09/08/99

TIP PROJECT NO. : B-4147

CONTRACT : C202842

STRUCTURES

STATE OF NORTH CAROLINA
DIVISION OF HIGHWAYS

HENDERSON COUNTY

STATE	STATE PROJECT REFERENCE NO.	SHEET NO.	TOTAL SHEETS
N.C.	B-4147		

STATE PROJ. NO.	F.A. PROJ. NO.	DESCRIPTION
33496.1.1	BRZ-1123(11)	PE
33496.2.1	BRZ-1123(11)	R / W
33496.3.1	BRZ-1123(11)	CONSTRUCTION

LOCATION: BRIDGE NO.75 OVER RIGHT PRONG MUD CREEK
BRIDGE NO.76 OVER LEFT PRONG MUD CREEK
ON SR 1123 (LITTLE RIVER ROAD)

TYPE OF WORK: GRADING, PAVING, DRAINAGE, AND STRUCTURES

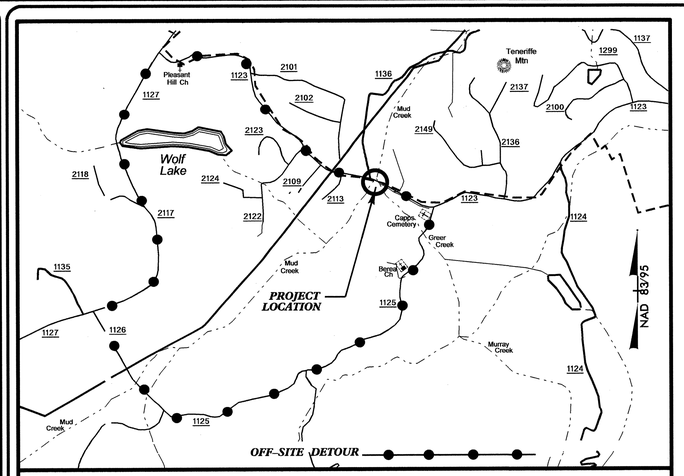

VICINITY MAP

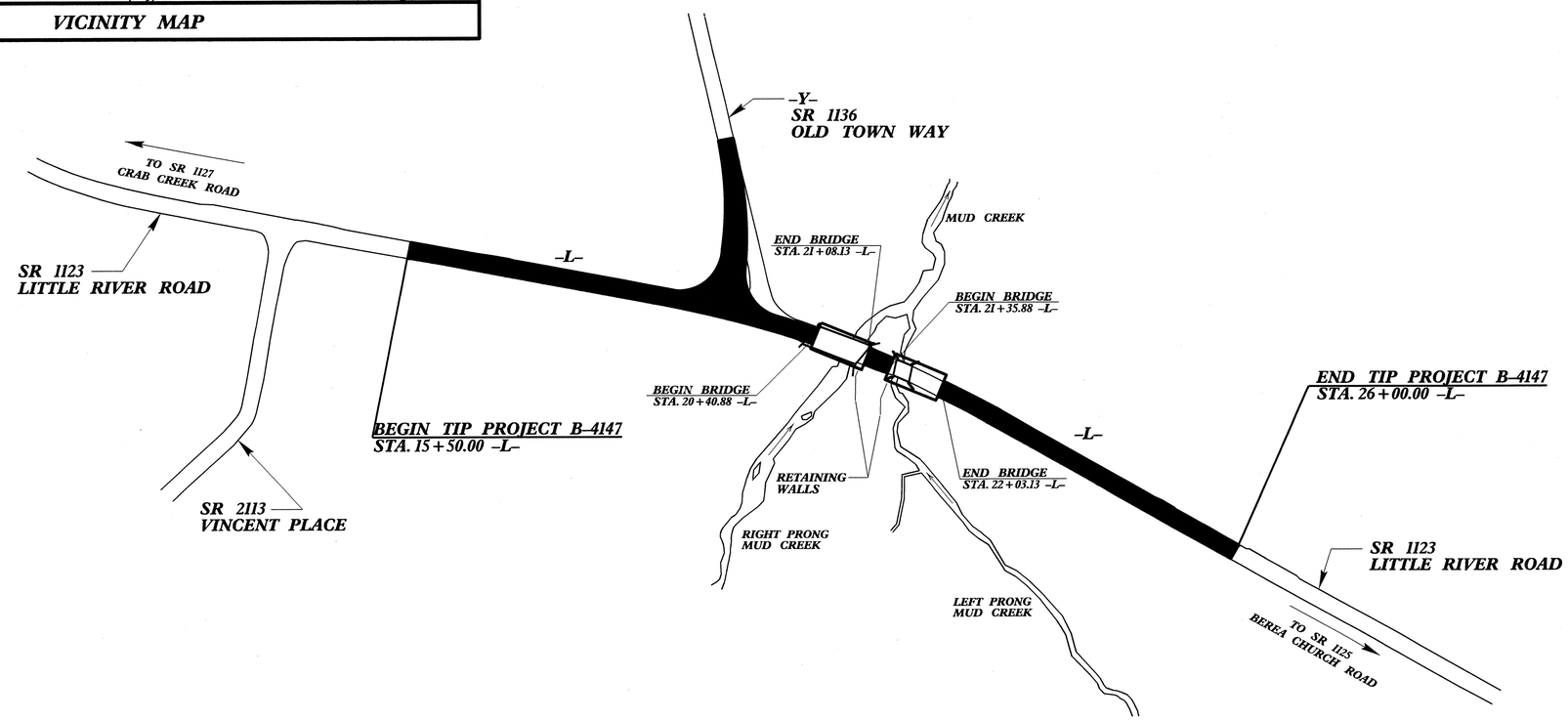

DESIGN DATA

ADT 2011	=	1,785
ADT 2031	=	3,710
DHV	=	12 %
D	=	55 %
* T	=	7 %
* * V	=	40 MPH
* TTST 1%		DUAL 6%

CLASSIFICATION: RURAL LOCAL
SUBREGIONAL TIER DESIGN

PROJECT LENGTH

LENGTH ROADWAY TIP PROJECT B-4147 = 0.174 MILES

LENGTH STRUCTURE TIP PROJECT B-4147 = 0.025 MILES

TOTAL LENGTH TIP PROJECT B-4147 = 0.199 MILES

PLANS PREPARED IN THE OFFICE OF:
DIVISION OF HIGHWAYS

2012 STANDARD SPECIFICATIONS

LETTING DATE:
JANUARY 15, 2013

Q. H. NGUYEN, P.E.
PROJECT ENGINEER

MARC G. CHEEK, P.E.
PROJECT DESIGN ENGINEER

STRUCTURES MANAGEMENT UNIT
1000 BIRCH RIDGE DRIVE
RALEIGH, N.C. 27610

DIVISION OF HIGHWAYS
STATE OF NORTH CAROLINA

P.E.
STATE DESIGN ENGINEER

DEPARTMENT OF TRANSPORTATION
FEDERAL HIGHWAY ADMINISTRATION

APPROVED
DIVISION ADMINISTRATOR DATE

26-NOV-2012 09:32
R:\Structures\Plans\Final Plans\B-4147_SD-01_TSH.dgn
mpoole

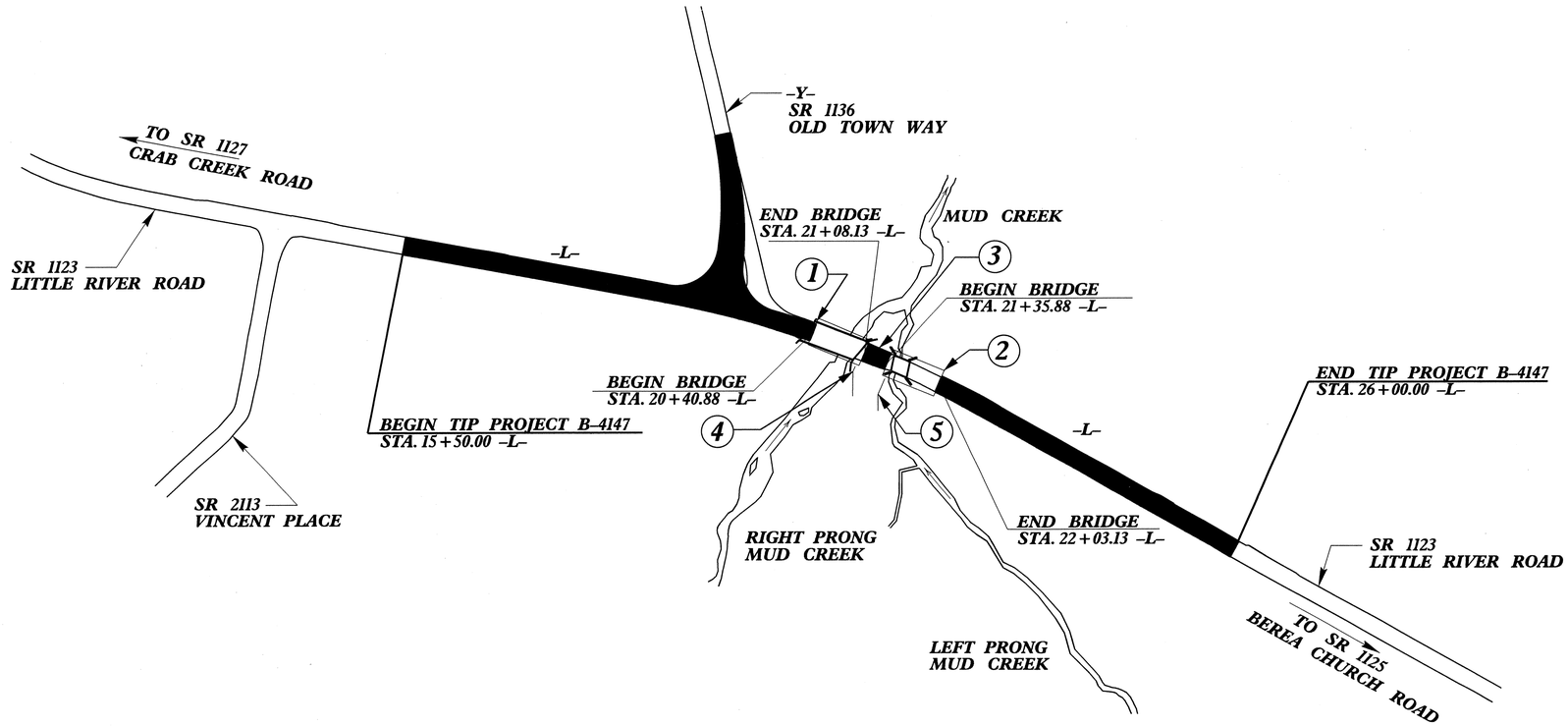

INDEX

STR. No.	STATION	DESCRIPTION	SHEETS
1	20+74.50 -L-	BRIDGE OVER RIGHT PRONG MUD CREEK ON SR 1123 (LITTLE RIVER ROAD)	S-1 THRU S-18
2	21+69.50 -L-	BRIDGE OVER LEFT PRONG MUD CREEK ON SR 1123 (LITTLE RIVER ROAD)	S-19 THRU S-37
3	21+22.00 -L-	SPECIAL APPROACH PAVEMENT	S-38 THRU S-39
4/5	10+20.71 -DR-	SHEET PILE RETAINING WALLS	W-1 THRU W-4

PROJECT NO. B-4147
HENDERSON COUNTY
STATION:

STATE OF NORTH CAROLINA
DEPARTMENT OF TRANSPORTATION
RALEIGH

STRUCTURE INDEX

NORTH CAROLINA PROFESSIONAL SEAL 20125 ENGINEER MARSHALL G. CHEEK, JR.
11-26-12

REVISIONS						SHEET NO.
NO.	BY:	DATE:	NO.	BY:	DATE:	TOTAL SHEETS
1			3			
2			4			

DRAWN BY : M. POOLE DATE : 07/12
CHECKED BY : M.G. CHEEK DATE : 08/12

26-NOV-2012 09:32
R:\Structures\Plans\Final Plans\B4147_SD_IS.dgn
mpoole

F.A. PROJ. No.: BRZ-1123 (11)

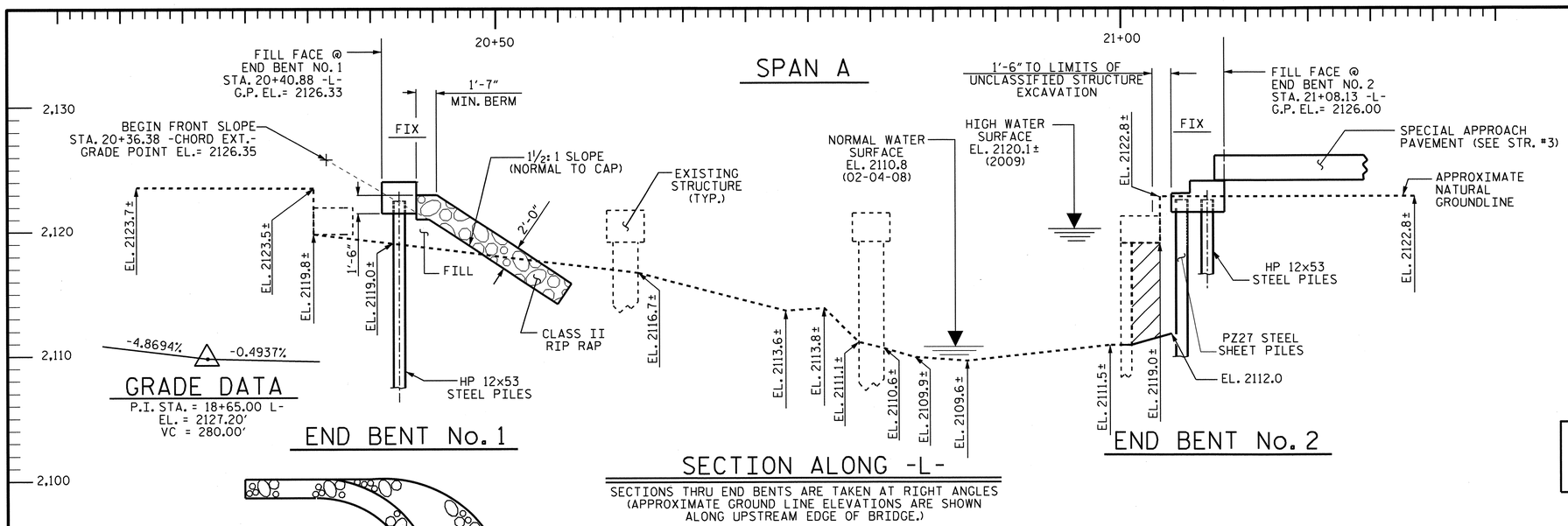

GRADE DATA

P.I. STA. = 18+65.00 L-
EL. = 2127.20'
VC = 280.00'

END BENT No. 1

SECTION ALONG -L-

SECTIONS THRU END BENTS ARE TAKEN AT RIGHT ANGLES (APPROXIMATE GROUND LINE ELEVATIONS ARE SHOWN ALONG UPSTREAM EDGE OF BRIDGE.)

END BENT No. 2

UNCLASSIFIED STRUCTURE EXCAVATION

PI STA. = 20+65.70 -L-
Δ= 18°-50'-26.5 (RT)
D = 4°-24'-26.5"
L = 427.48'
T = 215.69'
R = 1,300.00'

HORIZONTAL CURVE DATA -L-

NOTE TO CONTRACTOR: ALL STATIONING ON THE BRIDGE OCCURS ALONG THE CHORD FROM W.P.#1 TO W.P.#2, WHILE THE GRADE POINT FOLLOWS THE -L-.

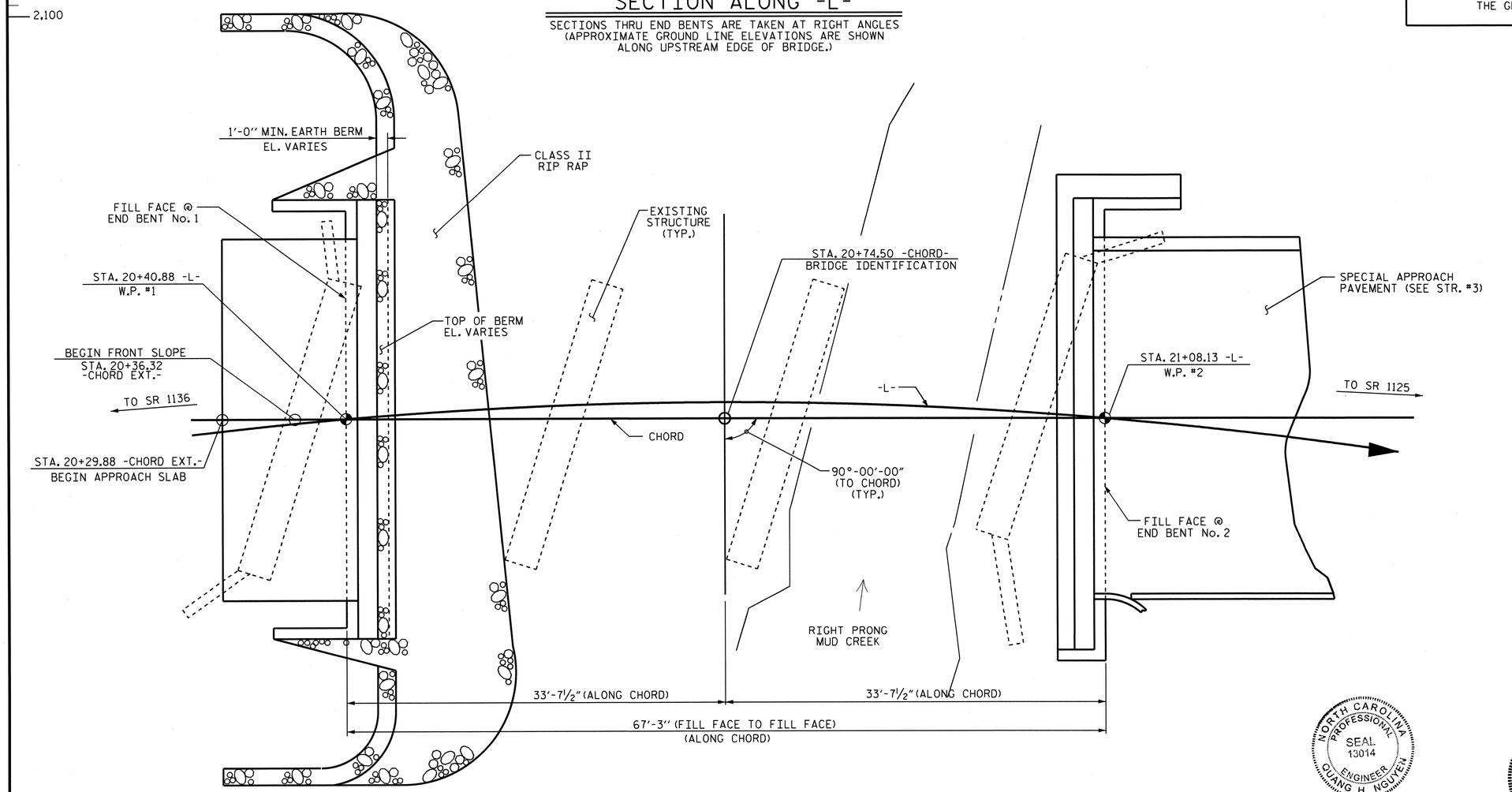

PLAN

PILES AND SHEET PILES ARE NOT SHOWN IN PLAN VIEW.

I HEREBY CERTIFY THESE PLANS ARE THE AS-BUILT PLANS

NORTH CAROLINA PROFESSIONAL SEAL 13014 ENGINEER QUANG H. NGUYEN

Quang H. Nguyen 11-26-12

NORTH CAROLINA PROFESSIONAL SEAL 20125 ENGINEER MARSHALL G. CHEEK, JR.

11-26-12

PROJECT NO. B-4147
HENDERSON COUNTY
STATION: 20+74.50 -L-

SHEET 1 OF 3 REPLACES BRIDGE #75

STATE OF NORTH CAROLINA
DEPARTMENT OF TRANSPORTATION
RALEIGH

GENERAL DRAWING

FOR BRIDGE #75 ON SR 1123 OVER RIGHT PRONG MUD CREEK BETWEEN SR 1136 AND SR 1125

REVISIONS						SHEET NO.
NO.	BY:	DATE:	NO.	BY:	DATE:	S-1
1			3			TOTAL SHEETS
2			4			39

STR. #1

NCDDS

DRAWN BY : J.R. MCROY DATE : 07-26-12
CHECKED BY : M.G. CHEEK DATE : 08/09/12

26-NOV-2012 09:31
R:\Structures\Plans\FinalPlans\Str_#1\B4147_SD_01_GD.dgn
mpoole

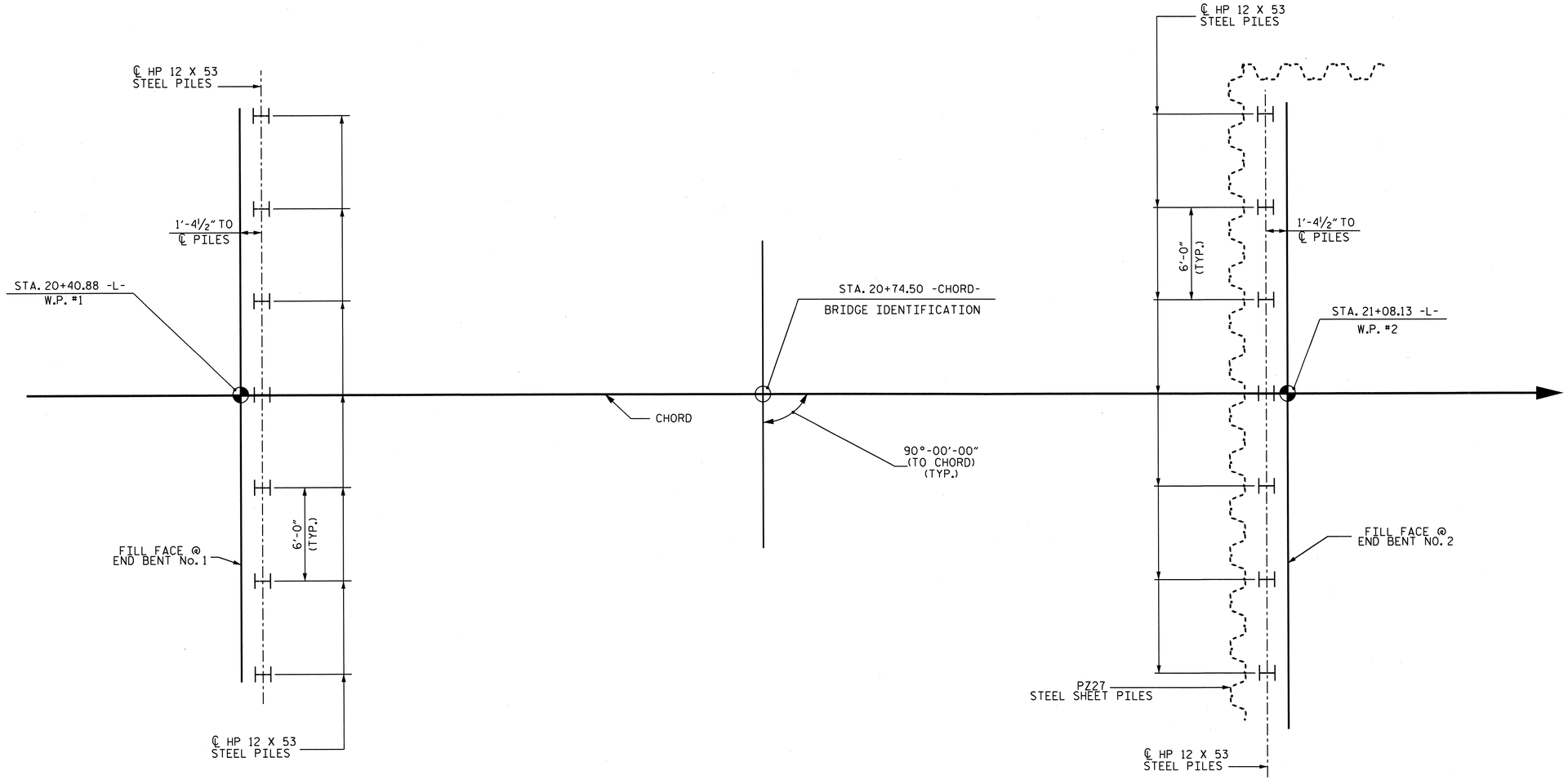

FOUNDATION LAYOUT

NOTES

FOR PILES, SEE SECTION 450 OF THE STANDARD SPECIFICATIONS.

PILES AT END BENT No. 1 ARE DESIGNED FOR A FACTORED RESISTANCE OF 80 TONS PER PILE.

DRIVE PILES AT END BENT No. 1 TO A REQUIRED DRIVING RESISTANCE OF 133 TONS PER PILE.

PILES AT END BENT No. 2 ARE DESIGNED FOR A FACTORED RESISTANCE OF 80 TONS PER PILE.

DRIVE PILES AT END BENT No. 2 TO A REQUIRED DRIVING RESISTANCE OF 133 TONS PER PILE.

SHEET PILES SHALL BE INSTALLED TO AN ELEVATION OF 2095.0 FT. AT END BENT No. 2.

SCOUR CRITICAL ELEVATION 2107.0 FT. FOR VERTICAL ABUTMENT.

PROJECT NO. B-4147
HENDERSON COUNTY
STATION: 20+74.50 -L-

SHEET 2 OF 3

STATE OF NORTH CAROLINA
DEPARTMENT OF TRANSPORTATION
RALEIGH

GENERAL DRAWING
FOR BRIDGE #75 ON SR 1123
OVER RIGHT PRONG MUD CREEK
BETWEEN SR 1136 AND SR 1125

NORTH CAROLINA PROFESSIONAL SEAL 20125 ENGINEER MARSHALL G. CHEEK, JR.
11-26-12

REVISIONS						SHEET NO.
NO.	BY:	DATE:	NO.	BY:	DATE:	S-2
1			3			TOTAL SHEETS
2			4			39

DRAWN BY : M. POOLE DATE : 08/12
CHECKED BY : M. G. CHEEK DATE : 08/12

26-NOV-2012 09:31
R:\Structures\Plans\Final Plans\Str_#1\B4147_SD_01_FL.dgn
mpoole

BENCHMARK No. 1: NAIL IN BASE OF 18 INCH WHITE PINE, STA. 12+98.00 -L-, 29.00' RT, EL. 2151.94'.

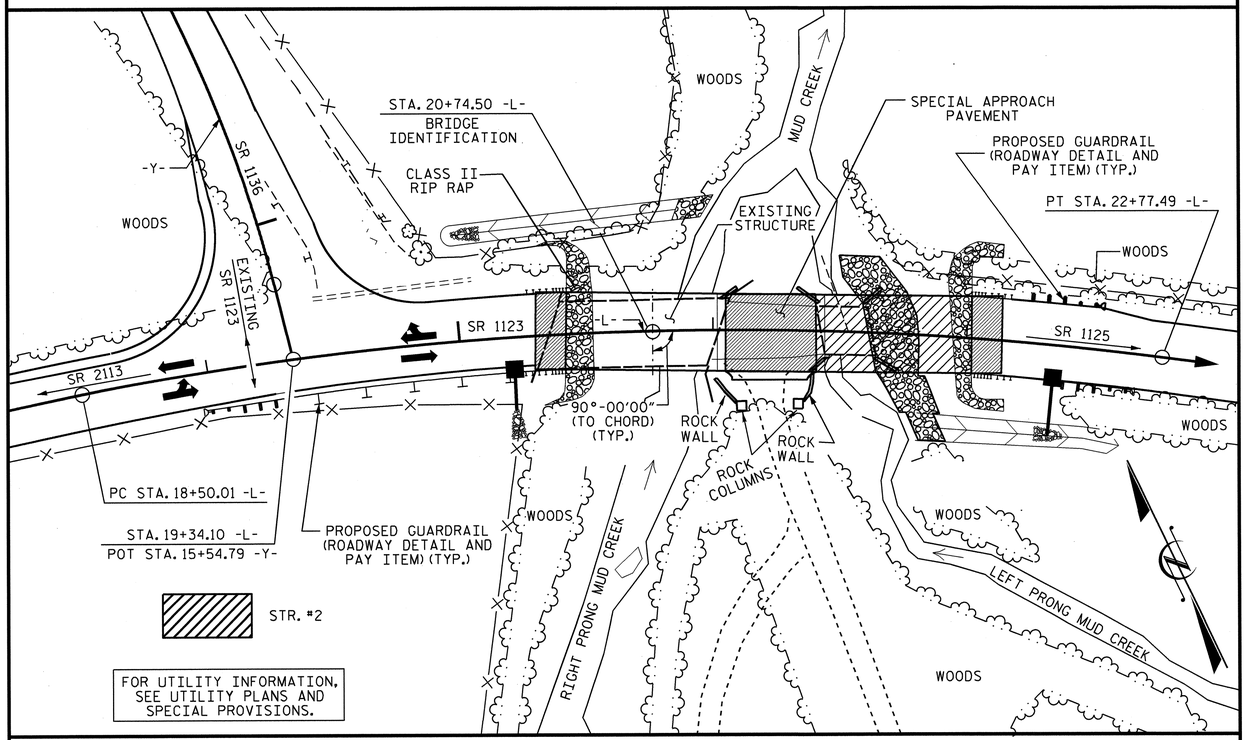

LOCATION SKETCH

GENERAL NOTES

ASSUMED LIVE LOAD = HL 93 OR ALTERNATE LOADING.

FOR OTHER DESIGN DATA AND GENERAL NOTES, SEE SHEET SN.

FOR EROSION CONTROL MEASURES, SEE EROSION CONTROL PLANS.

THIS BRIDGE HAS BEEN DESIGNED IN ACCORDANCE WITH THE AASHTO LRFD BRIDGE DESIGN SPECIFICATIONS.

REMOVAL OF THE EXISTING BRIDGE SHALL BE PERFORMED SO AS NOT ALLOW DEBRIS TO FALL INTO THE WATER. THE CONTRACTOR SHALL REMOVE THE BRIDGE AND SUBMIT PLANS FOR DEMOLITION IN ACCORDANCE WITH ARTICLE 402-2 OF THE STANDARD SPECIFICATIONS.

THE MATERIAL SHOWN IN THE CROSS-HATCHED AREA (SEE SHEET 1 OF 3) SHALL BE EXCAVATED FOR A DISTANCE OF 25 FEET TO EACH SIDE OF CENTERLINE ROADWAY AS DIRECTED BY THE ENGINEER. THIS WORK WILL BE PAID FOR AT THE CONTRACT LUMP SUM PRICE FOR UNCLASSIFIED STRUCTURE EXCAVATION. SEE SECTION 412 OF THE STANDARD SPECIFICATIONS.

THE SUBSTRUCTURE OF THE EXISTING BRIDGE INDICATED ON THE PLANS IS FROM THE BEST INFORMATION AVAILABLE. SINCE THIS INFORMATION IS SHOWN FOR THE CONVENIENCE OF THE CONTRACTOR, THE CONTRACTOR SHALL HAVE NO CLAIM WHATSOEVER AGAINST THE DEPARTMENT OF TRANSPORTATION FOR ANY DELAYS OR ADDITIONAL COST INCURRED BASED ON DIFFERENCES BETWEEN THE EXISTING BRIDGE SUBSTRUCTURE SHOWN ON THE PLANS AND THE ACTUAL CONDITIONS AT THE PROJECT SITE.

ASPHALT WEARING SURFACE IS INCLUDED IN ROADWAY QUANTITY ON ROADWAY PLANS.

THE EXISTING 3 SPAN STRUCTURE (1 @ 25'-3", 2 @ 21'-5") WITH A ROADWAY WIDTH OF 24'-6" AND A 2½" ASPHALT WEARING SURFACE ON A TIMBER FLOOR ON STEEL I-BEAMS, WITH A SUBSTRUCTURE CONSISTING OF TIMBER CAP ON TIMBER PILES AT THE END BENTS AND BENTS AND LOCATED AT THE SITE OF THE PROPOSED BRIDGE SHALL BE REMOVED. SEE SPECIAL PROVISIONS FOR "REMOVAL OF EXISTING STRUCTURE".

ALL PAVEMENT MARKING WILL BE IN ACCORDANCE WITH THE PAVEMENT MARKING PLANS AND SHALL PROVIDE FOR BICYCLES.

THIS STRUCTURE HAS BEEN DESIGNED IN ACCORDANCE WITH HEC 18, "EVALUATING SCOUR AT BRIDGES".

THE CONTRACTOR SHALL PROVIDE INDEPENDENT ASSURANCE SAMPLES OF REINFORCING STEEL AS FOLLOWS: FOR PROJECTS REQUIRING UP TO 400 TONS OF REINFORCING STEEL, ONE 30 INCH SAMPLE OF EACH SIZE BAR USED, AND FOR PROJECTS REQUIRING OVER 400 TONS OF REINFORCING STEEL, TWO 30 INCH SAMPLES OF EACH SIZE BAR USED. THE BARS FROM WHICH THE SAMPLES ARE TAKEN MUST THEN BE SPLICED WITH REPLACEMENT BARS OF THE SIZE AND LENGTH OF THE SAMPLE, PLUS A MINIMUM LAP SPLICE OF THIRTY BAR DIAMETERS. PAYMENT FOR THE SAMPLES OF REINFORCING STEEL SHALL BE CONSIDERED INCIDENTAL TO VARIOUS PAY ITEMS.

INASMUCH AS THE PAINT SYSTEM ON THE EXISTING STRUCTURAL STEEL CONTAINS LEAD, THE CONTRACTOR'S ATTENTION IS DIRECTED TO ARTICLE 107-1 OF THE STANDARD SPECIFICATIONS. ANY COST RESULTING FROM COMPLIANCE WITH APPLICABLE STATE OR FEDERAL REGULATIONS PERTAINING TO HANDLING OF MATERIALS CONTAINING LEAD BASED PAINT SHALL BE INCLUDED IN THE BID PRICE FOR "REMOVAL OF EXISTING STRUCTURE".

FOR SUBMITTAL OF WORKING DRAWINGS, SEE SPECIAL PROVISIONS.

FOR FALSEWORK AND FORMWORK, SEE SPECIAL PROVISIONS.

FOR CRANE SAFETY, SEE SPECIAL PROVISIONS.

FOR GROUT FOR STRUCTURES, SEE SPECIAL PROVISIONS.

THIS BRIDGE IS LOCATED IN SEISMIC ZONE 1.

FOR 18" STEEL SHEET PILES, SEE SPECIAL PROVISIONS.

THE ENTIRE COST OF THE WORK TO CONSTRUCT THE SPECIAL APPROACH PAVEMENT SHALL BE INCLUDED IN THE LUMP SUM PRICE BID FOR BRIDGE APPROACH SLABS. FOR SPECIAL APPROACH PAVEMENT, SEE "SPECIAL APPROACH PAVEMENT" SHEETS (STR. #3).

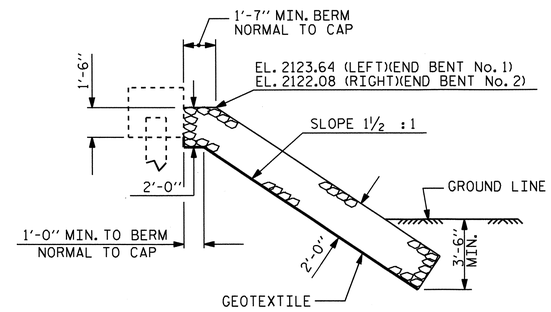

℄ SECTION

BERM RIP RAPPED

HYDRAULIC DATA

DESIGN DISCHARGE ---------- = 2,250 C.F.S
FREQUENCY OF DESIGN FLOOD ---------- = 25 YRS.
DESIGN HIGH WATER ELEVATION ---------- = 2,119.1'
DRAINAGE AREA ---------- = 10.9 SQ. MI.
BASE DISCHARGE (Q100) ---------- = 3,360 C.F.S.
BASE HIGH WATER ELEVATION ---------- = 2,120.1'

OVERTOPPING FLOOD DATA

OVERTOPPING DISCHARGE ---------- = N/A C.F.S.
FREQUENCY OF OVERTOPPING FLOOD ---------- = >500± YRS.
OVERTOPPING FLOOD ELEVATION ---------- = 2,122.6

TOTAL BILL OF MATERIAL

	REMOVAL OF EXISTING STRUCTURE	UNCLASSIFIED STRUCTURE EXCAVATION	CLASS A CONCRETE	BRIDGE APPROACH SLABS	REINFORCING STEEL	HP 12 X 53 STEEL PILES		TWO BAR METAL RAIL	1'-2" X 2'-10½" CONCRETE PARAPET	RIP RAP CLASS II (2'-0" THICK)	GEOTEXTILE FOR DRAINAGE	ELASTOMERIC BEARINGS	3'-0" X 2'-0" PRESTRESSED CONCRETE CORED SLABS		18" STEEL SHEET PILES
	LUMP SUM	LUMP SUM	CU. YDS.	LUMP SUM	LBS.	NO.	LIN. FT.	LIN. FT.	LIN. FT.	TONS	SQ. YARDS	LUMP SUM	NO.	LIN. FT.	SQ. FT.
SUPERSTRUCTURE	LUMP SUM			LUMP SUM				149.96	160.00			LUMP SUM	11	715.00	
END BENT NO. 1			14.4		2115	7	265			125	139				
END BENT NO. 2		LUMP SUM	17.6		2732	7	265								1380
TOTAL	LUMP SUM	LUMP SUM	32.0	LUMP SUM	4847	14	530	149.96	160.00	125	139	LUMP SUM	11	715.00	1380

PROJECT NO. B-4147
HENDERSON COUNTY
STATION: 20+74.50 -L-

SHEET 3 OF 3

STATE OF NORTH CAROLINA
DEPARTMENT OF TRANSPORTATION
RALEIGH

GENERAL DRAWING

FOR BRIDGE #75 ON SR 1123 OVER RIGHT PRONG MUD CREEK BETWEEN SR 1136 AND SR 1125

NORTH CAROLINA PROFESSIONAL SEAL 20125 ENGINEER MARSHALL G. CHEEK, JR.
11-26-12

REVISIONS						SHEET NO.
NO.	BY:	DATE:	NO.	BY:	DATE:	S-3
1			3			TOTAL SHEETS
2			4			39

DRAWN BY : J.R. MCROY DATE : 7/30/12
CHECKED BY : M.G. CHEEK DATE : 8/9/12

26-NOV-2012 10:46
R:\Structures\Plans\Final Plans\Str_#1\B4147_SD_01_GD.dgn
dahodge

STR. #1

LOAD AND RESISTANCE FACTOR RATING (LRFD) SUMMARY FOR PRESTRESSED CONCRETE GIRDERS

LEVEL		VEHICLE	WEIGHT (W) (TONS)	CONTROLLING LOAD RATING (#)	MINIMUM RATING FACTORS (RF)	TONS = W X RF	STRENGTH I LIMIT STATE											SERVICE III LIMIT STATE						COMMENT NUMBER
							LIVELOAD FACTORS	MOMENT					SHEAR					LIVELOAD FACTORS	MOMENT					
								DISTRIBUTION FACTORS (DF)	RATING FACTOR	SPAN	GIRDER LOCATION	DISTANCE FROM LEFT END OF SPAN (ft)	DISTRIBUTION FACTORS (DF)	RATING FACTOR	SPAN	GIRDER LOCATION	DISTANCE FROM LEFT END OF SPAN (ft)		DISTRIBUTION FACTORS (DF)	RATING FACTOR	SPAN	GIRDER LOCATION	DISTANCE FROM LEFT END OF SPAN (ft)	
DESIGN LOAD RATING		HL-93(Inv)	N/A	1	1.07	--	1.75	0.270	1.08	A	EL	32.000	0.510	1.23	A	EL	6.400	0.80	0.270	1.07	A	EL	32.000	
		HL-93(Opr)	N/A	--	1.40	--	1.35	0.270	1.40	A	EL	32.000	0.510	1.60	A	EL	6.400	N/A	--	--	--	--	--	
		HS-20(Inv)	36.000	2	1.37	49.20	1.75	0.270	1.39	A	EL	32.000	0.510	1.51	A	EL	6.400	0.80	0.270	1.37	A	EL	32.000	
		HS-20(Opr)	36.000	--	1.80	64.83	1.35	0.270	1.80	A	EL	32.000	0.510	1.96	A	EL	6.400	N/A	--	--	--	--	--	
LEGAL LOAD RATING	SV	SNSH	13.500	--	3.00	40.52	1.4	0.270	3.81	A	EL	32.000	0.510	4.43	A	EL	6.400	0.80	0.270	3.00	A	EL	32.000	
		SNGARBS2	20.000	--	2.27	45.44	1.4	0.270	2.89	A	EL	32.000	0.510	3.17	A	EL	6.400	0.80	0.270	2.27	A	EL	32.000	
		SNAGRIS2	22.000	--	2.17	47.67	1.4	0.270	2.75	A	EL	32.000	0.510	2.95	A	EL	6.400	0.80	0.270	2.17	A	EL	32.000	
		SNCOTTS3	27.250	--	1.50	40.73	1.4	0.270	1.90	A	EL	32.000	0.510	2.21	A	EL	6.400	0.80	0.270	1.49	A	EL	32.000	
		SNAGGRS4	34.925	--	1.26	44.09	1.4	0.270	1.60	A	EL	32.000	0.510	1.85	A	EL	6.400	0.80	0.270	1.26	A	EL	32.000	
		SNS5A	35.550	--	1.23	43.86	1.4	0.270	1.57	A	EL	32.000	0.510	1.89	A	EL	6.400	0.80	0.270	1.23	A	EL	32.000	
		SNS6A	39.950	--	1.14	45.44	1.4	0.270	1.45	A	EL	32.000	0.510	1.73	A	EL	6.400	0.80	0.270	1.14	A	EL	32.000	
		SNS7B	42.000	--	1.08	45.51	1.4	0.270	1.38	A	EL	32.000	0.510	1.71	A	EL	6.400	0.80	0.270	1.08	A	EL	32.000	
	TTST	TNAGRIT3	33.000	--	1.39	45.83	1.4	0.270	1.76	A	EL	32.000	0.510	2.05	A	EL	6.400	0.80	0.270	1.39	A	EL	32.000	
		TNT4A	33.075	--	1.40	46.19	1.4	0.270	1.77	A	EL	32.000	0.510	1.99	A	EL	6.400	0.80	0.270	1.40	A	EL	32.000	
		TNT6A	41.600	--	1.15	47.73	1.4	0.270	1.46	A	EL	32.000	0.510	1.83	A	EL	6.400	0.80	0.270	1.15	A	EL	32.000	
		TNT7A	42.000	--	1.16	48.55	1.4	0.270	1.47	A	EL	32.000	0.510	1.78	A	EL	6.400	0.80	0.270	1.16	A	EL	32.000	
		TNT7B	42.000	--	1.20	50.54	1.4	0.270	1.53	A	EL	32.000	0.510	1.66	A	EL	6.400	0.80	0.270	1.20	A	EL	32.000	
		TNAGRIT4	43.000	--	1.14	48.99	1.4	0.270	1.45	A	EL	32.000	0.510	1.60	A	EL	6.400	0.80	0.270	1.14	A	EL	32.000	
		TNAGT5A	45.000	--	1.07	48.22	1.4	0.270	1.36	A	EL	32.000	0.510	1.60	A	EL	6.400	0.80	0.270	1.07	A	EL	32.000	
		TNAGT5B	45.000	3	1.06	47.54	1.4	0.270	1.34	A	EL	32.000	0.510	1.52	A	EL	6.400	0.80	0.270	1.06	A	EL	32.000	

LOAD FACTORS:

DESIGN LOAD RATING FACTORS	LIMIT STATE	γ_{DC}	γ_{DW}
	STRENGTH I	1.25	1.50
	SERVICE III	1.00	1.00

NOTES:

MINIMUM RATING FACTORS ARE BASED ON THE STRENGTH I AND SERVICE III LIMIT STATES.

ALLOWABLE STRESSES FOR SERVICE III LIMIT STATE ARE AS REQUIRED FOR DESIGN.

COMMENTS:

1.
2.
3.
4.

(#) CONTROLLING LOAD RATING

(1) DESIGN LOAD RATING (HL-93)

(2) DESIGN LOAD RATING (HS-20)

(3) LEGAL LOAD RATING **

** SEE CHART FOR VEHICLE TYPE

GIRDER LOCATION

I - INTERIOR GIRDER
EL - EXTERIOR LEFT GIRDER
ER - EXTERIOR RIGHT GIRDER

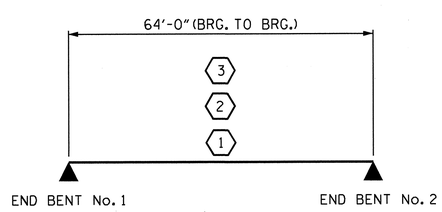

LRFR SUMMARY

SPAN A

PROJECT NO. B-4147

HENDERSON COUNTY

STATION: 20+74.50 -L-

STATE OF NORTH CAROLINA
DEPARTMENT OF TRANSPORTATION
RALEIGH

STANDARD

LRFR SUMMARY FOR 65' CORED SLAB UNIT 90° SKEW (NON-INTERSTATE TRAFFIC)

NORTH CAROLINA PROFESSIONAL SEAL 20125 ENGINEER MATTHEW L. CHEEK, JR.
11-26-12

REVISIONS						SHEET NO.
NO.	BY:	DATE:	NO.	BY:	DATE:	S-4
1			3			TOTAL SHEETS
2			4			39

ASSEMBLED BY : J.R. MCROY DATE : 7/12
CHECKED BY : M.G. CHEEK DATE : 8/12
DRAWN BY : MAA 1/08
CHECKED BY : GM/DI 2/08
REV. 11/12/08R MAA/GM

26-NOV-2012 10:46
R:\Structures\Plans\Final Plans\Str_#1\B4147_01_cored-slab.dgn
dahodge

STR. #1

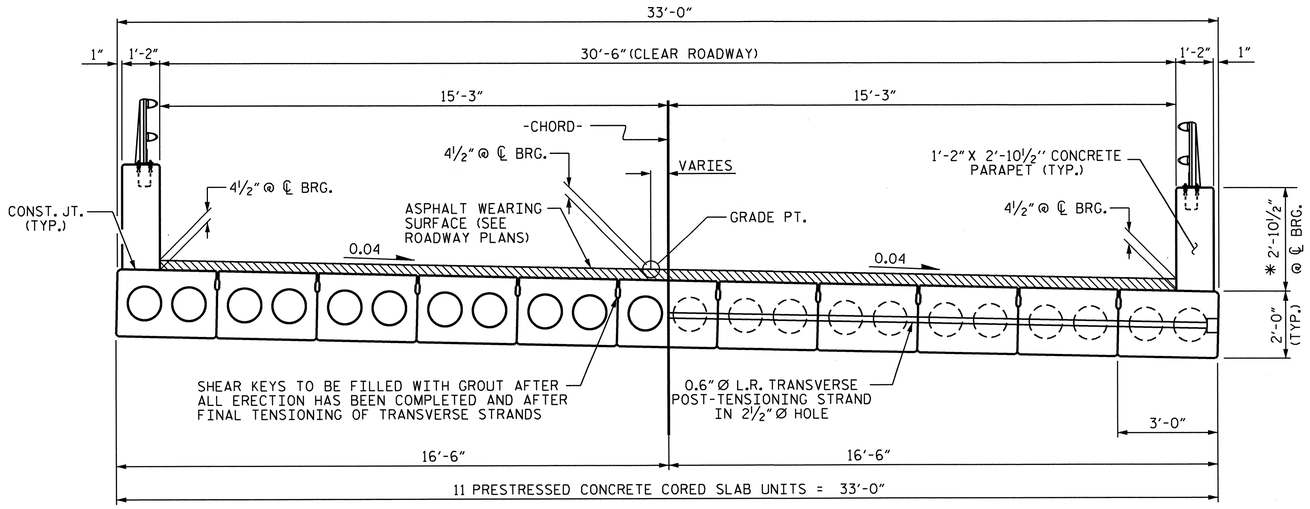

HALF SECTION
THROUGH VOIDS

HALF SECTION
AT INTERMEDIATE DIAPHRAGMS

TYPICAL SECTION

* - THE MAXIMUM PARAPET HEIGHT AND ASPHALT THICKNESS IS SHOWN. THE HEIGHT OF THE PARAPET AND ASPHALT THICKNESS VARIES WHILE THE TOP OF THE PARAPET FOLLOWS THE PROFILE OF THE GUTTERLINE. FOR PARAPET HEIGHT DETAILS AND ASPHALT THICKNESS, SEE "SECTION THRU PARAPET" DETAIL, SHEET 3 OF 3.

FIXED END

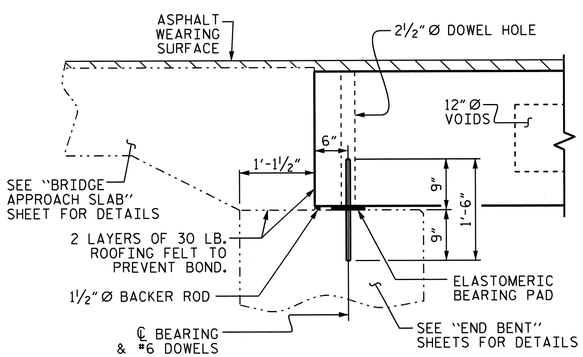

SECTION AT END BENT

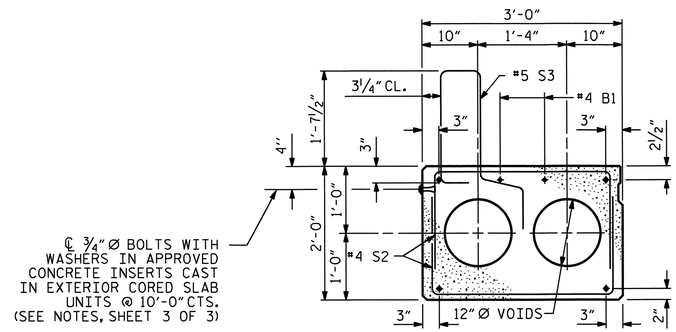

EXTERIOR SLAB SECTION

(FOR PRESTRESSED STRAND LAYOUT, SEE "INTERIOR SLAB SECTION".)

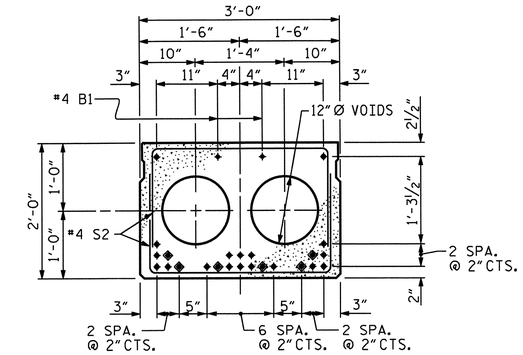

INTERIOR SLAB SECTION (65' UNIT)
(24 STRANDS REQUIRED)

0.6'' Ø LOW RELAXATION STRAND LAYOUT

◈ BOND SHALL BE BROKEN ON THESE STRANDS FOR A DISTANCE OF 12'-0" FROM END OF CORED SLAB UNIT. SEE STANDARD SPECIFICATIONS, ARTICLE 1078-7.

DEBONDING LEGEND

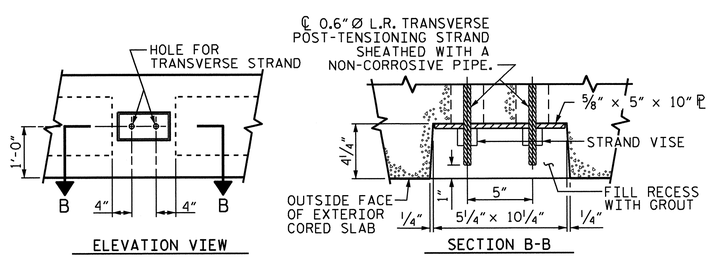

GROUTED RECESS AT END OF POST-TENSIONED STRAND-CORED SLABS

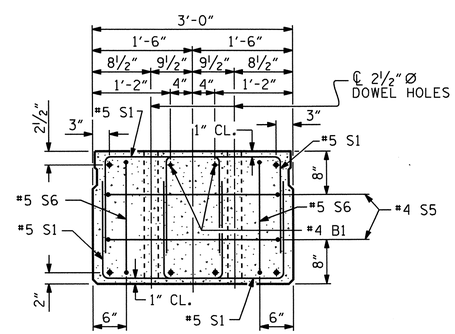

END ELEVATION

SHOWING PLACEMENT OF DOUBLE STIRRUPS AND LOCATION OF DOWEL HOLES. (STRAND LAYOUT NOT SHOWN.) INTERIOR SLAB UNIT SHOWN-EXTERIOR SLAB UNIT SIMILAR EXCEPT SHEAR KEY LOCATION.

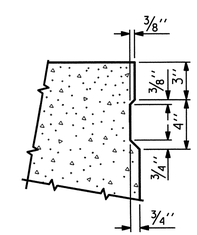

SHEAR KEY DETAIL

NOTE: OMIT SHEAR KEY ON OUTSIDE FACE OF EXTERIOR CORED SLABS.

PROJECT NO. B-4147
HENDERSON COUNTY
STATION: 20+74.50 -L-

SHEET 1 OF 3

STATE OF NORTH CAROLINA
DEPARTMENT OF TRANSPORTATION
RALEIGH

3'-0" X 2'-0"
PRESTRESSED CONCRETE
CORED SLAB UNIT
90° SKEW

NORTH CAROLINA PROFESSIONAL SEAL 20125 ENGINEER MARSHALL G. CHEEK, JR.
11-26-12

REVISIONS						SHEET NO.
NO.	BY:	DATE:	NO.	BY:	DATE:	S-5
1			3			TOTAL SHEETS
2			4			39

STR. #1

ASSEMBLED BY : J.R. MCROY DATE : 7/12
CHECKED BY : M.G. CHEEK DATE : 8/12

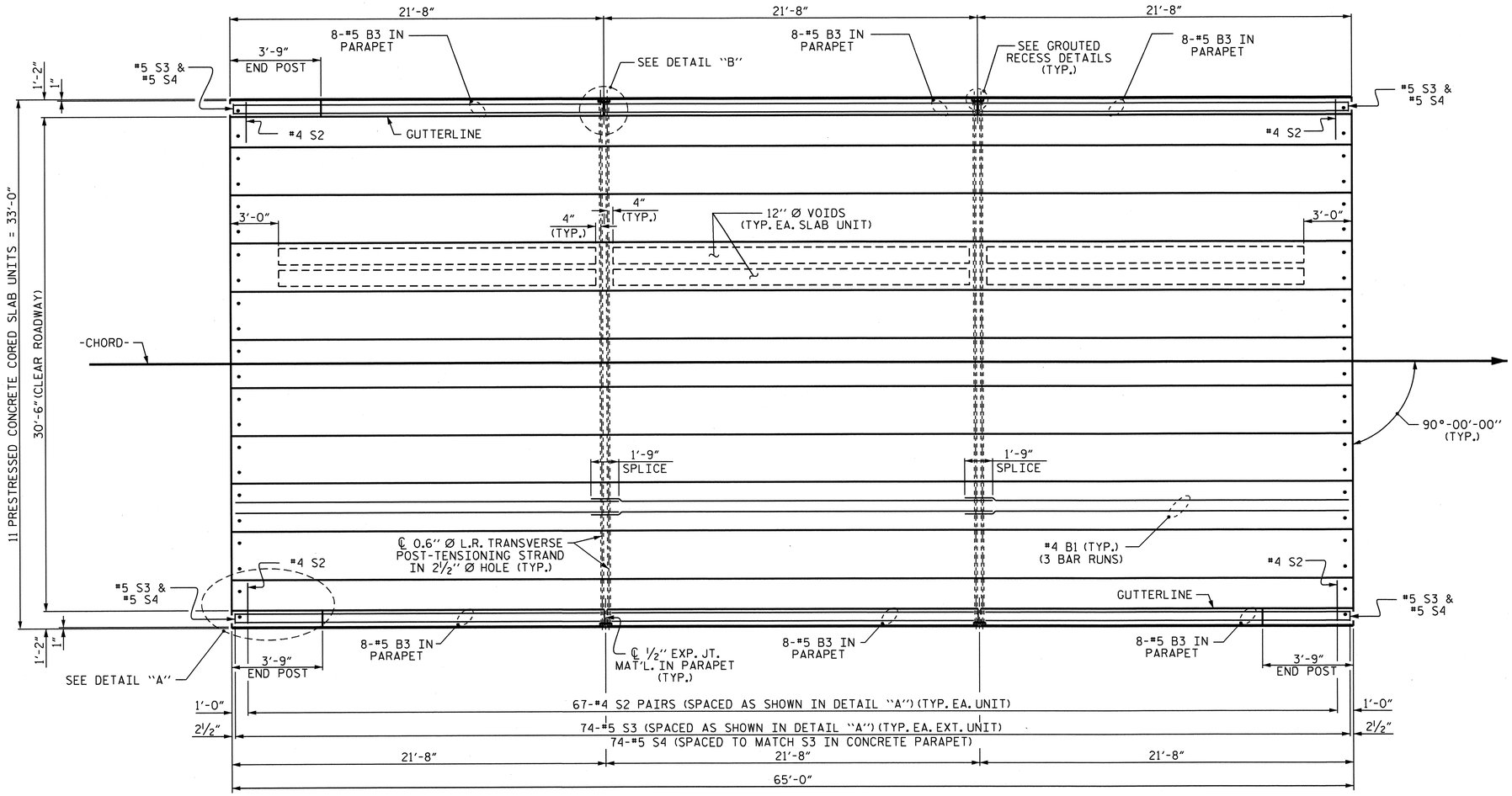

PLAN OF UNIT

FOR END POST DETAILS AND REINFORCING, SEE SHEET 3 OF 3.

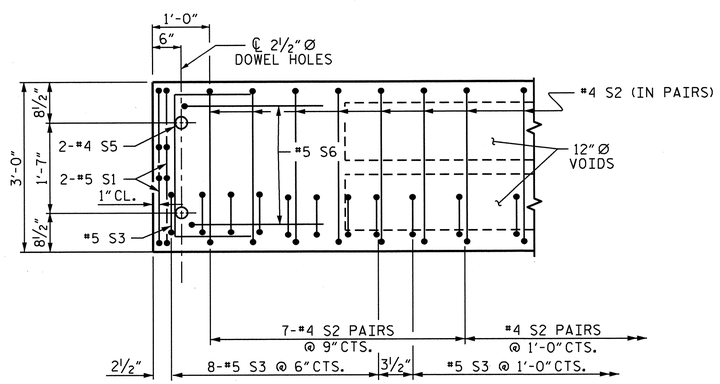

DETAIL "A"

NOTE: EXTERIOR UNIT SHOWN - INTERIOR UNIT SIMILAR EXCEPT OMIT #5 S3 BARS.

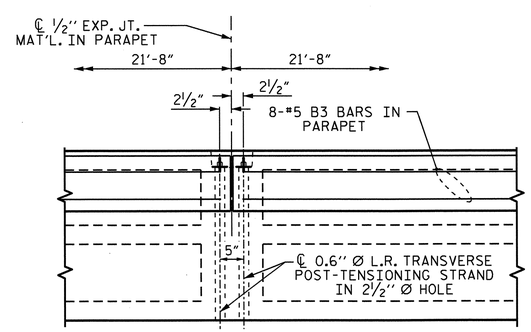

DETAIL "B"

#4 S2 BARS MAY BE SHIFTED AS NECESSARY TO MAINTAIN 1" CLEAR TO GROUTED RECESS AND 2½" Ø TRANSVERSE POST-TENSIONING STRAND HOLES

PROJECT NO. B-4147
HENDERSON COUNTY
STATION: 20+74.50 -L-

SHEET 2 OF 3

STATE OF NORTH CAROLINA
DEPARTMENT OF TRANSPORTATION
RALEIGH

PLAN OF 65' UNIT
30'-6" CLEAR ROADWAY
90° SKEW

NORTH CAROLINA PROFESSIONAL SEAL 20125 ENGINEER MARSHALL G. CHEEK, JR.
11-26-12

REVISIONS						SHEET NO.
NO.	BY:	DATE:	NO.	BY:	DATE:	S-6
1			3			TOTAL SHEETS
2			4			39

ASSEMBLED BY :	J.R. MCROY	DATE :	7/12
CHECKED BY :	M.G. CHEEK	DATE :	8/12

26-NOV-2012 10:47
R:\Structures\Plans\Final Plans\Str_#1\B4147_01_cored-slab.dgn
dahodge

STR. #1

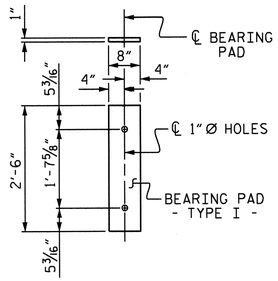

FIXED END
(TYPE I - 22 REQ'D)

ELASTOMERIC BEARING DETAILS

ELASTOMER IN ALL BEARINGS SHALL BE 60 DUROMETER HARDNESS.

CONCRETE RELEASE STRENGTH	
UNIT	PSI
65' UNITS	4800

GRADE 270 STRANDS	0.6" Ø L.R.
AREA (SQUARE INCHES)	0.217
ULTIMATE STRENGTH (LBS. PER STRAND)	58,600
APPLIED PRESTRESS (LBS. PER STRAND)	43,950

BILL OF MATERIAL 2 PARAPETS AND 3 END POSTS

BAR	NUMBER	SIZE	TYPE	LENGTH	WEIGHT
✱ B3	48	#5	STR	21'-3"	1064
✱ E1	6	#7	STR	2'-8"	33
✱ E2	6	#7	STR	3'-3"	40
✱ E3	6	#7	STR	3'-9"	46
✱ E4	6	#7	STR	4'-3"	52
✱ E5	6	#7	STR	4'-9"	58
✱ F1	6	#6	STR	2'-0"	18
✱ F2	6	#6	STR	3'-3"	29
✱ F3	6	#6	STR	3'-9"	34
✱ S4	148	#5	2	6'-2"	952
✱ EPOXY COATED REINFORCING STEEL			LBS.		2326
CLASS AA CONCRETE			CU. YDS.		17.0
† 1'-2" X 2'-10½" CONCRETE PARAPET				160.00 LIN. FT.	

† PAY LENGTH INCLUDES 1'-2" X 2'-10½" CONCRETE PARAPET ON SPECIAL APPROACH PAVEMENT.

BAR TYPES

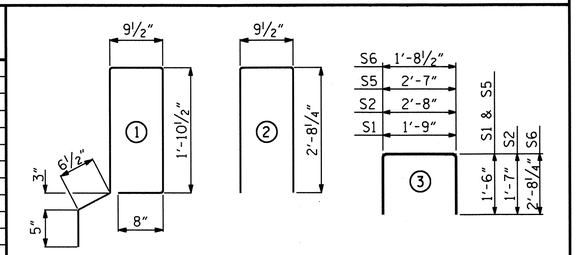

BILL OF MATERIAL FOR ONE 65' CORED SLAB UNIT

BAR	NUMBER	SIZE	TYPE	EXTERIOR UNIT LENGTH	EXTERIOR UNIT WEIGHT	INTERIOR UNIT LENGTH	INTERIOR UNIT WEIGHT
B1	6	#4	STR	22'-10"	92	22'-10"	92
S1	8	#5	3	4'-9"	40	4'-9"	40
S2	134	#4	3	5'-10"	522	5'-10"	522
✱ S3	74	#5	1	6'-2"	476		
S5	4	#4	3	5'-7"	15	5'-7"	15
S6	4	#5	3	7'-1"	30	7'-1"	30
REINFORCING STEEL			LBS.		699		699
✱ EPOXY COATED REINFORCING STEEL			LBS.		476		
6000 P.S.I. CONCRETE			CU. YDS.		11.0		11.0
0.6" Ø L.R. STRANDS			No.		24		24

NOTES

ALL PRESTRESSING STRANDS SHALL BE 7-WIRE LOW RELAXATION GRADE 270 STRANDS AND SHALL CONFORM TO AASHTO M203 EXCEPT FOR SAMPLING REQUIREMENTS WHICH SHALL BE IN ACCORDANCE WITH THE STANDARD SPECIFICATIONS.

ALL REINFORCING STEEL CAST WITH THE CORED SLAB SECTIONS SHALL BE GRADE 60 AND SHALL BE INCLUDED IN THE UNIT PRICE BID FOR PRESTRESSED CONCRETE CORED SLABS.

RECESSES FOR TRANSVERSE STRANDS SHALL BE GROUTED AFTER THE TENSIONING OF THE STRANDS.

THE 2½" Ø DOWEL HOLES AT FIXED ENDS OF SLAB SECTIONS SHALL BE FILLED WITH NON-SHRINK GROUT.

THE BACKER RODS SHALL CONFORM TO THE REQUIREMENTS OF TYPE M BOND BREAKER. SEE SECTION 1028 OF THE STANDARD SPECIFICATIONS.

WHEN CORED SLABS ARE CAST, AN INTERNAL HOLD-DOWN SYSTEM SHALL BE EMPLOYED TO PREVENT VOIDS FROM RISING OR MOVING SIDEWAYS. AT LEAST SIX WEEKS PRIOR TO CASTING CORED SLABS, THE CONTRACTOR SHALL SUBMIT TO THE ENGINEER FOR REVIEW AND COMMENT, DETAILED DRAWINGS OF THE PROPOSED HOLD-DOWN SYSTEM. IN ADDITION TO STRUCTURAL DETAILS, LOCATION AND SPACING OF THE HOLD-DOWNS SHALL BE INDICATED.

ALL REINFORCING STEEL IN THE CONCRETE PARAPETS AND END POSTS SHALL BE EPOXY COATED.

PRESTRESSING STRANDS SHALL BE CUT FLUSH WITH THE CORED SLAB UNIT ENDS.

APPLY EPOXY PROTECTIVE COATING TO CORED SLAB UNIT ENDS.

TRANSVERSE POST TENSIONING OF THE CORED SLAB UNITS SHALL BE DONE IN ACCORDANCE WITH THE STANDARD SPECIFICATIONS.

MAINTAIN A SYMMETRIC TENSION FORCE BETWEEN EACH PAIR OF TRANSVERSE POST TENSIONING STRANDS IN THE DIAPHRAGM.

THE TRANSFER OF LOAD FROM THE ANCHORAGES TO THE CORED SLAB UNIT SHALL BE DONE WHEN THE CONCRETE HAS REACHED A COMPRESSIVE STRENGTH OF NOT LESS THAN THE REQUIRED STRENGTH SHOWN IN THE "CONCRETE RELEASE STRENGTH" TABLE.

FOR GROUT FOR STRUCTURES, SEE SPECIAL PROVISIONS.

ALL BAR SUPPORTS USED IN THE PARAPET AND ALL INCIDENTAL REINFORCING STEEL SHALL BE EPOXY COATED IN ACCORDANCE WITH THE STANDARD SPECIFICATIONS.

CONCRETE INSERTS SHALL HAVE A MINIMUM WORKING LOAD SHEAR CAPACITY OF 2.5 KIPS.

THE ¾" Ø BOLTS, WASHERS AND CONCRETE INSERTS SHALL BE GALVANIZED IN ACCORDANCE WITH SECTION 1076 OF THE STANDARD SPECIFICATIONS.

THE BOLTS, WASHERS AND CONCRETE INSERTS ARE PROVIDED AS AN OPTION FOR THE CONTRACTOR TO ATTACH MATERIALS TO PREVENT DEBRIS FROM DROPPING INTO THE WATER DURING CONSTRUCTION OF THE PARAPETS.

UPON COMPLETION OF THE BRIDGE CONSTRUCTION, THE ¾" Ø BOLTS AND WASHERS SHALL BE REMOVED AND THE CONCRETE INSERTS SHALL BE GROUTED.

THE COST OF THE ¾" Ø BOLTS, WASHERS AND INSERTS SHALL BE INCLUDED IN THE PRICE BID FOR PRESTRESSED CONCRETE CORED SLABS.

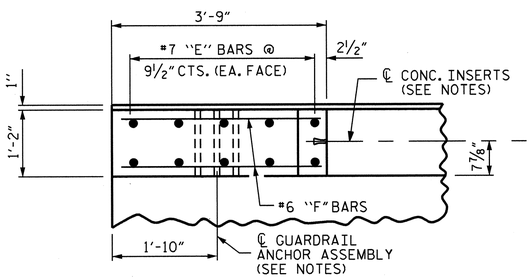

PLAN OF END POST

DEAD LOAD DEFLECTION AND CAMBER	3'-0" x 2'-0"
65' CORED SLAB UNIT	0.6" Ø L.R. STRAND
CAMBER (SLAB ALONE IN PLACE)	3½" ↑
DEFLECTION DUE TO SUPERIMPOSED DEAD LOAD✱✱	11/16" ↓
FINAL CAMBER	2 13/16" ↑

✱✱ INCLUDES FUTURE WEARING SURFACE

GUTTERLINE ASPHALT THICKNESS & PARAPET HEIGHT	ASPHALT OVERLAY THICKNESS @ MID-SPAN	PARAPET HEIGHT @ MID-SPAN
65' UNITS	1 11/16"	2'-7 11/16"

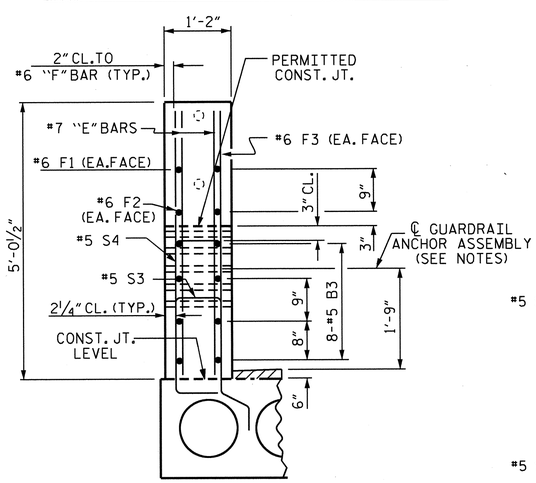

END VIEW

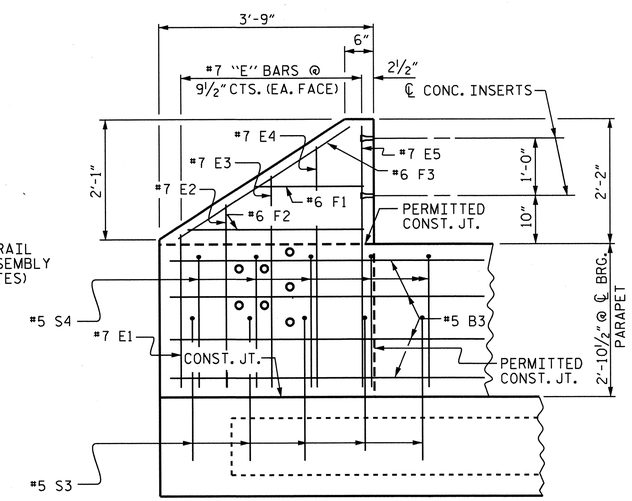

ELEVATION

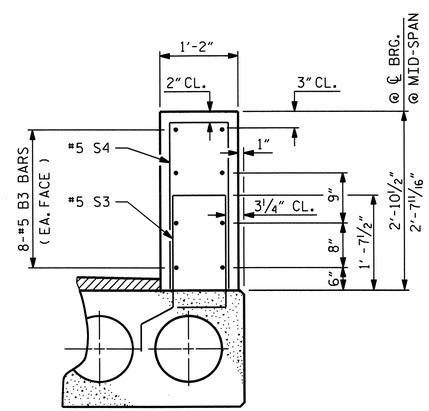

SECTION THRU PARAPET

PARAPET AND END POST FOR TWO-BAR RAIL

PROJECT NO. B-4147
HENDERSON COUNTY
STATION: 20+74.50 -L-

SHEET 3 OF 3

STATE OF NORTH CAROLINA
DEPARTMENT OF TRANSPORTATION
RALEIGH

3'-0" X 2'-0"
PRESTRESSED CONCRETE
CORED SLAB UNIT
90° SKEW

NORTH CAROLINA PROFESSIONAL SEAL 20125 ENGINEER MARSHALL G. CHEEK, JR. 11-26-12

REVISIONS						SHEET NO.
NO.	BY:	DATE:	NO.	BY:	DATE:	S-7
1			3			TOTAL SHEETS
2			4			39

ASSEMBLED BY : J.R. MCROY DATE : 7/12
CHECKED BY : M.G. CHEEK DATE : 8/12

26-NOV-2012 09:30
R:\Structures\Plans\FinalPlans\Str_#1\B4147_01_cored-slab.dgn
mpoole

STR. #1

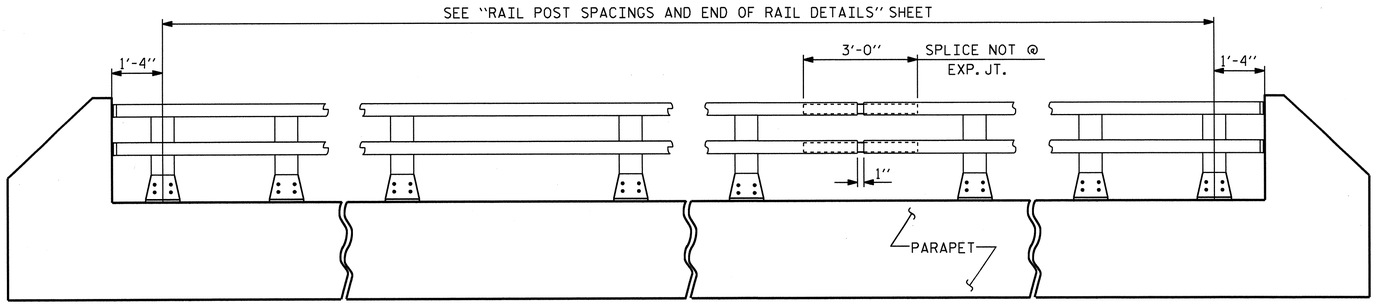

ELEVATION

NOTE : FOR ATTACHMENT OF METAL RAIL TO END POST, SEE SHEET 2 OF 3.

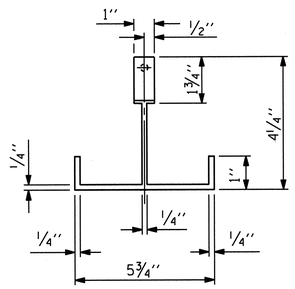

PLAN

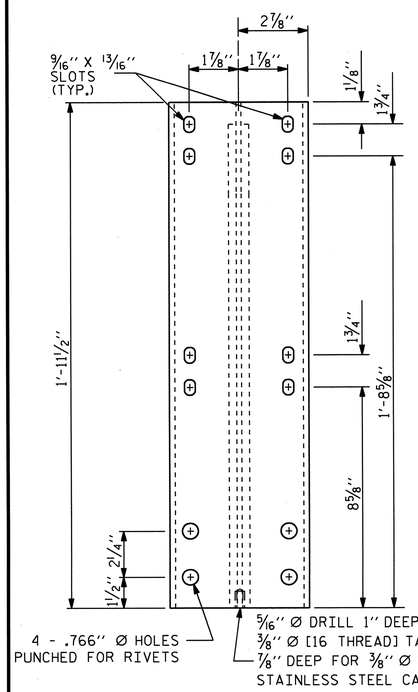

FRONT ELEVATION

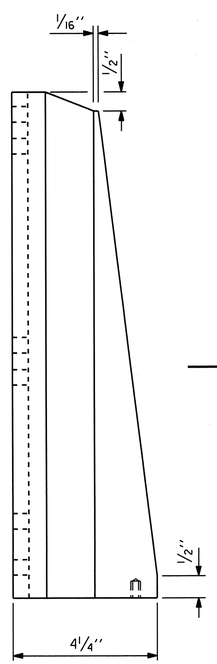

SIDE ELEVATION

DETAILS OF POST

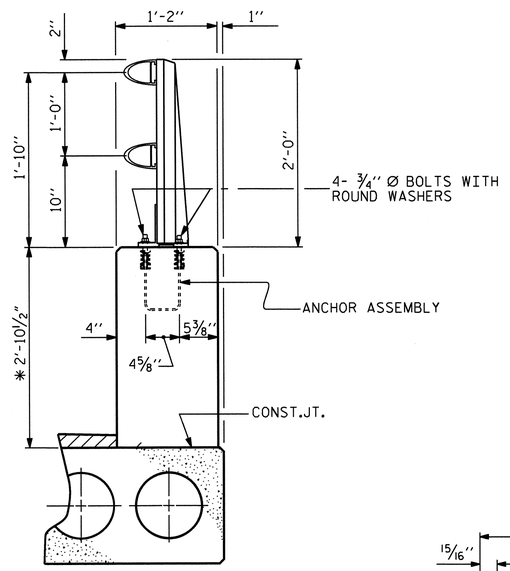

SECTION THRU PARAPET AND RAIL

* THE MAXIMUM HEIGHT OF THE PARAPET IS SHOWN. THE HEIGHT OF THE PARAPET FOLLOWS THE PROFILE OF THE GUTTERLINE.

FOR SECTION THRU PARAPET AND RAIL ON SPECIAL APPROACH PAVEMENT, SEE "SPECIAL APPROACH PAVEMENT" SHEETS.

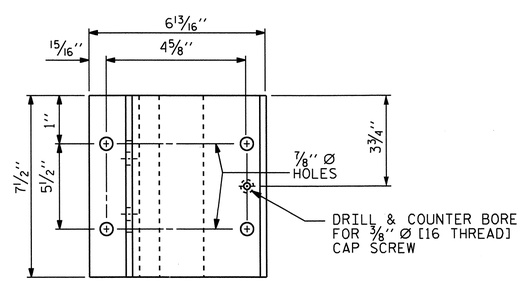

PLAN

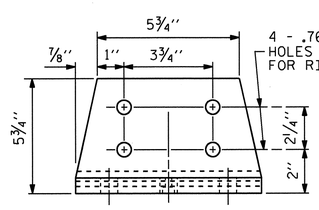

FRONT ELEVATION

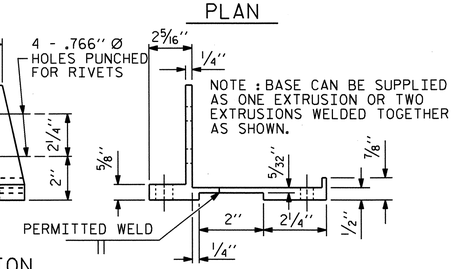

SIDE ELEVATION

POST BASE DETAILS

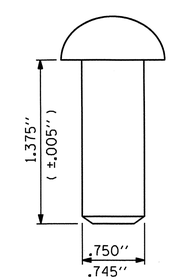

RIVET DETAIL

NOTES

THE METAL RAIL SHALL BE ALUMINUM AND IN ACCORDANCE WITH THE REQUIREMENTS OF THE GENERAL NOTES AND THE FOLLOWING SPECIFICATIONS.

ALUMINUM RAILS

MATERIAL FOR POSTS, BASES AND RAILS, EXPANSION BARS AND CLAMP BARS SHALL BE ASTM B-221 ALLOY 6061-T6.

MATERIAL FOR RIVETS SHALL BE ASTM B316 ALLOY 6061-T6. RIVETS SHALL BE STANDARD BUTTON HEAD AND CONE POINT COLD DRIVEN AS PER DRAWING.

THE BASE OF RAIL POSTS, OR ANY OTHER ALUMINUM SURFACE IN CONTACT WITH CONCRETE SHALL BE THOROUGHLY COATED WITH AN ALUMINUM IMPREGNATED CAULKING COMPOUND OF APPROVED QUALITY.

MATERIAL FOR SHIMS TO BE ASTM B209 ALLOY 6061-T6.

GENERAL NOTES

RAILING SHALL BE CONTINUOUS FROM END POST TO END POST OF BRIDGE. EACH JOINT IN RAIL LENGTH SHALL BE SPLICED AS DETAILED. PANEL LENGTHS OF RAIL SHALL BE ATTACHED TO A MINIMUM OF THREE POSTS.

FOR END OF RAIL TO CLEAR FACE OF CONCRETE END POST DIMENSION, SEE STANDARD NO. BMR2.

CAP SCREWS SHALL BE ASTM F593 ALLOY 305 STAINLESS STEEL. WASHERS SHALL MEET THE REQUIREMENTS OF ASTM F844 EXCEPT THEY SHALL BE MADE FROM ALLOY 304 STAINLESS STEEL.

CERTIFIED MILL REPORTS ARE REQUIRED FOR RAILS AND POSTS. SHOP INSPECTION IS NOT REQUIRED.

METAL RAIL POSTS SHALL BE SET NORMAL TO CURB GRADE.

METHOD OF MEASUREMENT FOR METAL RAILS: FOR LENGTH OF METAL RAILS TO BE PAID FOR, SEE THE STANDARD SPECIFICATIONS.

CURVED RAIL USAGE: WHERE RAILS ARE TO BE USED ON BRIDGES ON HORIZONTAL AND/OR VERTICAL CURVATURE THE CONTRACTOR MAY, AT HIS OPTION, HAVE THE REQUIRED CURVATURE IN THE RAIL FORMED IN THE SHOP OR IN THE FIELD. IN EITHER EVENT, THE RAIL SHALL CONFORM WITHOUT BUCKLING OR KINKING TO THE REQUIRED CURVATURE IN A UNIFORM MANNER ACCEPTABLE TO THE ENGINEER.

TO INSURE FUTURE IDENTIFICATION OF THE FABRICATOR, A PERMANENT IDENTIFYING MARK SHALL BE PLACED ON EACH POST. THE METHOD OF MARKING AND LOCATION SHALL BE SUCH THAT IT DOES NOT DETRACT FROM THE APPEARANCE OF THE POST, BUT REMAINS VISIBLE AFTER RAIL PLACEMENT.

SHIMS SHALL BE USED AS NECESSARY FOR POST ALIGNMENT.

ALLOY 6351-T5 MAY BE SUBSTITUTED FOR ALLOY 6061-T6 WHERE APPLICABLE.

MINOR VARIATIONS IN DETAILS OF METAL RAIL WILL BE CONSIDERED. DETAILS OF SUCH VARIATIONS, IF DESIRED, SHALL BE SUBMITTED FOR APPROVAL.

GROOVED CONTRACTION JOINTS, 1/2" IN DEPTH, SHALL BE TOOLED IN ALL EXPOSED FACES OF THE PARAPET AND IN ACCORDANCE WITH ARTICLE 825-10(B) OF THE STANDARD SPECIFICATIONS. A CONTRACTION JOINT SHALL BE LOCATED AT EACH THIRD POINT BETWEEN PARAPET EXPANSION JOINTS. ONLY ONE CONTRACTION JOINT IS REQUIRED AT MIDPOINT OF PARAPET SEGMENTS LESS THAN 20 FEET IN LENGTH AND NO CONTRACTION JOINTS ARE REQUIRED FOR THOSE SEGMENTS LESS THAN 10 FEET IN LENGTH.

PAY LENGTH = 149.96 LIN. FT.

(PAY LENGTH INCLUDES 2 BAR METAL RAIL ON SPECIAL APPROACH PAVEMENT)

PROJECT NO. B-4147

HENDERSON COUNTY

STATION: 20+74.50 -L-

SHEET 1 OF 3

STATE OF NORTH CAROLINA
DEPARTMENT OF TRANSPORTATION
RALEIGH

STANDARD

2 BAR METAL RAIL

NORTH CAROLINA PROFESSIONAL SEAL 20125 ENGINEER MARSHALL G. CHEEK, JR.
11-26-12

ASSEMBLED BY : J.R. MCROY	DATE : 7/12
CHECKED BY : M.G. CHEEK	DATE : 8/12
DRAWN BY : EEM 6/94	REV. 5/7/03R RWW/JTE
CHECKED BY : RGW 6/94	REV. 5/1/06 TLA/GM
	REV. 10/1/11 MAA/GM

REVISIONS						SHEET NO.
NO.	BY:	DATE:	NO.	BY:	DATE:	S-8
1			3			TOTAL SHEETS
2			4			39

STR. #1

STD. NO. BMR3

26-NOV-2012 09:30
R:\Structures\Plans\Final Plans\Str_#1\B4147_01_cored-slab.dgn
mpoole

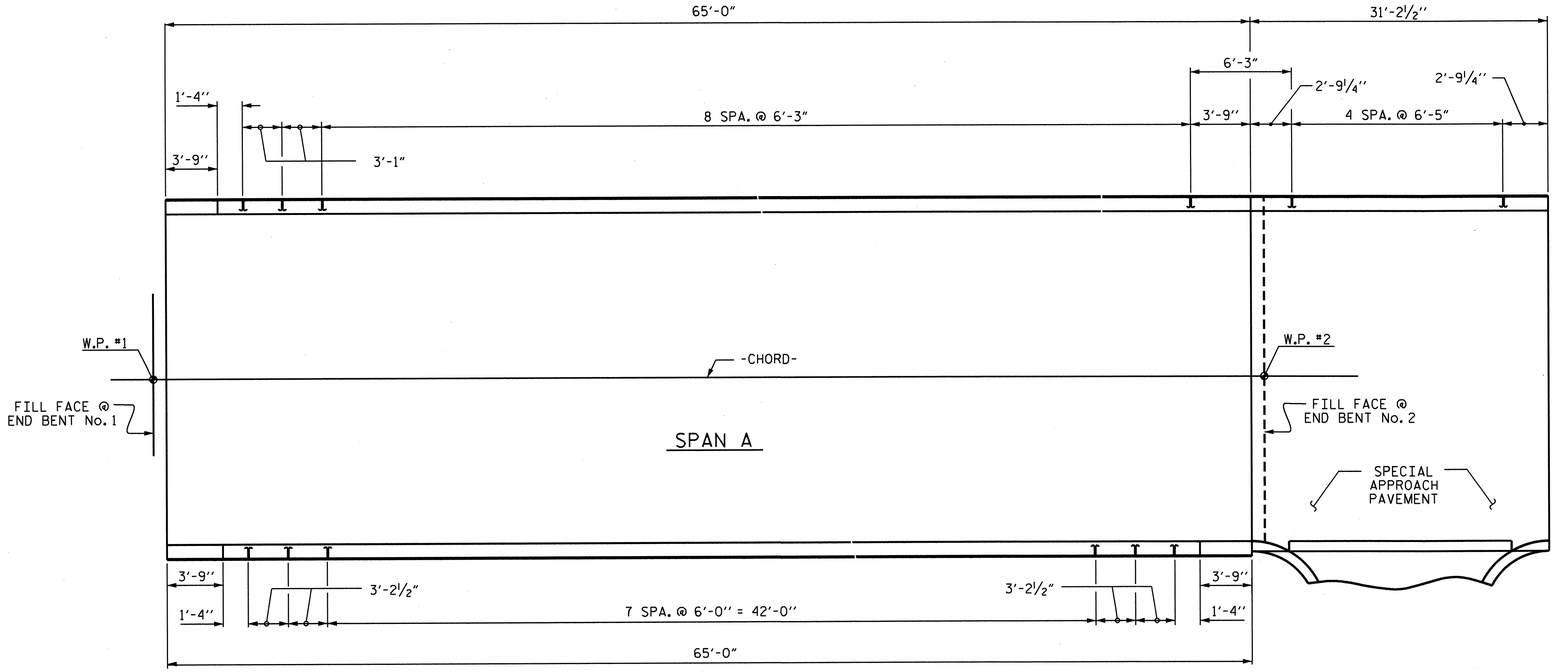

PLAN OF RAIL POST SPACINGS

FOR SPECIAL APPROACH PAVEMENT, SEE "SPECIAL APPROACH PAVEMENT" SHEETS.

NOTES

STRUCTURAL CONCRETE INSERT

THE STRUCTURAL CONCRETE INSERT ASSEMBLY SHALL CONSIST OF THE FOLLOWING COMPONENTS:

A. FERRULES SHALL BE MADE FROM STEEL MEETING THE REQUIREMENTS OF AASHTO M169, GRADE 12L14 AND SHALL HAVE A MINIMUM LENGTH OF THREADS OF 1½".

B. 1 - ¾" Ø X 1⅝" BOLT WITH WASHER. BOLT SHALL CONFORM TO THE REQUIREMENTS OF ASTM A307. BOLT AND WASHER SHALL BE GALVANIZED. (AT THE CONTRACTOR'S OPTION, STAINLESS STEEL BOLT AND WASHER MAY BE USED AS AN ALTERNATE FOR THE ¾" Ø X 1⅝" GALVANIZED BOLT AND WASHER. THEY SHALL CONFORM TO OR EXCEED THE MECHANICAL REQUIREMENTS OF ASTM A307. THE USE OF THIS ALTERNATE SHALL BE APPROVED BY THE ENGINEER.)

C. WIRE STRUT SHOWN IN THE CONCRETE INSERT ASSEMBLY DETAIL IS THE MINIMUM ALLOWABLE SIZE AND SHALL HAVE A MINIMUM TENSILE STRENGTH OF 100,000 PSI. AS AN OPTION, A 7/16" Ø WIRE STRUT WITH A MINIMUM TENSILE STRENGTH OF 90,000 PSI IS ACCEPTABLE.

NOTES

METAL RAIL TO END POST CONNECTION

THE METAL RAIL TO END POST CONNECTION SHALL CONSIST OF THE FOLLOWING COMPONENTS:

A. ½" PLATES SHALL CONFORM TO AASHTO M270 GRADE 36 AND SHALL BE GALVANIZED AFTER FABRICATION.

B. ¾" STRUCTURAL CONCRETE INSERT SHALL HAVE A WORKING LOAD SHEAR CAPACITY OF 4800 LBS. THE FERRULES SHALL ENGAGE A ¾"Ø X 1⅝" BOLT WITH 2" O.D. WASHER IN PLACE. THE ¾"Ø X 1⅝" BOLT SHALL HAVE N. C. THREADS.

C. CAP SCREWS FOR RAIL ATTACHMENT TO ANGLE SHALL CONFORM TO THE REQUIREMENTS OF ASTM F593 ALLOY 305 STAINLESS STEEL. CAP SCREWS TO BE CENTERED IN SLOTS AT 60°F.

D. STANDARD CLAMP BARS (SEE METAL RAIL SHEET 3 OF 3).

E. ½" Ø PIPE SLEEVES (IF REQUIRED) TO BE GALVANIZED.

THE COST OF THE STANDARD CLAMP BARS AND CAP SCREWS USED IN THE METAL RAIL TO END POST CONNECTION SHALL BE INCLUDED IN THE UNIT CONTRACT PRICE BID FOR LINEAR FEET OF 1 OR 2 BAR METAL RAILS.

THE ¾" STRUCTURAL CONCRETE INSERT WITH BOLT SHALL BE ASSEMBLED IN THE SHOP.

THE COST OF THE ¾" STRUCTURAL CONCRETE INSERT ASSEMBLY, AND THE ½" PLATES COMPLETE IN PLACE SHALL BE INCLUDED IN THE VARIOUS PAY ITEMS.

THE CONTRACTOR, AT HIS OPTION, MAY USE AN ADHESIVE BONDING SYSTEM IN LIEU OF THE STRUCTURAL CONCRETE INSERT EMBEDDED IN THE END POST. IF THE ADHESIVE BONDING SYSTEM IS USED, THE ¾" Ø X 1⅝" BOLT WITH WASHER SHALL BE REPLACED WITH A ¾"Ø X 6½" BOLT AND 2" O.D. WASHER. ALL SPECIFICATIONS THAT APPLY TO THE ¾" Ø X 1⅝" BOLT SHALL APPLY TO THE ¾"Ø X 6 ½" BOLT. FIELD TESTING OF THE ADHESIVE BONDING SYSTEM IS NOT REQUIRED.

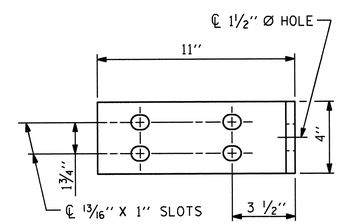

ELEVATION

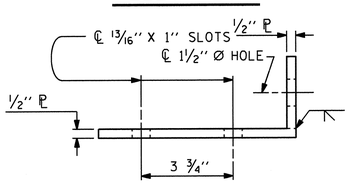

TOP VIEW

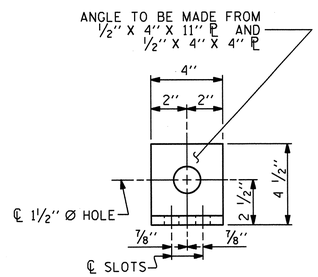

END VIEW (FIX AND EXP.)

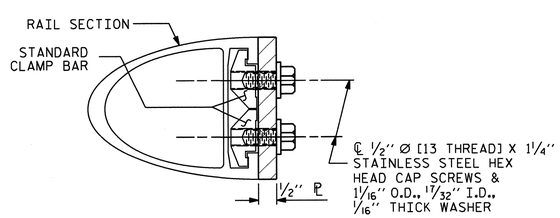

SECTION H-H (FIX)

FIXED

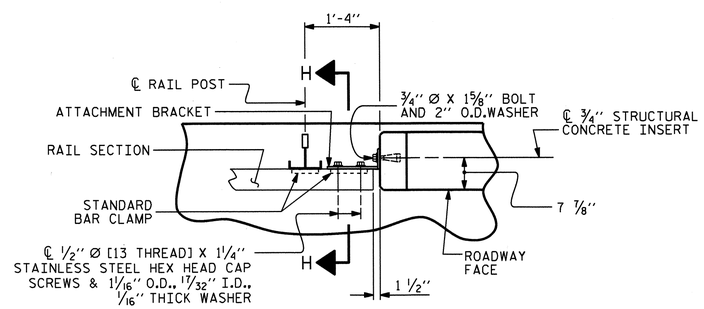

PLAN - RAIL AND END POST

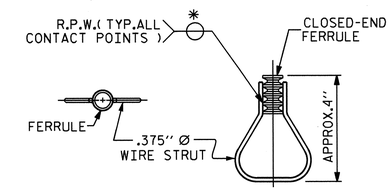

STRUCTURAL CONCRETE INSERT

* EACH WELDED ATTACHMENT OF WIRE TO FERRULE SHALL DEVELOP THE TENSILE STRENGTH OF THE WIRE.

DETAILS FOR ATTACHING METAL RAIL TO END POST

PROJECT NO. B-4147

HENDERSON COUNTY

STATION: 20+74.50 -L-

SHEET 2 OF 3

STATE OF NORTH CAROLINA
DEPARTMENT OF TRANSPORTATION
RALEIGH

STANDARD

RAIL POST SPACINGS
AND
END OF RAIL DETAILS

FOR TWO BAR METAL RAILS

NORTH CAROLINA PROFESSIONAL SEAL 20125 ENGINEER MARSHALL G. CHEEK, JR.
11-26-12

ASSEMBLED BY : J.R. MCROY	DATE : 7/12
CHECKED BY : M.G. CHEEK	DATE : 8/12

DRAWN BY : FCJ 1/88	REV. 5/7/03 RWW/JTE
CHECKED BY : CRK 3/89	REV. 5/1/06 TLA/GM
	REV. 10/1/11 MAA/GM

REVISIONS							SHEET NO.
NO.	BY:	DATE:	NO.	BY:	DATE:		S-9
1			3				TOTAL SHEETS
2			4				39

STR. #1

STD. NO. BMR2

26-NOV-2012 09:30
R:\Structures\Plans\Final Plans\Str_#1\B4147_01_cored-slab.dgn
mpoole

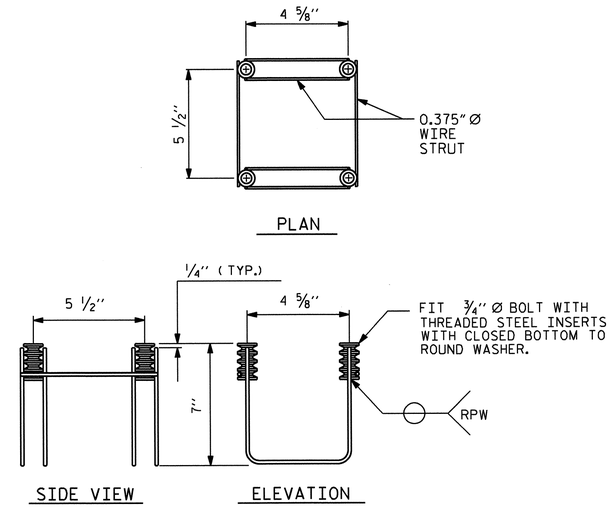

4-BOLT METAL RAIL ANCHOR ASSEMBLY

(28 ASSEMBLIES REQUIRED)
(INCLUDES ANCHOR ASSEMBLIES REQUIRED FOR 2 BAR METAL RAIL ON SPECIAL APPROACH PAVEMENT.)

NOTES

STRUCTURAL CONCRETE ANCHOR ASSEMBLY

THE STRUCTURAL CONCRETE ANCHOR ASSEMBLY SHALL CONSIST OF THE FOLLOWING COMPONENTS :

A. FERRULES SHALL BE MADE FROM STEEL MEETING THE REQUIREMENTS OF AASHTO M169, GRADE 12L14 AND SHALL HAVE A MINIMUM LENGTH OF THREADS OF 2" FOR 3/4" FERRULES.

B. 4 - 3/4" Ø X 2 1/2" BOLTS WITH WASHERS. BOLTS SHALL CONFORM TO THE REQUIREMENTS OF ASTM A307. BOLTS AND WASHERS SHALL BE GALVANIZED. AT THE CONTRACTOR'S OPTION, STAINLESS STEEL BOLTS AND WASHERS MAY BE USED AS AN ALTERNATE FOR THE 3/4" Ø X 2 1/2" GALVANIZED BOLTS AND WASHERS. THEY SHALL CONFORM TO OR EXCEED THE MECHANICAL REQUIREMENTS OF ASTM A307. THE USE OF THIS ALTERNATE SHALL BE APPROVED BY THE ENGINEER.

C. WIRE STRUT SHOWN IN THE CONCRETE ANCHOR ASSEMBLY DETAIL IS THE MINIMUM ALLOWABLE SIZE AND SHALL HAVE A MINIMUM TENSILE STRENGTH OF 100,000 PSI. AS AN OPTION, A 7/16" Ø WIRE STRUT WITH A MINIMUM TENSILE STRENGTH OF 90,000 PSI IS ACCEPTABLE.

D. THE METAL RAIL ANCHOR ASSEMBLIES TO BE HOT DIPPED GALVANIZED TO CONFORM TO REQUIREMENTS OF AASHTO M111.

E. THE COST OF THE METAL RAIL ANCHOR ASSEMBLY WITH BOLTS AND WASHERS COMPLETE IN PLACE SHALL BE INCLUDED IN THE PRICE BID FOR LINEAR FEET OF METAL RAIL.

F. BOLTS TO BE TIGHTENED ONE-HALF TURN WITH A WRENCH FROM A FINGER-TIGHT POSITION.

THE CONTRACTOR MAY USE ADHESIVELY ANCHORED ANCHOR BOLTS IN PLACE OF THE METAL RAIL ANCHOR ASSEMBLY. LEVEL ONE FIELD TESTING IS REQUIRED, AND THE YIELD LOAD OF THE 3/4" Ø BOLT IS 10 KIPS. FOR ADHESIVELY ANCHORED ANCHOR BOLTS OR DOWELS, SEE THE STANDARD SPECIFICATIONS.

WHEN ADHESIVELY ANCHORED ANCHOR BOLTS ARE USED, BOLTS SHALL MEET THE REQUIREMENTS OF ASTM F593 ALLOY 304 STAINLESS STEEL WITH MINIMUM 75,000 PSI ULTIMATE STRENGTH. NUTS SHALL MEET THE REQUIREMENTS OF ASTM F594 ALLOY 304 STAINLESS STEEL AND WASHERS SHALL MEET THE REQUIREMENTS OF ASTM F844 EXCEPT THEY SHALL BE MADE FROM ALLOY 304 STAINLESS STEEL.

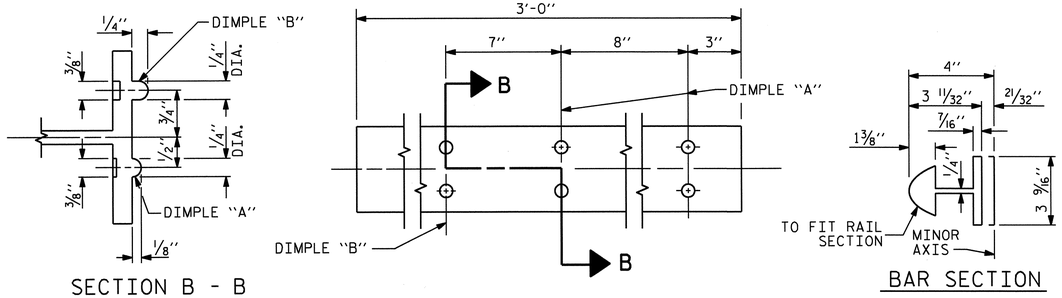

EXPANSION BAR DETAILS

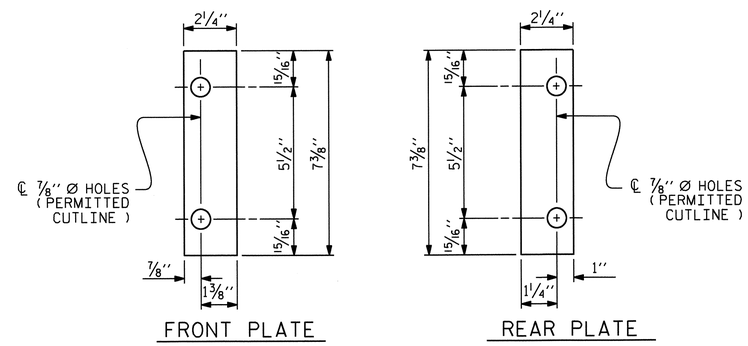

SHIM DETAILS

NOTE :
SHIMS MAY BE CUT ALONG PERMITTED CUTLINE OR SLOTTED TO EDGE OF PLATE TO FACILITATE PLACEMENT.

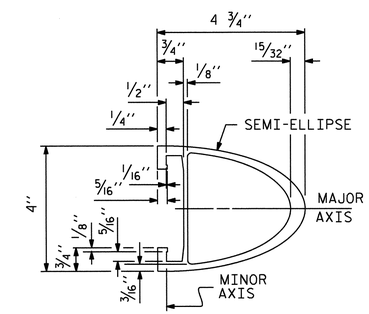

RAIL SECTION

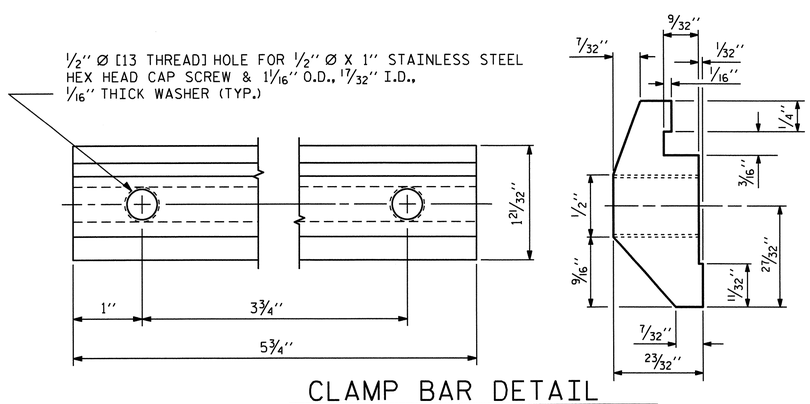

CLAMP BAR DETAIL
(4 REQUIRED PER POST)

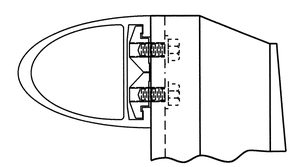

CLAMP ASSEMBLY

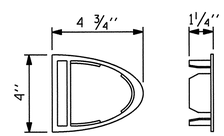

RAIL CAP

PROJECT NO. B-4147
HENDERSON COUNTY
STATION: 20+74.50 -L-

SHEET 3 OF 3

STATE OF NORTH CAROLINA
DEPARTMENT OF TRANSPORTATION
RALEIGH

STANDARD

2 BAR METAL RAIL

NORTH CAROLINA PROFESSIONAL SEAL 20125 ENGINEER MARSHALL L. GRAY, JR.
11-26-12

REVISIONS								SHEET NO.
NO.	BY:	DATE:	NO.	BY:	DATE:			S-10
1			3					TOTAL SHEETS
2			4					39

ASSEMBLED BY : J.R. MCROY		DATE : 7/12	
CHECKED BY : M.G. CHEEK		DATE : 8/12	
DRAWN BY : EEM 6/94	REV. 8/16/99	MAB/LES	
CHECKED BY : RGW 6/94	REV. 5/1/06R	KMM/GM	
	REV. 10/1/11	MAA/GM	

05-SEP-2012 08:45
R:\Structures\Plans\Final Plans\Str_#1\B4147_01_cored-slab.dgn
mpoole

STR. #1

STD. NO. BMR4

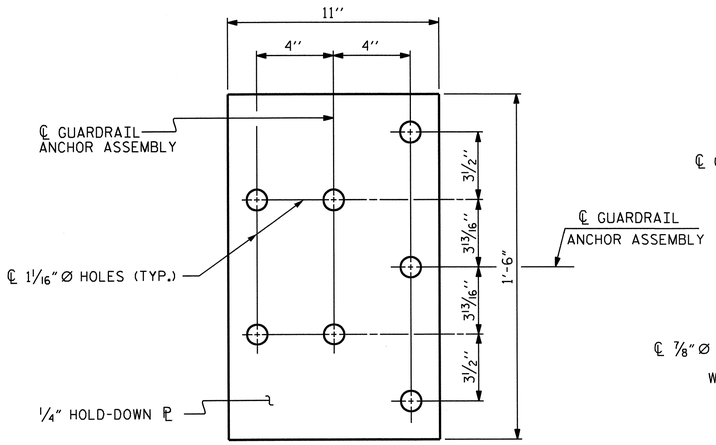

PLAN

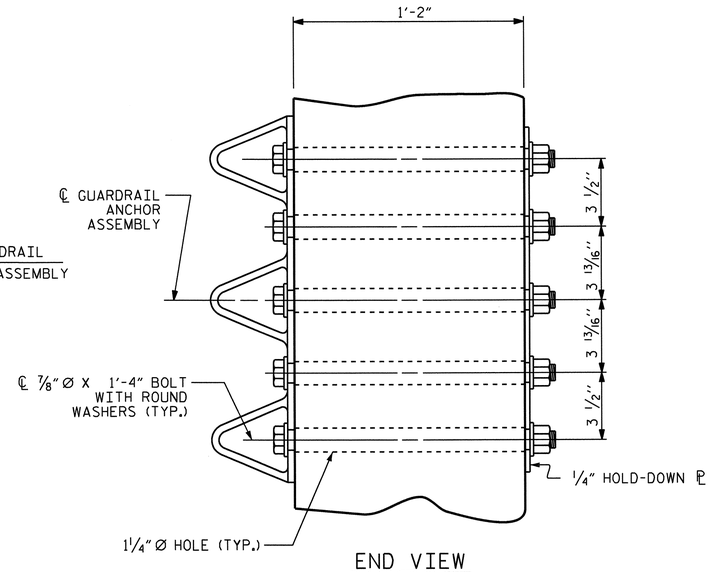

END VIEW

GUARDRAIL ANCHOR ASSEMBLY DETAILS

NOTES

THE GUARDRAIL ANCHOR ASSEMBLY SHALL CONSIST OF A 1/4'' HOLD DOWN PLATE AND 7 - 7/8'' Ø BOLTS WITH NUTS AND WASHERS.

THE HOLD-DOWN PLATE SHALL CONFORM TO AASHTO M270 GRADE 36. AFTER FABRICATION, THE HOLD-DOWN PLATE SHALL BE HOT-DIP GALVANIZED IN ACCORDANCE WITH AASHTO M111.

BOLTS SHALL CONFORM TO THE REQUIREMENTS OF ASTM A307 AND NUTS SHALL CONFORM TO THE REQUIREMENTS OF AASHTO M291. BOLTS, NUTS AND WASHERS SHALL BE GALVANIZED. AT THE CONTRACTOR'S OPTION, STAINLESS STEEL BOLTS, NUTS AND WASHERS MAY BE USED AS AN ALTERNATE FOR THE 7/8'' Ø GALVANIZED BOLTS, NUTS AND WASHERS. THEY SHALL CONFORM TO OR EXCEED THE MECHANICAL REQUIREMENTS OF ASTM A307. THE USE OF THIS ALTERNATE SHALL BE APPROVED BY THE ENGINEER.

THE GUARDRAIL ANCHOR ASSEMBLY IS REQUIRED AT ALL POINTS WHERE APPROACH GUARDRAIL IS TO BE ATTACHED TO THE END OF THE PARAPET. FOR POINTS OF ATTACHMENT, SEE SKETCH.

AFTER INSTALLATION, THE EXPOSED THREAD OF THE BOLT SHALL BE BURRED WITH A SHARP POINTED TOOL.

THE COST OF THE GUARDRAIL ANCHOR ASSEMBLIES WITH BOLTS, NUTS AND WASHERS COMPLETE IN PLACE, SHALL BE INCLUDED IN THE VARIOUS PAY ITEMS.

THE VERTICAL REINFORCING BARS MAY BE SHIFTED SLIGHTLY IN THE END POST TO CLEAR ASSEMBLY BOLTS.

THE 1 1/4'' Ø HOLES SHALL BE FORMED OR DRILLED WITH A CORE BIT. IMPACT TOOLS WILL NOT BE PERMITTED. ANY CONCRETE DAMAGED BY THIS WORK SHALL BE REPAIRED TO THE SATISFACTION OF THE ENGINEER.

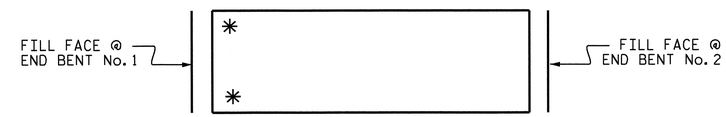

SKETCH SHOWING POINTS OF ATTACHMENT

* LOCATION OF GUARDRAIL ATTACHMENT

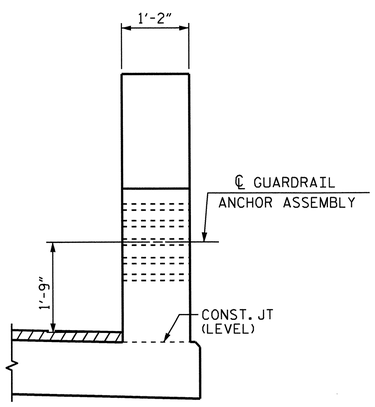

END VIEW

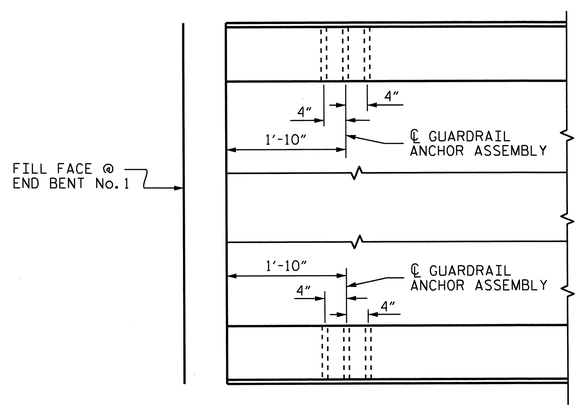

PLAN

LOCATION OF GUARDRAIL ANCHOR AT END POST

PROJECT NO. B-4147
HENDERSON COUNTY
STATION: 20+74.50 -L-

STATE OF NORTH CAROLINA
DEPARTMENT OF TRANSPORTATION
RALEIGH

GUARDRAIL ANCHORAGE DETAILS FOR METAL RAILS

NORTH CAROLINA PROFESSIONAL SEAL 20125 ENGINEER M.G. CHEEK, JR. 11-26-12

REVISIONS						SHEET NO.
NO.	BY:	DATE:	NO.	BY:	DATE:	S-11
1			3			TOTAL SHEETS
2			4			39

ASSEMBLED BY : J.R. MCROY	DATE : 7/12		
CHECKED BY : M.G. CHEEK	DATE : 8/12		
DRAWN BY : EEM 6/94	REV. 8/16/99	MAB/LES	
CHECKED BY : RGW 6/94	REV. 5/1/06R	KMM/GM	
	REV. 10/1/11	MAA/GM	

STR. #1

05-SEP-2012 08:45
R:\Structures\Plans\FinalPlans\Str_#1\B4147_01_cored-slab.dgn
mpoole

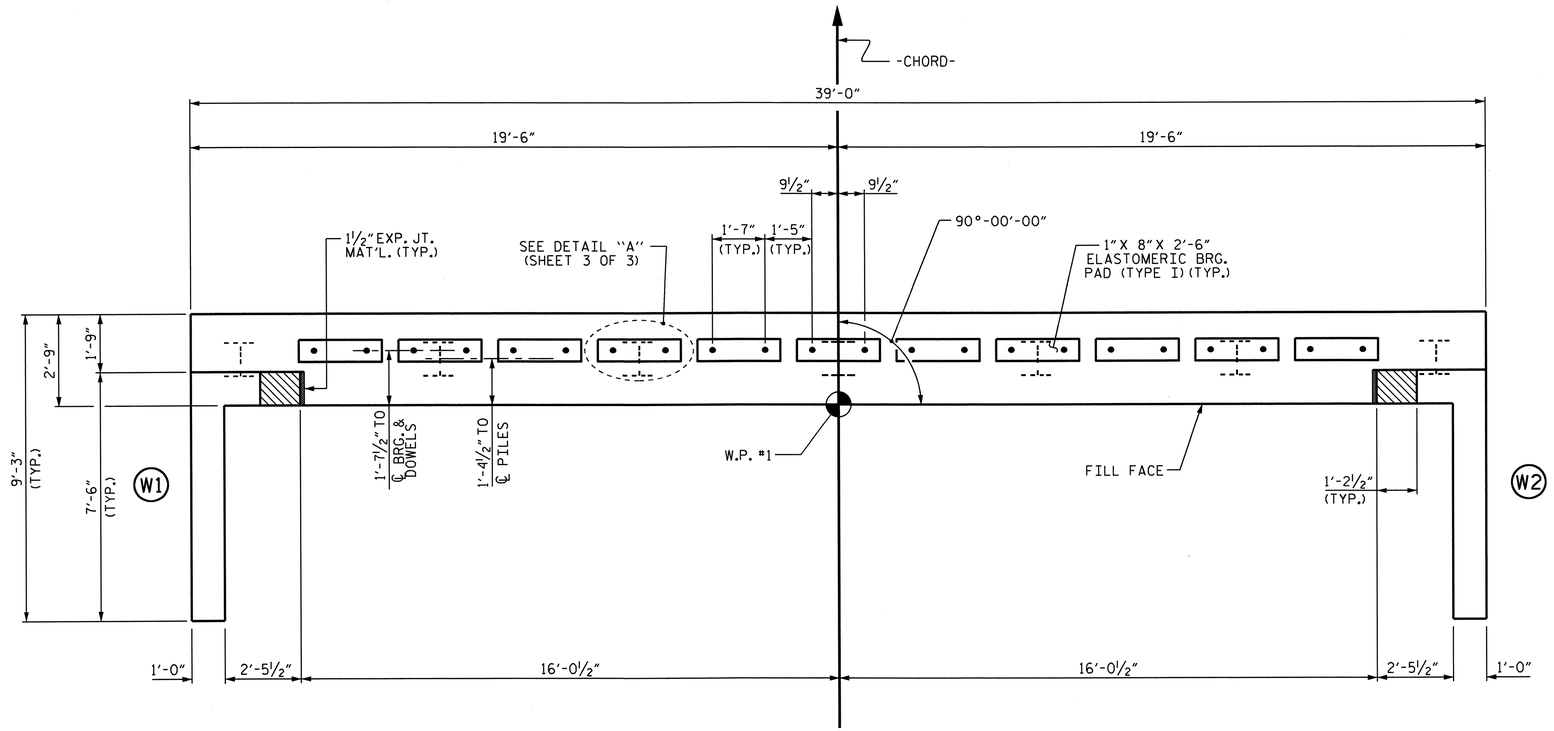

PLAN

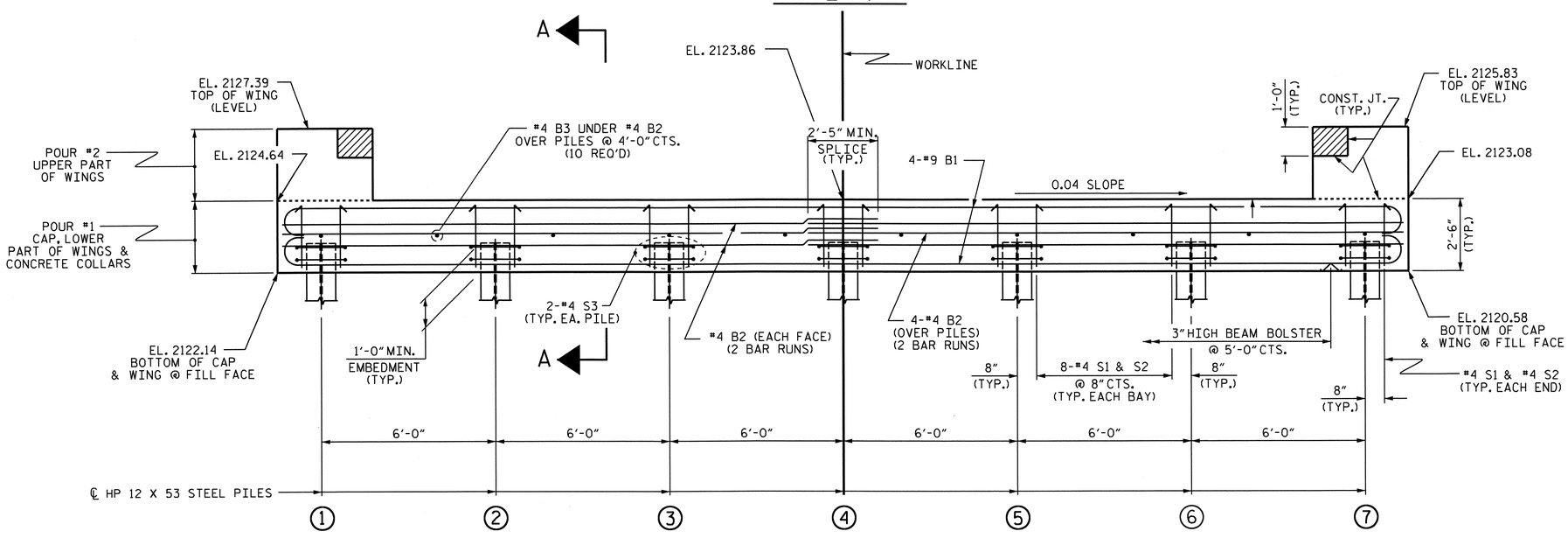

ELEVATION

WINGS NOT SHOWN FOR CLARITY. FOR SECTION A-A, SEE SHEET 3 OF 3.
CONCRETE COLLARS FOR STEEL PILES NOT SHOWN IN PLAN AND ELEVATION VIEWS FOR CLARITY.
SEE "CORROSION PROTECTION FOR STEEL PILES DETAIL", SHEET 3 OF 3.

NOTES

STIRRUPS IN CAP MAY BE SHIFTED AS NECESSARY TO CLEAR DOWELS.

FOR CORROSION PROTECTION OF STEEL PILES, SEE SHEET 3 OF 3.

THE CONCRETE IN THE SHADED AREA OF THE WING SHALL BE POURED AFTER THE PARAPET IS CAST IF SLIP FORMING IS USED.

FOR PILE SPLICE DETAILS, SEE SHEET 3 OF 3.

FOR WING DETAILS, SEE SHEET 2 OF 3.

TOP OF PILE ELEVATIONS	
1	2123.10
2	2122.86
3	2122.62
4	2122.38
5	2122.14
6	2121.90
7	2121.66

PROJECT NO. B-4147
HENDERSON COUNTY
STATION: 20+74.50 -L-

SHEET 1 OF 3

STATE OF NORTH CAROLINA
DEPARTMENT OF TRANSPORTATION
RALEIGH

SUBSTRUCTURE

END BENT No. 1

NORTH CAROLINA PROFESSIONAL SEAL 20125 ENGINEER MARSHALL L. CHEEK, JR. 11-26-12

REVISIONS						SHEET NO.
NO.	BY:	DATE:	NO.	BY:	DATE:	S-12
1			3			TOTAL SHEETS
2			4			38

ASSEMBLED BY :	J.R. MCROY	DATE :	6/12
CHECKED BY :	M.G. CHEEK	DATE :	8/12
DRAWN BY :	DGE	02/10	
CHECKED BY :	MKT	02/10	

05-SEP-2012 08:58
R:\Structures\Plans\FinalPlans\Str_#1\B4147_SD_01_EB.dgn
mpoole

STR. #1

STD. NO. EB_33_90S

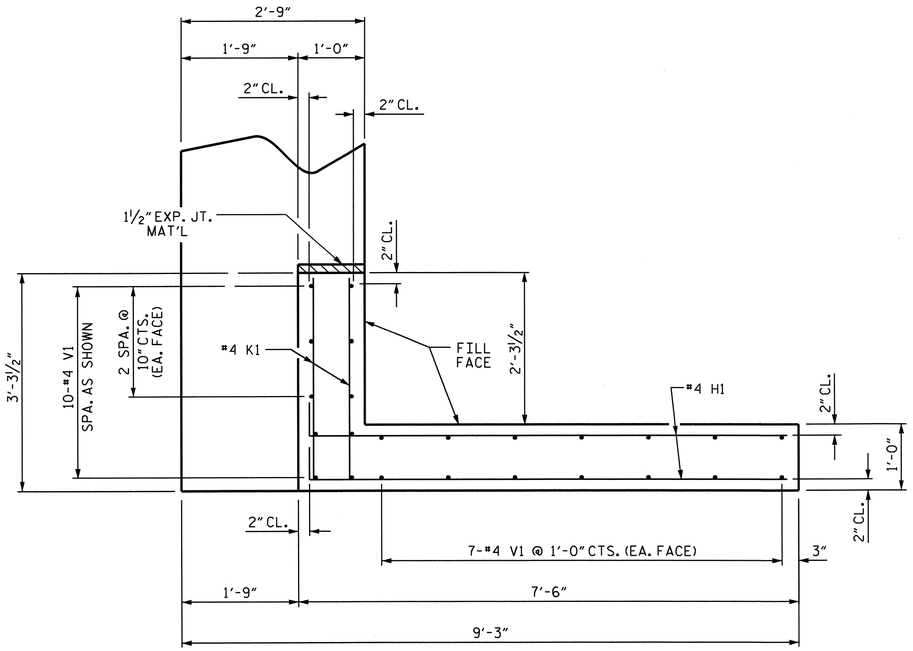

PLAN OF WING (W1)

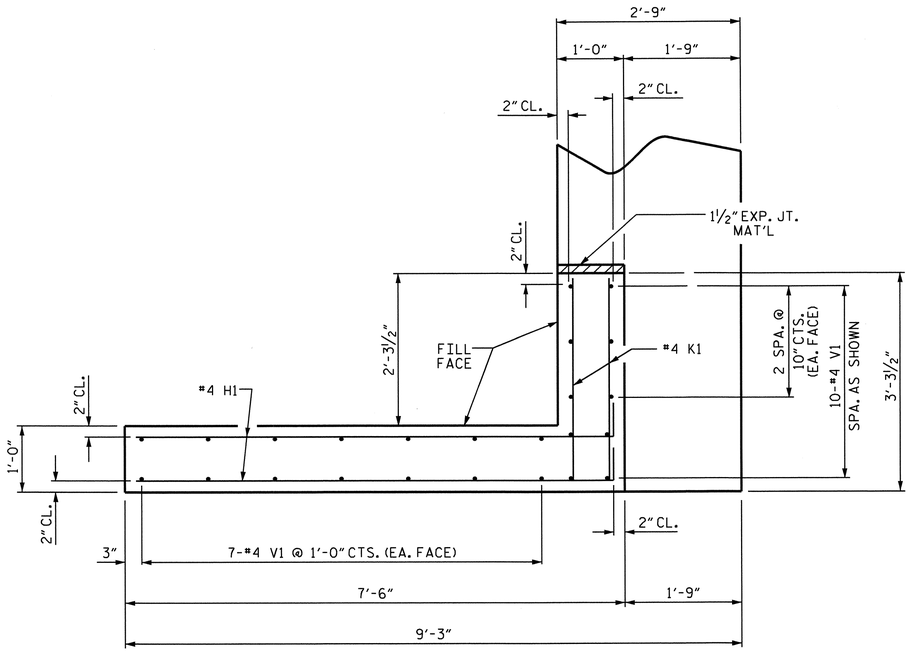

PLAN OF WING (W2)

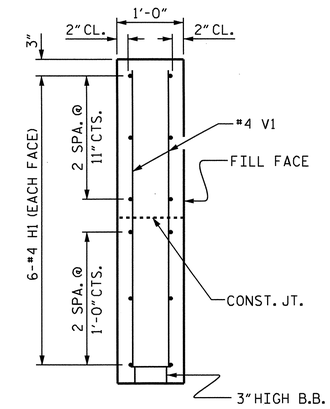

SECTION X-X

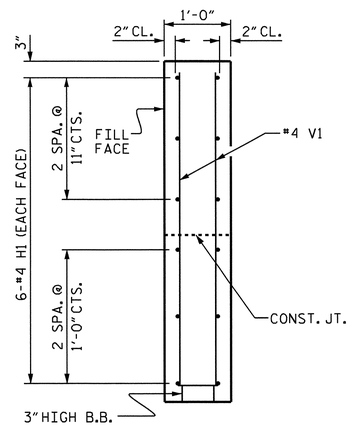

SECTION Y-Y

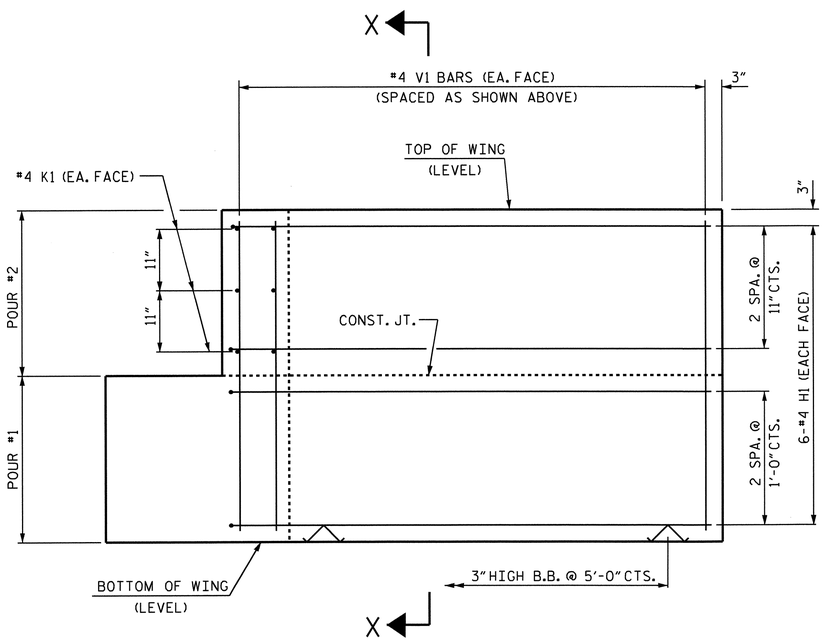

ELEVATION OF WING (W1)

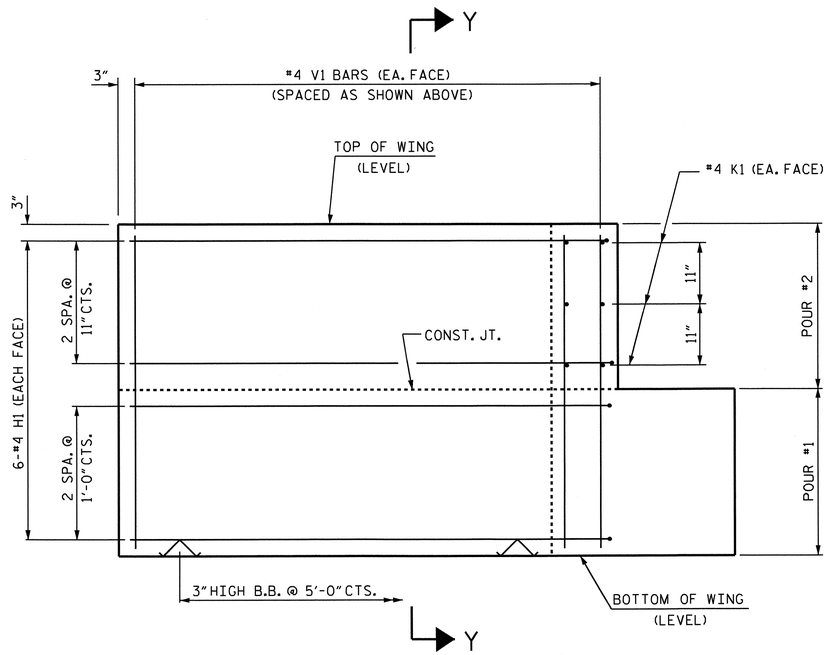

ELEVATION OF WING (W2)

WING DETAILS

PROJECT NO. B-4147

HENDERSON COUNTY

STATION: 20+74.50 -L-

SHEET 2 OF 3

STATE OF NORTH CAROLINA
DEPARTMENT OF TRANSPORTATION
RALEIGH

SUBSTRUCTURE

END BENT No. 1
WING DETAILS

NORTH CAROLINA PROFESSIONAL SEAL 20125 ENGINEER MARSHALL G. CHEEK, JR.
11-26-12

REVISIONS						SHEET NO.
NO.	BY:	DATE:	NO.	BY:	DATE:	S-13
1			3			TOTAL SHEETS
2			4			38

ASSEMBLED BY : J.R. MCROY		DATE :	6/12
CHECKED BY : M.G. CHEEK		DATE :	8/12
DRAWN BY : DGE	02/10		
CHECKED BY : MKT	02/10		

05-SEP-2012 08:58
R:\Structures\Plans\FinalPlans\Str_#1\B4147_SD_01_EB.dgn
mpoole

STR. #1

STD. NO. EB_33_90S

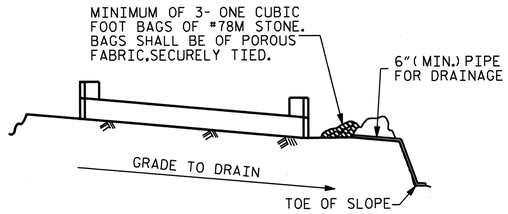

BAGGED STONE AND PIPE SHALL BE PLACED IMMEDIATELY AFTER COMPLETION OF END BENT EXCAVATION. PIPE MAY BE EITHER CONCRETE, CORRUGATED STEEL, CORRUGATED ALUMINUM ALLOY, OR CORRUGATED PLASTIC. PERFORATED PIPE WILL NOT BE ALLOWED.

BAGGED STONE SHALL REMAIN IN PLACE UNTIL THE ENGINEER DIRECTS THAT IT BE REMOVED. THE CONTRACTOR SHALL REMOVE AND DISPOSE OF SILT ACCUMULATIONS AT BAGGED STONE WHEN SO DIRECTED BY THE ENGINEER. BAGS SHALL BE REMOVED AND REPLACED WHENEVER THE ENGINEER DETERMINES THAT THEY HAVE DETERIORATED AND LOST THEIR EFFECTIVENESS.

NO SEPARATE PAYMENT WILL BE MADE FOR THIS WORK AND THE ENTIRE COST OF THIS WORK SHALL BE INCLUDED IN THE UNIT CONTRACT PRICE BID FOR THE SEVERAL PAY ITEMS.

TEMPORARY DRAINAGE AT END BENT

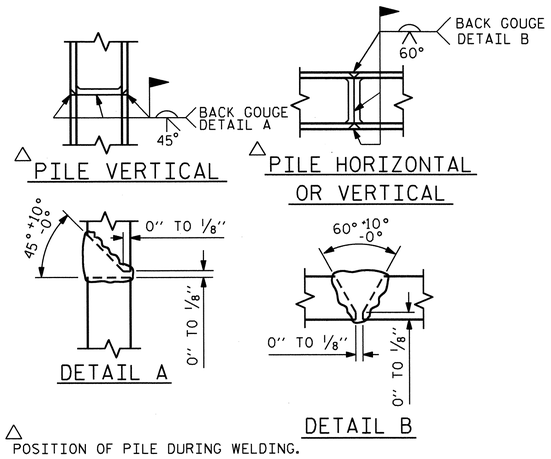

△ POSITION OF PILE DURING WELDING.

PILE SPLICE DETAILS

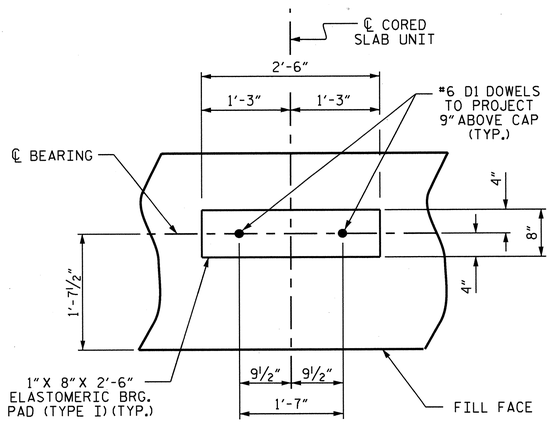

DETAIL "A"

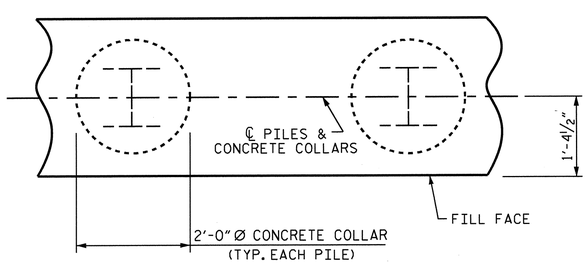

PLAN

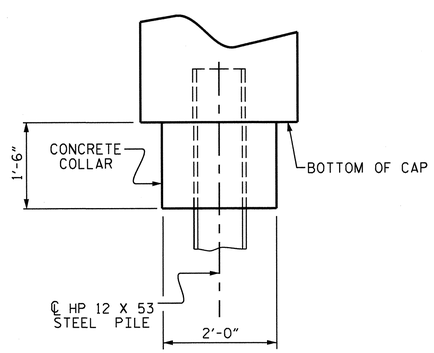

ELEVATION

CORROSION PROTECTION FOR STEEL PILES DETAIL

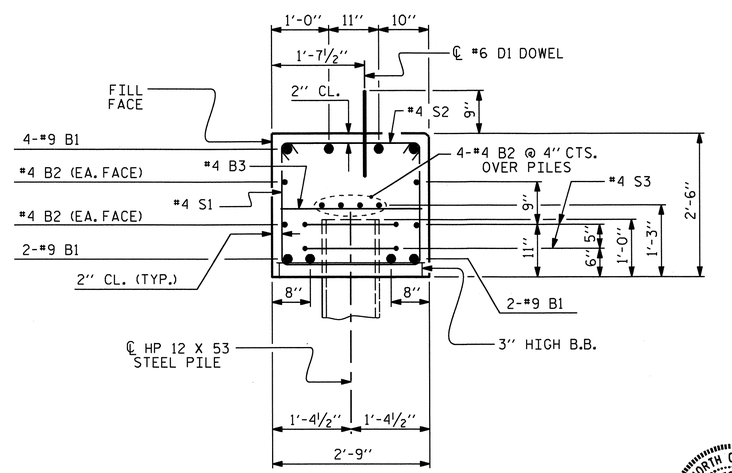

SECTION A-A

(CONCRETE COLLAR NOT SHOWN FOR CLARITY. SEE "CORROSION PROTECTION FOR STEEL PILES DETAIL.")

BAR TYPES

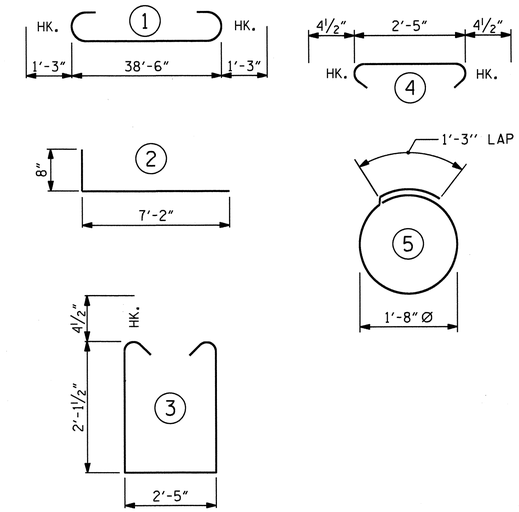

ALL BAR DIMENSIONS ARE OUT TO OUT.

BILL OF MATERIAL

END BENT No. 1

BAR	NO.	SIZE	TYPE	LENGTH	WEIGHT
B1	8	#9	1	41'-0"	1115
B2	16	#4	STR	20'-7"	220
B3	10	#4	STR	2'-5"	16
D1	22	#6	STR	1'-6"	50
H1	24	#4	2	7'-10"	126
K1	12	#4	STR	2'-11"	23
S1	50	#4	3	7'-5"	248
S2	50	#4	4	3'-2"	106
S3	14	#4	5	6'-6"	61
V1	48	#4	STR	4'-8"	150

REINFORCING STEEL 2115 LBS.

CLASS A CONCRETE BREAKDOWN (FOR ONE END BENT)

POUR #1	CAP, LOWER PART OF WINGS & COLLARS	12.4 CU. YDS.
POUR #2	UPPER PART OF WINGS	2.0 CU. YDS.
TOTAL CLASS A CONCRETE		14.4 CU. YDS.

HP 12 X 53 STEEL PILES

NO: 7 LIN. FT.= 265

PROJECT NO. B-4147

HENDERSON COUNTY

STATION: 20+74.50 -L-

SHEET 3 OF 3

STATE OF NORTH CAROLINA
DEPARTMENT OF TRANSPORTATION
RALEIGH

SUBSTRUCTURE

END BENT No. 1 DETAILS

NORTH CAROLINA PROFESSIONAL SEAL 20125 ENGINEER MARSHALL G. CHEEK, JR. 11-26-12

REVISIONS						SHEET NO.
NO.	BY:	DATE:	NO.	BY:	DATE:	S-14
1			3			TOTAL SHEETS
2			4			39

ASSEMBLED BY : J.R. MCROY	DATE : 6/12
CHECKED BY : M.G. CHEEK	DATE : 8/12
DRAWN BY : DGE 02/10	
CHECKED BY : MKT 02/10	

26-NOV-2012 09:29
R:\Structures\Plans\FinalPlans\Str_#1\B4147_SD_01_EB.dgn
mpoole

STR. #1

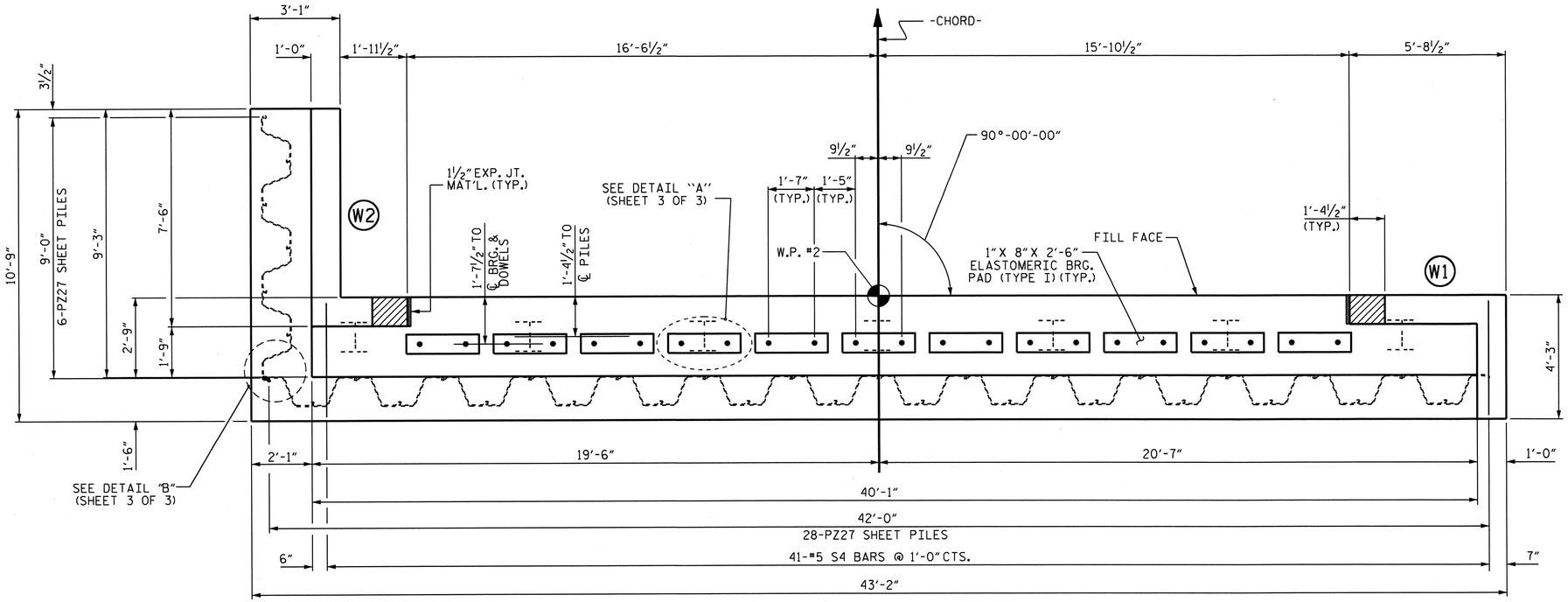

PLAN

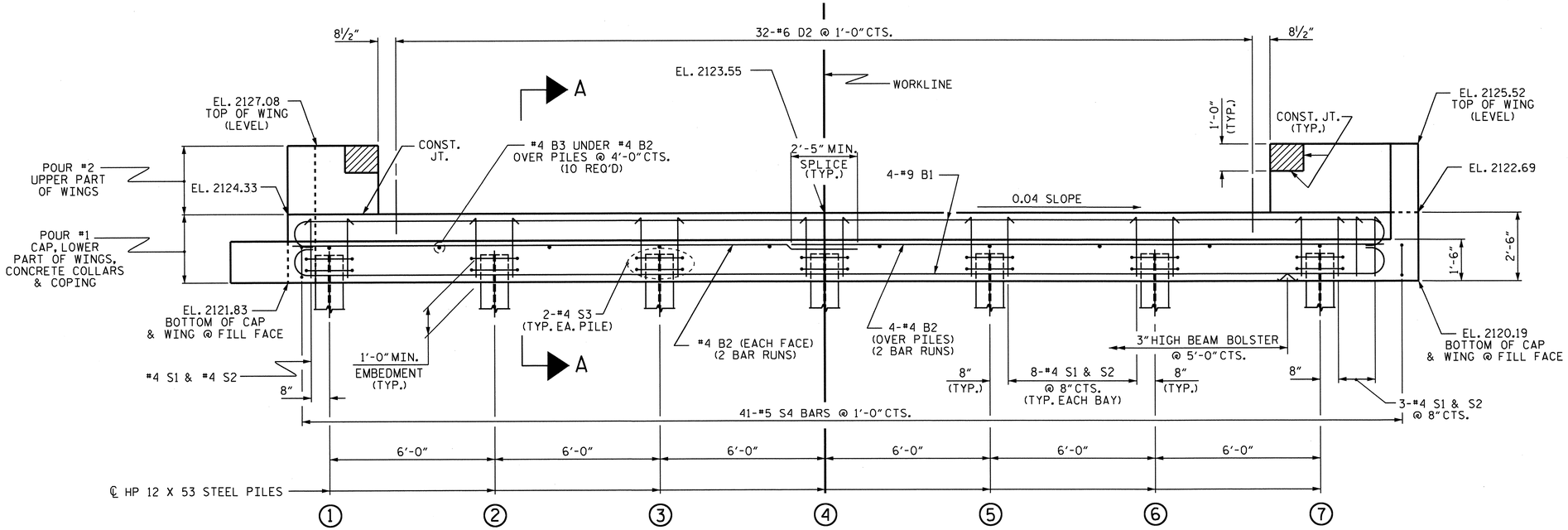

ELEVATION

FOR SECTION A-A, SEE SHEET 3 OF 3. CONCRETE COLLARS FOR STEEL PILES NOT SHOWN IN PLAN AND ELEVATION VIEWS FOR CLARITY. SEE "CORROSION PROTECTION FOR STEEL PILES DETAIL", SHEET 3 OF 3.

NOTES

STIRRUPS IN CAP MAY BE SHIFTED AS NECESSARY TO CLEAR DOWELS.

FOR CORROSION PROTECTION OF STEEL PILES, SEE SHEET 3 OF 3.

THE CONCRETE IN THE SHADED AREA OF THE WING SHALL BE POURED AFTER THE VERTICAL CONCRETE BARRIER RAIL IS CAST IF SLIP FORMING IS USED.

FOR PILE SPLICE DETAILS, SEE SHEET 3 OF 3.

FOR WING DETAILS, SEE SHEET 2 OF 3.

THE #6 D2 DOWELS SHALL BE INSTALLED USING AN ADHESIVE ANCHORING SYSTEM. LEVEL ONE FIELD TESTING IS REQUIRED AND THE YIELD LOAD FOR THE #6 D2 DOWELS IS 26.4 KIPS. INSTALL ONE STRAIGHT DOWEL FOR TESTING.

TOP OF PILE ELEVATIONS	
1	2122.79
2	2122.55
3	2122.31
4	2122.07
5	2121.83
6	2121.59
7	2121.35

PROJECT NO. B-4147

HENDERSON COUNTY

STATION: 20+74.50 -L-

SHEET 1 OF 3

STATE OF NORTH CAROLINA
DEPARTMENT OF TRANSPORTATION
RALEIGH

SUBSTRUCTURE

END BENT No. 2

NORTH CAROLINA PROFESSIONAL SEAL 20125 ENGINEER M. G. CHEEK 11-26-12

REVISIONS						SHEET NO.
NO.	BY:	DATE:	NO.	BY:	DATE:	S-15
1			3			TOTAL SHEETS
2			4			39

ASSEMBLED BY :	J.R. MCROY	DATE :	6/12
CHECKED BY :	M.G. CHEEK	DATE :	8/12

26-NOV-2012 09:29
R:\Structures\Plans\FinalPlans\Str_#1\B4147_SD_01_EB.dgn
mpoole

STR. #1

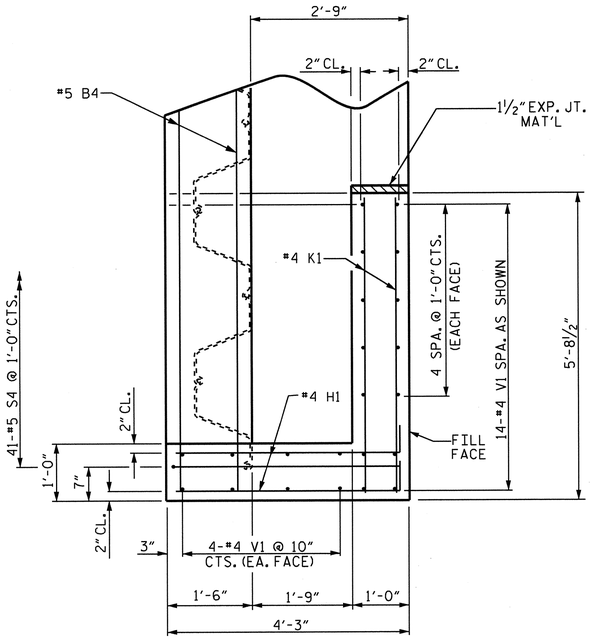

PLAN OF WING (W1)

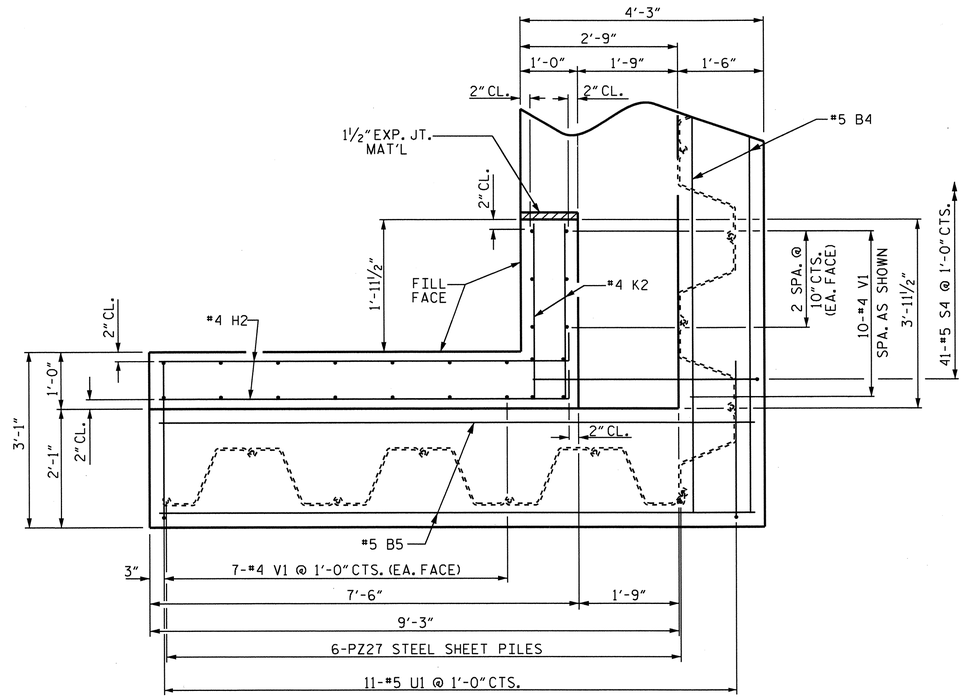

PLAN OF WING (W2)

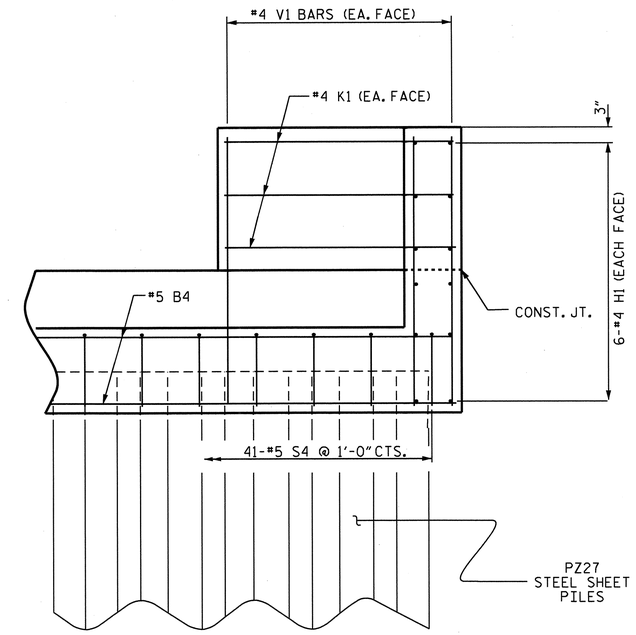

SECTION X-X

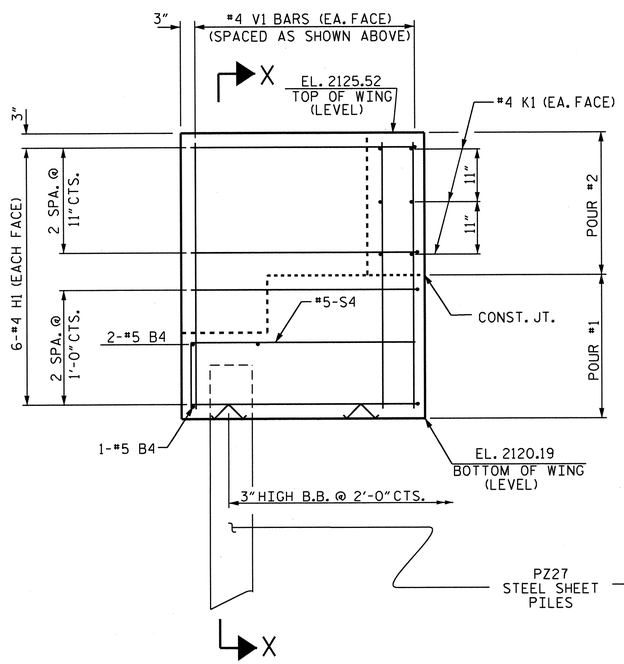

ELEVATION OF WING (W1)

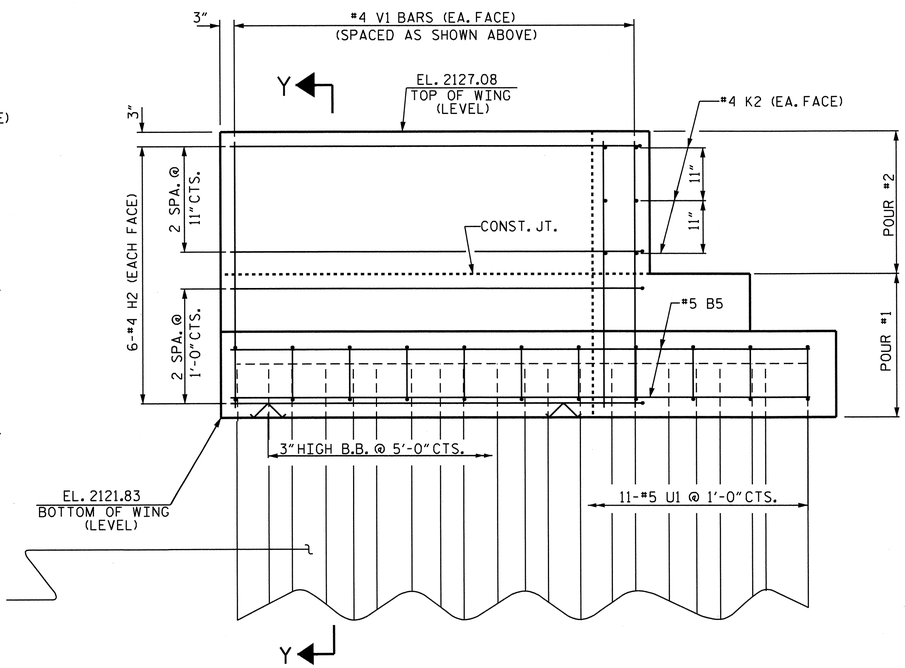

ELEVATION OF WING (W2)

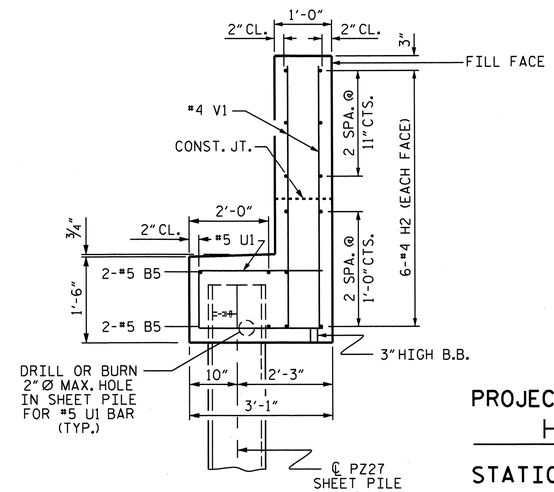

SECTION Y-Y

PROJECT NO. B-4147

HENDERSON COUNTY

STATION: 20+74.50 -L-

SHEET 2 OF 3

STATE OF NORTH CAROLINA
DEPARTMENT OF TRANSPORTATION
RALEIGH

SUBSTRUCTURE

END BENT NO. 2 WING DETAILS

NORTH CAROLINA PROFESSIONAL SEAL 20125 ENGINEER MARSHALL G. CHEEK, JR.

REVISIONS								SHEET NO.
NO.	BY:	DATE:	NO.	BY:	DATE:			S-16
1			3					TOTAL SHEETS
2			4					39

DRAWN BY : J.R. MCROY DATE : 7/12
CHECKED BY : M.G. CHEEK DATE : 8/12

26-NOV-2012 09:29
R:\Structures\Plans\Final Plans\Str_#1\B4147_SD_01_EB.dgn
mpoole

STR. #1

NCBDS

BAGGED STONE AND PIPE SHALL BE PLACED IMMEDIATELY AFTER COMPLETION OF END BENT EXCAVATION. PIPE MAY BE EITHER CONCRETE, CORRUGATED STEEL, CORRUGATED ALUMINUM ALLOY, OR CORRUGATED PLASTIC. PERFORATED PIPE WILL NOT BE ALLOWED.

BAGGED STONE SHALL REMAIN IN PLACE UNTIL THE ENGINEER DIRECTS THAT IT BE REMOVED. THE CONTRACTOR SHALL REMOVE AND DISPOSE OF SILT ACCUMULATIONS AT BAGGED STONE WHEN SO DIRECTED BY THE ENGINEER. BAGS SHALL BE REMOVED AND REPLACED WHENEVER THE ENGINEER DETERMINES THAT THEY HAVE DETERIORATED AND LOST THEIR EFFECTIVENESS.

NO SEPARATE PAYMENT WILL BE MADE FOR THIS WORK AND THE ENTIRE COST OF THIS WORK SHALL BE INCLUDED IN THE UNIT CONTRACT PRICE BID FOR THE SEVERAL PAY ITEMS.

TEMPORARY DRAINAGE AT END BENT

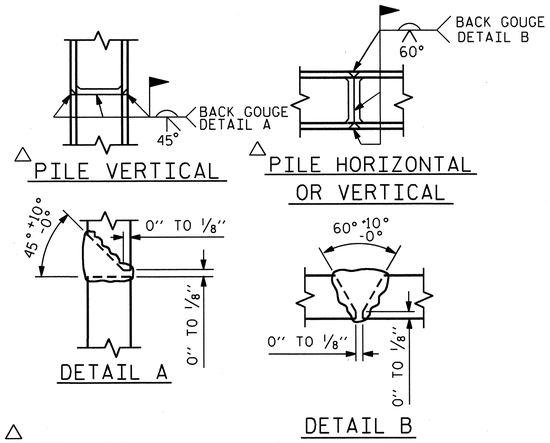

△ POSITION OF PILE DURING WELDING.

PILE SPLICE DETAILS

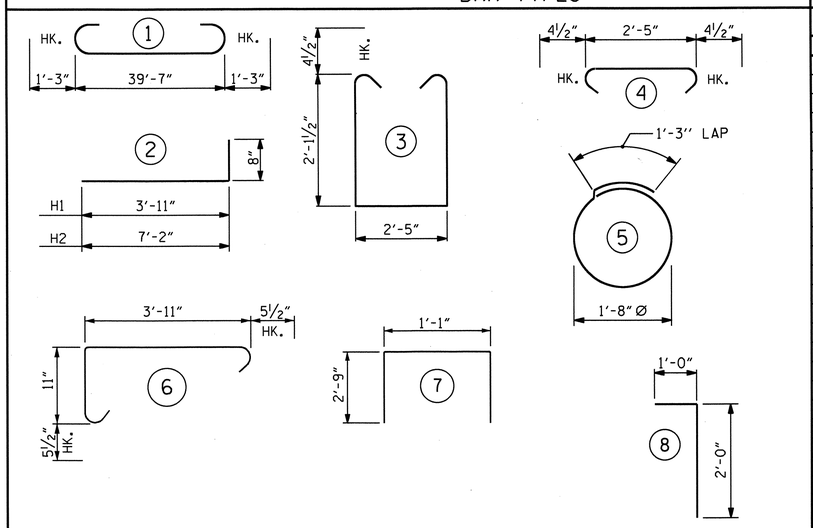

ALL BAR DIMENSIONS ARE OUT TO OUT.

BILL OF MATERIAL
END BENT No. 2

BAR	NO.	SIZE	TYPE	LENGTH	WEIGHT
B1	8	#9	1	42'-1"	1145
B2	12	#4	STR	21'-1"	169
B3	10	#4	STR	2'-5"	16
B4	3	#5	STR	42'-10"	134
B5	4	#5	STR	10'-5"	43
D1	22	#6	STR	1'-6"	50
D2	32	#6	8	3'-0"	144
H1	12	#4	2	4'-7"	37
H2	12	#4	2	7'-10"	63
K1	6	#4	STR	5'-4"	21
K2	6	#4	STR	2'-7"	10
S1	52	#4	3	7'-5"	258
S2	52	#4	4	3'-2"	110
S3	14	#4	5	6'-6"	61
S4	41	#5	6	5'-9"	246
U1	11	#5	7	6'-7"	76
V1	46	#4	STR	4'-10"	149

REINFORCING STEEL 2732 LBS.

CLASS A CONCRETE BREAKDOWN

POUR #1 CAP, LOWER PART OF WINGS, COLLARS & COPING 15.8 CU. YDS.

POUR #2 UPPER PART OF WINGS 1.8 CU. YDS.

TOTAL CLASS A CONCRETE 17.6 CU. YDS.

HP 12 X 53 STEEL PILES

NO: 7 LIN. FT.= 265

18" STEEL SHEET PILES

NO. PZ27 = 34

NO. PZ90 = 1

TOTAL NO. = 35 1380 SQ. FT.

DETAIL "B"

ANCHOR STUD DETAIL

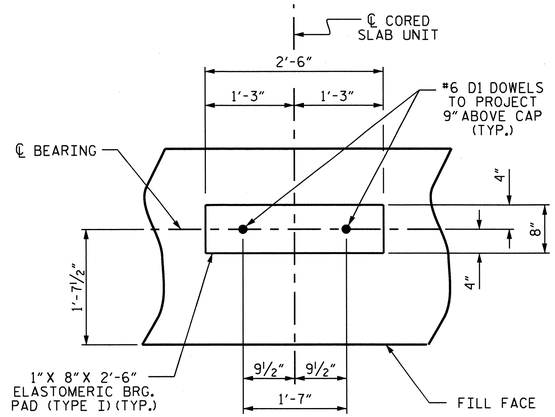

DETAIL "A"

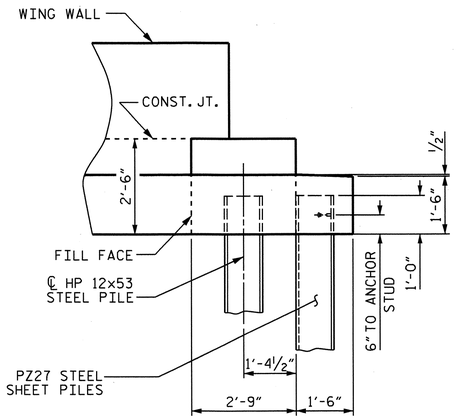

END ELEVATION

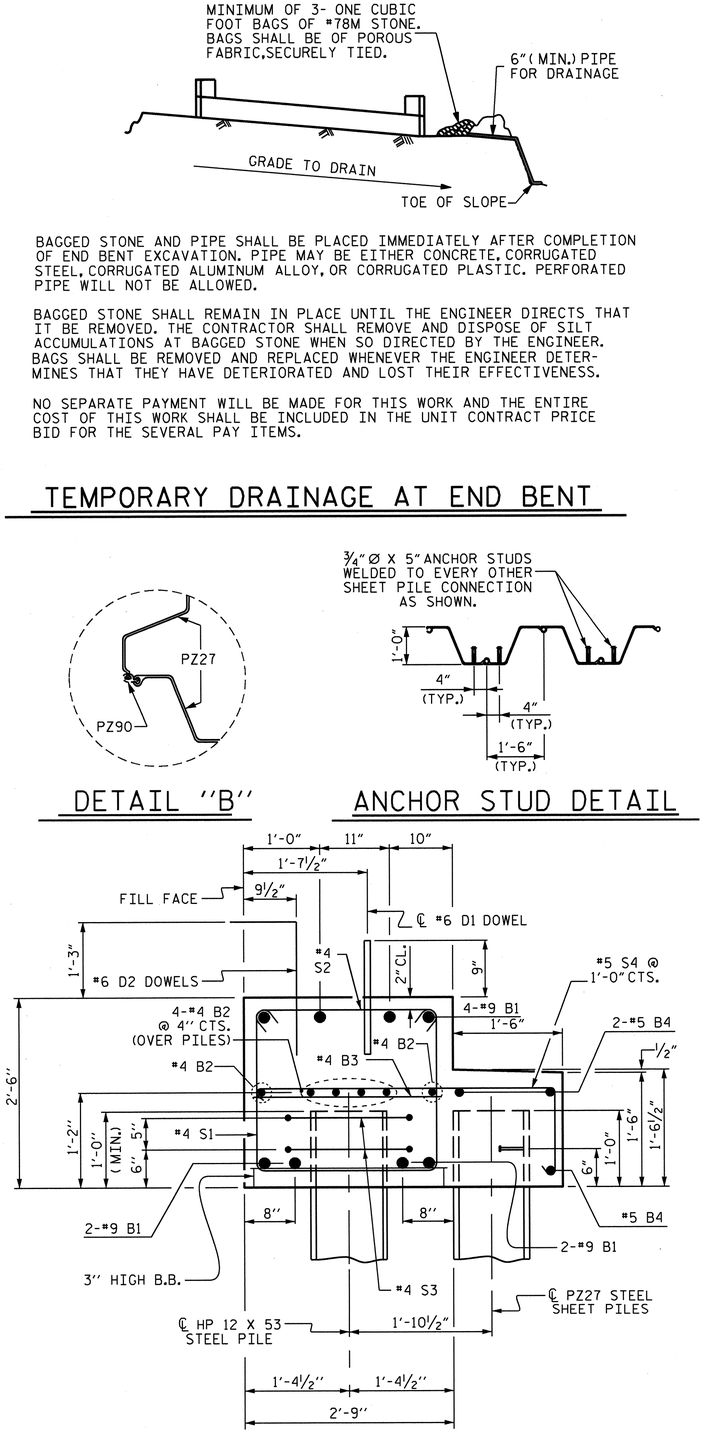

SECTION A-A

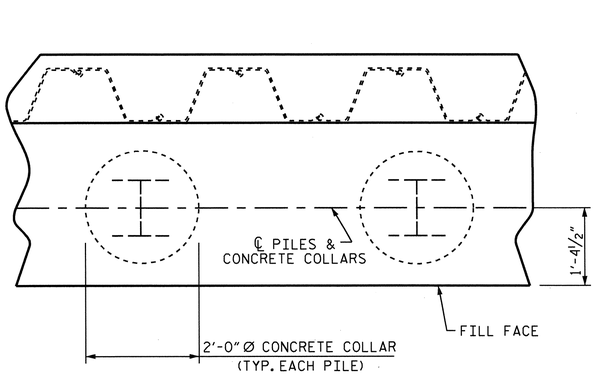

PLAN

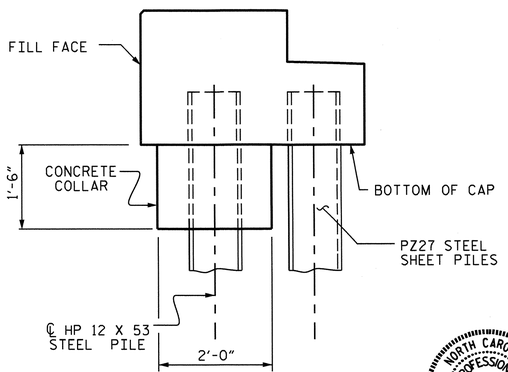

ELEVATION

CORROSION PROTECTION FOR STEEL PILES DETAIL

PROJECT NO. B-4147

HENDERSON COUNTY

STATION: 20+74.50 -L-

SHEET 3 OF 3

STATE OF NORTH CAROLINA
DEPARTMENT OF TRANSPORTATION
RALEIGH

SUBSTRUCTURE

END BENT No. 2
DETAILS

NORTH CAROLINA PROFESSIONAL SEAL 20125 ENGINEER MARSHALL G. CHEEK, JR. 11-26-12

REVISIONS						SHEET NO.
NO.	BY:	DATE:	NO.	BY:	DATE:	S-17
1			3			TOTAL SHEETS
2			4			39

ASSEMBLED BY : J.R. MCROY DATE : 6/12
CHECKED BY : M.G. CHEEK DATE : 8/12

26-NOV-2012 09:28
R:\Structures\Plans\FinalPlans\Str_#1\B4147_SD_01_EB.dgn
mpoole

STR. #1

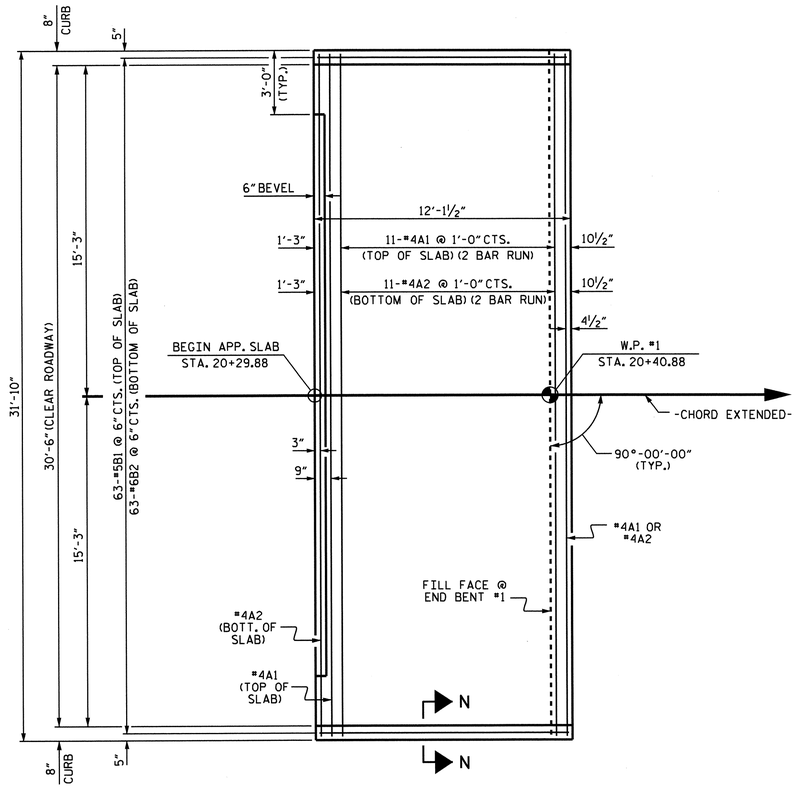

PLAN @ END BENT #1

NOTES

FOR BRIDGE APPROACH FILL INCLUDING GEOTEXTILE, 4" Ø DRAINAGE PIPE, AND #78M STONE BACKFILL, SEE ROADWAY PLANS.

GEOTEXTILE SHALL BE TYPE 1 IN ACCORDANCE WITH THE STANDARD SPECIFICATIONS SECTION 1056.

#78M STONE BACKFILL (CLASS V SELECT MATERIAL) SHALL BE IN ACCORDANCE WITH STANDARD SPECIFICATIONS SECTION 1016.

#78M STONE BACKFILL IS TO BE CONTINUOUS ALONG FILL FACE OF BACKWALL FROM OUTSIDE EDGE TO OUTSIDE EDGE OF APPROACH SLAB.

FOR THE 4" Ø DRAINAGE PIPE OUTLET(S), SEE ROADWAY STANDARD DRAWINGS.

AREA BETWEEN THE WINGWALL AND APPROACH SLAB SHALL BE GRADED TO DRAIN THE WATER AWAY FROM THE FILL FACE OF THE BRIDGE AND SHALL BE PAVED. SEE ROADWAY PLANS.

APPROACH SLAB GROOVING IS NOT REQUIRED.

BILL OF MATERIAL

APPROACH SLAB AT EB #1

BAR	NO.	SIZE	TYPE	LENGTH	WEIGHT
* A1	26	#4	STR	16'-11"	294
A2	26	#4	STR	16'-9"	291
* B1	63	#5	STR	11'-2"	734
B2	63	#6	STR	11'-8"	1104
REINFORCING STEEL				LBS.	1395
* EPOXY COATED REINFORCING STEEL				LBS.	1028
CLASS AA CONCRETE				C. Y.	19.9

SPLICE LENGTHS

BAR SIZE	EPOXY COATED	UNCOATED
#4	2'-0"	1'-9"
#5	2'-6"	2'-2"
#6	3'-10"	2'-7"

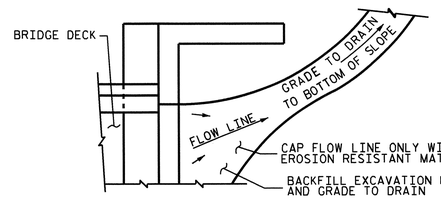

NOTE: IF THE APPROACH SLAB IS NOT CONSTRUCTED IMMEDIATELY AFTER THE BACKFILLING OF THE END BENT EXCAVATION, GRADE TO DRAIN TO THE BOTTOM OF THE SLOPE AND PROVIDE EROSION RESISTANT MATERIAL, SUCH AS FIBERGLASS ROVING OR AS DIRECTED BY THE ENGINEER TO PREVENT SOIL EROSION AND TO PROTECT THE AREA ADJACENT TO THE STRUCTURE. THE CONTRACTOR WILL BE REQUIRED TO REMOVE THESE MATERIALS PRIOR TO CONSTRUCTION OF THE APPROACH SLAB.

TEMPORARY DRAINAGE DETAIL

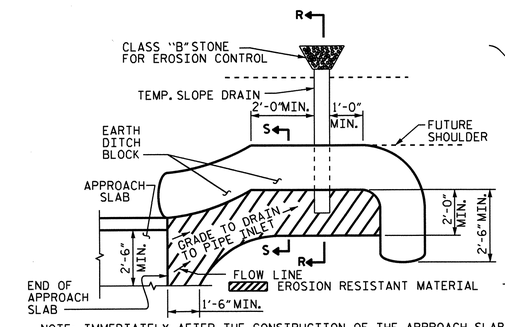

NOTE: IMMEDIATELY AFTER THE CONSTRUCTION OF THE APPROACH SLAB, THE CONTRACTOR SHALL PROVIDE TEMPORARY BERM AND SLOPE DRAIN. CONTRACTOR SHALL GRADE TO PIPE INLET AND PROVIDE EROSION RESISTANT MATERIAL AS SHOWN. THE EROSION RESISTANT MATERIAL SHALL BE EITHER 1) ASPHALT PLANT MIX, TYPE 1 OR TYPE 2, MIN. 2" DEPTH, 2) EROSION CONTROL MAT, OR 3) CONCRETE, AS DIRECTED BY THE ENGINEER. THE SLOPE DRAIN SHALL CONSIST OF A NON-PERFORATED TEMPORARY DRAINAGE PIPE, 12 INCHES IN DIAMETER.

PLAN VIEW

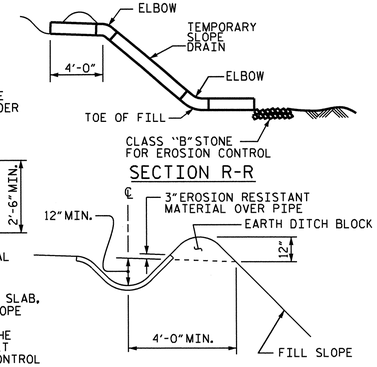

SECTION S-S

TEMPORARY BERM AND SLOPE DRAIN DETAILS

(TO BE USED WHEN SHOULDER BERM GUTTER IS REQUIRED)

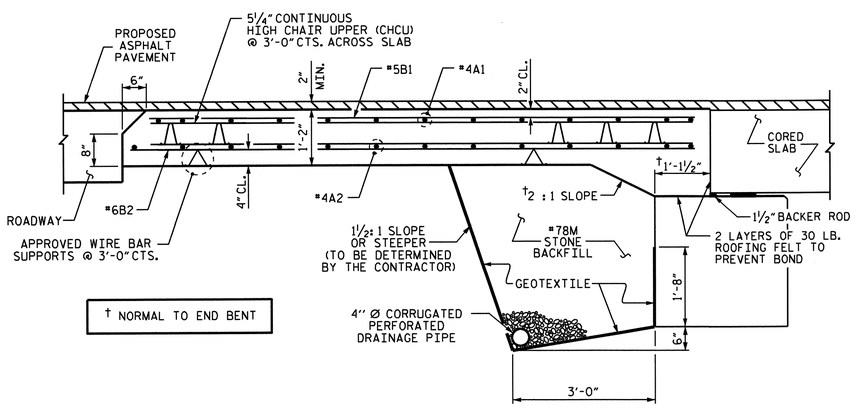

† NORMAL TO END BENT

SECTION THRU SLAB

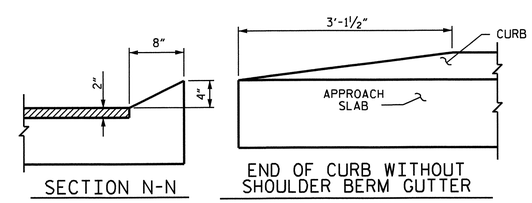

SECTION N-N

END OF CURB WITHOUT SHOULDER BERM GUTTER

CURB DETAILS

PROJECT NO. B-4147

HENDERSON COUNTY

STATION: 20+74.50 -L-

STATE OF NORTH CAROLINA
DEPARTMENT OF TRANSPORTATION
RALEIGH

STANDARD
BRIDGE APPROACH SLAB
FOR PRESTRESSED CONCRETE
CORED SLAB UNIT
(SUB-REGIONAL TIER)
90° SKEW

NORTH CAROLINA PROFESSIONAL SEAL 20125 ENGINEER MARSHALL L. HODGES, JR.
11-20-12

REVISIONS						SHEET NO.
NO.	BY:	DATE:	NO.	BY:	DATE:	S-18
1			3			TOTAL SHEETS
2			4			39

STR. #1 STD. NO. BAS_33_90S

ASSEMBLED BY : J.R. MCROY DATE : 8/12
CHECKED BY : M.G. CHEEK DATE : 8/12

05-SEP-2012 08:42
R:\Structures\Plans\Final Plans\Str_#1\B4147_SD_01_AS.dgn
mpoole

F.A. PROJ. No.: BRZ-1123 (11)

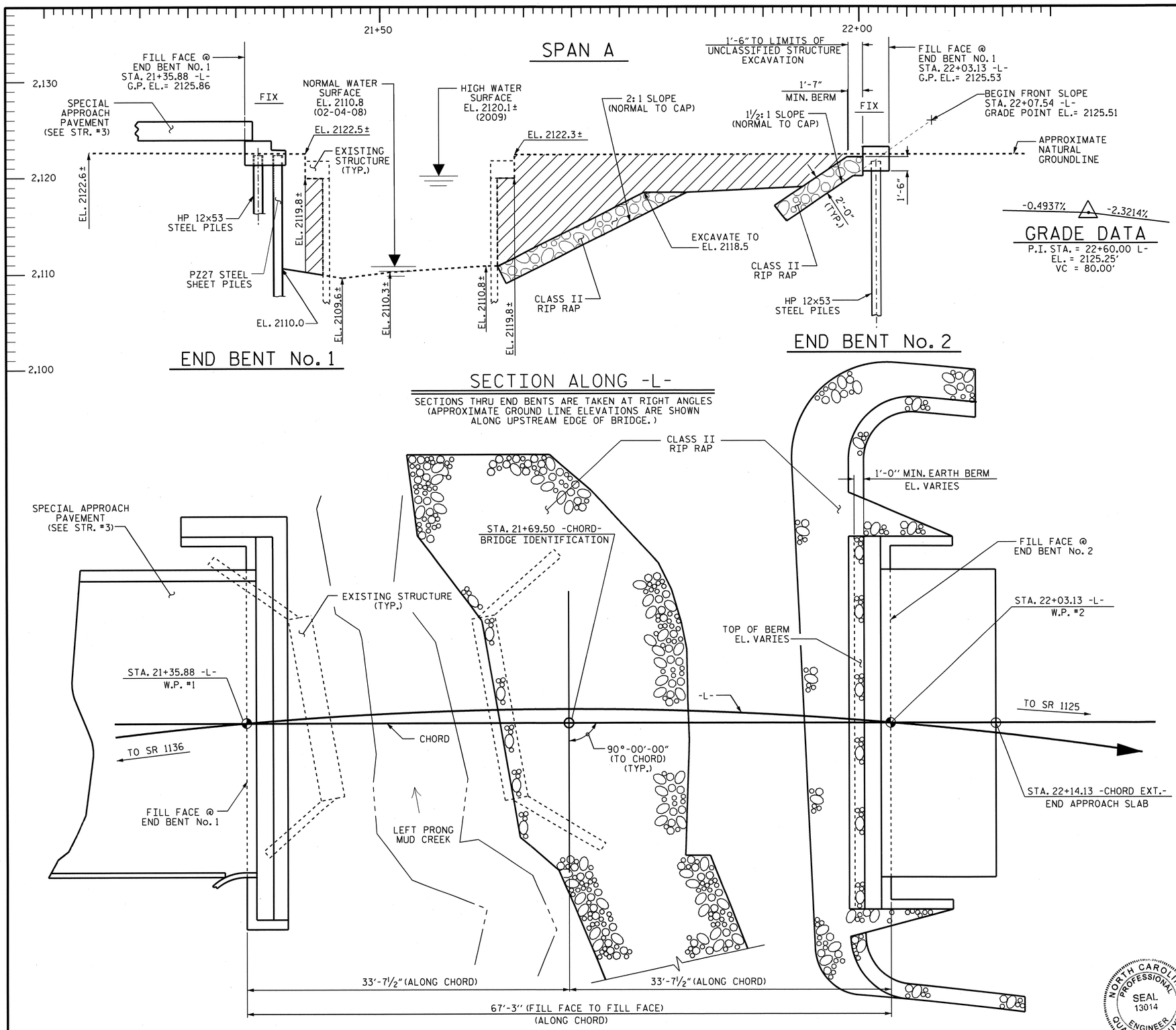

UNCLASSIFIED STRUCTURE EXCAVATION

-0.4937% △ -2.3214%

GRADE DATA
P.I. STA. = 22+60.00 L-
EL. = 2125.25'
VC = 80.00'

PI STA. = 20+65.70 -L-
△= 18°-50'-26.5 (RT)
D = 4°-24'-26.5"
L = 427.48'
T = 215.69'
R = 1,300.00'

HORIZONTAL CURVE DATA -L-

NOTE TO CONTRACTOR: ALL STATIONING ON THE BRIDGE OCCURS ALONG THE CHORD FROM W.P.#1 TO W.P.#2, WHILE THE GRADE POINT FOLLOWS THE -L-.

I HEREBY CERTIFY THESE PLANS ARE THE AS-BUILT PLANS

PROJECT NO. B-4147
HENDERSON COUNTY
STATION: 21+69.50 -L-

SHEET 1 OF 3 REPLACES BRIDGE #76

STATE OF NORTH CAROLINA
DEPARTMENT OF TRANSPORTATION
RALEIGH

GENERAL DRAWING
FOR BRIDGE #76 ON SR 1123 OVER LEFT PRONG MUD CREEK BETWEEN SR 1136 AND SR 1125

REVISIONS						SHEET NO.
NO.	BY:	DATE:	NO.	BY:	DATE:	S-19
1			3			TOTAL SHEETS
2			4			39

NORTH CAROLINA PROFESSIONAL SEAL 13014 ENGINEER QUANG H. NGUYEN
Quang H. Nguyen 11-26-12

NORTH CAROLINA PROFESSIONAL SEAL 20125 ENGINEER MARSHALL G. CHEEK, JR.
11-26-12

DRAWN BY : J.R. MCROY DATE : 07-26-12
CHECKED BY : M.G. CHEEK DATE : 07-31-12

26-NOV-2012 09:27
R:\Structures\Plans\Final Plans\Str_#2\B4147_SD_GD.dgn
mpoole

STR. #2 NCDDS

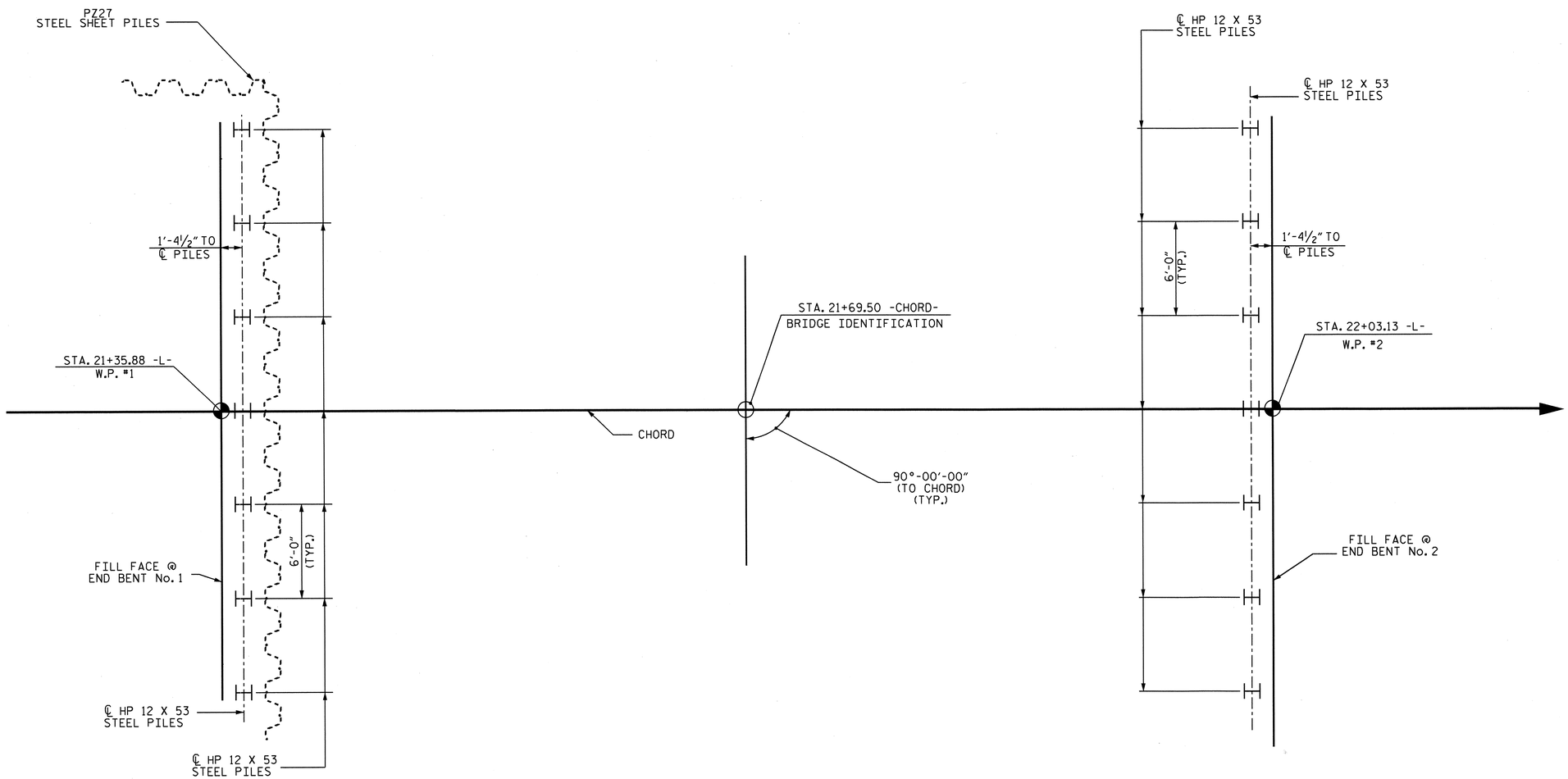

FOUNDATION LAYOUT

NOTES

FOR PILES, SEE SECTION 450 OF THE STANDARD SPECIFICATIONS.

PILES AT END BENT No. 1 ARE DESIGNED FOR A FACTORED RESISTANCE OF 80 TONS PER PILE.

DRIVE PILES AT END BENT No. 1 TO A REQUIRED DRIVING RESISTANCE OF 133 TONS PER PILE.

PILES AT END BENT No. 2 ARE DESIGNED FOR A FACTORED RESISTANCE OF 80 TONS PER PILE.

DRIVE PILES AT END BENT No. 2 TO A REQUIRED DRIVING RESISTANCE OF 133 TONS PER PILE.

SHEET PILES SHALL BE INSTALLED TO AN ELEVATION OF 2095.0 FT. AT END BENT No. 1.

SCOUR CRITICAL ELEVATION 2107.0 FT. FOR VERTICAL ABUTMENT.

PROJECT NO. B-4147
HENDERSON COUNTY
STATION: 21+69.50 -L-

SHEET 2 OF 3

STATE OF NORTH CAROLINA
DEPARTMENT OF TRANSPORTATION
RALEIGH

GENERAL DRAWING
FOR BRIDGE #76 ON SR 1123
OVER LEFT PRONG MUD CREEK
BETWEEN SR 1136 AND SR 1125

NORTH CAROLINA PROFESSIONAL SEAL 20125 ENGINEER MARSHALL G. CHEEK, JR.
11-26-12

REVISIONS						SHEET NO.
NO.	BY:	DATE:	NO.	BY:	DATE:	S-20
1			3			TOTAL SHEETS
2			4			39

DRAWN BY : M. POOLE DATE : 08/12
CHECKED BY : M. G. CHEEK DATE : 08/12

26-NOV-2012 09:27
R:\Structures\Plans\Final Plans\Str_#2\B4147_SD_02_FL.dgn
mpoole

STR. #2

BENCHMARK No. 2: NAIL IN BASE OF 16 INCH WILD CHERRY, STA. 30+63.00 -L-, 26.00' OFFSET, EL. 2129.08'.

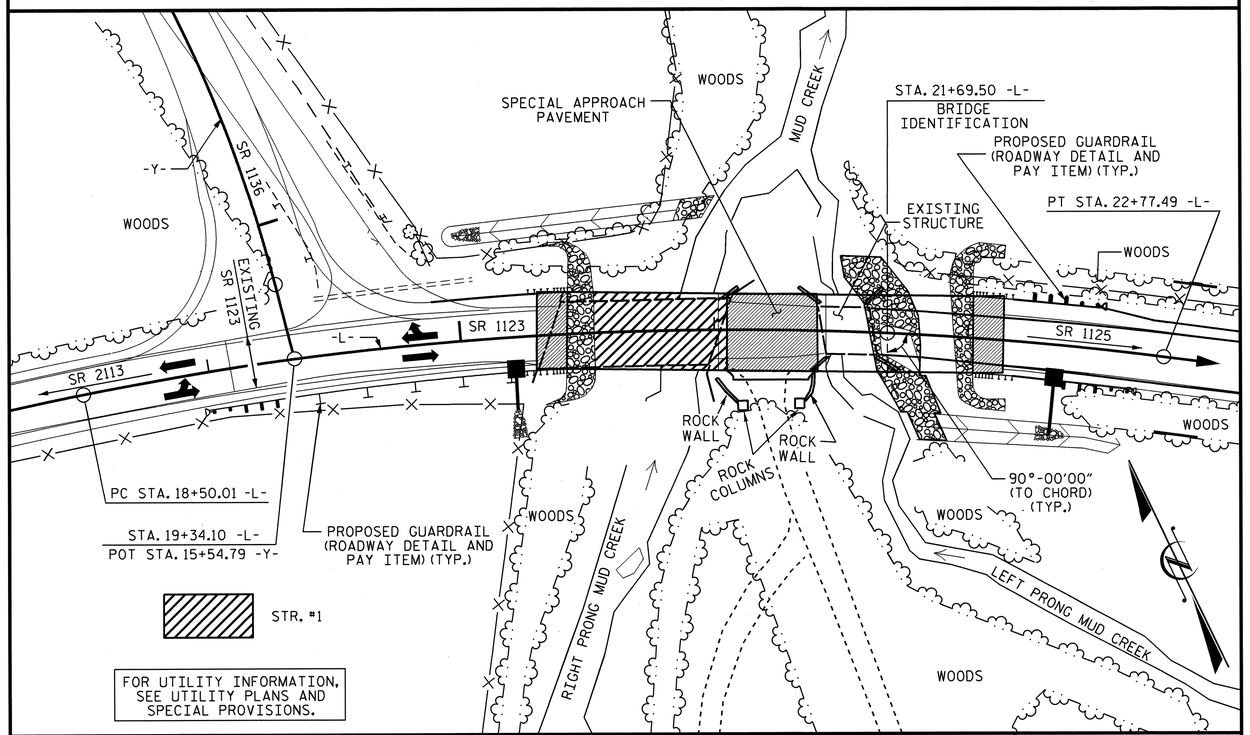

LOCATION SKETCH

GENERAL NOTES

ASSUMED LIVE LOAD = HL 93 OR ALTERNATE LOADING.

FOR OTHER DESIGN DATA AND GENERAL NOTES, SEE SHEET SN.

FOR EROSION CONTROL MEASURES, SEE EROSION CONTROL PLANS.

THIS BRIDGE HAS BEEN DESIGNED IN ACCORDANCE WITH THE AASHTO LRFD BRIDGE DESIGN SPECIFICATIONS.

REMOVAL OF THE EXISTING BRIDGE SHALL BE PERFORMED SO AS NOT ALLOW DEBRIS TO FALL INTO THE WATER. THE CONTRACTOR SHALL REMOVE THE BRIDGE AND SUBMIT PLANS FOR DEMOLITION IN ACCORDANCE WITH ARTICLE 402-2 OF THE STANDARD SPECIFICATIONS.

THE MATERIAL SHOWN IN THE CROSS-HATCHED AREA (SEE SHEET 1 OF 3) SHALL BE EXCAVATED FOR A DISTANCE OF 25 FEET TO EACH SIDE OF CENTERLINE ROADWAY AS DIRECTED BY THE ENGINEER. THIS WORK WILL BE PAID FOR AT THE CONTRACT LUMP SUM PRICE FOR UNCLASSIFIED STRUCTURE EXCAVATION. SEE SECTION 412 OF THE STANDARD SPECIFICATIONS.

THE SUBSTRUCTURE OF THE EXISTING BRIDGE INDICATED ON THE PLANS IS FROM THE BEST INFORMATION AVAILABLE. SINCE THIS INFORMATION IS SHOWN FOR THE CONVENIENCE OF THE CONTRACTOR, THE CONTRACTOR SHALL HAVE NO CLAIM WHATSOEVER AGAINST THE DEPARTMENT OF TRANSPORTATION FOR ANY DELAYS OR ADDITIONAL COST INCURRED BASED ON DIFFERENCES BETWEEN THE EXISTING BRIDGE SUBSTRUCTURE SHOWN ON THE PLANS AND THE ACTUAL CONDITIONS AT THE PROJECT SITE.

ASPHALT WEARING SURFACE IS INCLUDED IN ROADWAY QUANTITY ON ROADWAY PLANS.

THE EXISTING 2 SPAN STRUCTURE (1 @ 10'-9", 1 @ 10'-0") WITH A ROADWAY WIDTH OF 19'-3" AND A 3" ASPHALT WEARING SURFACE ON A TIMBER FLOOR ON STEEL I-BEAMS, WITH A SUBSTRUCTURE CONSISTING OF REINFORCED CONCRETE ABUTMENTS AND TIMBER CAP ON TIMBER POST AND SILL BENT AND LOCATED AT THE SITE OF THE PROPOSED BRIDGE SHALL BE REMOVED.

ALL PAVEMENT MARKING WILL BE IN ACCORDANCE WITH THE PAVEMENT MARKING PLANS AND SHALL PROVIDE FOR BICYCLES.

THIS STRUCTURE HAS BEEN DESIGNED IN ACCORDANCE WITH HEC 18, "EVALUATING SCOUR AT BRIDGES".

THE CONTRACTOR SHALL PROVIDE INDEPENDENT ASSURANCE SAMPLES OF REINFORCING STEEL AS FOLLOWS: FOR PROJECTS REQUIRING UP TO 400 TONS OF REINFORCING STEEL, ONE 30 INCH SAMPLE OF EACH SIZE BAR USED, AND FOR PROJECTS REQUIRING OVER 400 TONS OF REINFORCING STEEL, TWO 30 INCH SAMPLES OF EACH SIZE BAR USED. THE BARS FROM WHICH THE SAMPLES ARE TAKEN MUST THEN BE SPLICED WITH REPLACEMENT BARS OF THE SIZE AND LENGTH OF THE SAMPLE, PLUS A MINIMUM LAP SPLICE OF THIRTY BAR DIAMETERS. PAYMENT FOR THE SAMPLES OF REINFORCING STEEL SHALL BE CONSIDERED INCIDENTAL TO VARIOUS PAY ITEMS.

INASMUCH AS THE PAINT SYSTEM ON THE EXISTING STRUCTURAL STEEL CONTAINS LEAD, THE CONTRACTOR'S ATTENTION IS DIRECTED TO ARTICLE 107-1 OF THE STANDARD SPECIFICATIONS. ANY COST RESULTING FROM COMPLIANCE WITH APPLICABLE STATE OR FEDERAL REGULATIONS PERTAINING TO HANDLING OF MATERIALS CONTAINING LEAD BASED PAINT SHALL BE INCLUDED IN THE BID PRICE FOR "REMOVAL OF EXISTING STRUCTURE".

FOR SUBMITTAL OF WORKING DRAWINGS, SEE SPECIAL PROVISIONS.

FOR FALSEWORK AND FORMWORK, SEE SPECIAL PROVISIONS.

FOR CRANE SAFETY, SEE SPECIAL PROVISIONS.

FOR GROUT FOR STRUCTURES, SEE SPECIAL PROVISIONS.

THIS BRIDGE IS LOCATED IN SEISMIC ZONE 1.

FOR 18" STEEL SHEET PILES, SEE SPECIAL PROVISIONS.

HYDRAULIC DATA

DESIGN DISCHARGE ---------- = 2,250 C.F.S
FREQUENCY OF DESIGN FLOOD ---------- = 25 YRS.
DESIGN HIGH WATER ELEVATION ---------- = 2,119.1'
DRAINAGE AREA ---------- = 10.9 SQ. MI.
BASE DISCHARGE (Q100) ---------- = 3,360 C.F.S.
BASE HIGH WATER ELEVATION ---------- = 2,120.1'

OVERTOPPING FLOOD DATA

OVERTOPPING DISCHARGE ---------- = N/A C.F.S.
FREQUENCY OF OVERTOPPING FLOOD ---------- = >500± YRS.
OVERTOPPING FLOOD ELEVATION ---------- = 2,122.6

TOTAL BILL OF MATERIAL

	REMOVAL OF EXISTING STRUCTURE	UNCLASSIFIED STRUCTURE EXCAVATION	CLASS A CONCRETE	BRIDGE APPROACH SLABS	REINFORCING STEEL	HP 12 X 53 STEEL PILES		TWO BAR METAL RAIL	1'-2" X 2'-10½" CONCRETE PARAPET	RIP RAP CLASS II (2'-0" THICK)	GEOTEXTILE FOR DRAINAGE	ELASTOMERIC BEARINGS	3'-0" X 2'-0" PRESTRESSED CONCRETE CORED SLABS		18" STEEL SHEET PILES
	LUMP SUM	LUMP SUM	CU. YDS.	LUMP SUM	LBS.	NO.	LIN. FT.	LIN. FT.	LIN. FT.	TONS	SQ. YARDS	LUMP SUM	NO.	LIN. FT.	SQ. FT.
SUPERSTRUCTURE	LUMP SUM			LUMP SUM				118.75	130.00			LUMP SUM	11	715.00	
END BENT NO. 1		LUMP SUM	17.6		2732	7	300								1375
END BENT NO. 2		LUMP SUM	14.4		2115	7	210			165	183				
TOTAL	LUMP SUM	LUMP SUM	32.0	LUMP SUM	4847	14	510	118.75	130.00	165	183	LUMP SUM	11	715.00	1375

PROJECT NO. B-4147
HENDERSON COUNTY
STATION: 21+69.50 -L-

SHEET 3 OF 3

STATE OF NORTH CAROLINA
DEPARTMENT OF TRANSPORTATION
RALEIGH

GENERAL DRAWING
FOR BRIDGE #76 ON SR 1123 OVER LEFT PRONG MUD CREEK BETWEEN SR 1136 AND SR 1125

NORTH CAROLINA PROFESSIONAL SEAL 20125 ENGINEER MARSHALL D. CREEK, JR.
11-26-12

REVISIONS						SHEET NO.
NO.	BY:	DATE:	NO.	BY:	DATE:	S-21
1			3			TOTAL SHEETS
2			4			39

DRAWN BY : J.R. MCROY DATE : 7/30/12
CHECKED BY : M.G. CHEEK DATE : 8/9/12

26-NOV-2012 09:26
R:\Structures\Plans\FinalPlans\Str_#2\B4147_SD_GD.dgn

STR. #2

LOAD AND RESISTANCE FACTOR RATING (LRFD) SUMMARY FOR PRESTRESSED CONCRETE GIRDERS

LEVEL		VEHICLE	WEIGHT (W) (TONS)	CONTROLLING LOAD RATING (#)	MINIMUM RATING FACTORS (RF)	TONS = W X RF	STRENGTH I LIMIT STATE											SERVICE III LIMIT STATE						COMMENT NUMBER
								MOMENT					SHEAR						MOMENT					
							LIVELOAD FACTORS	DISTRIBUTION FACTORS (DF)	RATING FACTOR	SPAN	GIRDER LOCATION	DISTANCE FROM LEFT END OF SPAN (ft)	DISTRIBUTION FACTORS (DF)	RATING FACTOR	SPAN	GIRDER LOCATION	DISTANCE FROM LEFT END OF SPAN (ft)	LIVELOAD FACTORS	DISTRIBUTION FACTORS (DF)	RATING FACTOR	SPAN	GIRDER LOCATION	DISTANCE FROM LEFT END OF SPAN (ft)	
DESIGN LOAD RATING		HL-93(Inv)	N/A	1	1.07	--	1.75	0.270	1.08	A	EL	32.000	0.510	1.23	A	EL	6.400	0.80	0.270	1.07	A	EL	32.000	
		HL-93(Opr)	N/A	--	1.40	--	1.35	0.270	1.40	A	EL	32.000	0.510	1.60	A	EL	6.400	N/A	--	--	--	--	--	
		HS-20(Inv)	36.000	2	1.37	49.20	1.75	0.270	1.39	A	EL	32.000	0.510	1.51	A	EL	6.400	0.80	0.270	1.37	A	EL	32.000	
		HS-20(Opr)	36.000	--	1.80	64.83	1.35	0.270	1.80	A	EL	32.000	0.510	1.96	A	EL	6.400	N/A	--	--	--	--	--	
LEGAL LOAD RATING	SV	SNSH	13.500	--	3.00	40.52	1.4	0.270	3.81	A	EL	32.000	0.510	4.43	A	EL	6.400	0.80	0.270	3.00	A	EL	32.000	
		SNGARBS2	20.000	--	2.27	45.44	1.4	0.270	2.89	A	EL	32.000	0.510	3.17	A	EL	6.400	0.80	0.270	2.27	A	EL	32.000	
		SNAGRIS2	22.000	--	2.17	47.67	1.4	0.270	2.75	A	EL	32.000	0.510	2.95	A	EL	6.400	0.80	0.270	2.17	A	EL	32.000	
		SNCOTTS3	27.250	--	1.50	40.73	1.4	0.270	1.90	A	EL	32.000	0.510	2.21	A	EL	6.400	0.80	0.270	1.49	A	EL	32.000	
		SNAGGRS4	34.925	--	1.26	44.09	1.4	0.270	1.60	A	EL	32.000	0.510	1.85	A	EL	6.400	0.80	0.270	1.26	A	EL	32.000	
		SNS5A	35.550	--	1.23	43.86	1.4	0.270	1.57	A	EL	32.000	0.510	1.89	A	EL	6.400	0.80	0.270	1.23	A	EL	32.000	
		SNS6A	39.950	--	1.14	45.44	1.4	0.270	1.45	A	EL	32.000	0.510	1.73	A	EL	6.400	0.80	0.270	1.14	A	EL	32.000	
		SNS7B	42.000	--	1.08	45.51	1.4	0.270	1.38	A	EL	32.000	0.510	1.71	A	EL	6.400	0.80	0.270	1.08	A	EL	32.000	
	TTST	TNAGRIT3	33.000	--	1.39	45.83	1.4	0.270	1.76	A	EL	32.000	0.510	2.05	A	EL	6.400	0.80	0.270	1.39	A	EL	32.000	
		TNT4A	33.075	--	1.40	46.19	1.4	0.270	1.77	A	EL	32.000	0.510	1.99	A	EL	6.400	0.80	0.270	1.40	A	EL	32.000	
		TNT6A	41.600	--	1.15	47.73	1.4	0.270	1.46	A	EL	32.000	0.510	1.83	A	EL	6.400	0.80	0.270	1.15	A	EL	32.000	
		TNT7A	42.000	--	1.16	48.55	1.4	0.270	1.47	A	EL	32.000	0.510	1.78	A	EL	6.400	0.80	0.270	1.16	A	EL	32.000	
		TNT7B	42.000	--	1.20	50.54	1.4	0.270	1.53	A	EL	32.000	0.510	1.66	A	EL	6.400	0.80	0.270	1.20	A	EL	32.000	
		TNAGRIT4	43.000	--	1.14	48.99	1.4	0.270	1.45	A	EL	32.000	0.510	1.60	A	EL	6.400	0.80	0.270	1.14	A	EL	32.000	
		TNAGT5A	45.000	--	1.07	48.22	1.4	0.270	1.36	A	EL	32.000	0.510	1.60	A	EL	6.400	0.80	0.270	1.07	A	EL	32.000	
		TNAGT5B	45.000	3	1.06	47.54	1.4	0.270	1.34	A	EL	32.000	0.510	1.52	A	EL	6.400	0.80	0.270	1.06	A	EL	32.000	

LOAD FACTORS:

DESIGN LOAD RATING FACTORS	LIMIT STATE	γ_{DC}	γ_{DW}
	STRENGTH I	1.25	1.50
	SERVICE III	1.00	1.00

NOTES:

MINIMUM RATING FACTORS ARE BASED ON THE STRENGTH I AND SERVICE III LIMIT STATES.

ALLOWABLE STRESSES FOR SERVICE III LIMIT STATE ARE AS REQUIRED FOR DESIGN.

COMMENTS:

1.
2.
3.
4.

(#) CONTROLLING LOAD RATING

(1) DESIGN LOAD RATING (HL-93)
(2) DESIGN LOAD RATING (HS-20)
(3) LEGAL LOAD RATING **
** SEE CHART FOR VEHICLE TYPE

GIRDER LOCATION

I - INTERIOR GIRDER
EL - EXTERIOR LEFT GIRDER
ER - EXTERIOR RIGHT GIRDER

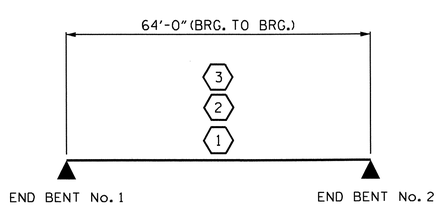

LRFR SUMMARY

SPAN A

PROJECT NO. B-4147
HENDERSON COUNTY
STATION: 21+69.50 -L-

STATE OF NORTH CAROLINA
DEPARTMENT OF TRANSPORTATION
RALEIGH

STANDARD
LRFR SUMMARY FOR 65' CORED SLAB UNIT 90° SKEW
(NON-INTERSTATE TRAFFIC)

NORTH CAROLINA PROFESSIONAL SEAL 20125 ENGINEER MARSHALL M. CHEEK, JR. 11-26-12

REVISIONS						SHEET NO.
NO.	BY:	DATE:	NO.	BY:	DATE:	S-22
1			3			TOTAL SHEETS
2			4			39

ASSEMBLED BY : J.R. MCROY	DATE : 7/12
CHECKED BY : M.G. CHEEK	DATE : 8/12
DRAWN BY : MAA 1/08	REV. 11/12/08R MAA/GM
CHECKED BY : GM/DI 2/08	

05-SEP-2012 08:42
R:\Structures\Plans\Final Plans\Str_#2\B4147_SD_02_cored_slab.dgn
mpoole

STR. #2

STD. NO. 24LRFR1_90_65L

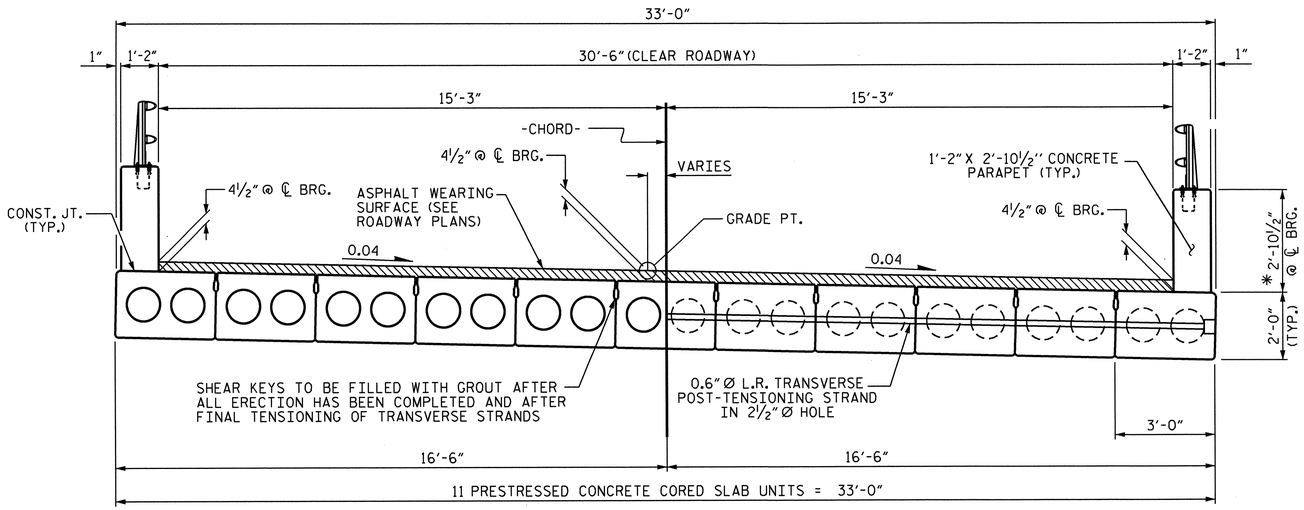

HALF SECTION
THROUGH VOIDS

TYPICAL SECTION

HALF SECTION
AT INTERMEDIATE DIAPHRAGMS

* - THE MAXIMUM PARAPET HEIGHT AND ASPHALT THICKNESS IS SHOWN. THE HEIGHT OF THE PARAPET AND ASPHALT THICKNESS VARIES WHILE THE TOP OF THE PARAPET FOLLOWS THE PROFILE OF THE GUTTERLINE. FOR PARAPET HEIGHT DETAILS AND ASPHALT THICKNESS, SEE "SECTION THRU PARAPET" DETAIL, SHEET 3 OF 3.

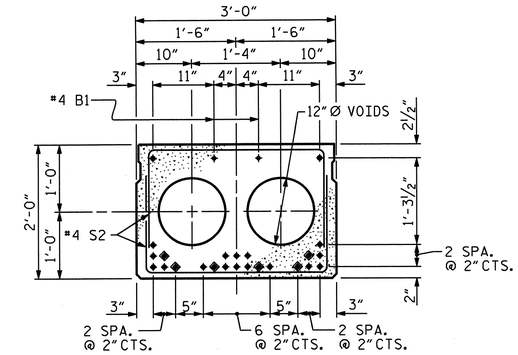

INTERIOR SLAB SECTION (65' UNIT)
(24 STRANDS REQUIRED)

0.6'' Ø LOW RELAXATION STRAND LAYOUT

◆ BOND SHALL BE BROKEN ON THESE STRANDS FOR A DISTANCE OF 12'-0" FROM END OF CORED SLAB UNIT. SEE STANDARD SPECIFICATIONS, ARTICLE 1078-7.

DEBONDING LEGEND

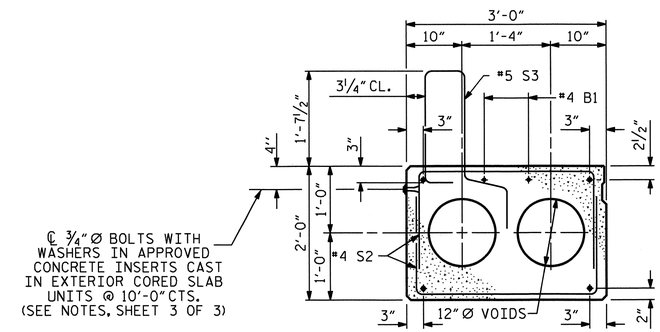

EXTERIOR SLAB SECTION

(FOR PRESTRESSED STRAND LAYOUT, SEE "INTERIOR SLAB SECTION".)

FIXED END

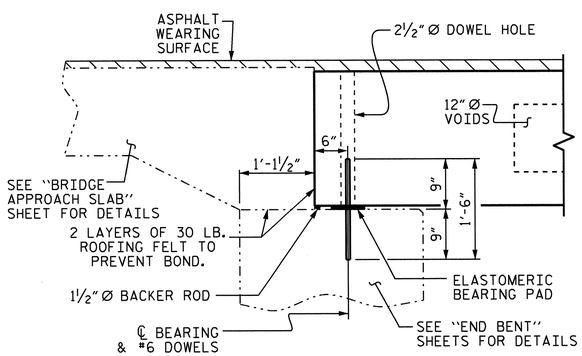

SECTION AT END BENT

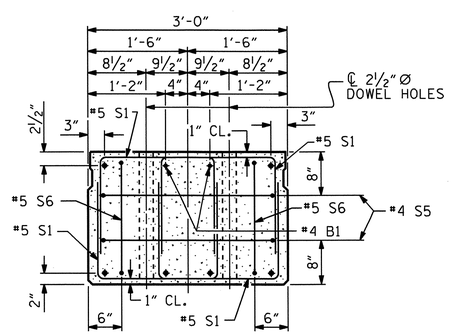

END ELEVATION

SHOWING PLACEMENT OF DOUBLE STIRRUPS AND LOCATION OF DOWEL HOLES. (STRAND LAYOUT NOT SHOWN.) INTERIOR SLAB UNIT SHOWN-EXTERIOR SLAB UNIT SIMILAR EXCEPT SHEAR KEY LOCATION.

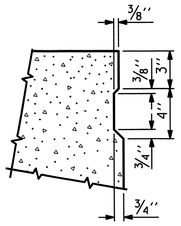

SHEAR KEY DETAIL

NOTE: OMIT SHEAR KEY ON OUTSIDE FACE OF EXTERIOR CORED SLABS.

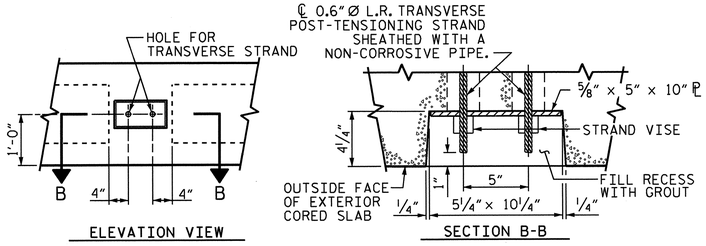

GROUTED RECESS AT END OF POST-TENSIONED STRAND • CORED SLABS

PROJECT NO. B-4147
HENDERSON COUNTY
STATION: 21+69.50 -L-

SHEET 1 OF 3

STATE OF NORTH CAROLINA
DEPARTMENT OF TRANSPORTATION
RALEIGH

3'-0" X 2'-0"
PRESTRESSED CONCRETE
CORED SLAB UNIT
90° SKEW

NORTH CAROLINA PROFESSIONAL SEAL 20125 ENGINEER MARSHALL G. CHEEK, JR.
11-26-12

REVISIONS							SHEET NO.
NO.	BY:	DATE:	NO.	BY:	DATE:		S-23
1			3				TOTAL SHEETS
2			4				39

ASSEMBLED BY : J.R. MCROY DATE : 7/12
CHECKED BY : M.G. CHEEK DATE : 8/12

01-OCT-2012 07:18
R:\Structures\Plans\Final Plans\Str_#2\B4147_SD_02_cored_slab.dgn
mpoole

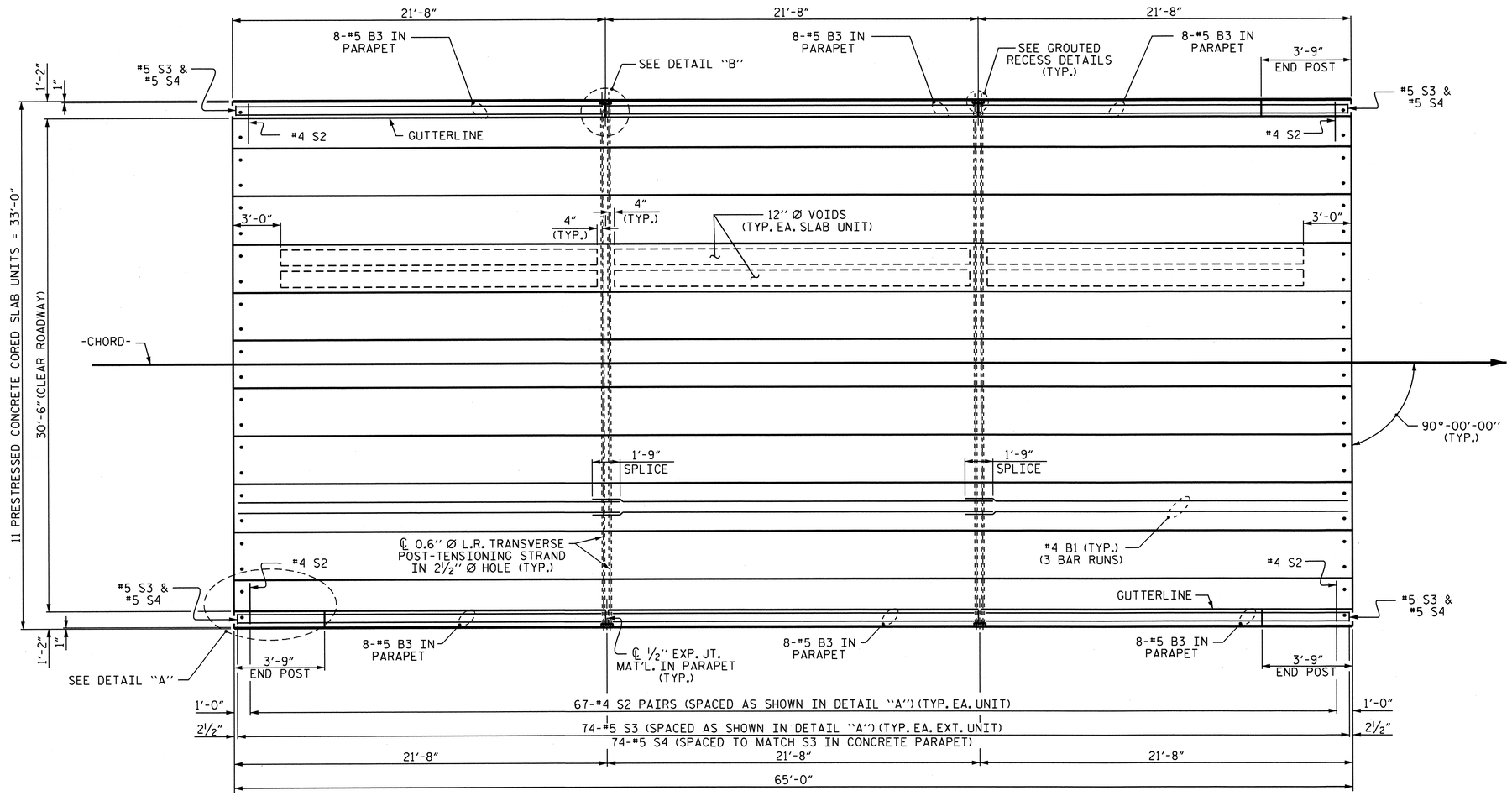

PLAN OF UNIT

FOR END POST DETAILS AND REINFORCING, SEE SHEET 3 OF 3.

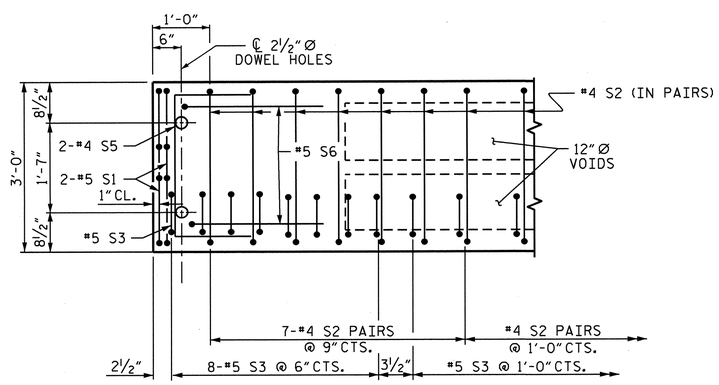

DETAIL "A"

NOTE: EXTERIOR UNIT SHOWN - INTERIOR UNIT SIMILAR EXCEPT OMIT #5 S3 BARS.

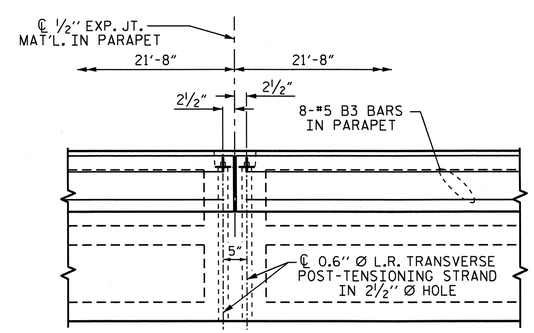

DETAIL "B"

#4 S2 BARS MAY BE SHIFTED AS NECESSARY TO MAINTAIN 1" CLEAR TO GROUTED RECESS AND 2½" Ø TRANSVERSE POST-TENSIONING STRAND HOLES

ASSEMBLED BY :	J.R. MCROY	DATE :	7/12
CHECKED BY :	M.G. CHEEK	DATE :	8/12

26-NOV-2012 10:49
R:\Structures\Plans\Final Plans\Str_#2\B4147_SD_02_cored_slab.dgn
dahodge

PROJECT NO. B-4147
HENDERSON COUNTY
STATION: 21+69.50 -L-

SHEET 2 OF 3

STATE OF NORTH CAROLINA
DEPARTMENT OF TRANSPORTATION
RALEIGH

PLAN OF 65' UNIT
30'-6" CLEAR ROADWAY
90° SKEW

NORTH CAROLINA PROFESSIONAL SEAL 20125 ENGINEER MARSHALL G. CHEEK, JR.
11-26-12

REVISIONS						SHEET NO.
NO.	BY:	DATE:	NO.	BY:	DATE:	S-24
1			3			TOTAL SHEETS
2			4			39

STR. #2

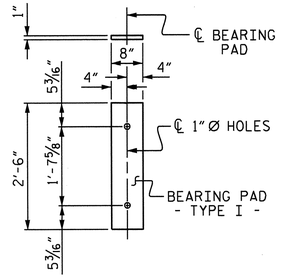

FIXED END
(TYPE I - 22 REQ'D)

ELASTOMERIC BEARING DETAILS

ELASTOMER IN ALL BEARINGS SHALL BE 60 DUROMETER HARDNESS.

CONCRETE RELEASE STRENGTH	
UNIT	PSI
65' UNITS	4800

GRADE 270 STRANDS	0.6" Ø L.R.
AREA (SQUARE INCHES)	0.217
ULTIMATE STRENGTH (LBS. PER STRAND)	58,600
APPLIED PRESTRESS (LBS. PER STRAND)	43,950

BILL OF MATERIAL 2 PARAPETS AND 3 END POSTS

BAR	NUMBER	SIZE	TYPE	LENGTH	WEIGHT
* B3	48	#5	STR	21'-3"	1064
* E1	6	#7	STR	2'-8"	33
* E2	6	#7	STR	3'-3"	40
* E3	6	#7	STR	3'-9"	46
* E4	6	#7	STR	4'-3"	52
* E5	6	#7	STR	4'-9"	58
* F1	6	#6	STR	2'-0"	18
* F2	6	#6	STR	3'-3"	29
* F3	6	#6	STR	3'-9"	34
* S4	148	#5	2	6'-2"	952
* EPOXY COATED REINFORCING STEEL				LBS.	2326
CLASS AA CONCRETE				CU. YDS.	17.0
1'-2" X 2'-10 1/2" CONCRETE PARAPET					130.00 LIN. FT.

BAR TYPES

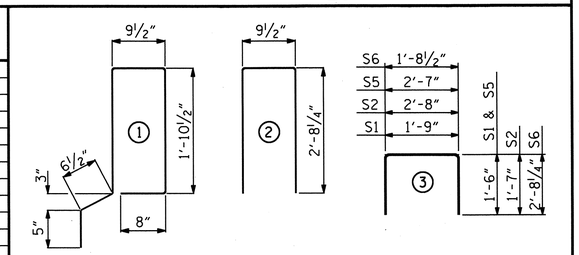

BILL OF MATERIAL FOR ONE 65' CORED SLAB UNIT

BAR	NUMBER	SIZE	TYPE	EXTERIOR UNIT LENGTH	EXTERIOR UNIT WEIGHT	INTERIOR UNIT LENGTH	INTERIOR UNIT WEIGHT
B1	6	#4	STR	22'-10"	92	22'-10"	92
S1	8	#5	3	4'-9"	40	4'-9"	40
S2	134	#4	3	5'-10"	522	5'-10"	522
* S3	74	#5	1	6'-2"	476		
S5	4	#4	3	5'-7"	15	5'-7"	15
S6	4	#5	3	7'-1"	30	7'-1"	30
REINFORCING STEEL			LBS.		699		699
* EPOXY COATED REINFORCING STEEL			LBS.		476		
6000 P.S.I. CONCRETE			CU. YDS.		11.0		11.0
0.6" Ø L.R. STRANDS			No.		24		24

CORED SLABS REQUIRED	NUMBER	LENGTH	TOTAL LENGTH
65' UNIT			
EXTERIOR C.S.	2	65'-0"	130'-0"
INTERIOR C.S.	9	65'-0"	585'-0"
TOTAL	11		715'-0"

NOTES

ALL PRESTRESSING STRANDS SHALL BE 7-WIRE LOW RELAXATION GRADE 270 STRANDS AND SHALL CONFORM TO AASHTO M203 EXCEPT FOR SAMPLING REQUIREMENTS WHICH SHALL BE IN ACCORDANCE WITH THE STANDARD SPECIFICATIONS.

ALL REINFORCING STEEL CAST WITH THE CORED SLAB SECTIONS SHALL BE GRADE 60 AND SHALL BE INCLUDED IN THE UNIT PRICE BID FOR PRESTRESSED CONCRETE CORED SLABS.

RECESSES FOR TRANSVERSE STRANDS SHALL BE GROUTED AFTER THE TENSIONING OF THE STRANDS.

THE 2 1/2" Ø DOWEL HOLES AT FIXED ENDS OF SLAB SECTIONS SHALL BE FILLED WITH NON-SHRINK GROUT.

THE BACKER RODS SHALL CONFORM TO THE REQUIREMENTS OF TYPE M BOND BREAKER. SEE SECTION 1028 OF THE STANDARD SPECIFICATIONS.

WHEN CORED SLABS ARE CAST, AN INTERNAL HOLD-DOWN SYSTEM SHALL BE EMPLOYED TO PREVENT VOIDS FROM RISING OR MOVING SIDEWAYS. AT LEAST SIX WEEKS PRIOR TO CASTING CORED SLABS, THE CONTRACTOR SHALL SUBMIT TO THE ENGINEER FOR REVIEW AND COMMENT, DETAILED DRAWINGS OF THE PROPOSED HOLD-DOWN SYSTEM. IN ADDITION TO STRUCTURAL DETAILS, LOCATION AND SPACING OF THE HOLD-DOWNS SHALL BE INDICATED.

ALL REINFORCING STEEL IN THE CONCRETE PARAPETS AND END POSTS SHALL BE EPOXY COATED.

PRESTRESSING STRANDS SHALL BE CUT FLUSH WITH THE CORED SLAB UNIT ENDS.

APPLY EPOXY PROTECTIVE COATING TO CORED SLAB UNIT ENDS.

TRANSVERSE POST TENSIONING OF THE CORED SLAB UNITS SHALL BE DONE IN ACCORDANCE WITH THE STANDARD SPECIFICATIONS.

MAINTAIN A SYMMETRIC TENSION FORCE BETWEEN EACH PAIR OF TRANSVERSE POST TENSIONING STRANDS IN THE DIAPHRAGM.

THE TRANSFER OF LOAD FROM THE ANCHORAGES TO THE CORED SLAB UNIT SHALL BE DONE WHEN THE CONCRETE HAS REACHED A COMPRESSIVE STRENGTH OF NOT LESS THAN THE REQUIRED STRENGTH SHOWN IN THE "CONCRETE RELEASE STRENGTH" TABLE.

FOR GROUT FOR STRUCTURES, SEE SPECIAL PROVISIONS.

ALL BAR SUPPORTS USED IN THE PARAPET AND ALL INCIDENTAL REINFORCING STEEL SHALL BE EPOXY COATED IN ACCORDANCE WITH THE STANDARD SPECIFICATIONS.

CONCRETE INSERTS SHALL HAVE A MINIMUM WORKING LOAD SHEAR CAPACITY OF 2.5 KIPS.

THE 3/4" Ø BOLTS, WASHERS AND CONCRETE INSERTS SHALL BE GALVANIZED IN ACCORDANCE WITH SECTION 1076 OF THE STANDARD SPECIFICATIONS.

THE BOLTS, WASHERS AND CONCRETE INSERTS ARE PROVIDED AS AN OPTION FOR THE CONTRACTOR TO ATTACH MATERIALS TO PREVENT DEBRIS FROM DROPPING INTO THE WATER DURING CONSTRUCTION OF THE PARAPETS.

UPON COMPLETION OF THE BRIDGE CONSTRUCTION, THE 3/4" Ø BOLTS AND WASHERS SHALL BE REMOVED AND THE CONCRETE INSERTS SHALL BE GROUTED.

THE COST OF THE 3/4" Ø BOLTS, WASHERS AND INSERTS SHALL BE INCLUDED IN THE PRICE BID FOR PRESTRESSED CONCRETE CORED SLABS.

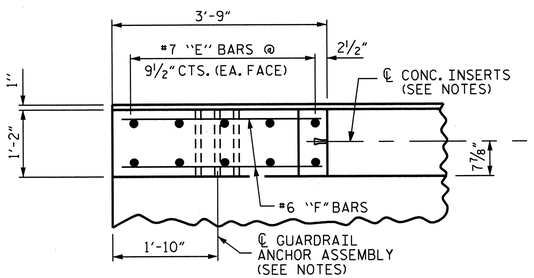

PLAN OF END POST

DEAD LOAD DEFLECTION AND CAMBER	3'-0" x 2'-0"
65' CORED SLAB UNIT	0.6" Ø L.R. STRAND
CAMBER (SLAB ALONE IN PLACE)	3 1/2" ↑
DEFLECTION DUE TO SUPERIMPOSED DEAD LOAD**	11/16" ↓
FINAL CAMBER	2 13/16" ↑

** INCLUDES FUTURE WEARING SURFACE

GUTTERLINE ASPHALT THICKNESS & PARAPET HEIGHT	ASPHALT OVERLAY THICKNESS @ MID-SPAN	PARAPET HEIGHT @ MID-SPAN
65' UNITS	1 11/16"	2'-7 11/16"

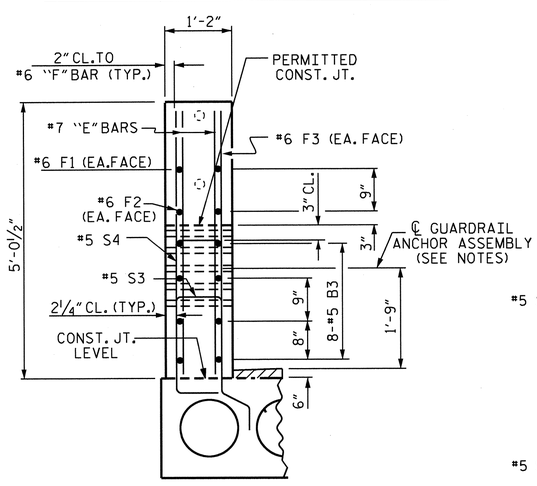

END VIEW

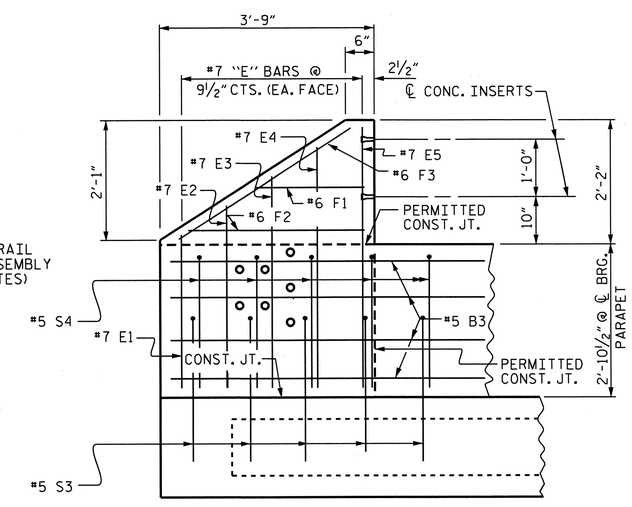

ELEVATION

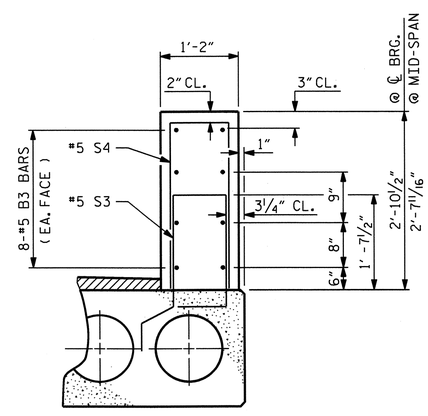

SECTION THRU PARAPET

PARAPET AND END POST FOR TWO-BAR RAIL

PROJECT NO. B-4147
HENDERSON COUNTY
STATION: 21+69.50 -L-

SHEET 3 OF 3

STATE OF NORTH CAROLINA
DEPARTMENT OF TRANSPORTATION
RALEIGH

3'-0" X 2'-0"
PRESTRESSED CONCRETE
CORED SLAB UNIT
90° SKEW

NORTH CAROLINA PROFESSIONAL SEAL 20125 ENGINEER MARSHALL C. CHEEK, JR.
11-26-12

REVISIONS							SHEET NO.
NO.	BY:	DATE:	NO.	BY:	DATE:		S-25
1			3				TOTAL SHEETS
2			4				39

ASSEMBLED BY : J.R. MCROY DATE : 7/12
CHECKED BY : M.C. CHEEK DATE : 8/12

26-NOV-2012 09:26
R:\Structures\Plans\FinalPlans\Str_#2\B4147_SD_02_cored_slab.dgn
mpoole

STR. #2

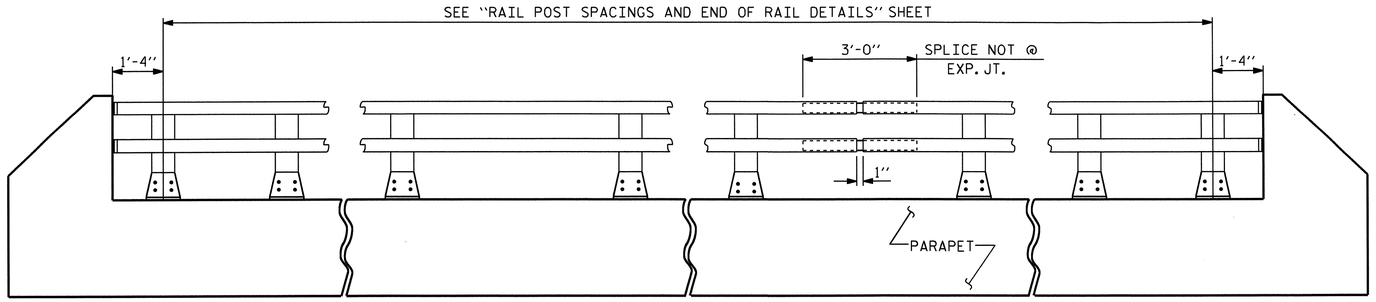

ELEVATION

NOTE : FOR ATTACHMENT OF METAL RAIL TO END POST, SEE SHEET 2 OF 3.

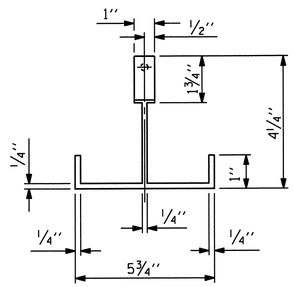

PLAN

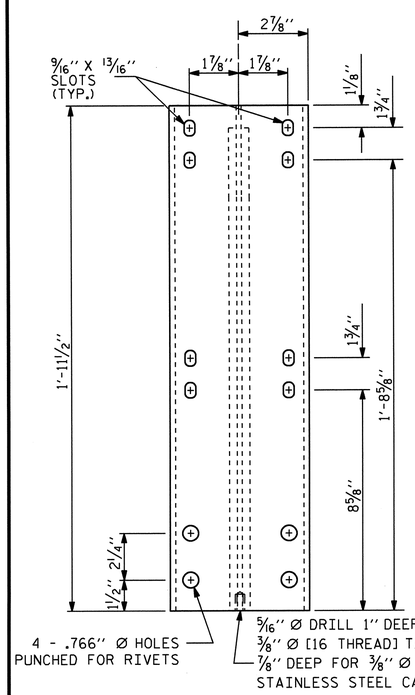

FRONT ELEVATION

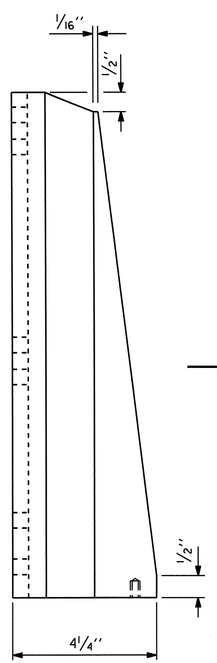

SIDE ELEVATION

DETAILS OF POST

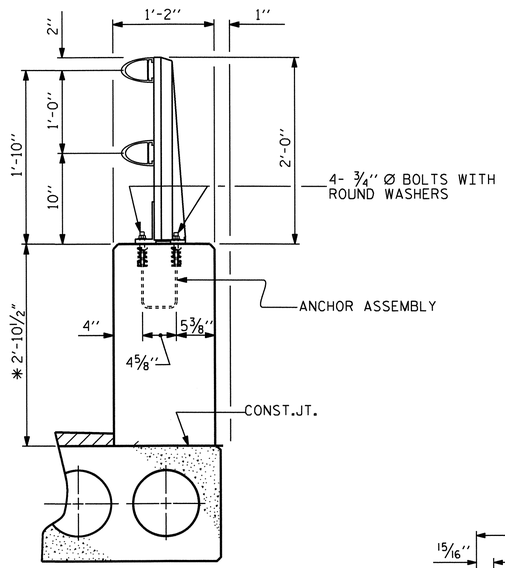

SECTION THRU PARAPET AND RAIL

* THE MAXIMUM HEIGHT OF THE PARAPET IS SHOWN. THE HEIGHT OF THE PARAPET FOLLOWS THE PROFILE OF THE GUTTERLINE.

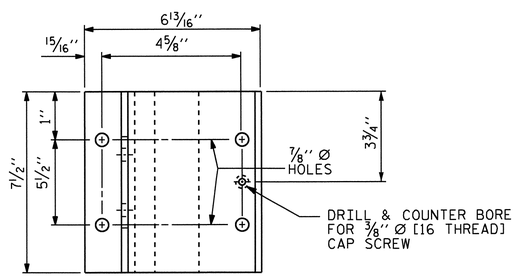

PLAN

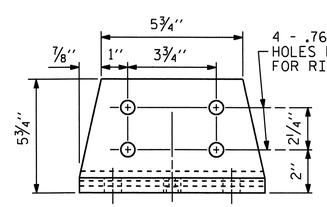

FRONT ELEVATION

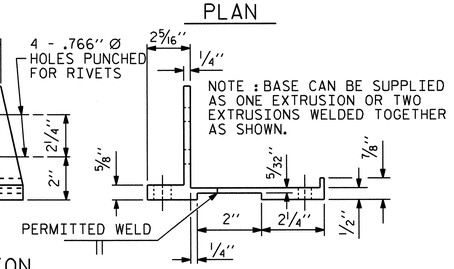

SIDE ELEVATION

POST BASE DETAILS

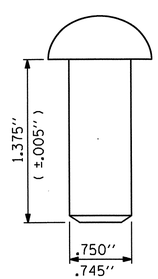

RIVET DETAIL

NOTES

THE METAL RAIL SHALL BE ALUMINUM AND IN ACCORDANCE WITH THE REQUIREMENTS OF THE GENERAL NOTES AND THE FOLLOWING SPECIFICATIONS.

ALUMINUM RAILS

MATERIAL FOR POSTS, BASES AND RAILS, EXPANSION BARS AND CLAMP BARS SHALL BE ASTM B-221 ALLOY 6061-T6.

MATERIAL FOR RIVETS SHALL BE ASTM B316 ALLOY 6061-T6. RIVETS SHALL BE STANDARD BUTTON HEAD AND CONE POINT COLD DRIVEN AS PER DRAWING.

THE BASE OF RAIL POSTS, OR ANY OTHER ALUMINUM SURFACE IN CONTACT WITH CONCRETE SHALL BE THOROUGHLY COATED WITH AN ALUMINUM IMPREGNATED CAULKING COMPOUND OF APPROVED QUALITY.

MATERIAL FOR SHIMS TO BE ASTM B209 ALLOY 6061-T6.

GENERAL NOTES

RAILING SHALL BE CONTINUOUS FROM END POST TO END POST OF BRIDGE. EACH JOINT IN RAIL LENGTH SHALL BE SPLICED AS DETAILED. PANEL LENGTHS OF RAIL SHALL BE ATTACHED TO A MINIMUM OF THREE POSTS.

FOR END OF RAIL TO CLEAR FACE OF CONCRETE END POST DIMENSION, SEE STANDARD NO. BMR2.

CAP SCREWS SHALL BE ASTM F593 ALLOY 305 STAINLESS STEEL. WASHERS SHALL MEET THE REQUIREMENTS OF ASTM F844 EXCEPT THEY SHALL BE MADE FROM ALLOY 304 STAINLESS STEEL.

CERTIFIED MILL REPORTS ARE REQUIRED FOR RAILS AND POSTS. SHOP INSPECTION IS NOT REQUIRED.

METAL RAIL POSTS SHALL BE SET NORMAL TO CURB GRADE.

METHOD OF MEASUREMENT FOR METAL RAILS: FOR LENGTH OF METAL RAILS TO BE PAID FOR, SEE THE STANDARD SPECIFICATIONS.

CURVED RAIL USAGE: WHERE RAILS ARE TO BE USED ON BRIDGES ON HORIZONTAL AND/OR VERTICAL CURVATURE THE CONTRACTOR MAY, AT HIS OPTION, HAVE THE REQUIRED CURVATURE IN THE RAIL FORMED IN THE SHOP OR IN THE FIELD. IN EITHER EVENT, THE RAIL SHALL CONFORM WITHOUT BUCKLING OR KINKING TO THE REQUIRED CURVATURE IN A UNIFORM MANNER ACCEPTABLE TO THE ENGINEER.

TO INSURE FUTURE IDENTIFICATION OF THE FABRICATOR, A PERMANENT IDENTIFYING MARK SHALL BE PLACED ON EACH POST. THE METHOD OF MARKING AND LOCATION SHALL BE SUCH THAT IT DOES NOT DETRACT FROM THE APPEARANCE OF THE POST, BUT REMAINS VISIBLE AFTER RAIL PLACEMENT.

SHIMS SHALL BE USED AS NECESSARY FOR POST ALIGNMENT.

ALLOY 6351-T5 MAY BE SUBSTITUTED FOR ALLOY 6061-T6 WHERE APPLICABLE.

MINOR VARIATIONS IN DETAILS OF METAL RAIL WILL BE CONSIDERED. DETAILS OF SUCH VARIATIONS, IF DESIRED, SHALL BE SUBMITTED FOR APPROVAL.

GROOVED CONTRACTION JOINTS, 1/2" IN DEPTH, SHALL BE TOOLED IN ALL EXPOSED FACES OF THE PARAPET AND IN ACCORDANCE WITH ARTICLE 825-10(B) OF THE STANDARD SPECIFICATIONS. A CONTRACTION JOINT SHALL BE LOCATED AT EACH THIRD POINT BETWEEN PARAPET EXPANSION JOINTS. ONLY ONE CONTRACTION JOINT IS REQUIRED AT MIDPOINT OF PARAPET SEGMENTS LESS THAN 20 FEET IN LENGTH AND NO CONTRACTION JOINTS ARE REQUIRED FOR THOSE SEGMENTS LESS THAN 10 FEET IN LENGTH.

PAY LENGTH = 118.75 LIN. FT.

PROJECT NO. B-4147
HENDERSON COUNTY
STATION: 21+69.50 -L-

SHEET 1 OF 3

STATE OF NORTH CAROLINA
DEPARTMENT OF TRANSPORTATION
RALEIGH

STANDARD

2 BAR METAL RAIL

NORTH CAROLINA PROFESSIONAL SEAL 20125 ENGINEER MARSHALL C. CHEEK, JR. 11-26-12

ASSEMBLED BY : J.R. MCROY	DATE : 7/12
CHECKED BY : M.C. CHEEK	DATE : 8/12

DRAWN BY : EEM	6/94	REV. 5/7/03R	RWW/JTE
CHECKED BY : RGW	6/94	REV. 5/1/06	TLA/GM
		REV. 10/1/11	MAA/GM

REVISIONS

NO.	BY:	DATE:	NO.	BY:	DATE:
1			3		
2			4		

SHEET NO. S-26
TOTAL SHEETS 39

STR. #2 STD. NO. BMR3

05-SEP-2012 08:40
R:\Structures\Plans\Final Plans\Str_#2\B4147_SD_02_cored_slab.dgn
mpoole

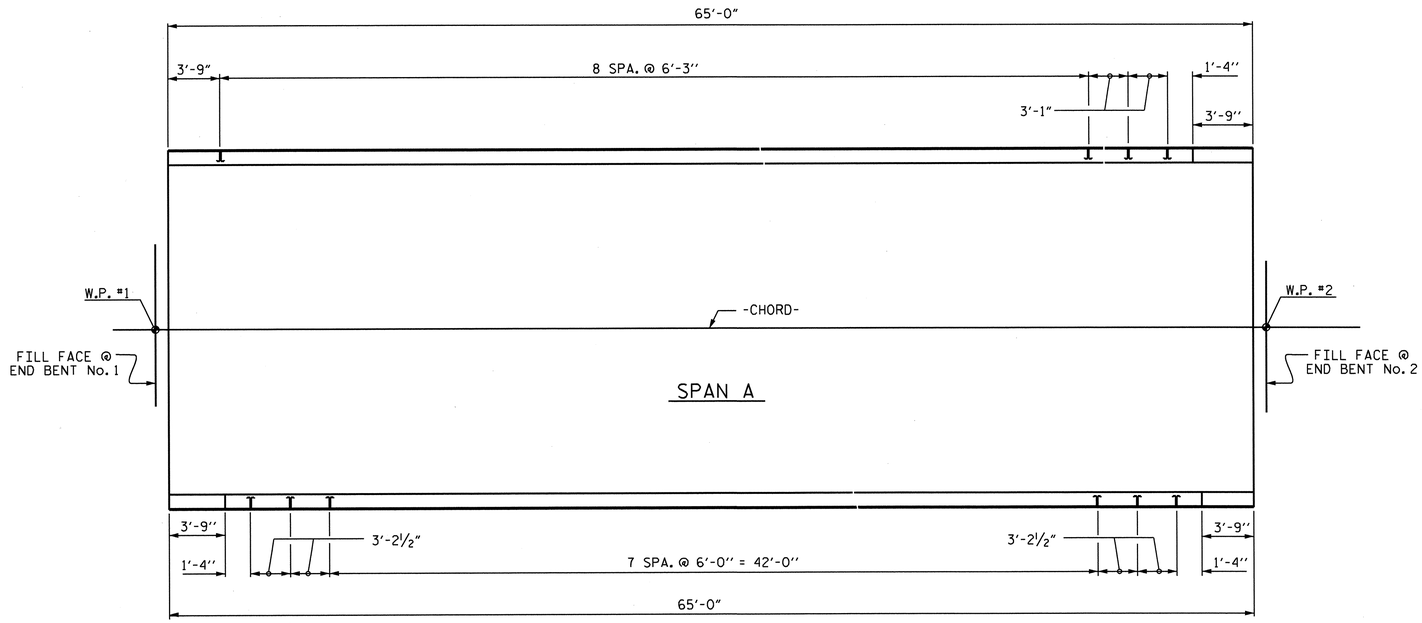

PLAN OF RAIL POST SPACINGS

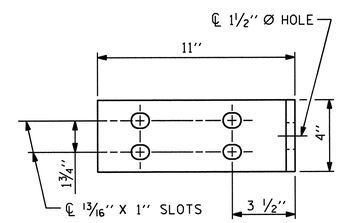

ELEVATION

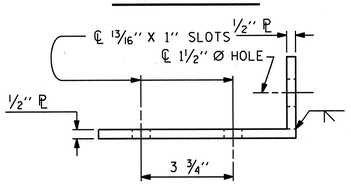

TOP VIEW

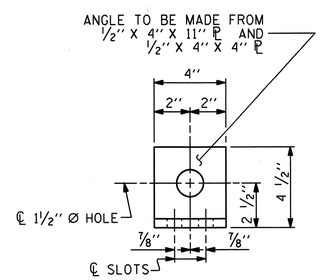

END VIEW (FIX AND EXP.)

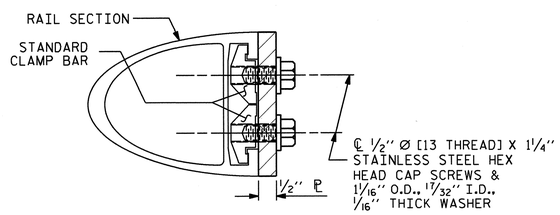

SECTION H-H (FIX)

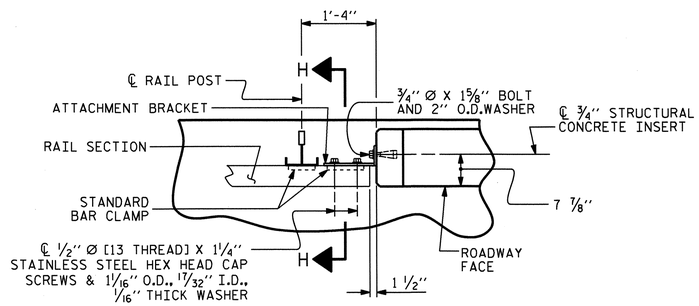

PLAN - RAIL AND END POST

NOTES

STRUCTURAL CONCRETE INSERT

THE STRUCTURAL CONCRETE INSERT ASSEMBLY SHALL CONSIST OF THE FOLLOWING COMPONENTS:

A. FERRULES SHALL BE MADE FROM STEEL MEETING THE REQUIREMENTS OF AASHTO M169, GRADE 12L14 AND SHALL HAVE A MINIMUM LENGTH OF THREADS OF 1½".

B. 1 - ¾" Ø X 1⅝" BOLT WITH WASHER. BOLT SHALL CONFORM TO THE REQUIREMENTS OF ASTM A307. BOLT AND WASHER SHALL BE GALVANIZED. (AT THE CONTRACTOR'S OPTION, STAINLESS STEEL BOLT AND WASHER MAY BE USED AS AN ALTERNATE FOR THE ¾" Ø X 1⅝" GALVANIZED BOLT AND WASHER. THEY SHALL CONFORM TO OR EXCEED THE MECHANICAL REQUIREMENTS OF ASTM A307. THE USE OF THIS ALTERNATE SHALL BE APPROVED BY THE ENGINEER.)

C. WIRE STRUT SHOWN IN THE CONCRETE INSERT ASSEMBLY DETAIL IS THE MINIMUM ALLOWABLE SIZE AND SHALL HAVE A MINIMUM TENSILE STRENGTH OF 100,000 PSI. AS AN OPTION, A 7/16" Ø WIRE STRUT WITH A MINIMUM TENSILE STRENGTH OF 90,000 PSI IS ACCEPTABLE.

NOTES

METAL RAIL TO END POST CONNECTION

THE METAL RAIL TO END POST CONNECTION SHALL CONSIST OF THE FOLLOWING COMPONENTS:

A. ½" PLATES SHALL CONFORM TO AASHTO M270 GRADE 36 AND SHALL BE GALVANIZED AFTER FABRICATION.

B. ¾" STRUCTURAL CONCRETE INSERT SHALL HAVE A WORKING LOAD SHEAR CAPACITY OF 4800 LBS. THE FERRULES SHALL ENGAGE A ¾"Ø X 1⅝" BOLT WITH 2" O.D. WASHER IN PLACE. THE ¾"Ø X 1⅝" BOLT SHALL HAVE N. C. THREADS.

C. CAP SCREWS FOR RAIL ATTACHMENT TO ANGLE SHALL CONFORM TO THE REQUIREMENTS OF ASTM F593 ALLOY 305 STAINLESS STEEL. CAP SCREWS TO BE CENTERED IN SLOTS AT 60°F.

D. STANDARD CLAMP BARS (SEE METAL RAIL SHEET 3 OF 3).

E. ½" Ø PIPE SLEEVES (IF REQUIRED) TO BE GALVANIZED.

THE COST OF THE STANDARD CLAMP BARS AND CAP SCREWS USED IN THE METAL RAIL TO END POST CONNECTION SHALL BE INCLUDED IN THE UNIT CONTRACT PRICE BID FOR LINEAR FEET OF 1 OR 2 BAR METAL RAILS.

THE ¾" STRUCTURAL CONCRETE INSERT WITH BOLT SHALL BE ASSEMBLED IN THE SHOP.

THE COST OF THE ¾" STRUCTURAL CONCRETE INSERT ASSEMBLY, AND THE ½" PLATES COMPLETE IN PLACE SHALL BE INCLUDED IN THE VARIOUS PAY ITEMS.

THE CONTRACTOR, AT HIS OPTION, MAY USE AN ADHESIVE BONDING SYSTEM IN LIEU OF THE STRUCTURAL CONCRETE INSERT EMBEDDED IN THE END POST. IF THE ADHESIVE BONDING SYSTEM IS USED, THE ¾" Ø X 1⅝" BOLT WITH WASHER SHALL BE REPLACED WITH A ¾"Ø X 6½" BOLT AND 2" O.D. WASHER. ALL SPECIFICATIONS THAT APPLY TO THE ¾" Ø X 1⅝" BOLT SHALL APPLY TO THE ¾"Ø X 6 ½" BOLT. FIELD TESTING OF THE ADHESIVE BONDING SYSTEM IS NOT REQUIRED.

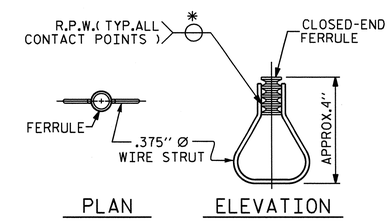

STRUCTURAL CONCRETE INSERT

* EACH WELDED ATTACHMENT OF WIRE TO FERRULE SHALL DEVELOP THE TENSILE STRENGTH OF THE WIRE.

FIXED

DETAILS FOR ATTACHING METAL RAIL TO END POST

PROJECT NO. B-4147

HENDERSON COUNTY

STATION: 21+69.50 -L-

SHEET 2 OF 3

STATE OF NORTH CAROLINA
DEPARTMENT OF TRANSPORTATION
RALEIGH

STANDARD

RAIL POST SPACINGS
AND
END OF RAIL DETAILS
FOR TWO BAR METAL RAILS

NORTH CAROLINA PROFESSIONAL SEAL 20125 ENGINEER MARSHALL G. CHEEK, JR. 11-26-12

REVISIONS								SHEET NO.
NO.	BY:	DATE:	NO.	BY:	DATE:			S-27
1			3					TOTAL SHEETS
2			4					39

ASSEMBLED BY : J.R. MCROY		DATE : 7/12	
CHECKED BY : M.G. CHEEK		DATE : 8/12	
DRAWN BY : FCJ 1/88	REV. 5/7/03	RWW/JTE	
CHECKED BY : CRK 3/89	REV. 5/1/06	TLA/GM	
	REV. 10/1/11	MAA/GM	

STR. #2

STD. NO. BMR2

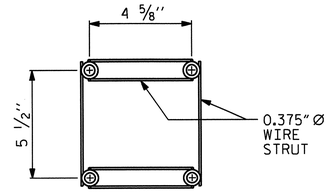

PLAN

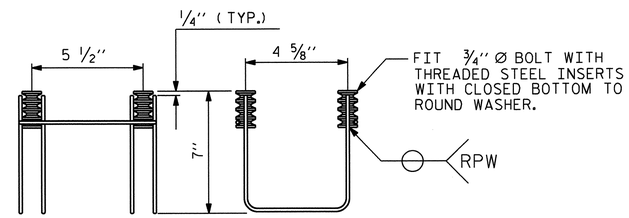

SIDE VIEW ELEVATION

4-BOLT METAL RAIL ANCHOR ASSEMBLY

(23 ASSEMBLIES REQUIRED)

NOTES

STRUCTURAL CONCRETE ANCHOR ASSEMBLY

THE STRUCTURAL CONCRETE ANCHOR ASSEMBLY SHALL CONSIST OF THE FOLLOWING COMPONENTS :

A. FERRULES SHALL BE MADE FROM STEEL MEETING THE REQUIREMENTS OF AASHTO M169, GRADE 12L14 AND SHALL HAVE A MINIMUM LENGTH OF THREADS OF 2'' FOR 3/4'' FERRULES.

B. 4 - 3/4'' Ø X 2 1/2'' BOLTS WITH WASHERS. BOLTS SHALL CONFORM TO THE REQUIREMENTS OF ASTM A307. BOLTS AND WASHERS SHALL BE GALVANIZED. AT THE CONTRACTOR'S OPTION, STAINLESS STEEL BOLTS AND WASHERS MAY BE USED AS AN ALTERNATE FOR THE 3/4'' Ø X 2 1/2'' GALVANIZED BOLTS AND WASHERS. THEY SHALL CONFORM TO OR EXCEED THE MECHANICAL REQUIREMENTS OF ASTM A307. THE USE OF THIS ALTERNATE SHALL BE APPROVED BY THE ENGINEER.

C. WIRE STRUT SHOWN IN THE CONCRETE ANCHOR ASSEMBLY DETAIL IS THE MINIMUM ALLOWABLE SIZE AND SHALL HAVE A MINIMUM TENSILE STRENGTH OF 100,000 PSI. AS AN OPTION, A 7/16'' Ø WIRE STRUT WITH A MINIMUM TENSILE STRENGTH OF 90,000 PSI IS ACCEPTABLE.

D. THE METAL RAIL ANCHOR ASSEMBLIES TO BE HOT DIPPED GALVANIZED TO CONFORM TO REQUIREMENTS OF AASHTO M111.

E. THE COST OF THE METAL RAIL ANCHOR ASSEMBLY WITH BOLTS AND WASHERS COMPLETE IN PLACE SHALL BE INCLUDED IN THE PRICE BID FOR LINEAR FEET OF METAL RAIL.

F. BOLTS TO BE TIGHTENED ONE-HALF TURN WITH A WRENCH FROM A FINGER-TIGHT POSITION.

THE CONTRACTOR MAY USE ADHESIVELY ANCHORED ANCHOR BOLTS IN PLACE OF THE METAL RAIL ANCHOR ASSEMBLY. LEVEL ONE FIELD TESTING IS REQUIRED, AND THE YIELD LOAD OF THE 3/4'' Ø BOLT IS 10 KIPS. FOR ADHESIVELY ANCHORED ANCHOR BOLTS OR DOWELS, SEE THE STANDARD SPECIFICATIONS.

WHEN ADHESIVELY ANCHORED ANCHOR BOLTS ARE USED, BOLTS SHALL MEET THE REQUIREMENTS OF ASTM F593 ALLOY 304 STAINLESS STEEL WITH MINIMUM 75,000 PSI ULTIMATE STRENGTH. NUTS SHALL MEET THE REQUIREMENTS OF ASTM F594 ALLOY 304 STAINLESS STEEL AND WASHERS SHALL MEET THE REQUIREMENTS OF ASTM F844 EXCEPT THEY SHALL BE MADE FROM ALLOY 304 STAINLESS STEEL.

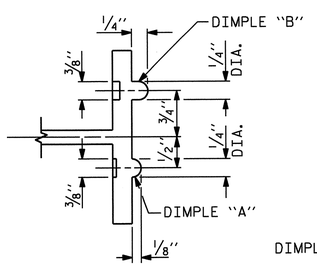

SECTION B - B

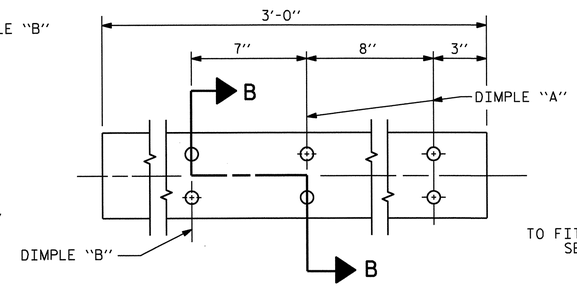

EXPANSION BAR DETAILS

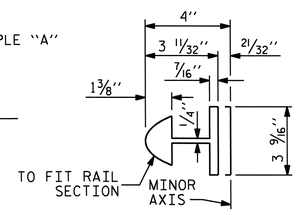

BAR SECTION

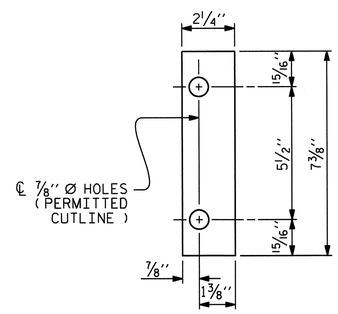

FRONT PLATE

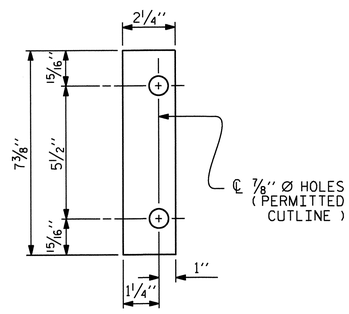

REAR PLATE

SHIM DETAILS

NOTE :
SHIMS MAY BE CUT ALONG PERMITTED CUTLINE OR SLOTTED TO EDGE OF PLATE TO FACILITATE PLACEMENT.

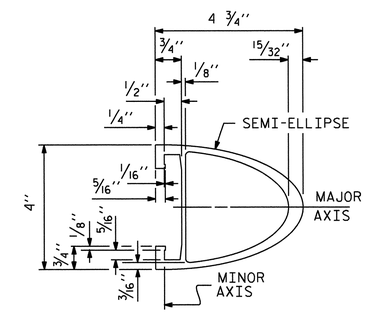

RAIL SECTION

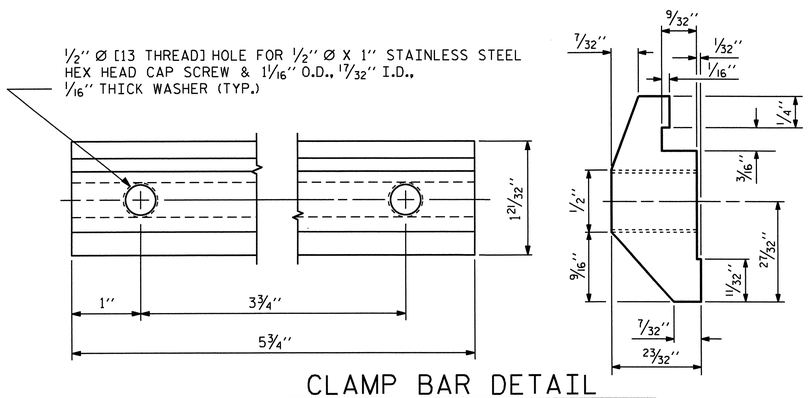

CLAMP BAR DETAIL

(4 REQUIRED PER POST)

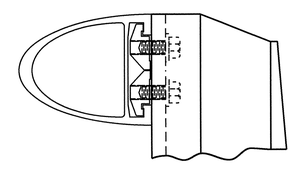

CLAMP ASSEMBLY

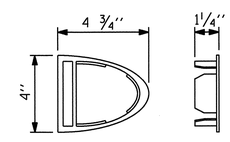

RAIL CAP

PROJECT NO. B-4147
HENDERSON COUNTY
STATION: 21+69.50 -L-

SHEET 3 OF 3

STATE OF NORTH CAROLINA
DEPARTMENT OF TRANSPORTATION
RALEIGH

STANDARD

2 BAR METAL RAIL

NORTH CAROLINA PROFESSIONAL SEAL 20125 ENGINEER M. A. GREER
11-26-12

ASSEMBLED BY : J.R. MCROY		DATE : 7/12	
CHECKED BY : M.G. CHEEK		DATE : 8/12	
DRAWN BY : EEM 6/94	REV. 8/16/99	MAB/LES	
CHECKED BY : RGW 6/94	REV. 5/1/06R	KMM/GM	
	REV. 10/1/11	MAA/GM	

REVISIONS								SHEET NO.
NO.	BY:	DATE:	NO.	BY:	DATE:			S-28
1			3					TOTAL SHEETS
2			4					39

05-SEP-2012 08:39
R:\Structures\Plans\Final Plans\Str_*2\B4147_SD_02_cored_slab.dgn
mpoole

STR. #2

STD. NO. BMR4

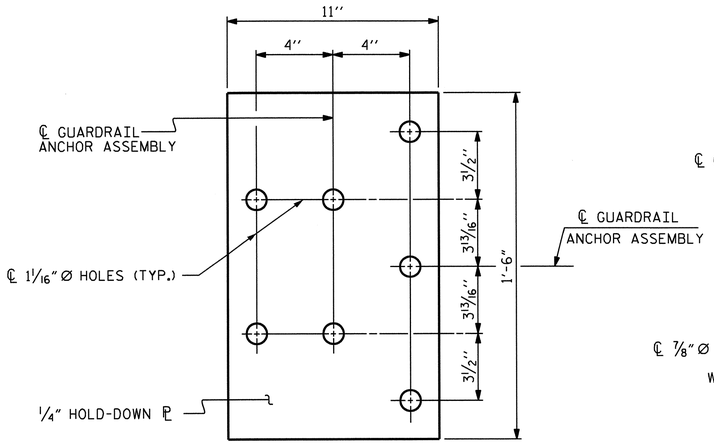

PLAN

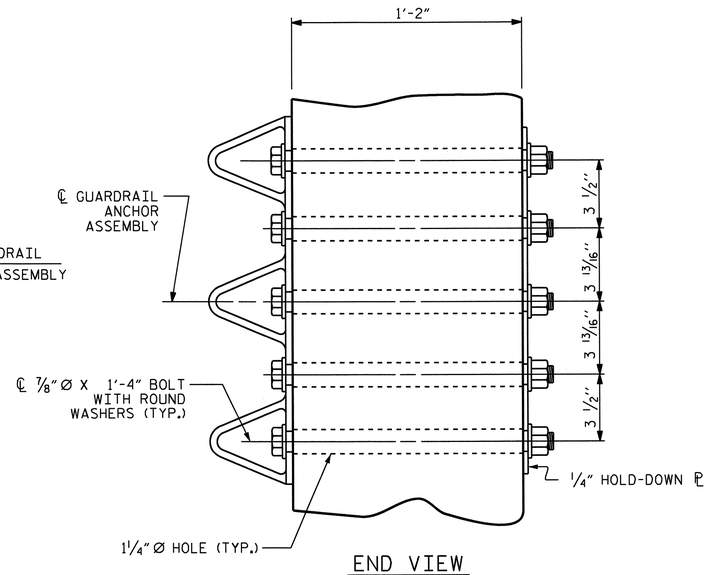

END VIEW

GUARDRAIL ANCHOR ASSEMBLY DETAILS

NOTES

THE GUARDRAIL ANCHOR ASSEMBLY SHALL CONSIST OF A 1/4" HOLD DOWN PLATE AND 7 - 7/8" Ø BOLTS WITH NUTS AND WASHERS.

THE HOLD-DOWN PLATE SHALL CONFORM TO AASHTO M270 GRADE 36. AFTER FABRICATION, THE HOLD-DOWN PLATE SHALL BE HOT-DIP GALVANIZED IN ACCORDANCE WITH AASHTO M111.

BOLTS SHALL CONFORM TO THE REQUIREMENTS OF ASTM A307 AND NUTS SHALL CONFORM TO THE REQUIREMENTS OF AASHTO M291. BOLTS, NUTS AND WASHERS SHALL BE GALVANIZED. AT THE CONTRACTOR'S OPTION, STAINLESS STEEL BOLTS, NUTS AND WASHERS MAY BE USED AS AN ALTERNATE FOR THE 7/8" Ø GALVANIZED BOLTS, NUTS AND WASHERS. THEY SHALL CONFORM TO OR EXCEED THE MECHANICAL REQUIREMENTS OF ASTM A307. THE USE OF THIS ALTERNATE SHALL BE APPROVED BY THE ENGINEER.

THE GUARDRAIL ANCHOR ASSEMBLY IS REQUIRED AT ALL POINTS WHERE APPROACH GUARDRAIL IS TO BE ATTACHED TO THE END OF THE PARAPET. FOR POINTS OF ATTACHMENT, SEE SKETCH.

AFTER INSTALLATION, THE EXPOSED THREAD OF THE BOLT SHALL BE BURRED WITH A SHARP POINTED TOOL.

THE COST OF THE GUARDRAIL ANCHOR ASSEMBLIES WITH BOLTS, NUTS AND WASHERS COMPLETE IN PLACE, SHALL BE INCLUDED IN THE VARIOUS PAY ITEMS.

THE VERTICAL REINFORCING BARS MAY BE SHIFTED SLIGHTLY IN THE END POST TO CLEAR ASSEMBLY BOLTS.

THE 1 1/4" Ø HOLES SHALL BE FORMED OR DRILLED WITH A CORE BIT. IMPACT TOOLS WILL NOT BE PERMITTED. ANY CONCRETE DAMAGED BY THIS WORK SHALL BE REPAIRED TO THE SATISFACTION OF THE ENGINEER.

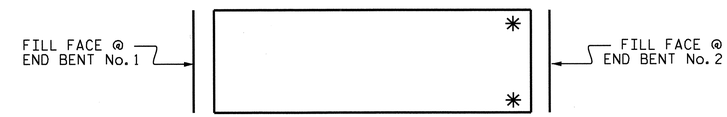

SKETCH SHOWING POINTS OF ATTACHMENT

*LOCATION OF GUARDRAIL ATTACHMENT

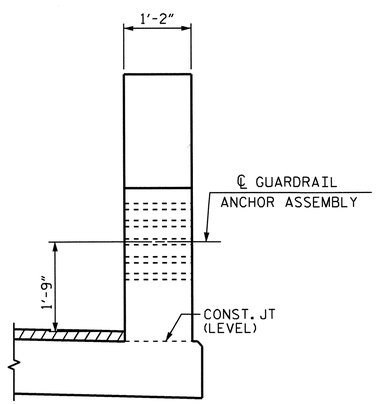

END VIEW

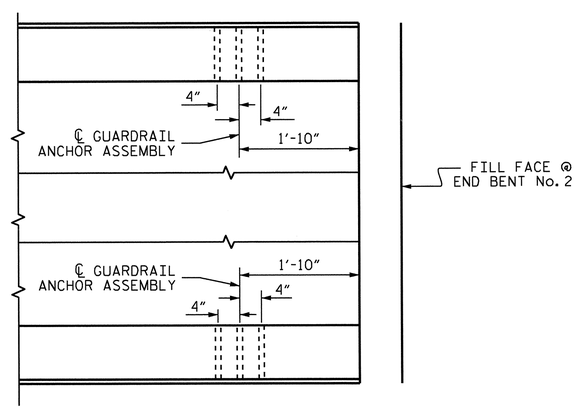

PLAN

LOCATION OF GUARDRAIL ANCHOR AT END POST

PROJECT NO. B-4147
HENDERSON COUNTY
STATION: 21+69.50 -L-

STATE OF NORTH CAROLINA
DEPARTMENT OF TRANSPORTATION
RALEIGH

GUARDRAIL ANCHORAGE DETAILS FOR METAL RAILS

ASSEMBLED BY : J.R. MCROY	DATE : 7/12
CHECKED BY : M.G. CHEEK	DATE : 8/12
DRAWN BY : EEM 6/94	REV. 8/16/99 MAB/LES
CHECKED BY : RGW 6/94	REV. 5/1/06R KMM/GM
	REV. 10/1/11 MAA/GM

REVISIONS

NO.	BY:	DATE:	NO.	BY:	DATE:
1			3		
2			4		

SHEET NO. S-29
TOTAL SHEETS 39

STR. #2

05-SEP-2012 08:39
R:\Structures\Plans\FinalPlans\Str_#2\B4147_SD_02_cored_slab.dgn
mpoole

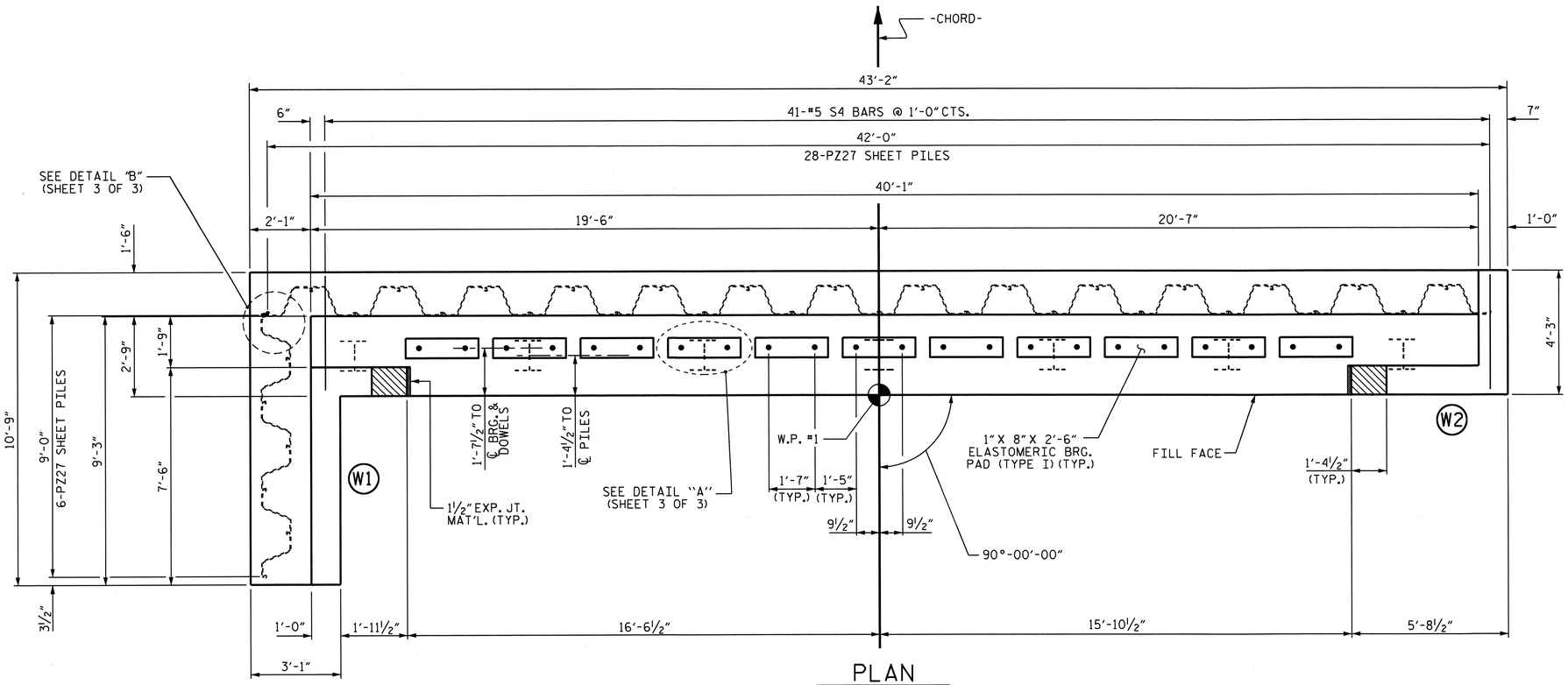

PLAN

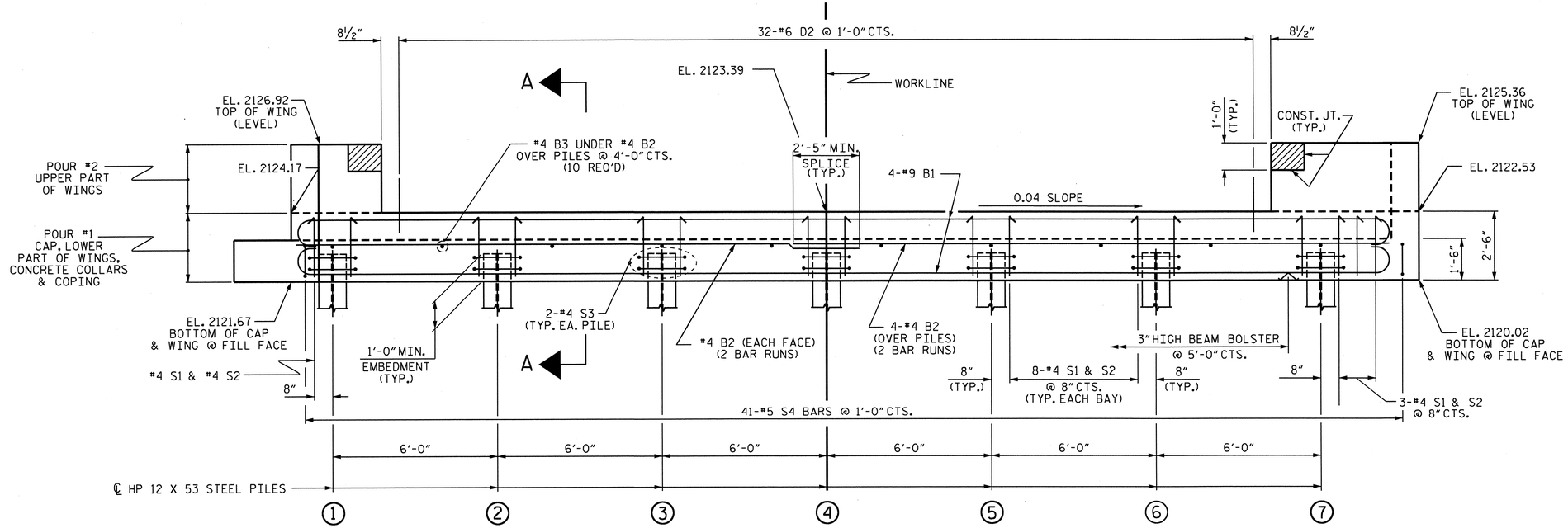

ELEVATION

FOR SECTION A-A, SEE SHEET 3 OF 3. CONCRETE COLLARS FOR STEEL PILES NOT SHOWN IN PLAN AND ELEVATION VIEWS FOR CLARITY. SEE "CORROSION PROTECTION FOR STEEL PILES DETAIL", SHEET 3 OF 3.

NOTES

STIRRUPS IN CAP MAY BE SHIFTED AS NECESSARY TO CLEAR DOWELS.

FOR CORROSION PROTECTION OF STEEL PILES, SEE SHEET 3 OF 3.

THE CONCRETE IN THE SHADED AREA OF THE WING SHALL BE POURED AFTER THE VERTICAL CONCRETE BARRIER RAIL IS CAST IF SLIP FORMING IS USED.

FOR PILE SPLICE DETAILS, SEE SHEET 3 OF 3.

FOR WING DETAILS, SEE SHEET 2 OF 3.

THE #6 D2 DOWELS SHALL BE INSTALLED USING AN ADHESIVE ANCHORING SYSTEM. LEVEL ONE FIELD TESTING IS REQUIRED AND THE YIELD LOAD FOR THE #6 D2 DOWELS IS 26.4 KIPS. INSTALL ONE STRAIGHT DOWEL FOR TESTING.

TOP OF PILE ELEVATIONS	
1	2122.63
2	2122.39
3	2122.15
4	2121.91
5	2121.67
6	2121.43
7	2121.19

PROJECT NO. B-4147

HENDERSON COUNTY

STATION: 21+69.50 -L-

SHEET 1 OF 3

STATE OF NORTH CAROLINA
DEPARTMENT OF TRANSPORTATION
RALEIGH

SUBSTRUCTURE

END BENT No. 1

NORTH CAROLINA PROFESSIONAL SEAL 20125 ENGINEER MARSHALL G. CHEEK, JR.
11-26-12

REVISIONS						SHEET NO.
NO.	BY:	DATE:	NO.	BY:	DATE:	S-30
1			3			TOTAL SHEETS
2			4			39

ASSEMBLED BY :	J.R. MCROY	DATE :	6/12
CHECKED BY :	M.G. CHEEK	DATE :	8/12

26-NOV-2012 10:51
R:\Structures\Plans\Final Plans\Str_#2\B4147_SD_02_EB.dgn
dahodge

STR. #2

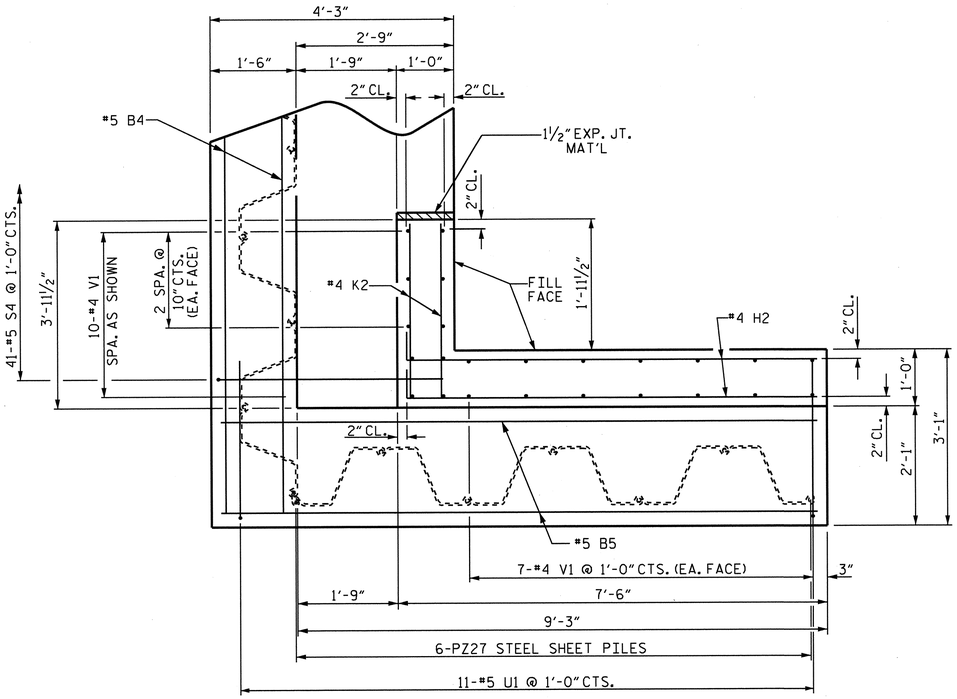

PLAN OF WING (W1)

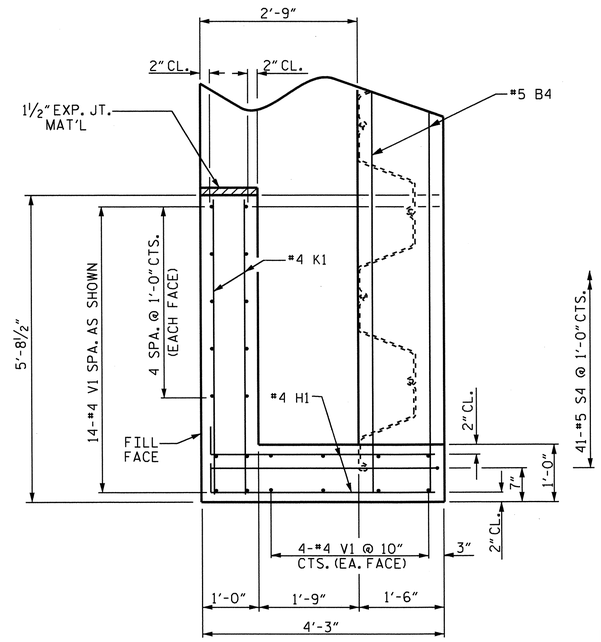

PLAN OF WING (W2)

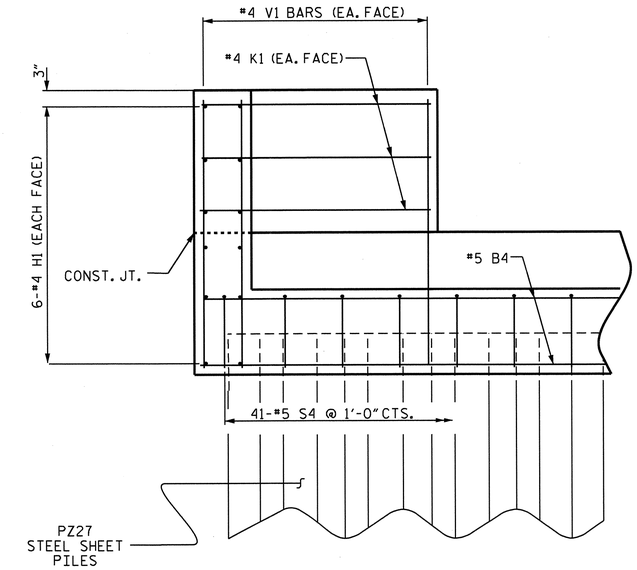

SECTION X-X

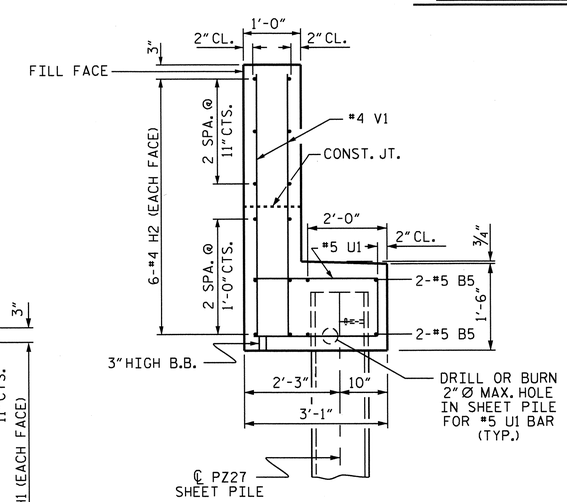

SECTION Y-Y

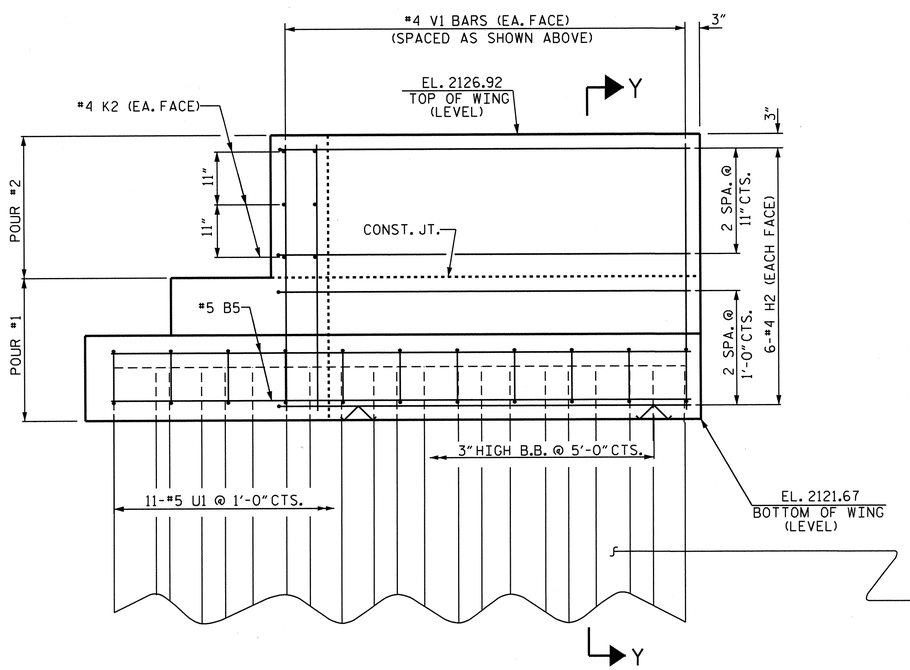

ELEVATION OF WING (W1)

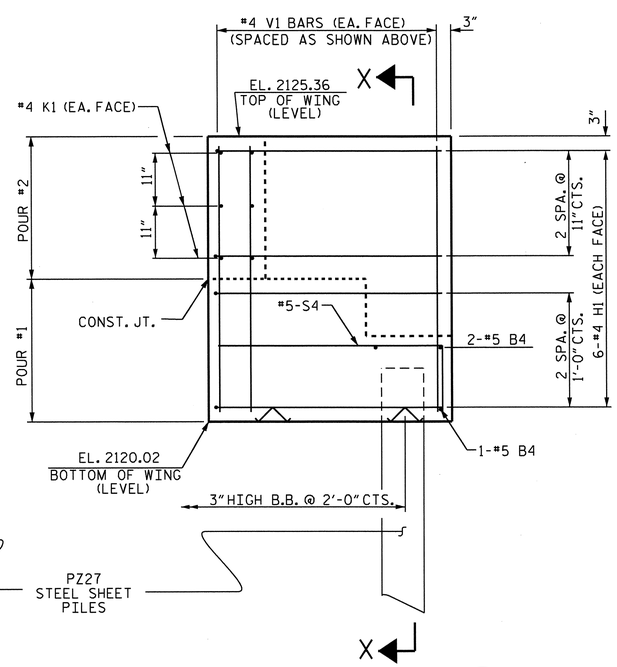

ELEVATION OF WING (W2)

PROJECT NO. B-4147

HENDERSON COUNTY

STATION: 21+69.50 -L-

SHEET 2 OF 3

STATE OF NORTH CAROLINA
DEPARTMENT OF TRANSPORTATION
RALEIGH

SUBSTRUCTURE

END BENT NO. 1
WING DETAILS

NORTH CAROLINA PROFESSIONAL SEAL 20125 ENGINEER MARSHALL G. CHEEK, JR.
11-26-12

REVISIONS						SHEET NO.
NO.	BY:	DATE:	NO.	BY:	DATE:	S-31
1			3			TOTAL SHEETS
2			4			39

DRAWN BY : J.R. MCROY DATE : 7/12
CHECKED BY : M.G. CHEEK DATE : 8/12

26-NOV-2012 09:26
R:\Structures\Plans\Final Plans\Str_#2\B4147_SD_02_EB.dgn
mpoole

STR. #2 NCDDS

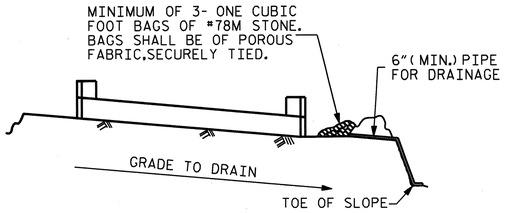

BAGGED STONE AND PIPE SHALL BE PLACED IMMEDIATELY AFTER COMPLETION OF END BENT EXCAVATION. PIPE MAY BE EITHER CONCRETE, CORRUGATED STEEL, CORRUGATED ALUMINUM ALLOY, OR CORRUGATED PLASTIC. PERFORATED PIPE WILL NOT BE ALLOWED.

BAGGED STONE SHALL REMAIN IN PLACE UNTIL THE ENGINEER DIRECTS THAT IT BE REMOVED. THE CONTRACTOR SHALL REMOVE AND DISPOSE OF SILT ACCUMULATIONS AT BAGGED STONE WHEN SO DIRECTED BY THE ENGINEER. BAGS SHALL BE REMOVED AND REPLACED WHENEVER THE ENGINEER DETERMINES THAT THEY HAVE DETERIORATED AND LOST THEIR EFFECTIVENESS.

NO SEPARATE PAYMENT WILL BE MADE FOR THIS WORK AND THE ENTIRE COST OF THIS WORK SHALL BE INCLUDED IN THE UNIT CONTRACT PRICE BID FOR THE SEVERAL PAY ITEMS.

TEMPORARY DRAINAGE AT END BENT

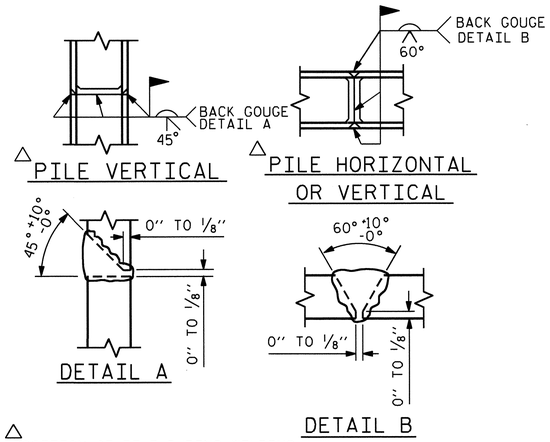

△ POSITION OF PILE DURING WELDING.

PILE SPLICE DETAILS

BAR TYPES

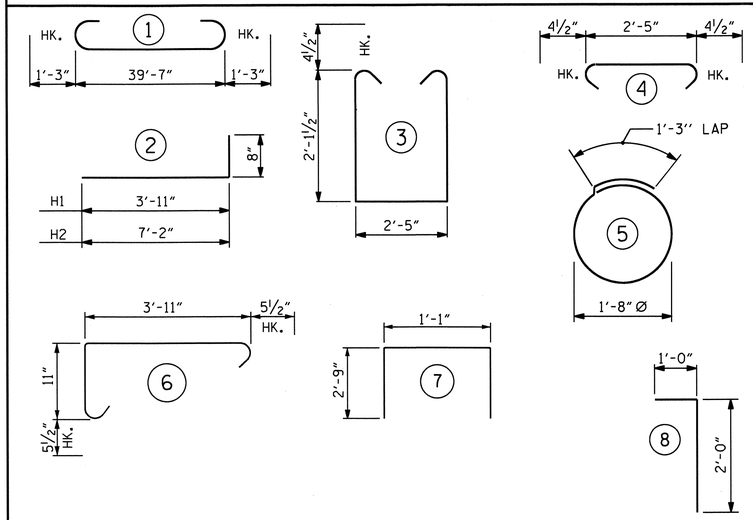

ALL BAR DIMENSIONS ARE OUT TO OUT.

BILL OF MATERIAL

END BENT No. 1

BAR	NO.	SIZE	TYPE	LENGTH	WEIGHT
B1	8	#9	1	42'-1"	1145
B2	12	#4	STR	21'-1"	169
B3	10	#4	STR	2'-5"	16
B4	3	#5	STR	42'-10"	134
B5	4	#5	STR	10'-5"	43
D1	22	#6	STR	1'-6"	50
D2	32	#6	8	3'-0"	144
H1	12	#4	2	4'-7"	37
H2	12	#4	2	7'-10"	63
K1	6	#4	STR	5'-4"	21
K2	6	#4	STR	2'-7"	10
S1	52	#4	3	7'-5"	258
S2	52	#4	4	3'-2"	110
S3	14	#4	5	6'-6"	61
S4	41	#5	6	5'-9"	246
U1	11	#5	7	6'-7"	76
V1	46	#4	STR	4'-10"	149

REINFORCING STEEL 2732 LBS.

CLASS A CONCRETE BREAKDOWN

POUR #1 CAP, LOWER PART OF WINGS, COLLARS & COPING 15.8 CU. YDS.

POUR #2 UPPER PART OF WINGS 1.8 CU. YDS.

TOTAL CLASS A CONCRETE 17.6 CU. YDS.

HP 12 X 53 STEEL PILES

NO: 7 LIN. FT.= 300

18" STEEL SHEET PILES

NO. PZ27 = 34

NO. PZ90 = 1

TOTAL NO. = 35 1375 SQ. FT.

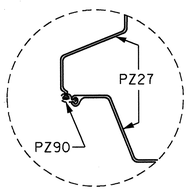

DETAIL "B"

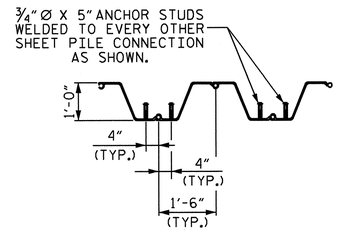

ANCHOR STUD DETAIL

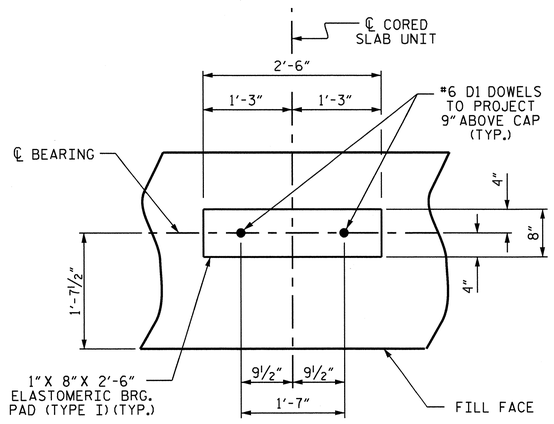

DETAIL "A"

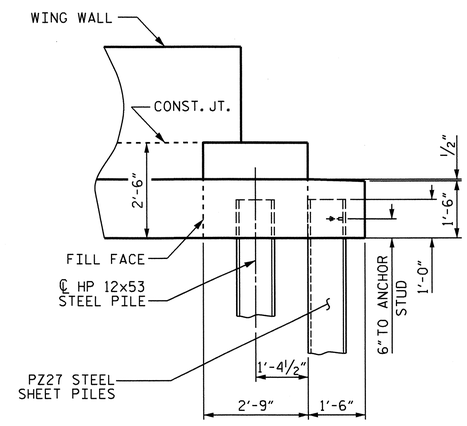

END ELEVATION

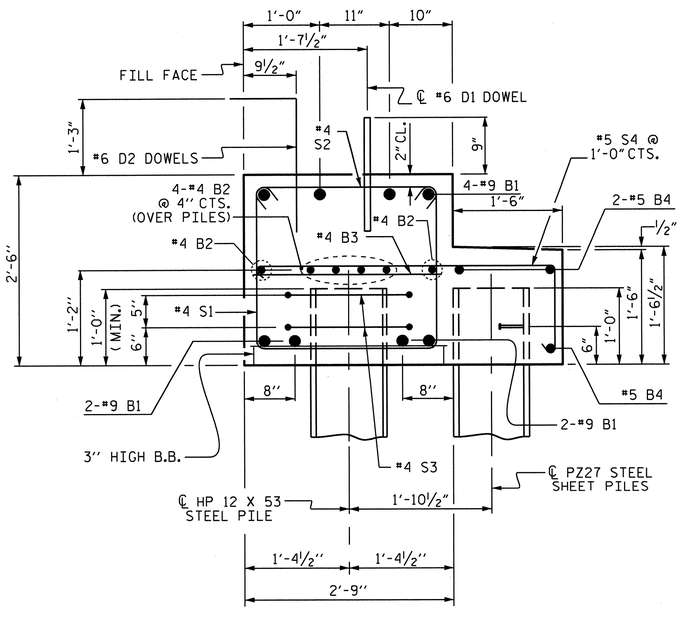

SECTION A-A

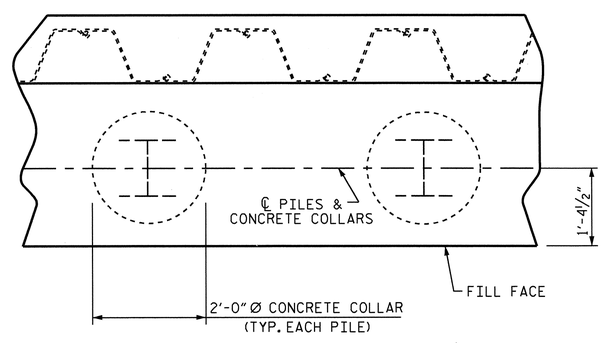

PLAN

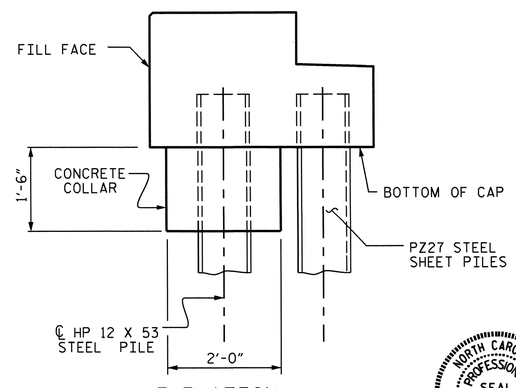

ELEVATION

CORROSION PROTECTION FOR STEEL PILES DETAIL

NORTH CAROLINA PROFESSIONAL SEAL 20125 ENGINEER MARSHALL G. CHEEK, JR.
11-26-12

PROJECT NO. B-4147

HENDERSON COUNTY

STATION: 21+69.50 -L-

SHEET 3 OF 3

STATE OF NORTH CAROLINA
DEPARTMENT OF TRANSPORTATION
RALEIGH

SUBSTRUCTURE

END BENT No. 1
DETAILS

REVISIONS						SHEET NO.
NO.	BY:	DATE:	NO.	BY:	DATE:	S-32
1			3			TOTAL SHEETS
2			4			39

ASSEMBLED BY : J.R. MCROY DATE : 6/12
CHECKED BY : M.G. CHEEK DATE : 8/12

26-NOV-2012 09:25
R:\Structures\Plans\FinalPlans\Str_*2\B4147_SD_02_EB.dgn
mpoole

STR. #2

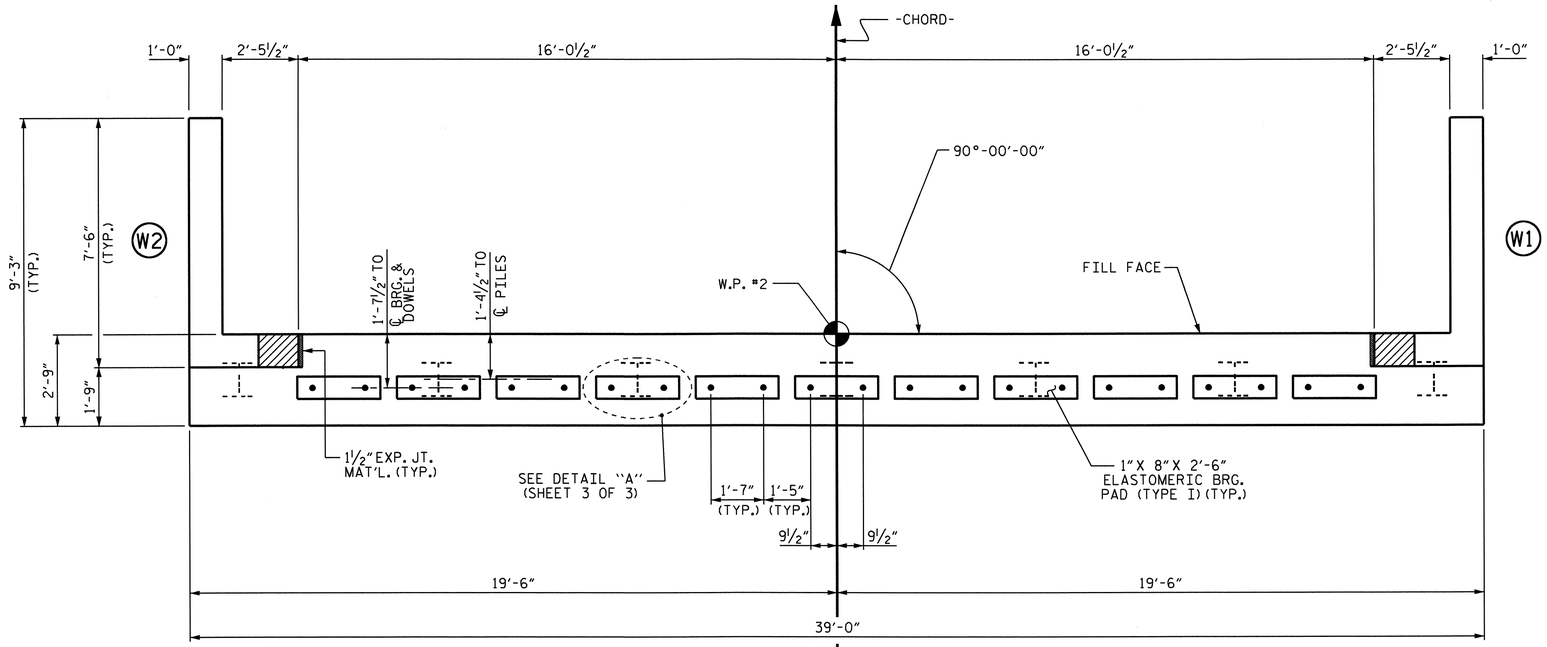

PLAN

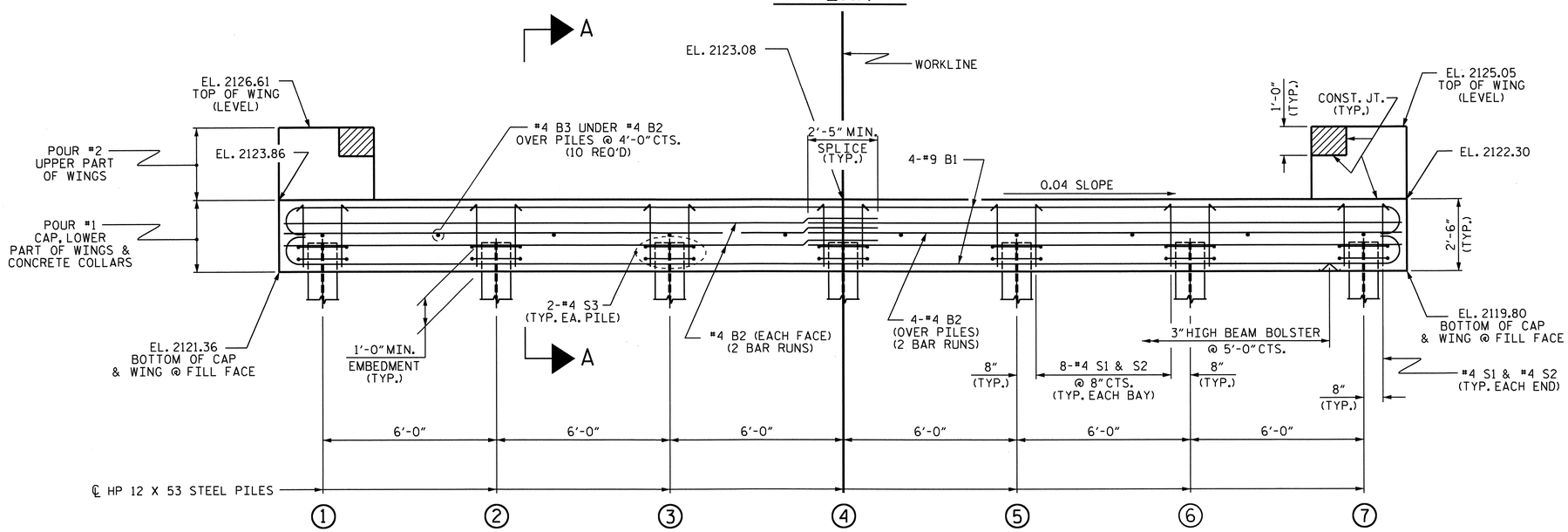

ELEVATION

WINGS NOT SHOWN FOR CLARITY. FOR SECTION A-A, SEE SHEET 3 OF 3.
CONCRETE COLLARS FOR STEEL PILES NOT SHOWN IN PLAN AND ELEVATION VIEWS FOR CLARITY.
SEE "CORROSION PROTECTION FOR STEEL PILES DETAIL", SHEET 3 OF 3.

NOTES

STIRRUPS IN CAP MAY BE SHIFTED AS NECESSARY TO CLEAR DOWELS.

FOR CORROSION PROTECTION OF STEEL PILES, SEE SHEET 3 OF 3.

THE CONCRETE IN THE SHADED AREA OF THE WING SHALL BE POURED AFTER THE PARAPET IS CAST IF SLIP FORMING IS USED.

FOR PILE SPLICE DETAILS, SEE SHEET 3 OF 3.

FOR WING DETAILS, SEE SHEET 2 OF 3.

TOP OF PILE ELEVATIONS	
1	2122.32
2	2122.08
3	2121.84
4	2121.60
5	2121.36
6	2121.12
7	2120.88

PROJECT NO. B-4147
HENDERSON COUNTY
STATION: 21+69.50 -L-

SHEET 1 OF 3

STATE OF NORTH CAROLINA
DEPARTMENT OF TRANSPORTATION
RALEIGH

SUBSTRUCTURE

END BENT No. 2

NORTH CAROLINA PROFESSIONAL SEAL 20125 ENGINEER MARSHAL G. CHEEK, JR.
11-26-12

REVISIONS								SHEET NO.
NO.	BY:	DATE:	NO.	BY:	DATE:			S-33
1			3					TOTAL SHEETS
2			4					38

ASSEMBLED BY :	J.R. MCROY	DATE :	6/12
CHECKED BY :	M.G. CHEEK	DATE :	8/12
DRAWN BY :	DGE	02/10	
CHECKED BY :	MKT	02/10	

05-SEP-2012 08:29
R:\Structures\Plans\FinalPlans\Str_#2\B4147_SD_02_EB.dgn
mpoole

STR. #2

STD. NO. EB_33_90S

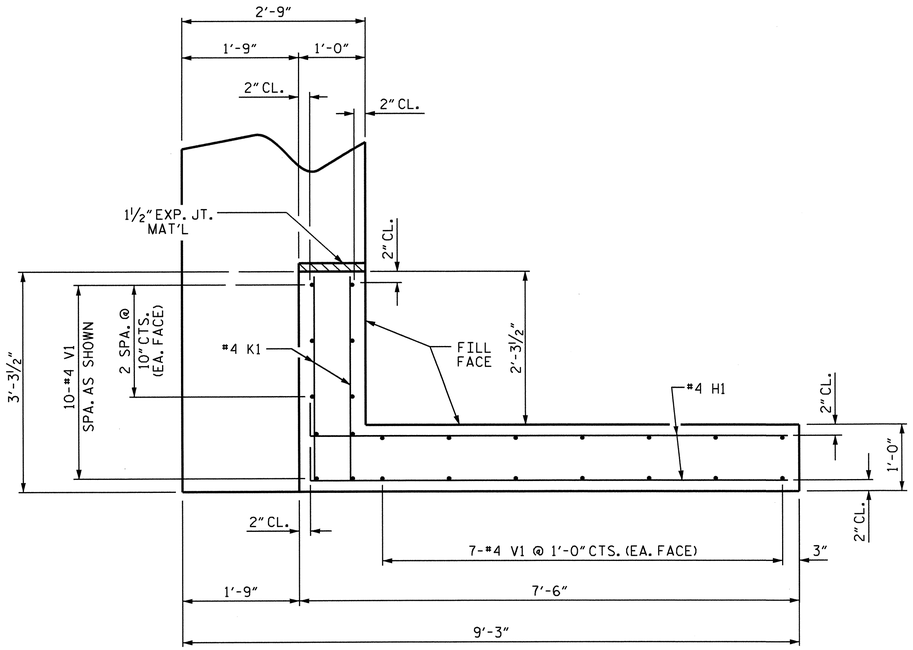

PLAN OF WING (W1)

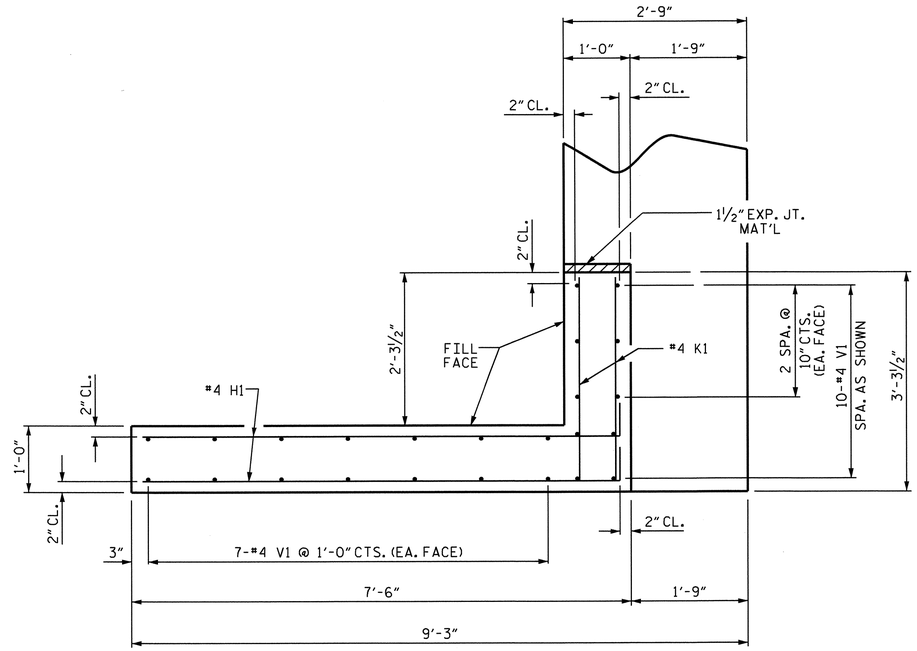

PLAN OF WING (W2)

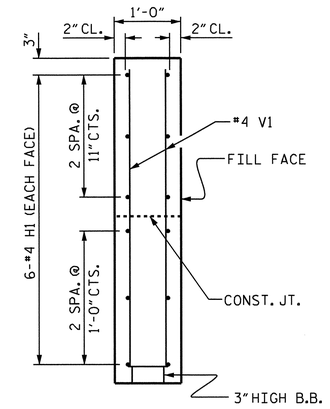

SECTION X-X

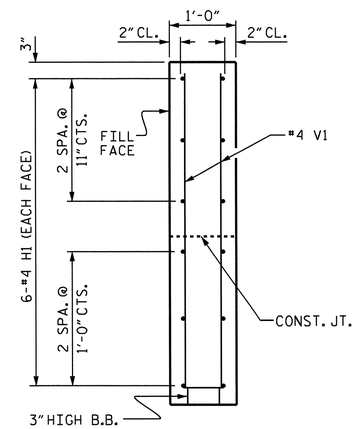

SECTION Y-Y

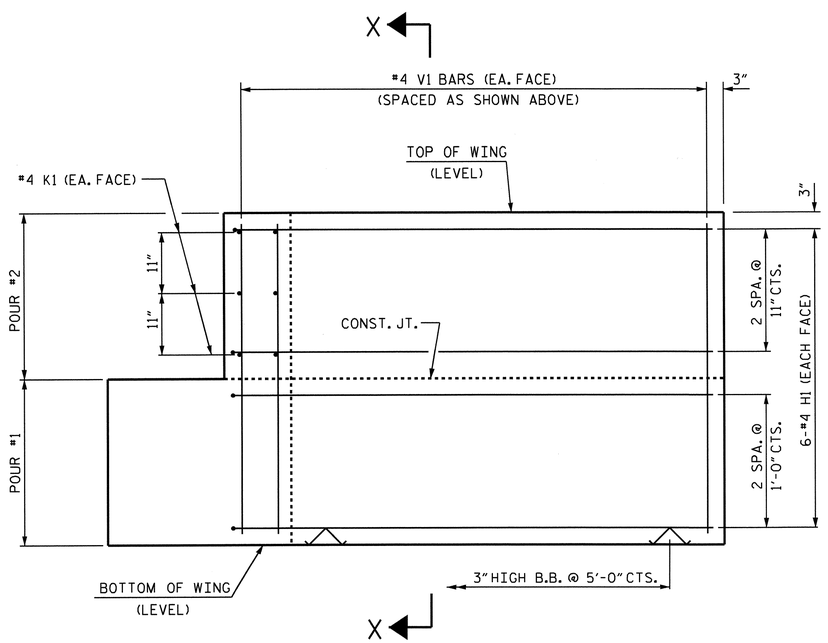

ELEVATION OF WING (W1)

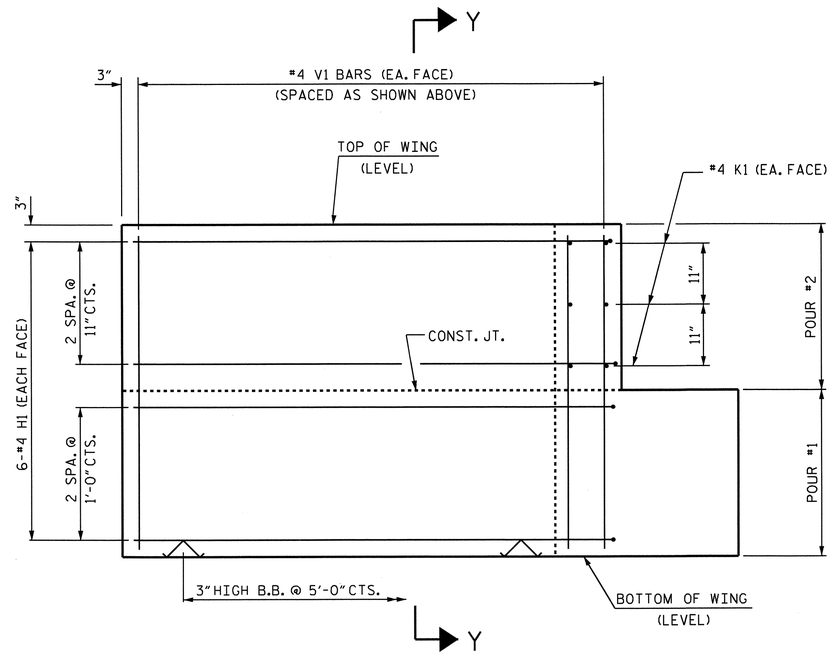

ELEVATION OF WING (W2)

WING DETAILS

PROJECT NO. B-4147

HENDERSON COUNTY

STATION: 21+69.50 -L-

SHEET 2 OF 3

STATE OF NORTH CAROLINA
DEPARTMENT OF TRANSPORTATION
RALEIGH

SUBSTRUCTURE

END BENT No. 2
WING DETAILS

REVISIONS						SHEET NO.
NO.	BY:	DATE:	NO.	BY:	DATE:	S-34
1			3			TOTAL SHEETS
2			4			38

NORTH CAROLINA PROFESSIONAL SEAL 20125 ENGINEER MARSHALL G. CHEEK, JR.
11-26-12

ASSEMBLED BY : J.R. MCROY		DATE :	6/12
CHECKED BY : M.G. CHEEK		DATE :	8/12
DRAWN BY : DGE	02/10		
CHECKED BY : MKT	02/10		

05-SEP-2012 08:29
R:\Structures\Plans\FinalPlans\Str_#2\B4147_SD_02_EB.dgn
mpoole

STR. #2 STD. NO. EB_33_90S

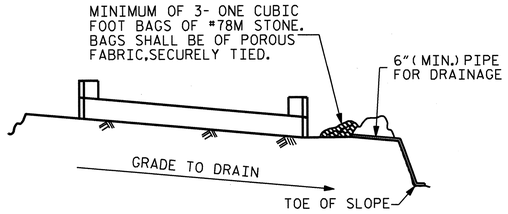

BAGGED STONE AND PIPE SHALL BE PLACED IMMEDIATELY AFTER COMPLETION OF END BENT EXCAVATION. PIPE MAY BE EITHER CONCRETE, CORRUGATED STEEL, CORRUGATED ALUMINUM ALLOY, OR CORRUGATED PLASTIC. PERFORATED PIPE WILL NOT BE ALLOWED.

BAGGED STONE SHALL REMAIN IN PLACE UNTIL THE ENGINEER DIRECTS THAT IT BE REMOVED. THE CONTRACTOR SHALL REMOVE AND DISPOSE OF SILT ACCUMULATIONS AT BAGGED STONE WHEN SO DIRECTED BY THE ENGINEER. BAGS SHALL BE REMOVED AND REPLACED WHENEVER THE ENGINEER DETERMINES THAT THEY HAVE DETERIORATED AND LOST THEIR EFFECTIVENESS.

NO SEPARATE PAYMENT WILL BE MADE FOR THIS WORK AND THE ENTIRE COST OF THIS WORK SHALL BE INCLUDED IN THE UNIT CONTRACT PRICE BID FOR THE SEVERAL PAY ITEMS.

TEMPORARY DRAINAGE AT END BENT

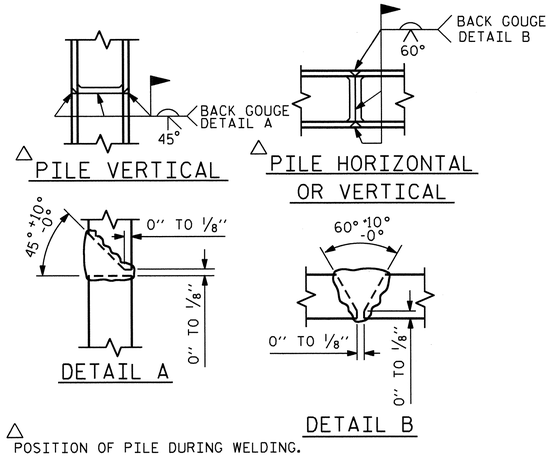

△ POSITION OF PILE DURING WELDING.

PILE SPLICE DETAILS

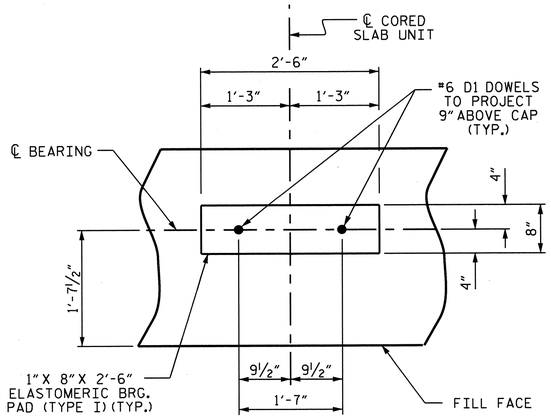

DETAIL "A"

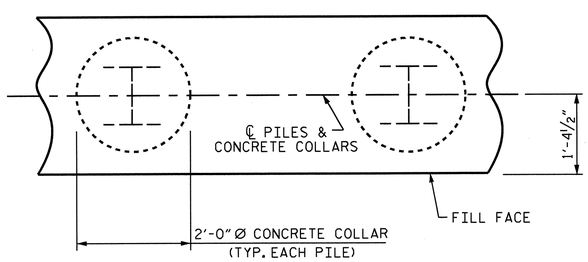

PLAN

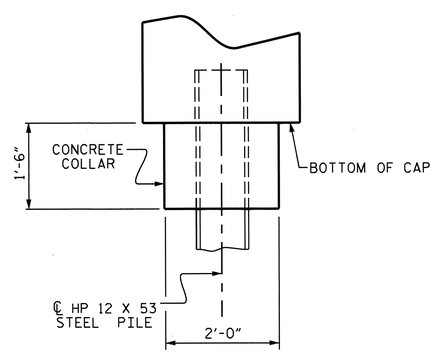

ELEVATION

CORROSION PROTECTION FOR STEEL PILES DETAIL

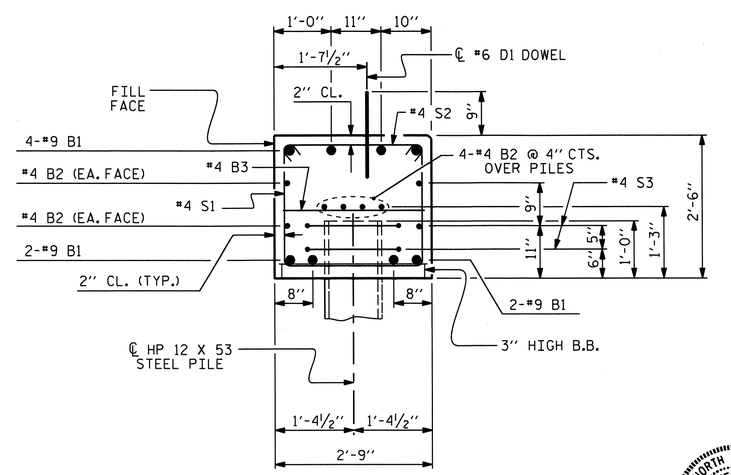

SECTION A-A

(CONCRETE COLLAR NOT SHOWN FOR CLARITY. SEE "CORROSION PROTECTION FOR STEEL PILES DETAIL.")

BAR TYPES

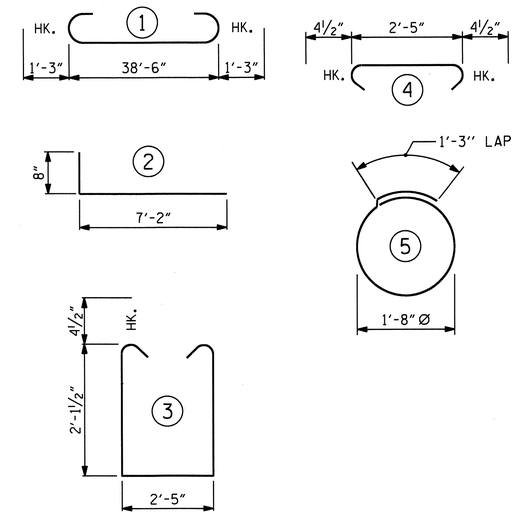

ALL BAR DIMENSIONS ARE OUT TO OUT.

BILL OF MATERIAL
END BENT No. 2

BAR	NO.	SIZE	TYPE	LENGTH	WEIGHT
B1	8	#9	1	41'-0"	1115
B2	16	#4	STR	20'-7"	220
B3	10	#4	STR	2'-5"	16
D1	22	#6	STR	1'-6"	50
H1	24	#4	2	7'-10"	126
K1	12	#4	STR	2'-11"	23
S1	50	#4	3	7'-5"	248
S2	50	#4	4	3'-2"	106
S3	14	#4	5	6'-6"	61
V1	48	#4	STR	4'-8"	150

REINFORCING STEEL 2115 LBS.

CLASS A CONCRETE BREAKDOWN (FOR ONE END BENT)

POUR #1 CAP, LOWER PART OF WINGS & COLLARS 12.4 CU. YDS.

POUR #2 UPPER PART OF WINGS 2.0 CU. YDS.

TOTAL CLASS A CONCRETE 14.4 CU. YDS.

HP 12 X 53 STEEL PILES

NO: 7 LIN. FT.= 210

PROJECT NO. B-4147
HENDERSON COUNTY
STATION: 21+69.50 -L-

SHEET 3 OF 3

STATE OF NORTH CAROLINA
DEPARTMENT OF TRANSPORTATION
RALEIGH

SUBSTRUCTURE

END BENT No. 2
DETAILS

NORTH CAROLINA PROFESSIONAL SEAL 20125 ENGINEER MARSHALL G. CHEEK, JR.
11-26-12

REVISIONS						SHEET NO.
NO.	BY:	DATE:	NO.	BY:	DATE:	S-35
1			3			TOTAL SHEETS
2			4			39

ASSEMBLED BY : J.R. MCROY DATE : 7/12
CHECKED BY : M.G. CHEEK DATE : 8/12

DRAWN BY : DGE 02/10
CHECKED BY : MKT 02/10

26-NOV-2012 09:25
R:\Structures\Plans\FinalPlans\Str_*2\B4147_SD_02_EB.dgn
mpoole

STR. #2

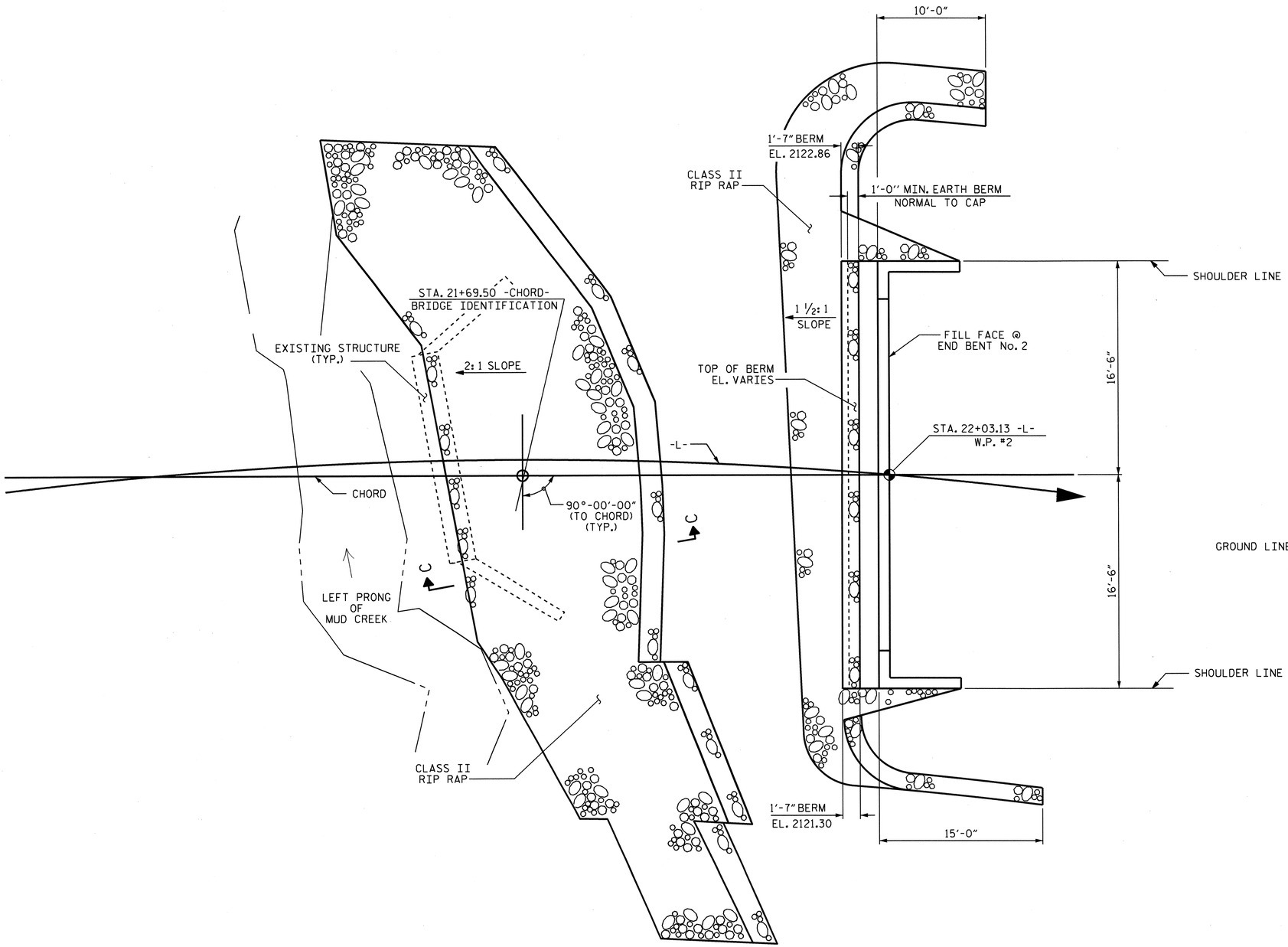

PLAN

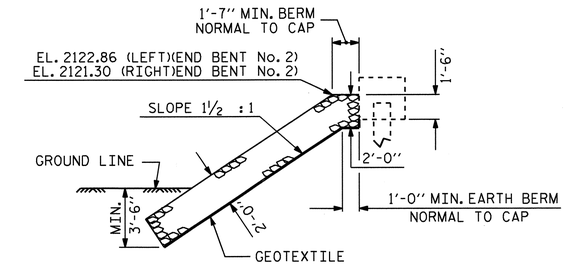

℄ SECTION
BERM RIP RAPPED

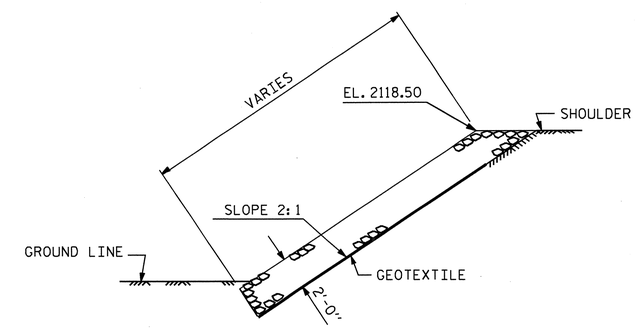

SECTION C-C

ESTIMATED QUANTITIES		
BRIDGE @ STA. 21+69.50 -CHORD-	RIP RAP CLASS II (2'-0" THICK)	GEOTEXTILE FOR DRAINAGE
	TONS	SQUARE YARDS
END BENT 2	70	78
* STREAM BANK	95	105

* STREAM BANK QUANTITY IS INCLUDED WITH END BENT No. 2
QUANTITY IN TOTAL BILL OF MATERIAL

PROJECT NO. B-4147
HENDERSON COUNTY
STATION: 21+69.50 -L-

STATE OF NORTH CAROLINA
DEPARTMENT OF TRANSPORTATION
RALEIGH

RIP RAP
DETAILS

NORTH CAROLINA PROFESSIONAL SEAL 20125 ENGINEER MARSHALL G. CHEEK, JR.
11-26-12

REVISIONS						SHEET NO.
NO.	BY:	DATE:	NO.	BY:	DATE:	S-36
1			3			TOTAL SHEETS
2			4			39

DRAWN BY : W.J.HARRIS DATE : 8-29-12
CHECKED BY : M.G. CHEEK DATE : 9/12

26-NOV-2012 09:24
R:\Structures\Plans\Final Plans\Str_#2\B4147_SD_GD.dgn
mpoole

STR. #2

NCBDS

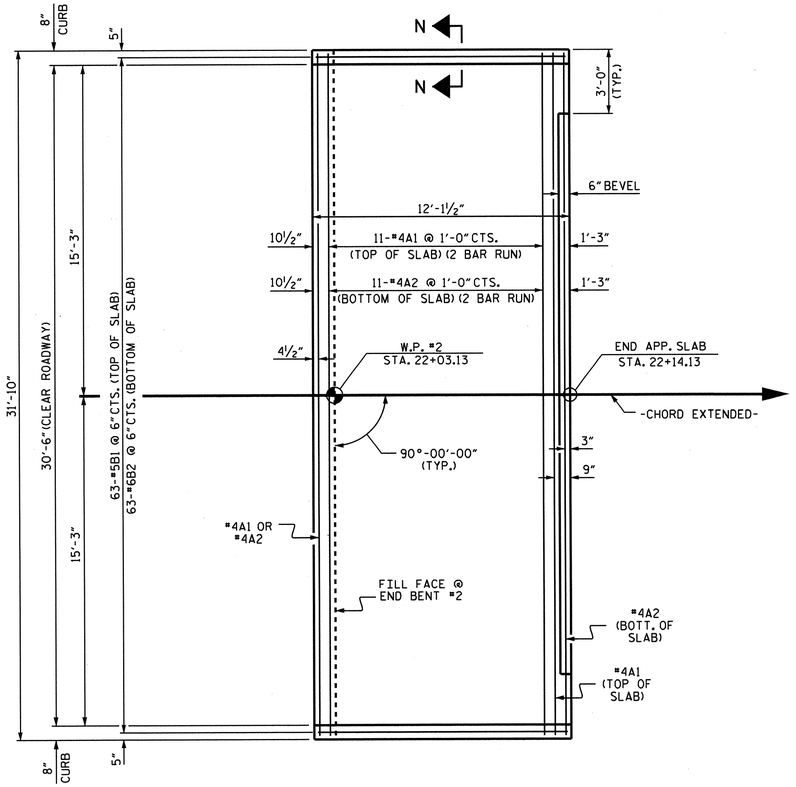

PLAN @ END BENT #2

NOTES

FOR BRIDGE APPROACH FILL INCLUDING GEOTEXTILE, 4" Ø DRAINAGE PIPE, AND #78M STONE BACKFILL, SEE ROADWAY PLANS.

GEOTEXTILE SHALL BE TYPE 1 IN ACCORDANCE WITH THE STANDARD SPECIFICATIONS SECTION 1056.

#78M STONE BACKFILL (CLASS V SELECT MATERIAL) SHALL BE IN ACCORDANCE WITH STANDARD SPECIFICATIONS SECTION 1016.

#78M STONE BACKFILL IS TO BE CONTINUOUS ALONG FILL FACE OF BACKWALL FROM OUTSIDE EDGE TO OUTSIDE EDGE OF APPROACH SLAB.

FOR THE 4" Ø DRAINAGE PIPE OUTLET(S), SEE ROADWAY STANDARD DRAWINGS.

AREA BETWEEN THE WINGWALL AND APPROACH SLAB SHALL BE GRADED TO DRAIN THE WATER AWAY FROM THE FILL FACE OF THE BRIDGE AND SHALL BE PAVED. SEE ROADWAY PLANS.

APPROACH SLAB GROOVING IS NOT REQUIRED.

BILL OF MATERIAL
APPROACH SLAB AT EB #2

BAR	NO.	SIZE	TYPE	LENGTH	WEIGHT
* A1	26	#4	STR	16'-11"	294
A2	26	#4	STR	16'-9"	291
* B1	63	#5	STR	11'-2"	734
B2	63	#6	STR	11'-8"	1104
REINFORCING STEEL				LBS.	1395
* EPOXY COATED REINFORCING STEEL				LBS.	1028
CLASS AA CONCRETE				C.Y.	19.9

SPLICE LENGTHS

BAR SIZE	EPOXY COATED	UNCOATED
#4	2'-0"	1'-9"
#5	2'-6"	2'-2"
#6	3'-10"	2'-7"

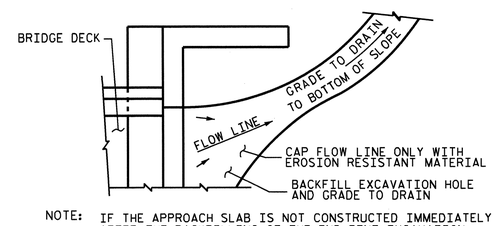

NOTE: IF THE APPROACH SLAB IS NOT CONSTRUCTED IMMEDIATELY AFTER THE BACKFILLING OF THE END BENT EXCAVATION, GRADE TO DRAIN TO THE BOTTOM OF THE SLOPE AND PROVIDE EROSION RESISTANT MATERIAL, SUCH AS FIBERGLASS ROVING OR AS DIRECTED BY THE ENGINEER TO PREVENT SOIL EROSION AND TO PROTECT THE AREA ADJACENT TO THE STRUCTURE. THE CONTRACTOR WILL BE REQUIRED TO REMOVE THESE MATERIALS PRIOR TO CONSTRUCTION OF THE APPROACH SLAB.

TEMPORARY DRAINAGE DETAIL

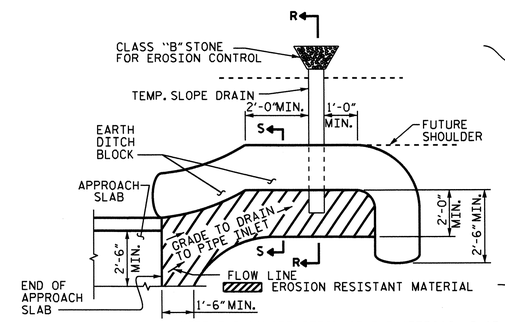

NOTE: IMMEDIATELY AFTER THE CONSTRUCTION OF THE APPROACH SLAB, THE CONTRACTOR SHALL PROVIDE TEMPORARY BERM AND SLOPE DRAIN. CONTRACTOR SHALL GRADE TO PIPE INLET AND PROVIDE EROSION RESISTANT MATERIAL AS SHOWN. THE EROSION RESISTANT MATERIAL SHALL BE EITHER 1) ASPHALT PLANT MIX, TYPE 1 OR TYPE 2, MIN. 2" DEPTH, 2) EROSION CONTROL MAT, OR 3) CONCRETE, AS DIRECTED BY THE ENGINEER. THE SLOPE DRAIN SHALL CONSIST OF A NON-PERFORATED TEMPORARY DRAINAGE PIPE, 12 INCHES IN DIAMETER.

PLAN VIEW

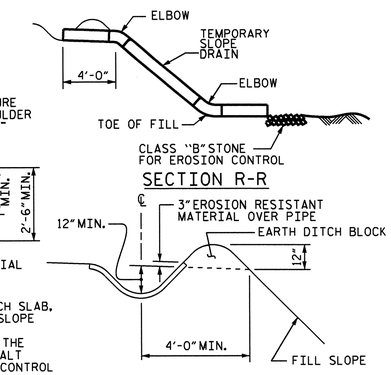

SECTION S-S

TEMPORARY BERM AND SLOPE DRAIN DETAILS

(TO BE USED WHEN SHOULDER BERM GUTTER IS REQUIRED)

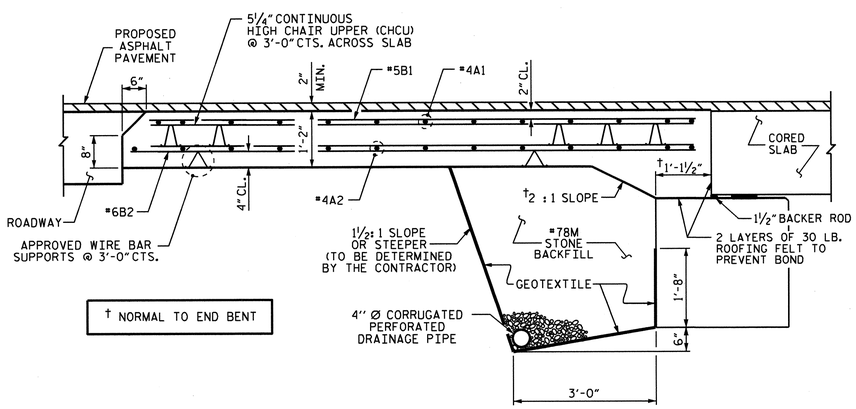

† NORMAL TO END BENT

SECTION THRU SLAB

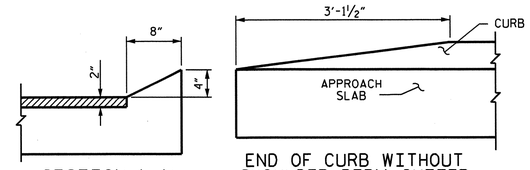

SECTION N-N

END OF CURB WITHOUT SHOULDER BERM GUTTER

CURB DETAILS

PROJECT NO. B-4147
HENDERSON COUNTY
STATION: 21+69.50 -L-

STATE OF NORTH CAROLINA
DEPARTMENT OF TRANSPORTATION
RALEIGH

STANDARD
BRIDGE APPROACH SLAB
FOR PRESTRESSED CONCRETE
CORED SLAB UNIT
(SUB-REGIONAL TIER)
90° SKEW

NORTH CAROLINA PROFESSIONAL SEAL 20125 ENGINEER MARSHALL L. CHEEK, JR.
11-26-12

REVISIONS						SHEET NO.
NO.	BY:	DATE:	NO.	BY:	DATE:	S-37
1			3			TOTAL SHEETS
2			4			39

STR. #2 STD. NO. BAS_33_90S

ASSEMBLED BY :	J.R. MCROY	DATE :	8/12
CHECKED BY :	M.G. CHEEK	DATE :	8/12
DRAWN BY : SHS/MAA 5-09	REV. 12-11	MAA/AAC	
CHECKED BY : BCH 5-09			

26-NOV-2012 10:52
R:\Structures\Plans\Final Plans\Str_#2\B4147_SD_02_AS.dgn
dahodge

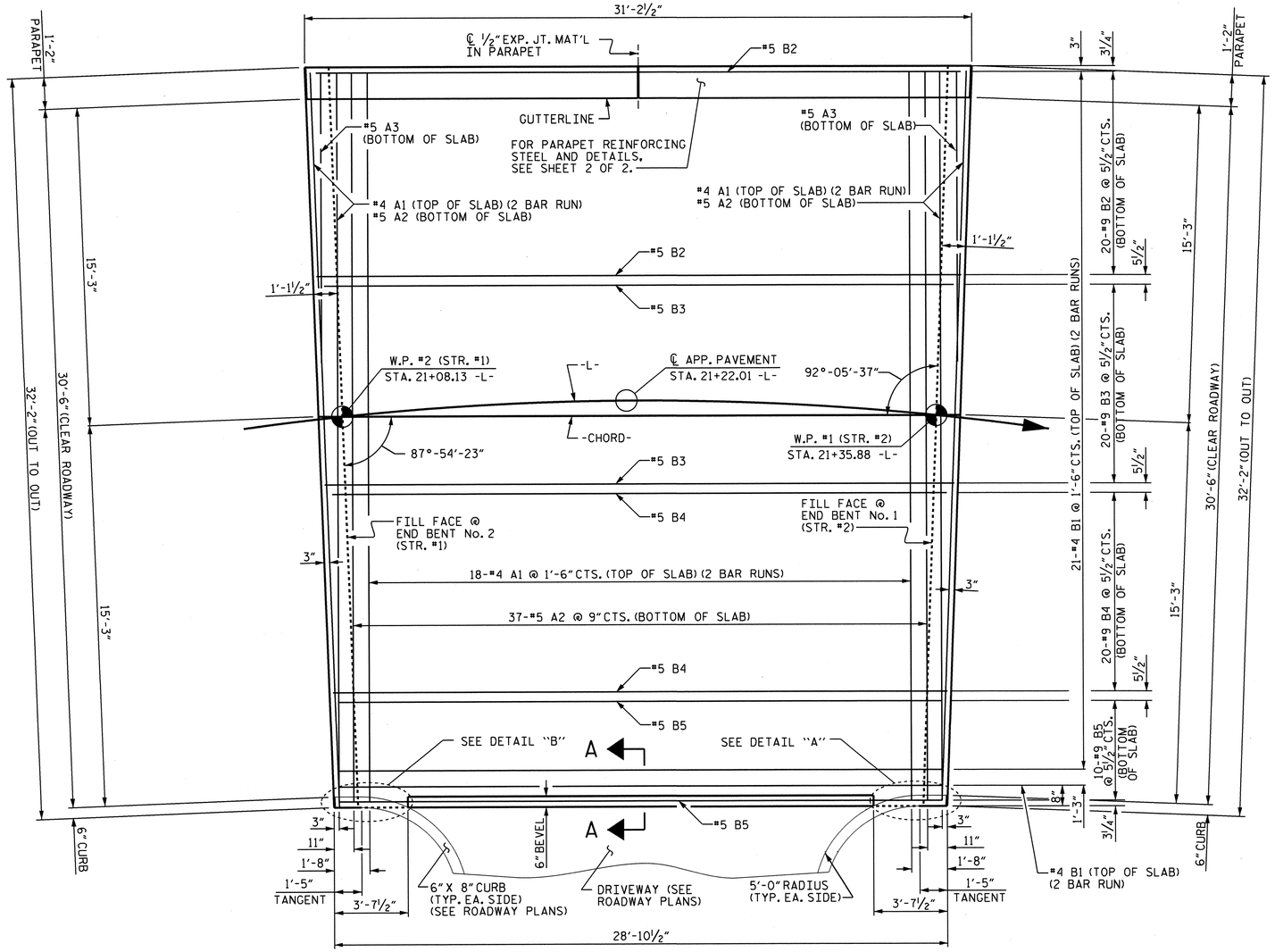

PLAN

NOTES

AREA BETWEEN THE WINGWALL AND APPROACH PAVEMENT SHALL BE GRADED TO DRAIN THE WATER AWAY FROM THE FILL FACE OF THE BRIDGES AND SHALL BE PAVED. SEE ROADWAY PLANS.

THE 6" COMP. A.B.C. SHALL BE FLUSH WITH THE ROADWAY END OF THE APPROACH PAVEMENT AND SHALL EXTEND 1'-0" OUTSIDE OF EACH EDGE OF THE APPROACH PAVEMENT.

THE CONTRACTOR MAY USE 4" TYPE B-25.0B ASPHALT CONCRETE BASE COURSE IN LIEU OF 6" COMP. A.B.C. IF THIS OPTION IS USED, THE BASE COURSE SHALL BE FLUSH WITH THE ROADWAY END OF THE APPROACH PAVEMENT AND THE WIDTH SHALL BE THE SAME AS THAT OF THE APPROACH PAVEMENT.

GROOVING IS NOT REQUIRED ON THE APPROACH PAVEMENT.

THE CONTRACTOR MAY USE ADHESIVELY ANCHORED DOWELS IN PLACE OF #4 D1 DOWELS. NO FIELD TESTING IS REQUIRED. FOR ADHESIVELY ANCHORED ANCHOR BOLTS OR DOWELS, SEE STANDARD SPECIFICATIONS.

ALL FALSEWORK AND FORMS FOR THE APPROACH PAVEMENT SHALL REMAIN IN PLACE UNTIL THE ENTIRE UNIT IS CAST AND CURED.

FOR SUBMITTAL OF WORKING DRAWINGS, SEE SPECIAL PROVISIONS.

FOR FALSEWORK AND FORMWORK, SEE SPECIAL PROVISIONS.

FOR GROUT FOR STRUCTURES, SEE SPECIAL PROVISIONS.

NO SEPARATE PAYMENT WILL BE MADE FOR MATERIALS OR LABOR REQUIRED TO CONSTRUCT THE SPECIAL APPROACH PAVEMENT. THE ENTIRE COST OF THIS WORK SHALL BE INCLUDED IN THE LUMP SUM PRICE BID FOR BRIDGE APPROACH SLABS.

FOR CRANE SAFETY, SEE SPECIAL PROVISIONS.

ASPHALT WEARING SURFACE IS INCLUDED IN ROADWAY PLANS.

THE COST OF THE 1'-2" x 2'-10½" CONCRETE PARAPET AND 2 BAR METAL RAIL IS INCLUDED WITH THE PRICE BID "FOR 1'-2" x 2'-10½" CONCRETE PARAPET" AND "2 BAR METAL RAIL" FOR STR. #1.

BILL OF MATERIAL

SPECIAL APPROACH PAVEMENT

BAR	NO.	SIZE	TYPE	LENGTH	WEIGHT
* A1	44	#4	STR	17'-0"	500
A2	41	#5	STR	31'-10"	1361
A3	2	#5	STR	11'-5"	24
* B1	44	#4	STR	16'-6"	485
B2	20	#9	STR	30'-2"	2051
B3	20	#9	STR	29'-6"	2006
B4	20	#9	STR	28'-10"	1961
B5	10	#9	STR	28'-6"	969
* D1	6	#4	STR	1'-6"	6
REINFORCING STEEL				LBS.	8,372
* EPOXY COATED REINFORCING STEEL				LBS.	991
CLASS AA CONCRETE				CU. YDS.	74.5

SPLICE LENGTH CHART

BAR SIZE	EPOXY COATED	UNCOATED
#4	2'-0"	1'-9"

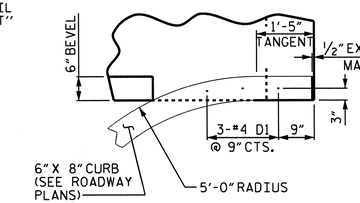

DETAIL "A"

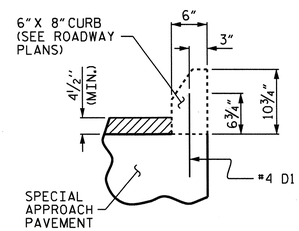

DOWEL PLACEMENT DETAIL

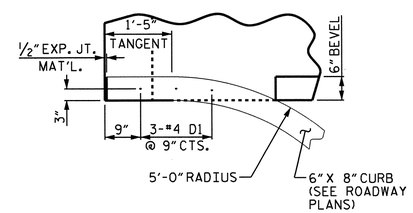

DETAIL "B"

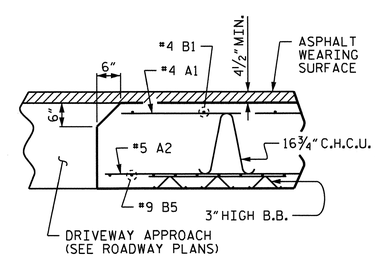

SECTION A-A

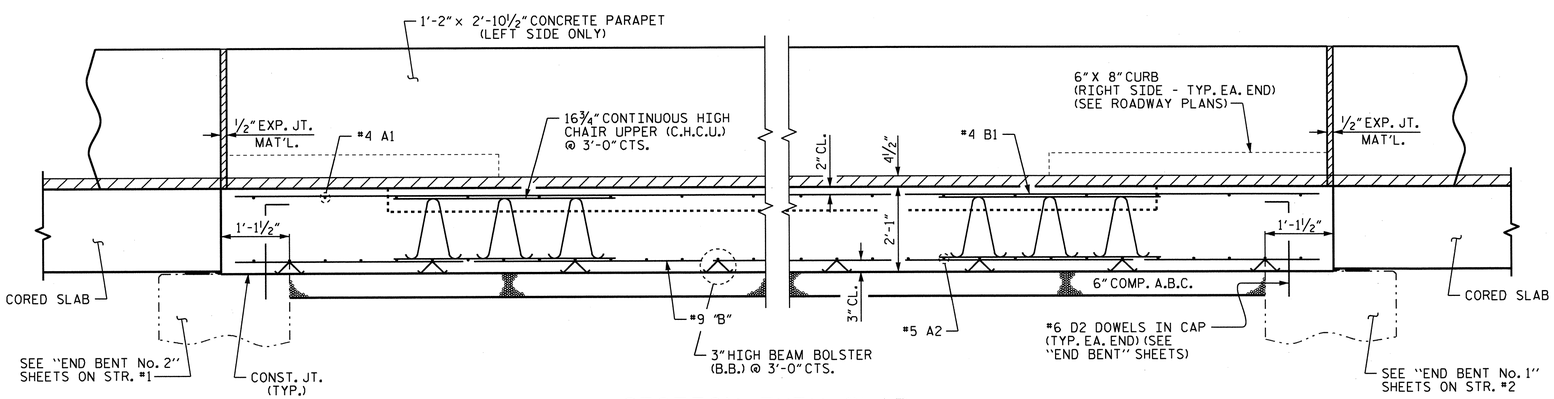

SECTION THRU SLAB

PROJECT NO. B-4147

HENDERSON COUNTY

STATION: 21+22.01 -L-

SHEET 1 OF 2

STATE OF NORTH CAROLINA
DEPARTMENT OF TRANSPORTATION
RALEIGH

SPECIAL APPROACH PAVEMENT

NORTH CAROLINA PROFESSIONAL SEAL 20125 ENGINEER MARSHALL G. CHEEK, JR. 11-26-12

REVISIONS								SHEET NO.
NO.	BY:	DATE:	NO.	BY:	DATE:			S-38
1			3					TOTAL SHEETS
2			4					39

STR. #3

DRAWN BY : J.R. MCROY/W.J.H. DATE : 8/3/12
CHECKED BY : M.G. CHEEK DATE : 8/12

26-NOV-2012 09:24
R:\Structures\Plans\Final Plans\Str_#3\B4147_SD_03AS.dgn
mpoole

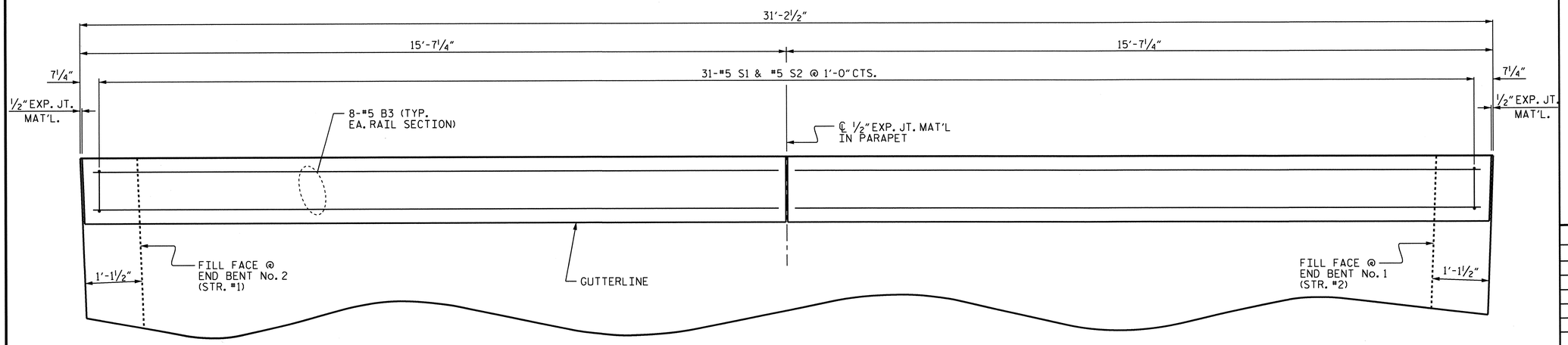

1'-2" x 2'-10½" CONCRETE PARAPET

BAR TYPES

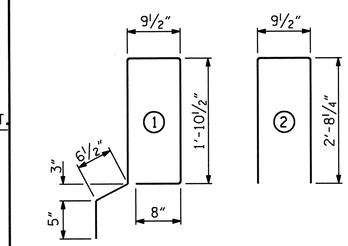

ALL BAR DIMENSIONS ARE OUT TO OUT.

BILL OF MATERIAL

FOR CONCRETE PARAPET ONLY

BAR	NO.	SIZE	TYPE	LENGTH	WEIGHT
* B3	16	#5	STR	15'-3"	255
* S1	31	#5	1	6'-2"	199
* S2	31	#5	2	6'-2"	199
* EPOXY COATED REINFORCING STEEL				LBS.	653
CLASS AA CONCRETE				CU. YDS.	3.9

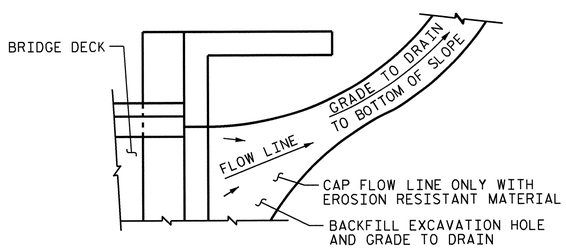

NOTE: IF THE APPROACH SLAB IS NOT CONSTRUCTED IMMEDIATELY AFTER THE BACKFILLING OF THE END BENT EXCAVATION, GRADE TO DRAIN TO THE BOTTOM OF THE SLOPE AND PROVIDE EROSION RESISTANT MATERIAL, SUCH AS FIBERGLASS ROVING OR AS DIRECTED BY THE ENGINEER TO PREVENT SOIL EROSION AND TO PROTECT THE AREA ADJACENT TO THE STRUCTURE. THE CONTRACTOR WILL BE REQUIRED TO REMOVE THESE MATERIALS PRIOR TO CONSTRUCTION OF THE APPROACH SLAB.

TEMPORARY DRAINAGE DETAIL

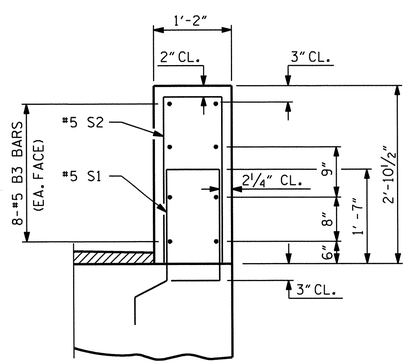

SECTION THRU RAIL

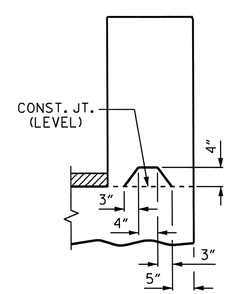

SECTION S-S

AT DAM IN OPEN JOINT (THIS IS TO BE USED ONLY WHEN SLIP FORM IS USED)

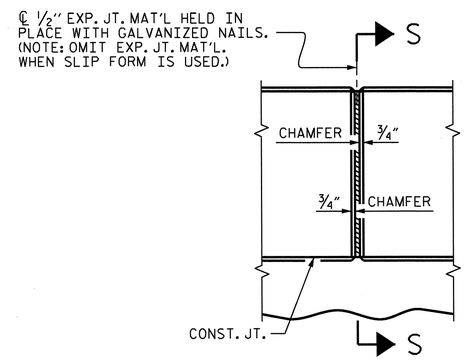

ELEVATION AT EXPANSION JOINTS

BARRIER RAIL DETAILS

NOTES:

THE PARAPET SHALL NOT BE CAST UNTIL ALL APPROACH PAVEMENT CONCRETE HAS BEEN CAST AND HAS REACHED A MINIMUM COMPRESSIVE STRENGTH OF 3,000 PSI.

ALL REINFORCING STEEL IN PARAPET SHALL BE EPOXY COATED.

VERTICAL GROOVED CONTRACTION JOINTS, ½" IN DEPTH, SHALL BE TOOLED IN ALL EXPOSED FACES OF THE PARAPET AND IN ACCORDANCE WITH ARTICLE 825-10(B) OF THE STANDARD SPECIFICATIONS. THE CONTRACTION JOINT SHALL BE LOCATED AT EACH THIRD POINT BETWEEN PARAPET EXPANSION JOINTS. ONLY ONE CONTRACTION JOINT IS REQUIRED AT MIDPOINT OF BARRIER RAIL SEGMENTS LESS THAN 20 FEET IN LENGTH AND NO CONTRACTION JOINTS ARE REQUIRED FOR THOSE SEGMENTS LESS THAN 10 FEET IN LENGTH.

PROJECT NO. B-4147

HENDERSON COUNTY

STATION: 21+22.01 -L-

SHEET 2 OF 2

STATE OF NORTH CAROLINA
DEPARTMENT OF TRANSPORTATION
RALEIGH

SPECIAL APPROACH PAVEMENT

NORTH CAROLINA PROFESSIONAL SEAL 20125 ENGINEER MARSHALL B. CHEEK, JR. 12-14-12

REVISIONS							SHEET NO.
NO.	BY:	DATE:	NO.	BY:	DATE:		S-39
1			3				TOTAL SHEETS
2			4				39

STR. #3

DRAWN BY : J.R. MCROY/W.J.H. DATE : 8/12
CHECKED BY : M.G. CHEEK DATE : 8/12

14-DEC-2012 08:30
R:\Structures\Plans\Final Plans\Str_#3\B4147_SD_03AS.dgn
mpoole

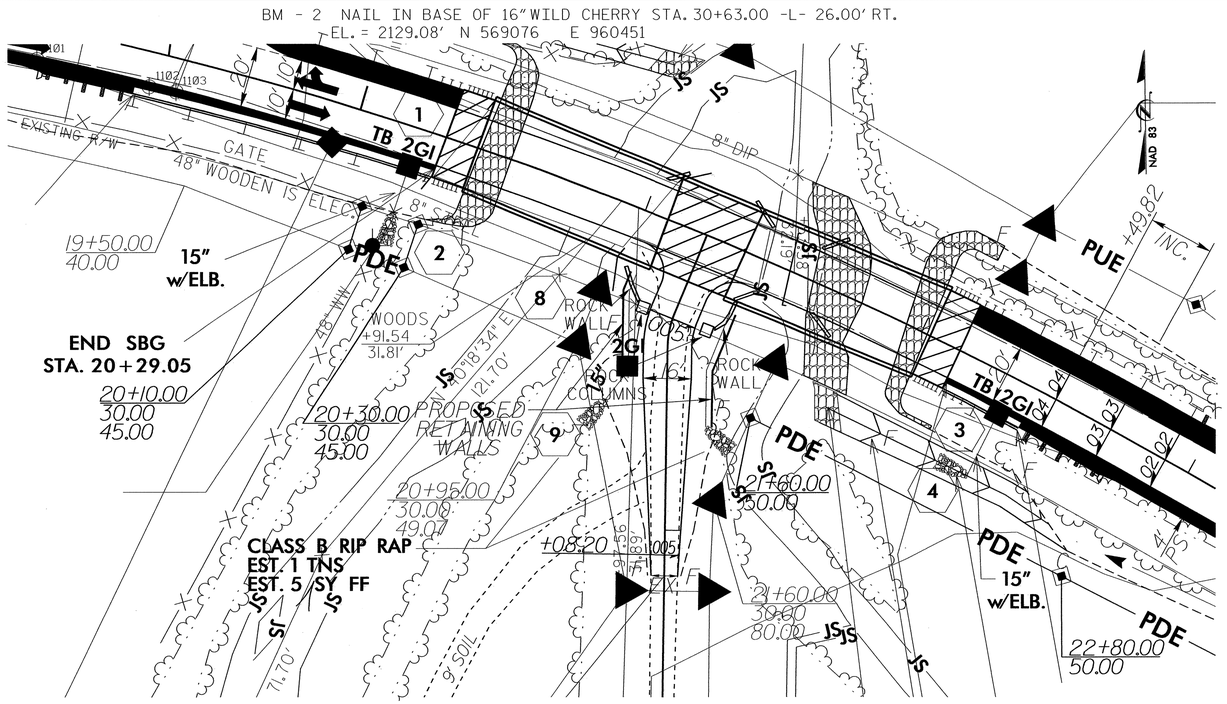

LOCATION SKETCH

GEOTECHNICAL ENGINEER	ENGINEER
NORTH CAROLINA PROFESSIONAL SEAL 29869 ENGINEER FRANK C CLARK	
SIGNATURE DATE 10/18/12	SIGNATURE DATE

RETAINING WALL ELEVATIONS

-DR- STA	OFFSET FROM ℄ (RIGHT)	ELEV @ TOP OF WALL	SHEET PILE TIP ELEVATION	* PROPOSED FINISHED GRADE	* EXPOSED WALL HEIGHT
10+20.71	18.70	2125.70	2092.00	2120.84	4.86
10+28.14	18.36	2124.65	2097.00	2118.71	5.94
10+39.46	16.20	2123.04	2102.00	2117.67	5.37
10+50.00	15.00	2118.01	2102.00	2118.01	0.00

* ELEVATION @ PROPOSED FINISHED GRADE AND EXPOSED WALL HEIGHT DO NOT INCLUDE EMBEDMENT DEPTH

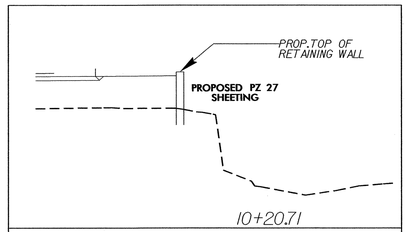

SECTION A

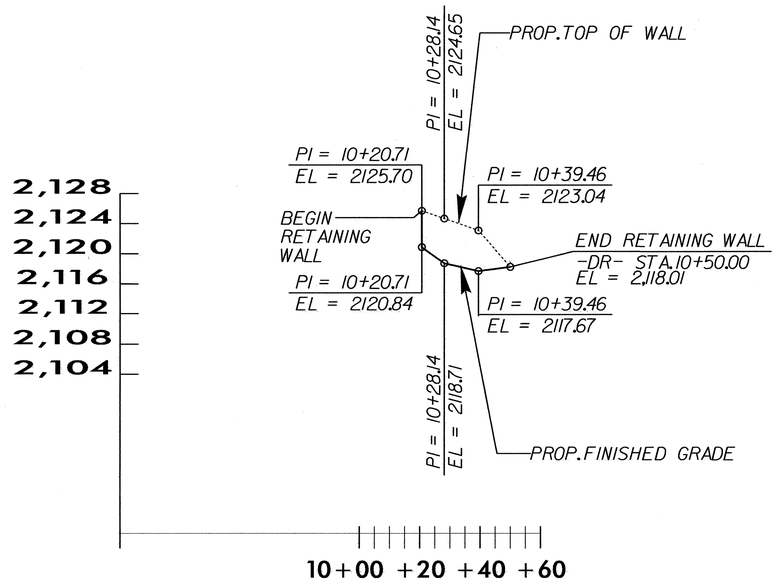

TOTAL STRUCTURE QUANTITIES

SHEET PILE RETAINING WALL	135	SQ. FT.

PROJECT NO.: B-4147

HENDERSON **COUNTY**

STATION: 10+20.71 -L- TO 10+50.00 -DR-

SHEET 1 OF 4

PREPARED BY:	J.T.W.	DATE: 10/12	
REVIEWED BY:	S.C.C.	DATE: 10/12	

GEOTECHNICAL ENGINEERING UNIT

☐ EASTERN REGIONAL OFFICE
☒ WESTERN REGIONAL OFFICE
☐ CONTRACT OFFICE

STATE OF NORTH CAROLINA
DEPARTMENT OF TRANSPORTATION
RALEIGH

SHEET PILE
RETAINING WALL RIGHT

REVISIONS						SHEET NO.
NO.	BY	DATE	NO.	BY	DATE	W-1
1			3			TOTAL SHEETS
2			4			4

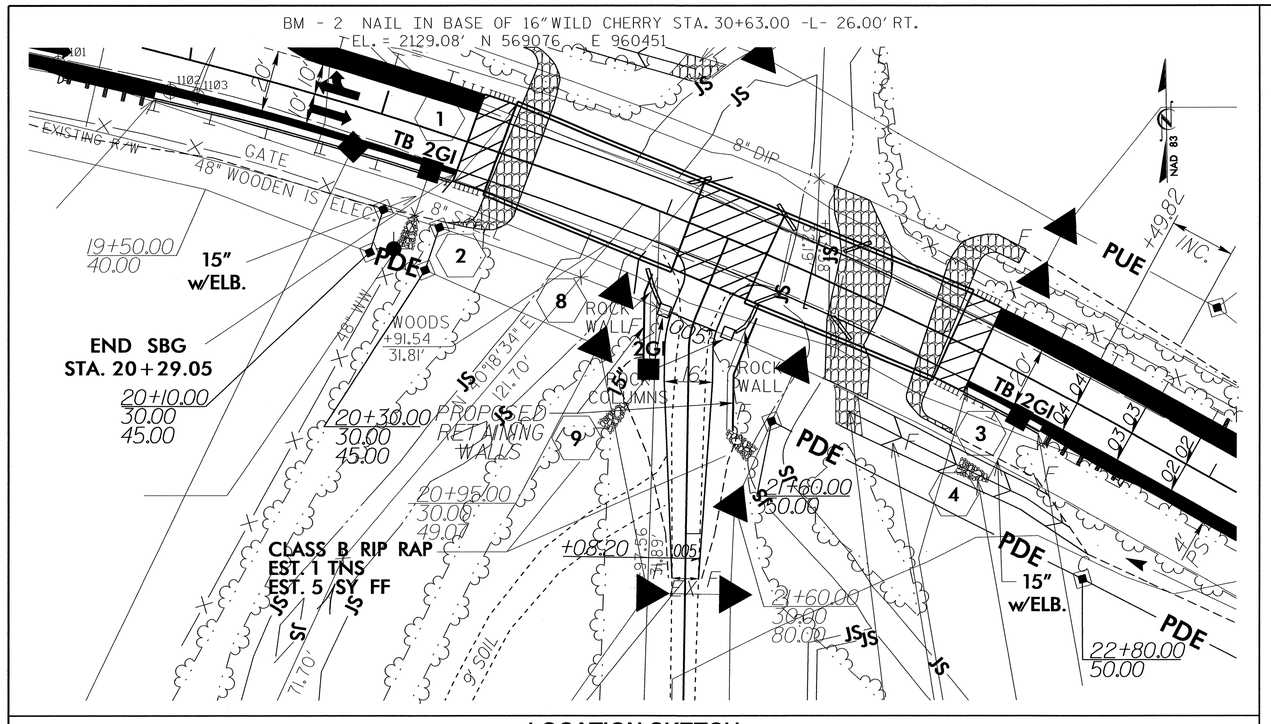

LOCATION SKETCH

GEOTECHNICAL ENGINEER	ENGINEER
SEAL 29869 NORTH CAROLINA PROFESSIONAL ENGINEER SHANE C. CLARK	
SIGNATURE DATE 10/8/12	SIGNATURE DATE

RETAINING WALL ELEVATIONS

-DR- STA	OFFSET FROM ℄ (LEFT)	ELEV @ TOP OF WALL	SHEET PILE TIP ELEVATION	* PROPOSED FINISHED GRADE	* EXPOSED WALL HEIGHT
10+20.71	18.88	2125.51	2092.00	2114.45	11.06
10+28.14	18.90	2122.54	2097.00	2117.92	4.62
10+39.46	18.68	2122.26	2102.00	2118.28	3.98
10+50.00	15.00	2122.01	2102.00	2118.60	3.50
10+65.00	15.00	2119.63	2102.00	2118.46	1.82
10+66.00	15.00	2118.62	2102.00	2118.62	0.00

* ELEVATION @ PROPOSED FINISHED GRADE AND EXPOSED WALL HEIGHT DO NOT INCLUDE EMBEDMENT DEPTH

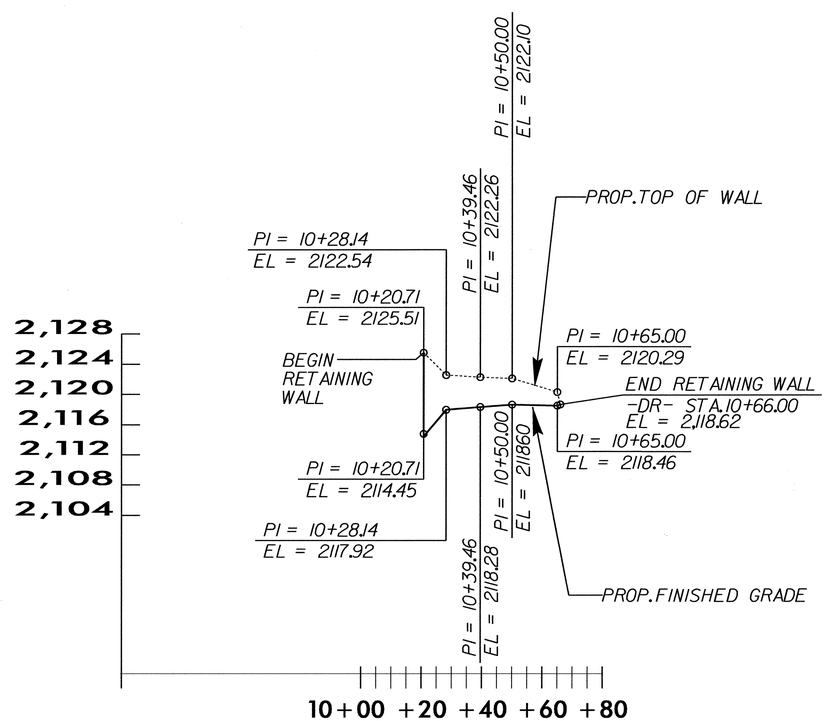

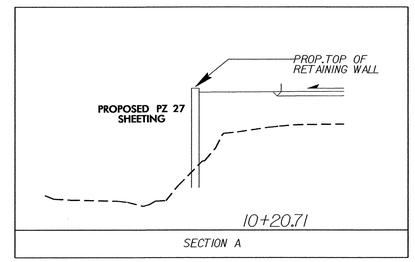

SECTION A

TOTAL STRUCTURE QUANTITIES

SHEET PILE RETAINING WALL	190	SQ. FT.

PROJECT NO.: B-4147
HENDERSON **COUNTY**
STATION: 10+20.71 -L- TO 10+66.00 -DR-
SHEET 2 OF 4

PREPARED BY: J.T.W.	DATE: 10/12		
REVIEWED BY: S.C.C.	DATE: 10/12		

GEOTECHNICAL ENGINEERING UNIT
☐ EASTERN REGIONAL OFFICE
☒ WESTERN REGIONAL OFFICE
☐ CONTRACT OFFICE
STATE OF NORTH CAROLINA
DEPARTMENT OF TRANSPORTATION
RALEIGH

SHEET PILE RETAINING WALL LEFT

REVISIONS						SHEET NO.
NO.	BY	DATE	NO.	BY	DATE	W-2
1	-	-	3	-	-	TOTAL SHEETS
2	-	-	4	-	-	4

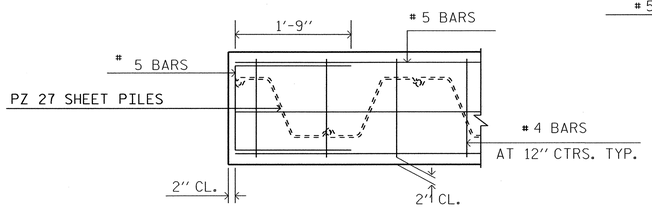

TOP VIEW

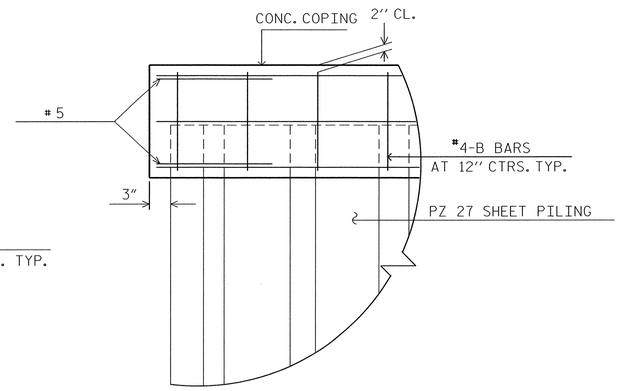

FRONT VIEW

END OF COPING DETAILS

N. T. S.

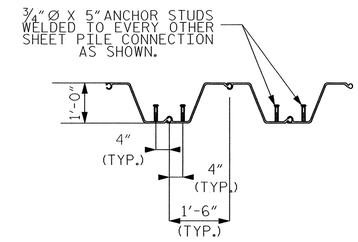

ANCHOR STUD DETAIL

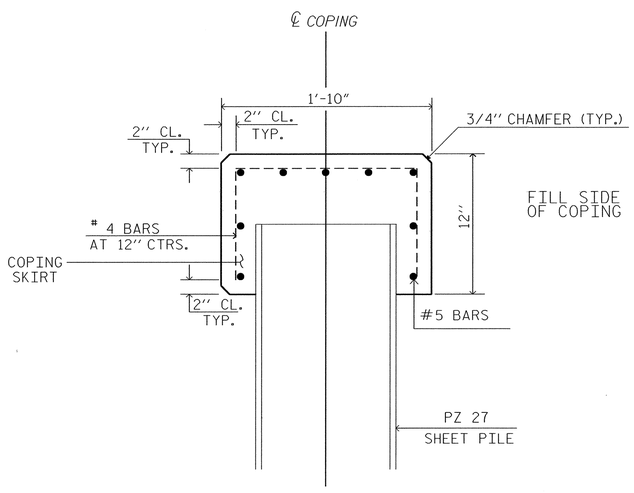

FULL COPING DETAIL

N. T. S.

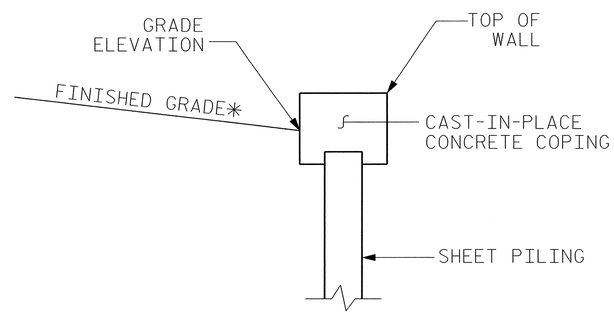

COPING DETAILS

*SEE ROADWAY PLANS FOR FINISHED GRADE DETAILS.

GEOTECHNICAL ENGINEER

NORTH CAROLINA PROFESSIONAL SEAL 29869 ENGINEER SHANE C CLARK

SIGNATURE 10/18/12 DATE

ENGINEER

SIGNATURE DATE

BAR TYPES

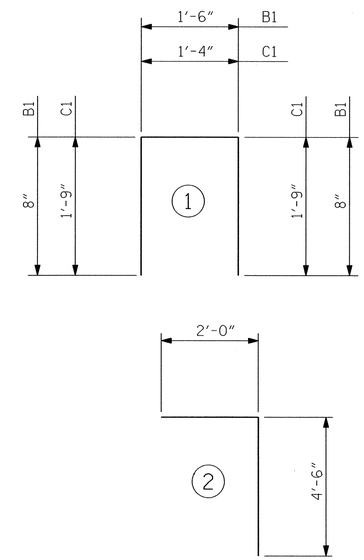

ALL BAR DIMENSIONS ARE OUT TO OUT.

"B" BARS = #4, "C" BARS = #5

PREPARED BY: EJS	DATE: 10/12
REVIEWED BY: SCC	DATE: 10/12

GEOTECHNICAL ENGINEERING UNIT

☐ EASTERN REGIONAL OFFICE
☒ WESTERN REGIONAL OFFICE
☐ CONTRACT OFFICE

STATE OF NORTH CAROLINA
DEPARTMENT OF TRANSPORTATION
RALEIGH

PROJECT NO.: B-4147
HENDERSON COUNTY
STATION: VARIES

SHEET 3 OF 4

SHEET PILE
WALL CONSTRUCTION
DETAILS

REVISIONS						SHEET NO.
NO.	BY	DATE	NO.	BY	DATE	W-3
1	-	-	3	-	-	TOTAL SHEETS
2	-	-	4	-	-	4

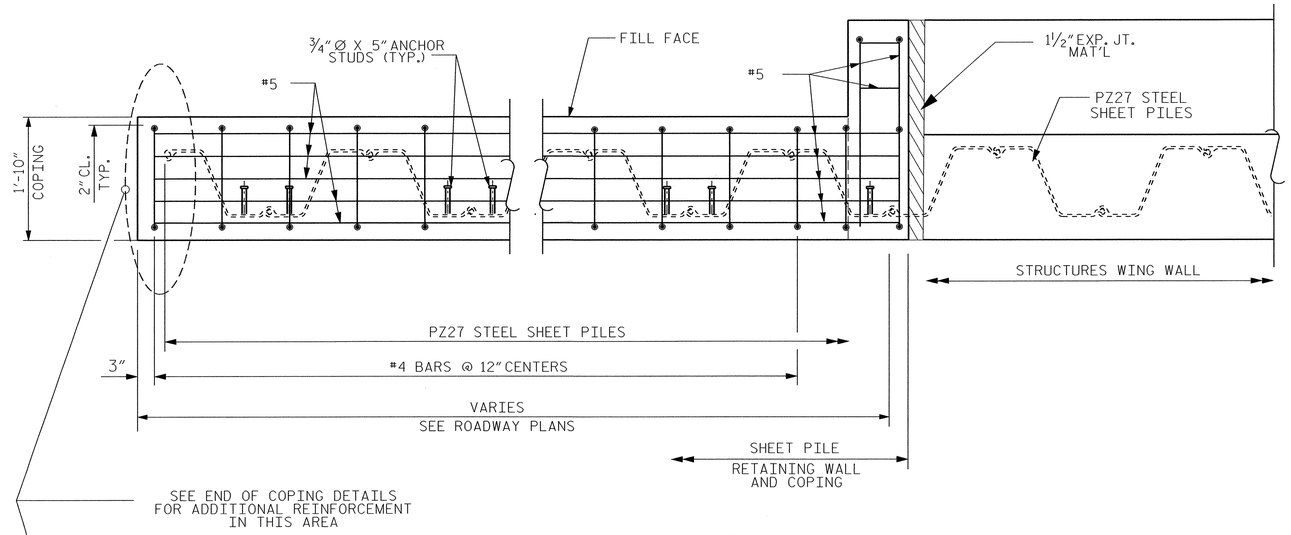

PLAN

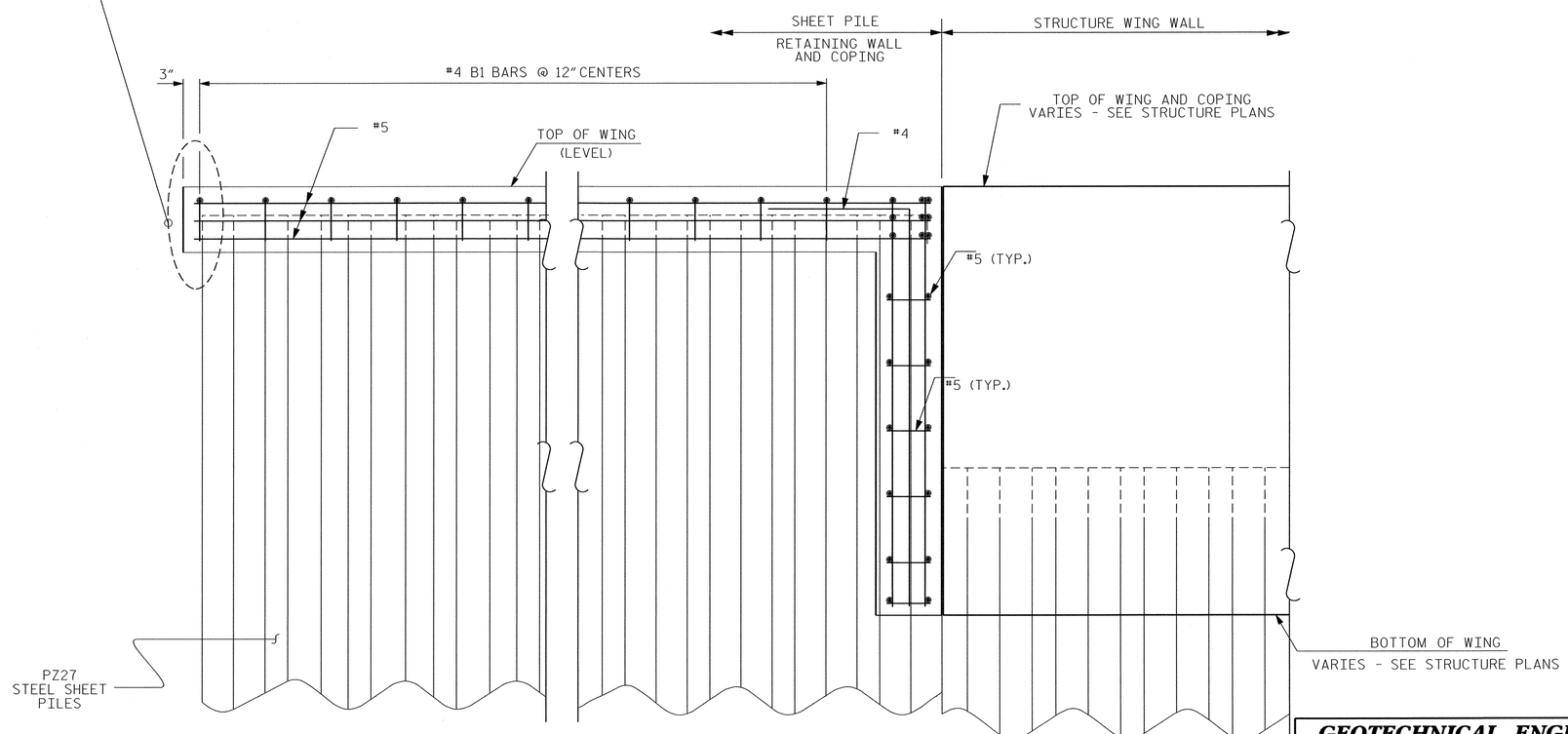

ELEVATION

GEOTECHNICAL ENGINEER	ENGINEER
NORTH CAROLINA PROFESSIONAL SEAL 29869 ENGINEER SHANE C CLARK	
S. Clark 10/10/12 SIGNATURE DATE	SIGNATURE DATE

NOTES

FOR SHEET PILE RETAINING WALLS, SEE SECTION 452 OF THE STANDARD SPECIFICATIONS

CONTRACTOR IS SUBMIT FINAL COPING DETAILS FOR APPROVAL PRIOR TO ORDERING MATERIALS OR CONSTRUCTING COPING.

TYPICAL REINFORCEMENT BAR SIZES, LOCATIONS AND CLEARANCES ARE SHOWN ON PLANS FOR REFERENCE.

FIELD ADJUSTMENT OF BARS MAY BE NECESSARY FOR PLACEMENT IN COPING.

ALL REINFORCING SHALL BE GRADE 60 AS DESCRIBED IN SECTION 1070 OF THE STANDARD SPECIFICATIONS.

FOR SHEET PILE RETAINING WALLS AND CAST-IN-PLACE COPING, SEE SECTION 452 OF THE STANDARD SPECIFICATIONS.

ALL SHEET PILES TO BE PZ27

SHEET PILES ARE TO BE INSTALLED TO ELEVATIONS SHOWN IN THE TABLE. TIP ELEVATIONS BETWEEN STATIONS ARE TO BE INTERPRETED AS A STRAIGHT LINE BETWEEN STATED TIP ELEVATIONS.

SHEET PILES ARE TO BE INSTALLED PLUMB (+/- 1% OF FULL INSTALLED LENGTH) ALONG THE FRONT FACE AND LEADING EDGES.

STEEL SHEET PILES SHALL BE EMBEDDED A MINIMUM OF 0'-9" INTO COPING.

PROJECT NO.: B-4147
HENDERSON ***COUNTY***
STATION: VARIES
SHEET 4 OF 4

PREPARED BY: EJS	DATE: 10/12
REVIEWED BY: SCC	DATE: 10/12

GEOTECHNICAL ENGINEERING UNIT

- [ ] ***EASTERN REGIONAL OFFICE***
- [x] ***WESTERN REGIONAL OFFICE***
- [ ] ***CONTRACT OFFICE***

STATE OF NORTH CAROLINA
DEPARTMENT OF TRANSPORTATION
RALEIGH

SHEET PILE WALL CONSTRUCTION DETAILS

REVISIONS

NO.	BY	DATE	NO.	BY	DATE
1	-	-	3	-	-
2	-	-	4	-	-

SHEET NO. W-4
TOTAL SHEETS 4

STANDARD NOTES

DESIGN DATA:

SPECIFICATIONS	A.A.S.H.T.O. (CURRENT)
LIVE LOAD	SEE PLANS
IMPACT ALLOWANCE	SEE A.A.S.H.T.O.
STRESS IN EXTREME FIBER OF	
STRUCTURAL STEEL - AASHTO M270 GRADE 36	20,000 LBS. PER SQ. IN.
- AASHTO M270 GRADE 50W	27,000 LBS. PER SQ. IN.
- AASHTO M270 GRADE 50	27,000 LBS. PER SQ. IN.
REINFORCING STEEL IN TENSION	
GRADE 60	24,000 LBS. PER SQ. IN.
CONCRETE IN COMPRESSION	1,200 LBS. PER SQ. IN.
CONCRETE IN SHEAR	SEE A.A.S.H.T.O.
STRUCTURAL TIMBER - TREATED OR	
UNTREATED - EXTREME FIBER STRESS	1,800 LBS. PER SQ. IN.
COMPRESSION PERPENDICULAR TO GRAIN OF TIMBER	375 LBS. PER SQ. IN.
EQUIVALENT FLUID PRESSURE OF EARTH	30 LBS. PER CU. FT. (MINIMUM)

MATERIAL AND WORKMANSHIP:

EXCEPT AS MAY OTHERWISE BE SPECIFIED ON PLANS OR IN THE SPECIAL PROVISIONS, ALL MATERIAL AND WORKMANSHIP SHALL BE IN ACCORDANCE WITH THE 2012 "STANDARD SPECIFICATIONS FOR ROADS AND STRUCTURES" OF THE N. C. DEPARTMENT OF TRANSPORTATION.

STEEL SHEET PILING FOR PERMANENT OR TEMPORARY APPLICATIONS SHALL BE HOT ROLLED.

CONCRETE:

UNLESS OTHERWISE REQUIRED ON PLANS, CLASS A CONCRETE SHALL BE USED FOR ALL PORTIONS OF ALL STRUCTURES WITH THE EXCEPTION THAT: CLASS AA CONCRETE SHALL BE USED IN BRIDGE SUPERSTRUCTURES, ABUTMENT BACKWALLS, AND APPROACH SLABS; AND CLASS B CONCRETE SHALL BE USED FOR SLOPE PROTECTION AND RIP RAP.

CONCRETE CHAMFERS:

UNLESS OTHERWISE NOTED ON THE PLANS, ALL EXPOSED CORNERS ON STRUCTURES SHALL BE CHAMFERED 3/4" WITH THE FOLLOWING EXCEPTIONS: TOP CORNERS OF CURBS MAY BE ROUNDED TO 1-1/2" RADIUS WHICH IS BUILT INTO CURB FORMS; CORNERS OF TRANSVERSE FLOOR EXPANSION JOINTS SHALL BE ROUNDED WITH A 1/4" FINISHING TOOL UNLESS OTHERWISE REQUIRED ON PLANS; AND CORNERS OF EXPANSION JOINTS IN THE ROADWAY FACES AND TOPS OF CURBS AND SIDEWALKS SHALL BE ROUNDED TO A 1/4" RADIUS WITH A FINISHING STONE OR TOOL UNLESS OTHERWISE REQUIRED ON PLANS.

DOWELS:

DOWELS WHEN INDICATED ON PLANS AS FOR CULVERT EXTENSIONS, SHALL BE EMBEDDED AT LEAST 12" INTO THE OLD CONCRETE AND GROUTED INTO PLACE WITH 1:2 CEMENT MORTAR.

ALLOWANCE FOR DEAD LOAD DEFLECTION, SETTLEMENT, ETC. IN CASTING SUPERSTRUCTURES:

BRIDGES SHALL BE BUILT ON THE GRADE OR VERTICAL CURVE SHOWN ON PLANS. SLABS, CURBS AND PARAPETS SHALL CONFORM TO THE GRADE OR CURVE.

ALL DIMENSIONS WHICH ARE GIVEN IN SECTION AND ARE AFFECTED BY DEAD LOAD DEFLECTIONS ARE DIMENSIONS AT CENTER LINE OF BEARING UNLESS OTHERWISE NOTED ON PLANS. IN SETTING FORMS FOR STEEL BEAM BRIDGES AND PRESTRESSED CONCRETE GIRDER BRIDGES, ADJUSTMENTS SHALL BE MADE DUE TO THE DEAD LOAD DEFLECTIONS FOR THE ELEVATIONS SHOWN. WHERE BLOCKS ARE SHOWN OVER BEAMS FOR BUILDING UP TO THE SLAB, THE VERTICAL DIMENSIONS OF THE BLOCKS SHALL BE ADJUSTED BETWEEN BEARINGS TO COMPENSATE FOR DEAD LOAD DEFLECTIONS, VERTICAL CURVE ORDINATE, AND ACTUAL BEAM CAMBER. WHERE BOTTOM OF SLAB IS IN LINE WITH BOTTOM OF TOP FLANGES, DEPTH OF SLAB BETWEEN BEARINGS SHALL BE ADJUSTED TO COMPENSATE FOR DEAD LOAD DEFLECTION, VERTICAL CURVE ORDINATE, AND ACTUAL BEAM CAMBER.

IN SETTING FALSEWORK AND FORMS FOR REINFORCED CONCRETE SPANS, AN ALLOWANCE SHALL BE MADE FOR DEAD LOAD DEFLECTIONS, SETTLEMENT OF FALSEWORK, AND PERMANENT CAMBER WHICH SHALL BE PROVIDED FOR IN ADDITION TO THE ELEVATIONS SHOWN. AFTER REMOVAL OF THE FALSEWORK, THE FINISHED STRUCTURES SHALL CONFORM TO THE PROFILE AND ELEVATIONS SHOWN ON THE PLANS AND CONSTRUCTION ELEVATIONS FURNISHED BY THE ENGINEER.

DETAILED DRAWINGS FOR FALSEWORK OR FORMS FOR BRIDGE SUPERSTRUCTURE AND ANY STRUCTURE OR PARTS OF A STRUCTURE AS NOTED ON THE PLANS SHALL BE SUBMITTED TO THE ENGINEER FOR APPROVAL BEFORE CONSTRUCTION OF THE FALSEWORK OR FORMS IS STARTED.

REINFORCING STEEL:

ALL REINFORCING STEEL SHALL BE DEFORMED. DIMENSIONS RELATIVE TO PLACEMENT OF REINFORCING ARE TO CENTERS OF BARS UNLESS OTHERWISE INDICATED IN THE PLANS. DIMENSIONS ON BAR DETAILS ARE TO CENTERS OF BARS OR ARE OUT TO OUT AS INDICATED ON PLANS.

WIRE BAR SUPPORTS SHALL BE PROVIDED FOR REINFORCING STEEL WHERE INDICATED ON THE PLANS. WHEN BAR SUPPORT PIECES ARE PLACED IN CONTINUOUS LINES, THEY SHALL BE SO PLACED THAT THE ENDS OF THE SUPPORTING WIRES SHALL BE LAPPED TO LOCK LEGS ON ADJOINING PIECES.

STRUCTURAL STEEL:

AT THE CONTRACTOR'S OPTION, HE MAY SUBSTITUTE 7/8" Ø SHEAR STUDS FOR THE 3/4" Ø STUDS SPECIFIED ON THE PLANS. THIS SUBSTITUTION SHALL BE MADE AT THE RATE OF 3 - 7/8" Ø STUDS FOR 4 - 3/4" Ø STUDS, AND STUD SPACING CHANGES SHALL BE MADE AS NECESSARY TO PROVIDE THE SAME EQUIVALENT NUMBER OF 7/8" Ø STUDS ALONG THE BEAM AS SHOWN FOR 3/4" Ø STUDS BASED ON THE RATIO OF 3 - 7/8" Ø STUDS FOR 4 - 3/4" Ø STUDS. STUDS OF THE LENGTH SPECIFIED ON THE PLANS MUST BE PROVIDED. THE MAXIMUM SPACING SHALL BE 2'-0".

EXCEPT AT THE INTERIOR SUPPORTS OF CONTINUOUS BEAMS WHERE THE COVER PLATE IS IN CONTACT WITH BEARING PLATE, THE CONTRACTOR MAY, AT HIS OPTION, SUBSTITUTE FOR THE COVER PLATES DESIGNATED ON THE PLANS COVER PLATES OF THE EQUIVALENT AREA PROVIDED THESE PLATES ARE AT LEAST 5/16" IN THICKNESS AND DO NOT EXCEED A WIDTH EQUAL TO THE FLANGE WIDTH LESS 2" OR A THICKNESS EQUAL TO 2 TIMES THE FLANGE THICKNESS. THE SIZE OF FILLET WELDS SHALL CONFORM TO THE REQUIREMENTS OF THE CURRENT ANSI/AASHTO/AWS "BRIDGE WELDING CODE". ELECTROSLAG WELDING WILL NOT BE PERMITTED.

WITH THE SOLE EXCEPTION OF EDGES AT SURFACES WHICH BEAR ON OTHER SURFACES, ALL SHARP EDGES AND ENDS OF SHAPES AND PLATES SHALL BE SLIGHTLY ROUNDED BY SUITABLE MEANS TO A RADIUS OF APPROXIMATELY 1/16 INCH OR EQUIVALENT FLAT SURFACE AT A SUITABLE ANGLE PRIOR TO PAINTING, GALVANIZING, OR METALLIZING.

HANDRAILS AND POSTS:

METAL STANDARDS AND FACES OF THE CONCRETE END POSTS FOR THE METAL RAIL SHALL BE SET NORMAL TO THE GRADE OF THE CURB, UNLESS OTHERWISE SHOWN ON PLANS. THE METAL RAIL AND TOPS OF CONCRETE POSTS USED WITH THE ALUMINUM RAIL SHALL BE BUILT PARALLEL TO THE GRADE OF THE CURB.

METAL HANDRAILS SHALL BE IN ACCORDANCE WITH THE PLANS. RAILS SHALL BE AS MANUFACTURED FOR BRIDGE RAILING. CASTINGS SHALL BE OF A UNIFORM APPEARANCE. FINS AND OTHER DEFORMATIONS RESULTING FROM CASTING OR OTHERWISE SHALL BE REMOVED IN A MANNER SO THAT A UNIFORM COLORING OF THE COMPLETED CASTING SHALL BE OBTAINED. CASTINGS WITH DISCOLORATIONS OR OF NON-UNIFORM COLORING WILL NOT BE ACCEPTED. CERTIFIED MILL REPORTS ARE REQUIRED FOR METAL RAILS AND POSTS.

SPECIAL NOTES:

GENERALLY, IN CASE OF DISCREPANCY, THIS STANDARD SHEET OF NOTES SHALL GOVERN OVER THE SPECIFICATIONS, BUT THE REMAINDER OF THE PLANS SHALL GOVERN OVER NOTES HEREON, AND SPECIAL PROVISIONS SHALL GOVERN OVER ALL. SEE SPECIFICATIONS ARTICLE 105-4.

ENGLISH

JANUARY, 1990