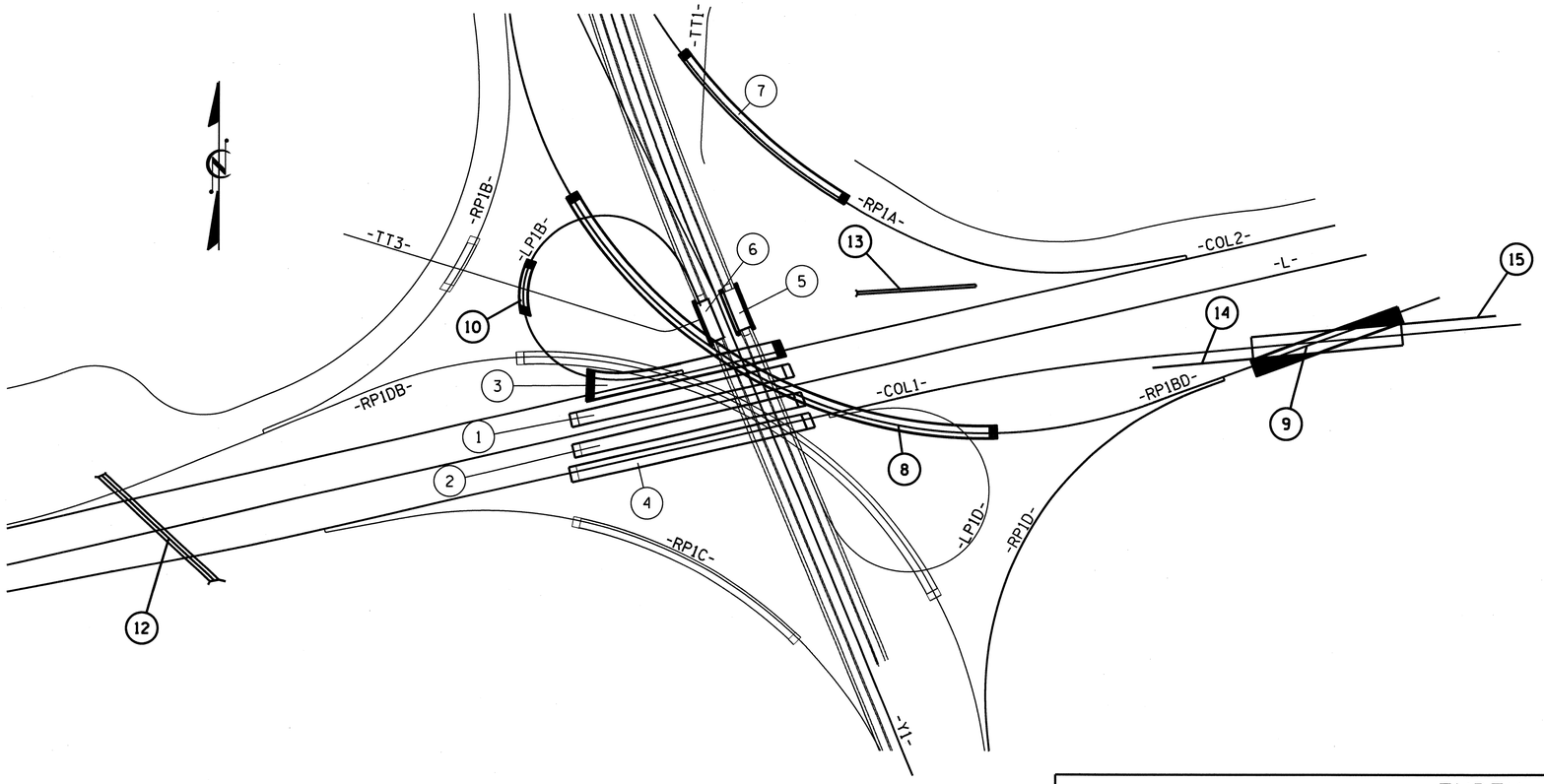

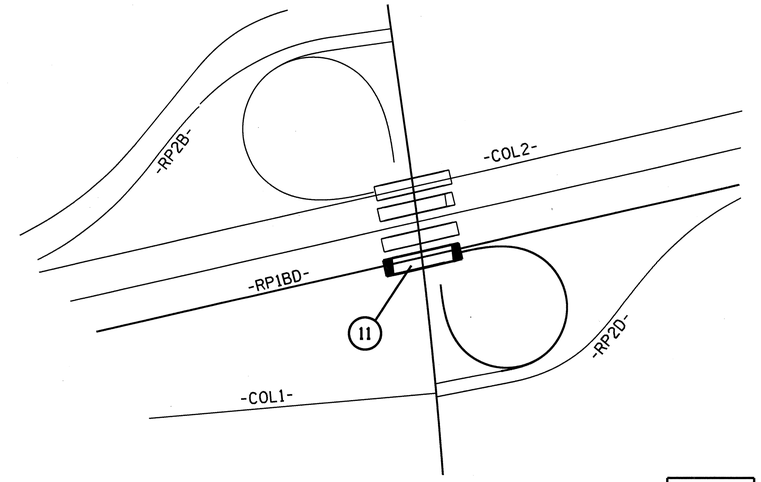

PART 2 OF 2

INDEX

STRUCTURE NO.	STATION	DESCRIPTION	SHEET NUMBERS
1	28+72.615 -L- POT = 20+16.038 -Y1- POT LEFT LANE	BRIDGE 366 OVER BEAVER CREEK AND ALL AMERICAN FREEWAY ON FAYETTEVILLE OUTER LOOP	S-1 THRU S-9
2	28+72.615 -L- POT = 20+16.038 -Y1- POT RIGHT LANE	BRIDGE 367 OVER BEAVER CREEK AND ALL AMERICAN FREEWAY ON FAYETTEVILLE OUTER LOOP	S-10 THRU S-16
3	28+66.746 -COL2- POT = 19+80.253 -Y1- POT	BRIDGE 369 OVER BEAVER CREEK AND ALL AMERICAN FREEWAY ON FAYETTEVILLE OUTER LOOP	S-17 THRU S-76
4	28+78.486 -COL1- POT = 20+51.823 -Y1- POT	BRIDGE 368 OVER BEAVER CREEK AND ALL AMERICAN FREEWAY ON FAYETTEVILLE OUTER LOOP	S-77 THRU S-83
5	19+34.958 -Y1- POT LEFT LANE	BRIDGE 235 OVER BEAVER CREEK ON ALL AMERICAN FREEWAY	S-84 THRU S-126
6	19+34.958 -Y1- POT RIGHT LANE	BRIDGE 4 OVER BEAVER CREEK ON ALL AMERICAN FREEWAY	S-127 THRU S-165
7	14+60.500 -RP1A- POC	BRIDGE 370 OVER BEAVER CREEK ON RAMP 1A	S-166 THRU S-225

PART 1

INDEX

STRUCTURE NO.	STATION	DESCRIPTION	SHEET NUMBERS
8	28+98.516 -L- POT = 28+72.626 -RP1BD- POC	BRIDGE 371 ON FLYOVER OVER BEAVER CREEK, FAYETTEVILLE OUTER LOOP, AND ALL AMERICAN FREEWAY	S-226 THRU S-314
9	34+25.491 -COL1- POT = 34+21.044 -RP1BD- POT	BRIDGE 376 ON RAMP 1BD OVER COL1	S-315 THRU S-371
10	12+10.929 -LP1B- POC = 11+57.976 -TT3- POT	BRIDGE 375 OVER TANK TRAIL 3 ON LOOP 1B	S-372 THRU S-411
11	41+33.963 -RP1BD- = 17+34.915 -Y2-	BRIDGE ON FAYETTEVILLE OUTER LOOP (RAMP 1BD) OVER BRAGG BLVD. (NC 24)	SS-1 THRU SS-17
12	22+70.320 -L- POT	DOUBLE 3.6M X 1.8M RCBC	C-1 THRU C-4
13	30+73.000 -L- POT 67.300M LT.	SINGLE 1.8M X 1.8M RCBC	C-5 THRU C-8
14	34+40.000 -COL1- 7.680M RT.	MSE RETAINING WALL	W-1 THRU W-3
15	34+40.000 -COL1- 7.680M LT.	MSE RETAINING WALL	W-1 THRU W-3

PART 2

PROJECT NO. U-2519DA
CUMBERLAND COUNTY

STATE OF NORTH CAROLINA
DEPARTMENT OF TRANSPORTATION
RALEIGH

INDEX

REVISIONS					
NO.	BY:	DATE:	NO.	BY:	DATE:
1			3		
2			4		

31-MAR-2011 12:26
R:\Structures\frye\str_L_LL\Final Plans\u2519da_sd_index.dgn
dcrutcher

F. A. PROJECT NO. NHF-0100(21)

2.7850 % -2.4020 %

PI = 29+00.000 -RP1BD-
EL. = 84.238
VC = 270

GRADE DATA

METRIC

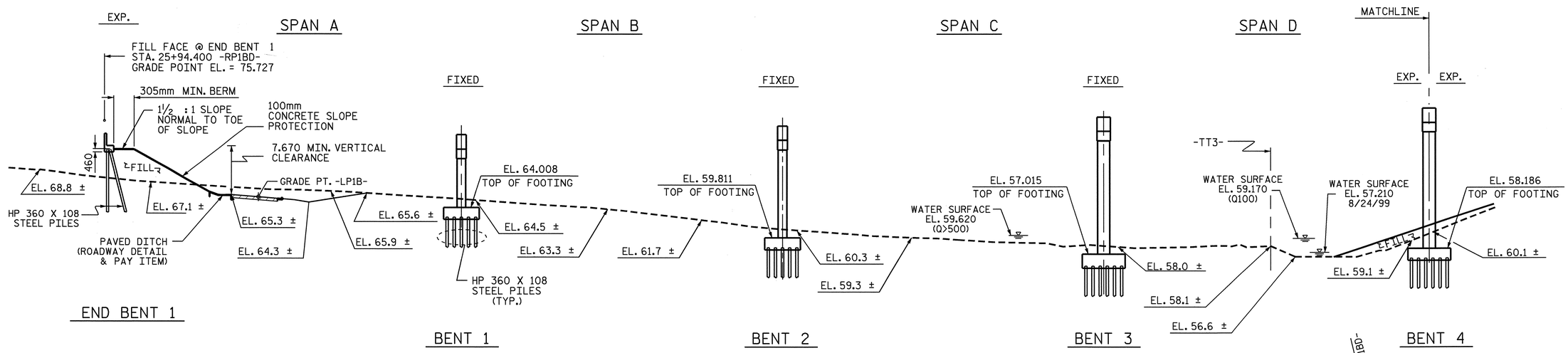

HORIZONTAL CURVE DATA -RP1BD-

PI = STA. 29+55.024
Δ = 97°-19′-41.8″ (LT)
L = 798.388m
T = 534.315m
R = 470.000m
SE = 0.06

SECTION ALONG -RP1BD-

(SECTIONS AT END BENTS AND BENTS ARE AT RIGHT ANGLES)

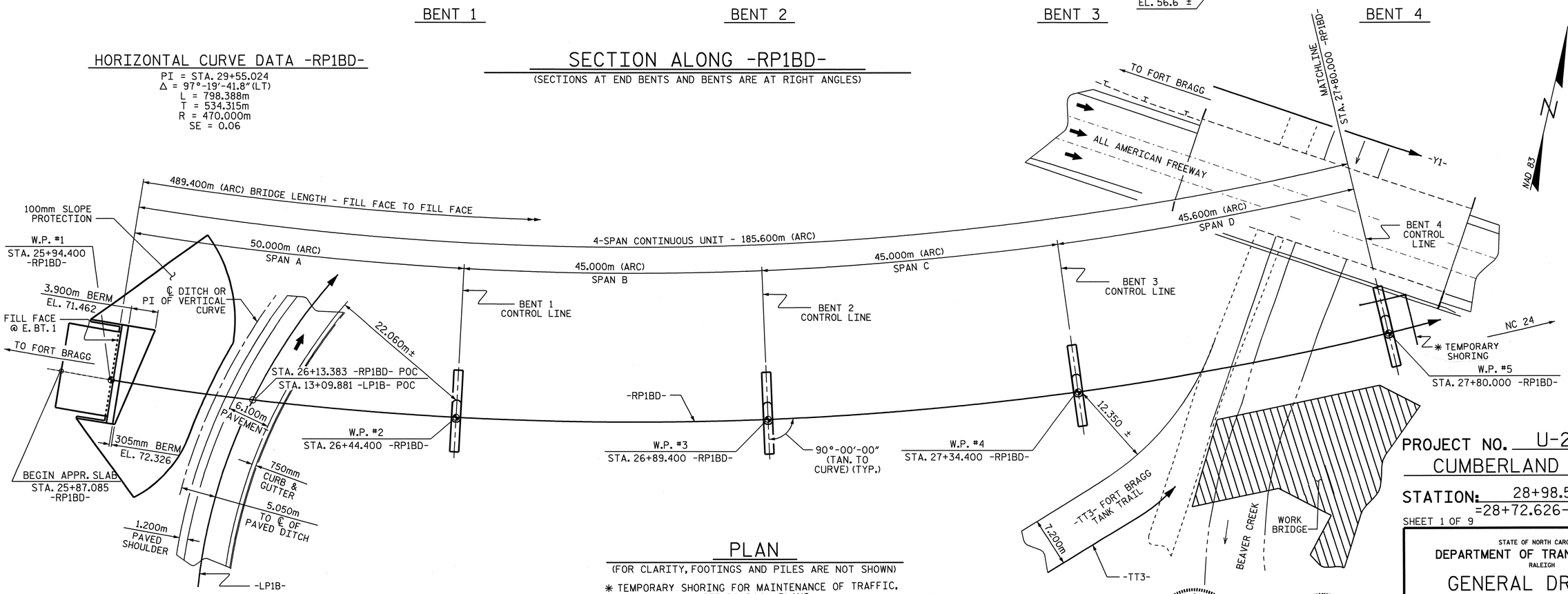

PLAN

(FOR CLARITY, FOOTINGS AND PILES ARE NOT SHOWN)

* TEMPORARY SHORING FOR MAINTENANCE OF TRAFFIC, SEE ROADWAY PLANS.

HORIZONTAL CURVE DATA -LP1B-

PI = STA. 28+29.927
Δ = 185°-21′-26.4″ (RT)
L = 258.808m
T = 1,709.927m
R = 80.000m
SE = 0.08

PROJECT NO. U-2519DA
CUMBERLAND COUNTY
STATION: 28+98.516 -L-
=28+72.626-RP1BD-POC

SHEET 1 OF 9 BRIDGE NO. 371

STATE OF NORTH CAROLINA
DEPARTMENT OF TRANSPORTATION
RALEIGH

GENERAL DRAWING

FOR BRIDGE OVER BEAVER CREEK AND ALL AMERICAN FREEWAY ON FAYETTEVILLE OUTER LOOP BETWEEN SR 1415 AND NC 24

NORTH CAROLINA PROFESSIONAL SEAL 11915 ENGINEER JOHN C. FRYE
10/13/08

NORTH CAROLINA PROFESSIONAL SEAL 16301 ENGINEER TING HSIUNG FANG
10/13/08

REVISIONS						SHEET NO.
NO.	BY:	DATE:	NO.	BY:	DATE:	S-226
1			3			TOTAL SHEETS
2			4			411

DRAWN BY : D. G. ELY DATE : 2/07
CHECKED BY : T. H. FANG DATE : 3/07

13-OCT-2008 15:24
z:\u2519da\structures\frye\str10_rp1bd_fo\final plans\u-2519da_sd_gd_10.dgn
ttfang

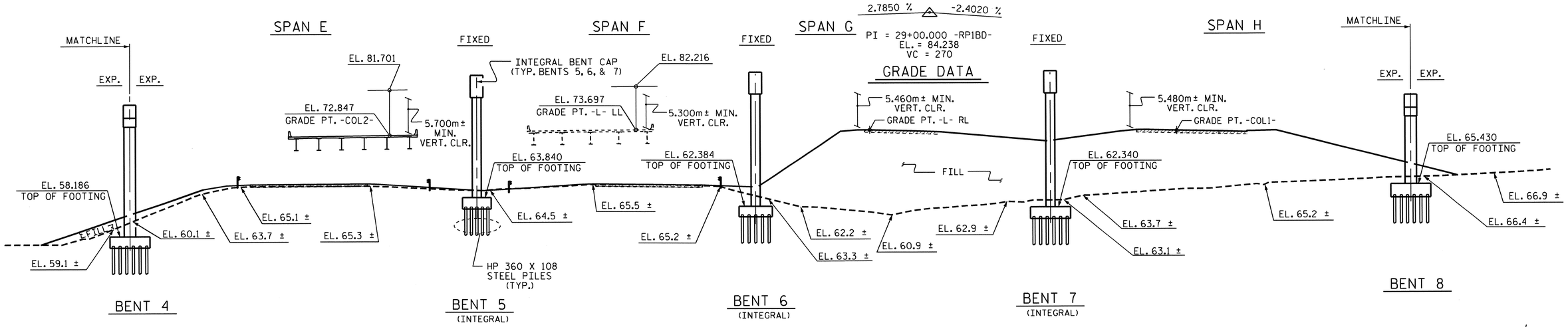

HORIZONTAL CURVE DATA -RP1BD-

PI = STA. 29+55.024
Δ = 97°-19'-41.8" (LT)
L = 798.388m
T = 534.315m
R = 470.000m
SE = 0.06

SECTION ALONG -RP1BD-

(SECTIONS AT END BENTS AND BENTS ARE AT RIGHT ANGLES)

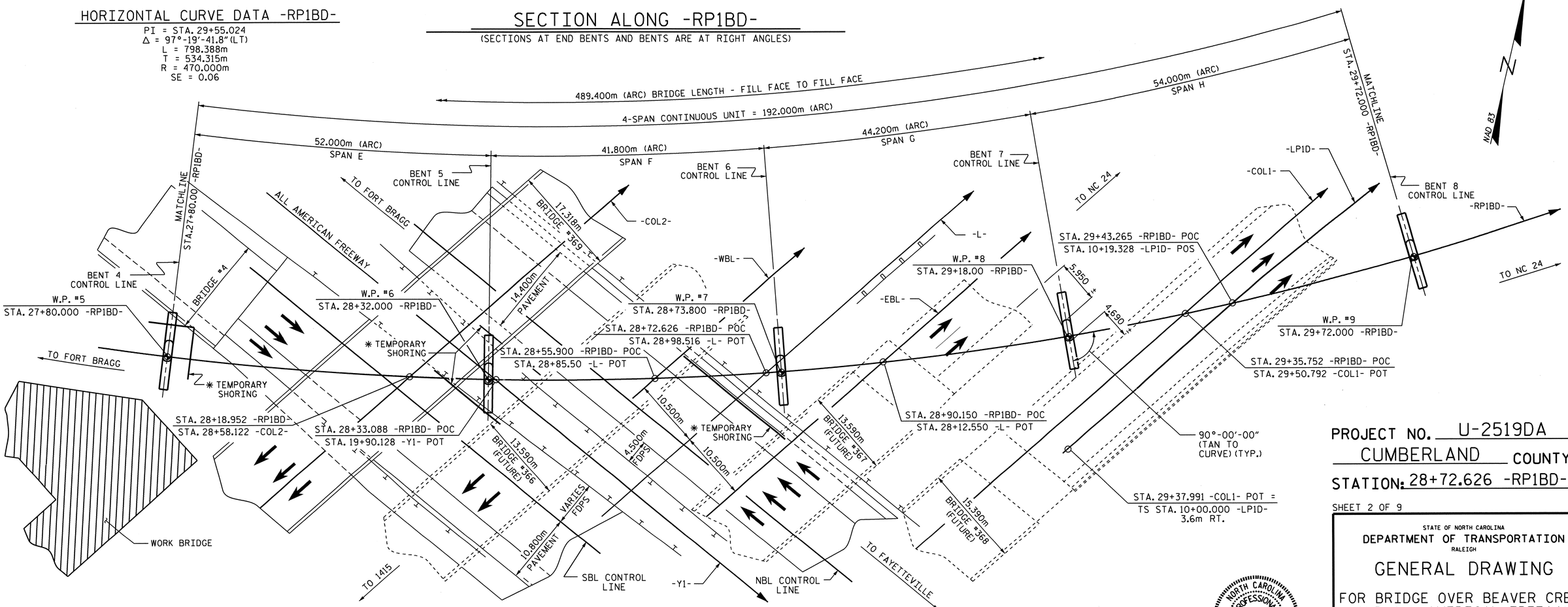

PLAN

(FOR CLARITY, FOOTINGS AND PILES ARE NOT SHOWN)

* TEMPORARY SHORING FOR MAINTENANCE OF TRAFFIC, SEE ROADWAY PLANS.

PROJECT NO. U-2519DA
CUMBERLAND COUNTY
STATION: 28+72.626 -RP1BD-

SHEET 2 OF 9

STATE OF NORTH CAROLINA
DEPARTMENT OF TRANSPORTATION
RALEIGH

GENERAL DRAWING

FOR BRIDGE OVER BEAVER CREEK AND ALL AMERICAN FREEWAY ON FAYETTEVILLE OUTER LOOP BETWEEN SR 1415 AND NC 24

NORTH CAROLINA PROFESSIONAL SEAL 16301 ENGINEER TING HSUNG FANG
6/9/11

REVISIONS								SHEET NO.
NO.	BY:	DATE:	NO.	BY:	DATE:			S-227
1			3					TOTAL SHEETS
2			4					411

DRAWN BY : D. G. ELY DATE : 3/07
CHECKED BY : T. N. FANG DATE : 3/07

09-JUN-2011 11:30
K:\TIPProjects-U\U2519da\Structures\frye\str10_RP1BD_F0\Final Plans\u-2519da_sd_gd_10.dgn
ttfang

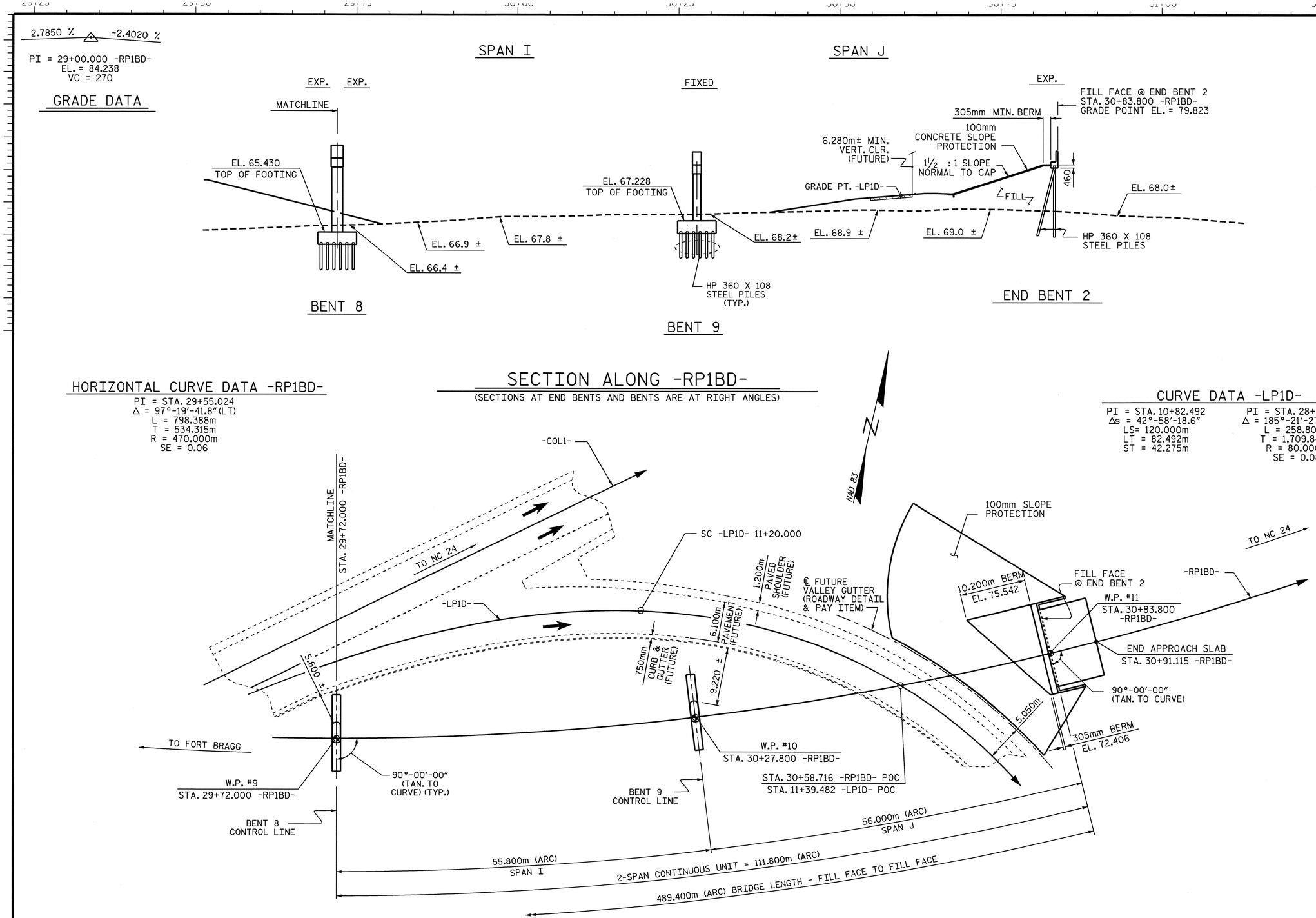

PLAN

FOUNDATIONS NOT SHOWN FOR CLARITY

PROJECT NO. U-2519DA

CUMBERLAND COUNTY

STATION: 28+72.626 -RP1BD-

SHEET 3 OF 9

STATE OF NORTH CAROLINA
DEPARTMENT OF TRANSPORTATION
RALEIGH

GENERAL DRAWING

FOR BRIDGE OVER BEAVER CREEK AND ALL AMERICAN FREEWAY ON FAYETTEVILLE OUTER LOOP BETWEEN SR 1415 AND NC 24

NORTH CAROLINA PROFESSIONAL SEAL 16301 ENGINEER TING HSIUNG FANG

10/13/08

REVISIONS						SHEET NO.
NO.	BY:	DATE:	NO.	BY:	DATE:	S-228
1			3			TOTAL SHEETS
2			4			411

DRAWN BY : D. G. ELY DATE : 3/07
CHECKED BY : T. H. FANG DATE : 3/07

13-OCT-2008 08:18
z:\u2519da\structures\frye\str10_rp1bd_fo\final plans\u-2519da_sd_gd_10.dgn
ttfang

NOTES:

DRIVE PILES AT END BENTS 1 AND 2 AND BENTS 4 AND 6 TO A REQUIRED BEARING CAPACITY OF 1340 kN PER PILE. THE REQUIRED BEARING CAPACITY IS EQUAL TO THE ALLOWABLE BEARING CAPACITY WITH A MINIMUM FACTOR OF SAFETY OF TWO.

DRIVE PILES AT BENTS 1, 2, 3, 5, 7, 8 & 9 TO A REQUIRED BEARING CAPACITY OF 1780 kN PER PILE. THE REQUIRED BEARING CAPACITY IS EQUAL TO THE ALLOWABLE BEARING CAPACITY WITH A MINIMUM FACTOR OF SAFETY OF TWO.

THE ALLOWABLE BEARING CAPACITY FOR PILES AT END BENTS 1 AND 2 AND BENTS 4 AND 6 IS 670 kN PER PILE.

THE ALLOWABLE BEARING CAPACITY FOR PILES AT BENTS 1, 2, 3, 5, 7, 8 & 9 IS 890 kN PER PILE.

IT HAS BEEN ESTIMATED THAT A HAMMER WITH THE EQUIVALENT RATED ENERGY IN THE RANGE OF 66 TO 100 KJ PER BLOW WILL BE REQUIRED TO DRIVE PILES AT ALL BENTS. THIS ESTIMATED ENERGY RANGE DOES NOT RELEASE THE CONTRACTOR FROM ARTICLE 450-5 OF THE STANDARD SPECIFICATIONS.

PILE RESTRIKES FOR LRFD MAY BE REQUIRED. SEE PILE RESTRIKE FOR LRFD SPECIAL PROVISION.

TESTING THE FIRST PRODUCTION PILES WITH THE PILE DRIVING ANALYZER (PDA) DURING DRIVING, RESTRIKING OR REDRIVING IS REQUIRED. THE ENGINEER WILL DETERMINE THE NEED FOR ADDITIONAL PDA TESTING. SEE PILE DRIVING ANALYZER SPECIAL PROVISION.

NO EMBANKMENT CONSTRUCTION RELATED WAITING PERIOD IS REQUIRED.

FOR PILES, SEE SPECIAL PROVISIONS.

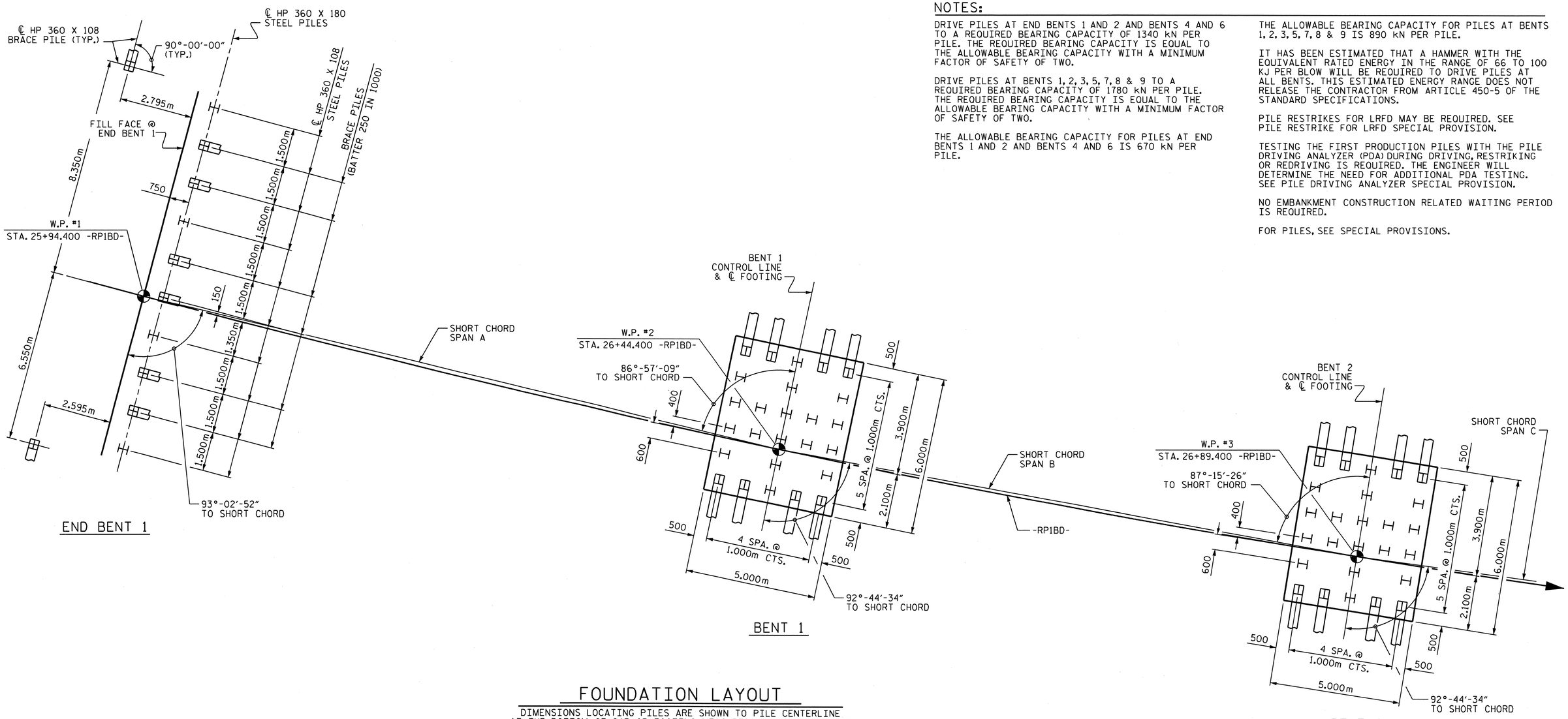

FOUNDATION LAYOUT

DIMENSIONS LOCATING PILES ARE SHOWN TO PILE CENTERLINE AT THE BOTTOM OF CAP OR FOOTING, MEASURED FROM THE TANGENT TO -RP1BD- AT EACH WORK POINT.

ALL BENT CONTROL LINES & ℄ FOOTINGS IN TRANSVERSE DIRECTION ARE RADIAL TO THE -RP1BD-.

BRACE PILES AT INTERIOR BENTS ARE TO BE BATTERED 125 IN 1000

ALL PILES ARE HP 360 X 108 STEEL PILES.

PROJECT NO. U-2519DA

CUMBERLAND COUNTY

STATION: 28+72.626 -RP1BD-

SHEET 4 OF 9

NORTH CAROLINA PROFESSIONAL SEAL 16301 ENGINEER TING HSIUNG FANG

3/9/11

STATE OF NORTH CAROLINA
DEPARTMENT OF TRANSPORTATION
RALEIGH

GENERAL DRAWING
BRIDGE OVER BEAVER CREEK AND ALL AMERICAN FREEWAY ON FAYETTEVILLE OUTER LOOP BETWEEN SR 1415 AND NC 24

REVISIONS						SHEET NO.
NO.	BY:	DATE:	NO.	BY:	DATE:	S-229
1			3			TOTAL SHEETS
2			4			411

DRAWN BY : E.C. LOCKLEAR DATE : 4-8-08
CHECKED BY : T.H. FANG DATE : 9-26-08

09-MAR-2011 16:28
K:\TIPProjects-U\U2519da\Structures\frye\str10_RP1BD_F0\Final Plans\U2519DA_sd_FL_10.dgn
ttfang

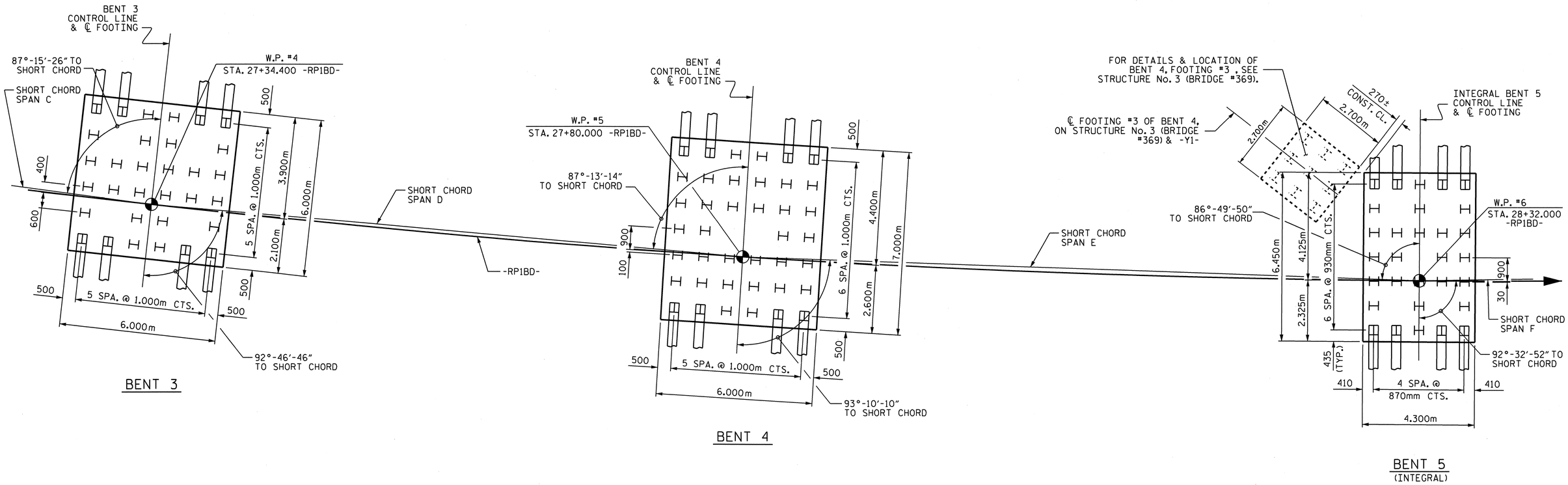

FOUNDATION LAYOUT

DIMENSIONS LOCATING PILES ARE SHOWN TO PILE CENTERLINE AT THE BOTTOM OF CAP OR FOOTING, MEASURED FROM THE TANGENT TO -RP1BD- AT EACH WORK POINT.

ALL BENT CONTROL LINES & ℄ FOOTINGS IN TRANSVERSE DIRECTION ARE RADIAL TO THE -RP1BD-.

BRACE PILES AT INTERIOR BENTS ARE TO BE BATTERED 125 IN 1000

ALL PILES ARE HP 360 X 108 STEEL PILES.

THE ENGINEER SHOULD CONFIRM THE FOOTING LAYOUT AT BENT 5 AND STRUCTURE No. 3 (BRIDGE #369) BENT 4 FOOTING #3 BEFORE ANY PILES ARE DRIVEN IN EITHER FOOTING.

NORTH CAROLINA PROFESSIONAL SEAL 16301 ENGINEER T.H. FANG
3/9/11

PROJECT NO. U-2519DA
CUMBERLAND COUNTY
STATION: 28+72.626 -RP1BD-

SHEET 5 OF 9

STATE OF NORTH CAROLINA
DEPARTMENT OF TRANSPORTATION
RALEIGH

GENERAL DRAWING
BRIDGE OVER BEAVER CREEK
AND ALL AMERICAN FREEWAY
ON FAYETTEVILLE OUTER
LOOP BETWEEN SR 1415
AND NC 24

REVISIONS						SHEET NO.
NO.	BY:	DATE:	NO.	BY:	DATE:	S-230
1			3			TOTAL SHEETS
2			4			411

DRAWN BY : E.C. LOCKLEAR DATE : 4-8-08
CHECKED BY : T.H. FANG DATE : 9-26-08

09-MAR-2011 16:28
K:\TIPProjects-U\U2519da\Structures\frye\str10_RP1BD_F0\Final Plans\U2519DA_sd_FL_10.dgn
ttfang

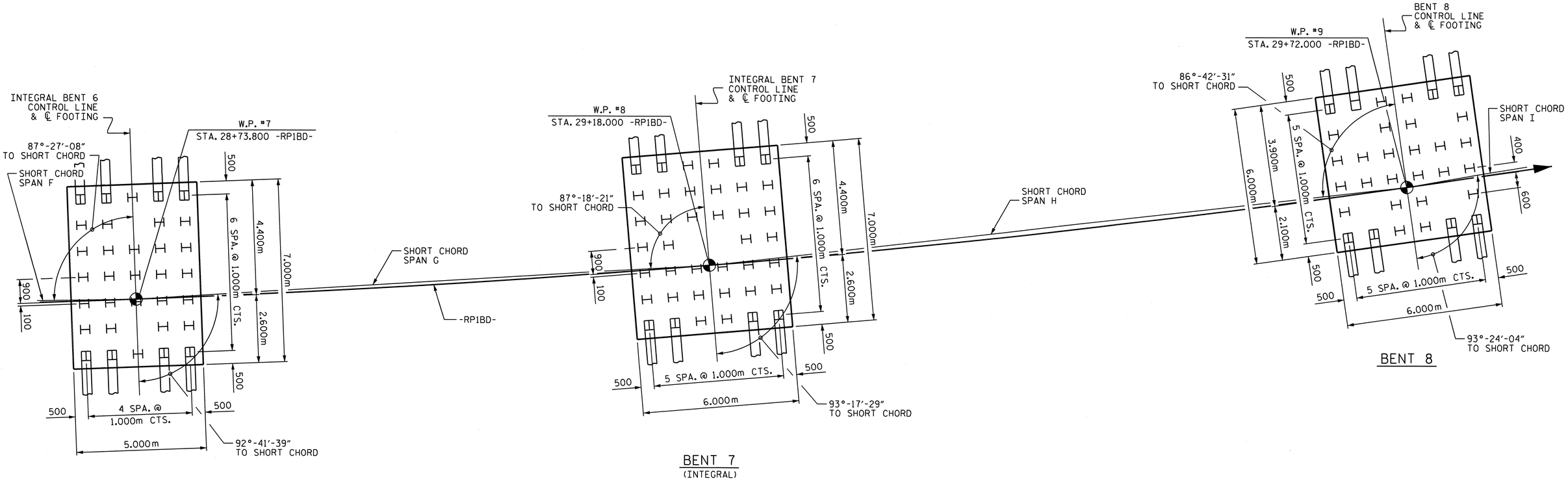

FOUNDATION LAYOUT

DIMENSIONS LOCATING PILES ARE SHOWN TO PILE CENTERLINE AT THE BOTTOM OF CAP OR FOOTING, MEASURED FROM THE TANGENT TO -RP1BD- AT EACH WORK POINT.

ALL BENT CONTROL LINES & ℄ FOOTINGS IN TRANSVERSE DIRECTION ARE RADIAL TO THE -RP1BD-.

BRACE PILES AT INTERIOR BENTS ARE TO BE BATTERED 125 IN 1000

ALL PILES ARE HP 360 X 108 STEEL PILES.

PROJECT NO. U-2519DA
CUMBERLAND COUNTY
STATION: 28+72.626 -RP1BD-

SHEET 6 OF 9

NORTH CAROLINA PROFESSIONAL SEAL 16301 ENGINEER T.H. FANG
3/10/11

STATE OF NORTH CAROLINA
DEPARTMENT OF TRANSPORTATION
RALEIGH

GENERAL DRAWING
BRIDGE OVER BEAVER CREEK AND ALL AMERICAN FREEWAY ON FAYETTEVILLE OUTER LOOP BETWEEN SR 1415 AND NC 24

REVISIONS						SHEET NO.
NO.	BY:	DATE:	NO.	BY:	DATE:	S-231
1			3			TOTAL SHEETS
2			4			411

DRAWN BY : E.C. LOCKLEAR DATE : 4-8-08
CHECKED BY : T.H. FANG DATE : 9-26-08

10-MAR-2011 09:01
K:\TIPProjects-U\U2519da\Structures\frye\str10_RP1BD_F0\Final Plans\U2519DA_sd_FL_10.dgn
ttfang

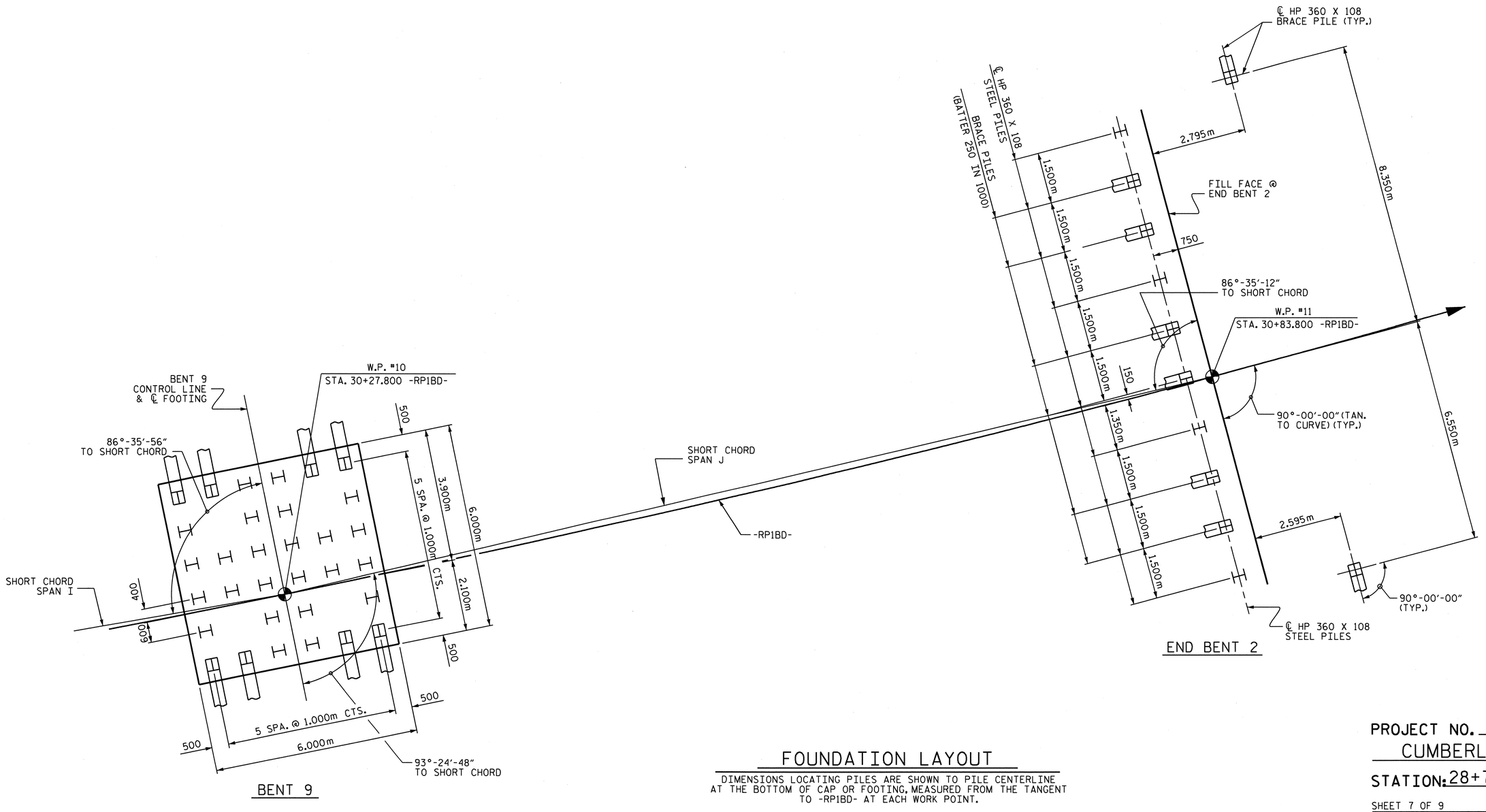

FOUNDATION LAYOUT

DIMENSIONS LOCATING PILES ARE SHOWN TO PILE CENTERLINE AT THE BOTTOM OF CAP OR FOOTING, MEASURED FROM THE TANGENT TO -RP1BD- AT EACH WORK POINT.

ALL BENT CONTROL LINES & ℄ FOOTINGS IN TRANSVERSE DIRECTION ARE RADIAL TO THE -RP1BD-.

BRACE PILES AT INTERIOR BENTS ARE TO BE BATTERED 125 IN 1000

ALL PILES ARE HP 360 X 108 STEEL PILES.

PROJECT NO. U-2519DA
CUMBERLAND COUNTY
STATION: 28+72.626 -RP1BD-

SHEET 7 OF 9

NORTH CAROLINA PROFESSIONAL SEAL 16301 ENGINEER TING HSIANG FANG
3/10/11

STATE OF NORTH CAROLINA
DEPARTMENT OF TRANSPORTATION
RALEIGH

GENERAL DRAWING
BRIDGE OVER BEAVER CREEK AND ALL AMERICAN FREEWAY ON FAYETTEVILLE OUTER LOOP BETWEEN SR 1415 AND NC 24

REVISIONS						SHEET NO.
NO.	BY:	DATE:	NO.	BY:	DATE:	S-232
1			3			TOTAL SHEETS
2			4			411

DRAWN BY : E.C. LOCKLEAR DATE : 4-08-08
CHECKED BY : T.H. FANG DATE : 9-26-08

10-MAR-2011 09:00
K:\TIPProjects-U\U2519da\Structures\frye\str10_RP1BD_F0\Final Plans\U2519DA_sd_FL_10.dgn
tfang

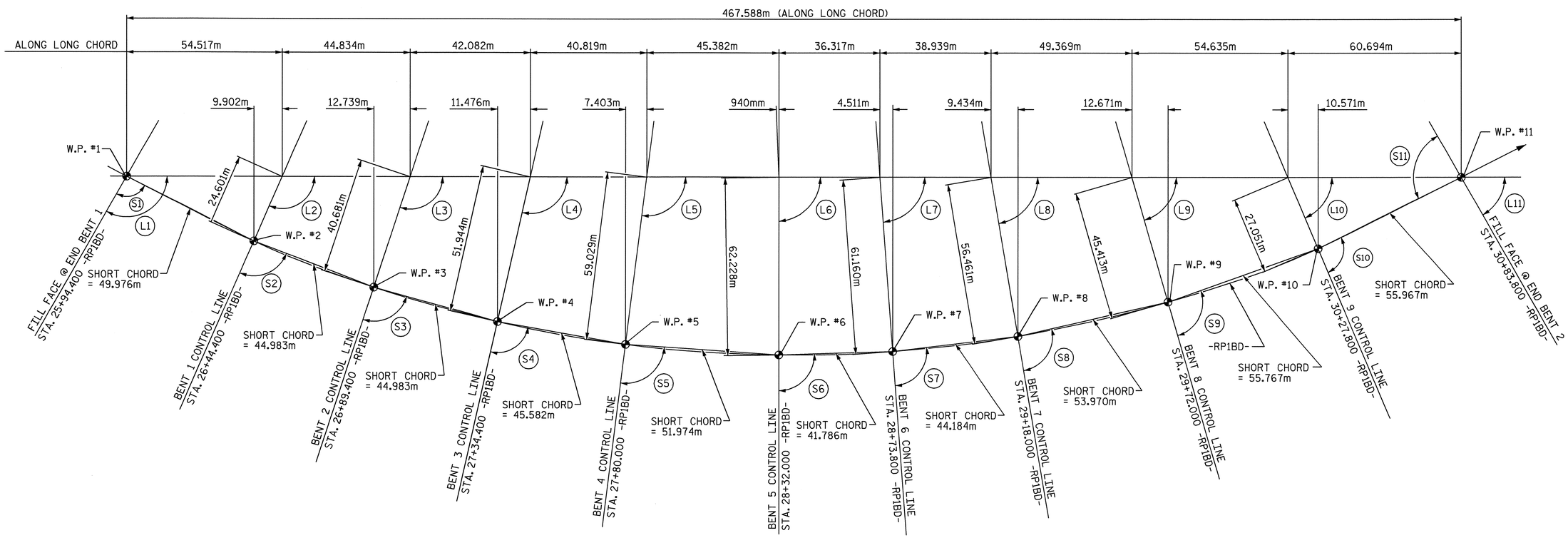

ANGLES			
LONG CHORD		SHORT CHORD	
L1	119°-49′-49″	S1	93°-02′-52″
L2	113°-44′-06″	S2	92°-44′-34″
L3	108°-14′-58″	S3	92°-44′-34″
L4	102°-45′-49″	S4	92°-46′-46″
L5	97°-12′-17″	S5	93°-10′-10″
L6	90°-51′-56″	S6	92°-32′-52″
L7	85°-46′-12″	S7	92°-41′-39″
L8	80°-22′-54″	S8	93°-17′-29″
L9	73°-47′-55″	S9	93°-24′-04″
L10	66°-59′-47″	S10	93°-24′-48″
L11	60°-10′-11″	S11	86°-35′-12″

LONG CHORD LAYOUT

ALL BENT CONTROL LINES AND END BENT FILL FACE LINES ARE PLACED RADIALLY TO -RP1BD-

HORIZONTAL CURVE DATA -RP1BD-

P.I. STA. = 29+55.024
Δ = 97°-19′-41.8″(LT)
L = 798.388m
T = 534.315m
R = 470.000m
SE = 0.06

NORTH CAROLINA PROFESSIONAL SEAL 16301 ENGINEER TING HSIUNG FANG
Ting H. Fang
10/08/08

PROJECT NO. U-2519DA
CUMBERLAND COUNTY
STATION: 28+72.626 -RP1BD-

SHEET 8 OF 9

STATE OF NORTH CAROLINA
DEPARTMENT OF TRANSPORTATION
RALEIGH

GENERAL DRAWING

FOR BRIDGE OVER BEAVER CREEK AND ALL AMERICAN FREEWAY ON FAYETTEVILLE OUTER LOOP BETWEEN SR 1415 AND NC 24

REVISIONS						SHEET NO.
NO.	BY:	DATE:	NO.	BY:	DATE:	S-233
1			3			TOTAL SHEETS
2			4			411

DRAWN BY : D. G. ELY DATE : 3/07
CHECKED BY : T. N. FANG DATE : 3/07

07-OCT-2008 16:00
H:\Structures\frye\str10_RP1BD_F0\Final Plans\u-2519da_sd_gd_10.dgn
sdombrowski

TOTAL BILL OF MATERIAL

	CONST., MAINT. & REMOVAL OF TEMP. ACCESS	FOUNDATION EXCAVATION FOR BENT	PDA TESTING	PDA ASSISTANCE	REINFORCED CONCRETE DECK SLAB	GROOVING BRIDGE FLOORS	CLASS A CONCRETE	BRIDGE APPROACH SLABS	REINFORCING STEEL	STRUCTURAL STEEL	HP 360 X 108 STEEL PILES		PILE REDRIVES	CONCRETE BARRIER RAIL	100mm SLOPE PROTECTION	POT BEARINGS	EVAZOTE JOINT SEALS	MODULAR EXPANSION JOINT SEALS	POST TENSIONING TENDONS	PRESTRESS -41.4 MPA CONCRETE	POST-TENSIONING ENCASEMENT
	LUMP SUM	LUMP SUM	EACH	EACH	SQ. METERS	SQ. METERS	CU. METERS	LUMP SUM	kg	APPROX. kg	NO.	METERS	EACH	METERS	SQ. METERS	LUMP SUM	LUMP SUM	LUMP SUM	LUMP SUM	CU. METERS	CU. METERS
SUPERSTRUCTURE					6,065	5623.2				1,698,000				975.117		LUMP SUM	LUMP SUM	LUMP SUM			
END BENT 1							44.6		3,265		12	324	3		600						
BENT 1		LUMP SUM					118.2		10,071		26	702	7								
BENT 2		LUMP SUM					136.4		11,430		26	546	7								
BENT 3		LUMP SUM					202.3		16,007		32	544	8								
BENT 4		LUMP SUM					202.2		16,292		40	680	10								
BENT 5		LUMP SUM					101.6		14,796		30	570	8						LUMP SUM	40.6	3.9
BENT 6		LUMP SUM					115.8		15,925		33	495	8						LUMP SUM	40.6	3.9
BENT 7		LUMP SUM					137.7		16,873		40	1000	10						LUMP SUM	40.6	3.9
BENT 8		LUMP SUM					176.5		13,574		32	800	8								
BENT 9		LUMP SUM					141.9		12,115		32	1088	8								
END BENT 2							44.6		3,269		12	444	3		760						
TOTAL	LUMP SUM	LUMP SUM	2	2	6,065	5623.2	1,421.8	LUMP SUM	133,717	1,698,000	315	7193	80	975.117	1360	LUMP SUM	LUMP SUM	LUMP SUM	LUMP SUM	121.8	11.7

B.M. #12: POINT BL12, ALUMINUM DISK 65.137m LT. OF STA. 27+21.030 -L-, ELEV. 59.506

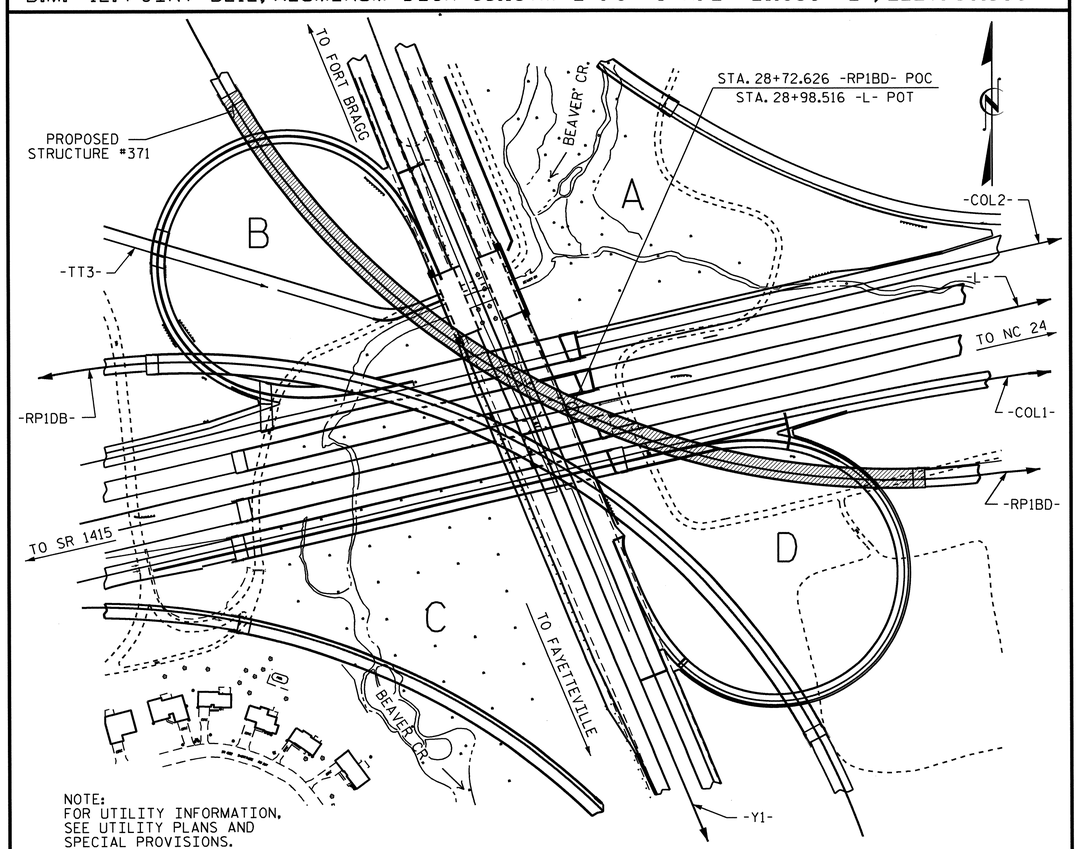

NOTE:
FOR UTILITY INFORMATION, SEE UTILITY PLANS AND SPECIAL PROVISIONS.

LOCATION SKETCH

DRAWN BY : D. G. ELY DATE : 02-07
CHECKED BY : T.H. FANG DATE : 3/07

NOTES

ALL DIMENSIONS ARE IN MILLIMETERS UNLESS OTHERWISE NOTED.

ALL ELEVATIONS ARE IN METERS.

ASSUMED LIVE LOAD = MS 22.5 OR ALTERNATE LOADING.

FOR OTHER DESIGN DATA AND GENERAL NOTES, SEE SHEET SNSM.

FOR EROSION CONTROL MEASURES, SEE EROSION CONTROL PLANS.

THIS BRIDGE HAS BEEN DESIGNED BY THE STRENGTH DESIGN METHOD AS SPECIFIED IN AASHTO STANDARD SPECIFICATIONS.

ALL STRUCTURAL STEEL SHALL BE AASHTO M270 GRADE 345W AND PAINTED IN ACCORDANCE WITH SYSTEM 4 OF ARTICLE 442-7 OF THE STANDARD SPECIFICATIONS UNLESS OTHERWISE NOTED ON THE PLANS.

REMOVABLE FORMS MAY BE USED IN LIEU OF METAL STAY-IN-PLACE FORMS IN ACCORDANCE WITH ARTICLE 420-3 OF THE STANDARD SPECIFICATIONS.

FOR MAINTENANCE AND PROTECTION OF TRAFFIC BENEATH PROPOSED STRUCTURE, SEE SPECIAL PROVISIONS.

THIS BRIDGE HAS BEEN DESIGNED IN ACCORDANCE WITH THE REQUIREMENTS OF THE AASHTO STANDARD SPECIFICATIONS FOR SEISMIC DESIGN OF HIGHWAY BRIDGES FOR SEISMIC PERFORMANCE CATEGORY A.

THE CONTRACTOR SHALL PROVIDE INDEPENDENT ASSURANCE SAMPLES OF REINFORCING STEEL AS FOLLOWS: FOR PROJECTS REQUIRING UP TO 360,000 kg OF REINFORCING STEEL, ONE 760mm SAMPLE OF EACH SIZE BAR USED, AND FOR PROJECTS REQUIRING OVER 360,000 kg OF REINFORCING STEEL, TWO 760mm SAMPLES OF EACH SIZE BAR USED. THE BARS FROM WHICH THE SAMPLES ARE TAKEN MUST THEN BE SPLICED WITH REPLACEMENT BARS OF THE SIZE AND LENGTH OF THE SAMPLE PLUS A MINIMUM LAP SPLICE OF THIRTY BAR DIAMETERS.

FOR POT BEARINGS, SEE SPECIAL PROVISIONS.

FOR OPTIONAL DISC BEARINGS, SEE SPECIAL PROVISIONS.

FOR MODULAR EXPANSION JOINT SEALS, SEE SPECIAL PROVISIONS.

FOR EVAZOTE JOINT SEALS, SEE SPECIAL PROVISIONS.

FOR ELASTOMERIC CONCRETE, SEE SPECIAL PROVISIONS.

FOR POST-TENSIONING TENDONS, SEE SPECIAL PROVISIONS.

FOR 41.4 MPA CONCRETE, SEE SPECIAL PROVISIONS.

FOR GROUT FOR STRUCTURES, SEE SPECIAL PROVISIONS.

FOR CURING CONCRETE, SEE SPECIAL PROVISIONS.

NEEDLE BEAMS WILL NOT BE ALLOWED UNLESS OTHERWISE CALLED FOR ON THE PLANS OR APPROVED BY THE ENGINEER.

FOR LIMITS OF TEMPORARY SHORING FOR MAINTENANCE OF TRAFFIC, SEE TRAFFIC CONTROL PLANS, FOR TEMPORARY SHORING PAY ITEM, SEE ROADWAY PLANS.

STEEL SHEET PILING REQUIRED FOR SHORING SHALL BE HOT ROLLED.

FOR BRIDGE DECK RIDEABILITY AND GROOVING, SEE SPECIAL PROVISIONS.

FOR THERMAL SPRAY COATINGS, SEE SPECIAL PROVISIONS.

FOR SHIPPING STEEL STRUCTURAL MEMBERS, SEE SPECIAL PROVISIONS.

FOR HIGH STRENGTH BOLTS, SEE SPECIAL PROVISIONS.

FOR ADHESIVE ANCHORED ANCHOR BOLTS OR DOWELS, SEE SPECIAL PROVISIONS.

FOR SUBMITTAL OF WORKING DRAWINGS, SEE SPECIAL PROVISIONS.

FOR METRIC STRUCTURAL STEEL, SEE SPECIAL PROVISIONS.

FOR FALSEWORK AND FORMWORK, SEE SPECIAL PROVISIONS.

FOR CRANE SAFETY, SEE SPECIAL PROVISIONS.

FOR CONSTRUCTION, MAINTENANCE AND REMOVAL OF TEMPORARY ACCESS, SEE SPECIAL PROVISIONS.

FOR CONSTRUCTION SEQUENCE OF INTEGRAL BENTS, SEE SCHEMATIC SEQUENCE OF CONSTRUCTION AND NOTES INTEGRAL BENTS 5, 6 & 7.

FOR PLACING LOAD ON STRUCTURE MEMBERS, SEE SPECIAL PROVISIONS.

FOR MASS CONCRETE, SEE SPECIAL PROVISIONS.

HYDRAULIC DATA

DESIGN DISCHARGE	= 52.7 m^3/s
FREQUENCY OF DESIGN FLOOD	= 50 YEARS
DESIGN HIGH WATER ELEVATION	= 58.72
DRAINAGE AREA	= 15.0 SQ. km.
BASIC DISCHARGE(Q100)	= 58.9 m^3/s
BASIC HIGH WATER ELEVATION	= 59.17

OVERTOPPING FLOOD DATA

OVERTOPPING DISCHARGE	= ✱✱ CU. METERS/SEC.
FREQUENCY OF OVERTOPPING FLOOD	= > 500 YRS.
OVERTOPPING FLOOD ELEVATION	= 63.03

✱✱ OVERTOPPING FLOOD IS GREATER THAN THE 500+ YEAR EVENT. OVERTOPPING LOCATION AT -RP1A- 16+34.207

NORTH CAROLINA PROFESSIONAL SEAL 16301 ENGINEER TING HSIENG FANG
6/9/11

PROJECT NO. U-2519DA
CUMBERLAND COUNTY
STATION: 28+72.626 -RP1BD-

SHEET 9 OF 9

STATE OF NORTH CAROLINA
DEPARTMENT OF TRANSPORTATION
RALEIGH

GENERAL DRAWING

FOR BRIDGE OVER BEAVER CREEK AND ALL AMERICAN FREEWAY ON FAYETTEVILLE OUTER LOOP BETWEEN SR 1415 AND NC 24

REVISIONS						SHEET NO.
NO.	BY:	DATE:	NO.	BY:	DATE:	S-234
1			3			TOTAL SHEETS
2			4			411

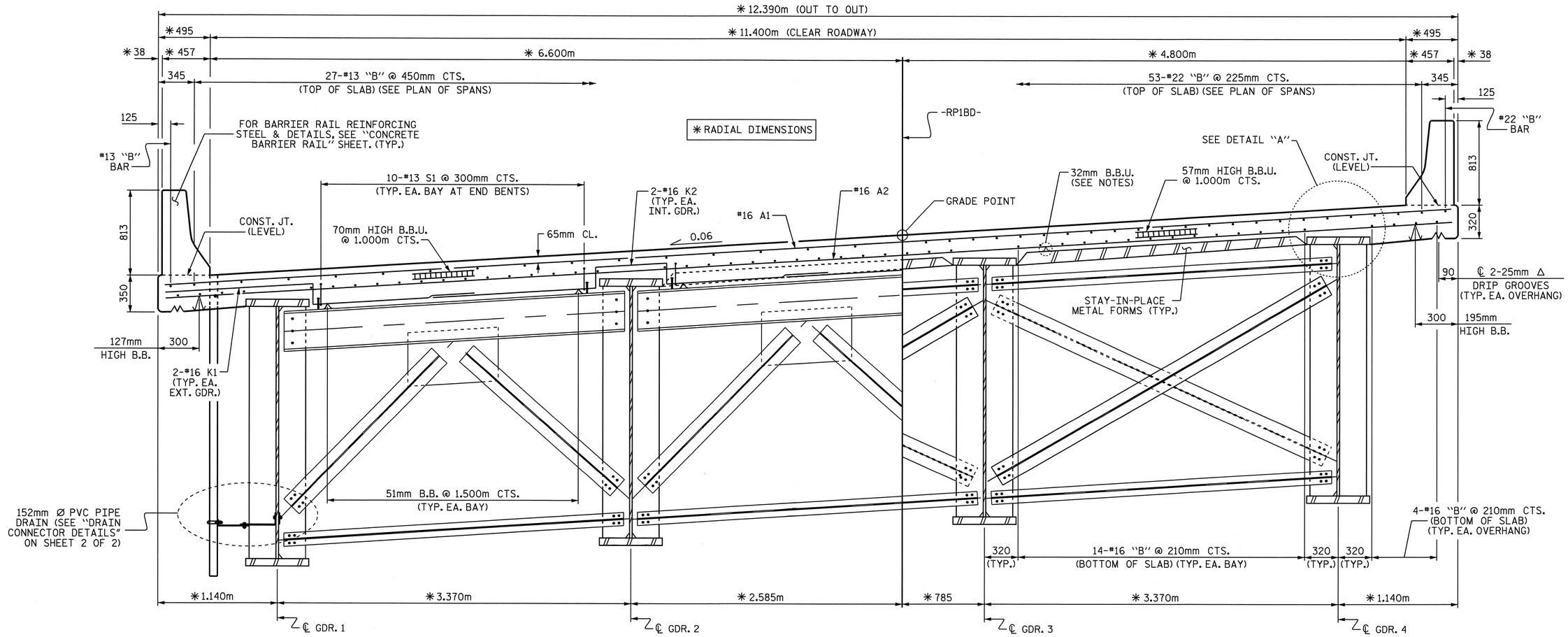

TYPICAL HALF SECTION

(SHOWING END BENTS, FOR EXPANSION BENTS 4 & 8, SEE PARTIAL SECTION A-A ON SHEET 2 OF 2.)

TYPICAL HALF SECTION

(SHOWING CONTINUOUS BENT & INTERMEDIATE DIAPHRAGMS)
(FOR SECTION OF INTEGRAL BENTS 5, 6, 7, SEE SUBSTRUCTURE BENTS 5, 6 & 7 SHEETS)

NOTES

PROVIDE 32mm HIGH BEAM BOLSTERS UPPER AT 1.2m CTS. ATOP THE METAL STAY-IN-PLACE FORMS TO SUPPORT THE BOTTOM MAT OF 'A' BARS. WHEN USING REMOVABLE FORMS, PROVIDE CONTINUOUS HIGH CHAIRS FOR METAL DECK (C.H.C.M.) @ 1.2m CTS. WITH A HEIGHT TO SUPPORT THE BOTTOM MAT OF 'A' BARS A CLEAR DISTANCE OF 65mm ABOVE THE TOP OF THE REMOVABLE FORM.

METAL STAY-IN-PLACE FORMS SHALL NOT BE WELDED TO BEAM OR GIRDER FLANGES IN THE ZONES REQUIRING CHARPY V-NOTCH TEST. SEE STRUCTURAL STEEL DETAIL SHEETS.

PREVIOUSLY CAST CONCRETE IN A CONTINUOUS UNIT SHALL HAVE ATTAINED A MINIMUM COMPRESSIVE STRENGTH OF 20.7 MPa BEFORE ADDITIONAL CONCRETE IS CAST IN THE UNIT.

BARRIER RAIL IN A CONTINUOUS UNIT SHALL NOT BE CAST UNTIL ALL SLAB CONCRETE IN THE UNIT HAS BEEN CAST AND HAS REACHED A MINIMUM COMPRESSIVE STRENGTH OF 20.7 MPa.

STRUCTURAL STEEL ERECTION IN A CONTINUOUS UNIT SHALL BE COMPLETE BEFORE FALSEWORK OR FORMS ARE PLACED ON THE UNIT.

#16 G1 BAR MAY BE SHIFTED SLIGHTLY, AS NECESSARY, TO CLEAR REINFORCING STEEL AND STIRRUPS.

THE CONTRACTOR MAY, WHEN NECESSARY, PROPOSE A SCHEME FOR AVOIDING INTERFERENCE BETWEEN METAL STAY-IN-PLACE FORM SUPPORTS OR FORMS AND BEAM/GIRDER STIFFENERS OR CONNECTOR PLATES. THE PROPOSAL SHALL BE INDICATED, AS APPROPRIATE, ON EITHER THE STEEL WORKING DRAWINGS OR THE METAL STAY-IN-PLACE FORM WORKING DRAWINGS.

THE CONTRACTOR SHALL ADJUST THE GIRDER BUILDUPS AS NECESSARY TO INCORPORATE A MAXIMUM PERMISSIBLE VARIATION IN POT BEARING DEPTH OF 13mm, SEE SPECIAL PROVISION FOR POT BEARINGS.

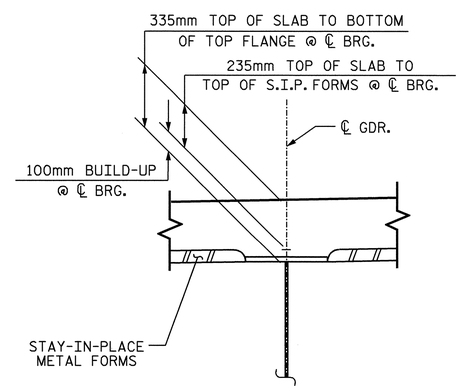

DETAIL "A"

NORTH CAROLINA PROFESSIONAL SEAL 16301 ENGINEER TING HSIUNG FANG
10/08/08

PROJECT NO. U-2519DA
CUMBERLAND COUNTY
STATION: 28+72.626 -RP1BD-

SHEET 1 OF 2

STATE OF NORTH CAROLINA
DEPARTMENT OF TRANSPORTATION
RALEIGH

SUPERSTRUCTURE

TYPICAL SECTION

REVISIONS						SHEET NO.
NO.	BY:	DATE:	NO.	BY:	DATE:	S-235
1			3			TOTAL SHEETS
2			4			411

DRAWN BY : J.P. ADAMS DATE : 8/2/07
CHECKED BY : T.H. FANG DATE : 7/18/08

07-OCT-2008 16:00
H:\Structures\frye\str10_RP1BD_F0\Final Plans\u-2519da_sd_ts.dgn
sdombrowski

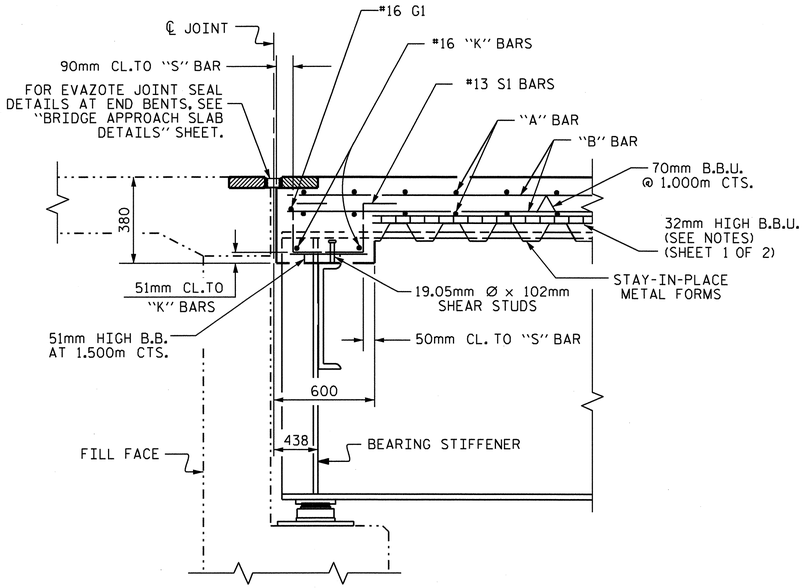

SECTION @ END BENTS

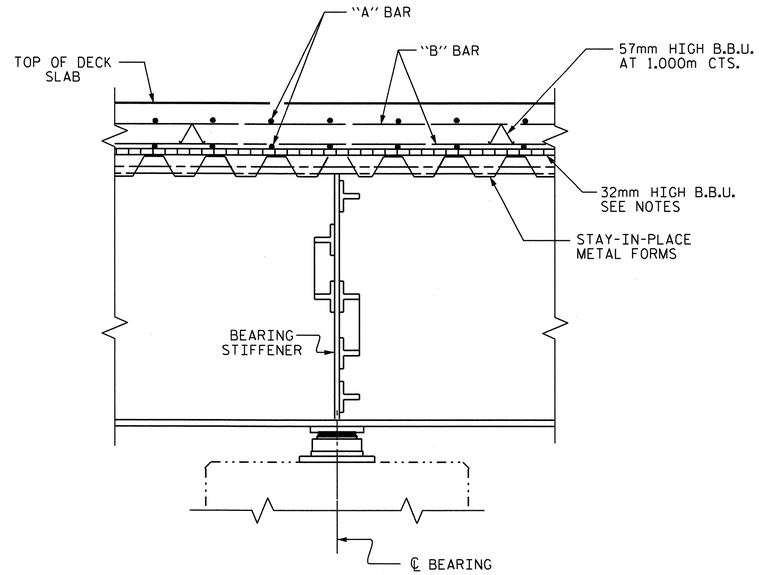

SECTION THRU CONTINUOUS BENT

@ BENTS 1, 2, 3 & 9

FOR SECTION THRU INTEGRAL BENTS 5, 6 & 7, SEE SUBSTRUCTURE SHEETS BENTS 5, 6 & 7

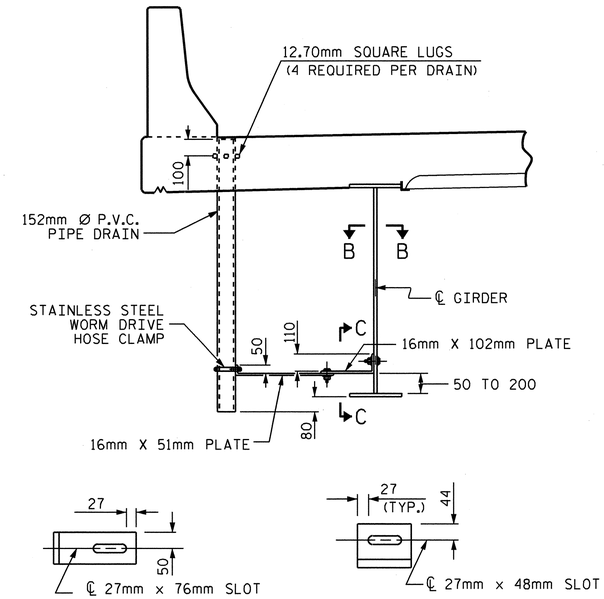

SECTION B-B

SECTION C-C

DRAIN CONNECTOR DETAIL

COUPLING IN DRAIN PIPE WILL BE PERMITTED AS APPROVED BY THE ENGINEER.

TOP OF FLOOR DRAINS TO BE SET 10mm BELOW SURFACE OF SLAB.

4- 13mm SQ. LUGS TO BE GLUED TO THE P.V.C. PLASTIC PIPE AT EQUAL SPACES AROUND THE PIPE DRAIN APPROXIMATELY 100mm FROM THE TOP OF THE PIPE.

BOLT SIZE TO BE SAME AS DIAPHRAGM AND CROSSFRAME CONNECTIONS. STAINLESS STEEL WORM HOSE CLAMP SHALL BE COMMERCIAL QUALITY.

THE 152mm Ø PVC PLASTIC PIPE AND FITTINGS SHALL BE SCHEDULE 40 AND CONFORM TO ASTM D1785.

PVC DECK DRAINS SHALL BE PAINTED WITH TWO COATS OF BROWN PRIMER MEETING THE REQUIREMENTS OF ARTICLE 1080-12 OF THE STANDARD SPECIFICATIONS. EACH COAT SHALL BE 2 DRY MILS (0.050mm) THICK. DECK DRAINS SHALL BE ROUGHENED PRIOR TO PAINTING. NO SEPARATE PAYMENT SHALL BE MADE FOR PAINTING PVC DECK DRAINS AS THIS IS CONSIDERED INCIDENTAL TO THE PAY ITEM FOR REINFORCED CONCRETE DECK SLAB.

PLATES SHALL CONFORM TO AASHTO M270 STEEL OR APPROVED EQUAL.

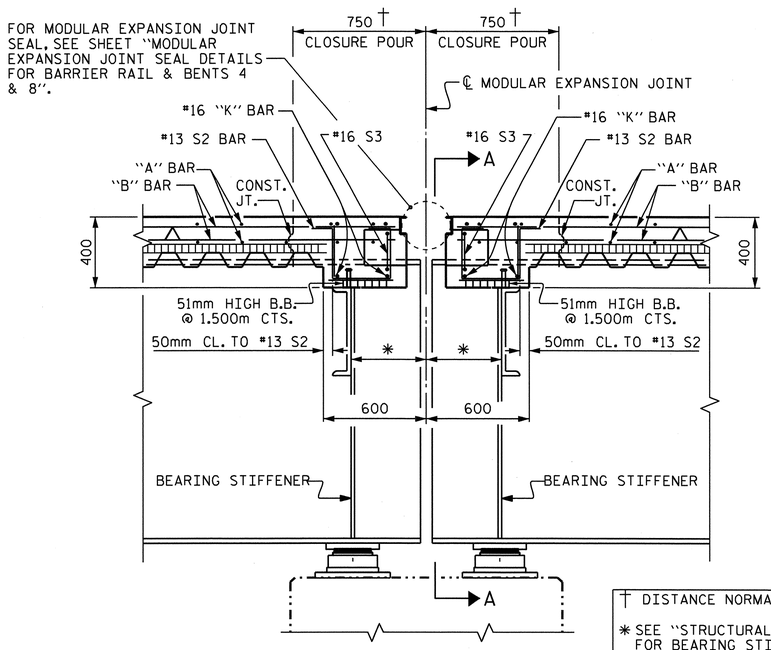

† DISTANCE NORMAL TO JOINT

* SEE "STRUCTURAL STEEL DETAILS" FOR BEARING STIFFENER LOCATION AND PLATE THICKNESS

SECTION @ BENTS 4 & 8

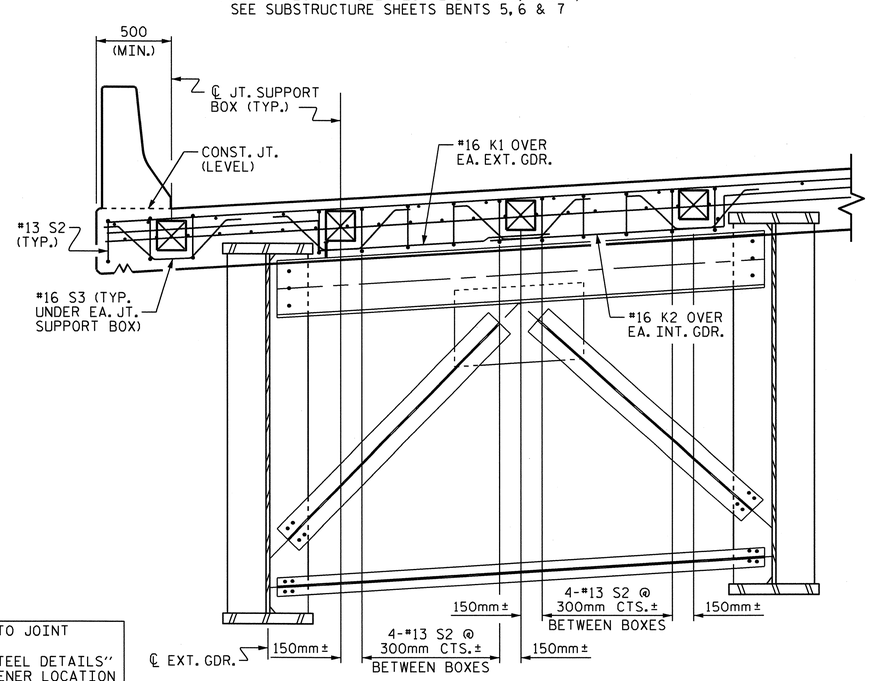

PARTIAL SECTION A-A

SHOWING MODULAR EXPANSION JOINT DETAILS IN BENT DIAPHRAGM

NOTES

THE "B" BARS IN THE DECK SLAB MAY BE CUT AS DIRECTED BY THE ENGINEER TO CLEAR THE MODULAR JOINT SUPPORT BOXES.

#16 G1 MAY BE SHIFTED SLIGHTLY, AS NECESSARY, TO CLEAR REINFORCING STEEL & STIRRUPS.

PROJECT NO. U-2519DA

CUMBERLAND COUNTY

STATION: 28+72.626 -RP1BD-

SHEET 2 OF 2

NORTH CAROLINA PROFESSIONAL SEAL 16301 ENGINEER TING-YU LUNG FANG

3/14/11

STATE OF NORTH CAROLINA
DEPARTMENT OF TRANSPORTATION
RALEIGH

SUPERSTRUCTURE

TYPICAL SECTION

REVISIONS						SHEET NO.
NO.	BY:	DATE:	NO.	BY:	DATE:	S-236
1			3			TOTAL SHEETS
2			4			411

DRAWN BY : J.P. ADAMS DATE : 8/2/07
CHECKED BY : T.H. FANG DATE : 7/10/08

14-MAR-2011 15:56
K:\TIPProjects-U\U2519da\Structures\frye\strl0_RP1BD_F0\Final Plans\u-2519da_sd_ts.dgn
ttfang

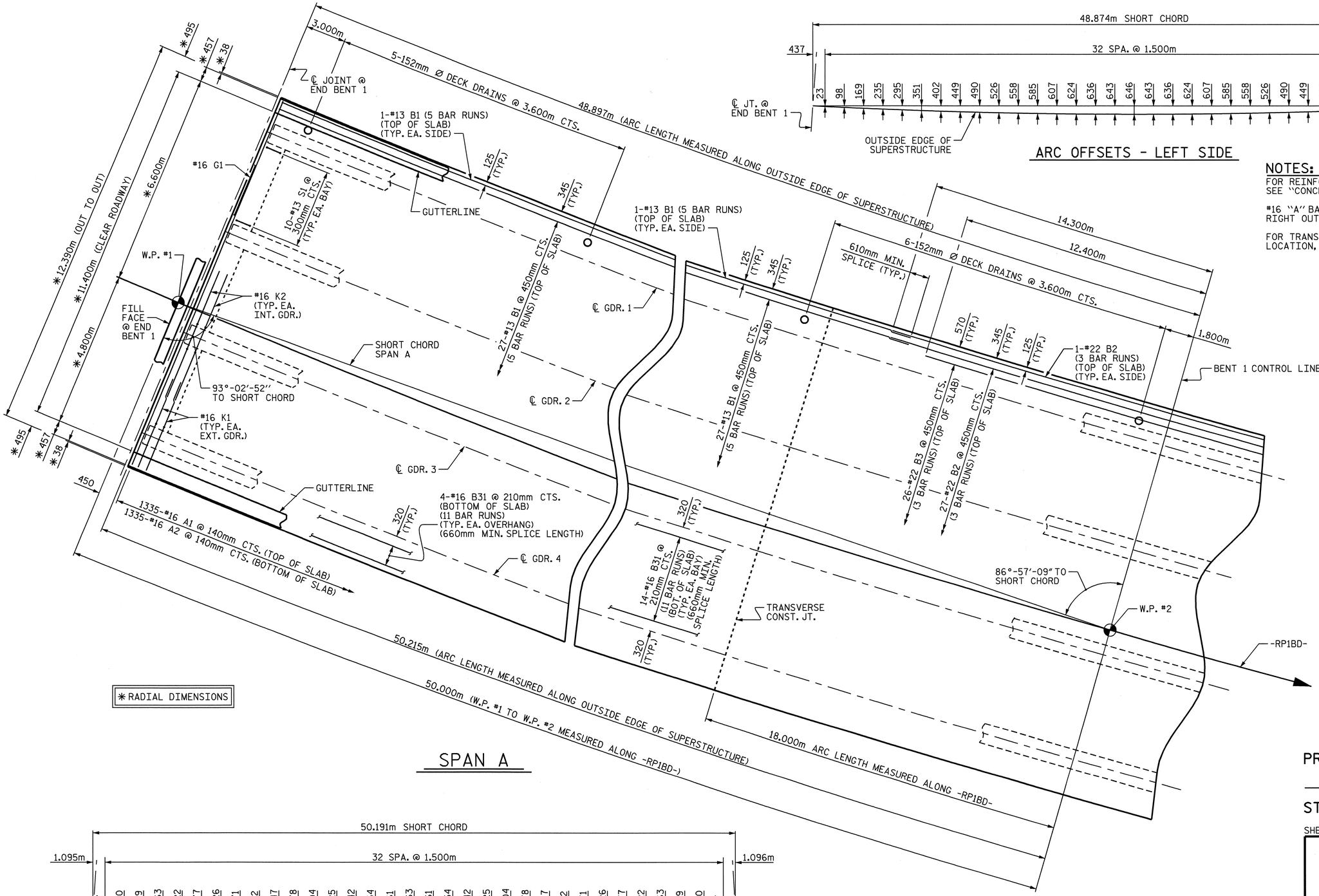

SPAN A

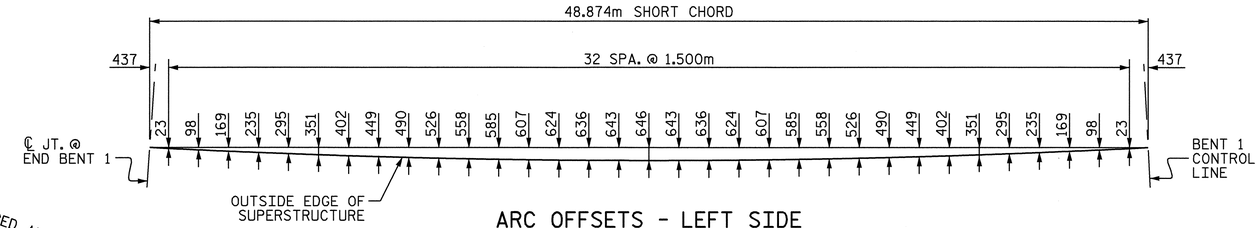

ARC OFFSETS - LEFT SIDE

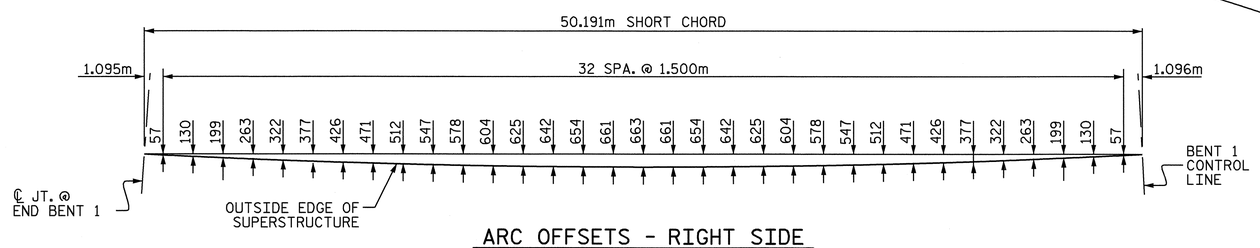

ARC OFFSETS - RIGHT SIDE

NOTES:

FOR REINFORCING STEEL IN BARRIER RAIL, SEE "CONCRETE BARRIER RAIL" SHEETS.

#16 "A" BARS ARE TO BE PLACED RADIALLY ALONG RIGHT OUTSIDE EDGE OF SUPERSTRUCTURE.

FOR TRANSVERSE CONSTRUCTION JOINT DETAILS AND LOCATION, SEE POURING SEQUENCE.

NORTH CAROLINA PROFESSIONAL SEAL 16301 ENGINEER TING HSILING FANG
Ting H. Fang 10/08/08

PROJECT NO. U-2519DA
CUMBERLAND COUNTY
STATION: 28+72.626 -RP1BD-

SHEET 1 OF 10

STATE OF NORTH CAROLINA
DEPARTMENT OF TRANSPORTATION
RALEIGH

SUPERSTRUCTURE

PLAN OF SPANS
SPAN A

REVISIONS						SHEET NO.
NO.	BY:	DATE:	NO.	BY:	DATE:	S-237
1			3			TOTAL SHEETS
2			4			411

DRAWN BY : J.P. ADAMS DATE : 12/5/07
CHECKED BY : T. H. FANG DATE : 5/1/08

07-OCT-2008 16:00
H:\Structures\frye\str10_RP1BD_F0\Final Plans\u-2519da_sd_s*.dgn
sdombrowski

FOR NOTES, SEE "PLAN OF SPANS, SPAN A", ON SHEET 1 OF 10

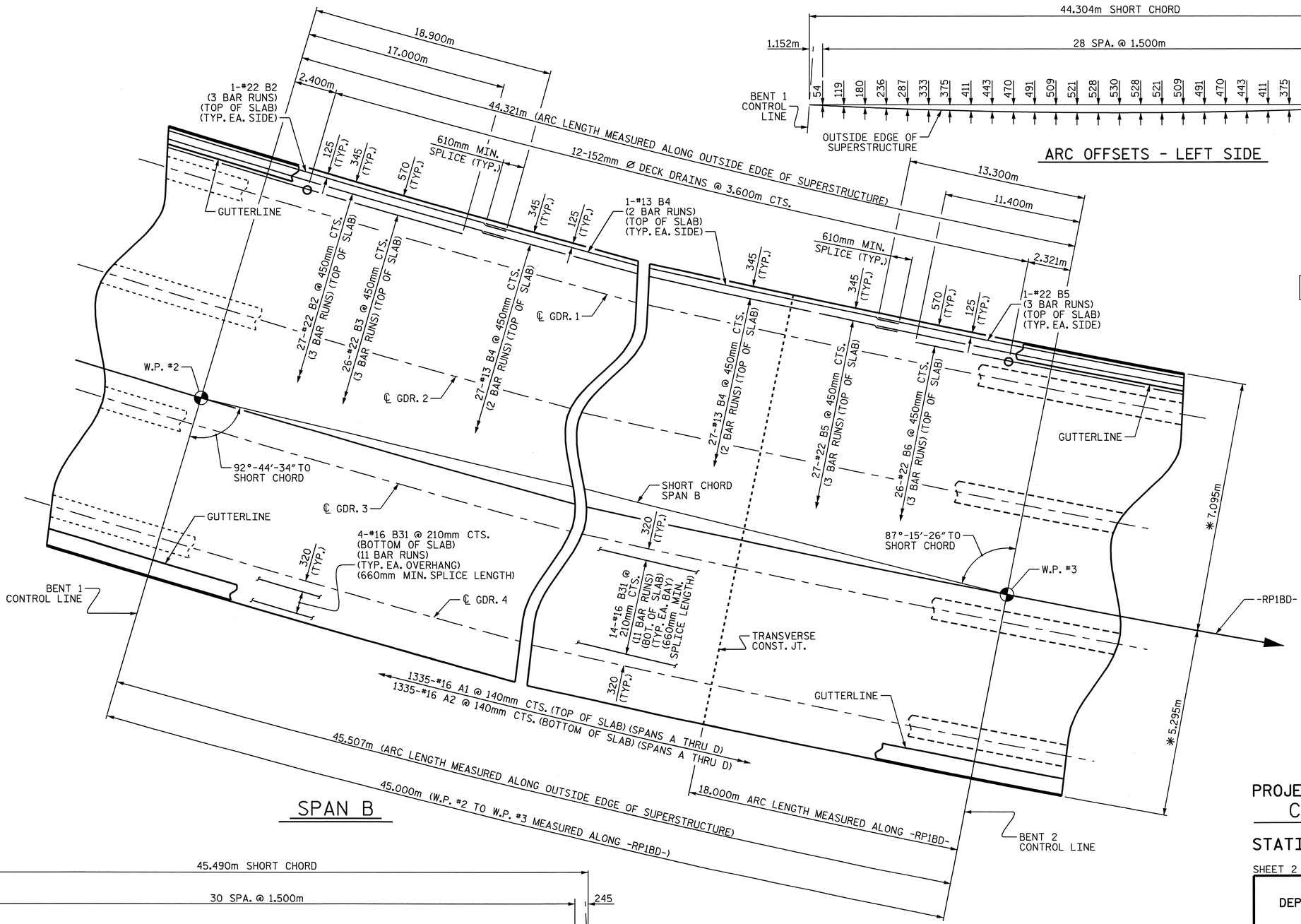

SPAN B

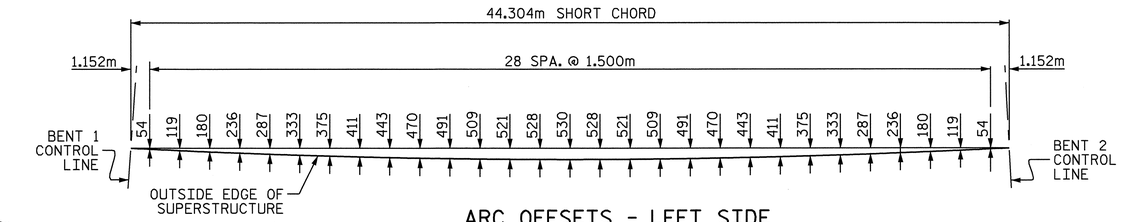

ARC OFFSETS - LEFT SIDE

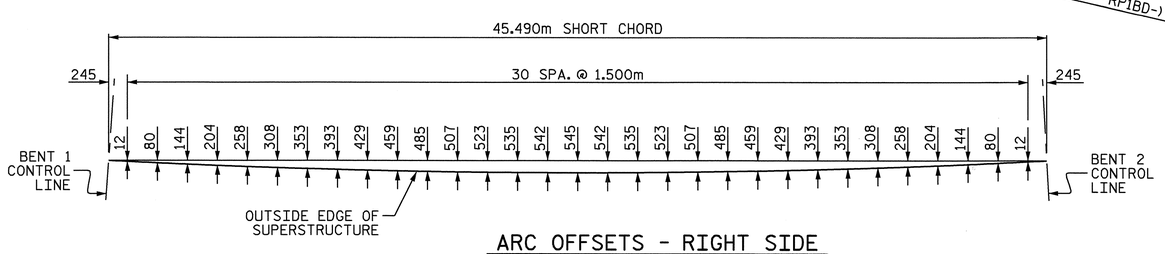

ARC OFFSETS - RIGHT SIDE

NORTH CAROLINA PROFESSIONAL SEAL 16301 ENGINEER TING HSIUNG FANG

10/08/08

PROJECT NO. U-2519DA
CUMBERLAND COUNTY
STATION: 28+72.626 -RP1BD-

SHEET 2 OF 10

STATE OF NORTH CAROLINA
DEPARTMENT OF TRANSPORTATION
RALEIGH

SUPERSTRUCTURE

PLAN OF SPANS
SPAN B

REVISIONS						SHEET NO.
NO.	BY:	DATE:	NO.	BY:	DATE:	S-238
1			3			TOTAL SHEETS
2			4			411

DRAWN BY : J.P. ADAMS DATE : 12/5/07
CHECKED BY : T. H. FANG DATE : 5/1/08

07-OCT-2008 16:00
H:\Structures\frye\str10_RP1BD_F0\Final Plans\u-2519da_sd_s*.dgn
sdombrowski

FOR NOTES, SEE "PLAN OF SPANS, SPAN A", ON SHEET 1 OF 10

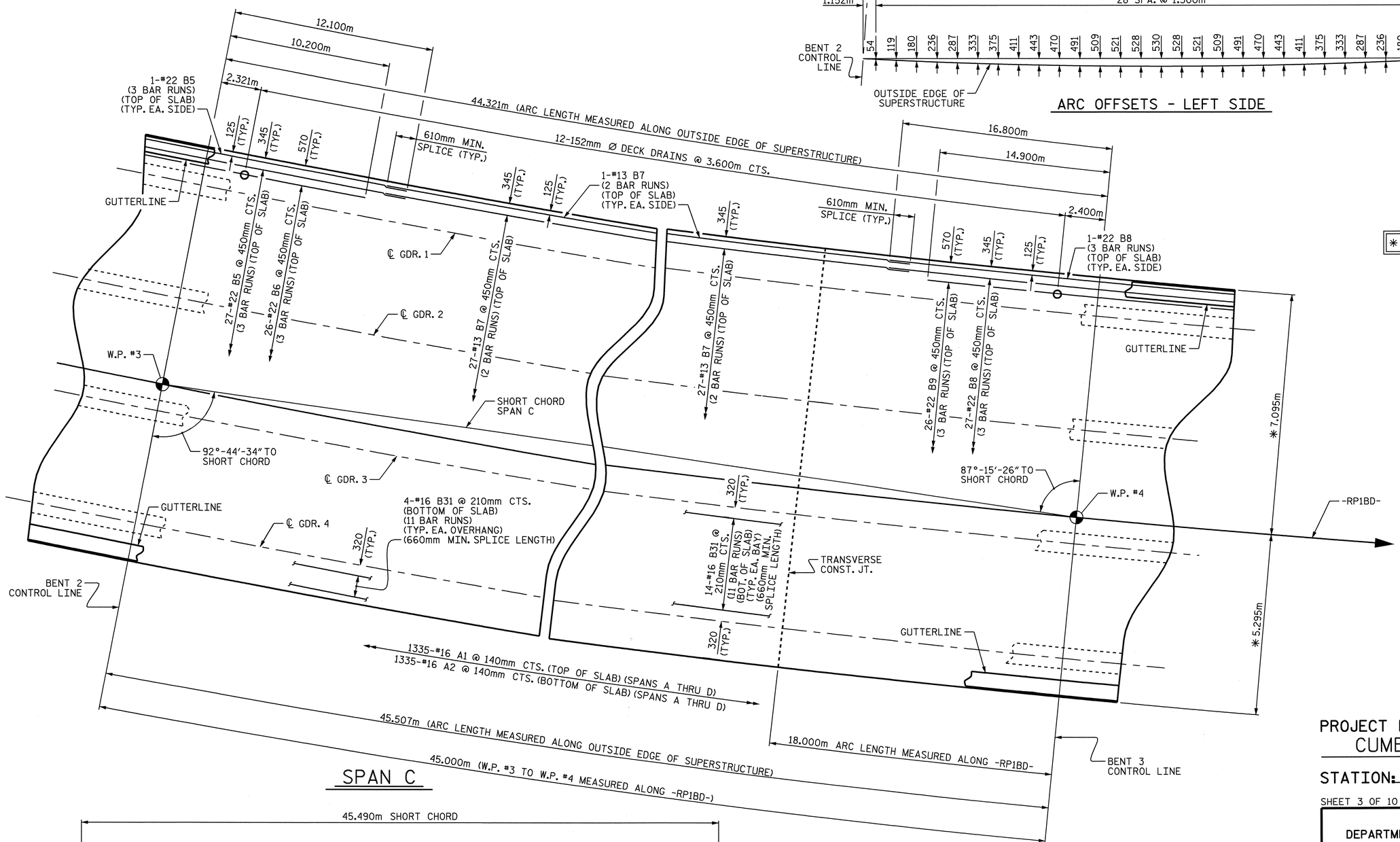

✱ RADIAL DIMENSIONS

SPAN C

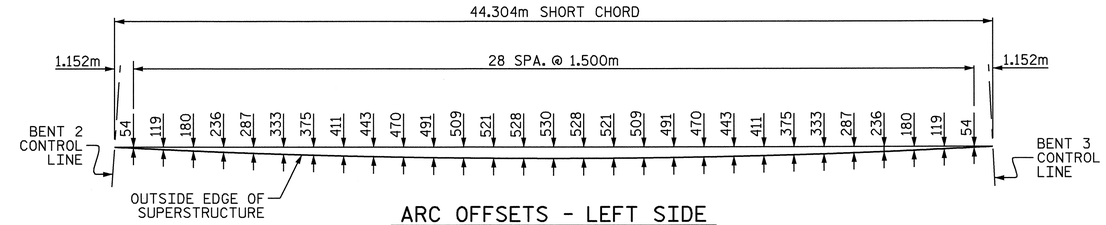

ARC OFFSETS - LEFT SIDE

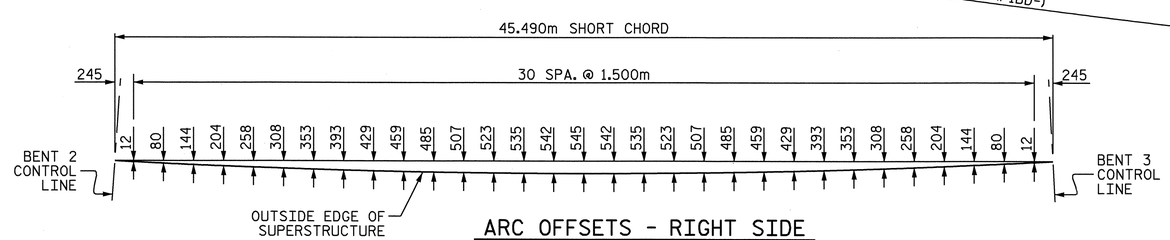

ARC OFFSETS - RIGHT SIDE

NORTH CAROLINA PROFESSIONAL SEAL 16301 ENGINEER TING HSILING FANG

7/16/08

PROJECT NO. U-2519DA
CUMBERLAND COUNTY
STATION: 28+72.626 -RP1BD-

SHEET 3 OF 10

STATE OF NORTH CAROLINA
DEPARTMENT OF TRANSPORTATION
RALEIGH

SUPERSTRUCTURE

PLAN OF SPANS
SPAN C

REVISIONS						SHEET NO.
NO.	BY:	DATE:	NO.	BY:	DATE:	S-239
1			3			TOTAL SHEETS
2			4			411

DRAWN BY : J.P. ADAMS DATE : 12/5/07
CHECKED BY : T. H. FANG DATE : 5/1/08

07-OCT-2008 16:00
H:\Structures\frye\str10_RP1BD_F0\Final Plans\u-2519da_sd_s*.dgn
sdombrowski

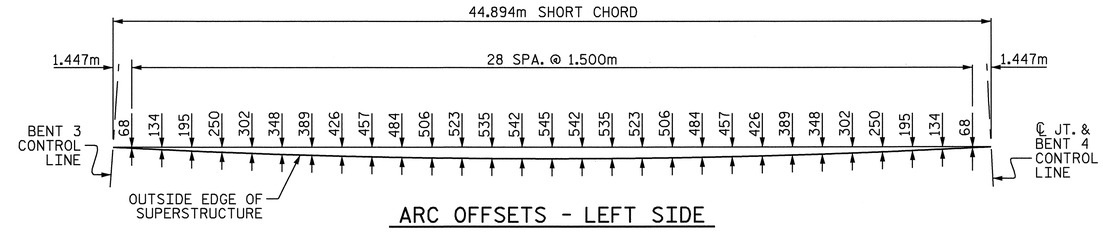

ARC OFFSETS - LEFT SIDE

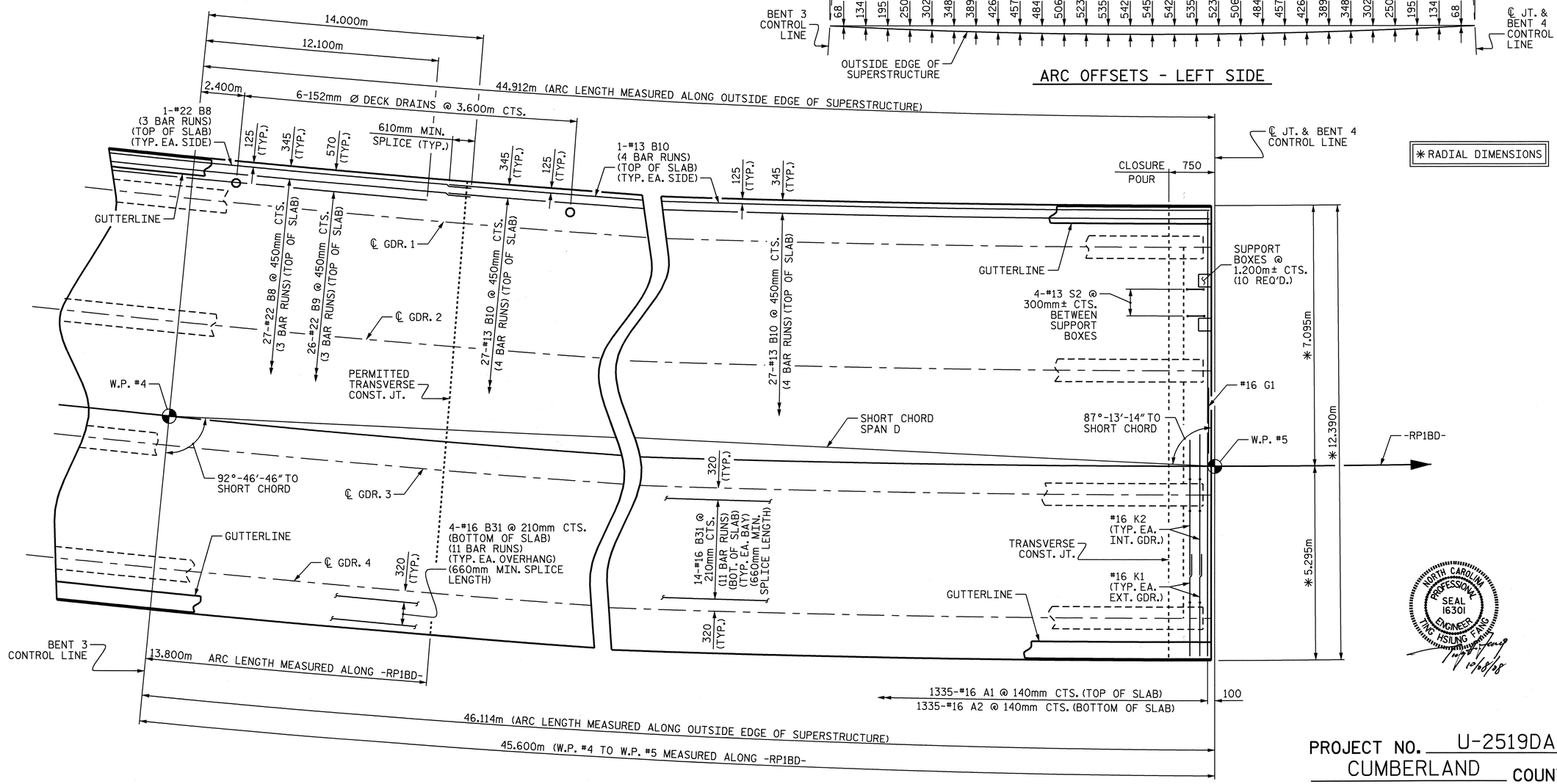

SPAN D

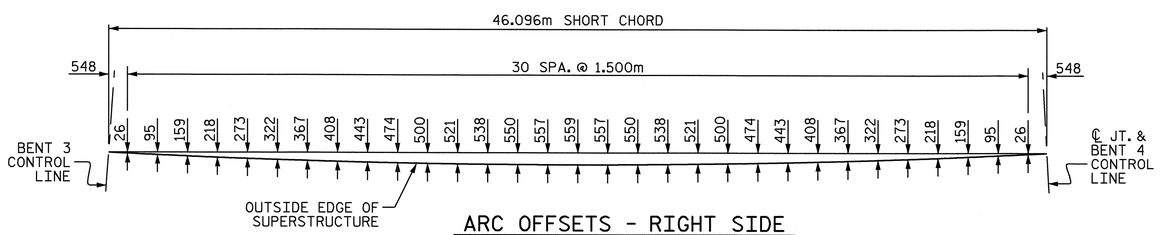

ARC OFFSETS - RIGHT SIDE

NORTH CAROLINA PROFESSIONAL SEAL 16301 ENGINEER TING-HSIUNG FANG

12/08/08

PROJECT NO. U-2519DA
CUMBERLAND COUNTY
STATION: 28+72.626 -RP1BD-

SHEET 4 OF 10

STATE OF NORTH CAROLINA
DEPARTMENT OF TRANSPORTATION
RALEIGH

SUPERSTRUCTURE

PLAN OF SPANS
SPAN D

REVISIONS						SHEET NO.
NO.	BY:	DATE:	NO.	BY:	DATE:	S-240
1			3			TOTAL SHEETS
2			4			411

DRAWN BY : J.P. ADAMS DATE : 12/5/07
CHECKED BY : T. H. FANG DATE : 5/1/08

07-OCT-2008 16:00
H:\Structures\frye\str10_RP1BD_F0\Final Plans\u-2519da_sd_s*.dgn
sdombrowski

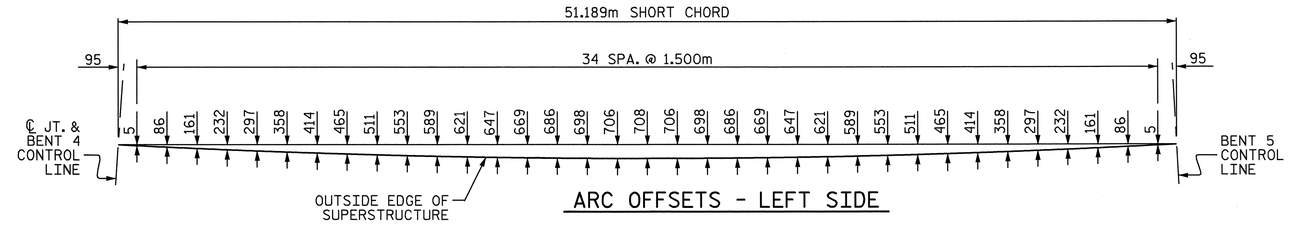

ARC OFFSETS - LEFT SIDE

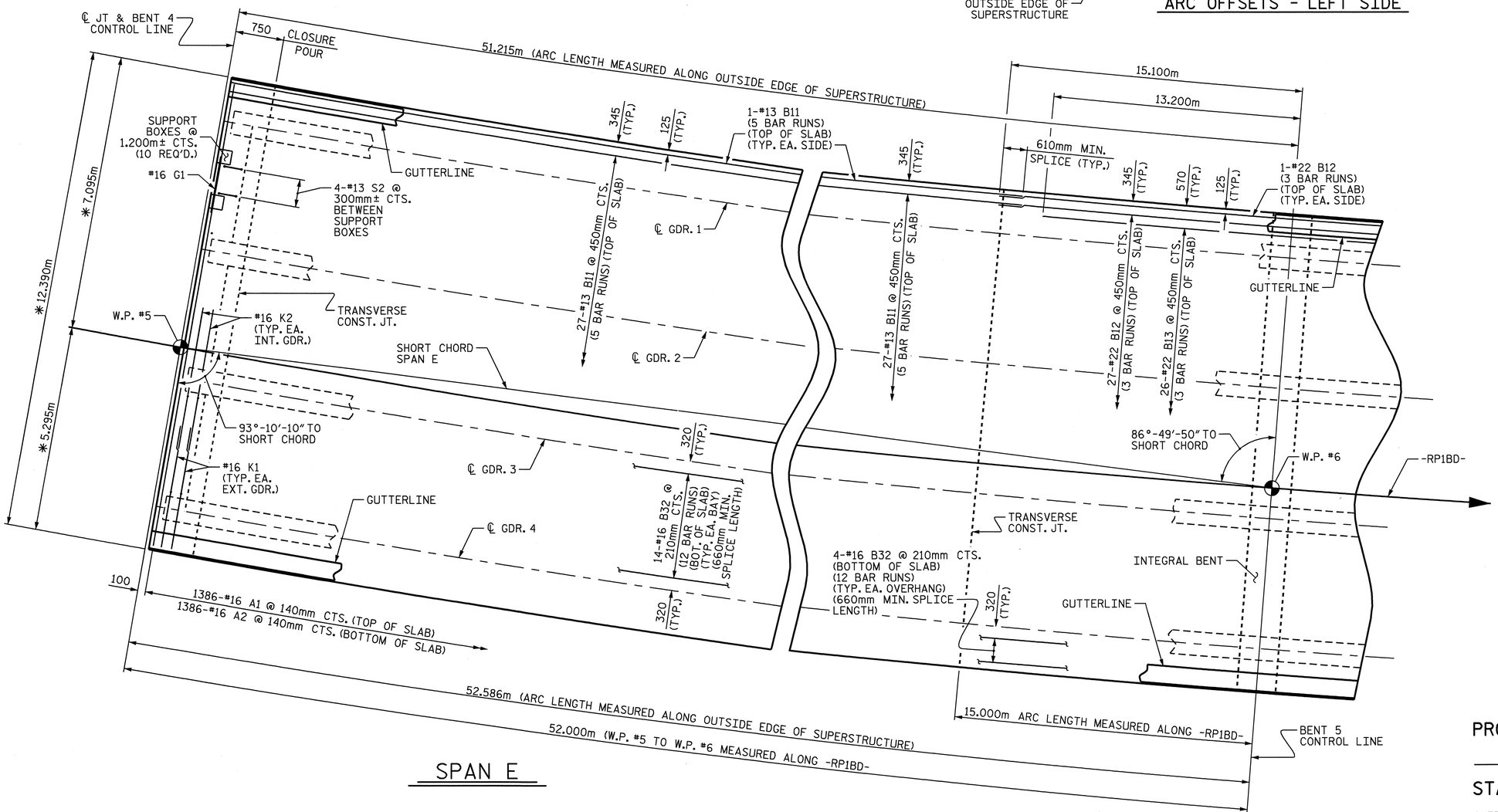

SPAN E

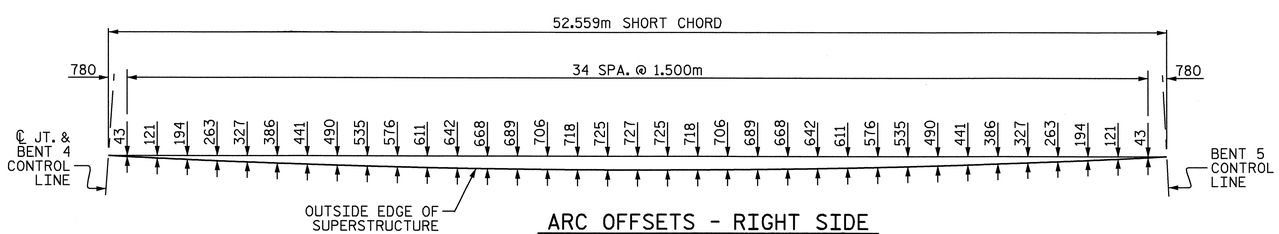

ARC OFFSETS - RIGHT SIDE

STATE OF NORTH CAROLINA PROFESSIONAL SEAL 16301 ENGINEER TING HSILING FANG

10/08/08

PROJECT NO. U-2519DA
CUMBERLAND COUNTY
STATION: 28+72.626 -RP1BD-

SHEET 5 OF 10

STATE OF NORTH CAROLINA
DEPARTMENT OF TRANSPORTATION
RALEIGH

SUPERSTRUCTURE

PLAN OF SPANS
SPAN E

REVISIONS						SHEET NO.
NO.	BY:	DATE:	NO.	BY:	DATE:	S-241
1			3			TOTAL SHEETS
2			4			411

DRAWN BY : E. C. LOCKLEAR DATE : 6/25/08
CHECKED BY : T. H. FANG DATE : 7/1/08

07-OCT-2008 16:00
H:\Structures\frye\str10_RP1BD_F0\Final Plans\u-2519da_sd_s*.dgn
sdombrowski

FOR NOTES, SEE "PLAN OF SPANS, SPAN A", ON SHEET 1 OF 10

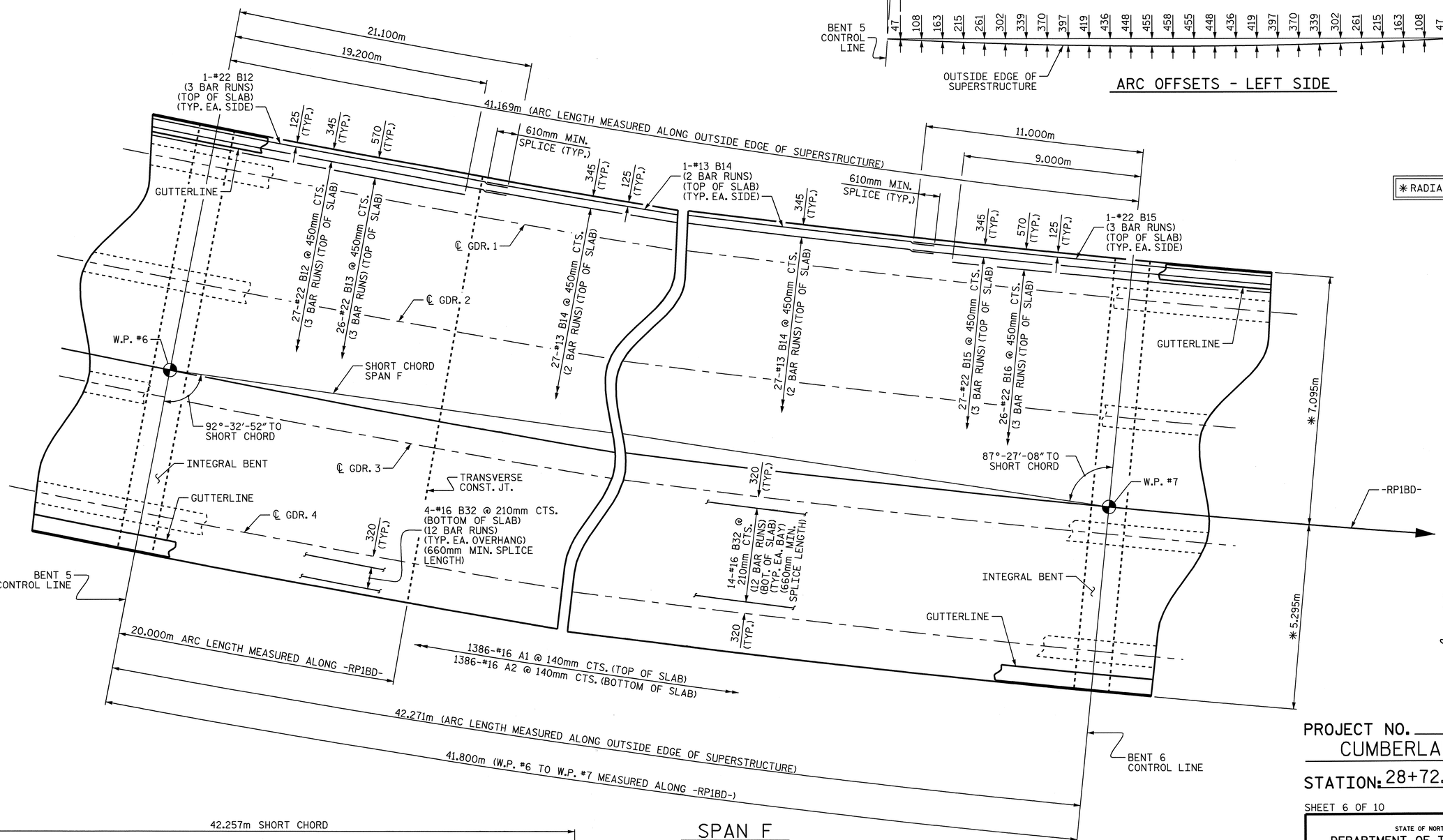

SPAN F

✱ RADIAL DIMENSIONS

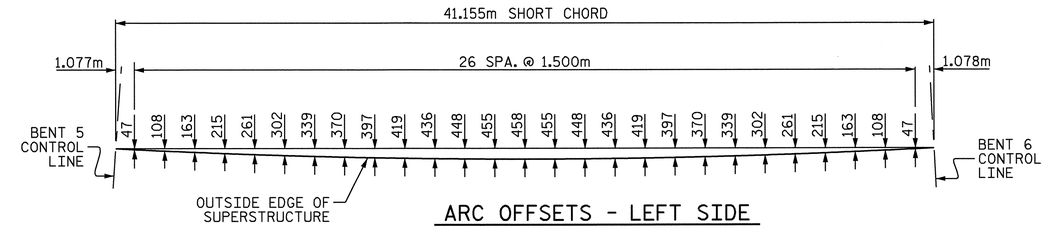

ARC OFFSETS - LEFT SIDE

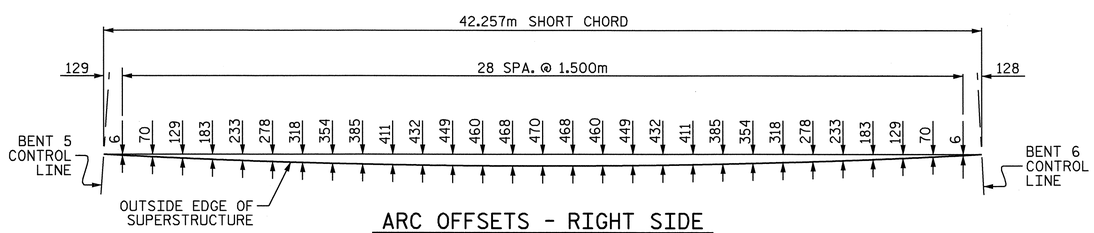

ARC OFFSETS - RIGHT SIDE

NORTH CAROLINA PROFESSIONAL SEAL 16301 ENGINEER TING HSIUNG FANG
12/08/08

PROJECT NO. U-2519DA
CUMBERLAND COUNTY
STATION: 28+72.626 -RP1BD-

SHEET 6 OF 10

STATE OF NORTH CAROLINA
DEPARTMENT OF TRANSPORTATION
RALEIGH

SUPERSTRUCTURE

PLAN OF SPANS
SPAN F

REVISIONS						SHEET NO.
NO.	BY:	DATE:	NO.	BY:	DATE:	S-242
1			3			TOTAL SHEETS
2			4			411

DRAWN BY : E. C. LOCKLEAR DATE : 6/25/08
CHECKED BY : T. H. FANG DATE : 7/1/08

07-OCT-2008 16:00
H:\Structures\frye\str10_RP1BD_F0\Final Plans\u-2519da_sd_s*.dgn
sdombrowski

FOR NOTES, SEE "PLAN OF SPANS, SPAN A", ON SHEET 1 OF 10

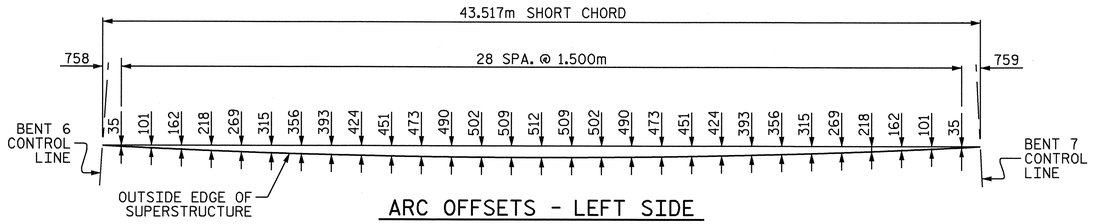

ARC OFFSETS - LEFT SIDE

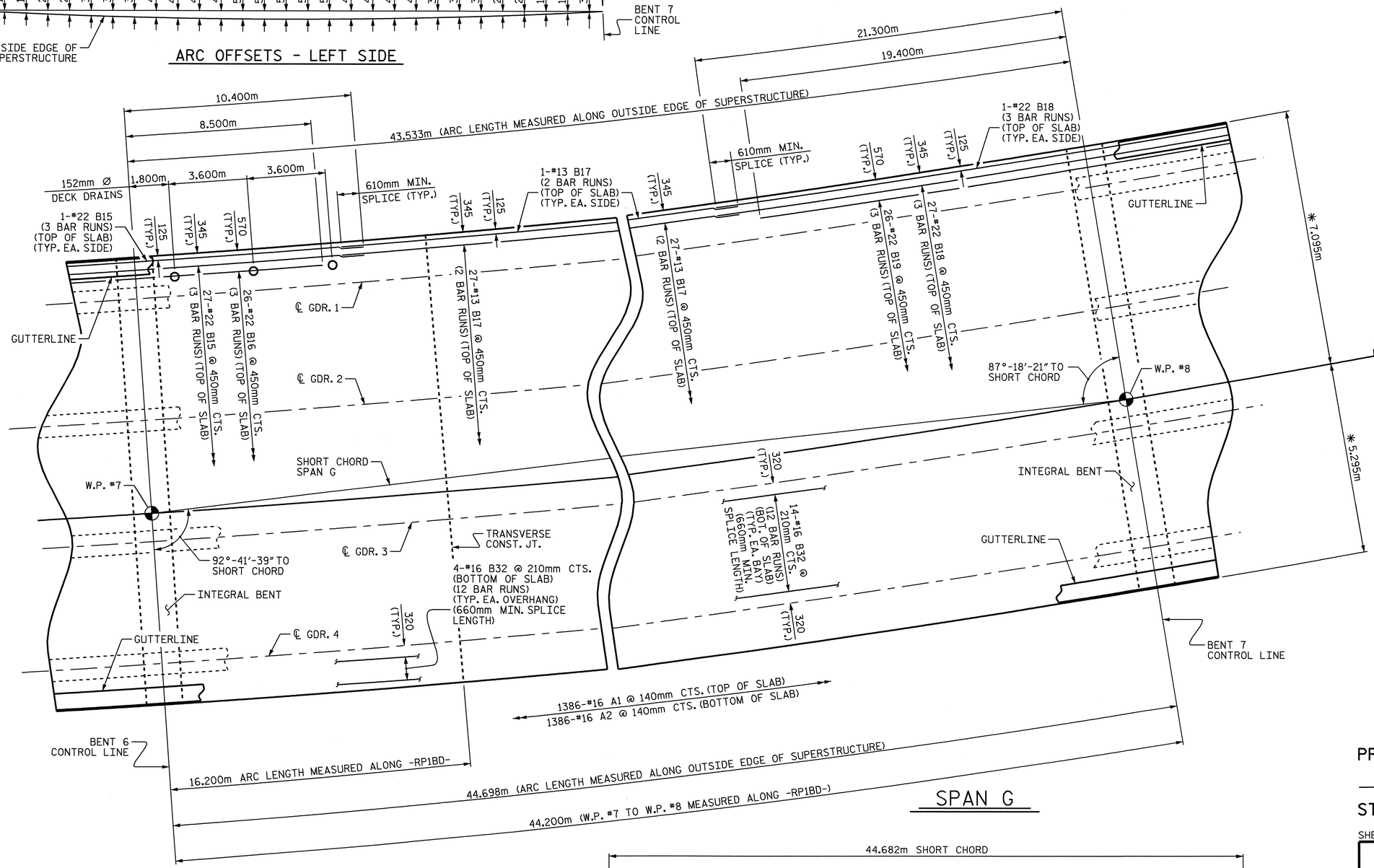

SPAN G

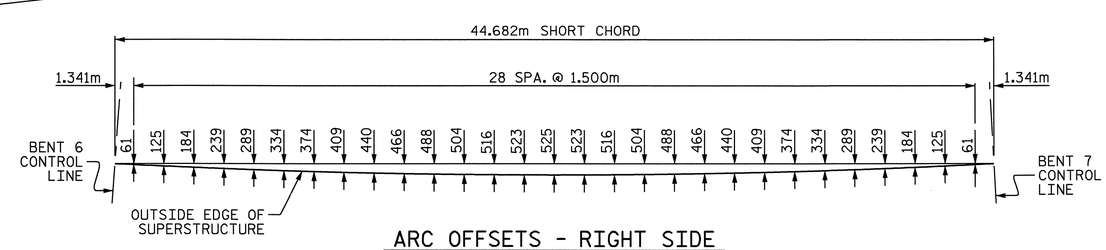

ARC OFFSETS - RIGHT SIDE

NORTH CAROLINA PROFESSIONAL SEAL 16301 ENGINEER TING HSILANG FANG

7/1/08

PROJECT NO. U-2519DA
CUMBERLAND COUNTY
STATION: 28+72.626 -RP1BD-

SHEET 7 OF 10

STATE OF NORTH CAROLINA
DEPARTMENT OF TRANSPORTATION
RALEIGH

SUPERSTRUCTURE

PLAN OF SPANS
SPAN G

REVISIONS						SHEET NO.
NO.	BY:	DATE:	NO.	BY:	DATE:	S-243
1			3			TOTAL SHEETS
2			4			411

DRAWN BY : E. C. LOCKLEAR DATE : 6/25/08
CHECKED BY : T. H. FANG DATE : 7/1/08

07-OCT-2008 16:00
H:\Structures\frye\str10_RP1BD_F0\Final Plans\u-2519da_sd_s*.dgn
sdombrowski

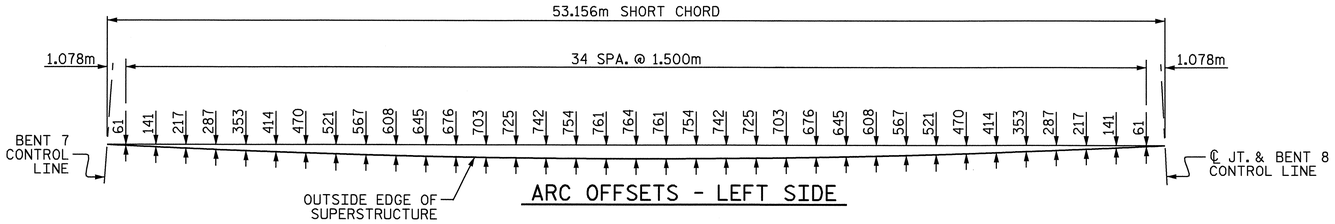

ARC OFFSETS - LEFT SIDE

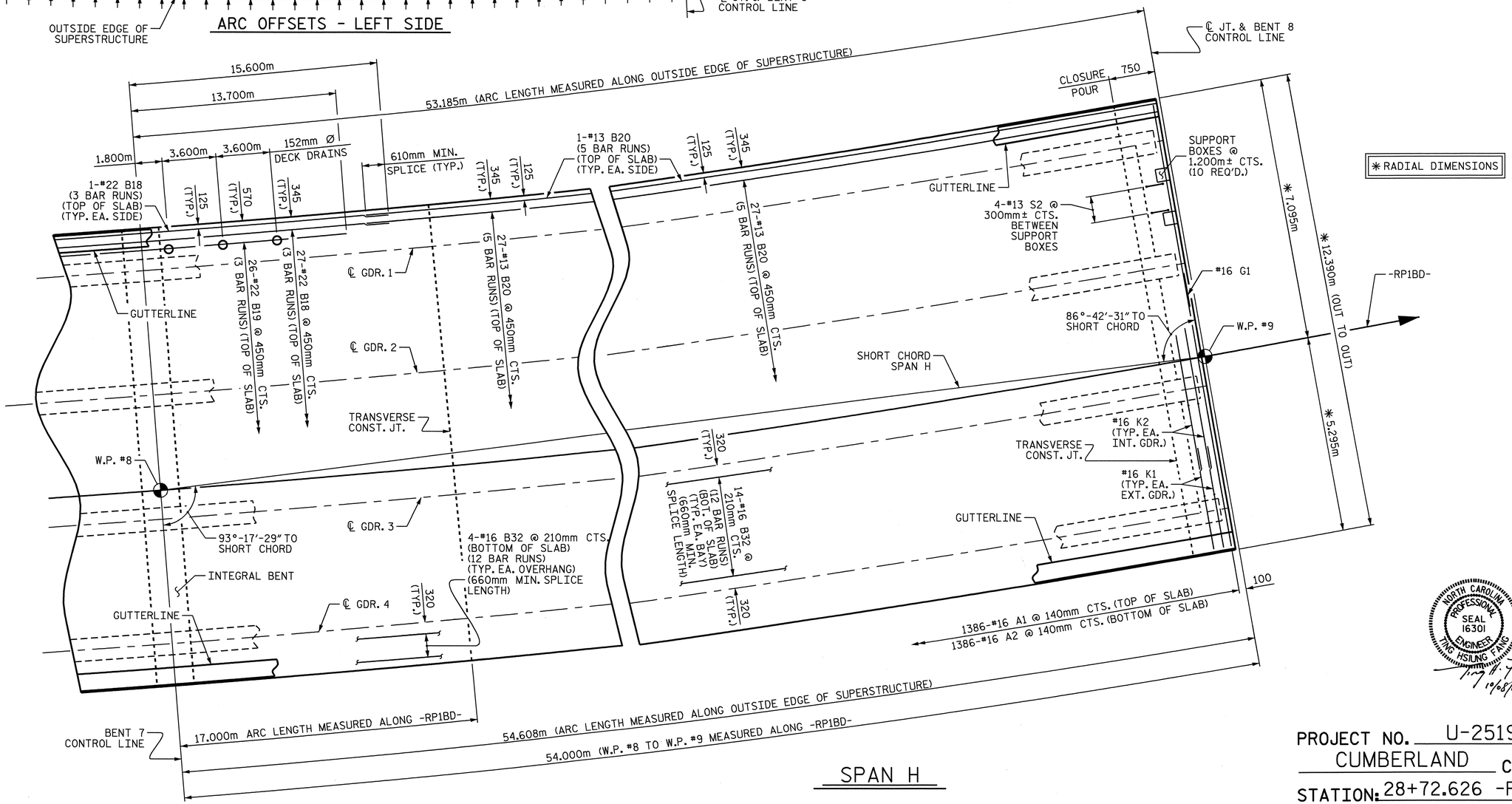

✱ RADIAL DIMENSIONS

SPAN H

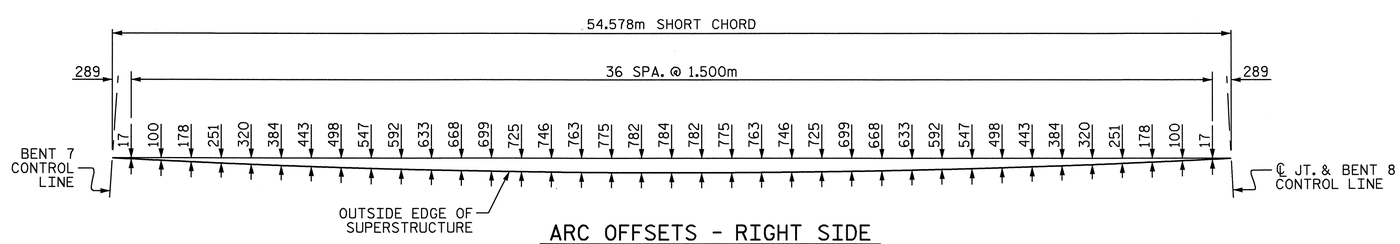

ARC OFFSETS - RIGHT SIDE

NORTH CAROLINA PROFESSIONAL SEAL 16301 ENGINEER TING HSIUNG FANG

10/08/08

PROJECT NO. U-2519DA
CUMBERLAND COUNTY
STATION: 28+72.626 -RP1BD-

SHEET 8 OF 10

STATE OF NORTH CAROLINA
DEPARTMENT OF TRANSPORTATION
RALEIGH

SUPERSTRUCTURE

PLAN OF SPANS
SPAN H

REVISIONS						SHEET NO.
NO.	BY:	DATE:	NO.	BY:	DATE:	S-244
1			3			TOTAL SHEETS
2			4			411

DRAWN BY : E. C. LOCKLEAR DATE : 6/25/08
CHECKED BY : T. H. FANG DATE : 7/1/08

07-OCT-2008 16:00
H:\Structures\frye\str10_RP1BD_F0\Final Plans\u-2519da_sd_s*.dgn
sdombrowski

FOR NOTES, SEE "PLAN OF SPANS, SPAN A", ON SHEET 1 OF 10

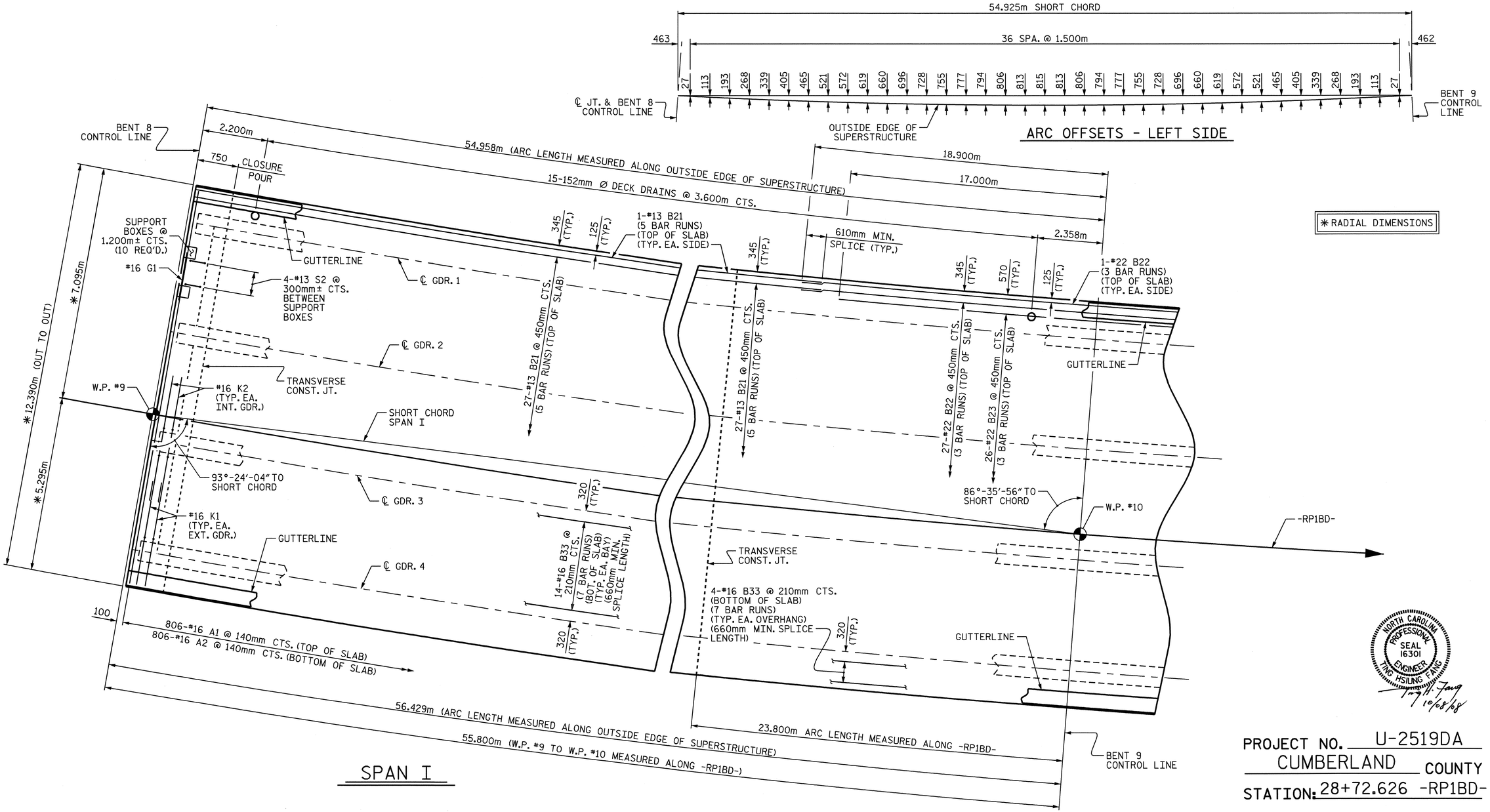

NORTH CAROLINA PROFESSIONAL SEAL 16301 ENGINEER TING HSIUNG FANG
T. H. Fang 10/08/08

PROJECT NO. U-2519DA
CUMBERLAND COUNTY
STATION: 28+72.626 -RP1BD-

SHEET 9 OF 10

STATE OF NORTH CAROLINA
DEPARTMENT OF TRANSPORTATION
RALEIGH

SUPERSTRUCTURE

PLAN OF SPANS
SPAN I

REVISIONS						SHEET NO.
NO.	BY:	DATE:	NO.	BY:	DATE:	S-245
1			3			TOTAL SHEETS
2			4			411

DRAWN BY : E. C. LOCKLEAR DATE : 6/25/08
CHECKED BY : T. H. FANG DATE : 7/1/08

07-OCT-2008 16:00
H:\Structures\frye\str10_RP1BD_F0\Final Plans\u-2519da_sd_s*.dgn
sdombrowski

FOR NOTES, SEE "PLAN OF SPANS, SPAN A", ON SHEET 1 OF 10

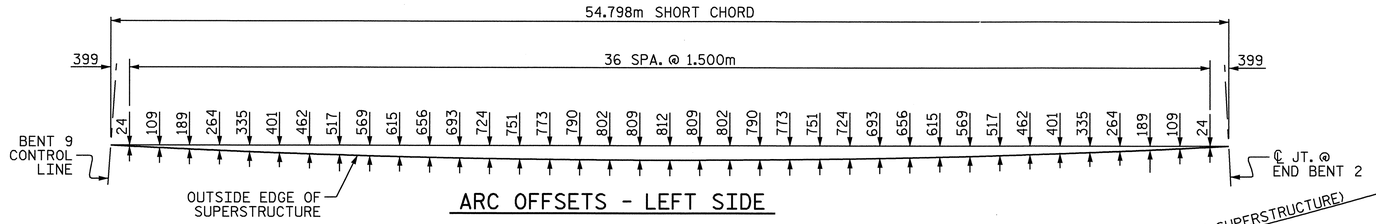

ARC OFFSETS - LEFT SIDE

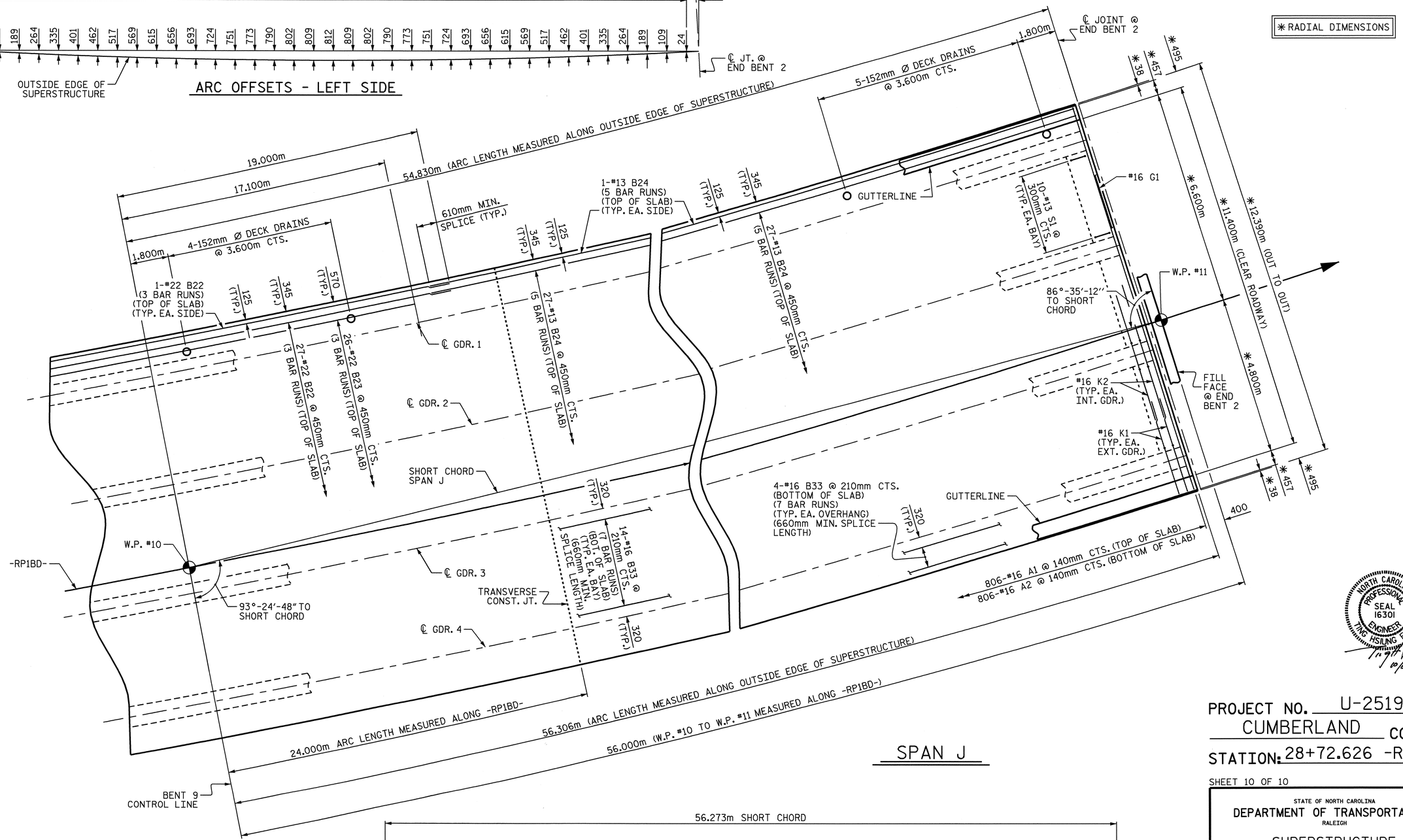

SPAN J

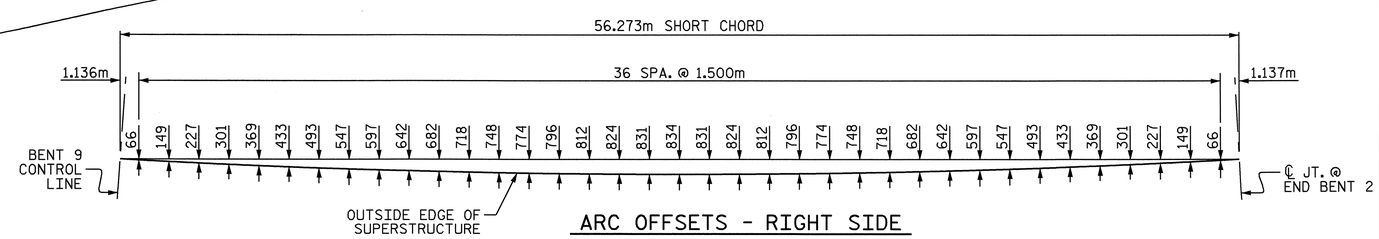

ARC OFFSETS - RIGHT SIDE

NORTH CAROLINA PROFESSIONAL SEAL 16301 ENGINEER TIMOTHY HSIUNG FANG
10/08/08

PROJECT NO. U-2519DA
CUMBERLAND COUNTY
STATION: 28+72.626 -RP1BD-

SHEET 10 OF 10

STATE OF NORTH CAROLINA
DEPARTMENT OF TRANSPORTATION
RALEIGH

SUPERSTRUCTURE

PLAN OF SPANS
SPAN J

REVISIONS						SHEET NO.
NO.	BY:	DATE:	NO.	BY:	DATE:	S-246
1			3			TOTAL SHEETS
2			4			411

DRAWN BY : E. C. LOCKLEAR DATE : 6/25/08
CHECKED BY : T. H. FANG DATE : 7/1/08

07-OCT-2008 16:00
H:\Structures\frye\str10_RP1BD_F0\Final Plans\u-2519da_sd_s*.dgn
sdombrowski

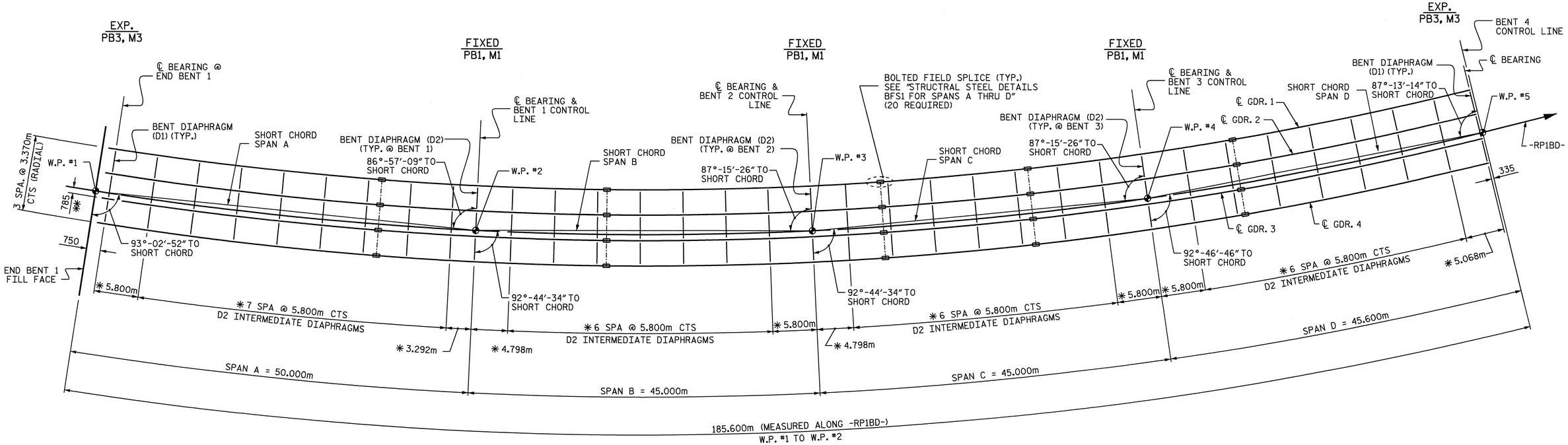

FRAMING PLAN - SPANS A THRU D

ALL DIAPHRAGMS ARE PLACED RADIALLY TO ℄ GIRDERS
✱ DIMENSION MEASURED ALONG ℄ GIRDER 4
✱✱ RADIAL DIMENSION

PROJECT NO. U-2519DA
CUMBERLAND COUNTY
STATION: 28+72.626 -RP1BD-

SHEET 1 OF 3

NORTH CAROLINA PROFESSIONAL SEAL 16301 ENGINEER TING HSIUNG FANG
10/08/08

STATE OF NORTH CAROLINA
DEPARTMENT OF TRANSPORTATION
RALEIGH
SUPERSTRUCTURE

FRAMING PLAN
SPANS A THRU D

REVISIONS						SHEET NO.
NO.	BY:	DATE:	NO.	BY:	DATE:	S-247
1			3			TOTAL SHEETS
2			4			411

DRAWN BY : J. P. ADAMS DATE : 8/8/07
CHECKED BY : T. H. FANG DATE : 4/25/08

07-OCT-2008 16:00
H:\Structures\frye\str10_RP1BD_F0\Final Plans\U-2519DA_sd_fp_10.dgn
sdombrowski

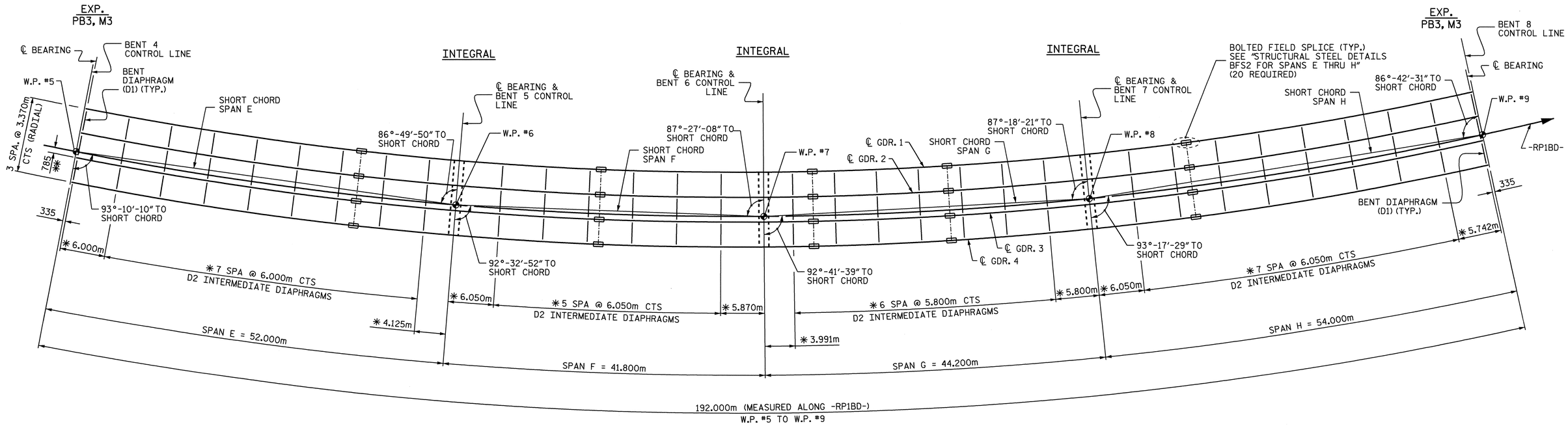

FRAMING PLAN - SPANS E THRU H

ALL DIAPHRAGMS ARE PLACED RADIALLY TO ℄ GIRDERS
* DIMENSION MEASURED ALONG ℄ GIRDER 4
** RADIAL DIMENSION

PROJECT NO. U-2519DA
CUMBERLAND COUNTY
STATION: 28+72.626 -RP1BD-

SHEET 2 OF 3

STATE OF NORTH CAROLINA
DEPARTMENT OF TRANSPORTATION
RALEIGH
SUPERSTRUCTURE

FRAMING PLAN
SPANS E THRU H

NORTH CAROLINA PROFESSIONAL SEAL 16301 ENGINEER TING HSILUNG FANG
Ting H. Fang
10/08/08

REVISIONS						SHEET NO.
NO.	BY:	DATE:	NO.	BY:	DATE:	S-248
1			3			TOTAL SHEETS
2			4			411

DRAWN BY : J. P. ADAMS DATE : 8/8/07
CHECKED BY : T. H. FANG DATE : 4/25/08

07-OCT-2008 16:00
H:\Structures\frye\str10_RP1BD_F0\Final Plans\U-2519DA_sd_fp_10.dgn
sdombrowski

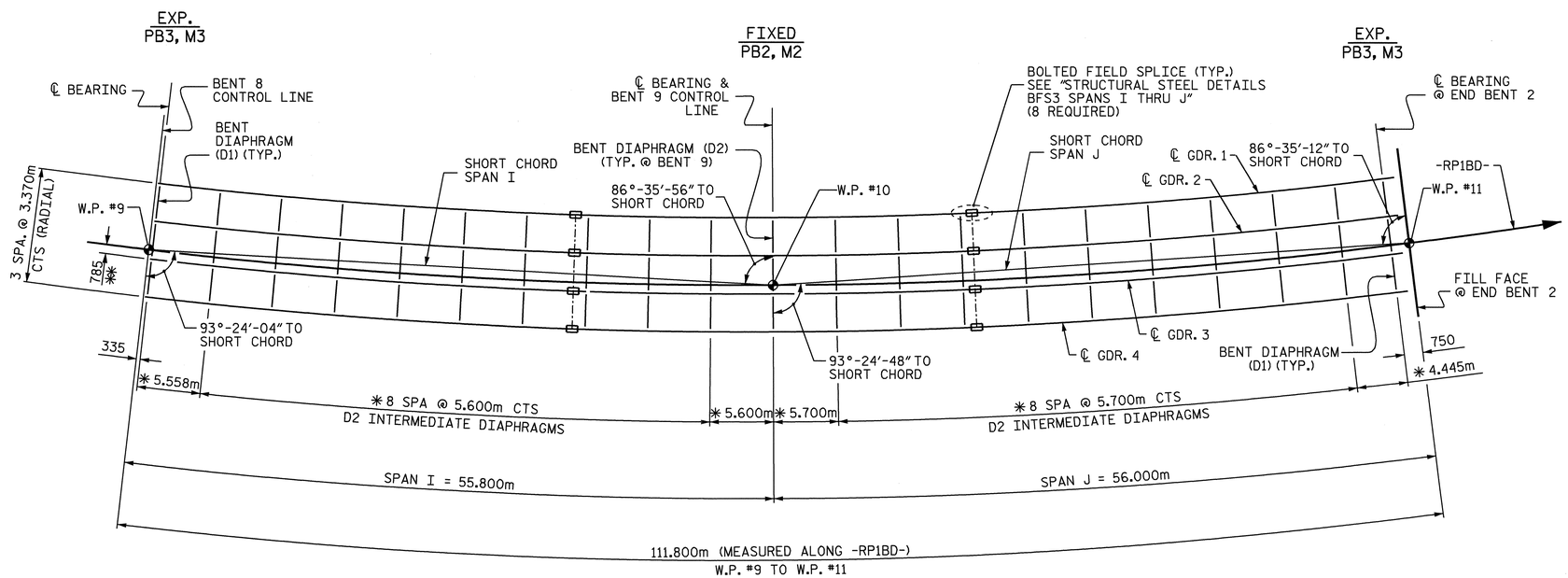

FRAMING PLAN - SPANS I & J

ALL DIAPHRAGMS ARE PLACED RADIALLY TO ℄ GIRDERS
✳ DIMENSION MEASURED ALONG ℄ GIRDER 4
✳✳ RADIAL DIMENSION

PROJECT NO. U-2519DA
CUMBERLAND COUNTY
STATION: 28+72.626 -RP1BD-

SHEET 3 OF 3

STATE OF NORTH CAROLINA
DEPARTMENT OF TRANSPORTATION
RALEIGH
SUPERSTRUCTURE

FRAMING PLAN
SPANS I & J

NORTH CAROLINA PROFESSIONAL SEAL 16301 ENGINEER TING HSIUNG FANG
Ting H. Fang
10/08/08

REVISIONS						SHEET NO.
NO.	BY:	DATE:	NO.	BY:	DATE:	S-249
1			3			TOTAL SHEETS
2			4			411

DRAWN BY : J. P. ADAMS DATE : 8/8/07
CHECKED BY : T. H. FANG DATE : 4/25/08

07-OCT-2008 16:00
H:\Structures\frye\str10_RP1BD_F0\Final Plans\U-2519DA_sd_fp_10.dgn
sdombrowski

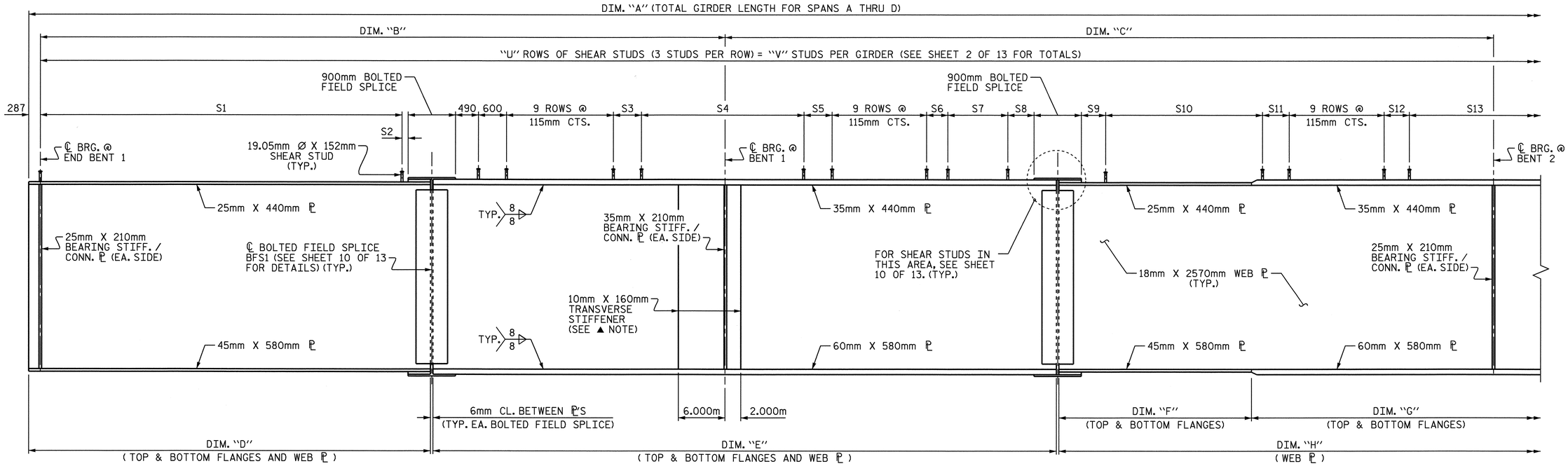

GIRDER ELEVATION

▲ NOTE:
TRANSVERSE STIFFENERS ARE TO BE PLACED ON ONE SIDE OF GIRDER ONLY. TRANSVERSE STIFFENERS ARE NOT TO BE PLACED ON THE OUTSIDE OF EXTERIOR GIRDERS.

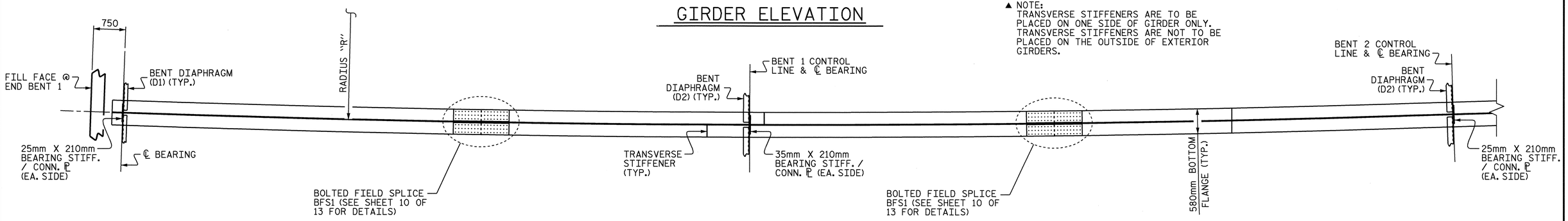

BOTTOM FLANGE DETAIL

SHEAR STUD SPACING FOR SPANS A-D GIRDERS

	S1	S2	S3	S4	S5	S6	S7	S8	S9	S10	S11	S12	S13
GDR. 1	81 ROWS @ 440mm CTS.	131	600	39 ROWS @ 600mm CTS.	349	440	5 ROWS @ 440mm CTS.	335	440	38 ROWS @ 440mm CTS.	505	380	42 ROWS @ 380mm CTS.
GDR. 2	81 ROWS @ 440mm CTS.	397	600	40 ROWS @ 600mm CTS.	600	500	3 ROWS @ 500mm CTS.	402	271	39 ROWS @ 440mm CTS.	440	380	42 ROWS @ 380mm CTS.
GDR. 3	82 ROWS @ 440mm CTS.	222	600	41 ROWS @ 600mm CTS.	600	600	600	321	330	39 ROWS @ 440mm CTS.	440	600	42 ROWS @ 380mm CTS.
GDR. 4	82 ROWS @ 440mm CTS.	487	325	43 ROWS @ 600mm CTS.	325	600	0	490	330	40 ROWS @ 440mm CTS.	313	400	40 ROWS @ 400mm CTS.

GIRDER DIMENSIONS

	RADIUS "R"	DIM. "A"	DIM. "B"	DIM. "C"	DIM. "D"	DIM. "E"	DIM. "F"	DIM. "G"	DIM. "H"
GDR. 1	464.045m	182.719m	48.616m	44.430m	36.065m	30.108m	16.781m	19.744m	36.525m
GDR. 2	467.415m	184.050m	48.975m	44.752m	36.331m	30.326m	16.903m	19.887m	36.790m
GDR. 3	470.785m	185.381m	49.333m	45.076m	36.596m	30.545m	17.025m	20.031m	37.056m
GDR. 4	474.155m	186.712m	49.692m	45.398m	36.861m	30.764m	17.147m	20.174m	37.321m

PROJECT NO. U-2519DA
CUMBERLAND COUNTY
STATION: 28+72.626 -RP1BD-

SHEET 1 OF 13

STATE OF NORTH CAROLINA
DEPARTMENT OF TRANSPORTATION
RALEIGH

SUPERSTRUCTURE

STRUCTURAL STEEL DETAILS
SPANS A & B

NORTH CAROLINA PROFESSIONAL SEAL 16301 ENGINEER TING HSIUNG FANG
10/13/08

REVISIONS						SHEET NO.
NO.	BY:	DATE:	NO.	BY:	DATE:	S-250
1			3			TOTAL SHEETS
2			4			411

DRAWN BY : E.C. LOCKLEAR DATE : 6-11-08
CHECKED BY : K.W. ALFORD DATE : 7-17-08

13-OCT-2008 10:49
z:\u2519da\structures\frye\strl0_rplbd_fo\final plans\u-2519da_sd_ss_l0.dgn
ttfang

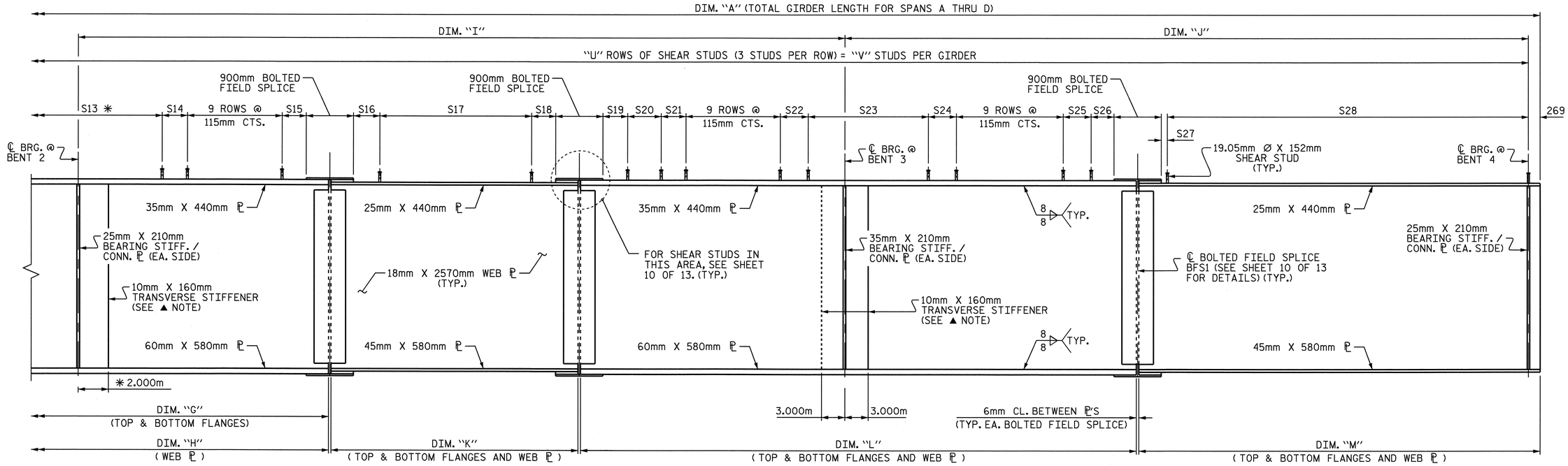

GIRDER ELEVATION

✱ DIMENSION LOCATES AN ADDITIONAL TRANSVERSE STIFFENER FOR GIRDER 2 ONLY

▲ NOTE:
TRANSVERSE STIFFENERS ARE TO BE PLACED ON ONE SIDE OF GIRDER ONLY. TRANSVERSE STIFFENERS ARE NOT TO BE PLACED ON THE OUTSIDE OF EXTERIOR GIRDERS.

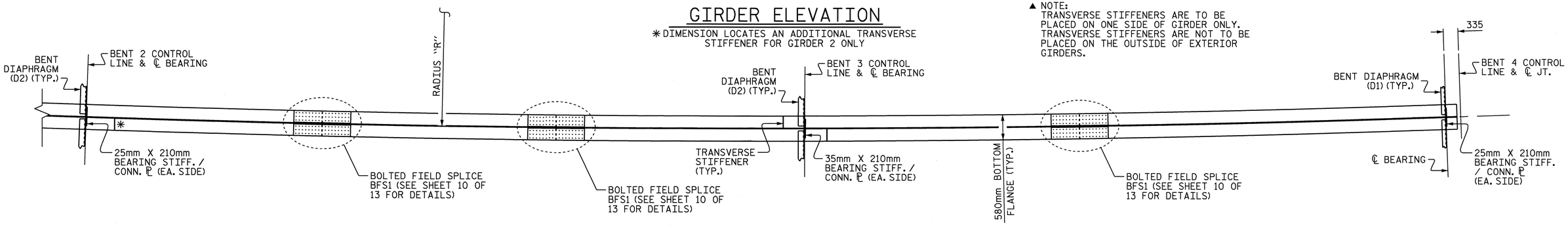

BOTTOM FLANGE DETAIL

✱ ADDITIONAL TRANSVERSE STIFFENER FOR GIRDER 2 ONLY

SHEAR STUD SPACING FOR SPANS A-D GIRDERS

	S14	S15	S16	S17	S18	S19	S20	S21	S22	S23	S24	S25	S26	S27	S28	"U"	"V"
GDR. 1	380	226	240	47 ROWS @ 400mm CTS.	207	450	3 ROWS @ 560mm CTS.	560	600	36 ROWS @ 600mm CTS.	465	400	310	505	74 ROWS @ 430mm CTS.	421	1263
GDR. 2	380	285	260	45 ROWS @ 420mm CTS.	250	395	3 ROWS @ 520mm CTS.	520	560	36 ROWS @ 600mm CTS.	600	600	391	313	75 ROWS @ 430mm CTS.	420	1260
GDR. 3	360	292	310	45 ROWS @ 420mm CTS.	343	374	540	540	600	37 ROWS @ 600mm CTS.	600	600	453	180	75 ROWS @ 435mm CTS.	421	1263
GDR. 4	400	384	290	48 ROWS @ 400mm CTS.	187	490	0	600	600	38 ROWS @ 600mm CTS.	600	600	417	488	74 ROWS @ 440mm CTS.	423	1269

GIRDER DIMENSIONS

	RADIUS "R"	DIM. "A"	DIM. "G"	DIM. "H"	DIM. "I"	DIM. "J"	DIM. "K"	DIM. "L"	DIM. "M"
GDR. 1	464.045m	182.719m	19.744m	36.525m	44.430m	44.687m	19.741m	27.639m	32.611m
GDR. 2	467.415m	184.050m	19.887m	36.790m	44.753m	45.014m	19.884m	27.840m	32.849m
GDR. 3	470.785m	185.381m	20.031m	37.056m	45.075m	45.341m	20.027m	28.041m	33.086m
GDR. 4	474.155m	186.712m	20.174m	37.321m	45.398m	45.668m	20.171m	28.241m	33.324m

PROJECT NO. U-2519DA
CUMBERLAND COUNTY
STATION: 28+72.626 -RP1BD-

SHEET 2 OF 13

STATE OF NORTH CAROLINA
DEPARTMENT OF TRANSPORTATION
RALEIGH

SUPERSTRUCTURE

STRUCTURAL STEEL DETAILS

SPANS C & D

NORTH CAROLINA PROFESSIONAL SEAL 029441 ENGINEER KRISTY W. ALFORD
10/10/08

REVISIONS						SHEET NO.
NO.	BY:	DATE:	NO.	BY:	DATE:	S-251
1			3			TOTAL SHEETS
2			4			411

DRAWN BY : E.C. LOCKLEAR DATE : 6-11-08
CHECKED BY : K.W. ALFORD DATE : 7-17-08

07-OCT-2008 15:59
H:\Structures\frye\str10_RP1BD_F0\Final Plans\U-2519DA_sd_ss_10.dgn
sdombrowski

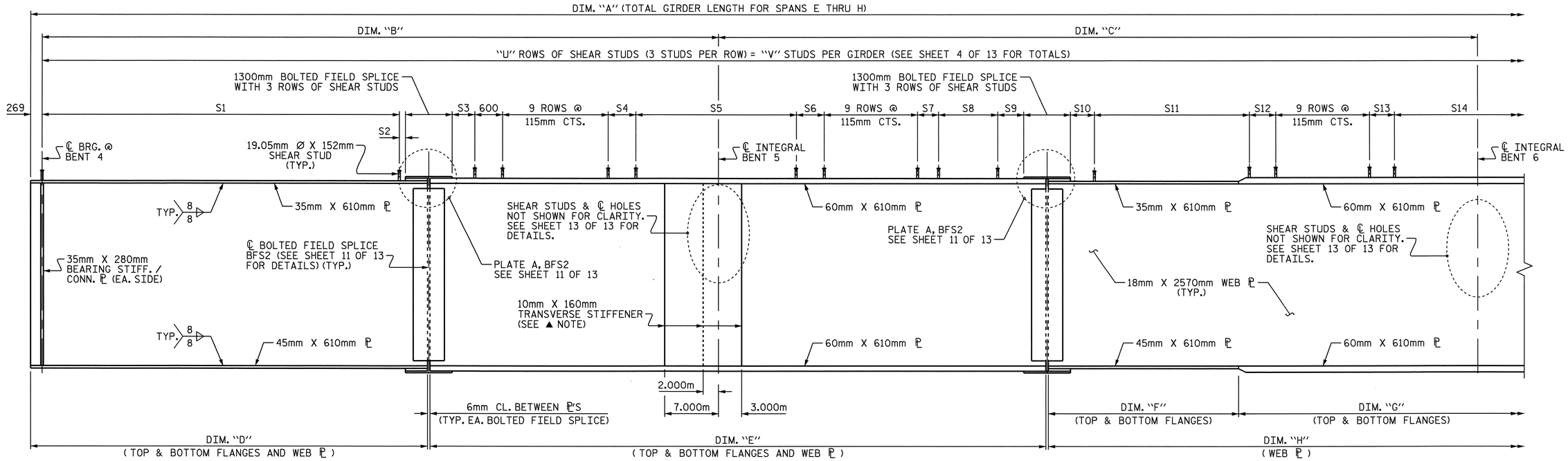

GIRDER ELEVATION

▲ NOTE:
TRANSVERSE STIFFENERS ARE TO BE PLACED ON ONE SIDE OF GIRDER ONLY. TRANSVERSE STIFFENERS ARE NOT TO BE PLACED ON THE OUTSIDE OF EXTERIOR GIRDERS.

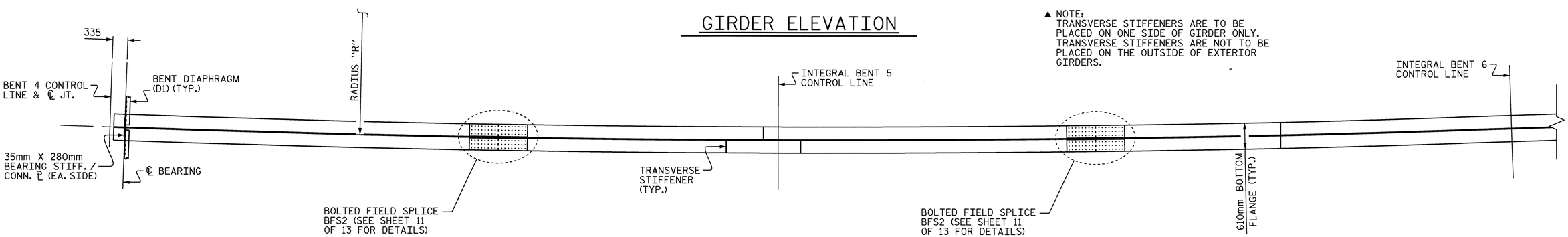

BOTTOM FLANGE DETAIL

SHEAR STUD SPACING FOR SPANS E-H GIRDERS

	S1	S2	S3	S4	S5	S6	S7	S8	S9	S10	S11	S12	S13	S14
GDR. #1	81 ROWS @ 460mm CTS.	227	383	500	43 ROWS @ 600mm CTS.	390	360	6 ROWS @ 360mm CTS.	209	122	37 ROWS @ 360mm CTS.	360	360	35 ROWS @ 360mm CTS.
GDR. #2	80 ROWS @ 470mm CTS.	173	377	500	44 ROWS @ 600mm CTS.	460	360	5 ROWS @ 360mm CTS.	142	210	38 ROWS @ 360mm CTS.	418	300	35 ROWS @ 360mm CTS.
GDR. #3	80 ROWS @ 470mm CTS.	449	391	600	45 ROWS @ 600mm CTS.	460	600	600	264	346	30 ROWS @ 470mm CTS.	450	180	55 ROWS @ 220mm CTS.
GDR. #4	81 ROWS @ 470mm CTS.	255	405	600	46 ROWS @ 600mm CTS.	600	600	0	347	390	31 ROWS @ 470mm CTS.	463	210	57 ROWS @ 210mm CTS.

GIRDER DIMENSIONS

	RADIUS "R"	DIM. "A"	DIM. "B"	DIM. "C"	DIM. "D"	DIM. "E"	DIM. "F"	DIM. "G"	DIM. "H"
GDR. #1	464.045m	189.435m	51.006m	41.270m	37.943m	32.576m	14.808m	13.820m	28.628m
GDR. #2	467.415m	190.812m	51.379m	41.570m	38.219m	32.813m	14.914m	13.920m	28.834m
GDR. #3	470.785m	192.189m	51.752m	41.870m	38.495m	33.049m	15.022m	14.021m	29.043m
GDR. #4	474.155m	193.566m	52.125m	42.170m	38.771m	33.286m	15.130m	14.120m	29.250m

PROJECT NO. U-2519DA
CUMBERLAND COUNTY
STATION: 28+72.626 -RP1BD-

SHEET 3 OF 13

STATE OF NORTH CAROLINA
DEPARTMENT OF TRANSPORTATION
RALEIGH
SUPERSTRUCTURE

STRUCTURAL STEEL DETAILS
SPANS E & F

NORTH CAROLINA PROFESSIONAL SEAL 029441 ENGINEER KRISTY W. ALFORD
10/13/08

REVISIONS						SHEET NO.
NO.	BY:	DATE:	NO.	BY:	DATE:	S-252
1			3			TOTAL SHEETS
2			4			411

DRAWN BY : E.C. LOCKLEAR DATE : 6-11-08
CHECKED BY : K.W. ALFORD DATE : 7-17-08

07-OCT-2008 15:59
H:\Structures\frye\str10_RP1BD_F0\Final Plans\U-2519DA_sd_ss_10.dgn
sdombrowski

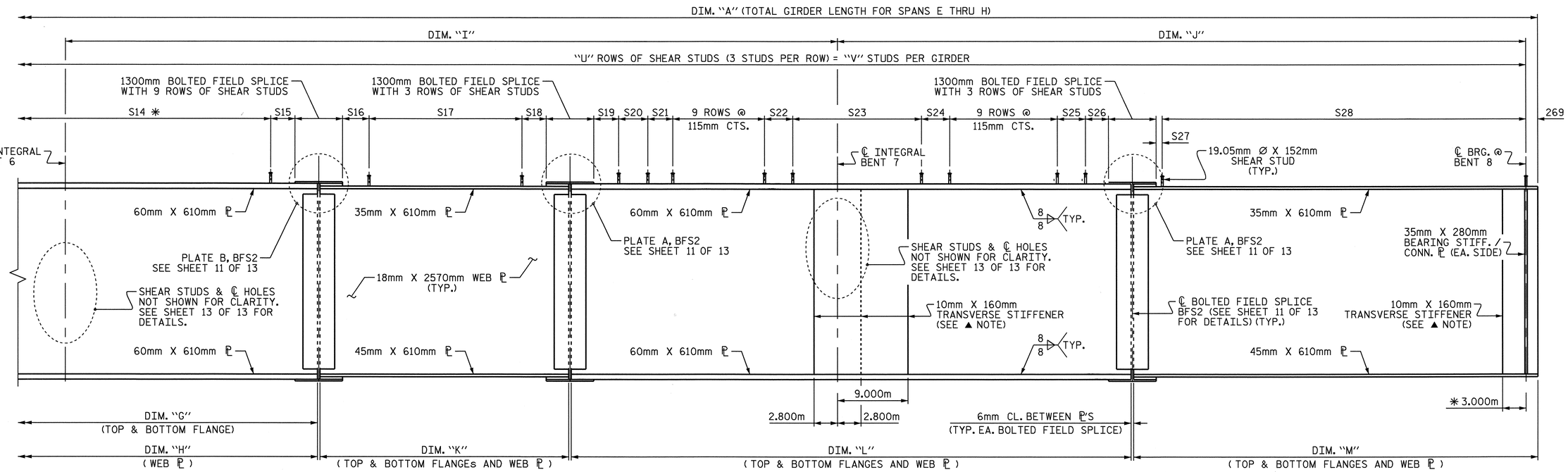

GIRDER ELEVATION

✱ DIMENSION LOCATES AN ADDITIONAL TRANSVERSE STIFFENER FOR GIRDER 4 ONLY

▲ NOTE:
TRANSVERSE STIFFENERS ARE TO BE PLACED ON ONE SIDE OF GIRDER ONLY. TRANSVERSE STIFFENERS ARE NOT TO BE PLACED ON THE OUTSIDE OF EXTERIOR GIRDERS.

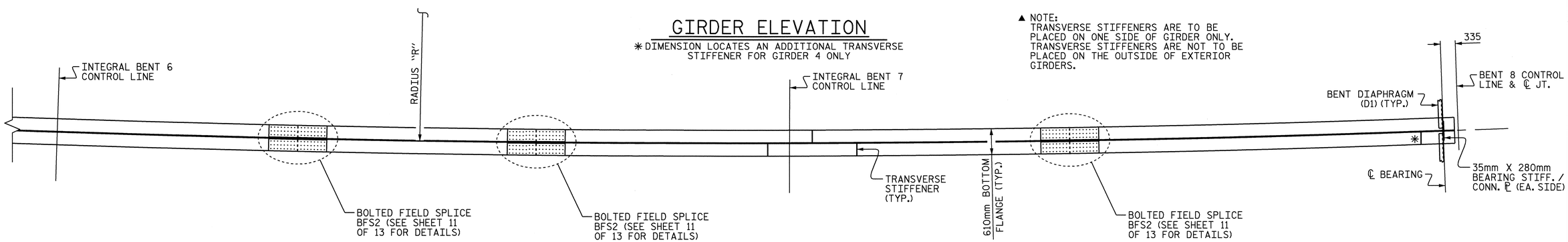

BOTTOM FLANGE DETAIL

✱ ADDITIONAL TRANSVERSE STIFFENER FOR GIRDER 4 ONLY

SHEAR STUD SPACING FOR SPANS A-D GIRDERS

	S15	S16	S17	S18	S19	S20	S21	S22	S23	S24	S25	S26	S27	S28	"U"	"V"
GDR. 1	372	360	45 ROWS @ 370mm CTS.	325	300	3 ROWS @ 600mm CTS.	600	600	43 ROWS @ 600mm CTS.	600	600	342	328	84 ROWS @ 460mm CTS.	424	1272
GDR. 2	132	170	44 ROWS @ 390mm CTS.	159	450	0	600	600	45 ROWS @ 600mm CTS.	600	600	428	200	84 ROWS @ 465mm CTS.	423	1269
GDR. 3	343	380	30 ROWS @ 570mm CTS.	321	386	0	500	540	51 ROWS @ 540mm CTS.	540	540	409	442	85 ROWS @ 460mm CTS.	426	1278
GDR. 4	113	410	33 ROWS @ 520mm CTS.	314	253	0	0	520	49 ROWS @ 580mm CTS.	580	580	379	359	84 ROWS @ 470mm CTS.	429	1287

GIRDER DIMENSIONS

	RADIUS "R"	DIM. "A"	DIM. "G"	DIM. "H"	DIM. "I"	DIM. "J"	DIM. "K"	DIM. "L"	DIM. "M"
GDR. 1	464.045m	189.435m	13.820m	28.628m	43.640m	52.981m	18.259m	32.576m	39.424m
GDR. 2	467.415m	190.812m	13.920m	28.834m	43.957m	53.368m	18.393m	32.812m	39.711m
GDR. 3	470.785m	192.189m	14.021m	29.043m	44.274m	53.755m	18.525m	33.049m	39.998m
GDR. 4	474.155m	193.566m	14.120m	29.250m	44.591m	54.142m	18.658m	33.286m	40.285m

PROJECT NO. U-2519DA
CUMBERLAND COUNTY
STATION: 28+72.626 -RP1BD-

SHEET 4 OF 13

STATE OF NORTH CAROLINA
DEPARTMENT OF TRANSPORTATION
RALEIGH
SUPERSTRUCTURE

STRUCTURAL STEEL DETAILS
SPANS G & H

NORTH CAROLINA PROFESSIONAL SEAL 029441 ENGINEER KRISTY W. ALFORD
10/13/08

REVISIONS						SHEET NO.
NO.	BY:	DATE:	NO.	BY:	DATE:	S-253
1			3			TOTAL SHEETS
2			4			411

DRAWN BY : E.C. LOCKLEAR DATE : 6-11-08
CHECKED BY : K.W. ALFORD DATE : 7-17-08

07-OCT-2008 15:59
H:\Structures\frye\str10_RP1BD_F0\Final Plans\U-2519DA_sd_ss_10.dgn
sdombrowski

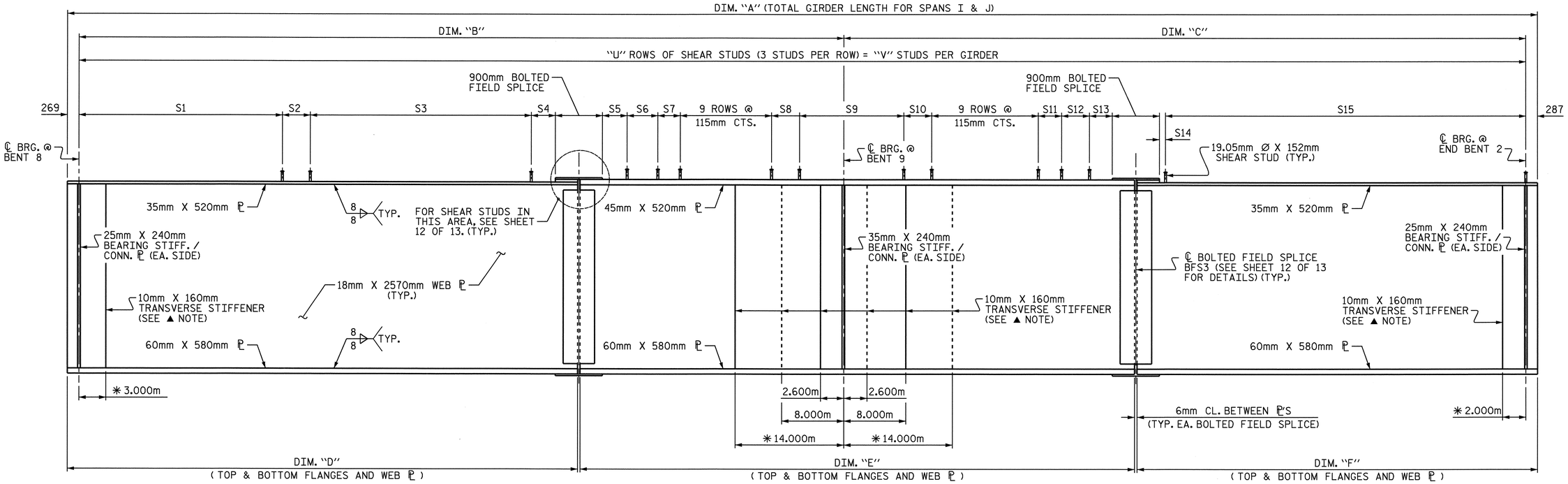

GIRDER ELEVATION

✱ DIMENSION LOCATES 4 ADDITIONAL TRANSVERSE STIFFENERS FOR GIRDER 4 ONLY

▲ NOTE:
TRANSVERSE STIFFENERS ARE TO BE PLACED ON ONE SIDE OF GIRDER ONLY. TRANSVERSE STIFFENERS ARE NOT TO BE PLACED ON THE OUTSIDE OF EXTERIOR GIRDERS.

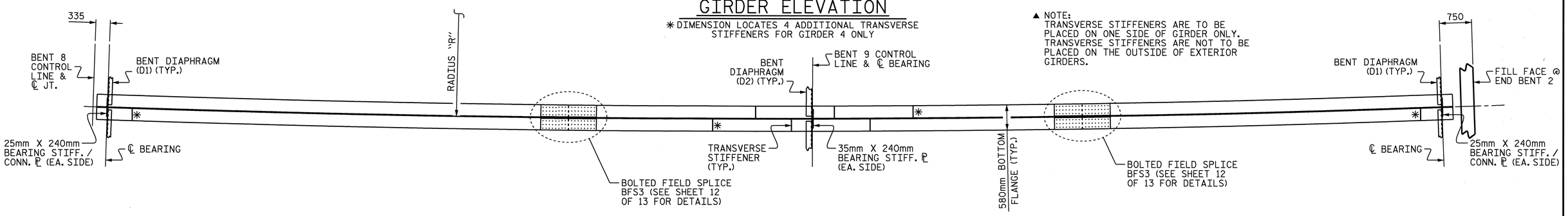

BOTTOM FLANGE DETAIL

✱ 4 ADDITIONAL TRANSVERSE STIFFENER FOR GIRDER 4 ONLY

SHEAR STUD SPACING FOR SPANS I & J GIRDERS

	S1	S2	S3	S4	S5	S6	S7	S8	S9	S10	S11	S12	S13	S14	S15	"U"	"V"
GDR. 1	45 ROWS @ 430mm CTS.	600	29 ROWS @ 600mm CTS.	414	336	4 ROWS @ 600mm CTS.	400	380	45 ROWS @ 600mm CTS.	600	600	4 ROWS @ 600mm CTS.	290	128	78 ROWS @ 470mm CTS.	223	669
GDR. 2	53 ROWS @ 430mm CTS.	600	24 ROWS @ 600mm CTS.	246	254	4 ROWS @ 600mm CTS.	400	430	46 ROWS @ 600mm CTS.	390	600	4 ROWS @ 600mm CTS.	189	111	77 ROWS @ 480mm CTS.	226	677
GDR. 3	42 ROWS @ 430mm CTS.	558	32 ROWS @ 600mm CTS.	490	392	4 ROWS @ 500mm CTS.	500	600	46 ROWS @ 600mm CTS.	600	600	4 ROWS @ 500mm CTS.	428	384	77 ROWS @ 480mm CTS.	223	669
GDR. 4	45 ROWS @ 440mm CTS.	440	30 ROWS @ 600mm CTS.	351	239	4 ROWS @ 500mm CTS.	500	600	47 ROWS @ 600mm CTS.	590	500	4 ROWS @ 500mm CTS.	347	176	78 ROWS @ 480mm CTS.	226	678

GIRDER DIMENSIONS

	RADIUS "R"	DIM. "A"	DIM. "B"	DIM. "C"	DIM. "D"	DIM. "E"	DIM. "F"
GDR. 1	464.045m	109.854m	54.758m	54.540m	37.450m	35.340m	37.052m
GDR. 2	467.415m	110.656m	55.158m	54.942m	37.722m	35.597m	37.325m
GDR. 3	470.785m	111.458m	55.558m	55.344m	37.994m	35.854m	37.598m
GDR. 4	474.155m	112.259m	55.958m	55.745m	38.267m	36.110m	37.870m

PROJECT NO. U-2519DA
CUMBERLAND COUNTY
STATION: 28+72.626 -RP1BD-

SHEET 5 OF 13

STATE OF NORTH CAROLINA
DEPARTMENT OF TRANSPORTATION
RALEIGH

SUPERSTRUCTURE

STRUCTURAL STEEL DETAILS

SPANS I & J

NORTH CAROLINA PROFESSIONAL SEAL 16301 ENGINEER TING HSIUNG FANG
10/13/08

REVISIONS						SHEET NO.
NO.	BY:	DATE:	NO.	BY:	DATE:	S-254
1			3			TOTAL SHEETS
2			4			411

DRAWN BY : E.C. LOCKLEAR DATE : 6-11-08
CHECKED BY : K.W. ALFORD DATE : 7-17-08

13-OCT-2008 10:54
z:\u2519da\structures\frye\str10_rp1bd_fo\final plans\u-2519da_sd_ss_10.dgn
ttfang

FOR STRUCTURAL STEEL NOTES, SEE SHEET 9 OF 13.

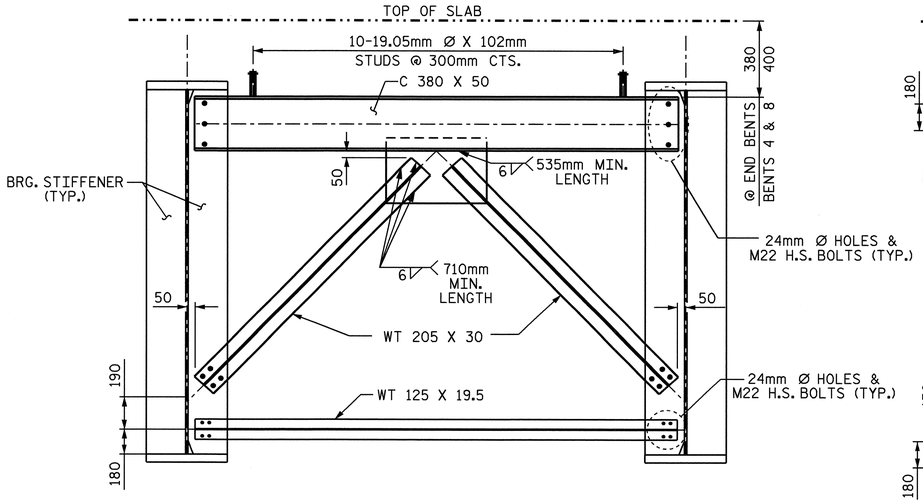

BENT DIAPHRAGM AT EXP. JTS.
(D1)

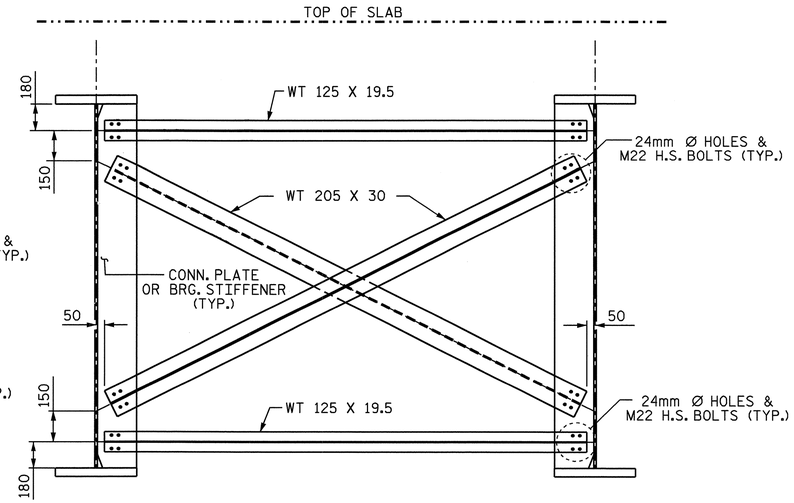

INTERMEDIATE OR BENT DIAPHRAGM
(D2)

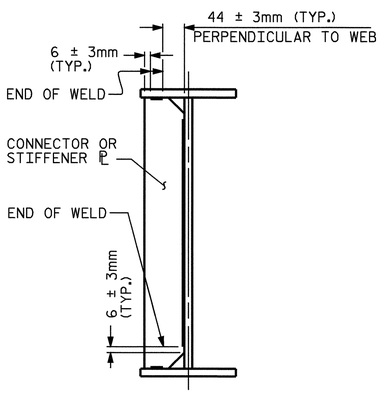

TYPICAL STIFFENER OR CONNECTOR PLATE CONNECTIONS

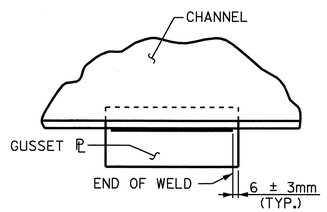

TYPICAL GUSSET PLATE CONNECTION

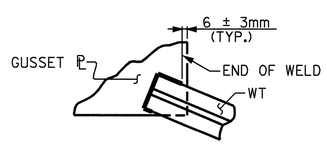

TYPICAL "TEE" TO GUSSET PLATE CONNECTIONS

WELD TERMINATION DETAILS

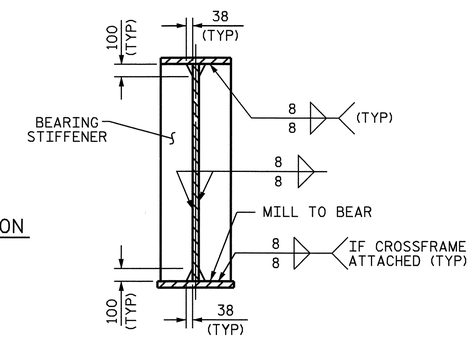

BEARING STIFFENER
BEARING STIFFENER MAY REQUIRE COPING IF WIDER THAN BOTTOM FLANGE

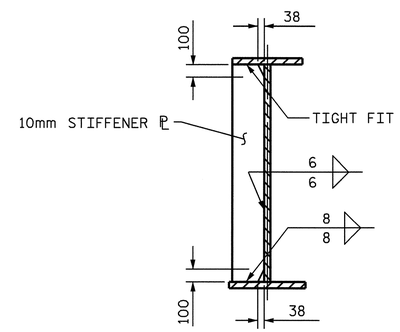

TRANSVERSE STIFFENER

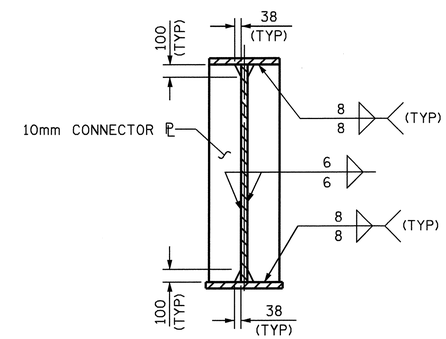

CONNECTOR PLATE

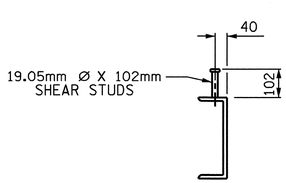

SHEAR STUD DETAILS

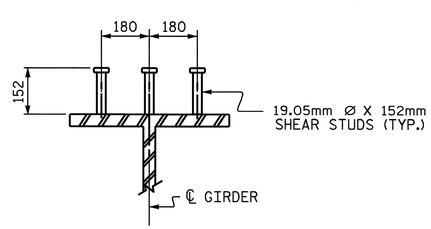

SHEAR STUD DETAILS
(TYP. EA. GDR.)

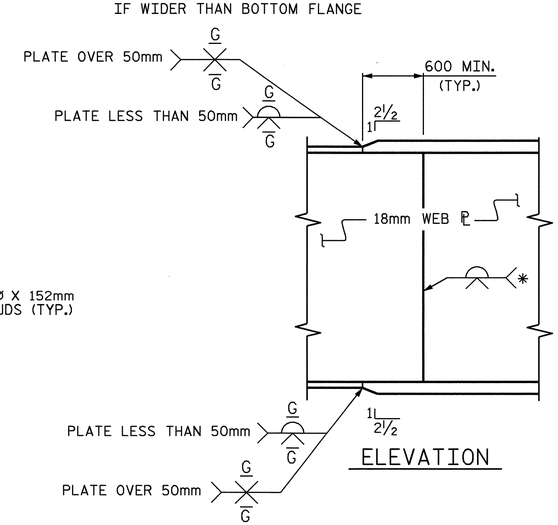

* GRIND SMOOTH AND FLUSH ON OUTER FACE OF EXTERIOR GIRDERS

ELEVATION

SHOP FLANGE AND WEB SPLICE

PROJECT NO. U-2519DA
CUMBERLAND COUNTY
STATION: 28+72.626 -RP1BD-

SHEET 6 OF 13

STATE OF NORTH CAROLINA
DEPARTMENT OF TRANSPORTATION
RALEIGH

SUPERSTRUCTURE

STRUCTURAL STEEL DETAILS

NORTH CAROLINA PROFESSIONAL SEAL 16301 ENGINEER TING HSIUNG FANG
10/08/08

REVISIONS						SHEET NO.
NO.	BY:	DATE:	NO.	BY:	DATE:	S-255
1			3			TOTAL SHEETS
2			4			411

DRAWN BY : J.P. ADAMS DATE : 8/21/07
CHECKED BY : K.W. ALFORD DATE : 7/23/08

07-OCT-2008 15:59
H:\Structures\frye\str10_RP1BD_F0\Final Plans\U-2519DA_sd_ss_10.dgn
sdombrowski

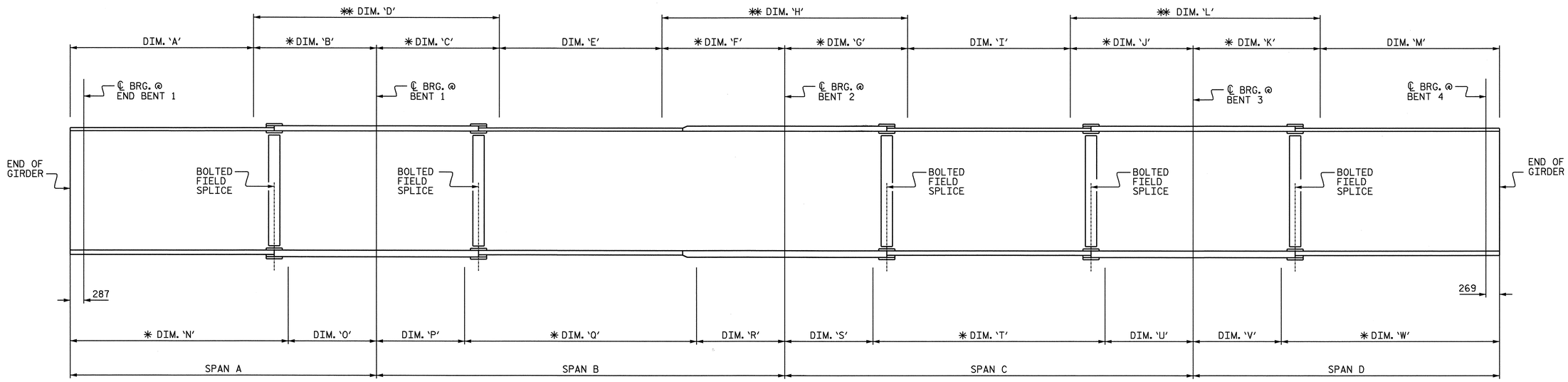

ELEVATION SHOWING SPANS A THRU D

SEE TABLE BELOW FOR DIMENSIONS

TABLE FOR CHARPY V-NOTCH TEST FOR CONTINUOUS GIRDERS

GIRDER	DIM. 'A'	DIM. 'B'	DIM. 'C'	DIM. 'D'	DIM. 'E'	DIM. 'F'	DIM. 'G'	DIM. 'H'	DIM. 'I'	DIM. 'J'	DIM. 'K'	DIM. 'L'	DIM. 'M'	DIM. 'N'	DIM. 'O'	DIM. 'P'	DIM. 'Q'	DIM. 'R'	DIM. 'S'	DIM. 'T'	DIM. 'U'	DIM. 'V'	DIM. 'W'
1	36.003m	12.900m	20.700m	33.600m	8.230m	15.500m	14.100m	29.600m	12.930m	17.400m	12.900m	30.300m	32.056m	41.100m	7.803m	9.000m	29.400m	6.030m	5.800m	30.200m	8.430m	7.474m	37.482m
2	36.762m	12.500m	20.400m	32.900m	9.552m	14.800m	13.400m	28.200m	14.352m	17.000m	12.600m	29.600m	32.683m	41.400m	7.862m	9.370m	29.500m	5.882m	5.700m	30.600m	8.452m	7.501m	37.782m
3	37.421m	12.200m	20.500m	32.700m	10.375m	14.300m	12.600m	26.900m	15.675m	16.800m	12.300m	29.100m	33.310m	41.500m	8.121m	9.900m	29.200m	5.975m	5.830m	30.200m	9.045m	7.728m	37.882m
4	36.779m	13.200m	45.398m	58.598m	0.000m	0.000m	15.500m	15.500m	8.698m	21.200m	13.500m	34.700m	32.437m	42.000m	7.979m	9.870m	29.800m	5.728m	5.480m	31.000m	8.918m	7.655m	38.282m

SPAN LENGTHS

GIRDER	SPAN A	SPAN B	SPAN C	SPAN D
1	48.903m	44.430m	44.430m	44.956m
2	49.262m	44.752m	44.753m	45.283m
3	49.620m	45.076m	45.075m	45.610m
4	49.979m	45.398m	45.398m	45.937m

CHARPY V-NOTCH TEST FOR CONTINUOUS PLATE GIRDERS

* CHARPY V-NOTCH TESTS ARE REQUIRED FOR ALL TOP OR BOTTOM FLANGE PLATES WHICH FALL WITHIN THESE LIMITS. CHARPY V-NOTCH TESTS ARE REQUIRED FOR ALL WEB PLATES, ALL SPLICE PLATES, AND ALL CROSSFRAME COMPONENTS AND CONNECTOR PLATES. IF A PERMITTED SHOP FLANGE SPLICE IS NOT USED, CHARPY V-NOTCH TESTS WILL BE REQUIRED FOR THE ENTIRE FLANGE PLATE. FOR CHARPY V-NOTCH TESTS, SEE ARTICLE 1072-9 OF THE STANDARD SPECIFICATIONS.

** NO WELDING OF FORMS OR FALSEWORK TO THE TOP FLANGE WILL BE PERMITTED IN THIS REGION.

NORTH CAROLINA PROFESSIONAL SEAL 16301 ENGINEER TING HSIUNG FANG

10/08/08

PROJECT NO. U-2519DA

CUMBERLAND COUNTY

STATION: 28+72.626 -RP1BD-

SHEET 7 OF 13

STATE OF NORTH CAROLINA
DEPARTMENT OF TRANSPORTATION
RALEIGH

SUPERSTRUCTURE

STRUCTURAL STEEL DETAILS

CHARPY V-NOTCH TEST FOR SPANS A THRU D

REVISIONS						SHEET NO.
NO.	BY:	DATE:	NO.	BY:	DATE:	S-256
1			3			TOTAL SHEETS
2			4			411

DRAWN BY : J.P. ADAMS DATE : 8-22-07
CHECKED BY : T.H. FANG DATE : 4-25-08

07-OCT-2008 15:59
H:\Structures\frye\str10_RP1BD_F0\Final Plans\U-2519DA_sd_ss_10.dgn
sdombrowski

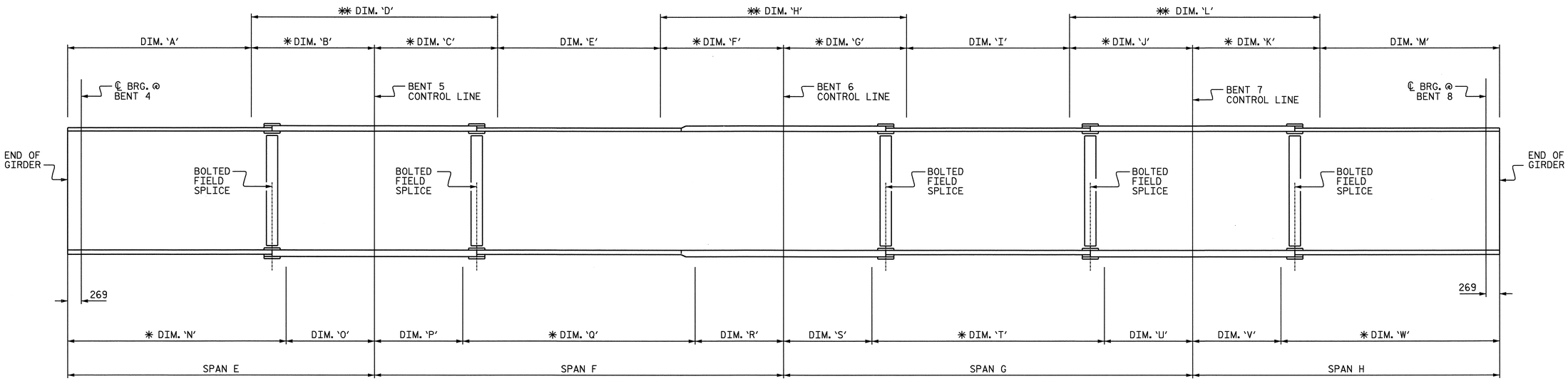

ELEVATION SHOWING SPANS E THRU H

SEE TABLE BELOW FOR DIMENSIONS

TABLE FOR CHARPY V-NOTCH TEST FOR CONTINUOUS GIRDERS

GIRDER	DIM. 'A'	DIM. 'B'	DIM. 'C'	DIM. 'D'	DIM. 'E'	DIM. 'F'	DIM. 'G'	DIM. 'H'	DIM. 'I'	DIM. 'J'	DIM. 'K'	DIM. 'L'	DIM. 'M'	DIM. 'N'	DIM. 'O'	DIM. 'P'	DIM. 'Q'	DIM. 'R'	DIM. 'S'	DIM. 'T'	DIM. 'U'	DIM. 'V'	DIM. 'W'
1	38.275m	13.000m	41.270m	54.270m	0.000m	0.000m	13.900m	13.900m	4.140m	25.600m	13.800m	39.400m	39.450m	42.782m	8.493m	10.070m	27.100m	4.100m	3.900m	29.400m	10.340m	9.068m	44.182m
2	38.848m	12.800m	41.570m	54.370m	0.000m	0.000m	12.900m	12.900m	6.657m	24.400m	13.600m	38.000m	40.037m	43.182m	8.466m	10.400m	27.200m	3.970m	3.750m	29.500m	10.707m	9.055m	44.582m
3	39.421m	12.600m	41.870m	54.470m	0.000m	0.000m	11.500m	11.500m	8.474m	24.300m	13.400m	37.700m	40.624m	43.282m	8.739m	11.100m	27.000m	3.770m	3.600m	29.300m	11.374m	9.342m	44.682m
4	38.894m	13.500m	42.170m	55.670m	0.000m	0.000m	44.591m	44.591m	0.000m	0.000m	14.200m	14.200m	40.211m	43.582m	8.812m	11.080m	28.700m	2.390m	2.300m	30.900m	11.391m	9.329m	45.082m

SPAN LENGTHS

GIRDER	SPAN E	SPAN F	SPAN G	SPAN H
1	51.275m	41.270m	43.640m	53.250m
2	51.648m	41.570m	43.957m	53.637m
3	52.021m	41.870m	44.274m	54.024m
4	52.394m	42.170m	44.591m	54.411m

CHARPY V-NOTCH TEST FOR CONTINUOUS PLATE GIRDERS

* CHARPY V-NOTCH TESTS ARE REQUIRED FOR ALL TOP OR BOTTOM FLANGE PLATES WHICH FALL WITHIN THESE LIMITS. CHARPY V-NOTCH TESTS ARE REQUIRED FOR ALL WEB PLATES, ALL SPLICE PLATES, AND ALL CROSSFRAME COMPONENTS AND CONNECTOR PLATES. IF A PERMITTED SHOP FLANGE SPLICE IS NOT USED, CHARPY V-NOTCH TESTS WILL BE REQUIRED FOR THE ENTIRE FLANGE PLATE. FOR CHARPY V-NOTCH TESTS, SEE ARTICLE 1072-9 OF THE STANDARD SPECIFICATIONS.

** NO WELDING OF FORMS OR FALSEWORK TO THE TOP FLANGE WILL BE PERMITTED IN THIS REGION.

NORTH CAROLINA PROFESSIONAL SEAL 16301 ENGINEER TING HSILUNG FANG
10/08/08

PROJECT NO. U-2519DA
CUMBERLAND COUNTY
STATION: 28+72.626 -RP1BD-

SHEET 8 OF 13

STATE OF NORTH CAROLINA
DEPARTMENT OF TRANSPORTATION
RALEIGH
SUPERSTRUCTURE

STRUCTURAL STEEL DETAILS

CHARPY V-NOTCH TEST FOR SPANS E THRU H

REVISIONS						SHEET NO.
NO.	BY:	DATE:	NO.	BY:	DATE:	S-257
1			3			TOTAL SHEETS
2			4			411

DRAWN BY : J.P. ADAMS DATE : 8-22-07
CHECKED BY : T.H. FANG DATE : 4-25-08

07-OCT-2008 15:59
H:\Structures\frye\str10_RP1BD_F0\Final Plans\U-2519DA_sd_ss_10.dgn
sdombrowski

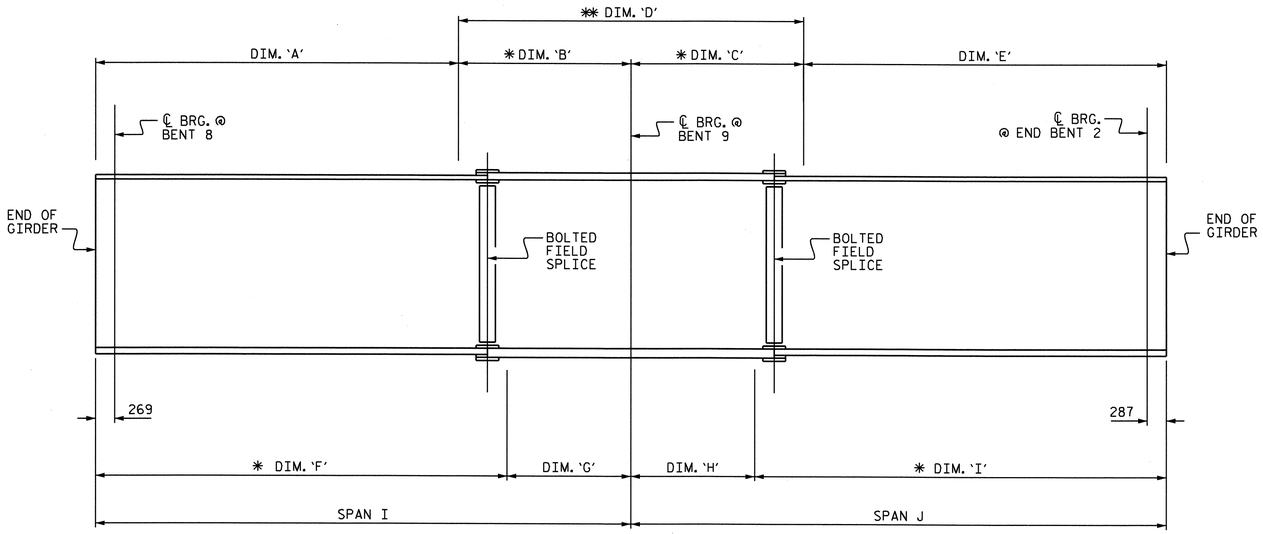

ELEVATION SHOWING SPANS I & J

SEE TABLE BELOW FOR DIMENSIONS

TABLE FOR CHARPY V-NOTCH TEST FOR CONTINUOUS GIRDERS									
GIRDER	DIM. 'A'	DIM. 'B'	DIM. 'C'	DIM. 'D'	DIM. 'E'	DIM. 'F'	DIM. 'G'	DIM. 'H'	DIM. 'I'
1	38.227m	16.800m	16.900m	33.700m	37.927m	44.782m	10.245m	10.327m	44.500m
2	38.727m	16.700m	16.800m	33.500m	38.429m	44.982m	10.445m	10.529m	44.700m
3	39.127m	16.700m	16.800m	33.500m	38.831m	44.882m	10.945m	10.931m	44.700m
4	38.027m	18.200m	18.300m	36.500m	37.732m	45.382m	10.845m	10.832m	45.200m

SPAN LENGTHS		
GIRDER	SPAN I	SPAN J
1	55.027m	54.827m
2	55.427m	55.229m
3	55.827m	55.631m
4	56.227m	56.032m

CHARPY V-NOTCH TEST FOR CONTINUOUS PLATE GIRDERS

* CHARPY V-NOTCH TESTS ARE REQUIRED FOR ALL TOP OR BOTTOM FLANGE PLATES WHICH FALL WITHIN THESE LIMITS. CHARPY V-NOTCH TESTS ARE REQUIRED FOR ALL WEB PLATES, ALL SPLICE PLATES, AND ALL CROSSFRAME COMPONENTS AND CONNECTOR PLATES. IF A PERMITTED SHOP FLANGE SPLICE IS NOT USED, CHARPY V-NOTCH TESTS WILL BE REQUIRED FOR THE ENTIRE FLANGE PLATE. FOR CHARPY V-NOTCH TESTS, SEE ARTICLE 1072-9 OF THE STANDARD SPECIFICATIONS.

** NO WELDING OF FORMS OR FALSEWORK TO THE TOP FLANGE WILL BE PERMITTED IN THIS REGION.

NOTES:

ALL STRUCTURAL STEEL SHALL BE AASHTO M270 GRADE 345W AND PAINTED IN ACCORDANCE WITH SYSTEM 4 OF ARTICLE 442-7 OF THE STANDARD SPECIFICATIONS UNLESS OTHERWISE NOTED ON THE PLANS.

ALL DIMENSIONS SHOWN ARE HORIZONTAL OR VERTICAL, UNLESS OTHERWISE NOTED.

ALL FIELD CONNECTIONS TO BE 22.23mm DIA. HIGH STRENGTH BOLTS UNLESS OTHERWISE NOTED.

BEARING STIFFENERS ARE TO BE PLACED NORMAL TO THE WEB OF THE GIRDER AND SHALL BE PLUMB.

BEARING STIFFENERS MAY REQUIRE COPING IF WIDER THAN BOTTOM FLANGE TO AVOID INTERFERENCE WITH THE ANCHOR BOLT.

SHOP SPLICES ARE PERMITTED TO LIMIT THE MAXIMUM REQUIRED FLANGE PIECE LENGTHS TO 18 METERS AND WEB PIECE LENGTHS TO 14 METERS. PERMITTED FLANGE AND WEB SHOP SPLICES SHALL NOT BE LOCATED WITHIN 4.5 METERS OF MAXIMUM DEAD LOAD DEFLECTION (NOR WITHIN 4.5 METERS OF INTERMEDIATE BEARINGS OF CONTINUOUS UNITS). KEEP 600mm MINIMUM BETWEEN WEB AND FLANGE SHOP SPLICES. KEEP 150mm MINIMUM BETWEEN CONNECTOR PLATE OR TRANSVERSE STIFFENER WELDS AND WEB OR FLANGE SHOP SPLICES.

STUDS ON GIRDERS MAY BE SHIFTED UP TO 25mm IF NECESSARY TO CLEAR FLANGE SPLICE WELD.

END OF BEAMS AND GIRDERS SHALL BE PLUMB.

TENSION ON THE AASHTO M164 BOLTS SHALL BE CALIBRATED USING DIRECT TENSION INDICATOR WASHERS. FOR DIRECT TENSION INDICATORS, SEE SPECIAL PROVISIONS.

FOR SHIPPING OF STEEL STRUCTURAL MEMBERS, SEE SPECIAL PROVISIONS.

FOR HIGH STRENGTH BOLTS, SEE SPECIAL PROVISIONS.

NORTH CAROLINA PROFESSIONAL SEAL 16301 ENGINEER TING HSIUNG FANG
3/10/11

PROJECT NO. U-2519DA
CUMBERLAND COUNTY
STATION: 28+72.626 -RP1BD-

SHEET 9 OF 13

STATE OF NORTH CAROLINA
DEPARTMENT OF TRANSPORTATION
RALEIGH
SUPERSTRUCTURE

STRUCTURAL STEEL DETAILS

CHARPY V-NOTCH TEST FOR SPANS I & J

REVISIONS						SHEET NO.
NO.	BY:	DATE:	NO.	BY:	DATE:	S-258
1			3			TOTAL SHEETS
2			4			411

DRAWN BY : J.P. ADAMS DATE : 8-22-07
CHECKED BY : T.H. FANG DATE : 4-25-08

10-MAR-2011 09:16
K:\TIPProjects-U\U2519da\Structures\frye\str10_RP1BD_F0\Final Plans\U-2519DA_sd_ss_10.dgn
ttfang

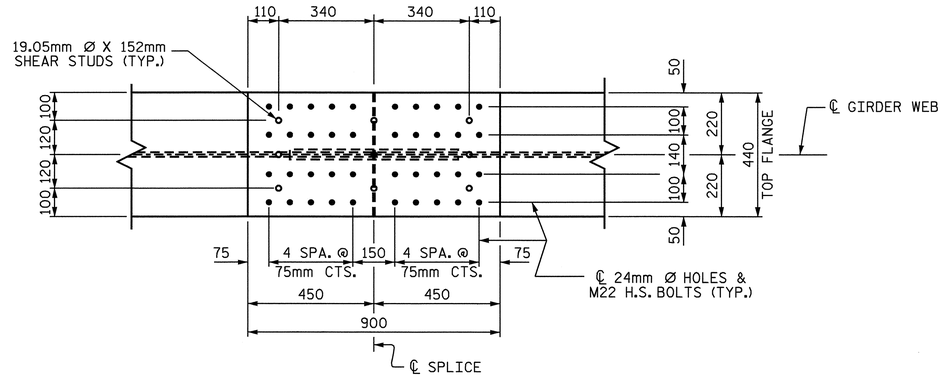

PLAN (TOP OF TOP FLANGE)

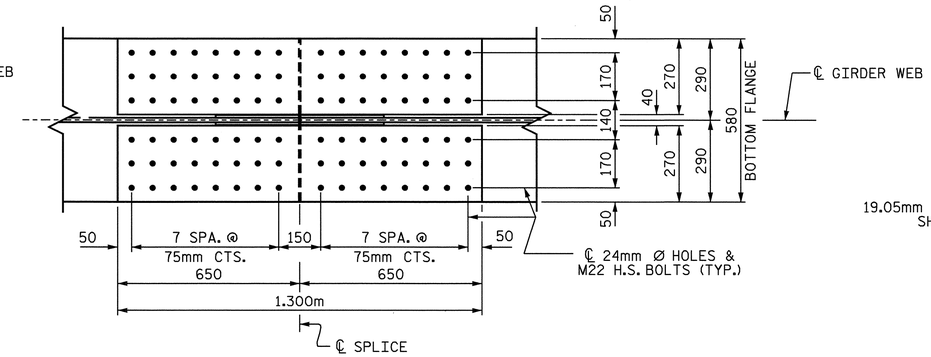

PLAN (TOP OF BOTTOM FLANGE)

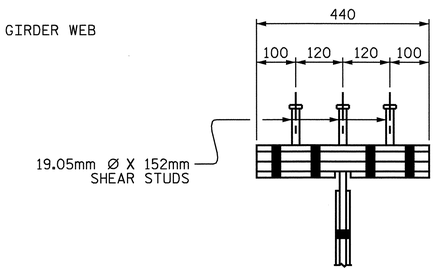

SHEAR STUD DETAIL FOR TOP FLANGE SPLICE PLATE

✱ SHEAR STUDS ARE TO BE SHOP WELDED ON TOP OF PLATE BEFORE FIELD ASSEMBLY.

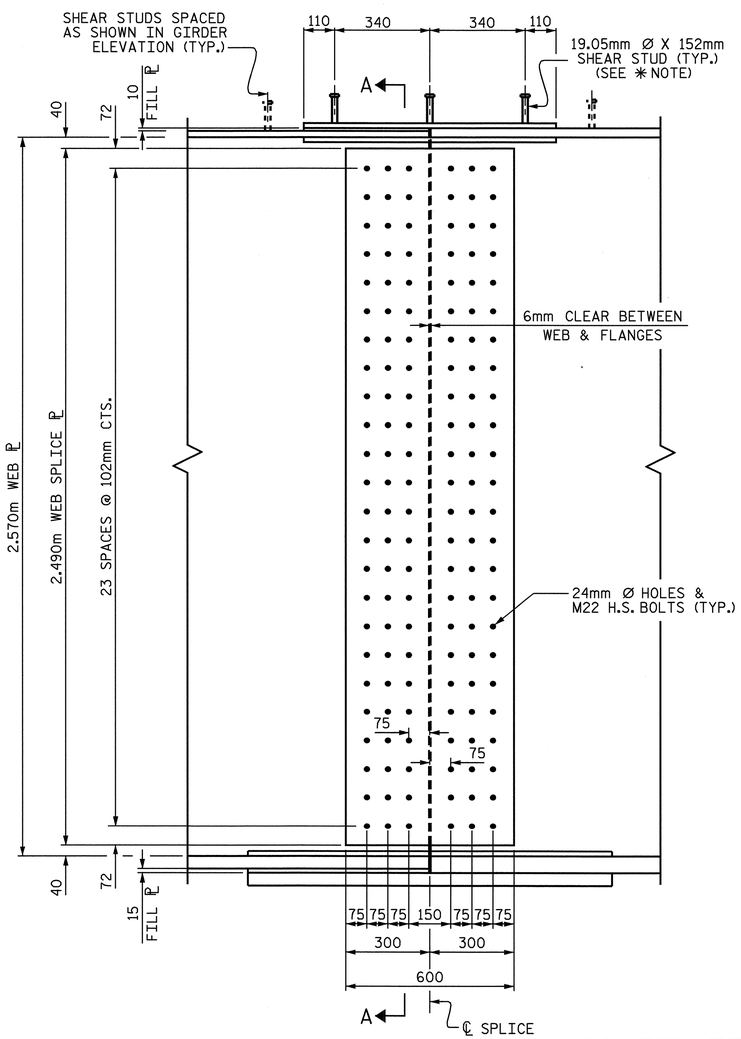

ELEVATION

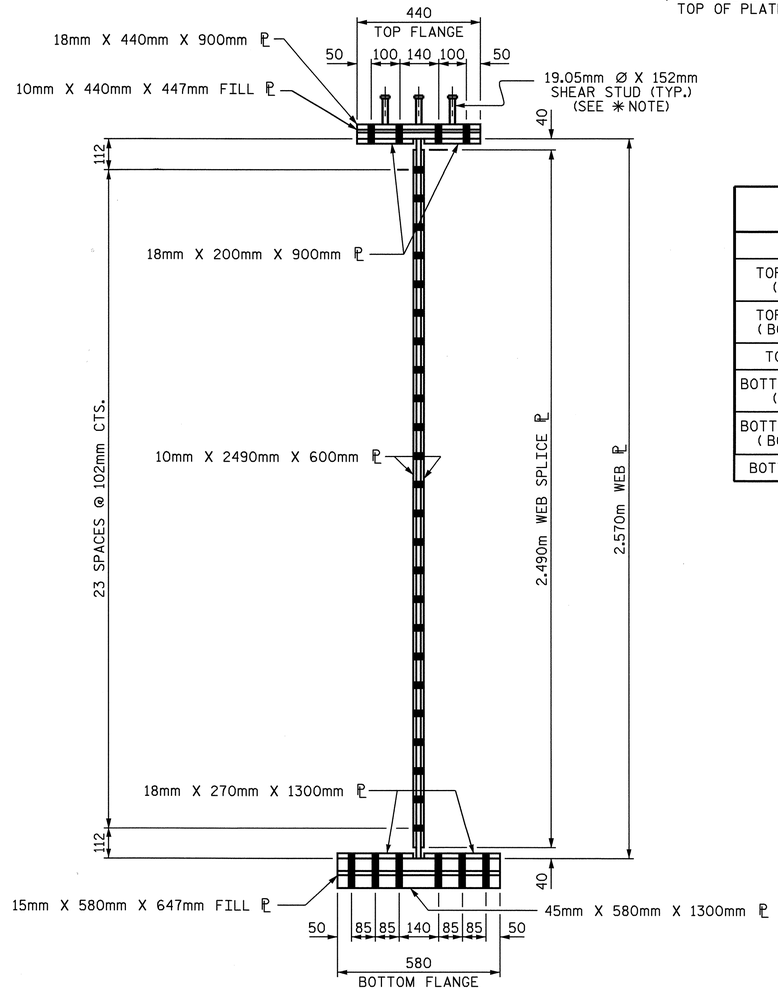

SECTION A-A

DESCRIPTION	SIZE	NO. REQ'D FOR ONE FIELD SPLICE	TOTAL REQ'D
WEB SPLICE ℙ	10mm X 2490mm X 600mm	2	40
TOP FLANGE SPLICE ℙ (TOP OF FLANGE)	18mm X 440mm X 900mm	1	20
TOP FLANGE SPLICE ℙ (BOTTOM OF FLANGE)	18mm X 200mm X 900mm	2	40
TOP FLANGE FILL ℙ	10mm X 440mm X 447mm	1	20
BOTTOM FLANGE SPLICE ℙ (TOP OF FLANGE)	18mm X 270mm X 1300mm	2	40
BOTTOM FLANGE SPLICE ℙ (BOTTOM OF FLANGE)	45mm X 580mm X 1300mm	1	20
BOTTOM FLANGE FILL ℙ	15mm X 580mm X 647mm	1	20

BOLTED FIELD SPLICE "BFS1" DETAILS

(TYPICAL EACH FIELD SPLICE IN SPANS A THRU D)

PROJECT NO. U-2519DA
CUMBERLAND COUNTY
STATION: 28+72.626 -RP1BD-

SHEET 10 OF 13

STATE OF NORTH CAROLINA
DEPARTMENT OF TRANSPORTATION
RALEIGH

SUPERSTRUCTURE

STRUCTURAL STEEL DETAILS

BFS1
FOR SPANS A THRU D

NORTH CAROLINA PROFESSIONAL SEAL 16301 ENGINEER TING-HSIUNG FANG
T.H. Fang 10/08/08

REVISIONS						SHEET NO.
NO.	BY:	DATE:	NO.	BY:	DATE:	S-259
1			3			TOTAL SHEETS
2			4			411

DRAWN BY : J.P. ADAMS DATE : 8/16/07
CHECKED BY : T.H. FANG DATE : 7/15/08

07-OCT-2008 15:59
H:\Structures\frye\str10_RP1BD_F0\Final Plans\U-2519DA_sd_ss_10.dgn
sdombrowski

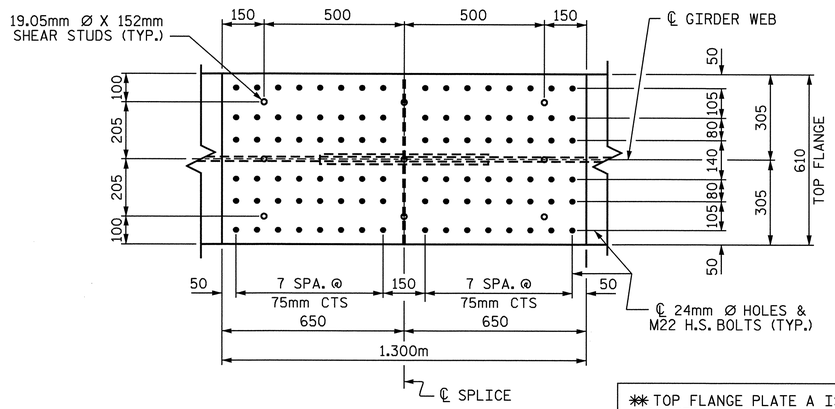

PLAN (TOP OF TOP FLANGE)

✱✱ PLATE A WITH 3 ROWS OF SHEAR STUDS

✱✱ TOP FLANGE PLATE A IS TYPICAL FOR ALL BOLTED FIELD SPLICES EXCEPT AS NOTED ON GIRDER ELEVATION. SEE "STRUCTURAL STEEL DETAILS" SHEET 4 OF 13.

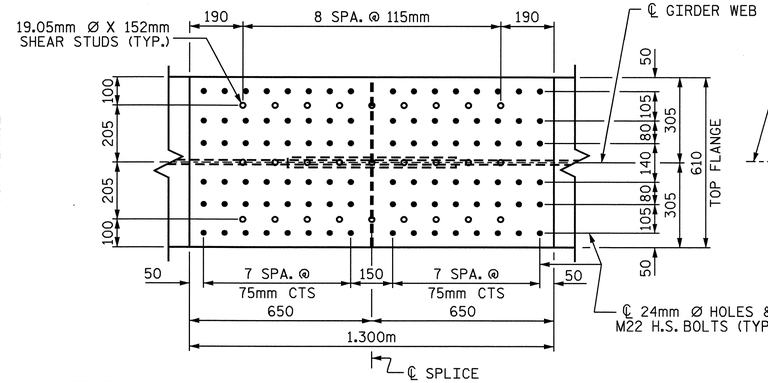

PLAN (TOP OF TOP FLANGE)

✱✱ PLATE B WITH 9 ROWS OF SHEAR STUDS

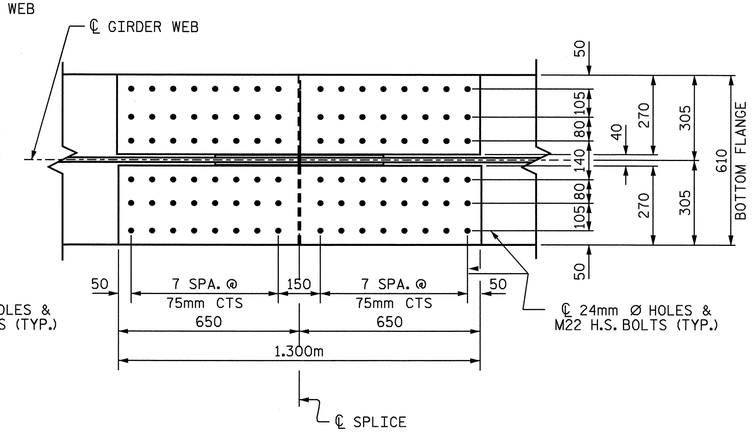

PLAN (TOP OF BOTTOM FLANGE)

✱ SHEAR STUDS ARE TO BE SHOP WELDED ON TOP OF PLATE BEFORE FIELD ASSEMBLY.

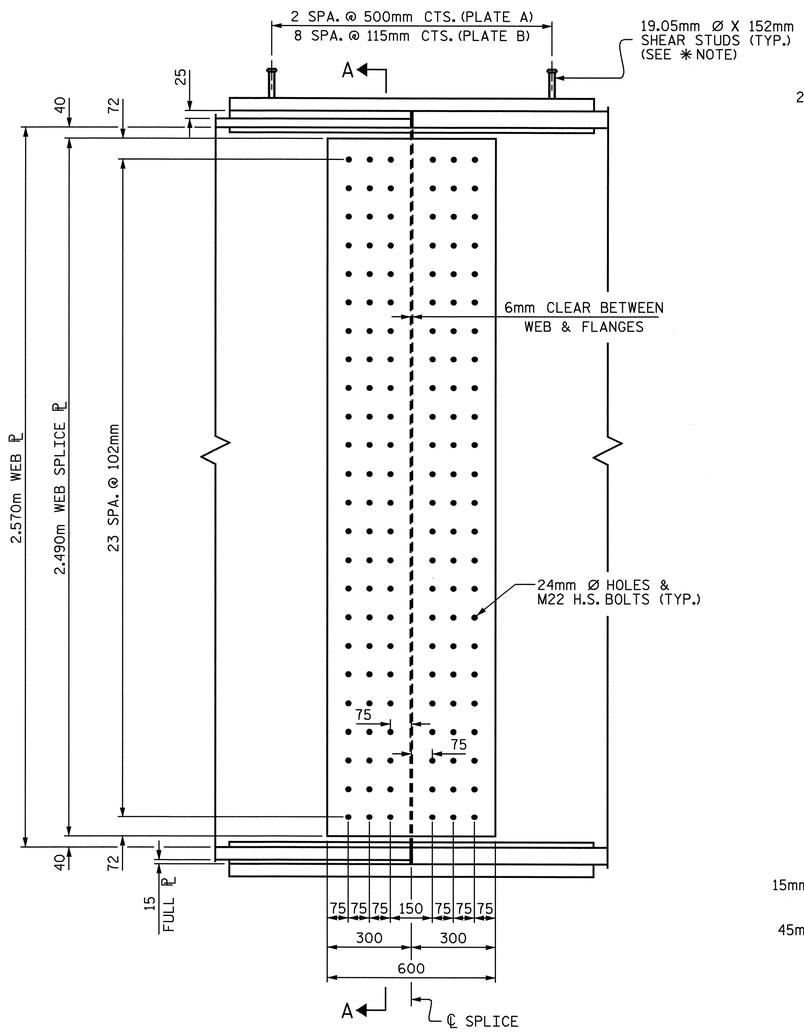

ELEVATION

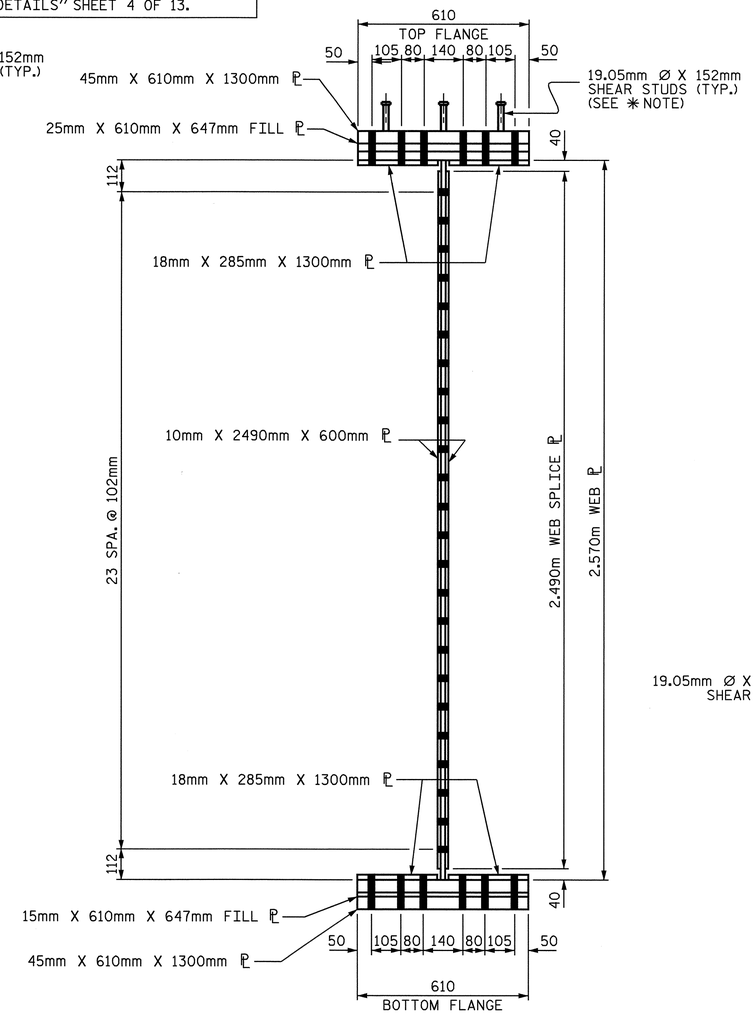

SECTION A-A

DESCRIPTION	SIZE	NO. REQ'D FOR ONE FIELD SPLICE	TOTAL REQ'D
WEB SPLICE ℙ	10mm X 2490mm X 600mm	2	40
TOP FLANGE SPLICE ℙ (TOP OF FLANGE)	45mm X 610mm X 1300mm	1	20
TOP FLANGE SPLICE ℙ (BOTTOM OF FLANGE)	18mm X 285mm X 1300mm	2	40
TOP FLANGE FILL ℙ	25mm X 610mm X 647mm	1	20
BOTTOM FLANGE SPLICE ℙ (TOP OF FLANGE)	18mm X 285mm X 1300mm	2	40
BOTTOM FLANGE SPLICE ℙ (BOTTOM OF FLANGE)	45mm X 610mm X 1300mm	1	20
BOTTOM FLANGE FILL ℙ	15mm X 610mm X 647mm	1	20

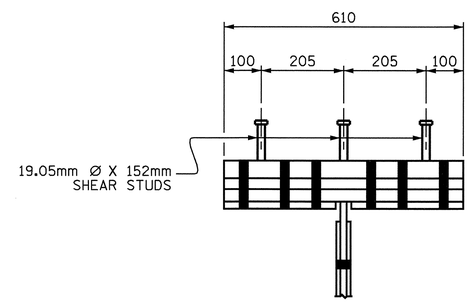

SHEAR STUD DETAIL FOR TOP FLANGE SPLICE PLATE

PROJECT NO. U-2519DA

CUMBERLAND COUNTY

STATION: 28+72.626 -RP1BD-

SHEET 11 OF 13

STATE OF NORTH CAROLINA
DEPARTMENT OF TRANSPORTATION
RALEIGH

SUPERSTRUCTURE

STRUCTURAL STEEL DETAILS

BFS2

FOR SPANS E THRU H

NORTH CAROLINA PROFESSIONAL SEAL 16301 ENGINEER TING-HSIUNG FANG
10/13/08

REVISIONS						SHEET NO.
NO.	BY:	DATE:	NO.	BY:	DATE:	S-260
1			3			TOTAL SHEETS
2			4			411

BOLTED FIELD SPLICE "BFS2" DETAILS

(TYPICAL EACH FIELD SPLICE IN SPANS E THRU H)

DRAWN BY : J.P. ADAMS DATE : 8/16/07
CHECKED BY : K.W. ALFORD DATE : 7/24/08

13-OCT-2008 10:43
z:\u2519da\structures\frye\str10_rplbd_fo\final plans\u-2519da_sd_ss_10.dgn
tfang

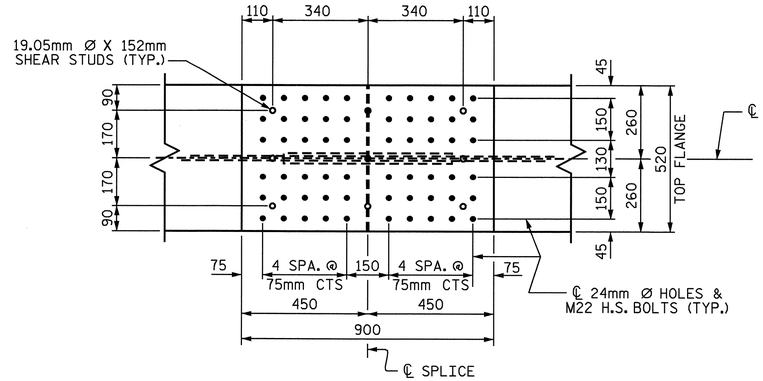

PLAN (TOP OF TOP FLANGE)

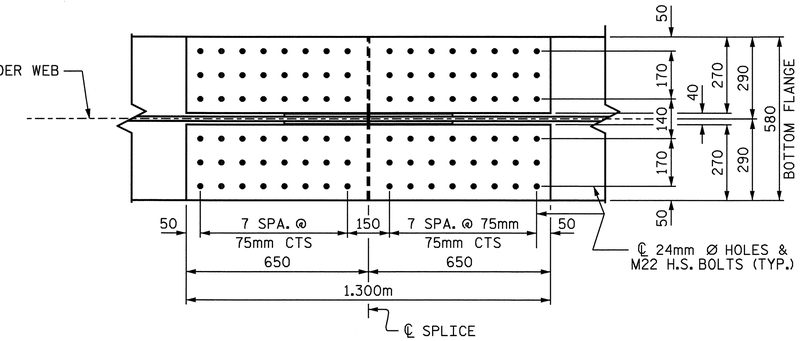

PLAN (TOP OF BOTTOM FLANGE)

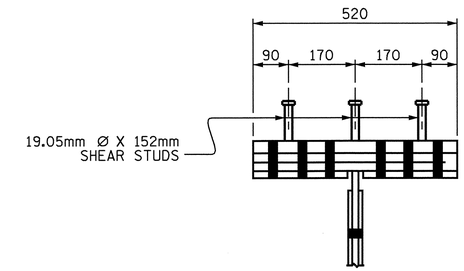

SHEAR STUD DETAIL FOR
TOP FLANGE SPLICE PLATE

✱ SHEAR STUDS ARE TO BE SHOP WELDED ON
TOP OF PLATE BEFORE FIELD ASSEMBLY.

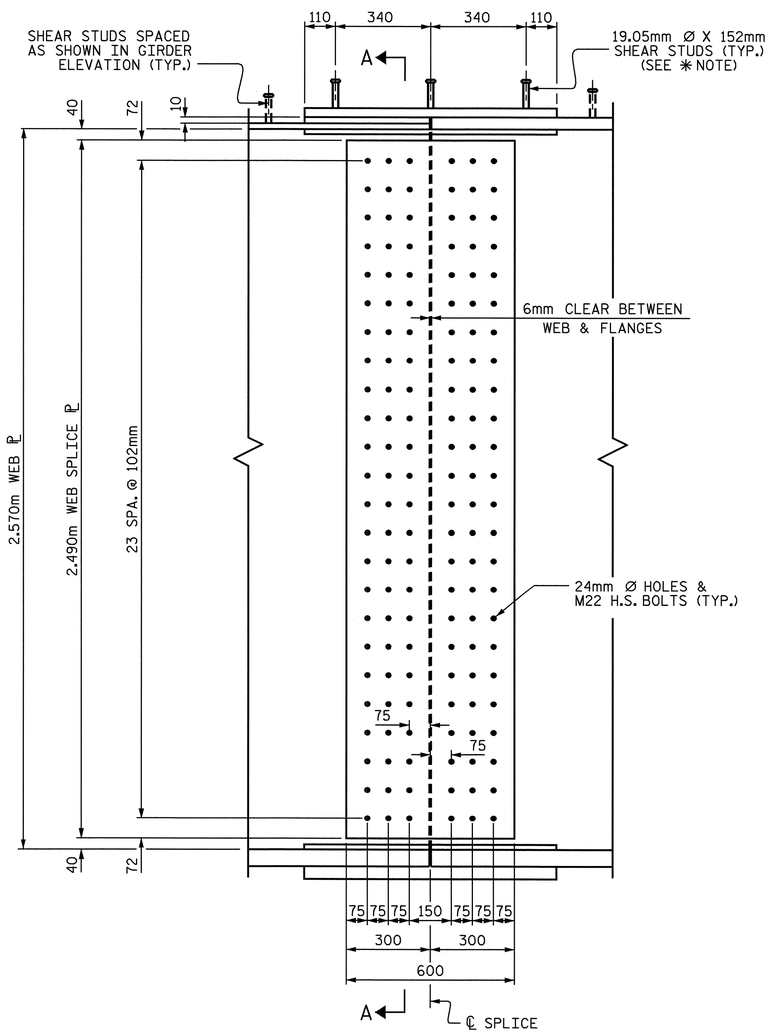

ELEVATION

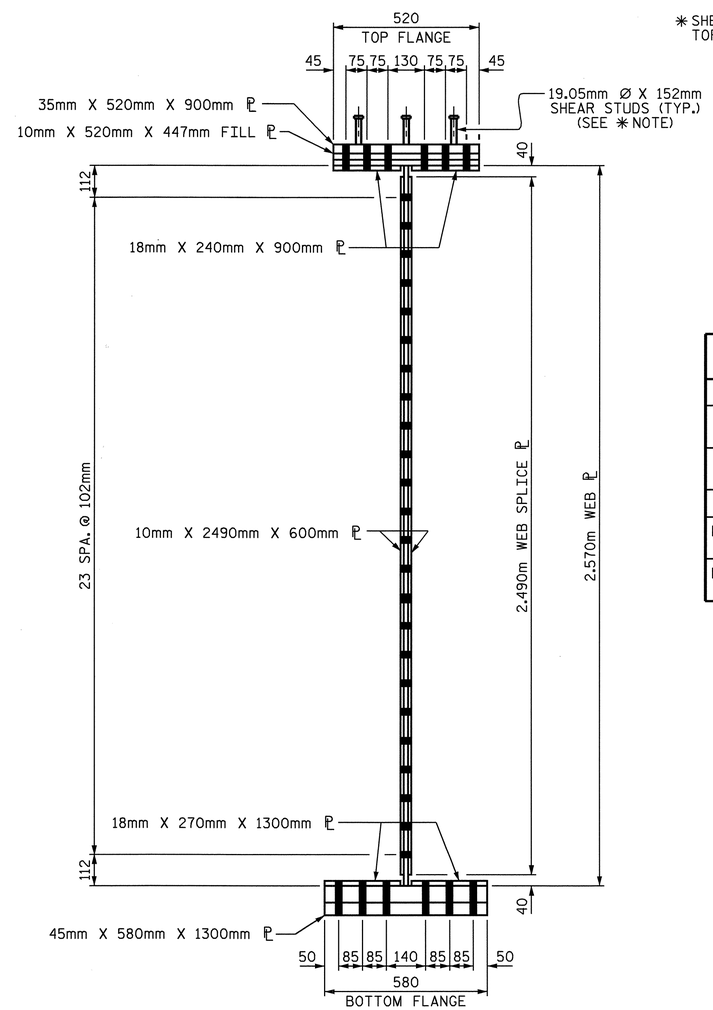

SECTION A-A

DESCRIPTION	SIZE	NO. REQ'D FOR ONE FIELD SPLICE	TOTAL REQ'D
WEB SPLICE ℙ	10mm X 2490mm X 600mm	2	16
TOP FLANGE SPLICE ℙ (TOP OF FLANGE)	35mm X 520mm X 900mm	1	8
TOP FLANGE SPLICE ℙ (BOTTOM OF FLANGE)	18mm X 240mm X 900mm	2	16
TOP FLANGE FILL ℙ	10mm X 520mm X 447mm	1	8
BOTTOM FLANGE SPLICE ℙ (TOP OF FLANGE)	18mm X 270mm X 1300mm	2	16
BOTTOM FLANGE SPLICE ℙ (BOTTOM OF FLANGE)	45mm X 580mm X 1300mm	1	8

PROJECT NO. U-2519DA
CUMBERLAND COUNTY
STATION: 28+72.626 -RP1BD-

SHEET 12 OF 13

NORTH CAROLINA PROFESSIONAL SEAL 16301 ENGINEER TING HSIUNG TANG
10/08/08

STATE OF NORTH CAROLINA
DEPARTMENT OF TRANSPORTATION
RALEIGH
SUPERSTRUCTURE

STRUCTURAL STEEL DETAILS
BFS3
FOR SPANS I & J

REVISIONS						SHEET NO.
NO.	BY:	DATE:	NO.	BY:	DATE:	S-261
1			3			TOTAL SHEETS
2			4			411

BOLTED FIELD SPLICE "BFS3" DETAILS

(TYPICAL EACH FIELD SPLICE IN SPANS I & J)

DRAWN BY : J.P. ADAMS DATE : 8/16/07
CHECKED BY : K.W. ALFORD DATE : 7/24/08

07-OCT-2008 15:59
H:\Structures\frye\str10_RP1BD_F0\Final Plans\U-2519DA_sd_ss_10.dgn
sdombrowski

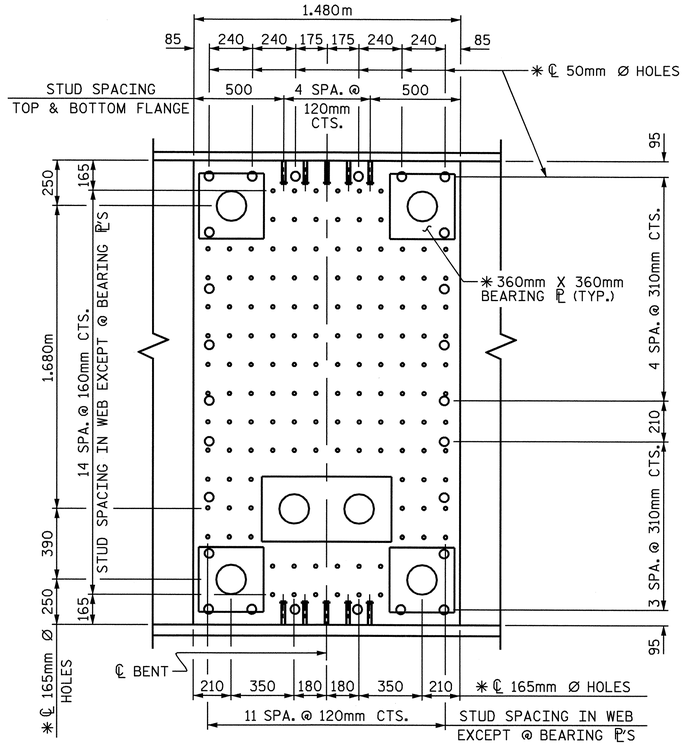

GIRDERS 1 & 4 (EXTERIOR FACE)

ALL SHEAR STUDS ARE 19.05mm Ø X 127mm (148 REQ'D.),
SHEAR STUDS ON TOP OF TOP FLANGE NOT SHOWN FOR CLARITY.

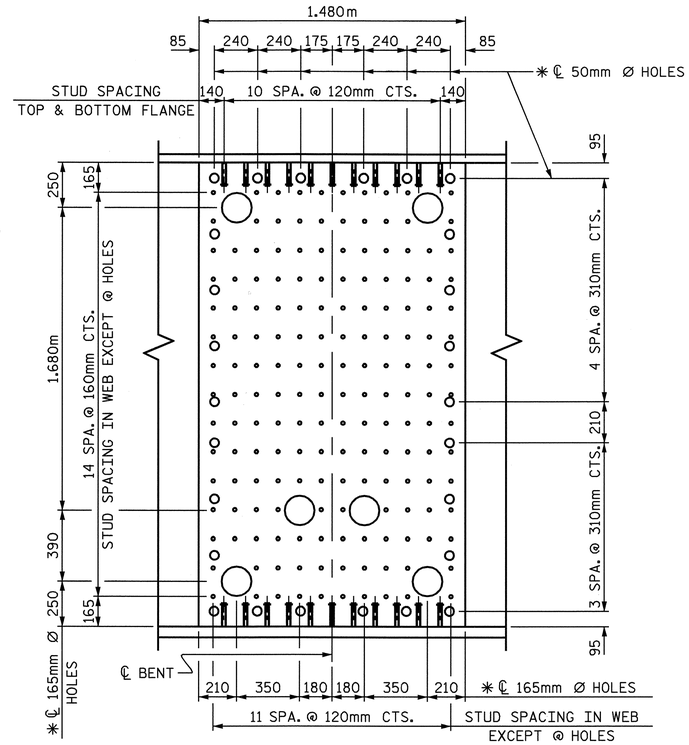

GIRDERS 1 & 4 (INTERIOR FACE)

ALL SHEAR STUDS ARE 19.05mm Ø X 127mm (192 REQ'D.),
SHEAR STUDS ON TOP OF TOP FLANGE NOT SHOWN FOR CLARITY.

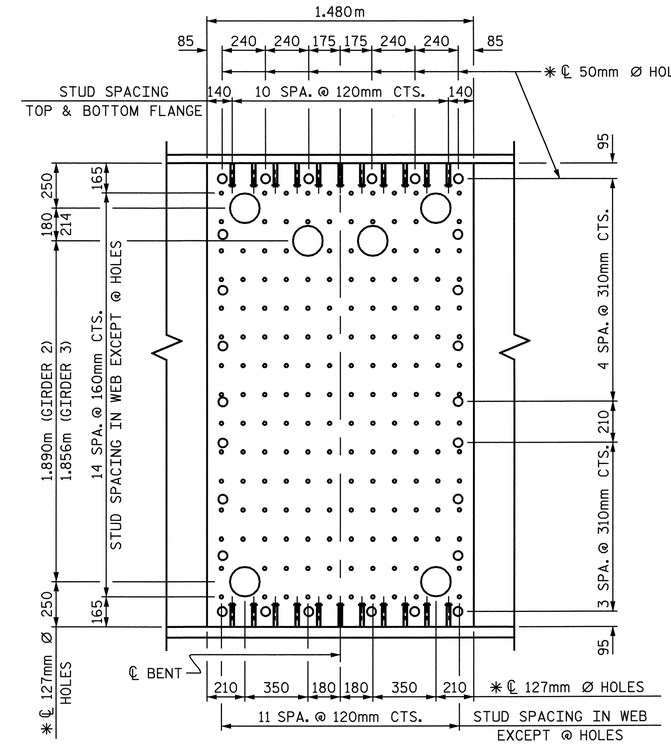

GIRDERS 2 & 3 (BOTH FACES)

ALL SHEAR STUDS ARE 19.05mm Ø X 127mm (384 REQ'D. PER EA. GIRDER),
SHEAR STUDS ON TOP OF TOP FLANGE NOT SHOWN FOR CLARITY.

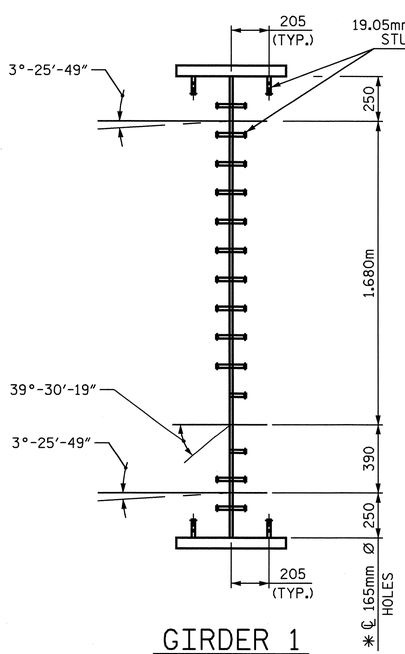

GIRDER 1

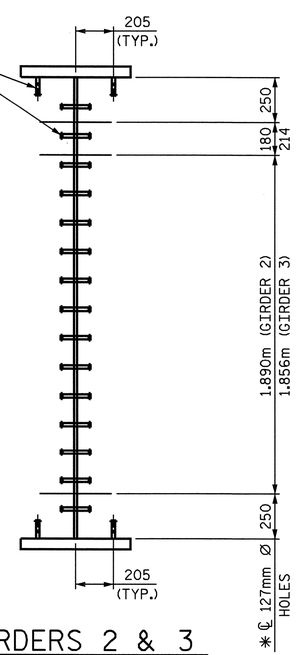

GIRDERS 2 & 3

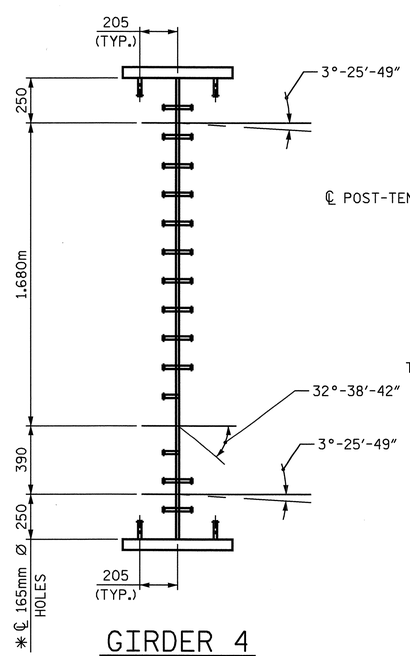

GIRDER 4

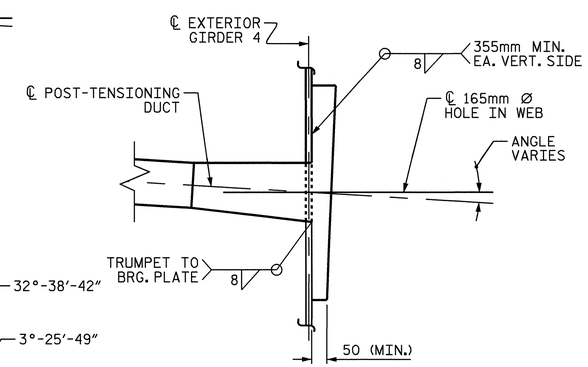

SECTION AT BEARING PLATE

GIRDER 4 SHOWN, GIRDER 1 SIMILAR

NOTES

✱ THE ITEMS LISTED BELOW SHALL BE VERIFIED BY THE POST-TENSIONING SUPPLIER PRIOR TO FABRICATION:

1. SIZE, SHAPE & THICKNESS OF BEARING PLATE.
2. DIAMETER OF BEARING PLATE HOLES.
3. DIAMETER OF WEB HOLES.

LOCATIONS OF SHEAR STUDS ON THE WEB MAY BE SHIFTED SLIGHTLY TO PROVIDE ADEQUATE CLEARANCE TO BEARING PLATES AND WEB HOLES.

SEE SHEETS #3 & 4 OF 13 FOR SPACING OF SHEAR STUDS ON TOP OF TOP FLANGE.

FOR ADDITIONAL NOTES ON POST-TENSIONING AND ANCHORAGE, SEE "SCHEMATIC SEQUENCE OF CONSTRUCTION AND NOTES INTEGRAL BENTS 5, 6 & 7" SHEET.

HOLES IN WEB MAY NEED TO BE A GREATER DIAMETER TO ACCEPT 8mm BEARING PLATE TO TRUMPET WELD.

PROJECT NO. U-2519DA
CUMBERLAND COUNTY
STATION: 28+72.626 -RP1BD-

SHEET 13 OF 13

STATE OF NORTH CAROLINA
DEPARTMENT OF TRANSPORTATION
RALEIGH

SUPERSTRUCTURE

STRUCTURAL STEEL DETAILS AT INTEGRAL BENTS 5, 6 & 7

NORTH CAROLINA PROFESSIONAL SEAL 029441 ENGINEER KRISTY W. ALFORD
10/8/08

REVISIONS						SHEET NO.
NO.	BY:	DATE:	NO.	BY:	DATE:	S-262
1			3			TOTAL SHEETS
2			4			411

DRAWN BY : E.C. LOCKLEAR DATE : 5-22-08
CHECKED BY : K.W. ALFORD DATE : 7-28-08

07-OCT-2008 15:59
H:\Structures\frye\str10_RP1BD_F0\Final Plans\U-2519DA_sd_ss_10.dgn
sdombrowski

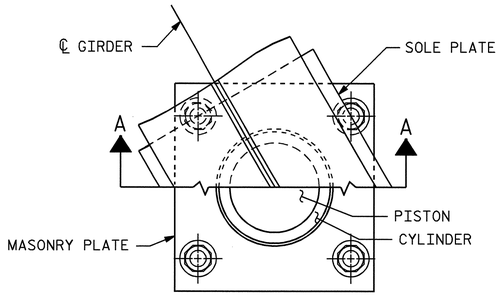

CUT-AWAY PLAN

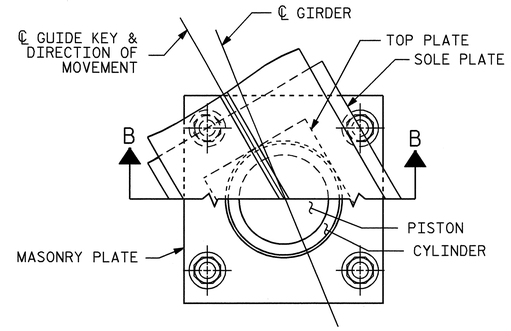

CUT-AWAY PLAN

FOR GUIDE KEY ANGLE, SEE PLAN BELOW

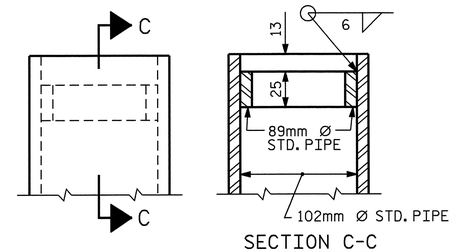

SECTION C-C

DETAIL "A"

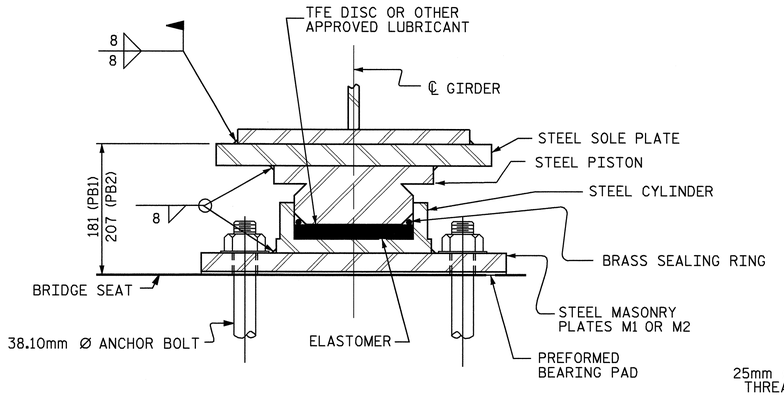

SECTION A-A

PB1, FIXED	PB2, FIXED
(12 REQ'D.)	(4 REQ'D.)

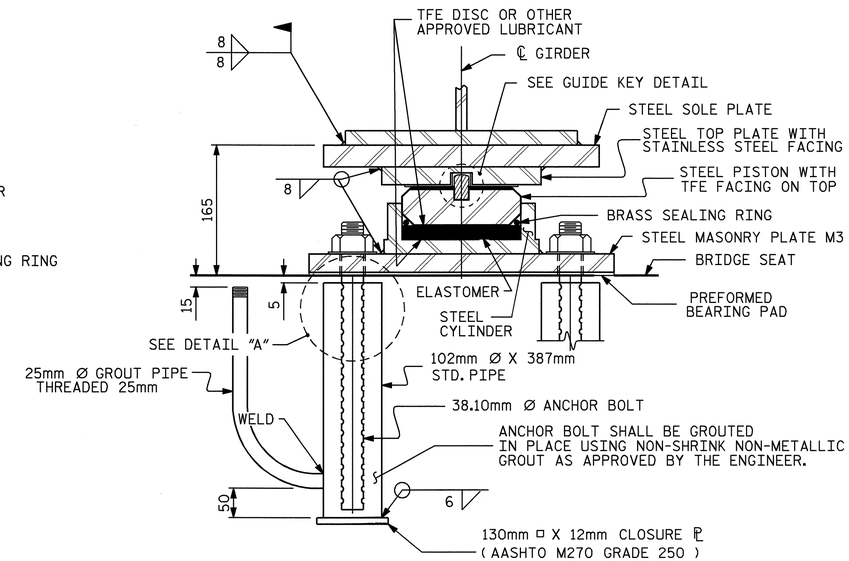

SECTION B-B

PB3, EXP.
(24 REQ'D.)

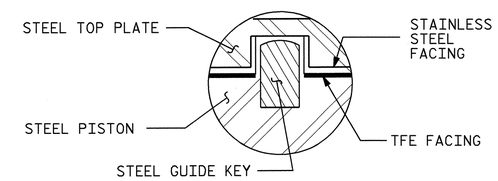

GUIDE KEY DETAIL

POT BEARING DETAILS

FOR LOCATION OF VARIOUS POT BEARINGS, SEE FRAMING PLANS

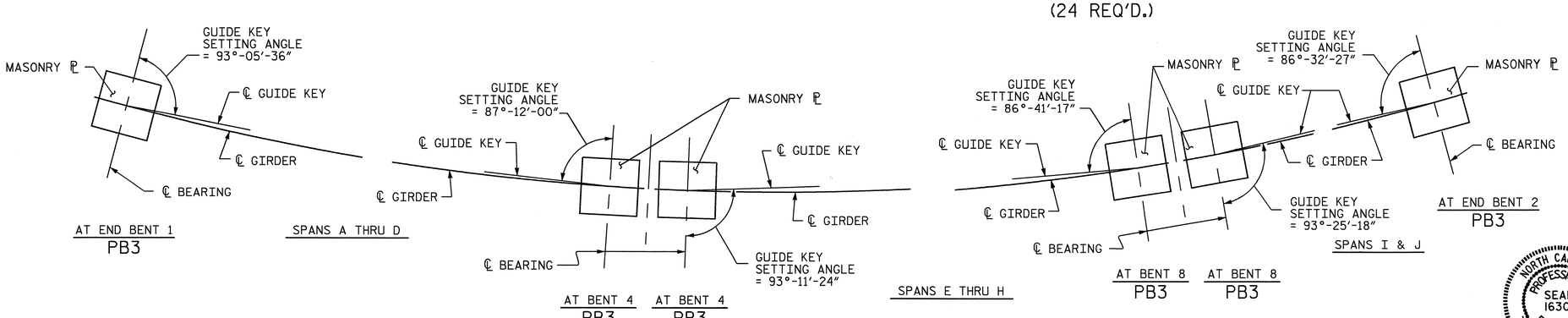

GUIDE KEY SETTING PLAN

GUIDE KEY SETTING ANGLES ARE TYPICAL FOR ALL GIRDERS IN THE SPAN.

PROJECT NO. U-2519DA
CUMBERLAND COUNTY
STATION: 28+72.626 -RP1BD-

SHEET 1 OF 2

STATE OF NORTH CAROLINA
DEPARTMENT OF TRANSPORTATION
RALEIGH

STANDARD
POT BEARING DETAILS

NORTH CAROLINA PROFESSIONAL SEAL 16301 ENGINEER TING HSIUNG FANG
10/08/08

REVISIONS						SHEET NO.
NO.	BY:	DATE:	NO.	BY:	DATE:	S-263
1			3			TOTAL SHEETS
2			4			411

ASSEMBLED BY : J.P. ADAMS	DATE : 12/3/07
CHECKED BY : T. H. FANG	DATE : 6/20/08
DRAWN BY : RWW 8/99	REV. 7/10/01 LES/RWW
CHECKED BY : LES 8/99	REV. 5/7/03 RWW/JTE
	REV. 5/1/06 TLA/GM

07-OCT-2008 15:59
H:\Structures\frye\str10_RP1BD_F0\Final Plans\U-2519DA_sd_bg.dgn
sdombrowski

PB1SM.STD

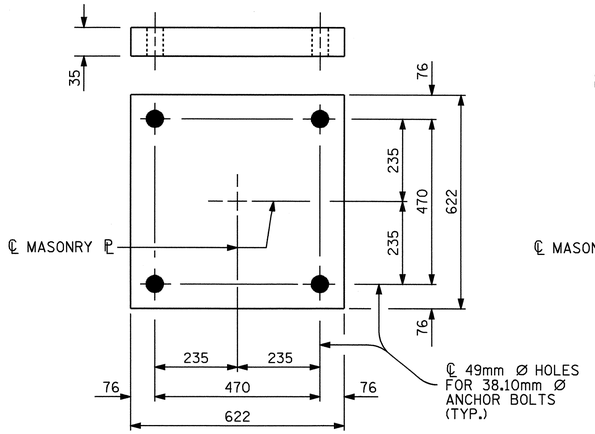

PLAN
M1 (12 REQ'D.)
(FIXED) @ BENTS 1, 2 & 3

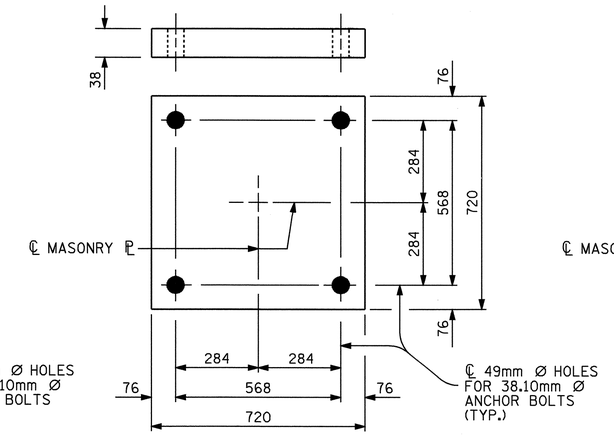

PLAN
M2 (4 REQ'D.)
(FIXED) @ BENT 9

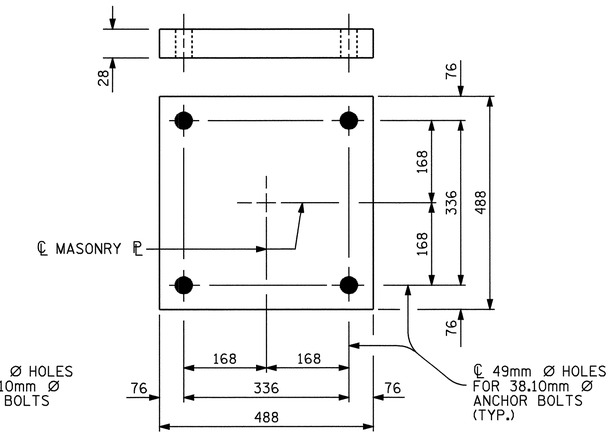

PLAN
M3 (24 REQ'D.)
(EXPANSION)
@ END BENTS 1 & 2, BENTS 4 & 8

NOTES

FOR POT BEARINGS, SEE SPECIAL PROVISIONS.

AT ALL POINTS OF SUPPORT IN SPANS A-D, SPAN E (NEAR), SPAN H (FAR), AND SPANS I-J, NUTS FOR ANCHOR BOLTS SHALL BE TIGHTENED FINGER TIGHT AND GIVEN AN ADDITIONAL 1/4 TURN. THE THREAD OF THE NUT AND BOLT SHALL THEN BE BURRED WITH A SHARP POINTED TOOL.

WHEN WELDING THE SOLE PLATE TO THE GIRDER, USE TEMPERATURE INDICATING WAX PENS, OR OTHER SUITABLE MEANS, TO ENSURE THAT THE TEMPERATURE OF THE BEARING DOES NOT EXCEED 121°C. TEMPERATURES ABOVE THIS MAY DAMAGE THE TFE OR ELASTOMER.

AFTER BEARING ASSEMBLY IS IN PLACE AND ANCHOR BOLTS HAVE BEEN FINALLY POSITIONED. THEY SHALL BE GROUTED IN PLACE AS SHOWN.

THE CLOSURE PLATE, GROUT PIPE AND STANDARD PIPE FOR THIS ASSEMBLY NEED NOT BE GALVANIZED.

SOLE PLATES SHOULD BE WELDED TO BEAM FLANGES AND ANCHOR BOLTS SHOULD BE GROUTED BEFORE FALSEWORK IS PLACED.

ALL SURFACES OF BEARING PLATES SHALL BE SMOOTH AND STRAIGHT.

FOR THERMAL SPRAYED COATINGS (METALLIZATION), SEE SPECIAL PROVISIONS.

THE CONTRACTOR MAY SUBSTITUTE DISC BEARINGS FOR THE POT BEARINGS SHOWN. FOR OPTIONAL DISC BEARINGS, SEE SPECIAL PROVISIONS.

MASONRY PLATE DETAILS

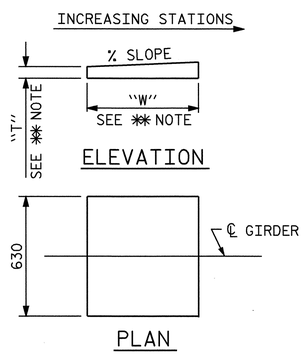

✱✱ NOTE:
DIMENSIONS "W" AND "T" ARE TO BE DETERMINED BY THE MANUFACTURER.

SOLE PLATE DETAILS

SOLE PLATE SLOPE

LOCATION	% SLOPE
END BENT 1	2.790%
BENT 1	2.790%
BENT 2	2.790%
BENT 3	2.770%
BENT 4 (N)	2.503%
BENT 4 (F)	2.490%
BENT 8 (N)	-1.185%
BENT 8 (F)	-1.198%
BENT 9	-2.248%
END BENT 2	-2.400%

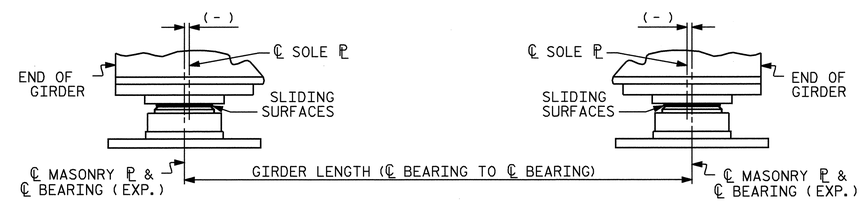

TABLE FOR PLATE SETTING DATA
(EXPANSION POT BEARINGS)

TEMPERATURE AT TIME OF SETTING	0° C	16° C	32° C	✱
END BENT 1	-15	0	15	-8
BENT 4 (N)	-15	0	15	-6
BENT 4 (F)	-16	0	16	-7
BENT 8 (N)	-16	0	16	-8
BENT 8 (F)	-9	0	9	-7
END BENT 2	-14	0	14	-7

✱CORRECTION FOR END ROTATION DUE TO WEIGHT OF SLAB AND COMPOSITE DEAD LOAD.

TEMPERATURE SETTING DETAIL

TABLE FOR LOADS AND MOVEMENTS

BEARING	LOCATION	VERTICAL LOAD (kN)			LATERAL LOAD (kN)	TOTAL MOVEMENT (mm)
		DEAD	LIVE	TOTAL		
PB3 (EXP.)	END BENT 1	752	349	1101	150	52
PB1 (FIXED)	BENT 1	2062	632	2694	412	0
PB1 (FIXED)	BENT 2	1485	588	2073	297	0
PB1 (FIXED)	BENT 3	1953	613	2566	390	0
PB3 (EXP.)	BENT 4 (N)	671	327	998	134	52
PB3 (EXP.)	BENT 4 (F)	817	356	1173	163	54
PB3 (EXP.)	BENT 8 (N)	852	368	1220	170	54
PB3 (EXP.)	BENT 8 (F)	845	387	1232	169	32
PB2 (FIXED)	BENT 9	2697	725	3422	539	0
PB3 (EXP.)	END BENT 2	839	387	1226	168	47

PROJECT NO. U-2519DA
CUMBERLAND COUNTY
STATION: 28+72.626 -RP1BD-

SHEET 2 OF 2

STATE OF NORTH CAROLINA
DEPARTMENT OF TRANSPORTATION
RALEIGH

STANDARD
POT BEARING DETAILS

NORTH CAROLINA PROFESSIONAL SEAL 029441 ENGINEER KRISTY W. ALFORD

REVISIONS						SHEET NO.
NO.	BY:	DATE:	NO.	BY:	DATE:	S-264
1			3			TOTAL SHEETS
2			4			411

ASSEMBLED BY : J.P. ADAMS DATE : 12/3/07
CHECKED BY : K.W. ALFORD DATE : 7/21/08

DRAWN BY : RWW 8/99
CHECKED BY : LES 8/99

REV. 7/10/01 LES/RWW
REV. 5/7/03 RWW/JTE
REV. 5/1/06 TLA/GM

07-OCT-2008 15:59
H:\Structures\frye\str10_RPIBD_F0\Final Plans\U-2519DA_sd_bg.dgn
sdombrowski

PB1SM.STD

DEAD LOAD DEFLECTION TABLE FOR GIRDERS

SPAN A

GIRDER 1

TWENTIETH POINTS	0	.05	.10	.15	.20	.25	.30	.35	.40	.45	.50	.55	.60	.65	.70	.75	.80	.85	.90	.95	0
DEFLECTION DUE TO WEIGHT OF GIRDER	0.000	-0.003	-0.005	-0.008	-0.010	-0.012	-0.013	-0.014	-0.015	-0.015	-0.014	-0.014	-0.013	-0.011	-0.010	-0.008	-0.006	-0.004	-0.003	-0.001	0.000
DEFLECTION DUE TO WEIGHT OF SLAB *	0.000	-0.007	-0.015	-0.021	-0.027	-0.032	-0.036	-0.038	-0.040	-0.040	-0.040	-0.037	-0.035	-0.032	-0.026	-0.022	-0.016	-0.012	-0.006	-0.003	0.000
DEFLECTION DUE TO WEIGHT OF BARRIER RAIL	0.000	-0.001	-0.001	-0.002	-0.003	-0.003	-0.003	-0.004	-0.004	-0.004	-0.004	-0.004	-0.003	-0.003	-0.003	-0.002	-0.002	-0.001	-0.001	-0.000	0.000
TOTAL DEAD LOAD DEFLECTION	0.000	-0.011	-0.021	-0.031	-0.040	-0.047	-0.052	-0.056	-0.059	-0.059	-0.058	-0.055	-0.051	-0.046	-0.039	-0.032	-0.024	-0.017	-0.010	-0.004	0.000
VERTICAL CURVE ORDINATE	0.000	0.000	0.000	0.000	0.000	0.000	0.000	0.000	0.000	0.000	0.000	0.000	0.000	0.000	0.000	0.000	0.000	0.000	0.000	0.000	0.000
REQUIRED CAMBER	0	11	21	31	40	47	52	56	59	59	58	55	51	46	39	32	24	17	10	4	0

GIRDER 2

TWENTIETH POINTS	0	.05	.10	.15	.20	.25	.30	.35	.40	.45	.50	.55	.60	.65	.70	.75	.80	.85	.90	.95	0
DEFLECTION DUE TO WEIGHT OF GIRDER	0.000	-0.003	-0.006	-0.009	-0.011	-0.013	-0.015	-0.016	-0.016	-0.017	-0.016	-0.015	-0.014	-0.013	-0.011	-0.009	-0.007	-0.005	-0.003	-0.001	0.000
DEFLECTION DUE TO WEIGHT OF SLAB *	0.000	-0.009	-0.016	-0.024	-0.031	-0.037	-0.040	-0.044	-0.047	-0.046	-0.046	-0.044	-0.040	-0.036	-0.030	-0.025	-0.019	-0.013	-0.008	-0.004	0.000
DEFLECTION DUE TO WEIGHT OF BARRIER RAIL	0.000	-0.001	-0.002	-0.002	-0.003	-0.003	-0.004	-0.004	-0.004	-0.004	-0.004	-0.004	-0.004	-0.003	-0.003	-0.002	-0.002	-0.001	-0.001	-0.000	0.000
TOTAL DEAD LOAD DEFLECTION	0.000	-0.013	-0.024	-0.035	-0.045	-0.053	-0.059	-0.064	-0.067	-0.067	-0.066	-0.063	-0.058	-0.052	-0.044	-0.036	-0.028	-0.019	-0.012	-0.005	0.000
VERTICAL CURVE ORDINATE	0.000	0.000	0.000	0.000	0.000	0.000	0.000	0.000	0.000	0.000	0.000	0.000	0.000	0.000	0.000	0.000	0.000	0.000	0.000	0.000	0.000
REQUIRED CAMBER	0	13	24	35	45	53	59	64	67	67	66	63	58	52	44	36	28	19	12	5	0

GIRDER 3

TWENTIETH POINTS	0	.05	.10	.15	.20	.25	.30	.35	.40	.45	.50	.55	.60	.65	.70	.75	.80	.85	.90	.95	0
DEFLECTION DUE TO WEIGHT OF GIRDER	0.000	-0.003	-0.007	-0.010	-0.012	-0.014	-0.016	-0.017	-0.018	-0.018	-0.018	-0.017	-0.016	-0.014	-0.012	-0.010	-0.008	-0.005	-0.003	-0.001	0.000
DEFLECTION DUE TO WEIGHT OF SLAB *	0.000	-0.010	-0.018	-0.027	-0.035	-0.041	-0.046	-0.049	-0.051	-0.052	-0.051	-0.048	-0.045	-0.040	-0.034	-0.027	-0.021	-0.015	-0.009	-0.005	0.000
DEFLECTION DUE TO WEIGHT OF BARRIER RAIL	0.000	-0.001	-0.002	-0.002	-0.003	-0.004	-0.004	-0.005	-0.005	-0.005	-0.005	-0.005	-0.004	-0.004	-0.003	-0.003	-0.002	-0.002	-0.001	-0.000	0.000
TOTAL DEAD LOAD DEFLECTION	0.000	-0.014	-0.027	-0.039	-0.050	-0.059	-0.066	-0.071	-0.074	-0.075	-0.074	-0.070	-0.065	-0.058	-0.049	-0.040	-0.031	-0.022	-0.013	-0.006	0.000
VERTICAL CURVE ORDINATE	0.000	0.000	0.000	0.000	0.000	0.000	0.000	0.000	0.000	0.000	0.000	0.000	0.000	0.000	0.000	0.000	0.000	0.000	0.000	0.000	0.000
REQUIRED CAMBER	0	14	27	39	50	59	66	71	74	75	74	70	65	58	49	40	31	22	13	6	0

GIRDER 4

TWENTIETH POINTS	0	.05	.10	.15	.20	.25	.30	.35	.40	.45	.50	.55	.60	.65	.70	.75	.80	.85	.90	.95	0
DEFLECTION DUE TO WEIGHT OF GIRDER	0.000	-0.004	-0.007	-0.011	-0.014	-0.016	-0.018	-0.019	-0.020	-0.020	-0.020	-0.019	-0.017	-0.016	-0.013	-0.011	-0.008	-0.006	-0.004	-0.002	0.000
DEFLECTION DUE TO WEIGHT OF SLAB *	0.000	-0.010	-0.021	-0.029	-0.038	-0.045	-0.050	-0.055	-0.057	-0.058	-0.056	-0.053	-0.049	-0.044	-0.038	-0.031	-0.024	-0.016	-0.010	-0.004	0.000
DEFLECTION DUE TO WEIGHT OF BARRIER RAIL	0.000	-0.001	-0.002	-0.003	-0.003	-0.004	-0.005	-0.005	-0.005	-0.005	-0.005	-0.005	-0.005	-0.004	-0.004	-0.003	-0.002	-0.002	-0.001	-0.000	0.000
TOTAL DEAD LOAD DEFLECTION	0.000	-0.015	-0.030	-0.043	-0.055	-0.065	-0.073	-0.079	-0.082	-0.083	-0.081	-0.077	-0.071	-0.064	-0.055	-0.045	-0.034	-0.024	-0.015	-0.006	0.000
VERTICAL CURVE ORDINATE	0.000	0.000	0.000	0.000	0.000	0.000	0.000	0.000	0.000	0.000	0.000	0.000	0.000	0.000	0.000	0.000	0.000	0.000	0.000	0.000	0.000
REQUIRED CAMBER	0	15	30	43	55	65	73	79	82	83	81	77	71	64	55	45	34	24	15	6	0

SPAN B

GIRDER 1

TWENTIETH POINTS	0	.05	.10	.15	.20	.25	.30	.35	.40	.45	.50	.55	.60	.65	.70	.75	.80	.85	.90	.95	0
DEFLECTION DUE TO WEIGHT OF GIRDER	0.000	0.000	0.001	0.000	0.000	0.000	-0.001	-0.001	-0.002	-0.002	-0.002	-0.002	-0.002	-0.002	-0.002	-0.002	-0.001	-0.001	0.000	0.000	0.000
DEFLECTION DUE TO WEIGHT OF SLAB *	0.000	0.002	0.002	0.002	0.001	0.000	-0.001	-0.002	-0.003	-0.004	-0.005	-0.006	-0.005	-0.005	-0.004	-0.003	-0.003	-0.001	-0.001	0.000	0.000
DEFLECTION DUE TO WEIGHT OF BARRIER RAIL	0.000	0.000	0.000	0.000	0.000	0.000	0.000	-0.001	-0.001	-0.001	-0.001	-0.001	-0.001	-0.001	-0.001	-0.001	0.000	0.000	0.000	0.000	0.000
TOTAL DEAD LOAD DEFLECTION	0.000	0.002	0.003	0.002	0.001	0.000	-0.002	-0.004	-0.006	-0.007	-0.008	-0.009	-0.008	-0.008	-0.007	-0.006	-0.004	-0.002	-0.001	0.000	0.000
VERTICAL CURVE ORDINATE	0.000	0.000	0.000	0.000	0.000	0.000	0.000	0.000	0.000	0.000	0.000	0.000	0.000	0.000	0.000	0.000	0.000	0.000	0.000	0.000	0.000
REQUIRED CAMBER	0	-2	-3	-2	-1	0	2	4	6	7	8	9	8	8	7	6	4	2	1	0	0

GIRDER 2

TWENTIETH POINTS	0	.05	.10	.15	.20	.25	.30	.35	.40	.45	.50	.55	.60	.65	.70	.75	.80	.85	.90	.95	0
DEFLECTION DUE TO WEIGHT OF GIRDER	0.000	0.001	0.001	0.001	0.000	0.000	-0.001	-0.001	-0.001	-0.002	-0.002	-0.002	-0.002	-0.002	-0.002	-0.001	-0.001	-0.001	0.000	0.000	0.000
DEFLECTION DUE TO WEIGHT OF SLAB *	0.000	0.001	0.003	0.002	0.002	0.001	0.000	-0.002	-0.003	-0.004	-0.005	-0.005	-0.005	-0.005	-0.004	-0.003	-0.003	-0.001	-0.001	0.000	0.000
DEFLECTION DUE TO WEIGHT OF BARRIER RAIL	0.000	0.000	0.000	0.000	0.000	0.000	0.000	0.000	-0.001	-0.001	-0.001	-0.001	-0.001	-0.001	-0.001	-0.001	0.000	0.000	0.000	0.000	0.000
TOTAL DEAD LOAD DEFLECTION	0.000	0.002	0.004	0.003	0.002	0.001	-0.001	-0.003	-0.005	-0.007	-0.008	-0.008	-0.008	-0.008	-0.007	-0.005	-0.004	-0.002	-0.001	0.000	0.000
VERTICAL CURVE ORDINATE	0.000	0.000	0.000	0.000	0.000	0.000	0.000	0.000	0.000	0.000	0.000	0.000	0.000	0.000	0.000	0.000	0.000	0.000	0.000	0.000	0.000
REQUIRED CAMBER	0	-2	-4	-3	-2	-1	1	3	5	7	8	8	8	8	7	5	4	2	1	0	0

GIRDER 3

TWENTIETH POINTS	0	.05	.10	.15	.20	.25	.30	.35	.40	.45	.50	.55	.60	.65	.70	.75	.80	.85	.90	.95	0
DEFLECTION DUE TO WEIGHT OF GIRDER	0.000	0.001	0.001	0.001	0.001	0.000	0.000	-0.001	-0.001	-0.002	-0.002	-0.002	-0.002	-0.002	-0.002	-0.001	-0.001	-0.001	0.000	0.000	0.000
DEFLECTION DUE TO WEIGHT OF SLAB *	0.000	0.002	0.003	0.003	0.002	0.002	0.000	-0.001	-0.002	-0.003	-0.004	-0.004	-0.005	-0.004	-0.003	-0.003	-0.003	-0.001	-0.001	0.000	0.000
DEFLECTION DUE TO WEIGHT OF BARRIER RAIL	0.000	0.000	0.000	0.000	0.000	0.000	0.000	0.000	-0.001	-0.001	-0.001	-0.001	-0.001	-0.001	-0.001	-0.001	0.000	0.000	0.000	0.000	0.000
TOTAL DEAD LOAD DEFLECTION	0.000	0.003	0.004	0.004	0.003	0.002	0.000	-0.002	-0.004	-0.006	-0.007	-0.007	-0.008	-0.007	-0.006	-0.005	-0.004	-0.002	-0.001	0.000	0.000
VERTICAL CURVE ORDINATE	0.000	0.000	0.000	0.000	0.000	0.000	0.000	0.000	0.000	0.000	0.000	0.000	0.000	0.000	0.000	0.000	0.000	0.000	0.000	0.000	0.000
REQUIRED CAMBER	0	-3	-4	-4	-3	-2	0	2	4	6	7	7	8	7	6	5	4	2	1	0	0

GIRDER 4

TWENTIETH POINTS	0	.05	.10	.15	.20	.25	.30	.35	.40	.45	.50	.55	.60	.65	.70	.75	.80	.85	.90	.95	0
DEFLECTION DUE TO WEIGHT OF GIRDER	0.000	0.001	0.001	0.001	0.001	0.001	0.000	0.000	-0.001	-0.001	-0.002	-0.002	-0.002	-0.002	-0.002	-0.001	-0.001	-0.001	0.000	0.000	0.000
DEFLECTION DUE TO WEIGHT OF SLAB *	0.000	0.002	0.004	0.004	0.004	0.002	0.001	-0.001	-0.001	-0.003	-0.003	-0.004	-0.004	-0.004	-0.003	-0.003	-0.002	-0.001	-0.001	0.000	0.000
DEFLECTION DUE TO WEIGHT OF BARRIER RAIL	0.000	0.000	0.000	0.000	0.000	0.000	0.000	0.000	-0.001	-0.001	-0.001	-0.001	-0.001	-0.001	-0.001	-0.001	0.000	0.000	0.000	0.000	0.000
TOTAL DEAD LOAD DEFLECTION	0.000	0.003	0.005	0.005	0.005	0.003	0.001	-0.001	-0.003	-0.005	-0.006	-0.007	-0.007	-0.007	-0.006	-0.005	-0.003	-0.002	-0.001	0.000	0.000
VERTICAL CURVE ORDINATE	0.000	0.000	0.000	0.000	0.000	0.000	0.000	0.000	0.000	0.000	0.000	0.000	0.000	0.000	0.000	0.000	0.000	0.000	0.000	0.000	0.000
REQUIRED CAMBER	0	-3	-5	-5	-5	-3	-1	1	3	5	6	7	7	7	6	5	3	2	1	0	0

* INCLUDES SLAB, BUILDUPS & STAY-IN-PLACE FORMS.

ALL VALUES ARE SHOWN IN METERS, EXCEPT "FINAL CAMBER" WHICH IS SHOWN IN MILLIMETERS.

VALUES GIVEN IN TABLE ARE AT TWENTIETH POINTS BETWEEN ℄ BEARINGS.

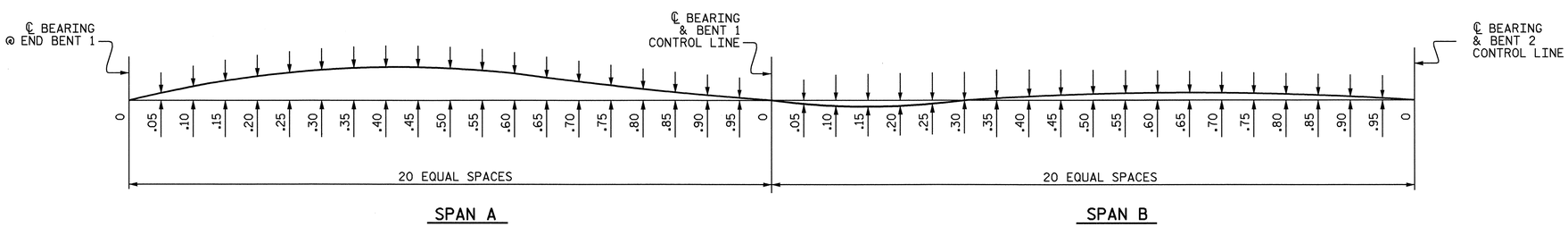

SCHEMATIC OF CAMBER ORDINATES

FOR CAMBER VALUES AT EACH GIDER TWENTIETH POINTS, SEE TABLES.
SLOPE FOR ZERO CAMBER BASE LINE VARIES.

NORTH CAROLINA PROFESSIONAL SEAL 16301 ENGINEER TING HSIUNG FANG
10/08/08

PROJECT NO. U-2519DA
CUMBERLAND COUNTY
STATION: 28+72.626 -RP1BD-

SHEET 1 OF 5

STATE OF NORTH CAROLINA
DEPARTMENT OF TRANSPORTATION
RALEIGH
SUPERSTRUCTURE

DEAD LOAD DEFLECTION TABLES

SPANS A & B

REVISIONS						SHEET NO.
NO.	BY:	DATE:	NO.	BY:	DATE:	S-265
1			3			TOTAL SHEETS
2			4			411

DRAWN BY : J. P. ADAMS DATE : 8/6/07
CHECKED BY : T. H. FANG DATE : 4/25/08

07-OCT-2008 15:59
H:\Structures\frye\str10_RP1BD_F0\Final Plans\u-2519da_sd_dl.dgn
sdombrowski

DEAD LOAD DEFLECTION TABLE FOR GIRDERS

SPAN C

GIRDER 1

TWENTIETH POINTS	0	.05	.10	.15	.20	.25	.30	.35	.40	.45	.50	.55	.60	.65	.70	.75	.80	.85	.90	.95	0
DEFLECTION DUE TO WEIGHT OF GIRDER	0.000	0.000	-0.001	-0.001	-0.002	-0.002	-0.003	-0.003	-0.003	-0.003	-0.003	-0.003	-0.003	-0.002	-0.002	-0.001	-0.001	0.000	0.000	0.000	0.000
DEFLECTION DUE TO WEIGHT OF SLAB *	0.000	-0.001	-0.001	-0.003	-0.003	-0.005	-0.006	-0.008	-0.008	-0.009	-0.009	-0.008	-0.006	-0.006	-0.004	-0.003	-0.001	-0.001	0.001	0.001	0.000
DEFLECTION DUE TO WEIGHT OF BARRIER RAIL	0.000	0.000	0.000	0.000	-0.001	-0.001	-0.001	-0.001	-0.001	-0.001	-0.001	-0.001	-0.001	-0.001	-0.001	0.000	0.000	0.000	0.000	0.000	0.000
TOTAL DEAD LOAD DEFLECTION	0.000	-0.001	-0.002	-0.004	-0.006	-0.008	-0.010	-0.012	-0.012	-0.013	-0.013	-0.012	-0.010	-0.009	-0.007	-0.004	-0.002	-0.001	0.001	0.001	0.000
VERTICAL CURVE ORDINATE	0.000	0.000	0.000	0.000	0.000	0.000	0.000	0.000	0.000	0.000	0.000	0.000	0.000	0.000	0.000	0.000	0.000	0.000	0.000	0.000	0.000
REQUIRED CAMBER	0	1	2	4	6	8	10	12	12	13	13	12	10	9	7	4	2	1	-1	-1	0

GIRDER 2

TWENTIETH POINTS	0	.05	.10	.15	.20	.25	.30	.35	.40	.45	.50	.55	.60	.65	.70	.75	.80	.85	.90	.95	0
DEFLECTION DUE TO WEIGHT OF GIRDER	0.000	0.000	-0.001	-0.001	-0.002	-0.002	-0.003	-0.003	-0.003	-0.003	-0.003	-0.003	-0.003	-0.002	-0.002	-0.001	-0.001	0.000	0.000	0.000	0.000
DEFLECTION DUE TO WEIGHT OF SLAB *	0.000	-0.001	-0.002	-0.004	-0.004	-0.006	-0.007	-0.008	-0.009	-0.010	-0.009	-0.008	-0.007	-0.006	-0.004	-0.003	-0.001	0.000	0.001	0.001	0.000
DEFLECTION DUE TO WEIGHT OF BARRIER RAIL	0.000	0.000	0.000	0.000	-0.001	-0.001	-0.001	-0.001	-0.001	-0.001	-0.001	-0.001	-0.001	-0.001	-0.001	0.000	0.000	0.000	0.000	0.000	0.000
TOTAL DEAD LOAD DEFLECTION	0.000	-0.001	-0.003	-0.005	-0.007	-0.009	-0.011	-0.012	-0.013	-0.014	-0.013	-0.012	-0.011	-0.009	-0.007	-0.004	-0.002	0.000	0.001	0.001	0.000
VERTICAL CURVE ORDINATE	0.000	0.000	0.000	0.000	0.000	0.000	0.000	0.000	0.000	0.000	0.000	0.000	0.000	0.000	0.000	0.000	0.000	0.000	0.000	0.000	0.000
REQUIRED CAMBER	0	1	3	5	7	9	11	12	13	14	13	12	11	9	7	4	2	0	-1	-1	0

GIRDER 3

TWENTIETH POINTS	0	.05	.10	.15	.20	.25	.30	.35	.40	.45	.50	.55	.60	.65	.70	.75	.80	.85	.90	.95	0
DEFLECTION DUE TO WEIGHT OF GIRDER	0.000	0.000	-0.001	-0.001	-0.002	-0.002	-0.003	-0.003	-0.004	-0.004	-0.003	-0.003	-0.003	-0.002	-0.002	-0.001	-0.001	0.000	0.000	0.000	0.000
DEFLECTION DUE TO WEIGHT OF SLAB *	0.000	-0.001	-0.002	-0.004	-0.004	-0.007	-0.008	-0.009	-0.009	-0.009	-0.010	-0.009	-0.007	-0.006	-0.004	-0.003	-0.001	0.000	0.001	0.001	0.000
DEFLECTION DUE TO WEIGHT OF BARRIER RAIL	0.000	0.000	0.000	0.000	-0.001	-0.001	-0.001	-0.001	-0.001	-0.001	-0.001	-0.001	-0.001	-0.001	-0.001	0.000	0.000	0.000	0.000	0.000	0.000
TOTAL DEAD LOAD DEFLECTION	0.000	-0.001	-0.003	-0.005	-0.007	-0.010	-0.012	-0.013	-0.014	-0.014	-0.014	-0.013	-0.011	-0.009	-0.007	-0.004	-0.002	0.000	0.001	0.001	0.000
VERTICAL CURVE ORDINATE	0.000	0.000	0.000	0.000	0.000	0.000	0.000	0.000	0.000	0.000	0.000	0.000	0.000	0.000	0.000	0.000	0.000	0.000	0.000	0.000	0.000
REQUIRED CAMBER	0	1	3	5	7	10	12	13	14	14	14	13	11	9	7	4	2	0	-1	-1	0

GIRDER 4

TWENTIETH POINTS	0	.05	.10	.15	.20	.25	.30	.35	.40	.45	.50	.55	.60	.65	.70	.75	.80	.85	.90	.95	0
DEFLECTION DUE TO WEIGHT OF GIRDER	0.000	0.000	-0.001	-0.001	-0.002	-0.002	-0.003	-0.003	-0.004	-0.004	-0.004	-0.003	-0.003	-0.002	-0.002	-0.001	0.000	0.000	0.000	0.000	0.000
DEFLECTION DUE TO WEIGHT OF SLAB *	0.000	-0.001	-0.002	-0.004	-0.005	-0.007	-0.008	-0.009	-0.009	-0.009	-0.009	-0.009	-0.007	-0.006	-0.003	-0.003	-0.002	0.001	0.002	0.001	0.000
DEFLECTION DUE TO WEIGHT OF BARRIER RAIL	0.000	0.000	0.000	0.000	-0.001	-0.001	-0.001	-0.001	-0.001	-0.001	-0.001	-0.001	-0.001	-0.001	-0.001	0.000	0.000	0.000	0.000	0.000	0.000
TOTAL DEAD LOAD DEFLECTION	0.000	-0.001	-0.003	-0.005	-0.008	-0.010	-0.012	-0.013	-0.014	-0.014	-0.014	-0.013	-0.011	-0.009	-0.006	-0.004	-0.002	0.001	0.002	0.001	0.000
VERTICAL CURVE ORDINATE	0.000	0.000	0.000	0.000	0.000	0.000	0.000	0.000	0.000	0.000	0.000	0.000	0.000	0.000	0.000	0.000	0.000	0.000	0.000	0.000	0.000
REQUIRED CAMBER	0	1	3	5	8	10	12	13	14	14	14	13	11	9	6	4	2	-1	-2	-1	0

SPAN D

GIRDER 1

TWENTIETH POINTS	0	.05	.10	.15	.20	.25	.30	.35	.40	.45	.50	.55	.60	.65	.70	.75	.80	.85	.90	.95	0
DEFLECTION DUE TO WEIGHT OF GIRDER	0.000	-0.001	-0.002	-0.003	-0.004	-0.005	-0.007	-0.008	-0.009	-0.009	-0.010	-0.010	-0.010	-0.010	-0.009	-0.008	-0.007	-0.005	-0.004	-0.002	0.000
DEFLECTION DUE TO WEIGHT OF SLAB *	0.000	-0.002	-0.004	-0.007	-0.011	-0.015	-0.017	-0.021	-0.024	-0.026	-0.027	-0.028	-0.028	-0.026	-0.025	-0.022	-0.019	-0.016	-0.010	-0.005	0.000
DEFLECTION DUE TO WEIGHT OF BARRIER RAIL	0.000	0.000	0.000	-0.001	-0.001	-0.001	-0.002	-0.002	-0.002	-0.003	-0.003	-0.003	-0.003	-0.003	-0.002	-0.002	-0.002	-0.001	-0.001	-0.001	0.000
TOTAL DEAD LOAD DEFLECTION	0.000	-0.003	-0.006	-0.011	-0.016	-0.021	-0.026	-0.031	-0.035	-0.038	-0.040	-0.041	-0.041	-0.039	-0.036	-0.032	-0.028	-0.022	-0.015	-0.008	0.000
VERTICAL CURVE ORDINATE	0.000	0.001	0.002	0.003	0.004	0.005	0.006	0.007	0.008	0.009	0.010	0.011	0.012	0.013	0.014	0.014	0.014	0.012	0.009	0.005	0.000
REQUIRED CAMBER	0	4	8	14	20	26	32	38	43	47	50	52	53	52	50	46	42	34	24	13	0

GIRDER 2

TWENTIETH POINTS	0	.05	.10	.15	.20	.25	.30	.35	.40	.45	.50	.55	.60	.65	.70	.75	.80	.85	.90	.95	0
DEFLECTION DUE TO WEIGHT OF GIRDER	0.000	-0.001	-0.002	-0.003	-0.004	-0.006	-0.007	-0.009	-0.010	-0.010	-0.011	-0.011	-0.011	-0.011	-0.010	-0.009	-0.008	-0.006	-0.004	-0.002	0.000
DEFLECTION DUE TO WEIGHT OF SLAB *	0.000	-0.002	-0.004	-0.008	-0.013	-0.016	-0.020	-0.023	-0.026	-0.029	-0.031	-0.032	-0.031	-0.030	-0.028	-0.025	-0.021	-0.016	-0.012	-0.006	0.000
DEFLECTION DUE TO WEIGHT OF BARRIER RAIL	0.000	0.000	-0.001	-0.001	-0.001	-0.002	-0.002	-0.002	-0.003	-0.003	-0.003	-0.003	-0.003	-0.003	-0.003	-0.002	-0.002	-0.002	-0.001	-0.001	0.000
TOTAL DEAD LOAD DEFLECTION	0.000	-0.003	-0.007	-0.012	-0.018	-0.024	-0.029	-0.034	-0.039	-0.042	-0.045	-0.046	-0.045	-0.044	-0.041	-0.036	-0.031	-0.024	-0.017	-0.009	0.000
VERTICAL CURVE ORDINATE	0.000	0.001	0.002	0.003	0.004	0.005	0.006	0.007	0.008	0.009	0.010	0.011	0.012	0.013	0.014	0.014	0.014	0.012	0.009	0.005	0.000
REQUIRED CAMBER	0	4	9	15	22	29	35	41	47	51	55	57	57	57	55	50	45	36	26	14	0

GIRDER 3

TWENTIETH POINTS	0	.05	.10	.15	.20	.25	.30	.35	.40	.45	.50	.55	.60	.65	.70	.75	.80	.85	.90	.95	0
DEFLECTION DUE TO WEIGHT OF GIRDER	0.000	-0.001	-0.002	-0.003	-0.005	-0.006	-0.008	-0.009	-0.010	-0.011	-0.012	-0.012	-0.012	-0.012	-0.011	-0.010	-0.008	-0.007	-0.005	-0.002	0.000
DEFLECTION DUE TO WEIGHT OF SLAB *	0.000	-0.003	-0.005	-0.010	-0.014	-0.018	-0.022	-0.026	-0.030	-0.032	-0.034	-0.035	-0.035	-0.033	-0.031	-0.027	-0.024	-0.018	-0.012	-0.006	0.000
DEFLECTION DUE TO WEIGHT OF BARRIER RAIL	0.000	0.000	-0.001	-0.001	-0.001	-0.002	-0.002	-0.003	-0.003	-0.003	-0.003	-0.003	-0.003	-0.003	-0.003	-0.003	-0.002	-0.002	-0.001	-0.001	0.000
TOTAL DEAD LOAD DEFLECTION	0.000	-0.004	-0.008	-0.014	-0.020	-0.026	-0.032	-0.038	-0.043	-0.046	-0.049	-0.050	-0.050	-0.048	-0.045	-0.040	-0.034	-0.027	-0.018	-0.009	0.000
VERTICAL CURVE ORDINATE	0.000	0.001	0.002	0.003	0.004	0.005	0.006	0.007	0.008	0.009	0.010	0.011	0.012	0.013	0.014	0.014	0.014	0.012	0.009	0.005	0.000
REQUIRED CAMBER	0	5	10	17	24	31	38	45	51	55	59	61	62	61	59	54	48	39	27	14	0

GIRDER 4

TWENTIETH POINTS	0	.05	.10	.15	.20	.25	.30	.35	.40	.45	.50	.55	.60	.65	.70	.75	.80	.85	.90	.95	0
DEFLECTION DUE TO WEIGHT OF GIRDER	0.000	-0.001	-0.002	-0.004	-0.005	-0.007	-0.009	-0.010	-0.011	-0.012	-0.013	-0.013	-0.013	-0.013	-0.012	-0.011	-0.009	-0.007	-0.005	-0.003	0.000
DEFLECTION DUE TO WEIGHT OF SLAB *	0.000	-0.003	-0.006	-0.010	-0.014	-0.019	-0.024	-0.028	-0.032	-0.035	-0.037	-0.037	-0.038	-0.036	-0.033	-0.029	-0.026	-0.020	-0.014	-0.006	0.000
DEFLECTION DUE TO WEIGHT OF BARRIER RAIL	0.000	0.000	-0.001	-0.001	-0.002	-0.002	-0.002	-0.003	-0.003	-0.003	-0.003	-0.004	-0.003	-0.003	-0.003	-0.003	-0.002	-0.002	-0.001	-0.001	0.000
TOTAL DEAD LOAD DEFLECTION	0.000	-0.004	-0.009	-0.015	-0.021	-0.028	-0.035	-0.041	-0.046	-0.050	-0.053	-0.054	-0.054	-0.052	-0.048	-0.043	-0.037	-0.029	-0.020	-0.010	0.000
VERTICAL CURVE ORDINATE	0.000	0.001	0.002	0.003	0.004	0.005	0.006	0.007	0.008	0.009	0.010	0.011	0.012	0.013	0.014	0.014	0.014	0.012	0.009	0.005	0.000
REQUIRED CAMBER	0	5	11	18	25	33	41	48	54	59	63	65	66	65	62	57	51	41	29	15	0

* INCLUDES SLAB, BUILDUPS & STAY-IN-PLACE FORMS.
ALL VALUES ARE SHOWN IN METERS, EXCEPT "FINAL CAMBER" WHICH IS SHOWN IN MILLIMETERS.
VALUES GIVEN IN TABLE ARE AT TWENTIETH POINTS BETWEEN ℄ BEARINGS.

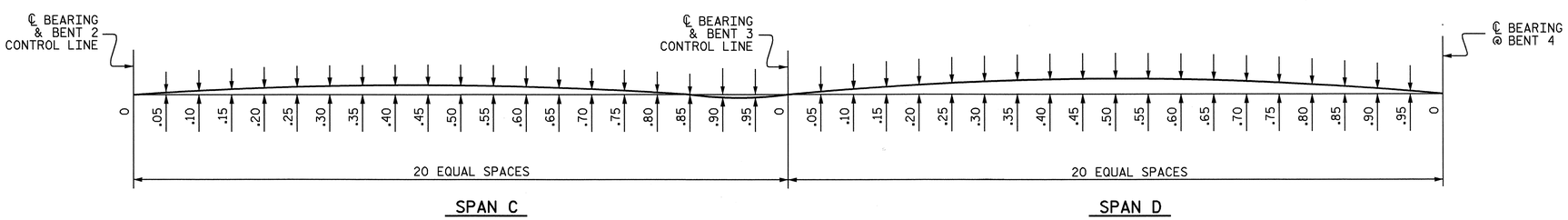

SCHEMATIC OF CAMBER ORDINATES

FOR CAMBER VALUES AT EACH GIDER TWENTIETH POINTS, SEE TABLES.
SLOPE FOR ZERO CAMBER BASE LINE VARIES.

NORTH CAROLINA PROFESSIONAL SEAL 16301 ENGINEER TING HSIUNG FANG
10/08/08

PROJECT NO. U-2519DA
CUMBERLAND COUNTY
STATION: 28+72.626 -RP1BD-

SHEET 2 OF 5

STATE OF NORTH CAROLINA
DEPARTMENT OF TRANSPORTATION
RALEIGH
SUPERSTRUCTURE

DEAD LOAD DEFLECTION TABLES

SPANS C & D

REVISIONS						SHEET NO.
NO.	BY:	DATE:	NO.	BY:	DATE:	S-266
1			3			TOTAL SHEETS
2			4			411

DRAWN BY : J. P. ADAMS DATE : 8/6/07
CHECKED BY : T. H. FANG DATE : 4/25/08

07-OCT-2008 15:59
H:\Structures\frye\str10_RP1BD_F0\Final Plans\u-2519da_sd_dl.dgn
sdombrowski

DEAD LOAD DEFLECTION TABLE FOR GIRDERS

SPAN E

GIRDER 1

TWENTIETH POINTS	0	.05	.10	.15	.20	.25	.30	.35	.40	.45	.50	.55	.60	.65	.70	.75	.80	.85	.90	.95	0
DEFLECTION DUE TO WEIGHT OF GIRDER	0.000	-0.003	-0.006	-0.008	-0.011	-0.012	-0.014	-0.015	-0.016	-0.016	-0.016	-0.015	-0.014	-0.012	-0.011	-0.009	-0.007	-0.005	-0.003	-0.001	0.000
DEFLECTION DUE TO WEIGHT OF SLAB ✳	0.000	-0.007	-0.014	-0.020	-0.025	-0.031	-0.034	-0.036	-0.038	-0.038	-0.037	-0.036	-0.033	-0.030	-0.025	-0.021	-0.015	-0.011	-0.007	-0.004	0.000
DEFLECTION DUE TO WEIGHT OF BARRIER RAIL	0.000	-0.001	-0.001	-0.002	-0.003	-0.003	-0.004	-0.004	-0.004	-0.004	-0.004	-0.004	-0.004	-0.003	-0.003	-0.002	-0.002	-0.001	-0.001	0.000	0.000
TOTAL DEAD LOAD DEFLECTION	0.000	-0.011	-0.021	-0.030	-0.039	-0.046	-0.052	-0.055	-0.058	-0.058	-0.057	-0.055	-0.051	-0.045	-0.039	-0.032	-0.024	-0.017	-0.011	-0.005	0.000
VERTICAL CURVE ORDINATE	0.000	0.012	0.023	0.033	0.041	0.048	0.054	0.058	0.062	0.063	0.064	0.063	0.062	0.058	0.054	0.048	0.041	0.033	0.023	0.012	0.000
REQUIRED CAMBER	0	23	44	63	80	94	106	113	120	121	121	118	113	103	93	80	65	50	34	17	0

GIRDER 2

TWENTIETH POINTS	0	.05	.10	.15	.20	.25	.30	.35	.40	.45	.50	.55	.60	.65	.70	.75	.80	.85	.90	.95	0
DEFLECTION DUE TO WEIGHT OF GIRDER	0.000	-0.003	-0.006	-0.009	-0.012	-0.014	-0.016	-0.017	-0.018	-0.018	-0.017	-0.017	-0.015	-0.014	-0.012	-0.010	-0.007	-0.005	-0.003	-0.001	0.000
DEFLECTION DUE TO WEIGHT OF SLAB ✳	0.000	-0.008	-0.016	-0.024	-0.029	-0.034	-0.038	-0.042	-0.042	-0.043	-0.043	-0.041	-0.038	-0.033	-0.029	-0.023	-0.019	-0.014	-0.008	-0.004	0.000
DEFLECTION DUE TO WEIGHT OF BARRIER RAIL	0.000	-0.001	-0.002	-0.002	-0.003	-0.004	-0.004	-0.004	-0.005	-0.005	-0.005	-0.004	-0.004	-0.004	-0.003	-0.003	-0.002	-0.001	-0.001	0.000	0.000
TOTAL DEAD LOAD DEFLECTION	0.000	-0.012	-0.024	-0.035	-0.044	-0.052	-0.058	-0.063	-0.065	-0.066	-0.065	-0.062	-0.057	-0.051	-0.044	-0.036	-0.028	-0.020	-0.012	-0.005	0.000
VERTICAL CURVE ORDINATE	0.000	0.012	0.023	0.033	0.041	0.048	0.054	0.058	0.062	0.064	0.064	0.064	0.062	0.058	0.054	0.048	0.041	0.033	0.023	0.012	0.000
REQUIRED CAMBER	0	24	47	68	85	100	112	121	127	130	129	126	119	109	98	84	69	53	35	17	0

GIRDER 3

TWENTIETH POINTS	0	.05	.10	.15	.20	.25	.30	.35	.40	.45	.50	.55	.60	.65	.70	.75	.80	.85	.90	.95	0
DEFLECTION DUE TO WEIGHT OF GIRDER	0.000	-0.004	-0.007	-0.010	-0.013	-0.016	-0.017	-0.019	-0.020	-0.020	-0.019	-0.018	-0.017	-0.015	-0.013	-0.011	-0.008	-0.006	-0.004	-0.002	0.000
DEFLECTION DUE TO WEIGHT OF SLAB ✳	0.000	-0.009	-0.017	-0.025	-0.033	-0.038	-0.044	-0.046	-0.048	-0.049	-0.048	-0.046	-0.043	-0.038	-0.032	-0.026	-0.021	-0.014	-0.008	-0.004	0.000
DEFLECTION DUE TO WEIGHT OF BARRIER RAIL	0.000	-0.001	-0.002	-0.003	-0.003	-0.004	-0.004	-0.005	-0.005	-0.005	-0.005	-0.005	-0.004	-0.004	-0.004	-0.003	-0.002	-0.002	-0.001	0.000	0.000
TOTAL DEAD LOAD DEFLECTION	0.000	-0.014	-0.026	-0.038	-0.049	-0.058	-0.065	-0.070	-0.073	-0.074	-0.072	-0.069	-0.064	-0.057	-0.049	-0.040	-0.031	-0.022	-0.013	-0.006	0.000
VERTICAL CURVE ORDINATE	0.000	0.012	0.023	0.033	0.041	0.048	0.054	0.058	0.062	0.064	0.064	0.064	0.062	0.058	0.054	0.048	0.041	0.033	0.023	0.012	0.000
REQUIRED CAMBER	0	26	49	71	90	106	119	128	135	138	136	133	126	115	103	88	72	55	36	18	0

GIRDER 4

TWENTIETH POINTS	0	.05	.10	.15	.20	.25	.30	.35	.40	.45	.50	.55	.60	.65	.70	.75	.80	.85	.90	.95	0
DEFLECTION DUE TO WEIGHT OF GIRDER	0.000	-0.004	-0.008	-0.011	-0.015	-0.017	-0.019	-0.021	-0.022	-0.022	-0.021	-0.020	-0.019	-0.017	-0.014	-0.012	-0.009	-0.006	-0.004	-0.002	0.000
DEFLECTION DUE TO WEIGHT OF SLAB ✳	0.000	-0.010	-0.019	-0.028	-0.035	-0.043	-0.048	-0.051	-0.052	-0.053	-0.053	-0.051	-0.046	-0.042	-0.036	-0.029	-0.023	-0.016	-0.010	-0.004	0.000
DEFLECTION DUE TO WEIGHT OF BARRIER RAIL	0.000	-0.001	-0.002	-0.003	-0.004	-0.004	-0.005	-0.005	-0.006	-0.006	-0.006	-0.005	-0.005	-0.004	-0.004	-0.003	-0.002	-0.002	-0.001	-0.001	0.000
TOTAL DEAD LOAD DEFLECTION	0.000	-0.015	-0.029	-0.042	-0.054	-0.064	-0.072	-0.077	-0.080	-0.081	-0.080	-0.076	-0.070	-0.063	-0.054	-0.044	-0.034	-0.024	-0.015	-0.007	0.000
VERTICAL CURVE ORDINATE	0.000	0.012	0.023	0.033	0.041	0.048	0.054	0.058	0.062	0.064	0.064	0.064	0.062	0.058	0.054	0.048	0.041	0.033	0.023	0.012	0.000
REQUIRED CAMBER	0	27	52	75	95	112	126	135	142	145	144	140	132	121	108	92	75	57	38	19	0

SPAN F

GIRDER 1

TWENTIETH POINTS	0	.05	.10	.15	.20	.25	.30	.35	.40	.45	.50	.55	.60	.65	.70	.75	.80	.85	.90	.95	0
DEFLECTION DUE TO WEIGHT OF GIRDER	0.000	0.001	0.001	0.001	0.001	0.001	0.001	0.000	0.000	0.000	-0.001	-0.001	-0.001	-0.001	-0.001	-0.001	0.000	0.000	0.000	0.000	0.000
DEFLECTION DUE TO WEIGHT OF SLAB ✳	0.000	0.001	0.002	0.003	0.003	0.002	0.002	0.002	0.001	0.000	0.000	-0.001	-0.001	-0.001	-0.001	-0.001	-0.001	-0.001	0.000	0.000	0.000
DEFLECTION DUE TO WEIGHT OF BARRIER RAIL	0.000	0.000	0.000	0.000	0.000	0.000	0.000	0.000	0.000	0.000	0.000	0.000	0.000	0.000	0.000	0.000	0.000	0.000	0.000	0.000	0.000
TOTAL DEAD LOAD DEFLECTION	0.000	0.002	0.003	0.004	0.004	0.003	0.003	0.002	0.001	0.000	-0.001	-0.002	-0.002	-0.002	-0.002	-0.002	-0.001	-0.001	0.000	0.000	0.000
VERTICAL CURVE ORDINATE	0.000	0.008	0.015	0.021	0.027	0.032	0.035	0.038	0.040	0.042	0.042	0.042	0.040	0.038	0.035	0.032	0.027	0.021	0.015	0.008	0.000
REQUIRED CAMBER	0	6	12	17	23	29	32	36	39	42	43	44	42	40	37	34	28	22	15	8	0

GIRDER 2

TWENTIETH POINTS	0	.05	.10	.15	.20	.25	.30	.35	.40	.45	.50	.55	.60	.65	.70	.75	.80	.85	.90	.95	0
DEFLECTION DUE TO WEIGHT OF GIRDER	0.000	0.001	0.001	0.001	0.001	0.001	0.001	0.001	0.000	0.000	0.000	-0.001	-0.001	-0.001	-0.001	-0.001	0.000	0.000	0.000	0.000	0.000
DEFLECTION DUE TO WEIGHT OF SLAB ✳	0.000	0.001	0.003	0.004	0.004	0.003	0.003	0.002	0.002	0.001	0.000	0.000	-0.001	-0.001	-0.001	-0.001	-0.001	-0.001	0.000	0.000	0.000
DEFLECTION DUE TO WEIGHT OF BARRIER RAIL	0.000	0.000	0.000	0.000	0.000	0.000	0.000	0.000	0.000	0.000	0.000	0.000	0.000	0.000	0.000	0.000	0.000	0.000	0.000	0.000	0.000
TOTAL DEAD LOAD DEFLECTION	0.000	0.002	0.004	0.005	0.005	0.004	0.004	0.003	0.002	0.001	0.000	-0.001	-0.002	-0.002	-0.002	-0.002	-0.001	-0.001	0.000	0.000	0.000
VERTICAL CURVE ORDINATE	0.000	0.008	0.015	0.021	0.027	0.032	0.035	0.038	0.040	0.042	0.042	0.042	0.040	0.038	0.035	0.032	0.027	0.021	0.015	0.008	0.000
REQUIRED CAMBER	0	6	11	16	22	28	31	35	38	41	42	43	42	40	37	34	28	22	15	8	0

GIRDER 3

TWENTIETH POINTS	0	.05	.10	.15	.20	.25	.30	.35	.40	.45	.50	.55	.60	.65	.70	.75	.80	.85	.90	.95	0
DEFLECTION DUE TO WEIGHT OF GIRDER	0.000	0.001	0.001	0.002	0.001	0.001	0.001	0.001	0.000	0.000	0.000	0.000	-0.001	-0.001	-0.001	-0.001	0.000	0.000	0.000	0.000	0.000
DEFLECTION DUE TO WEIGHT OF SLAB ✳	0.000	0.002	0.004	0.004	0.005	0.005	0.004	0.003	0.003	0.001	0.000	0.000	0.000	0.000	-0.001	0.000	-0.001	-0.001	0.000	0.000	0.000
DEFLECTION DUE TO WEIGHT OF BARRIER RAIL	0.000	0.000	0.000	0.000	0.000	0.000	0.000	0.000	0.000	0.000	0.000	0.000	0.000	0.000	0.000	0.000	0.000	0.000	0.000	0.000	0.000
TOTAL DEAD LOAD DEFLECTION	0.000	0.003	0.005	0.006	0.006	0.006	0.005	0.004	0.003	0.001	0.000	0.000	-0.001	-0.001	-0.002	-0.001	-0.001	-0.001	0.000	0.000	0.000
VERTICAL CURVE ORDINATE	0.000	0.008	0.015	0.021	0.027	0.032	0.035	0.038	0.040	0.042	0.042	0.042	0.040	0.038	0.035	0.032	0.027	0.021	0.015	0.008	0.000
REQUIRED CAMBER	0	5	10	15	21	26	30	34	37	41	42	42	41	39	37	33	28	22	15	8	0

GIRDER 4

TWENTIETH POINTS	0	.05	.10	.15	.20	.25	.30	.35	.40	.45	.50	.55	.60	.65	.70	.75	.80	.85	.90	.95	0
DEFLECTION DUE TO WEIGHT OF GIRDER	0.000	0.001	0.001	0.002	0.002	0.002	0.001	0.001	0.001	0.000	0.000	0.000	0.000	-0.001	-0.001	0.000	0.000	0.000	0.000	0.000	0.000
DEFLECTION DUE TO WEIGHT OF SLAB ✳	0.000	0.002	0.005	0.004	0.005	0.005	0.005	0.004	0.003	0.003	0.001	0.000	0.000	0.000	0.000	-0.001	-0.001	0.000	0.000	0.000	0.000
DEFLECTION DUE TO WEIGHT OF BARRIER RAIL	0.000	0.000	0.000	0.001	0.000	0.000	0.000	0.000	0.000	0.000	0.000	0.000	0.000	0.000	0.000	0.000	0.000	0.000	0.000	0.000	0.000
TOTAL DEAD LOAD DEFLECTION	0.000	0.003	0.006	0.007	0.007	0.007	0.006	0.005	0.004	0.003	0.001	0.000	0.000	-0.001	-0.001	-0.001	-0.001	0.000	0.000	0.000	0.000
VERTICAL CURVE ORDINATE	0.000	0.008	0.015	0.021	0.027	0.032	0.035	0.038	0.040	0.042	0.042	0.042	0.040	0.038	0.035	0.032	0.027	0.021	0.015	0.008	0.000
REQUIRED CAMBER	0	5	9	14	20	25	29	33	36	39	41	42	40	39	36	33	28	21	15	8	0

✳ INCLUDES SLAB, BUILDUPS & STAY-IN-PLACE FORMS.
ALL VALUES ARE SHOWN IN METERS, EXCEPT "FINAL CAMBER" WHICH IS SHOWN IN MILLIMETERS.
VALUES GIVEN IN TABLE ARE AT TWENTIETH POINTS BETWEEN ℄ BEARINGS.

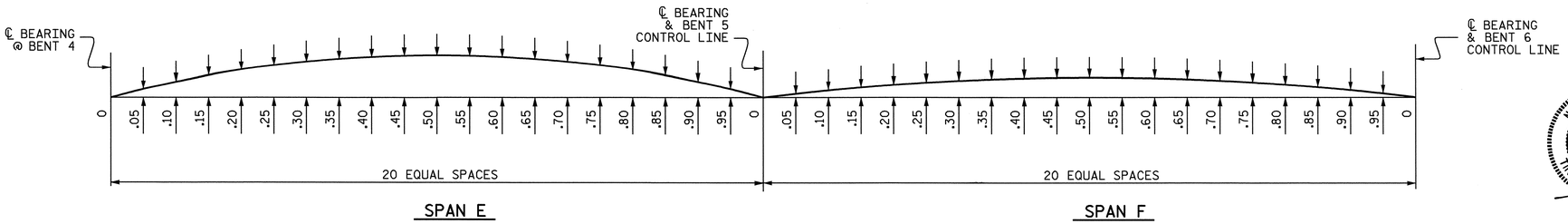

SCHEMATIC OF CAMBER ORDINATES

FOR CAMBER VALUES AT EACH GIDER TWENTIETH POINTS, SEE TABLES.
SLOPE FOR ZERO CAMBER BASE LINE VARIES.

NORTH CAROLINA PROFESSIONAL SEAL 16301 ENGINEER TING HSIUNG FANG
10/08/08

PROJECT NO. U-2519DA
CUMBERLAND COUNTY
STATION: 28+72.626 -RP1BD-

SHEET 3 OF 5

STATE OF NORTH CAROLINA
DEPARTMENT OF TRANSPORTATION
RALEIGH
SUPERSTRUCTURE

DEAD LOAD DEFLECTION TABLES

SPANS E & F

REVISIONS						SHEET NO.
NO.	BY:	DATE:	NO.	BY:	DATE:	S-267
1			3			TOTAL SHEETS
2			4			411

DRAWN BY : J. P. ADAMS DATE : 8/6/07
CHECKED BY : T. H. FANG DATE : 4/25/08

07-OCT-2008 15:58
H:\Structures\frye\str10_RP1BD_F0\Final Plans\u-2519da_sd_dl.dgn
sdombrowski

DEAD LOAD DEFLECTION TABLE FOR GIRDERS

SPAN G

GIRDER 1

TWENTIETH POINTS	0	.05	.10	.15	.20	.25	.30	.35	.40	.45	.50	.55	.60	.65	.70	.75	.80	.85	.90	.95	0
DEFLECTION DUE TO WEIGHT OF GIRDER	0.000	0.000	0.000	-0.001	-0.001	-0.001	-0.001	-0.002	-0.002	-0.002	-0.001	-0.001	-0.001	0.000	0.000	0.001	0.001	0.001	0.001	0.001	0.000
DEFLECTION DUE TO WEIGHT OF SLAB ✳	0.000	-0.001	-0.001	-0.001	-0.002	-0.003	-0.004	-0.003	-0.003	-0.003	-0.003	-0.002	-0.001	0.000	0.001	0.002	0.002	0.003	0.003	0.001	0.000
DEFLECTION DUE TO WEIGHT OF BARRIER RAIL	0.000	0.000	0.000	0.000	0.000	0.000	0.000	0.000	0.000	0.000	0.000	0.000	0.000	0.000	0.000	0.000	0.000	0.000	0.000	0.000	0.000
TOTAL DEAD LOAD DEFLECTION	0.000	-0.001	-0.001	-0.002	-0.003	-0.004	-0.005	-0.005	-0.005	-0.005	-0.004	-0.003	-0.002	0.000	0.001	0.003	0.003	0.004	0.004	0.002	0.000
VERTICAL CURVE ORDINATE	0.000	0.009	0.017	0.024	0.030	0.035	0.039	0.043	0.045	0.046	0.047	0.046	0.045	0.043	0.039	0.035	0.030	0.024	0.017	0.009	0.000
REQUIRED CAMBER	0	10	18	26	33	39	44	48	50	51	51	49	47	43	38	32	27	20	13	7	0

GIRDER 2

TWENTIETH POINTS	0	.05	.10	.15	.20	.25	.30	.35	.40	.45	.50	.55	.60	.65	.70	.75	.80	.85	.90	.95	0
DEFLECTION DUE TO WEIGHT OF GIRDER	0.000	0.000	0.000	-0.001	-0.001	-0.001	-0.001	-0.001	-0.001	-0.001	-0.001	-0.001	0.000	0.000	0.001	0.001	0.001	0.001	0.001	0.001	0.000
DEFLECTION DUE TO WEIGHT OF SLAB ✳	0.000	-0.001	-0.001	-0.001	-0.002	-0.003	-0.004	-0.004	-0.004	-0.003	-0.002	-0.001	-0.001	0.001	0.001	0.003	0.004	0.004	0.003	0.002	0.000
DEFLECTION DUE TO WEIGHT OF BARRIER RAIL	0.000	0.000	0.000	0.000	0.000	0.000	0.000	0.000	0.000	0.000	0.000	0.000	0.000	0.000	0.000	0.000	0.000	0.000	0.000	0.000	0.000
TOTAL DEAD LOAD DEFLECTION	0.000	-0.001	-0.001	-0.002	-0.003	-0.004	-0.005	-0.005	-0.005	-0.004	-0.003	-0.002	-0.001	0.001	0.002	0.004	0.005	0.005	0.004	0.003	0.000
VERTICAL CURVE ORDINATE	0.000	0.009	0.017	0.024	0.030	0.035	0.039	0.043	0.045	0.046	0.047	0.046	0.045	0.043	0.039	0.035	0.030	0.024	0.017	0.009	0.000
REQUIRED CAMBER	0	10	18	26	33	39	44	48	50	50	50	48	46	42	37	31	25	19	13	6	0

GIRDER 3

TWENTIETH POINTS	0	.05	.10	.15	.20	.25	.30	.35	.40	.45	.50	.55	.60	.65	.70	.75	.80	.85	.90	.95	0
DEFLECTION DUE TO WEIGHT OF GIRDER	0.000	0.000	0.000	-0.001	-0.001	-0.001	-0.001	-0.001	-0.001	-0.001	-0.001	0.000	0.000	0.000	0.001	0.001	0.001	0.002	0.001	0.001	0.000
DEFLECTION DUE TO WEIGHT OF SLAB ✳	0.000	-0.001	-0.001	-0.001	-0.002	-0.003	-0.003	-0.003	-0.003	-0.002	-0.001	-0.001	0.001	0.002	0.003	0.004	0.005	0.004	0.004	0.002	0.000
DEFLECTION DUE TO WEIGHT OF BARRIER RAIL	0.000	0.000	0.000	0.000	0.000	0.000	0.000	0.000	0.000	0.000	0.000	0.000	0.000	0.000	0.000	0.000	0.000	0.000	0.000	0.000	0.000
TOTAL DEAD LOAD DEFLECTION	0.000	-0.001	-0.001	-0.002	-0.003	-0.004	-0.004	-0.004	-0.004	-0.003	-0.002	-0.001	0.001	0.002	0.004	0.005	0.006	0.006	0.005	0.003	0.000
VERTICAL CURVE ORDINATE	0.000	0.009	0.017	0.024	0.030	0.035	0.039	0.043	0.045	0.046	0.047	0.046	0.045	0.043	0.039	0.035	0.030	0.024	0.017	0.009	0.000
REQUIRED CAMBER	0	10	18	26	33	39	43	47	49	49	49	47	44	41	35	30	24	18	12	6	0

GIRDER 4

TWENTIETH POINTS	0	.05	.10	.15	.20	.25	.30	.35	.40	.45	.50	.55	.60	.65	.70	.75	.80	.85	.90	.95	0
DEFLECTION DUE TO WEIGHT OF GIRDER	0.000	0.000	0.000	-0.001	-0.001	-0.001	-0.001	-0.001	-0.001	-0.001	-0.001	0.000	0.000	0.001	0.001	0.002	0.002	0.002	0.002	0.001	0.000
DEFLECTION DUE TO WEIGHT OF SLAB ✳	0.000	-0.001	-0.001	-0.001	-0.002	-0.003	-0.003	-0.003	-0.002	-0.001	0.000	0.000	0.002	0.003	0.004	0.005	0.005	0.004	0.004	0.003	0.000
DEFLECTION DUE TO WEIGHT OF BARRIER RAIL	0.000	0.000	0.000	0.000	0.000	0.000	0.000	0.000	0.000	0.000	0.000	0.000	0.000	0.000	0.000	0.000	0.000	0.001	0.000	0.000	0.000
TOTAL DEAD LOAD DEFLECTION	0.000	-0.001	-0.001	-0.002	-0.003	-0.004	-0.004	-0.004	-0.003	-0.002	-0.001	0.000	0.002	0.004	0.005	0.007	0.007	0.007	0.006	0.004	0.000
VERTICAL CURVE ORDINATE	0.000	0.009	0.017	0.024	0.030	0.035	0.039	0.043	0.045	0.046	0.047	0.046	0.045	0.043	0.039	0.035	0.030	0.024	0.017	0.009	0.000
REQUIRED CAMBER	0	10	18	26	33	39	43	47	48	48	48	46	43	39	34	28	23	17	11	5	0

SPAN H

GIRDER 1

TWENTIETH POINTS	0	.05	.10	.15	.20	.25	.30	.35	.40	.45	.50	.55	.60	.65	.70	.75	.80	.85	.90	.95	0
DEFLECTION DUE TO WEIGHT OF GIRDER	0.000	-0.001	-0.003	-0.005	-0.007	-0.010	-0.012	-0.014	-0.016	-0.017	-0.018	-0.018	-0.018	-0.017	-0.016	-0.014	-0.012	-0.010	-0.007	-0.003	0.000
DEFLECTION DUE TO WEIGHT OF SLAB ✳	0.000	-0.004	-0.008	-0.013	-0.018	-0.023	-0.029	-0.033	-0.037	-0.041	-0.042	-0.043	-0.043	-0.042	-0.039	-0.034	-0.029	-0.023	-0.015	-0.008	0.000
DEFLECTION DUE TO WEIGHT OF BARRIER RAIL	0.000	0.000	-0.001	-0.001	-0.002	-0.003	-0.003	-0.004	-0.004	-0.004	-0.005	-0.005	-0.005	-0.004	-0.004	-0.004	-0.003	-0.002	-0.002	-0.001	0.000
TOTAL DEAD LOAD DEFLECTION	0.000	-0.005	-0.012	-0.019	-0.027	-0.036	-0.044	-0.051	-0.057	-0.062	-0.065	-0.066	-0.066	-0.063	-0.059	-0.052	-0.044	-0.035	-0.024	-0.012	0.000
VERTICAL CURVE ORDINATE	0.000	0.013	0.025	0.035	0.044	0.052	0.058	0.063	0.066	0.069	0.069	0.069	0.066	0.063	0.058	0.052	0.044	0.035	0.025	0.013	0.000
REQUIRED CAMBER	0	18	37	54	71	88	102	114	123	131	134	135	132	126	117	104	88	70	49	25	0

GIRDER 2

TWENTIETH POINTS	0	.05	.10	.15	.20	.25	.30	.35	.40	.45	.50	.55	.60	.65	.70	.75	.80	.85	.90	.95	0
DEFLECTION DUE TO WEIGHT OF GIRDER	0.000	-0.002	-0.004	-0.006	-0.008	-0.011	-0.013	-0.016	-0.018	-0.019	-0.020	-0.020	-0.020	-0.019	-0.018	-0.016	-0.014	-0.011	-0.007	-0.004	0.000
DEFLECTION DUE TO WEIGHT OF SLAB ✳	0.000	-0.004	-0.008	-0.014	-0.021	-0.027	-0.033	-0.038	-0.042	-0.047	-0.049	-0.051	-0.050	-0.048	-0.044	-0.040	-0.034	-0.026	-0.018	-0.009	0.000
DEFLECTION DUE TO WEIGHT OF BARRIER RAIL	0.000	0.000	-0.001	-0.002	-0.002	-0.003	-0.004	-0.004	-0.005	-0.005	-0.005	-0.005	-0.005	-0.005	-0.005	-0.004	-0.003	-0.003	-0.002	-0.001	0.000
TOTAL DEAD LOAD DEFLECTION	0.000	-0.006	-0.013	-0.022	-0.031	-0.041	-0.050	-0.058	-0.065	-0.071	-0.074	-0.076	-0.075	-0.072	-0.067	-0.060	-0.051	-0.040	-0.027	-0.014	0.000
VERTICAL CURVE ORDINATE	0.000	0.013	0.025	0.035	0.044	0.052	0.058	0.063	0.066	0.069	0.069	0.069	0.066	0.063	0.058	0.052	0.044	0.035	0.025	0.013	0.000
REQUIRED CAMBER	0	19	38	57	75	93	108	121	131	140	143	145	141	135	125	112	95	75	52	27	0

GIRDER 3

TWENTIETH POINTS	0	.05	.10	.15	.20	.25	.30	.35	.40	.45	.50	.55	.60	.65	.70	.75	.80	.85	.90	.95	0
DEFLECTION DUE TO WEIGHT OF GIRDER	0.000	-0.002	-0.004	-0.007	-0.009	-0.012	-0.015	-0.018	-0.020	-0.021	-0.022	-0.023	-0.023	-0.022	-0.020	-0.018	-0.015	-0.012	-0.008	-0.004	0.000
DEFLECTION DUE TO WEIGHT OF SLAB ✳	0.000	-0.004	-0.010	-0.016	-0.023	-0.031	-0.037	-0.042	-0.048	-0.052	-0.055	-0.056	-0.055	-0.053	-0.050	-0.044	-0.038	-0.029	-0.020	-0.011	0.000
DEFLECTION DUE TO WEIGHT OF BARRIER RAIL	0.000	-0.001	-0.001	-0.002	-0.003	-0.003	-0.004	-0.005	-0.005	-0.006	-0.006	-0.006	-0.006	-0.006	-0.005	-0.005	-0.004	-0.003	-0.002	-0.001	0.000
TOTAL DEAD LOAD DEFLECTION	0.000	-0.007	-0.015	-0.025	-0.035	-0.046	-0.056	-0.065	-0.073	-0.079	-0.083	-0.085	-0.084	-0.081	-0.075	-0.067	-0.057	-0.044	-0.030	-0.016	0.000
VERTICAL CURVE ORDINATE	0.000	0.013	0.025	0.035	0.044	0.052	0.058	0.063	0.066	0.069	0.069	0.069	0.066	0.063	0.058	0.052	0.044	0.035	0.025	0.013	0.000
REQUIRED CAMBER	0	20	40	60	79	98	114	128	139	148	152	154	150	144	133	119	101	79	55	29	0

GIRDER 4

TWENTIETH POINTS	0	.05	.10	.15	.20	.25	.30	.35	.40	.45	.50	.55	.60	.65	.70	.75	.80	.85	.90	.95	0
DEFLECTION DUE TO WEIGHT OF GIRDER	0.000	-0.002	-0.004	-0.007	-0.010	-0.014	-0.017	-0.019	-0.022	-0.024	-0.025	-0.025	-0.025	-0.024	-0.022	-0.020	-0.017	-0.013	-0.009	-0.005	0.000
DEFLECTION DUE TO WEIGHT OF SLAB ✳	0.000	-0.005	-0.012	-0.018	-0.026	-0.032	-0.041	-0.048	-0.053	-0.058	-0.061	-0.062	-0.062	-0.060	-0.055	-0.049	-0.042	-0.033	-0.023	-0.012	0.000
DEFLECTION DUE TO WEIGHT OF BARRIER RAIL	0.000	-0.001	-0.001	-0.002	-0.003	-0.004	-0.004	-0.005	-0.006	-0.006	-0.006	-0.007	-0.006	-0.006	-0.006	-0.005	-0.004	-0.003	-0.002	-0.001	0.000
TOTAL DEAD LOAD DEFLECTION	0.000	-0.008	-0.017	-0.027	-0.039	-0.050	-0.062	-0.072	-0.081	-0.088	-0.092	-0.094	-0.093	-0.090	-0.083	-0.074	-0.063	-0.049	-0.034	-0.018	0.000
VERTICAL CURVE ORDINATE	0.000	0.013	0.025	0.035	0.044	0.052	0.058	0.063	0.066	0.069	0.069	0.069	0.066	0.063	0.058	0.052	0.044	0.035	0.025	0.013	0.000
REQUIRED CAMBER	0	21	42	62	83	102	120	135	147	157	161	163	159	153	141	126	107	84	59	31	0

✳ INCLUDES SLAB, BUILDUPS & STAY-IN-PLACE FORMS.

ALL VALUES ARE SHOWN IN METERS, EXCEPT "FINAL CAMBER" WHICH IS SHOWN IN MILLIMETERS.

VALUES GIVEN IN TABLE ARE AT TWENTIETH POINTS BETWEEN ℄ BEARINGS.

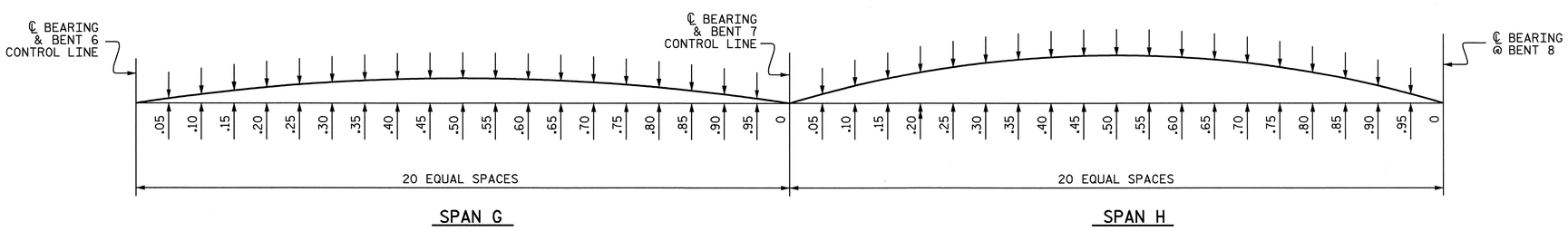

SCHEMATIC OF CAMBER ORDINATES

FOR CAMBER VALUES AT EACH GIDER TWENTIETH POINTS, SEE TABLES.
SLOPE FOR ZERO CAMBER BASE LINE VARIES.

NORTH CAROLINA PROFESSIONAL SEAL 16301 ENGINEER TING HSILUNG FANG
10/08/08

PROJECT NO. U-2519DA
CUMBERLAND COUNTY
STATION: 28+72.626 -RP1BD-

SHEET 4 OF 5

STATE OF NORTH CAROLINA
DEPARTMENT OF TRANSPORTATION
RALEIGH
SUPERSTRUCTURE

DEAD LOAD DEFLECTION TABLES

SPANS G & H

REVISIONS						SHEET NO.
NO.	BY:	DATE:	NO.	BY:	DATE:	S-268
1			3			TOTAL SHEETS
2			4			411

DRAWN BY : J. P. ADAMS DATE : 8/6/07
CHECKED BY : T. H. FANG DATE : 4/25/08

07-OCT-2008 15:58
H:\Structures\frye\str10_RP1BD_F0\Final Plans\u-2519da_sd_dl.dgn
sdombrowski

DEAD LOAD DEFLECTION TABLE FOR GIRDERS

SPAN I

GIRDER 1

TWENTIETH POINTS	0	.05	.10	.15	.20	.25	.30	.35	.40	.45	.50	.55	.60	.65	.70	.75	.80	.85	.90	.95	0
DEFLECTION DUE TO WEIGHT OF GIRDER	0.000	-0.003	-0.007	-0.010	-0.012	-0.014	-0.016	-0.017	-0.018	-0.018	-0.017	-0.016	-0.014	-0.012	-0.010	-0.008	-0.006	-0.004	-0.002	-0.001	0.000
DEFLECTION DUE TO WEIGHT OF SLAB *	0.000	-0.008	-0.014	-0.022	-0.028	-0.034	-0.037	-0.040	-0.041	-0.040	-0.039	-0.037	-0.033	-0.029	-0.024	-0.019	-0.012	-0.008	-0.003	-0.001	0.000
DEFLECTION DUE TO WEIGHT OF BARRIER RAIL	0.000	-0.001	-0.002	-0.002	-0.003	-0.003	-0.004	-0.004	-0.004	-0.004	-0.004	-0.004	-0.004	-0.003	-0.003	-0.002	-0.002	-0.001	-0.001	0.000	0.000
TOTAL DEAD LOAD DEFLECTION	0.000	-0.012	-0.023	-0.034	-0.043	-0.051	-0.057	-0.061	-0.063	-0.062	-0.060	-0.057	-0.051	-0.044	-0.037	-0.029	-0.020	-0.013	-0.006	-0.002	0.000
VERTICAL CURVE ORDINATE	0.000	0.014	0.027	0.038	0.047	0.055	0.062	0.067	0.071	0.073	0.074	0.073	0.071	0.067	0.062	0.055	0.047	0.038	0.027	0.014	0.000
REQUIRED CAMBER	0	26	50	72	90	106	119	128	134	135	134	130	122	111	99	84	67	51	33	16	0

GIRDER 2

TWENTIETH POINTS	0	.05	.10	.15	.20	.25	.30	.35	.40	.45	.50	.55	.60	.65	.70	.75	.80	.85	.90	.95	0
DEFLECTION DUE TO WEIGHT OF GIRDER	0.000	-0.004	-0.007	-0.011	-0.014	-0.016	-0.018	-0.019	-0.020	-0.020	-0.019	-0.018	-0.016	-0.014	-0.011	-0.009	-0.006	-0.004	-0.002	-0.001	0.000
DEFLECTION DUE TO WEIGHT OF SLAB *	0.000	-0.009	-0.017	-0.024	-0.032	-0.037	-0.042	-0.044	-0.045	-0.045	-0.044	-0.042	-0.037	-0.032	-0.027	-0.021	-0.015	-0.009	-0.004	-0.001	0.000
DEFLECTION DUE TO WEIGHT OF BARRIER RAIL	0.000	0.000	-0.002	-0.003	-0.003	-0.004	-0.004	-0.005	-0.005	-0.005	-0.005	-0.004	-0.004	-0.004	-0.003	-0.002	-0.002	-0.001	-0.001	0.000	0.000
TOTAL DEAD LOAD DEFLECTION	0.000	-0.014	-0.026	-0.038	-0.049	-0.057	-0.064	-0.068	-0.070	-0.070	-0.068	-0.064	-0.057	-0.050	-0.041	-0.032	-0.023	-0.014	-0.007	-0.002	0.000
VERTICAL CURVE ORDINATE	0.000	0.014	0.027	0.038	0.047	0.055	0.062	0.067	0.071	0.073	0.074	0.073	0.071	0.067	0.062	0.055	0.047	0.038	0.027	0.014	0.000
REQUIRED CAMBER	0	28	53	76	96	112	126	135	141	143	142	137	128	117	103	87	70	52	34	16	0

GIRDER 3

TWENTIETH POINTS	0	.05	.10	.15	.20	.25	.30	.35	.40	.45	.50	.55	.60	.65	.70	.75	.80	.85	.90	.95	0
DEFLECTION DUE TO WEIGHT OF GIRDER	0.000	-0.004	-0.008	-0.012	-0.015	-0.018	-0.020	-0.021	-0.022	-0.022	-0.021	-0.019	-0.018	-0.015	-0.012	-0.010	-0.007	-0.004	-0.002	-0.001	0.000
DEFLECTION DUE TO WEIGHT OF SLAB *	0.000	-0.010	-0.019	-0.028	-0.035	-0.042	-0.046	-0.050	-0.051	-0.051	-0.049	-0.046	-0.041	-0.036	-0.030	-0.022	-0.016	-0.011	-0.005	-0.002	0.000
DEFLECTION DUE TO WEIGHT OF BARRIER RAIL	0.000	-0.001	-0.002	-0.003	-0.004	-0.004	-0.005	-0.005	-0.005	-0.005	-0.005	-0.005	-0.004	-0.004	-0.003	-0.003	-0.002	-0.001	-0.001	0.000	0.000
TOTAL DEAD LOAD DEFLECTION	0.000	-0.015	-0.029	-0.043	-0.054	-0.064	-0.071	-0.076	-0.078	-0.078	-0.075	-0.070	-0.063	-0.055	-0.045	-0.035	-0.025	-0.016	-0.008	-0.003	0.000
VERTICAL CURVE ORDINATE	0.000	0.014	0.027	0.038	0.047	0.055	0.062	0.067	0.071	0.073	0.074	0.073	0.071	0.067	0.062	0.055	0.047	0.038	0.027	0.014	0.000
REQUIRED CAMBER	0	29	56	81	101	119	133	143	149	151	149	143	134	122	107	90	72	54	35	17	0

GIRDER 4

TWENTIETH POINTS	0	.05	.10	.15	.20	.25	.30	.35	.40	.45	.50	.55	.60	.65	.70	.75	.80	.85	.90	.95	0
DEFLECTION DUE TO WEIGHT OF GIRDER	0.000	-0.005	-0.009	-0.013	-0.017	-0.019	-0.022	-0.023	-0.024	-0.024	-0.023	-0.021	-0.019	-0.017	-0.014	-0.011	-0.007	-0.005	-0.002	-0.001	0.000
DEFLECTION DUE TO WEIGHT OF SLAB *	0.000	-0.011	-0.021	-0.031	-0.038	-0.046	-0.051	-0.054	-0.056	-0.055	-0.053	-0.051	-0.045	-0.039	-0.031	-0.024	-0.018	-0.011	-0.005	-0.002	0.000
DEFLECTION DUE TO WEIGHT OF BARRIER RAIL	0.000	-0.001	-0.002	-0.003	-0.004	-0.005	-0.005	-0.006	-0.006	-0.006	-0.006	-0.005	-0.005	-0.004	-0.004	-0.003	-0.002	-0.001	-0.001	0.000	0.000
TOTAL DEAD LOAD DEFLECTION	0.000	-0.017	-0.032	-0.047	-0.059	-0.070	-0.078	-0.083	-0.086	-0.085	-0.082	-0.077	-0.069	-0.060	-0.049	-0.038	-0.027	-0.017	-0.008	-0.003	0.000
VERTICAL CURVE ORDINATE	0.000	0.014	0.027	0.038	0.047	0.055	0.062	0.067	0.071	0.073	0.074	0.073	0.071	0.067	0.062	0.055	0.047	0.038	0.027	0.014	0.000
REQUIRED CAMBER	0	31	59	85	106	125	140	150	157	158	156	150	140	127	111	93	74	55	35	17	0

SPAN J

GIRDER 1

TWENTIETH POINTS	0	.05	.10	.15	.20	.25	.30	.35	.40	.45	.50	.55	.60	.65	.70	.75	.80	.85	.90	.95	0
DEFLECTION DUE TO WEIGHT OF GIRDER	0.000	-0.001	-0.002	-0.004	-0.006	-0.008	-0.010	-0.012	-0.014	-0.015	-0.017	-0.017	-0.017	-0.017	-0.016	-0.014	-0.012	-0.009	-0.007	-0.003	0.000
DEFLECTION DUE TO WEIGHT OF SLAB *	0.000	-0.001	-0.004	-0.007	-0.013	-0.018	-0.023	-0.028	-0.032	-0.036	-0.038	-0.040	-0.040	-0.038	-0.036	-0.033	-0.027	-0.022	-0.014	-0.008	0.000
DEFLECTION DUE TO WEIGHT OF BARRIER RAIL	0.000	0.000	0.000	-0.001	-0.001	-0.002	-0.003	-0.003	-0.004	-0.004	-0.004	-0.004	-0.004	-0.004	-0.004	-0.003	-0.003	-0.002	-0.002	-0.001	0.000
TOTAL DEAD LOAD DEFLECTION	0.000	-0.002	-0.006	-0.012	-0.020	-0.028	-0.036	-0.043	-0.050	-0.055	-0.059	-0.061	-0.061	-0.059	-0.056	-0.050	-0.042	-0.033	-0.023	-0.012	0.000
VERTICAL CURVE ORDINATE	0.000	0.003	0.004	0.004	0.004	0.004	0.004	0.003	0.003	0.003	0.003	0.002	0.002	0.002	0.002	0.001	0.001	0.001	0.001	0.000	0.000
REQUIRED CAMBER	0	5	10	16	24	32	40	46	53	58	62	63	63	61	58	51	43	34	24	12	0

GIRDER 2

TWENTIETH POINTS	0	.05	.10	.15	.20	.25	.30	.35	.40	.45	.50	.55	.60	.65	.70	.75	.80	.85	.90	.95	0
DEFLECTION DUE TO WEIGHT OF GIRDER	0.000	-0.001	-0.002	-0.004	-0.006	-0.009	-0.011	-0.013	-0.015	-0.017	-0.018	-0.019	-0.019	-0.019	-0.017	-0.016	-0.013	-0.010	-0.007	-0.004	0.000
DEFLECTION DUE TO WEIGHT OF SLAB *	0.000	-0.001	-0.004	-0.009	-0.014	-0.020	-0.026	-0.032	-0.037	-0.041	-0.043	-0.044	-0.045	-0.043	-0.041	-0.036	-0.032	-0.025	-0.017	-0.008	0.000
DEFLECTION DUE TO WEIGHT OF BARRIER RAIL	0.000	0.000	-0.001	-0.001	-0.002	-0.002	-0.003	-0.003	-0.004	-0.004	-0.005	-0.005	-0.005	-0.005	-0.004	-0.004	-0.003	-0.003	-0.002	-0.001	0.000
TOTAL DEAD LOAD DEFLECTION	0.000	-0.002	-0.007	-0.014	-0.022	-0.031	-0.040	-0.048	-0.056	-0.062	-0.066	-0.068	-0.069	-0.067	-0.062	-0.056	-0.048	-0.038	-0.026	-0.013	0.000
VERTICAL CURVE ORDINATE	0.000	0.003	0.004	0.004	0.004	0.004	0.004	0.003	0.003	0.003	0.003	0.002	0.002	0.002	0.002	0.001	0.001	0.001	0.001	0.000	0.000
REQUIRED CAMBER	0	5	11	18	26	35	44	51	59	65	69	70	71	69	64	57	49	39	27	13	0

GIRDER 3

TWENTIETH POINTS	0	.05	.10	.15	.20	.25	.30	.35	.40	.45	.50	.55	.60	.65	.70	.75	.80	.85	.90	.95	0
DEFLECTION DUE TO WEIGHT OF GIRDER	0.000	-0.001	-0.002	-0.004	-0.007	-0.009	-0.012	-0.015	-0.017	-0.019	-0.020	-0.021	-0.021	-0.020	-0.019	-0.017	-0.015	-0.012	-0.008	-0.004	0.000
DEFLECTION DUE TO WEIGHT OF SLAB *	0.000	-0.001	-0.004	-0.010	-0.015	-0.022	-0.028	-0.034	-0.040	-0.044	-0.048	-0.049	-0.050	-0.049	-0.045	-0.041	-0.034	-0.027	-0.019	-0.010	0.000
DEFLECTION DUE TO WEIGHT OF BARRIER RAIL	0.000	0.000	-0.001	-0.001	-0.002	-0.003	-0.003	-0.004	-0.004	-0.005	-0.005	-0.005	-0.005	-0.005	-0.005	-0.004	-0.004	-0.003	-0.002	-0.001	0.000
TOTAL DEAD LOAD DEFLECTION	0.000	-0.002	-0.007	-0.015	-0.024	-0.034	-0.043	-0.053	-0.061	-0.068	-0.073	-0.075	-0.076	-0.074	-0.069	-0.062	-0.053	-0.042	-0.029	-0.015	0.000
VERTICAL CURVE ORDINATE	0.000	0.003	0.004	0.004	0.004	0.004	0.004	0.003	0.003	0.003	0.003	0.002	0.002	0.002	0.002	0.001	0.001	0.001	0.001	0.000	0.000
REQUIRED CAMBER	0	5	11	19	28	38	47	56	64	71	76	77	78	76	71	63	54	43	30	15	0

GIRDER 4

TWENTIETH POINTS	0	.05	.10	.15	.20	.25	.30	.35	.40	.45	.50	.55	.60	.65	.70	.75	.80	.85	.90	.95	0
DEFLECTION DUE TO WEIGHT OF GIRDER	0.000	-0.001	-0.002	-0.004	-0.007	-0.010	-0.013	-0.016	-0.019	-0.021	-0.022	-0.023	-0.023	-0.022	-0.021	-0.019	-0.016	-0.013	-0.009	-0.005	0.000
DEFLECTION DUE TO WEIGHT OF SLAB *	0.000	-0.002	-0.005	-0.011	-0.017	-0.023	-0.031	-0.038	-0.043	-0.048	-0.052	-0.054	-0.054	-0.054	-0.050	-0.044	-0.038	-0.030	-0.021	-0.010	0.000
DEFLECTION DUE TO WEIGHT OF BARRIER RAIL	0.000	0.000	-0.001	-0.001	-0.002	-0.003	-0.003	-0.004	-0.005	-0.005	-0.006	-0.006	-0.006	-0.005	-0.005	-0.005	-0.004	-0.003	-0.002	-0.001	0.000
TOTAL DEAD LOAD DEFLECTION	0.000	-0.003	-0.008	-0.016	-0.026	-0.036	-0.047	-0.058	-0.067	-0.074	-0.080	-0.083	-0.083	-0.081	-0.076	-0.068	-0.058	-0.046	-0.032	-0.016	0.000
VERTICAL CURVE ORDINATE	0.000	0.003	0.004	0.004	0.004	0.004	0.004	0.003	0.003	0.003	0.003	0.002	0.002	0.002	0.002	0.001	0.001	0.001	0.001	0.000	0.000
REQUIRED CAMBER	0	6	12	20	30	40	51	61	70	77	83	85	85	83	78	69	59	47	33	16	0

* INCLUDES SLAB, BUILDUPS & STAY-IN-PLACE FORMS.
ALL VALUES ARE SHOWN IN METERS, EXCEPT "FINAL CAMBER" WHICH IS SHOWN IN MILLIMETERS.
VALUES GIVEN IN TABLE ARE AT TWENTIETH POINTS BETWEEN ℄ BEARINGS.

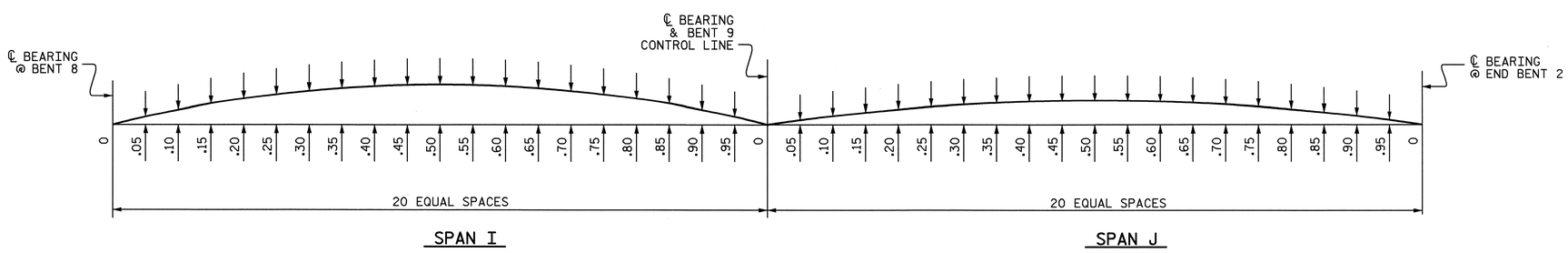

SCHEMATIC OF CAMBER ORDINATES

FOR CAMBER VALUES AT EACH GIDER TWENTIETH POINTS, SEE TABLES.
SLOPE FOR ZERO CAMBER BASE LINE VARIES.

NORTH CAROLINA PROFESSIONAL SEAL 16301 ENGINEER TING HSIUNG FANG
10/08/08

PROJECT NO. U-2519DA
CUMBERLAND COUNTY
STATION: 28+72.626 -RP1BD-

SHEET 5 OF 5

STATE OF NORTH CAROLINA
DEPARTMENT OF TRANSPORTATION
RALEIGH
SUPERSTRUCTURE

DEAD LOAD DEFLECTION TABLES

SPANS I & J

REVISIONS						SHEET NO.
NO.	BY:	DATE:	NO.	BY:	DATE:	S-269
1			3			TOTAL SHEETS
2			4			411

DRAWN BY : J. P. ADAMS DATE : 8/6/07
CHECKED BY : T. H. FANG DATE : 4/25/08

07-OCT-2008 15:58
H:\Structures\frye\str10_RP1BD_F0\Final Plans\u-2519da_sd_dl.dgn
sdombrowski

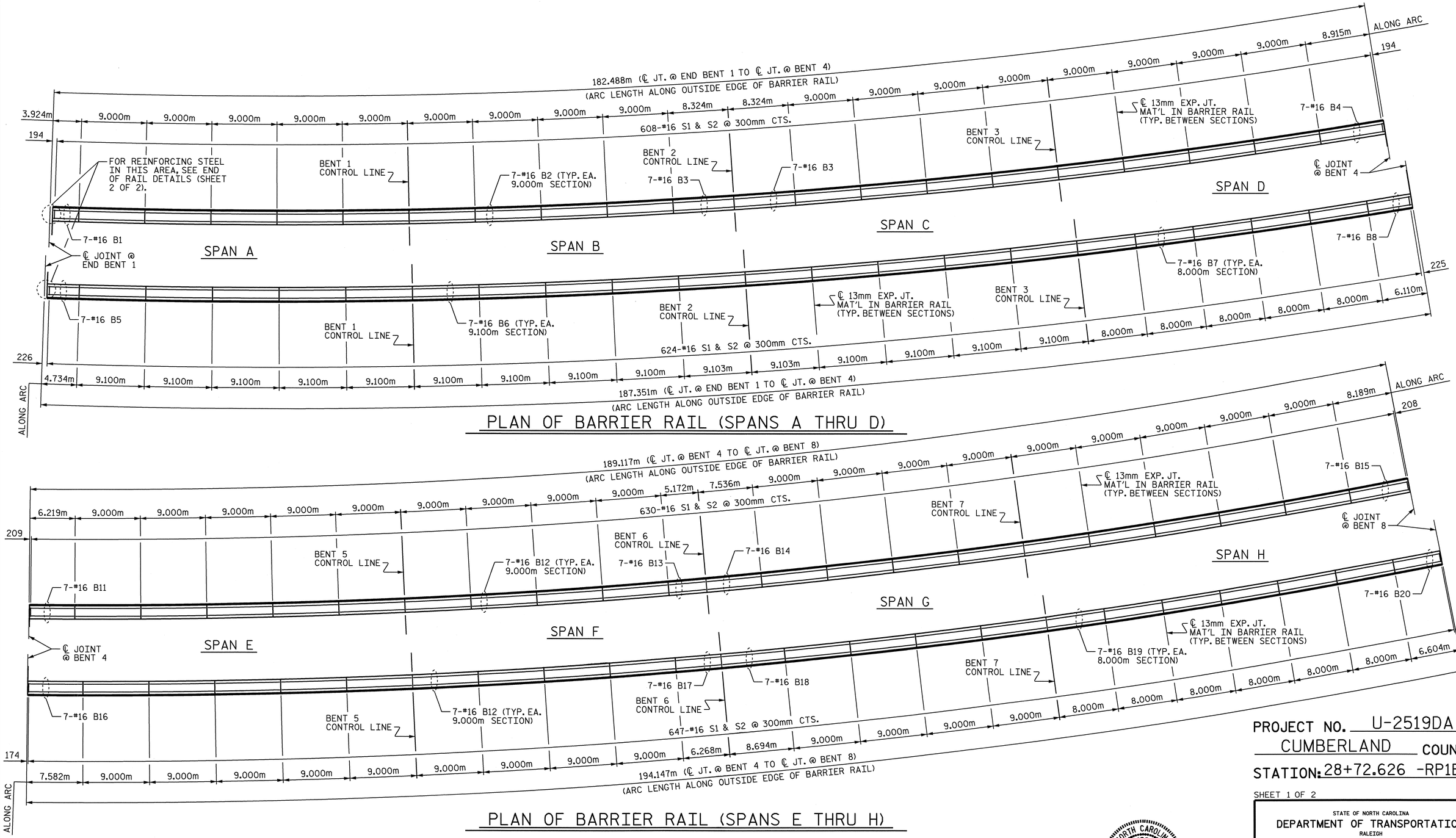

PLAN OF BARRIER RAIL (SPANS A THRU D)

PLAN OF BARRIER RAIL (SPANS E THRU H)

PROJECT NO. U-2519DA

CUMBERLAND COUNTY

STATION: 28+72.626 -RP1BD-

SHEET 1 OF 2

NORTH CAROLINA PROFESSIONAL SEAL 16301 ENGINEER TING-HSIUNG FANG

10/08/08

STATE OF NORTH CAROLINA
DEPARTMENT OF TRANSPORTATION
RALEIGH

SUPERSTRUCTURE

CONCRETE BARRIER RAIL

REVISIONS						SHEET NO.
NO.	BY:	DATE:	NO.	BY:	DATE:	S-270
1			3			TOTAL SHEETS
2			4			411

DRAWN BY : E.C. LOCKLEAR DATE : 5-1-08

CHECKED BY : T.H. FANG DATE : 6-15-08

07-OCT-2008 15:58
H:\Structures\frye\str10_RP1BD_F0\Final Plans\u2519da_sd_br_10.dgn
sdombrowski

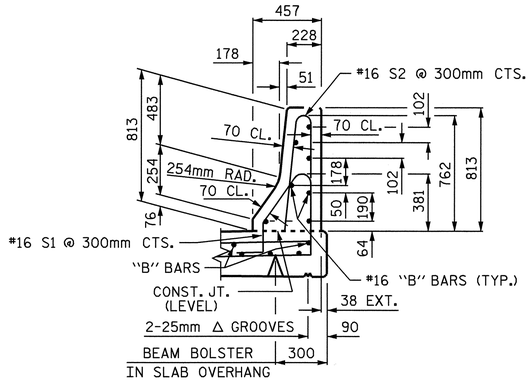

SECTION THRU RAIL

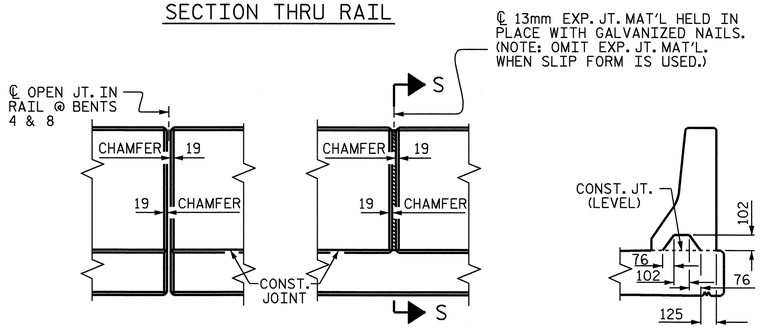

ELEVATION AT EXPANSION JOINTS

SECTION S-S

AT DAM IN OPEN JOINT (THIS IS TO BE USED ONLY WHEN SLIP FORM IS USED)

BARRIER RAIL DETAILS

NOTES:

THE BARRIER RAIL IN EACH CONTINUOUS UNIT SHALL NOT BE CAST UNTIL ALL SLAB CONCRETE IN THAT UNIT HAS BEEN CAST AND HAS REACHED A MINIMUM COMPRESSIVE STRENGTH OF 20.7 MPa.

THE JOINTS IN THE DECK SHALL BE FORMED PRIOR TO THE CASTING OF BARRIER RAIL.

ALL REINFORCING STEEL IN BARRIER RAILS SHALL BE EPOXY COATED.

THE #16 S1 AND #16 S2 BARS MAY BE ADJUSTED SLIGHTLY IN ORDER TO MAINTAIN A 50mm MINIMUM CLEARANCE TO THE 13mm EXPANSION JOINT MATERIAL.

VERTICAL GROOVED CONTRACTION JOINTS, 12mm IN DEPTH, SHALL BE TOOLED IN ALL EXPOSED FACES OF THE BARRIER RAIL AND IN ACCORDANCE WITH ARTICLE 825-10(B) OF THE STANDARD SPECIFICATIONS. THE CONTRACTION JOINT SHALL BE LOCATED AT EACH THIRD POINT BETWEEN BARRIER RAIL EXPANSION JOINTS. ONLY ONE CONTRACTION JOINT IS REQUIRED AT MIDPOINT OF BARRIER RAIL SEGMENTS LESS THAN 6.1m IN LENGTH AND NO CONTRACTION JOINTS ARE REQUIRED FOR THOSE SEGMENTS LESS THAN 3.5m IN LENGTH.

BILL OF MATERIAL

SPAN A-D

FOR CONCRETE BARRIER RAIL ONLY

BAR	NO.	SIZE	TYPE	LENGTH	WEIGHT
✳B1	7	#16	STR	3780	41
✳B2	119	#16	STR	8880	1640
✳B3	14	#16	STR	8200	178
✳B4	7	#16	STR	8760	95
✳B5	7	#16	STR	4580	50
✳B6	105	#16	STR	8980	1463
✳B7	35	#16	STR	7880	428
✳B8	7	#16	STR	5960	65
✳S1	1232	#16	1	1500	2868
✳S2	1232	#16	2	1580	3021

✳ EPOXY COATED REINFORCING STEEL 9,849 kg
CLASS AA CONCRETE 92.7m³
CONCRETE BARRIER RAIL 369.691m

SPAN E-H

FOR CONCRETE BARRIER RAIL ONLY

BAR	NO.	SIZE	TYPE	LENGTH	WEIGHT
✳B11	7	#16	STR	6060	66
✳B12	217	#16	STR	8880	2991
✳B13	7	#16	STR	5060	55
✳B14	7	#16	STR	7420	81
✳B15	7	#16	STR	8020	87
✳B16	7	#16	STR	7420	81
✳B17	7	#16	STR	6160	67
✳B18	7	#16	STR	8580	93
✳B19	42	#16	STR	7880	514
✳B20	7	#16	STR	6440	70
✳S1	1277	#16	1	1500	2973
✳S2	1277	#16	2	1580	3131

✳ EPOXY COATED REINFORCING STEEL 10,208 kg
CLASS AA CONCRETE 96.1m³
CONCRETE BARRIER RAIL 383.104m

BAR TYPES

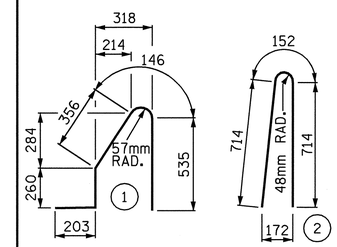

ALL BAR DIMENSIONS ARE OUT TO OUT.

SPAN I-J

FOR CONCRETE BARRIER RAIL ONLY

BAR	NO.	SIZE	TYPE	LENGTH	WEIGHT
✳B21	7	#16	STR	6800	74
✳B22	84	#16	STR	7880	1027
✳B23	7	#16	STR	6700	73
✳B24	7	#16	STR	5260	57
✳B25	84	#16	STR	8380	1092
✳B26	7	#16	STR	5160	56
✳S1	742	#16	1	1500	1727
✳S2	742	#16	2	1580	1820

✳ EPOXY COATED REINFORCING STEEL 5,926 kg
CLASS AA CONCRETE 55.8m³
CONCRETE BARRIER RAIL 222.382m

TOTAL CONCRETE BARRIER RAIL 975.177m

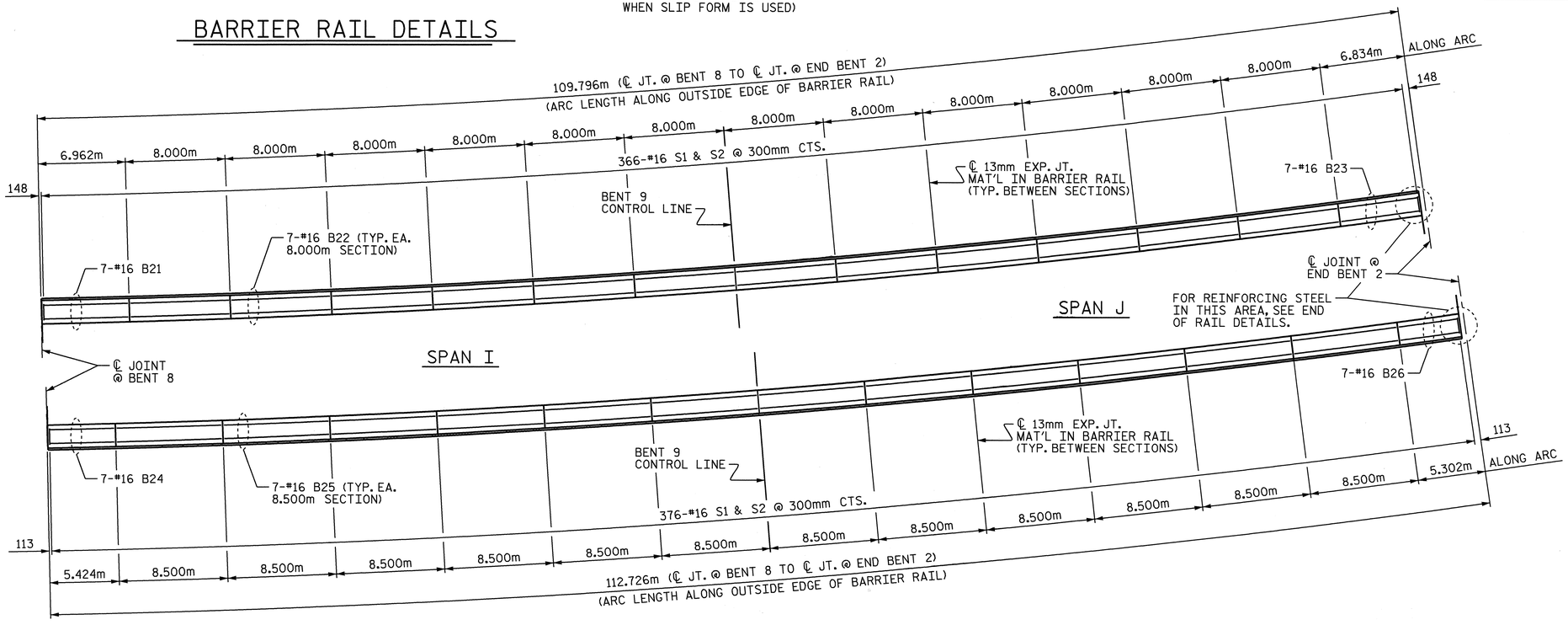

PLAN OF BARRIER RAIL (SPANS I & J)

NORTH CAROLINA PROFESSIONAL SEAL 16301 ENGINEER TING HSIUNG FANG
10/08/08

PROJECT NO. U-2519DA
CUMBERLAND COUNTY
STATION: 28+72.626 -RP1BD-

SHEET 2 OF 2

STATE OF NORTH CAROLINA
DEPARTMENT OF TRANSPORTATION
RALEIGH

SUPERSTRUCTURE

CONCRETE BARRIER RAIL

REVISIONS						SHEET NO.
NO.	BY:	DATE:	NO.	BY:	DATE:	S-271
1			3			TOTAL SHEETS
2			4			411

DRAWN BY : E.C. LOCKLEAR DATE : 5-1-08
CHECKED BY : T.H. FANG DATE : 6-25-08

07-OCT-2008 15:58
H:\Structures\frye\str10_RP1BD_F0\Final Plans\u2519da_sd_br_10.dgn
sdombrowski

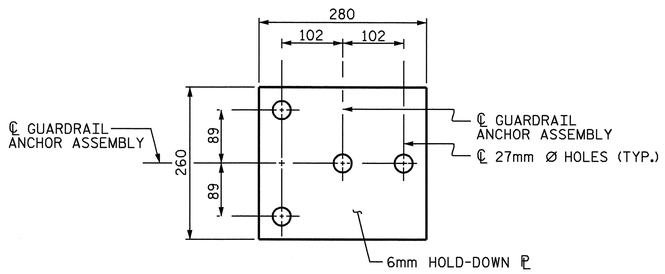

PLAN

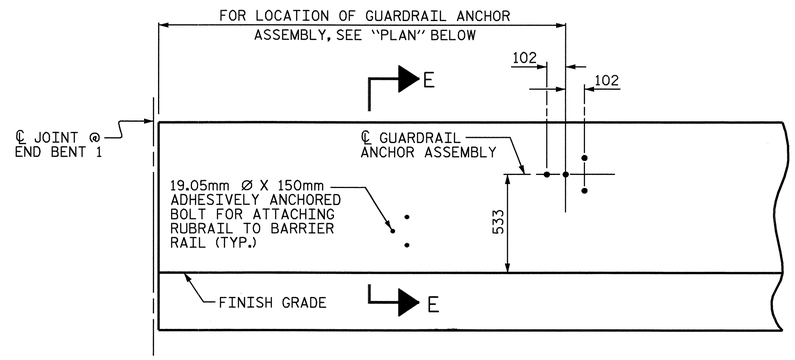

ELEVATION

FOR LOCATION OF RUBRAIL, SEE ROADWAY STD. 862.03

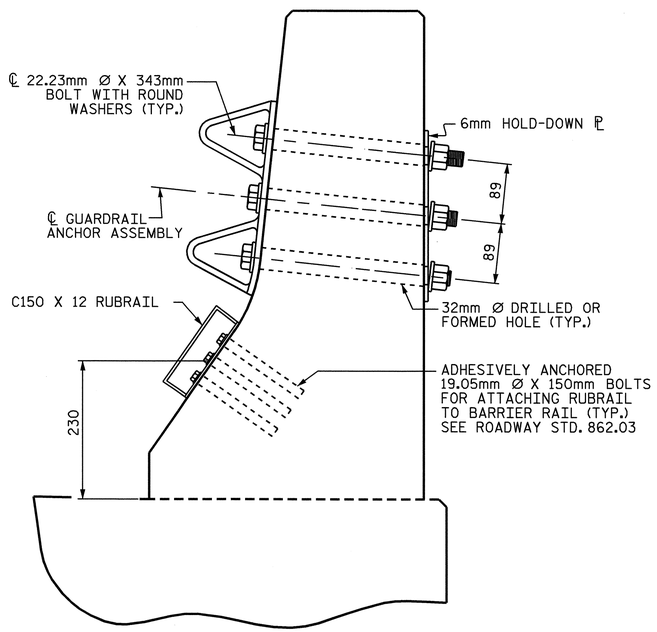

SECTION E-E

GUARDRAIL ANCHOR ASSEMBLY DETAILS

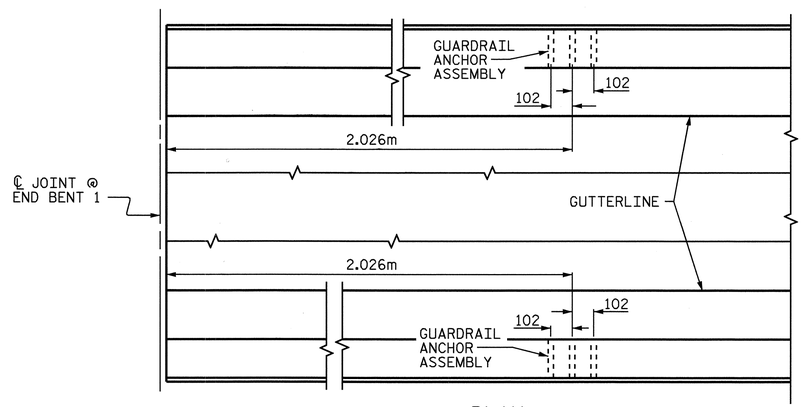

PLAN

LOCATION OF ANCHORS FOR GUARDRAIL

END BENT 1 SHOWN, END BENT 2 LEFT SIDE SIMILAR.

NOTES

THE GUARDRAIL ANCHOR ASSEMBLY SHALL CONSIST OF A 6mm HOLD DOWN PLATE AND 4 - 22.23mm Ø BOLTS WITH NUTS AND WASHERS, RUBRAIL, AND ADHESIVELY ANCHORED BOLTS.

THE HOLD-DOWN PLATE SHALL CONFORM TO AASHTO M270 GRADE 36. AFTER FABRICATION, THE HOLD-DOWN PLATE SHALL BE HOT-DIP GALVANIZED IN ACCORDANCE WITH AASHTO M111.

BOLTS SHALL CONFORM TO THE REQUIREMENTS OF ASTM A307 AND NUTS SHALL CONFORM TO THE REQUIREMENTS OF AASHTO M291. BOLTS, NUTS AND WASHERS SHALL BE GALVANIZED. (AT THE CONTRACTOR'S OPTION, STAINLESS STEEL BOLTS, NUTS AND WASHERS MAY BE USED AS AN ALTERNATE FOR THE 22.23mm Ø GALVANIZED BOLTS, NUTS AND WASHERS. THEY SHALL CONFORM TO OR EXCEED THE MECHANICAL REQUIREMENTS OF ASTM A307. THE USE OF THIS ALTERNATE SHALL BE APPROVED BY THE ENGINEER.)

THE GUARDRAIL ANCHOR ASSEMBLY IS REQUIRED AT ALL POINTS WHERE APPROACH GUARDRAIL IS TO BE ATTACHED TO THE END OF BARRIER RAIL. FOR POINTS OF ATTACHMENT, SEE SKETCH.

AFTER INSTALLATION, THE EXPOSED THREAD OF THE BOLT SHALL BE BURRED WITH A SHARP POINTED TOOL.

THE COST OF THE GUARDRAIL ANCHOR ASSEMBLY SHALL BE INCLUDED IN THE UNIT CONTRACT PRICE BID FOR CONCRETE BARRIER RAIL.

THE 32mm Ø HOLES SHALL BE FORMED OR DRILLED WITH A CORE BIT. IMPACT TOOLS WILL NOT BE PERMITTED. ANY CONCRETE DAMAGED BY THIS WORK SHALL BE REPAIRED TO THE SATISFACTION OF THE ENGINEER.

THE C150 X 12 RUBRAIL IS TO BE ADHESIVELY ANCHORED TO THE RAIL USING THREE 19.05mm Ø X 150mm BOLTS WITH WASHERS. LEVEL ONE FIELD TESTING IS REQUIRED, AND THE YIELD LOAD OF THE 19.05mm Ø BOLTS IS 53.4kN. FOR ADHESIVELY ANCHORED ANCHOR BOLTS OR DOWELS, SEE SPECIAL PROVISIONS. SEE ROADWAY STANDARD 862.03FOR DETAILS AND LOCATION OF THE RUBRAIL.

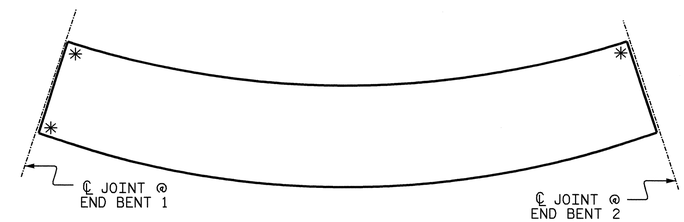

SKETCH SHOWING POINTS OF ATTACHMENTS

✳ DENOTES GUARDRAIL ANCHOR ASSEMBLY

PROJECT NO. U-2519DA

CUMBERLAND COUNTY

STATION: 28+72.626 -RP1BD-

NORTH CAROLINA PROFESSIONAL SEAL 16301 ENGINEER TING HSIUNG FANG

10/08/08

STATE OF NORTH CAROLINA
DEPARTMENT OF TRANSPORTATION
RALEIGH

STANDARD

GUARDRAIL ANCHORAGE FOR BARRIER RAIL

REVISIONS						SHEET NO.
NO.	BY:	DATE:	NO.	BY:	DATE:	S-272
1			3			TOTAL SHEETS
2			4			411

ASSEMBLED BY : E.C. LOCKLEAR DATE : 6/3/08
CHECKED BY : T. H. FANG DATE : 6/24/08

DRAWN BY : TLA 5/06
CHECKED BY : GM 5/06

ADDED 5/1/06

07-OCT-2008 15:58
H:\Structures\frye\str10_RP1BD_F0\Final Plans\u2519da_sd_br_10.dgn
sdombrowski

STD. NO. GRA2SM

THIS SHEET
INTENTIONALLY
LEFT BLANK

PROJECT NO. U-2519DA
CUMBERLAND COUNTY
STATION: 28+72.626-RP1BD-

STATE OF NORTH CAROLINA
DEPARTMENT OF TRANSPORTATION
RALEIGH

BLANK SHEET

REVISIONS						SHEET NO.
NO.	BY:	DATE:	NO.	BY:	DATE:	S-273
1			3			TOTAL SHEETS
2			4			411

ASSEMBLED BY :	DATE :
CHECKED BY :	DATE :
DRAWN BY : EEM 1/96	REV. 7/10/01 LES/RDR
CHECKED BY : RGW 1/96	REV. 5/7/03RR RWW/JTE
	REV. 5/1/06 TLA/GM

18-MAR-2011 10:59
K:\TIPProjects-U\U2519da\Structures\frye\str10_RP1BD_F0\Final Plans\U2519DA_sd_aej_10.dgn
ttang

STD. NO. AEJ1SM

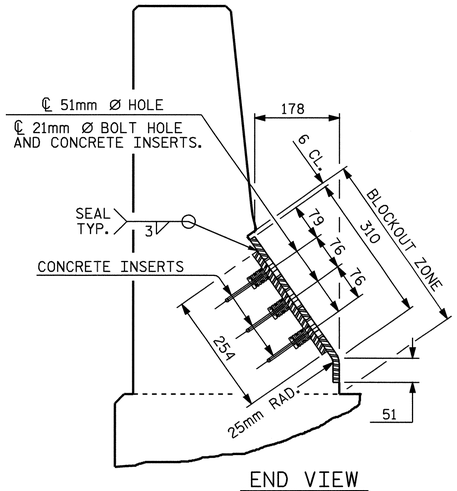

END VIEW

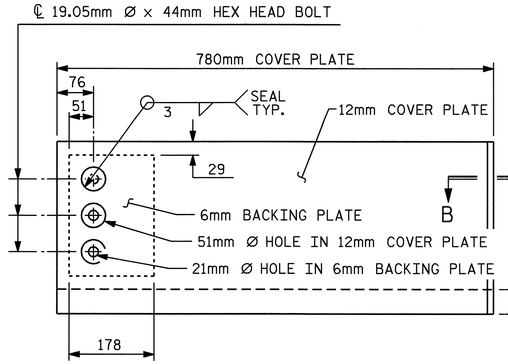

TYPE I - ELEVATION VIEW

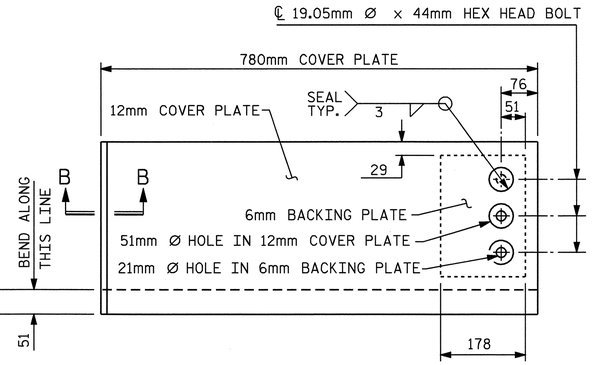

TYPE II - ELEVATION VIEW

BEND ALONG THIS LINE

51

COVER PLATE DETAILS

NOTES

FOR MODULAR EXPANSION JOINT SEALS, SEE SPECIAL PROVISIONS.

THE STEEL PLATES SHALL CONFORM TO AASHTO M270 GRADE 250 OR APPROVED EQUAL AND BE PAINTED IN ACCORDANCE WITH THE STANDARD SPECIFICATIONS. AT THE CONTRACTOR'S OPTION, THE PLATES MAY BE METALLIZED AFTER FABRICATION. SEE SPECIAL PROVISIONS FOR THERMAL SPRAYED COATINGS (METALLIZATION).

THE 19.05mm Ø HEX HEAD BOLTS SHALL CONFORM TO ASTM F593 ALLOY 304 STAINLESS STEEL.

THE 19.05mm CONCRETE INSERTS SHALL BE CLOSED-END FERRULES WITH LOOPED WIRE STRUTS ATTACHED TO THEM. THE INSERTS SHALL CONFORM TO AASHTO M169, GRADE 12L14 AND SHALL HAVE A TENSILE WORKING LOAD CAPACITY OF 13.3 kN.

NO SEPARATE PAYMENT WILL BE MADE FOR FURNISHING AND INSTALLING THE COVER PLATE. THE ENTIRE COST OF THIS WORK SHALL BE INCLUDED IN THE LUMP SUM PRICE FOR "MODULAR EXPANSION JOINT SEALS."

SET TOP OF MODULAR EXPANSION JOINT SEAL DEVICE A MINIMUM OF 3mm AND A MAXIMUM OF 6mm BELOW THE TOP OF SLAB.

	SKEW ANGLE	TOTAL MOVEMENT ALONG ℄ ROADWAY
BENT 4	90°-00'-00"	100mm
BENT 8	90°-00'-00"	85mm

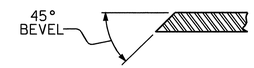

SECTION B-B

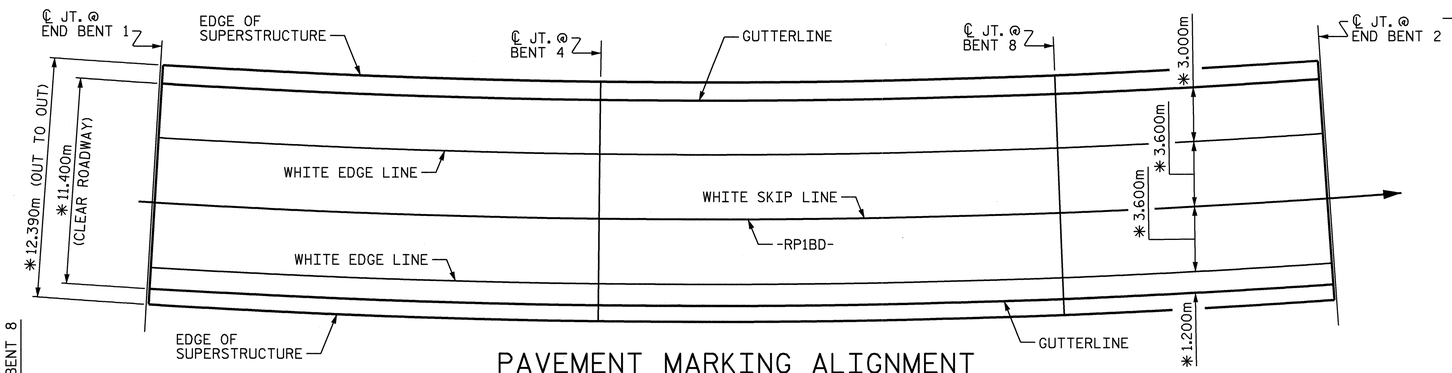

PAVEMENT MARKING ALIGNMENT

*RADIAL DIMENSIONS

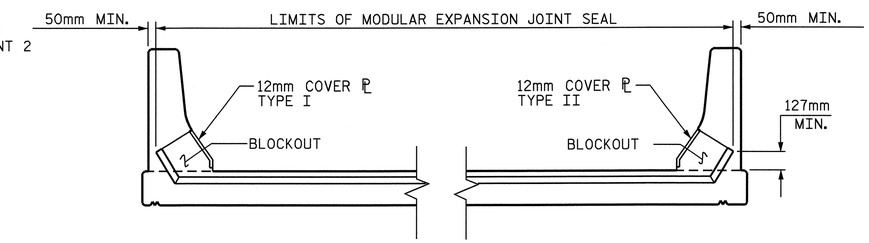

SKETCH SHOWING LIMITS OF MODULAR EXPANSION JOINT SEAL-BARRIER RAIL

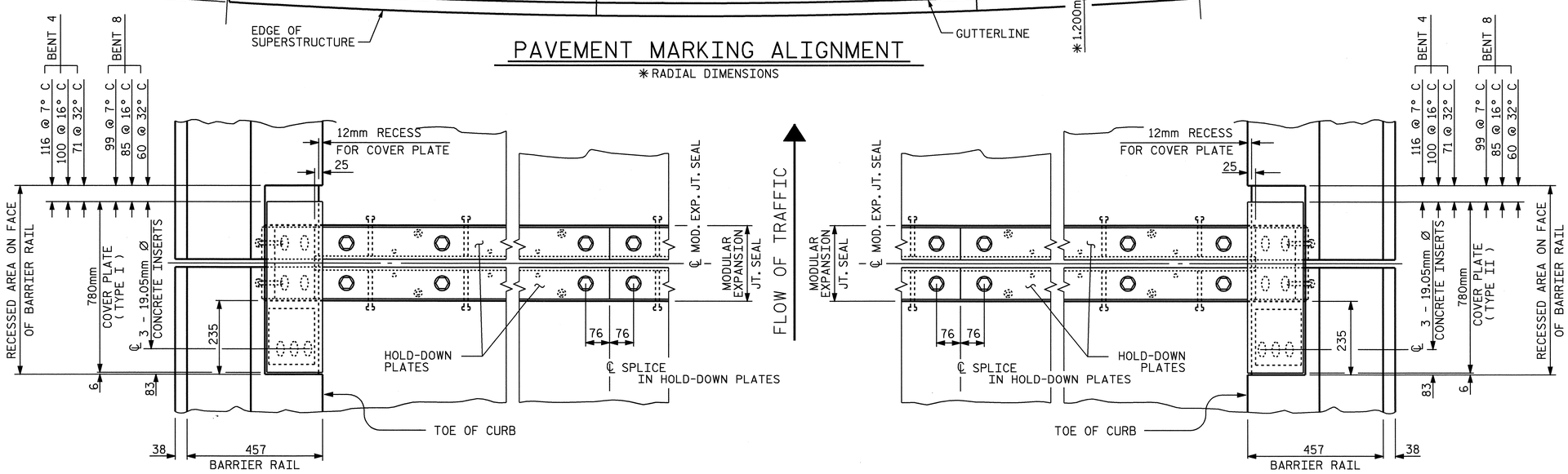

LEFT SIDE

RIGHT SIDE

PLAN OF MODULAR EXPANSION JOINT SEAL

@ BENTS 4 & 8

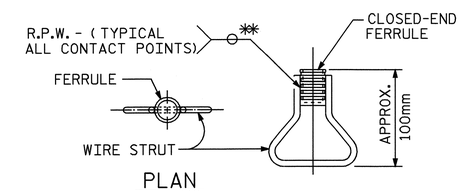

PLAN

ELEVATION

CONCRETE INSERT

** EACH WELDED ATTACHMENT OF WIRE TO FERRULE SHALL DEVELOP THE TENSILE STRENGTH OF THE WIRE.

PROJECT NO. U-2519DA
CUMBERLAND COUNTY
STATION: 28+72.626 -RP1BD-

STATE OF NORTH CAROLINA
DEPARTMENT OF TRANSPORTATION
RALEIGH

STANDARD

MODULAR EXPANSION JOINT SEAL DETAILS FOR BARRIER RAIL AT BENTS 4 & 8

NORTH CAROLINA PROFESSIONAL SEAL 029441 ENGINEER KRISTY W. ALFORD
10/13/08

REVISIONS						SHEET NO.
NO.	BY:	DATE:	NO.	BY:	DATE:	S-274
1			3			TOTAL SHEETS
2			4			411

ASSEMBLED BY : E.C. LOCKLEAR	DATE : 7-14-08
CHECKED BY : K.W. ALFORD	DATE : 7-21-08
DRAWN BY : EEM 7/96	REV. 8/16/99 RAL/LES
CHECKED BY : VAP 7/96	REV. 10/17/00R RWW/LES
	REV. 5/1/06 TLA/GM

07-OCT-2008 15:58
H:\Structures\frye\str10_RP1BD_F0\Final Plans\U2519DA_sd_mej_10.dgn
sdombrowski

STD. NO. MEJS1SM

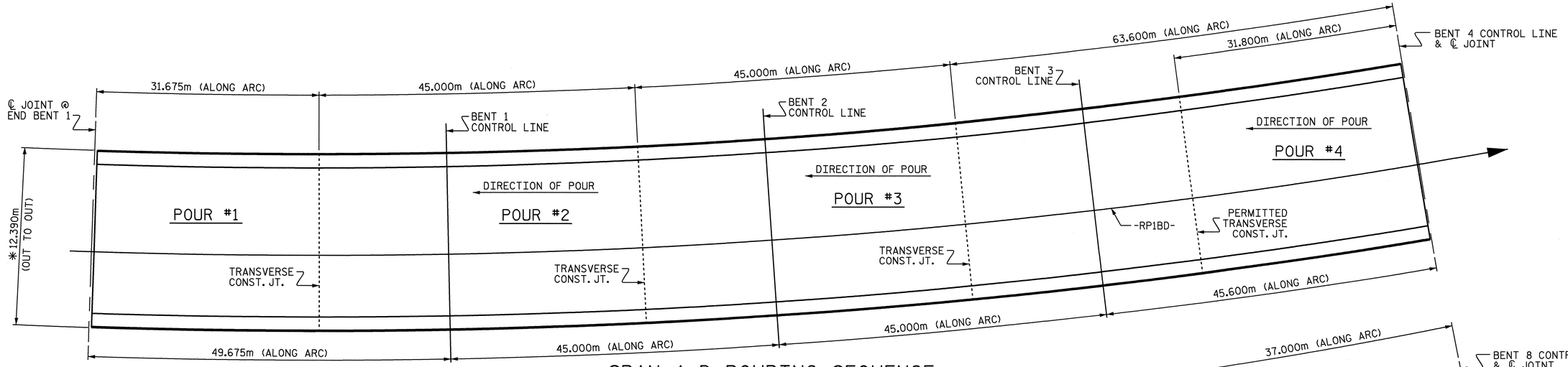

SPAN A-D POURING SEQUENCE

*RADIAL DIMENSIONS

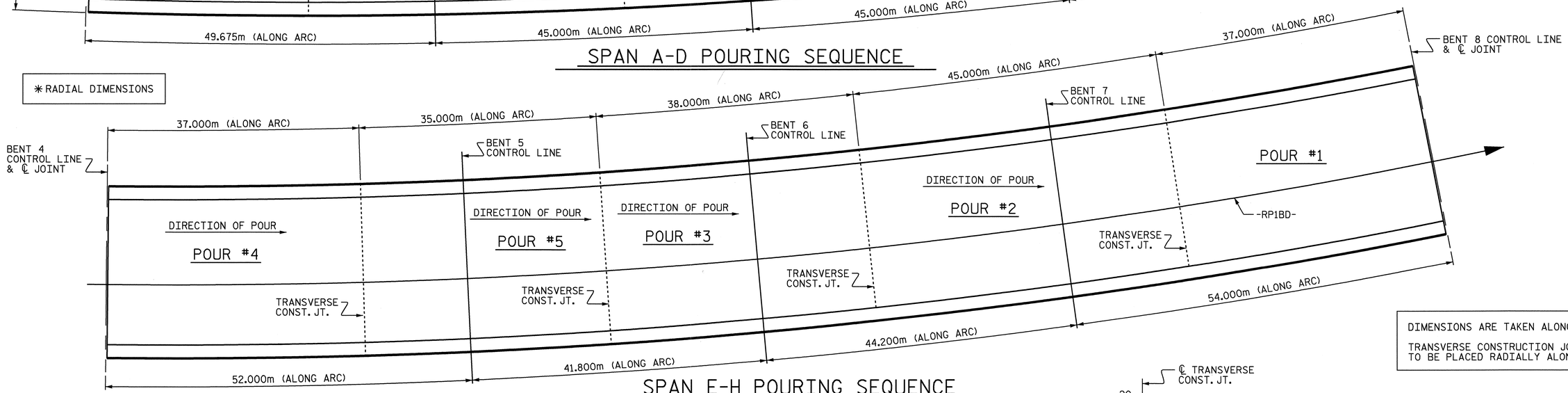

SPAN E-H POURING SEQUENCE

DIMENSIONS ARE TAKEN ALONG -RP1BD-.

TRANSVERSE CONSTRUCTION JOINTS ARE TO BE PLACED RADIALLY ALONG -RP1BD-.

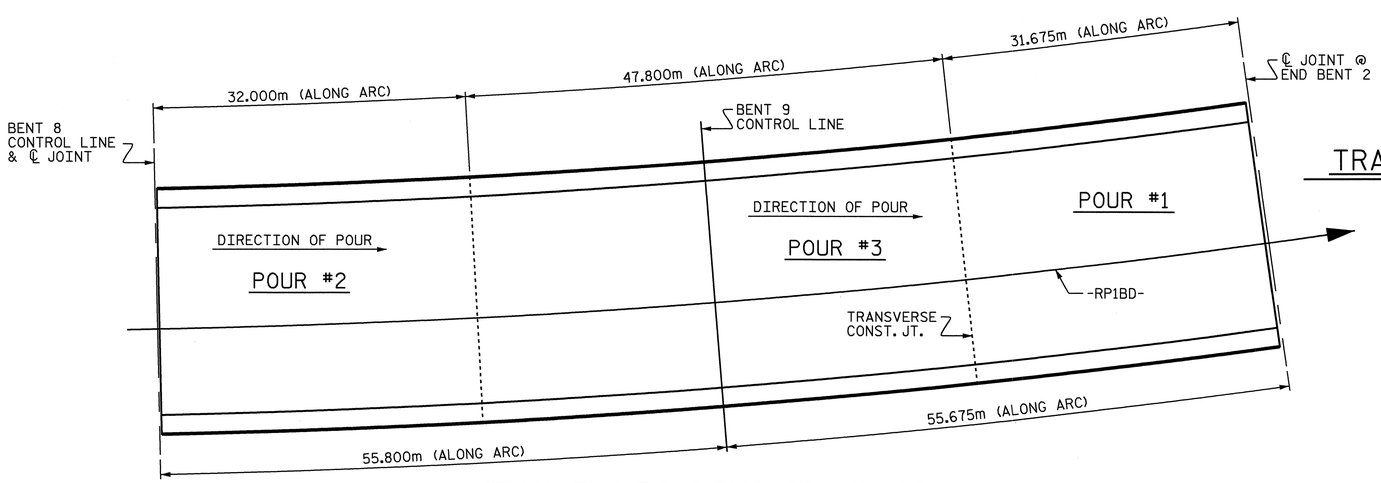

SPAN I-J POURING SEQUENCE

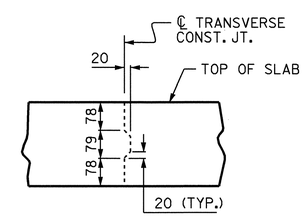

TRANSVERSE CONSTRUCTION JOINT DETAIL

REINFORCING STEEL IN SLAB NOT SHOWN, LONGITUDINAL REINFORCING STEEL SHALL BE CONTINUOUS THRU JOINT.

PROJECT NO. U-2519DA
CUMBERLAND COUNTY
STATION: 28+72.626 -RP1BD-

STATE OF NORTH CAROLINA
DEPARTMENT OF TRANSPORTATION
RALEIGH

SUPERSTRUCTURE

POURING SEQUENCE

NORTH CAROLINA PROFESSIONAL SEAL 11915 ENGINEER JOHN C. FRYE
10/15/08

REVISIONS						SHEET NO.
NO.	BY:	DATE:	NO.	BY:	DATE:	S-275
1			3			TOTAL SHEETS
2			4			411

DRAWN BY : E.C. LOCKLEAR DATE : 5-2-08
CHECKED BY : J.C. FRYE DATE : 8-18-08

13-OCT-2008 12:09
z:\u2519da\structures\frye\str10_rp1bd_fo\final plans\u2519da_sd_bm_10.dgn
tfang

SUPERSTRUCTURE REINFORCING STEEL LENGTHS ARE BASED ON THE FOLLOWING MINIMUM SPLICE LENGTHS

BAR SIZE	SUPERSTRUCTURE EXCEPT APPROACH SLABS, PARAPET, AND BARRIER RAIL		APPROACH SLABS		PARAPET AND BARRIER RAIL
	EPOXY COATED	UNCOATED	EPOXY COATED	UNCOATED	
#13	610	540	610	540	840
#16	770	660	770	660	1050
#19	920	790	1190	790	1330
#22	1580	1060			
#25	2080	1390			

BILL OF MATERIAL

SPANS A-D

BAR	NO.	SIZE	TYPE	LENGTH	WEIGHT
✱ A1	1335	16	STR	12290	25464
A2	1335	16	STR	12290	25464
✱ B1	145	13	STR	7800	1124
✱ B2	87	22	STR	12120	3208
✱ B3	78	22	STR	10860	2577
✱ B4	58	13	STR	7580	437
✱ B5	87	22	STR	9520	2520
✱ B6	78	22	STR	8260	1960
✱ B7	58	13	STR	9220	532
✱ B8	87	22	STR	11320	2996
✱ B9	78	22	STR	10060	2387
✱ B10	116	13	STR	8640	996
B31	550	16	STR	17620	15040
✱ G1	2	16	STR	12290	38
✱ K1	8	16	1	3380	42
✱ K2	8	16	2	4580	57
✱ S1	30	13	3	1180	35
✱ S2	36	13	3	1100	39
✱ S3	11	16	4	1100	19

REINFORCING STEEL 40,504 kg

✱ EPOXY COATED REINFORCING STEEL 44,431 kg

SPANS E-H

BAR	NO.	SIZE	TYPE	LENGTH	WEIGHT
✱ A1	1386	16	STR	12290	26437
A2	1386	16	STR	12290	26437
✱ B11	145	13	STR	8100	1167
✱ B12	87	22	STR	13120	3472
✱ B13	78	22	STR	11860	2814
✱ B14	58	13	STR	6020	347
✱ B15	87	22	STR	8200	2170
✱ B16	78	22	STR	6900	1637
✱ B17	58	13	STR	7420	428
✱ B18	87	22	STR	13360	3536
✱ B19	78	22	STR	12100	2871
✱ B20	145	13	STR	8420	1214
B32	600	16	STR	16780	15626
✱ G1	2	16	STR	12290	38
✱ K1	8	16	1	3380	42
✱ K2	8	16	2	4580	57
✱ S2	76	13	3	1100	83
✱ S3	22	16	4	1100	38

REINFORCING STEEL 42,063 kg

✱ EPOXY COATED REINFORCING STEEL 46,351 kg

SPANS I-J

BAR	NO.	SIZE	TYPE	LENGTH	WEIGHT
✱ A1	806	16	STR	12290	15374
A2	806	16	STR	12290	15374
✱ B21	145	13	STR	8100	1167
✱ B22	87	22	STR	13700	3626
✱ B23	78	22	STR	12420	2947
✱ B24	145	13	STR	8200	1182
B33	350	16	STR	16660	9050
✱ G1	2	16	STR	12290	38
✱ K1	8	16	1	3380	42
✱ K2	8	16	2	4580	57
✱ S1	30	13	3	1180	35
✱ S2	38	13	3	1100	42
✱ S3	11	16	4	1100	19

REINFORCING STEEL 24,424 kg

✱ EPOXY COATED REINFORCING STEEL 24,529 kg

BAR TYPES

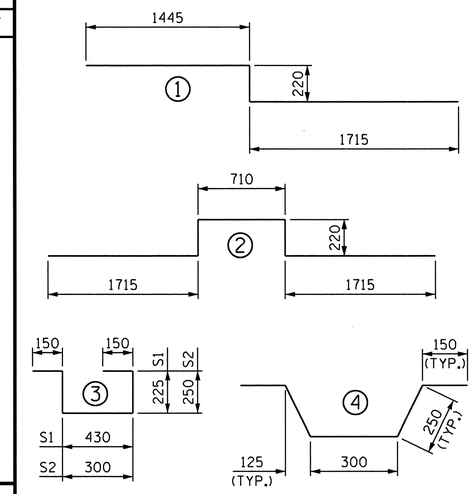

ALL BAR DIMENSIONS ARE OUT TO OUT.

SUPERSTRUCTURE BILL OF MATERIAL

	CLASS AA CONCRETE (m3)						REINFORCING STEEL (kg)	EPOXY COATED REINFORCING STEEL (kg)
	POUR #1	POUR #2	POUR #3	POUR #4	POUR #5	TOTAL		
SPAN "A-D"	113.0	159.5	159.5	226.1	——	658.1	40,504	44,431
SPAN "E-H"	131.8	158.1	133.4	131.6	122.8	677.7	42,063	46,351
SPAN "I-J"	113.1	114.4	169.7	——	——	397.2	24,424	24,529
■ TOTALS						1733.0	106,991	115,311

■ BARRIER RAIL QUANTITIES ARE NOT INCLUDED.

GROOVING BRIDGE FLOORS

APPROACH SLABS	163.2 m^2
BRIDGE DECK	5,460.0 m^2
TOTAL	5,623.2 m^2

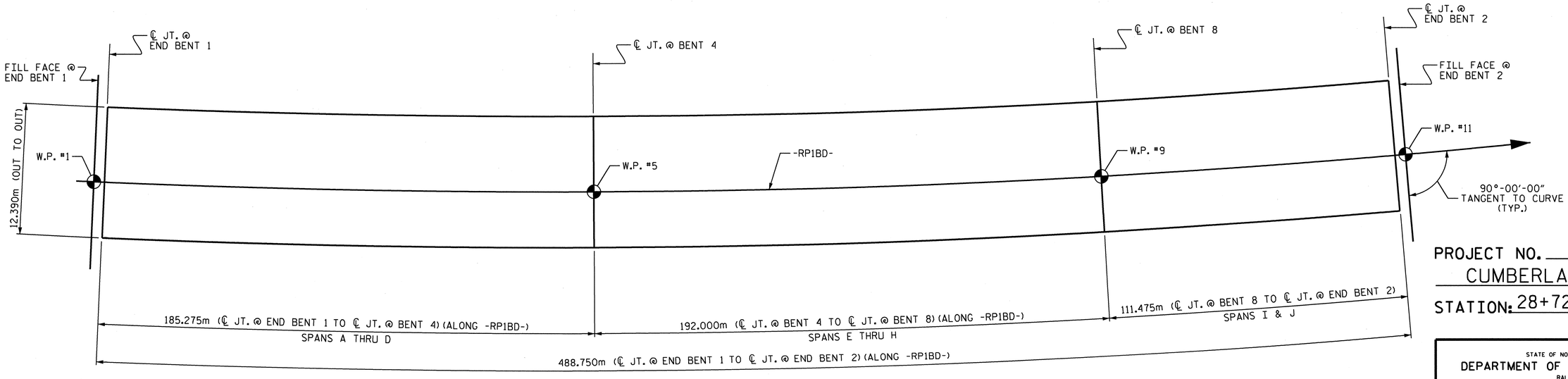

LAYOUT FOR COMPUTING AREA
OF REINFORCED CONCRETE DECK SLAB
(SQ. METER = 6,056)

PROJECT NO. U-2519DA
CUMBERLAND COUNTY
STATION: 28+72.626 -RP1BD-

NORTH CAROLINA PROFESSIONAL SEAL 16301 ENGINEER T.H. FANG
3/15/11

STATE OF NORTH CAROLINA
DEPARTMENT OF TRANSPORTATION
RALEIGH

SUPERSTRUCTURE
BILL OF MATERIAL

REVISIONS						SHEET NO.
NO.	BY:	DATE:	NO.	BY:	DATE:	S-276
1			3			TOTAL SHEETS
2			4			411

DRAWN BY : E.C. LOCKLEAR DATE : 7/21/08
CHECKED BY : T.H. FANG DATE : 7/23/08

15-MAR-2011 09:56
K:\TIPProjects-U\U2519da\Structures\frye\str10_RP1BD_F0\Final Plans\U2519DA_sd_bm_10.dgn
ttfang

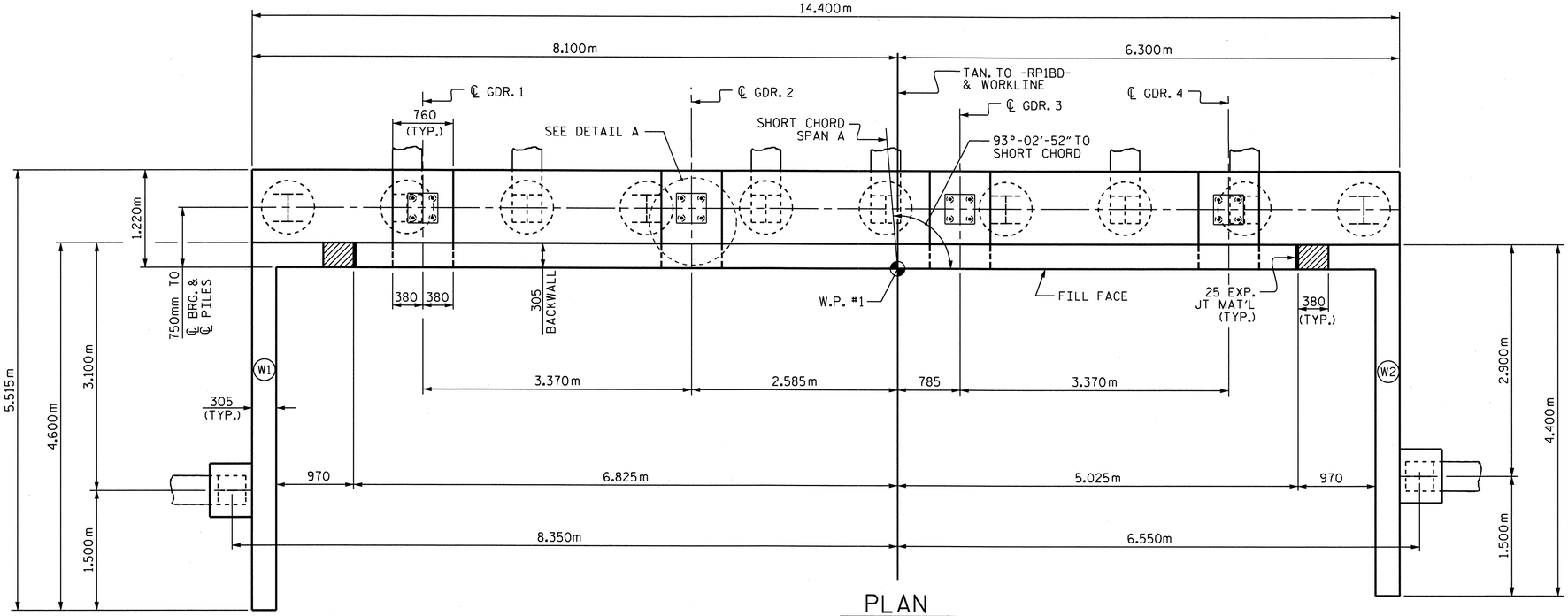

PLAN

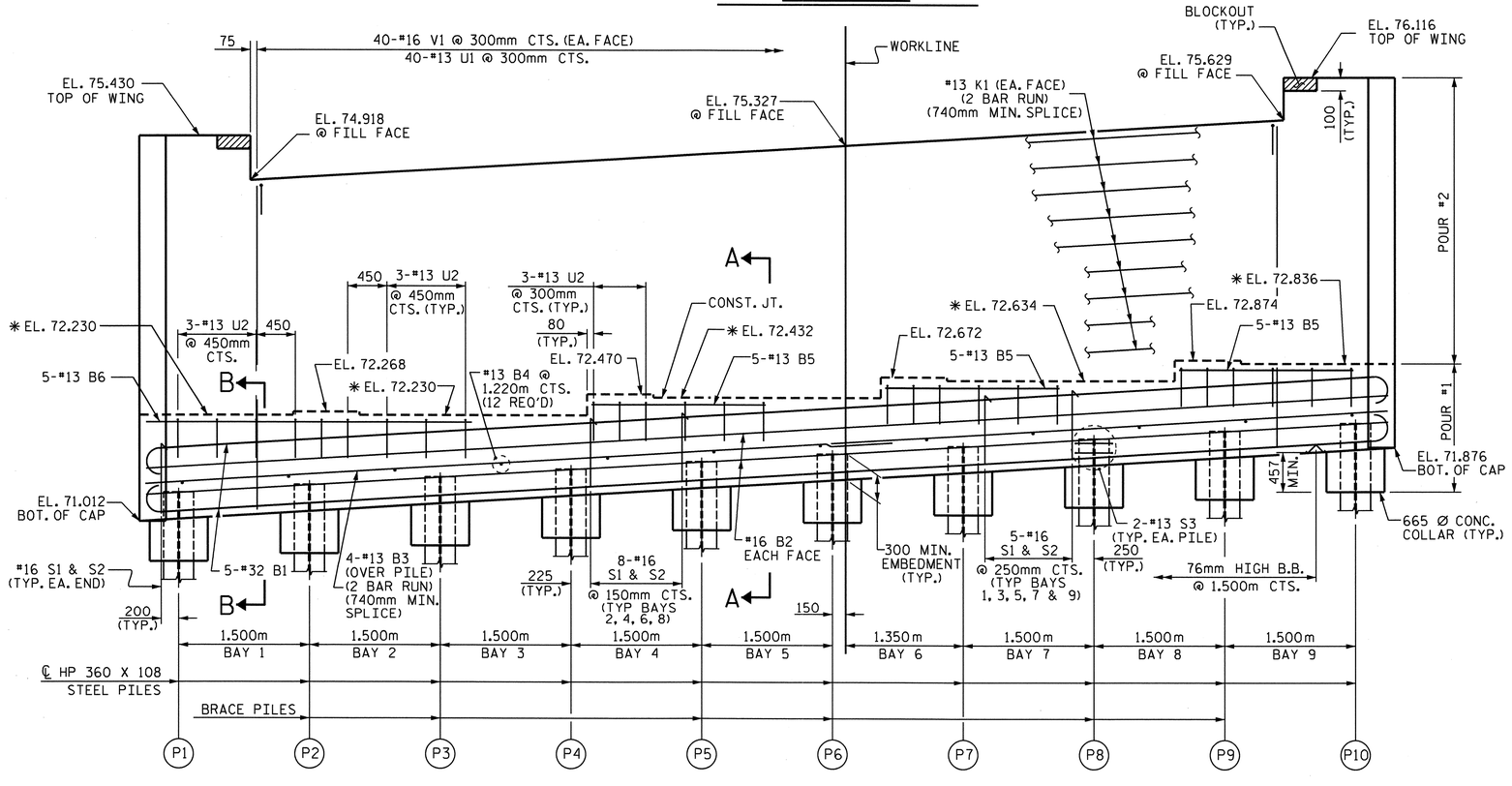

✱ FOR LOCATION OF ELEVATIONS BETWEEN BRIDGE SEAT BUILDUPS, SEE SECTIONS THRU CAP, SHEET 3 OF 3.

ELEVATION

PILE IN WINGS NOT SHOWN FOR CLARITY.

NOTES

STIRRUPS IN CAP MAY BE SHIFTED AS NECESSARY TO CLEAR ANCHOR BOLTS.

FOR PIPE INSERT DETAILS, SEE "POT BEARING DETAILS" SHEETS.

BACKWALL SHALL BE PLACED BEFORE APPLYING THE EPOXY PROTECTIVE COATING.

THE TOP SURFACE AREAS OF THE END BENT CAPS SHALL BE CURED IN ACCORDANCE WITH THE STANDARD SPECIFICATIONS EXCEPT THE MEMBRANE CURING COMPOUND METHOD SHALL NOT BE USED.

✱ THE TOP SURFACE OF THE CAP EXCEPT THE BRIDGE SEAT BUILDUPS SHALL BE SLOPED TRANSVERSELY FROM THE FILL FACE TO THE BACK FACE AT THE RATE OF 2 %.

THE CONTRACTOR SHALL ADJUST THE GIRDER BUILDUPS AS NECESSARY TO INCORPORATE A MAXIMUM PERMISSIBLE VARIATION IN POT BEARING DEPTH OF 13mm, SEE SPECIAL PROVISION FOR POT BEARINGS.

THE CONTRACTOR SHALL PROVIDE FOR INSTALLATION OF THE 102mm DIAMETER DRAIN PIPE THROUGH THE WING WALL AS REQUIRED FOR REINFORCED BRIDGE APPROACH FILLS, SEE THE ROADWAY PLANS. REINFORCING STEEL IN THE WING WALL MAY BE SHIFTED AS NECESSARY TO CLEAR THE DRAIN PIPE.

CONCRETE IN THE SHADED AREA OF THE WING SHALL BE POURED AFTER THE BARRIER RAIL IS CAST IF SLIP FORMING IS USED.

FOR PILE SPLICE DETAILS, SEE END BENT SHEET 3 OF 3.

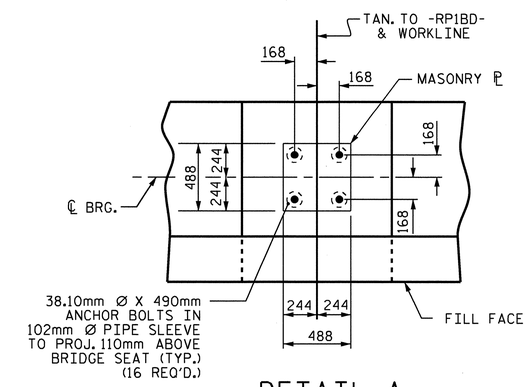

DETAIL A

TOP OF PILE ELEVATION	
PILE	ELEVATION
P1	71.355
P2	71.445
P3	71.535
P4	71.625
P5	71.715
P6	71.805
P7	71.895
P8	71.985
P9	72.075
P10	72.165

PROJECT NO. U-2519DA
CUMBERLAND COUNTY
STATION: 28+72.626 -RP1BD-

SHEET 1 OF 3

STATE OF NORTH CAROLINA
DEPARTMENT OF TRANSPORTATION
RALEIGH

SUBSTRUCTURE

END BENT 1

NORTH CAROLINA PROFESSIONAL SEAL 16301 ENGINEER TING HSIANG FANG
3/22/11

REVISIONS						SHEET NO.
NO.	BY:	DATE:	NO.	BY:	DATE:	S-277
1			3			TOTAL SHEETS
2			4			411

DRAWN BY : Q. T. NGUYEN DATE : 12-07
CHECKED BY : T. H. FANG DATE : 5-08

22-MAR-2011 11:56
K:\TIPProjects-U\U2519da\Structures\frye\str10_RP1BD_F0\Final Plans\u2519da_sd_e*_10.dgn
tfang

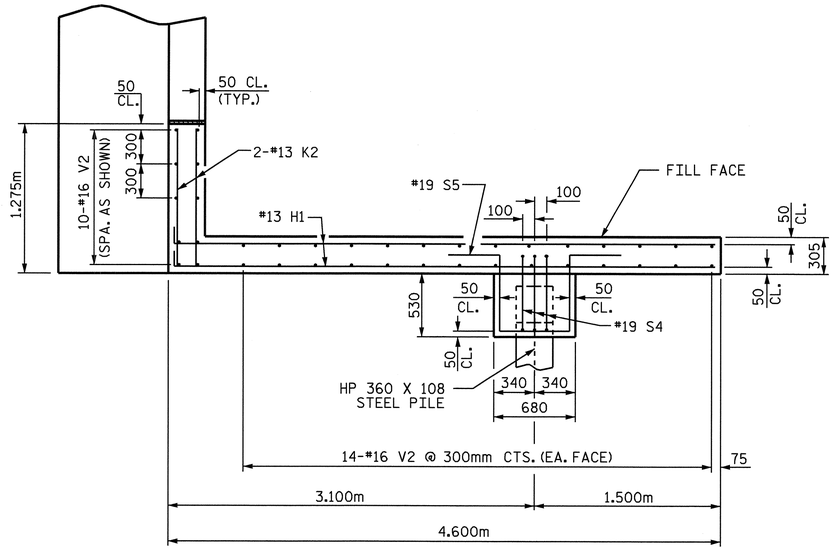

PLAN W1

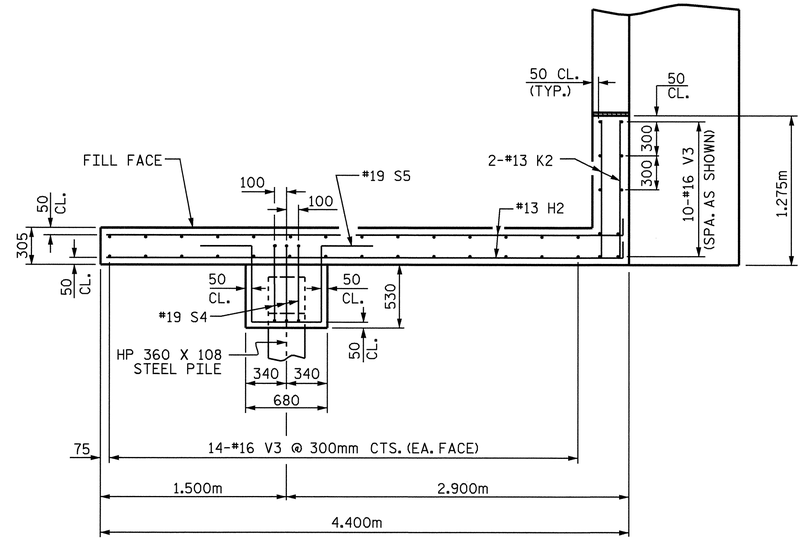

PLAN W2

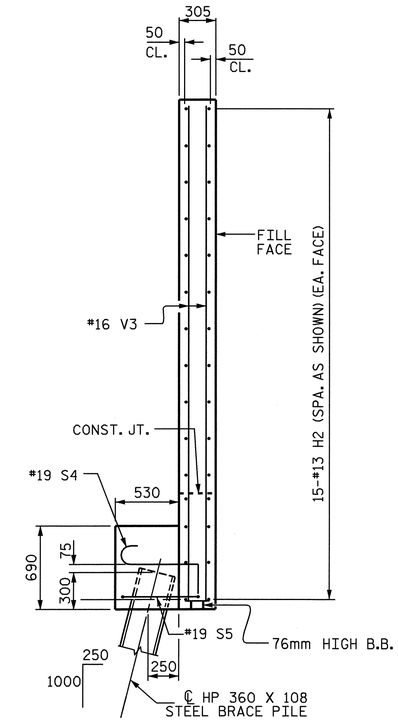

SECTION Y-Y

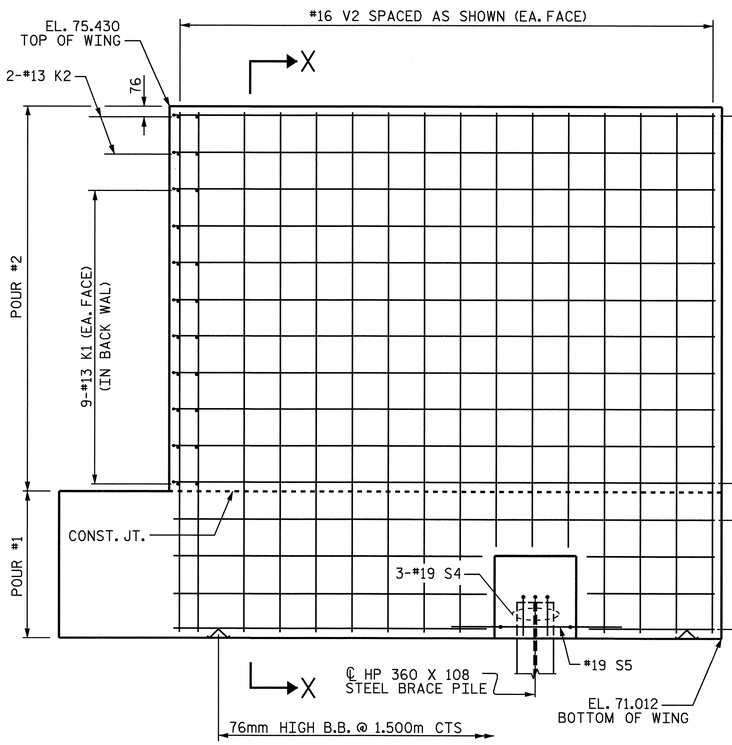

ELEVATION W1

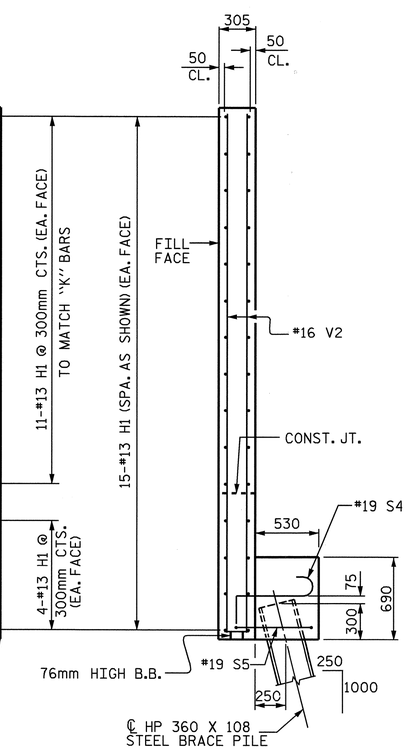

SECTION X-X

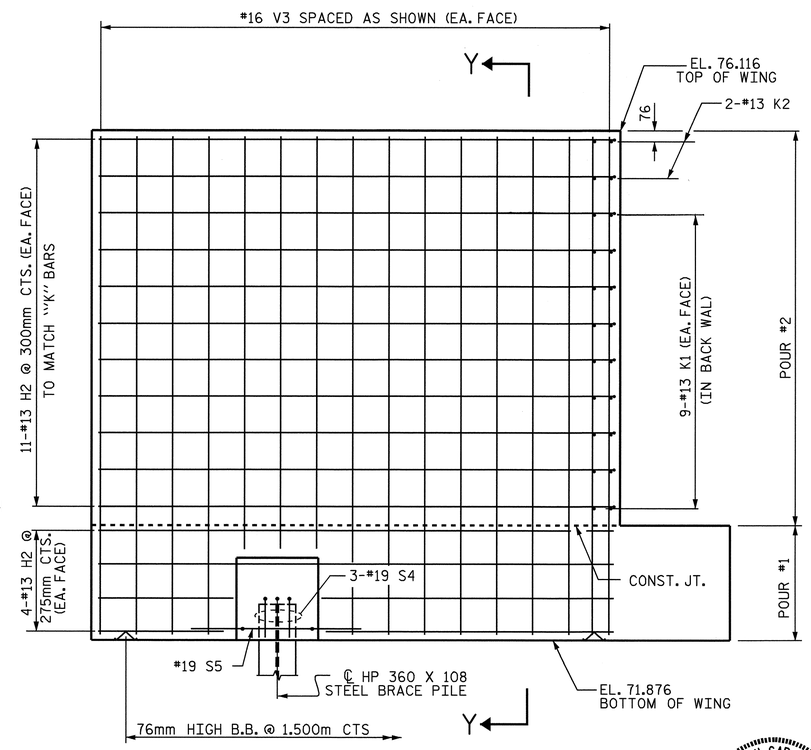

ELEVATION W2

PROJECT NO. U-2519DA
CUMBERLAND COUNTY
STATION: 28+72.626 -RP1BD-

SHEET 2 OF 3

STATE OF NORTH CAROLINA
DEPARTMENT OF TRANSPORTATION
RALEIGH

SUBSTRUCTURE

END BENT 1

NORTH CAROLINA PROFESSIONAL SEAL 16301 ENGINEER TING HSILING FANG
10/08/08

REVISIONS						SHEET NO.
NO.	BY:	DATE:	NO.	BY:	DATE:	S-278
1			3			TOTAL SHEETS
2			4			411

DRAWN BY : Q.T. NGUYEN DATE : 12-07
CHECKED BY : T. H. FANG DATE : 5-22-08

07-OCT-2008 15:58
H:\Structures\frye\str10_RP1BD_F0\Final Plans\u2519da_sd_e*_10.dgn
sdombrowski

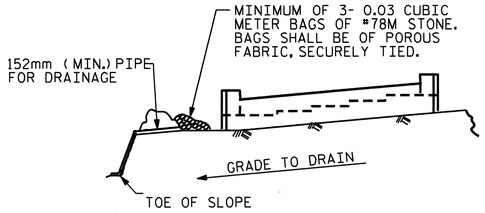

BAGGED STONE AND PIPE SHALL BE PLACED IMMEDIATELY AFTER COMPLETION OF END BENT EXCAVATION. PIPE MAY BE EITHER CONCRETE, CORRUGATED STEEL, CORRUGATED ALUMINUM ALLOY, OR CORRUGATED PLASTIC. PERFORATED PIPE WILL NOT BE ALLOWED.

BAGGED STONE SHALL REMAIN IN PLACE UNTIL THE ENGINEER DIRECTS THAT IT BE REMOVED. THE CONTRACTOR SHALL REMOVE AND DISPOSE OF SILT ACCUMULATIONS AT BAGGED STONE WHEN SO DIRECTED BY THE ENGINEER. BAGS SHALL BE REMOVED AND REPLACED WHENEVER THE ENGINEER DETERMINES THAT THEY HAVE DETERIORATED AND LOST THEIR EFFECTIVENESS.

NO SEPARATE PAYMENT WILL BE MADE FOR THIS WORK AND THE ENTIRE COST OF THIS WORK SHALL BE INCLUDED IN THE UNIT CONTRACT PRICE BID FOR THE SEVERAL PAY ITEMS.

TEMPORARY DRAINAGE AT END BENT

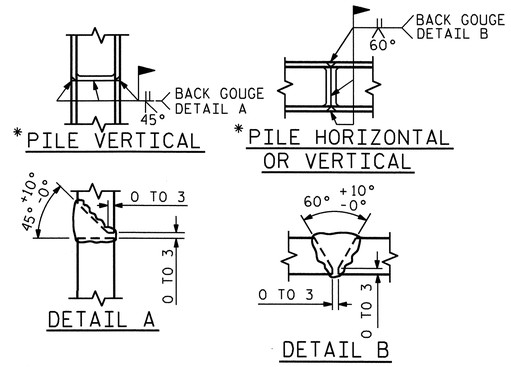

*POSITION OF PILE DURING WELDING.

PILE SPLICE DETAILS

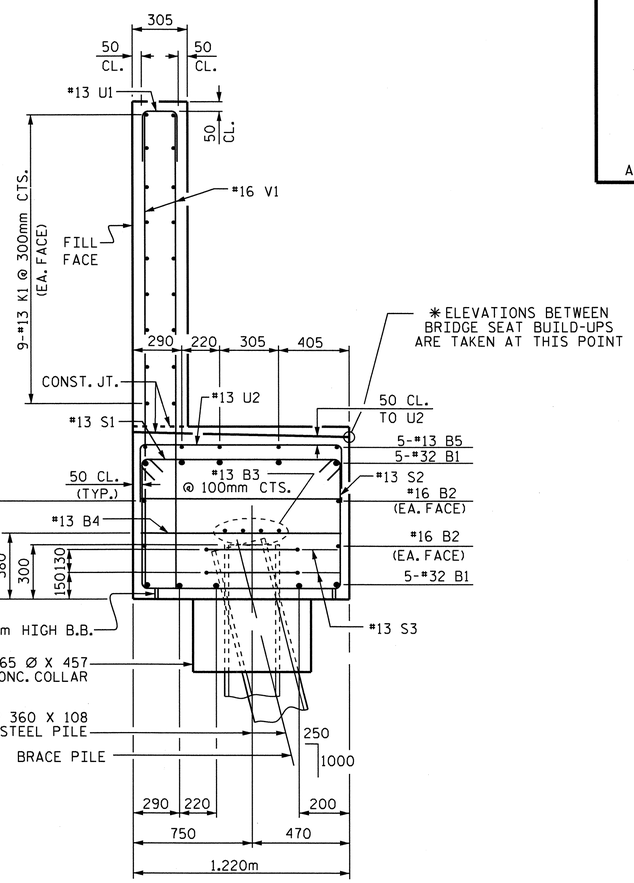

SECTION A-A

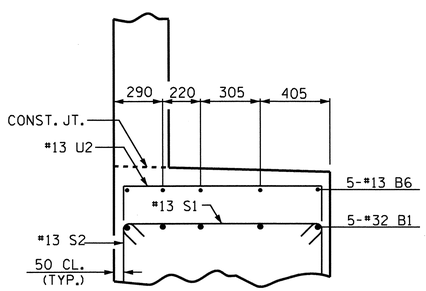

PARTIAL SECTION B-B

BAR TYPES

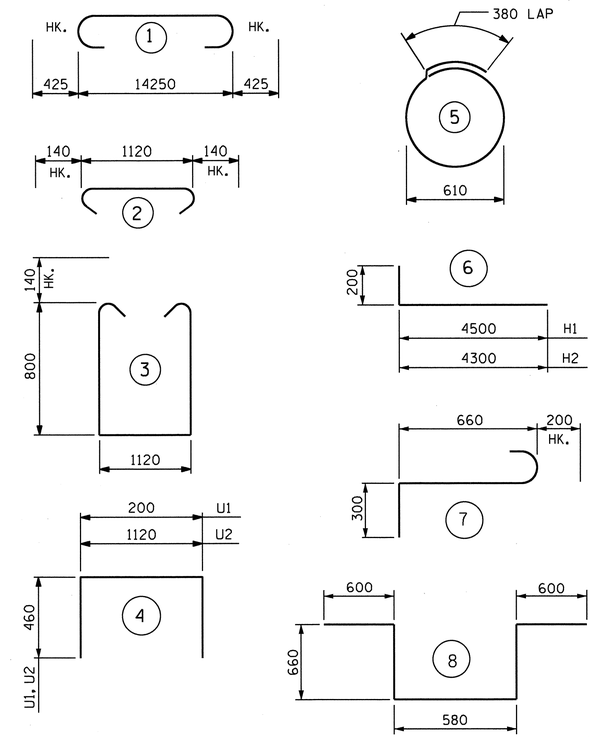

ALL BAR DIMENSIONS ARE OUT TO OUT.

BILL OF MATERIAL
END BENT 1

BAR	NO.	SIZE	TYPE	LENGTH	WEIGHT
B1	10	32	1	15100	967
B2	4	16	STR	14300	89
B3	8	13	STR	7520	60
B4	12	13	STR	1120	13
B5	15	13	STR	2100	31
B6	5	13	STR	4260	21
H1	30	13	6	4700	140
H2	30	13	6	4500	134
K1	36	13	STR	7520	269
K2	8	13	STR	1160	9
S1	59	16	2	1400	128
S2	59	16	3	3000	275
S3	20	13	5	2300	46
S4	6	19	7	1160	16
S5	2	19	8	3100	14
U1	40	13	4	1120	45
U2	27	13	4	2040	55
V1	80	16	STR	3700	459
V2	38	16	STR	4280	252
V3	38	16	STR	4100	242

REINFORCING STEEL kg 3265

CLASS A CONCRETE BREAKDOWN
POUR #1: CAP & WINGS & COLLARS 23.3 m3
POUR #2 WINGS & BACKWALL 21.3 m3

CLASS A CONCRETE TOTAL 44.6 m3

HP 360 X 108 STEEL PILES
NO. 12 METERS 324.0

PILE REDRIVES
EA. 3

PROJECT NO. U-2519DA
CUMBERLAND COUNTY
STATION: 28+72.626 -RP1BD-

SHEET 3 OF 3

STATE OF NORTH CAROLINA
DEPARTMENT OF TRANSPORTATION
RALEIGH

SUBSTRUCTURE

END BENT 1

NORTH CAROLINA PROFESSIONAL SEAL 16301 ENGINEER TING HSIONG FANG
3/11/11

REVISIONS						SHEET NO.
NO.	BY:	DATE:	NO.	BY:	DATE:	S-279
1			3			TOTAL SHEETS
2			4			411

DRAWN BY : O.T. NGUYEN DATE : 12-07
CHECKED BY : T. H. FANG DATE : 5-22-08

11-MAR-2011 15:46
K:\TIPProjects-U\U2519da\Structures\frye\str10_RP1BD_F0\Final Plans\u2519da_sd_e*_10.dgn
ttfang

NOTES:

STIRRUPS AND U1 BARS IN CAP MAY BE SHIFTED SLIGHTLY, AS NECESSARY, TO CLEAR ANCHOR BOLTS.

HOOKS ON M1 BARS MAY BE TURNED AS NECESSARY FOR PLACING REINFORCING STEEL.

DETAILED DRAWINGS FOR FALSEWORK AND FORMS FOR THIS HAMMERHEAD BENT CAP SHALL BE SUBMITTED. SEE SHEET SNSM & SPECIAL PROVISION, FOR FORMWORK & FALSEWORK.

FOR PILE SPLICE DETAILS, SEE SHEET 3 OF 3, END BENT 1.

THE TOP SURFACE AREAS OF THE CAP SHALL BE CURED IN ACCORDANCE WITH THE STANDARD SPECIFICATIONS EXCEPT THE MEMBRANE CURING COMPOUND METHOD SHALL NOT BE USED.

FOR MASS CONCRETE, SEE SPECIAL PROVISIONS.

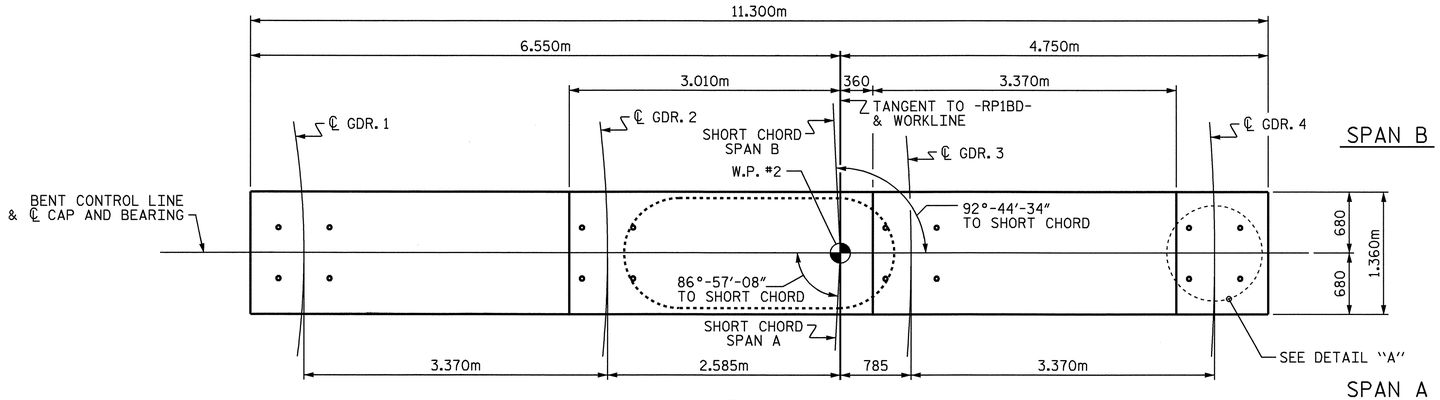

PLAN

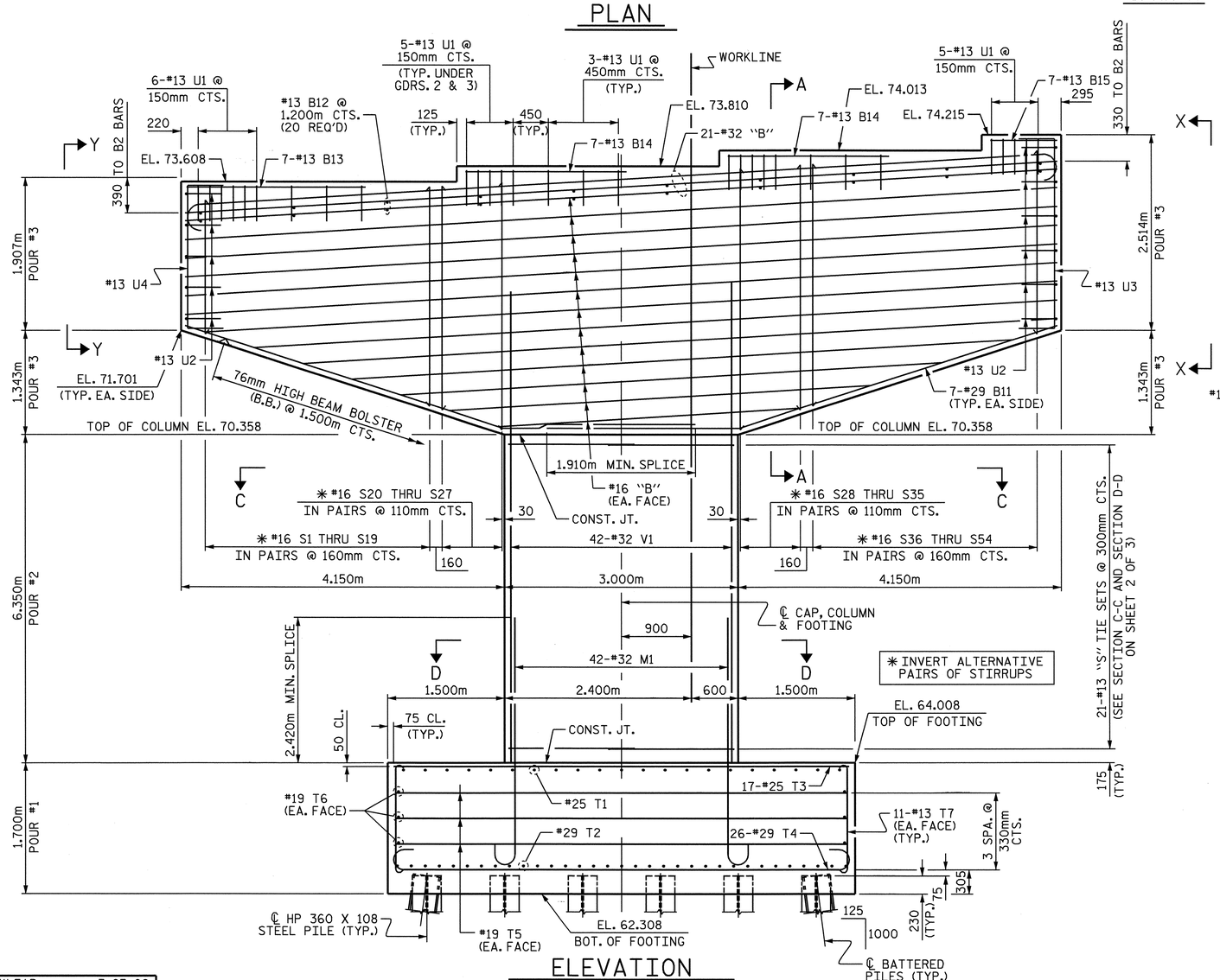

ELEVATION

FOR PILE ARRANGEMENT & SPACINGS, SEE SHEET 2 OF 3

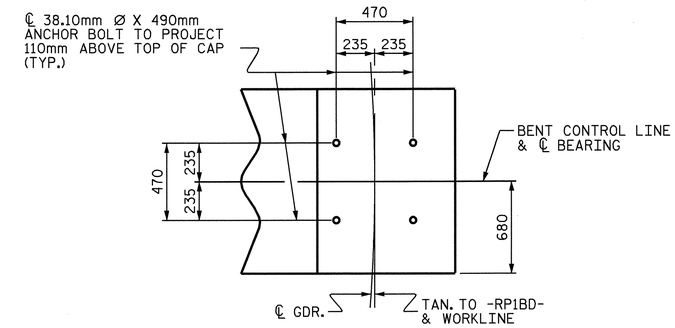

DETAIL "A"

(TYP. EA. GIRDER)

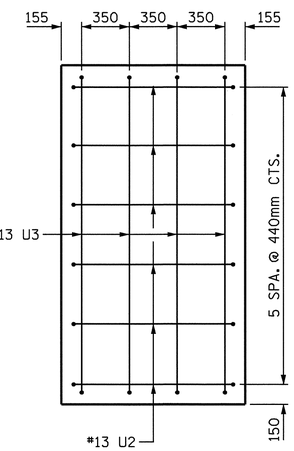

VIEW X-X

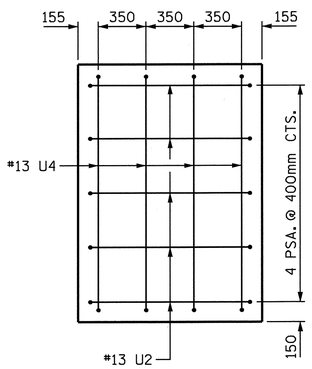

VIEW Y-Y

PROJECT NO. U-2519DA

CUMBERLAND COUNTY

STATION: 28+72.626-RP1BD-

SHEET 1 OF 3

STATE OF NORTH CAROLINA
DEPARTMENT OF TRANSPORTATION
RALEIGH

SUBSTRUCTURE

BENT 1

NORTH CAROLINA PROFESSIONAL SEAL 16301 ENGINEER TING HSIUNG FANG

10/08/08

REVISIONS						SHEET NO.
NO.	BY:	DATE:	NO.	BY:	DATE:	S-280
1			3			TOTAL SHEETS
2			4			411

DRAWN BY : E.C. LOCKLEAR DATE : 3-23-08

CHECKED BY : T.H. FANG DATE : 6-23-08

07-OCT-2008 15:58
H:\Structures\frye\str10_RP1BD_F0\Final Plans\u2519da_sd_bts_10.dgn
sdombrowski

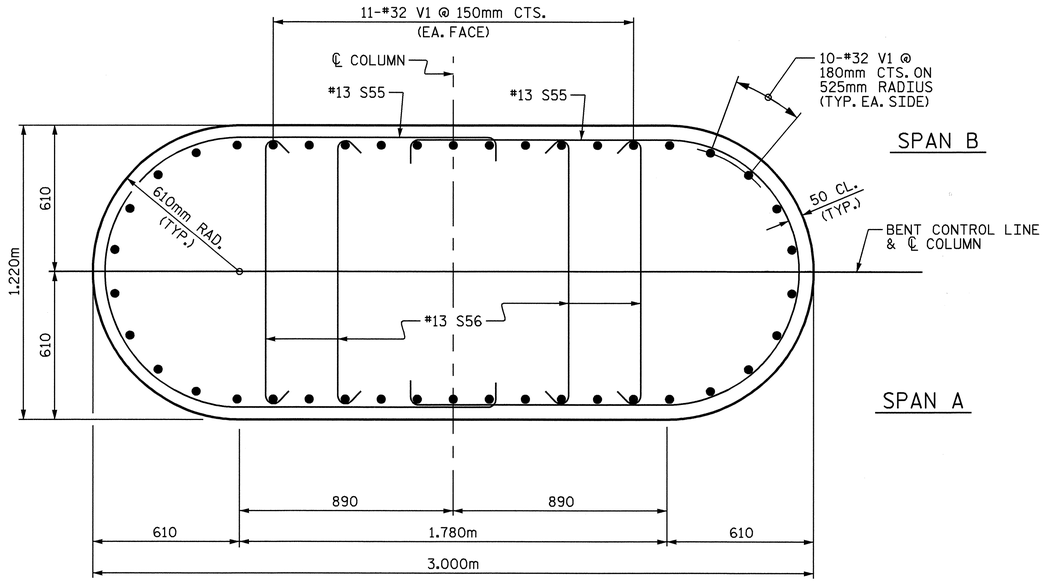

SECTION C-C

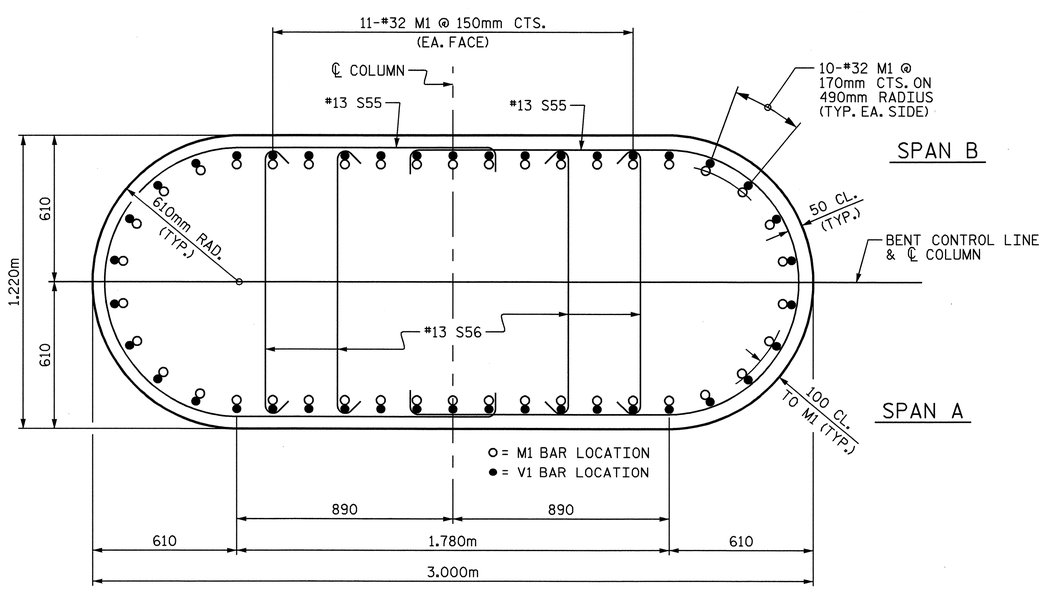

SECTION D-D

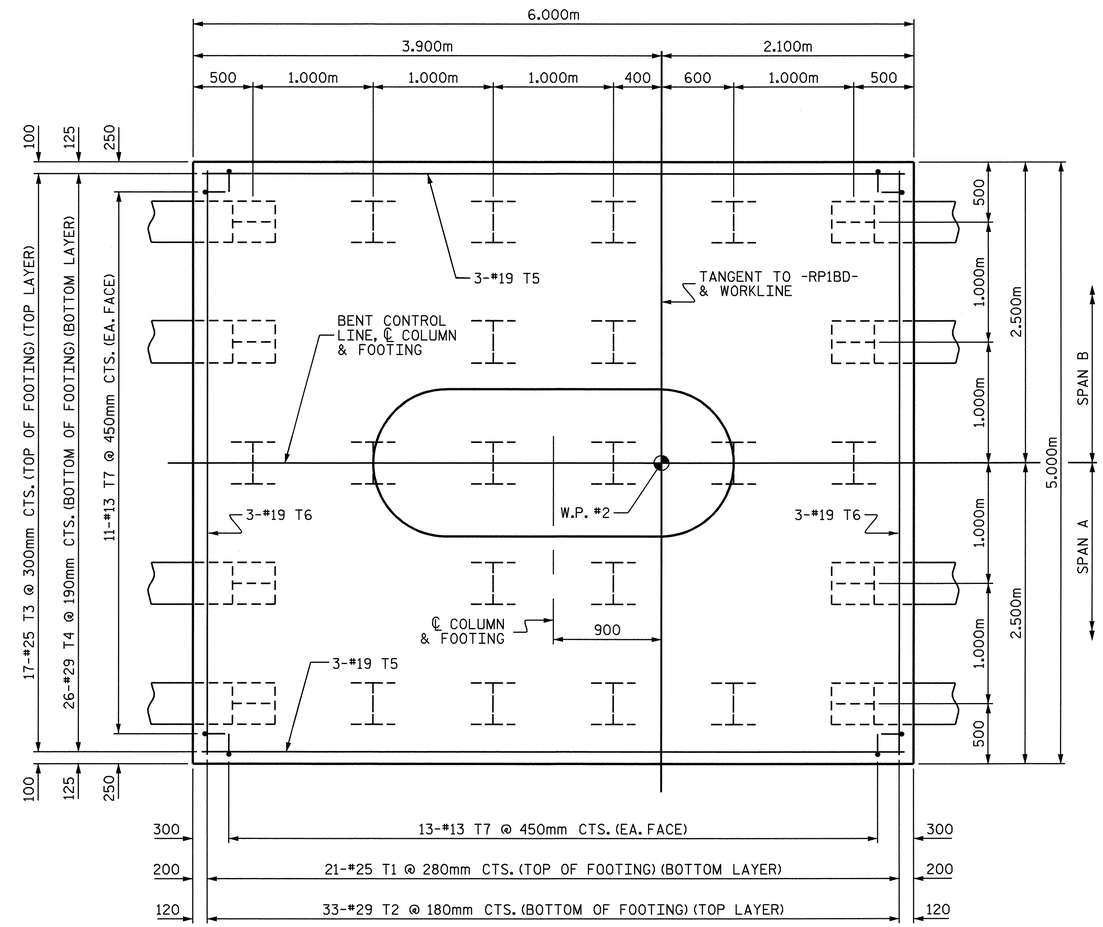

PLAN OF FOOTING

(SEE SECTION D-D FOR PLACEMENT OF M1 BARS IN FOOTING)

PROJECT NO. U-2519DA

CUMBERLAND COUNTY

STATION: 28+72.626-RP1BD-

SHEET 2 OF 3

STATE OF NORTH CAROLINA
DEPARTMENT OF TRANSPORTATION
RALEIGH

SUBSTRUCTURE

BENT 1

NORTH CAROLINA PROFESSIONAL SEAL 16301 ENGINEER TING HSIUNG FANG

10/08/08

REVISIONS						SHEET NO.
NO.	BY:	DATE:	NO.	BY:	DATE:	S-281
1			3			TOTAL SHEETS
2			4			411

DRAWN BY : E.C. LOCKLEAR DATE : 3-23-08

CHECKED BY : T.H. FANG DATE : 5-7-08

07-OCT-2008 15:58
H:\Structures\frye\str10_RP1BD_F0\Final Plans\u2519da_sd_bts_10.dgn
sdombrowski

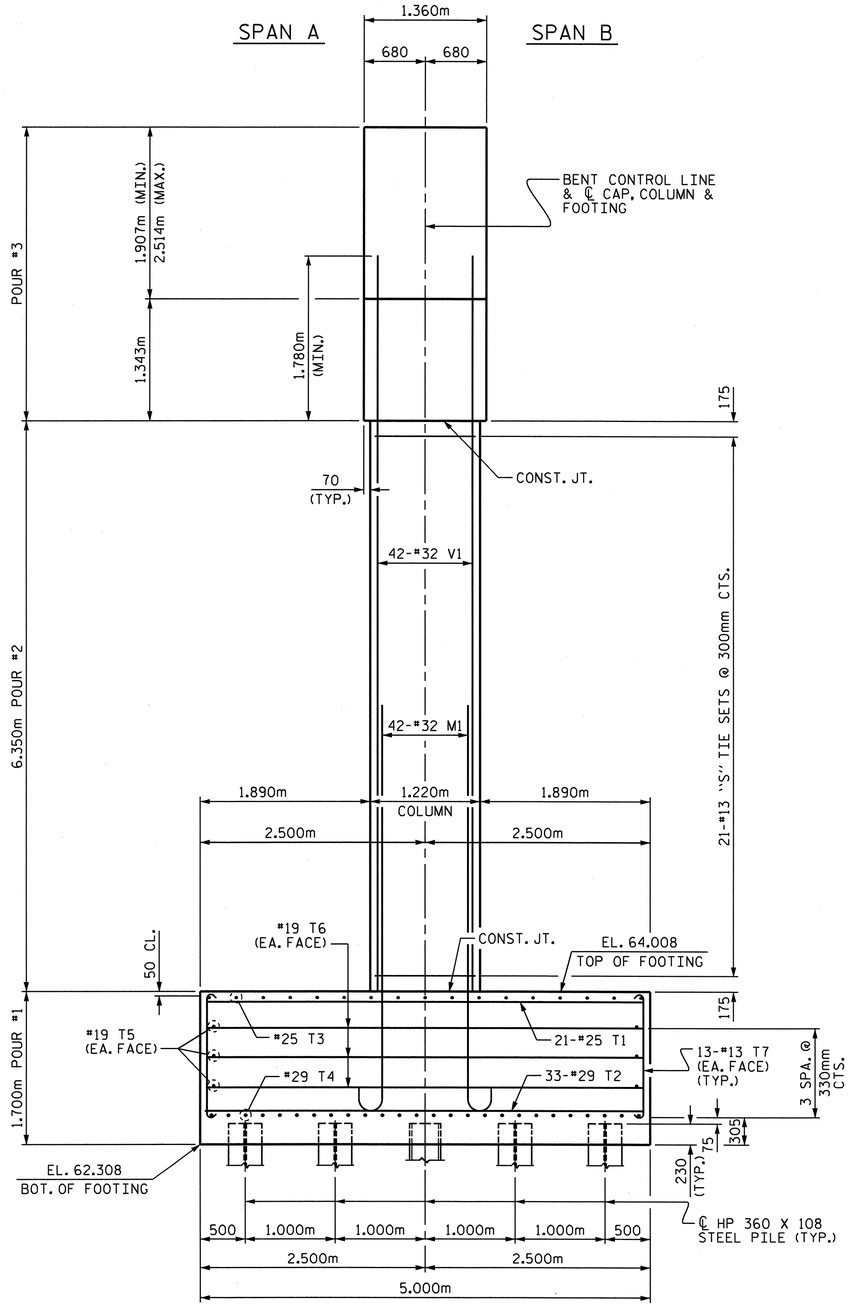

END ELEVATION

BAR TYPES

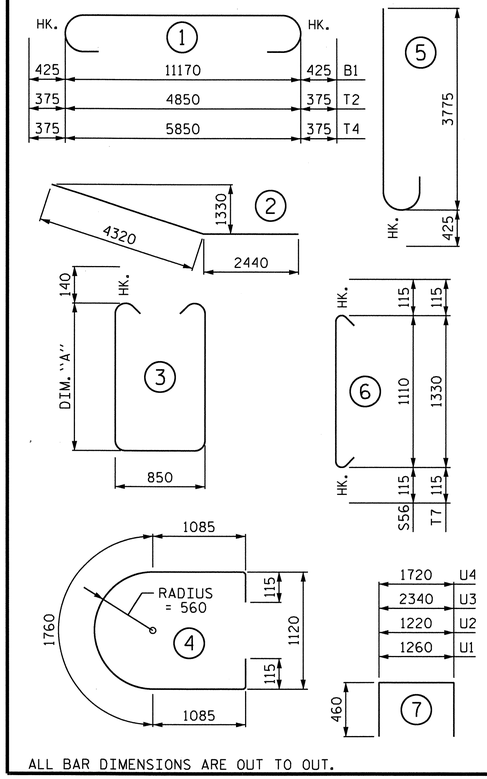

ALL BAR DIMENSIONS ARE OUT TO OUT.

BILL OF MATERIAL

BENT 1

BAR	NO.	SIZE	TYPE	DIM. "A"	LENGTH	WEIGHT
B1	7	#32	1	—	12020	539
B2	14	#32	STR	—	11220	1006
B3	10	#16	STR	—	11220	174
B4	2	#16	STR	—	11020	34
B5	2	#16	STR	—	10400	32
B6	2	#16	STR	—	9760	30
B7	2	#16	STR	—	8660	27
B8	2	#16	STR	—	7120	22
B9	2	#16	STR	—	5580	17
B10	2	#16	STR	—	4040	13
B11	14	#29	2	—	6760	479
B12	20	#13	STR	—	1260	25
B13	7	#13	STR	—	2300	16
B14	14	#13	STR	—	2060	29
B15	7	#13	STR	—	920	6
M1	42	#32	5	—	4200	1130
S1	2	#16	3	1685	4500	14
S2	2	#16	3	1745	4620	14
S3	2	#16	3	1805	4740	15
S4	2	#16	3	1875	4880	15
S5	2	#16	3	1935	5000	16
S6	2	#16	3	1995	5120	16
S7	2	#16	3	2055	5240	16
S8	2	#16	3	2115	5360	17
S9	2	#16	3	2175	5480	17
S10	2	#16	3	2235	5600	17
S11	2	#16	3	2305	5740	18
S12	2	#16	3	2365	5860	18
S13	2	#16	3	2415	5960	18
S14	2	#16	3	2485	6100	19
S15	2	#16	3	2545	6220	19
S16	2	#16	3	2605	6340	20
S17	2	#16	3	2665	6460	20
S18	2	#16	3	2735	6600	20
S19	2	#16	3	2795	6720	21
S20	2	#16	3	2855	6840	21
S21	2	#16	3	2895	6920	21
S22	2	#16	3	2935	7000	22
S23	2	#16	3	2975	7080	22
S24	2	#16	3	3025	7180	22
S25	2	#16	3	3065	7260	23
S26	2	#16	3	3105	7340	23
S27	2	#16	3	3155	7440	23
S28	2	#16	3	3335	7800	24
S29	2	#16	3	3305	7740	24
S30	2	#16	3	3275	7680	24
S31	2	#16	3	3245	7620	24
S32	2	#16	3	3215	7560	23
S33	2	#16	3	3195	7520	23
S34	2	#16	3	3165	7460	23
S35	2	#16	3	3135	7400	23
S36	2	#16	3	3085	7300	23
S37	2	#16	3	3045	7220	22
S38	2	#16	3	3005	7140	22
S39	2	#16	3	2965	7060	22
S40	2	#16	3	2925	6980	22
S41	2	#16	3	2875	6880	21
S42	2	#16	3	2835	6800	21
S43	2	#16	3	2795	6720	21
S44	2	#16	3	2755	6640	21
S45	2	#16	3	2715	6560	20
S46	2	#16	3	2665	6460	20
S47	2	#16	3	2625	6380	20
S48	2	#16	3	2585	6300	20
S49	2	#16	3	2545	6220	19
S50	2	#16	3	2495	6120	19
S51	2	#16	3	2455	6040	19
S52	2	#16	3	2415	5960	18
S53	2	#16	3	2375	5880	18
S54	2	#16	3	2635	6400	20
S55	42	#13	4	—	4160	174
S56	84	#13	6	—	1340	112
T1	21	#25	STR	—	4840	404
T2	33	#29	1	—	5600	935
T3	17	#25	STR	—	5840	394
T4	26	#29	1	—	6600	868
T5	6	#19	STR	—	5860	79
T6	6	#19	STR	—	4860	65
T7	48	#13	6	—	1560	74
U1	30	#13	7	—	2180	65
U2	11	#13	7	—	2140	23
U3	4	#13	7	—	3260	13
U4	4	#13	7	—	2640	10
V1	42	#32	STR	—	8140	2189
REINFORCING STEEL						10,071 kg

CLASS A CONCRETE BREAKDOWN:

POUR #1 - FOOTING	51.0 m3
POUR #2 - COLUMN	21.2 m3
POUR #3 - CAP	46.0 m3
TOTAL CLASS A CONCRETE	118.2 m3

HP 360 X 108 STEEL PILES: NO. 26 METERS 702.0

PILE REDRIVES: EACH 7

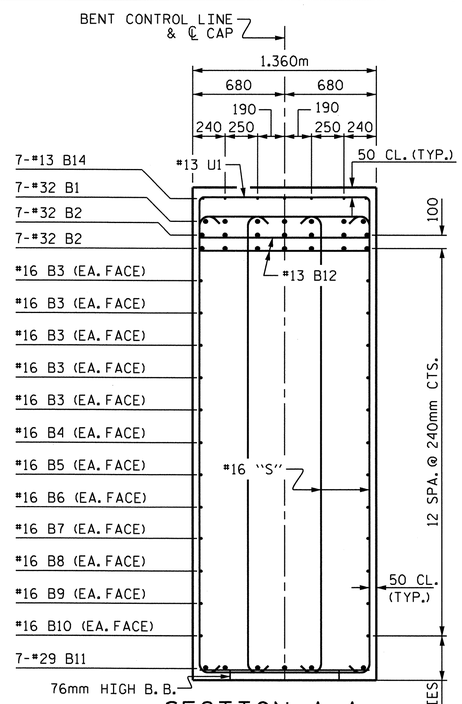

SECTION A-A

(FOR CLARITY, COLUMN REINFORCING STEEL NOT SHOWN.)

PROJECT NO. U-2519DA

CUMBERLAND COUNTY

STATION: 28+72.626-RP1BD-

SHEET 3 OF 3

STATE OF NORTH CAROLINA
DEPARTMENT OF TRANSPORTATION
RALEIGH

SUBSTRUCTURE

BENT 1

NORTH CAROLINA PROFESSIONAL SEAL 16301 ENGINEER

3/10/11

REVISIONS						SHEET NO.
NO.	BY:	DATE:	NO.	BY:	DATE:	S-282
1			3			TOTAL SHEETS
2			4			411

DRAWN BY : E.C. LOCKLEAR DATE : 3-23-08

CHECKED BY : T.H. FANG DATE : 5-7-08

10-MAR-2011 14:42
X:\TIPProjects-U\U2519da\Structures\frye\str10_RP1BD_F0\Final Plans\u2519da_sd_bts_10.dgn
qtnguyen

NOTES:

STIRRUPS AND U1 BARS IN CAP MAY BE SHIFTED SLIGHTLY, AS NECESSARY, TO CLEAR ANCHOR BOLTS.

HOOKS ON M1 BARS MAY BE TURNED AS NECESSARY FOR PLACING REINFORCING STEEL.

DETAILED DRAWINGS FOR FALSEWORK AND FORMS FOR THIS HAMMERHEAD BENT CAP SHALL BE SUBMITTED. SEE SHEET SNSM & SPECIAL PROVISION, FOR FORMWORK & FALSEWORK.

FOR PILE SPLICE DETAILS, SEE SHEET 3 OF 3, END BENT 1.

THE TOP SURFACE AREAS OF THE CAP SHALL BE CURED IN ACCORDANCE WITH THE STANDARD SPECIFICATIONS EXCEPT THE MEMBRANE CURING COMPOUND METHOD SHALL NOT BE USED.

FOR MASS CONCRETE, SEE SPECIAL PROVISIONS.

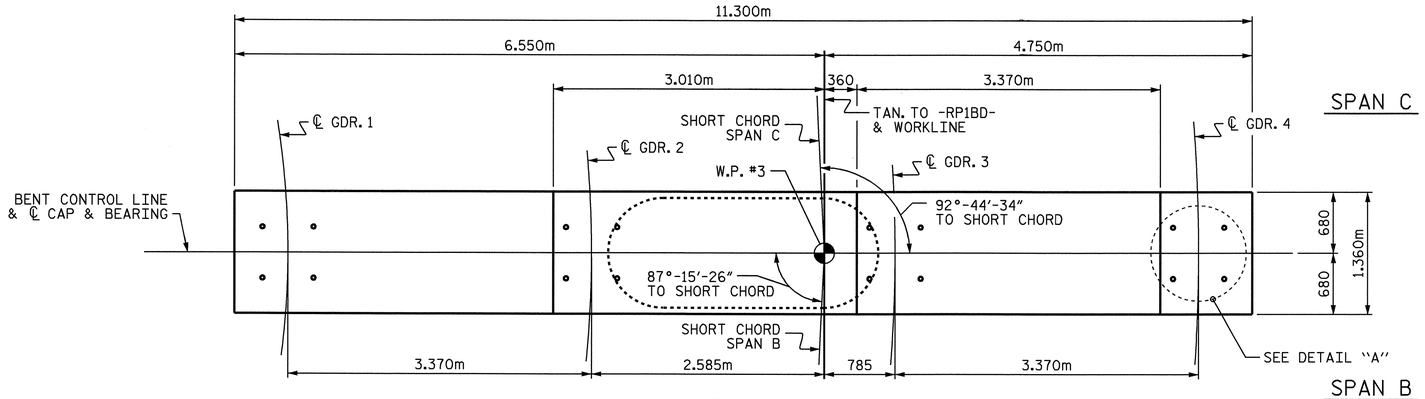

PLAN

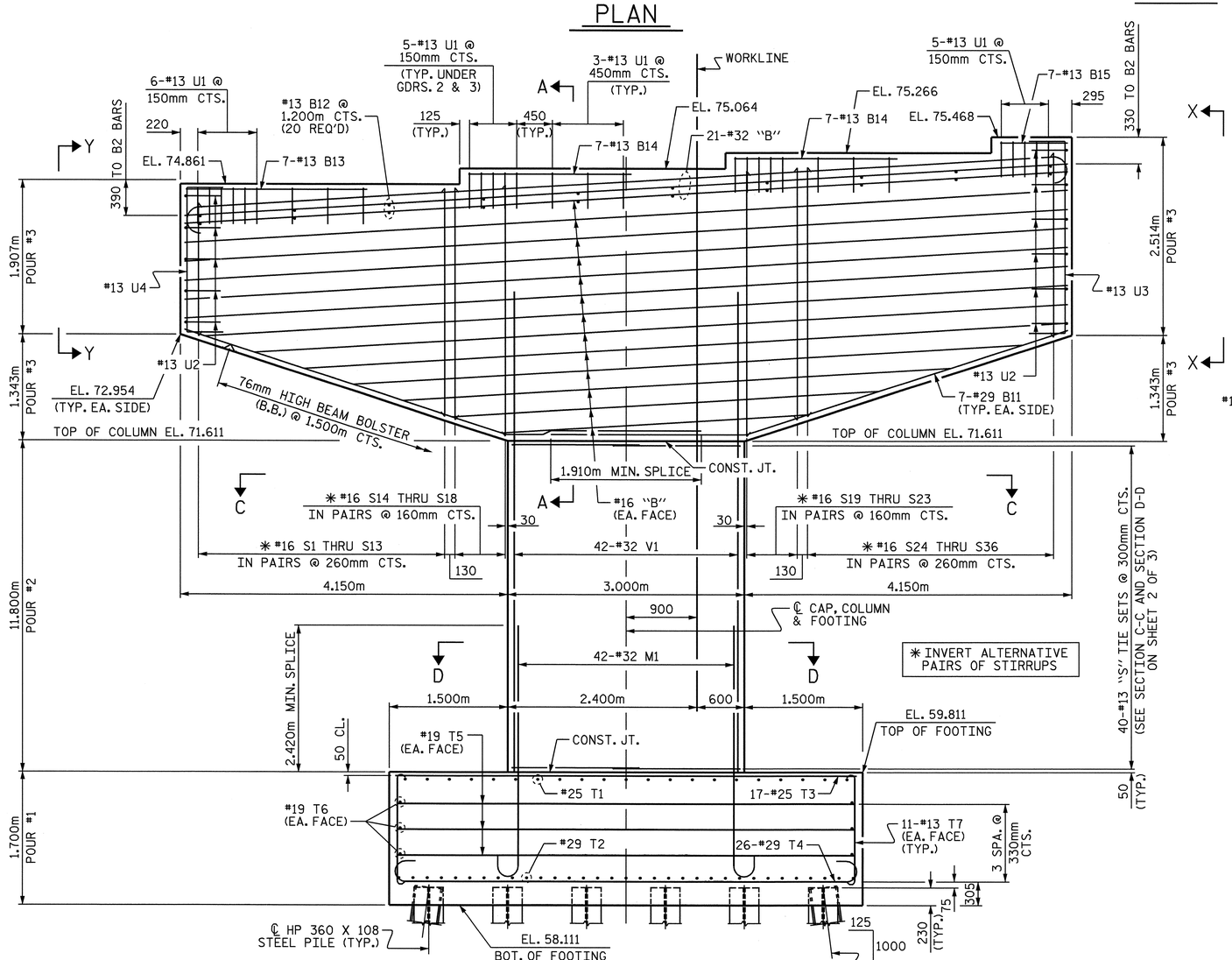

ELEVATION

FOR PILE ARRANGEMENT & SPACINGS, SEE SHEET 2 OF 3

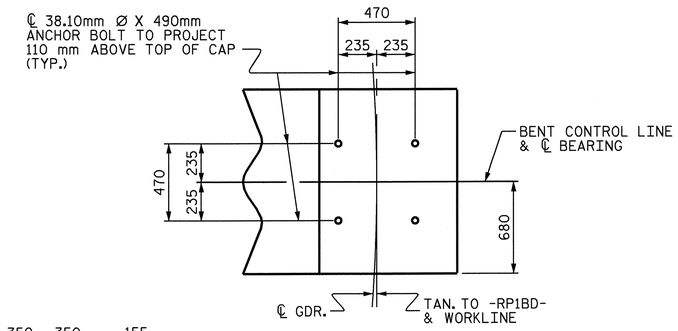

DETAIL "A"

(TYP. EA. GIRDER)

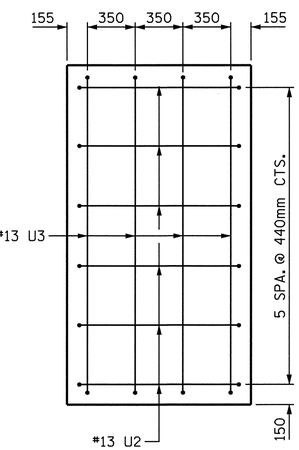

VIEW X-X

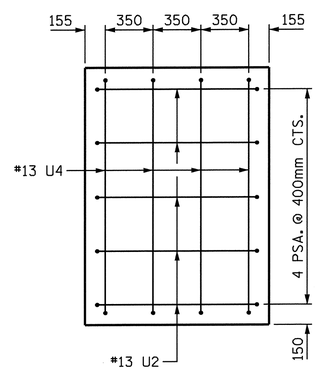

VIEW Y-Y

PROJECT NO. U-2519DA

CUMBERLAND COUNTY

STATION: 28+72.626-RP1BD-

SHEET 1 OF 3

STATE OF NORTH CAROLINA
DEPARTMENT OF TRANSPORTATION
RALEIGH

SUBSTRUCTURE

BENT 2

NORTH CAROLINA PROFESSIONAL SEAL 20445 ENGINEER P. KOREY NEWTON

10/8/2008

REVISIONS						SHEET NO.
NO.	BY:	DATE:	NO.	BY:	DATE:	S-283
1			3			TOTAL SHEETS
2			4			411

DRAWN BY : E.C. LOCKLEAR DATE : 3-23-08

CHECKED BY : P. K. NEWTON DATE : 10-01-08

07-OCT-2008 15:58
H:\Structures\frye\str10_RP1BD_F0\Final Plans\u2519da_sd_bts_10.dgn
sdombrowski

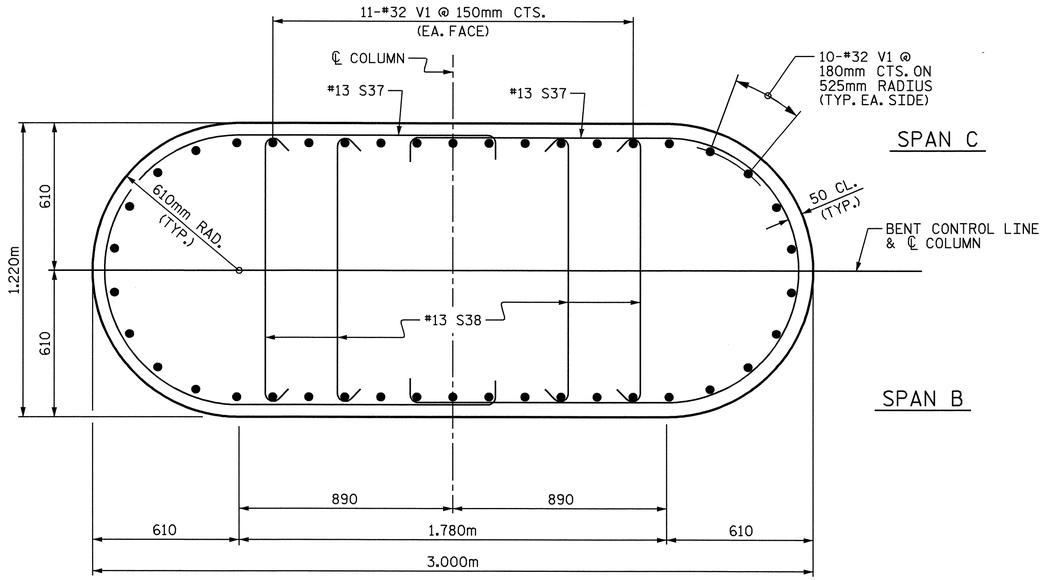

SECTION C-C

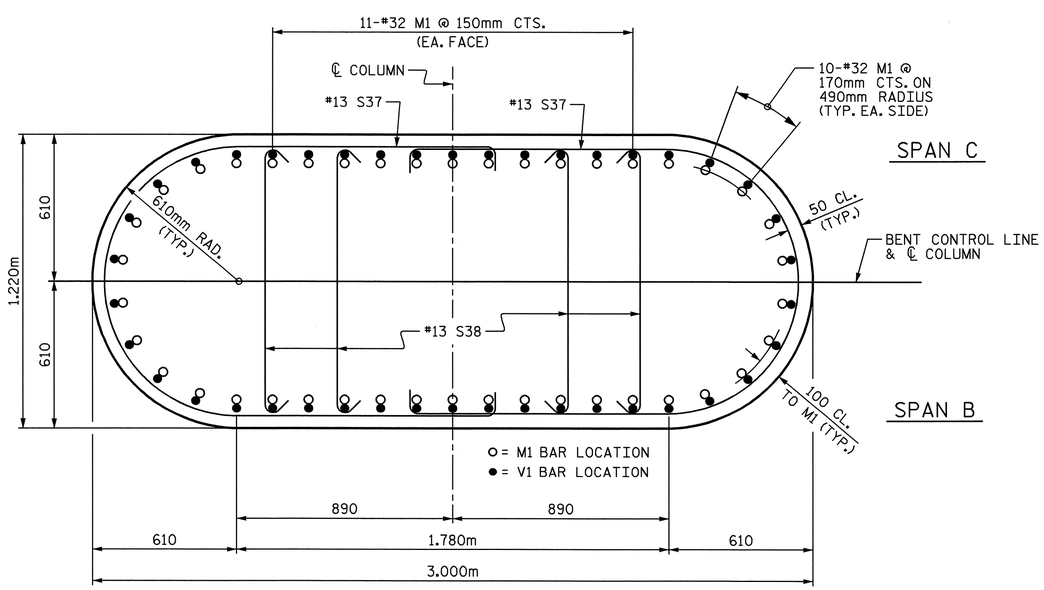

SECTION D-D

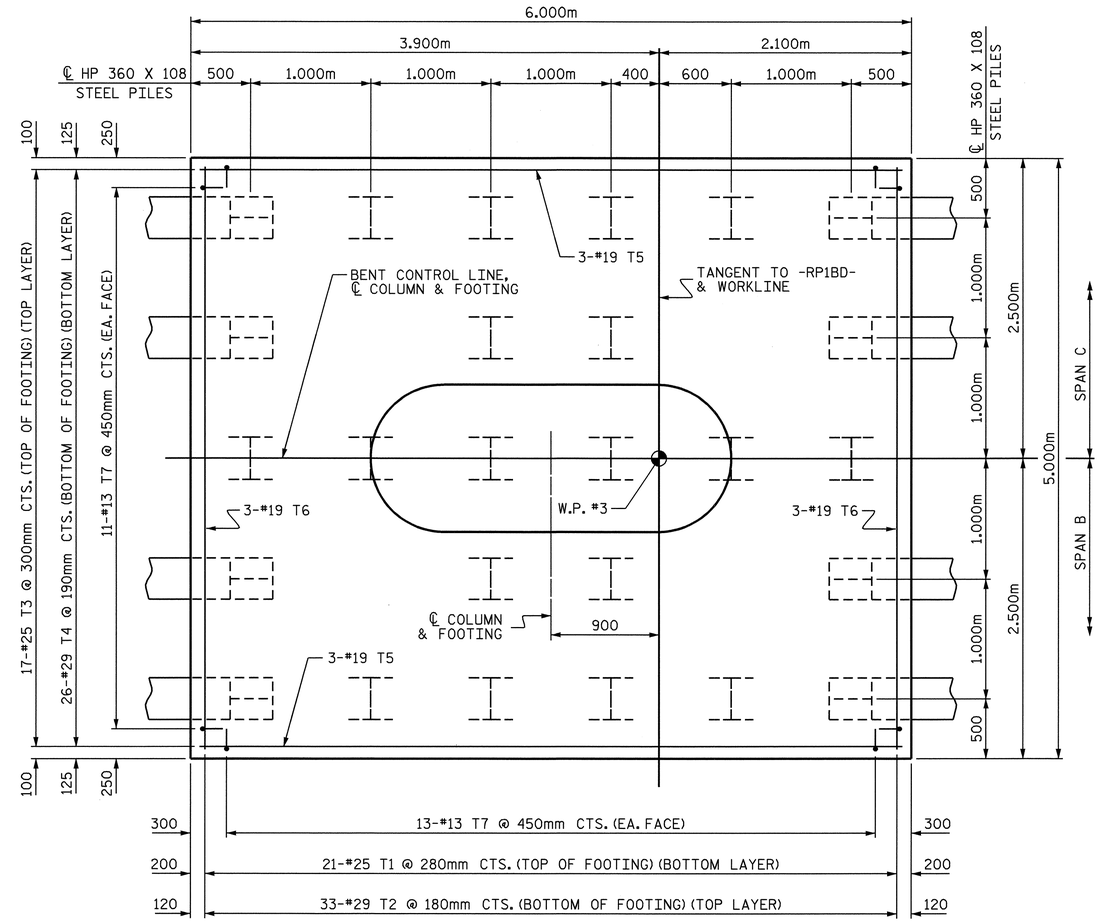

PLAN OF FOOTING

(SEE SECTION D-D FOR PLACEMENT OF M1 BARS IN FOOTING)

PROJECT NO. U-2519DA

CUMBERLAND COUNTY

STATION: 28+72.626-RP1BD-

SHEET 2 OF 3

NORTH CAROLINA PROFESSIONAL SEAL 28445 ENGINEER P. KOREY NEWTON

P. K. Newton

10/8/2008

STATE OF NORTH CAROLINA

DEPARTMENT OF TRANSPORTATION

RALEIGH

SUBSTRUCTURE

BENT 2

REVISIONS						SHEET NO.
NO.	BY:	DATE:	NO.	BY:	DATE:	S-284
1			3			TOTAL SHEETS
2			4			411

DRAWN BY : E.C. LOCKLEAR DATE : 3-23-08

CHECKED BY : P. K. NEWTON DATE : 10-01-08

08-OCT-2008 07:56
r:\structures\frye\str10_rp1bd_fo\final plans\u2519da_sd_bts_10.dgn
sdombrowski

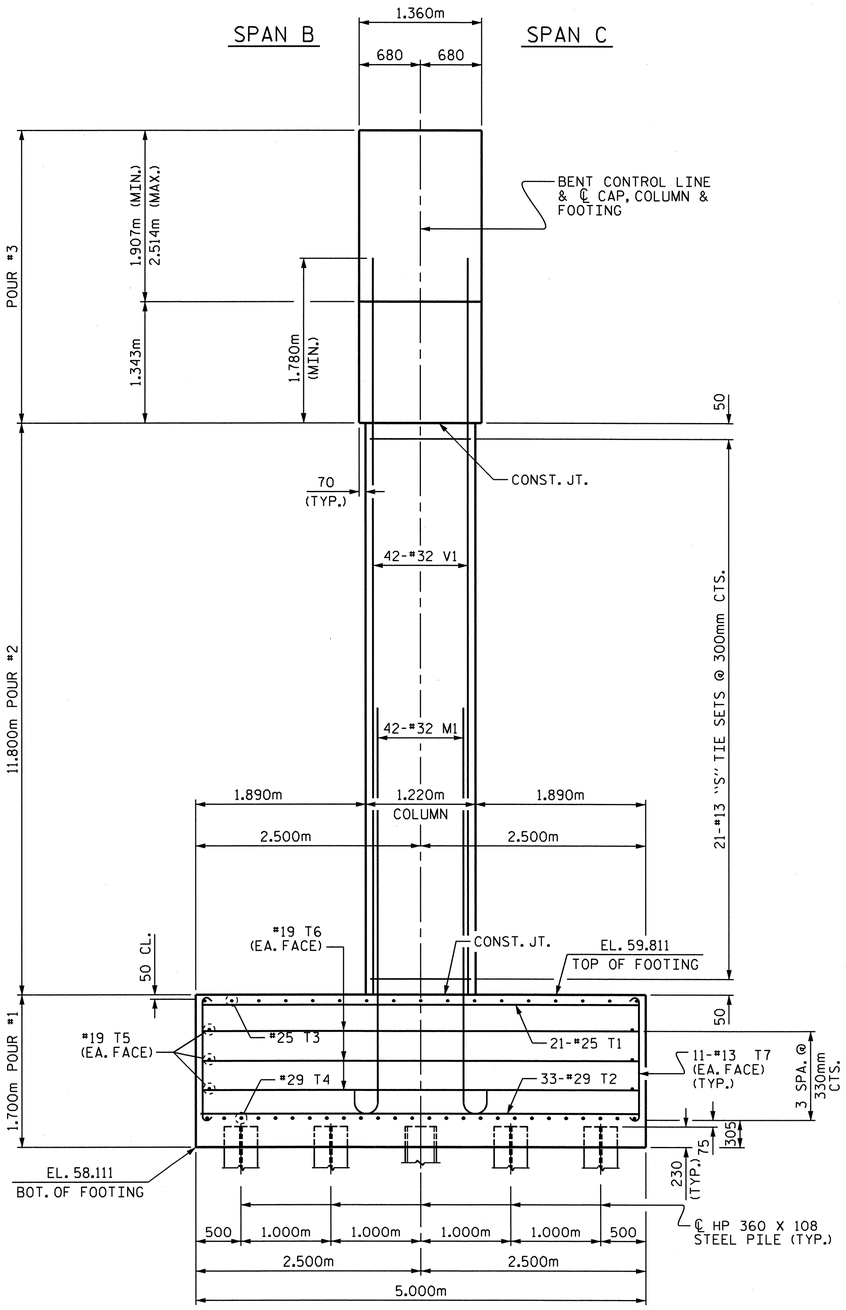

END ELEVATION

BAR TYPES

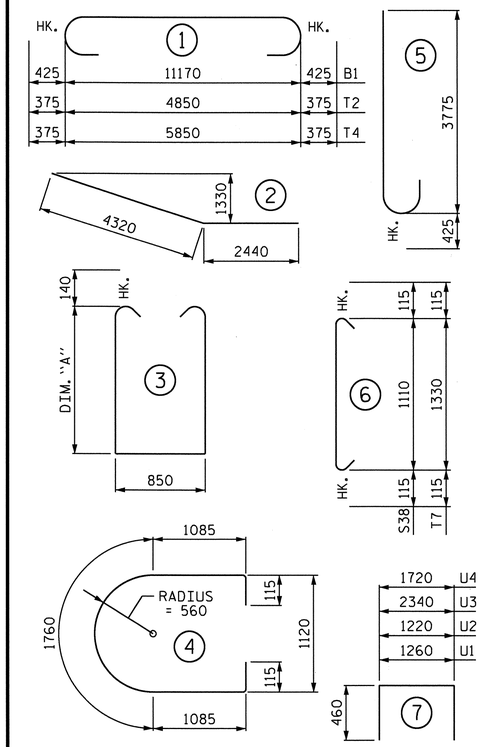

ALL BAR DIMENSIONS ARE OUT TO OUT.

BILL OF MATERIAL

BENT 2

BAR	NO.	SIZE	TYPE	DIM. "A"	LENGTH	WEIGHT
B1	7	#32	1	—	12020	539
B2	14	#32	STR	—	11220	1006
B3	10	#16	STR	—	11220	174
B4	2	#16	STR	—	11020	34
B5	2	#16	STR	—	10400	32
B6	2	#16	STR	—	9760	30
B7	2	#16	STR	—	8660	27
B8	2	#16	STR	—	7120	22
B9	2	#16	STR	—	5580	17
B10	2	#16	STR	—	4040	13
B11	10	#16	2	—	6760	479
B12	20	#13	STR	—	1260	25
B13	7	#13	STR	—	2300	16
B14	14	#13	STR	—	2060	29
B15	7	#13	STR	—	920	6
M1	42	#32	5	—	4200	1130
S1	2	#16	3	1655	4440	14
S2	2	#16	3	1755	4640	14
S3	2	#16	3	1855	4840	15
S4	2	#16	3	1955	5040	16
S5	2	#16	3	2055	5240	16
S6	2	#16	3	2155	5440	17
S7	2	#16	3	2255	5640	18
S8	2	#16	3	2355	5840	18
S9	2	#16	3	2455	6040	19
S10	2	#16	3	2555	6240	19
S11	2	#16	3	2655	6440	20
S12	2	#16	3	2755	6640	21
S13	2	#16	3	2855	6840	21
S14	2	#16	3	2905	6940	22
S15	2	#16	3	2965	7060	22
S16	2	#16	3	3025	7180	22
S17	2	#16	3	3085	7300	23
S18	2	#16	3	3150	7430	23
S19	2	#16	3	3335	7800	24
S20	2	#16	3	3295	7720	24
S21	2	#16	3	3255	7640	24
S22	2	#16	3	3205	7540	23
S23	2	#16	3	3165	7460	23
S24	2	#16	3	3135	7400	23
S25	2	#16	3	3065	7260	23
S26	2	#16	3	2995	7120	22
S27	2	#16	3	2925	6980	22
S28	2	#16	3	2855	6840	21
S29	2	#16	3	2785	6700	21
S30	2	#16	3	2725	6580	20
S31	2	#16	3	2655	6440	20
S32	2	#16	3	2585	6300	20
S33	2	#16	3	2515	6160	19
S34	2	#16	3	2445	6020	19
S35	2	#16	3	2375	5880	18
S36	2	#16	3	2315	5760	18
S37	80	#13	4	—	4160	331
S38	160	#13	6	—	1340	213
T1	21	#25	STR	—	4840	404
T2	33	#29	STR	—	5600	935
T3	17	#25	STR	—	5840	394
T4	26	#29	STR	—	6600	868
T5	6	#19	STR	—	5860	79
T6	6	#19	STR	—	4860	65
T7	48	#13	STR	—	1560	74
U1	30	#13	7	—	2180	65
U2	11	#13	7	—	2140	23
U3	4	#13	7	—	3260	13
U4	4	#13	7	—	2640	10
V1	42	#32	STR	—	13580	3653

REINFORCING STEEL 11,430 kg

CLASS A CONCRETE BREAKDOWN:

POUR #1 - FOOTING	51.0 m3
POUR #2 - COLUMN	39.4 m3
POUR #3 - CAP	46.0 m3
TOTAL CLASS A CONCRETE	136.4 m3

HP 360 X 108 STEEL PILES: NO. 26 METERS 546.0

PILE REDRIVES: EACH 7

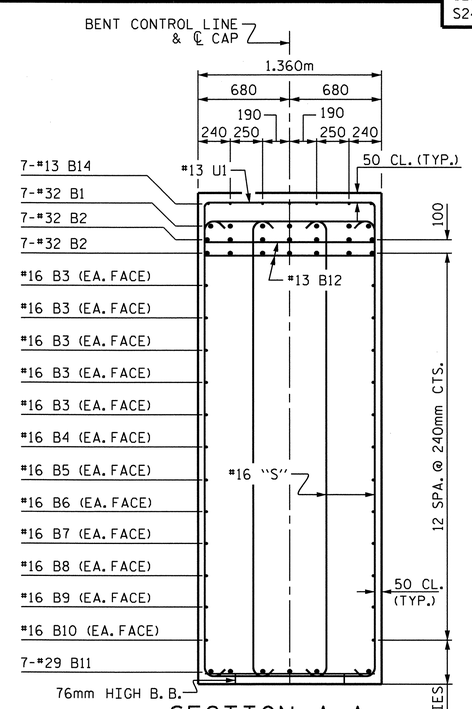

SECTION A-A

(FOR CLARITY, COLUMN REINFORCING STEEL NOT SHOWN.)

PROJECT NO. U-2519DA

CUMBERLAND COUNTY

STATION: 28+72.626-RP1BD-

SHEET 3 OF 3

STATE OF NORTH CAROLINA
DEPARTMENT OF TRANSPORTATION
RALEIGH

SUBSTRUCTURE

BENT 2

NORTH CAROLINA PROFESSIONAL SEAL 26445 ENGINEER KOREY NEWTON

3/11/2011

REVISIONS						SHEET NO.
NO.	BY:	DATE:	NO.	BY:	DATE:	S-285
1			3			TOTAL SHEETS
2			4			411

DRAWN BY : E.C. LOCKLEAR DATE : 3-23-08

CHECKED BY : P. K. NEWTON DATE : 10-01-08

10-MAR-2011 14:42
X:\TIPProjects-U\U2519da\Structures\frye\str10_RP1BD_F0\Final Plans\u2519da_sd_bts_10.dgn
qtnguyen

NOTES:

STIRRUPS AND U1 BARS IN CAP MAY BE SHIFTED SLIGHTLY, AS NECESSARY, TO CLEAR ANCHOR BOLTS.

HOOKS ON M1 BARS MAY BE TURNED AS NECESSARY FOR PLACING REINFORCING STEEL.

DETAILED DRAWINGS FOR FALSEWORK AND FORMS FOR THIS HAMMERHEAD BENT CAP SHALL BE SUBMITTED. SEE SHEET SNSM & SPECIAL PROVISION, FOR FORMWORK & FALSEWORK.

FOR PILE SPLICE DETAILS, SEE SHEET 3 OF 3, END BENT 1.

THE TOP SURFACE AREAS OF THE CAP SHALL BE CURED IN ACCORDANCE WITH THE STANDARD SPECIFICATIONS EXCEPT THE MEMBRANE CURING COMPOUND METHOD SHALL NOT BE USED.

FOR MASS CONCRETE, SEE SPECIAL PROVISIONS.

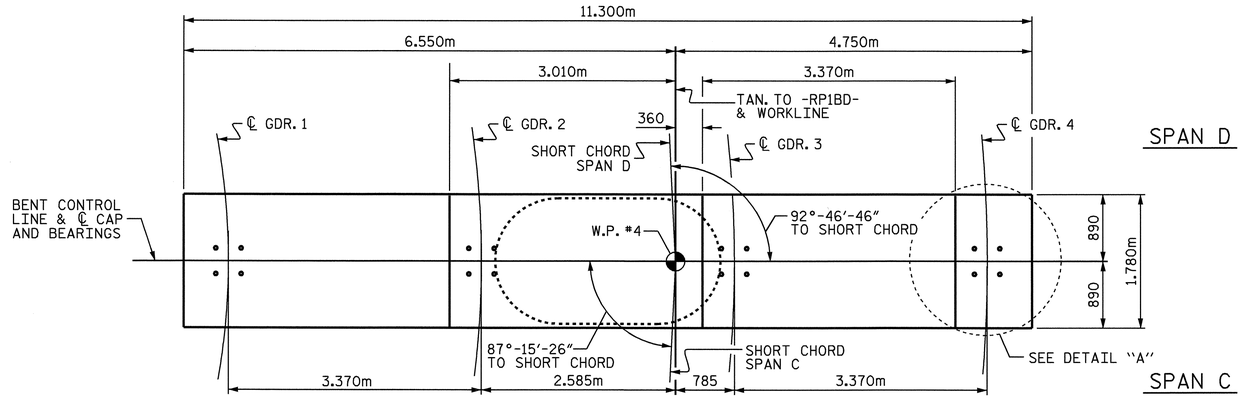

PLAN

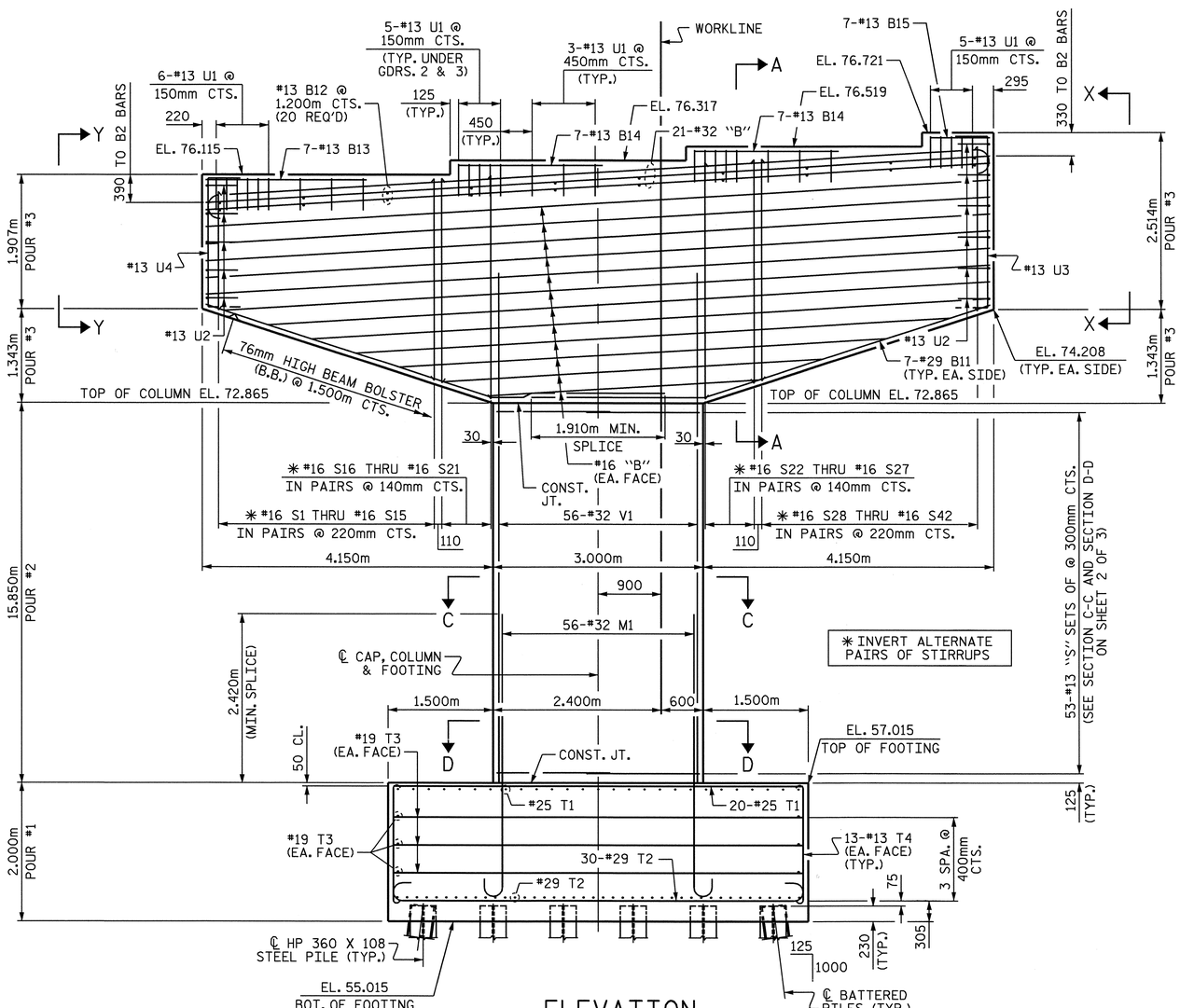

ELEVATION

FOR PILE ARRANGEMENT & SPACINGS, SEE PLAN OF FOOTING ON SHEET 2 OF 3

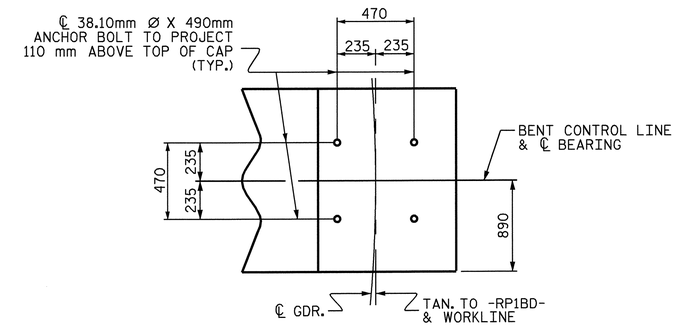

DETAIL "A"

(TYP. EA. GIRDER)

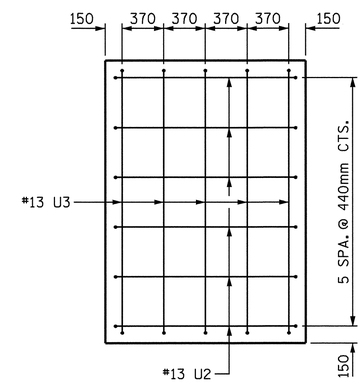

VIEW X-X

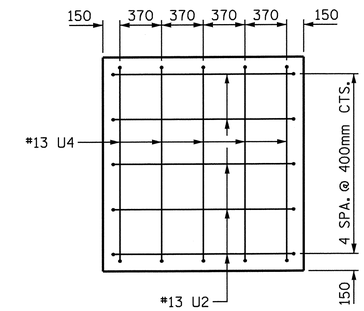

VIEW Y-Y

PROJECT NO. U-2519DA

CUMBERLAND COUNTY

STATION: 28+72.626-RP1BD-

SHEET 1 OF 3

STATE OF NORTH CAROLINA
DEPARTMENT OF TRANSPORTATION
RALEIGH

SUBSTRUCTURE

BENT 3

NORTH CAROLINA PROFESSIONAL SEAL 16301 ENGINEER TING HSIUNG FANG

10/08/08

REVISIONS						SHEET NO.
NO.	BY:	DATE:	NO.	BY:	DATE:	S-286
1			3			TOTAL SHEETS
2			4			411

DRAWN BY : E.C. LOCKLEAR DATE : 4-20-08
CHECKED BY : T.H. FANG DATE : 5-7-08

07-OCT-2008 15:58
H:\Structures\frye\str10_RP1BD_F0\FinalPlans\u2519da_sd_bts_10.dgn
sdombrowski

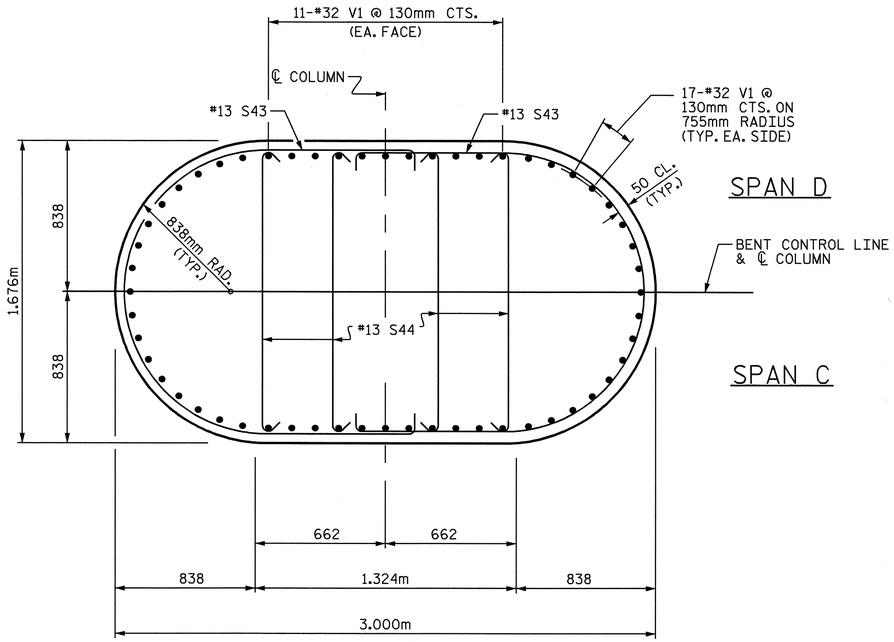

SECTION C-C

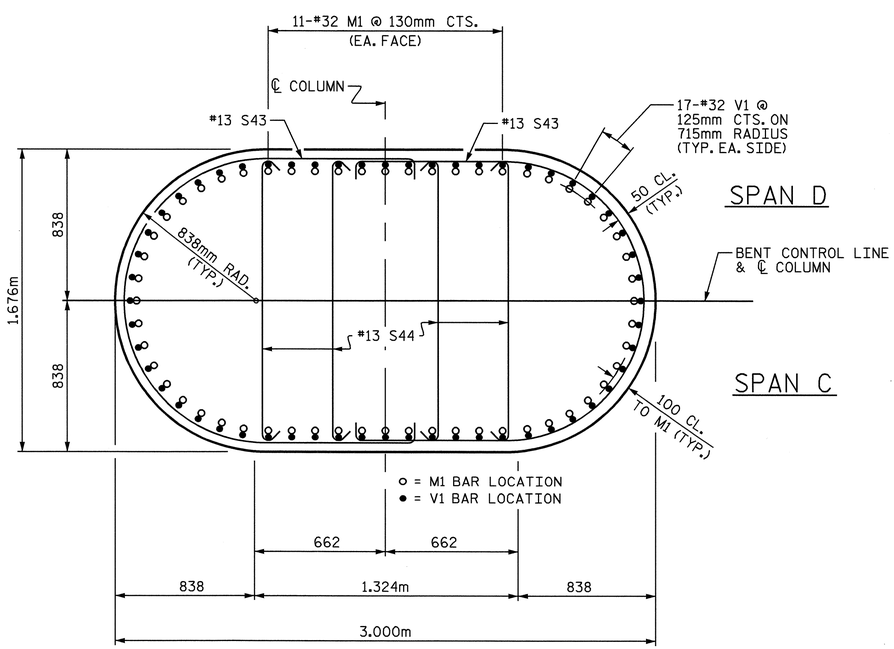

SECTION D-D

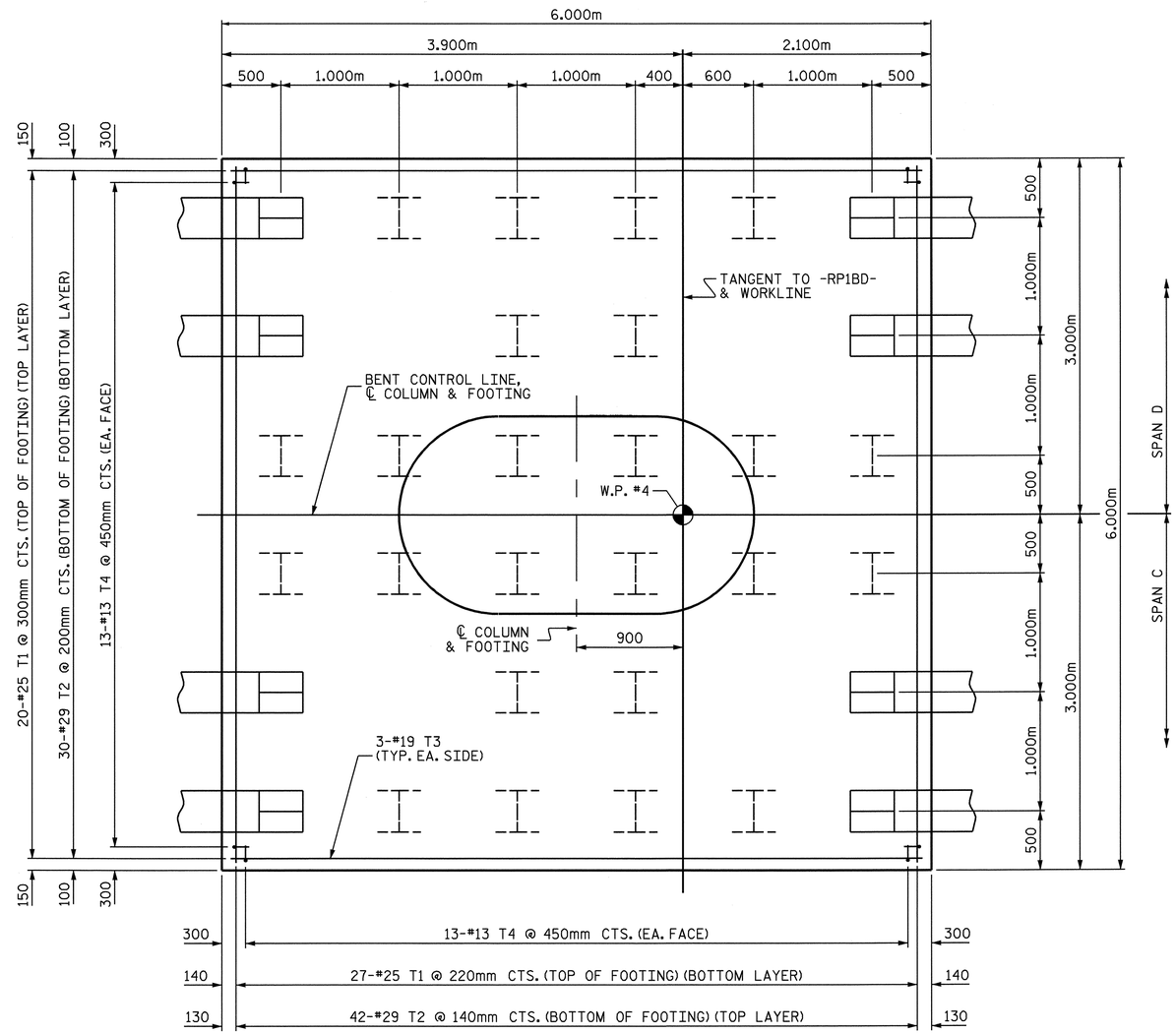

PLAN OF FOOTING

(SEE SECTION D-D FOR PLACEMENT OF M1 BARS IN FOOTING)

PROJECT NO. U-2519DA

CUMBERLAND COUNTY

STATION: 28+72.626-RP1BD-

SHEET 2 OF 3

STATE OF NORTH CAROLINA
DEPARTMENT OF TRANSPORTATION
RALEIGH

SUBSTRUCTURE

BENT 3

NORTH CAROLINA PROFESSIONAL SEAL 16301 ENGINEER TING HSIUNG FANG

10/08/08

REVISIONS						SHEET NO.
NO.	BY:	DATE:	NO.	BY:	DATE:	S-287
1			3			TOTAL SHEETS
2			4			411

DRAWN BY : E.C. LOCKLEAR DATE : 4-20-08

CHECKED BY : T.H. FANG DATE : 5-7-08

07-OCT-2008 15:57
H:\Structures\frye\str10_RP1BD_F0\Final Plans\u2519da_sd_bts_10.dgn
sdombrowski

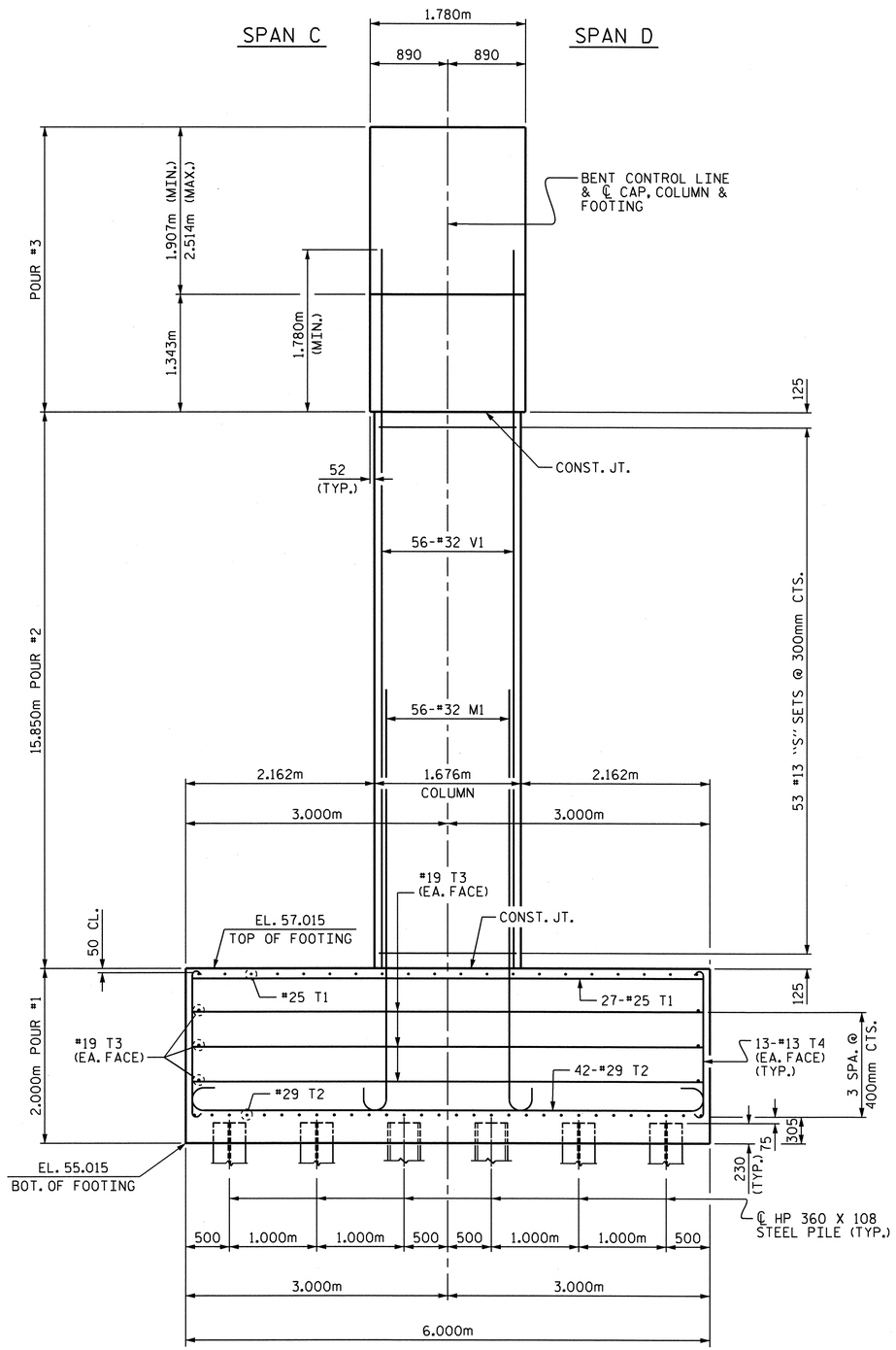

END ELEVATION

BAR TYPES

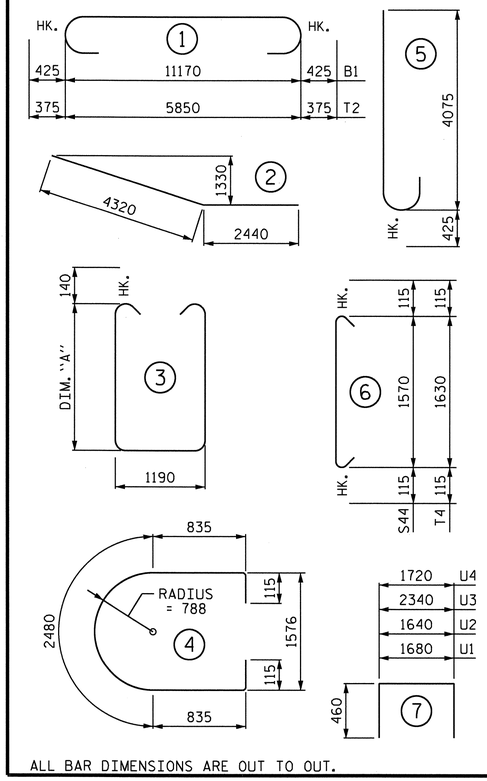

ALL BAR DIMENSIONS ARE OUT TO OUT.

BILL OF MATERIAL

BENT 3

BAR	NO.	SIZE	TYPE	DIM. "A"	LENGTH	WEIGHT
B1	7	#32	1	—	12020	539
B2	14	#32	STR	—	11220	1006
B3	10	#16	STR	—	11220	174
B4	2	#16	STR	—	11020	34
B5	2	#16	STR	—	10400	32
B6	2	#16	STR	—	9760	30
B7	2	#16	STR	—	8660	27
B8	2	#16	STR	—	7120	22
B9	2	#16	STR	—	5580	17
B10	2	#16	STR	—	4040	13
B11	14	#29	2	—	6760	479
B12	20	#13	STR	—	1680	33
B13	7	#13	STR	—	2300	16
B14	14	#13	STR	—	2060	29
B15	7	#13	STR	—	920	6
M1	56	#32	5	—	4500	1614
S1	2	#16	3	1655	4780	15
S2	2	#16	3	1745	4960	15
S3	2	#16	3	1825	5120	16
S4	2	#16	3	1915	5300	16
S5	2	#16	3	1995	5460	17
S6	2	#16	3	2085	5640	18
S7	2	#16	3	2165	5800	18
S8	2	#16	3	2245	5960	18
S9	2	#16	3	2335	6140	19
S10	2	#16	3	2415	6300	20
S11	2	#16	3	2505	6480	20
S12	2	#16	3	2585	6640	21
S13	2	#16	3	2665	6800	21
S14	2	#16	3	2755	6980	22
S15	2	#16	3	2835	7140	22
S16	2	#16	3	2885	7240	22
S17	2	#16	3	2935	7340	23
S18	2	#16	3	2985	7440	23
S19	2	#16	3	3045	7560	23
S20	2	#16	3	3095	7660	24
S21	2	#16	3	3155	7780	24
S22	2	#16	3	3335	8140	25
S23	2	#16	3	3305	8080	25
S24	2	#16	3	3265	8000	25
S25	2	#16	3	3225	7920	25
S26	2	#16	3	3185	7840	24
S27	2	#16	3	3155	7780	24
S28	2	#16	3	3125	7720	24
S29	2	#16	3	3065	7600	24
S30	2	#16	3	3005	7480	23
S31	2	#16	3	2945	7360	23
S32	2	#16	3	2895	7260	23
S33	2	#16	3	2835	7140	22
S34	2	#16	3	2775	7020	22
S35	2	#16	3	2715	6900	21
S36	2	#16	3	2655	6780	21
S37	2	#16	3	2605	6680	21
S38	2	#16	3	2545	6560	20
S39	2	#16	3	2485	6440	20
S40	2	#16	3	2425	6320	20
S41	2	#16	3	2365	6200	19
S42	2	#16	3	2305	6080	19
S43	106	#13	4	—	4360	459
S44	212	#13	6	—	1800	379
T1	47	#25	STR		5840	1091
T2	72	#29	1		6600	2405
T3	12	#19	STR	—	5860	157
T4	52	#13	6	—	1860	96
U1	30	#13	7	—	2600	78
U2	11	#13	7	—	2560	28
U3	5	#13	7	—	3260	16
U4	5	#13	7	—	2640	13
V1	56	#32	STR	—	17640	6326

REINFORCING STEEL 16,007 kg

CLASS A CONCRETE BREAKDOWN:

POUR #1	- FOOTING	72.0 m3
POUR #2	- COLUMN	70.1 m3
POUR #3	- CAP	60.2 m3
TOTAL CLASS A CONCRETE		202.3 m3

HP 360 X 108 STEEL PILES: NO. 32 METERS 544.0

PILE REDRIVES: EACH 8

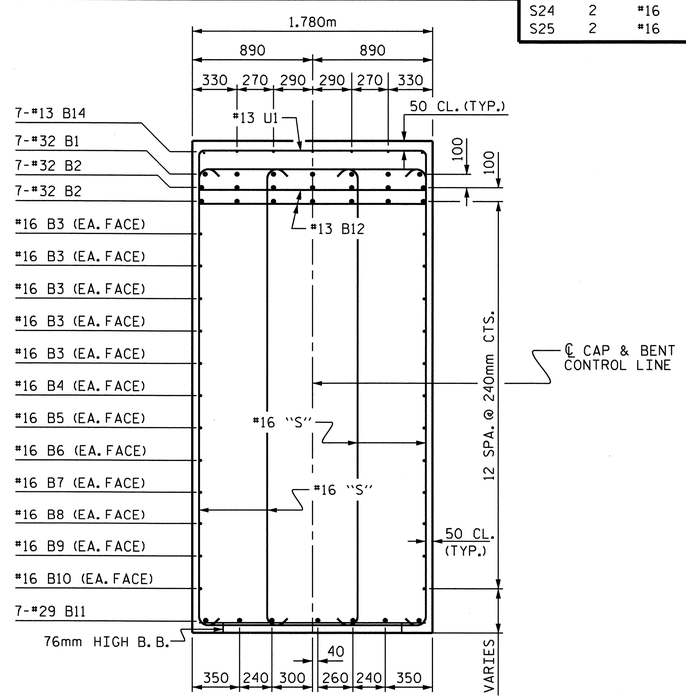

SECTION A-A

(FOR CLARITY, COLUMN REINFORCING STEEL NOT SHOWN.)

PROJECT NO. U-2519DA

CUMBERLAND COUNTY

STATION: 28+72.626-RP1BD-

SHEET 3 OF 3

STATE OF NORTH CAROLINA
DEPARTMENT OF TRANSPORTATION
RALEIGH

SUBSTRUCTURE

BENT 3

NORTH CAROLINA PROFESSIONAL SEAL 16301 ENGINEER TING-HSIUNG FANG

3/10/11

REVISIONS						SHEET NO.
NO.	BY:	DATE:	NO.	BY:	DATE:	S-288
1			3			TOTAL SHEETS
2			4			411

DRAWN BY : E.C. LOCKLEAR DATE : 4-20-08

CHECKED BY : T.H. FANG DATE : 5-7-08

10-MAR-2011 14:42
X:\TIPProjects-U\U2519da\Structures\frye\str10_RP1BD_F0\FinalPlans\u2519da_sd_bts_10.dgn
qtnguyen

NOTES:

STIRRUPS AND U1 BARS IN CAP MAY BE SHIFTED SLIGHTLY, AS NECESSARY, TO CLEAR ANCHOR BOLTS.

HOOKS ON M1 BARS MAY BE TURNED AS NECESSARY FOR PLACING REINFORCING STEEL.

DETAILED DRAWINGS FOR FALSEWORK AND FORMS FOR THIS HAMMERHEAD BENT CAP SHALL BE SUBMITTED. SEE SHEET SNSM & SPECIAL PROVISION, FOR FORMWORK & FALSEWORK.

FOR PILE SPLICE DETAILS, SEE SHEET 3 OF 3, END BENT 1.

THE TOP SURFACE AREAS OF THE CAP SHALL BE CURED IN ACCORDANCE WITH THE STANDARD SPECIFICATIONS EXCEPT THE MEMBRANE CURING COMPOUND METHOD SHALL NOT BE USED.

FOR MASS CONCRETE, SEE SPECIAL PROVISIONS.

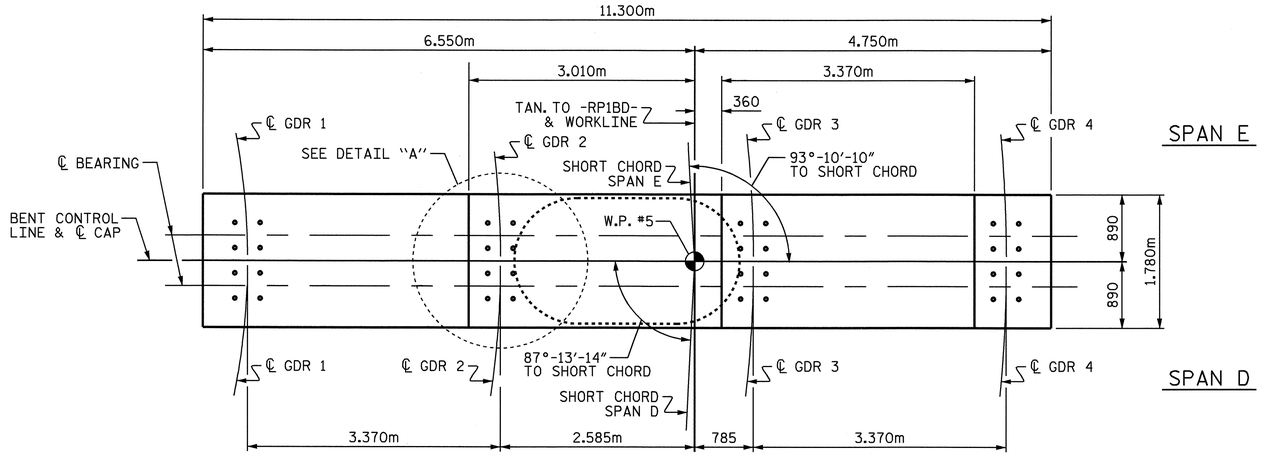

PLAN

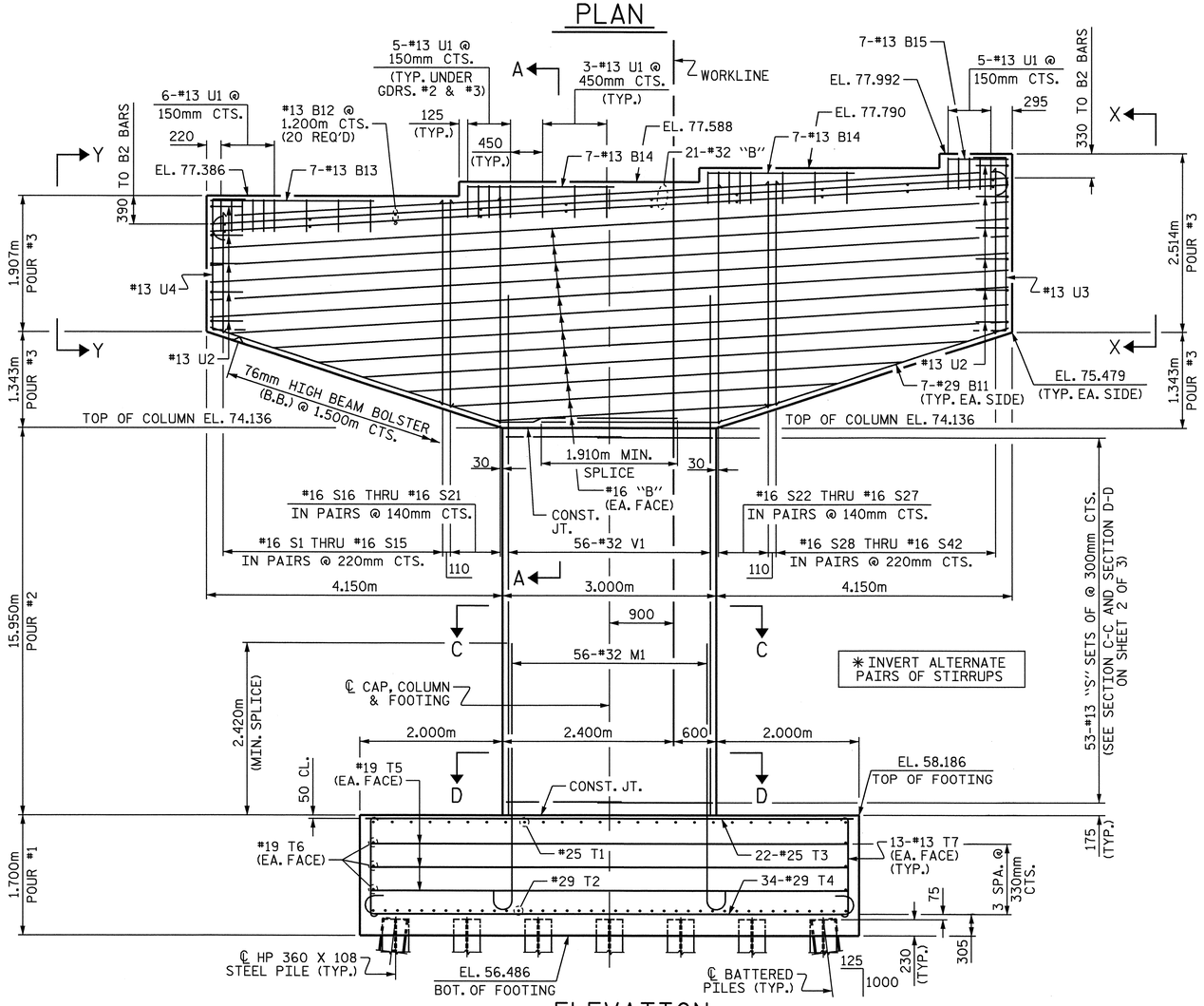

ELEVATION

FOR PILE ARRANGEMENT & SPACINGS, SEE PLAN OF FOOTING ON SHEET 2 OF 3

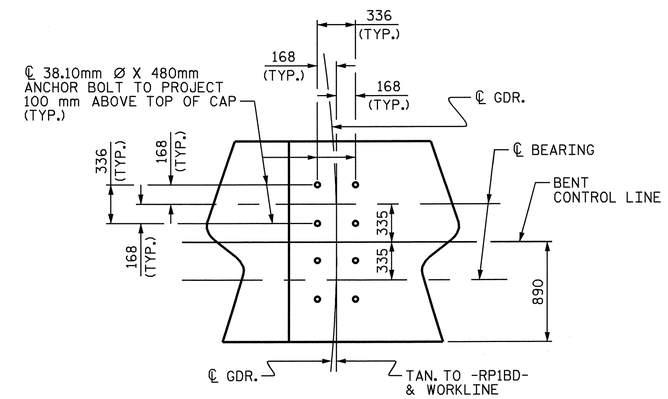

DETAIL "A"

(TYP. EA. GIRDER)

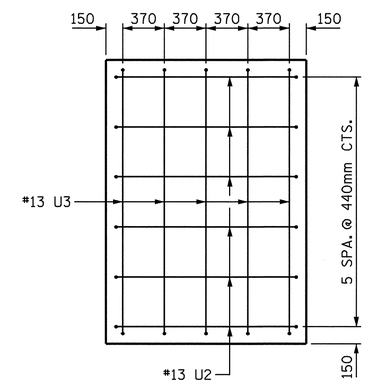

VIEW X-X

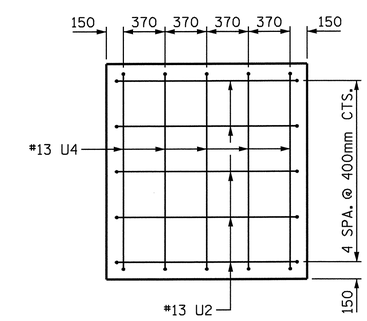

VIEW Y-Y

PROJECT NO. U-2519DA

CUMBERLAND COUNTY

STATION: 28+72.626-RP1BD-

SHEET 1 OF 3

STATE OF NORTH CAROLINA
DEPARTMENT OF TRANSPORTATION
RALEIGH

SUBSTRUCTURE

BENT 4

NORTH CAROLINA PROFESSIONAL SEAL 16301 ENGINEER TING HSILUNG FANG

10/08/08

REVISIONS						SHEET NO.
NO.	BY:	DATE:	NO.	BY:	DATE:	S-289
1			3			TOTAL SHEETS
2			4			411

DRAWN BY : E.C. LOCKLEAR DATE : 4-03-08
CHECKED BY : T.H. FANG DATE : 5-7-08

07-OCT-2008 15:57
H:\Structures\frye\str10_RP1BD_F0\Final Plans\u2519da_sd_bts_10.dgn
sdombrowski

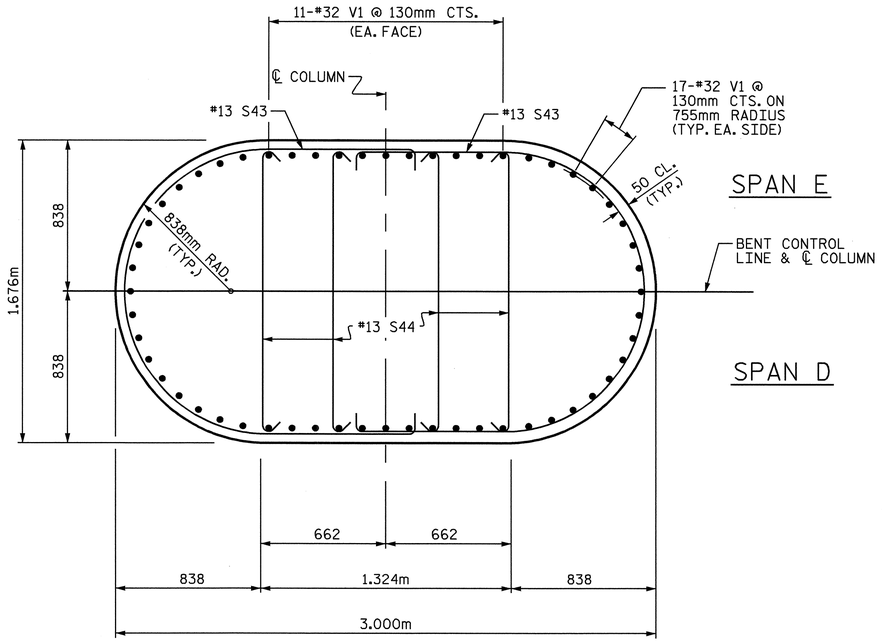

SECTION C-C

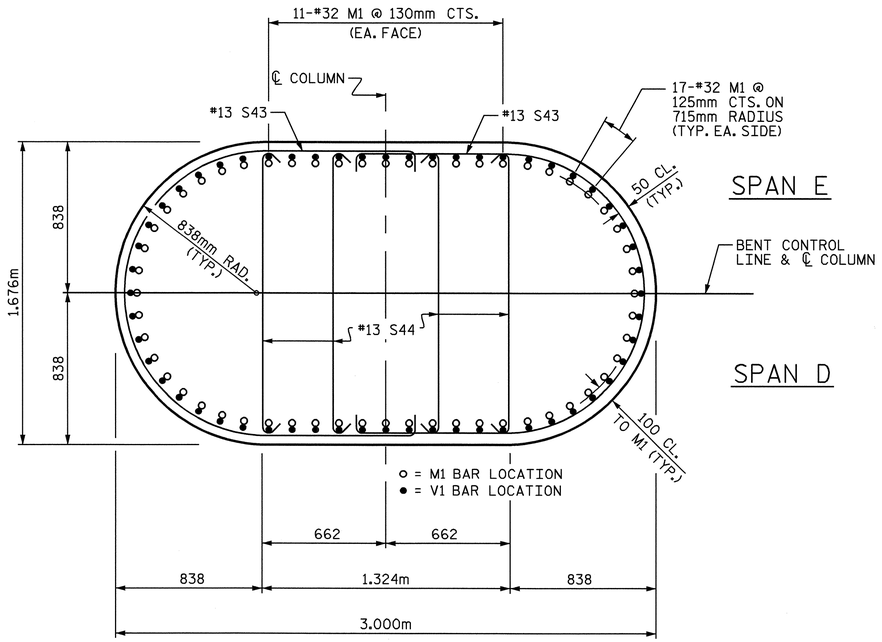

SECTION D-D

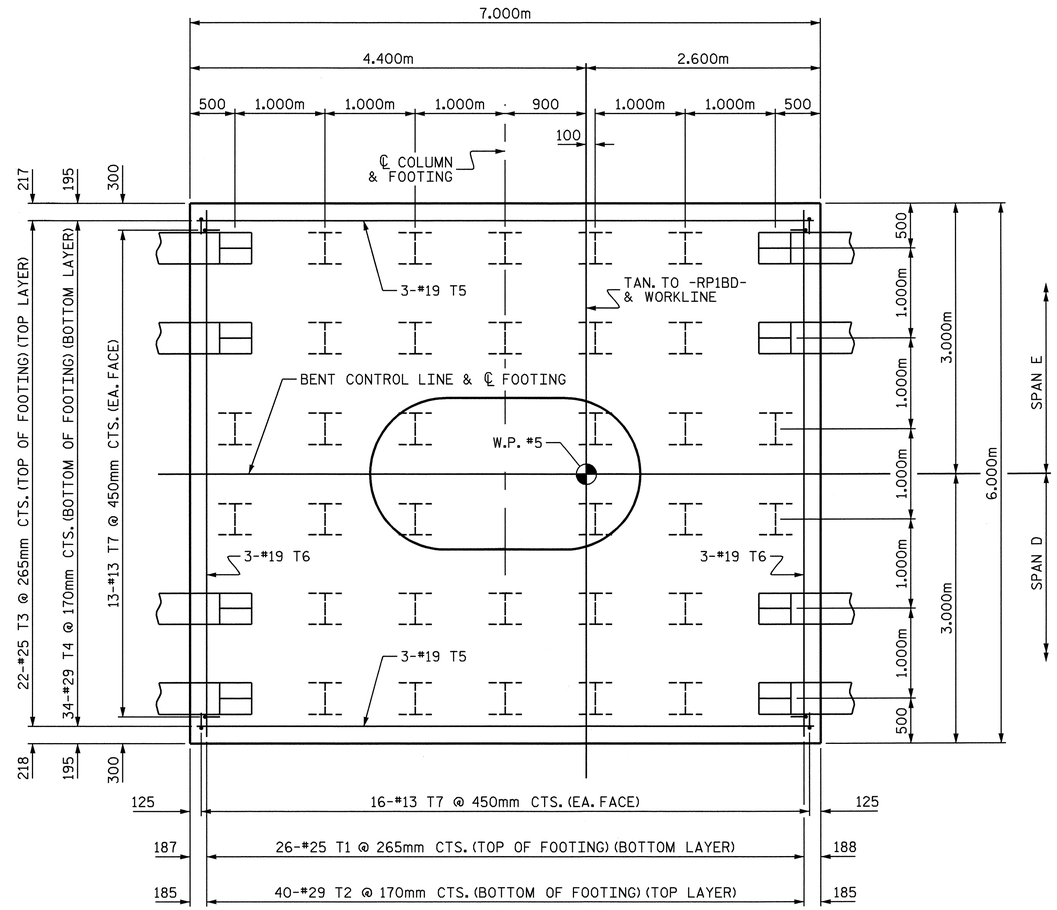

PLAN OF FOOTING

(SEE SECTION D-D FOR PLACEMENT OF M1 BARS IN FOOTING)

PROJECT NO. U-2519DA
CUMBERLAND COUNTY
STATION: 28+72.626-RP1BD-

SHEET 2 OF 3

STATE OF NORTH CAROLINA
DEPARTMENT OF TRANSPORTATION
RALEIGH

SUBSTRUCTURE

BENT 4

NORTH CAROLINA PROFESSIONAL SEAL 16301 ENGINEER TING HSIUNG FANG
10/08/08

REVISIONS						SHEET NO.
NO.	BY:	DATE:	NO.	BY:	DATE:	S-290
1			3			TOTAL SHEETS
2			4			411

DRAWN BY : E.C. LOCKLEAR DATE : 4-03-08
CHECKED BY : T.H. FANG DATE : 5-7-08

07-OCT-2008 15:57
H:\Structures\frye\str10_RP1BD_F0\Final Plans\u2519da_sd_bts_10.dgn
sdombrowski

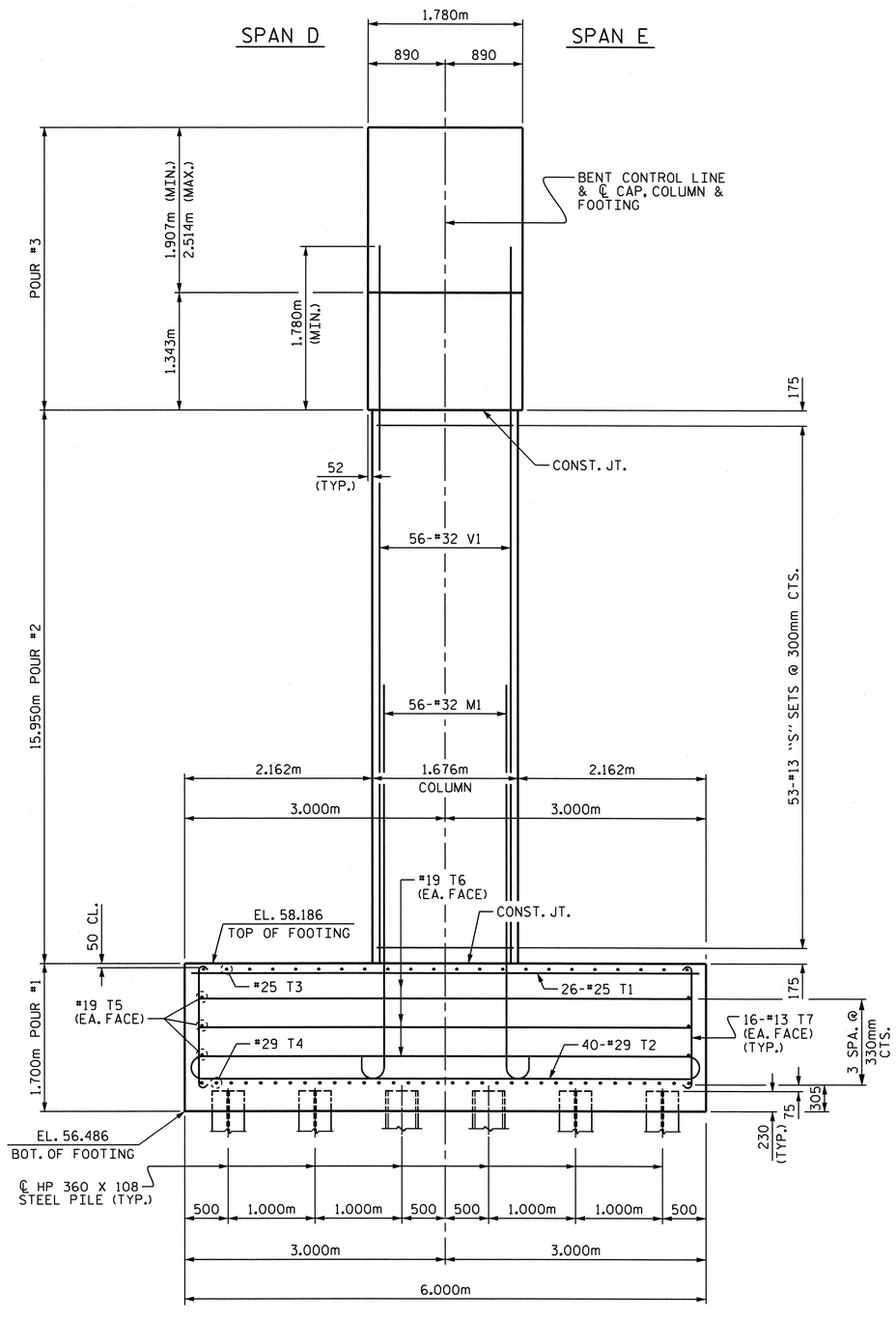

END ELEVATION

BAR TYPES

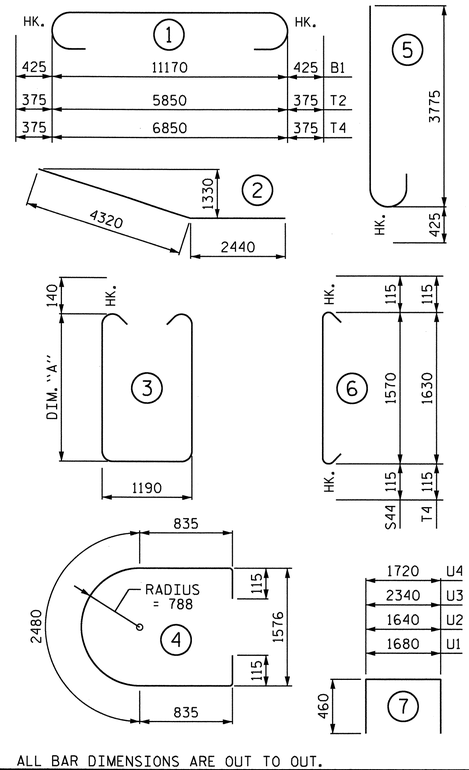

ALL BAR DIMENSIONS ARE OUT TO OUT.

BILL OF MATERIAL

BENT 4

BAR	NO.	SIZE	TYPE	DIM. "A"	LENGTH	WEIGHT
B1	7	#32	1	—	12020	539
B2	14	#32	STR	—	11220	1006
B3	10	#16	STR	—	11220	174
B4	2	#16	STR	—	11020	34
B5	2	#16	STR	—	10400	32
B6	2	#16	STR	—	9760	30
B7	2	#16	STR	—	8660	27
B8	2	#16	STR	—	7120	22
B9	2	#16	STR	—	5580	17
B10	2	#16	STR	—	4040	13
B11	14	#29	2	—	6760	479
B12	20	#13	STR	—	1680	33
B13	7	#13	STR	—	2300	16
B14	14	#13	STR	—	2060	29
B15	7	#13	STR	—	920	6
M1	56	#32	5	—	4200	1506
S1	2	#16	3	1655	4780	15
S2	2	#16	3	1745	4960	15
S3	2	#16	3	1825	5120	16
S4	2	#16	3	1915	5300	16
S5	2	#16	3	1995	5460	17
S6	2	#16	3	2085	5640	18
S7	2	#16	3	2165	5800	18
S8	2	#16	3	2245	5960	18
S9	2	#16	3	2335	6140	19
S10	2	#16	3	2415	6300	20
S11	2	#16	3	2505	6480	20
S12	2	#16	3	2585	6640	21
S13	2	#16	3	2665	6800	21
S14	2	#16	3	2755	6980	22
S15	2	#16	3	2835	7140	22
S16	2	#16	3	2885	7240	22
S17	2	#16	3	2935	7340	23
S18	2	#16	3	2985	7440	23
S19	2	#16	3	3045	7560	23
S20	2	#16	3	3095	7660	24
S21	2	#16	3	3155	7780	24
S22	2	#16	3	3335	8140	25
S23	2	#16	3	3305	8080	25
S24	2	#16	3	3265	8000	25
S25	2	#16	3	3225	7920	25
S26	2	#16	3	3185	7840	24
S27	2	#16	3	3155	7780	24
S28	2	#16	3	3125	7720	24
S29	2	#16	3	3065	7600	24
S30	2	#16	3	3005	7480	23
S31	2	#16	3	2945	7360	23
S32	2	#16	3	2895	7260	23
S33	2	#16	3	2835	7140	22
S34	2	#16	3	2775	7020	22
S35	2	#16	3	2715	6900	21
S36	2	#16	3	2655	6780	21
S37	2	#16	3	2605	6680	21
S38	2	#16	3	2545	6560	20
S39	2	#16	3	2485	6440	20
S40	2	#16	3	2425	6320	20
S41	2	#16	3	2365	6200	19
S42	2	#16	3	2305	6080	19
S43	106	#13	4	—	4360	459
S44	212	#13	6	—	1800	379
T1	26	#25	STR		5840	603
T2	40	#29	1		6600	1336
T3	22	#25	STR	—	6840	598
T4	34	#29	1	—	7600	1308
T5	6	#19	STR		6860	92
T6	6	#19	STR	—	5860	79
T7	58	#13	6	—	1560	90
U1	30	#13	7	—	2600	78
U2	11	#13	7	—	2560	28
U3	5	#13	7	—	3260	16
U4	5	#13	7	—	2640	13
V1	56	#32	STR	—	17740	6362

REINFORCING STEEL 16,292 kg

CLASS A CONCRETE BREAKDOWN:

POUR #1 - FOOTING	71.4	m3
POUR #2 - COLUMN	70.6	m3
POUR #3 - CAP	60.2	m3
TOTAL CLASS A CONCRETE	202.2	m3

HP 360 X 108 STEEL PILES: NO. 40 METERS 680.0

PILE REDRIVES: EACH 10

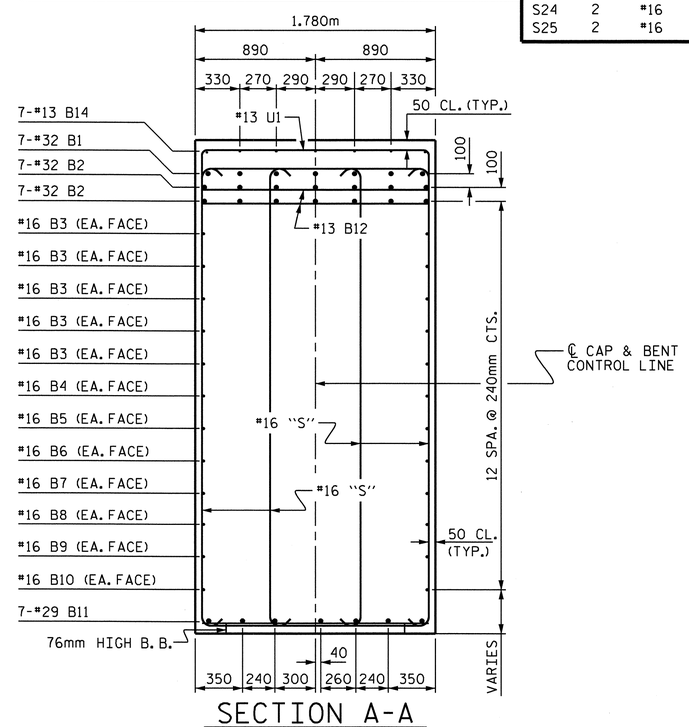

SECTION A-A

(FOR CLARITY, COLUMN REINFORCING STEEL NOT SHOWN.)

PROJECT NO. U-2519DA

CUMBERLAND COUNTY

STATION: 28+72.626-RP1BD-

SHEET 3 OF 3

STATE OF NORTH CAROLINA
DEPARTMENT OF TRANSPORTATION
RALEIGH

SUBSTRUCTURE

BENT 4

NORTH CAROLINA PROFESSIONAL SEAL 16301 ENGINEER T.H. FANG
3/10/11

REVISIONS						SHEET NO.
NO.	BY:	DATE:	NO.	BY:	DATE:	S-291
1			3			TOTAL SHEETS
2			4			411

DRAWN BY : E.C. LOCKLEAR DATE : 4-03-08

CHECKED BY : T.H. FANG DATE : 5-7-08

10-MAR-2011 14:41
X:\TIPProjects-U\U2519da\Structures\frye\str10_RP1BD_F0\FinalPlans\u2519da_sd_bts_10.dgn
qtnguyen

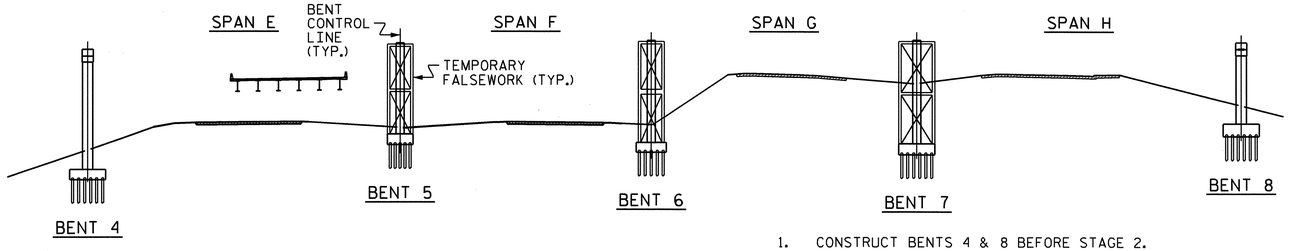

STAGE 1

1. CONSTRUCT BENTS 4 & 8 BEFORE STAGE 2.
2. DRIVE PILES, CONSTRUCT FOOTINGS AND COLUMNS FOR BENTS 5, 6 & 7.
3. ERECT TEMPORARY FALSEWORK FOR BENTS 5, 6 & 7.

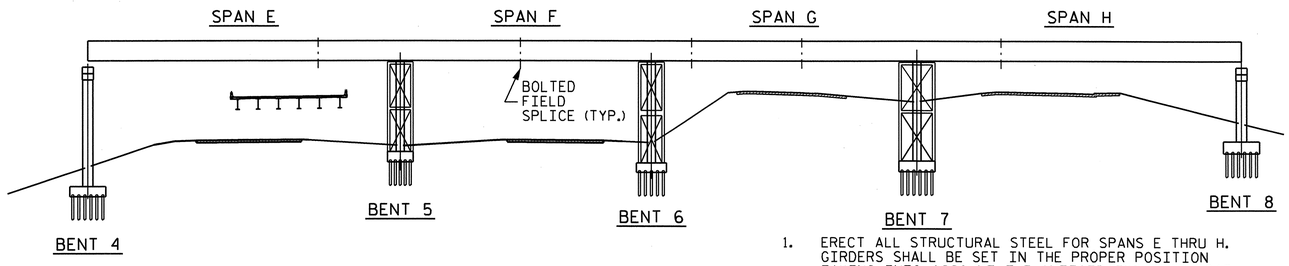

STAGE 2

1. ERECT ALL STRUCTURAL STEEL FOR SPANS E THRU H. GIRDERS SHALL BE SET IN THE PROPER POSITION TAKING INTO ACCOUNT THE ANTICIPATED DEAD LOAD DEFLECTION.
2. INSTALL ALL HIGH STRENGTH BOLTS IN ACCORDANCE WITH THE STANDARD SPECIFICATIONS AND THE SPECIAL PROVISIONS.

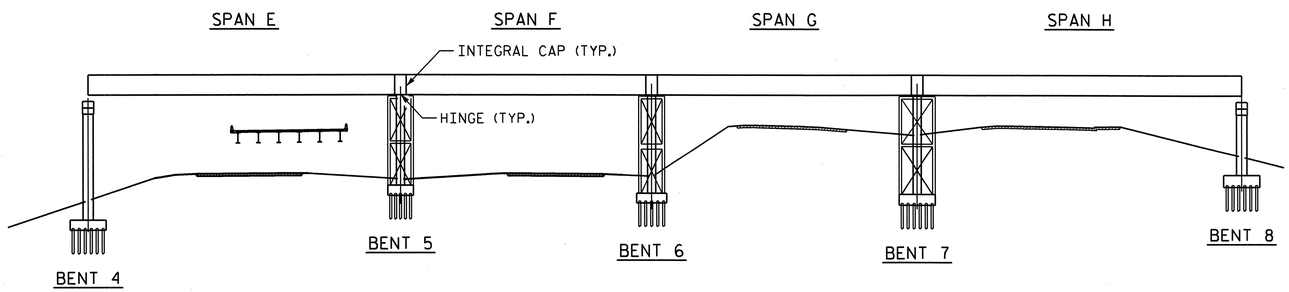

STAGE 3

1. CONSTRUCT INTEGRAL CAPS (SEE INTEGRAL BENT CONSTRUCTION SEQUENCE NOTES).

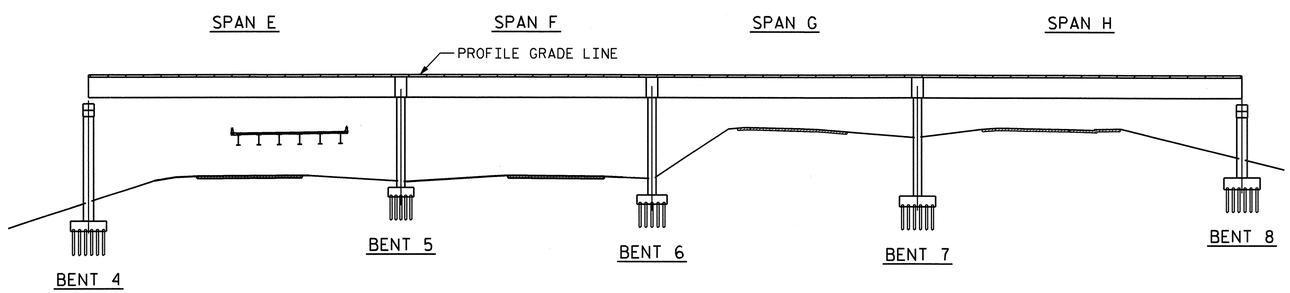

STAGE 4

1. REMOVE TEMPORARY FALSEWORK (SEE INTEGRAL BENT CONSTRUCTION SEQUENCE NOTES).
2. CONSTRUCT REMAINING PORTIONS OF SPANS E-H.

INTEGRAL BENT CONSTRUCTION SEQUENCE

THIS BRIDGE IS DESIGNED FOR THE CONSTRUCTION SEQUENCE SHOWN. IF THE CONTRACTOR USES AN ALTERNATE DESIGN AS ALLOWED BY THE SPECIAL PROVISION FOR POST-TENSIONING TENDONS, THEN THE CONTRACTOR BECOMES RESPONSIBLE FOR CHANGES TO THE CONSTRUCTION SEQUENCE. THE REVISED CONSTRUCTION SEQUENCE SHALL BE SUBMITTED FOR APPROVAL WITH THE ALTERNATE POST-TENSIONING DESIGN. THE FOLLOWING CONSTRUCTION SEQUENCE SHALL APPLY UNLESS OTHERWISE APPROVED IN WRITING BY THE ENGINEER.

1. CONSTRUCT FOOTING AND COLUMN IN ACCORDANCE WITH THE PLANS.
2. ERECT TEMPORARY FALSEWORK. TEMPORARY FALSEWORK SHALL SUPPORT GIRDERS ON BOTH SIDES OF INTEGRAL CAP. GIRDER SUPPORT SHALL BE WITHIN 1.500m OF CENTERLINE BENT.
3. ERECT ALL STRUCTURAL STEEL IN SPANS E THRU H. STRUCTURAL STEEL SHALL BE SUPPORTED BY TEMPORARY FALSEWORK AT BENTS 5, 6 & 7.
4. WHEN FOOTING AND SHAFT CONCRETE HAS ATTAINED THE SPECIFIED COMPRESSIVE STRENGTH VALUE (f'c), CONSTRUCT INTEGRAL CAP, INCLUDING POST-TENSIONING DUCTS. GROUT TUBES AND ANCHORAGES REQUIRED FOR CAP, IN ACCORDANCE WITH THE PLANS.
5. WHEN CAP CONCRETE HAS ATTAINED THE SPECIFIED INITIAL COMPRESSIVE STRENGTH VALUE (f'ci), INSTALL POST-TENSIONING TENDONS IN THE CAP (T1-T6) AND TENSION IN THE ORDER SHOWN BELOW.
6. WHEN TENSIONING OF THE CAP TENDONS (T1-T6) IS COMPLETE, TENDONS SHALL BE GROUTED AND ANCHORAGES SHALL BE PROTECTED. SEE POST-TENSIONING SPECIAL PROVISION FOR PROTECTION OF END ANCHORAGES.
7. REMOVE TEMPORARY FALSEWORK AFTER COMPLETION OF INTEGRAL CAPS FOR BENTS 5, 6 & 7.
8. CAST DECK AND RAILS AS SPECIFIED IN THE SUPERSTRUCTURE PLANS.

POST-TENSIONING DATA

CONCRETE
CAP AND HINGE
STRENGTH AT 28 DAYS (f'c) = 41.4MPa
STRENGTH AT POST-TENSIONING (f'ci) = 31.0MPa

FOOTING AND SHAFT (CLASS "AA" CONCRETE)
STRENGTH AT 28 DAYS (f'c) = 31.0MPa

TENDONS IN BENT CAPS 5, 6 AND 7
T1 & T2 = 19-15.24mm DIA., GRADE 270, SEVEN WIRE, LOW-RELAXATION STRANDS PER TENDON
T3 & T4 = 15-15.24mm DIA., GRADE 270, SEVEN WIRE, LOW-RELAXATION STRANDS PER TENDON
T5 & T6 = 7-15.24mm DIA., GRADE 270, SEVEN WIRE, LOW-RELAXATION STRANDS PER TENDON

FRICTION (U) = 0.15
WOBBLE (K) = 0.00066 /m
ANCHOR SET = 6mm
MODULUS OF ELASTICITY (Es) = 186,000MPa
JACKING FORCE BEFORE ANCHOR SET = 0.70 f's
(ALL TENDONS IN ALL BENTS)

DUCTS
T1 & T2 MINIMUM 110mm NOMINAL DIAMETER GALVANIZED RIGID OR SEMI-RIGID DUCTS
T3 & T4 MINIMUM 100mm NOMINAL DIAMETER GALVANIZED RIGID OR SEMI-RIGID DUCTS
T5 & T6 MINIMUM 70mm NOMINAL DIAMETER GALVANIZED RIGID OR SEMI-RIGID DUCTS

TENDON STRESSING DATA

TENDON	LOCATION	STRESSING SEQUENCE	JACKING FORCE BEFORE ANCHOR SET	ELONGATION BEFORE ANCHOR SET	ELONGATION AFTER ANCHOR SET
			KN	mm	mm
T1	CAP	1	3450	70	64
T2	CAP	3	3450	70	64
T3	CAP	5	2724	70	64
T4	CAP	6	2724	70	64
T5	CAP	4	1270	70	64
T6	CAP	2	1270	70	64

TENDON STRESSING NOTES

STRESS ALL CAP TENDONS (T1-T6) FROM GIRDER 1 END.

DURING STRESSING NO PERSONS SHALL BE DIRECTLY BEHIND EITHER END OF TENDONS.

INTEGRAL BENT NOTES (BENTS 5, 6 & 7)

NO CONCRETE SHALL BE PLACED IN ANY PORTION OF THE BENTS UNTIL REVIEW OF THE POST-TENSIONING SYSTEM SUBMITTED BY THE CONTRACTOR HAS BEEN COMPLETED.

POST-TENSIONING BEARING PLATES FOR CAP TENDONS (T1-T6) SHALL BE FABRICATED OF HOT-ROLLED STEEL CONFORMING TO ASTM A588 AND APPROVED BY THE ENGINEER. BEARING PLATES SHALL FIT FLAT AGAINST THE GIRDER WEB AND RECEIVE AN ANSI 500 FINISH ON THE SURFACE IN CONTACT WITH THE WEB. CENTERLINE OF THE TENDONS IS TO BE NORMAL TO OUTSIDE FACE OF BEARING PLATE.

POST-TENSIONING ANCHORAGE DETAILS SHALL BE DETERMINED BY THE POST-TENSIONING MATERIALS SUPPLIER. DETAILS SHALL BE SHOWN ON THE SHOP DRAWINGS AND SUBMITTED TO THE ENGINEER FOR APPROVAL. SEE SPECIAL PROVISION FOR POST-TENSIONING TENDONS.

BAR REINFORCEMENT INTERFERING WITH DUCT ALIGNMENT SHALL BE ADJUSTED AS APPROVED BY THE ENGINEER.

SPECIAL CARE SHALL BE TAKEN TO ENSURE PROPER CONSOLIDATION OF CONCRETE UNDER THE TOP FLANGE OF THE GIRDERS DURING PLACEMENT OF CONCRETE FOR INTEGRAL CAPS AND ANCHORAGE ENCASEMENTS TO ELIMINATE FORMATION OF VOIDS BENEATH TOP FLANGE.

AFTER CASTING CAP BUT PRIOR TO TENSIONING OF THE CAP, THE ENGINEER SHALL THOROUGHLY INSPECT THE INTERFACE BETWEEN THE GIRDER FLANGES AND CONCRETE TO LOCATE ANY VOIDS DUE TO INCOMPLETE CONSOLIDATION DURING PLACEMENT OF CONCRETE. IF VOIDS ARE DETECTED OR AS DIRECTED BY THE ENGINEER, THE CONTRACTOR SHALL REMOVE A SUFFICIENT VOLUME OF CONCRETE AND REPLACE WITH NON-SHRINK GROUT.

ENCASEMENT OF THE POST-TENSIONING ANCHORAGES SHALL BE SUBJECT TO THE SAME INSPECTION AND REPAIR CRITERIA AS SPECIFIED FOR THE CAP ABOVE.

TOP SURFACE OF THE CAPS SHALL BE INTENTIONALLY ROUGHENED WITH A WIRE BRUSH WHEN CAST AND THOROUGHLY CLEANED PRIOR TO PLACING DECK CONCRETE.

THE DUCTS AND STRANDS SHALL BE FREE OF DIRT, LOOSE RUST, AND OTHER DELETERIOUS SUBSTANCE BEFORE INSTALLING TENDONS. POST-TENSIONING DUCTS SHALL BE FILLED WITH GROUT AFTER STRESSING HAS BEEN COMPLETED, SEE SPECIAL PROVISION FOR POST-TENSIONING TENDONS.

CONTRACTOR SHALL SUBMIT DESIGN AND DRAWINGS OF TEMPORARY FALSEWORK, AND ERECTION PROCEDURES TO THE ENGINEER FOR APPROVAL. SEE SPECIAL PROVISION FOR POST-TENSIONING TENDONS'.

THERE IS NO PAYMENT FOR THE TEMPORARY FALSEWORK AS THE TEMPORARY FALSEWORK IS CONSIDERED INCIDENTAL TO THE CONSTRUCTION OF BENTS 5, 6 AND 7.

PROJECT NO. U-2519DA
CUMBERLAND COUNTY
STATION: 28+72.626-RP1BD-

STATE OF NORTH CAROLINA
DEPARTMENT OF TRANSPORTATION
RALEIGH

SCHEMATIC SEQUENCE OF CONSTRUCTION AND NOTES INTEGRAL BENTS 5, 6 & 7

NORTH CAROLINA PROFESSIONAL SEAL 11915 ENGINEER JOHN C. FRYE
3/25/11

REVISIONS						SHEET NO.
NO.	BY:	DATE:	NO.	BY:	DATE:	S-292
1			3			TOTAL SHEETS
2			4			411

DRAWN BY : E.C. LOCKLEAR DATE : 5-20-08
CHECKED BY : J.C. FRYE DATE : 6-24-08

14-MAR-2011 16:42
K:\TIPProjects-U\U2519da\Structures\frye\str10_RP1BD_F0\Final Plans\U2519DA_sd_ics_10.dgn
ttfang

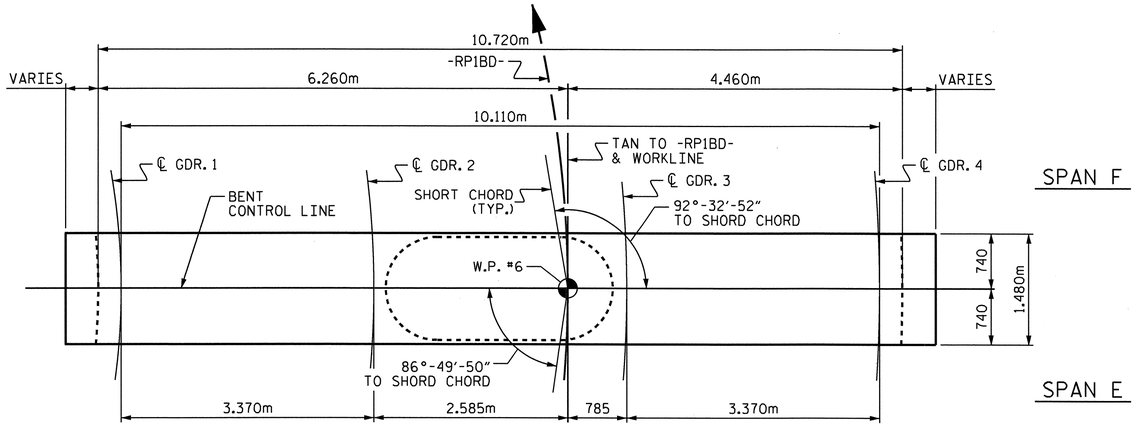

PLAN

DECK SLAB NOT SHOWN FOR CLARITY

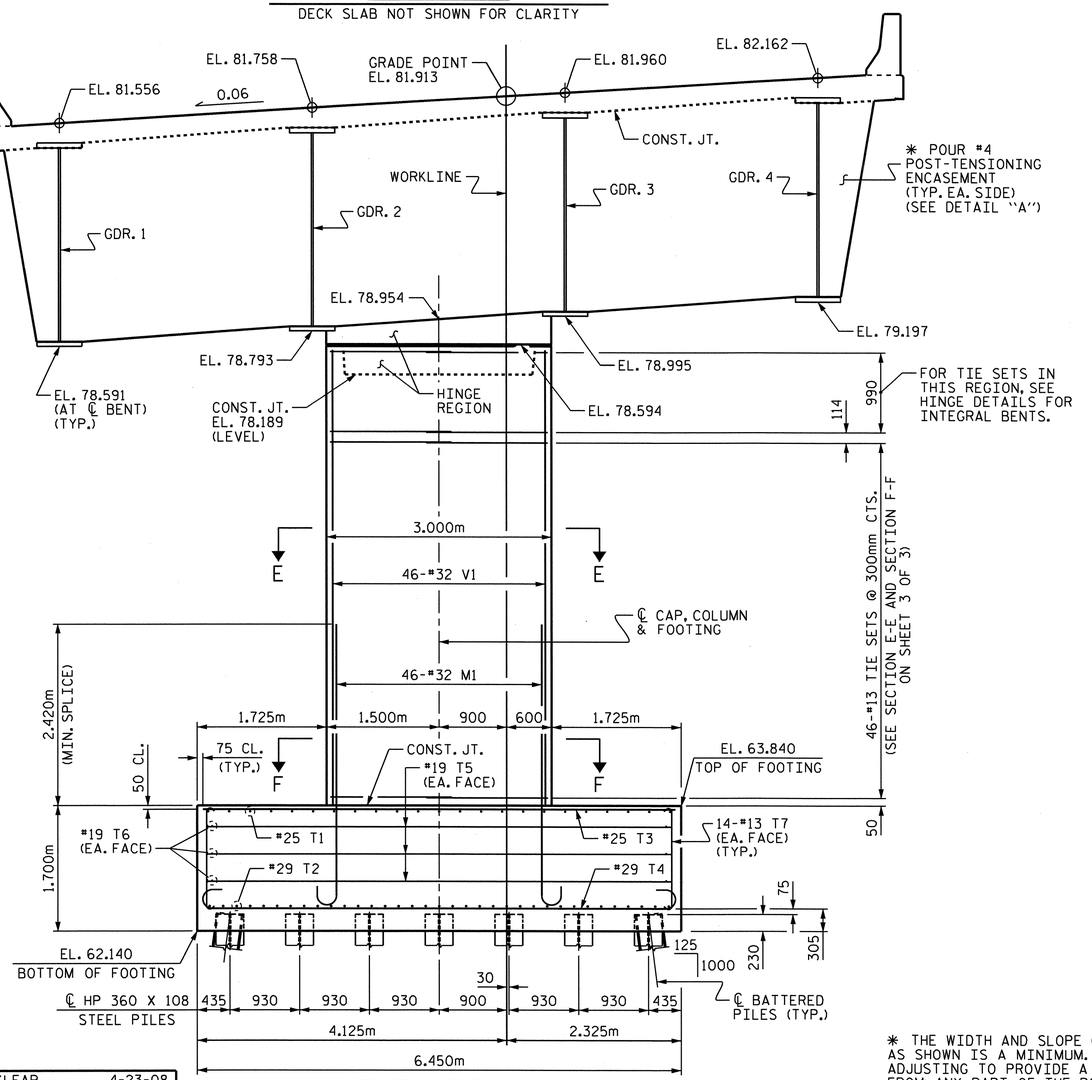

ELEVATION

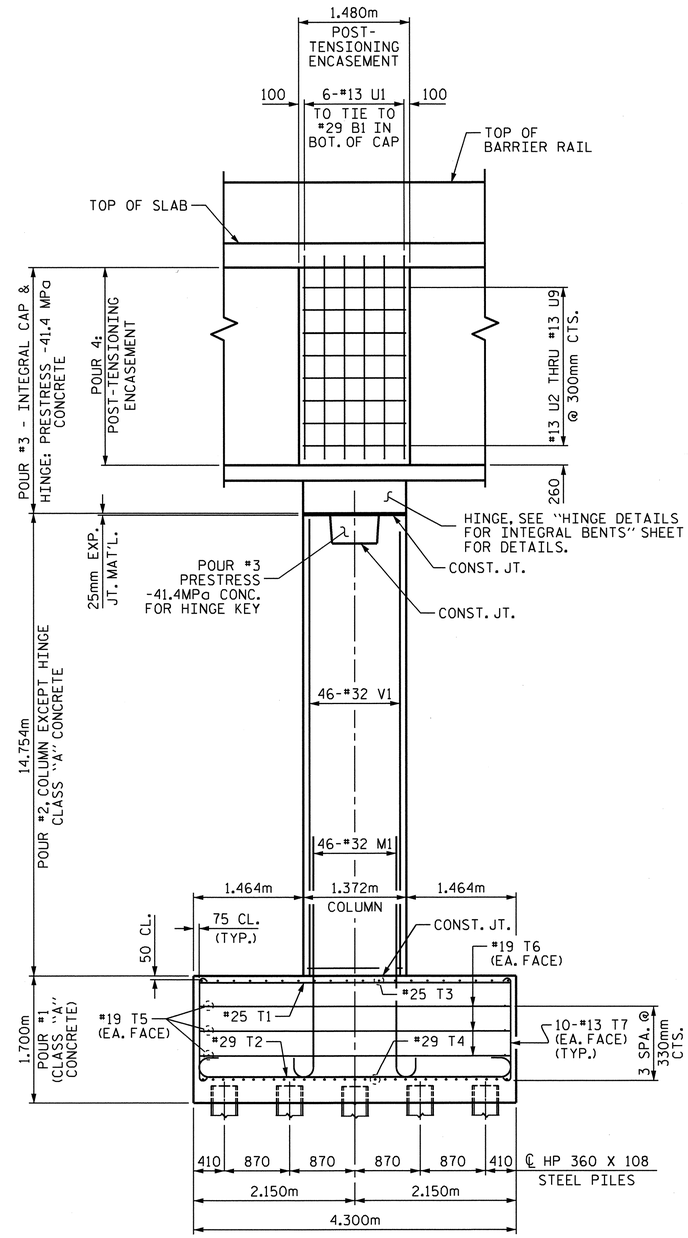

END ELEVATION

NOTES:

FOR STRUCTURAL STEEL DETAILS IN INTEGRAL BENT CAP SEE, "STRUCTURAL STEEL DETAILS AT BENTS 5, 6, & 7" SHEET.

FOR PILE SPLICE DETAILS SEE END BENT 1, SHEET 3 OF 3.

DETAILED DRAWINGS FOR FALSEWORK AND FORMS FOR THE INTEGRAL BENT SHALL BE SUBMITTED. SEE "SCHEMATIC SEQUENCE OF CONSTRUCTION AND NOTES INTEGRAL BENTS 5, 6 & 7" SHEET, SHEET SNSM, AND POST-TENSIONING TENDON SPECIAL PROVISION.

FOR CAP REINFORCING, SEE SHEET 2 OF 3.

FOR HINGE REINFORCING, SEE "HINGE DETAILS FOR INTEGRAL BENT" SHEET.

FOR SECTIONS E-E & F-F THROUGH COLUMN, SEE SHEET 3 OF 3.

LOCATION OF U2-U9 BARS MAYBE SHIFTED SLIGHTLY TO TIE TO B1 BARS IN CAP.

B1 BARS THROUGH BEARING PLATES MAYBE CUT AS APPROVED BY THE ENGINEER TO AVOID INTERFERING WITH POST-TENSIONING EQUIPMENT.

HOOKS ON M1 BARS MAY BE TURNED AS NECESSARY FOR PLACING REINFORCING STEEL.

FOR PRESTRESS -41.4 MPa CONCRETE, SEE SPECIAL PROVISIONS.

FOR PROTECTION OF END ANCHORAGES (POST-TENSIONING ENCASEMENT), SEE POST-TENSIONING TENDONS SPECIAL PROVISION.

FOR MASS CONCRETE, SEE SPECIAL PROVISIONS.

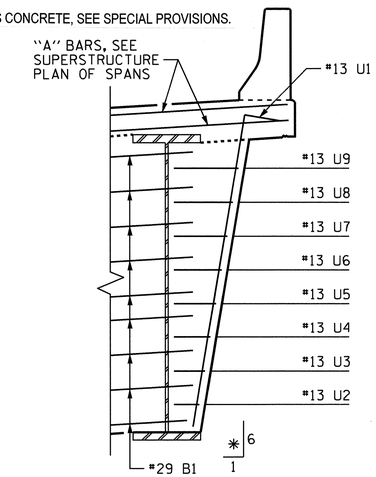

DETAIL "A"

SHEAR STUDS ON BOTH SIDES OF WEB, FLANGES & BEARING PLATES NOT SHOWN FOR CLARITY. SEE "STRUCTURAL STEEL DETAILS AT BENTS 5, 6, & 7" SHEET.

✱ THE WIDTH AND SLOPE OF THE POST-TENSIONING ENCASEMENT AS SHOWN IS A MINIMUM. THE WIDTH AND SLOPE MAY NEED ADJUSTING TO PROVIDE A 2" MINIMUM COVER OF EPOXY GROUT FROM ANY PART OF THE POST-TENSIONING HARDWARE OR ELEMENTS.

NORTH CAROLINA PROFESSIONAL SEAL 11915 ENGINEER JOHN C. FRYE

3/31/11

PROJECT NO. U-2519DA

CUMBERLAND COUNTY

STATION: 28+72.626-RP1BD-

SHEET 1 OF 3

STATE OF NORTH CAROLINA
DEPARTMENT OF TRANSPORTATION
RALEIGH

SUBSTRUCTURE

BENT 5 (INTEGRAL)

REVISIONS						SHEET NO.
NO.	BY:	DATE:	NO.	BY:	DATE:	S-293
1			3			TOTAL SHEETS
2			4			411

DRAWN BY : E.C. LOCKLEAR DATE : 4-23-08
CHECKED BY : J. C. FRYE DATE : 9-30-08

31-MAR-2011 11:23
K:\TIPProjects-U\U2519da\Structures\frye\str10_RP1BD_F0\Final Plans\u2519da_sd_ibt_10.dgn
ttfang

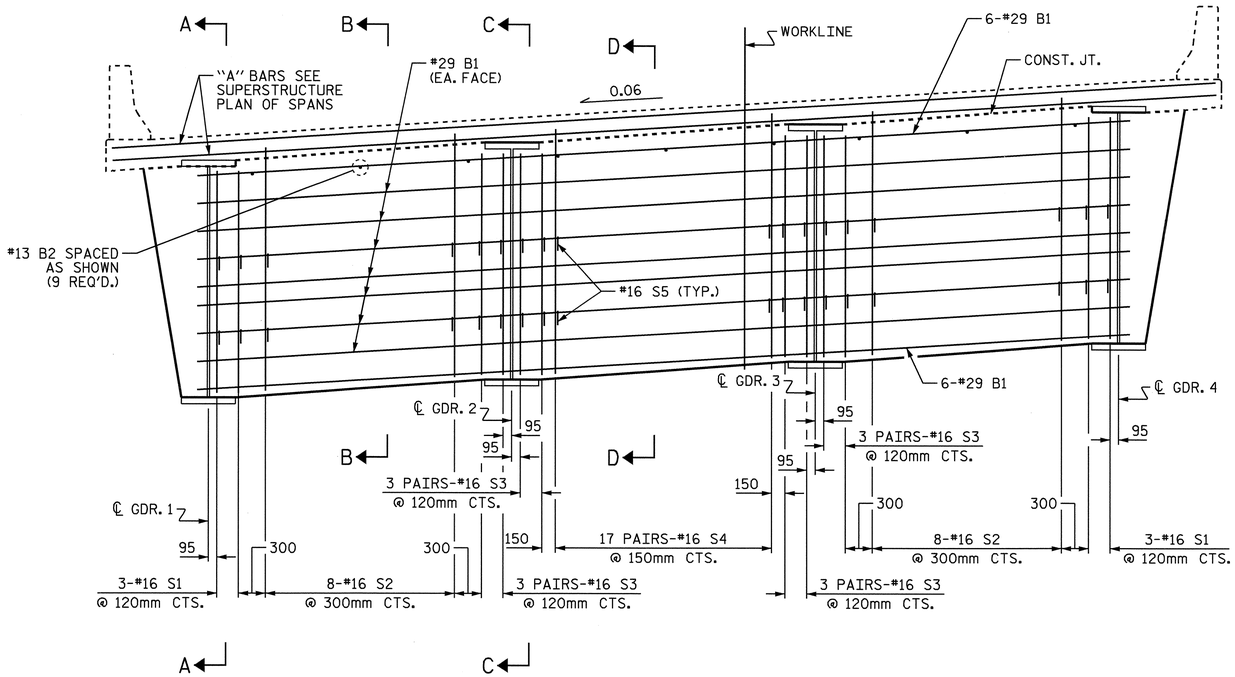

BENT CAP ELEVATION

CAP REINFORCING STEEL SHOWN, REINFORCING STEEL IN POST-TENSIONING ENCASEMENT NOT SHOWN FOR CLARITY.

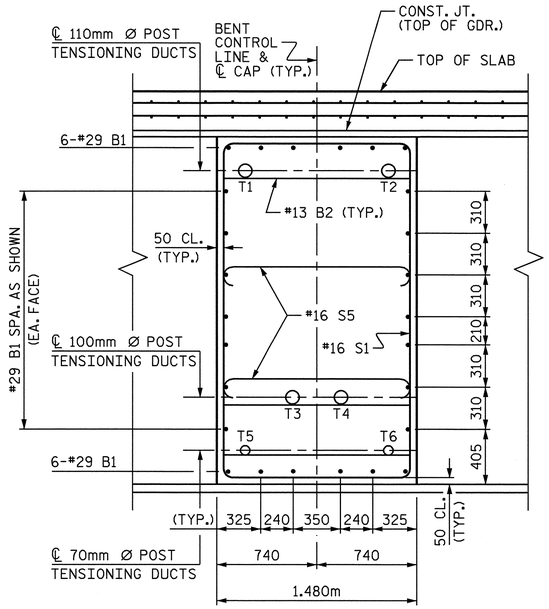

SECTION A-A

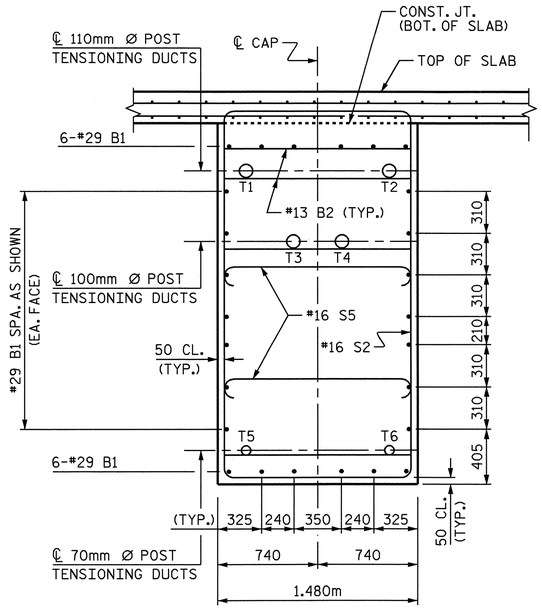

SECTION B-B

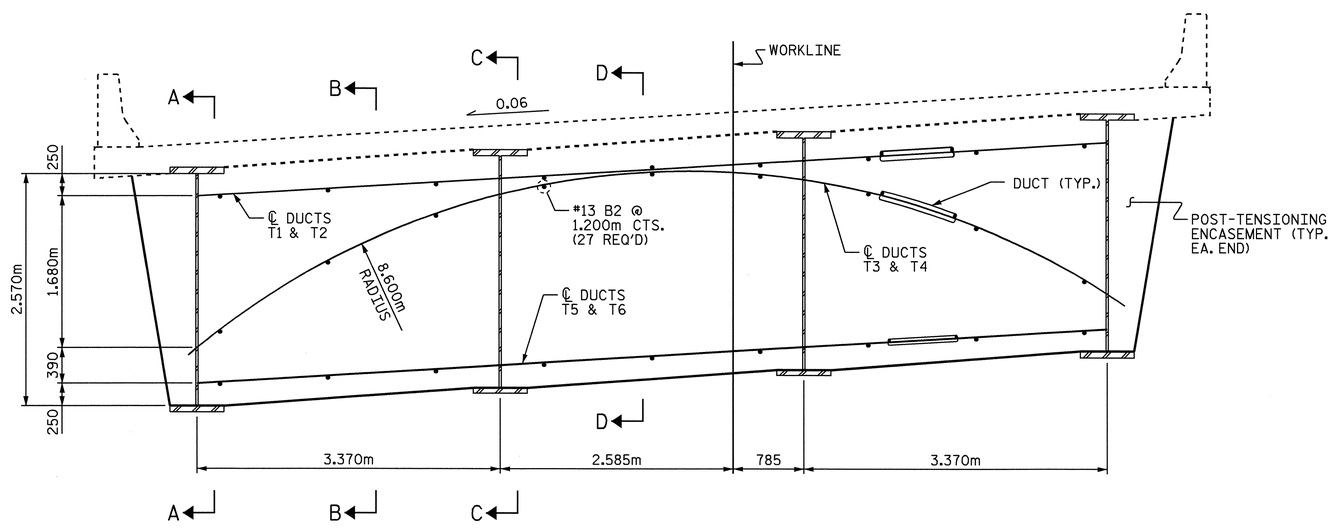

BENT CAP ELEVATION

(SHOWING POST-TENSIONING)

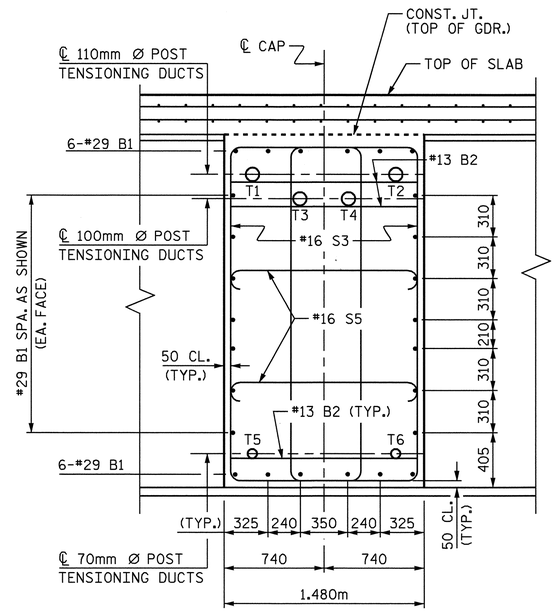

SECTION C-C

FOR LOCATION OF POST-TENSIONING DUCTS, SEE SUPERSTRUCTURE, "STRUCTURAL STEEL DETAILS @ INTEGRAL BENTS" SHEET.

NORTH CAROLINA PROFESSIONAL SEAL 11915 ENGINEER JOHN C. FRYE 10/1/08

PROJECT NO. U-2519DA
CUMBERLAND COUNTY
STATION: 28+72.626-RP1BD-

SHEET 2 OF 3

STATE OF NORTH CAROLINA
DEPARTMENT OF TRANSPORTATION
RALEIGH

SUBSTRUCTURE

BENT 5 (INTEGRAL)

REVISIONS						SHEET NO.
NO.	BY:	DATE:	NO.	BY:	DATE:	S-294
1			3			TOTAL SHEETS
2			4			411

DRAWN BY : E.C. LOCKLEAR DATE : 4-23-08
CHECKED BY : J. C. FRYE DATE : 9-30-08

13-OCT-2008 12:44
z:\u2519da\structures\frye\str10_rplbd_fo\final plans\u2519da_sd_lbt_10.dgn
tfang

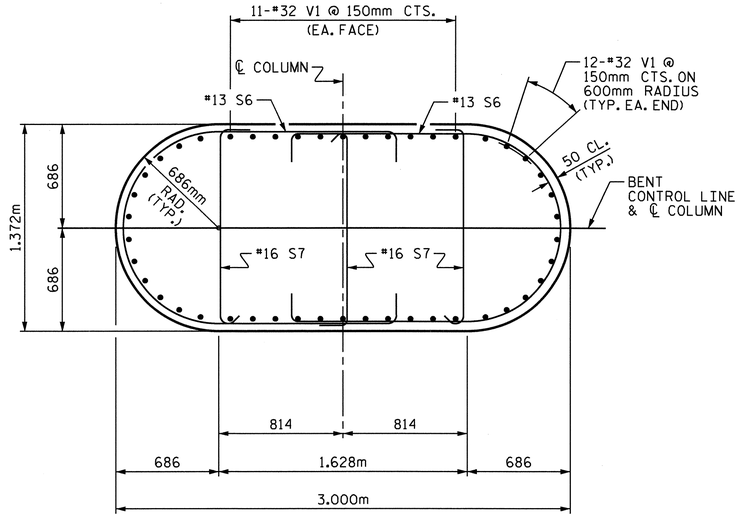

SECTION E-E

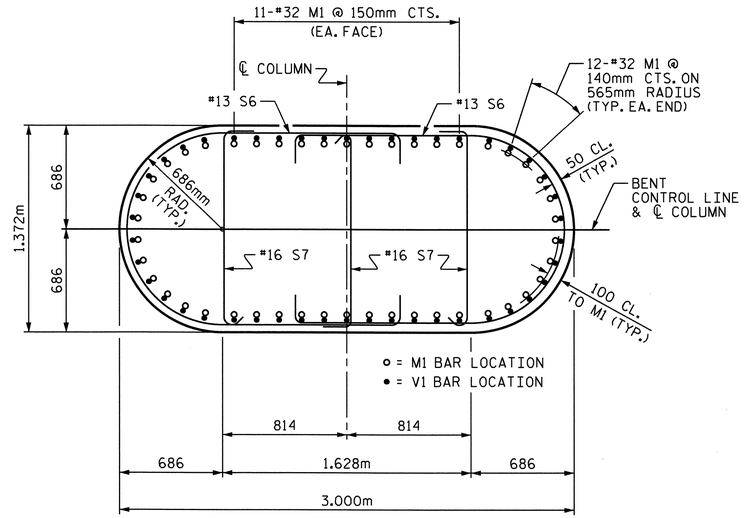

SECTION F-F

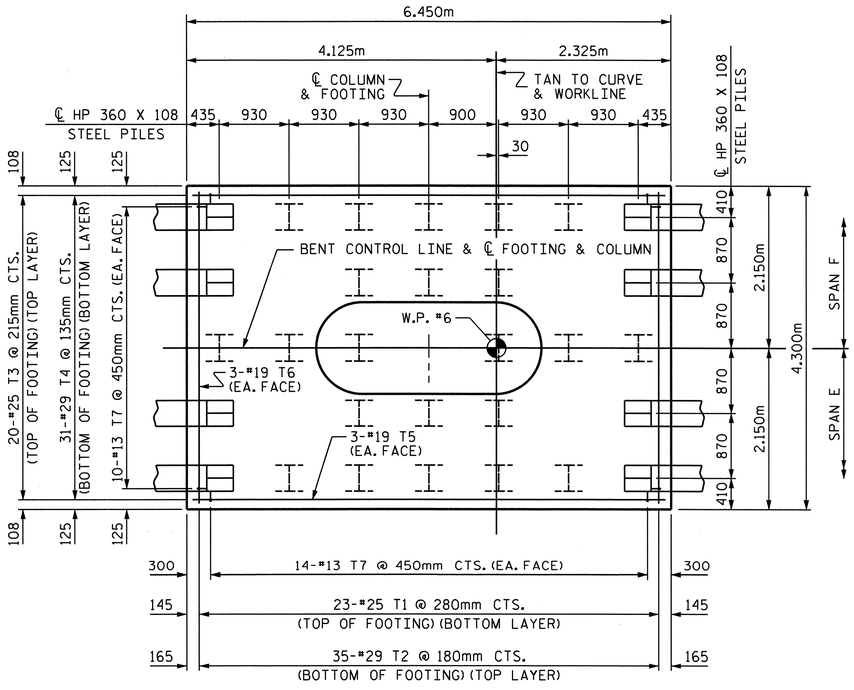

PLAN OF FOOTING

(SEE SECTION F-F FOR PLACEMENT OF "M" BARS IN FOOTING)

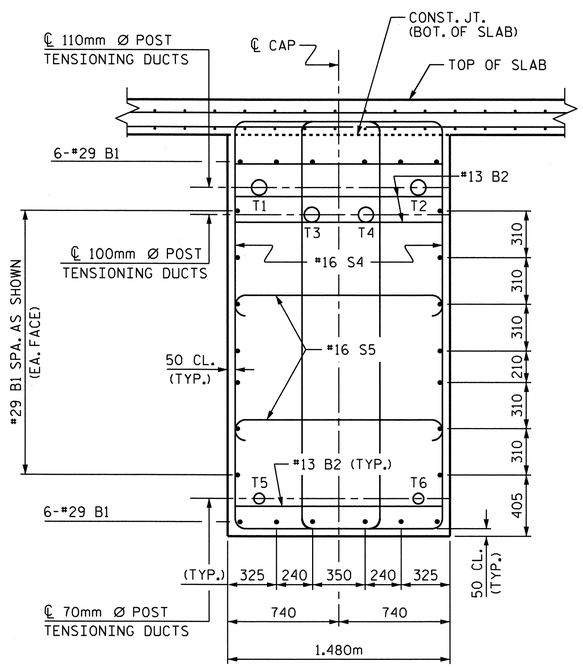

SECTION D-D

BAR TYPES

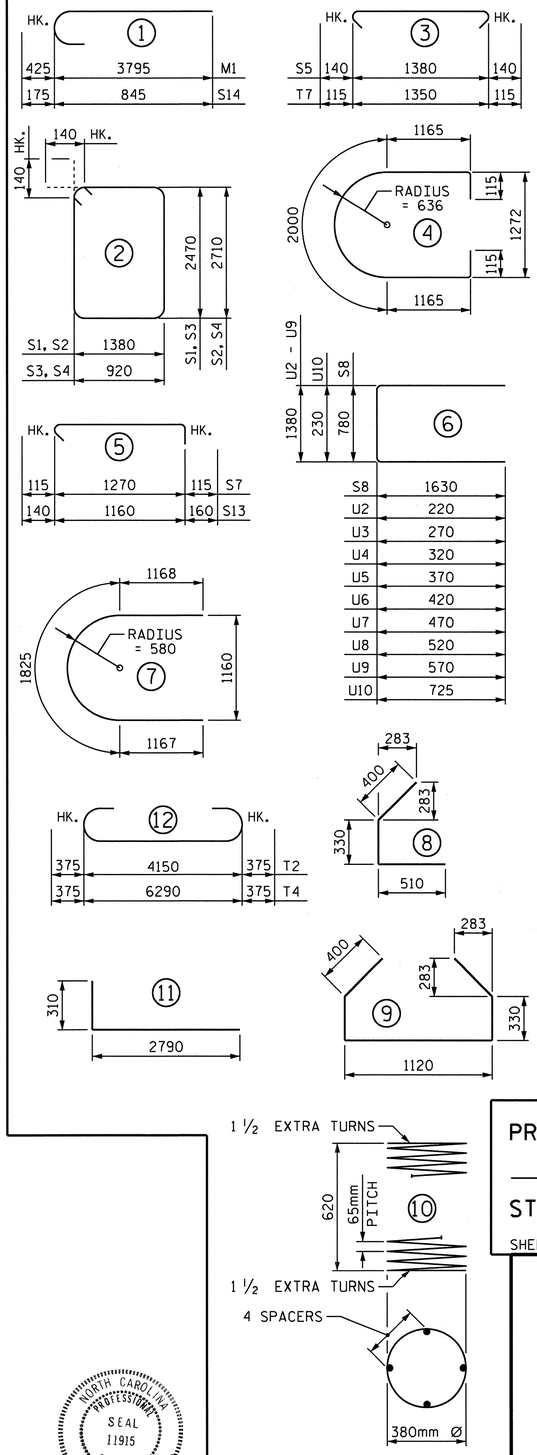

ALL BAR DIMENSIONS ARE OUT TO OUT

BILL OF MATERIAL

BENT 5

BAR	NO.	SIZE	TYPE	LENGTH	WEIGHT
B1	26	#29	STR	10560	1389
B2	36	#13	STR	1380	49
D1	96	#36	STR	3100	2353
M1	46	#32	1	4220	1243
S1	6	#16	2	7980	74
S2	16	#16	2	8460	210
S3	24	#16	2	7060	263
S4	34	#16	2	7540	398
S5	102	#16	3	1660	263
S6	108	#13	4	4560	490
S7	153	#16	5	1500	356
S8	6	#13	6	4040	24
S9	2	#13	STR	2160	4
S10	5	#16	7	4160	32
S11	12	#16	8	1240	23
S12	5	#16	9	2580	20
S13	3	#16	5	1460	7
S14	18	#16	1	1020	28
S15	6	#13	10	15000	89
T1	23	#25	STR	4140	378
T2	35	#29	12	4900	868
T3	20	#25	STR	6300	501
T4	31	#29	12	7040	1104
T5	6	#19	STR	6320	85
T6	6	#19	STR	4160	56
T7	48	#13	3	1580	75
U1	12	#13	11	3100	37
U2	2	#13	6	1820	4
U3	2	#13	6	1920	4
U4	2	#13	6	2020	4
U5	2	#13	6	2120	4
U6	2	#13	6	2220	4
U7	2	#13	6	2320	5
U8	2	#13	6	2420	5
U9	2	#13	6	2520	5
U10	6	#16	6	1680	16
V1	46	#32	STR	14680	4324

REINFORCING STEEL 14,796 kg

CLASS A CONCRETE BREAKDOWN:
POUR #1 - FOOTING 47.2 m3
POUR #2 - COLUMN 54.4 m3
TOTAL 101.6 m3

PRESTRESS -41.4 MPa CONCRETE:
POUR #3 - INTEGRAL CAP, HINGE & KEY 40.6 m3

POST-TENSIONING ENCASEMENT:
POUR #4 - EPOXY GROUT 3.9 m3

HP 360 X 108 STEEL PILES:
NO. 30 570.0 METERS
PILE REDRIVES:
NO. 8 EACH

PROJECT NO. U-2519DA
CUMBERLAND COUNTY
STATION: 28+72.626-RP1BD-
SHEET 3 OF 3

STATE OF NORTH CAROLINA
DEPARTMENT OF TRANSPORTATION
RALEIGH
SUBSTRUCTURE

BENT 5
(INTEGRAL)

REVISIONS						SHEET NO.
NO.	BY:	DATE:	NO.	BY:	DATE:	S-295
1			3			TOTAL SHEETS
2			4			411

NORTH CAROLINA PROFESSIONAL SEAL 11915 ENGINEER JOHN C. FRYE
3/25/11

DRAWN BY : E.C. LOCKLEAR DATE : 4-23-08
CHECKED BY : J. C. FRYE DATE : 6-10-08

22-MAR-2011 15:08
K:\TIPProjects-U\U2519da\Structures\frye\str10_RP1BD_F0\Final Plans\u2519da_sd_ibt_10.dgn
ttfang

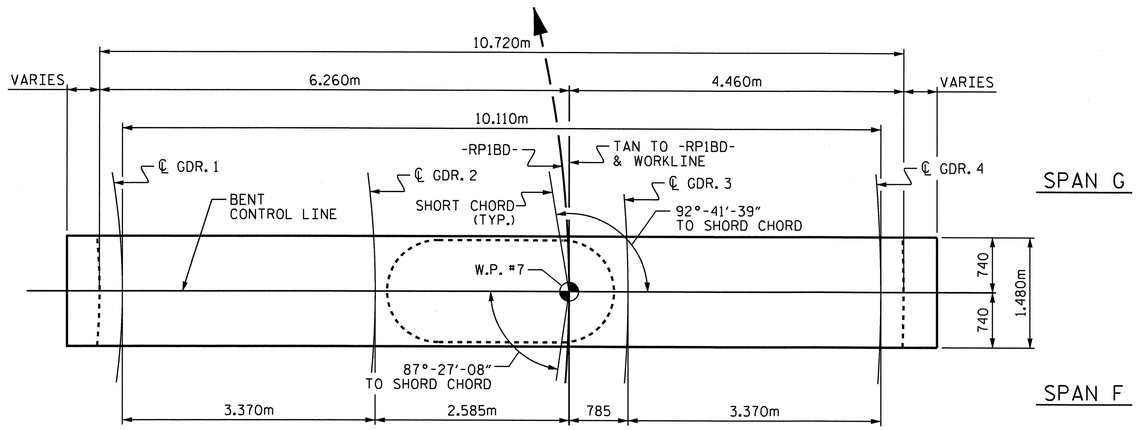

PLAN

DECK SLAB NOT SHOWN FOR CLARITY

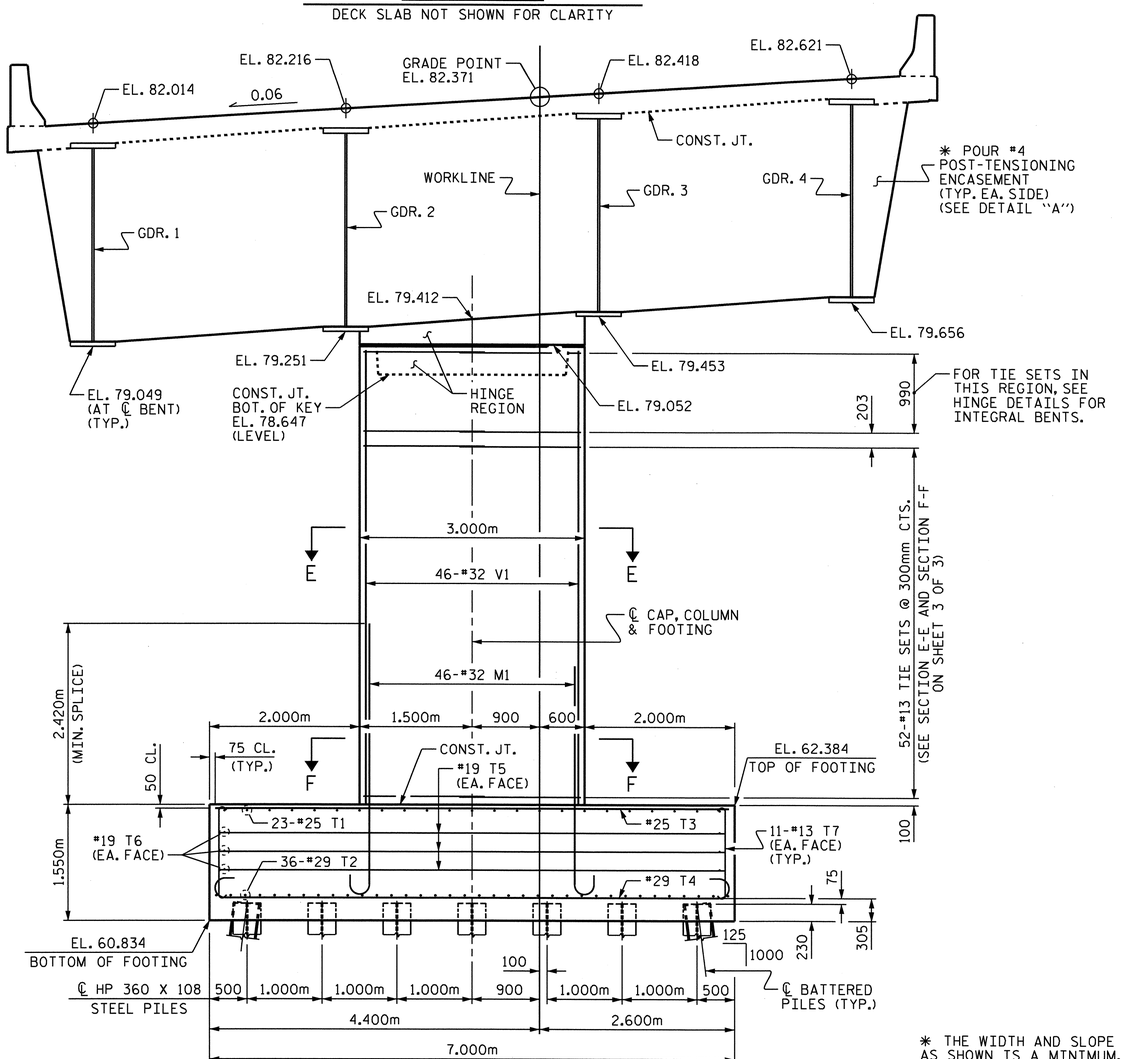

ELEVATION

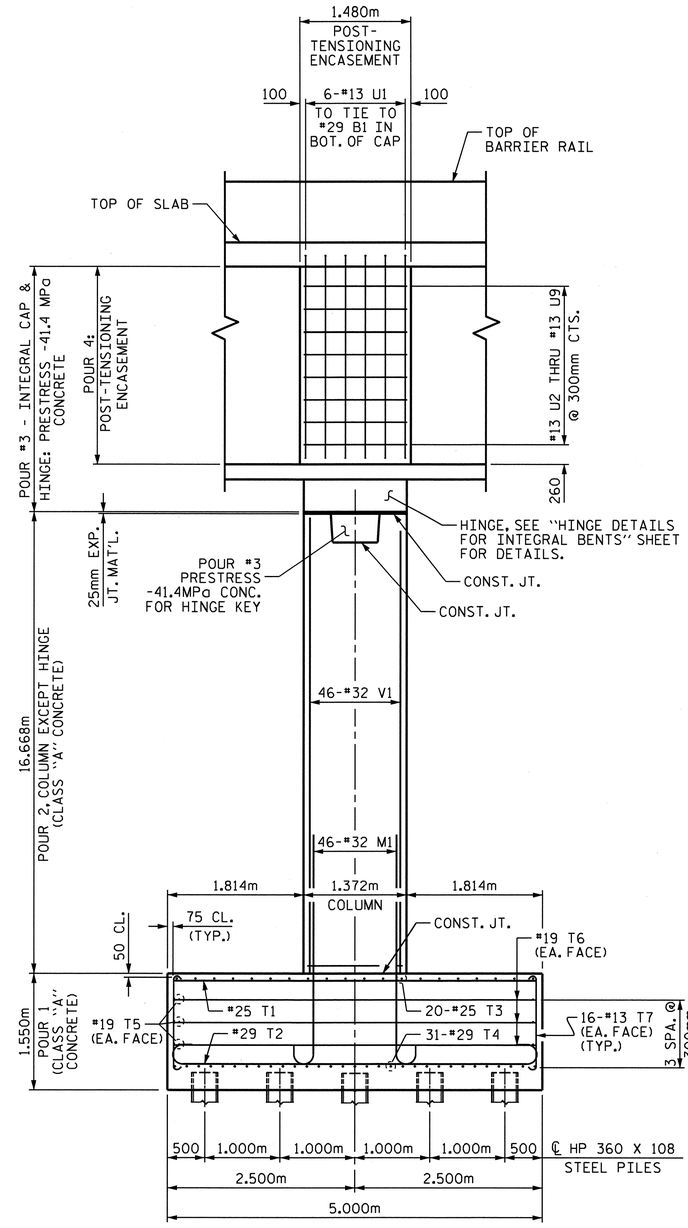

END ELEVATION

NOTES:

FOR STRUCTURAL STEEL DETAILS IN INTEGRAL BENT CAP SEE, "STRUCTURAL STEEL DETAILS AT BENTS 5, 6, & 7" SHEET.

FOR PILE SPLICE DETAILS SEE END BENT 1, SHEET 3 OF 3.

DETAILED DRAWINGS FOR FALSEWORK AND FORMS FOR THE INTEGRAL BENT SHALL BE SUBMITTED. SEE "SCHEMATIC SEQUENCE OF CONSTRUCTION AND NOTES INTEGRAL BENTS 5, 6 & 7" SHEET, SHEET SNSM, AND POST-TENSIONING TENDON SPECIAL PROVISION.

FOR CAP REINFORCING, SEE SHEET 2 OF 3.

FOR HINGE REINFORCING, SEE "HINGE DETAILS FOR INTEGRAL BENT" SHEET.

FOR SECTIONS E-E & F-F THROUGH COLUMN, SEE SHEET 3 OF 3.

LOCATION OF U2-U9 BARS MAYBE SHIFTED SLIGHTLY TO TIE TO B1 BARS IN CAP.

B1 BARS THROUGH BEARING PLATES MAYBE CUT AS APPROVED BY THE ENGINEER TO AVOID INTERFERING WITH POST-TENSIONING EQUIPMENT.

HOOKS ON M1 BARS MAY BE TURNED AS NECESSARY FOR PLACING REINFORCING STEEL.

FOR PRESTRESS -41.4 MPa CONCRETE, SEE SPECIAL PROVISIONS.

FOR PROTECTION OF END ANCHORAGES (POST-TENSIONING ENCASEMENT), SEE POST-TENSIONING TENDONS SPECIAL PROVISION.

FOR MASS CONCRETE, SEE SPECIAL PROVISIONS.

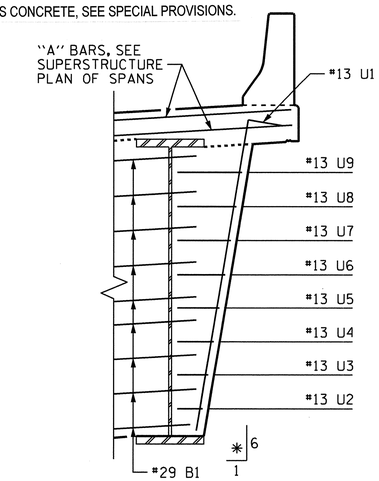

DETAIL "A"

SHEAR STUDS ON BOTH SIDES OF WEB, FLANGES & BEARING PLATES NOT SHOWN FOR CLARITY. SEE "STRUCTURAL STEEL DETAILS AT BENTS 5, 6, & 7" SHEET.

✱ THE WIDTH AND SLOPE OF THE POST-TENSIONING ENCASEMENT AS SHOWN IS A MINIMUM. THE WIDTH AND SLOPE MAY NEED ADJUSTING TO PROVIDE A 2" MINIMUM COVER OF EPOXY GROUT FROM ANY PART OF THE POST-TENSIONING HARDWARE OR ELEMENTS.

NORTH CAROLINA PROFESSIONAL SEAL 16301 ENGINEER TING HSING FANG
3/31/11

PROJECT NO. U-2519DA
CUMBERLAND COUNTY
STATION: 28+72.626-RP1BD-

SHEET 1 OF 3

STATE OF NORTH CAROLINA
DEPARTMENT OF TRANSPORTATION
RALEIGH

SUBSTRUCTURE

BENT 6 (INTEGRAL)

REVISIONS							SHEET NO.
NO.	BY:	DATE:	NO.	BY:	DATE:		S-296
1			3				TOTAL SHEETS
2			4				411

DRAWN BY : E.C. LOCKLEAR DATE : 4-23-08
CHECKED BY : K.W. ALFORD DATE : 6-10-08

31-MAR-2011 11:24
K:\TIPProjects-U\U2519da\Structures\frye\str10_RP1BD_F0\Final Plans\u2519da_sd_lbt_10.dgn
ttfang

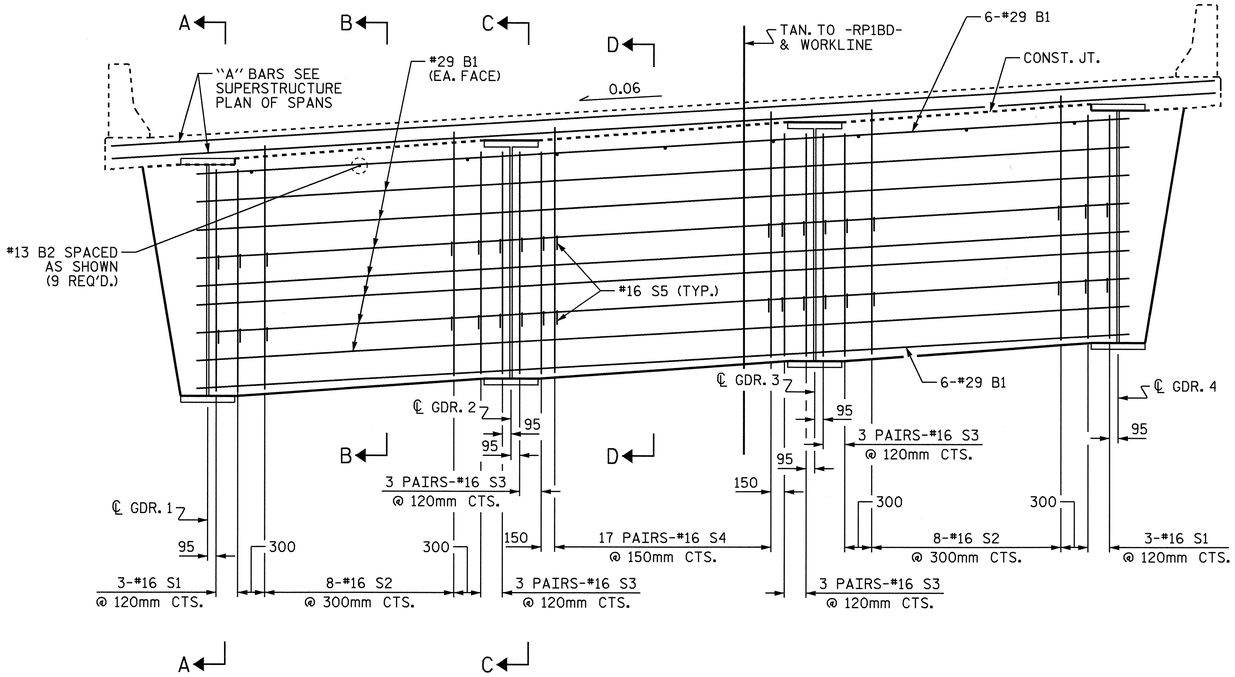

BENT CAP ELEVATION

CAP REINFORCING STEEL SHOWN, REINFORCING STEEL IN POST-TENSIONING ENCASEMENT NOT SHOWN FOR CLARITY.

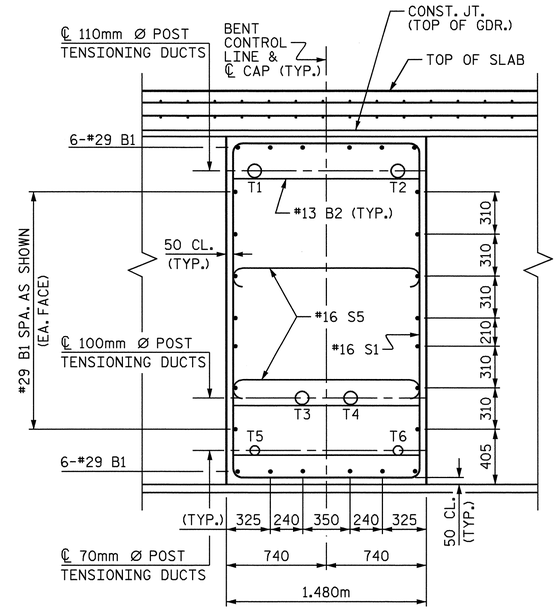

SECTION A-A

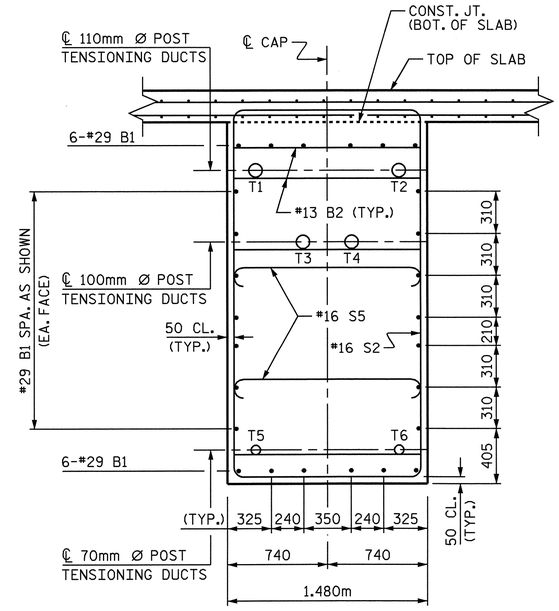

SECTION B-B

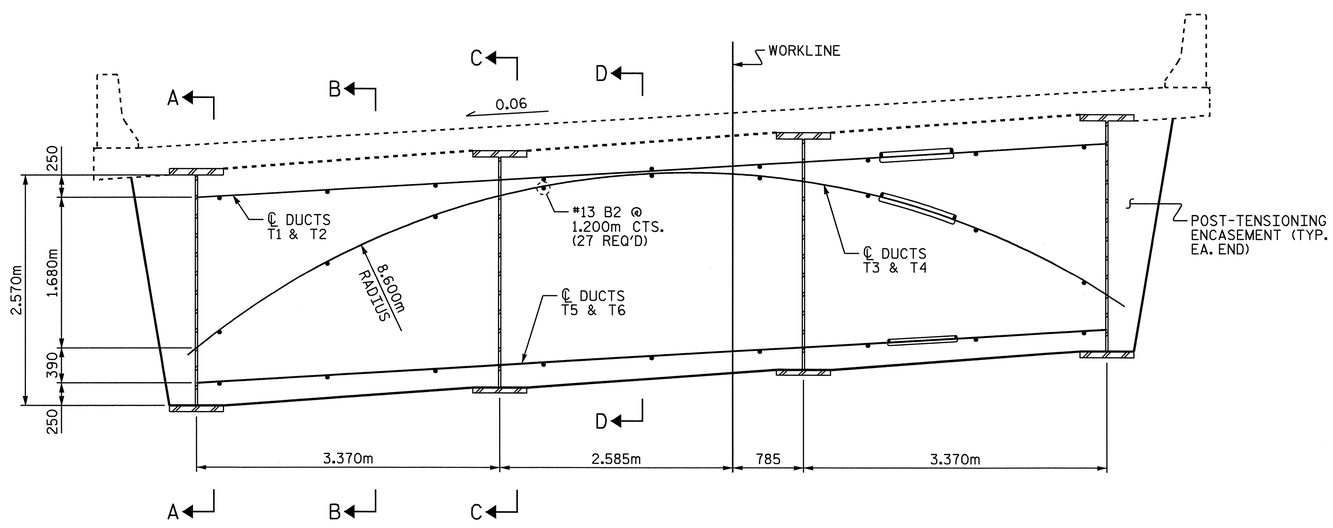

BENT CAP ELEVATION

(SHOWING POST-TENSIONING)

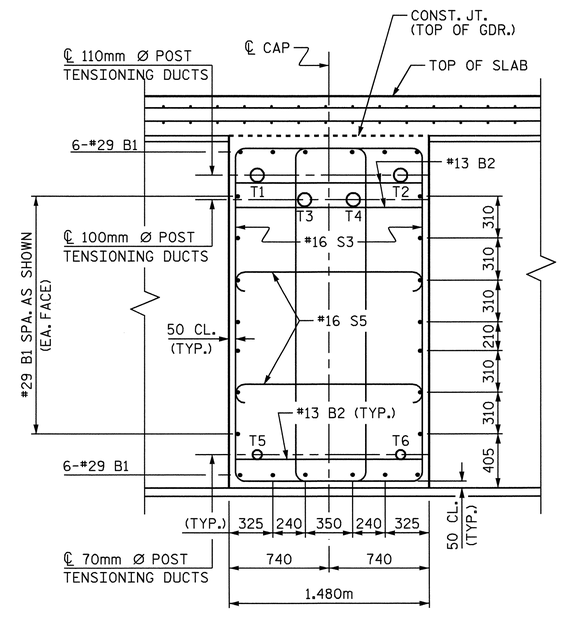

SECTION C-C

FOR LOCATION OF POST-TENSIONING DUCTS, SEE SUPERSTRUCTURE, "STRUCTURAL STEEL DETAILS @ INTEGRAL BENTS" SHEET.

NORTH CAROLINA PROFESSIONAL SEAL 16301 ENGINEER TING HSIUNG FANG

10/13/08

PROJECT NO. U-2519DA

CUMBERLAND COUNTY

STATION: 28+72.626-RP1BD-

SHEET 2 OF 3

STATE OF NORTH CAROLINA
DEPARTMENT OF TRANSPORTATION
RALEIGH

SUBSTRUCTURE

BENT 6 (INTEGRAL)

REVISIONS						SHEET NO.
NO.	BY:	DATE:	NO.	BY:	DATE:	S-297
1			3			TOTAL SHEETS
2			4			411

DRAWN BY : E.C. LOCKLEAR DATE : 4-23-08
CHECKED BY : K.W. ALFORD DATE : 5-28-08

13-OCT-2008 12:45
z:\u2519da\structures\frye\str10_rplbd_fo\finalplans\u2519da_sd_lbt_10.dgn
tfang

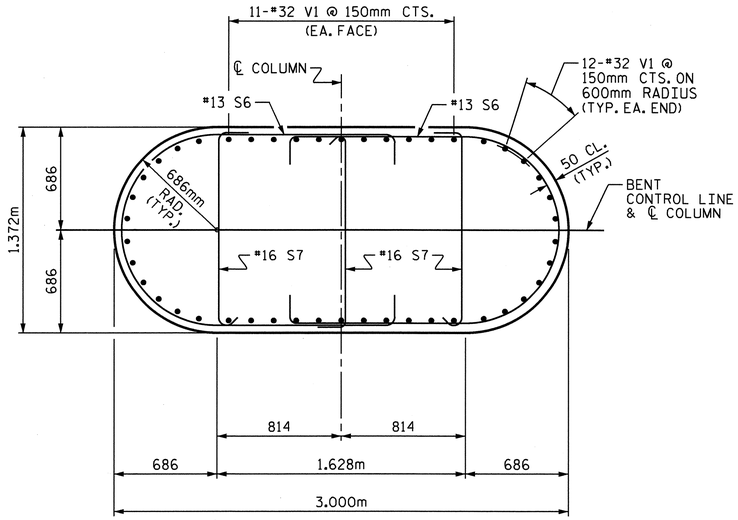

SECTION E-E

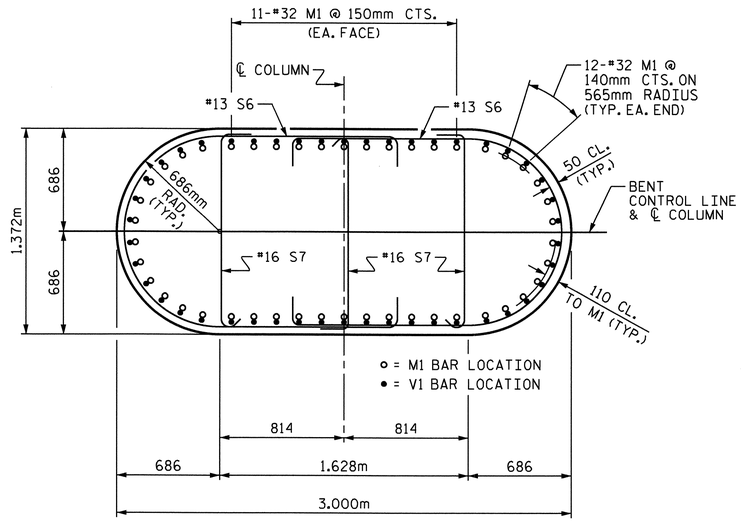

SECTION F-F

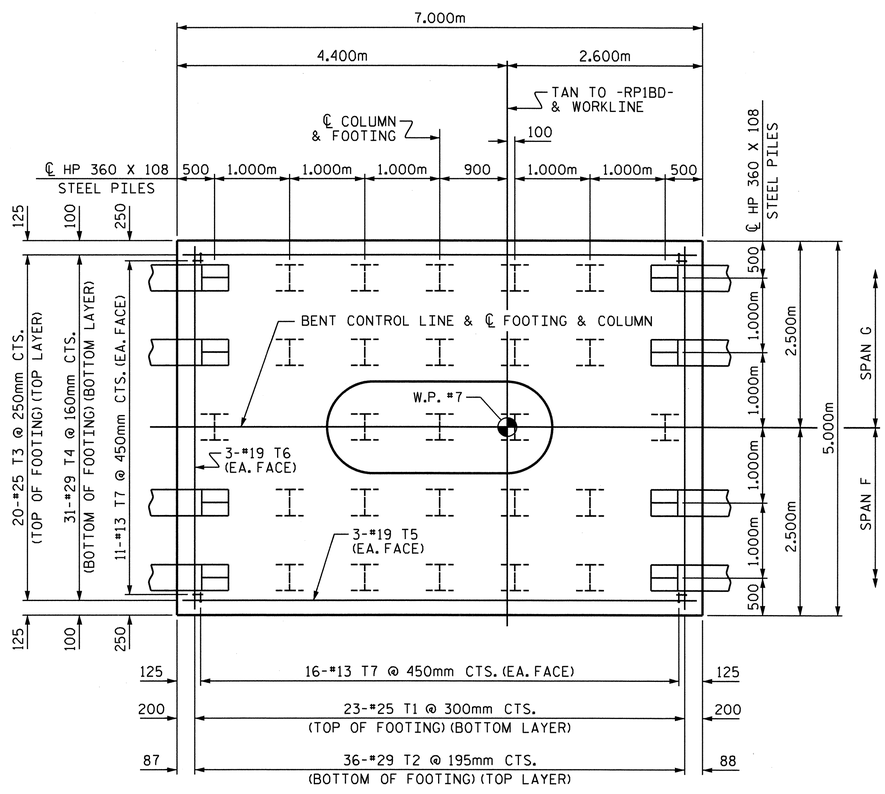

PLAN OF FOOTING

(SEE SECTION F-F FOR PLACEMENT OF "M" BARS IN FOOTING)

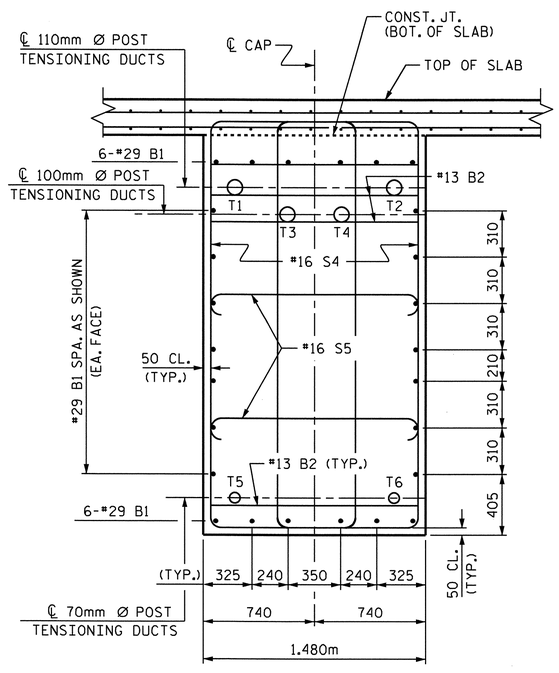

SECTION D-D

BAR TYPES

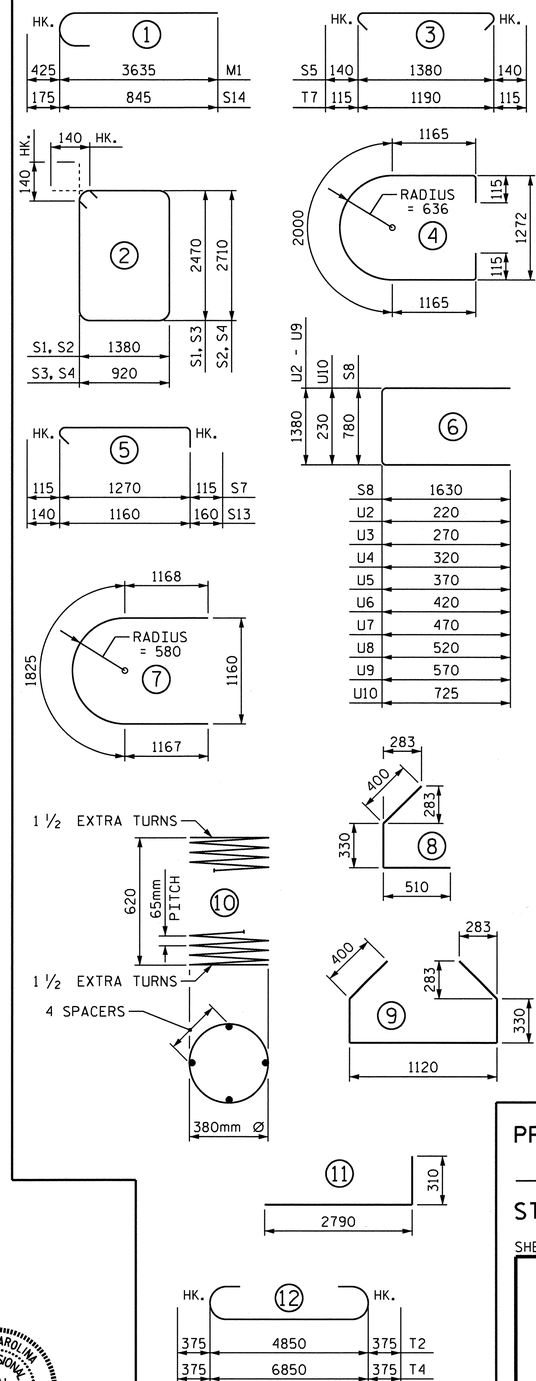

ALL BAR DIMENSIONS ARE OUT TO OUT

BILL OF MATERIAL

BENT 6

BAR	NO.	SIZE	TYPE	LENGTH	WEIGHT
B1	26	#29	STR	10560	1389
B2	36	#13	STR	1380	49
D1	96	#36	STR	3100	2353
M1	46	#32	1	4060	1196
S1	6	#16	2	7980	74
S2	16	#16	2	8460	210
S3	24	#16	2	7060	263
S4	34	#16	2	7540	398
S5	102	#16	3	1660	263
S6	120	#13	4	4560	543
S7	171	#16	5	1500	398
S8	6	#13	6	4040	24
S9	2	#13	STR	2160	4
S10	5	#16	7	4160	32
S11	12	#16	8	1240	23
S12	5	#16	9	2580	20
S13	3	#16	5	1460	7
S14	18	#16	1	1020	28
S15	6	#13	10	15000	89
T1	23	#25	STR	4840	442
T2	36	#29	12	5600	1020
T3	20	#25	STR	6840	544
T4	31	#29	12	7600	1192
T5	12	#19	STR	6860	184
T6	12	#19	STR	4860	130
T7	54	#13	3	1420	76
U1	12	#13	11	3100	37
U2	2	#13	6	1820	4
U3	2	#13	6	1920	4
U4	2	#13	6	2020	4
U5	2	#13	6	2120	4
U6	2	#13	6	2220	4
U7	2	#13	6	2320	5
U8	2	#13	6	2420	5
U9	2	#13	6	2520	5
U10	6	#16	6	1680	16
V1	46	#32	STR	16580	4884

REINFORCING STEEL 15,925 kg

CLASS A CONCRETE BREAKDOWN:
- POUR #1 - FOOTING 54.3 m3
- POUR #2 - COLUMN 61.5 m3
- TOTAL 115.8 m3

PRESTRESS -41.4 MPa CONCRETE:
- POUR #3 - INTEGRAL CAP, HINGE & KEY 40.6 m3

POST-TENSIONING ENCASEMENT:
- POUR #4 - EPOXY GROUT 3.9 m3

HP 360 X 108 STEEL PILES:
- NO. 33 495.0 METERS

PILE REDRIVES:
- NO. 8 EACH

PROJECT NO. U-2519DA
CUMBERLAND COUNTY
STATION: 28+72.626-RP1BD-

SHEET 3 OF 3

STATE OF NORTH CAROLINA
DEPARTMENT OF TRANSPORTATION
RALEIGH

SUBSTRUCTURE

BENT 6
(INTEGRAL)

NORTH CAROLINA PROFESSIONAL SEAL 16301 ENGINEER HSIUNG TING FANG
3/22/11

REVISIONS						SHEET NO.
NO.	BY:	DATE:	NO.	BY:	DATE:	S-298
1			3			TOTAL SHEETS
2			4			411

DRAWN BY : E.C. LOCKLEAR DATE : 4-23-08
CHECKED BY : K.W. ALFORD DATE : 6-02-08

22-MAR-2011 15:08
K:\TIPProjects-U\U2519da\Structures\frye\str10_RP1BD_F0\Final Plans\u2519da_sd_lbt_10.dgn
ttfang

NOTES: FOR STRUCTURAL STEEL DETAILS IN INTEGRAL BENT CAP SEE, "STRUCTURAL STEEL DETAILS AT BENTS 5, 6, & 7" SHEET.

FOR PILE SPLICE DETAILS SEE END BENT 1, SHEET 3 OF 3.

DETAILED DRAWINGS FOR FALSEWORK AND FORMS FOR THE INTEGRAL BENT SHALL BE SUBMITTED. SEE "SCHEMATIC SEQUENCE OF CONSTRUCTION AND NOTES INTEGRAL BENTS 5, 6 & 7" SHEET, SHEET SNSM, AND POST-TENSIONING TENDON SPECIAL PROVISION.

FOR CAP REINFORCING, SEE SHEET 2 OF 3.

FOR HINGE REINFORCING, SEE "HINGE DETAILS FOR INTEGRAL BENT" SHEET.

FOR SECTIONS E-E & F-F THROUGH COLUMN, SEE SHEET 3 OF 3.

LOCATION OF U2-U9 BARS MAYBE SHIFTED SLIGHTLY TO TIE TO B1 BARS IN CAP.

B1 BARS THROUGH BEARING PLATES MAYBE CUT AS APPROVED BY THE ENGINEER TO AVOID INTERFERING WITH POST-TENSIONING EQUIPMENT.

HOOKS ON M1 BARS MAY BE TURNED AS NECESSARY FOR PLACING REINFORCING STEEL.

FOR PRESTRESS -41.4 MPa CONCRETE, SEE SPECIAL PROVISIONS.

FOR PROTECTION OF END ANCHORAGES (POST-TENSIONING ENCASEMENT), SEE POST-TENSIONING TENDONS SPECIAL PROVISION.

FOR MASS CONCRETE, SEE SPECIAL PROVISIONS.

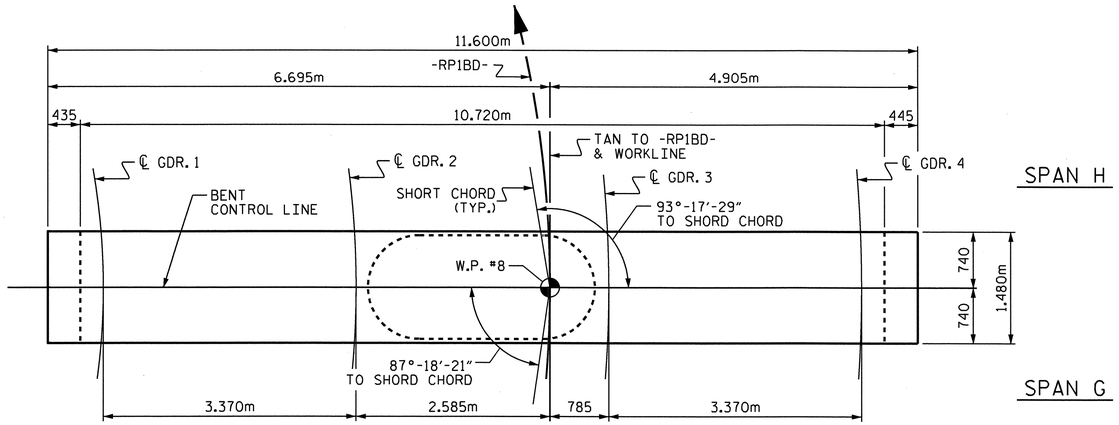

PLAN

DECK SLAB NOT SHOWN FOR CLARITY

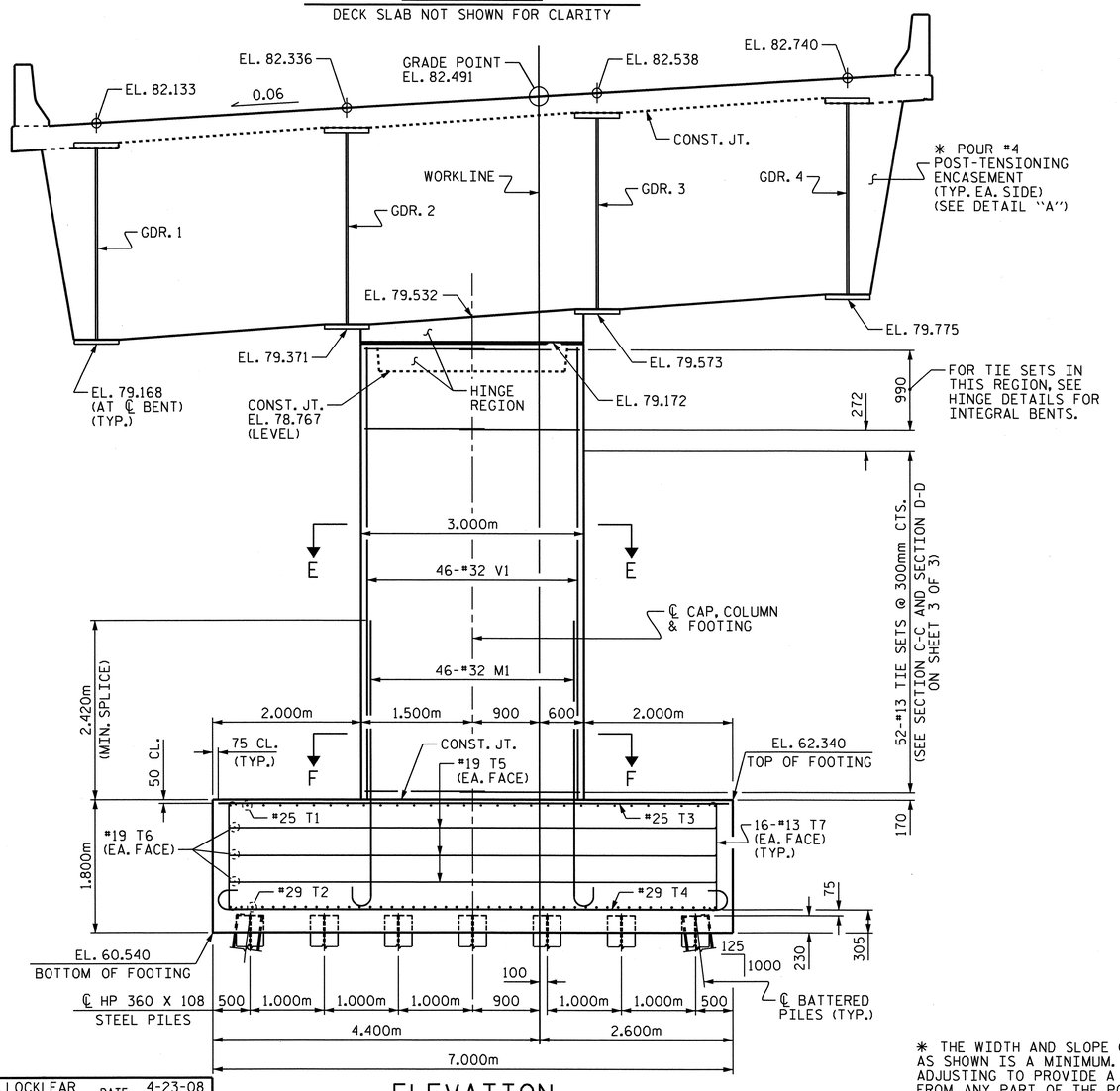

ELEVATION

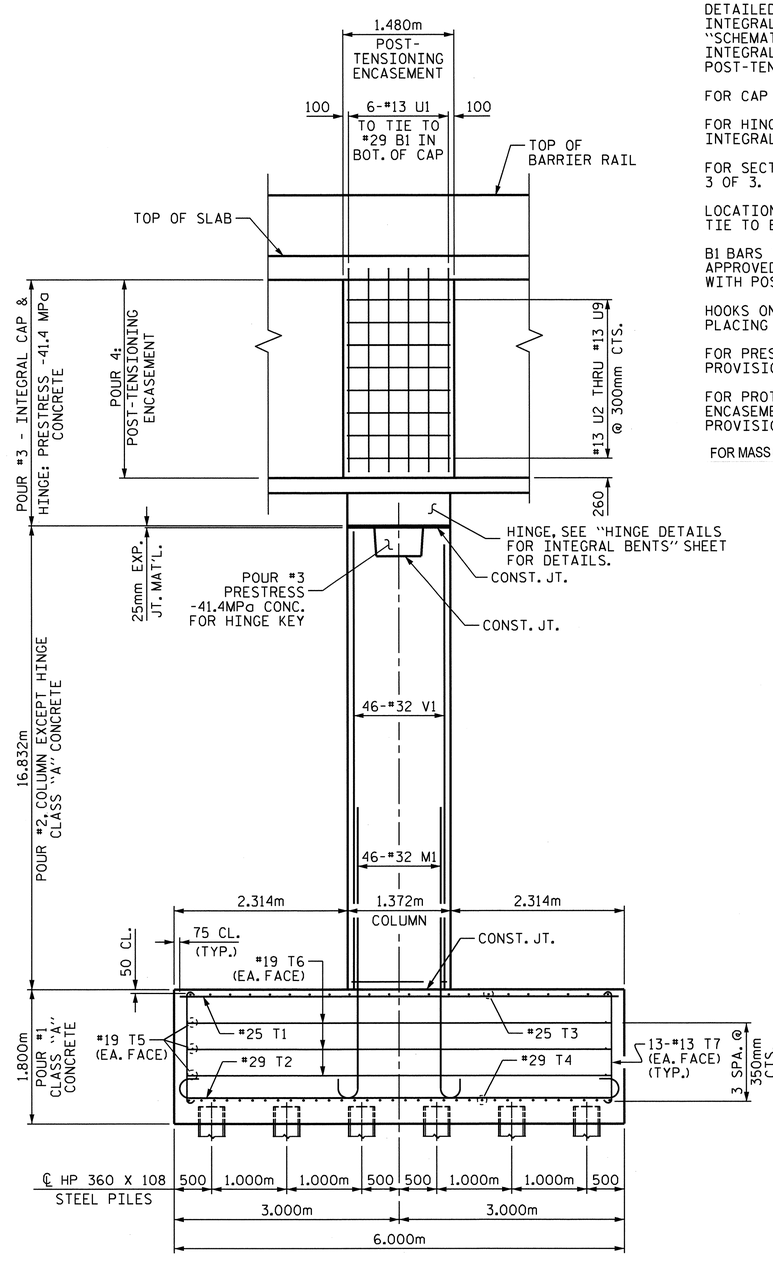

END ELEVATION

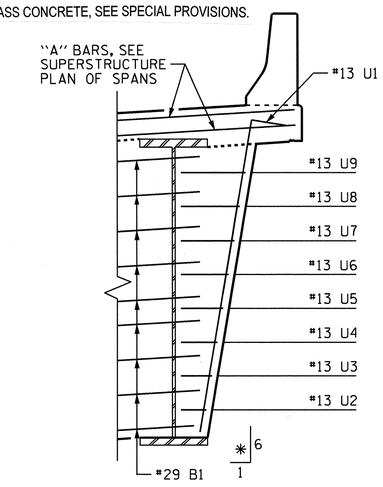

DETAIL "A"

SHEAR STUDS ON BOTH SIDES OF WEB, FLANGES & BEARING PLATES NOT SHOWN FOR CLARITY. SEE "STRUCTURAL STEEL DETAILS AT BENTS 5, 6, & 7" SHEET.

* THE WIDTH AND SLOPE OF THE POST-TENSIONING ENCASEMENT AS SHOWN IS A MINIMUM. THE WIDTH AND SLOPE MAY NEED ADJUSTING TO PROVIDE A 2" MINIMUM COVER OF EPOXY GROUT FROM ANY PART OF THE POST-TENSIONING HARDWARE OR ELEMENTS.

NORTH CAROLINA PROFESSIONAL SEAL 16301 ENGINEER TIMOTHY HSIUNG FANG
3/31/11

PROJECT NO. U-2519DA
CUMBERLAND COUNTY
STATION: 28+72.626-RP1BD-

SHEET 1 OF 3

STATE OF NORTH CAROLINA
DEPARTMENT OF TRANSPORTATION
RALEIGH

SUBSTRUCTURE

BENT 7 (INTEGRAL)

REVISIONS						SHEET NO.
NO.	BY:	DATE:	NO.	BY:	DATE:	S-299
1			3			TOTAL SHEETS
2			4			411

DRAWN BY : E.C. LOCKLEAR DATE : 4-23-08
CHECKED BY : T.H. FANG DATE : 9-15-08

31-MAR-2011 11:24
K:\TIPProjects-U\U2519da\Structures\frye\str10_RP1BD_F0\Final Plans\u2519da_sd_ibt_10.dgn
ttfang

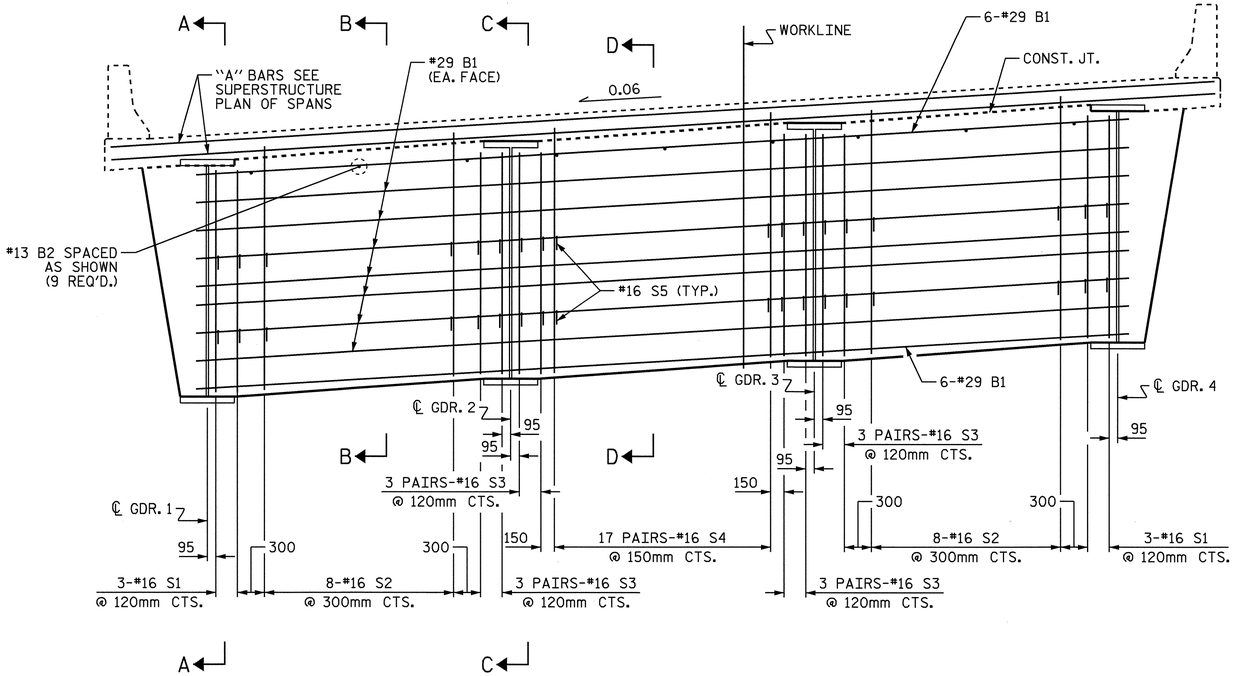

BENT CAP ELEVATION

CAP REINFORCING STEEL SHOWN, REINFORCING STEEL IN POST-TENSIONING ENCASEMENT NOT SHOWN FOR CLARITY.

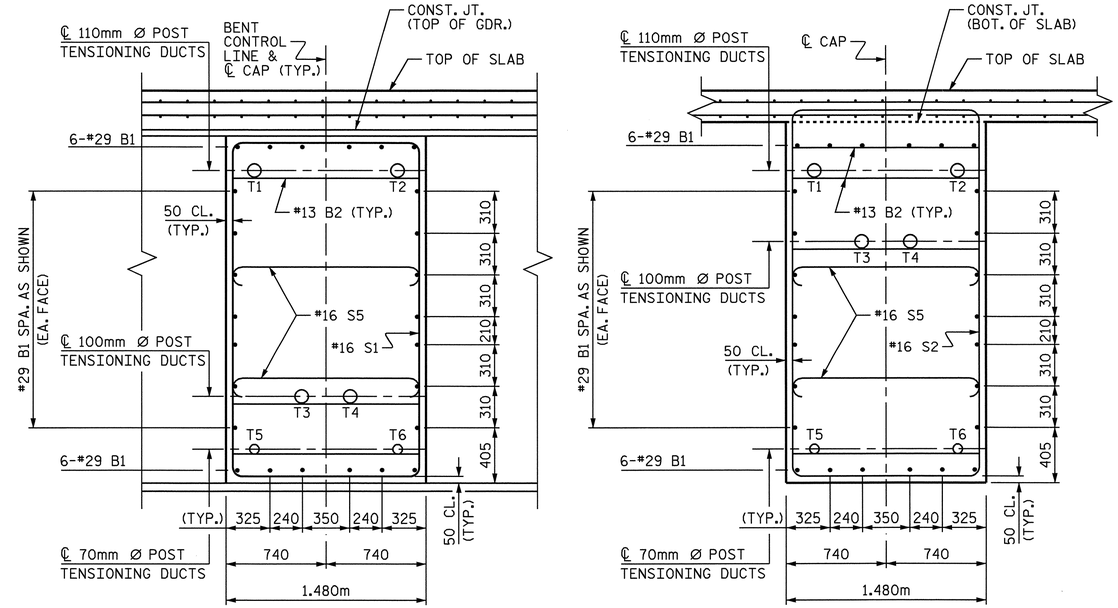

SECTION A-A

SECTION B-B

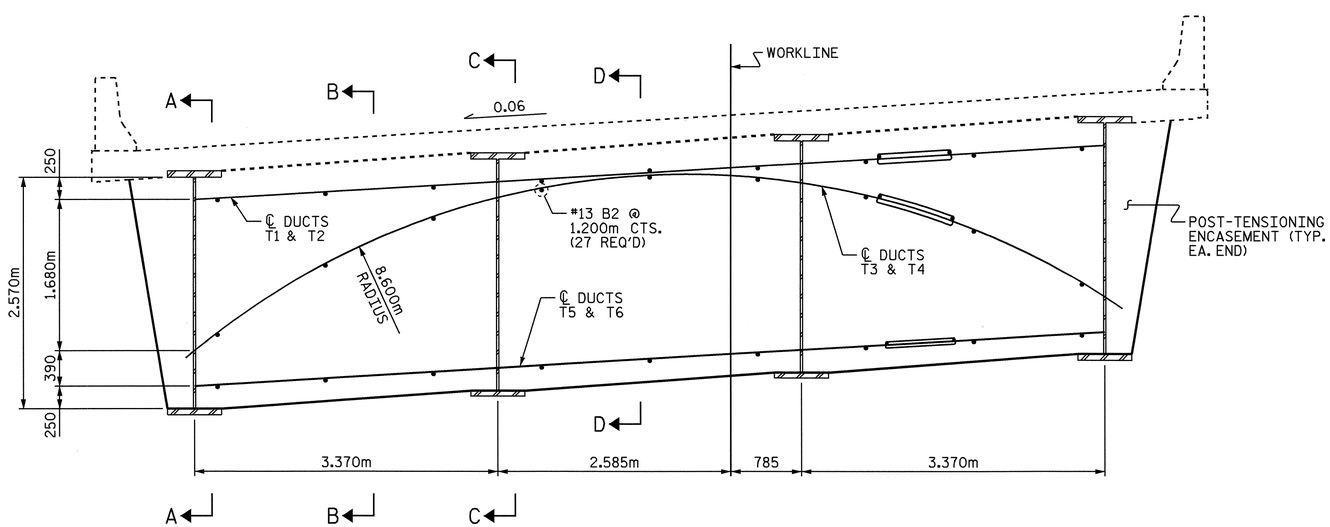

BENT CAP ELEVATION

(SHOWING POST-TENSIONING)

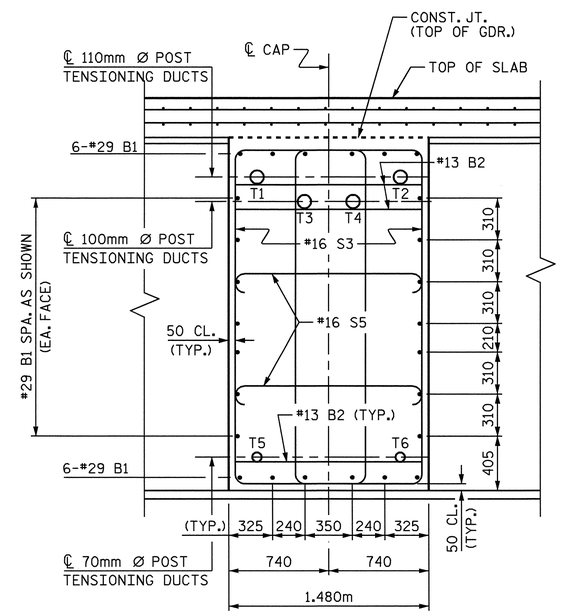

SECTION C-C

FOR LOCATION OF POST-TENSIONING DUCTS, SEE SUPERSTRUCTURE, "STRUCTURAL STEEL DETAILS @ INTEGRAL BENTS" SHEET.

NORTH CAROLINA PROFESSIONAL SEAL 16301 ENGINEER TING-HSIUNG FANG

10/13/08

PROJECT NO. U-2519DA

CUMBERLAND COUNTY

STATION: 28+72.626-RP1BD-

SHEET 2 OF 3

STATE OF NORTH CAROLINA
DEPARTMENT OF TRANSPORTATION
RALEIGH

SUBSTRUCTURE

BENT 7 (INTEGRAL)

REVISIONS						SHEET NO.
NO.	BY:	DATE:	NO.	BY:	DATE:	S-300
1			3			TOTAL SHEETS
2			4			411

DRAWN BY : E.C. LOCKLEAR DATE : 4-23-08
CHECKED BY : T. H. FANG DATE : 8-28-08

13-OCT-2008 12:46
z:\u2519da\structures\frye\str10_rplbd_fo\final plans\u2519da_sd_lbt_10.dgn
tfang

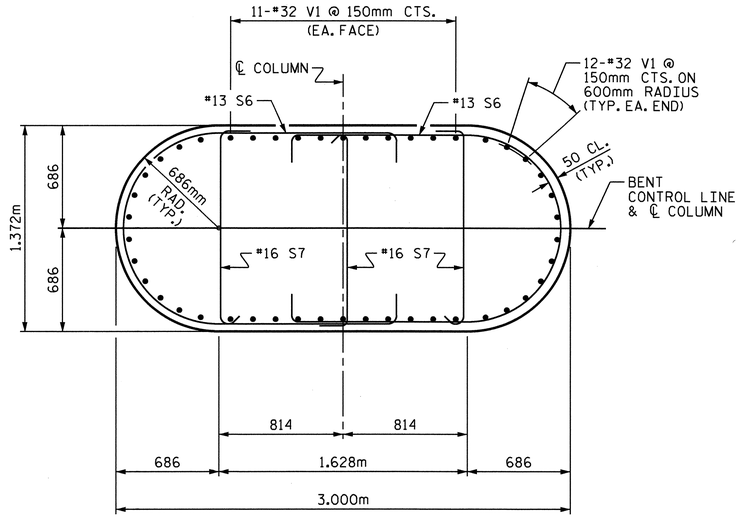

SECTION E-E

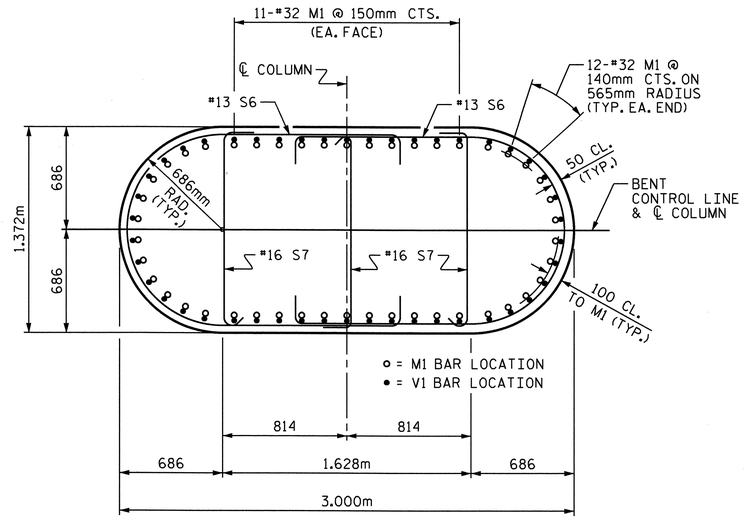

SECTION F-F

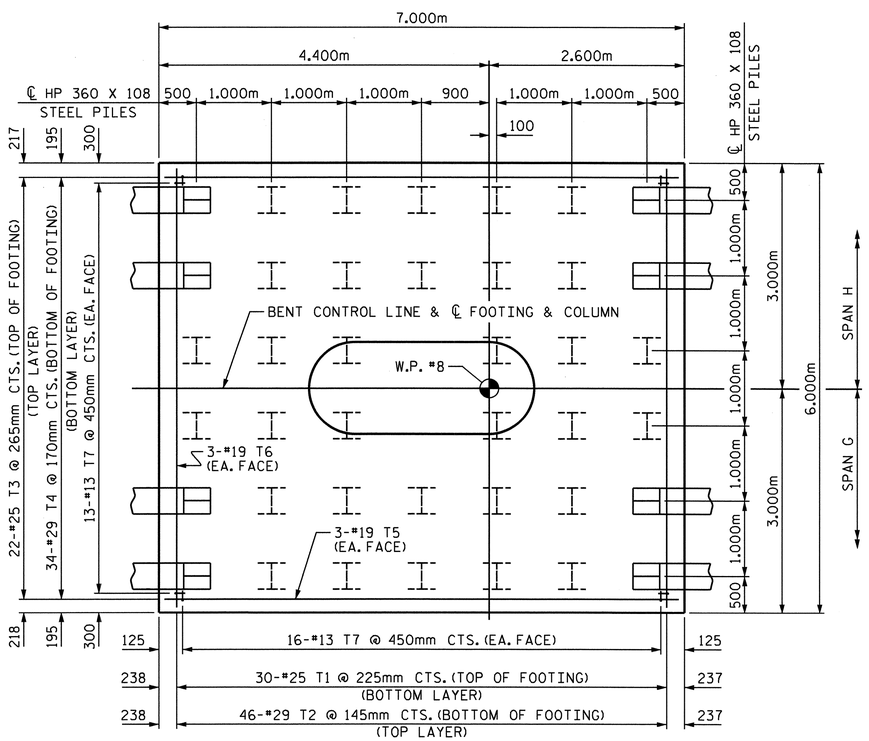

PLAN OF FOOTING

(SEE SECTION F-F FOR PLACEMENT OF "M" BARS IN FOOTING)

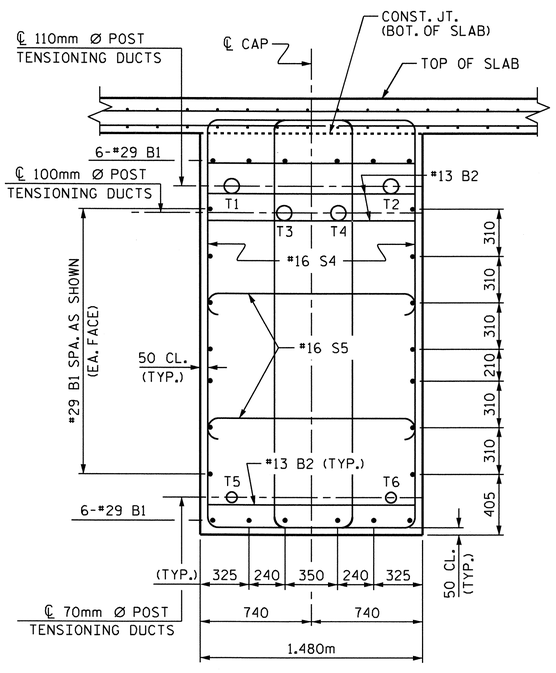

SECTION D-D

BAR TYPES

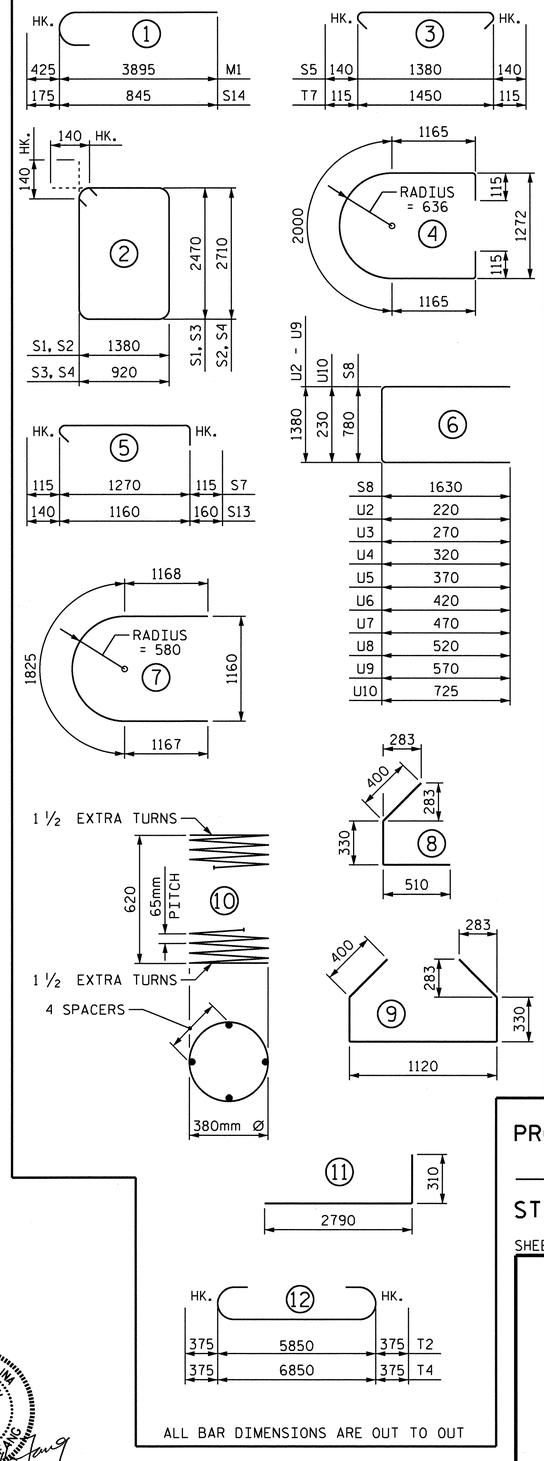

ALL BAR DIMENSIONS ARE OUT TO OUT

BILL OF MATERIAL

BENT 7

BAR	NO.	SIZE	TYPE	LENGTH	WEIGHT
B1	26	#29	STR	10560	1389
B2	36	#13	STR	1380	49
D1	96	#36	STR	3100	2353
M1	46	#32	1	4320	1273
S1	6	#16	2	7980	74
S2	16	#16	2	8460	210
S3	24	#16	2	7060	263
S4	34	#16	2	7540	398
S5	102	#16	3	1660	263
S6	120	#13	4	4560	544
S7	171	#16	5	1500	398
S8	6	#13	6	4040	24
S9	2	#13	STR	2160	4
S10	5	#16	7	4160	32
S11	12	#16	8	1240	23
S12	5	#16	9	2580	20
S13	3	#16	5	1460	7
S14	18	#16	1	1020	28
S15	6	#13	10	15000	89
T1	30	#25	STR	5840	696
T2	46	#29	12	6600	1536
T3	22	#25	STR	6840	598
T4	34	#29	12	7600	1308
T5	6	#19	STR	6870	92
T6	6	#19	STR	5860	79
T7	58	#13	3	1680	97
U1	12	#13	11	3100	37
U2	2	#13	6	1820	4
U3	2	#13	6	1920	4
U4	2	#13	6	2020	4
U5	2	#13	6	2120	4
U6	2	#13	6	2220	4
U7	2	#13	6	2320	5
U8	2	#13	6	2420	5
U9	2	#13	6	2520	5
U10	6	#16	6	1680	16
V1	46	#32	STR	16740	4937

REINFORCING STEEL 16,873 kg

CLASS A CONCRETE BREAKDOWN:
- POUR #1 - FOOTING 75.6 m3
- POUR #2 - COLUMN 62.1 m3
- TOTAL 137.7 m3

PRESTRESS -41.4 MPa CONCRETE:
- POUR #3 - INTEGRAL CAP, HINGE & KEY 40.6 m3

POST-TENSIONING ENCASEMENT:
- POUR #4 - EPOXY GROUT 3.9 m3

HP 360 X 108 STEEL PILES:
- NO. 40 1000.0 METERS

PILE REDRIVES:
- NO. 10 EACH

PROJECT NO. U-2519DA
CUMBERLAND COUNTY
STATION: 28+72.626-RP1BD-

SHEET 3 OF 3

STATE OF NORTH CAROLINA
DEPARTMENT OF TRANSPORTATION
RALEIGH

SUBSTRUCTURE

BENT 7
(INTEGRAL)

NORTH CAROLINA PROFESSIONAL SEAL 16301 ENGINEER TING HSIUNG FANG
3/22/11

REVISIONS						SHEET NO.
NO.	BY:	DATE:	NO.	BY:	DATE:	S-301
1			3			TOTAL SHEETS
2			4			411

DRAWN BY : E.C. LOCKLEAR DATE : 4-23-08
CHECKED BY : T.H. FANG DATE : 9-15-08

22-MAR-2011 15:08
K:\TIPProjects-U\U2519da\Structures\frye\str10_RP1BD_F0\Final Plans\u2519da_sd_lbt_10.dgn
ttfang

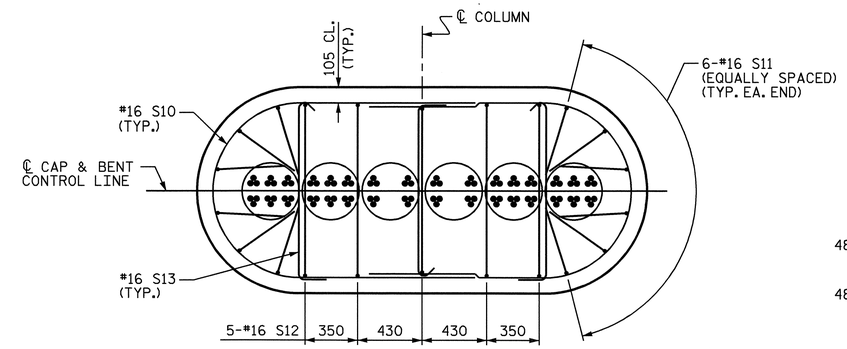

SECTION A-A

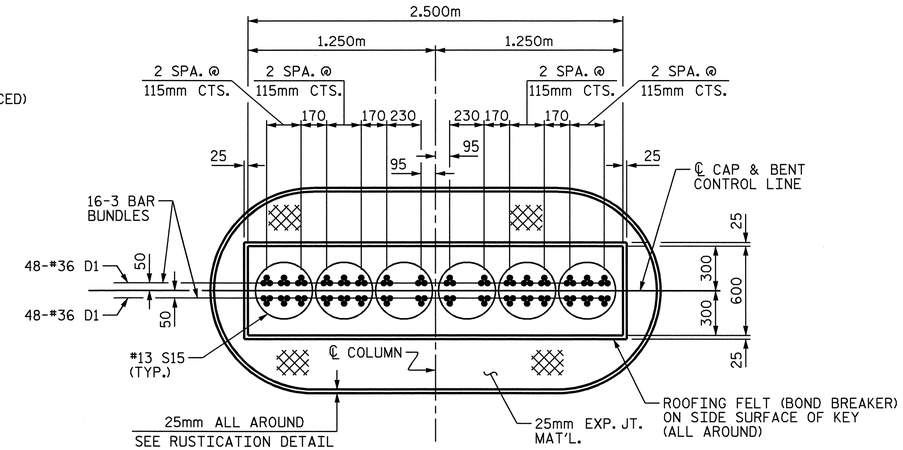

SECTION B-B

(D1 BAR BUNDLES ARE TO BE PLACED AS SHOWN)

NOTES:

THE HINGE REGION SHALL BE POURED MONOLITHICALLY WITH THE INTEGRAL CAP (CONCRETE WITH f'c = 41.4 MPa).

THE 25mm EXPANSION JOINT MATERIAL AND LOW MODULUS SILICONE SHALL BE IN ACCORDANCE WITH THE STANDARD SPECIFICATIONS.

REINFORCING IN THE HINGE REGION MAY BE SHIFTED SLIGHTLY AS DIRECTED BY THE ENGINEER.

SEE DRAWING "SCHEMATIC SEQUENCE OF CONSTRUCTION AND NOTES INTEGRAL BENTS 5, 6 & 7".

TOP OF COLUMN SHALL RECEIVE A TROWELLED FINISH AND BE THOROUGHLY CLEANED PRIOR TO PLACEMENT OF EXPANSION JOINT MATERIAL AND HINGE CONCRETE.

SIDE SURFACE OF KEY SHALL BE SMOOTH AND SHALL BE THOROUGHLY CLEANED PRIOR TO PLACEMENT OF ROOFING FELT (BOND BREAKER) AND HINGE CONCRETE.

BOTTOM SURFACE OF KEY SHALL BE SMOOTH AND SHALL BE THOROUGHLY CLEANED AND FREE FROM STANDING WATER PRIOR TO PLACEMENT OF HINGE CONCRETE.

FOR REINFORCING STEEL AND CONCRETE QUANTITIES, SEE INTEGRAL BENT DETAIL SHEET.

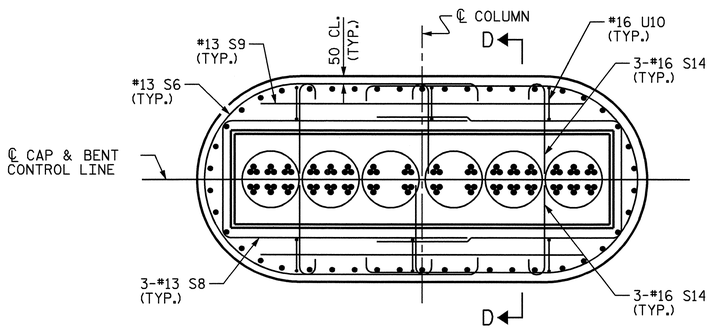

SECTION C-C

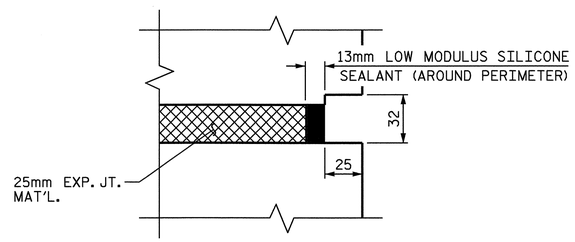

RUSTICATION DETAIL

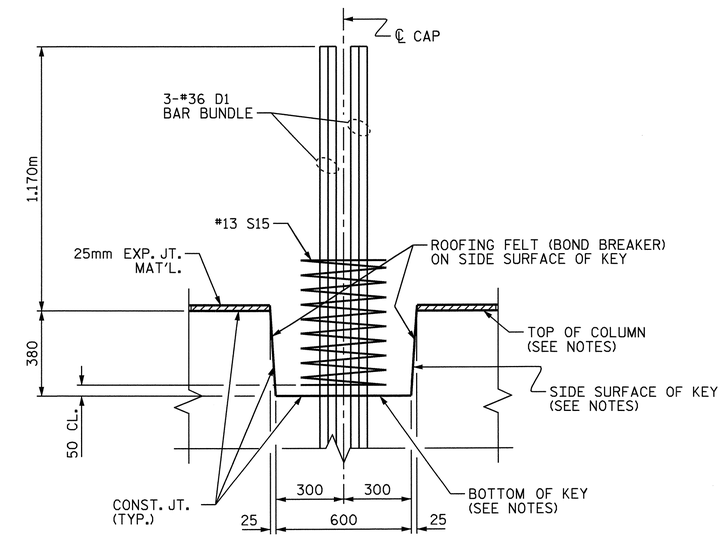

SECTION E-E

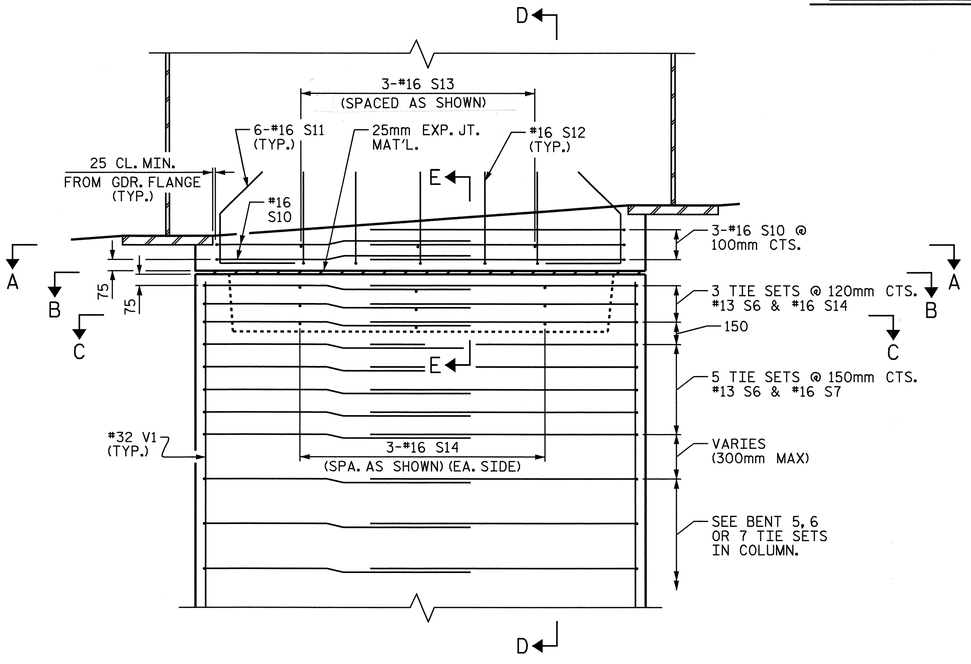

HINGE REGION DETAIL

(D1 BAR BUNDLES NOT SHOWN FOR CLARITY)

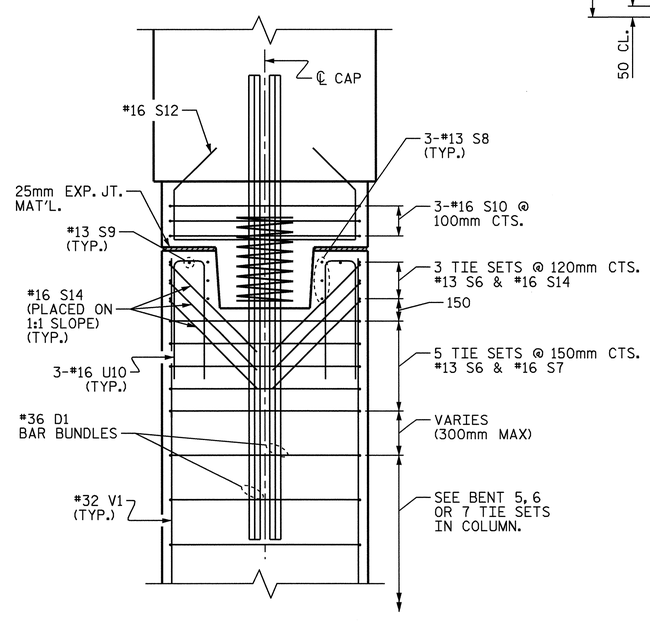

SECTION D-D

PROJECT NO. U-2519DA

CUMBERLAND COUNTY

STATION: 28+72.626-RP1BD-

NORTH CAROLINA PROFESSIONAL SEAL 16301 ENGINEER TING HSUNG FANG

10/13/08

STATE OF NORTH CAROLINA
DEPARTMENT OF TRANSPORTATION
RALEIGH

SUBSTRUCTURE

HINGE DETAILS FOR INTEGRAL BENTS

REVISIONS						SHEET NO.
NO.	BY:	DATE:	NO.	BY:	DATE:	S-302
1			3			TOTAL SHEETS
2			4			411

DRAWN BY : E.C. LOCKLEAR DATE : 4-23-08

CHECKED BY : K.W. ALFORD DATE : 6-02-08

13-OCT-2008 09:48
z:\u2519da\structures\frye\str10_rplbd_fo\final plans\u2519da_sd_lbt_10.dgn
tfang

NOTES:

STIRRUPS AND U1 BARS IN CAP MAY BE SHIFTED SLIGHTLY, AS NECESSARY, TO CLEAR ANCHOR BOLTS.

HOOKS ON M1 BARS MAY BE TURNED AS NECESSARY FOR PLACING REINFORCING STEEL.

DETAILED DRAWINGS FOR FALSEWORK AND FORMS FOR THIS HAMMERHEAD BENT CAP SHALL BE SUBMITTED. SEE SHEET SNSM & SPECIAL PROVISION, FOR FORMWORK & FALSEWORK.

FOR PILE SPLICE DETAILS, SEE SHEET 3 OF 3, END BENT 2.

THE TOP SURFACE AREAS OF THE CAP SHALL BE CURED IN ACCORDANCE WITH THE STANDARD SPECIFICATIONS EXCEPT THE MEMBRANE CURING COMPOUND METHOD SHALL NOT BE USED.

FOR MASS CONCRETE, SEE SPECIAL PROVISIONS.

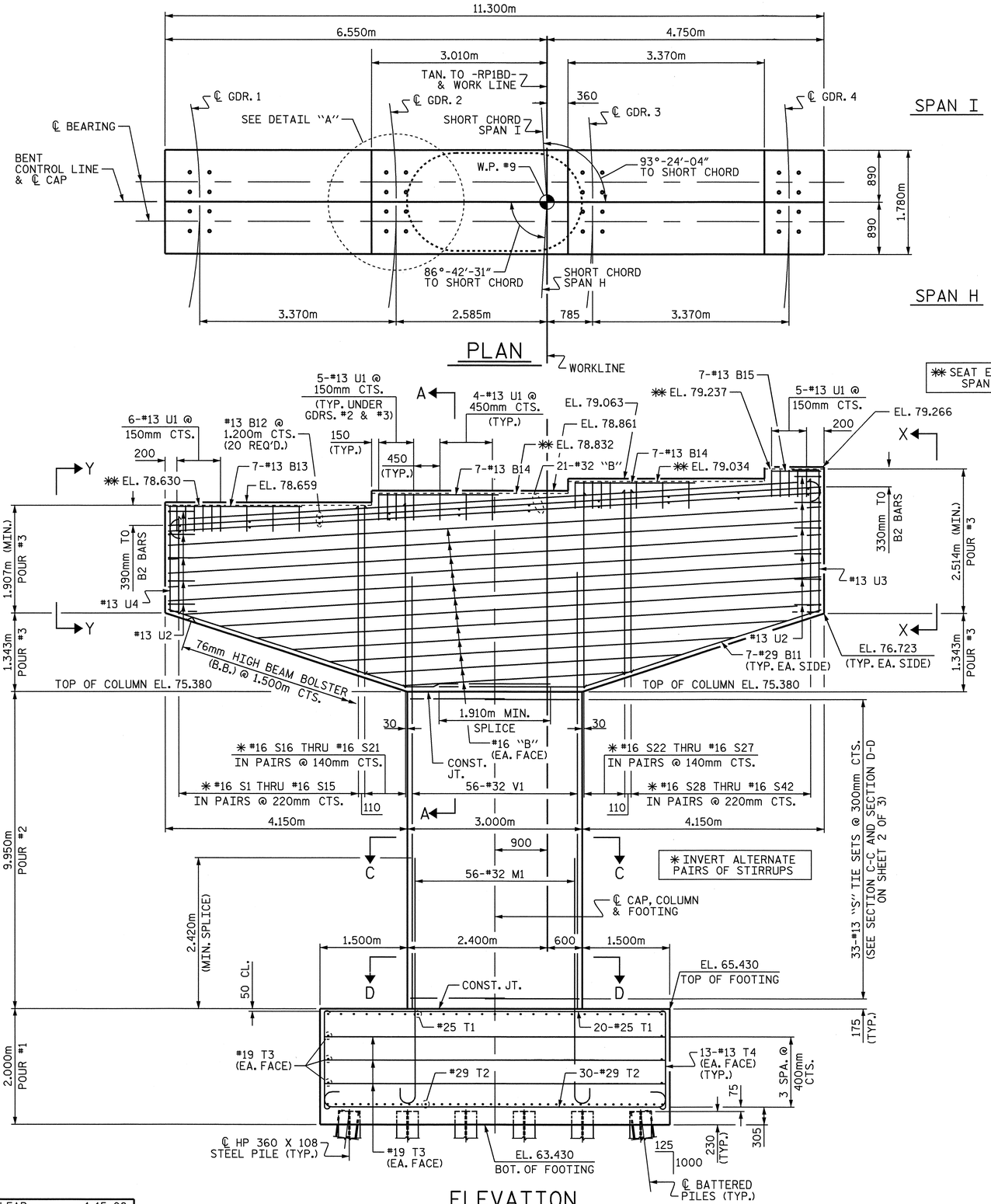

FOR PILE ARRANGEMENT & SPACINGS, SEE PLAN OF FOOTING ON SHEET 2 OF 3

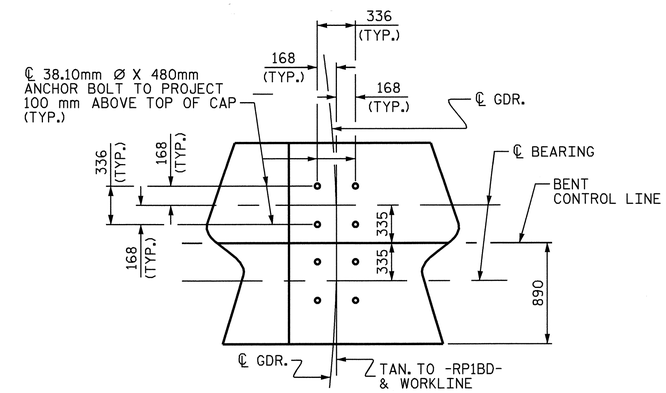

DETAIL "A"

(TYP. EA. GIRDER)

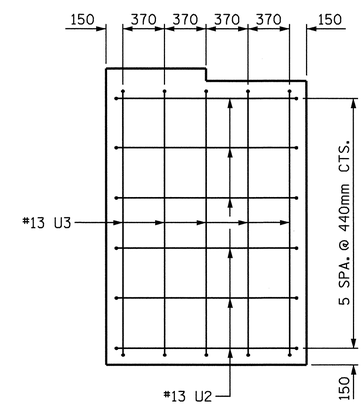

VIEW X-X

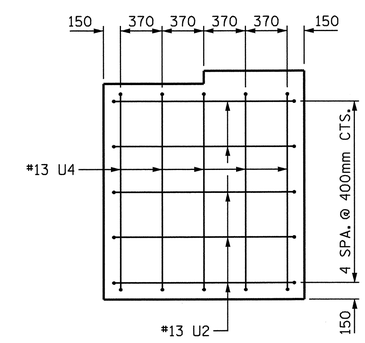

VIEW Y-Y

PROJECT NO. U-2519DA

CUMBERLAND COUNTY

STATION: 28+72.626-RP1BD-

SHEET 1 OF 3

STATE OF NORTH CAROLINA
DEPARTMENT OF TRANSPORTATION
RALEIGH

SUBSTRUCTURE

BENT 8

NORTH CAROLINA PROFESSIONAL SEAL 16301 ENGINEER TING HSIUNG FANG

10/08/08

REVISIONS								SHEET NO.
NO.	BY:	DATE:	NO.	BY:	DATE:			S-303
1			3					TOTAL SHEETS
2			4					411

DRAWN BY : E.C. LOCKLEAR DATE : 4-15-08

CHECKED BY : K.W. ALFORD DATE : 6/18/08

07-OCT-2008 15:57
H:\Structures\frye\str10_RP1BD_F0\FinalPlans\u2519da_sd_bts_10.dgn
sdombrowski

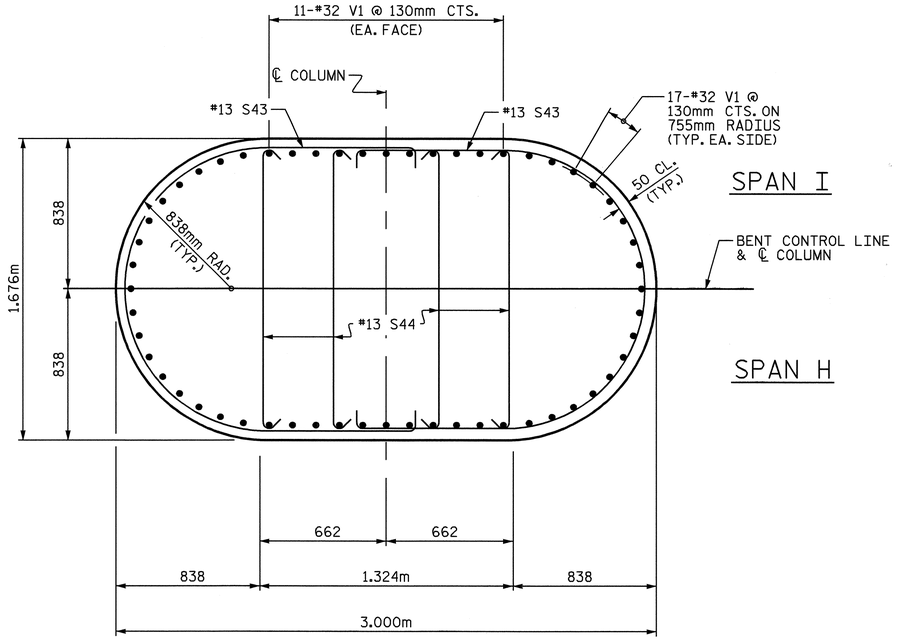

SECTION C-C

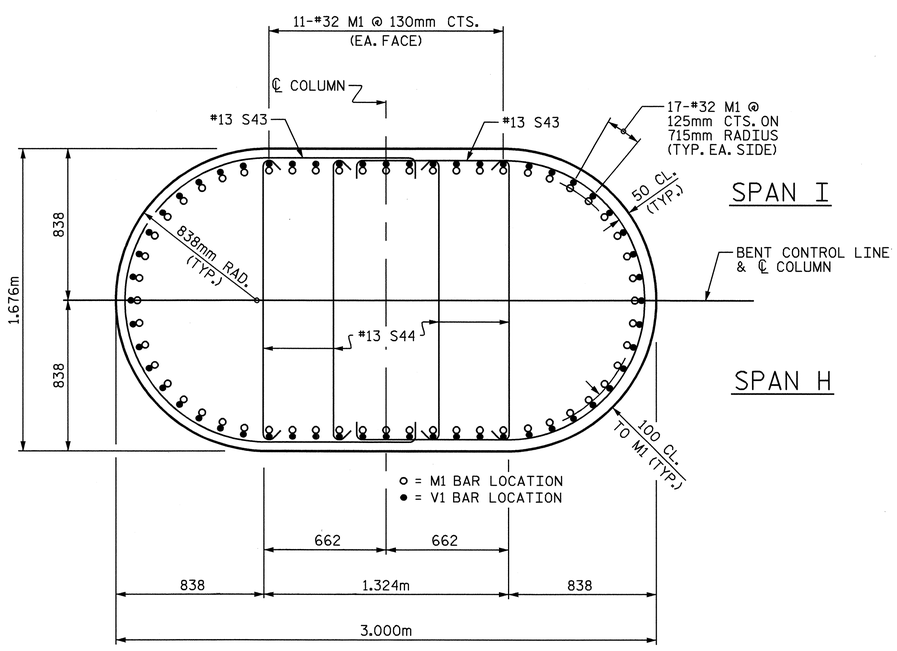

SECTION D-D

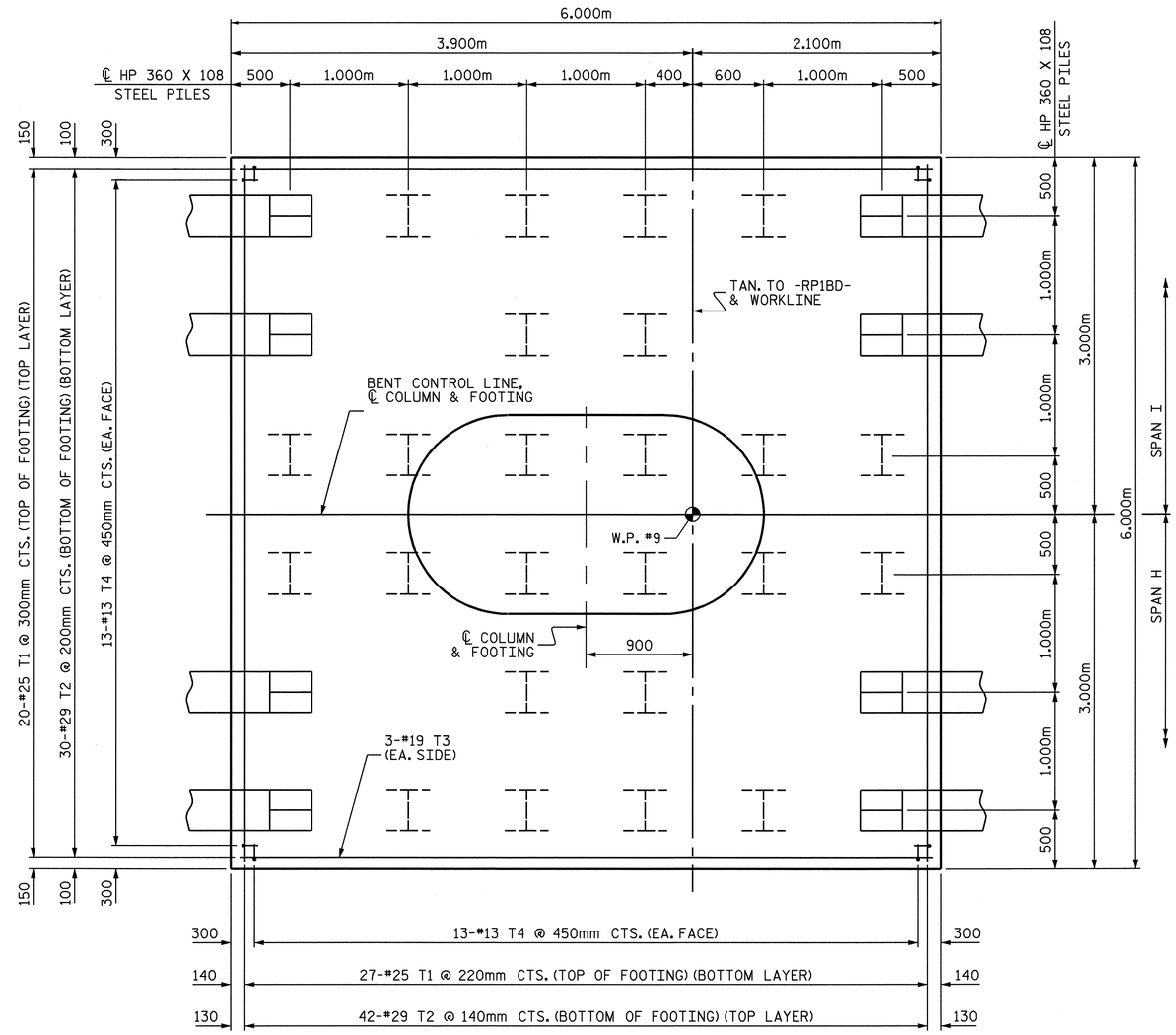

PLAN OF FOOTING

(SEE SECTION D-D FOR PLACEMENT OF M1 BARS IN FOOTING)

PROJECT NO. U-2519DA
CUMBERLAND COUNTY
STATION: 28+72.626-RP1BD-

SHEET 2 OF 3

STATE OF NORTH CAROLINA
DEPARTMENT OF TRANSPORTATION
RALEIGH

SUBSTRUCTURE

BENT 8

NORTH CAROLINA PROFESSIONAL SEAL 16301 ENGINEER TING HSIUNG FANG
10/08/08

REVISIONS						SHEET NO.
NO.	BY:	DATE:	NO.	BY:	DATE:	S-304
1			3			TOTAL SHEETS
2			4			411

DRAWN BY : E.C. LOCKLEAR DATE : 4-15-08
CHECKED BY : K.W. ALFORD DATE : 6/18/08

07-OCT-2008 15:57
H:\Structures\frye\str10_RP1BD_F0\Final Plans\u2519da_sd_bts_10.dgn
sdombrowski

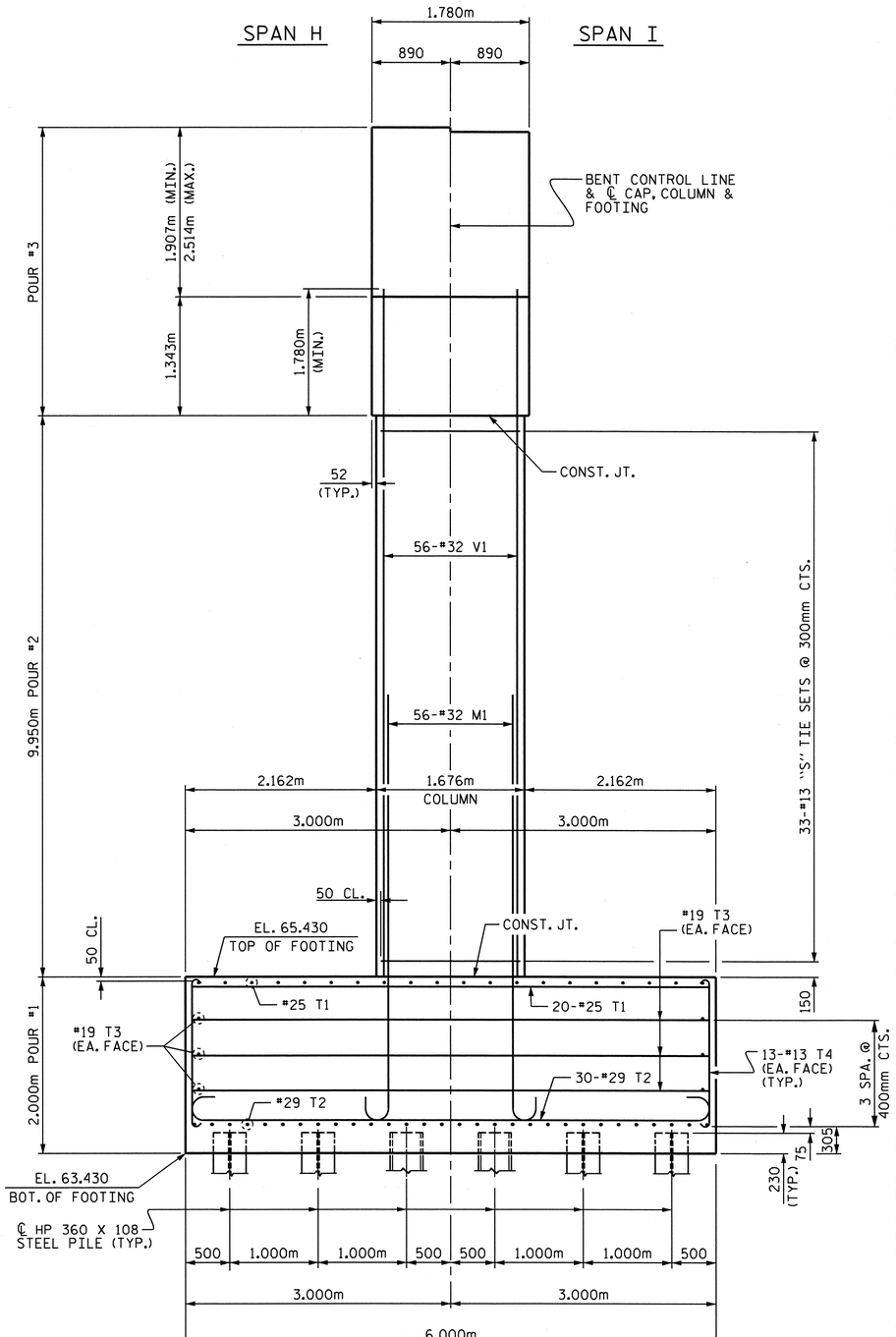

END ELEVATION

BAR TYPES

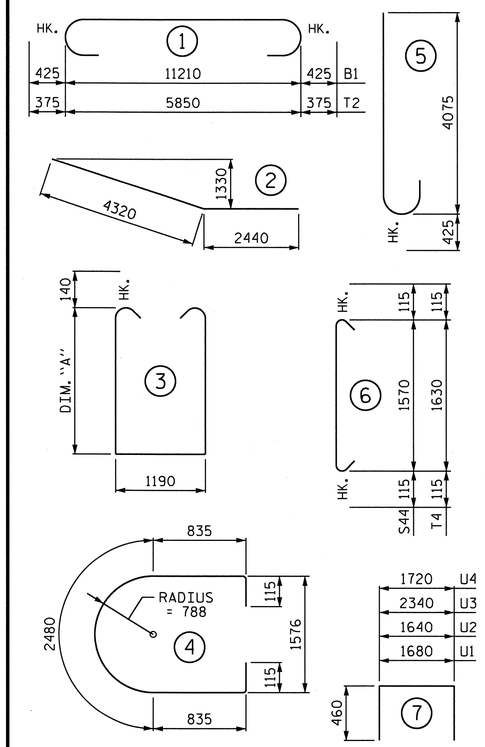

ALL BAR DIMENSIONS ARE OUT TO OUT.

BILL OF MATERIAL

BENT 8

BAR	NO.	SIZE	TYPE	DIM. "A"	LENGTH	WEIGHT
B1	7	#32	1	—	12020	539
B2	14	#32	STR	—	11220	1006
B3	10	#16	STR	—	11220	174
B4	2	#16	STR	—	11020	34
B5	2	#16	STR	—	10400	32
B6	2	#16	STR	—	9760	30
B7	2	#16	STR	—	8660	27
B8	2	#16	STR	—	7120	22
B9	2	#16	STR	—	5580	17
B10	2	#16	STR	—	4040	13
B11	14	#29	2	—	6760	479
B12	20	#13	STR	—	1680	33
B13	7	#13	STR	—	2300	16
B14	14	#13	STR	—	2060	29
B15	7	#13	STR	—	920	6
M1	56	#32	5	—	4500	1614
S1	2	#16	3	1655	4780	15
S2	2	#16	3	1745	4960	15
S3	2	#16	3	1825	5120	16
S4	2	#16	3	1915	5300	16
S5	2	#16	3	1995	5460	17
S6	2	#16	3	2085	5640	18
S7	2	#16	3	2165	5800	18
S8	2	#16	3	2245	5960	18
S9	2	#16	3	2335	6140	19
S10	2	#16	3	2415	6300	20
S11	2	#16	3	2505	6480	20
S12	2	#16	3	2585	6640	21
S13	2	#16	3	2665	6800	21
S14	2	#16	3	2755	6980	22
S15	2	#16	3	2835	7140	22
S16	2	#16	3	2885	7240	22
S17	2	#16	3	2935	7340	23
S18	2	#16	3	2985	7440	23
S19	2	#16	3	3045	7560	23
S20	2	#16	3	3095	7660	24
S21	2	#16	3	3155	7780	24
S22	2	#16	3	3335	8140	25
S23	2	#16	3	3305	8080	25
S24	2	#16	3	3265	8000	25
S25	2	#16	3	3225	7920	25

BAR	NO.	SIZE	TYPE	DIM. "A"	LENGTH	WEIGHT
S26	2	#16	3	3185	7840	24
S27	2	#16	3	3155	7780	24
S28	2	#16	3	3125	7720	24
S29	2	#16	3	3065	7600	24
S30	2	#16	3	3005	7480	23
S31	2	#16	3	2945	7360	23
S32	2	#16	3	2895	7260	23
S33	2	#16	3	2835	7140	22
S34	2	#16	3	2775	7020	22
S35	2	#16	3	2715	6900	21
S36	2	#16	3	2655	6780	21
S37	2	#16	3	2605	6680	21
S38	2	#16	3	2545	6560	20
S39	2	#16	3	2485	6440	20
S40	2	#16	3	2425	6320	20
S41	2	#16	3	2365	6200	19
S42	2	#16	3	2305	6080	19
S43	66	#13	4	—	4360	286
S44	132	#13	6	—	1800	236
T1	47	#25	STR		5840	1091
T2	72	#29	1		6600	2405
T3	12	#19	STR	—	5860	157
T4	52	#13	6	—	1860	96
U1	30	#13	7	—	2600	78
U2	11	#13	7	—	2560	28
U3	5	#13	7	—	3260	16
U4	5	#13	7	—	2640	13
V1	56	#32	STR	—	11740	4210
REINFORCING STEEL						13,574

CLASS A CONCRETE BREAKDOWN:

POUR #1 - FOOTING	72.0 m3
POUR #2 - COLUMN	44.0 m3
POUR #3 - CAP	60.5 m3
TOTAL CLASS A CONCRETE	176.5 m3

HP 360 X 108 STEEL PILES:
NO. 32 METERS 800.0

PILE REDRIVES:
EACH 8

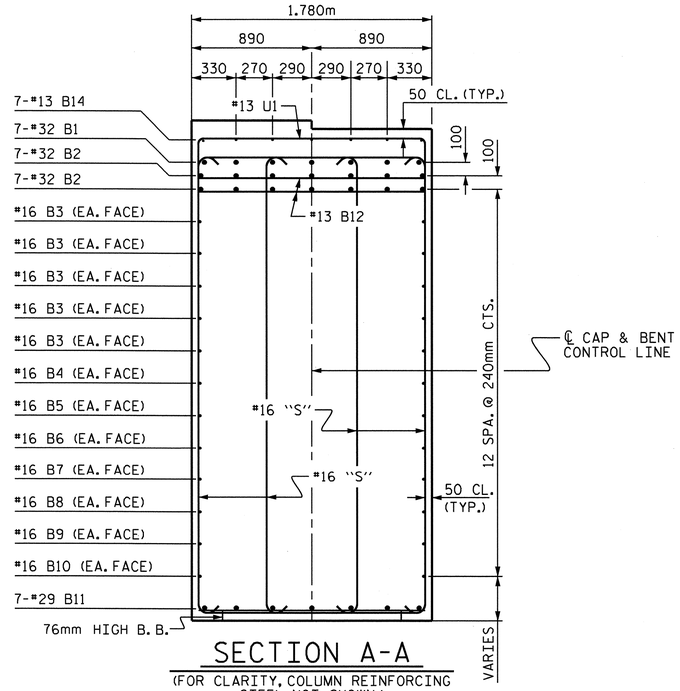

SECTION A-A
(FOR CLARITY, COLUMN REINFORCING STEEL NOT SHOWN.)

PROJECT NO. U-2519DA
CUMBERLAND COUNTY
STATION: 28+72.626-RP1BD-

SHEET 3 OF 3

STATE OF NORTH CAROLINA
DEPARTMENT OF TRANSPORTATION
RALEIGH

SUBSTRUCTURE

BENT 8

NORTH CAROLINA PROFESSIONAL SEAL 16301 ENGINEER JING-HSUNG CHANG
3/10/11

REVISIONS						SHEET NO.
NO.	BY:	DATE:	NO.	BY:	DATE:	S-305
1			3			TOTAL SHEETS
2			4			411

DRAWN BY : E.C. LOCKLEAR DATE : 4-15-08
CHECKED BY : K.W. ALFORD DATE : 6/20/08

10-MAR-2011 14:41
X:\TIPProjects-U\U2519da\Structures\frye\str10_RP1BD_F0\FinalPlans\u2519da_sd_bts_10.dgn
qtnguyen

NOTES:

STIRRUPS AND U1 BARS IN CAP MAY BE SHIFTED SLIGHTLY, AS NECESSARY, TO CLEAR ANCHOR BOLTS.

HOOKS ON M1 BARS MAY BE TURNED AS NECESSARY FOR PLACING REINFORCING STEEL.

DETAILED DRAWINGS FOR FALSEWORK AND FORMS FOR THIS HAMMERHEAD BENT CAP SHALL BE SUBMITTED. SEE SHEET SNSM & SPECIAL PROVISION, FOR FORMWORK & FALSEWORK.

FOR PILE SPLICE DETAILS, SEE SHEET 3 OF 3, END BENT 2.

THE TOP SURFACE AREAS OF THE CAP SHALL BE CURED IN ACCORDANCE WITH THE STANDARD SPECIFICATIONS EXCEPT THE MEMBRANE CURING COMPOUND METHOD SHALL NOT BE USED.

FOR MASS CONCRETE, SEE SPECIAL PROVISIONS.

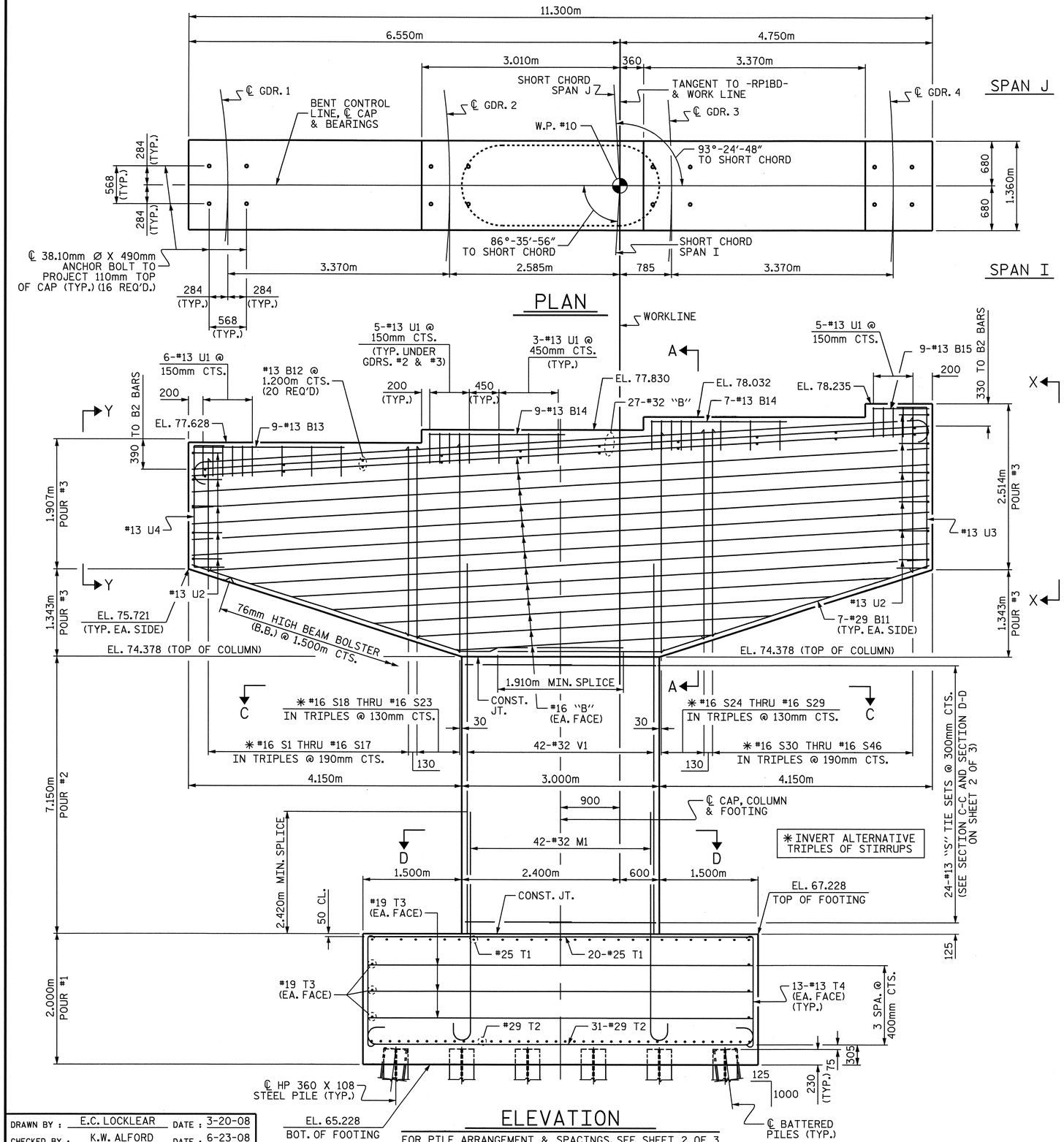

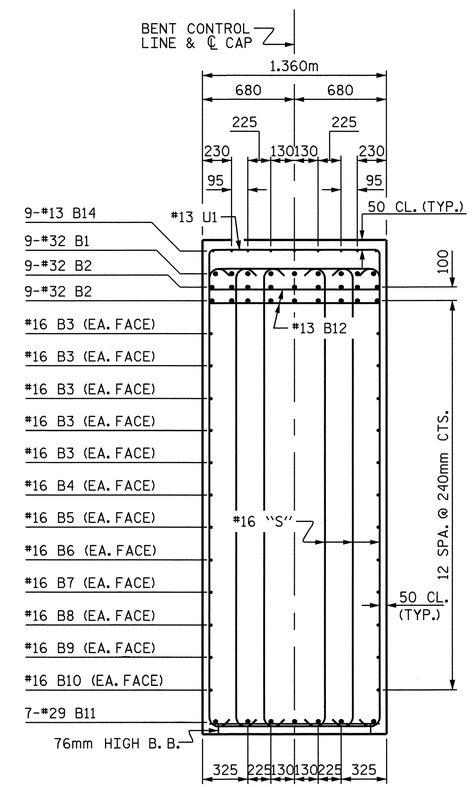

SECTION A-A

(FOR CLARITY, COLUMN REINFORCING STEEL NOT SHOWN.)

PROJECT NO. U-2519DA

CUMBERLAND COUNTY

STATION: 28+72.626-RP1BD-

SHEET 1 OF 3

STATE OF NORTH CAROLINA
DEPARTMENT OF TRANSPORTATION
RALEIGH

SUBSTRUCTURE

BENT 9

NORTH CAROLINA PROFESSIONAL SEAL 16301 ENGINEER TING HSIUNG FANG

10/08/08

REVISIONS						SHEET NO.
NO.	BY:	DATE:	NO.	BY:	DATE:	S-306
1			3			TOTAL SHEETS
2			4			411

DRAWN BY : E.C. LOCKLEAR DATE : 3-20-08

CHECKED BY : K.W. ALFORD DATE : 6-23-08

07-OCT-2008 15:56
H:\Structures\frye\str10_RP1BD_F0\Final Plans\u2519da_sd_bts_10.dgn
sdombrowski

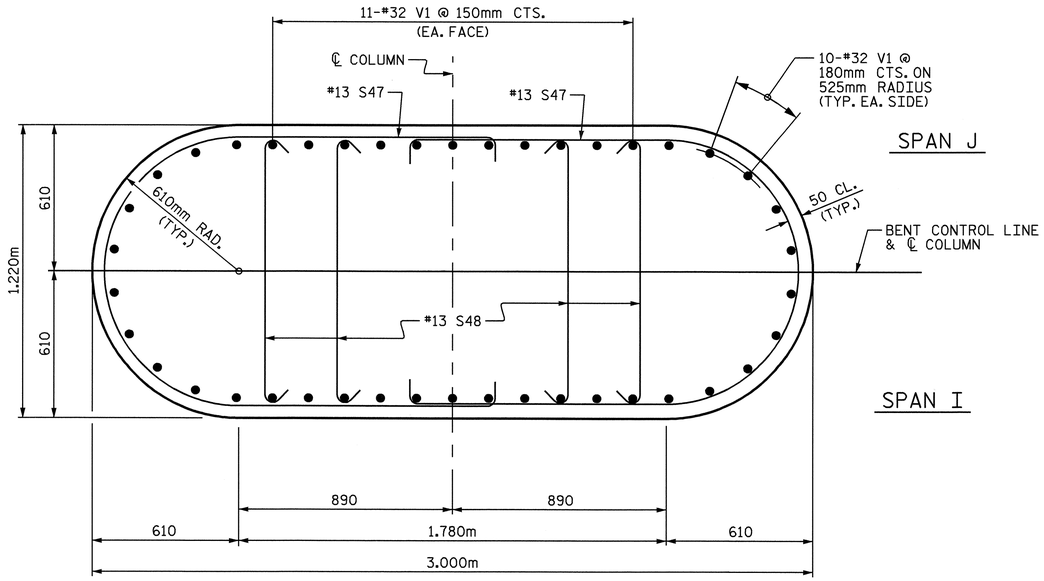

SECTION C-C

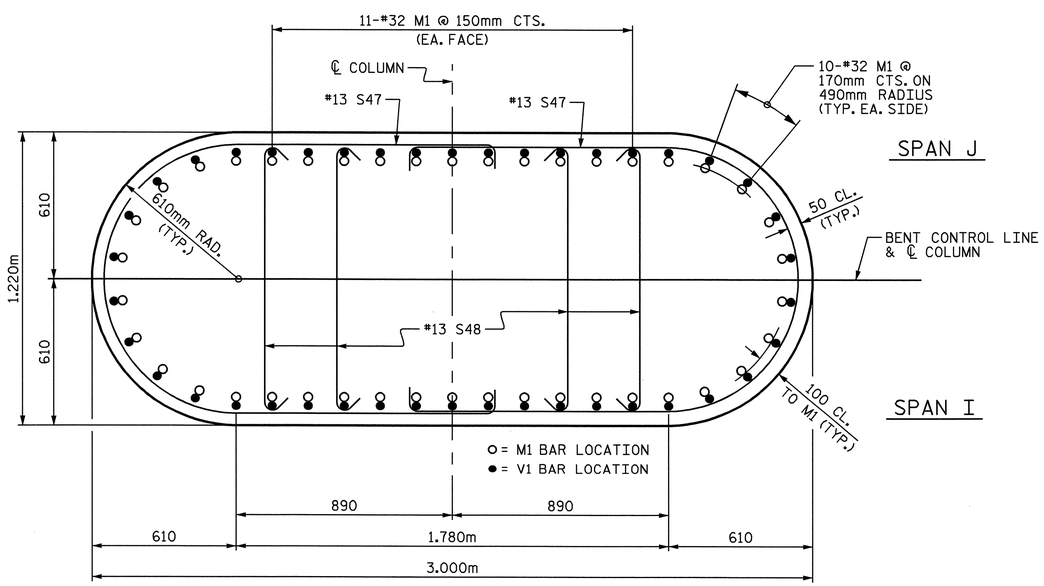

SECTION D-D

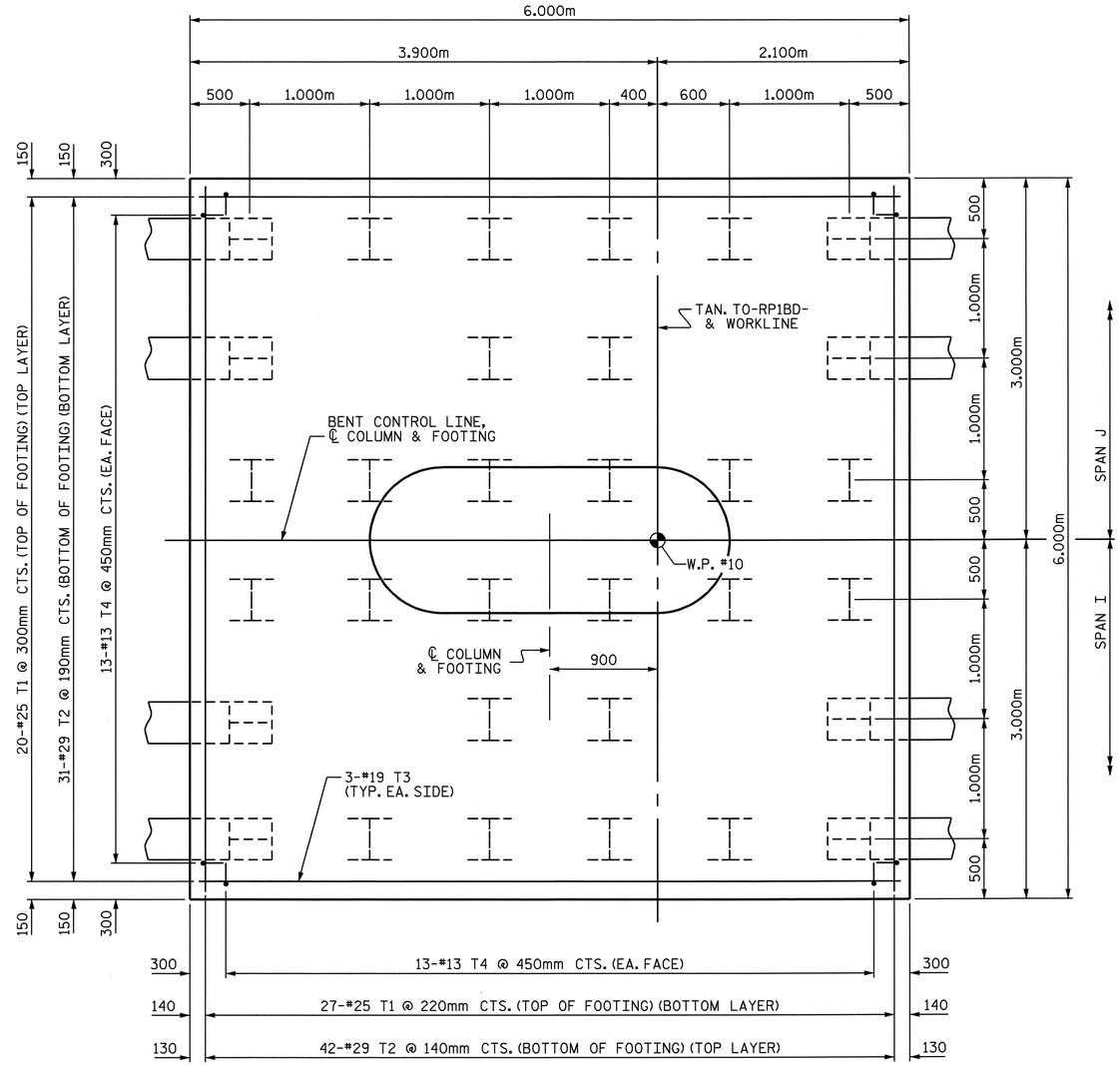

PLAN OF FOOTING

(SEE SECTION D-D FOR PLACEMENT OF M1 BARS IN FOOTING)

PROJECT NO. U-2519DA

CUMBERLAND COUNTY

STATION: 28+72.626-RP1BD-

SHEET 2 OF 3

STATE OF NORTH CAROLINA
DEPARTMENT OF TRANSPORTATION
RALEIGH

SUBSTRUCTURE

BENT 9

NORTH CAROLINA PROFESSIONAL SEAL 16301 ENGINEER TING HSIUNG FENG

10/08/08

REVISIONS						SHEET NO.
NO.	BY:	DATE:	NO.	BY:	DATE:	S-307
1			3			TOTAL SHEETS
2			4			411

DRAWN BY : E.C. LOCKLEAR DATE : 3-20-08

CHECKED BY : K.W. ALFORD DATE : 6-23-08

07-OCT-2008 15:56
H:\Structures\frye\str10_RP1BD_F0\Final Plans\u2519da_sd_bts_10.dgn
sdombrowski

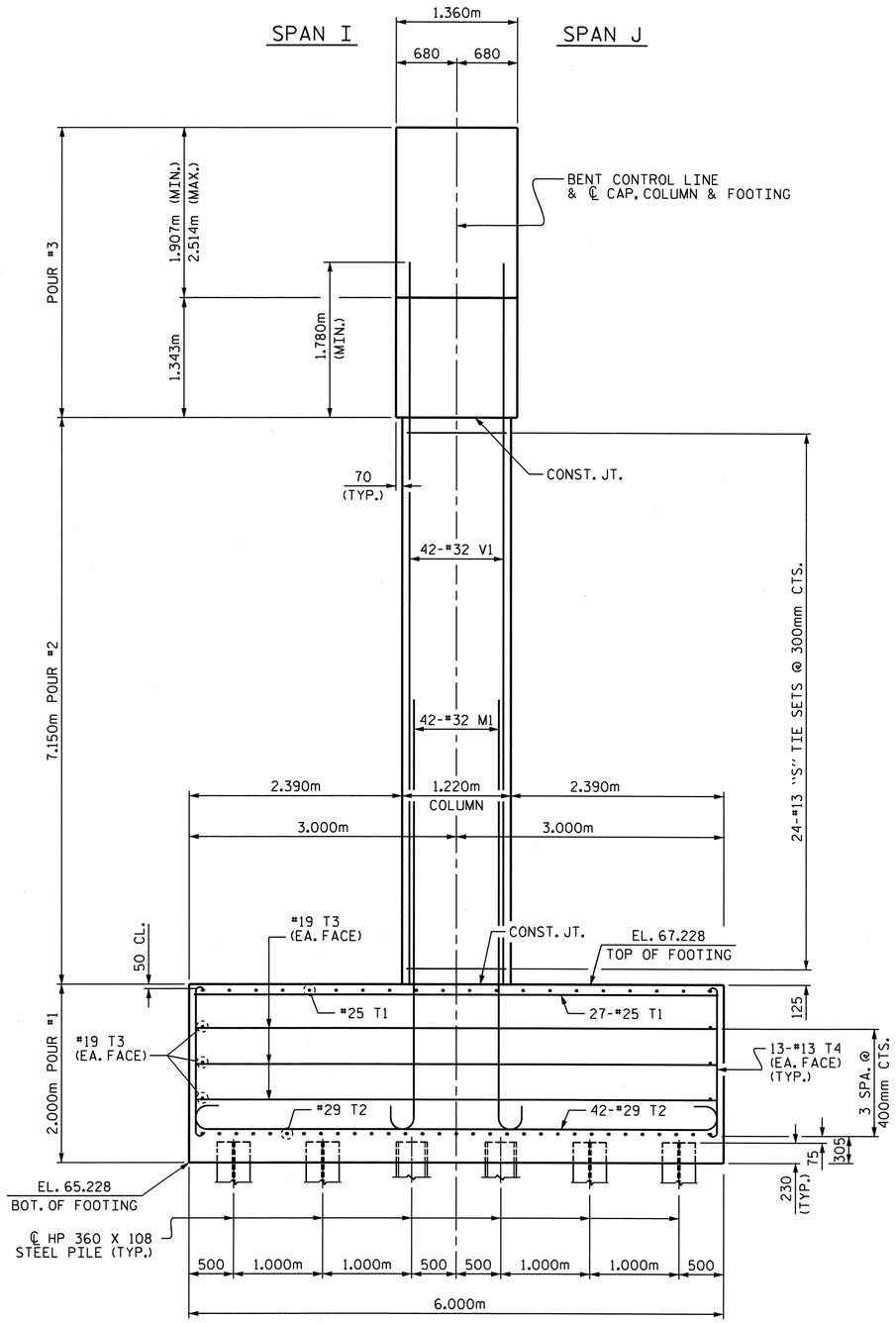

END ELEVATION

BAR TYPES

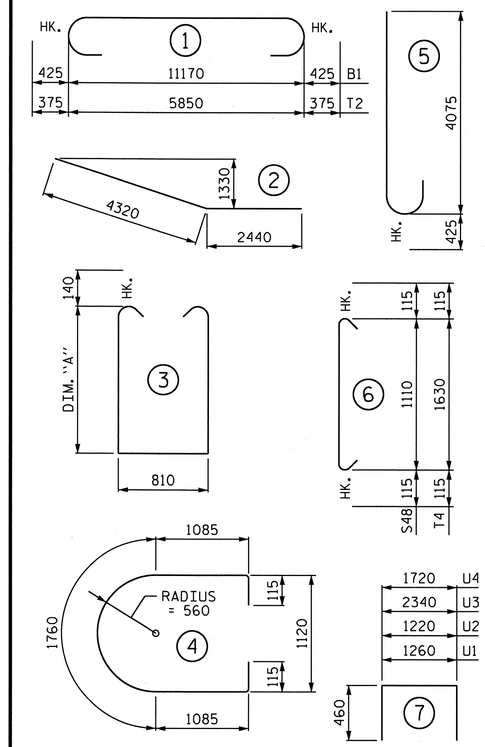

ALL BAR DIMENSIONS ARE OUT TO OUT.

BILL OF MATERIAL

BENT 9

BAR	NO.	SIZE	TYPE	DIM. "A"	LENGTH	WEIGHT
B1	9	#32	1	—	12020	693
B2	18	#32	STR	—	11220	1293
B3	10	#16	STR	—	11220	174
B4	2	#16	STR	—	11020	34
B5	2	#16	STR	—	10400	32
B6	2	#16	STR	—	9760	30
B7	2	#16	STR	—	8660	27
B8	2	#16	STR	—	7120	22
B9	2	#16	STR	—	5580	17
B10	2	#16	STR	—	4040	13
B11	14	#29	2	—	6760	479
B12	20	#13	STR	—	1260	25
B13	9	#13	STR	—	2300	21
B14	18	#13	STR	—	2060	37
B15	9	#13	STR	—	920	8
M1	42	#32	5	—	4500	1210
S1	3	#16	3	1685	4460	21
S2	3	#16	3	1755	4600	21
S3	3	#16	3	1835	4760	22
S4	3	#16	3	1905	4900	23
S5	3	#16	3	1975	5040	23
S6	3	#16	3	2045	5180	24
S7	3	#16	3	2125	5340	25
S8	3	#16	3	2195	5480	26
S9	3	#16	3	2265	5620	26
S10	3	#16	3	2345	5780	27
S11	3	#16	3	2415	5920	28
S12	3	#16	3	2485	6060	28
S13	3	#16	3	2555	6200	29
S14	3	#16	3	2635	6360	30
S15	3	#16	3	2705	6500	30
S16	3	#16	3	2775	6640	31
S17	3	#16	3	2855	6800	32
S18	3	#16	3	2905	6900	32
S19	3	#16	3	2955	7000	33
S20	3	#16	3	3005	7100	33
S21	3	#16	3	3055	7200	34
S22	3	#16	3	3105	7300	34
S23	3	#16	3	3155	7400	34
S24	3	#16	3	3335	7760	36
S25	3	#16	3	3305	7700	36
S26	3	#16	3	3265	7620	35
S27	3	#16	3	3235	7560	35
S28	3	#16	3	3195	7480	35
S29	3	#16	3	3165	7420	35
S30	3	#16	3	3135	7360	34
S31	3	#16	3	3085	7260	34
S32	3	#16	3	3035	7160	33
S33	3	#16	3	2985	7060	33
S34	3	#16	3	2925	6940	32
S35	3	#16	3	2875	6840	32
S36	3	#16	3	2825	6740	31
S37	3	#16	3	2775	6640	31
S38	3	#16	3	2725	6540	30
S39	3	#16	3	2675	6440	30
S40	3	#16	3	2625	6340	30
S41	3	#16	3	2575	6240	29
S42	3	#16	3	2525	6140	29
S43	3	#16	3	2475	6040	28
S44	3	#16	3	2425	5940	28
S45	3	#16	3	2375	5840	27
S46	3	#16	3	2325	5740	27
S47	48	#13	4	—	4160	198
S48	96	#13	6	—	1340	128
T1	47	#25	STR	—	5840	1091
T2	73	#29	1	—	6600	2438
T3	12	#19	STR	—	5860	157
T4	52	#13	6	—	1860	96
U1	30	#13	7	—	2180	65
U2	11	#13	7	—	2140	23
U3	4	#13	7	—	3260	13
U4	4	#13	7	—	2640	10
V1	42	#32	STR	—	8940	2405
REINFORCING STEEL						12,115 kg

CLASS A CONCRETE BREAKDOWN:

POUR #1	- FOOTING	72.0 m3
POUR #2	- COLUMN	23.9 m3
POUR #3	- CAP	46.0 m3
TOTAL CLASS A CONCRETE		141.9 m3

HP 360 X 108 STEEL PILES: NO. 32 METERS 1088.0

PILE REDRIVES: EACH 8

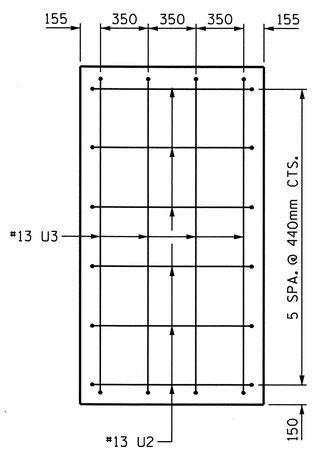

VIEW X-X

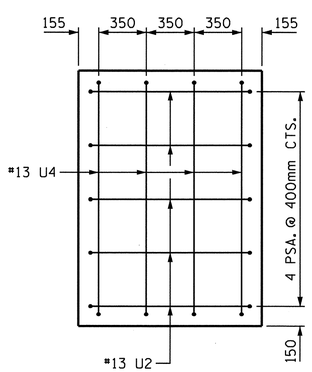

VIEW Y-Y

NORTH CAROLINA PROFESSIONAL SEAL 16301 ENGINEER K.W. ALFORD
3/10/11

PROJECT NO. U-2519DA
CUMBERLAND COUNTY
STATION: 28+72.626-RP1BD-

SHEET 3 OF 3

STATE OF NORTH CAROLINA
DEPARTMENT OF TRANSPORTATION
RALEIGH

SUBSTRUCTURE

BENT 9

REVISIONS						SHEET NO.
NO.	BY:	DATE:	NO.	BY:	DATE:	S-308
1			3			TOTAL SHEETS
2			4			411

DRAWN BY : E.C. LOCKLEAR DATE : 3-20-08
CHECKED BY : K.W. ALFORD DATE : 6/23/08

10-MAR-2011 14:41
X:\TIPProjects-U\U2519da\Structures\frye\str10_RP1BD_F0\FinalPlans\u2519da_sd_bts_10.dgn
qtnguyen

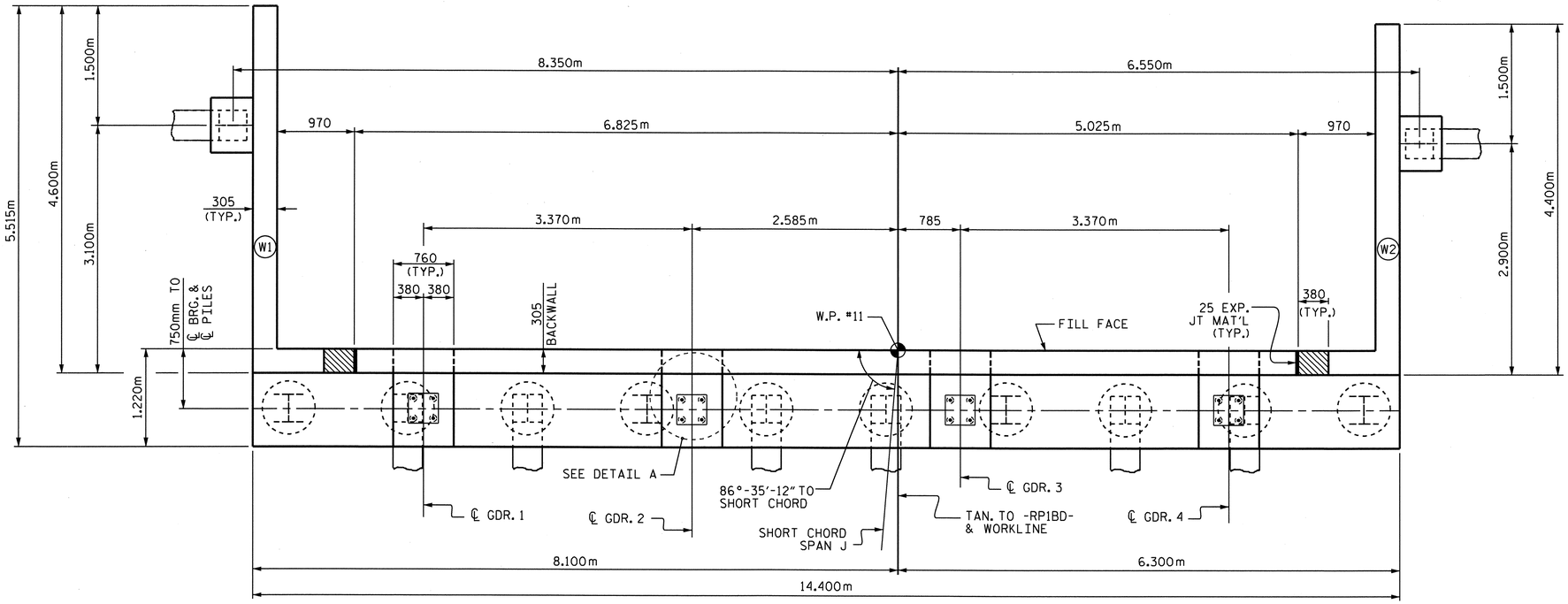

PLAN

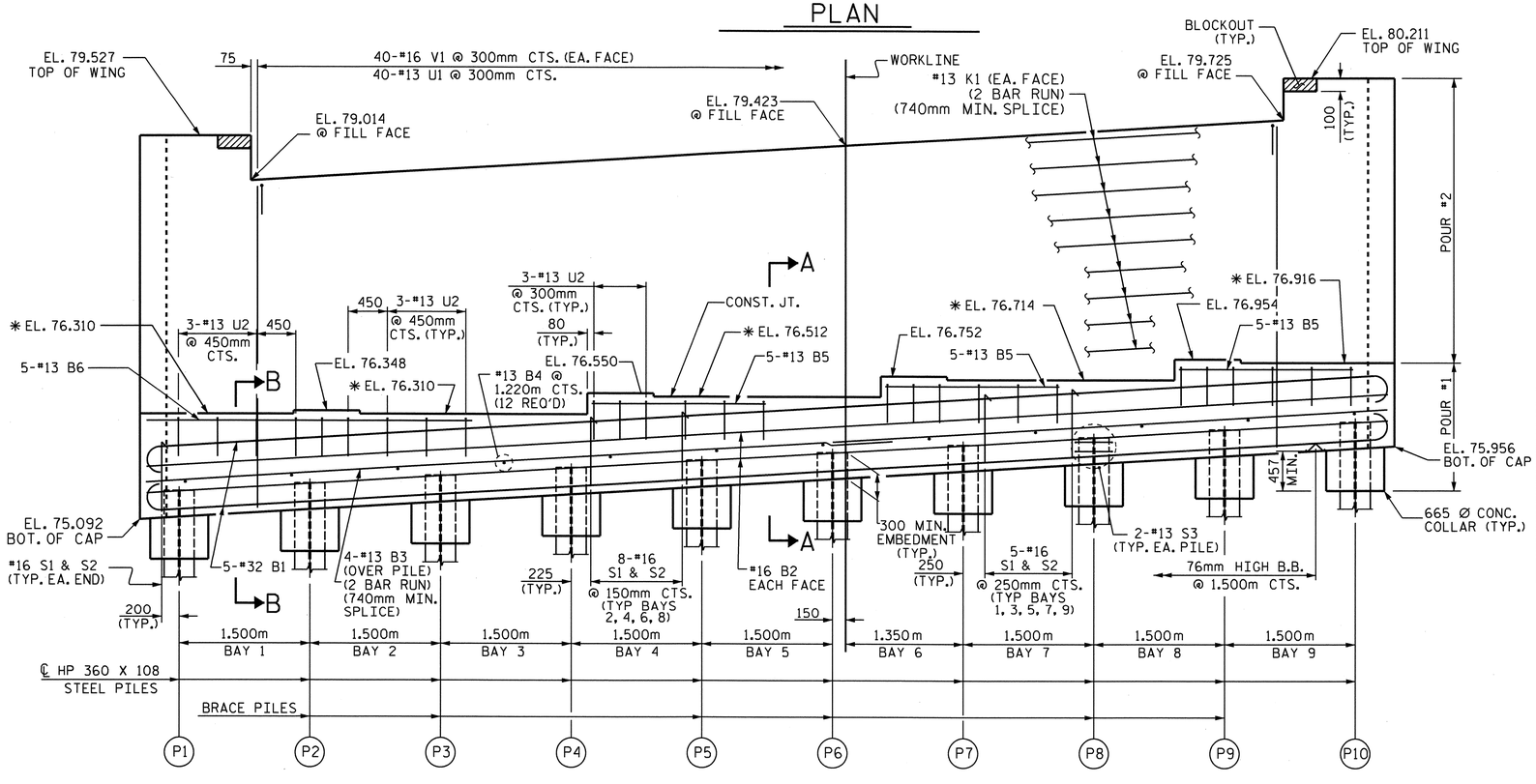

✱ FOR LOCATION OF ELEVATIONS BETWEEN BRIDGE SEAT BUILDUPS, SEE SECTIONS THRU CAP, SHEET 3 OF 3.

ELEVATION

PILE IN WINGS NOT SHOWN FOR CLARITY.

NOTES

STIRRUPS IN CAP MAY BE SHIFTED AS NECESSARY TO CLEAR ANCHOR BOLTS.

FOR PIPE INSERT DETAILS, SEE "POT BEARING DETAILS" SHEETS.

BACKWALL SHALL BE PLACED BEFORE APPLYING THE EPOXY PROTECTIVE COATING.

THE TOP SURFACE AREAS OF THE END BENT CAPS SHALL BE CURED IN ACCORDANCE WITH THE STANDARD SPECIFICATIONS EXCEPT THE MEMBRANE CURING COMPOUND METHOD SHALL NOT BE USED.

✱ THE TOP SURFACE OF THE CAP EXCEPT THE BRIDGE SEAT BUILDUPS SHALL BE SLOPED TRANSVERSELY FROM THE FILL FACE TO THE BACK FACE AT THE RATE OF 2 %.

THE CONTRACTOR SHALL ADJUST THE GIRDER BUILDUPS AS NECESSARY TO INCORPORATE A MAXIMUM PERMISSIBLE VARIATION IN POT BEARING DEPTH OF 13mm, SEE SPECIAL PROVISION FOR POT BEARINGS.

THE CONTRACTOR SHALL PROVIDE FOR INSTALLATION OF THE 102mm DIAMETER DRAIN PIPE THROUGH THE WING WALL AS REQUIRED FOR REINFORCED BRIDGE APPROACH FILLS, SEE THE ROADWAY PLANS. REINFORCING STEEL IN THE WING WALL MAY BE SHIFTED AS NECESSARY TO CLEAR THE DRAIN PIPE.

CONCRETE IN THE SHADED AREA OF THE WING SHALL BE POURED AFTER THE BARRIER RAIL IS CAST IF SLIP FORMING IS USED.

FOR PILE SPLICE DETAILS, SEE END BENT SHEET 3 OF 3.

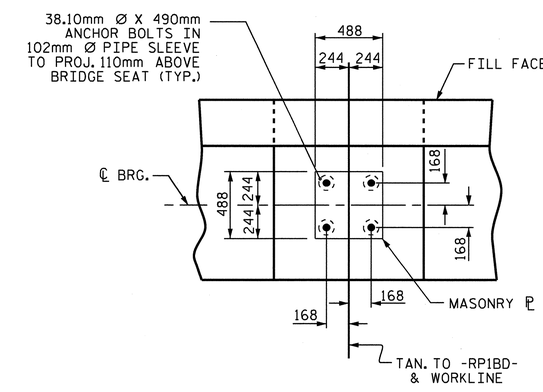

DETAIL A

TOP OF PILE ELEVATION	
PILE	ELEVATION
P1	75.435
P2	75.525
P3	75.615
P4	75.705
P5	75.795
P6	75.885
P7	75.975
P8	76.065
P9	76.155
P10	76.245

PROJECT NO. U-2519DA
CUMBERLAND COUNTY
STATION: 28+72.626 -RP1BD-

SHEET 1 OF 3

STATE OF NORTH CAROLINA
DEPARTMENT OF TRANSPORTATION
RALEIGH

SUBSTRUCTURE

END BENT 2

NORTH CAROLINA PROFESSIONAL SEAL 16301 ENGINEER TING HSING FANG
3/22/11

REVISIONS						SHEET NO.
NO.	BY:	DATE:	NO.	BY:	DATE:	S-309
1			3			TOTAL SHEETS
2			4			411

DRAWN BY : O. T. NGUYEN DATE : 12-07
CHECKED BY : T. H. FANG DATE : 5-08

22-MAR-2011 11:56
K:\TIPProjects-U\U2519da\Structures\frye\str10_RP1BD_F0\Final Plans\u2519da_sd_e*_10.dgn
tfang

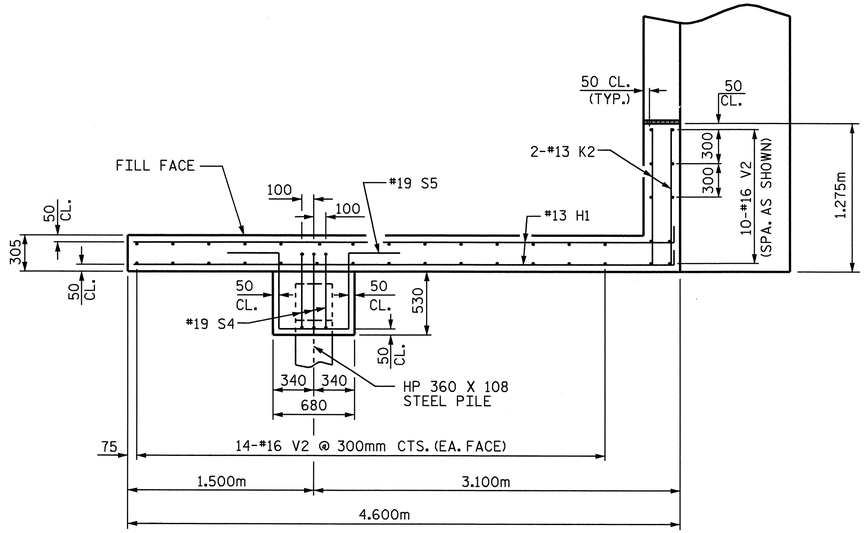

PLAN W1

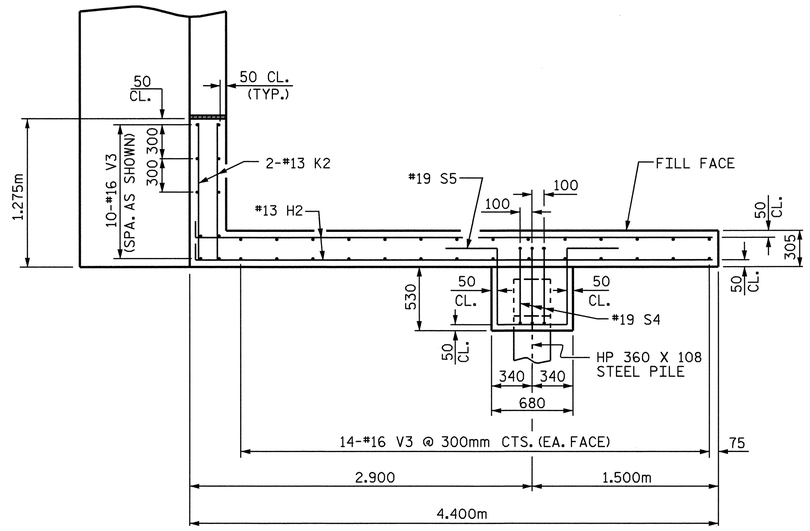

PLAN W2

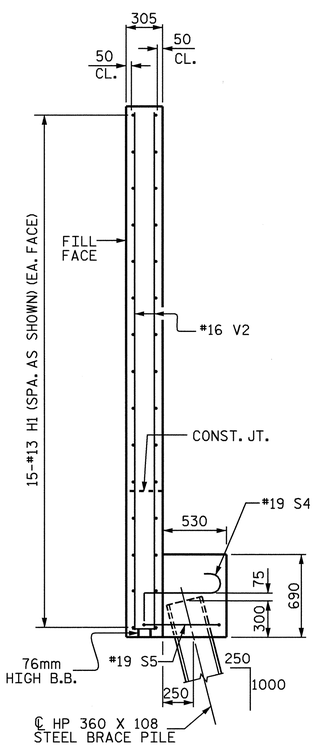

SECTION X-X

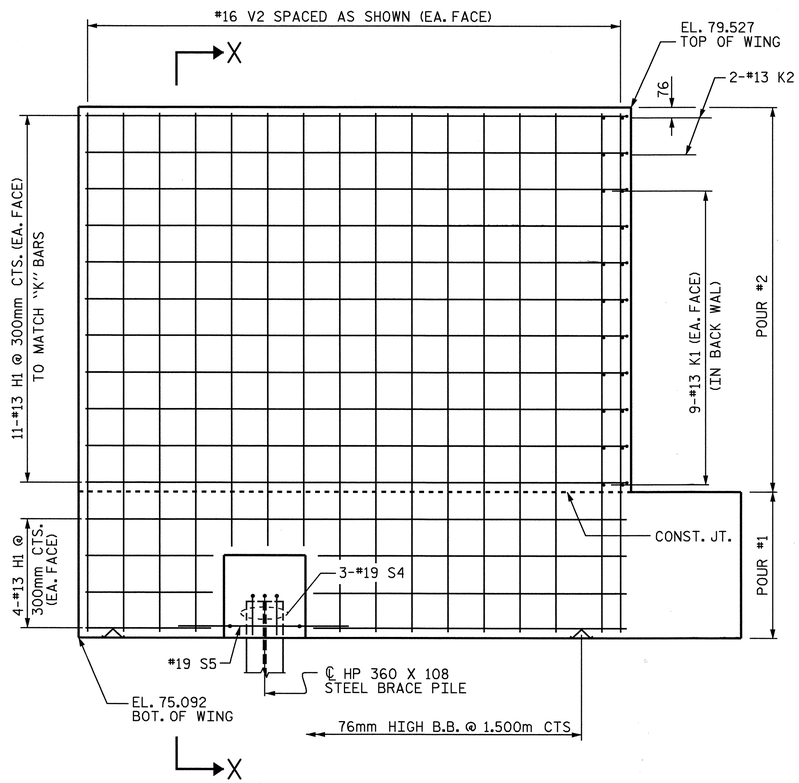

ELEVATION W1

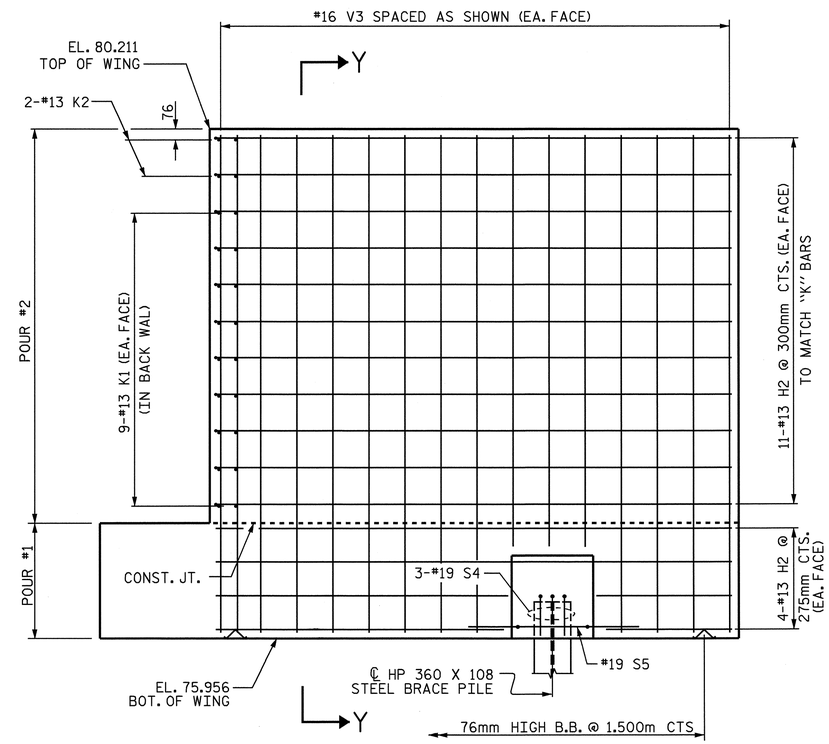

ELEVATION W2

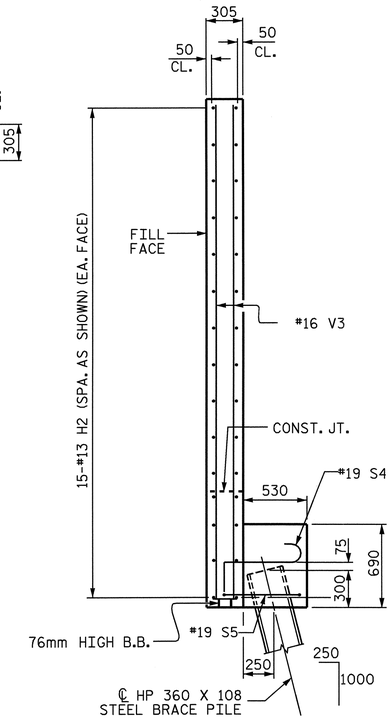

SECTION Y-Y

PROJECT NO. U-2519DA
CUMBERLAND COUNTY
STATION: 28+72.626 -RP1BD-

SHEET 2 OF 3

STATE OF NORTH CAROLINA
DEPARTMENT OF TRANSPORTATION
RALEIGH

SUBSTRUCTURE

END BENT 2

REVISIONS						SHEET NO.
NO.	BY:	DATE:	NO.	BY:	DATE:	S-310
1			3			TOTAL SHEETS
2			4			411

DRAWN BY : Q.T. NGUYEN DATE : 12-07
CHECKED BY : T.H. FANG DATE : 5-22-08

07-OCT-2008 15:56
H:\Structures\frye\str10_RP1BD_F0\Final Plans\u2519da_sd_e*_10.dgn
sdombrowski

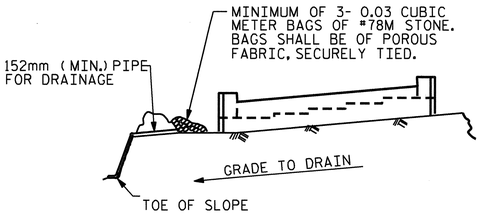

BAGGED STONE AND PIPE SHALL BE PLACED IMMEDIATELY AFTER COMPLETION OF END BENT EXCAVATION. PIPE MAY BE EITHER CONCRETE, CORRUGATED STEEL, CORRUGATED ALUMINUM ALLOY, OR CORRUGATED PLASTIC. PERFORATED PIPE WILL NOT BE ALLOWED.

BAGGED STONE SHALL REMAIN IN PLACE UNTIL THE ENGINEER DIRECTS THAT IT BE REMOVED. THE CONTRACTOR SHALL REMOVE AND DISPOSE OF SILT ACCUMULATIONS AT BAGGED STONE WHEN SO DIRECTED BY THE ENGINEER. BAGS SHALL BE REMOVED AND REPLACED WHENEVER THE ENGINEER DETERMINES THAT THEY HAVE DETERIORATED AND LOST THEIR EFFECTIVENESS.

NO SEPARATE PAYMENT WILL BE MADE FOR THIS WORK AND THE ENTIRE COST OF THIS WORK SHALL BE INCLUDED IN THE UNIT CONTRACT PRICE BID FOR THE SEVERAL PAY ITEMS.

TEMPORARY DRAINAGE AT END BENT

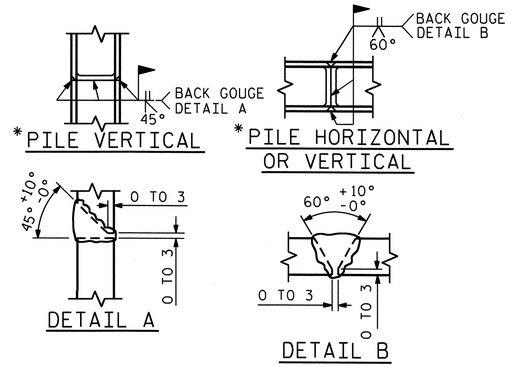

*POSITION OF PILE DURING WELDING.

PILE SPLICE DETAILS

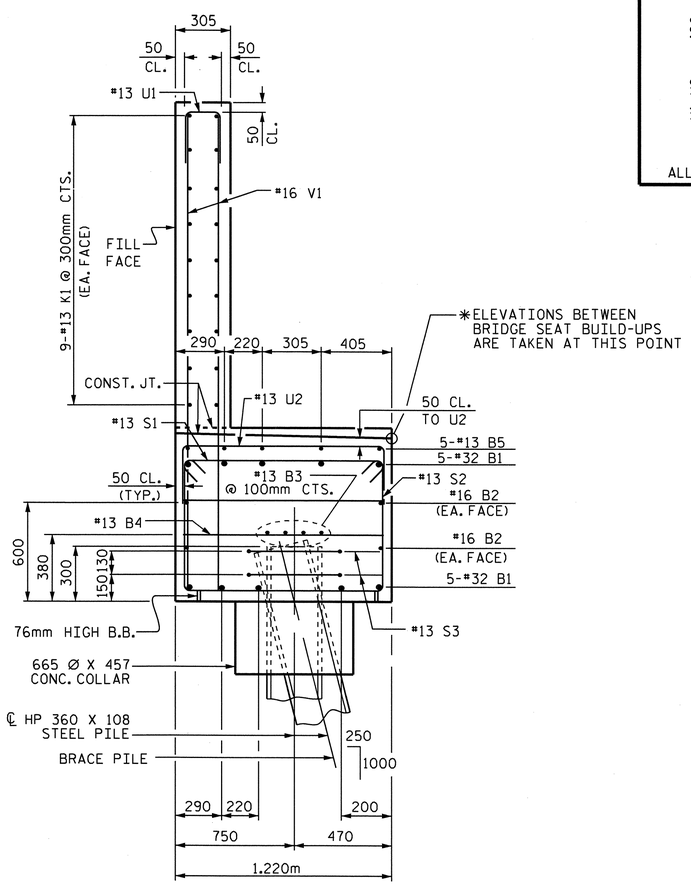

SECTION A-A

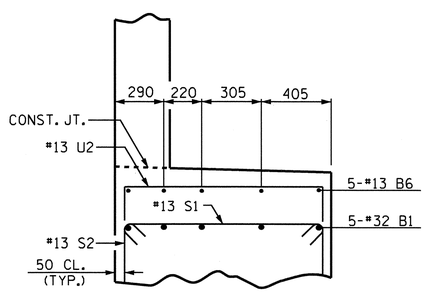

PARTIAL SECTION B-B

BAR TYPES

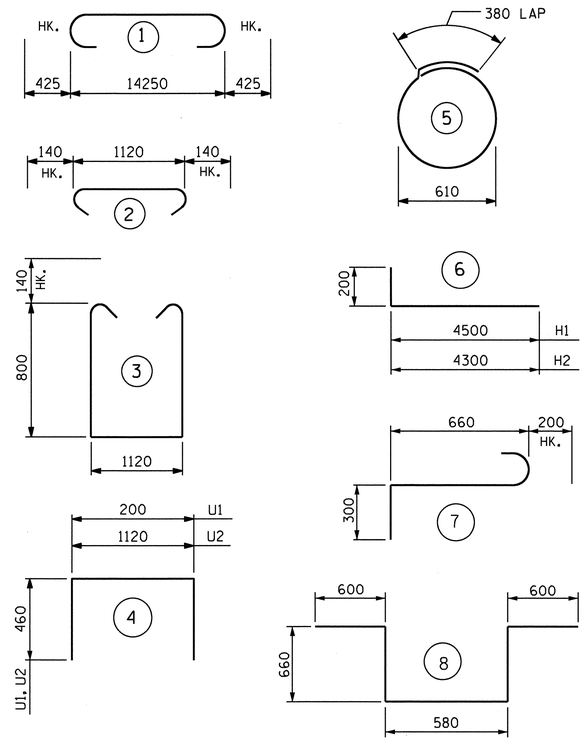

ALL BAR DIMENSIONS ARE OUT TO OUT.

BILL OF MATERIAL
END BENT 2

BAR	NO.	SIZE	TYPE	LENGTH	WEIGHT
B1	10	32	1	15100	967
B2	4	16	STR	14300	89
B3	8	13	STR	7520	60
B4	12	13	STR	1120	13
B5	15	13	STR	2100	31
B6	5	13	STR	4260	21
H1	30	13	6	4700	140
H2	30	13	6	4500	134
K1	36	13	STR	7520	269
K2	8	13	STR	1160	9
S1	59	16	2	1400	128
S2	59	16	3	3000	275
S3	20	13	5	2300	46
S4	6	19	7	1160	16
S5	2	19	8	3100	14
U1	40	13	4	1120	45
U2	27	13	4	2040	55
V1	80	16	STR	3700	459
V2	38	16	STR	4300	254
V3	38	16	STR	4120	244

REINFORCING STEEL kg 3269

CLASS A CONCRETE BREAKDOWN
POUR #1: CAP & WINGS & COLLARS 23.3 m3
POUR #2 WINGS & BACKWALL 21.3 m3

CLASS A CONCRETE TOTAL 44.6 m3

HP 360 X 108 STEEL PILES
NO. 12 METERS 444.0

PILE REDRIVES
EA. 3

PROJECT NO. U-2519DA
CUMBERLAND COUNTY
STATION: 28+72.626 -RP1BD-

SHEET 3 OF 3

STATE OF NORTH CAROLINA
DEPARTMENT OF TRANSPORTATION
RALEIGH

SUBSTRUCTURE

END BENT 2

NORTH CAROLINA PROFESSIONAL SEAL 16301 ENGINEER TING HSIANG FANG
3/11/11

REVISIONS						SHEET NO.
NO.	BY:	DATE:	NO.	BY:	DATE:	S-311
1			3			TOTAL SHEETS
2			4			411

DRAWN BY : Q.T. NGUYEN DATE : 12-07
CHECKED BY : T. H. FANG DATE : 5-22-08

11-MAR-2011 15:50
K:\TIPProjects-U\U2519da\Structures\frye\str10_RP1BD_F0\Final Plans\u2519da_sd_e*_10.dgn
ttfang

GENERAL NOTES

SLOPE PROTECTION SHALL BE PLACED UNDER THE ENDS OF THE BRIDGE AS SHOWN IN THE DETAILS. STRAIGHT EDGING WILL NOT BE REQUIRED UNLESS, IN THE OPINION OF THE ENGINEER, VISUAL INSPECTION INDICATES A NEED FOR IT. MEASUREMENT AND PAYMENT SHALL BE AS PRESCRIBED IN SECTION 462 OF THE STANDARD SPECIFICATIONS.

SLOPE PROTECTION SHALL CONSIST OF 100mm POURED-IN-PLACE CONCRETE PAVING AS SHOWN IN THE DETAILS ON THIS SHEET. CONCRETE SHALL BE CLASS "B". THE CONCRETE SURFACE SHALL BE FLOATED WITH A WOODEN FLOAT AND FINISHED. WELDED WIRE FABRIC REINFORCING SHALL BE 152 X 152 - W9.1 X W9.1, 1520mm WIDE. SLOPE PROTECTION SHALL BE POURED IN 1520mm STRIPS AS SHOWN IN THE "POURING DETAIL" WITH 600mm LONG #13 BARS PLACED ALONG THE SLOPE BETWEEN STRIPS AT 450mm MAXIMUM SPACING. SLOPE PROTECTION MAY BE POURED IN ALTERNATE 1220mm AND 1520mm STRIPS AS SHOWN IN THE "OPTIONAL POURING DETAIL" WITH ADJACENT RUNS OF WELDED WIRE FABRIC LAPPING AT LEAST 152mm. THE COST OF THE WELDED WIRE FABRIC AND #13 BARS, IF USED, SHALL BE INCLUDED IN THE CONTRACT UNIT PRICE BID PER SQUARE METER FOR SLOPE PROTECTION.

BRIDGE @ STA. 28+72.626 -RP1BD-	100mm SLOPE PROTECTION	* WELDED WIRE FABRIC 1520mm WIDE
	SQUARE METERS	APPROX. METERS
END BENT 1	600	440
END BENT 2	760	555

* QUANTITY SHOWN IS BASED ON 1520mm POURS.

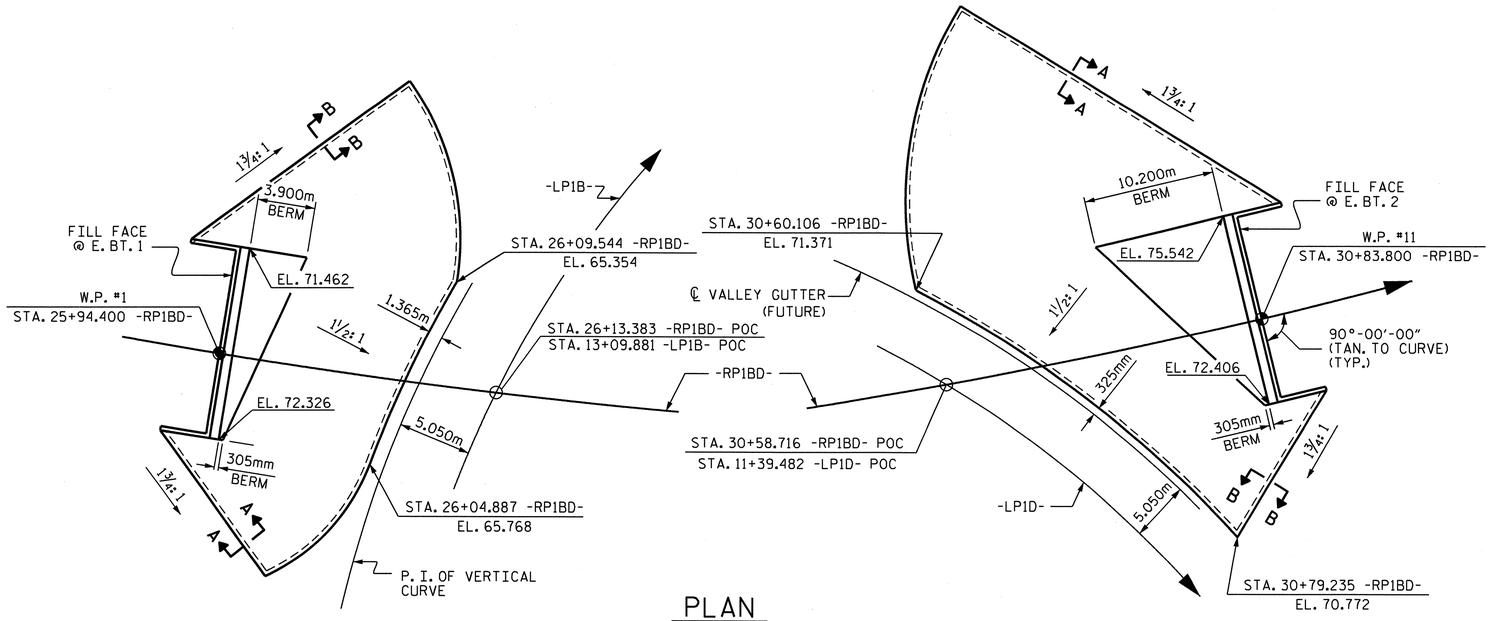

PLAN

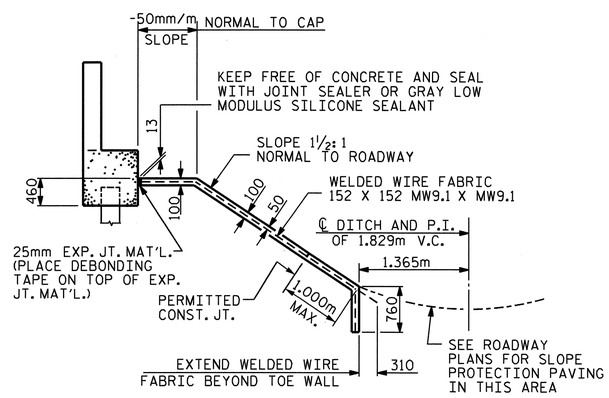

AT END BENT 1
WHEN FILL CATCHES IN DITCH

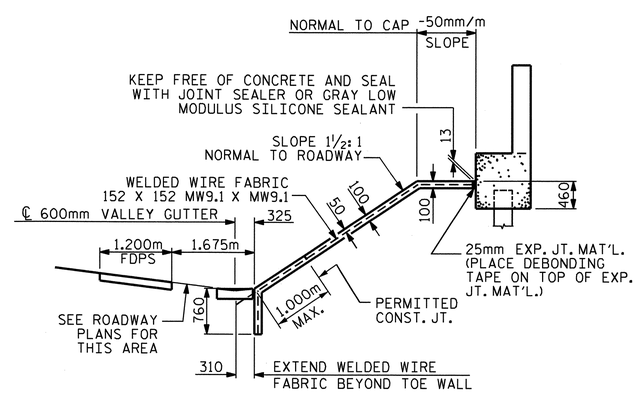

AT END BENT 2
WHEN FILL CATCHES IN VALLEY GUTTER

SECTION ALONG -RP1BD-

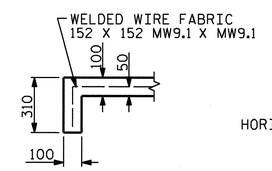

SECTION A-A

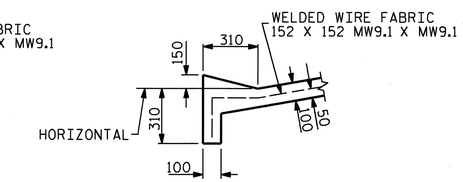

SECTION B-B

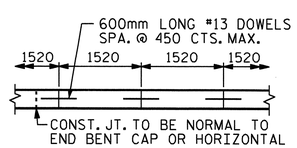

STRIP WIDTHS MAY VARY IN CURVED PORTION.

POURING DETAIL

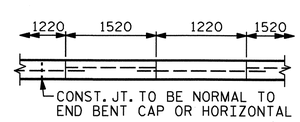

POUR A 1220mm STRIP FIRST. STRIP WIDTHS MAY VARY IN CURVED PORTION.

OPTIONAL POURING DETAIL

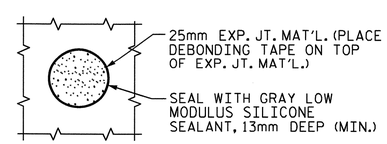

PLAN WHERE CONCRETE SLOPE PROTECTION MUST BE PLACED AROUND A BENT COLUMN

PROJECT NO. U-2519DA
CUMBERLAND COUNTY
STATION: 28+72.626 -RP1BD-

NORTH CAROLINA PROFESSIONAL SEAL 16301 ENGINEER T. H. FANG
3/9/11

STATE OF NORTH CAROLINA
DEPARTMENT OF TRANSPORTATION
RALEIGH

STANDARD SLOPE PROTECTION DETAILS

REVISIONS						SHEET NO.
NO.	BY:	DATE:	NO.	BY:	DATE:	S-312
1			3			TOTAL SHEETS
2			4			411

ASSEMBLED BY : E.C. LOCKLEAR	DATE : 3-13-08	
CHECKED BY : T. H. FANG	DATE : 9-16-08	
DRAWN BY : ELR 5/92	REV. 7/10/01	LES/RDR
CHECKED BY : GRP 6/92	REV. 5/1/03	RWW/JTE
	REV. 5/1/06	TLA/GM

09-MAR-2011 16:49
K:\TIPProjects-U\U2519da\Structures\frye\strl0_RP1BD_F0\FinalPlans\u2519da_sd_sp_l0.dgn
tfang

STD. NO. SP1SM

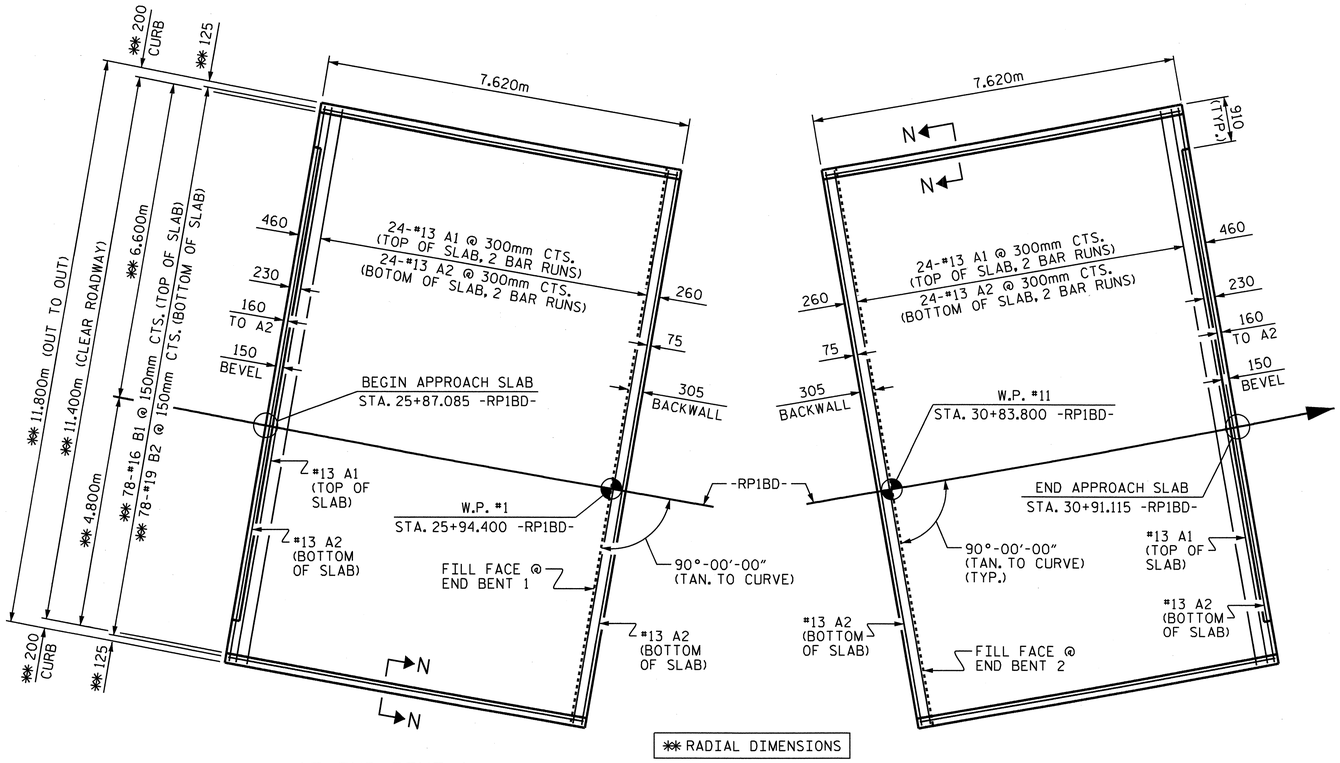

AT END BENT 1

AT END BENT 2

PLAN

DIMENSIONS SHOWN ARE TYPICAL FOR BOTH APPROACH SLABS.
ARC OFFSETS ARE SHOWN ON SHEET 2 OF 2.

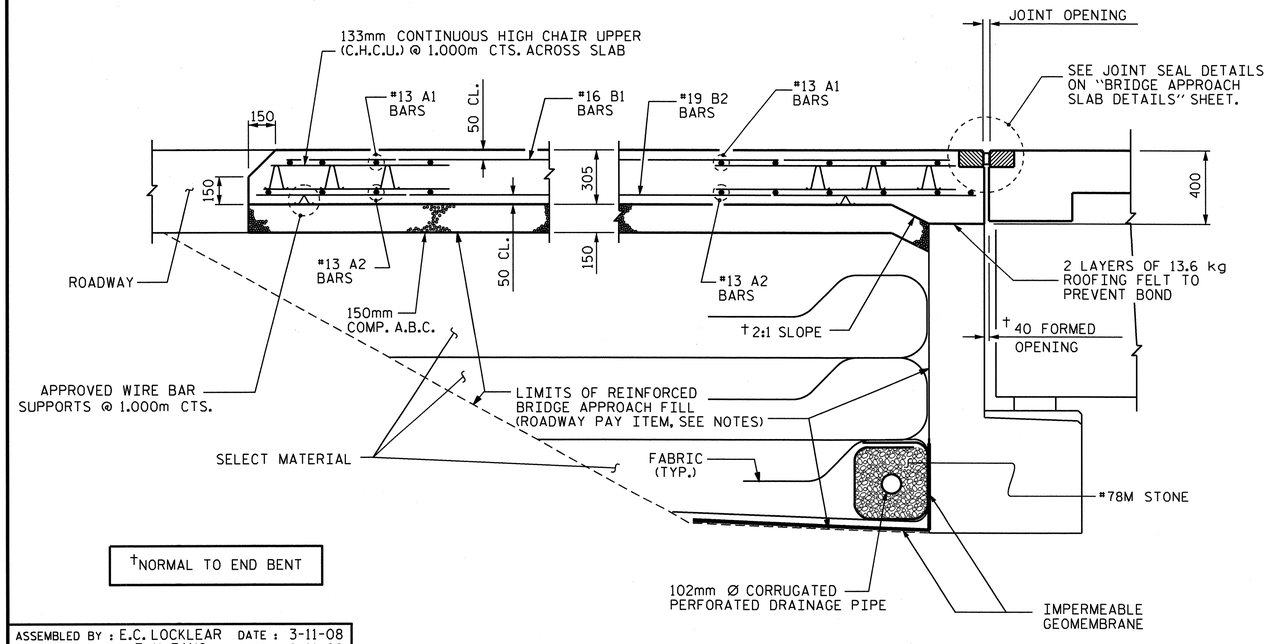

†NORMAL TO END BENT

SECTION THRU SLAB

NOTES

APPROACH SLAB SHALL NOT BE CONSTRUCTED PRIOR TO COMPLETION OF THE BRIDGE DECK.

FOR REINFORCED BRIDGE APPROACH FILL INCLUDING FABRIC, IMPERMEABLE GEOMEMBRANE, 102mm Ø DRAINAGE PIPE, #78M STONE, AND SELECT MATERIAL, SEE ROADWAY PLANS.

AREA BETWEEN THE WINGWALL AND APPROACH SLAB SHALL BE GRADED TO DRAIN THE WATER AWAY FROM THE FILL FACE OF THE BRIDGE AND SHALL BE PAVED. SEE ROADWAY PLANS.

THE 150mm COMP. A.B.C. SHALL BE FLUSH WITH THE ROADWAY END OF THE APPROACH SLAB AND SHALL EXTEND 300mm OUTSIDE OF EACH EDGE OF THE APPROACH SLAB.

THE CONTRACTOR MAY USE 100mm TYPE B-25.0B ASPHALT CONCRETE COURSE IN LIEU OF 150mm COMP. A.B.C. IF THIS OPTION IS USED, THE BASE COURSE SHALL BE FLUSH WITH THE ROADWAY END OF THE APPROACH SLAB, AND THE WIDTH SHALL BE THE SAME AS THAT OF THE APPROACH SLAB.

THE CONTRACTOR MAY USE 125mm CLASS "A" CONCRETE BASE IN LIEU OF 150mm COMP. A.B.C. IF THIS OPTION IS USED, THE CONCRETE BASE SHALL BE FLUSH WITH THE ROADWAY END OF THE APPROACH SLAB, AND THE WIDTH SHALL BE THE SAME AS THAT OF THE APPROACH SLAB. THE CONCRETE SHALL BE FINISHED TO A SMOOTH SURFACE AND A LAYER OF 13.6 kg ROOFING FELT SHALL BE PLACED BETWEEN THE CONCRETE BASE AND THE APPROACH SLAB TO PREVENT BOND. THE APPROACH SLAB SHALL NOT BE CAST UNTIL THE CONCRETE BASE HAS REACHED AN AGE OF THREE CURING DAYS.

WITH EVAZOTE JOINT SEAL

FOR EVAZOTE JOINT SEALS, SEE SPECIAL PROVISIONS.

THE NOMINAL UNCOMPRESSED SEAL WIDTH OF THE EVAZOTE JOINT SEAL SHALL BE 87mm.

FOR ELASTOMERIC CONCRETE, SEE SPECIAL PROVISIONS.

BILL OF MATERIAL

APPROACH SLAB AT E.B. 1

BAR	NO.	SIZE	TYPE	LENGTH	WEIGHT
✱ A1	50	#13	STR	6160	306
A2	52	#13	STR	6120	316
✱ B1	78	#16	STR	7220	874
B2	78	#19	STR	7520	1311
REINFORCING STEEL				kg.	1627
✱ EPOXY COATED REINFORCING STEEL				kg.	1180
CLASS AA CONCRETE				C.M.	27.8

APPROACH SLAB AT E.B. 2

BAR	NO.	SIZE	TYPE	LENGTH	WEIGHT
✱ A1	50	#13	STR	6160	306
A2	52	#13	STR	6120	316
✱ B1	78	#16	STR	7220	874
B2	78	#19	STR	7520	1311
REINFORCING STEEL				kg.	1627
✱ EPOXY COATED REINFORCING STEEL				kg.	1180
CLASS AA CONCRETE				C.M.	27.8

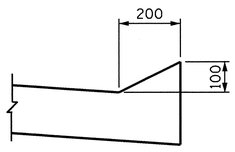

SECTION N-N

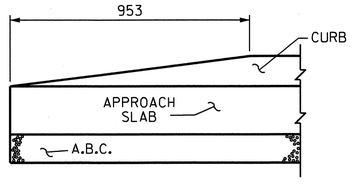

END OF CURB WITHOUT SHOULDER BERM GUTTER

CURB DETAILS

PROJECT NO. U-2519DA
CUMBERLAND COUNTY
STATION: 28+72.626 -RP1BD-

SHEET 1 OF 2

STATE OF NORTH CAROLINA
DEPARTMENT OF TRANSPORTATION
RALEIGH

STANDARD

BRIDGE APPROACH SLAB FOR FLEXIBLE PAVEMENT

NORTH CAROLINA PROFESSIONAL SEAL 16301 ENGINEER T. H. FANG
3/14/11

REVISIONS						
NO.	BY:	DATE:	NO.	BY:	DATE:	
1			3			
2			4			

SHEET NO. S-313
TOTAL SHEETS 411

STD. NO. BAS4SM

ASSEMBLED BY : E.C. LOCKLEAR DATE : 3-11-08
CHECKED BY : T. H. FANG DATE : 8-11-08

DRAWN BY : FCJ 6/87
CHECKED BY : EGA 6/87

REV. 7/10/01 RWW/LES
REV. 5/7/03R RWW/JTE
REV. 5/1/06R KMM/GM

14-MAR-2011 14:35
K:\TIPProjects-U\U2519da\Structures\frye\str10_RP1BD_F0\Final Plans\u2519da_sd_as_10.dgn
tfang

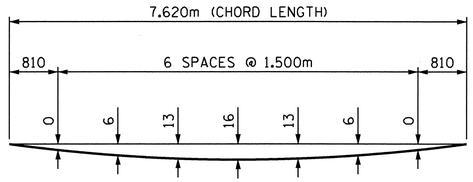

LEFT SIDE - END BENT 1 & 2

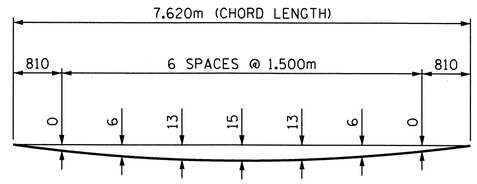

RIGHT SIDE - END BENT 1 & 2

ARC OFFSETS

NOTE: CHORD LENGTHS ARE ALONG OUTSIDE EDGE AT INTERSECTION OF BEGINNING AND ENDING FACES OF APPROACH SLABS.

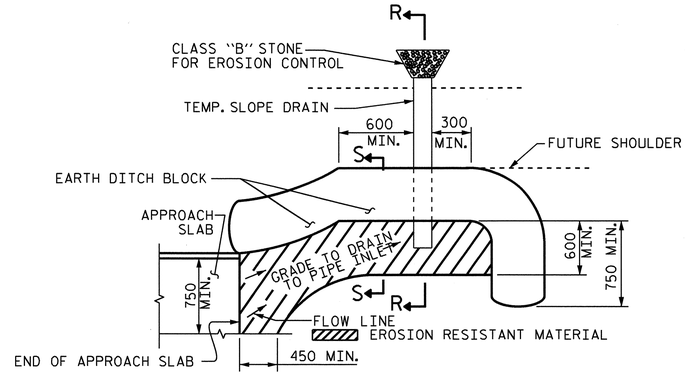

NOTE: IMMEDIATELY AFTER THE CONSTRUCTION OF THE APPROACH SLAB, THE CONTRACTOR SHALL PROVIDE TEMPORARY BERM AND SLOPE DRAIN. CONTRACTOR SHALL GRADE TO PIPE INLET AND PROVIDE EROSION RESISTANT MATERIAL AS SHOWN. THE EROSION RESISTANT MATERIAL SHALL BE EITHER 1) ASPHALT PLANT MIX, TYPE 1 OR TYPE 2, MIN. 50mm DEPTH, 2) EROSION CONTROL MAT, OR 3) CONCRETE, AS DIRECTED BY THE ENGINEER. THE SLOPE DRAIN SHALL CONSIST OF A NON-PERFORATED TEMPORARY DRAINAGE PIPE, 305mm IN DIAMETER.

PLAN VIEW

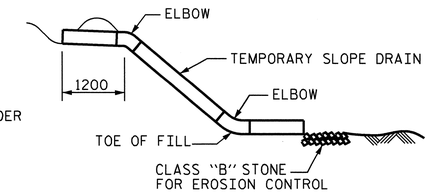

SECTION R-R

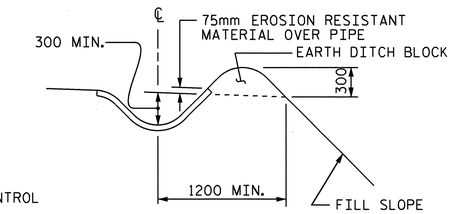

SECTION S-S

TEMPORARY BERM AND SLOPE DRAIN DETAILS

(TO BE USED WHEN SHOULDER BERM GUTTER IS REQUIRED)

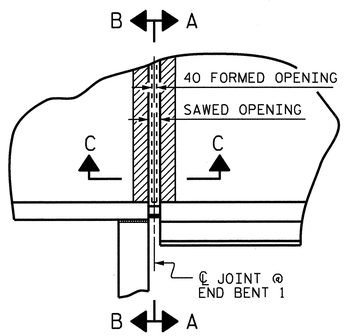

PLAN

END BENT 1 SHOWN, END BENT 2 SIMILAR

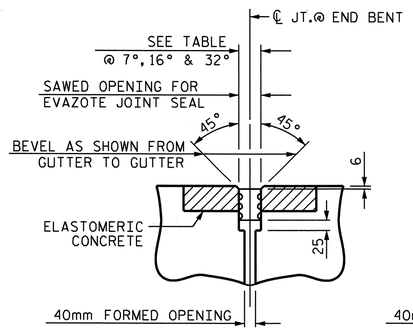

SECTION C-C

EVAZOTE JOINT SEAL

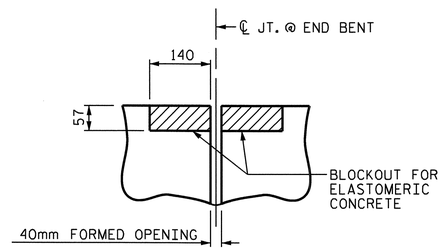

SECTION C-C

EVAZOTE JOINT SEAL (PRE-SAWED ELASTOMERIC CONCRETE DIMENSIONS)

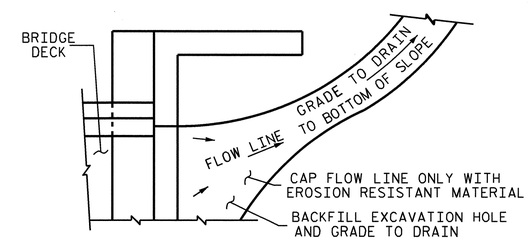

NOTE: IF THE APPROACH SLAB IS NOT CONSTRUCTED IMMEDIATELY AFTER THE BACKFILLING OF THE END BENT EXCAVATION, GRADE TO DRAIN TO THE BOTTOM OF THE SLOPE AND PROVIDE EROSION RESISTANT MATERIAL, SUCH AS FIBERGLASS ROVING OR AS DIRECTED BY THE ENGINEER TO PREVENT SOIL EROSION AND TO PROTECT THE AREA ADJACENT TO THE STRUCTURE. THE CONTRACTOR WILL BE REQUIRED TO REMOVE THESE MATERIALS PRIOR TO CONSTRUCTION OF THE APPROACH SLAB.

TEMPORARY DRAINAGE DETAIL

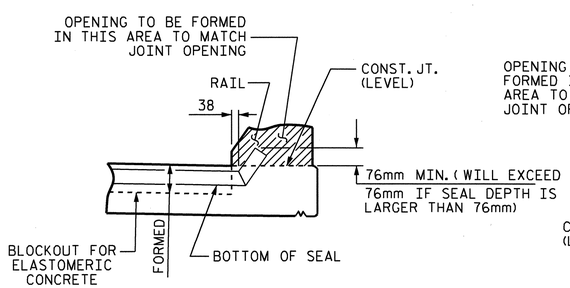

SECTION A-A

EVAZOTE JOINT SEAL TO BE CUT, HEAT WELDED AND TURNED UP PARALLEL TO SLOPED FACE OF THE BARRIER RAIL.

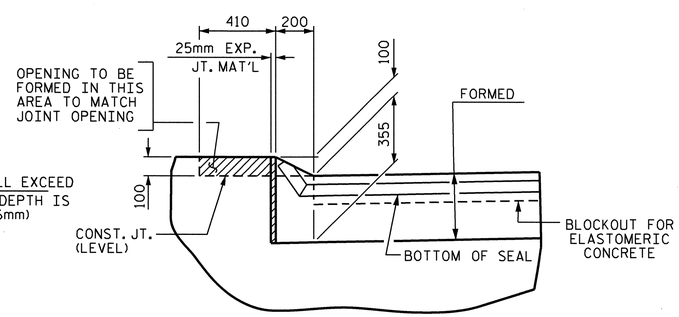

SECTION B-B

JOINT SEAL DETAILS @ END BENTS

SAWED OPENING FOR EVAZOTE JOINT SEAL			
	AT 7° C	AT 16° C	AT 32° C
END BENT 1	78mm	67mm	46mm
END BENT 2	72mm	64mm	50mm

ELASTOMERIC CONCRETE	
	* ELASTOMERIC CONCRETE (CU. m)
END BENT 1	0.24
END BENT 2	0.24

* BASED ON THE MINIMUM BLOCKOUT SHOWN.

NORTH CAROLINA PROFESSIONAL SEAL 16301 ENGINEER T.H. FANG
3/18/11

PROJECT NO. U-2519DA
CUMBERLAND COUNTY
STATION: 28+72.626 -RP1BD-

SHEET 2 OF 2

STATE OF NORTH CAROLINA
DEPARTMENT OF TRANSPORTATION
RALEIGH

STANDARD

BRIDGE APPROACH SLAB DETAILS

REVISIONS						SHEET NO.
NO.	BY:	DATE:	NO.	BY:	DATE:	S-314
1			3			TOTAL SHEETS
2			4			411

STD. NO. BAS10SM

ASSEMBLED BY : E.C. LOCKLEAR DATE : 3-11-08
CHECKED BY : T. H. FANG DATE : 8-11-08
DRAWN BY : FCJ 11/88
CHECKED BY : ARB 11/88
REV. 10/17/00 RWW/LES
REV. 5/7/03 RWW/JTE
REV. 5/1/06R MAA/KMM

18-MAR-2011 14:51
K:\TIPProjects-U\U2519da\Structures\frye\str10_RP1BD_F0\FinalPlans\u2519da_sd_as_10.dgn
tfang

r:\structures\brooks\final plans\u2519da_sa_gd.dgn
rmartin

F. A. PROJ. NO. NHF-0100(21)

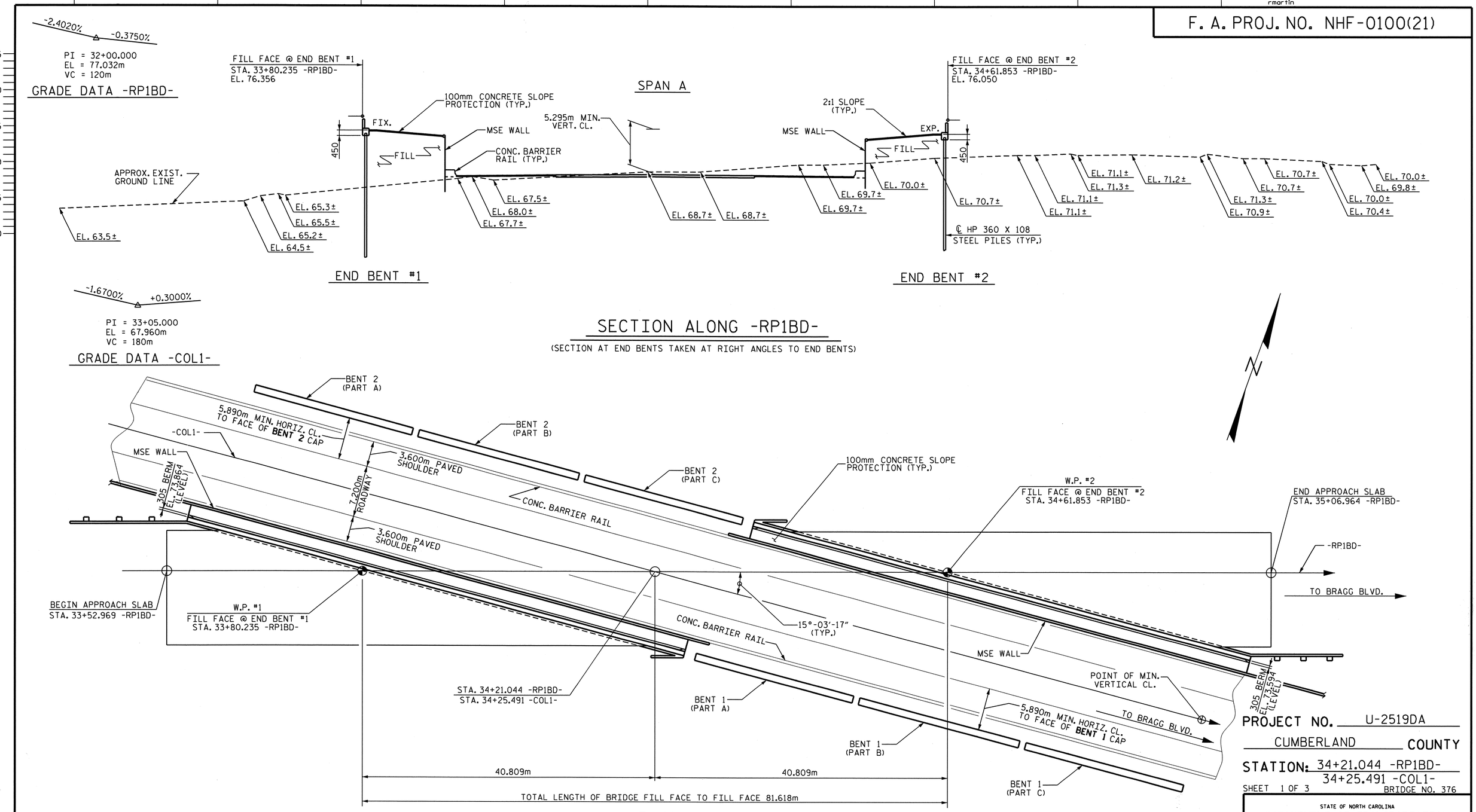

PROJECT NO. U-2519DA

CUMBERLAND COUNTY

STATION: 34+21.044 -RP1BD-
34+25.491 -COL1-

SHEET 1 OF 3

BRIDGE NO. 376

STATE OF NORTH CAROLINA
DEPARTMENT OF TRANSPORTATION
RALEIGH

GENERAL DRAWING FOR BRIDGE ON -RP1BD- OVER -COL1- BETWEEN ALL AMERICAN FREEWAY AND BRAGG BLVD.

NORTH CAROLINA PROFESSIONAL SEAL 23926 ENGINEER BRIAN C. HAWKS
2/14/11

REVISIONS						SHEET NO.
NO.	BY:	DATE:	NO.	BY:	DATE:	S-315
1			3			TOTAL SHEETS
2			4			411

DRAWN BY : R. D. MARTIN DATE : 7-12-07
CHECKED BY : P.S. ERVIN DATE : 9-2-08

DETAIL LOCATING PILES BENEATH APPROACH SLAB @ END BENT 2

SEE "BRIDGE APPROACH SLAB" FOR ADDITIONAL DETAIL.

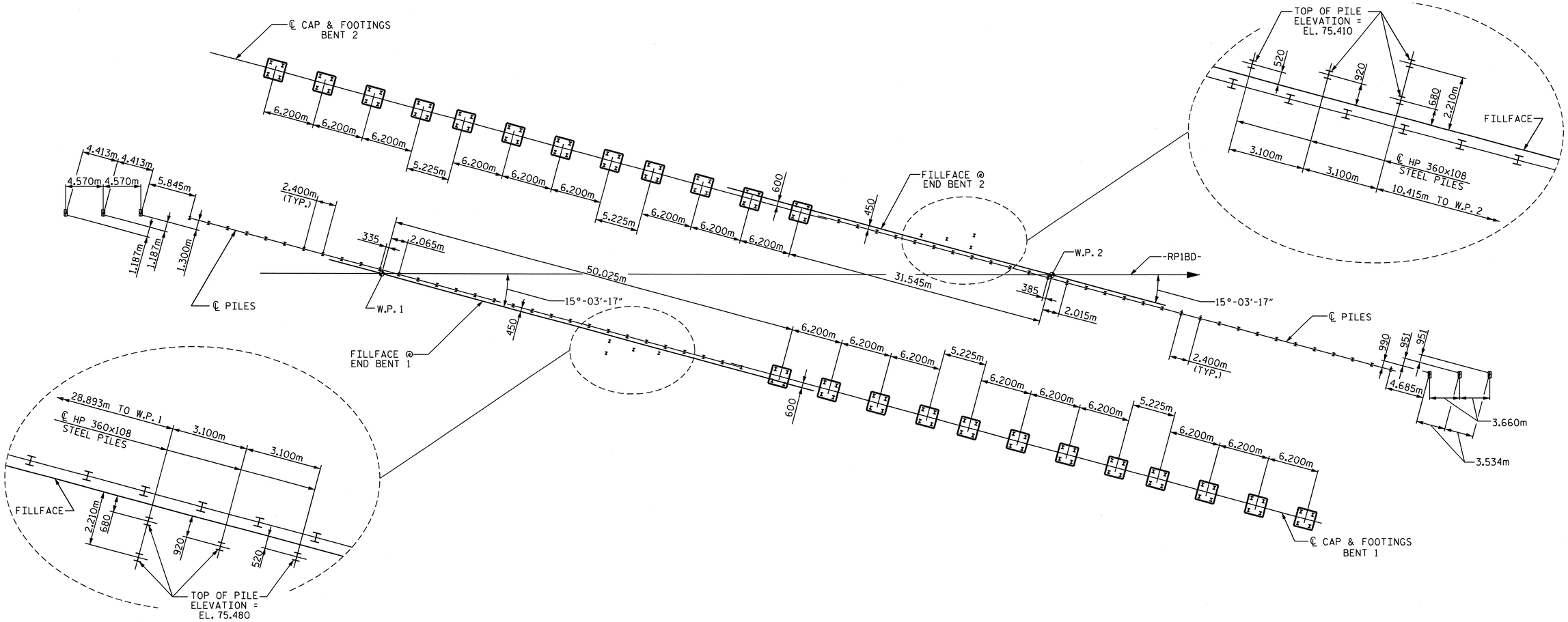

DETAIL LOCATING PILES BENEATH APPROACH SLAB @ END BENT 1

SEE "BRIDGE APPROACH SLAB" FOR ADDITIONAL DETAIL.

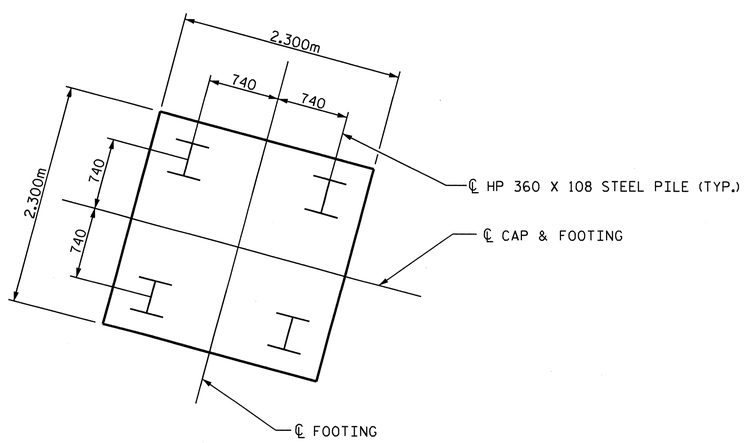

FOUNDATION LAYOUT

ALL PILES ARE HP 360 X 108 STEEL PILES

DIMENSIONS LOCATING PILES ARE TO PILE CENTERLINES.

ALL PILES ARE VERTICAL EXCEPT WING PILES ARE BATTERED 250:1000.

FOOTING DETAIL

(TYPICAL)

PROJECT NO. U-2519DA

CUMBERLAND COUNTY

STATION: 34+21.044 -RP1BD-
34+25.491 -COL1-

SHEET 2 OF 3

STATE OF NORTH CAROLINA
DEPARTMENT OF TRANSPORTATION
RALEIGH

GENERAL DRAWING FOR BRIDGE ON -RP1BD- OVER -COL1- BETWEEN ALL AMERICAN FREEWAY AND BRAGG BLVD.

NORTH CAROLINA PROFESSIONAL SEAL 23926 ENGINEER BRIAN C. HAWKS
3/30/2011

REVISIONS						SHEET NO.
NO.	BY:	DATE:	NO.	BY:	DATE:	5-3/6
1			3			TOTAL SHEETS
2			4			4/1

DRAWN BY : R. D. MARTIN DATE : 6-12-08
CHECKED BY : P.S. ERVIN DATE : 8-28-08

F.A. PROJ. NO. : NHF-0100(21)

BENCH MARK: BM#10 NAIL IN BASE OF 24"PINE 81m RIGHT OF -L- STA. 32+92 EL.63.429

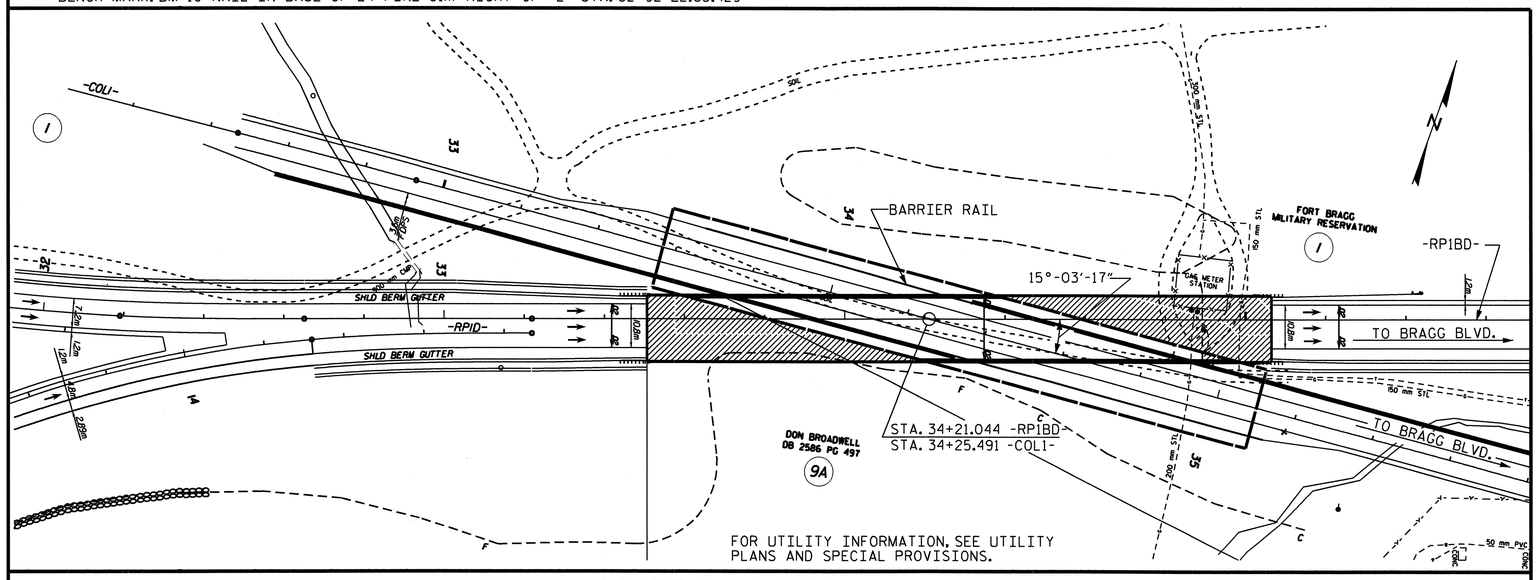

LOCATION SKETCH

NOTES

ALL DIMENSIONS ARE IN MILLIMETERS UNLESS OTHERWISE NOTED.

ALL ELEVATIONS ARE IN METERS.

ASSUMED LIVE LOAD = MS 22.5

THIS BRIDGE HAS BEEN DESIGNED BY THE STRENGTH DESIGN METHOD AS SPECIFIED IN AASHTO STANDARD SPECIFICATIONS.

THIS BRIDGE HAS BEEN DESIGNED IN ACCORDANCE WITH THE REQUIREMENTS OF THE AASHTO STANDARD SPECIFICATIONS FOR SEISMIC DESIGN OF HIGHWAY BRIDGES FOR SEISMIC PERFORMANCE CATEGORY A.

FOR OTHER DESIGN DATA AND GENERAL NOTES, SEE SHEET SNSM.

THE CONTRACTOR SHALL PROVIDE INDEPENDENT ASSURANCE SAMPLES OF REINFORCING STEEL AS FOLLOWS: FOR PROJECTS REQUIRING UP TO 360,000kg OF REINFORCING STEEL, ONE 760mm SAMPLE OF EACH SIZE BAR USED, AND FOR PROJECTS REQUIRING OVER 360,000kg OF STEEL, TWO 760mm SAMPLES OF EACH BAR SIZE USED. THE BARS FROM WHICH THE SAMPLES ARE TAKEN MUST THEN BE SPLICED WITH REPLACEMENT BARS OF THE SIZE AND LENGTH OF THE SAMPLE PLUS A MINIMUM LAP SPLICE OF THIRTY BAR DIAMETERS.

FOR SUBMITTAL OF WORKING DRAWINGS, SEE SPECIAL PROVISIONS.

FOR CRANE SAFETY, SEE SPECIAL PROVISIONS.

DRIVE PILES AT END BENT NO.1 AND END BENT NO.2 TO A REQUIRED BEARING CAPACITY OF 1340 kN PER PILE. THE REQUIRED BEARING CAPACITY IS EQUAL TO THE ALLOWABLE BEARING CAPACITY WITH A MINIMUM FACTOR OF SAFETY OF TWO.

DRIVE PILES AT BENT NO.1 AND BENT NO.2 TO A REQUIRED BEARING CAPACITY OF 900 kN PER PILE. THE REQUIRED BEARING CAPACITY IS EQUAL TO THE ALLOWABLE BEARING CAPACITY WITH A MINIMUM FACTOR OF SAFETY OF TWO.

THE ALLOWABLE BEARING CAPACITY FOR PILES AT END BENT NO.1 AND END BENT NO.2 IS 670 kN PER PILE.

THE ALLOWABLE BEARING CAPACITY FOR PILES AT BENT NO.1 AND BENT NO.2 IS 450 kN PER PILE.

TESTING PILES WITH THE PILE DRIVING ANALYZER (PDA) DURING DRIVING, RESTRIKING OR REDRIVING MAY BE REQUIRED. THE ENGINEER WILL DETERMINE THE NEED FOR PDA TESTING. SEE PILE DRIVING ANALYZER SPECIAL PROVISION.

PILE RESTRIKES FOR LRFD MAY BE REQUIRED, SEE PILE RESTRIKE FOR LRFD SPECIAL PROVISION.

FOR EROSION CONTROL MEASURES, SEE EROSION CONTROL PLANS.

FOR FALSEWORK AND FORMWORK, SEE SPECIAL PROVISIONS.

FOR PRESTRESSED CONCRETE MEMBERS, SEE SPECIAL PROVISIONS.

NOTES (CONT'D)

FOR PILES, SEE SPECIAL PROVISIONS.

FOR PLACING LOAD ON STRUCTURE MEMBERS, SEE SPECIAL PROVISIONS.

FOR CURING CONCRETE, SEE SPECIAL PROVISIONS.

TOTAL BILL OF MATERIAL

	FOUNDATION EXCAVATION FOR BENT	PDA TESTING	PDA ASSISTANCE	REINFORCED CONCRETE DECK SLAB	GROOVING BRIDGE FLOORS	CLASS 'A' CONCRETE	BRIDGE APPROACH SLABS	REINFORCING STEEL	SPIRAL COLUMN REINFORCING STEEL	1372mm PRESTRESSED CONCRETE GIRDERS	HP 360x108 STEEL PILES		PILE REDRIVES	CONCRETE BARRIER RAIL	100mm SLOPE PROTECTION	ELASTOMERIC BEARINGS	EVAZOTE JOINT SEALS
	LUMP SUM	EA.	EA.	SQ. METERS	SQ. METERS	CU. METERS	LUMP SUM	kg.	kg.	METERS	NO.	METERS	EA.	METERS	SQ. METERS	LUMP SUM	LUMP SUM
SUPERSTRUCTURE				2916.0	2216.6		LUMP SUM			960.680				154.756		LUMP SUM	LUMP SUM
END BENT #1						116.1		10266			37	962.0			138.7		
BENT #1 (PART A)	LUMP SUM					58.3		5927	777		16	320.0					
BENT #1 (PART B)	LUMP SUM					58.1		5912	751		16	320.0					
BENT #1 (PART C)	LUMP SUM					56.6		5799	727		16	320.0					
BENT #2 (PART A)	LUMP SUM					56.1		5784	780		16	352.0					
BENT #2 (PART B)	LUMP SUM					57.3		5841	780		16	352.0					
BENT #2 (PART C)	LUMP SUM					57.7		5818	780		16	352.0					
END BENT #2						116.4		9645			37	1123.0			138.7		
TOTAL	LUMP SUM	1	1	2916.0	2216.6	576.6	LUMP SUM	54992	4595	960.680	170	4101.0	76	154.756	277.4	LUMP SUM	LUMP SUM

PROJECT NO. U-2519DA

CUMBERLAND COUNTY

STATION: 34+21.044 -RP1BD-
34+25.491 -COL1-

SHEET 3 OF 3

NORTH CAROLINA PROFESSIONAL SEAL 23926 ENGINEER BRIAN C. HAWKS
2/16/11

STATE OF NORTH CAROLINA
DEPARTMENT OF TRANSPORTATION
RALEIGH

GENERAL DRAWING FOR BRIDGE ON -RP1BD- OVER -COL1- BETWEEN ALL AMERICAN FREEWAY AND BRAGG BLVD.

REVISIONS						SHEET NO.
NO.	BY:	DATE:	NO.	BY:	DATE:	S-317
1			3			TOTAL SHEETS
2			4			411

DRAWN BY : R. D. MARTIN DATE : 7-12-07
CHECKED BY : P.S. ERVIN DATE : 9-2-08

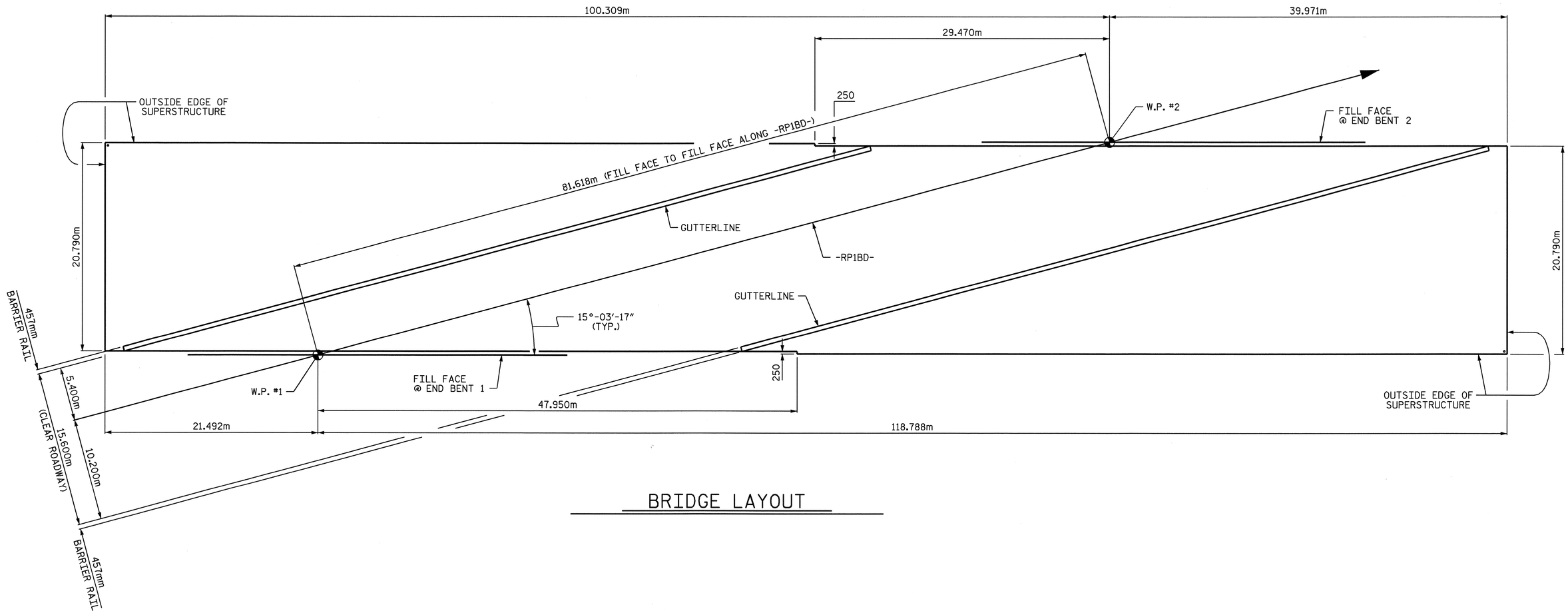

BRIDGE LAYOUT

PROJECT NO. U-2519DA

CUMBERLAND COUNTY

STATION: 34+21.044 -RP1BD-

STATE OF NORTH CAROLINA
DEPARTMENT OF TRANSPORTATION
RALEIGH

SUPERSTRUCTURE

BRIDGE LAYOUT

NORTH CAROLINA PROFESSIONAL SEAL 23926 ENGINEER BRIAN C. HANKS

9/11/08

REVISIONS						SHEET NO.
NO.	BY:	DATE:	NO.	BY:	DATE:	S-318
1			3			TOTAL SHEETS
2			4			411

DRAWN BY : P.C. BREWER DATE : 1/14/08
CHECKED BY : R. MARTIN DATE : 2/4/08

10-SEP-2008 11:27
r:\structures\brooks\final plans\U2519DA_sd_PS_11.dgn
pbrewer

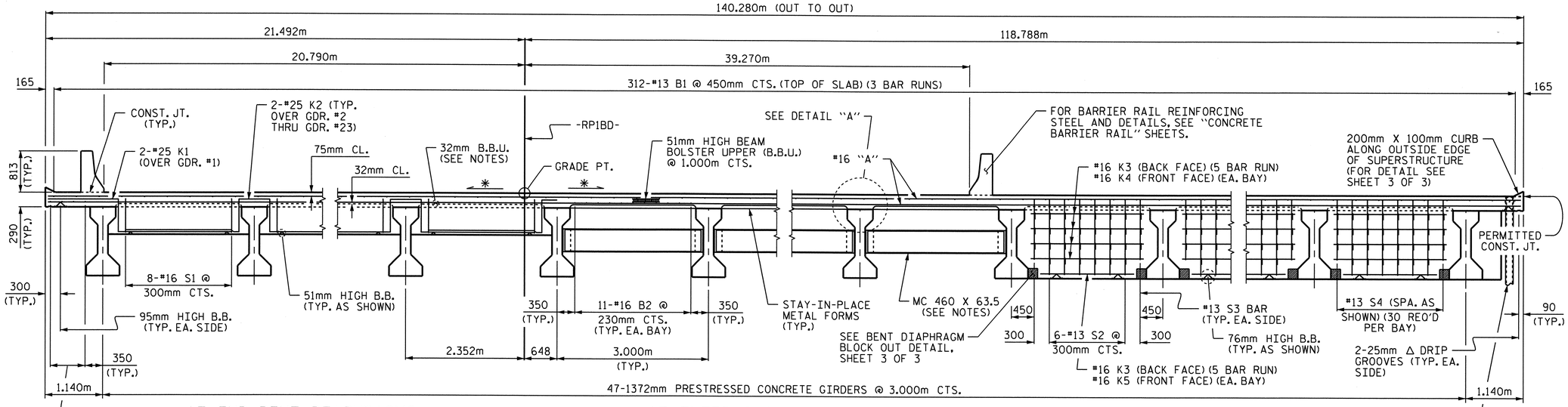

AT END BENT DIAPHRAGMS
(DETAILS TYP. FOR BAYS 1-22)

AT INTERMEDIATE DIAPHRAGMS

TYPICAL SECTION

(ALONG FILL FACE AT END BENT 1)
(✻ CROSS SLOPE IS 0.02 PERPENDICULAR TO -RP1BD-)

AT BENT DIAPHRAGMS
(DETAILS TYP. FOR BAYS 24-46)

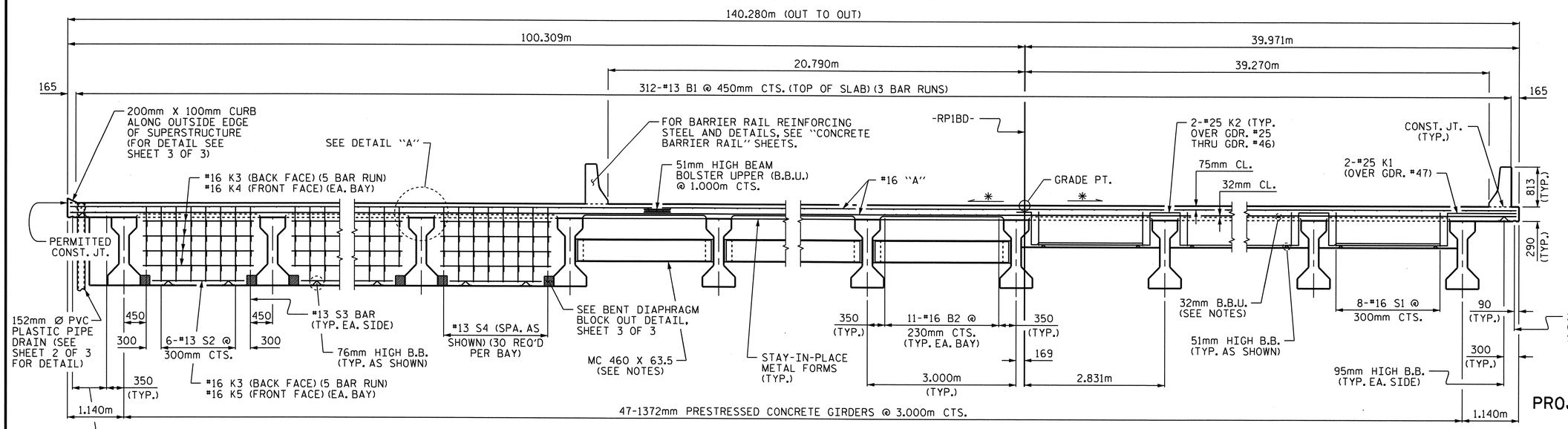

AT BENT DIAPHRAGMS
(DETAILS TYP. FOR BAYS 1-23)

AT INTERMEDIATE DIAPHRAGMS

TYPICAL SECTION

(ALONG FILL FACE AT END BENT 2)
(✻ CROSS SLOPE IS 0.02 PERPENDICULAR TO -RP1BD-)

AT END BENT DIAPHRAGMS
(DETAILS TYP. FOR BAYS 25-46)

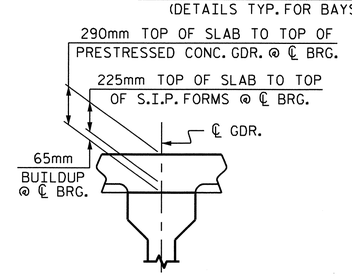

DETAIL "A"

(TYP. EA. GDR.)

NOTES:

PROVIDE 32mm HIGH BEAM BOLSTERS UPPER AT 1.2m CTS. ATOP THE METAL STAY-IN-PLACE FORMS TO SUPPORT THE BOTTOM MAT OF "A" BARS. WHEN USING REMOVABLE FORMS, PROVIDE CONTINUOUS HIGH CHAIRS FOR METAL DECK (C.H.C.M.) @ 1.2m CTS. WITH A HEIGHT TO SUPPORT THE BOTTOM MAT OF "A" BARS A CLEAR DISTANCE OF 65mm ABOVE THE TOP OF THE REMOVABLE FORM.

LONGITUDINAL STEEL MAY BE SHIFTED SLIGHTLY, AS NECESSARY, TO AVOID INTERFERENCE WITH STIRRUPS IN PRESTRESSED CONCRETE GIRDERS.

BARRIER RAIL SHALL NOT BE CAST UNTIL ALL SLAB CONCRETE IN THAT SPAN HAS BEEN CAST AND HAS REACHED A MINIMUM COMPRESSIVE STRENGTH OF 20.7 MPa.

CONCRETE IN THE END BENT AND BENT DIAPHRAGMS MAY BE CLASS A IN LIEU OF CLASS AA. PAYMENT SHALL BE MADE UNDER THE UNIT CONTRACT PRICE FOR REINFORCED CONCRETE DECK SLAB.

ALL REINFORCING STEEL IN BARRIER RAILS SHALL BE EPOXY COATED.

THE NOMINAL UNCOMPRESSED SEAL WIDTH OF THE EVAZOTE JOINT SEAL SHALL BE 64mm AT END BENT 1 & 2. FOR EVAZOTE JOINT SEALS, SEE SPECIAL PROVISIONS.

FOR INTERMEDIATE STEEL DIAPHRAGM DETAILS, SEE "INTERMEDIATE STEEL DIAPHRAGMS FOR TYPE IV PRESTRESSED CONCRETE GIRDERS" SHEET.

A 200mm X 100mm CURB SHALL BE PLACED AROUND THE OUTSIDE EDGE OF THE SUPERSTRUCTURE IN THE AREAS BEHIND THE BARRIER RAIL.

THE CONTRACTOR IS MADE AWARE THAT THE BUILDUPS IN GIRDERS 11 THROUGH 31 WILL INCREASE WITHIN THE SPAN. THE MAXIMUM INCREASE IS 170mm±. THE CONTRACTOR SHALL DESIGN THE SUPPORT SYSTEM FOR THE STAY-IN-PLACE FORMS ACCORDINGLY.

#13 "U2" BARS SHALL BE PLACED WITH GIRDER STIRRUPS WHEN THE BUILDUP EXCEEDS 105mm. SEE THE DETAIL ON "SUPERSTRUCTURE BILL OF MATERIAL" SHEET.

PROJECT NO. U-2519DA
CUMBERLAND COUNTY
STATION: 34+21.044 -RP1BD-

SHEET 1 OF 3

STATE OF NORTH CAROLINA
DEPARTMENT OF TRANSPORTATION
RALEIGH

SUPERSTRUCTURE
TYPICAL SECTIONS

NORTH CAROLINA PROFESSIONAL SEAL 23926 ENGINEER BRIAN C. HANKS
2/14/11

REVISIONS								SHEET NO.
NO.	BY:	DATE:	NO.	BY:	DATE:			S-319
1			3					TOTAL SHEETS
2			4					411

DRAWN BY : P.C. BREWER DATE : 1/14/08
CHECKED BY : R. MARTIN DATE : 2/4/08

01-FEB-2011 13:35
R:\Structures\brooks\Final Plans\U2519DA_sd_TS_11.dgn
tpayne

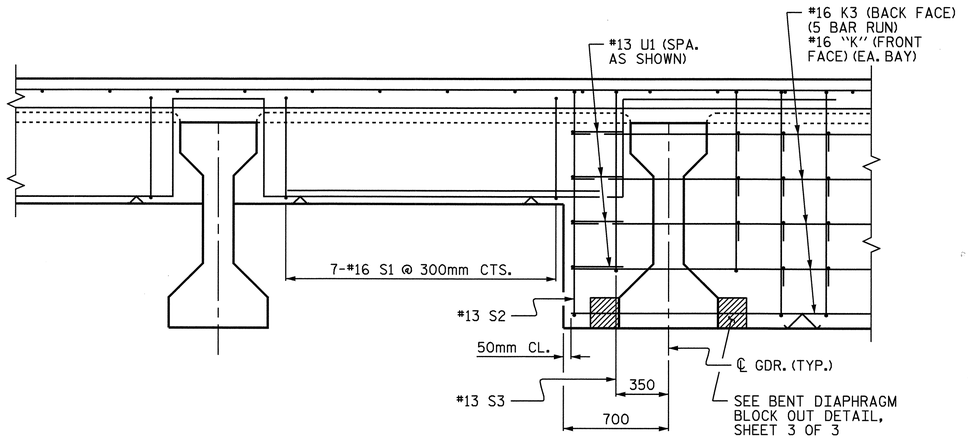

PARTIAL TYPICAL SECTION

(SHOWING BAY 23 AT END BENT 1, BAY 24 AT END BENT 2 SIMILAR)

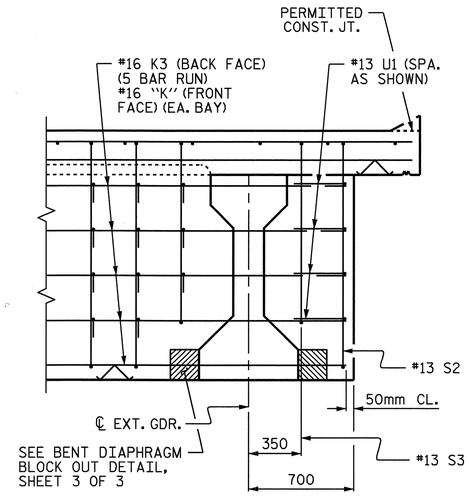

PARTIAL TYPICAL SECTION

(SHOWING RIGHT OVERHANG AT END BENT 1, LEFT OVERHANG AT END BENT 2 SIMILAR)

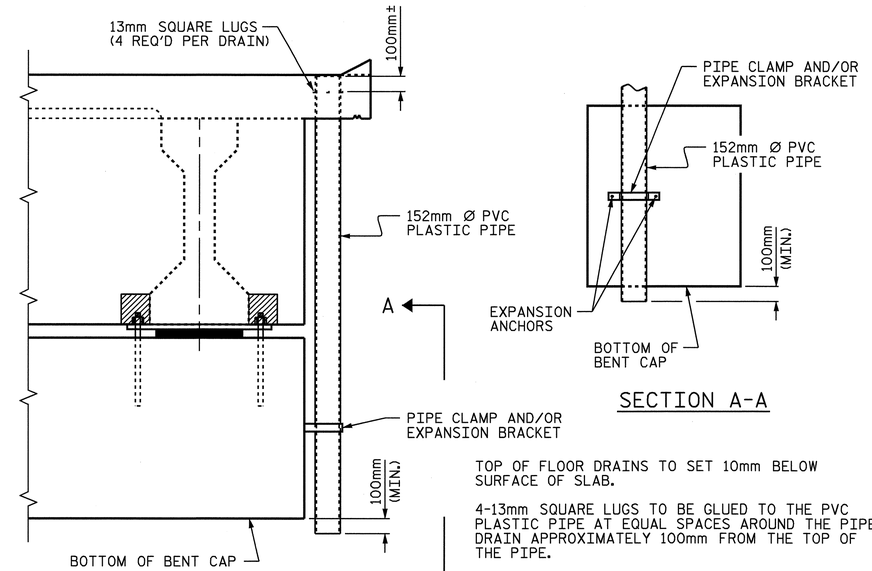

TOP OF FLOOR DRAINS TO SET 10mm BELOW SURFACE OF SLAB.

4-13mm SQUARE LUGS TO BE GLUED TO THE PVC PLASTIC PIPE AT EQUAL SPACES AROUND THE PIPE DRAIN APPROXIMATELY 100mm FROM THE TOP OF THE PIPE.

THE 152mm Ø PVC PIPE AND FITTINGS SHALL BE SCHEDULE 40 AND CONFORM TO ASTM D1785.

THE 152mm Ø PVC PIPE SHALL EXTEND 100mm BELOW THE BOTTOM OF THE BENT CAP.

DRAIN DETAILS

(2 REQUIRED)

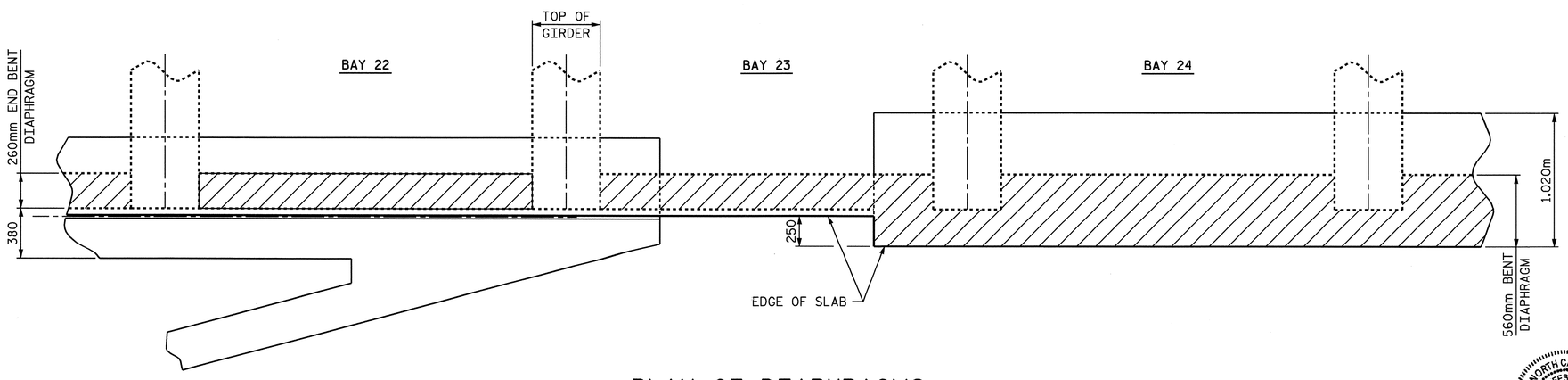

PLAN OF DIAPHRAGMS

(END BENT 1 SHOWN, END BENT 2 SIMILAR FOR BAYS 23-25)

PROJECT NO. U-2519DA

CUMBERLAND COUNTY

STATION: 34+21.044 -RP1BD-

SHEET 2 OF 3

STATE OF NORTH CAROLINA
DEPARTMENT OF TRANSPORTATION
RALEIGH

SUPERSTRUCTURE

TYPICAL SECTIONS

NORTH CAROLINA PROFESSIONAL SEAL 23926 ENGINEER BRIAN C. HANNS

9/11/08

REVISIONS						SHEET NO.
NO.	BY:	DATE:	NO.	BY:	DATE:	S-320
1			3			TOTAL SHEETS
2			4			411

DRAWN BY : P.C. BREWER DATE : 1/14/08
CHECKED BY : R. MARTIN DATE : 2/4/08

10-SEP-2008 11:27
r:\structures\brooks\final plans\U2519DA_sd_TS_11.dgn
pbrewer

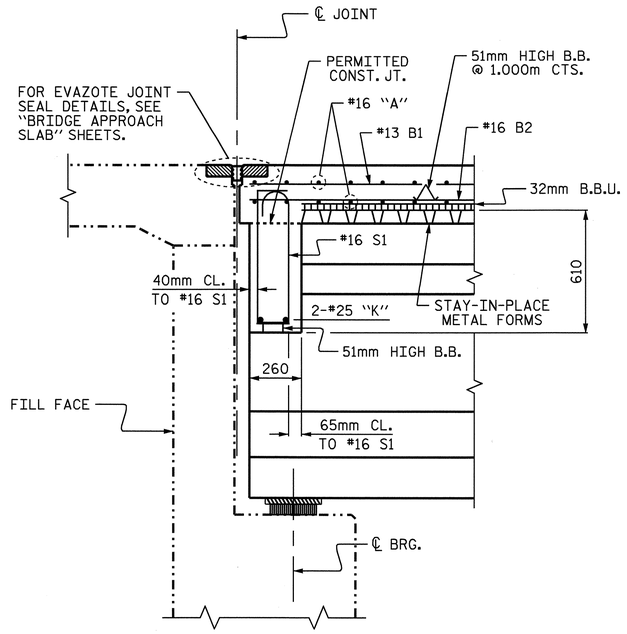

SECTION THRU END BENT DIAPHRAGM

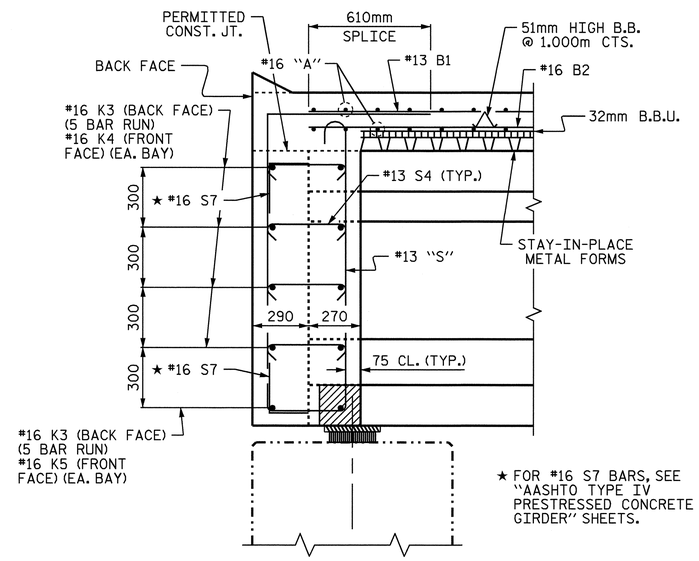

SECTION THRU BENT DIAPHRAGM

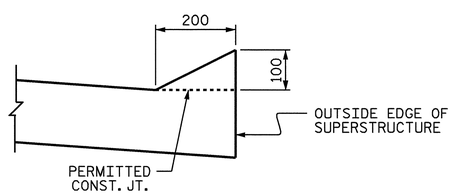

SECTION THRU CURB

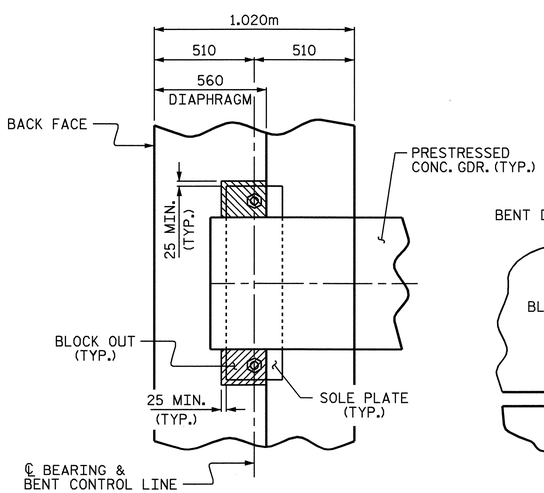

PLAN

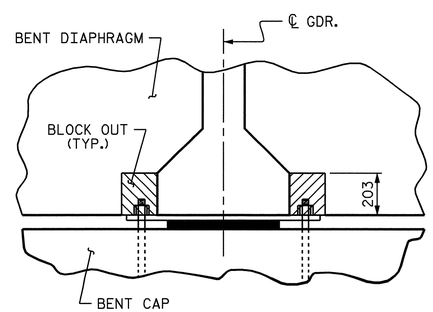

SECTION

BENT DIAPHRAGM BLOCK OUT DETAIL

PROJECT NO. U-2519DA

CUMBERLAND COUNTY

STATION: 34+21.044 -RP1BD-

SHEET 3 OF 3

STATE OF NORTH CAROLINA
DEPARTMENT OF TRANSPORTATION
RALEIGH

SUPERSTRUCTURE

TYPICAL SECTIONS

NORTH CAROLINA PROFESSIONAL SEAL 23926 ENGINEER BRIAN C. HANKS
B.C. H
9/4/08

REVISIONS						SHEET NO.
NO.	BY:	DATE:	NO.	BY:	DATE:	S-321
1			3			TOTAL SHEETS
2			4			411

DRAWN BY : P.C. BREWER DATE : 1/14/08
CHECKED BY : R. MARTIN DATE : 2/4/08

10-SEP-2008 11:27
r:\structures\brooks\final plans\U2519DA_sd_TS_11.dgn
pbrewer

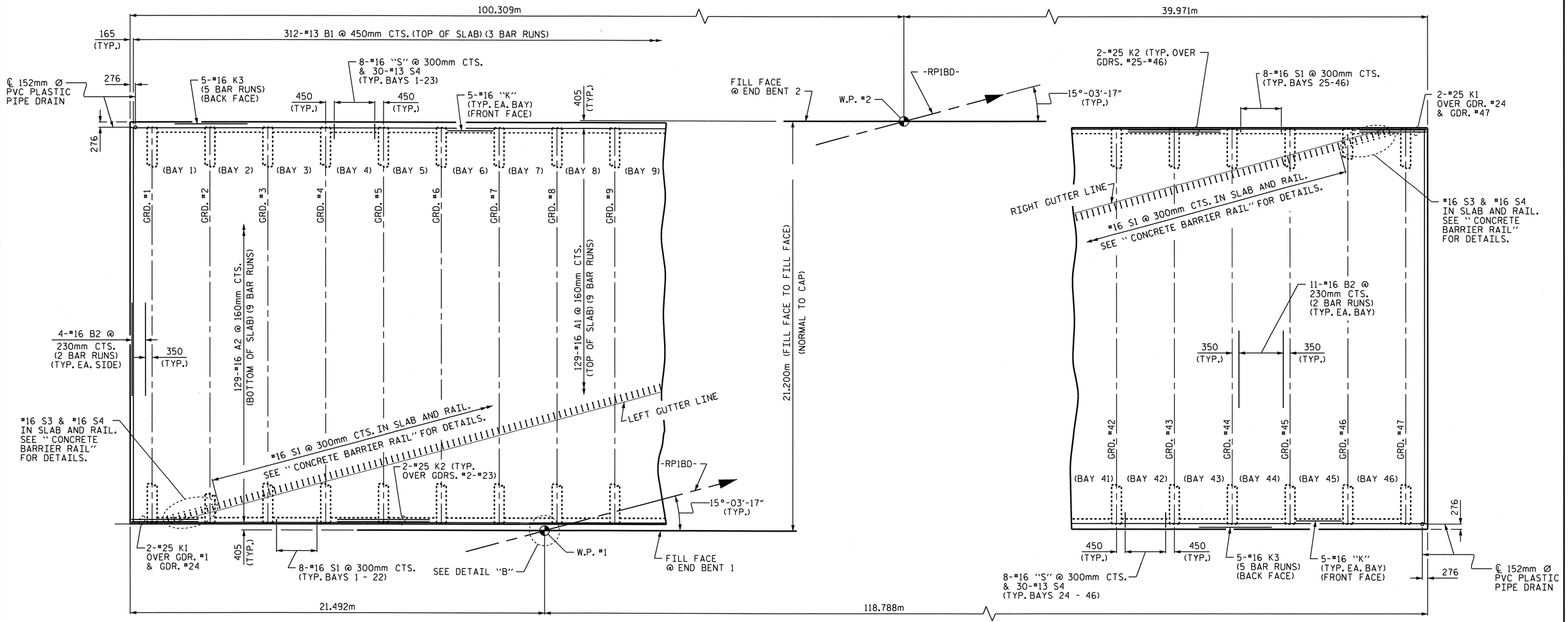

PLAN OF SPAN

(FOR CLARITY, BARRIER RAIL NOT SHOWN)

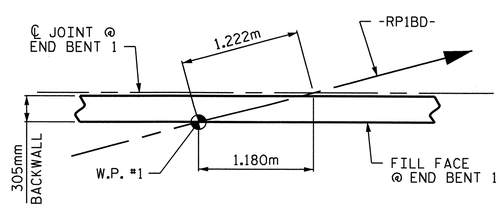

DETAIL "B"

(END BENT 1 SHOWN, END BENT 2 SIMILAR)

NOTES:

FOR SECTION THROUGH END BENT AND BENT DIAPHRAGMS, SEE "TYPICAL SECTIONS" SHEET 3 OF 3.

FOR DETAILS AND REINFORCING STEEL IN BAY 23 AT END BENT 1, BAY 24 AT END BENT 2, AND BENT OVERHANGS, SEE "TYPICAL SECTIONS" SHEET 2 OF 3.

FOR BARRIER RAIL REINFORCING STEEL AND DETAILS, SEE "CONCRETE BARRER RAIL" SHEETS.

PROJECT NO. U-2519DA

CUMBERLAND COUNTY

STATION: 34+21.044 -RP1BD-

STATE OF NORTH CAROLINA
DEPARTMENT OF TRANSPORTATION
RALEIGH

SUPERSTRUCTURE

PLAN OF SPAN

NORTH CAROLINA PROFESSIONAL SEAL 23926 ENGINEER BRIAN C. HANKS
3/30/2011

REVISIONS						
NO.	BY:	DATE:	NO.	BY:	DATE:	SHEET NO. 5-322
1			3			TOTAL SHEETS 411
2			4			

DRAWN BY : P.C. BREWER DATE : 1/14/08
CHECKED BY : R. MARTIN DATE : 2/4/08

29-MAR-2011 15:23
R:\Structures\brooks\Final Plans\Copy of U2519DA_sd_PS_11.dgn
pervin

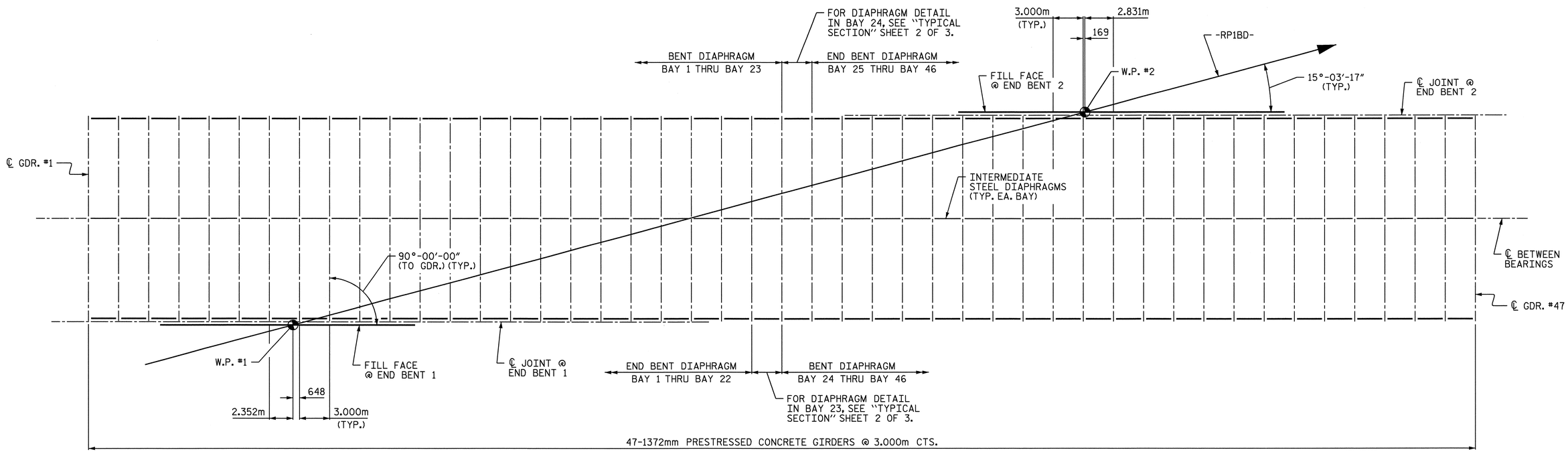

GIRDER LAYOUT

BEARING LAYOUT		
END BENT 1 (FIXED)		
GIRDERS	ELASTOMERIC BEARING	SOLE ℙ
GIRDER #1 THRU GIRDER #12	E1	P1
GIRDER #13 THRU GIRDER #25	E1	P2
GIRDER #26 THRU GIRDER #47	E1	P3
END BENT 2 (EXPANSION)		
GIRDERS	ELASTOMERIC BEARING	SOLE ℙ
GIRDER #1 THRU GIRDER #17	E1	P4
GIRDER #18 THRU GIRDER #30	E1	P5
GIRDER #31 THRU GIRDER #47	E1	P6

PROJECT NO. U-2519DA
CUMBERLAND COUNTY
STATION: 34+21.044 -RP1BD-

NORTH CAROLINA PROFESSIONAL SEAL 23926 ENGINEER BRIAN C. HANKS
9/11/08

STATE OF NORTH CAROLINA
DEPARTMENT OF TRANSPORTATION
RALEIGH

SUPERSTRUCTURE
FRAMING PLAN

REVISIONS						SHEET NO.
NO.	BY:	DATE:	NO.	BY:	DATE:	S-323
1			3			TOTAL SHEETS
2			4			411

DRAWN BY : P.C. BREWER DATE : 1/14/08
CHECKED BY : R. MARTIN DATE : 2/4/08

10-SEP-2008 11:27
r:\structures\brooks\final plans\U2519DA_sd_FP_11.dgn
pbrewer

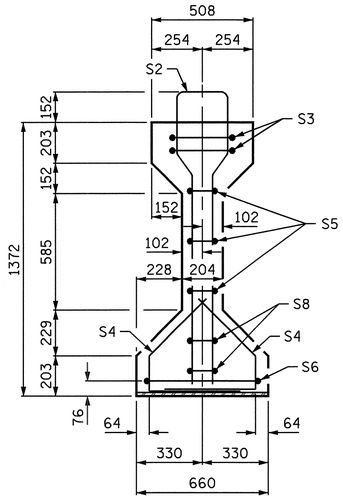

SECTION A-A

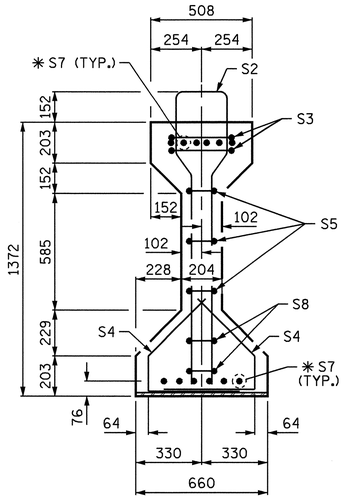

SECTION B-B

✱ FOR S7 BARS, SEE DETAIL "A" ON "AASHTO TYPE IV PRESTRESSED CONCRETE GIRDER" SHEET 3 OF 3.

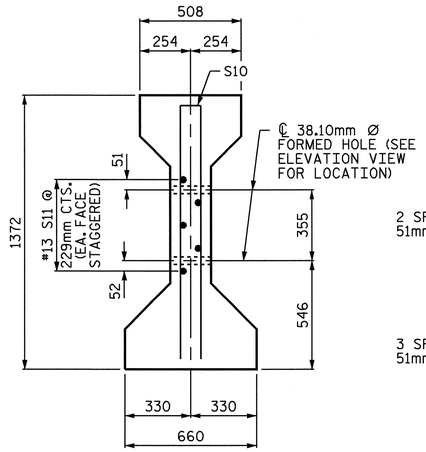

SECTION C-C
(S1 BARS NOT SHOWN)

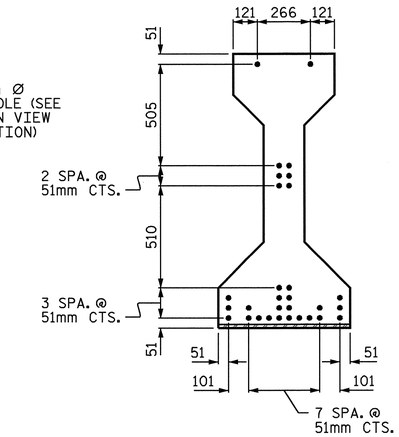

AT END OF GIRDER

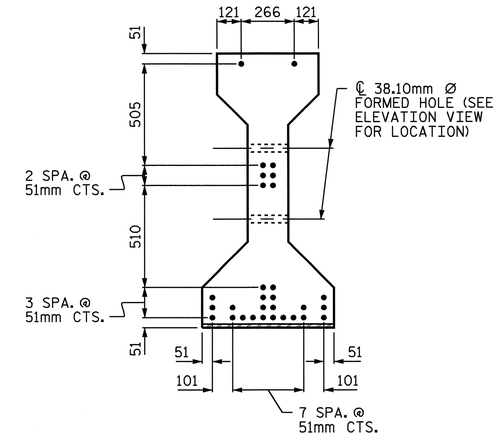

AT ℄ OF GIRDER

12.70mm Ø LOW RELAXATION STRAND LAYOUT

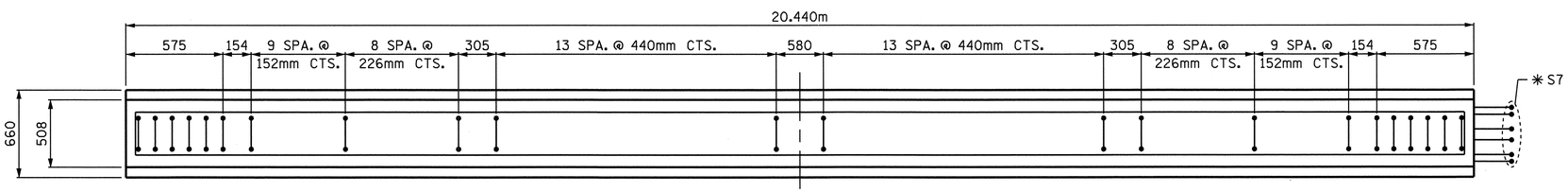

PLAN OF GIRDER

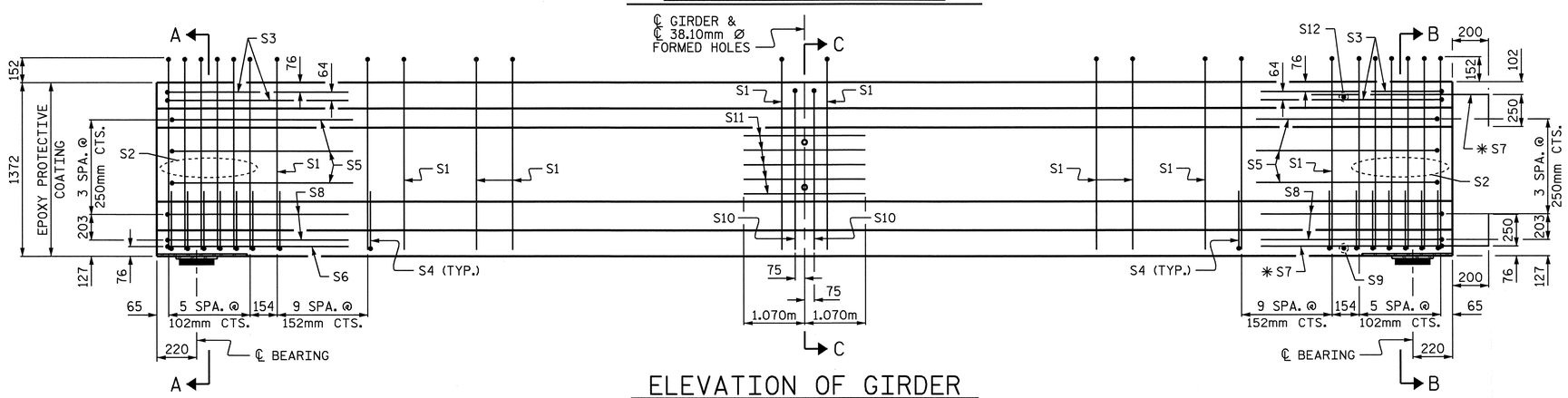

ELEVATION OF GIRDER

UPSTATION - GDR. #1 THRU GDR. #23 →

← UPSTATION - GDR. #25 THRU GDR. #47

NOTE:
FOR LOCATION OF FIXED AND EXPANSION BEARINGS, SEE "FRAMING PLAN".

NORTH CAROLINA PROFESSIONAL SEAL 23926 ENGINEER BRIAN C. HAWKS
9/11/08

12.70mm Ø L.R. GRADE 270 STRANDS

AREA (mm²)	ULTIMATE STRENGTH (kN PER STRAND)	APPLIED PRESTRESS (kN PER STRAND)
98.71	183.7	137.8

REINFORCING STEEL FOR ONE GIRDER

BAR	NUMBER	SIZE	TYPE	LENGTH	WEIGHT
S1	64	#13	1	3260	207
S2	12	#19	1	3260	87
S3	4	#13	2	2760	11
S4	64	#13	3	1040	66
S5	6	#13	2	2560	15
S6	1	#13	2	3020	3
✱ S7	12	#16	STR	1120	21
S8	4	#13	2	2620	10
S9	1	#10	STR	560	1
S10	2	#16	2	2640	8
S11	5	#13	STR	2140	11
S12	1	#10	STR	400	1

✱ NOTE: S7 BARS SHALL BE BENT BEFORE SHIPMENT. HEAT BENDING SHALL NOT BE ALLOWED.

BAR TYPES

ALL BAR DIMENSIONS ARE OUT TO OUT.

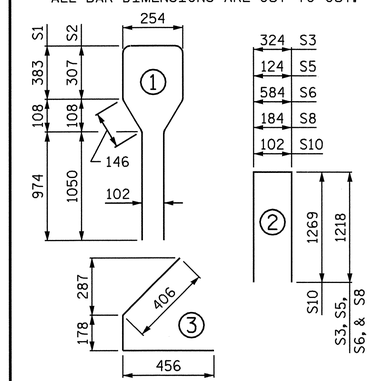

QUANTITIES FOR ONE GIRDER

REINFORCING STEEL	41.30 MPa CONCRETE	12.70mm Ø L.R. STRANDS
kg	m3	No.
441	10.4	30

GIRDERS REQUIRED

NUMBER	LENGTH	TOTAL LENGTH
46	20.440m	940.240m

PROJECT NO. U-2519DA

CUMBERLAND COUNTY

STATION: 34+21.044 -RP1BD-

SHEET 1 OF 3

STATE OF NORTH CAROLINA
DEPARTMENT OF TRANSPORTATION
RALEIGH

STANDARD
AASHTO TYPE IV PRESTRESSED CONCRETE GIRDER
(GDRS. #1-#23 & GDRS. #25-#47)

REVISIONS						SHEET NO.
NO.	BY:	DATE:	NO.	BY:	DATE:	S-324
1			3			TOTAL SHEETS
2			4			41

ASSEMBLED BY : P.C. BREWER	DATE : 1/14/08		
CHECKED BY : R. MARTIN	DATE : 2/4/08		
DRAWN BY : ELR 8/91	REV. 7/17/98	RWW/LES	
CHECKED BY : GRP 8/91	REV. 10/17/00R	RWW/LES	
	REV. 5/1/06	TLA/GM	

STD. NO. PCG6SM

10-SEP-2008 11:26
r:\structures\brooks\finalplans\u2519da_sd_gdr_11.dgn
pbrewer

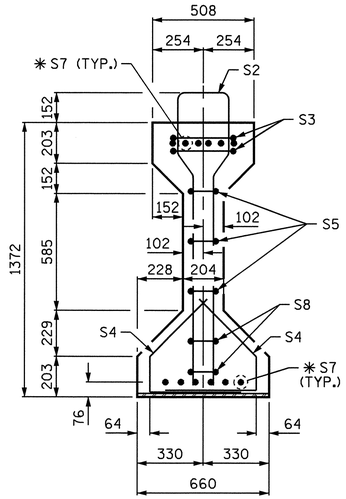

SECTION B-B

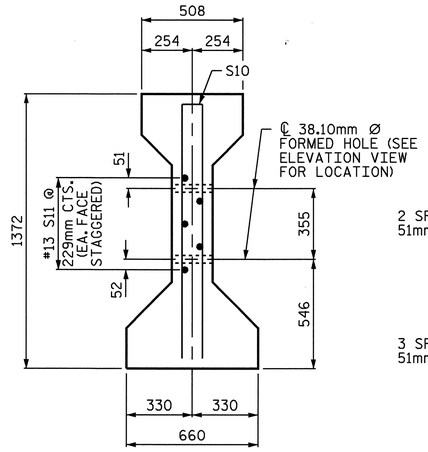

SECTION C-C
(S1 BARS NOT SHOWN)

✱ FOR S7 BARS, SEE DETAIL "A" ON "AASHTO TYPE IV PRESTRESSED CONCRETE GIRDER" SHEET 3 OF 3.

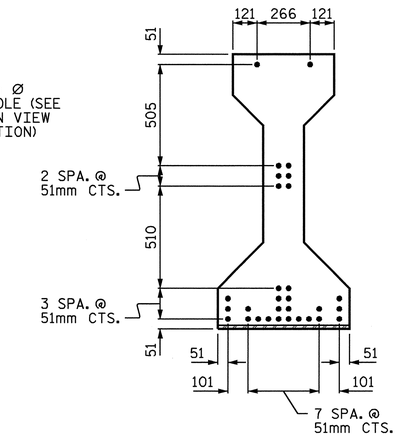

AT END OF GIRDER

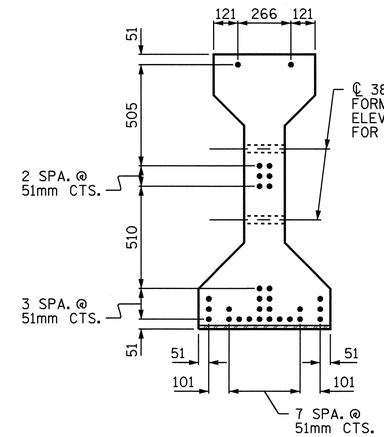

AT ℄ OF GIRDER

12.70mm Ø LOW RELAXATION STRAND LAYOUT

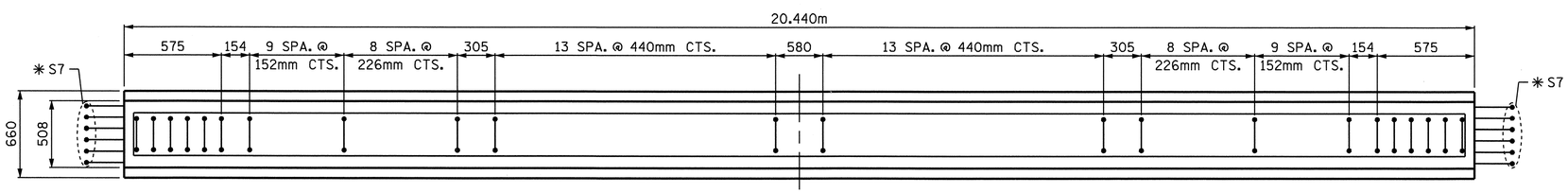

PLAN OF GIRDER

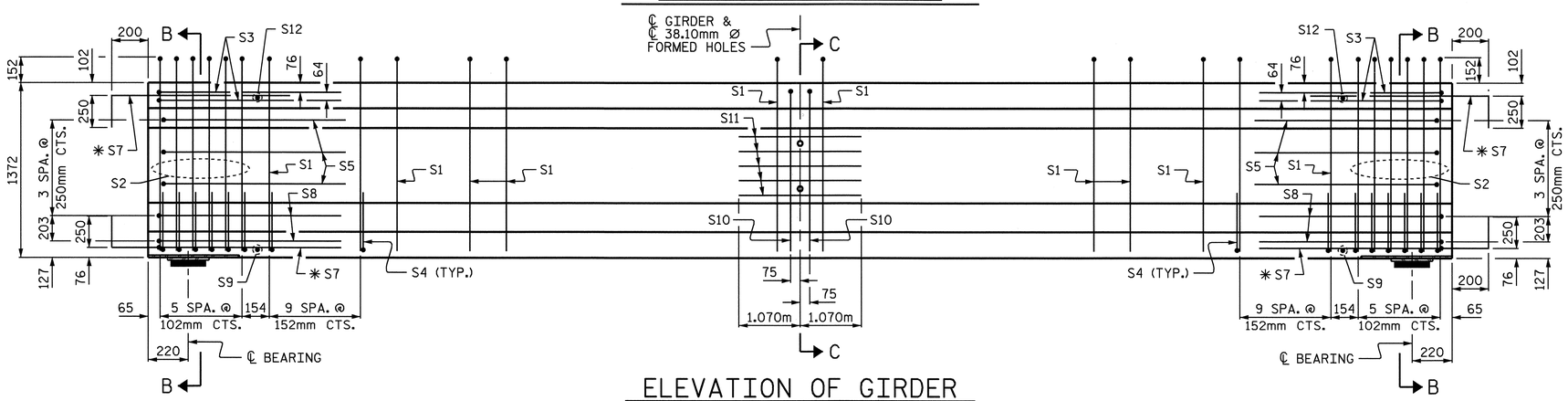

ELEVATION OF GIRDER

12.70mm Ø L.R. GRADE 270 STRANDS		
AREA (mm²)	ULTIMATE STRENGTH (kN PER STRAND)	APPLIED PRESTRESS (kN PER STRAND)
98.71	183.7	137.8

REINFORCING STEEL FOR ONE GIRDER

BAR	NUMBER	SIZE	TYPE	LENGTH	WEIGHT
S1	64	#13	1	3260	207
S2	12	#19	1	3260	87
S3	4	#13	2	2760	11
S4	64	#13	3	1040	66
S5	6	#13	2	2560	15
✱S7	24	#16	STR	1120	42
S8	4	#13	2	2620	10
S9	2	#10	STR	560	1
S10	2	#16	2	2640	8
S11	5	#13	STR	2140	11
S12	2	#10	STR	400	1

✱ NOTE: S7 BARS SHALL BE BENT BEFORE SHIPMENT. HEAT BENDING SHALL NOT BE ALLOWED.

BAR TYPES

ALL BAR DIMENSIONS ARE OUT TO OUT.

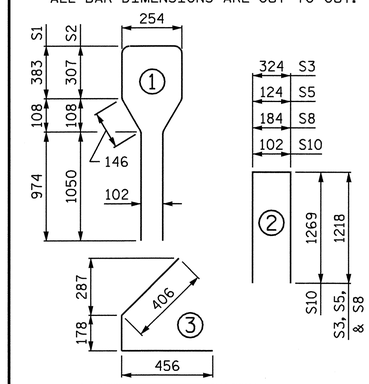

QUANTITIES FOR ONE GIRDER

REINFORCING STEEL	41.30 MPa CONCRETE	12.70mm Ø L.R. STRANDS
kg	m3	No.
459	10.4	30

GIRDERS REQUIRED

NUMBER	LENGTH	TOTAL LENGTH
1	20.440m	20.440m

PROJECT NO. U-2519DA

CUMBERLAND COUNTY

STATION: 34+21.044 -RP1BD-

SHEET 2 OF 3

STATE OF NORTH CAROLINA
DEPARTMENT OF TRANSPORTATION
RALEIGH

STANDARD

AASHTO TYPE IV PRESTRESSED CONCRETE GIRDER

(GDR. #24)

NORTH CAROLINA PROFESSIONAL SEAL 23926 ENGINEER BRIAN C. HAMME

9/11/08

REVISIONS						SHEET NO.
NO.	BY:	DATE:	NO.	BY:	DATE:	S-325
1			3			TOTAL SHEETS
2			4			411

STD. NO. PCG6SM

ASSEMBLED BY : P.C. BREWER	DATE : 1/14/08		
CHECKED BY : R. MARTIN	DATE : 2/4/08		
DRAWN BY : ELR 8/91	REV. 7/17/98	RWW/LES	
CHECKED BY : GRP 8/91	REV. 10/17/00R	RWW/LES	
	REV. 5/1/06	TLA/GM	

10-SEP-2008 11:26
r:\structures\brooks\finalplans\u2519da_sd_gdr_11.dgn
pbrewer

DEAD LOAD DEFLECTION TABLE FOR GIRDERS

12.70mm Ø LOW RELAXATION	GIRDER #1 THRU GIRDER #47										
TENTH POINTS	BRG.	0.1	0.2	0.3	0.4	0.5	0.6	0.7	0.8	0.9	BRG.
CAMBER (GIRDER ALONE IN PLACE) ↑	0.000	0.010	0.018	0.025	0.029	0.031	0.029	0.025	0.018	0.010	0.000
DEFLECTION DUE TO SUPERIMPOSED DEAD LOAD * ↓	0.000	0.004	0.008	0.011	0.013	0.014	0.013	0.011	0.008	0.004	0.000
FINAL CAMBER ↑	0	6	10	14	16	17	16	14	10	6	0

* INCLUDES SLAB, BUILDUPS & STAY-IN-PLACE FORMS.
ALL VALUES ARE SHOWN IN METERS, EXCEPT "FINAL CAMBER" WHICH IS SHOWN IN MILLIMETERS.

NOTES:

ALL PRESTRESSING STRANDS SHALL BE 7-WIRE LOW-RELAXATION GRADE 270 STRANDS AND SHALL CONFORM TO AASHTO M203M EXCEPT FOR SAMPLING REQUIREMENTS WHICH SHALL BE IN ACCORDANCE WITH THE STANDARD SPECIFICATIONS.

ALL REINFORCING STEEL SHALL BE GRADE 420.

APPLY EPOXY PROTECTIVE COATING TO END OF GIRDER SURFACES INDICATED IN ELEVATION VIEW.

EMBEDDED PLATE "B-1" SHALL BE GALVANIZED IN ACCORDANCE WITH THE SPECIFICATIONS. BEVEL EDGES OF PLATE "B-1" TO GIVE CLOSE FIT BUT NOT TIGHT FIT TO STEEL CASTING FORM.

ANCHOR STUDS SHALL CONFORM TO AASHTO M169 GRADES 1010 THROUGH 1020 OR APPROVED EQUAL, AND SHALL MEET THE TYPE "B" REQUIREMENTS OF SUBSECTION 7.3 OF THE ANSI/AASHTO/AWS D1.5 BRIDGE WELDING CODE.

AT ENDS OF GIRDERS TO BE EMBEDDED IN CONCRETE DIAPHRAGMS OR END WALLS, PRESTRESSING STRANDS MAY EXTEND A MAXIMUM OF 50mm BEYOND THE GIRDER ENDS. OTHERWISE, PRESTRESSING STRANDS SHALL BE CUT FLUSH WITH THE GIRDER ENDS.

THE TRANSFER OF LOAD FROM THE ANCHORAGES TO THE GIRDER SHALL BE DONE WHEN CONCRETE HAS REACHED A COMPRESSIVE STRENGTH OF NOT LESS THAN 27.60 MPa.

DEPENDING ON THE TYPE OF SYSTEM USED TO SUPPORT THE DECK SLAB FORMS, PRESET ANCHORS MAY BE NECESSARY IN THE PRESTRESSED CONCRETE GIRDER.

THE TOP SURFACE OF THE GIRDER, EXCLUDING THE OUTSIDE 100mm, SHALL BE RAKED TO A DEPTH OF 6mm.

FOR METRIC STRUCTURAL STEEL, SEE SPECIAL PROVISIONS.

SECTION "G"

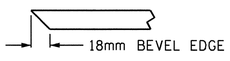

SECTION "F"

(SEE NOTES)

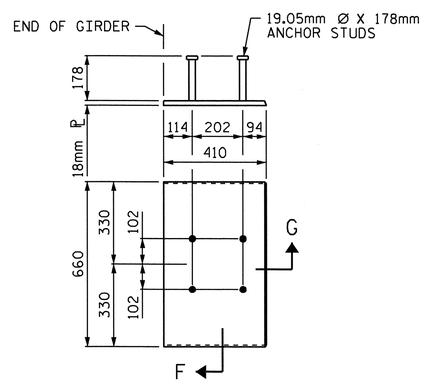

EMBEDDED PLATE "B-1" DETAILS FOR AASHTO TYPE IV GIRDER

(2 REQ'D PER GIRDER)

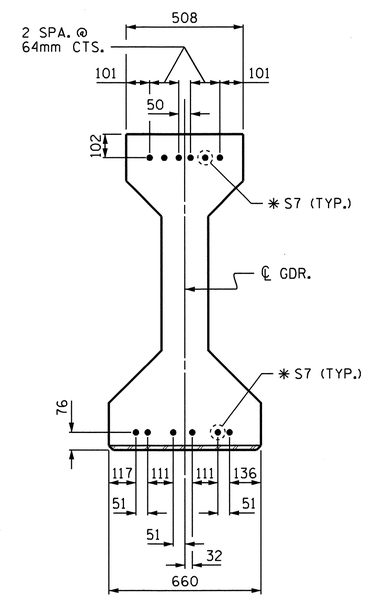

DETAIL "A"

(FOR AASHTO TYPE IV GIRDERS)

PROJECT NO. U-2519DA

CUMBERLAND COUNTY

STATION: 34+21.044 -RP1BD-

SHEET 3 OF 3

STATE OF NORTH CAROLINA
DEPARTMENT OF TRANSPORTATION
RALEIGH

STANDARD

AASHTO TYPE IV PRESTRESSED CONCRETE GIRDER

(DETAILS)

NORTH CAROLINA PROFESSIONAL SEAL 23926 ENGINEER BRIAN C. HAWKINS

2/14/11

REVISIONS						SHEET NO.
NO.	BY:	DATE:	NO.	BY:	DATE:	S-326
1			3			TOTAL SHEETS
2			4			411

ASSEMBLED BY : P.C. BREWER	DATE : 1/14/08
CHECKED BY : R. MARTIN	DATE : 2/4/08
DRAWN BY : ELR 11/91	REV. 10/17/00 RWW/LES
CHECKED BY : GRP 11/91	REV. 7/10/01RR LES/RDR
	REV. 5/1/06 TLA/GM

01-FEB-2011 14:09
R:\Structures\brooks\FinalPlans\u2519da_sd_gdr_11.dgn
tpayne

STD. NO. PCG11SM

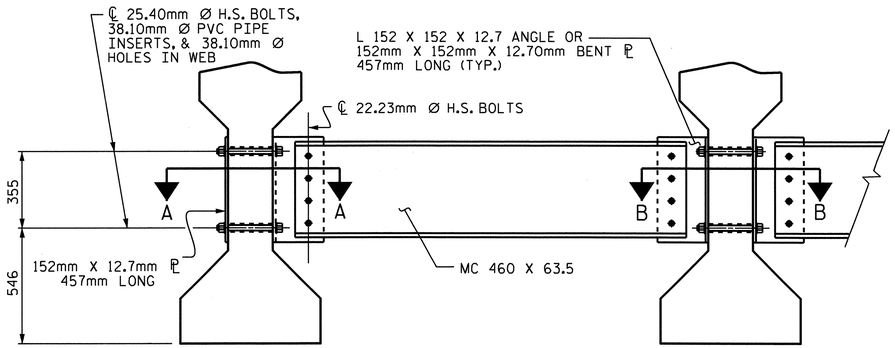

EXTERIOR GIRDER

INTERIOR GIRDER

PART SECTION AT INTERMEDIATE DIAPHRAGM

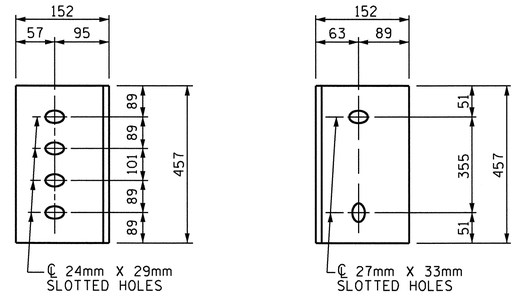

DIAPHRAGM FACE

WEB FACE

CONNECTOR PLATE DETAILS

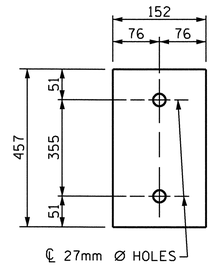

PLATE DETAILS

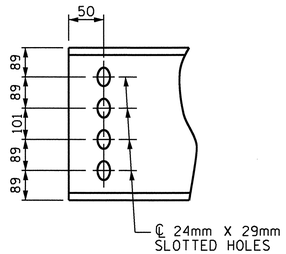

CHANNEL END

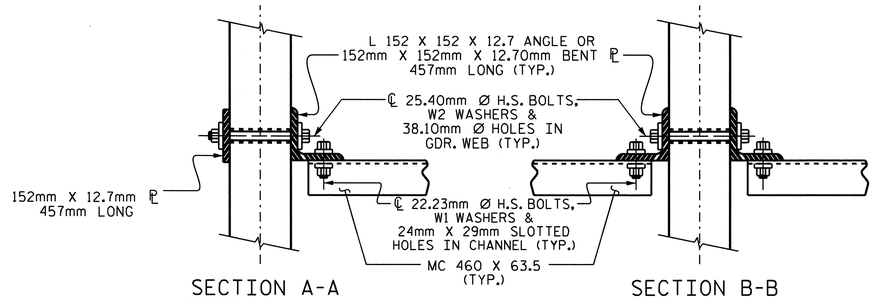

SECTION A-A

SECTION B-B

CONNECTION DETAILS

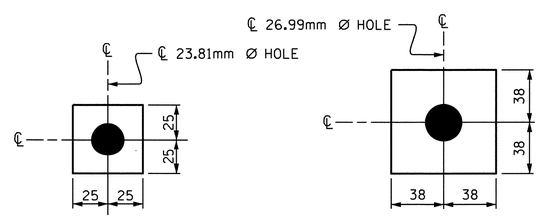

W1

ℙ 11.1 X 50 X 50

USE WITH 22.23mm Ø HVY. HEX NUTS & DIRECT TENSION INDICATOR WASHERS AT DIAPHRAGM CHANNEL TO CONNECTOR PLATE CONNECTIONS

W2

ℙ 11.1 X 76 X 76

USE WITH 25.40mm Ø HVY. HEX NUTS AT CONNECTOR PLATE TO GIRDER CONNECTIONS

WASHER DETAILS

STRUCTURAL STEEL NOTES

ALL INTERMEDIATE DIAPHRAGM STEEL, CONNECTOR PLATES AND PLATE WASHERS SHALL BE AASHTO M270 GRADE 345 OR APPROVED EQUAL.

TENSION ON THE AASHTO M164 BOLTS THROUGH THE CHANNEL MEMBER SHALL BE CALIBRATED USING DIRECT TENSION INDICATOR WASHERS IN ACCORDANCE WITH THE STANDARD SPECIFICATIONS. FOR DIRECT TENSION INDICATORS, SEE SPECIAL PROVISIONS.

TENSION ON THE AASHTO M164 BOLTS THROUGH THE GIRDER WEB SHALL BE SNUG TIGHTENED FOLLOWED BY AN ADDITIONAL 1/4 TURN.

THE PLATES, BENT PLATES, CHANNELS, ANGLES, AND PLATE WASHERS SHALL BE GALVANIZED OR METALLIZED IN ACCORDANCE WITH THE STANDARD SPECIFICATIONS. FOR THERMAL SPRAYED COATINGS (METALLIZATION), SEE SPECIAL PROVISIONS.

FOR METALLIZATION, APPLY AN 8 MIL THICK 99.99 PERCENT ZINC (W-Zn-1) THERMAL SPRAYED COATING WITH A 0.5 MIL THICK SEAL COAT TO ALL STEEL DIAPHRAGM SURFACES IN ACCORDANCE WITH THE THERMAL SPRAYED COATINGS SPECIAL PROVISIONS AND SECTION 442 OF THE STANDARD SPECIFICATIONS.

GALVANIZE THE HIGH STRENGTH BOLTS, NUTS, WASHERS AND DIRECT TENSION INDICATORS IN ACCORDANCE WITH THE STANDARD SPECIFICATIONS. FOR HIGH STRENGTH BOLTS, SEE SPECIAL PROVISIONS.

USE A MINIMUM 11mm THICK PLATE WASHER WITH STANDARD HOLES UNDER EACH BOLT HEAD AND NUT. THE PLATE WASHERS SHALL HAVE SUFFICIENT SIZE TO COVER THE HOLES AFTER INSTALLATION. HARDENED WASHERS AND DIRECT TENSION INDICATORS ARE TO BE USED IN CONJUNCTION WITH THE PLATE WASHERS IN THE CHANNEL MEMBER CONNECTION.

FOR BOLTS THROUGH THE GIRDER WEB, PROVIDE SUFFICIENT LENGTH OF ALL BOLTS TO ACCOMMODATE WASHERS AND THE THICKNESS OF CONNECTING MEMBER PLUS AT LEAST 6mm PROJECTION BEYOND THE NUT.

INTERMEDIATE DIAPHRAGM ASSEMBLY SHALL COMPLY WITH SECTION 1072 OF THE STANDARD SPECIFICATIONS.

CONTRACTOR SHALL SUBMIT TWO SETS OF WORKING DRAWINGS FOR THE INTERMEDIATE DIAPHRAGM ASSEMBLY FOR REVIEW, COMMENTS AND ACCEPTANCE. AFTER REVIEW, COMMENTS, AND ACCEPTANCE, SUBMIT SEVEN SETS FOR DISTRIBUTION.

THE COST OF THE STEEL DIAPHRAGMS AND ASSEMBLIES SHALL BE INCLUDED IN THE UNIT PRICE BID FOR PRESTRESSED CONCRETE GIRDERS.

PROJECT NO. U-2519DA

CUMBERLAND COUNTY

STATION: 34+21.044 -RP1BD-

STATE OF NORTH CAROLINA
DEPARTMENT OF TRANSPORTATION
RALEIGH

STANDARD

INTERMEDIATE STEEL DIAPHRAGMS FOR TYPE IV PRESTRESSED CONCRETE GIRDERS

NORTH CAROLINA PROFESSIONAL SEAL 23926 ENGINEER BRIAN C. HANKS

2/14/11

REVISIONS						SHEET NO.
NO.	BY:	DATE:	NO.	BY:	DATE:	S-327
1			3			TOTAL SHEETS
2			4			411

ASSEMBLED BY : T. PAYNE	DATE : 2/1/2011
CHECKED BY : R. MARTIN	DATE : 2/1/2011
DRAWN BY : TLA 6/05	ADDED 10/21/05
CHECKED BY : VC 6/05	REV. 5/1/06RR KMM/GM

01-FEB-2011 09:06
R:\Structures\brooks\Final Plans\pcgl2sm.dgn
tpayne

STD.No.PCG12SM

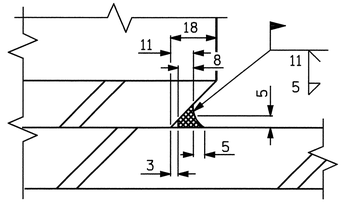

DETAIL "A"

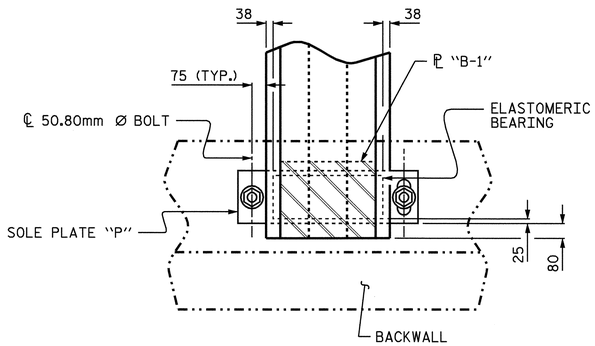

TYPICAL HALF-PLAN
(SHOWING FIXED END BENT 1)

TYPICAL HALF-PLAN
(SHOWING EXPANSION END BENT 2)

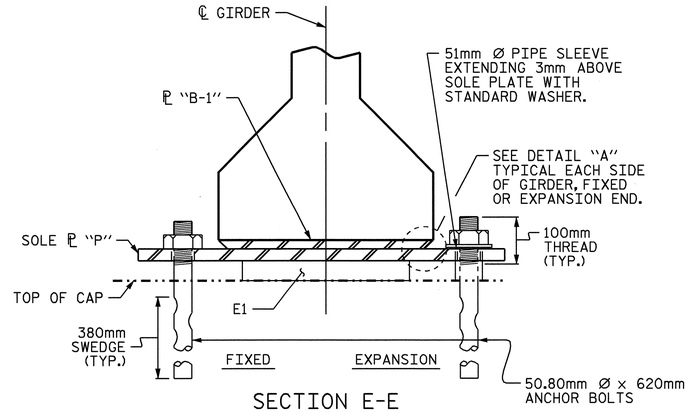

SECTION E-E

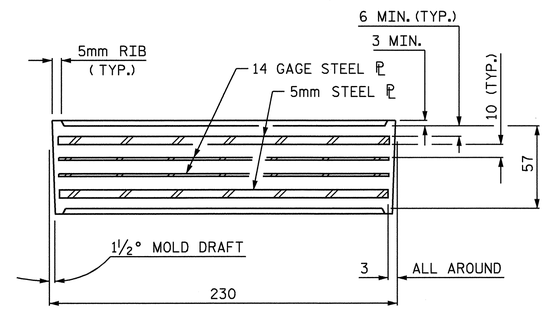

TYPICAL SECTION OF ELASTOMERIC BEARINGS

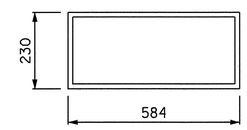

E1 (94 REQ'D)

PLAN VIEW OF ELASTOMERIC BEARING

TYPE V

NOTES:

AT ALL FIXED POINTS OF SUPPORT, NUTS FOR ANCHOR BOLTS ARE TO BE TIGHTENED FINGER TIGHT AND THEN BACKED OFF ½ TURN. THE THREAD OF THE NUT AND BOLT SHALL THEN BE BURRED WITH A SHARP POINTED TOOL.

THE 51mm Ø PIPE SLEEVE SHALL BE CUT FROM SCHEDULE 40 PVC PLASTIC PIPE. THE PVC PLASTIC PIPE SHALL MEET THE REQUIREMENTS OF ASTM D1785.

STEEL SOLE PLATES, ANCHOR BOLTS, NUTS, AND WASHERS SHALL BE GALVANIZED IN ACCORDANCE WITH THE STANDARD SPECIFICATIONS.

PRIOR TO WELDING, GRIND THE GALVANIZED SURFACE OF THE PORTION OF THE EMBEDDED PLATE AND SOLE PLATE THAT ARE TO BE WELDED. AFTER WELDING, DAMAGED GALVANIZED SURFACES SHALL BE REPAIRED IN ACCORDANCE WITH THE STANDARD SPECIFICATIONS.

WHEN WELDING THE SOLE PLATE TO THE EMBEDDED PLATE IN THE GIRDER, USE TEMPERATURE INDICATING WAX PENS, OR OTHER SUITABLE MEANS, TO ENSURE THAT THE TEMPERATURE OF THE SOLE PLATE DOES NOT EXCEED 149°C. TEMPERATURES ABOVE THIS MAY DAMAGE THE ELASTOMER.

SOLE PLATE "P", BOLTS, NUTS, WASHERS, AND PIPE SLEEVE SHALL BE INCLUDED IN THE PAY ITEM FOR PRESTRESSED CONCRETE GIRDERS.

ANCHOR BOLTS SHALL MEET THE REQUIREMENTS OF ASTM A449. NUTS SHALL MEET THE REQUIREMENTS OF AASHTO M291M-12 OR AASHTO M292M-2H. WASHERS SHALL MEET THE REQUIREMENTS OF AASHTO M293M. SHOP DRAWINGS ARE NOT REQUIRED FOR ANCHOR BOLTS, NUTS AND WASHERS. SHOP INSPECTION IS REQUIRED.

ALL SURFACES OF BEARING PLATES SHALL BE SMOOTH AND STRAIGHT.

LOAD RATINGS	
	MAX.D.L.+ L.L.
TYPE V	801 KN

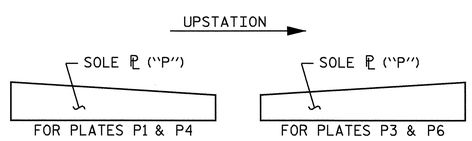

SOLE ℄ PLACEMENT DETAIL

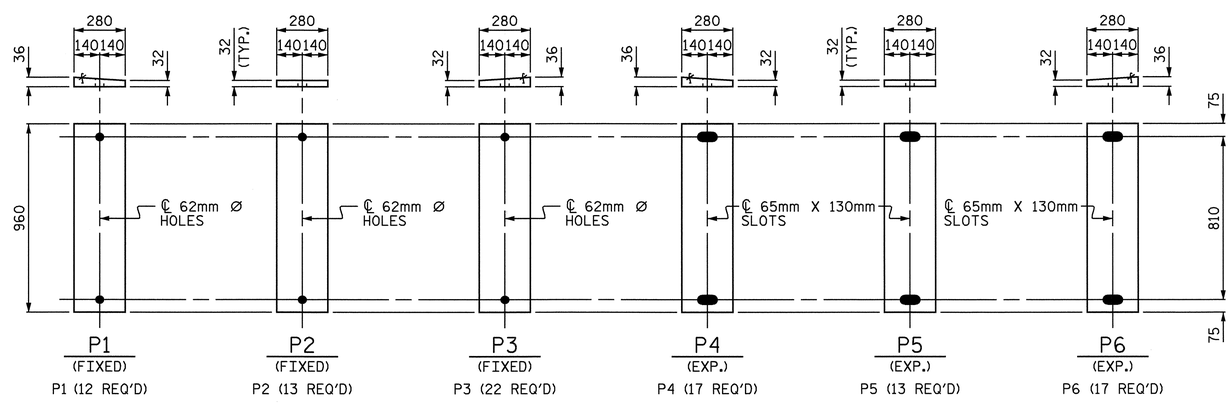

SOLE PLATE DETAILS ("P")

PROJECT NO. U-2519DA
CUMBERLAND COUNTY
STATION: 34+21.044 -RP1BD-

STATE OF NORTH CAROLINA
DEPARTMENT OF TRANSPORTATION
RALEIGH

STANDARD
ELASTOMERIC BEARING DETAILS
PRESTRESSED CONCRETE GIRDER SUPERSTRUCTURE

NORTH CAROLINA PROFESSIONAL SEAL 23926 ENGINEER BRIAN C. HANKS
9/11/08

REVISIONS						SHEET NO.
NO.	BY:	DATE:	NO.	BY:	DATE:	S-328
1			3			TOTAL SHEETS
2			4			411

STD. NO. EB4SM

ASSEMBLED BY : P.C. BREWER	DATE : 1/14/08		
CHECKED BY : R. MARTIN	DATE : 2/4/08		
DRAWN BY : EEM 2/97	REV. 8/16/99 RWW/LES		
CHECKED BY : VAP 2/97	REV. 10/17/00 RWW/LES		
	REV. 5/1/06 TLA/GM		

10-SEP-2008 11:25
r:\structures\brooks\finalplans\U2519DA_sd_BG_11.dgn
pbrewer

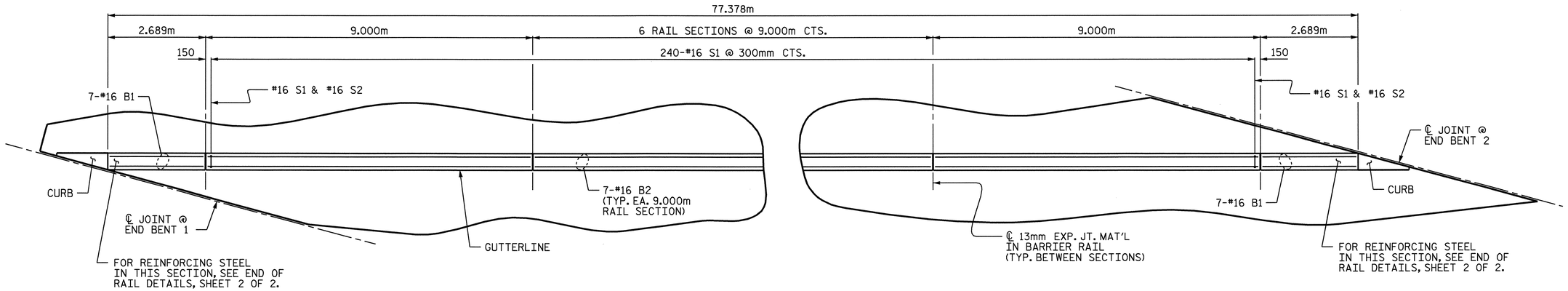

PLAN OF LEFT SIDE BARRIER RAIL

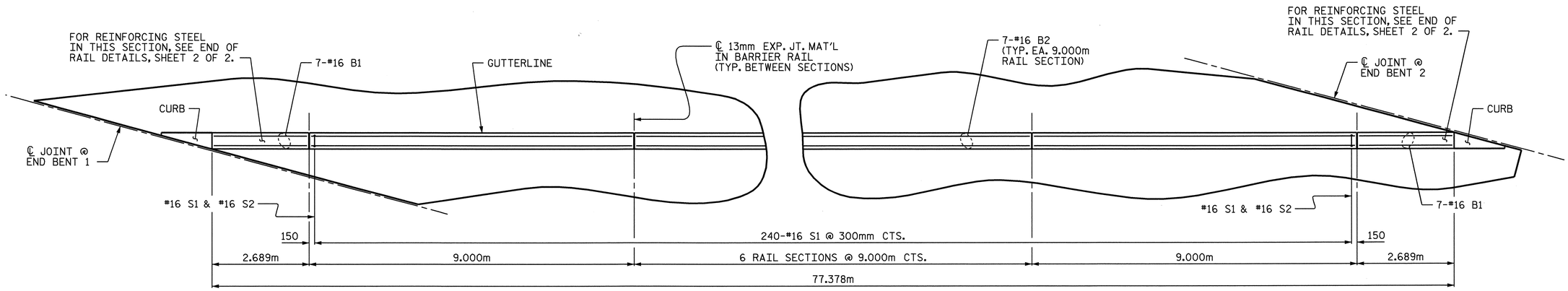

PLAN OF RIGHT SIDE BARRIER RAIL

NOTES:

ALL DIMENSIONS ARE TAKEN ALONG THE BACK FACE OF THE BARRIER RAIL.

THE #16 S1 AND #16 S2 BARS MAY BE SHIFTED SLIGHTLY, AS NECESSARY, TO MAINTAIN A 50mm MINIMUM CLEARANCE TO THE 13mm EXPANSION JOINT MATERIAL.

NORTH CAROLINA PROFESSIONAL SEAL 23926 ENGINEER BRIAN C. HANKS

9/11/08

PROJECT NO. U-2519DA

CUMBERLAND COUNTY

STATION: 34+21.044 -RP1BD-

SHEET 1 OF 2

STATE OF NORTH CAROLINA
DEPARTMENT OF TRANSPORTATION
RALEIGH

SUPERSTRUCTURE

CONCRETE BARRIER RAIL

REVISIONS						SHEET NO.
NO.	BY:	DATE:	NO.	BY:	DATE:	S-329
1			3			TOTAL SHEETS
2			4			411

DRAWN BY : P.C. BREWER DATE : 1/14/08
CHECKED BY : R. MARTIN DATE : 2/4/08

10-SEP-2008 11:25
r:\structures\brooks\final plans\U2519DA_sd_BR_11.dgn
pbrewer

NOTES:

THE BARRIER RAIL SHALL NOT BE CAST UNTIL ALL SLAB CONCRETE HAS BEEN CAST AND HAS REACHED A MINIMUM COMPRESSIVE STRENGTH OF 20.7 MPa.

THE JOINT IN THE DECK SHALL BE SAWED PRIOR TO THE CASTING OF BARRIER RAIL.

ALL REINFORCING STEEL IN BARRIER RAILS SHALL BE EPOXY COATED.

THE #16 S3 AND #16 S4 BARS SHALL BE INSTALLED, USING AN ADHESIVE ANCHORING SYSTEM, AFTER SAWING THE JOINT. THE YIELD LOAD FOR THE #16 S3 AND #16 S4 BARS IS 82.7 kN. FIELD TESTING FOR THE ADHESIVE BONDING SYSTEM IS NOT REQUIRED.

VERTICAL GROOVED CONTRACTION JOINTS, 12mm IN DEPTH, SHALL BE TOOLED IN ALL EXPOSED FACES OF THE BARRIER RAIL AND IN ACCORDANCE WITH ARTICLE 825-10(B) OF THE STANDARD SPECIFICATIONS. THE CONTRACTION JOINT SHALL BE LOCATED AT EACH THIRD POINT BETWEEN BARRIER RAIL EXPANSION JOINTS. ONLY ONE CONTRACTION JOINT IS REQUIRED AT MIDPOINT OF BARRIER RAIL SEGMENTS LESS THAN 6.1m IN LENGTH AND NO CONTRACTION JOINTS ARE REQUIRED FOR THOSE SEGMENTS LESS THAN 3.5m IN LENGTH.

BAR TYPES

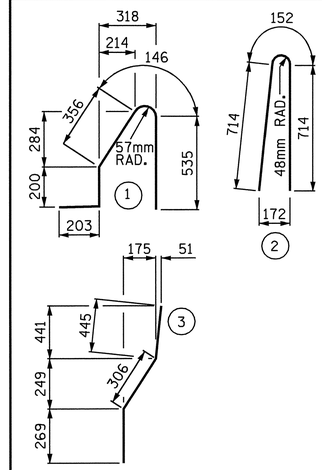

ALL BAR DIMENSIONS ARE OUT TO OUT.

BILL OF MATERIAL

FOR CONCRETE BARRIER RAIL ONLY

BAR	NO.	SIZE	TYPE	LENGTH	WEIGHT
✳ B1	28	#16	STR	2560	111
✳ B2	112	#16	STR	8860	1540
✳ S1	480	#16	1	1440	1073
✳ S2	480	#16	2	1580	1177
✳ S3	36	#16	3	1020	57
✳ S4	36	#16	STR	960	54

✳ EPOXY COATED REINFORCING STEEL 4,012 kg

CLASS AA CONCRETE 38.9m³

CONCRETE BARRIER RAIL 154.756m

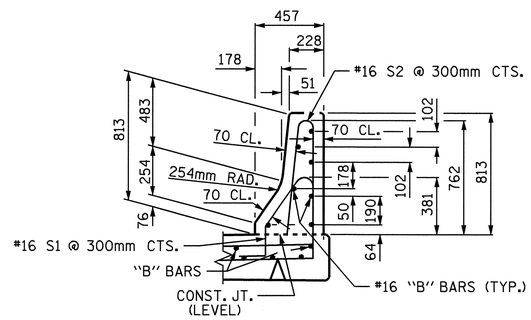

SECTION THRU RAIL

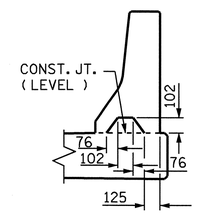

SECTION S-S

AT DAM IN OPEN JOINT
(THIS IS TO BE USED ONLY WHEN SLIP FORM IS USED)

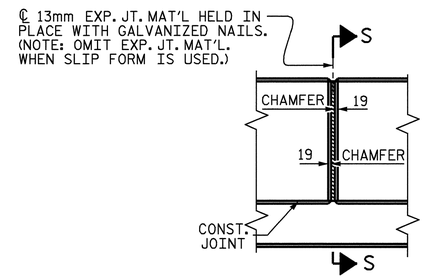

ELEVATION AT EXPANSION JOINTS

BARRIER RAIL DETAILS

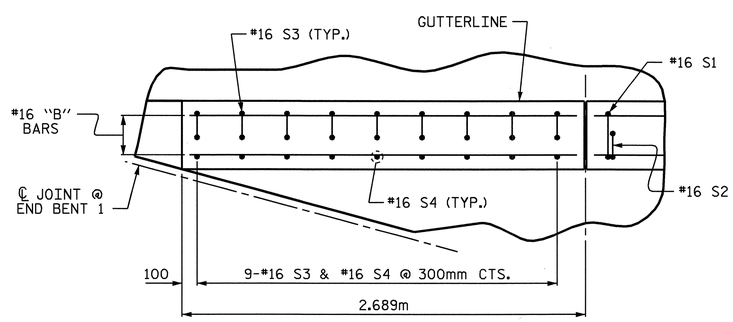

PLAN

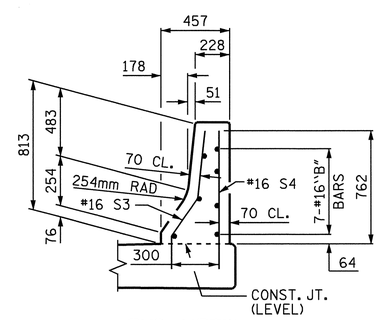

END VIEW

END OF RAIL DETAILS

(FOR ADHESIVE ANCHORING AT SAWED JOINTS)
(TYP. EA. 2.689m SECTION)

PROJECT NO. U-2519DA

CUMBERLAND COUNTY

STATION: 34+21.044 -RP1BD-

SHEET 2 OF 2

STATE OF NORTH CAROLINA
DEPARTMENT OF TRANSPORTATION
RALEIGH

STANDARD
CONCRETE BARRIER RAIL

NORTH CAROLINA PROFESSIONAL SEAL 23926 ENGINEER BRIAN C. HAWKINS
9/11/08

REVISIONS						SHEET NO.
NO.	BY:	DATE:	NO.	BY:	DATE:	S-330
1			3			TOTAL SHEETS
2			4			411

ASSEMBLED BY : P.C. BREWER		DATE : 1/14/08	
CHECKED BY : R. MARTIN		DATE : 2/4/08	
DRAWN BY : ARB 5/87	REV. 10/17/00	RWW/LES	
CHECKED BY : SJD 9/87	REV. 5/7/03R	RWW/JTE	
	REV. 5/1/06	TLA/GM	

10-SEP-2008 11:25
r:\structures\brooks\final plans\U2519DA_sd_BR_11.dgn
pbrewer

STD. No. CBR1SM

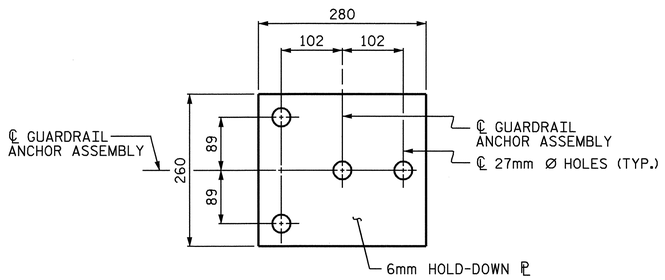

PLAN

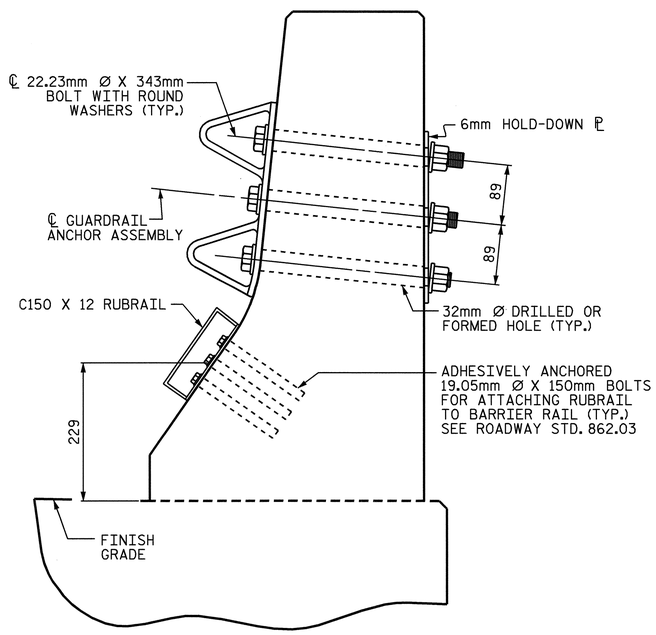

SECTION E-E

GUARDRAIL ANCHOR ASSEMBLY DETAILS

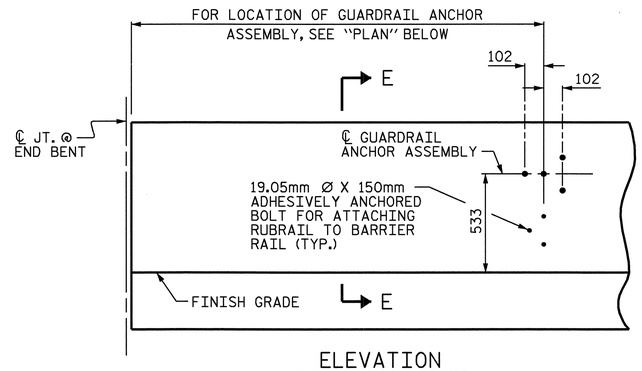

ELEVATION

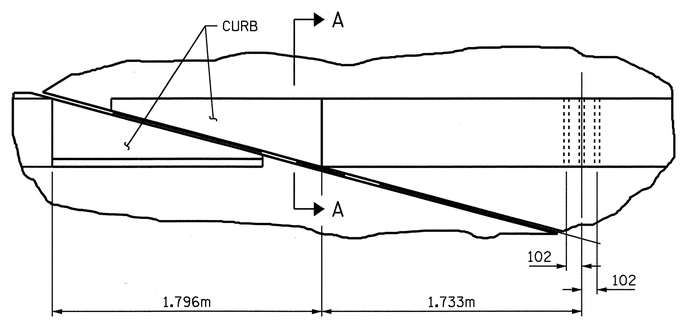

PLAN OF LEFT SIDE

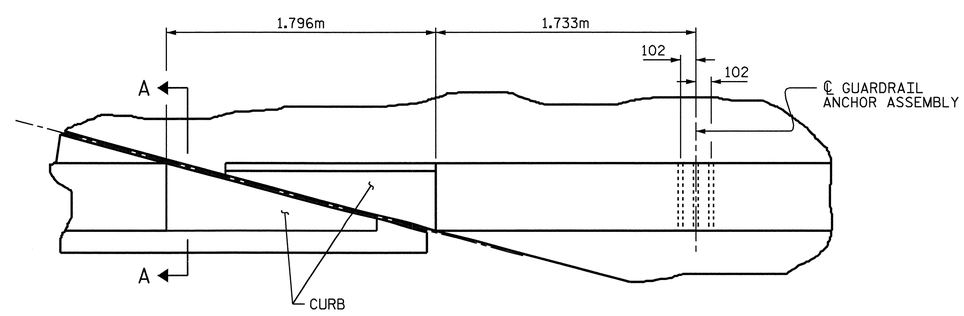

PLAN OF RIGHT SIDE

LOCATION OF ANCHORS FOR GUARDRAIL

END BENT 1 SHOWN, END BENT 2 SIMILAR.

NOTES:

THE GUARDRAIL ANCHOR ASSEMBLY SHALL CONSIST OF A 6mm HOLD DOWN PLATE AND 4 - 22.23mm Ø BOLTS WITH NUTS AND WASHERS, RUBRAIL, AND ADHESIVELY ANCHORED BOLTS.

THE HOLD-DOWN PLATE SHALL CONFORM TO AASHTO M270 GRADE 36. AFTER FABRICATION, THE HOLD-DOWN PLATE SHALL BE HOT-DIP GALVANIZED IN ACCORDANCE WITH AASHTO M111.

BOLTS SHALL CONFORM TO THE REQUIREMENTS OF ASTM A307 AND NUTS SHALL CONFORM TO THE REQUIREMENTS OF AASHTO M291. BOLTS, NUTS AND WASHERS SHALL BE GALVANIZED. (AT THE CONTRACTOR'S OPTION, STAINLESS STEEL BOLTS, NUTS AND WASHERS MAY BE USED AS AN ALTERNATE FOR THE 22.23mm Ø GALVANIZED BOLTS, NUTS AND WASHERS. THEY SHALL CONFORM TO OR EXCEED THE MECHANICAL REQUIREMENTS OF ASTM A307. THE USE OF THIS ALTERNATE SHALL BE APPROVED BY THE ENGINEER.)

THE GUARDRAIL ANCHOR ASSEMBLY IS REQUIRED AT ALL POINTS WHERE APPROACH GUARDRAIL IS TO BE ATTACHED TO THE END OF BARRIER RAIL. FOR POINTS OF ATTACHMENT, SEE SKETCH.

AFTER INSTALLATION, THE EXPOSED THREAD OF THE BOLT SHALL BE BURRED WITH A SHARP POINTED TOOL.

THE COST OF THE GUARDRAIL ANCHOR ASSEMBLY SHALL BE INCLUDED IN THE UNIT CONTRACT PRICE BID FOR CONCRETE BARRIER RAIL.

THE 32mm Ø HOLES SHALL BE FORMED OR DRILLED WITH A CORE BIT. IMPACT TOOLS WILL NOT BE PERMITTED. ANY CONCRETE DAMAGED BY THIS WORK SHALL BE REPAIRED TO THE SATISFACTION OF THE ENGINEER.

THE C150 X 12 RUBRAIL IS TO BE ADHESIVELY ANCHORED TO THE RAIL USING THREE 19.05mm Ø X 150mm BOLTS WITH WASHERS. LEVEL ONE FIELD TESTING IS REQUIRED, AND THE YIELD LOAD OF THE 19.05mm Ø BOLTS IS 53.4kN. FOR ADHESIVELY ANCHORED ANCHOR BOLTS OR DOWELS, SEE SPECIAL PROVISIONS. SEE ROADWAY STANDARD 862.03 FOR DETAILS OF THE RUBRAIL.

THE RUBRAIL SHALL SPAN THE OPENING BETWEEN THE RAIL ON THE APPROACH SLAB AND THE RAIL ON THE BRIDGE. THE RUBRAIL SHALL CONSIST OF AN UNBENT C150 X 12 WITH BOTH ENDS FABRICATED FOR ATTACHMENT TO THE BARRIER RAIL. SEE ROADWAY STANDARD 862.03 FOR DETAILS.

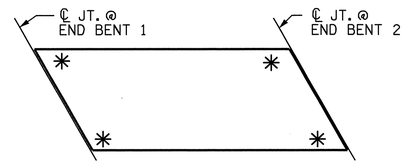

SKETCH SHOWING POINTS OF ATTACHMENTS

✳ DENOTES GUARDRAIL ANCHOR ASSEMBLY

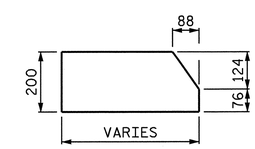

SECTION A-A

PROJECT NO. U-2519DA

CUMBERLAND COUNTY

STATION: 34+21.044 -RP1BD-

STATE OF NORTH CAROLINA
DEPARTMENT OF TRANSPORTATION
RALEIGH

STANDARD

GUARDRAIL ANCHORAGE FOR BARRIER RAIL

NORTH CAROLINA PROFESSIONAL SEAL 23926 ENGINEER BRIAN C. HANKS
7/29/08

REVISIONS						SHEET NO.
NO.	BY:	DATE:	NO.	BY:	DATE:	S-331
1			3			TOTAL SHEETS
2			4			411

STD. NO. GRA2SM

ASSEMBLED BY : P.C. BREWER	DATE : 1/14/08
CHECKED BY : R. MARTIN	DATE : 2/4/08
DRAWN BY : TLA 5/06	ADDED 5/1/06R KMM/GM
CHECKED BY : GM 5/06	

29-SEP-2008 10:42
r:\structures\brooks\final plans\u2519da_sd_br_ll.dgn
bhanks

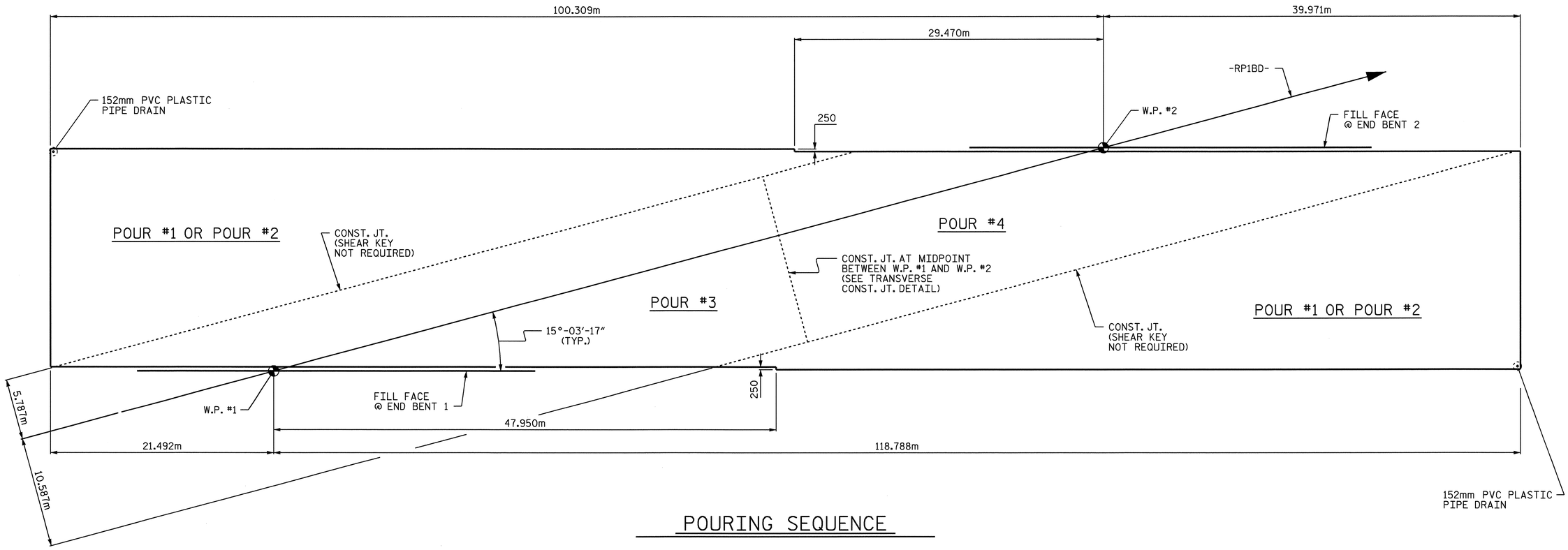

POURING SEQUENCE

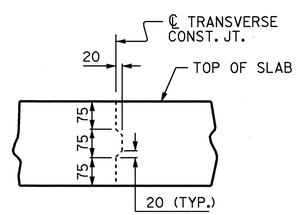

TRANSVERSE CONSTRUCTION JOINT DETAIL

NOTE: REINFORCING STEEL IN SLAB NOT SHOWN. LONGITUDINAL REINFORCING STEEL SHALL BE CONTINUOUS THRU JOINT.

NOTE:

THE CONSTRUCTION JOINTS FOR POUR #1 AND POUR #2 SHALL BE PLACED ADJACENT TO THE S1 BAR IN THE BARRIER RAIL.

PREVIOUSLY CAST CONCRETE SHALL HAVE ATTAINED A MINIMUM COMPRESSIVE STRENGTH OF 20.7 MPa BEFORE ADDITIONAL CONCRETE IS CAST.

POUR #3 AND POUR #4 REQUIRE A SCREED FINISH.

POUR #1 AND POUR #2 DO NOT REQUIRED A SCREED FINISH. POUR #1 AND POUR #2 SHALL BE GRADED TO DRAIN TO THE DETAILED DRAINAGE PIPE.

THE CONTRACTOR HAS THE OPTION TO SUBMIT FOR APPROVAL AN ALTERNATE TO THE PROPOSED POURING SEQUENCE.

PROJECT NO. U-2519DA

CUMBERLAND COUNTY

STATION: 34+21.044 -RP1BD-

NORTH CAROLINA PROFESSIONAL SEAL 23926 ENGINEER BRIAN C. HAWKS

9/11/08

STATE OF NORTH CAROLINA
DEPARTMENT OF TRANSPORTATION
RALEIGH

SUPERSTRUCTURE

POURING SEQUENCE

REVISIONS						SHEET NO.
NO.	BY:	DATE:	NO.	BY:	DATE:	S-332
1			3			TOTAL SHEETS
2			4			411

DRAWN BY : P.C. BREWER DATE : 1/14/08
CHECKED BY : R. MARTIN DATE : 2/4/08

10-SEP-2008 11:24
r:\structures\brooks\final plans\U2519DA_sd_BM_11.dgn
pbrewer

SUPERSTRUCTURE REINFORCING STEEL LENGTHS ARE BASED ON THE FOLLOWING MINIMUM SPLICE LENGTHS

BAR SIZE	SUPERSTRUCTURE EXCEPT APPROACH SLABS, PARAPET, AND BARRIER RAIL		APPROACH SLABS		PARAPET AND BARRIER RAIL
	EPOXY COATED	UNCOATED	EPOXY COATED	UNCOATED	
#13	610	540	610	540	840
#16	770	660	770	660	1050
#19	920	790	1190	790	1330
#22	1580	1060			
#25	2080	1390			

SUPERSTRUCTURE BILL OF MATERIAL

	CLASS AA CONCRETE (m3)					REINFORCING STEEL (kg)	EPOXY COATED REINFORCING STEEL (kg)
	POUR #1	POUR #2	POUR #3	POUR #4	TOTAL		
	258.1	258.1	175.9	175.9	868.0	49,207	41,639
■ TOTALS					868.0	49,207	41,639

■ BARRIER RAIL QUANTITIES ARE NOT INCLUDED.

BILL OF MATERIAL

BAR	NO.	SIZE	TYPE	LENGTH	WEIGHT
✳ A1	1161	16	STR	16260	29298
A2	1161	16	STR	16180	29154
✳ B1	936	13	STR	7380	6866
B2	1028	16	STR	10780	17199
✳ K1	8	25	1	4300	137
✳ K2	88	25	2	6420	2245
K3	50	16	STR	14680	1139
K4	184	16	STR	2380	680
K5	46	16	STR	1940	139
✳ S1	366	16	3	1780	1011
✳ S2	280	13	5	4340	1208
✳ S3	96	13	5	3740	357
S4	1380	13	4	640	878
U1	16	13	6	1140	18
✳ U2	685	13	6	760	517

REINFORCING STEEL 49,207 kg

✳ EPOXY COATED REINFORCING STEEL 41,639 kg

BAR TYPES

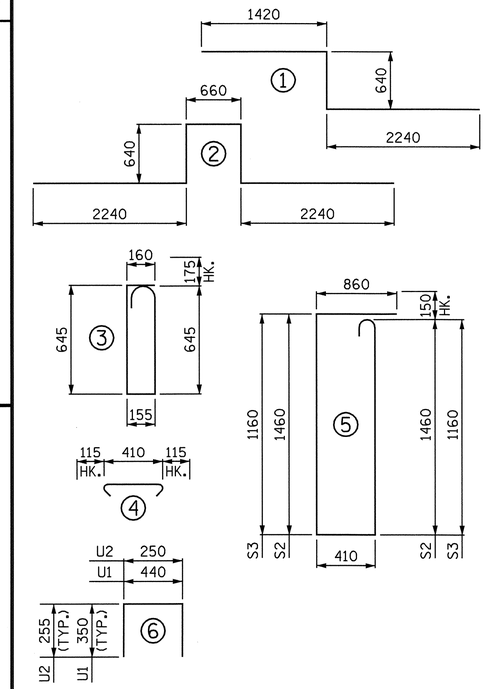

ALL BAR DIMENSIONS ARE OUT TO OUT.

GROOVING BRIDGE FLOORS

APPROACH SLABS	1,078.6 m^2
BRIDGE DECK	1,138.0 m^2
TOTAL	2,216.6 m^2

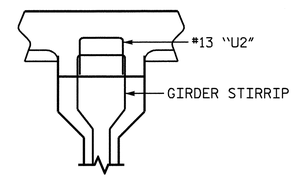

LARGE BUILDUP DETAIL

#13 "U2" BARS SHALL BE PLACED WITH THE STIRRUPS WHEN THE BUILDUP EXCEEDS 105mm AND SHALL SIT ON TOP OF THE GIRDER.

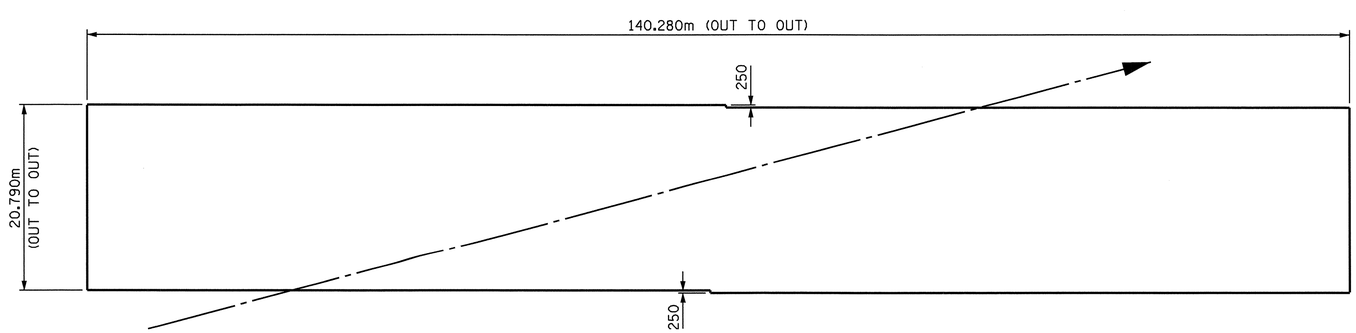

LAYOUT FOR COMPUTING AREA OF REINFORCED CONCRETE DECK SLAB (SQ. METER = 2,916)

PROJECT NO. U-2519DA

CUMBERLAND COUNTY

STATION: 34+21.044 -RP1BD-

STATE OF NORTH CAROLINA
DEPARTMENT OF TRANSPORTATION
RALEIGH

SUPERSTRUCTURE

BILL OF MATERIAL

NORTH CAROLINA PROFESSIONAL SEAL 23926 ENGINEER BRIAN C. HANKS

10/27/08

REVISIONS						SHEET NO.
NO.	BY:	DATE:	NO.	BY:	DATE:	S-333
1			3			TOTAL SHEETS
2			4			411

DRAWN BY : P.C. BREWER DATE : 1/14/08
CHECKED BY : R. MARTIN DATE : 2/4/08

24-OCT-2008 15:49
R:\Structures\brooks\FinalPlans\U2519DA_sd_BM_ll.dgn
tpayne

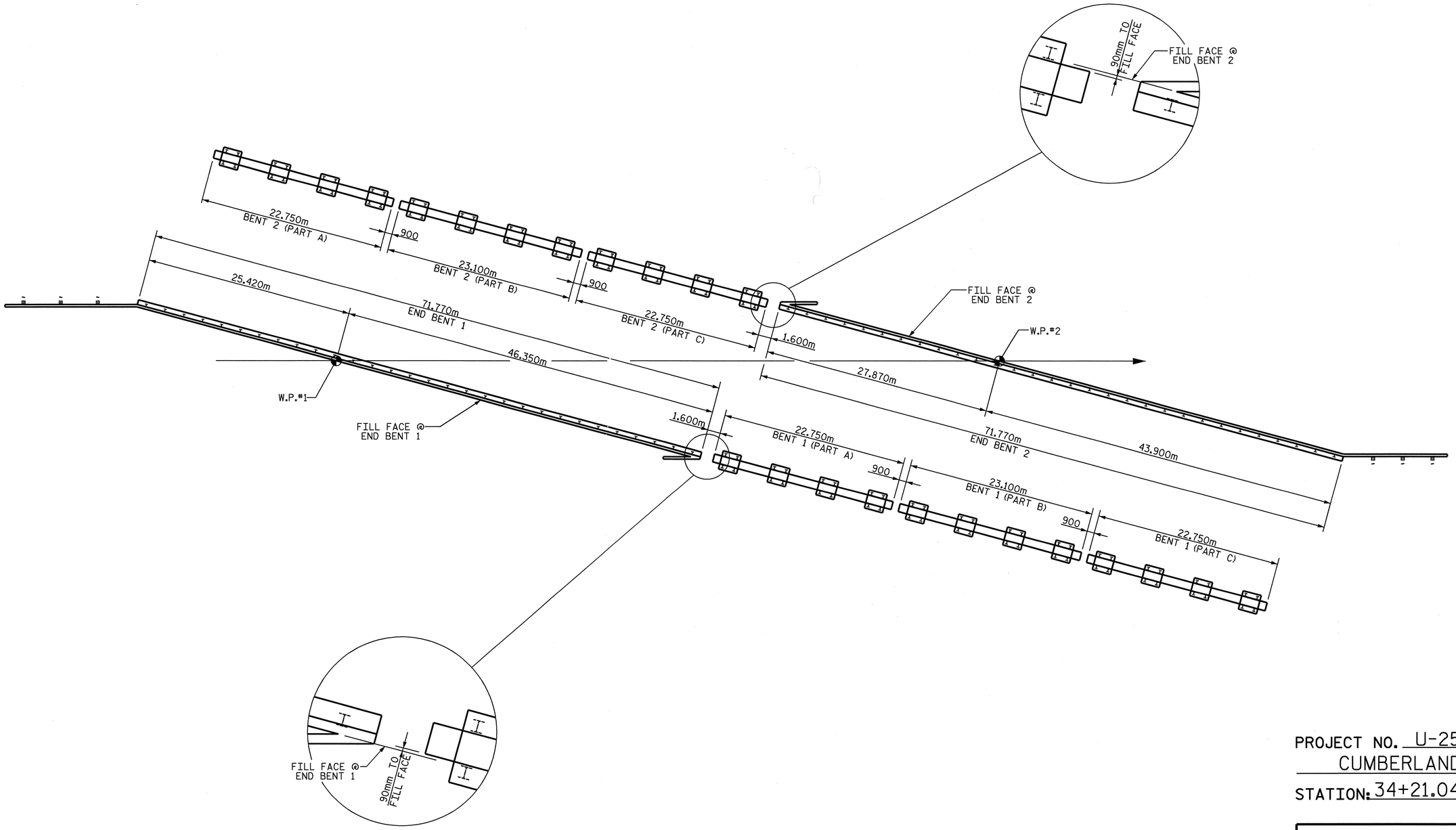

PROJECT NO. U-2519DA
CUMBERLAND COUNTY
STATION: 34+21.044-RP1BD-

STATE OF NORTH CAROLINA
DEPARTMENT OF TRANSPORTATION
RALEIGH

SUBSTRUCTURE LAYOUT

NORTH CAROLINA PROFESSIONAL SEAL 12960 ENGINEER PAUL STEPHEN ERVIN
9-11-08

REVISIONS						SHEET NO.
NO.	BY:	DATE:	NO.	BY:	DATE:	S-334
1			3			TOTAL SHEETS
2			4			411

DRAWN BY : R.D. MARTIN DATE : 6-27-08
CHECKED BY : P.S. ERVIN DATE : 8-7-08

FOR NOTES , SEE SHEET 2 OF 6.

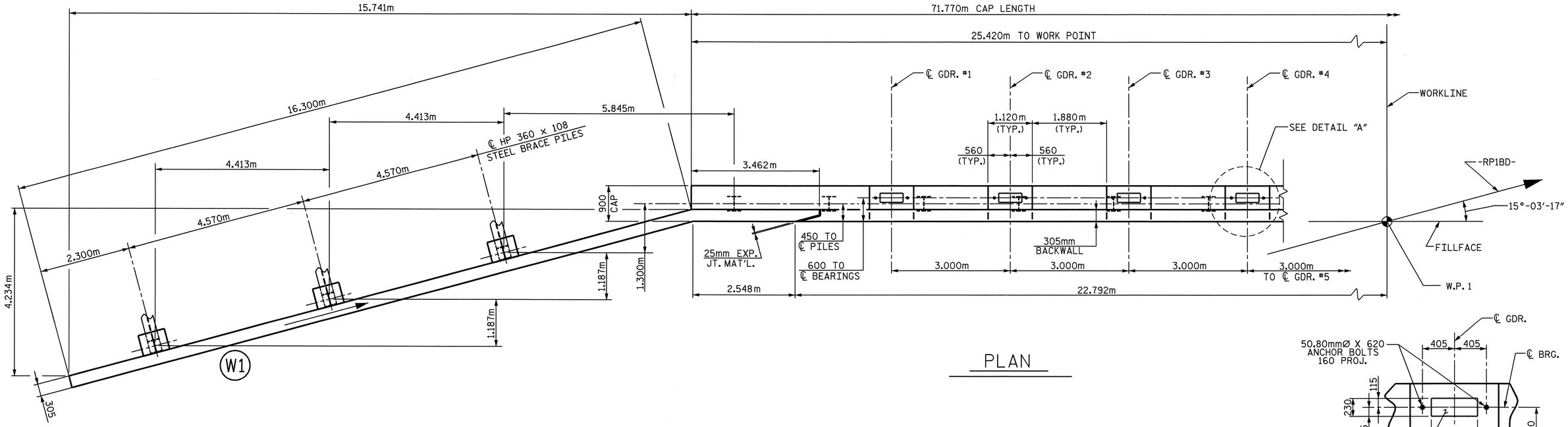

PLAN

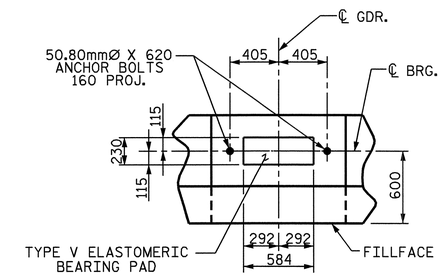

DETAIL "A"

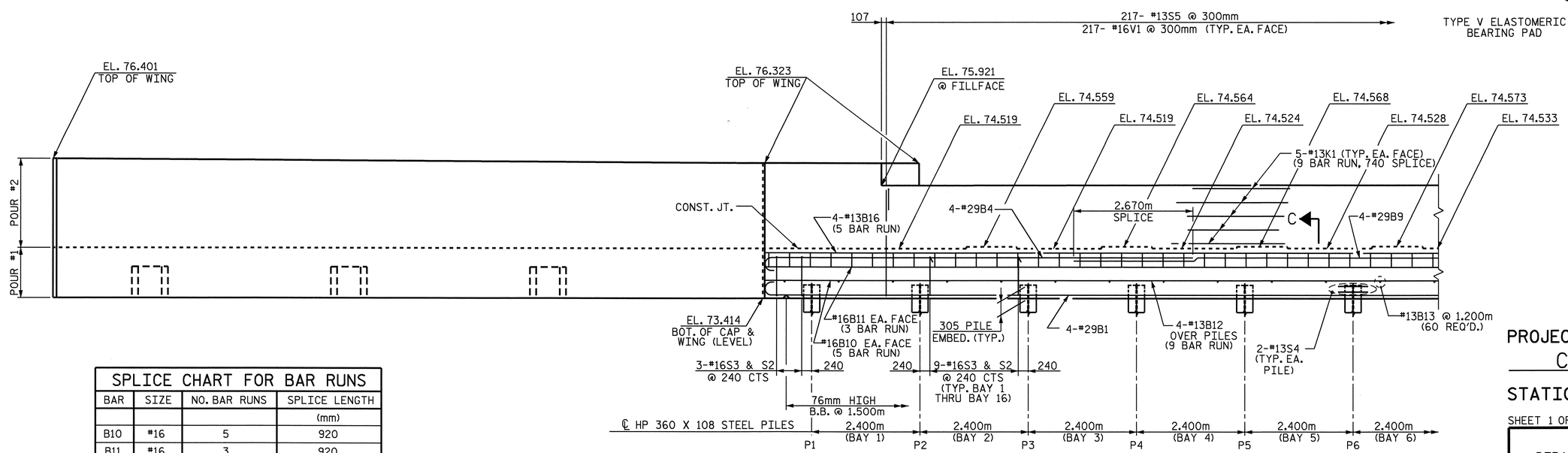

ELEVATION

WING PILES NOT SHOWN FOR CLARITY

SPLICE CHART FOR BAR RUNS			
BAR	SIZE	NO. BAR RUNS	SPLICE LENGTH (mm)
B10	#16	5	920
B11	#16	3	920
B12	#13	9	740
B16	#13	5	740

PROJECT NO. U-2519DA
CUMBERLAND COUNTY
STATION: 34+21.044-RP1BD-

SHEET 1 OF 6

STATE OF NORTH CAROLINA
DEPARTMENT OF TRANSPORTATION
RALEIGH

END BENT 1

NORTH CAROLINA PROFESSIONAL SEAL 12960 ENGINEER PAUL STEPHEN ERVIN
8-28-08

REVISIONS						SHEET NO.
NO.	BY:	DATE:	NO.	BY:	DATE:	S-335
1			3			TOTAL SHEETS
2			4			411

DRAWN BY : R.D. MARTIN DATE : 6-27-08
CHECKED BY : P.S. ERVIN DATE : 8-7-08

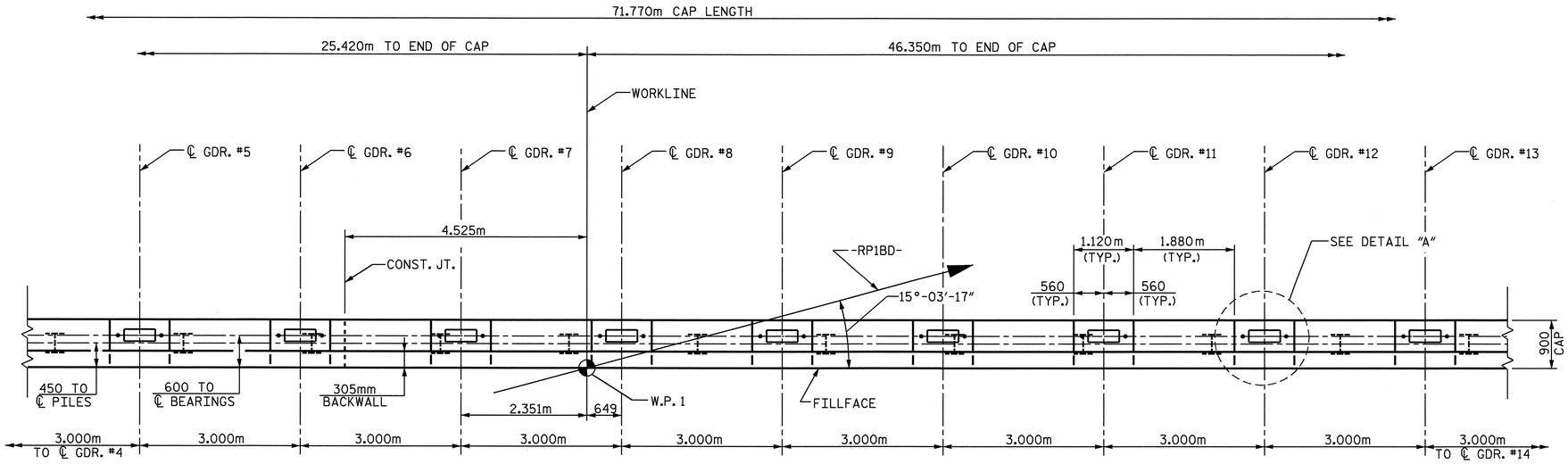

PLAN

NOTES

THE TOP SURFACE AREAS OF THE END BENT CAPS SHALL BE CURED IN ACCORDANCE WITH THE STANDARD SPECIFICATIONS EXCEPT THE MEMBRANE CURING COMPOUND METHOD SHALL NOT BE USED

BACKWALL SHALL BE PLACED BEFORE APPLYING EPOXY PROTECTIVE COATING.

STIRRUPS IN END BENT CAP MAY BE SHIFTED AS NECESSARY TO CLEAR ANCHOR BOLTS.

FOR SECTIONS, SEE SHEET 6 OF 6.

FOR PILE SPLICE DETAILS, SEE SHEET 6 OF 6.

FOR TEMPORARY DRAINAGE AT END BENT, SEE SHEET 6 OF 6.

THE TOP SURFACE OF THE CAP EXCEPT THE BRIDGE SEAT BUILDUPS SHALL BE SLOPED TRANSVERSELY FROM THE FILLFACE TO THE BACKFACE AT A RATE OF 2%.

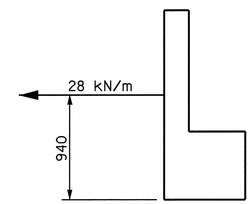

MSE STRAP LOAD DETAIL

A MINIMUM OF TWO LAYERS OF MSE STRAPS ARE REQUIRED BEHIND END BENT BACKWALL. THE MSE STRAPS ARE REQUIRED TO RESIST A SERVICE LOAD NO LESS THAN 28kN PER LINEAR METER APPLIED TO THE END BENT CAP 940 MILLIMETERS FROM BOTTOM OF CAP, SEE "RETAINING WALL NO.1 AND NO.2 DETAILS".

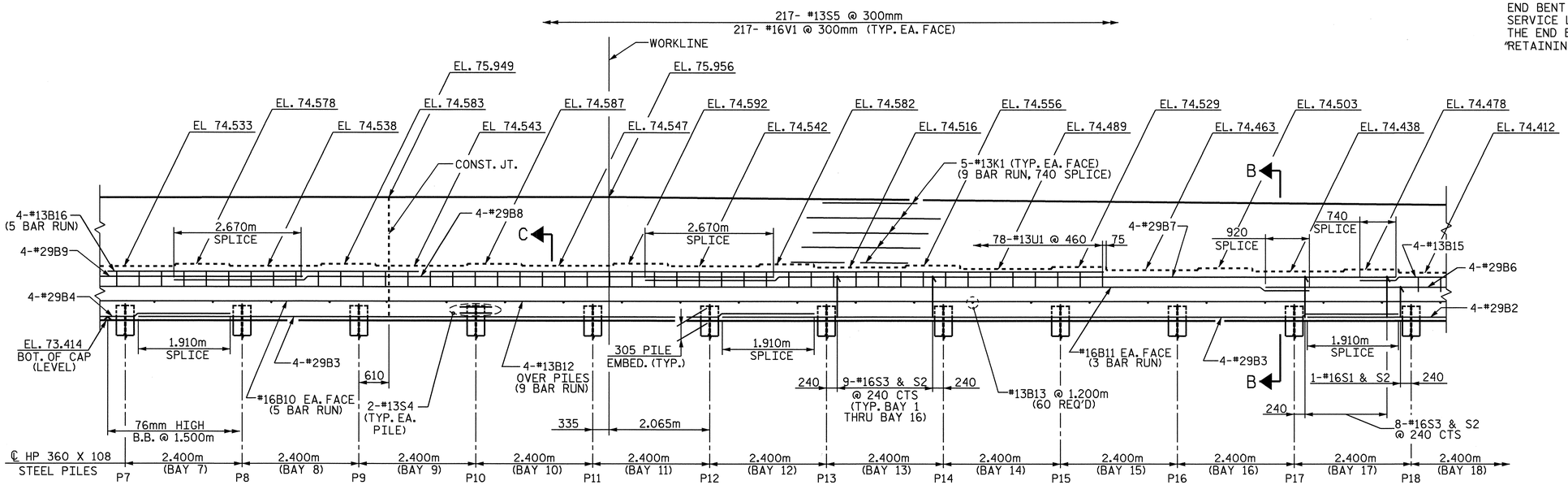

ELEVATION

FOR SPLICES AND BAR RUNS NOT SHOWN, SEE SHEET 1 OF 6.

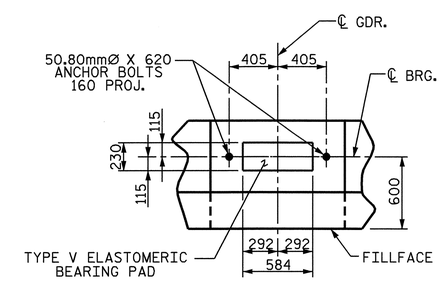

DETAIL "A"

PROJECT NO. U-2519DA
CUMBERLAND COUNTY
STATION: 34+21.044-RP1BD-

SHEET 2 OF 6

STATE OF NORTH CAROLINA
DEPARTMENT OF TRANSPORTATION
RALEIGH

END BENT 1

NORTH CAROLINA PROFESSIONAL SEAL 12990 ENGINEER PAUL STEPHEN ERVIN
9-11-08

REVISIONS						SHEET NO.
NO.	BY:	DATE:	NO.	BY:	DATE:	S-336
1			3			TOTAL SHEETS
2			4			All

DRAWN BY : R.D. MARTIN DATE : 6-27-08
CHECKED BY : P.S. ERVIN DATE : 8-7-08

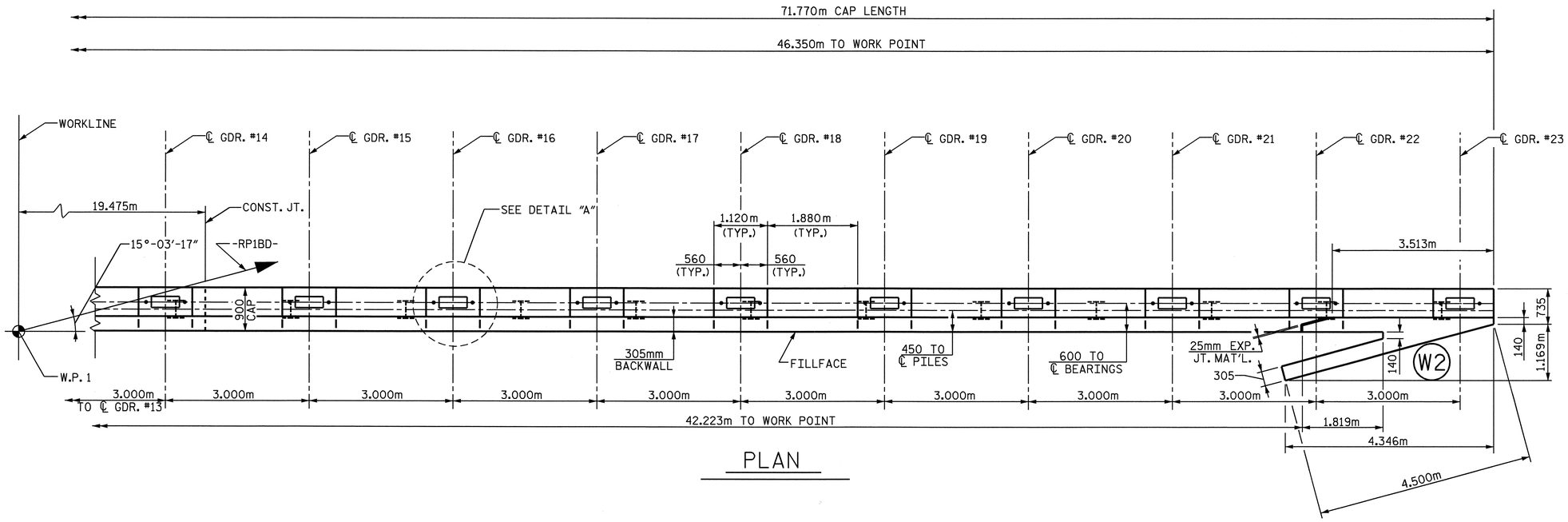

PLAN

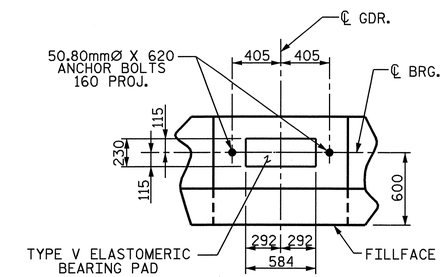

DETAIL "A"

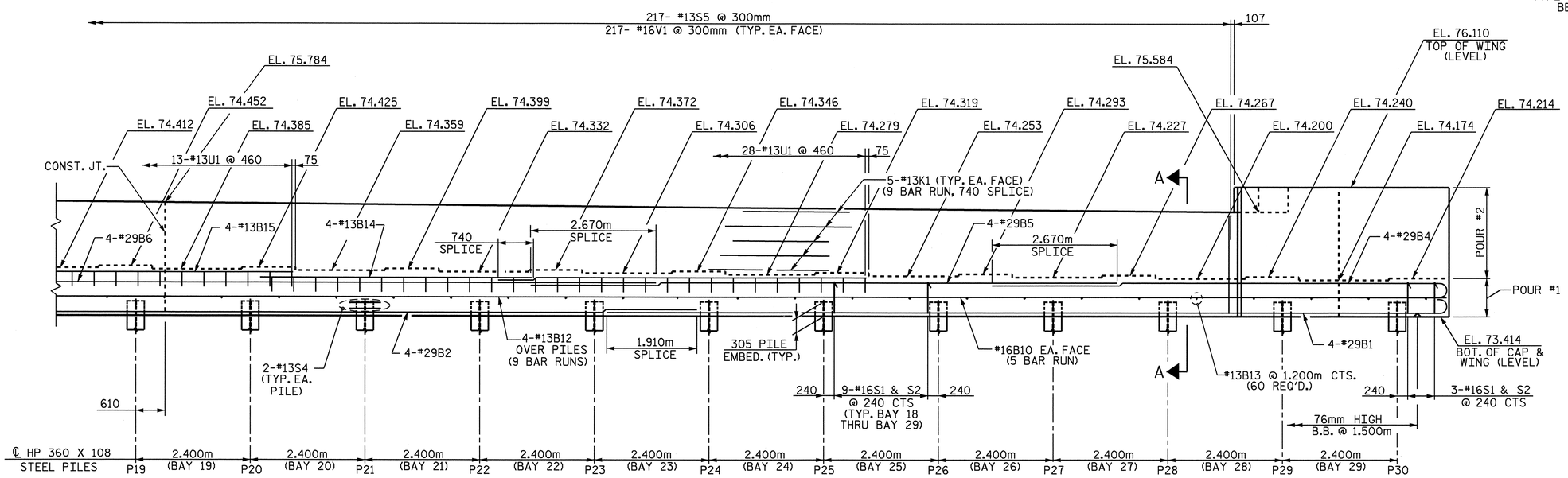

ELEVATION

FOR SPLICES AND BAR RUNS NOT SHOWN, SEE SHEET 1 OF 6.

PROJECT NO. U-2519DA
CUMBERLAND COUNTY
STATION: 34+21.044-RP1BD-

SHEET 3 OF 6

STATE OF NORTH CAROLINA
DEPARTMENT OF TRANSPORTATION
RALEIGH

END BENT 1

NORTH CAROLINA PROFESSIONAL SEAL 12960 ENGINEER PAUL STEPHEN ERVIN
9-11-08

REVISIONS						SHEET NO.
NO.	BY:	DATE:	NO.	BY:	DATE:	S-337
1			3			TOTAL SHEETS
2			4			411

DRAWN BY : R.D. MARTIN DATE : 6-27-08
CHECKED BY : P.S. ERVIN DATE : 8-7-08

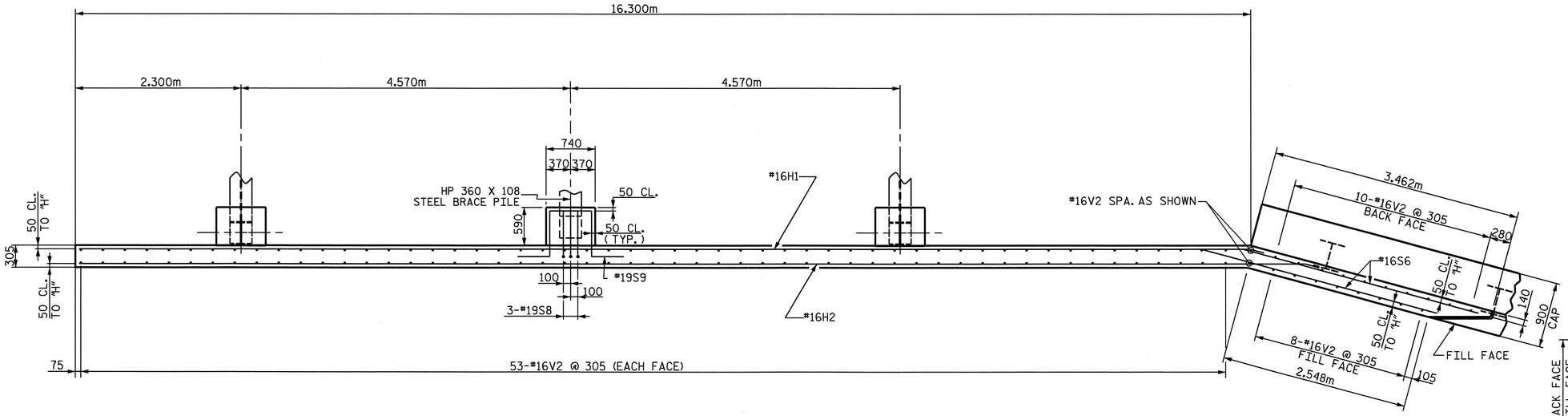

PLAN OF WING (W1)

BRACE PILE DETAILS ARE TYPICAL

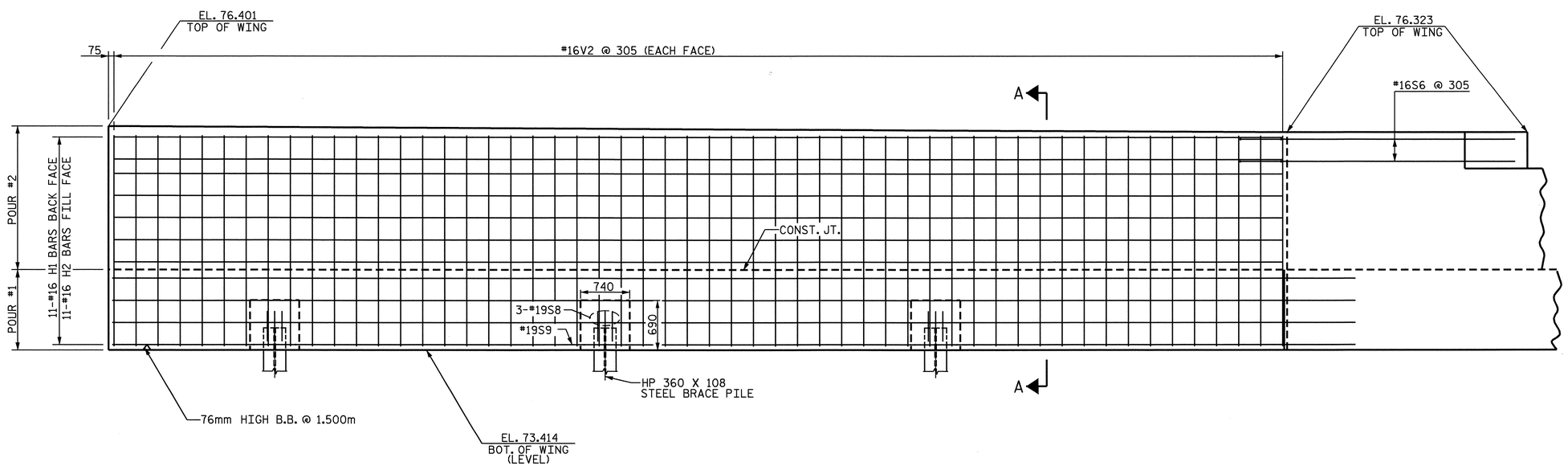

ELEVATION OF WING (W1)

BRACE PILE DETAILS ARE TYPICAL

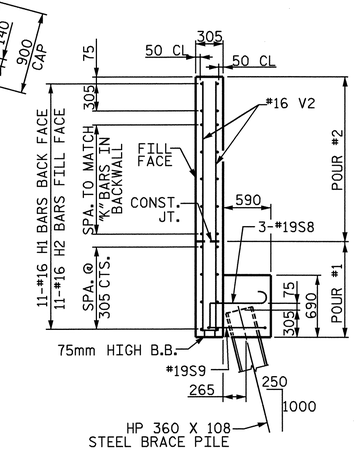

SECTION A-A

PROJECT NO. U-2519DA
CUMBERLAND COUNTY
STATION: 34+21.044-RP1BD-

SHEET 4 OF 6

STATE OF NORTH CAROLINA
DEPARTMENT OF TRANSPORTATION
RALEIGH

END BENT 1

NORTH CAROLINA PROFESSIONAL SEAL 12960 ENGINEER PAUL STEPHEN ERVIN
9-11-08

REVISIONS						SHEET NO.
NO.	BY:	DATE:	NO.	BY:	DATE:	S-338
1			3			TOTAL SHEETS
2			4			411

DRAWN BY : R.D. MARTIN DATE : 6-27-08
CHECKED BY : P.S. ERVIN DATE : 8-7-08

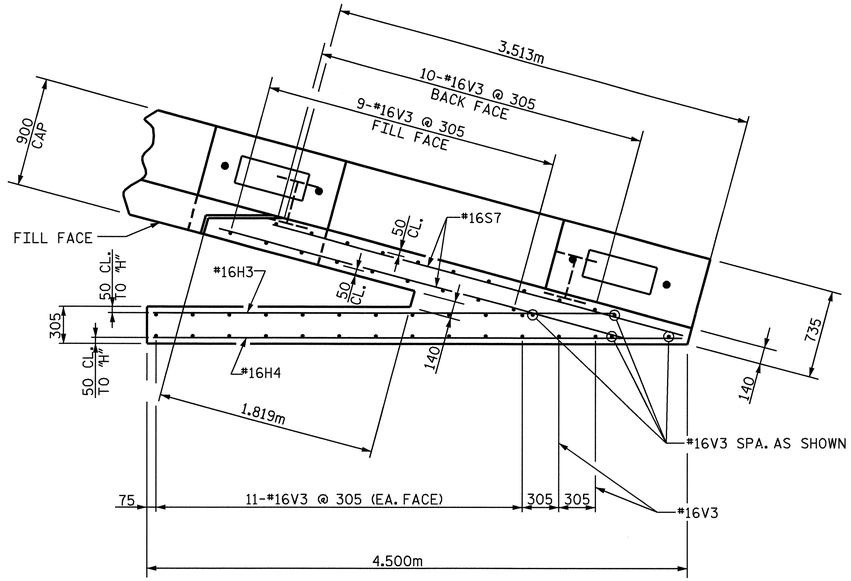

PLAN OF WING (W2)

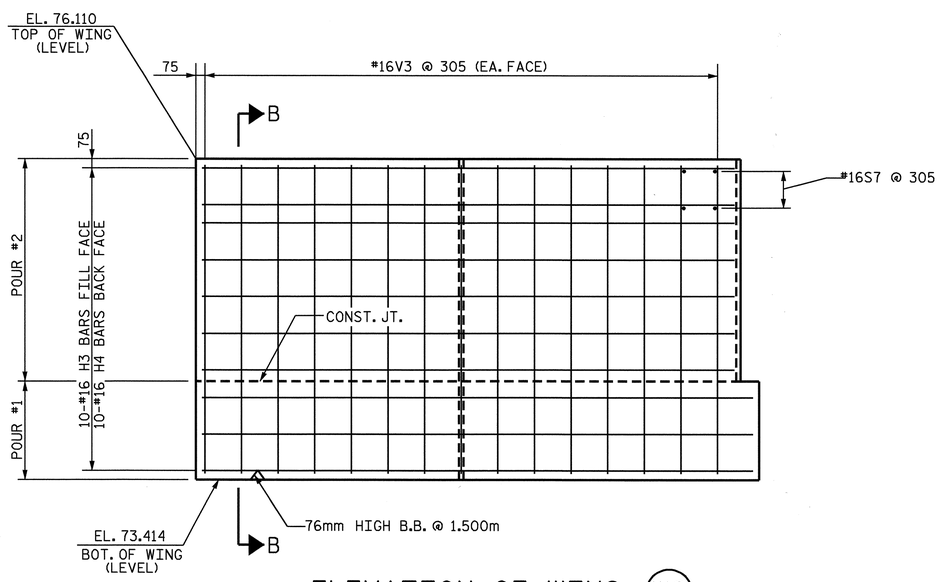

ELEVATION OF WING (W2)

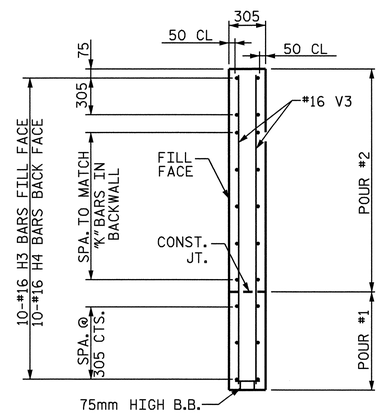

SECTION B-B

PROJECT NO. U-2519DA
CUMBERLAND COUNTY
STATION: 34+21.044-RP1BD-

SHEET 5 OF 6

STATE OF NORTH CAROLINA
DEPARTMENT OF TRANSPORTATION
RALEIGH

END BENT 1

NORTH CAROLINA PROFESSIONAL SEAL 12960 ENGINEER PAUL STEPHEN ERVIN
9-11-08

REVISIONS						SHEET NO.
NO.	BY:	DATE:	NO.	BY:	DATE:	S-339
1			3			TOTAL SHEETS
2			4			411

DRAWN BY : R.D. MARTIN DATE : 6-27-08
CHECKED BY : P.S. ERVIN DATE : 8-7-08

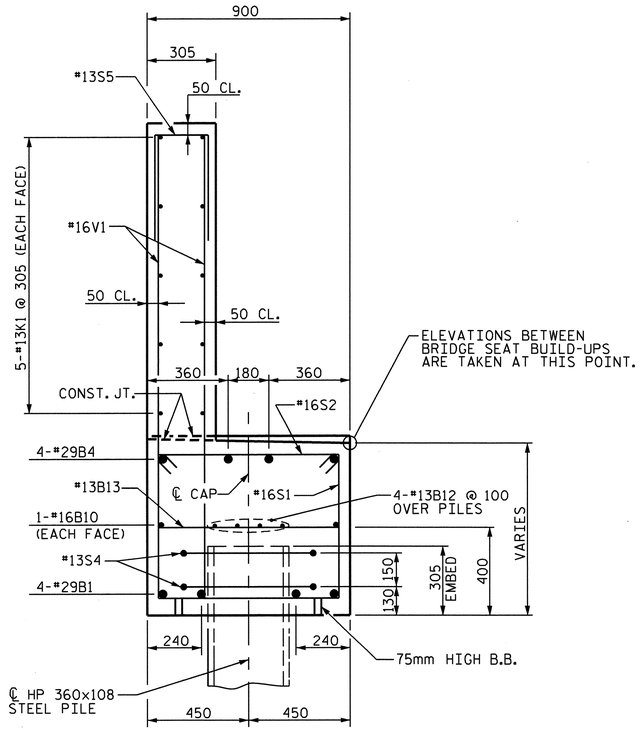

SECTION A-A

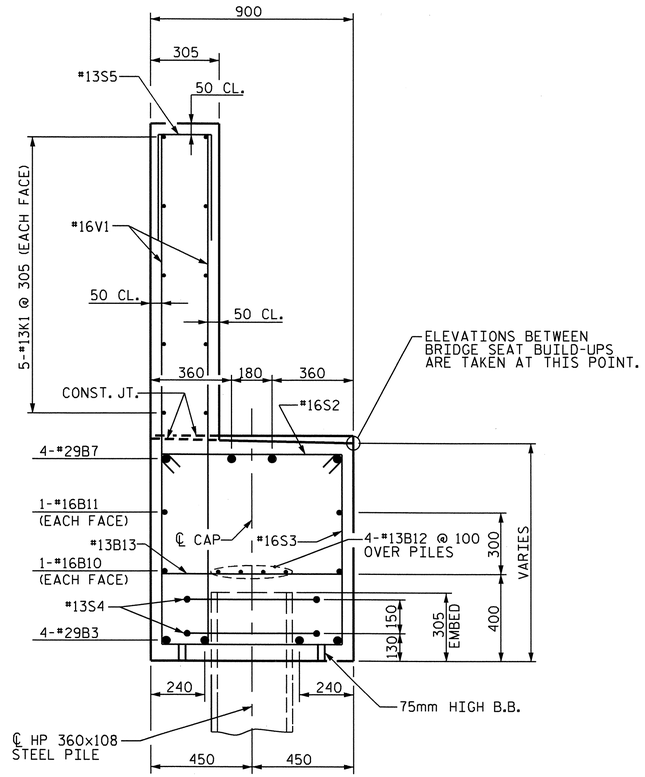

SECTION B-B

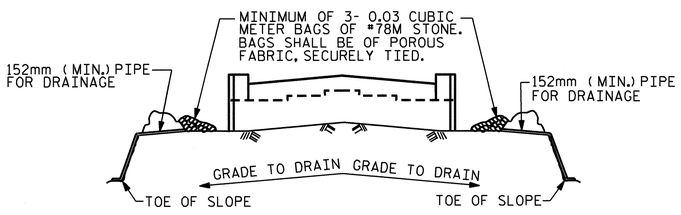

BAGGED STONE AND PIPE SHALL BE PLACED IMMEDIATELY AFTER COMPLETION OF END BENT EXCAVATION. PIPE MAY BE EITHER CONCRETE, CORRUGATED STEEL, CORRUGATED ALUMINUM ALLOY, OR CORRUGATED PLASTIC. PERFORATED PIPE WILL NOT BE ALLOWED.

BAGGED STONE SHALL REMAIN IN PLACE UNTIL THE ENGINEER DIRECTS THAT IT BE REMOVED. THE CONTRACTOR SHALL REMOVE AND DISPOSE OF SILT ACCUMULATIONS AT BAGGED STONE WHEN SO DIRECTED BY THE ENGINEER. BAGS SHALL BE REMOVED AND REPLACED WHENEVER THE ENGINEER DETERMINES THAT THEY HAVE DETERIORATED AND LOST THEIR EFFECTIVENESS.

NO SEPARATE PAYMENT WILL BE MADE FOR THIS WORK AND THE ENTIRE COST OF THIS WORK SHALL BE INCLUDED IN THE UNIT CONTRACT PRICE FOR THE SEVERAL PAY ITEMS.

TEMPORARY DRAINAGE AT END BENT

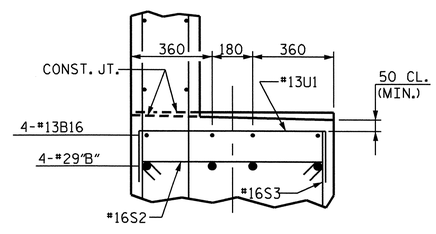

SECTION C

BAR TYPES

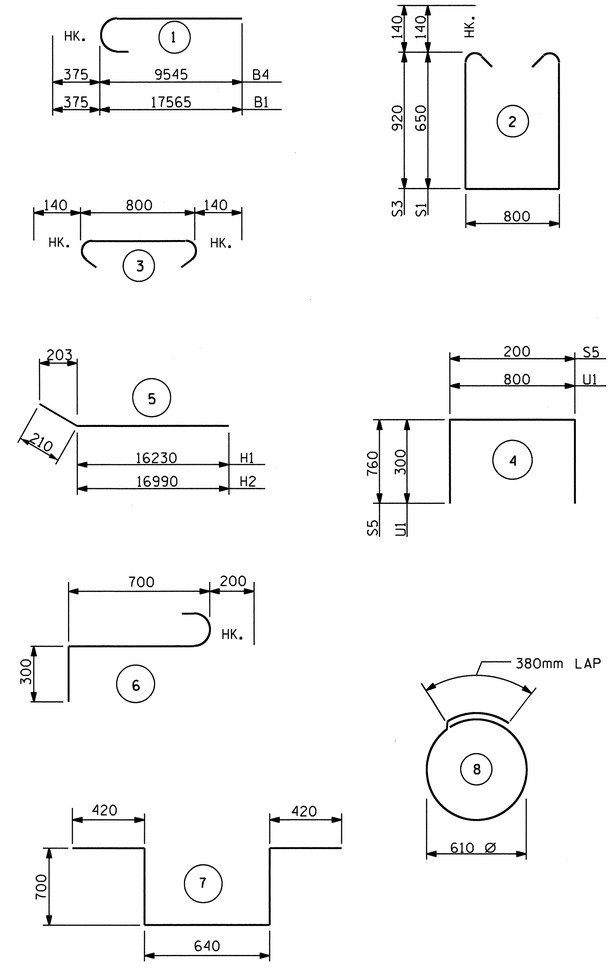

ALL BAR DIMENSIONS ARE OUT TO OUT.

BILL OF MATERIAL
END BENT NO. 1

BAR	NO.	SIZE	TYPE	LENGTH	WEIGHT
B1	8	#29	1	17940	726
B2	4	#29	STR	16280	330
B3	8	#29	STR	13920	563
B4	8	#29	1	9920	402
B5	4	#29	STR	12360	250
B6	4	#29	STR	16280	330
B7	4	#29	STR	15420	312
B8	4	#29	STR	12320	249
B9	4	#29	STR	12240	248
B10	10	#16	STR	15080	234
B11	6	#16	STR	13880	129
B12	36	#13	STR.	8620	308
B13	60	#13	STR	800	48
B14	4	#13	STR	5700	23
B15	4	#13	STR	6740	27
B16	20	#13	STR	7700	153
H1	11	#16	5	16440	281
H2	11	#16	5	17200	294
H3	10	#16	STR.	3840	60
H4	10	#16	STR.	4400	68
K1	90	#13	STR.	8620	771
S1	112	#16	2	2380	414
S2	267	#16	3	1080	448
S3	155	#16	2	2920	702
S4	60	#13	8	2300	137
S5	217	#13	4	1720	371
S6	4	#16	STR	3360	21
S7	4	#16	STR	3440	21
S8	9	#19	6	1200	24
S9	3	#19	7	2880	19
U1	119	#13	4	1400	166
V1	434	#16	STR	2080	1401
V2	126	#16	STR	2800	548
V3	47	#16	STR	2580	188
REINFORCING STEEL				kg.	10266

CLASS "A" CONCRETE (C.M.)			
	POUR 1	POUR 2	TOTAL
LEFT CAP ETC. @ W1	27.7	18.5	46.2
CENTER CAP & BACKWALL	23.7	10.1	33.8
RIGHT CAP ETC. @ W2	22.2	13.9	36.1
CLASS "A" CONCRETE		C.M.	116.1

HP 360x108 STEEL PILES (END BENT 1)		
NO. 33	LIN.M.	858.0

HP 360x108 STEEL PILES (APPROACH SLAB)		
NO. 4	LIN.M.	104.0

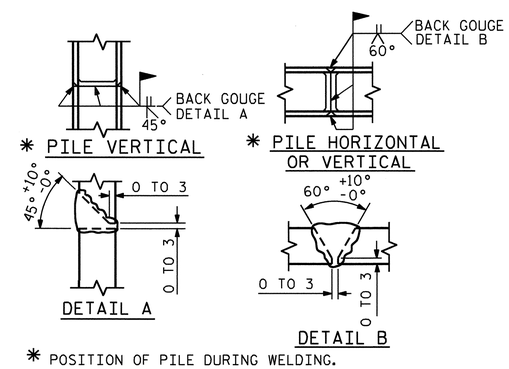

* POSITION OF PILE DURING WELDING.

PILE SPLICE DETAILS

PROJECT NO. U-2519DA
CUMBERLAND COUNTY
STATION: 34+21.044-RP1BD-

SHEET 6 OF 6

STATE OF NORTH CAROLINA
DEPARTMENT OF TRANSPORTATION
RALEIGH

END BENT 1

NORTH CAROLINA PROFESSIONAL SEAL 12960 ENGINEER PAUL STEPHEN ERVIN
11-15-11

REVISIONS								SHEET NO.
NO.	BY:	DATE:	NO.	BY:	DATE:			S-340
1			3					TOTAL SHEETS
2			4					411

DRAWN BY : R.D. MARTIN DATE : 6-27-08
CHECKED BY : P.S. ERVIN DATE : 8-7-08

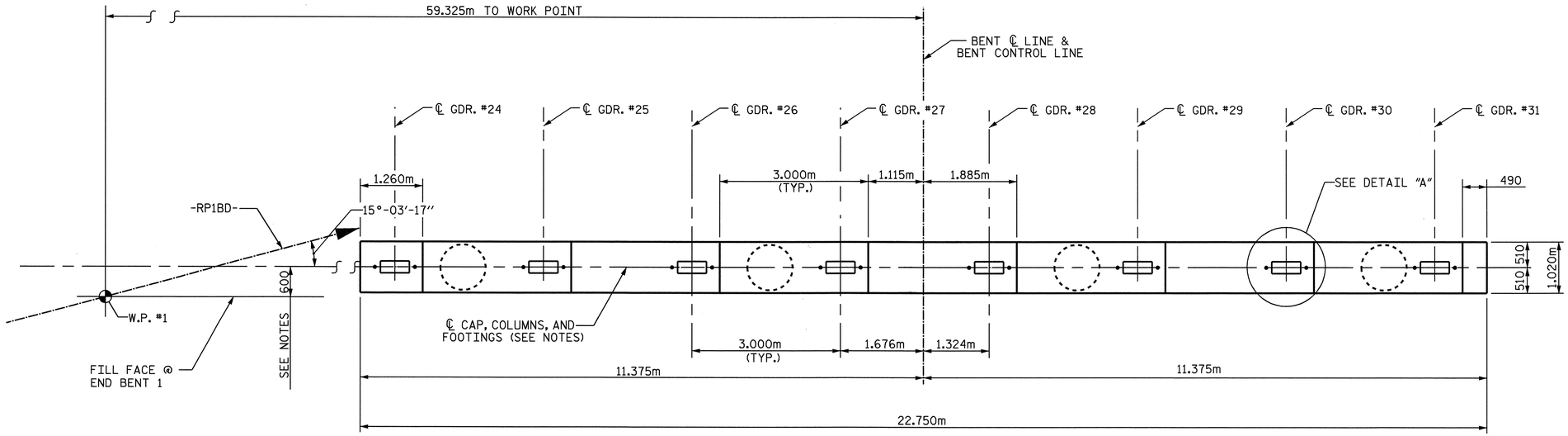

PLAN OF CAP

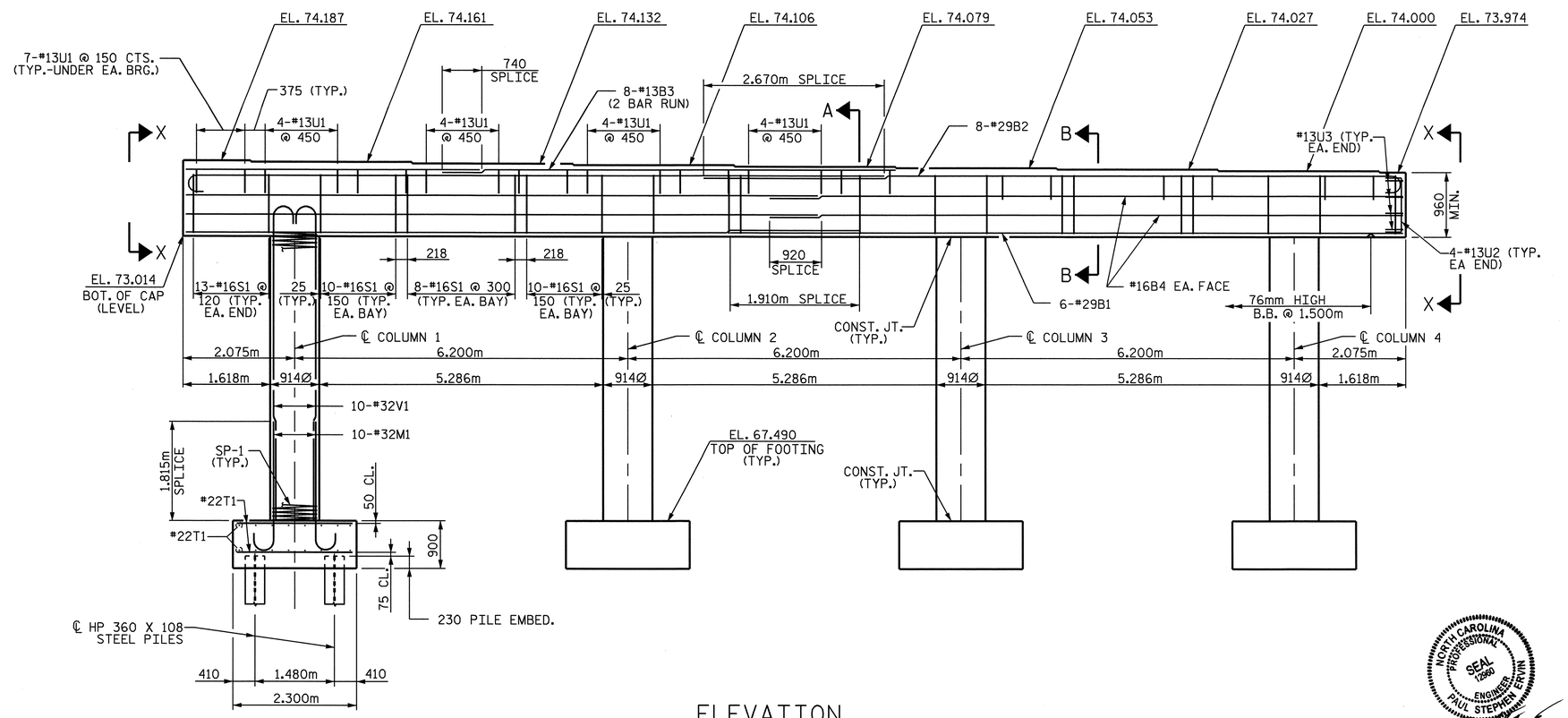

ELEVATION

FOOTING AND COLUMNS ARE TYPICAL

NOTES

THE TOP SURFACE AREAS OF THE BENT CAPS SHALL BE CURED IN ACCORDANCE WITH THE STANDARD SPECIFICATIONS EXCEPT THE MEMBRANE CURING COMPOUND METHOD SHALL NOT BE USED

STIRRUPS AND U1 BARS IN BENT CAP MAY BE SHIFTED AS NECESSARY TO CLEAR ANCHOR BOLTS.

FOR SECTIONS, SEE SHEET 2 OF 3.

FOR PILE SPLICE DETAILS, SEE SHEET 3 OF 3.

INVERT ALTERNATE STIRRUPS.

AN EPOXY COATING SHALL BE APPLIED TO THE CAP IN ACCORDANCE WITH SECTION 420-18 OF THE STANDARD SPECIFICATIONS.

THE CONTRACTOR'S ATTENTION IS CALLED TO THE FACT THE CENTERLINE OF THE CAP, COLUMNS AND FOOTINGS ARE OFFSET 600mm FROM THE FILL FACE AT END BENT 1. THE OFFSET IS IN THE DIRECTION TOWARD THE SURVEY LINE UNDER THE STRUCTURE (-COL1-).

HOOKS ON "V" BARS MAY BE TURNED AS NECESSARY FOR PLACING REINFORCING STEEL.

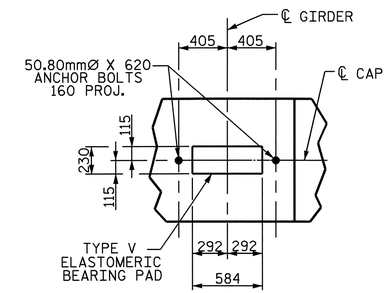

DETAIL "A"

PROJECT NO. U-2519DA
CUMBERLAND COUNTY
STATION: 34+21.044-RP1BD-

SHEET 1 OF 3

STATE OF NORTH CAROLINA
DEPARTMENT OF TRANSPORTATION
RALEIGH

BENT 1
(PART A)

NORTH CAROLINA PROFESSIONAL SEAL 12980 ENGINEER PAUL STEPHEN ERVIN
10-8-08

REVISIONS						SHEET NO.
NO.	BY:	DATE:	NO.	BY:	DATE:	S-341
1			3			TOTAL SHEETS
2			4			411

DRAWN BY : R.D. MARTIN DATE : 6-27-08
CHECKED BY : P.S. ERVIN DATE : 8-4-08

S:\PG3\U2519DA\U2519DA_sd_B*.dgn
rmartin

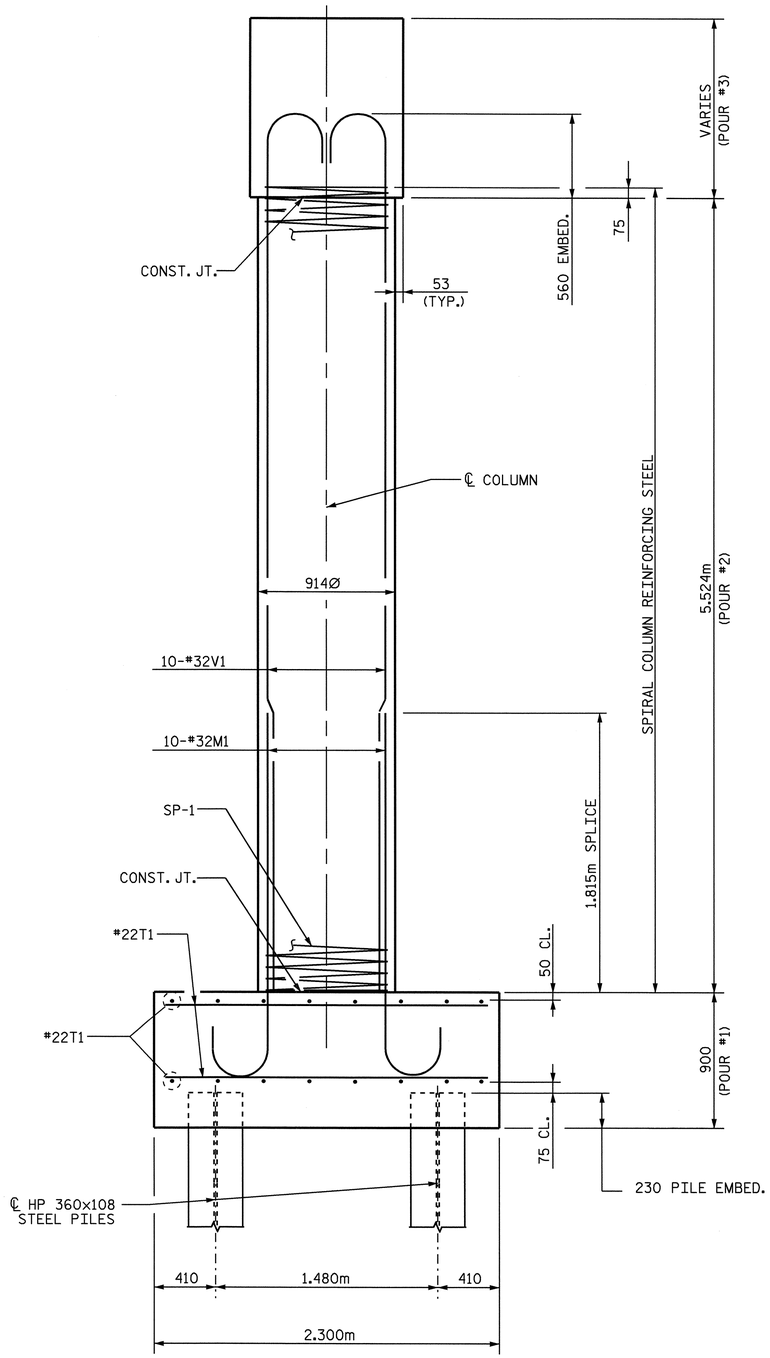

END ELEVATION

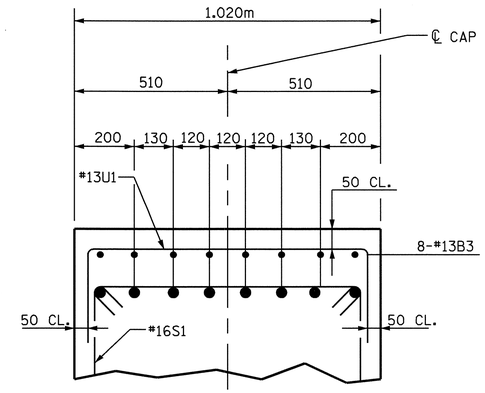

SECTION A

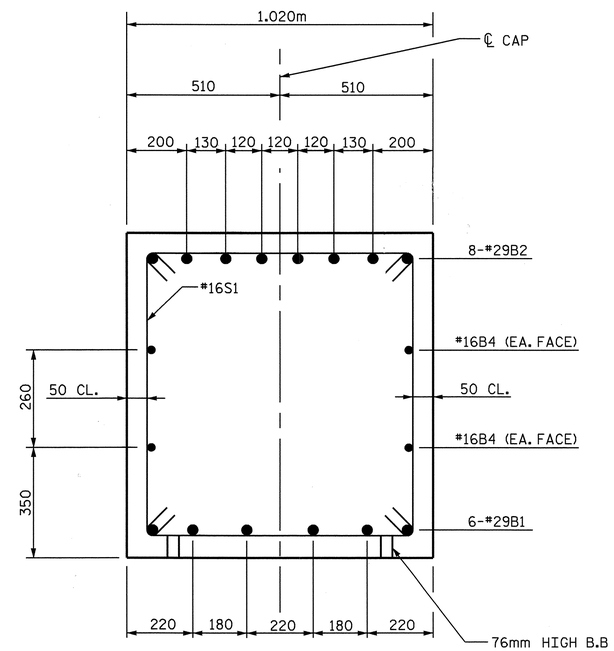

SECTION B-B

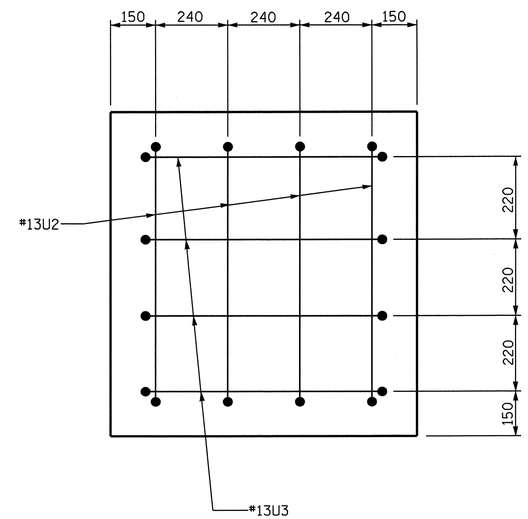

VIEW X-X

PROJECT NO. U-2519DA
CUMBERLAND COUNTY
STATION: 34+21.044-RP1BD-

SHEET 2 OF 3

STATE OF NORTH CAROLINA
DEPARTMENT OF TRANSPORTATION
RALEIGH

BENT 1
(PART A)

NORTH CAROLINA PROFESSIONAL SEAL 12960 ENGINEER PAUL STEPHEN ERVIN
10-8-08

REVISIONS						SHEET NO.
NO.	BY:	DATE:	NO.	BY:	DATE:	S-342
1			3			TOTAL SHEETS
2			4			411

DRAWN BY : R.D. MARTIN DATE : 6-27-08
CHECKED BY : P.S. ERVIN DATE : 8-4-08

S:\PG3\U2519DA\U2519DA_sd_B*.dgn
rmartin

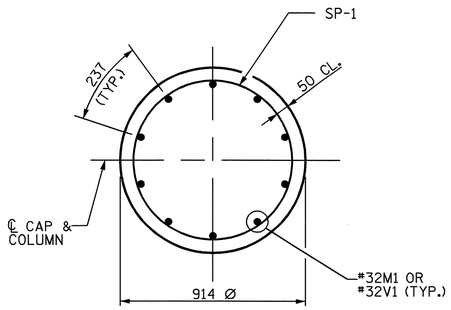

COLUMN SECTION
TYPICAL EACH COLUMN

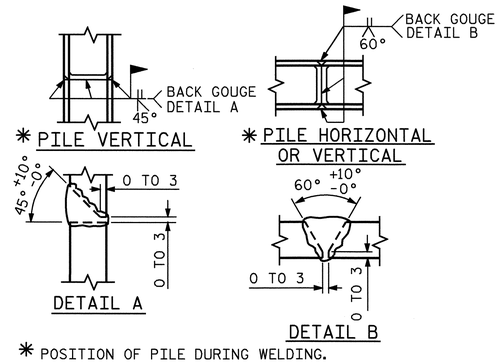

* POSITION OF PILE DURING WELDING.

PILE SPLICE DETAILS

BAR TYPES

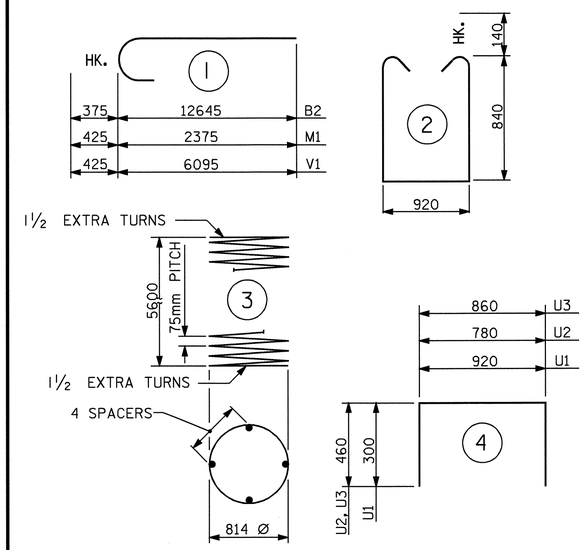

ALL BAR DIMENSIONS ARE OUT TO OUT.

BILL OF MATERIAL
BENT NO.1 (PART A)

BAR	NO.	SIZE	TYPE	LENGTH	WEIGHT
B1	12	#29	STR	12260	744
B2	16	#29	1	13020	1054
B3	16	#13	STR	6940	110
B4	8	#16	STR	11780	146
M1	40	#32	1	2800	717
S1	110	#16	2	2880	492
T1	128	#22	STR	2200	857
U1	72	#13	4	1520	109
U2	8	#13	4	1700	14
U3	8	#13	4	1780	14
V1	40	#32	1	6520	1670
SP-1	4	**	3	195540	777

REINFORCING STEEL kg 5927

SPIRAL COLUMN
REINFORCING STEEL kg 777

CLASS "A" CONCRETE
POUR #1 FOOTING 19.0 M3
POUR #2 COLUMN 14.5 M3
POUR #3 CAP 24.8 M3
CLASS "A" CONCRETE TOTAL 58.3 M3

HP 360x108 STEEL PILES
NO. 16 LIN.M. 320.0

FOUNDATION EXCAVATION: LUMP SUM

** THE SP-1 SPIRAL REINFORCING STEEL SHALL BE W20 OR D-20 COLD DRAWN WIRE OR #13 PLAIN OR DEFORMED BAR.

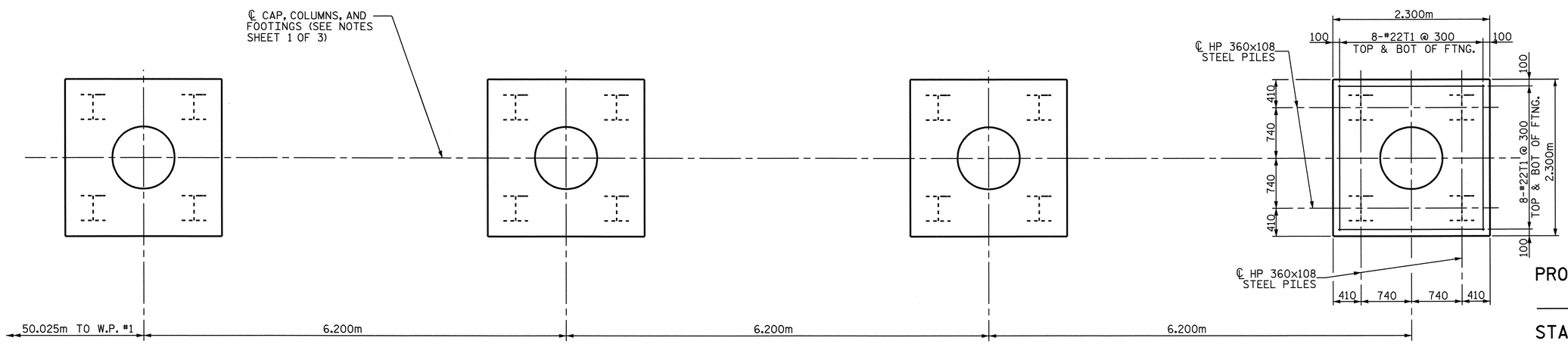

PLAN OF FOOTINGS
ALL FOOTINGS ARE TYPICAL

PROJECT NO. U-2519DA
CUMBERLAND COUNTY
STATION: 34+21.044-RP1BD-

SHEET 3 OF 3

STATE OF NORTH CAROLINA
DEPARTMENT OF TRANSPORTATION
RALEIGH

BENT 1
(PART A)

NORTH CAROLINA PROFESSIONAL SEAL 12960 ENGINEER PAUL STEPHEN ERVIN
10-8-08

REVISIONS						SHEET NO.
NO.	BY:	DATE:	NO.	BY:	DATE:	S-343
1			3			TOTAL SHEETS
2			4			411

DRAWN BY : R.D. MARTIN DATE : 6-27-08
CHECKED BY : P.S. ERVIN DATE : 8-4-08

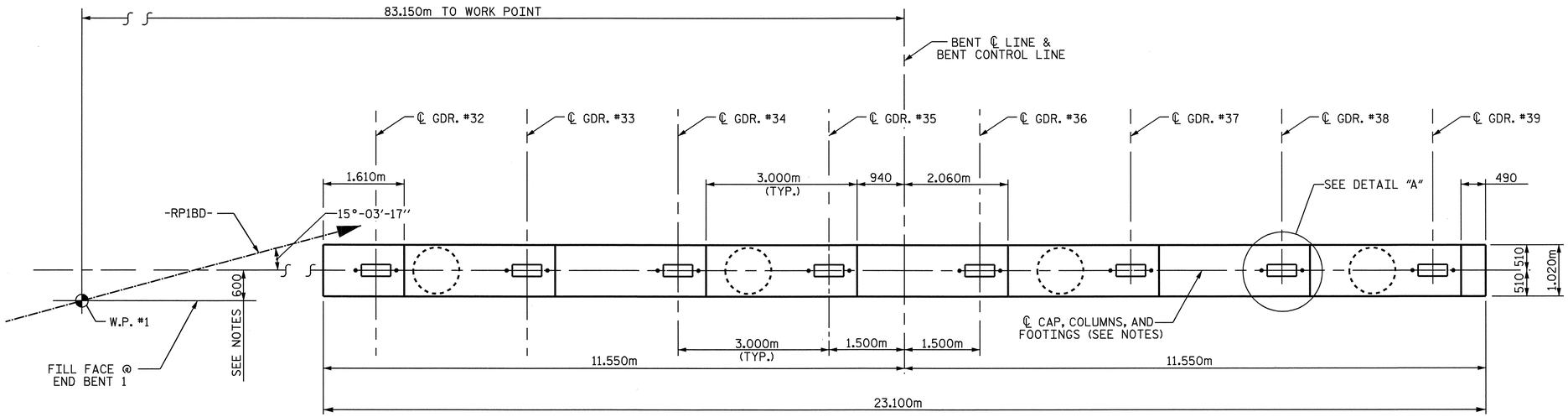

PLAN OF CAP

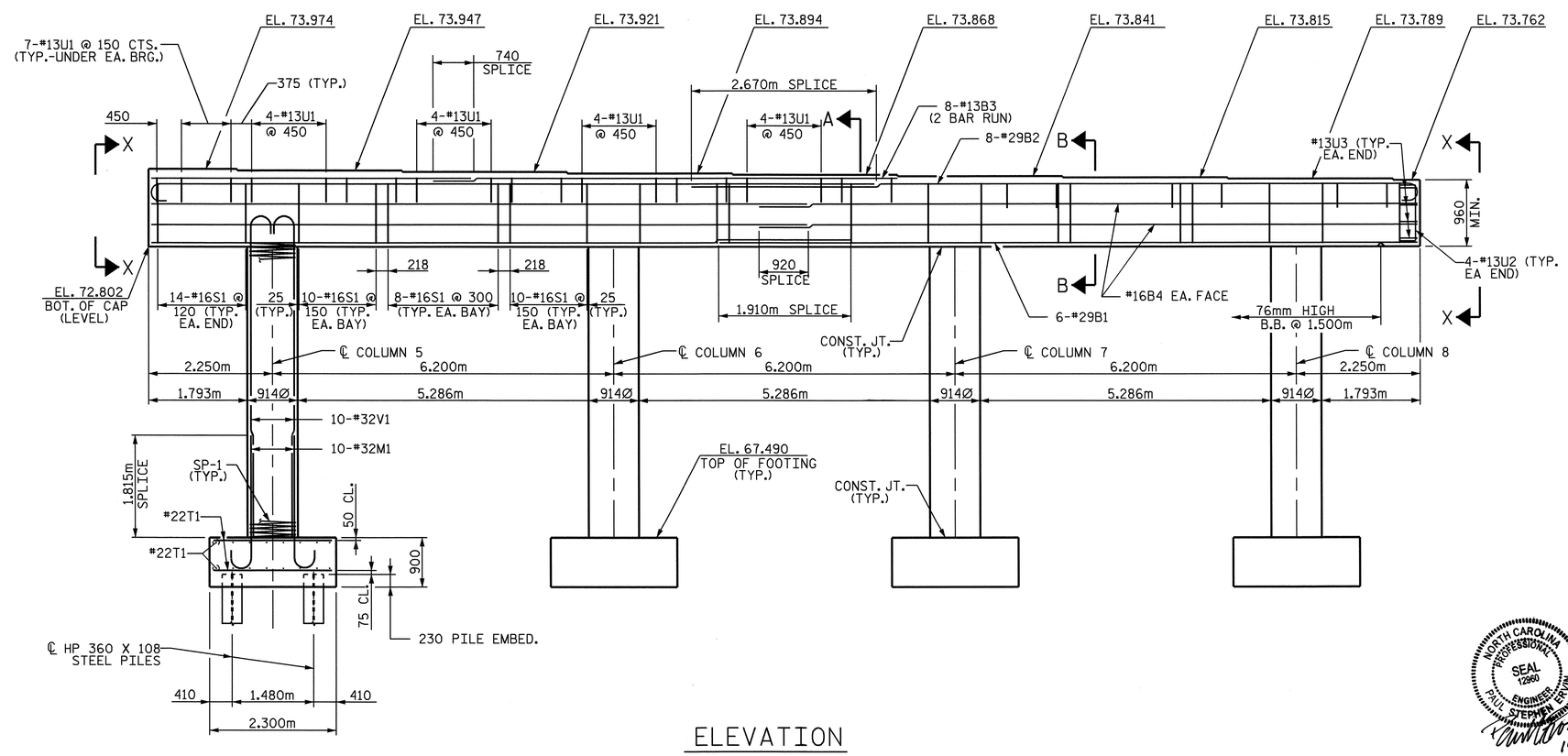

ELEVATION

FOOTING AND COLUMNS ARE TYPICAL

NOTES

THE TOP SURFACE AREAS OF THE BENT CAPS SHALL BE CURED IN ACCORDANCE WITH THE STANDARD SPECIFICATIONS EXCEPT THE MEMBRANE CURING COMPOUND METHOD SHALL NOT BE USED

STIRRUPS AND U1 BARS IN BENT CAP MAY BE SHIFTED AS NECESSARY TO CLEAR ANCHOR BOLTS.

FOR SECTIONS, SEE SHEET 2 OF 3.

FOR PILE SPLICE DETAILS, SEE SHEET 3 OF 3.

INVERT ALTERNATE STIRRUPS.

AN EPOXY COATING SHALL BE APPLIED TO THE CAP IN ACCORDANCE WITH SECTION 420-18 OF THE STANDARD SPECIFICATIONS.

THE CONTRACTOR'S ATTENTION IS CALLED TO THE FACT THE CENTERLINE OF THE CAP, COLUMNS AND FOOTINGS ARE OFFSET 600mm FROM THE FILL FACE AT END BENT 1. THE OFFSET IS IN THE DIRECTION TOWARD THE SURVEY LINE UNDER THE STRUCTURE (-COL1-).

HOOKS ON "V" BARS MAY BE TURNED AS NECESSARY FOR PLACING REINFORCING STEEL.

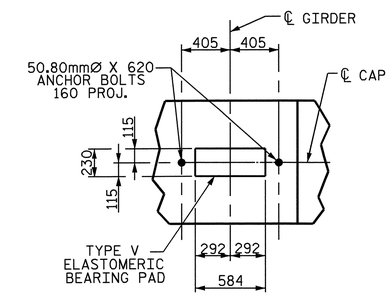

DETAIL "A"

PROJECT NO. U-2519DA
CUMBERLAND COUNTY
STATION: 34+21.044-RP1BD-

SHEET 1 OF 3

STATE OF NORTH CAROLINA
DEPARTMENT OF TRANSPORTATION
RALEIGH

BENT 1
(PART B)

NORTH CAROLINA PROFESSIONAL SEAL 12960 ENGINEER PAUL STEPHEN ERVIN

REVISIONS						SHEET NO.
NO.	BY:	DATE:	NO.	BY:	DATE:	S-344
1			3			TOTAL SHEETS
2			4			411

DRAWN BY : R.D. MARTIN DATE : 6-27-08
CHECKED BY : P.S. ERVIN DATE : 8-4-08

S:\PG3\U2519DA\U2519DA_sd_B*.dgn
rmartin

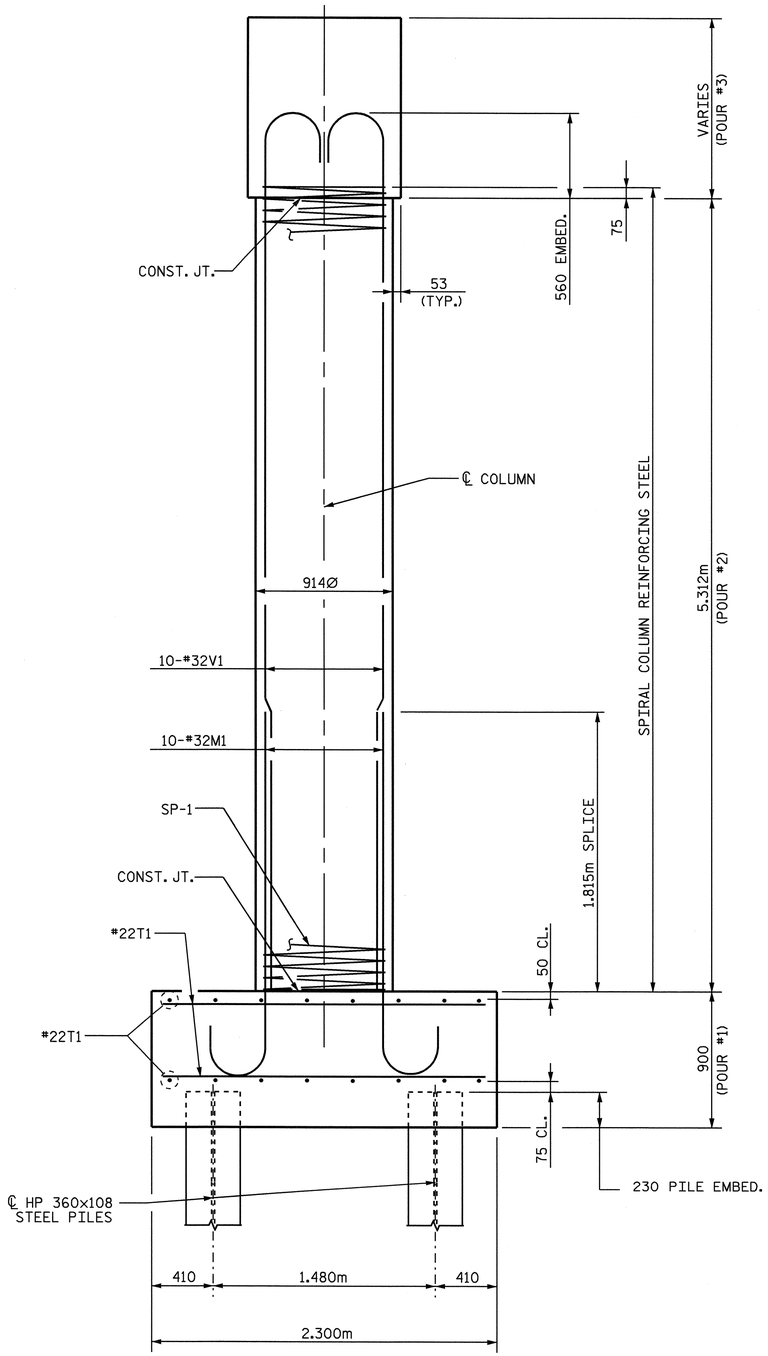

END ELEVATION

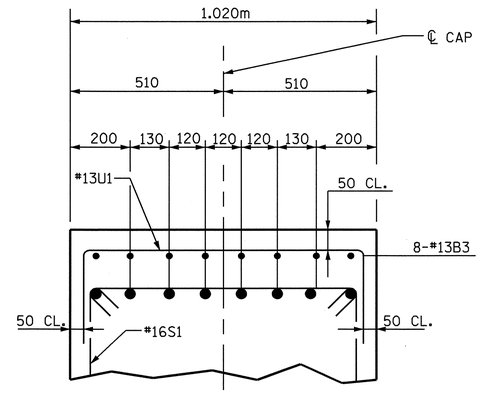

SECTION A

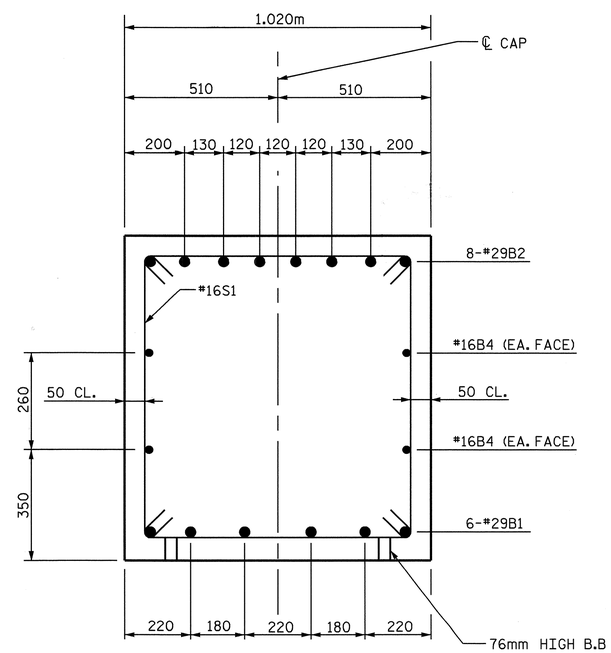

SECTION B-B

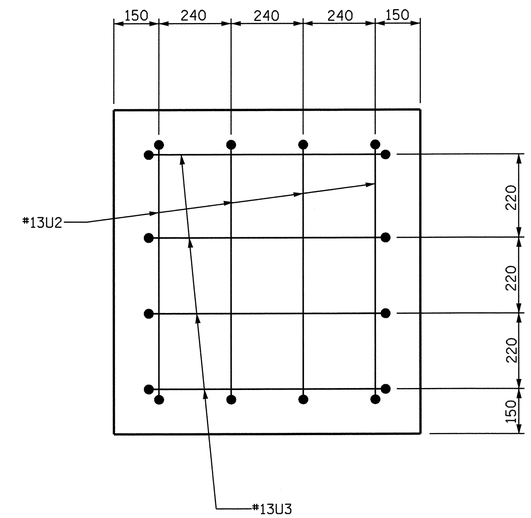

VIEW X-X

PROJECT NO. U-2519DA
CUMBERLAND COUNTY
STATION: 34+21.044-RP1BD-

SHEET 2 OF 3

STATE OF NORTH CAROLINA
DEPARTMENT OF TRANSPORTATION
RALEIGH

BENT 1
(PART B)

NORTH CAROLINA PROFESSIONAL SEAL 12960 ENGINEER STEPHEN PAUL ERVIN
10-8-08

REVISIONS						SHEET NO.
NO.	BY:	DATE:	NO.	BY:	DATE:	S-345
1			3			TOTAL SHEETS
2			4			411

DRAWN BY : R.D. MARTIN DATE : 6-27-08
CHECKED BY : P.S. ERVIN DATE : 8-4-08

S:\PG3\U2519DA\U2519DA_sd_B*.dgn
rmartin

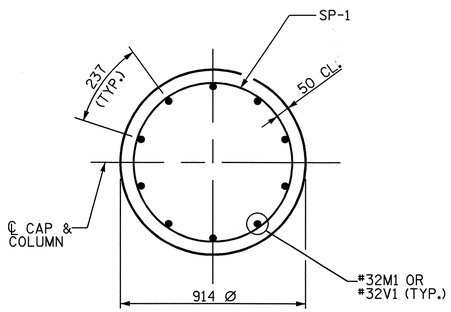

COLUMN SECTION
TYPICAL EACH COLUMN

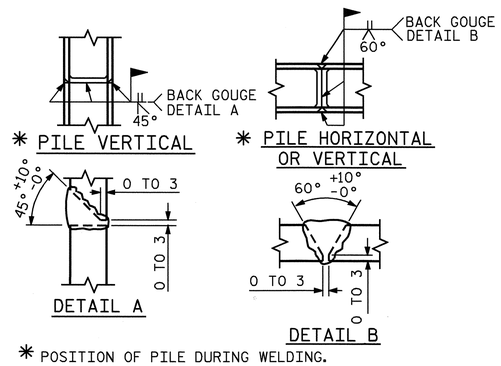

* POSITION OF PILE DURING WELDING.

PILE SPLICE DETAILS

BAR TYPES

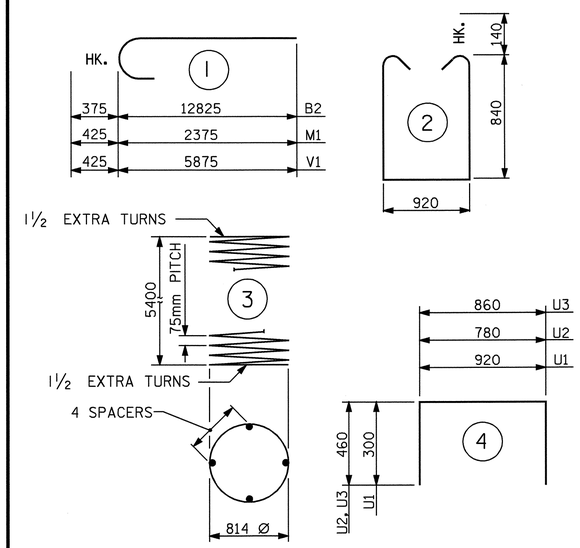

ALL BAR DIMENSIONS ARE OUT TO OUT.

BILL OF MATERIAL
BENT NO.1 (PART B)

BAR	NO.	SIZE	TYPE	LENGTH	WEIGHT
B1	12	#29	STR	12440	755
B2	16	#29	1	13200	1069
B3	16	#13	STR	7120	113
B4	8	#16	STR	11960	148
M1	40	#32	1	2800	717
S1	112	#16	2	2880	501
T1	128	#22	STR	2200	857
U1	73	#13	4	1520	110
U2	8	#13	4	1700	14
U3	8	#13	4	1780	14
V1	40	#32	1	6300	1614
SP-1	4	**	3	188820	751

REINFORCING STEEL kg 5912

SPIRAL COLUMN
REINFORCING STEEL kg 751

CLASS "A" CONCRETE
POUR #1 FOOTING 19.0 M3
POUR #2 COLUMN 13.9 M3
POUR #3 CAP 25.2 M3
CLASS "A" CONCRETE TOTAL 58.1 M3

HP 360x108 STEEL PILES
NO. 16 LIN.M. 320.0

FOUNDATION EXCAVATION: LUMP SUM

** THE SP-1 SPIRAL REINFORCING STEEL SHALL BE W20 OR D-20 COLD DRAWN WIRE OR #13 PLAIN OR DEFORMED BAR.

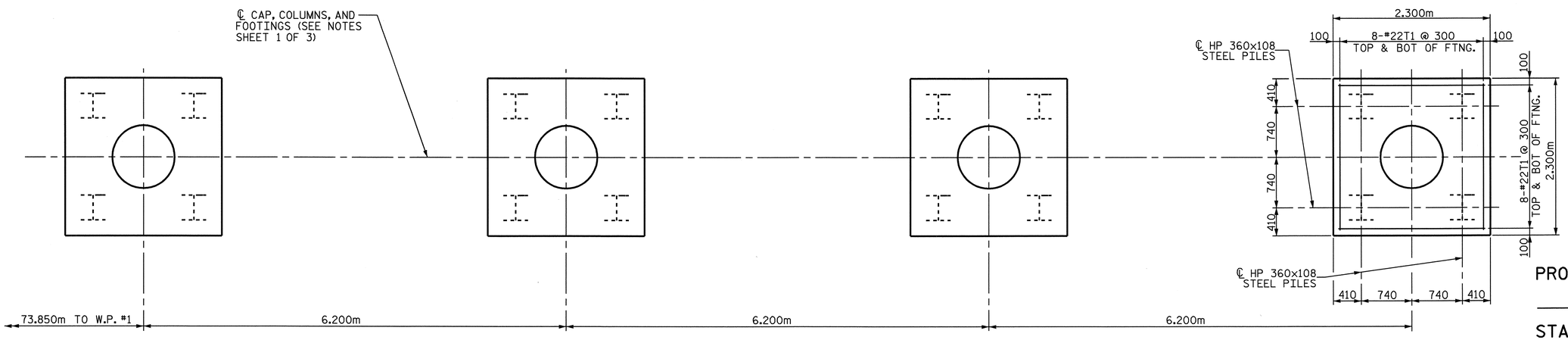

PLAN OF FOOTINGS
ALL FOOTINGS ARE TYPICAL

PROJECT NO. U-2519DA
CUMBERLAND COUNTY
STATION: 34+21.044-RP1BD-

SHEET 3 OF 3

STATE OF NORTH CAROLINA
DEPARTMENT OF TRANSPORTATION
RALEIGH

BENT 1
(PART B)

NORTH CAROLINA PROFESSIONAL SEAL 12960 ENGINEER PAUL STEPHEN ERVIN
10-8-08

REVISIONS						SHEET NO.
NO.	BY:	DATE:	NO.	BY:	DATE:	S-346
1			3			TOTAL SHEETS
2			4			411

DRAWN BY : R.D. MARTIN DATE : 6-27-08
CHECKED BY : P.S. ERVIN DATE : 8-4-08

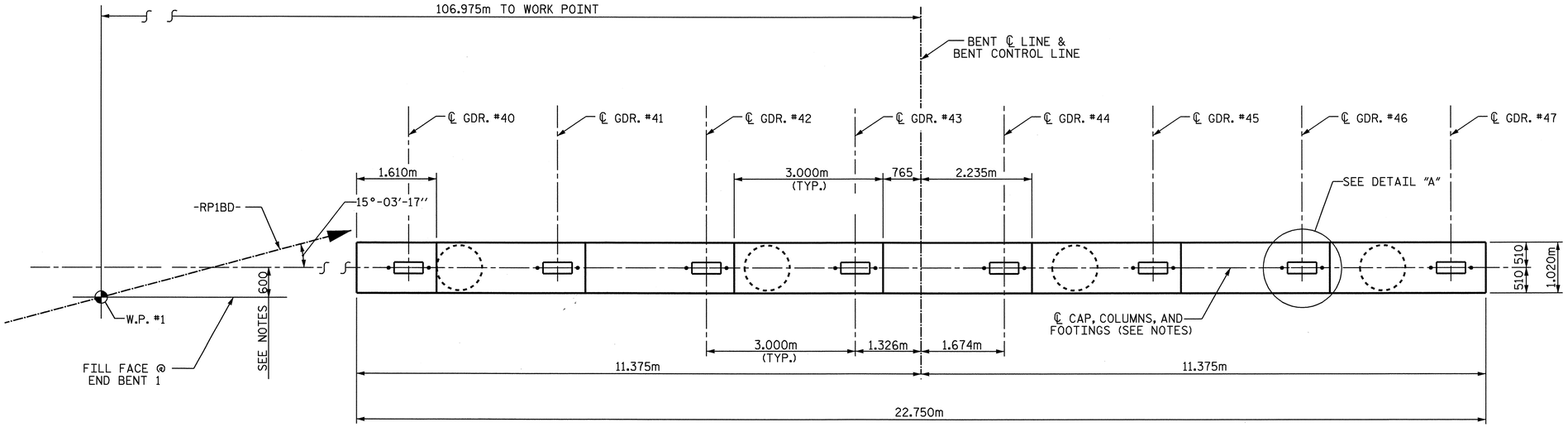

PLAN OF CAP

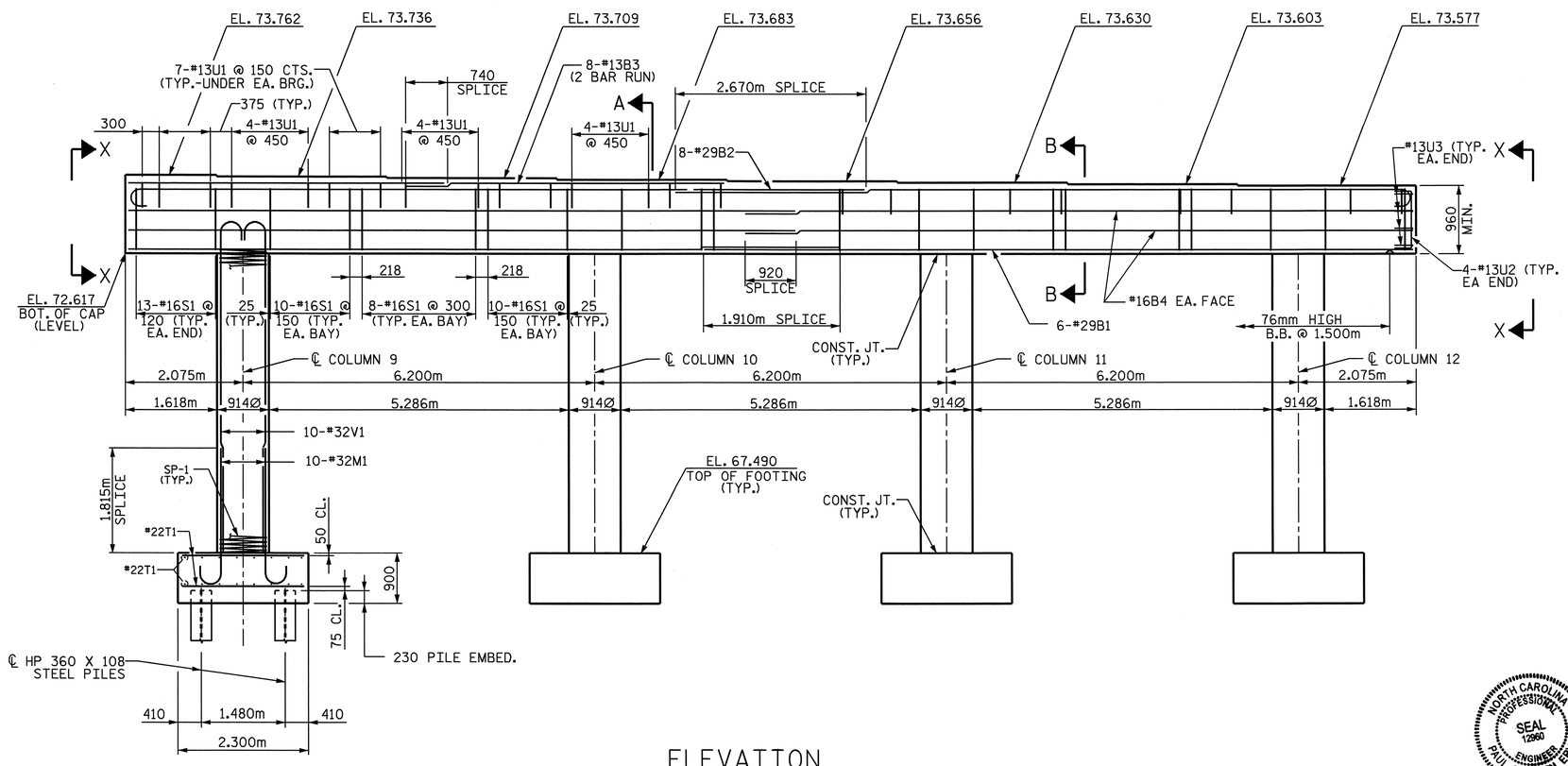

ELEVATION

FOOTING AND COLUMNS ARE TYPICAL

NOTES

THE TOP SURFACE AREAS OF THE BENT CAPS SHALL BE CURED IN ACCORDANCE WITH THE STANDARD SPECIFICATIONS EXCEPT THE MEMBRANE CURING COMPOUND METHOD SHALL NOT BE USED

STIRRUPS AND U1 BARS IN BENT CAP MAY BE SHIFTED AS NECESSARY TO CLEAR ANCHOR BOLTS.

FOR SECTIONS, SEE SHEET 2 OF 3.

FOR PILE SPLICE DETAILS, SEE SHEET 3 OF 3.

INVERT ALTERNATE STIRRUPS.

AN EPOXY COATING SHALL BE APPLIED TO THE CAP IN ACCORDANCE WITH SECTION 420-18 OF THE STANDARD SPECIFICATIONS.

THE CONTRACTOR'S ATTENTION IS CALLED TO THE FACT THE CENTERLINE OF THE CAP, COLUMNS AND FOOTINGS ARE OFFSET 600mm FROM THE FILL FACE AT END BENT 1. THE OFFSET IS IN THE DIRECTION TOWARD THE SURVEY LINE UNDER THE STRUCTURE (-COL1-).

HOOKS ON "V" BARS MAY BE TURNED AS NECESSARY FOR PLACING REINFORCING STEEL.

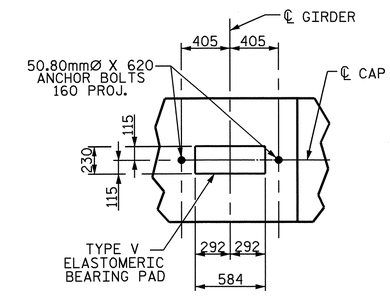

DETAIL "A"

PROJECT NO. U-2519DA
CUMBERLAND COUNTY
STATION: 34+21.044-RP1BD-

SHEET 1 OF 3

STATE OF NORTH CAROLINA
DEPARTMENT OF TRANSPORTATION
RALEIGH

BENT 1
(PART C)

NORTH CAROLINA PROFESSIONAL SEAL 12960 ENGINEER PAUL STEPHEN ERVIN

REVISIONS							SHEET NO.
NO.	BY:	DATE:	NO.	BY:	DATE:		S-347
1			3				TOTAL SHEETS
2			4				411

DRAWN BY : R.D. MARTIN DATE : 6-27-08
CHECKED BY : P.S. ERVIN DATE : 8-4-08

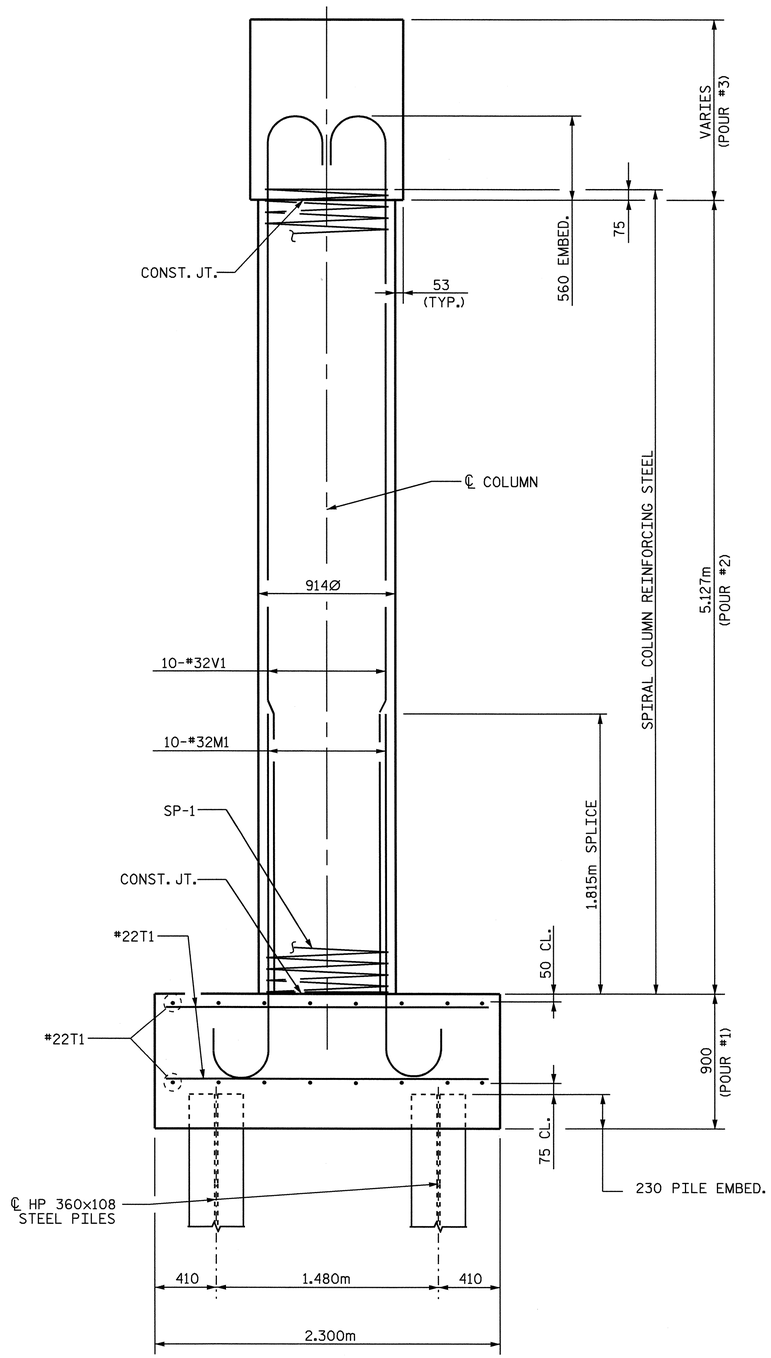

END ELEVATION

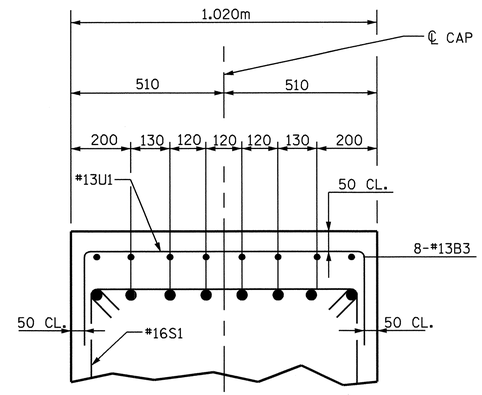

SECTION A

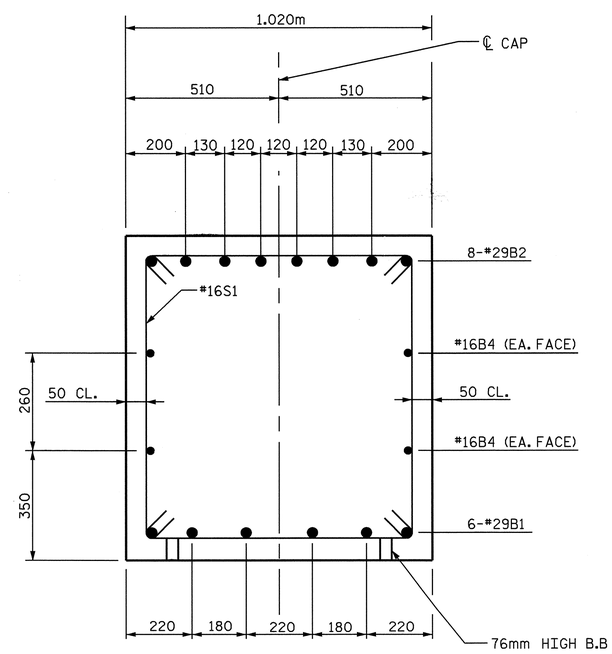

SECTION B-B

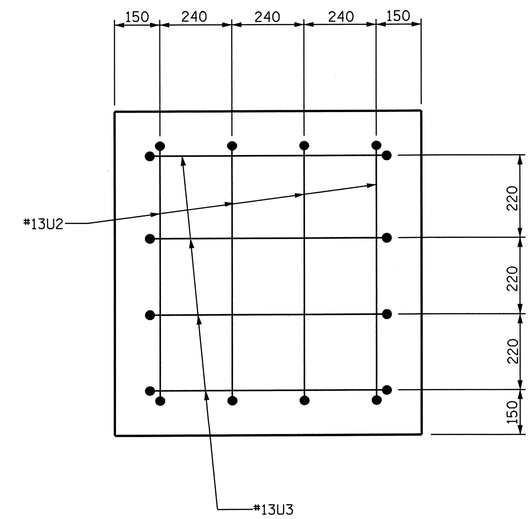

VIEW X-X

PROJECT NO. U-2519DA
CUMBERLAND COUNTY
STATION: 34+21.044-RP1BD-

SHEET 2 OF 3

STATE OF NORTH CAROLINA
DEPARTMENT OF TRANSPORTATION
RALEIGH

BENT 1
(PART C)

NORTH CAROLINA PROFESSIONAL SEAL 12960 ENGINEER PAUL STEPHEN ERVIN
1-8-08

REVISIONS						SHEET NO.
NO.	BY:	DATE:	NO.	BY:	DATE:	S-348
1			3			TOTAL SHEETS
2			4			All

DRAWN BY : R.D. MARTIN DATE : 6-27-08
CHECKED BY : P.S. ERVIN DATE : 8-4-08

S:\PG3\U2519DA\U2519DA_sd_B*.dgn
rmartin

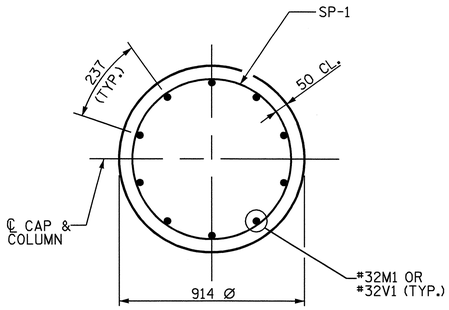

COLUMN SECTION
TYPICAL EACH COLUMN

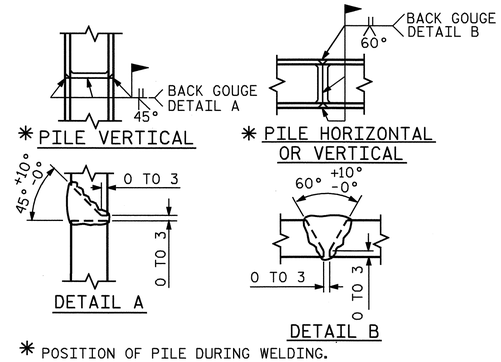

* POSITION OF PILE DURING WELDING.

PILE SPLICE DETAILS

BAR TYPES

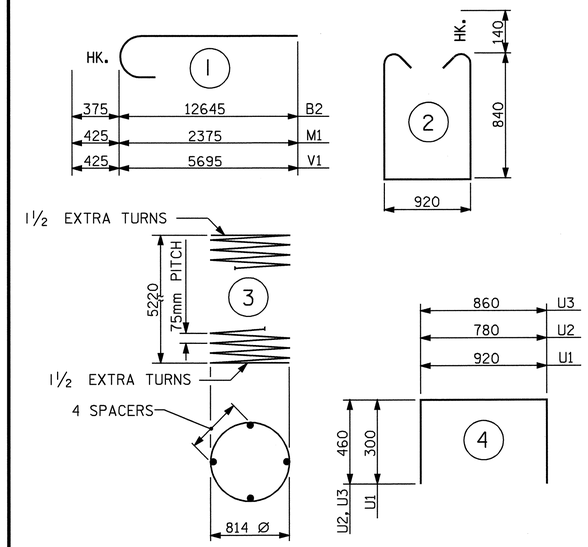

ALL BAR DIMENSIONS ARE OUT TO OUT.

BILL OF MATERIAL
BENT NO.1 (PART C)

BAR	NO.	SIZE	TYPE	LENGTH	WEIGHT
B1	12	#29	STR	12260	744
B2	16	#29	1	13020	1054
B3	16	#13	STR	5620	89
B4	8	#16	STR	11780	146
M1	40	#32	1	2800	717
S1	110	#16	2	2880	492
T1	128	#22	STR	2200	857
U1	69	#13	4	1520	104
U2	8	#13	4	1700	14
U3	8	#13	4	1780	14
V1	40	#32	1	6120	1568
SP-1	4	**	3	182780	727

REINFORCING STEEL kg 5799

SPIRAL COLUMN
REINFORCING STEEL kg 727

CLASS "A" CONCRETE
POUR #1 FOOTING 19.0 M3
POUR #2 COLUMN 13.4 M3
POUR #3 CAP 24.2 M3
CLASS "A" CONCRETE TOTAL 56.6 M3

HP 360x108 STEEL PILES
NO. 16 LIN.M. 320.0

FOUNDATION EXCAVATION: LUMP SUM

** THE SP-1 SPIRAL REINFORCING STEEL SHALL BE W20 OR D-20 COLD DRAWN WIRE OR #13 PLAIN OR DEFORMED BAR.

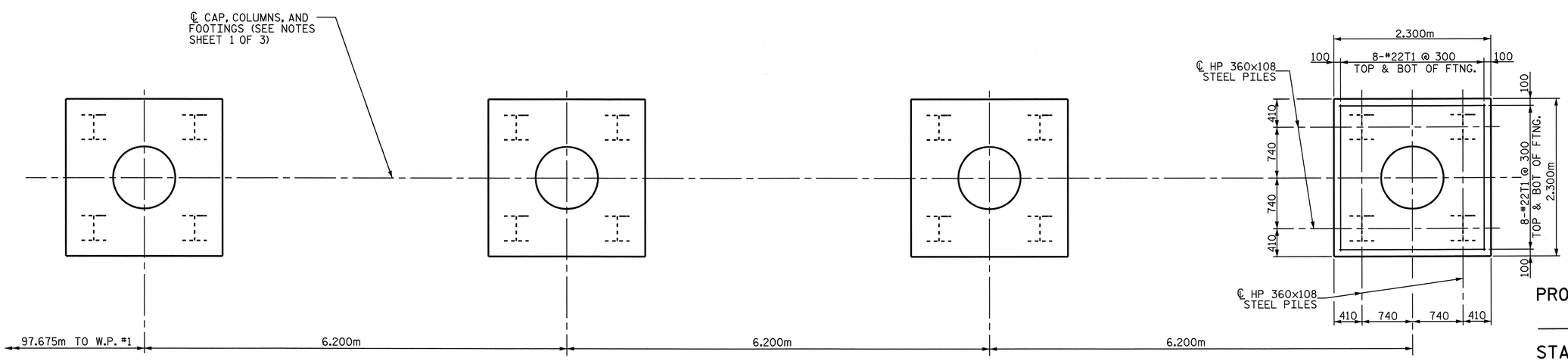

PLAN OF FOOTINGS
ALL FOOTINGS ARE TYPICAL

PROJECT NO. U-2519DA
CUMBERLAND COUNTY
STATION: 34+21.044-RP1BD-

SHEET 3 OF 3

STATE OF NORTH CAROLINA
DEPARTMENT OF TRANSPORTATION
RALEIGH

BENT 1
(PART C)

NORTH CAROLINA PROFESSIONAL SEAL 12960 ENGINEER PAUL STEPHEN ERVIN
10-8-08

REVISIONS						SHEET NO.
NO.	BY:	DATE:	NO.	BY:	DATE:	S-349
1			3			TOTAL SHEETS
2			4			411

DRAWN BY : R.D. MARTIN DATE : 6-27-08
CHECKED BY : P.S. ERVIN DATE : 8-4-08

S:\PG3\U2519DA\U2519DA_sd_B*.dgn
rmartin

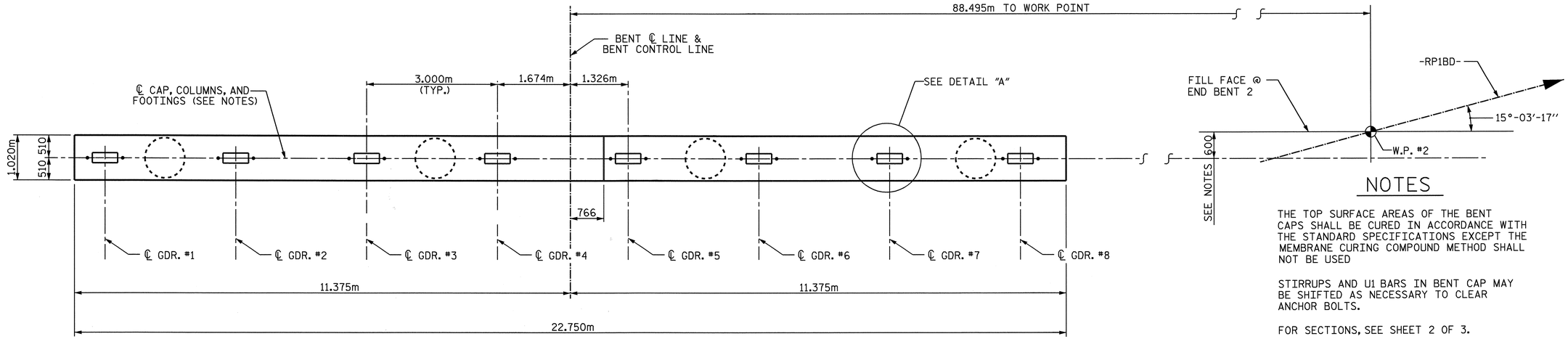

PLAN OF CAP

NOTES

THE TOP SURFACE AREAS OF THE BENT CAPS SHALL BE CURED IN ACCORDANCE WITH THE STANDARD SPECIFICATIONS EXCEPT THE MEMBRANE CURING COMPOUND METHOD SHALL NOT BE USED

STIRRUPS AND U1 BARS IN BENT CAP MAY BE SHIFTED AS NECESSARY TO CLEAR ANCHOR BOLTS.

FOR SECTIONS, SEE SHEET 2 OF 3.

FOR PILE SPLICE DETAILS, SEE SHEET 3 OF 3.

INVERT ALTERNATE STIRRUPS.

AN EPOXY COATING SHALL BE APPLIED TO THE CAP IN ACCORDANCE WITH SECTION 420-18 OF THE STANDARD SPECIFICATIONS.

THE CONTRACTOR'S ATTENTION IS CALLED TO THE FACT THE CENTERLINE OF THE CAP, COLUMNS AND FOOTINGS ARE OFFSET 600mm FROM THE FILL FACE AT END BENT 2. THE OFFSET IS IN THE DIRECTION TOWARD THE SURVEY LINE UNDER THE STRUCTURE (-COL1-).

HOOKS ON "V" BARS MAY BE TURNED AS NECESSARY FOR PLACING REINFORCING STEEL.

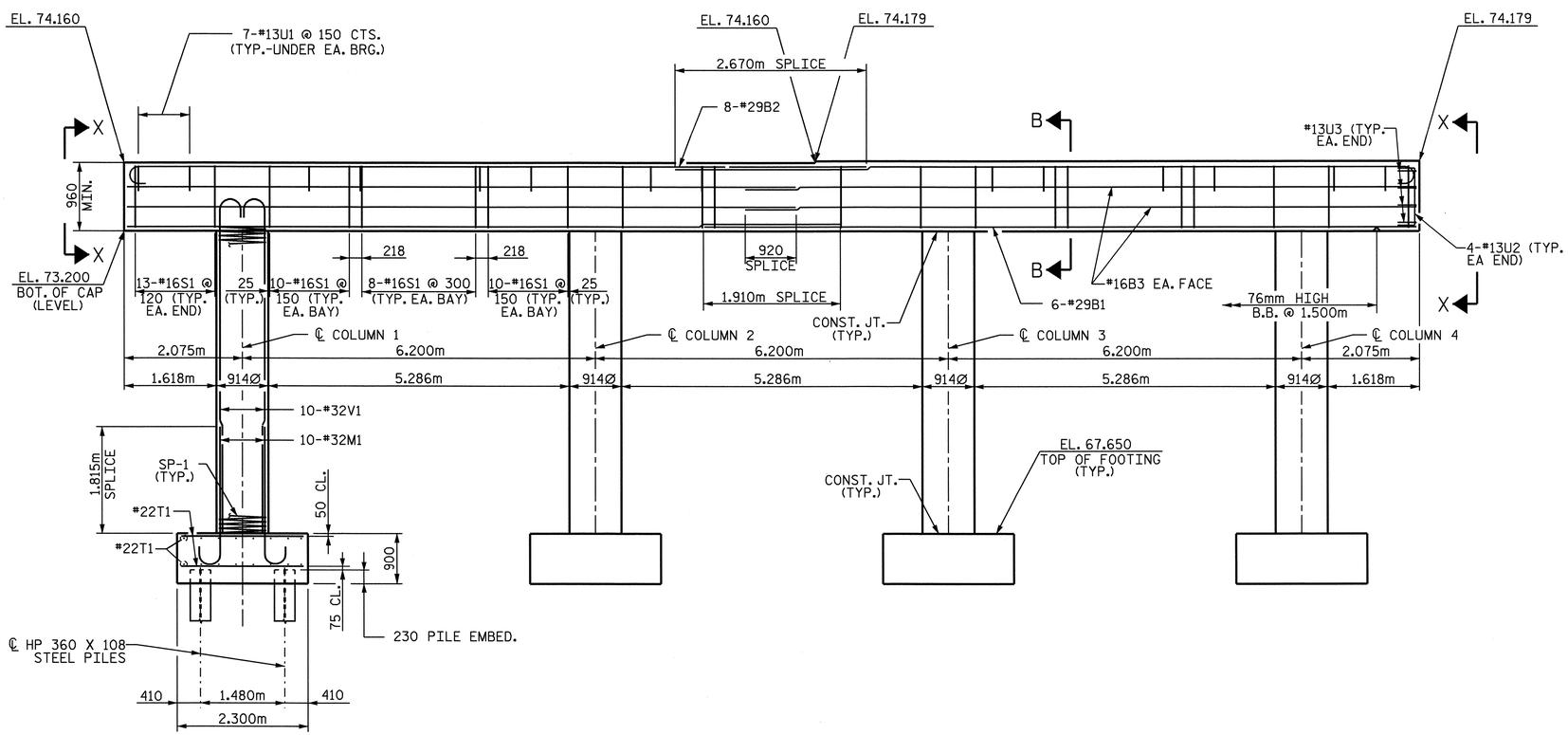

ELEVATION

FOOTING AND COLUMNS ARE TYPICAL

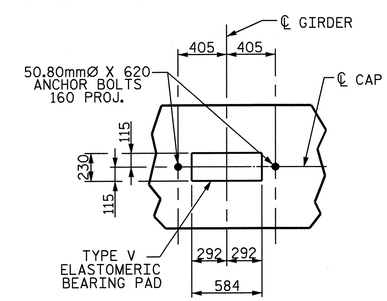

DETAIL "A"

PROJECT NO. U-2519DA
CUMBERLAND COUNTY
STATION: 34+21.044-RP1BD-

SHEET 1 OF 3

STATE OF NORTH CAROLINA
DEPARTMENT OF TRANSPORTATION
RALEIGH

BENT 2
(PART A)

NORTH CAROLINA PROFESSIONAL SEAL 12960 ENGINEER PAUL STEPHEN ERVIN
10-9-08

REVISIONS						SHEET NO.
NO.	BY:	DATE:	NO.	BY:	DATE:	S-350
1			3			TOTAL SHEETS
2			4			411

DRAWN BY : R.D. MARTIN DATE : 6-27-08
CHECKED BY : P.S. ERVIN DATE : 8-4-08

S:\PG3\U2519DA\U2519DA_sd_B*.dgn
rmartin

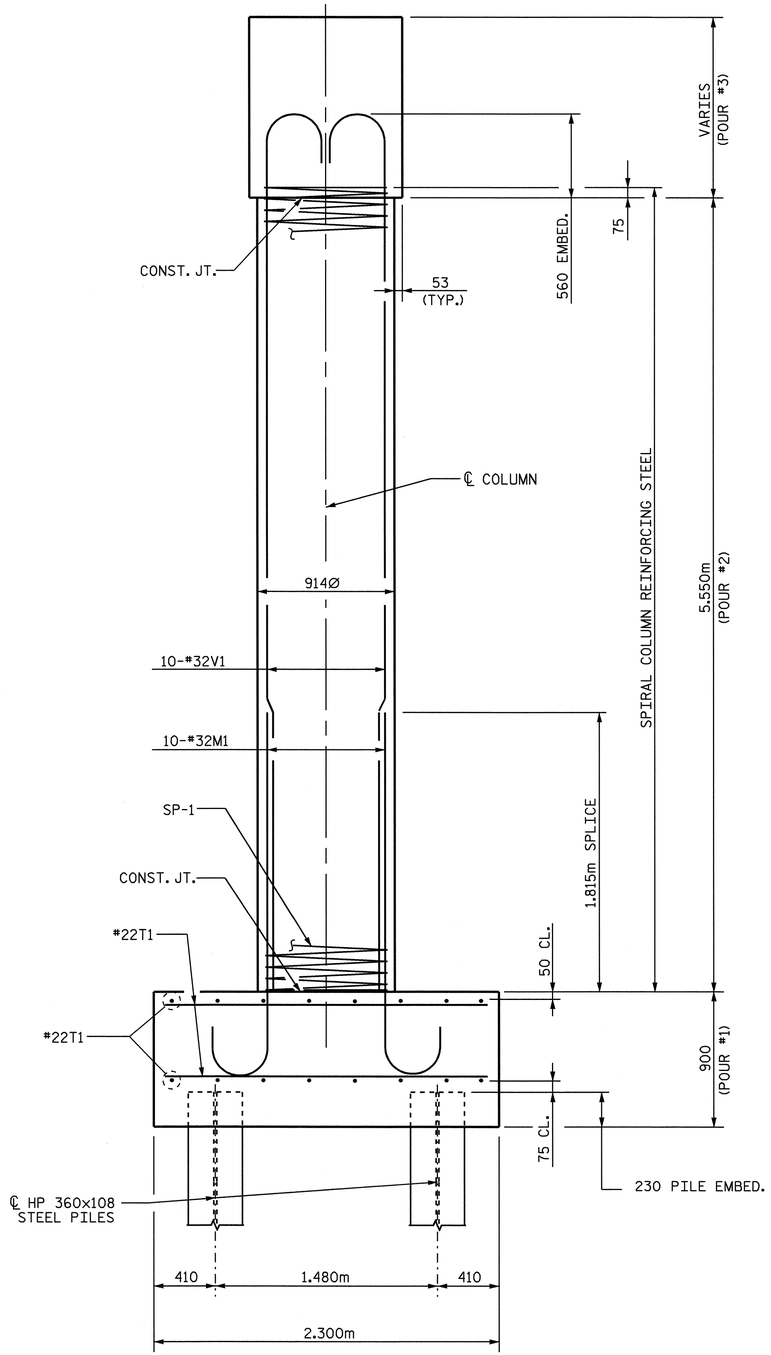

END ELEVATION

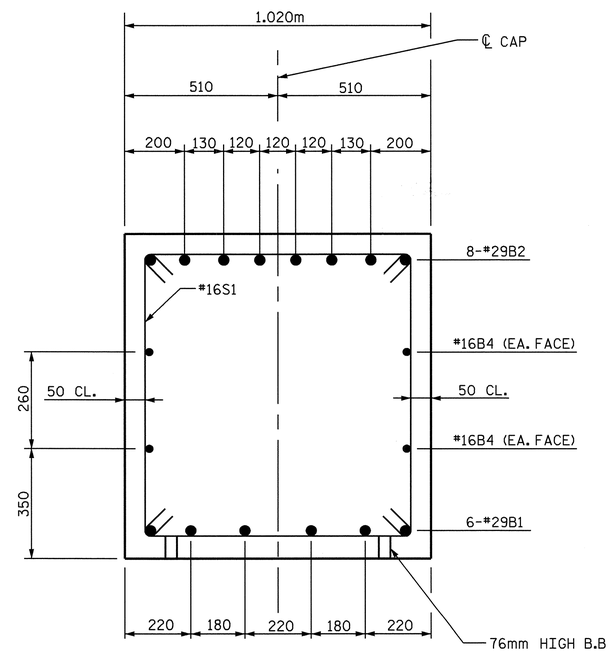

SECTION B-B

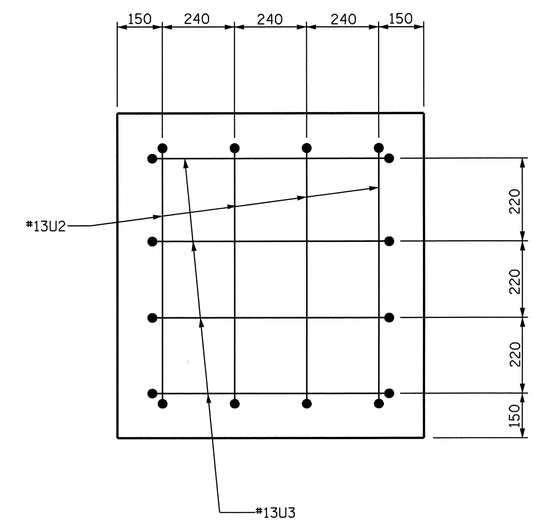

VIEW X-X

PROJECT NO. U-2519DA
CUMBERLAND COUNTY
STATION: 34+21.044-RP1BD-

SHEET 2 OF 3

STATE OF NORTH CAROLINA
DEPARTMENT OF TRANSPORTATION
RALEIGH

BENT 2
(PART A)

NORTH CAROLINA PROFESSIONAL SEAL 12960 ENGINEER PAUL STEPHEN ERVIN
10-8-08

REVISIONS						SHEET NO.
NO.	BY:	DATE:	NO.	BY:	DATE:	S-351
1			3			TOTAL SHEETS
2			4			411

DRAWN BY : R.D. MARTIN DATE : 6-27-08
CHECKED BY : P.S. ERVIN DATE : 8-4-08

S:\PG3\U2519DA\U2519DA_sd_B*.dgn
rmartin

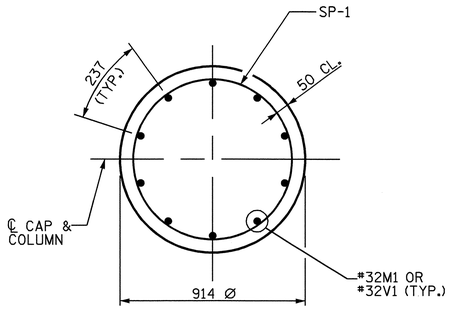

COLUMN SECTION
TYPICAL EACH COLUMN

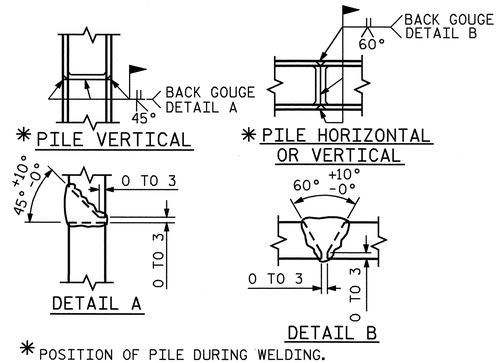

* POSITION OF PILE DURING WELDING.

PILE SPLICE DETAILS

BAR TYPES

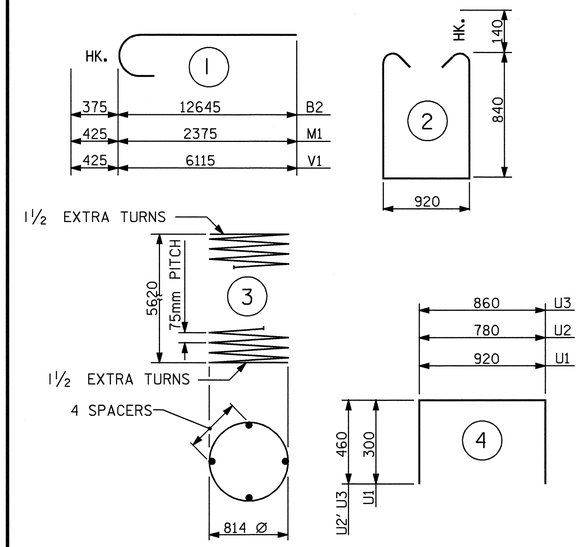

ALL BAR DIMENSIONS ARE OUT TO OUT.

BILL OF MATERIAL
BENT NO.2 (PART A)

BAR	NO.	SIZE	TYPE	LENGTH	WEIGHT
B1	12	#29	STR	12260	744
B2	16	#29	1	13020	1054
B3	8	#16	STR	11780	146
M1	40	#32	1	2800	717
S1	110	#16	2	2880	492
T1	128	#22	STR	2200	857
U1	56	#13	4	1520	85
U2	8	#13	4	1700	14
U3	8	#13	4	1780	14
V1	40	#32	1	6540	1675
SP-1	4	**	3	196220	780

REINFORCING STEEL kg 5784

SPIRAL COLUMN
REINFORCING STEEL kg 780

CLASS "A" CONCRETE
POUR #1 FOOTING 19.0 M3
POUR #2 COLUMN 14.6 M3
POUR #3 CAP 22.5 M3
CLASS "A" CONCRETE TOTAL 56.1 M3

HP 360x108 STEEL PILES
NO. 16 LIN.M. 352.0

FOUNDATION EXCAVATION: LUMP SUM

** THE SP-1 SPIRAL REINFORCING STEEL SHALL BE W20 OR D-20 COLD DRAWN WIRE OR #13 PLAIN OR DEFORMED BAR.

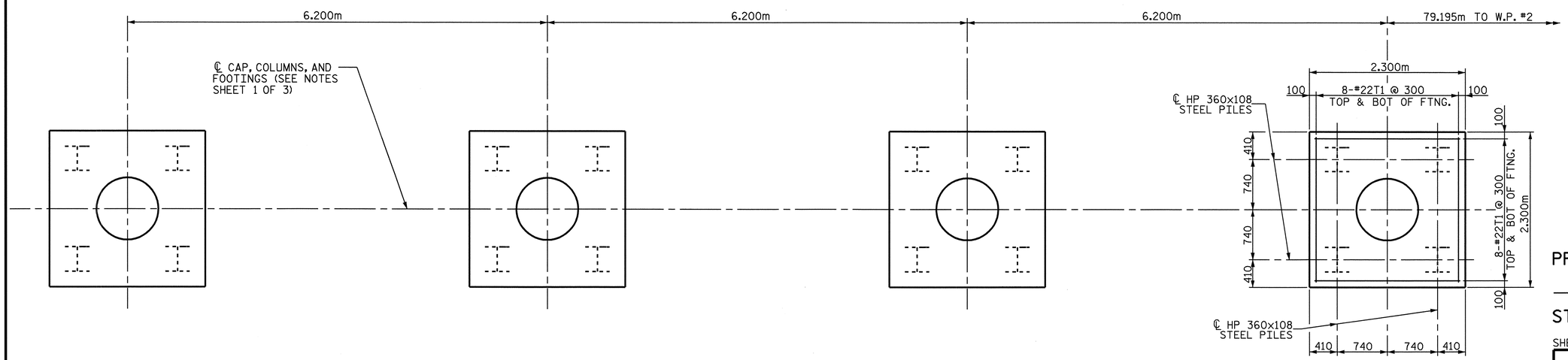

PLAN OF FOOTINGS
ALL FOOTINGS ARE TYPICAL

PROJECT NO. U-2519DA
CUMBERLAND COUNTY
STATION: 34+21.044-RP1BD-
SHEET 3 OF 3

STATE OF NORTH CAROLINA
DEPARTMENT OF TRANSPORTATION
RALEIGH

BENT 2
(PART A)

NORTH CAROLINA PROFESSIONAL SEAL 12960 ENGINEER PAUL STEPHEN ERVIN
10-8-08

REVISIONS							SHEET NO.
NO.	BY:	DATE:	NO.	BY:	DATE:		S-352
1			3				TOTAL SHEETS
2			4				411

DRAWN BY : R.D. MARTIN DATE : 6-27-08
CHECKED BY : P.S. ERVIN DATE : 8-4-08

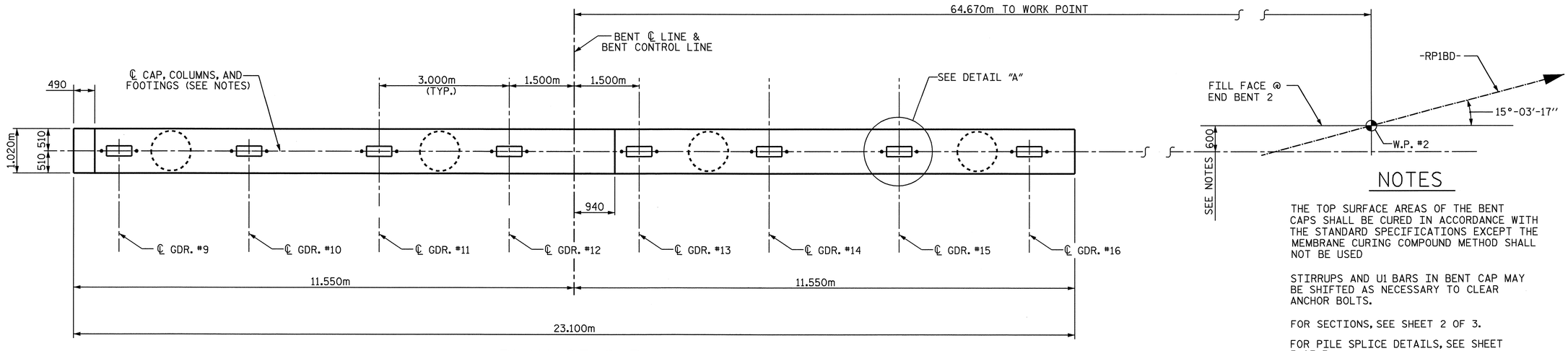

PLAN OF CAP

NOTES

THE TOP SURFACE AREAS OF THE BENT CAPS SHALL BE CURED IN ACCORDANCE WITH THE STANDARD SPECIFICATIONS EXCEPT THE MEMBRANE CURING COMPOUND METHOD SHALL NOT BE USED

STIRRUPS AND U1 BARS IN BENT CAP MAY BE SHIFTED AS NECESSARY TO CLEAR ANCHOR BOLTS.

FOR SECTIONS, SEE SHEET 2 OF 3.

FOR PILE SPLICE DETAILS, SEE SHEET 3 OF 3.

INVERT ALTERNATE STIRRUPS.

AN EPOXY COATING SHALL BE APPLIED TO THE CAP IN ACCORDANCE WITH SECTION 420-18 OF THE STANDARD SPECIFICATIONS.

THE CONTRACTOR'S ATTENTION IS CALLED TO THE FACT THE CENTERLINE OF THE CAP, COLUMNS AND FOOTINGS ARE OFFSET 600mm FROM THE FILL FACE AT END BENT 2. THE OFFSET IS IN THE DIRECTION TOWARD THE SURVEY LINE UNDER THE STRUCTURE (-COL1-).

HOOKS ON "V" BARS MAY BE TURNED AS NECESSARY FOR PLACING REINFORCING STEEL.

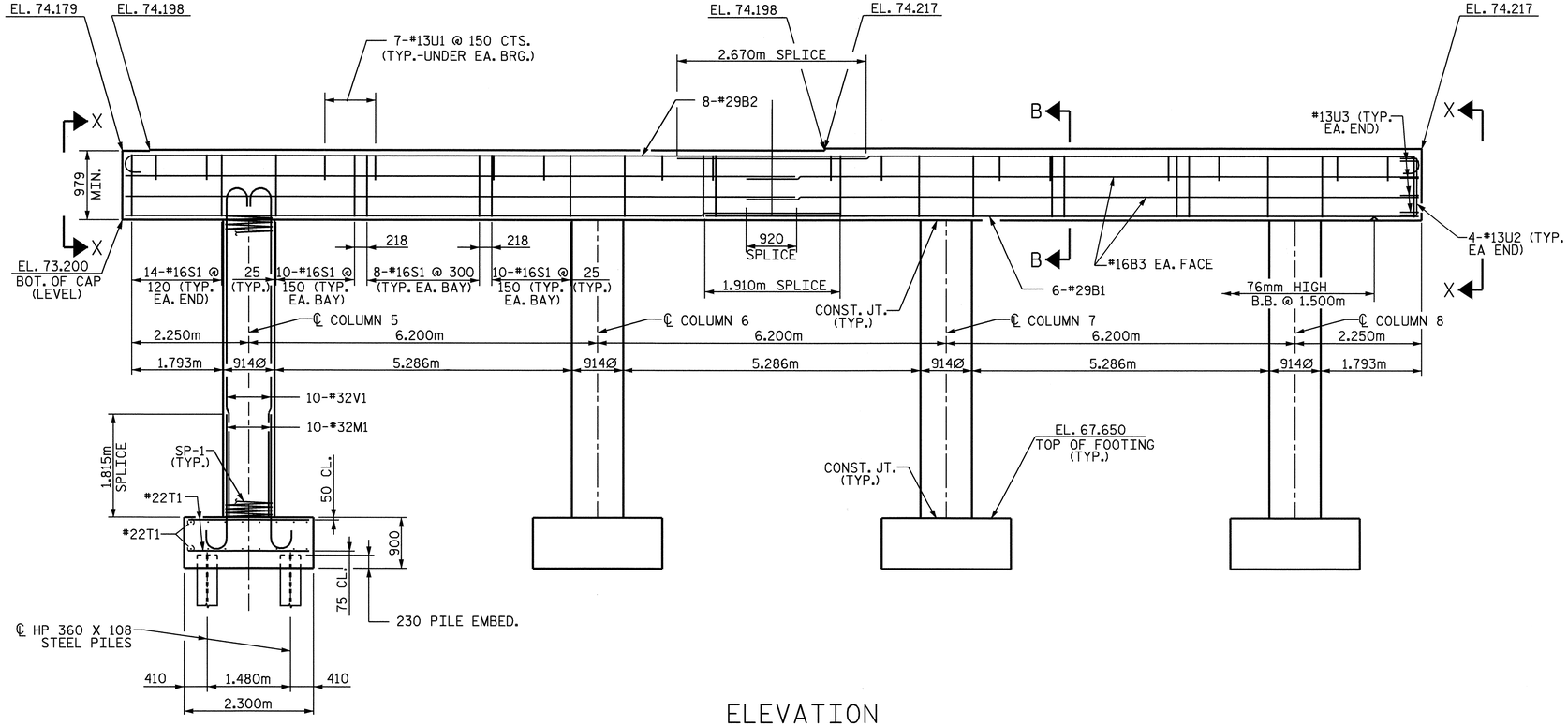

ELEVATION

FOOTING AND COLUMNS ARE TYPICAL

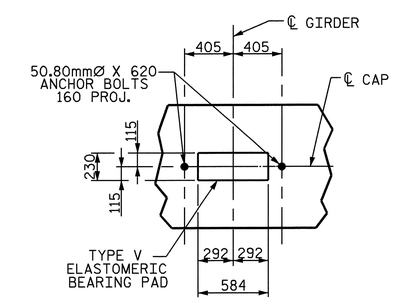

DETAIL "A"

PROJECT NO. U-2519DA
CUMBERLAND COUNTY
STATION: 34+21.044-RP1BD-

SHEET 1 OF 3

STATE OF NORTH CAROLINA
DEPARTMENT OF TRANSPORTATION
RALEIGH

BENT 2
(PART B)

NORTH CAROLINA PROFESSIONAL SEAL 12960 ENGINEER PAUL STEPHEN ERVIN
10-8-08

REVISIONS						SHEET NO.
NO.	BY:	DATE:	NO.	BY:	DATE:	S-353
1			3			TOTAL SHEETS
2			4			411

DRAWN BY : R.D. MARTIN DATE : 6-27-08
CHECKED BY : P.S. ERVIN DATE : 8-4-08

S:\PG3\U2519DA\U2519DA_sd_B*.dgn
rmartin

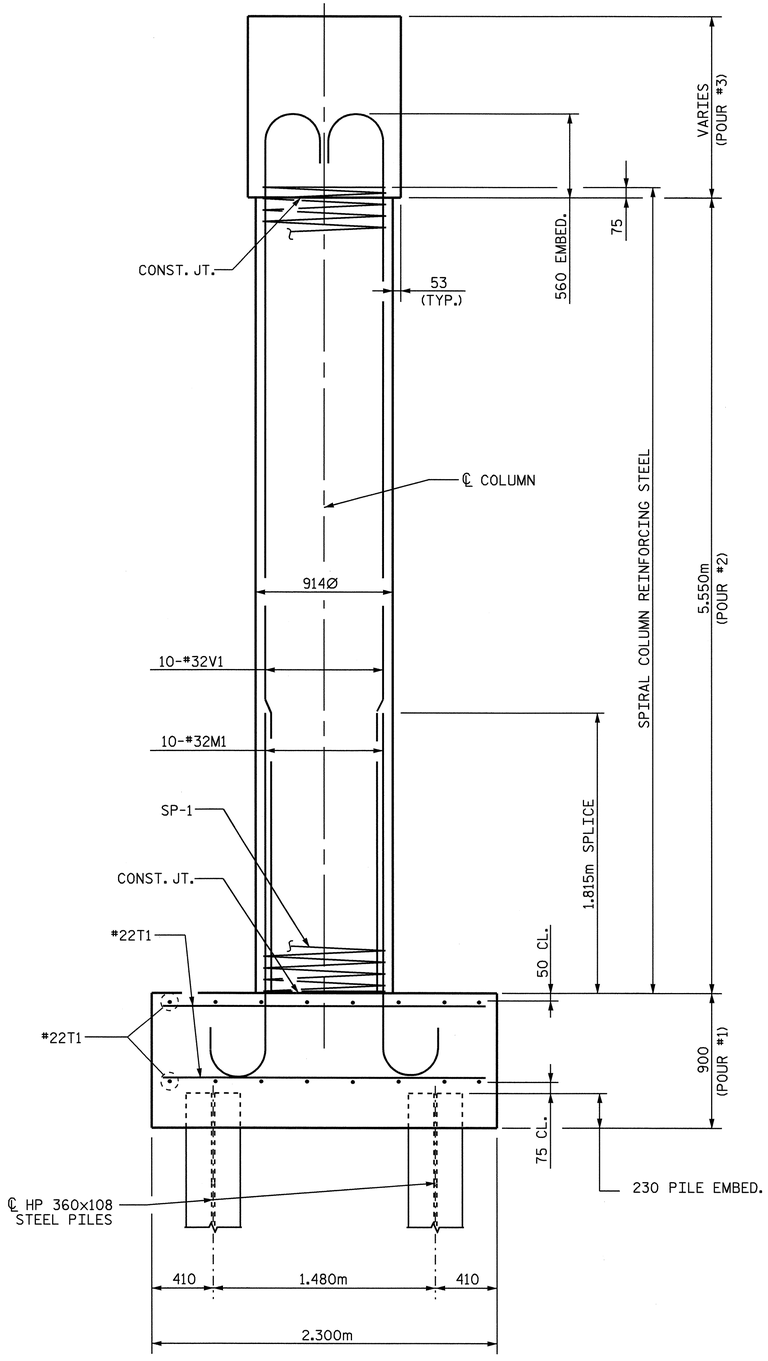

END ELEVATION

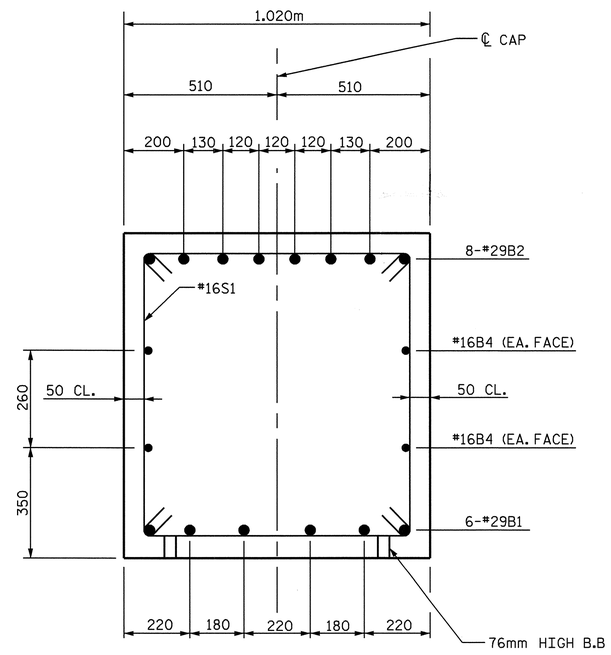

SECTION B-B

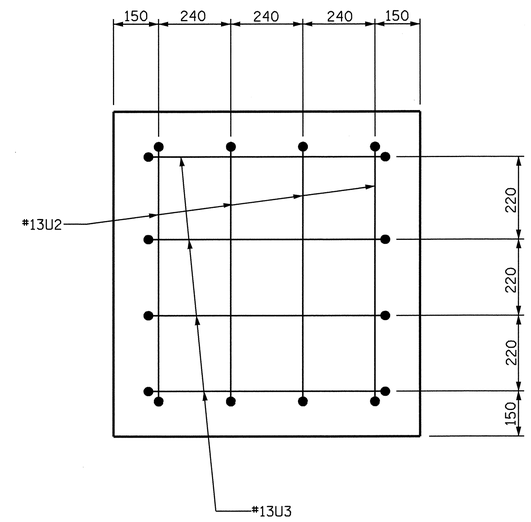

VIEW X-X

PROJECT NO. U-2519DA
CUMBERLAND COUNTY
STATION: 34+21.044-RP1BD-

SHEET 2 OF 3

STATE OF NORTH CAROLINA
DEPARTMENT OF TRANSPORTATION
RALEIGH

BENT 2
(PART B)

NORTH CAROLINA PROFESSIONAL SEAL 12960 ENGINEER PAUL STEPHEN ERVIN

REVISIONS						SHEET NO.
NO.	BY:	DATE:	NO.	BY:	DATE:	S-354
1			3			TOTAL SHEETS
2			4			411

DRAWN BY : R.D. MARTIN DATE : 6-27-08
CHECKED BY : P.S. ERVIN DATE : 8-4-08

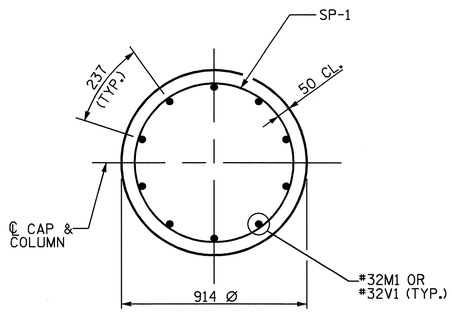

COLUMN SECTION

TYPICAL EACH COLUMN

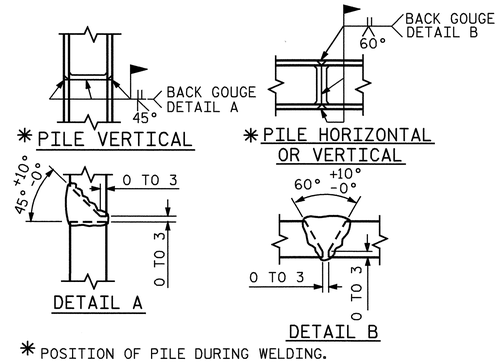

* POSITION OF PILE DURING WELDING.

PILE SPLICE DETAILS

BAR TYPES

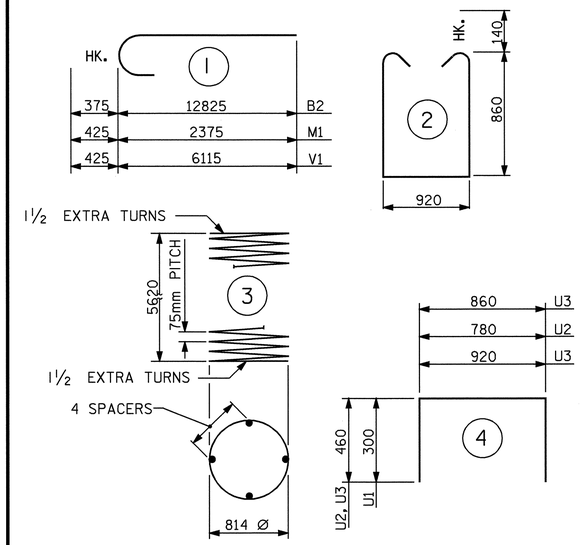

ALL BAR DIMENSIONS ARE OUT TO OUT.

BILL OF MATERIAL
BENT NO.2 (PART B)

BAR	NO.	SIZE	TYPE	LENGTH	WEIGHT
B1	12	#29	STR	12430	755
B2	16	#29	1	13200	1069
B3	8	#16	STR	11960	148
M1	40	#32	1	2800	717
S1	112	#16	2	2920	507
T1	128	#22	STR	2200	857
U1	56	#13	4	1520	85
U2	8	#13	4	1700	14
U3	8	#13	4	1780	14
V1	40	#32	1	6540	1675
SP-1	4	**	3	196220	780

REINFORCING STEEL kg 5841

SPIRAL COLUMN
REINFORCING STEEL kg 780

CLASS "A" CONCRETE
POUR #1 FOOTING 19.0 M3
POUR #2 COLUMN 14.5 M3
POUR #3 CAP 23.8 M3
CLASS "A" CONCRETE TOTAL 57.3 M3

HP 360x108 STEEL PILES
NO. 16 LIN.M. 352.0

FOUNDATION EXCAVATION: LUMP SUM

** THE SP-1 SPIRAL REINFORCING STEEL SHALL BE W20 OR D-20 COLD DRAWN WIRE OR #13 PLAIN OR DEFORMED BAR.

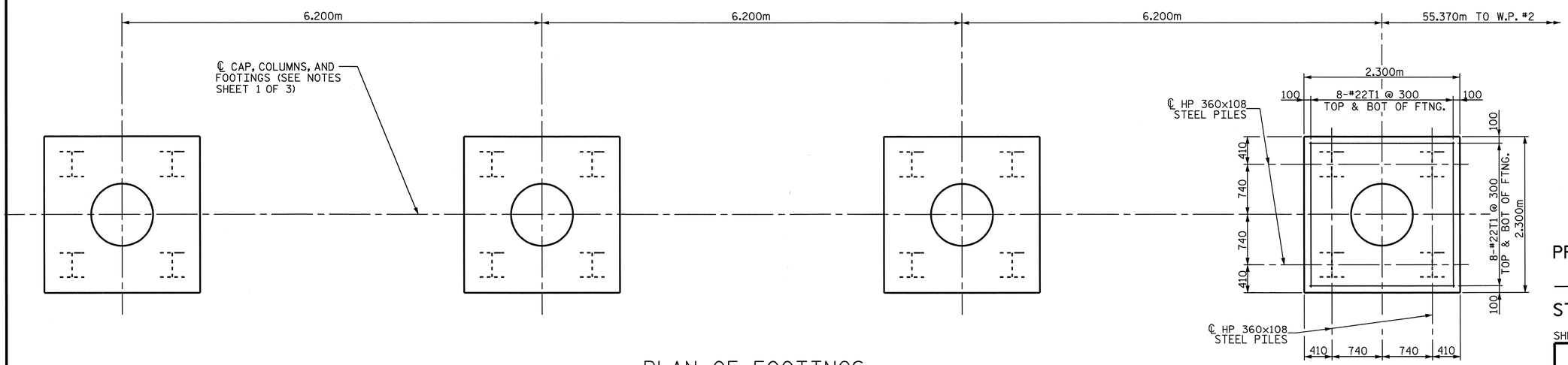

PLAN OF FOOTINGS

ALL FOOTINGS ARE TYPICAL

PROJECT NO. U-2519DA
CUMBERLAND COUNTY
STATION: 34+21.044-RP1BD-

SHEET 3 OF 3

STATE OF NORTH CAROLINA
DEPARTMENT OF TRANSPORTATION
RALEIGH

BENT 2
(PART B)

NORTH CAROLINA PROFESSIONAL SEAL 12960 ENGINEER PAUL STEPHEN ERVIN
10-8-08

REVISIONS						SHEET NO.
NO.	BY:	DATE:	NO.	BY:	DATE:	S-355
1			3			TOTAL SHEETS
2			4			411

DRAWN BY : R.D. MARTIN DATE : 6-27-08
CHECKED BY : P.S. ERVIN DATE : 8-4-08

S:\PG3\U2519DA\U2519DA_sd_B*.dgn
rmartin

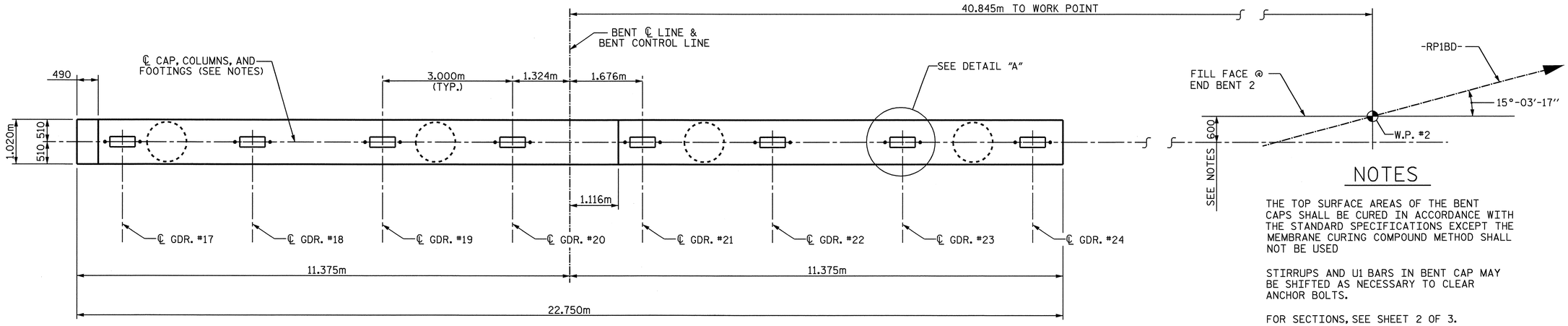

PLAN OF CAP

NOTES

THE TOP SURFACE AREAS OF THE BENT CAPS SHALL BE CURED IN ACCORDANCE WITH THE STANDARD SPECIFICATIONS EXCEPT THE MEMBRANE CURING COMPOUND METHOD SHALL NOT BE USED

STIRRUPS AND U1 BARS IN BENT CAP MAY BE SHIFTED AS NECESSARY TO CLEAR ANCHOR BOLTS.

FOR SECTIONS, SEE SHEET 2 OF 3.

FOR PILE SPLICE DETAILS, SEE SHEET 3 OF 3.

INVERT ALTERNATE STIRRUPS.

AN EPOXY COATING SHALL BE APPLIED TO THE CAP IN ACCORDANCE WITH SECTION 420-18 OF THE STANDARD SPECIFICATIONS.

THE CONTRACTOR'S ATTENTION IS CALLED TO THE FACT THE CENTERLINE OF THE CAP, COLUMNS AND FOOTINGS ARE OFFSET 600mm FROM THE FILL FACE AT END BENT 2. THE OFFSET IS IN THE DIRECTION TOWARD THE SURVEY LINE UNDER THE STRUCTURE (-COL1-).

HOOKS ON "V" BARS MAY BE TURNED AS NECESSARY FOR PLACING REINFORCING STEEL.

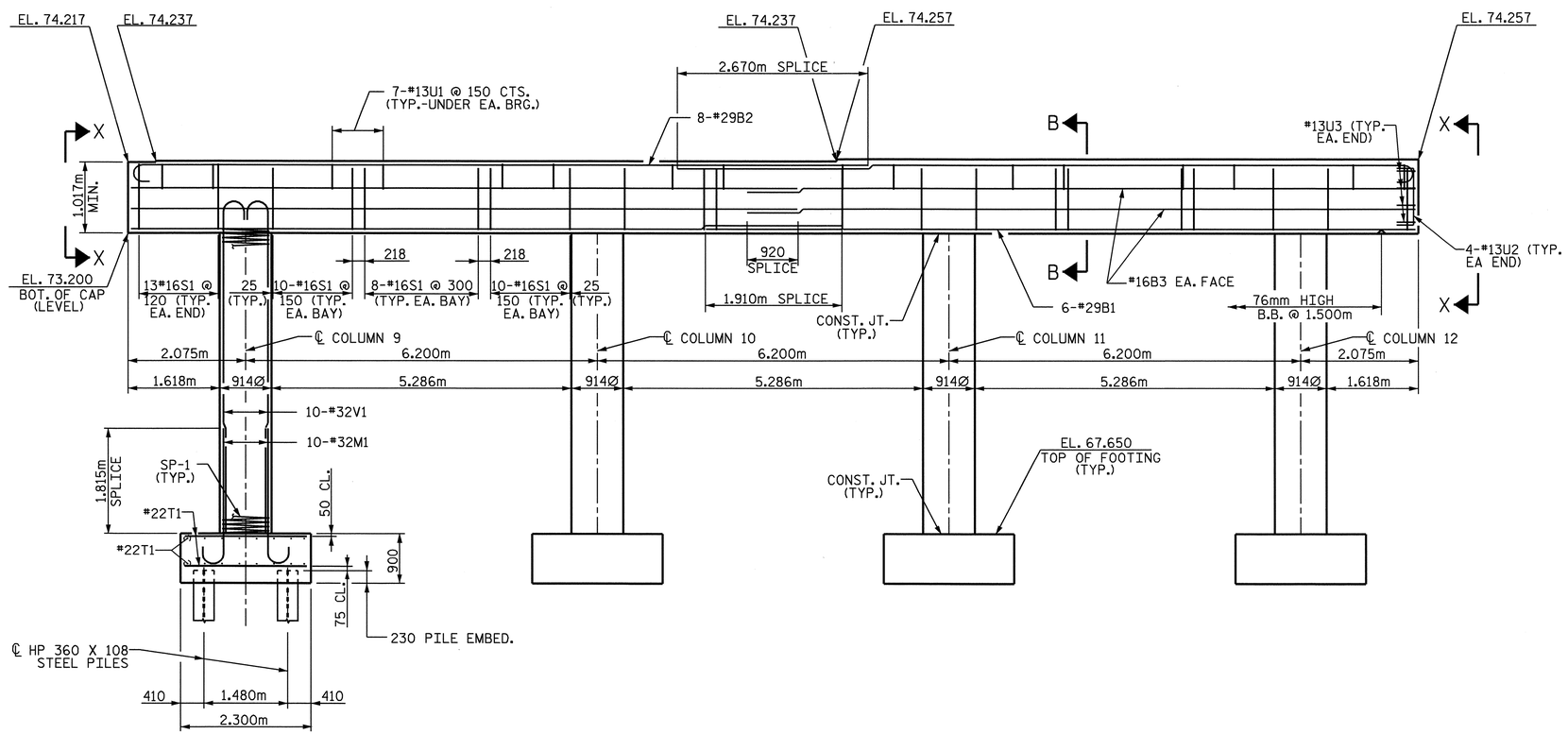

ELEVATION

FOOTING AND COLUMNS ARE TYPICAL

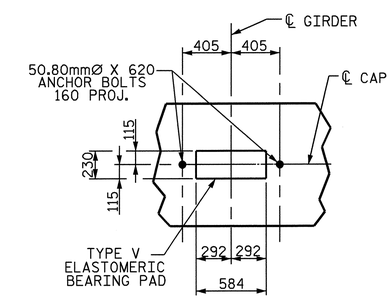

DETAIL "A"

PROJECT NO. U-2519DA

CUMBERLAND COUNTY

STATION: 34+21.044-RP1BD-

SHEET 1 OF 3

STATE OF NORTH CAROLINA
DEPARTMENT OF TRANSPORTATION
RALEIGH

BENT 2
(PART C)

NORTH CAROLINA PROFESSIONAL SEAL 12960 ENGINEER PAUL STEPHEN ERVIN
10-8-08

REVISIONS						SHEET NO.
NO.	BY:	DATE:	NO.	BY:	DATE:	S-356
1			3			TOTAL SHEETS
2			4			411

DRAWN BY : R.D. MARTIN DATE : 6-27-08
CHECKED BY : P.S. ERVIN DATE : 8-4-08

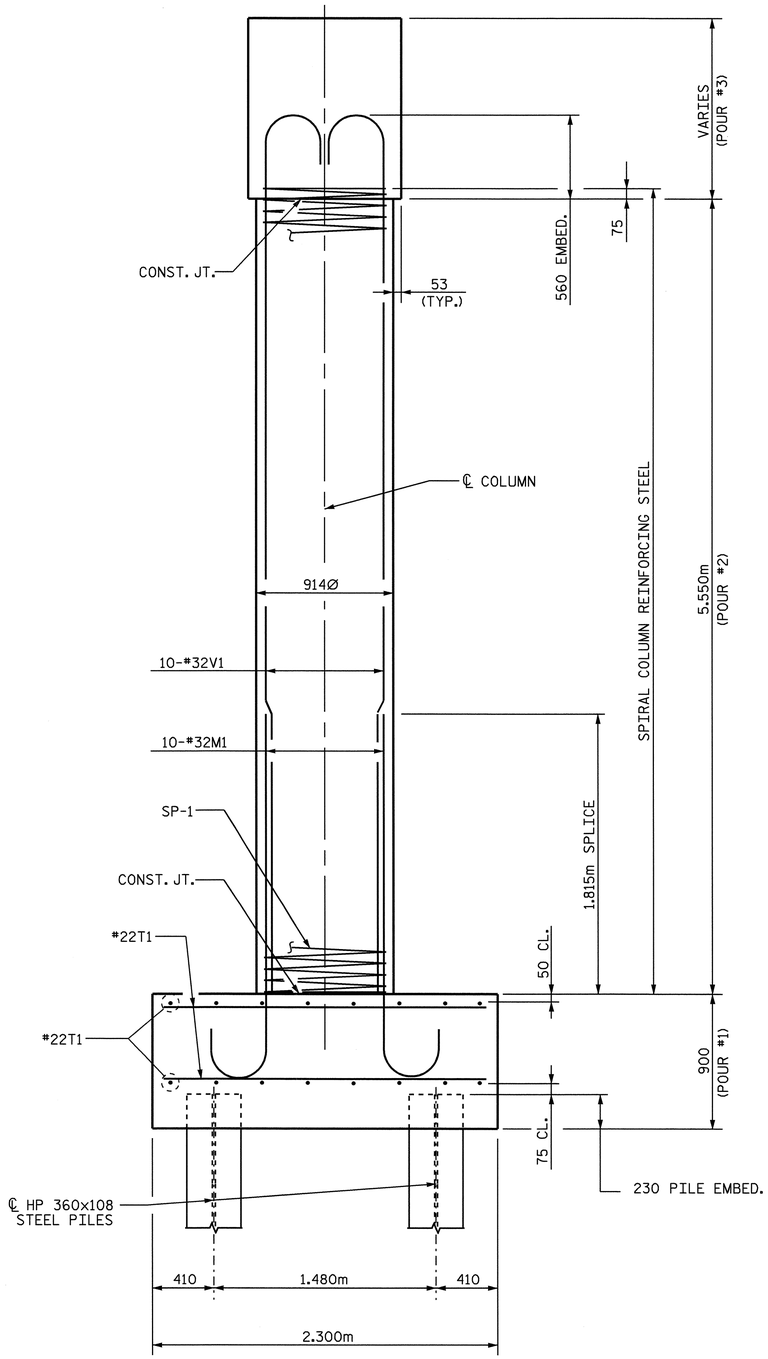

END ELEVATION

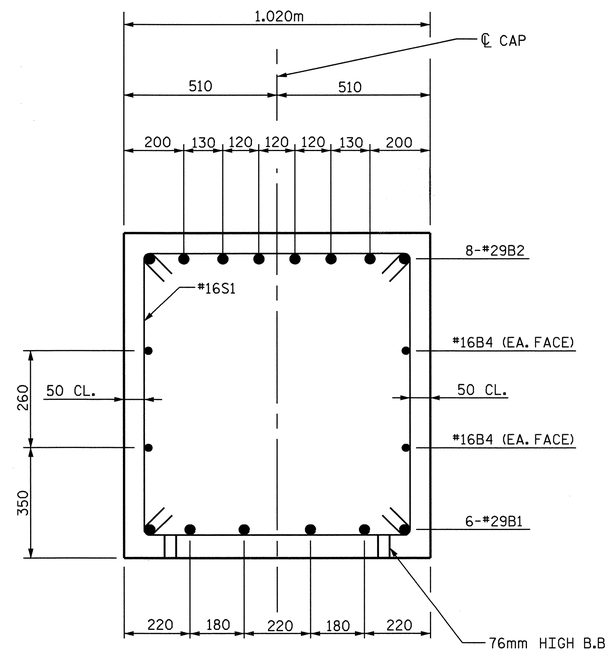

SECTION B-B

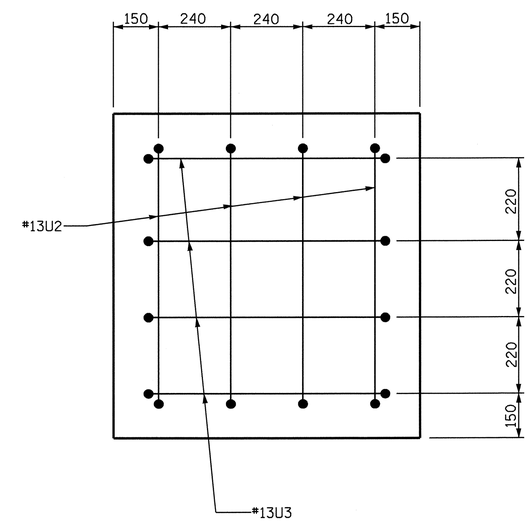

VIEW X-X

PROJECT NO. U-2519DA
CUMBERLAND COUNTY
STATION: 34+21.044-RP1BD-

SHEET 2 OF 3

STATE OF NORTH CAROLINA
DEPARTMENT OF TRANSPORTATION
RALEIGH

BENT 2
(PART C)

NORTH CAROLINA PROFESSIONAL SEAL 12960 ENGINEER PAUL STEPHEN ERVIN
10-8-08

REVISIONS						SHEET NO.
NO.	BY:	DATE:	NO.	BY:	DATE:	S-357
1			3			TOTAL SHEETS
2			4			411

DRAWN BY : R.D. MARTIN DATE : 6-27-08
CHECKED BY : P.S. ERVIN DATE : 8-4-08

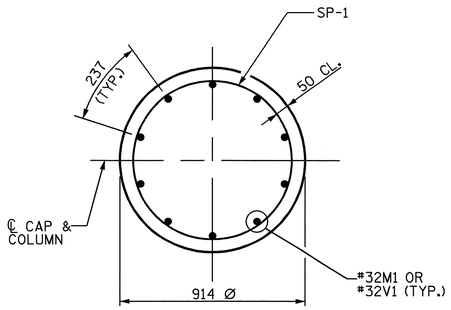

COLUMN SECTION

TYPICAL EACH COLUMN

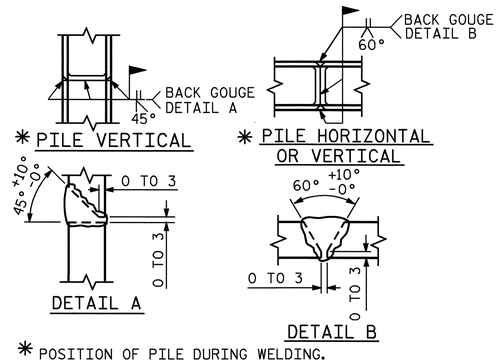

* POSITION OF PILE DURING WELDING.

PILE SPLICE DETAILS

BAR TYPES

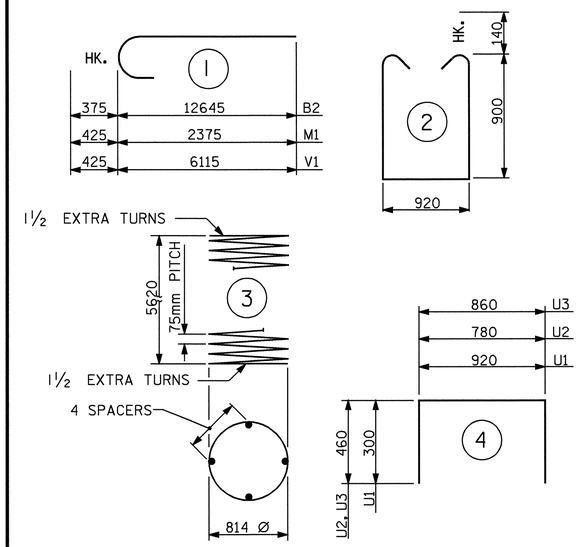

ALL BAR DIMENSIONS ARE OUT TO OUT.

BILL OF MATERIAL
BENT NO.2 (PART C)

BAR	NO.	SIZE	TYPE	LENGTH	WEIGHT
B1	12	#29	STR	12260	744
B2	16	#29	1	13020	1054
B3	8	#16	STR	11780	146
M1	40	#32	1	2800	717
S1	110	#16	2	3000	512
T1	128	#22	STR	2200	857
U1	56	#13	4	1520	85
U2	8	#13	4	1700	14
U3	8	#13	4	1780	14
V1	40	#32	1	6540	1675
SP-1	4	**	3	196220	780

REINFORCING STEEL kg 5818

SPIRAL COLUMN
REINFORCING STEEL kg 780

CLASS "A" CONCRETE
POUR #1 FOOTING 19.0 M3
POUR #2 COLUMN 14.5 M3
POUR #3 CAP 24.2 M3
CLASS "A" CONCRETE TOTAL 57.7 M3

HP 360x108 STEEL PILES
NO. 16 LIN.M. 352.0

FOUNDATION EXCAVATION: LUMP SUM

** THE SP-1 SPIRAL REINFORCING STEEL SHALL BE W20 OR D-20 COLD DRAWN WIRE OR #13 PLAIN OR DEFORMED BAR.

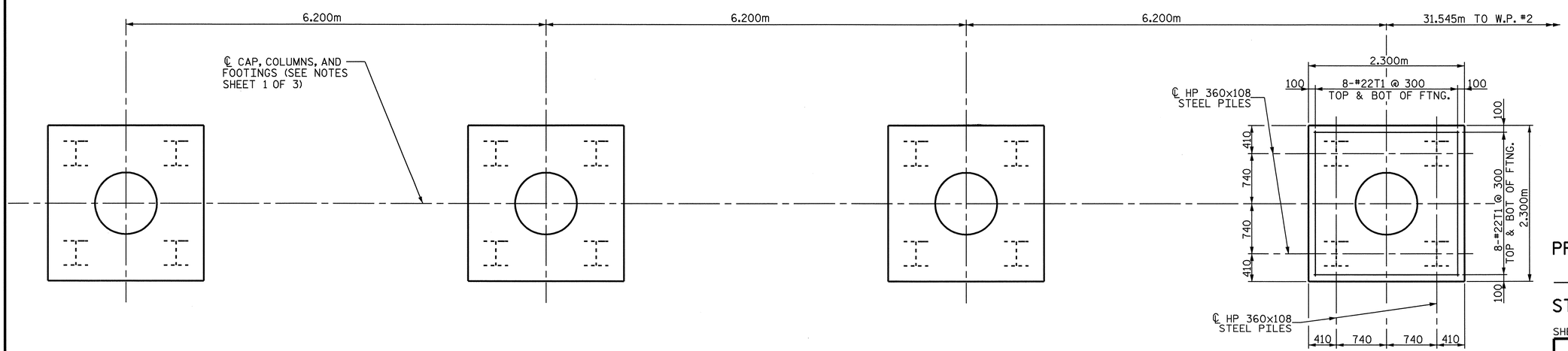

PLAN OF FOOTINGS

ALL FOOTINGS ARE TYPICAL

PROJECT NO. U-2519DA
CUMBERLAND COUNTY
STATION: 34+21.044-RP1BD-

SHEET 3 OF 3

STATE OF NORTH CAROLINA
DEPARTMENT OF TRANSPORTATION
RALEIGH

BENT 2
(PART C)

NORTH CAROLINA PROFESSIONAL SEAL 12960 ENGINEER PAUL STEPHEN ERVIN
10-8-08

REVISIONS						SHEET NO.
NO.	BY:	DATE:	NO.	BY:	DATE:	S-358
1			3			TOTAL SHEETS
2			4			411

DRAWN BY : R.D. MARTIN DATE : 6-27-08
CHECKED BY : P.S. ERVIN DATE : 8-4-08

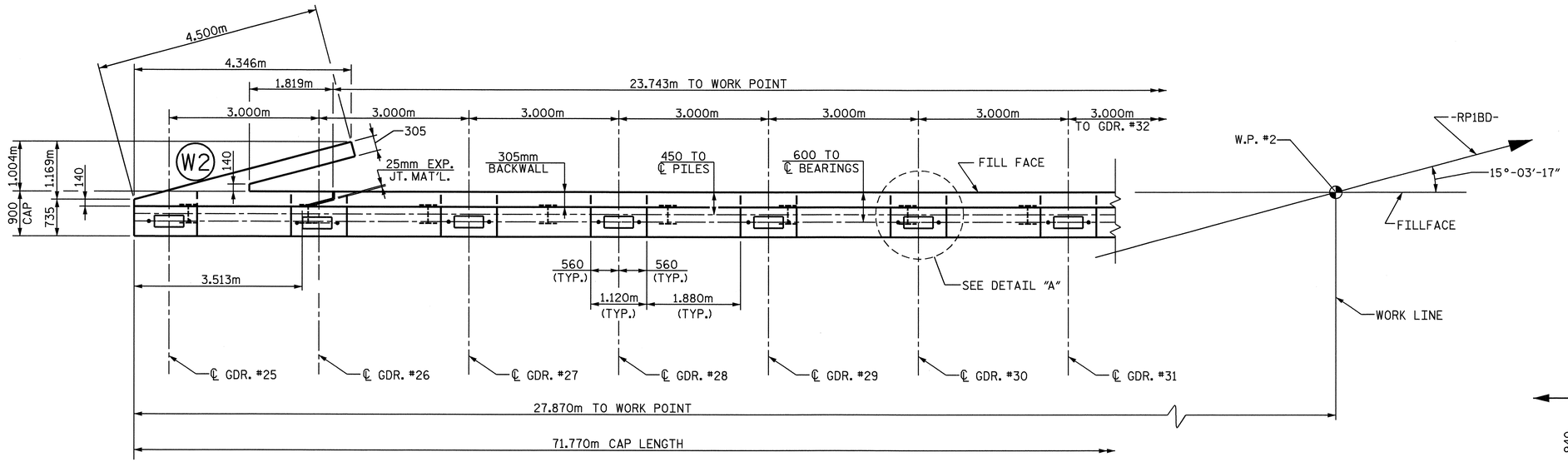

PLAN

NOTES

THE TOP SURFACE AREAS OF THE END BENT CAPS SHALL BE CURED IN ACCORDANCE WITH THE STANDARD SPECIFICATIONS EXCEPT THE MEMBRANE CURING COMPOUND METHOD SHALL NOT BE USED

BACKWALL SHALL BE PLACED BEFORE APPLYING EPOXY PROTECTIVE COATING.

STIRRUPS IN END BENT CAP MAY BE SHIFTED AS NECESSARY TO CLEAR ANCHOR BOLTS.

FOR SECTIONS, SEE SHEET 5 OF 5.

FOR PILE SPLICE DETAILS, SEE SHEET 5 OF 5.

FOR TEMPORARY DRAINAGE AT END BENT, SEE SHEET 5 OF 5.

THE TOP SURFACE OF THE CAP EXCEPT THE BRIDGE SEAT BUILDUPS SHALL BE SLOPED TRANSVERSELY FROM THE FILLFACE TO THE BACKFACE AT A RATE OF 2%.

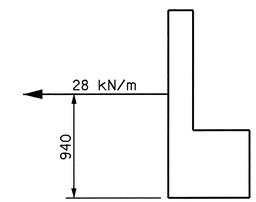

MSE STRAP LOAD DETAIL

A MINIMUM OF TWO LAYERS OF MSE STRAPS ARE REQUIRED BEHIND END BENT BACKWALL. THE MSE STRAPS ARE REQUIRED TO RESIST A SERVICE LOAD NO LESS THAN 28kN PER LINEAR METER APPLIED TO THE END BENT CAP 940 MILLIMETERS FROM BOTTOM OF CAP, SEE "RETAINING WALL NO.1 AND NO.2 DETAILS".

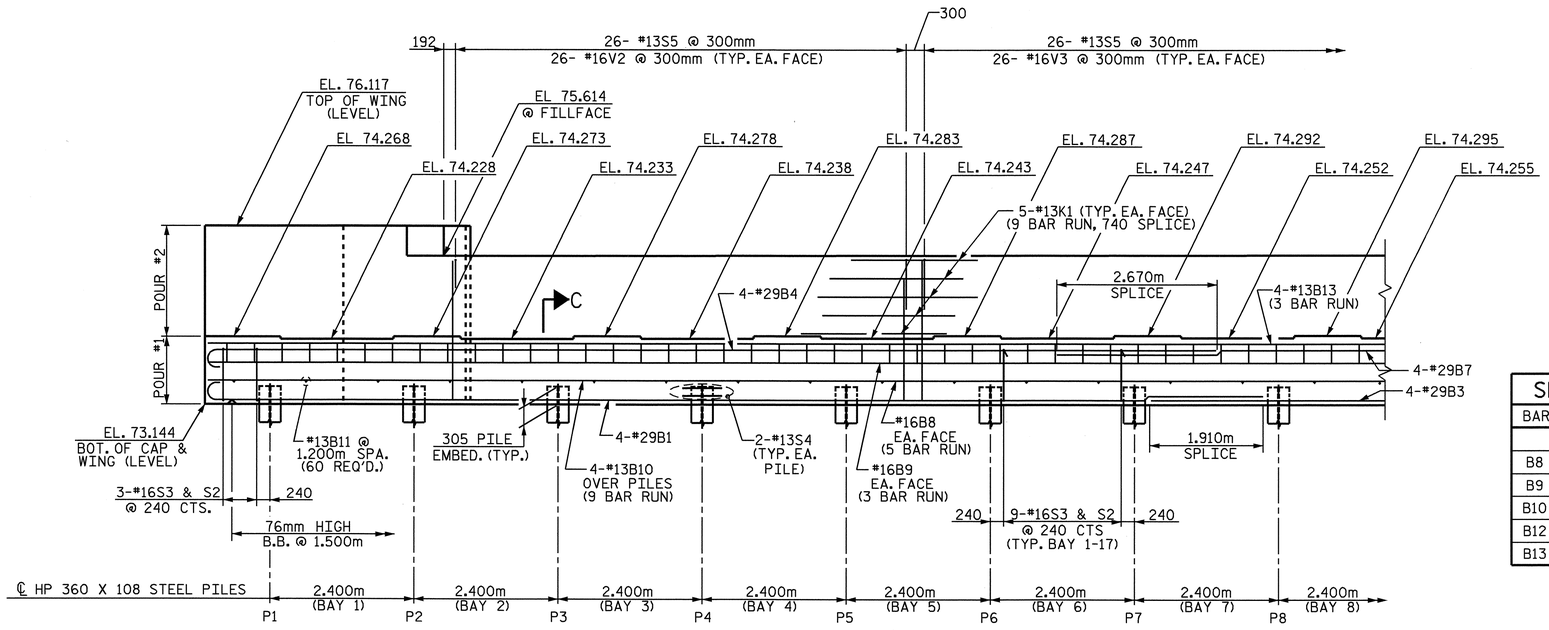

ELEVATION

SPLICE CHART FOR BAR RUNS			
BAR	SIZE	NO. BAR RUNS	SPLICE LENGTH
			(mm)
B8	#16	5	920
B9	#16	3	920
B10	#13	9	740
B12	#13	2	740
B13	#13	4	740

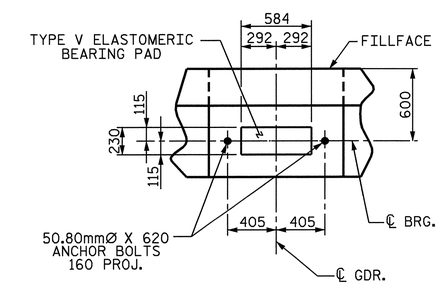

DETAIL "A"

PROJECT NO. U-2519DA
CUMBERLAND COUNTY
STATION: 34+21.044-RP1BD-

SHEET 1 OF 5

STATE OF NORTH CAROLINA
DEPARTMENT OF TRANSPORTATION
RALEIGH

END BENT 2

NORTH CAROLINA PROFESSIONAL SEAL 12960 ENGINEER PAUL STEPHEN ERVIN
8-30-08

REVISIONS								SHEET NO.
NO.	BY:	DATE:	NO.	BY:	DATE:			S-359
1			3					TOTAL SHEETS
2			4					411

DRAWN BY : R.D. MARTIN DATE : 6-27-08
CHECKED BY : P.S. ERVIN DATE : 8-7-08

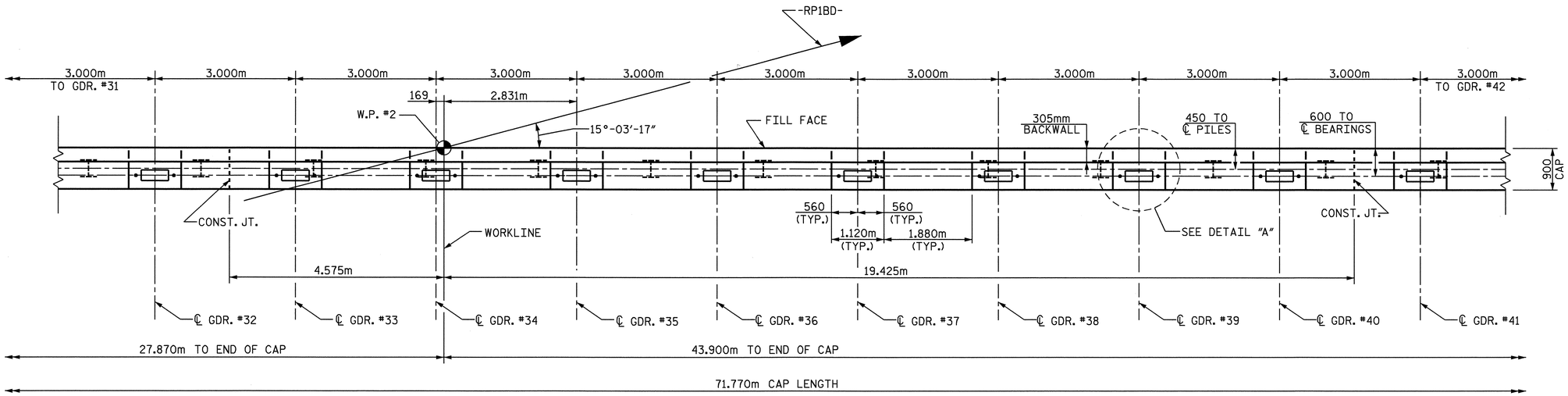

PLAN

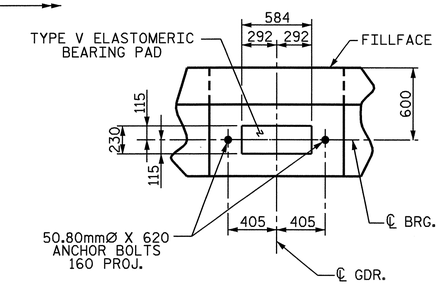

DETAIL "A"

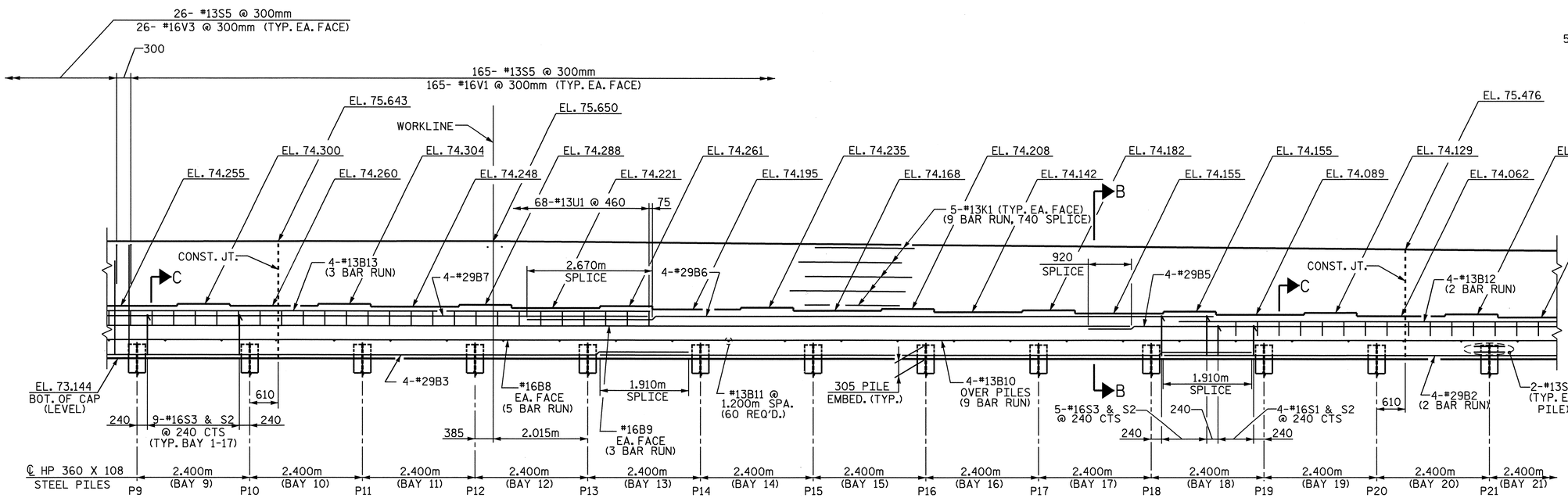

ELEVATION

FOR SPLICES AND BAR RUNS NOT SHOWN, SEE SHEET 1 OF 5.

PROJECT NO. U-2519DA
CUMBERLAND COUNTY
STATION: 34+21.044-RP1BD-

SHEET 2 OF 5

STATE OF NORTH CAROLINA
DEPARTMENT OF TRANSPORTATION
RALEIGH

END BENT 2

NORTH CAROLINA PROFESSIONAL SEAL 12360 ENGINEER PAUL STEPHEN ERVIN
8-11-08

REVISIONS						SHEET NO.
NO.	BY:	DATE:	NO.	BY:	DATE:	S-360
1			3			TOTAL SHEETS
2			4			411

DRAWN BY : R.D. MARTIN DATE : 6-27-08
CHECKED BY : P.S. ERVIN DATE : 8-7-08

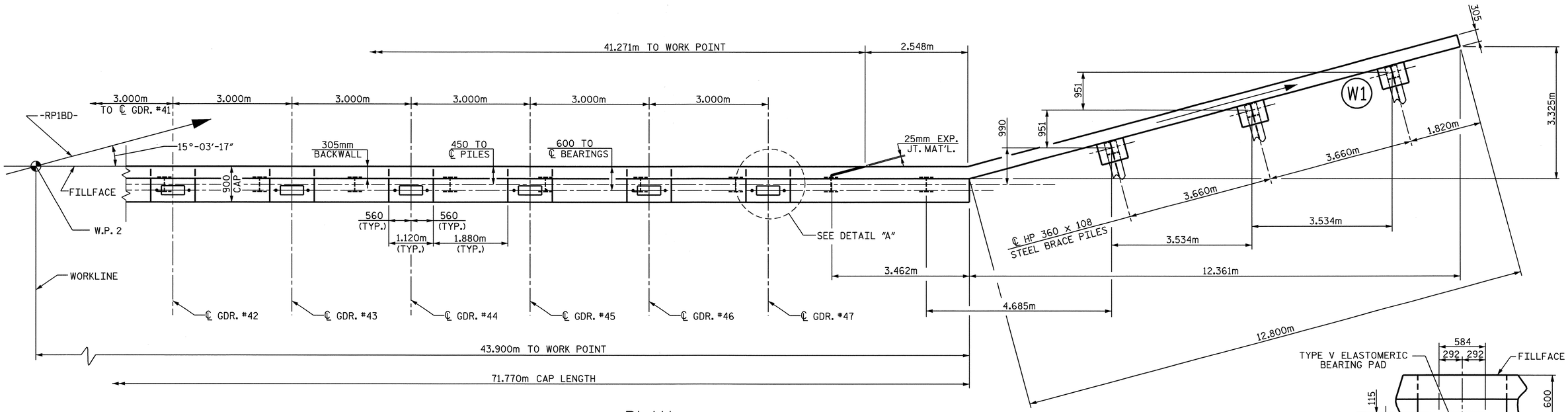

PLAN

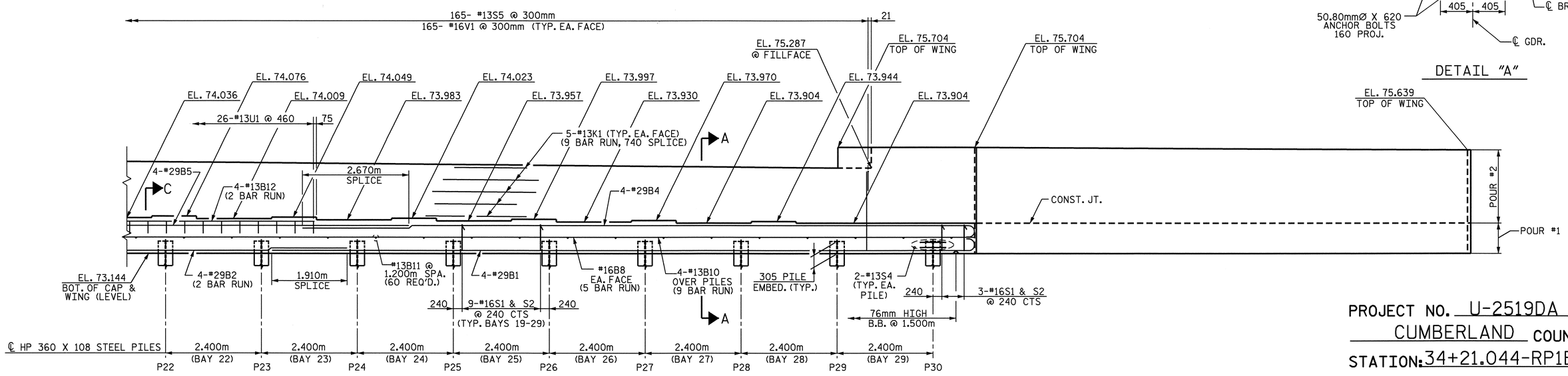

ELEVATION

WING PILES NOT SHOWN FOR CLARITY

FOR SPLICES AND BAR RUNS NOT SHOWN, SEE SHEET 1 OF 5.

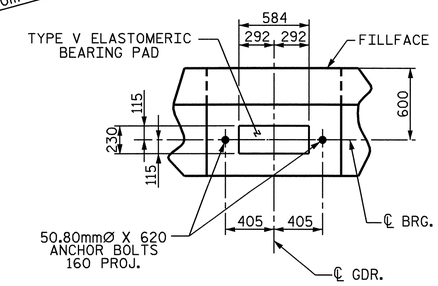

DETAIL "A"

PROJECT NO. U-2519DA
CUMBERLAND COUNTY
STATION: 34+21.044-RP1BD-

SHEET 3 OF 5

STATE OF NORTH CAROLINA
DEPARTMENT OF TRANSPORTATION
RALEIGH

END BENT 2

NORTH CAROLINA PROFESSIONAL SEAL 12960 ENGINEER PAUL STEPHEN ERVIN
7-11-08

REVISIONS						SHEET NO.
NO.	BY:	DATE:	NO.	BY:	DATE:	S-361
1			3			TOTAL SHEETS
2			4			41

DRAWN BY : R.D. MARTIN DATE : 6-27-08
CHECKED BY : P.S. ERVIN DATE : 8-7-08

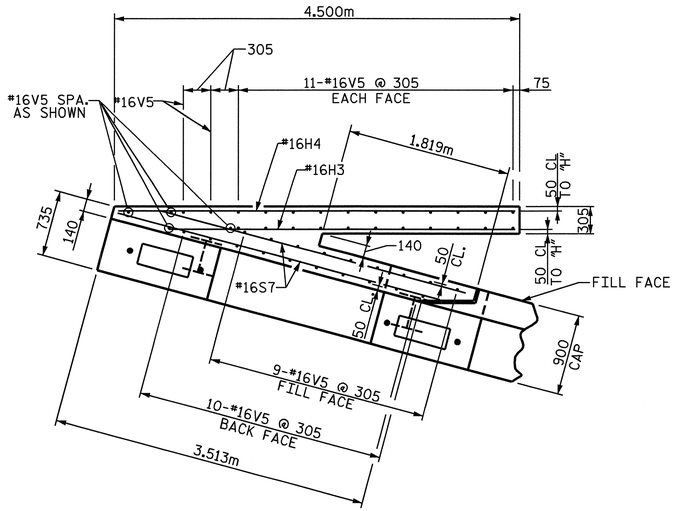

PLAN OF WING (W2)

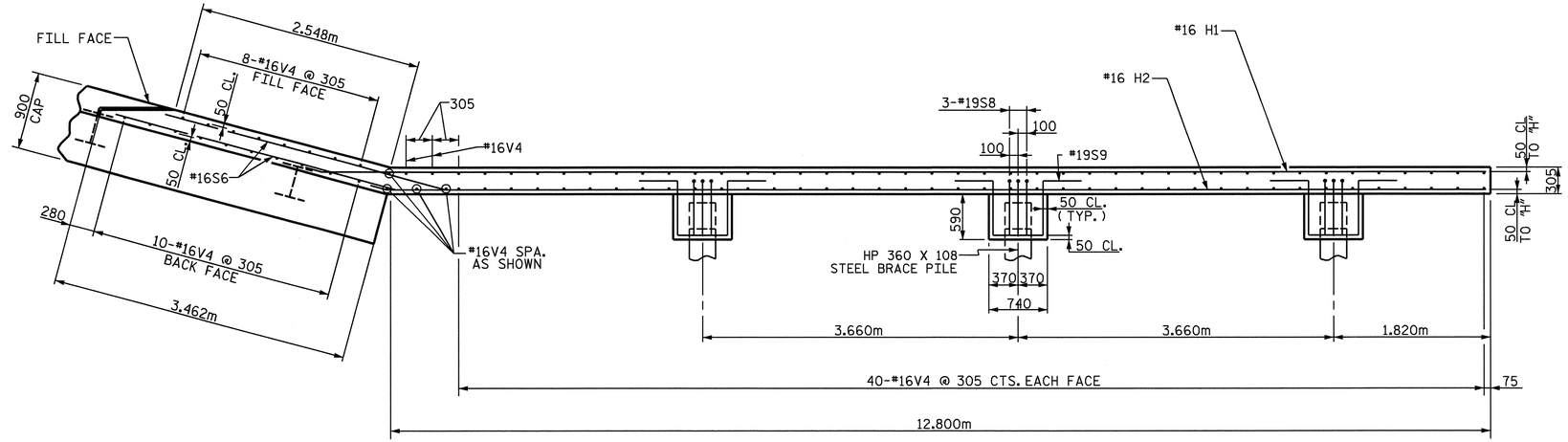

PLAN OF WING (W2)

BRACE PILE DETAILS ARE TYPICAL

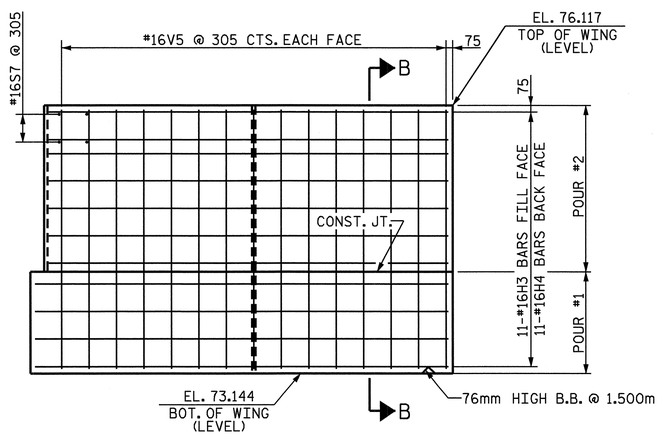

ELEVATION OF WING (W2)

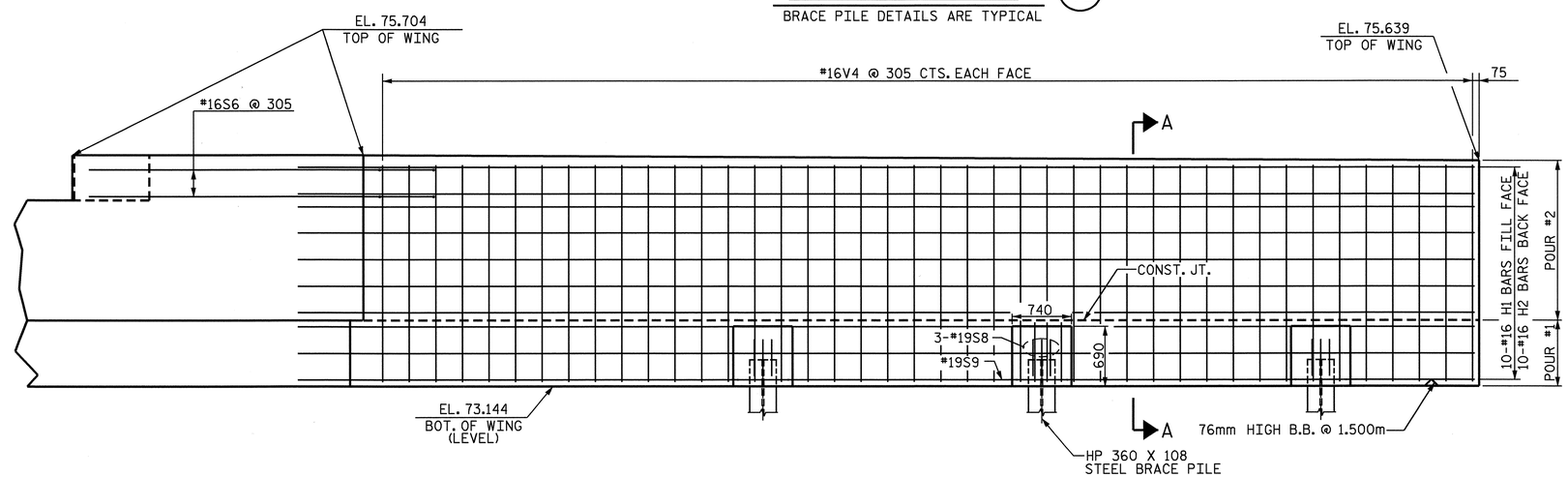

ELEVATION OF WING (W2)

BRACE PILE DETAILS ARE TYPICAL

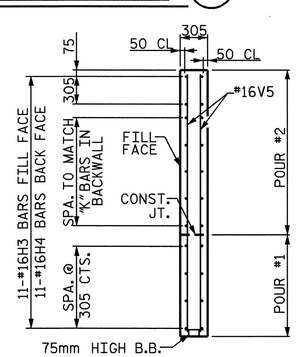

SECTION B-B

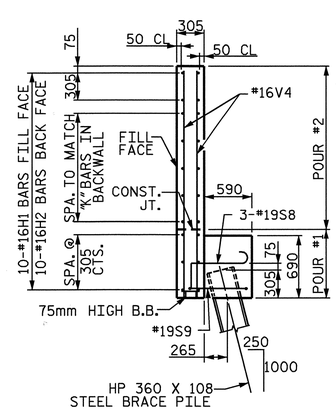

SECTION B-B

PROJECT NO. U-2519DA
CUMBERLAND COUNTY
STATION: 34+21.044-RP1BD-

SHEET 4 OF 5

STATE OF NORTH CAROLINA
DEPARTMENT OF TRANSPORTATION
RALEIGH

END BENT 2

NORTH CAROLINA PROFESSIONAL SEAL 12960 ENGINEER PAUL STEPHEN ERVIN
9-11-08

REVISIONS						SHEET NO.
NO.	BY:	DATE:	NO.	BY:	DATE:	S-362
1			3			TOTAL SHEETS
2			4			411

DRAWN BY : R.D. MARTIN DATE : 6-27-08
CHECKED BY : P.S. ERVIN DATE : 8-7-08

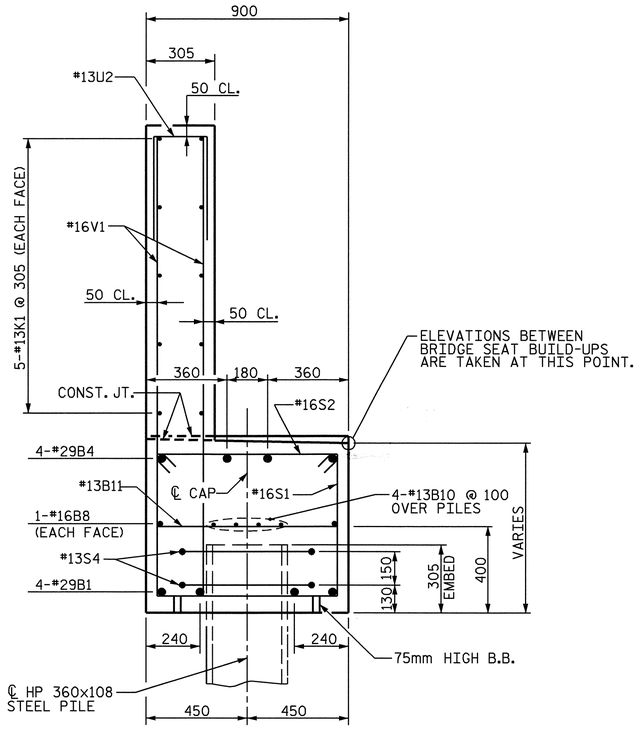

SECTION A-A

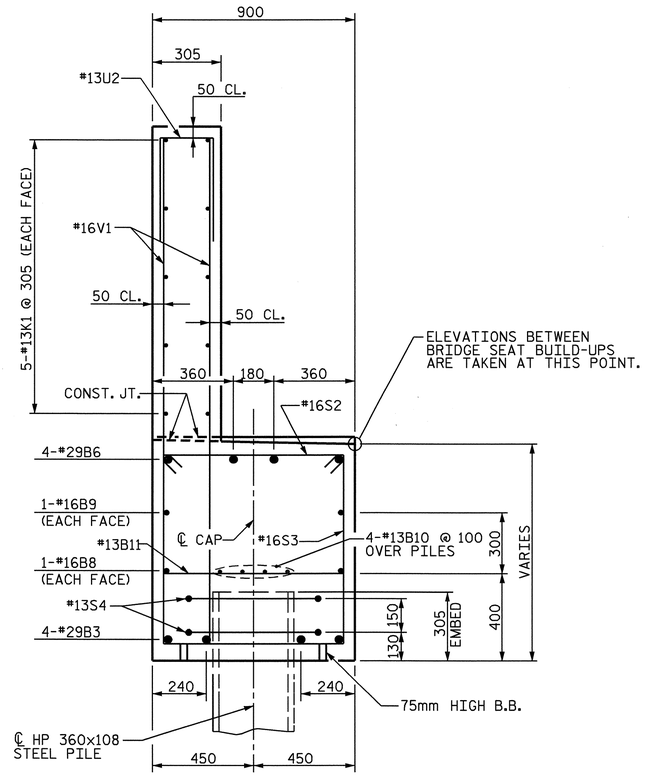

SECTION B-B

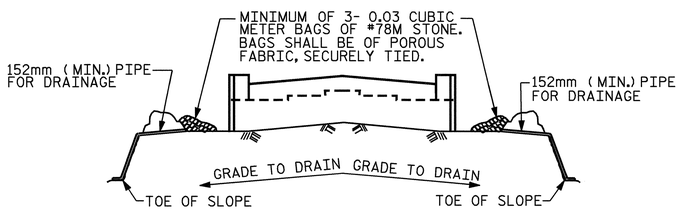

BAGGED STONE AND PIPE SHALL BE PLACED IMMEDIATELY AFTER COMPLETION OF END BENT EXCAVATION. PIPE MAY BE EITHER CONCRETE, CORRUGATED STEEL, CORRUGATED ALUMINUM ALLOY, OR CORRUGATED PLASTIC. PERFORATED PIPE WILL NOT BE ALLOWED.

BAGGED STONE SHALL REMAIN IN PLACE UNTIL THE ENGINEER DIRECTS THAT IT BE REMOVED. THE CONTRACTOR SHALL REMOVE AND DISPOSE OF SILT ACCUMULATIONS AT BAGGED STONE WHEN SO DIRECTED BY THE ENGINEER. BAGS SHALL BE REMOVED AND REPLACED WHENEVER THE ENGINEER DETERMINES THAT THEY HAVE DETERIORATED AND LOST THEIR EFFECTIVENESS.

NO SEPARATE PAYMENT WILL BE MADE FOR THIS WORK AND THE ENTIRE COST OF THIS WORK SHALL BE INCLUDED IN THE UNIT CONTRACT PRICE FOR THE SEVERAL PAY ITEMS.

TEMPORARY DRAINAGE AT END BENT

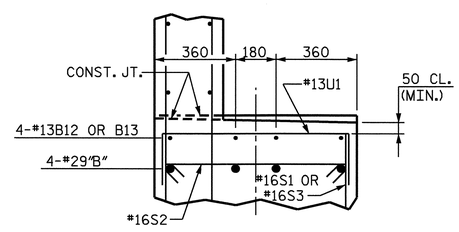

SECTION C

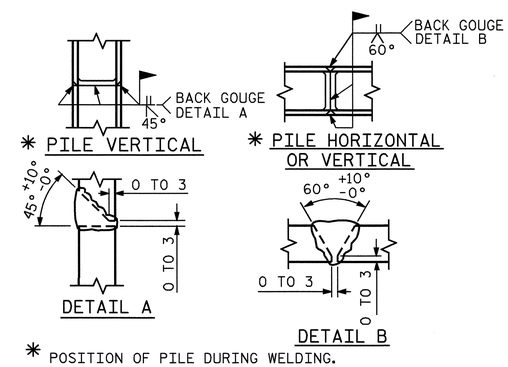

* POSITION OF PILE DURING WELDING.

PILE SPLICE DETAILS

BAR TYPES

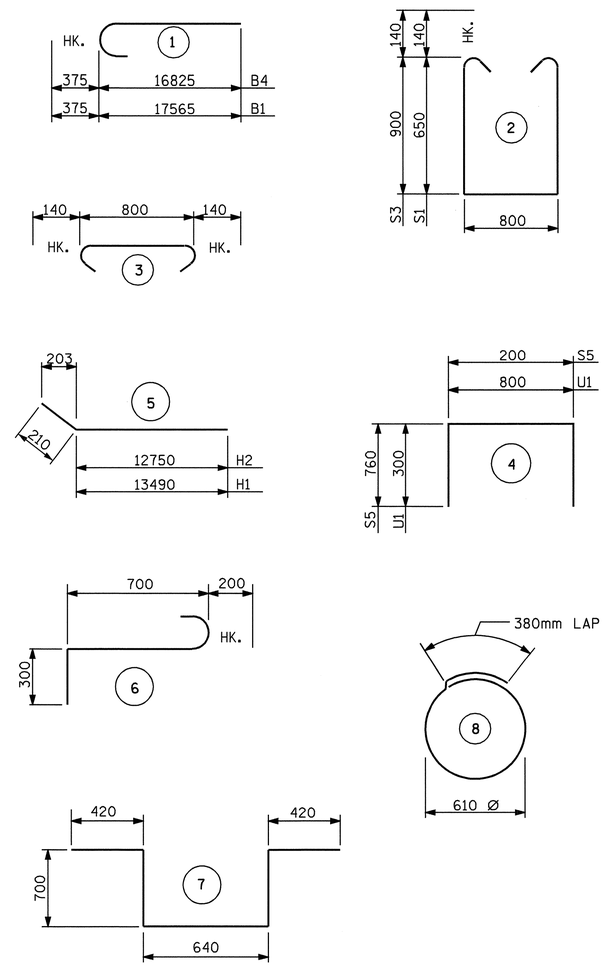

ALL BAR DIMENSIONS ARE OUT TO OUT.

BILL OF MATERIAL
END BENT NO. 2

BAR	NO.	SIZE	TYPE	LENGTH	WEIGHT
B1	8	#29	1	17940	726
B2	8	#29	STR	13920	563
B3	4	#29	STR	16320	330
B4	8	#29	1	17200	696
B5	4	#29	STR	17020	344
B6	4	#29	STR	14620	296
B7	4	#29	STR	14660	297
B8	10	#16	STR	15080	234
B9	6	#16	STR	14760	137
B10	36	#13	STR.	8620	308
B11	60	#13	STR	800	48
B12	8	#13	STR	6400	51
B13	16	#13	STR	8360	133
H1	10	#16	5	13700	213
H2	10	#16	5	12960	201
H3	11	#16	STR.	3840	66
H4	11	#16	STR.	4400	75
K1	90	#13	STR.	8620	771
S1	106	#16	2	2380	392
S2	267	#16	3	1080	448
S3	161	#16	2	2880	720
S4	60	#13	8	2300	137
S5	217	#13	4	1720	371
S6	4	#16	STR	3360	21
S7	4	#16	STR	3440	21
S8	9	#19	6	1200	24
S9	3	#19	7	2800	19
U1	94	#13	4	1400	131
V1	330	#16	STR	2020	1035
V2	52	#16	STR	1340	108
V3	52	#16	STR	1680	136
V4	104	#16	STR	2380	384
V5	47	#16	STR	2860	209

REINFORCING STEEL kg. 9645

CLASS "A" CONCRETE (C.M.)			
	POUR 1	POUR 2	TOTAL
LEFT CAP ETC. @ W2	24.6	13.8	38.4
CENTER CAP & BACKWALL	27.6	10.3	37.9
RIGHT CAP ETC. @ W1	22.4	17.7	40.1
CLASS "A" CONCRETE		C.M.	116.4

HP 360x108 STEEL PILES (END BENT 2)
NO. 33 LIN.M. 1023.0

HP 360x108 STEEL PILES (APPROACH SLAB)
NO. 4 LIN.M. 100.0

PROJECT NO. U-2519DA
CUMBERLAND COUNTY
STATION: 34+21.044-RP1BD-

SHEET 5 OF 5

STATE OF NORTH CAROLINA
DEPARTMENT OF TRANSPORTATION
RALEIGH

END BENT 2

NORTH CAROLINA PROFESSIONAL SEAL 12960 ENGINEER PAUL STEPHEN ERVIN
10-9-08

REVISIONS						SHEET NO.
NO.	BY:	DATE:	NO.	BY:	DATE:	S-363
1			3			TOTAL SHEETS
2			4			411

DRAWN BY : R.D. MARTIN DATE : 6-27-08
CHECKED BY : P.S. ERVIN DATE : 8-7-08

NOTES

SLOPE PROTECTION SHALL BE PLACED UNDER THE ENDS OF THE BRIDGE AS SHOWN IN THE DETAILS. STRAIGHT EDGING WILL NOT BE REQUIRED UNLESS, IN THE OPINION OF THE ENGINEER, VISUAL INSPECTION INDICATES A NEED FOR IT. MEASUREMENT AND PAYMENT SHALL BE AS PRESCRIBED IN SECTION 462 OF THE STANDARD SPECIFICATIONS. FOR BERM WIDTH, SEE GENERAL DRAWING.

SLOPE PROTECTION SHALL CONSIST OF 100mm POURED-IN-PLACE CONCRETE PAVING AS SHOWN IN THE DETAILS ON THIS SHEET. CONCRETE SHALL BE CLASS "B". THE CONCRETE SURFACE SHALL BE FLOATED WITH A WOODEN FLOAT AND FINISHED. WELDED WIRE FABRIC REINFORCING SHALL BE 152 X 152 - W9.1 X W9.1, 1520mm WIDE. SLOPE PROTECTION SHALL BE POURED IN 1520mm STRIPS AS SHOWN IN THE "POURING DETAIL" WITH 600mm LONG #13 BARS PLACED ALONG THE SLOPE BETWEEN STRIPS AT 450mm MAXIMUM SPACING. SLOPE PROTECTION MAY BE POURED IN ALTERNATE 1220mm AND 1520mm STRIPS AS SHOWN IN THE "OPTIONAL POURING DETAIL" WITH ADJACENT RUNS OF WELDED WIRE FABRIC LAPPING AT LEAST 152mm. THE COST OF THE WELDED WIRE FABRIC AND #13 BARS, IF USED, SHALL BE INCLUDED IN THE CONTRACT UNIT PRICE BID PER SQUARE METER FOR SLOPE PROTECTION.

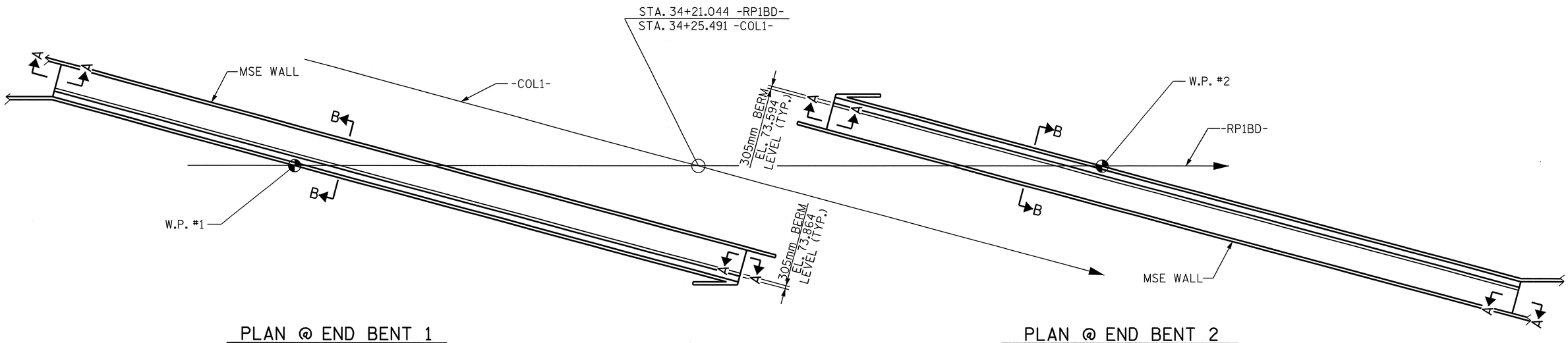

PLAN @ END BENT 1

PLAN @ END BENT 2

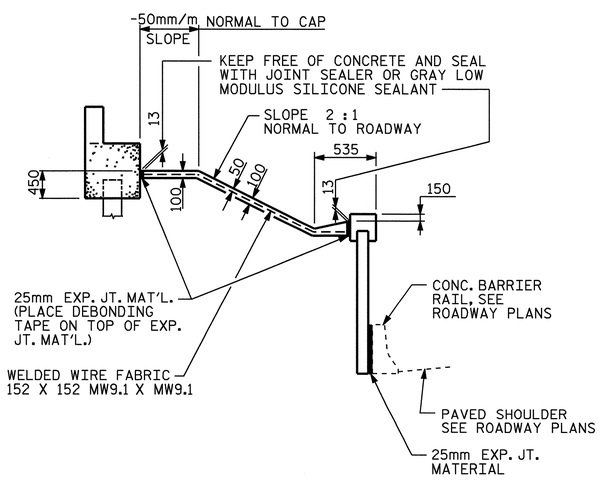

SECTION B-B

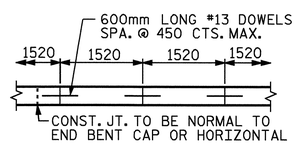

POURING DETAIL

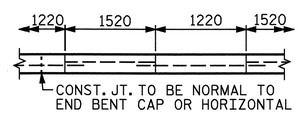

POUR A 1220mm STRIP FIRST.

OPTIONAL POURING DETAIL

BRIDGE @ STA. 34+21.044 -RP1BD-	100 mm SLOPE PROTECTION	* WELDED WIRE FABRIC 1520mm WIDE
	SQUARE METERS	APPROX. METERS
END BENT 1	138.7	88.0
END BENT 2	138.7	88.0

* QUANTITY SHOWN IS BASED ON 1520mm POURS.

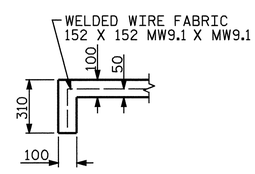

SECTION A-A

PROJECT NO. U-2519DA

CUMBERLAND COUNTY

STATION: 34+21.044 -RP1BD-
34+25.491 -COL1-

STATE OF NORTH CAROLINA
DEPARTMENT OF TRANSPORTATION
RALEIGH

SLOPE PROTECTION

NORTH CAROLINA PROFESSIONAL SEAL 12960 ENGINEER PAUL STEPHEN ERVIN
9-11-08

REVISIONS						SHEET NO.
NO.	BY:	DATE:	NO.	BY:	DATE:	S-36A
1			3			TOTAL SHEETS
2			4			411

DRAWN BY : R.D. MARTIN DATE : 7-22-08
CHECKED BY : P.S. ERVIN DATE : 8-20-08

10-SEP-2008 12:28
U:\rory\metric\U2519DA_sd_SP.dgn
rmartin

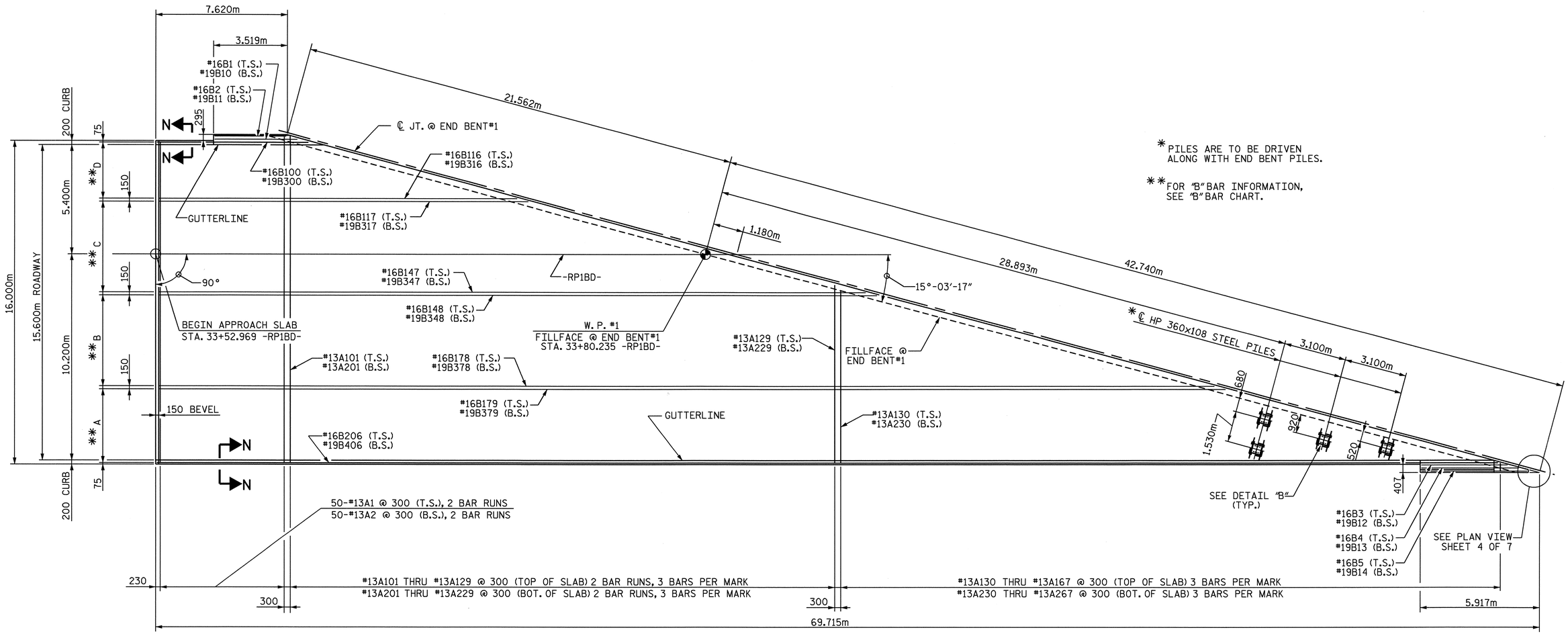

PLAN @ END BENT#1

(T.S.) = TOP OF SLAB
(B.S.) = BOTTOM OF SLAB

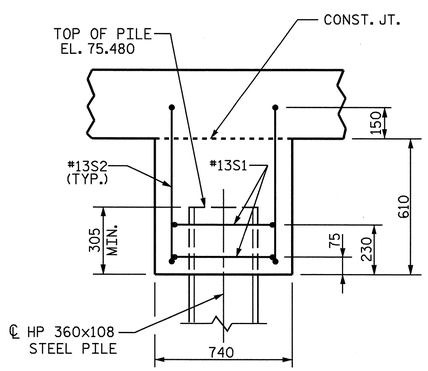

SECTION A-A

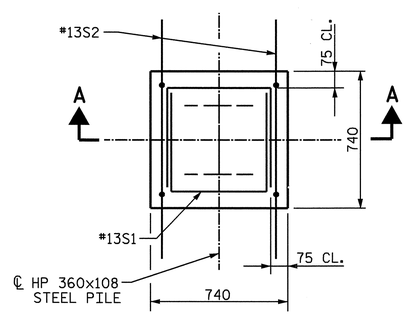

PLAN

DETAIL "B"

"B" BAR CHART	
A	#16B179 THRU #16B206 @ 150 (T.S.) 4 BAR RUNS, 770 SPLICE
	#19B379 THRU #19B406 @ 150 (B.S.) 4 BAR RUNS, 790 SPLICE
B	#16B148 THRU #16B178 @ 150 (T.S.) 3 BAR RUNS, 770 SPLICE
	#19B348 THRU #19B378 @ 150 (B.S.) 3 BAR RUNS, 790 SPLICE
C	#16B117 THRU #16B147 @ 150 (T.S.) 2 BAR RUNS, 770 SPLICE
	#19B317 THRU #19B347 @ 150 (B.S.) 2 BAR RUNS, 790 SPLICE
D	#16B100 THRU #16B116 @ 150 (T.S.)
	#19B300 THRU #19B316 @ 150 (B.S.)

PROJECT NO. U-2519DA
CUMBERLAND COUNTY
STATION: 34+21.044-RP1BD-

SHEET 1 OF 7

STATE OF NORTH CAROLINA
DEPARTMENT OF TRANSPORTATION
RALEIGH

BRIDGE APPROACH SLAB

NORTH CAROLINA PROFESSIONAL SEAL 12960 ENGINEER PAUL STEPHEN ERVIN
8-11-08

REVISIONS						SHEET NO.
NO.	BY:	DATE:	NO.	BY:	DATE:	S-365
1			3			TOTAL SHEETS
2			4			411

DRAWN BY : R.D. MARTIN DATE : 8-1-08
CHECKED BY : P.S. ERVIN DATE : 8-28-08

10-SEP-2008 13:54
U:\rory\metric\U2519DA_sd_AS.dgn
rmartin

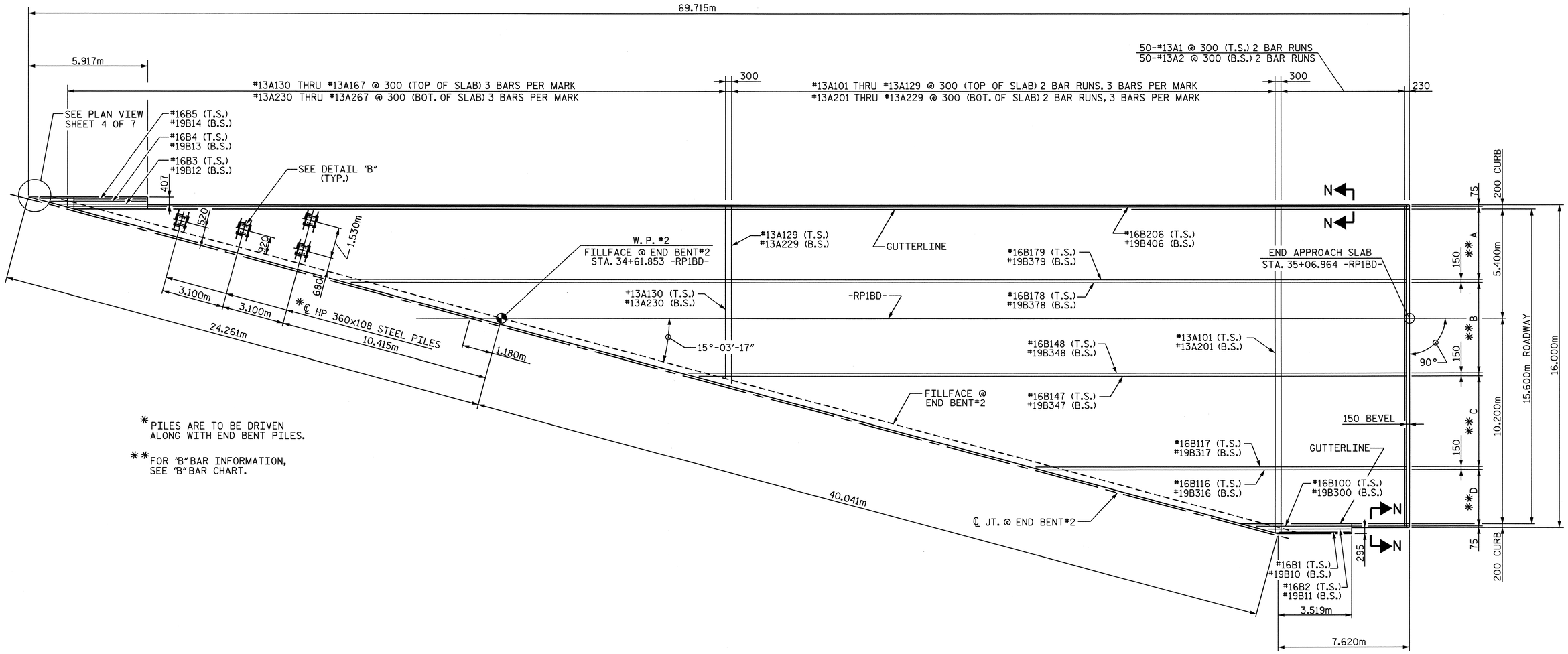

* PILES ARE TO BE DRIVEN ALONG WITH END BENT PILES.

** FOR "B" BAR INFORMATION, SEE "B" BAR CHART.

PLAN @ END BENT#2

(T.S.) = TOP OF SLAB
(B.S.) = BOTTOM OF SLAB

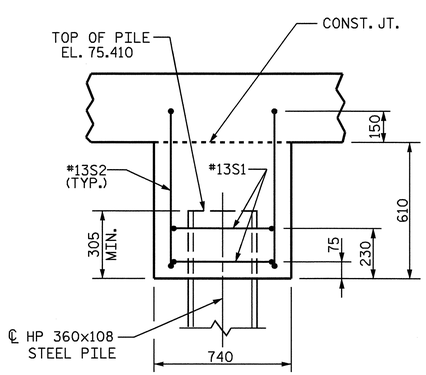

SECTION A-A

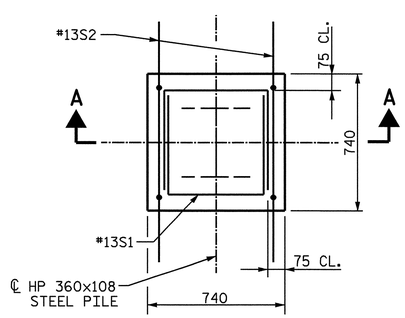

PLAN

DETAIL "B"

"B" BAR CHART	
A	#16B179 THRU #16B206 @ 150 (T.S.) 4 BAR RUNS, 770 SPLICE
	#19B379 THRU #19B406 @ 150 (B.S.) 4 BAR RUNS, 790 SPLICE
B	#16B148 THRU #16B178 @ 150 (T.S.) 3 BAR RUNS, 770 SPLICE
	#19B348 THRU #19B378 @ 150 (B.S.) 3 BAR RUNS, 790 SPLICE
C	#16B117 THRU #16B147 @ 150 (T.S.) 2 BAR RUNS, 770 SPLICE
	#19B317 THRU #19B347 @ 150 (B.S.) 2 BAR RUNS, 790 SPLICE
D	#16B100 THRU #16B116 @ 150 (T.S.)
	#19B300 THRU #19B316 @ 150 (B.S.)

PROJECT NO. U-2519DA
CUMBERLAND COUNTY
STATION: 34+21.044-RP1BD-

SHEET 2 OF 7

STATE OF NORTH CAROLINA
DEPARTMENT OF TRANSPORTATION
RALEIGH

BRIDGE APPROACH SLAB

NORTH CAROLINA PROFESSIONAL SEAL 12980 ENGINEER PAUL STEPHEN ERVIN
8-1-08

REVISIONS						SHEET NO.
NO.	BY:	DATE:	NO.	BY:	DATE:	S-366
1			3			TOTAL SHEETS
2			4			411

DRAWN BY : R.D. MARTIN DATE : 8-1-08
CHECKED BY : P.S. ERVIN DATE : 8-28-08

10-SEP-2008 13:55
U:\rory\metric\U2519DA_sd_AS.dgn
rmartin

NOTES

THE COST OF THE BARRIER RAIL ON THE APPROACH SLAB SHALL BE INCLUDED IN THE LUMP SUM CONTRACT PRICE BID FOR BRIDGE APPROACH SLABS.

TEMPORARY DRAINAGE AND TEMPORARY BERM AND SLOPE DRAINS WILL BE PAID FOR UNDER THE LUMP SUM PRICE FOR BRIDGE APPROACH SLAB.

AREA BETWEEN THE WINGWALL AND APPROACH SLAB SHALL BE GRADED TO DRAIN THE WATER AWAY FROM THE FILL FACE OF THE BRIDGE AND SHALL BE PAVED. SEE ROADWAY PLANS.

THE 150mm COMP. A.B.C. SHALL EXTEND 3m BEYOND THE END OF THE APPROACH SLAB AND 300mm OUTSIDE OF EACH EDGE OF THE SLAB.

THE CONTRACTOR MAY USE 100mm TYPE B-25.0B ASPHALT CONCRETE COURSE IN LIEU OF 150mm COMP. A.B.C. IF THIS OPTION IS USED, THE BASE COURSE SHALL EXTEND 300mm BEYOND THE END OF THE APPROACH SLAB AND THE WIDTH SHALL BE THE SAME AS THAT OF THE APPROACH SLAB.

THE CONTRACTOR MAY USE 125mm CLASS "A" CONCRETE BASE IN LIEU OF 150mm COMP. A.B.C. IF THIS OPTION IS USED, THE CONCRETE BASE SHALL EXTEND 300mm BEYOND THE END OF THE APPROACH SLAB AND THE WIDTH SHALL BE THE SAME AS THAT OF THE APPROACH SLAB. THE CONCRETE SHALL BE FINISHED TO A SMOOTH SURFACE AND A LAYER OF 13.6 kg ROOFING FELT SHALL BE PLACED BETWEEN THE CONCRETE BASE AND THE APPROACH SLAB TO PREVENT BOND. THE APPROACH SLAB SHALL NOT BE CAST UNTIL THE CONCRETE BASE HAS REACHED AN AGE OF THREE CURING DAYS.

THE JOINT SHALL BE SAWED PRIOR TO THE CASTING OF THE BARRIER RAIL.

FOR BACKFILL MATERIAL, SEE MSE RETAINING WALL SPECIAL PROVISIONS.

FOR ELASTOMERIC CONCRETE, SEE SPECIAL PROVISIONS.

ALL REINFORCING STEEL IN BARRIER RAILS SHALL BE EPOXY COATED.

FOR EVAZOTE JOINT SEALS, SEE SPECIAL PROVISIONS.

THE NOMINAL UNCOMPRESSED SEAL WIDTH OF THE EVAZOTE JOINT SEAL SHALL BE 64mm.

FOR PLAN OF APPROACH SLAB, SEE SHEET 1 OF 7 AND 2 OF 7.

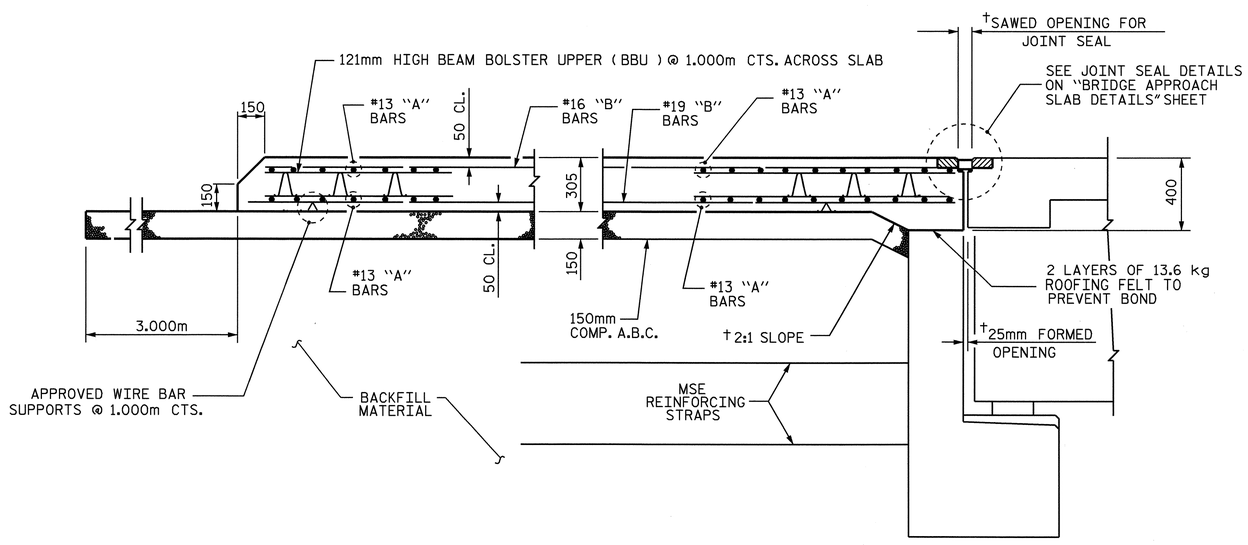

†NORMAL TO END BENT

SECTION THRU SLAB

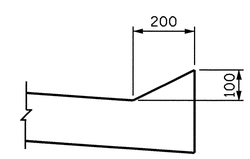

SECTION N-N

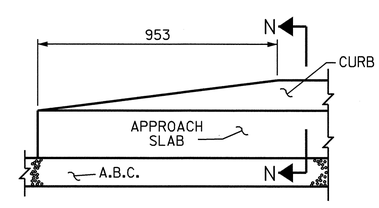

END OF CURB WITHOUT SHOULDER BERM GUTTER

CURB DETAILS

PROJECT NO. U-2519DA
CUMBERLAND COUNTY
STATION: 34+21.044-RP1BD-

SHEET 3 OF 7

STATE OF NORTH CAROLINA
DEPARTMENT OF TRANSPORTATION
RALEIGH

BRIDGE APPROACH SLAB FOR FLEXIBLE PAVEMENT

NORTH CAROLINA PROFESSIONAL SEAL 12960 ENGINEER PAUL STEPHEN ERVIN
9-30-08

REVISIONS						SHEET NO.
NO.	BY:	DATE:	NO.	BY:	DATE:	S-367
1			3			TOTAL SHEETS
2			4			411

ASSEMBLED BY : R.D. MARTIN	DATE : 8-1-08		
CHECKED BY : P.S. ERVIN	DATE : 8-28-08		
DRAWN BY : FCJ 6/87	REV. 10/17/00	RWW/LES	
CHECKED BY : EGA 6/87	REV. 7/10/01	RWW/LES	
	REV. 5/7/03R	RWW/JTE	

30-SEP-2008 14:58
S:\PG3\U2519DA\U2519DA_sd_AS.dgn
rmartin

STD. NO. BAS4SM

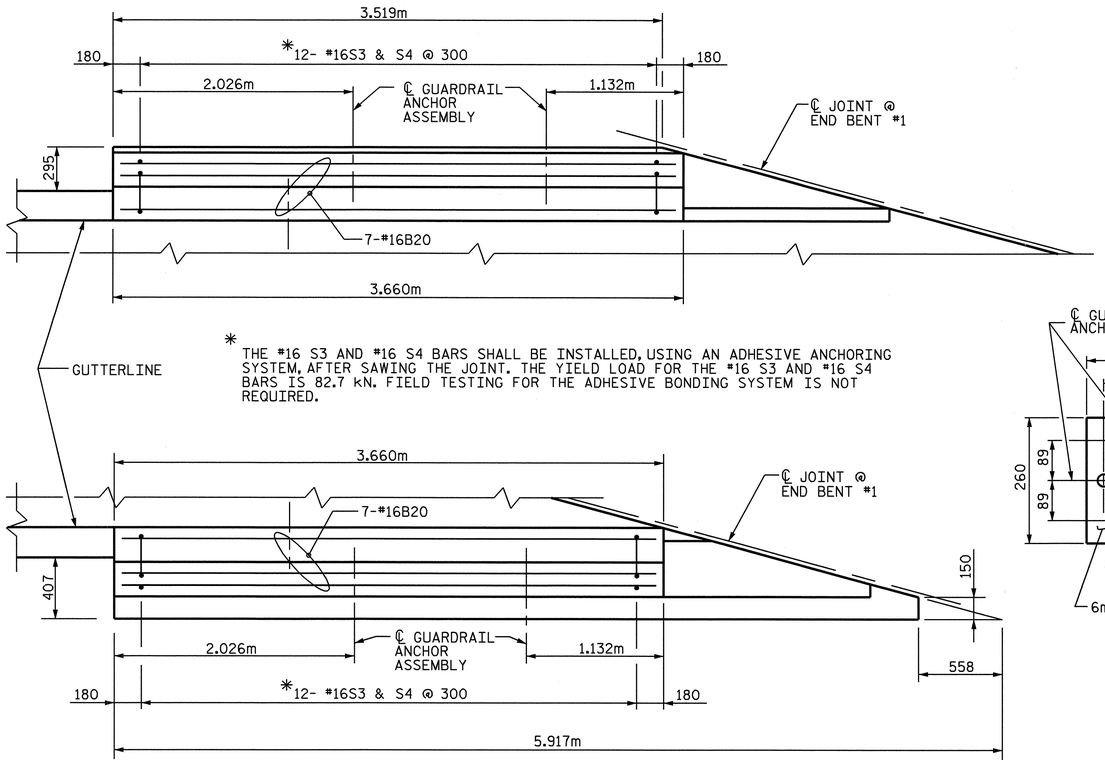

* THE #16 S3 AND #16 S4 BARS SHALL BE INSTALLED, USING AN ADHESIVE ANCHORING SYSTEM, AFTER SAWING THE JOINT. THE YIELD LOAD FOR THE #16 S3 AND #16 S4 BARS IS 82.7 kN. FIELD TESTING FOR THE ADHESIVE BONDING SYSTEM IS NOT REQUIRED.

PLAN

BEGIN APPROACH SLAB SHOWN, END APPROACH SLAB SIMILAR

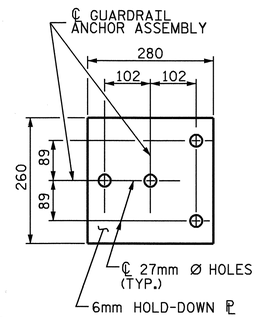

PLAN

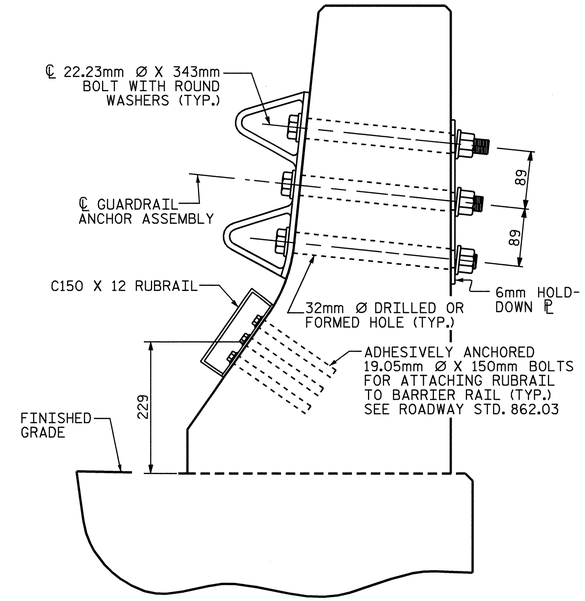

SECTION THRU RAIL

GUARDRAIL ANCHOR ASSEMBLY DETAILS

NOTES

THE GUARDRAIL ANCHOR ASSEMBLY SHALL CONSIST OF A 6mm HOLD DOWN PLATE AND 4 - 22.23mm Ø BOLTS WITH NUTS AND WASHERS, AND ADHESIVELY ANCHORED BOLTS.

THE HOLD-DOWN PLATE SHALL CONFORM TO AASHTO M270 GRADE 36. AFTER FABRICATION, THE HOLD-DOWN PLATE SHALL BE GALVANIZED IN ACCORDANCE WITH AASHTO M111.

BOLTS SHALL CONFORM TO THE REQUIREMENTS OF ASTM A307 AND NUTS SHALL CONFORM TO THE REQUIREMENTS OF AASHTO M291M. BOLTS, NUTS AND WASHERS SHALL BE GALVANIZED. AT THE CONTRACTOR'S OPTION, STAINLESS STEEL BOLTS, NUTS AND WASHERS MAY BE USED AS AN ALTERNATE FOR THE 22.23mm Ø GALVANIZED BOLTS, NUTS AND WASHERS. THEY SHALL CONFORM TO OR EXCEED THE MECHANICAL REQUIREMENTS OF ASTM A307. THE USE OF THIS ALTERNATE SHALL BE APPROVED BY THE ENGINEER.

AFTER INSTALLATION, THE EXPOSED THREAD OF THE BOLT SHALL BE BURRED WITH A SHARP POINTED TOOL.

THE COST OF THE GUARDRAIL ANCHOR ASSEMBLIES WITH BOLTS, NUTS AND WASHERS COMPLETE IN PLACE, SHALL BE INCLUDED IN THE LUMP SUM CONTRACT PRICE BID FOR BRIDGE APPROACH SLABS.

THE 32mm Ø HOLES SHALL BE FORMED OR DRILLED WITH A CORE BIT. IMPACT TOOLS WILL NOT BE PERMITTED. ANY CONCRETE DAMAGED BY THIS WORK SHALL BE REPAIRED TO THE SATISFACTION OF THE ENGINEER.

THE C150 X 12 RUBRAIL IS TO BE ADHESIVELY ANCHORED TO THE RAIL USING THREE 19.05mm Ø X 150mm BOLTS WITH WASHERS. LEVEL ONE FIELD TESTING IS REQUIRED, AND THE YIELD LOAD OF THE 19.05mm Ø BOLTS IS 53.4kN. FOR ADHESIVELY ANCHORED ANCHOR BOLTS OR DOWELS, SEE SPECIAL PROVISIONS. SEE ROADWAY STANDARD 862.03 FOR DETAILS AND LOCATION OF THE RUBRAIL.

THE RUBRAIL SPANNING THE OPENING BETWEEN THE BRIDGE AND THE APPROACH SLAB SHALL CONSIST OF AN UNBENT C150 X 12 WITH BOTH ENDS FABRICATED FOR ATTACHMENT TO BARRIER RAIL. SEE ROADWAY STD. 862.03 FOR DETAILS.

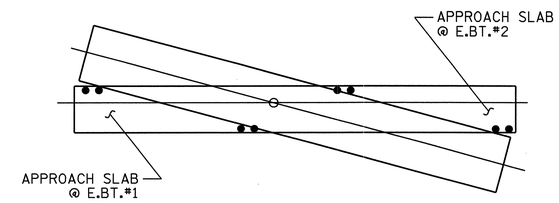

SKETCH SHOWING POINTS OF ATTACHMENT

● INDICATES POINTS OF ATTACHMENT

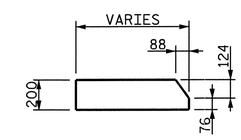

SECTION A-A

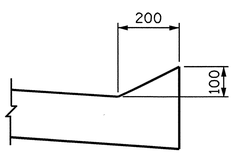

SECTION N-N

CURB DETAILS

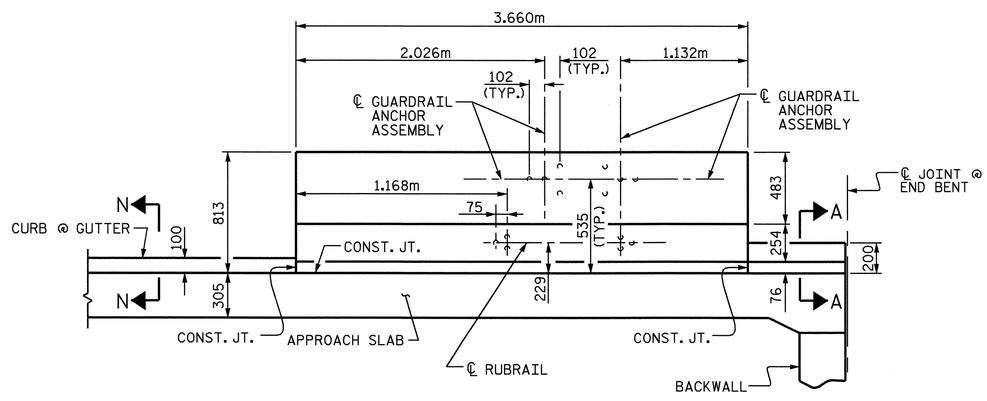

ELEVATION

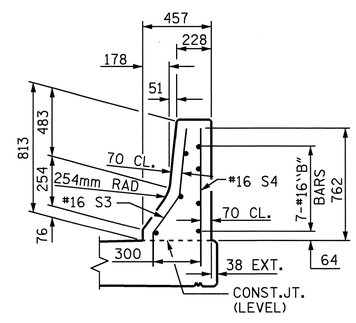

SECTION THRU RAIL

PROJECT NO. U-2519DA

CUMBERLAND COUNTY

STATION: 34+21.044-RP1BD-

SHEET 4 OF 7

STATE OF NORTH CAROLINA
DEPARTMENT OF TRANSPORTATION
RALEIGH

BRIDGE APPROACH SLAB DETAILS FOR FLEXIBLE PAVEMENT WITH BARRIER RAIL

NORTH CAROLINA PROFESSIONAL SEAL 12960 ENGINEER PAUL STEPHEN ERVIN

ASSEMBLED BY : R.D. MARTIN	DATE : 8-1-08		
CHECKED BY : P.S. ERVIN	DATE : 8-28-08		
DRAWN BY : RWW 8/01	REV. 5/7/03R	RWW/JTE	
CHECKED BY : LES 8/01			

REVISIONS						SHEET NO.
NO.	BY:	DATE:	NO.	BY:	DATE:	S-308
1			3			TOTAL SHEETS
2			4			411

10-SEP-2008 13:53
U:\rory\metric\U2519DA_sd_AS.dgn
rmartin

STD. NO. BAS6SM

BILL OF MATERIAL

EPOXY REINFORCING STEEL FOR ONE APPROACH SLAB (2 REQ'D.)

BAR	NO.	SIZE	TYPE	LENGTH	WEIGHT	BAR	NO.	SIZE	TYPE	LENGTH	WEIGHT	BAR	NO.	SIZE	TYPE	LENGTH	WEIGHT	BAR	NO.	SIZE	TYPE	LENGTH	WEIGHT
✳A1	50	#13	STR	8420	418	✳A151	3	#13	STR	3880	12	✳B136	2	#16	STR	14700	46	✳B187	4	#16	STR	14820	92
✳A101	6	#13	STR	8320	50	✳A152	3	#13	STR	3640	11	✳B137	2	#16	STR	14980	46	✳B188	4	#16	STR	14960	93
✳A102	6	#13	STR	8200	49	✳A153	3	#13	STR	3400	10	✳B138	2	#16	STR	15260	47	✳B189	4	#16	STR	15100	94
✳A103	6	#13	STR	8080	48	✳A154	3	#13	STR	3160	9	✳B139	2	#16	STR	15540	48	✳B190	4	#16	STR	15240	95
✳A104	6	#13	STR	7960	47	✳A155	3	#13	STR	2920	9	✳B140	2	#16	STR	15820	49	✳B191	4	#16	STR	15380	95
✳A105	6	#13	STR	7840	47	✳A156	3	#13	STR	2680	8	✳B141	2	#16	STR	16100	50	✳B192	4	#16	STR	15520	96
✳A106	6	#13	STR	7720	46	✳A157	3	#13	STR	2440	7	✳B142	2	#16	STR	16380	51	✳B193	4	#16	STR	15660	97
✳A107	6	#13	STR	7580	45	✳A158	3	#13	STR	2200	7	✳B143	2	#16	STR	16640	52	✳B194	4	#16	STR	15800	98
✳A108	6	#13	STR	7460	44	✳A159	3	#13	STR	1960	6	✳B144	2	#16	STR	16920	53	✳B195	4	#16	STR	15940	99
✳A109	6	#13	STR	7340	44	✳A160	3	#13	STR	1720	5	✳B145	2	#16	STR	17200	53	✳B196	4	#16	STR	16080	100
✳A110	6	#13	STR	7220	43	✳A161	3	#13	STR	1460	4	✳B146	2	#16	STR	17480	54	✳B197	4	#16	STR	16220	101
✳A111	6	#13	STR	7100	42	✳A162	3	#13	STR	1220	4	✳B147	2	#16	STR	17760	55	✳B198	4	#16	STR	16360	102
✳A112	6	#13	STR	6980	42	✳A163	3	#13	STR	980	3	✳B148	3	#16	STR	12280	57	✳B199	4	#16	STR	16500	102
✳A113	6	#13	STR	6860	41	✳A164	3	#13	STR	1140	3	✳B149	3	#16	STR	12480	58	✳B200	4	#16	STR	16640	103
✳A114	6	#13	STR	6740	40	✳A165	3	#13	STR	900	3	✳B150	3	#16	STR	12660	59	✳B201	4	#16	STR	16780	104
✳A115	6	#13	STR	6620	39	✳A166	3	#13	STR	660	2	✳B151	3	#16	STR	12840	60	✳B202	4	#16	STR	16920	105
✳A116	6	#13	STR	6500	39	✳A167	3	#13	STR	400	1	✳B152	3	#16	STR	13020	61	✳B203	4	#16	STR	17060	106
✳A117	6	#13	STR	6380	38							✳B153	3	#16	STR	13220	62	✳B204	4	#16	STR	17200	107
✳A118	6	#13	STR	6260	37							✳B154	3	#16	STR	13400	62	✳B205	4	#16	STR	17340	108
✳A119	6	#13	STR	6140	37	✳B100	1	#16	STR	8600	13	✳B155	3	#16	STR	13580	63	✳B206	4	#16	STR	17460	108
✳A120	6	#13	STR	6020	36	✳B101	1	#16	STR	9140	14	✳B156	3	#16	STR	13760	64						
✳A121	6	#13	STR	5900	35	✳B102	1	#16	STR	9700	15	✳B157	3	#16	STR	13960	65						
✳A122	6	#13	STR	5780	34	✳B103	1	#16	STR	10260	16	✳B158	3	#16	STR	14140	66	✳B1	1	#16	STR	3540	5
✳A123	6	#13	STR	5660	34	✳B104	1	#16	STR	10820	17	✳B159	3	#16	STR	14320	67	✳B2	1	#16	STR	4100	6
✳A124	6	#13	STR	5540	33	✳B105	1	#16	STR	11380	18	✳B160	3	#16	STR	14500	68	✳B3	1	#16	STR	4440	7
✳A125	6	#13	STR	5420	32	✳B106	1	#16	STR	11920	18	✳B161	3	#16	STR	14700	68	✳B4	1	#16	STR	4980	7
✳A126	6	#13	STR	5280	31	✳B107	1	#16	STR	12480	19	✳B162	3	#16	STR	14880	69	✳B5	1	#16	STR	5440	8
✳A127	6	#13	STR	5160	31	✳B108	1	#16	STR	13040	20	✳B163	3	#16	STR	15060	70	✳B20	28	#16	STR	3560	155
✳A128	6	#13	STR	5040	30	✳B109	1	#16	STR	13600	21	✳B164	3	#16	STR	15260	71						
✳A129	6	#13	STR	4920	29	✳B110	1	#16	STR	14160	22	✳B165	3	#16	STR	15440	72	✳S3	48	#16	1	1020	76
✳A130	3	#13	STR	8980	27	✳B111	1	#16	STR	14700	23	✳B166	3	#16	STR	15620	73	✳S4	48	#16	STR	960	72
✳A131	3	#13	STR	8740	26	✳B112	1	#16	STR	15260	24	✳B167	3	#16	STR	15800	74						
✳A132	3	#13	STR	8480	25	✳B113	1	#16	STR	15820	25	✳B168	3	#16	STR	16000	74						
✳A133	3	#13	STR	8240	25	✳B114	1	#16	STR	16380	25	✳B169	3	#16	STR	16180	75						
✳A134	3	#13	STR	8000	24	✳B115	1	#16	STR	16940	26	✳B170	3	#16	STR	16360	76						
✳A135	3	#13	STR	7760	23	✳B116	1	#16	STR	17480	27	✳B171	3	#16	STR	16540	77						
✳A136	3	#13	STR	7520	22	✳B117	2	#16	STR	9420	29	✳B172	3	#16	STR	16740	78	✳EPOXY COATED					
✳A137	3	#13	STR	7280	22	✳B118	2	#16	STR	9700	30	✳B173	3	#16	STR	16920	79	REINFORCING STEEL				kg.	8946
✳A138	3	#13	STR	7040	21	✳B119	2	#16	STR	9980	31	✳B174	3	#16	STR	17100	80						
✳A139	3	#13	STR	6800	20	✳B120	2	#16	STR	10260	32	✳B175	3	#16	STR	17280	80						
✳A140	3	#13	STR	6560	20	✳B121	2	#16	STR	10540	33	✳B176	3	#16	STR	17480	81						
✳A141	3	#13	STR	6300	19	✳B122	2	#16	STR	10820	34	✳B177	3	#16	STR	17660	82						
✳A142	3	#13	STR	6060	18	✳B123	2	#16	STR	11080	34	✳B178	3	#16	STR	17840	83						
✳A143	3	#13	STR	5820	17	✳B124	2	#16	STR	11360	35	✳B179	4	#16	STR	13720	85						
✳A144	3	#13	STR	5580	17	✳B125	2	#16	STR	11640	36	✳B180	4	#16	STR	13860	86						
✳A145	3	#13	STR	5340	16	✳B126	2	#16	STR	11920	37	✳B181	4	#16	STR	14000	87						
✳A146	3	#13	STR	5100	15	✳B127	2	#16	STR	12200	38	✳B182	4	#16	STR	14140	88						
✳A147	3	#13	STR	4860	14	✳B128	2	#16	STR	12480	39	✳B183	4	#16	STR	14280	89						
✳A148	3	#13	STR	4620	14	✳B129	2	#16	STR	12760	40	✳B184	4	#16	STR	14420	90						
✳A149	3	#13	STR	4380	13	✳B130	2	#16	STR	13040	40	✳B185	4	#16	STR	14560	90						
✳A150	3	#13	STR	4140	12	✳B131	2	#16	STR	13320	41	✳B186	4	#16	STR	14700	91						
						✳B132	2	#16	STR	13600	42												
						✳B133	2	#16	STR	13860	43												
						✳B134	2	#16	STR	14140	44												
						✳B135	2	#16	STR	14420	45												

NOTE:

BILL OF MATERIAL FOR REINFORCING STEEL CONTINUED ON SHEET 6 OF 7.

PROJECT NO. U-2519DA
CUMBERLAND COUNTY
STATION: 34+21.044-RP1BD-

SHEET 5 OF 7

STATE OF NORTH CAROLINA
DEPARTMENT OF TRANSPORTATION
RALEIGH

BRIDGE APPROACH SLAB

NORTH CAROLINA PROFESSIONAL SEAL 12960 ENGINEER PAUL STEPHEN ERVIN

REVISIONS						SHEET NO.
NO.	BY:	DATE:	NO.	BY:	DATE:	S-369
1			3			TOTAL SHEETS
2			4			411

DRAWN BY : R.D. MARTIN DATE : 8-1-08
CHECKED BY : P.S. ERVIN DATE : 8-28-08

10-SEP-2008 14:12
U:\rory\metric\U2519DA_sd_AS.dgn
rmartin

BILL OF MATERIAL (CONTINUED)

REINFORCING STEEL FOR ONE APPROACH SLAB (2 REQ'D.)

BAR	NO.	SIZE	TYPE	LENGTH	WEIGHT	BAR	NO.	SIZE	TYPE	LENGTH	WEIGHT	BAR	NO.	SIZE	TYPE	LENGTH	WEIGHT	BAR	NO.	SIZE	TYPE	LENGTH	WEIGHT
A2	50	#13	STR	8380	416	A251	3	#13	STR	3880	12	B336	2	#19	STR	14780	66	B387	4	#19	STR	14880	133
A201	6	#13	STR	8280	49	A252	3	#13	STR	3640	11	B337	2	#19	STR	15060	67	B388	4	#19	STR	15020	134
A202	6	#13	STR	8160	49	A253	3	#13	STR	3400	10	B338	2	#19	STR	15340	69	B389	4	#19	STR	15160	136
A203	6	#13	STR	8040	48	A254	3	#13	STR	3160	9	B339	2	#19	STR	15620	70	B390	4	#19	STR	15300	137
A204	6	#13	STR	7920	47	A255	3	#13	STR	2920	9	B340	2	#19	STR	15900	71	B391	4	#19	STR	15440	138
A205	6	#13	STR	7800	47	A256	3	#13	STR	2680	8	B341	2	#19	STR	16180	72	B392	4	#19	STR	15580	139
A206	6	#13	STR	7680	46	A257	3	#13	STR	2440	7	B342	2	#19	STR	16460	74	B393	4	#19	STR	15720	141
A207	6	#13	STR	7560	45	A258	3	#13	STR	2200	7	B343	2	#19	STR	16740	75	B394	4	#19	STR	15860	142
A208	6	#13	STR	7440	44	A259	3	#13	STR	1960	6	B344	2	#19	STR	17020	76	B395	4	#19	STR	16000	143
A209	6	#13	STR	7320	44	A260	3	#13	STR	1720	5	B345	2	#19	STR	17280	77	B396	4	#19	STR	16140	144
A210	6	#13	STR	7200	43	A261	3	#13	STR	1460	4	B346	2	#19	STR	17560	78	B397	4	#19	STR	16280	146
A211	6	#13	STR	7080	42	A262	3	#13	STR	1220	4	B347	2	#19	STR	17840	80	B398	4	#19	STR	16420	147
A212	6	#13	STR	6940	41	A263	3	#13	STR	980	3	B348	3	#19	STR	12340	83	B399	4	#19	STR	16540	148
A213	6	#13	STR	6820	41	A264	3	#13	STR	1140	3	B349	3	#19	STR	12540	84	B400	4	#19	STR	16680	149
A214	6	#13	STR	6700	40	A265	3	#13	STR	900	3	B350	3	#19	STR	12720	85	B401	4	#19	STR	16820	150
A215	6	#13	STR	6580	39	A266	3	#13	STR	660	2	B351	3	#19	STR	12900	86	B402	4	#19	STR	16960	152
A216	6	#13	STR	6460	39	A267	3	#13	STR	400	1	B352	3	#19	STR	13100	88	B403	4	#19	STR	17100	153
A217	6	#13	STR	6340	38							B353	3	#19	STR	13280	89	B404	4	#19	STR	17240	154
A218	6	#13	STR	6220	37							B354	3	#19	STR	13460	90	B405	4	#19	STR	17380	155
A219	6	#13	STR	6100	36	B300	1	#19	STR	8740	20	B355	3	#19	STR	13640	91	B406	4	#19	STR	17520	157
A220	6	#13	STR	5980	36	B301	1	#19	STR	9300	21	B356	3	#19	STR	13840	93						
A221	6	#13	STR	5860	35	B302	1	#19	STR	9860	22	B357	3	#19	STR	14020	94						
A222	6	#13	STR	5740	34	B303	1	#19	STR	10420	23	B358	3	#19	STR	14200	95	B10	1	#19	STR	3540	8
A223	6	#13	STR	5620	34	B304	1	#19	STR	10960	24	B359	3	#19	STR	14380	96	B11	1	#19	STR	4100	9
A224	6	#13	STR	5500	33	B305	1	#19	STR	11520	26	B360	3	#19	STR	14580	98	B12	1	#19	STR	4280	10
A225	6	#13	STR	5380	32	B306	1	#19	STR	12080	27	B361	3	#19	STR	14760	99	B13	1	#19	STR	4820	11
A226	6	#13	STR	5260	31	B307	1	#19	STR	12640	28	B362	3	#19	STR	14940	100	B14	1	#19	STR	5240	12
A227	6	#13	STR	5140	31	B308	1	#19	STR	13200	30	B363	3	#19	STR	15120	101						
A228	6	#13	STR	5020	30	B309	1	#19	STR	13740	31	B364	3	#19	STR	15320	103	S1	16	#13	2	1180	17
A229	6	#13	STR	4900	29	B310	1	#19	STR	14300	32	B365	3	#19	STR	15500	104	S2	8	#13	3	2600	20
A230	3	#13	STR	8980	27	B311	1	#19	STR	14860	33	B366	3	#19	STR	15680	105						
A231	3	#13	STR	8740	26	B312	1	#19	STR	15420	34	B367	3	#19	STR	15860	106						
A232	3	#13	STR	8480	25	B313	1	#19	STR	15980	36	B368	3	#19	STR	16060	108						
A233	3	#13	STR	8240	25	B314	1	#19	STR	16520	37	B369	3	#19	STR	16240	109						
A234	3	#13	STR	8000	24	B315	1	#19	STR	17080	38	B370	3	#19	STR	16420	110						
A235	3	#13	STR	7760	23	B316	1	#19	STR	17640	39	B371	3	#19	STR	16620	111	REINFORCING STEEL				kg.	11613
A236	3	#13	STR	7520	22	B317	2	#19	STR	9500	42	B372	3	#19	STR	16800	113						
A237	3	#13	STR	7280	22	B318	2	#19	STR	9780	44	B373	3	#19	STR	16980	114						
A238	3	#13	STR	7040	21	B319	2	#19	STR	10060	45	B374	3	#19	STR	17160	115						
A239	3	#13	STR	6800	20	B320	2	#19	STR	10340	46	B375	3	#19	STR	17360	116						
A240	3	#13	STR	6560	20	B321	2	#19	STR	10620	47	B376	3	#19	STR	17540	118						
A241	3	#13	STR	6300	19	B322	2	#19	STR	10900	49	B377	3	#19	STR	17720	119						
A242	3	#13	STR	6060	18	B323	2	#19	STR	11180	50	B378	3	#19	STR	17900	120						
A243	3	#13	STR	5820	17	B324	2	#19	STR	11460	51	B379	4	#19	STR	13780	123						
A244	3	#13	STR	5580	17	B325	2	#19	STR	11740	52	B380	4	#19	STR	13900	124						
A245	3	#13	STR	5340	16	B326	2	#19	STR	12000	54	B381	4	#19	STR	14040	126						
A246	3	#13	STR	5100	15	B327	2	#19	STR	12280	55	B382	4	#19	STR	14180	127						
A247	3	#13	STR	4860	14	B328	2	#19	STR	12560	56	B383	4	#19	STR	14320	128						
A248	3	#13	STR	4620	14	B329	2	#19	STR	12840	57	B384	4	#19	STR	14460	129						
A249	3	#13	STR	4380	13	B330	2	#19	STR	13120	59	B385	4	#19	STR	14600	131						
A250	3	#13	STR	4140	12	B331	2	#19	STR	13400	60	B386	4	#19	STR	14740	132						
						B332	2	#19	STR	13680	61												
						B333	2	#19	STR	13960	62												
						B334	2	#19	STR	14240	64												
						B335	2	#19	STR	14500	65												

BAR TYPES

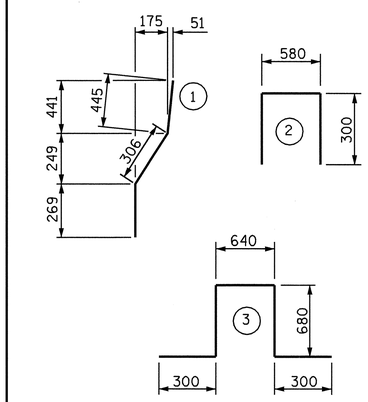

ALL BAR DIMENSIONS ARE OUT TO OUT

QUANTITIES FOR ONE APPROACH SLAB (2 REQ'D.)

REINFORCING STEEL	(kg.)	11613
EPOXY COATED REINFORCING STEEL	(kg.)	8946
CLASS AA CONCRETE	(m3)	188.9

NOTE:

HP 360x108 STEEL PILES ARE INCLUDED IN THE QUANTITIES FOR END BENT 1 AND END BENT 2.

PROJECT NO. U-2519DA
CUMBERLAND COUNTY
STATION: 34+21.044-RP1BD-

SHEET 6 OF 7

STATE OF NORTH CAROLINA
DEPARTMENT OF TRANSPORTATION
RALEIGH

BRIDGE APPROACH SLAB

NORTH CAROLINA PROFESSIONAL SEAL 12960 ENGINEER PAUL STEPHEN ERVIN

9-11-08

REVISIONS						SHEET NO.
NO.	BY:	DATE:	NO.	BY:	DATE:	S-370
1			3			TOTAL SHEETS
2			4			411

DRAWN BY : R.D. MARTIN DATE : 8-1-08
CHECKED BY : P.S. ERVIN DATE : 8-28-08

10-SEP-2008 14:12
U:\rory\metric\U2519DA_sd_AS.dgn
rmartin

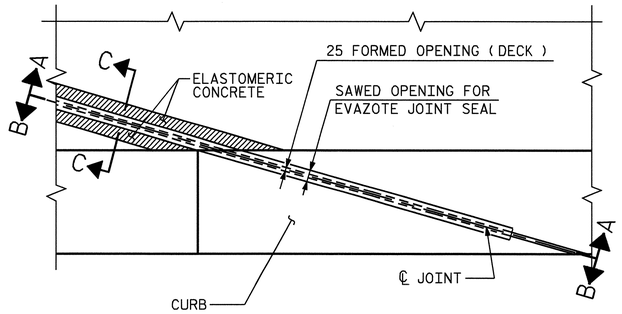

PLAN

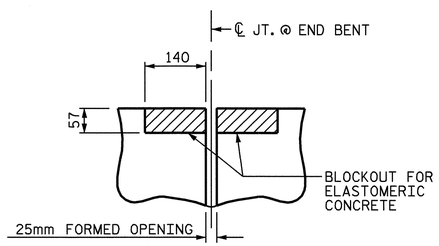

SECTION C-C

EVAZOTE JOINT SEAL
(PRE-SAWED ELASTOMERIC
CONCRETE DIMENSIONS)

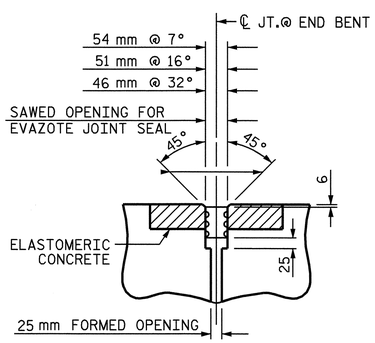

SECTION C-C

EVAZOTE JOINT SEAL

ELASTOMERIC CONCRETE	
END BENT NO.	ELASTOMERIC CONCRETE ✳ (CU. m)
1	1.0
2	1.0
TOTAL	2.0

✳ BASED ON THE MINIMUM BLOCKOUT SHOWN.

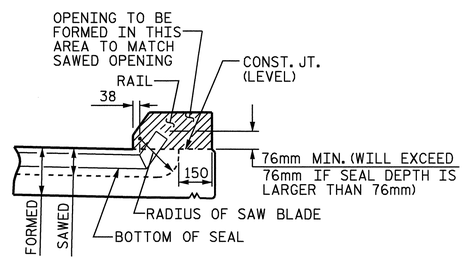

SECTION A-A

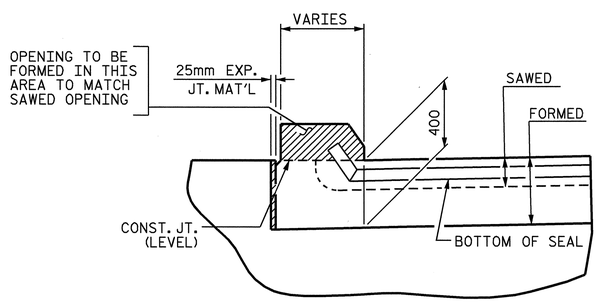

SECTION B-B

JOINT SEAL DETAILS @ END BENT

(FOR CURB)

EVAZOTE JOINT SEAL TO BE CUT, HEAT WELDED AND TURNED UP PARALLEL TO SLOPED FACE OF THE CURB.

THE JOINT SHALL BE SAWED PRIOR TO THE CASTING OF THE CURB AND BARRIER RAIL.

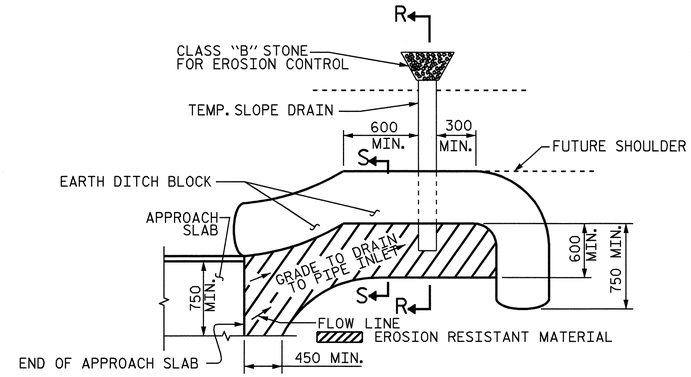

NOTE: IMMEDIATELY AFTER THE CONSTRUCTION OF THE APPROACH SLAB, THE CONTRACTOR SHALL PROVIDE TEMPORARY BERM AND SLOPE DRAIN. CONTRACTOR SHALL GRADE TO PIPE INLET AND PROVIDE EROSION RESISTANT MATERIAL AS SHOWN. THE EROSION RESISTANT MATERIAL SHALL BE EITHER 1) ASPHALT PLANT MIX, TYPE 1 OR TYPE 2, MIN. 50mm DEPTH, 2) EROSION CONTROL MAT, OR 3) CONCRETE, AS DIRECTED BY THE ENGINEER. THE SLOPE DRAIN SHALL CONSIST OF A NON-PERFORATED TEMPORARY DRAINAGE PIPE, 305mm IN DIAMETER.

PLAN VIEW

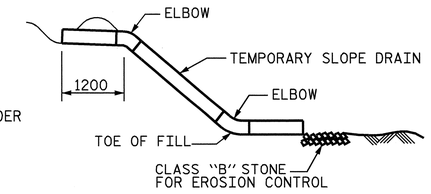

SECTION R-R

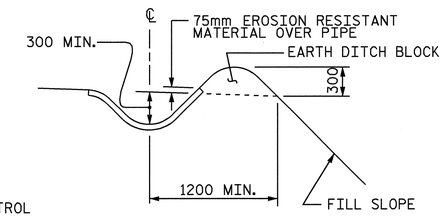

SECTION S-S

TEMPORARY BERM AND SLOPE DRAIN DETAILS

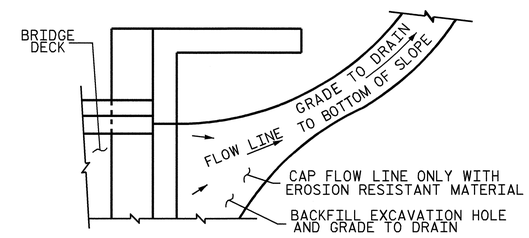

NOTE: IF THE APPROACH SLAB IS NOT CONSTRUCTED IMMEDIATELY AFTER THE BACKFILLING OF THE END BENT EXCAVATION, GRADE TO DRAIN TO THE BOTTOM OF THE SLOPE AND PROVIDE EROSION RESISTANT MATERIAL, SUCH AS FIBERGLASS ROVING OR AS DIRECTED BY THE ENGINEER TO PREVENT SOIL EROSION AND TO PROTECT THE AREA ADJACENT TO THE STRUCTURE. THE CONTRACTOR WILL BE REQUIRED TO REMOVE THESE MATERIALS PRIOR TO CONSTRUCTION OF THE APPROACH SLAB.

TEMPORARY DRAINAGE DETAIL

PROJECT NO. U-2519DA
CUMBERLAND COUNTY
STATION: 34+21.044-RP1BD-

SHEET 7 OF 7

STATE OF NORTH CAROLINA
DEPARTMENT OF TRANSPORTATION
RALEIGH

BRIDGE APPROACH SLAB DETAILS

NORTH CAROLINA PROFESSIONAL SEAL 12960 ENGINEER PAUL STEPHEN ERVIN
9-30-08

ASSEMBLED BY : R.D. MARTIN	DATE : 8-1-08
CHECKED BY : P.S. ERVIN	DATE : 8-28-08

DRAWN BY : FCJ 11/88	REV. 8/16/99 RAL/LES
CHECKED BY : ARB 11/88	REV. 10/17/00 RWW/LES
	REV. 5/7/03 RWW/JTE

REVISIONS						SHEET NO.
NO.	BY:	DATE:	NO.	BY:	DATE:	S-371
1			3			TOTAL SHEETS
2			4			411

STD. NO. BAS10SM

30-SEP-2008 09:01
S:\PGS\U2519DA\U2519DA_sd_AS.dgn
rmartin

F.A. PROJECT NO. NHF-0100 (21)

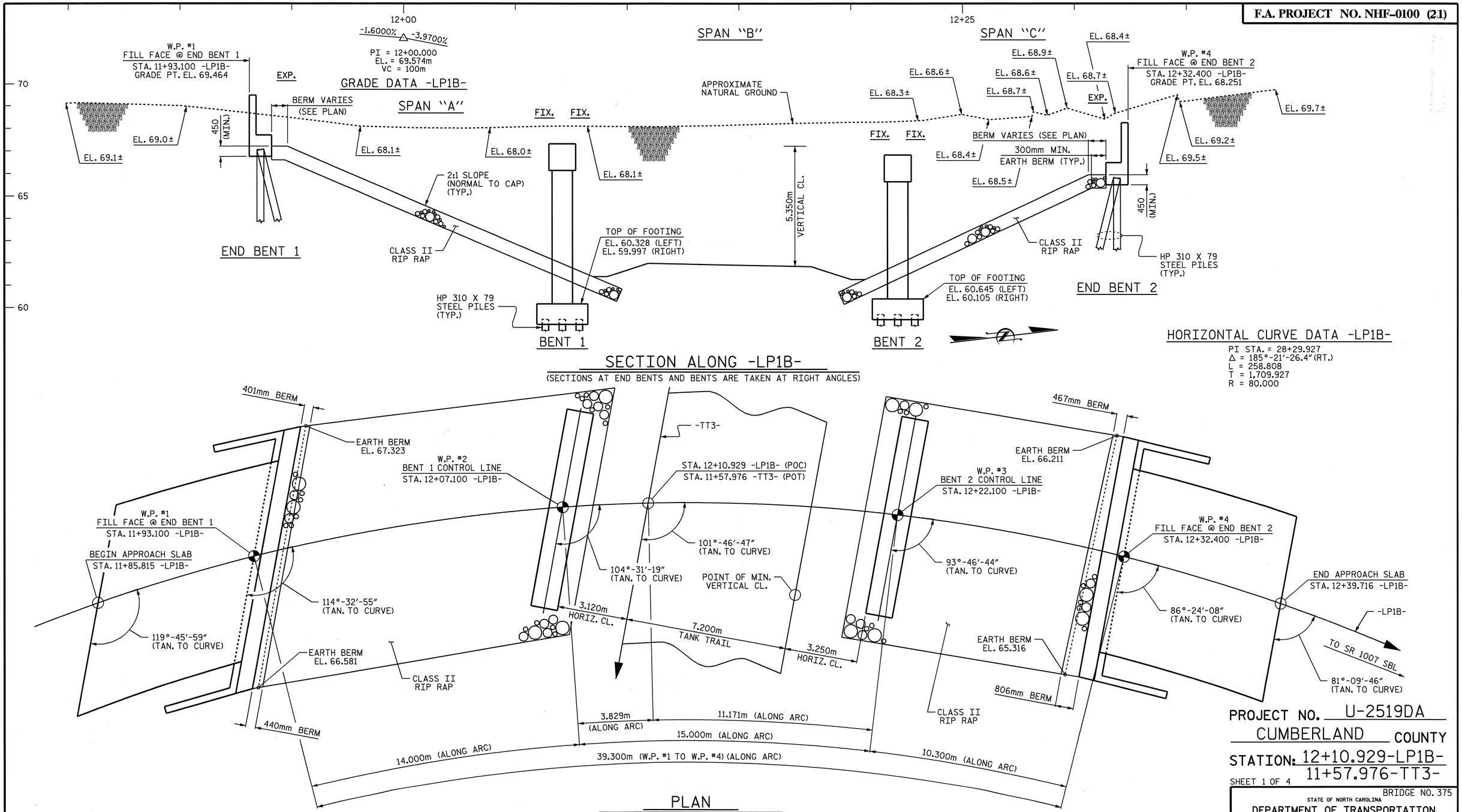

SECTION ALONG -LP1B-

(SECTIONS AT END BENTS AND BENTS ARE TAKEN AT RIGHT ANGLES)

HORIZONTAL CURVE DATA -LP1B-

PI STA. = 28+29.927
Δ = 185°-21'-26.4" (RT.)
L = 258.808
T = 1,709.927
R = 80.000

PLAN

(FOR CLARITY, PILES, COLUMNS, AND FOOTINGS ARE NOT SHOWN)

PROJECT NO. U-2519DA
CUMBERLAND COUNTY
STATION: 12+10.929-LP1B-
11+57.976-TT3-

SHEET 1 OF 4

BRIDGE NO. 375

STATE OF NORTH CAROLINA
DEPARTMENT OF TRANSPORTATION
RALEIGH

GENERAL DRAWING

BRIDGE OVER TANK TRAIL 3
ON LOOP 1B BETWEEN
FAYETTEVILLE OUTER LOOP
AND SR 1007 SBL

REVISIONS						SHEET NO.
NO.	BY:	DATE:	NO.	BY:	DATE:	S-372
1			3			TOTAL SHEETS
2			4			411

METRIC

NORTH CAROLINA PROFESSIONAL SEAL 9804 ENGINEER ROY M. GIORDANI
9-30-08

NORTH CAROLINA PROFESSIONAL SEAL 21638 ENGINEER LAURA E. SUTTON
9/30/08

DRAWN BY : P.C. BREWER DATE : 7/14/08
CHECKED BY : L.E. SUTTON DATE : 7/16/08

30-SEP-2008 09:52
r:\structures\glrolaml\str16\pbrewer\Microstation\u2519da_sd_gd_16.dgn
lsutton

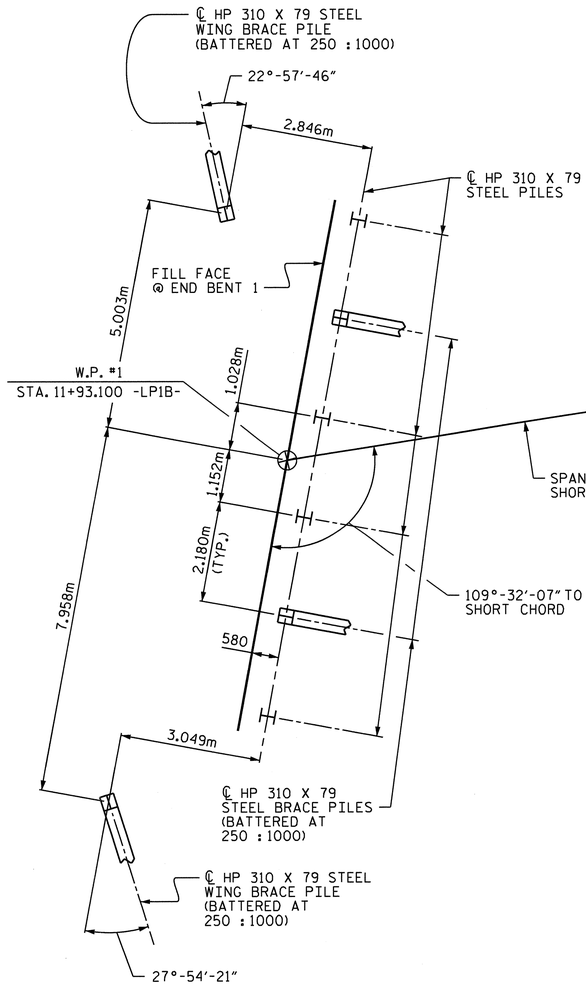

END BENT 1

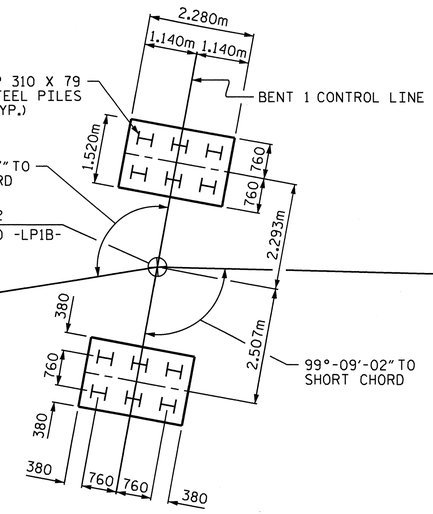

BENT 1

(FOOTING DIMENSIONS AND PILE LAYOUT ARE TYPICAL FOR EACH FOOTING.)

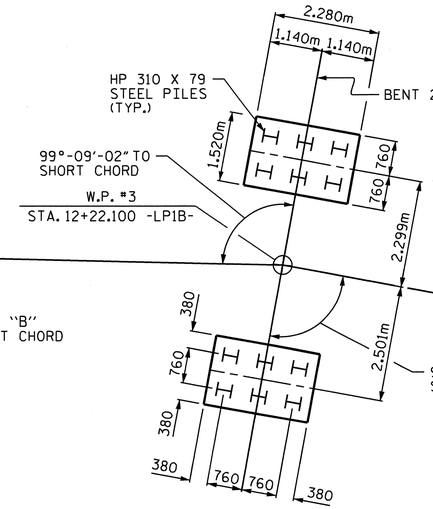

BENT 2

(FOOTING DIMENSIONS AND PILE LAYOUT ARE TYPICAL FOR EACH FOOTING.)

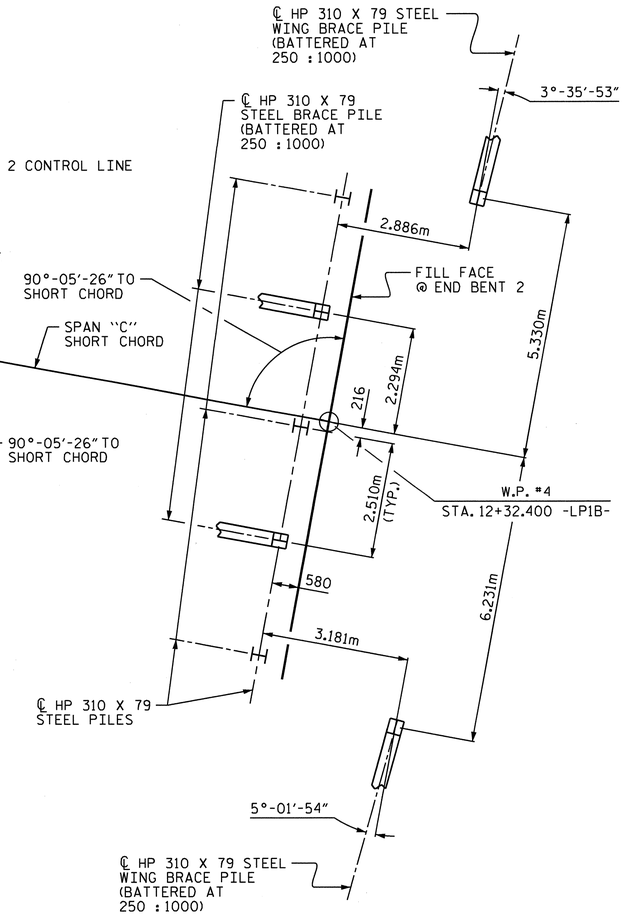

END BENT 2

FOUNDATION LAYOUT

ALL PILES ARE HP 310 X 79 STEEL PILES.

DIMENSIONS LOCATING PILES ARE SHOWN TO THE PILE CENTERLINE AT THE BOTTOM OF CAP. DIMENSIONS LOCATING END BENT WING BRACE PILES ARE SHOWN TO THE PILE CENTERLINE AT THE BOTTOM OF WING.

NOTES:

DRIVE PILES AT END BENT 1, BENT 1, BENT 2, AND END BENT 2 TO A REQUIRED BEARING CAPACITY OF 1060 kN PER PILE. THE REQUIRED BEARING CAPACITY IS EQUAL TO THE ALLOWABLE BEARING CAPACITY WITH A MINIMUM FACTOR OF SAFETY OF TWO.

THE ALLOWABLE BEARING CAPACITY FOR PILES AT END BENT 1, BENT 1, BENT 2, AND END BENT 2 IS 530 kN PER PILE.

TESTING PILES WITH THE PILE DRIVING ANALYZER (PDA) DURING DRIVING, RESTRIKING, OR REDRIVING MAY BE REQUIRED. THE ENGINEER WILL DETERMINE THE NEED FOR PDA TESTING. SEE PILE DRIVING ANALYZER SPECIAL PROVISION.

FOR PILES, SEE SPECIAL PROVISION.

CONTINUED ON SHEET 4 OF 4.

NORTH CAROLINA PROFESSIONAL SEAL 16301 ENGINEER TING HSIUNG FANG

3/28/11

PROJECT NO. U-2519DA

CUMBERLAND COUNTY

STATION: 12+10.929-LP1B-

SHEET 2 OF 4

STATE OF NORTH CAROLINA
DEPARTMENT OF TRANSPORTATION
RALEIGH

GENERAL DRAWING

BRIDGE OVER TANK TRAIL 3 ON LOOP 1B BETWEEN FAYETTEVILLE OUTER LOOP AND SR 1007 SBL

REVISIONS						SHEET NO.
NO.	BY:	DATE:	NO.	BY:	DATE:	S-373
1			3			TOTAL SHEETS
2			4			411

DRAWN BY : P.C. BREWER DATE : 7/14/08
CHECKED BY : L.E. SUTTON DATE : 7/16/08

28-MAR-2011 16:03
K:\TIPProjects-U\U2519da\Structures\girolami\str16\pbrewer\Microstation\u2519da_sd_gd_16.dgn
tfang

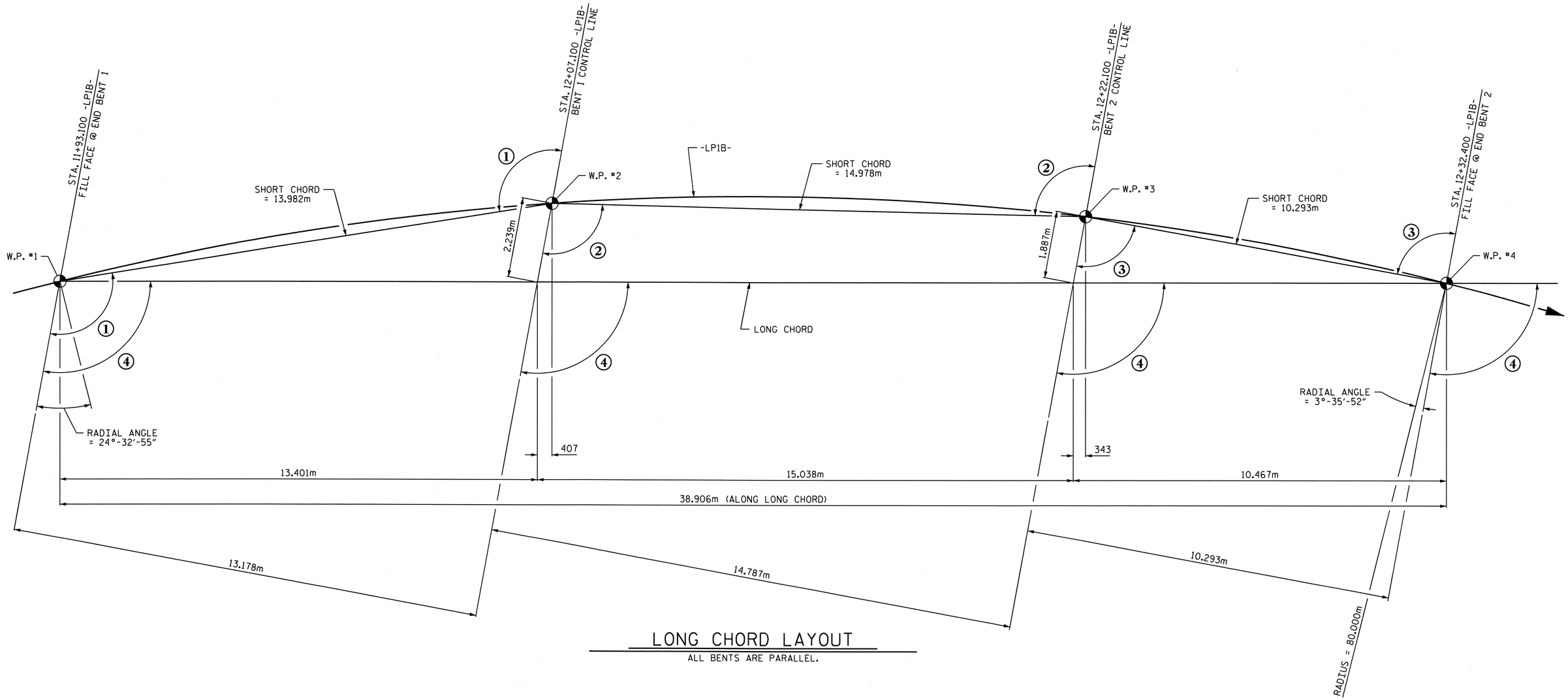

LONG CHORD LAYOUT

ALL BENTS ARE PARALLEL.

ANGLES

1	109°-32'-07"	3	90°-05'-26"
2	99°-09'-02"	4	100°-28'-21"

HORIZONTAL CURVE DATA -LP1B-

PI STA. 28+29.927
Δ = 185°-21'-26.4"
L = 258.808m
T = 1,709.927
R = 80.000

PROJECT NO. U-2519DA
CUMBERLAND COUNTY
STATION: 12+10.929-LP1B-

SHEET 3 OF 4

NORTH CAROLINA PROFESSIONAL SEAL 16301 ENGINEER TING HSIUNG FANG
3/16/11

STATE OF NORTH CAROLINA
DEPARTMENT OF TRANSPORTATION
RALEIGH

GENERAL DRAWING

BRIDGE OVER TANK TRAIL 3
ON LOOP 1B BETWEEN
FAYETTEVILLE OUTER LOOP
AND SR 1007 SBL

REVISIONS						SHEET NO.
NO.	BY:	DATE:	NO.	BY:	DATE:	S-374
1			3			TOTAL SHEETS
2			4			411

DRAWN BY : P.C. BREWER DATE : 7/14/08
CHECKED BY : L.E. SUTTON DATE : 7/16/08

16-MAR-2011 09:14
K:\TIPProjects-U\U2519da\Structures\girolami\str16\pbrewer\Microstation\u2519da_sd_gd_16.dgn
ttfang

BENCH MARK #12 (POINT BL-12): 65.137m LEFT OF STA. 27+21.030 -L-, EL. 59.506

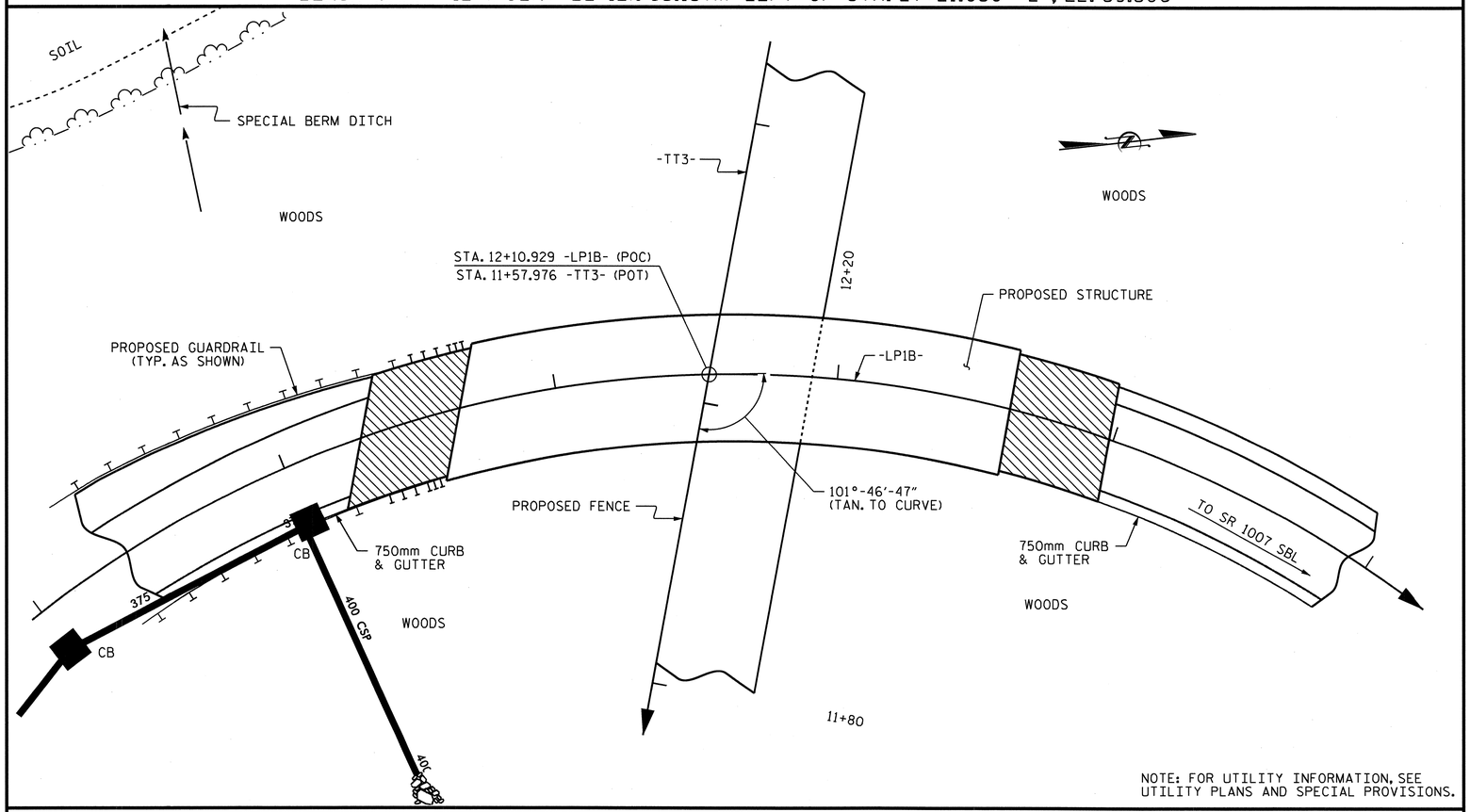

NOTE: FOR UTILITY INFORMATION, SEE UTILITY PLANS AND SPECIAL PROVISIONS.

LOCATION SKETCH

NOTES: (CONTINUED FROM SHEET 2 OF 4)

ALL DIMENSIONS ARE IN MILLIMETERS UNLESS OTHERWISE NOTED.

ALL ELEVATIONS ARE IN METERS.
ASSUMED LIVE LOAD = MS 22.5 OR ALTERNATE LOADING.

FOR OTHER DESIGN DATA AND GENERAL NOTES, SEE SHEET SNSM.

FOR EROSION CONTROL MEASURES, SEE EROSION CONTROL PLANS.

THIS BRIDGE HAS BEEN DESIGNED BY THE STRENGTH DESIGN METHOD AS SPECIFIED IN AASHTO STANDARD SPECIFICATIONS.

REMOVABLE FORMS MAY BE USED IN LIEU OF METAL STAY-IN-PLACE FORMS IN ACCORDANCE WITH ARTICLE 420-3 OF THE STANDARD SPECIFICATIONS.

WORK SHALL NOT BE STARTED ON THIS BRIDGE UNTIL ROADWAY SECTION HAS BEEN EXCAVATED.

THIS BRIDGE HAS BEEN DESIGNED IN ACCORDANCE WITH THE REQUIREMENTS OF THE AASHTO STANDARD SPECIFICATIONS FOR SEISMIC DESIGN OF HIGHWAY BRIDGES FOR SEISMIC PERFORMANCE CATEGORY A.

THE CONTRACTOR SHALL PROVIDE INDEPENDENT ASSURANCE SAMPLES OF REINFORCING STEEL AS FOLLOWS: FOR PROJECTS REQUIRING UP TO 360,000 kg OF REINFORCING STEEL, ONE 760mm SAMPLE OF EACH SIZE BAR USED, AND FOR PROJECTS REQUIRING OVER 360,000 kg OF REINFORCING STEEL, TWO 760mm SAMPLES OF EACH SIZE BAR USED. THE BARS FROM WHICH THE SAMPLES ARE TAKEN MUST THEN BE SPLICED WITH REPLACEMENT BARS OF THE SIZE AND LENGTH OF THE SAMPLE PLUS A MINIMUM LAP SPLICE OF THIRTY BAR DIAMETERS.

NEEDLE BEAMS WILL NOT BE ALLOWED UNLESS OTHERWISE CALLED FOR ON THE PLANS OR APPROVED BY THE ENGINEER.
FOR SUBMITTAL OF WORKING DRAWINGS, SEE SPECIAL PROVISIONS.

FOR METRIC STRUCTURAL STEEL, SEE SPECIAL PROVISIONS.

FOR FALSEWORK AND FORMWORK, SEE SPECIAL PROVISIONS.

FOR PRESTRESSED CONCRETE MEMBERS, SEE SPECIAL PROVISIONS.

FOR PLACING LOAD ON STRUCTURE MEMBERS, SEE SPECIAL PROVISIONS.

FOR CRANE SAFETY, SEE SPECIAL PROVISIONS.

FOR GROUT FOR STRUCTURES, SEE SPECIAL PROVISIONS.

FOR HIGH STRENGTH BOLTS, SEE SPECIAL PROVISIONS.

FOR CURING CONCRETE, SEE SPECIAL PROVISIONS.

FOR MAINTENANCE AND PROTECTION OF TRAFFIC BENEATH PROPOSED STRUCTURE, SEE SPECIAL PROVISIONS.

TOTAL BILL OF MATERIAL

	FOUNDATION EXCAVATION FOR BENT	PDA TESTING	PDA ASSISTANCE	REINFORCED CONCRETE DECK SLAB	GROOVING BRIDGE FLOORS	CLASS A CONCRETE	BRIDGE APPROACH SLABS	REINFORCING STEEL	SPIRAL COLUMN REINFORCING STEEL	1143mm PRESTRESSED CONCRETE GIRDERS		HP 310 X 79 STEEL PILES		PILE REDRIVES	CONCRETE BARRIER RAIL	RIP RAP CLASS II (600mm THICK)	FILTER FABRIC FOR DRAINAGE	ELASTOMERIC BEARINGS	EVAZOTE JOINT SEALS
	LUMP SUM	EACH	EACH	SQ. METERS	SQ. METERS	CU. METERS	LUMP SUM	kg	kg	NO.	METERS	NO.	METERS	EACH	METERS	METRIC TONS	SQ. METERS	LUMP SUM	LUMP SUM
SUPERSTRUCTURE				343.5	367.1		LUMP SUM			12	150.908				77.303			LUMP SUM	LUMP SUM
END BENT 1						21.9		1,658				8	96			212	217		
BENT 1	LUMP SUM					26.1		2,552	441			12	132						
BENT 2	LUMP SUM					25.4		2,475	401			12	120						
END BENT 2						19.7		1,523				7	84			171	175		
TOTAL	LUMP SUM	1	1	343.5	367.1	93.1	LUMP SUM	8,208	842	12	150.908	39	432	20	77.303	383	392	LUMP SUM	LUMP SUM

NORTH CAROLINA PROFESSIONAL SEAL 16301 ENGINEER TING HSING FANG
3/16/11

PROJECT NO. U-2519DA
CUMBERLAND COUNTY
STATION: 12+10.929-LP1B-

SHEET 4 OF 4

STATE OF NORTH CAROLINA
DEPARTMENT OF TRANSPORTATION
RALEIGH

GENERAL DRAWING

BRIDGE OVER TANK TRAIL 3 ON LOOP 1B BETWEEN FAYETTEVILLE OUTER LOOP AND SR 1007 SBL

REVISIONS						SHEET NO.
NO.	BY:	DATE:	NO.	BY:	DATE:	S-375
1			3			TOTAL SHEETS
2			4			411

DRAWN BY : P.C. BREWER DATE : 7/14/08
CHECKED BY : L.E. SUTTON DATE : 7/16/08

16-MAR-2011 09:13
K:\TIPProjects-U\U2519da\Structures\girolami\str16\pbrewer\Microstation\u2519da_sd_gd_16.dgn
ttfang

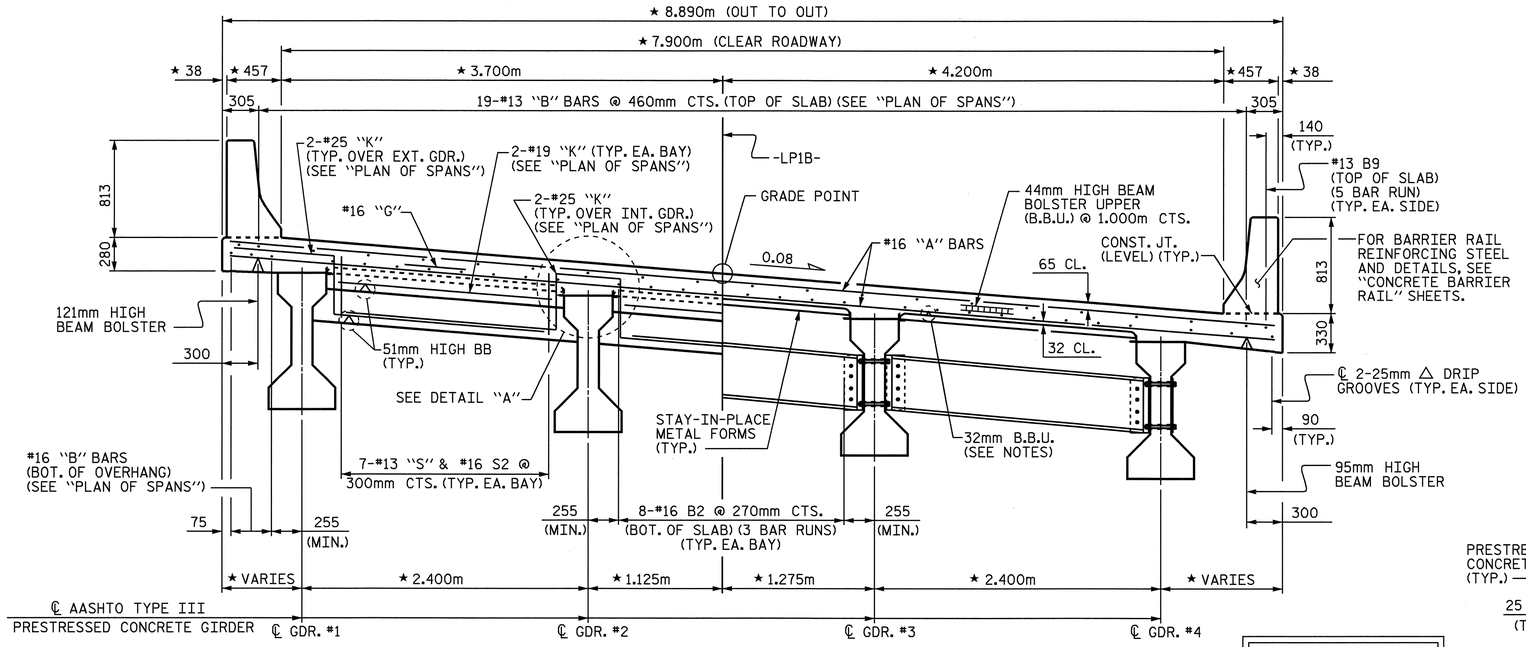

TYPICAL SECTION

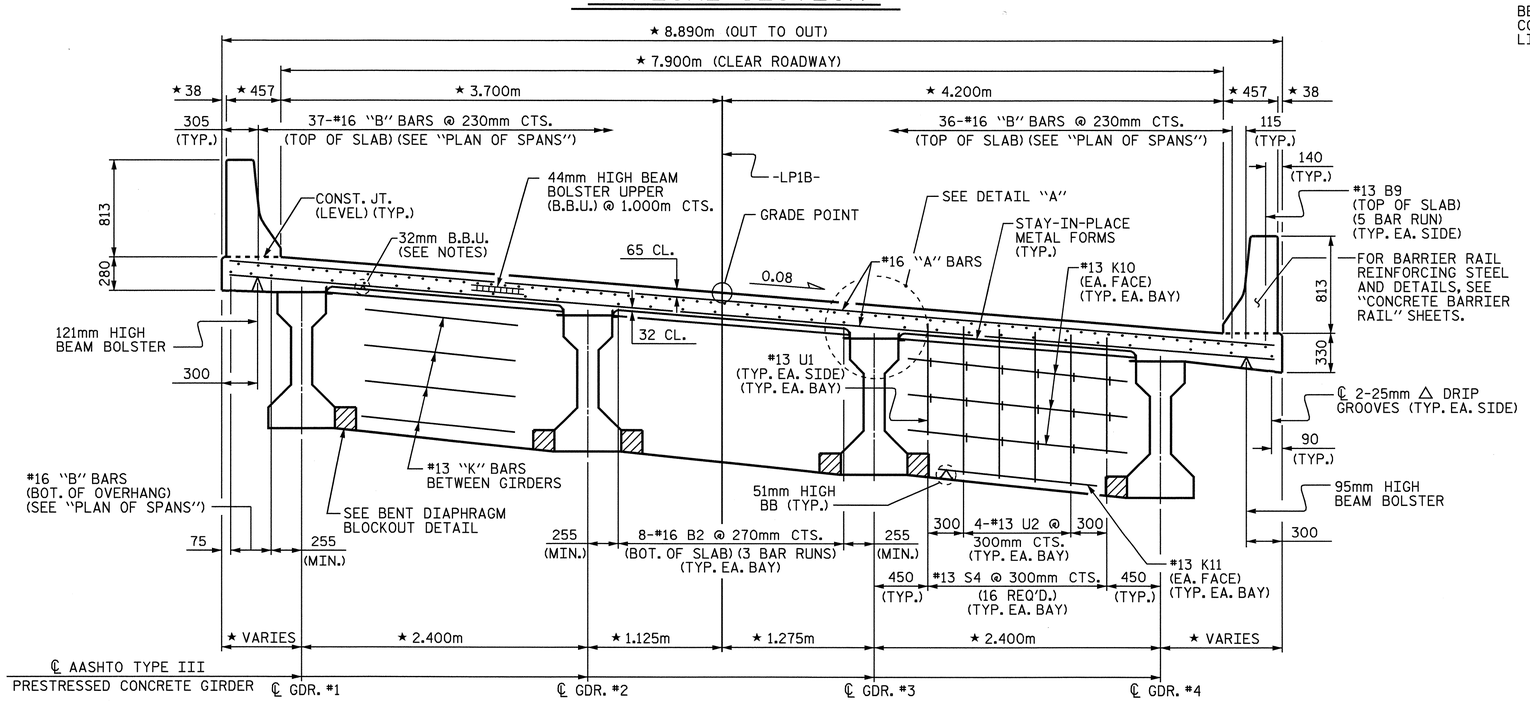

TYPICAL SECTION

(SHOWING CONTINUOUS BENT DIAPHRAGMS)

NOTES:

PROVIDE 32mm HIGH BEAM BOLSTERS UPPER AT 1.2m CTS. ATOP THE METAL STAY-IN-PLACE FORMS TO SUPPORT THE BOTTOM MAT OF "A" BARS. WHEN USING REMOVABLE FORMS, PROVIDE CONTINUOUS HIGH CHAIRS FOR METAL DECK (C.H.C.M.) @ 1.2m CTS. WITH A HEIGHT TO SUPPORT THE BOTTOM MAT OF "A" BARS A CLEAR DISTANCE OF 65mm ABOVE THE TOP OF THE REMOVABLE FORM.

LONGITUDINAL STEEL MAY BE SHIFTED SLIGHTLY, AS NECESSARY, TO AVOID INTERFERENCE WITH STIRRUPS IN PRESTRESSED CONCRETE GIRDERS.

PREVIOUSLY CAST CONCRETE IN A CONTINUOUS UNIT SHALL HAVE ATTAINED A MINIMUM COMPRESSIVE STRENGTH OF 20.7 MPa BEFORE ADDITIONAL CONCRETE IS CAST IN THE UNIT.

BARRIER RAIL IN A CONTINUOUS UNIT SHALL NOT BE CAST UNTIL ALL SLAB CONCRETE IN THE UNIT HAS BEEN CAST AND HAS REACHED A MINIMUM COMPRESSIVE STRENGTH OF 20.7 MPa.

FOR INTERMEDIATE DIAPHRAGM DETAILS, SEE "INTERMEDIATE STEEL DIAPHRAGMS FOR TYPE III PRESTRESSED CONCRETE GIRDERS" SHEET.

#16 "G" BAR MAY BE SHIFTED SLIGHTLY, AS NECESSARY, TO CLEAR REINFORCING STEEL AND STIRRUPS.

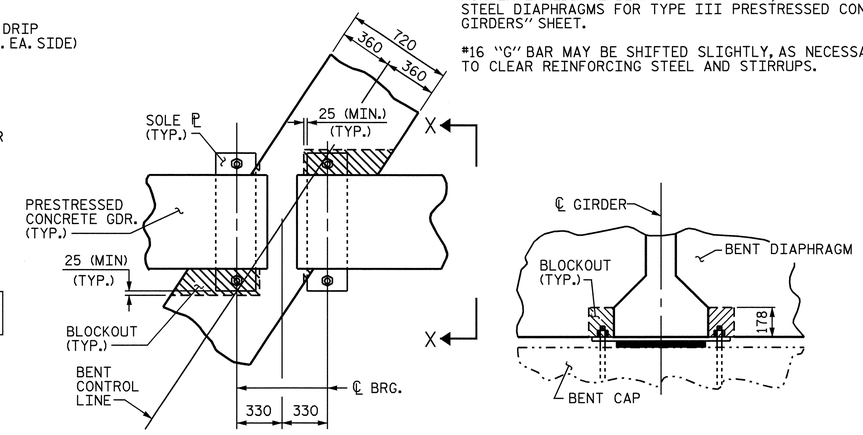

PLAN

SECTION X-X

BENT DIAPHRAGM BLOCKOUT DETAIL

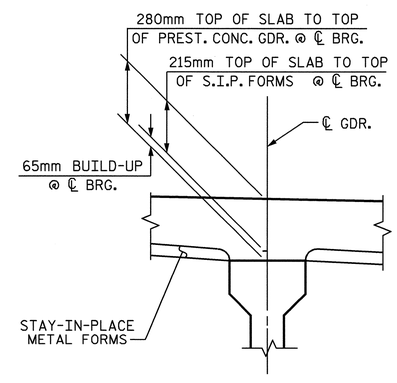

DETAIL "A"

PROJECT NO. U-2519DA
CUMBERLAND COUNTY
STATION: 12+10.929-LP1B-

SHEET 1 OF 2

STATE OF NORTH CAROLINA
DEPARTMENT OF TRANSPORTATION
RALEIGH

SUPERSTRUCTURE

TYPICAL SECTIONS

NORTH CAROLINA PROFESSIONAL SEAL 21638 ENGINEER LAURA E. SUTTON 8/25/08

REVISIONS							SHEET NO.
NO.	BY:	DATE:	NO.	BY:	DATE:		S-376
1			3				TOTAL SHEETS
2			4				411

DRAWN BY : A.S. CALLAWAY DATE : 12/20/07
CHECKED BY : P.C. BREWER DATE : 5/22/08

25-AUG-2008 14:04
r:\structures\girolaml\str16\scallaway\Microstation\u2519da_sd_ts_16.dgn
LSUTTON

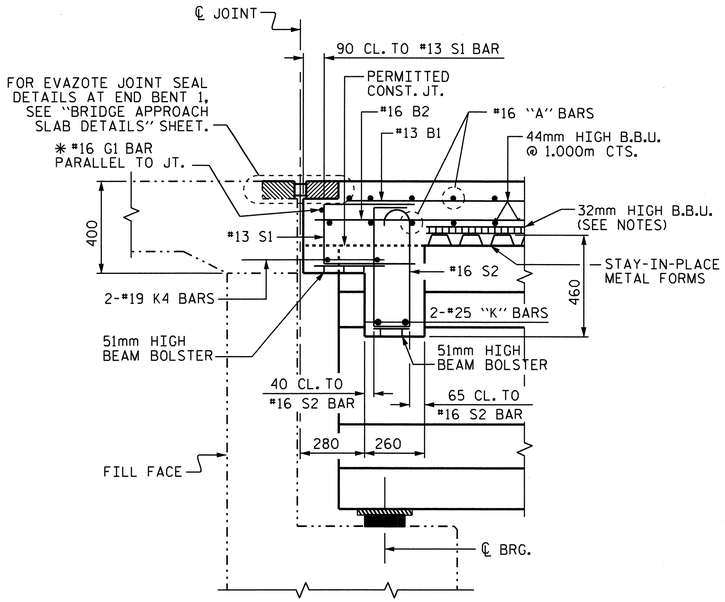

✱ #16 "G" BAR MAY BE SHIFTED SLIGHTLY AS NECESSARY, TO CLEAR REINFORCING STEEL AND STIRRUPS.

SECTION A-A

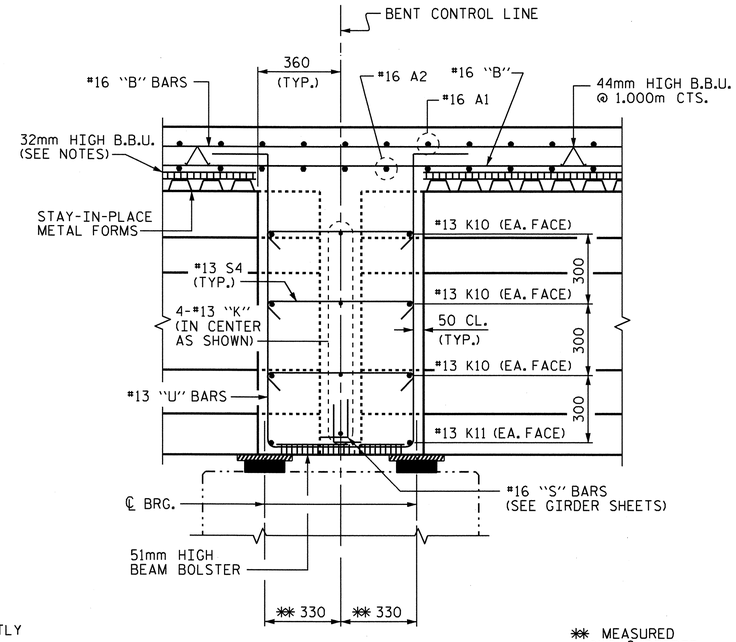

✱✱ MEASURED ALONG ℄ GIRDER

SECTION B-B

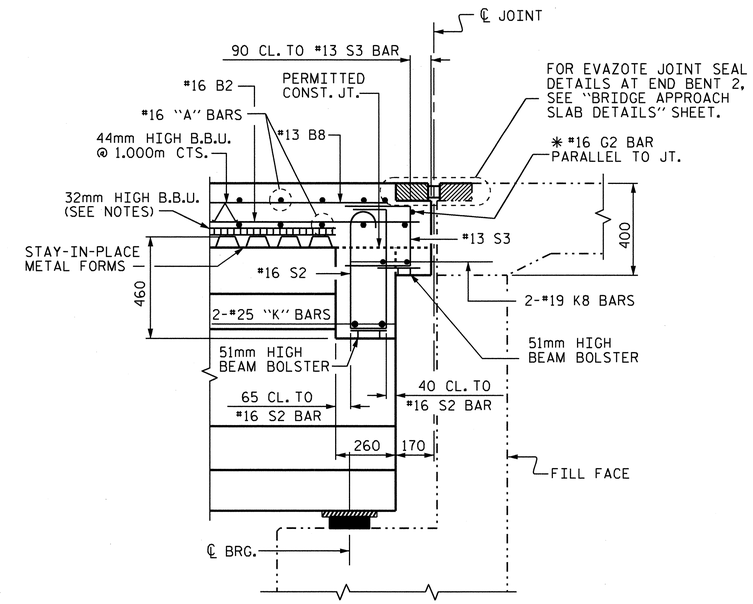

SECTION C-C

NOTE:
FOR LOCATION OF SECTIONS, SEE "PLAN OF SPANS" SHEETS.

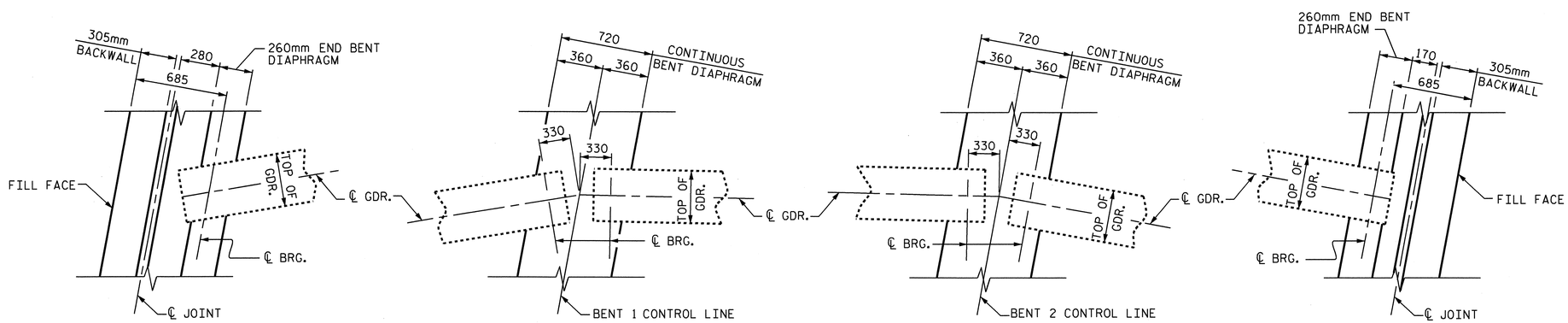

END BENT 1 DIAPHRAGM

BENT 1 DIAPHRAGM

BENT 2 DIAPHRAGM

END BENT 2 DIAPHRAGM

PLAN OF DIAPHRAGMS

PROJECT NO. U-2519DA
CUMBERLAND COUNTY
STATION: 12+10.929-LP1B-

SHEET 2 OF 2

STATE OF NORTH CAROLINA
DEPARTMENT OF TRANSPORTATION
RALEIGH

SUPERSTRUCTURE

TYPICAL SECTIONS

NORTH CAROLINA PROFESSIONAL SEAL 16301 ENGINEER TING-HSUNG FANG
3/18/11

REVISIONS						SHEET NO.
NO.	BY:	DATE:	NO.	BY:	DATE:	S-377
1			3			TOTAL SHEETS
2			4			411

DRAWN BY : A.S. CALLAWAY DATE : 12/21/07
CHECKED BY : P.C. BREWER DATE : 5/22/08

18-MAR-2011 16:30
K:\TIPProjects-U\U2519da\Structures\girolami\str16\scallaway\Microstation\u2519da_sd_ts_16.dgn
ttfang

★ RADIAL DIMENSIONS

▲ 212-#16 A1 @ 180mm CTS. (TOP OF SLAB)
▲ 212-#16 A2 @ 180mm CTS. (BOT. OF SLAB)

2.400m (ALONG ARC)
5.700m (ALONG ARC)
2.100m (ALONG ARC)
2.250m (ALONG ARC)
6.000m (ALONG ARC)

610
305 (TYP.)
140
#13 B9 (TOP OF SLAB) (5 BAR RUN)
115 (TYP.)
GUTTERLINE
℄ GDR. B1
36-#16 B4 @ 230mm CTS. (TOP OF SLAB)
37-#16 B3 @ 230mm CTS. (TOP OF SLAB)
255 (MIN.)
19-#13 B1 @ 460mm CTS. (TOP OF SLAB)
℄ GDR. A1
8-#16 B2 @ 270mm CTS. (BOT. OF SLAB) (3 BAR RUNS) (TYP. EA. BAY)
4-#13 "K" BARS (EA. FACE) (TYP. EA. BAY)
#13 S4 @ 300mm CTS. (TYP. EA. BAY) (16 REQ'D.)
720mm CONTINUOUS BENT DIAPHRAGM (TYP.)
℄ JOINT @ END BENT 1
2-#19 K4 (TYP. EA. BAY)
2-#25 K1 (OVER GDR. A1)
4-#13 K9 (IN CENTER)
℄ GDR. B2
W.P. #2
260mm END BENT DIAPHRAGM (TYP.)
℄ GDR. A2
-LP1B-
SPAN "B" SHORT CHORD
99°-09'-02" (TO SHORT CHORD)
SPAN "B"
TRANSVERSE CONST. JT.
2-#25 K2 (TYP. OVER INT. GDRS.)
SPAN "A" SHORT CHORD
SPAN "A"
W.P. #1
℄ GDR. B3
6-#13 "U" BARS @ 300mm CTS. (TYP. EA. BAY)
19-#13 B5 @ 460mm CTS. (TOP OF SLAB)
109°-32'-07" (TO SHORT CHORD)
℄ GDR. A3
FILL FACE @ END BENT 1
2-#25 K3 (OVER GDR. A4)
℄ GDR. B4
GUTTERLINE
℄ GDR. A4
3-#16 B2 @ EQ. SPA. (BOT. OF OVERHANG) (3 BAR RUNS) (TYP EA. SIDE)
7-#13 S1 & #16 S2 @ 300mm CTS. (TYP. EA. BAY)
#13 B9 (TOP OF SLAB) (5 BAR RUN)
BENT 1 CONTROL LINE
15.000m (ALONG ARC) (W.P. #2 TO W.P. #3)
#16 G1
75
14.000m (ALONG ARC) (W.P. #1 TO W.P. #2)
#16 A101 (TOP)
#16 A201 (BOT.)
#16 A1 (TOP)
#16 A2 (BOT.)
★38
★457
4.724m
★3.700m
★8.890m (OUT TO OUT)
★7.900m (CLEAR ROADWAY)
★4.200m
5.041m
#16 A220 (BOT.)
180
#16 A101 THRU #16 A119 @ 180mm CTS. (TOP OF SLAB)
#16 A201 THRU #16 A219 @ 180mm CTS. (BOT. OF SLAB)
#16 A119 (TOP)
#16 A219 (BOT.)

END BENT DETAIL

305mm BACKWALL
144
349
-LP1B-
SPAN "A" SHORT CHORD
W.P. #1
109°-32'-07" (TO SHORT CHORD)
FILL FACE @ END BENT 1
℄ JOINT @ END BENT 1

PARTIAL PLAN OF SPAN

FOR BARRIER RAIL REINFORCING STEEL AND DETAILS, SEE "CONCRETE BARRIER RAIL" SHEETS.

FOR TRANSVERSE CONSTRUCTION JOINT DETAIL AND LOCATION. SEE "POURING SEQUENCE" SHEET.

FOR INTERMEDIATE DIAPHRAGM LOCATIONS. SEE "PRESTRESSED CONCRETE GIRDER CONTINUOUS FOR LIVE LOAD" SHEETS.

▲ #16 "A" BARS ARE TO BE PLACED RADIALLY ALONG THE OUTSIDE LEFT EDGE OF SUPERSTRUCTURE.

PROJECT NO. U-2519DA
CUMBERLAND COUNTY
STATION: 12+10.929-LP1B-

SHEET 1 OF 2

STATE OF NORTH CAROLINA
DEPARTMENT OF TRANSPORTATION
RALEIGH

SUPERSTRUCTURE

PLAN OF SPANS

NORTH CAROLINA PROFESSIONAL SEAL 21638 ENGINEER LAURA E. SUTTON
9/30/08

REVISIONS						SHEET NO.
NO.	BY:	DATE:	NO.	BY:	DATE:	S-378
1			3			TOTAL SHEETS
2			4			411

DRAWN BY : A.S. CALLAWAY DATE : 12/19/07
CHECKED BY : P.C. BREWER DATE : 5/22/08

25-AUG-2008 15:49
r:\structures\girolami\str16\scallaway\Microstation\u2519da_sd_s*_16.dgn
LSUTTON

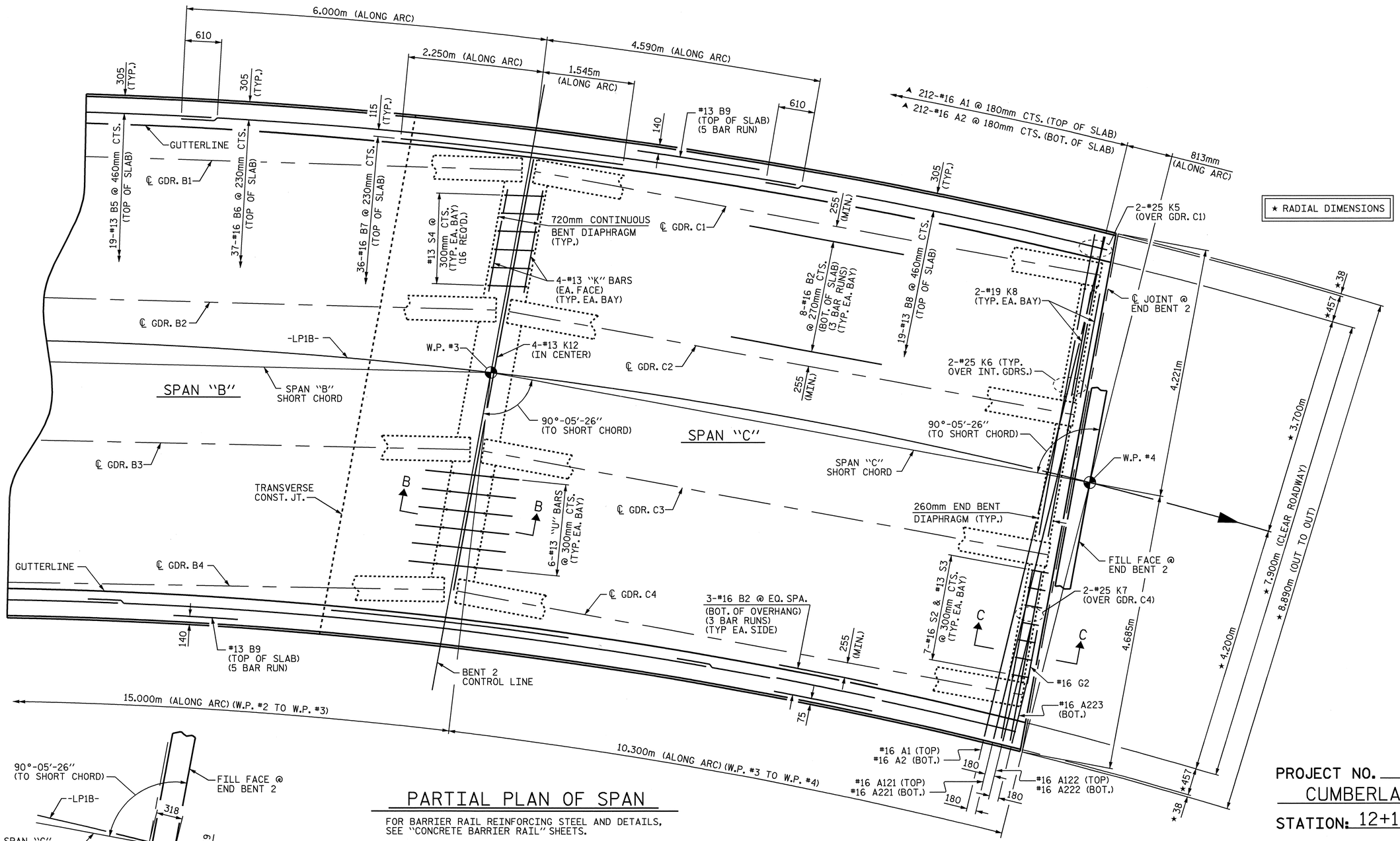

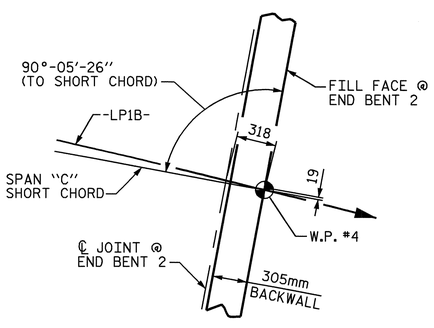

END BENT DETAIL

PARTIAL PLAN OF SPAN

FOR BARRIER RAIL REINFORCING STEEL AND DETAILS, SEE "CONCRETE BARRIER RAIL" SHEETS.

FOR TRANSVERSE CONSTRUCTION JOINT DETAIL AND LOCATION. SEE "POURING SEQUENCE" SHEET.

FOR INTERMEDIATE DIAPHRAGM LOCATIONS. SEE "PRESTRESSED CONCRETE GIRDER CONTINUOUS FOR LIVE LOAD" SHEETS.

▲ #16 "A" BARS ARE TO BE PLACED RADIALLY ALONG THE OUTSIDE LEFT EDGE OF SUPERSTRUCTURE.

NORTH CAROLINA PROFESSIONAL SEAL 21638 ENGINEER LAURA E. SUTTON
7/30/08

PROJECT NO. U-2519DA
CUMBERLAND COUNTY
STATION: 12+10.929-LP1B-

SHEET 2 OF 2

STATE OF NORTH CAROLINA
DEPARTMENT OF TRANSPORTATION
RALEIGH

SUPERSTRUCTURE

PLAN OF SPANS

REVISIONS						SHEET NO.
NO.	BY:	DATE:	NO.	BY:	DATE:	S-379
1			3			TOTAL SHEETS
2			4			411

DRAWN BY : A.S. CALLAWAY DATE : 12/19/07
CHECKED BY : P.C. BREWER DATE : 5/22/08

25-AUG-2008 15:49
r:\structures\girolaml\str16\scallaway\Microstation\u2519da_sd_s*_16.dgn
LSUTTON

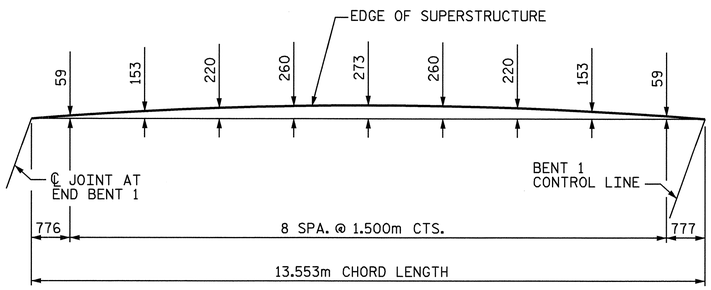

LEFT SIDE

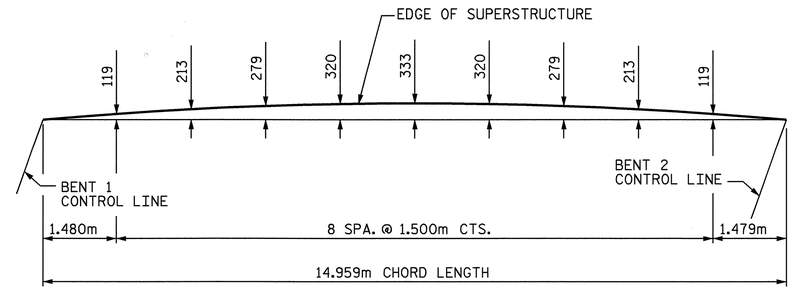

LEFT SIDE

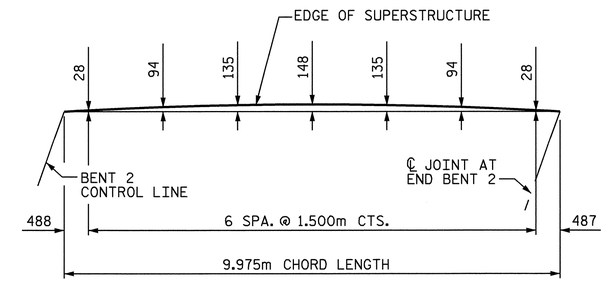

LEFT SIDE

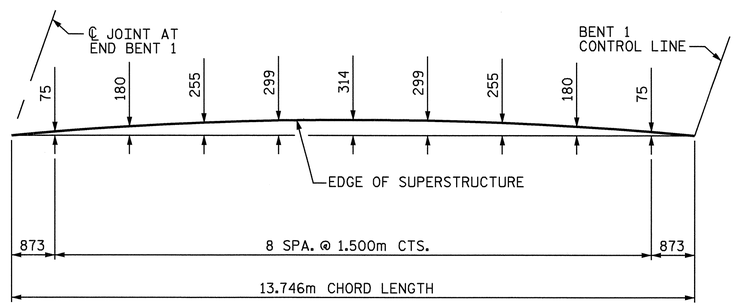

RIGHT SIDE

SPAN "A" ARC OFFSETS

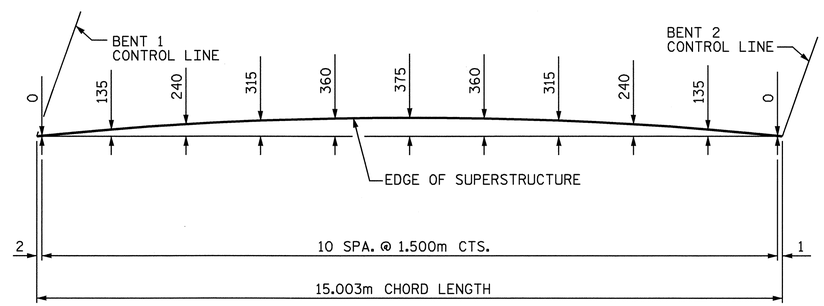

RIGHT SIDE

SPAN "B" ARC OFFSETS

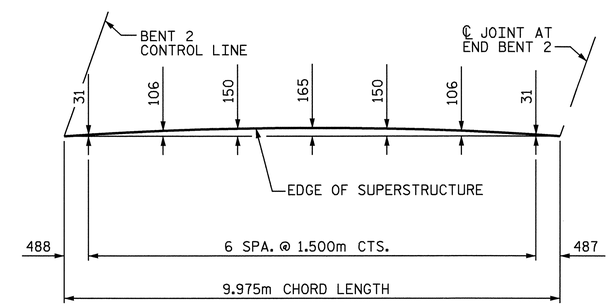

RIGHT SIDE

SPAN "C" ARC OFFSETS

PROJECT NO. U-2519DA
CUMBERLAND COUNTY
STATION: 12+10.929-LP1B-

STATE OF NORTH CAROLINA
DEPARTMENT OF TRANSPORTATION
RALEIGH

SUPERSTRUCTURE

ARC OFFSETS

NORTH CAROLINA PROFESSIONAL SEAL 21638 ENGINEER LAURA E. SUTTON
9/30/08

REVISIONS							SHEET NO.
NO.	BY:	DATE:	NO.	BY:	DATE:		S-380
1			3				TOTAL SHEETS
2			4				411

DRAWN BY : A.S. CALLAWAY DATE : 12/17/07
CHECKED BY : P.C. BREWER DATE : 5/22/08

25-AUG-2008 14:03
r:\structures\girolaml\str16\callaway\Microstation\u2519da_sd_s*_16.dgn
LSUTTON

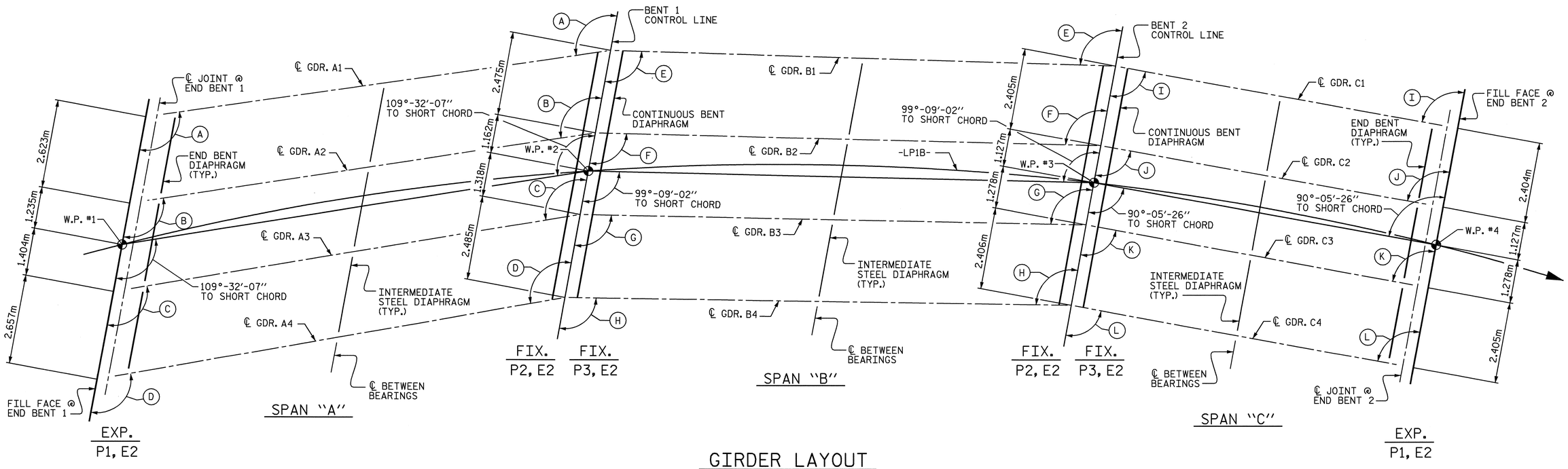

GIRDER LAYOUT

ANGLES					
A	108°-40′-22″	E	98°-45′-28″	I	90°-05′-12″
B	109°-15′-04″	F	99°-01′-17″	J	90°-05′-22″
C	109°-52′-04″	G	99°-18′-05″	K	90°-05′-31″
D	110°-31′-35″	H	99°-35′-58″	L	90°-05′-42″

PROJECT NO. U-2519DA
CUMBERLAND COUNTY
STATION: 12+10.929-LP1B-

STATE OF NORTH CAROLINA
DEPARTMENT OF TRANSPORTATION
RALEIGH

SUPERSTRUCTURE

GIRDER LAYOUT

NORTH CAROLINA PROFESSIONAL SEAL 21638 ENGINEER LAURA E. SUTTON
9/30/08

REVISIONS								SHEET NO.
NO.	BY:	DATE:	NO.	BY:	DATE:			S-381
1			3					TOTAL SHEETS
2			4					411

DRAWN BY : A.S. CALLAWAY DATE : 12/6/07
CHECKED BY : P.C. BREWER DATE : 5/22/08

30-SEP-2008 08:09
r:\structures\girolaml\str16\scallaway\microstation\u2519da_sd_fp_16.dgn
lsutton

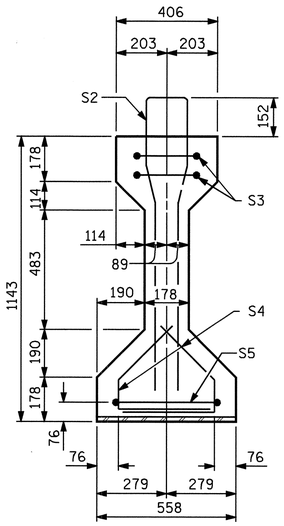

SECTION A-A

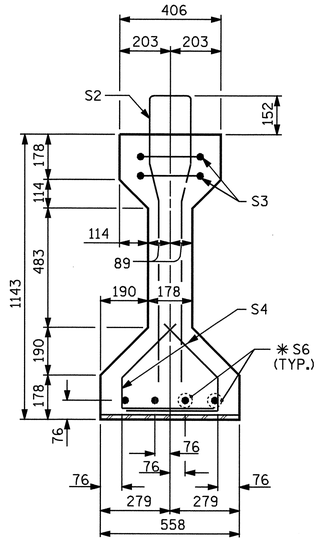

SECTION B-B

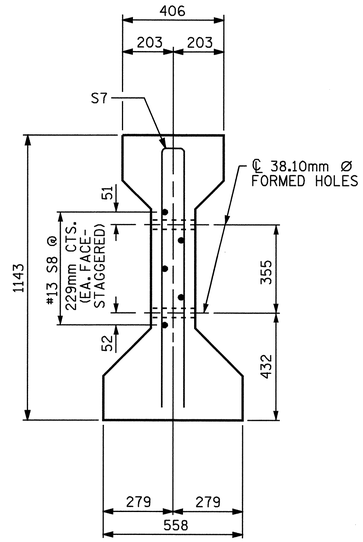

SECTION C-C

(S1 BARS NOT SHOWN)

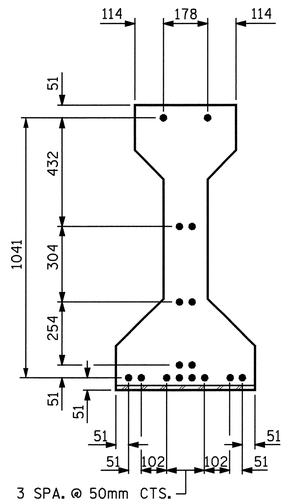

AT END OF GIRDER

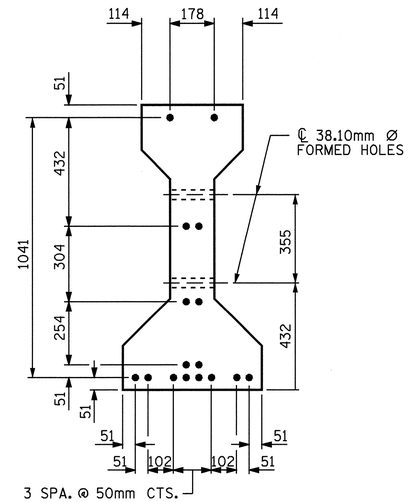

AT ℄ OF GIRDER

12.70mm Ø LOW RELAXATION STRAND LAYOUT

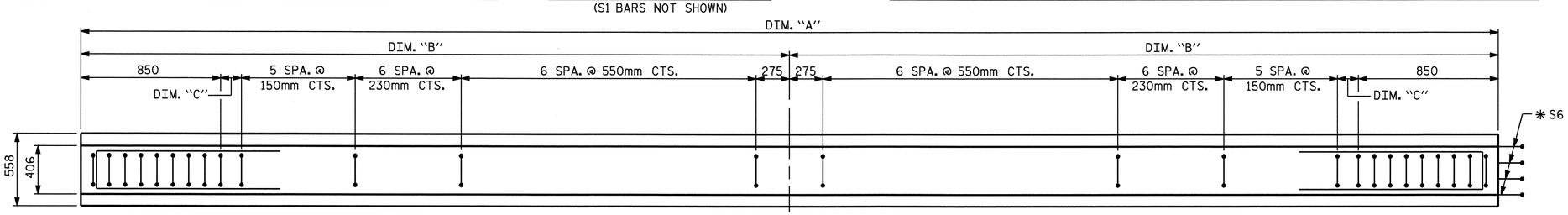

PLAN OF GIRDER

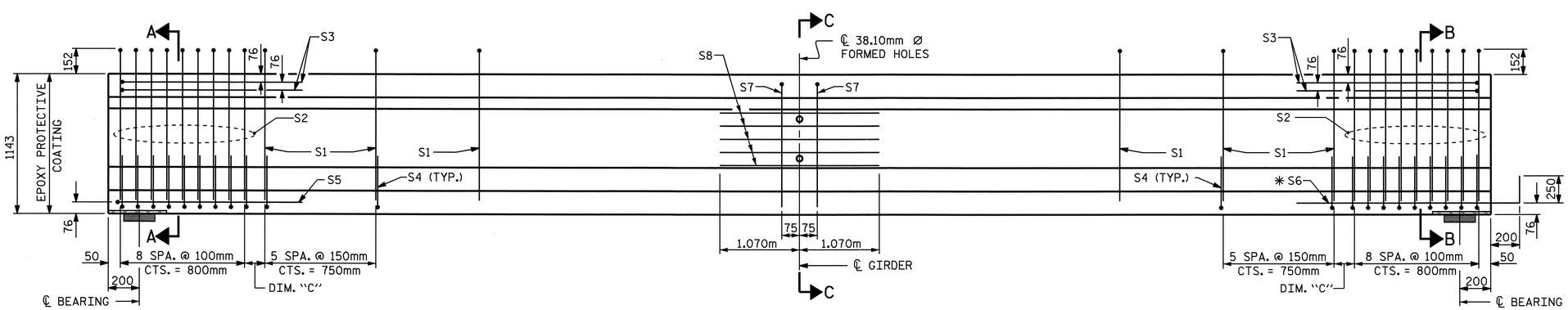

EXP.

ELEVATION OF GIRDER

FIX.

12.70mm Ø L. R. GRADE 270 STRANDS		
AREA (mm^2)	ULTIMATE STRENGTH (kN PER STRAND)	APPLIED PRESTRESS (kN PER STRAND)
98.71	183.7	137.8

REINFORCING STEEL FOR ONE GIRDER

BAR	NUMBER	SIZE	TYPE	LENGTH	WEIGHT
S1	36	#13	1	2600	93
S2	18	#19	1	2600	105
S3	4	#13	3	2660	11
S4	60	#13	2	840	50
S5	1	#13	3	2900	3
✱ S6	4	#16	STR	1120	7
S7	2	#16	3	2180	7
S8	5	#13	STR	2140	11

✱ NOTE: S6 BARS SHALL BE BENT BEFORE SHIPMENT. HEAT BENDING SHALL NOT BE ALLOWED.

BAR TYPES

ALL BAR DIMENSIONS ARE OUT TO OUT.

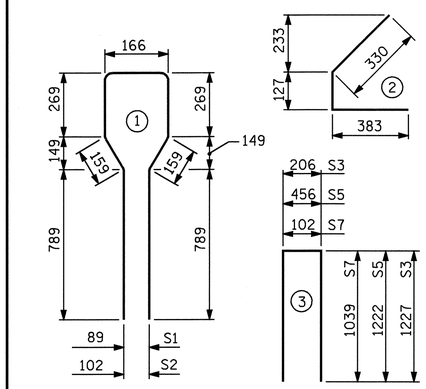

QUANTITIES FOR ONE GIRDER

	REINFORCING STEEL	35.0 MPa CONCRETE	12.70mm Ø L.R. STRANDS
	kg	m^3	No.
	287	4.8	16

GIRDERS REQUIRED

NUMBER	LENGTH	TOTAL LENGTH
4	SEE CHART	53.320m

GIRDER DIMENSIONS

GIRDER	DIM. "A"	DIM. "B"	DIM. "C"
A1	13.256m	6.628m	73mm
A2	13.302m	6.651m	96mm
A3	13.352m	6.676m	121mm
A4	13.410m	6.705m	150mm

PROJECT NO. U-2519DA
CUMBERLAND COUNTY
STATION: 12+10.929-LP1B-

SHEET 1 OF 4

STATE OF NORTH CAROLINA
DEPARTMENT OF TRANSPORTATION
RALEIGH

STANDARD

AASHTO TYPE III
PRESTRESSED CONCRETE GIRDER
CONTINUOUS FOR LIVE LOAD
SPAN "A"

NORTH CAROLINA PROFESSIONAL SEAL 21638 ENGINEER LAURA E. SUTTON
8/20/08

REVISIONS							SHEET NO.
NO.	BY:	DATE:	NO.	BY:	DATE:		S-382
1			3				TOTAL SHEETS
2			4				411

ASSEMBLED BY : A.S. CALLAWAY DATE : 12/5/07
CHECKED BY : P.C. BREWER DATE : 5/22/08

DRAWN BY : ELR 8/91
CHECKED BY : GRP 8/91

REV. 7/17/98 RWW/LES
REV. 10/17/00R RWW/LES
REV. 5/1/06 TLA/GM

06-AUG-2008 14:34
R:\Structures\girolaml\str16\scallaway\Microstation\u2519da_sd_g*_16.dgn
LSUTTON

STD. NO. PCG5SM

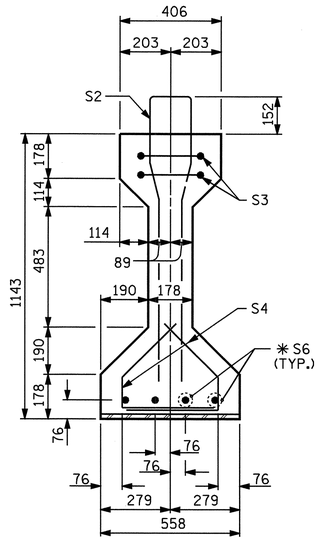

SECTION B-B

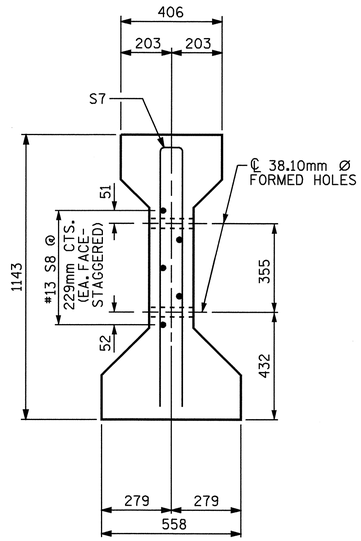

SECTION C-C

(S1 BARS NOT SHOWN)

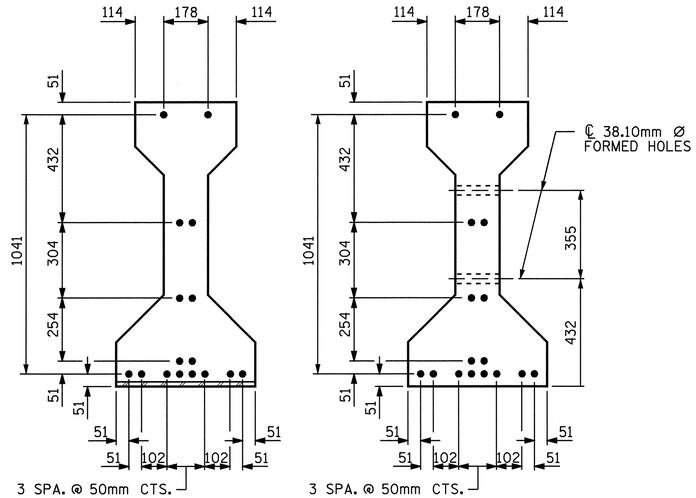

AT END OF GIRDER

AT ℄ OF GIRDER

12.70mm Ø LOW RELAXATION STRAND LAYOUT

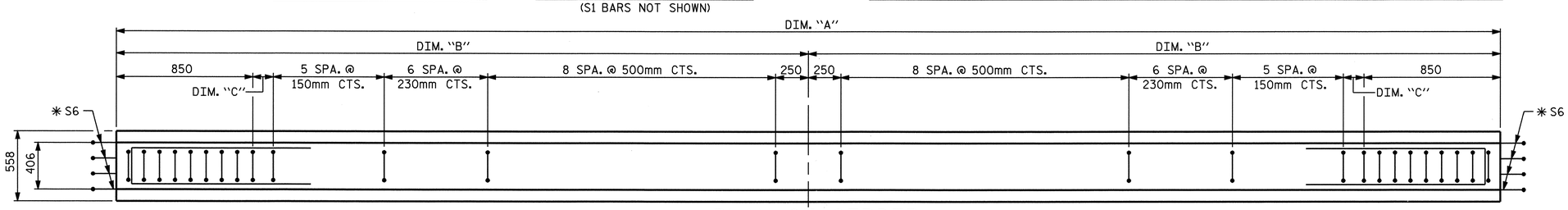

PLAN OF GIRDER

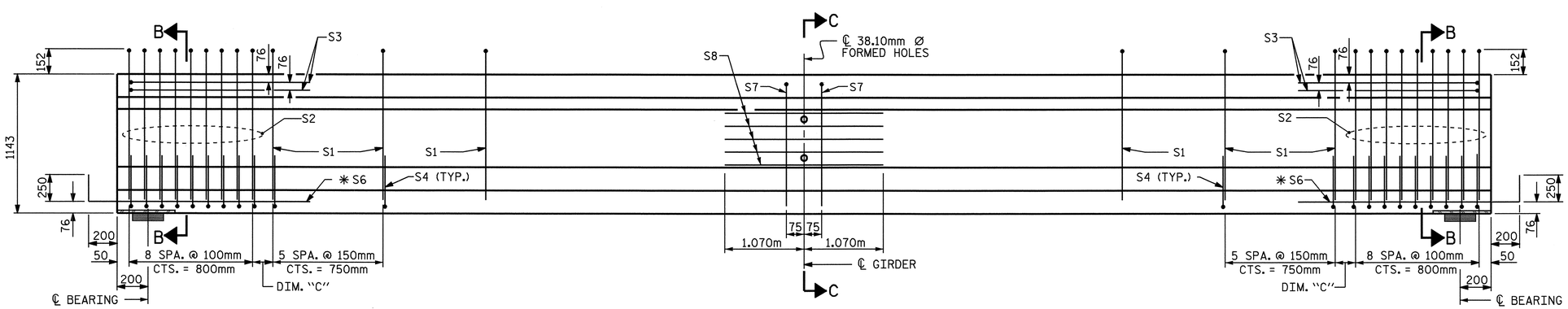

FIX.

ELEVATION OF GIRDER

FIX.

GIRDER DIMENSIONS			
GIRDER	DIM. "A"	DIM. "B"	DIM. "C"
B1	14.702m	7.351m	121mm
B2	14.712m	7.356m	126mm
B3	14.724m	7.362m	132mm
B4	14.738m	7.369m	139mm

12.70mm Ø L. R. GRADE 270 STRANDS		
AREA (mm^2)	ULTIMATE STRENGTH (kN PER STRAND)	APPLIED PRESTRESS (kN PER STRAND)
98.71	183.7	137.8

REINFORCING STEEL FOR ONE GIRDER

BAR	NUMBER	SIZE	TYPE	LENGTH	WEIGHT
S1	40	#13	1	2600	103
S2	18	#19	1	2600	105
S3	4	#13	3	2660	11
S4	60	#13	2	840	50
✱ S6	8	#16	STR	1120	14
S7	2	#16	3	2180	7
S8	5	#13	STR	2140	11

✱ NOTE: S6 BARS SHALL BE BENT BEFORE SHIPMENT. HEAT BENDING SHALL NOT BE ALLOWED.

BAR TYPES

ALL BAR DIMENSIONS ARE OUT TO OUT.

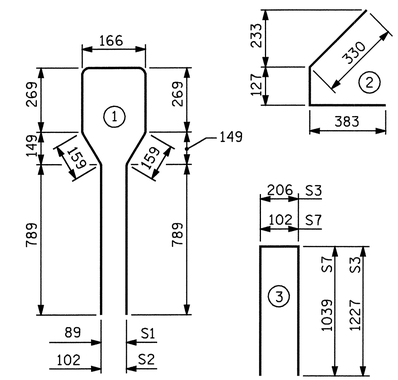

QUANTITIES FOR ONE GIRDER

	REINFORCING STEEL	35.0 MPa CONCRETE	12.70mm Ø L.R. STRANDS
	kg	m^3	No.
	301	5.3	16

GIRDERS REQUIRED

NUMBER	LENGTH	TOTAL LENGTH
4	SEE CHART	58.876m

PROJECT NO. U-2519DA

CUMBERLAND COUNTY

STATION: 12+10.929-LP1B-

SHEET 2 OF 4

STATE OF NORTH CAROLINA
DEPARTMENT OF TRANSPORTATION
RALEIGH

STANDARD

AASHTO TYPE III
PRESTRESSED CONCRETE GIRDER
CONTINUOUS FOR LIVE LOAD
SPAN "B"

NORTH CAROLINA PROFESSIONAL SEAL 21638 ENGINEER LAURA E. SUTTON
9/30/08

REVISIONS						SHEET NO.
NO.	BY:	DATE:	NO.	BY:	DATE:	S-383
1			3			TOTAL SHEETS
2			4			411

ASSEMBLED BY : A.S. CALLAWAY DATE : 12/5/07
CHECKED BY : P.C. BREWER DATE : 5/22/08

DRAWN BY : ELR 8/91
CHECKED BY : GRP 8/91

REV. 7/17/98 RWW/LES
REV. 10/17/00R RWW/LES
REV. 5/1/06 TLA/GM

06-AUG-2008 14:34
R:\Structures\gtrolami\str16\scallaway\Microstation\u2519da_sd_g*_16.dgn
LSUTTON

STD. NO. PCG5SM

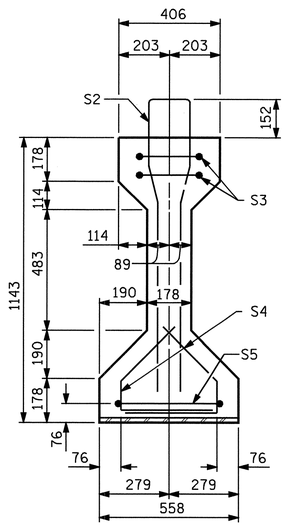

SECTION A-A

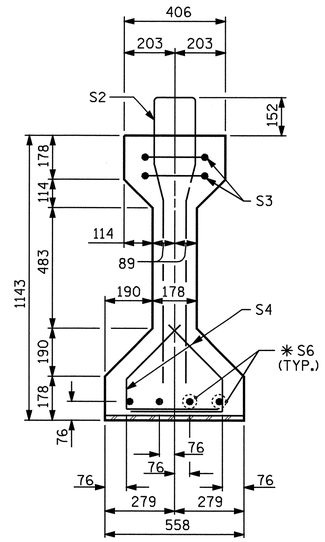

SECTION B-B

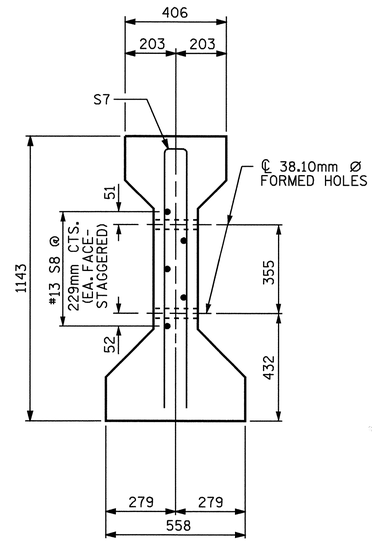

SECTION C-C

(S1 BARS NOT SHOWN)

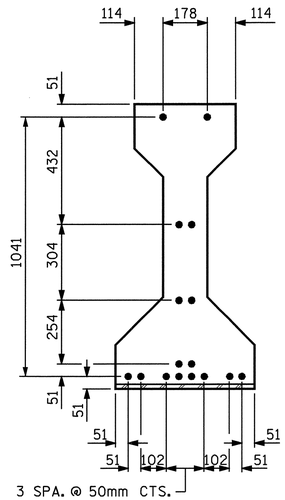

AT END OF GIRDER

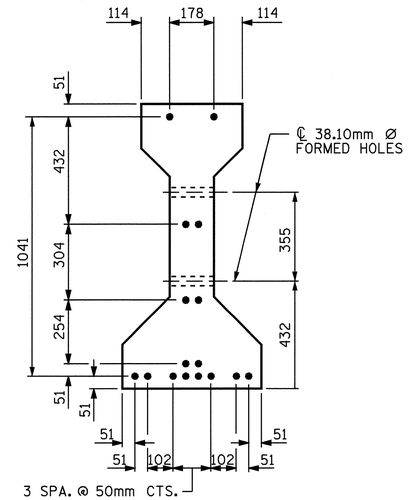

AT ℄ OF GIRDER

12.70mm Ø LOW RELAXATION STRAND LAYOUT

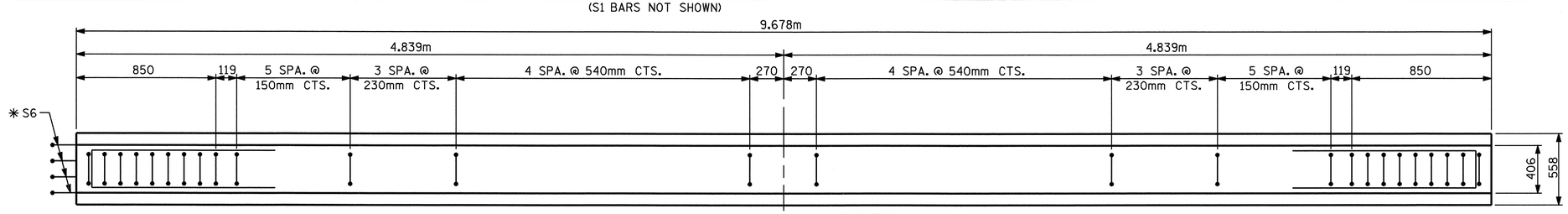

PLAN OF GIRDER

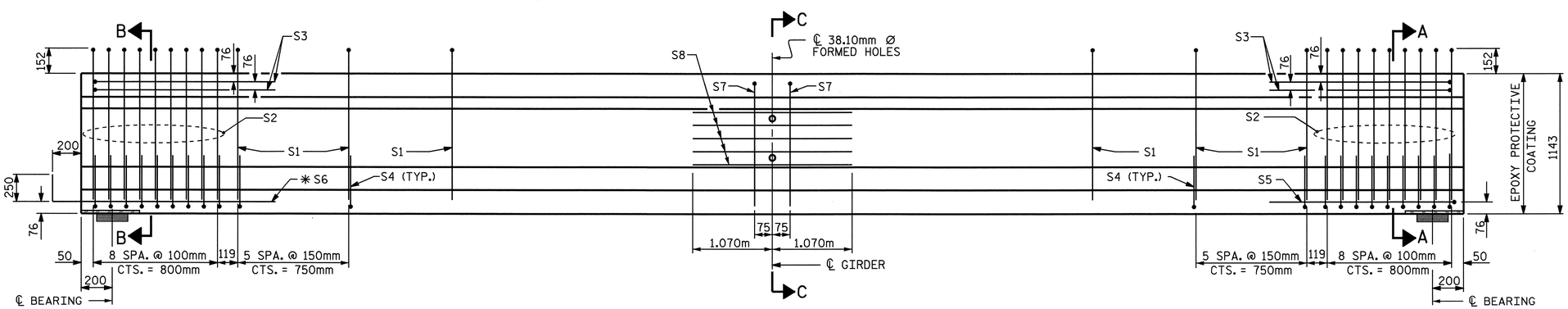

FIX.

ELEVATION OF GIRDER

EXP.

12.70mm Ø L. R. GRADE 270 STRANDS		
AREA (mm^2)	ULTIMATE STRENGTH (kN PER STRAND)	APPLIED PRESTRESS (kN PER STRAND)
98.71	183.7	137.8

REINFORCING STEEL FOR ONE GIRDER

BAR	NUMBER	SIZE	TYPE	LENGTH	WEIGHT
S1	26	#13	1	2600	67
S2	18	#19	1	2600	105
S3	4	#13	3	2660	11
S4	60	#13	2	840	50
S5	1	#13	3	2900	3
✳ S6	4	#16	STR	1120	7
S7	2	#16	3	2180	7
S8	5	#13	STR	2140	11

✳ NOTE: S6 BARS SHALL BE BENT BEFORE SHIPMENT. HEAT BENDING SHALL NOT BE ALLOWED.

BAR TYPES

ALL BAR DIMENSIONS ARE OUT TO OUT.

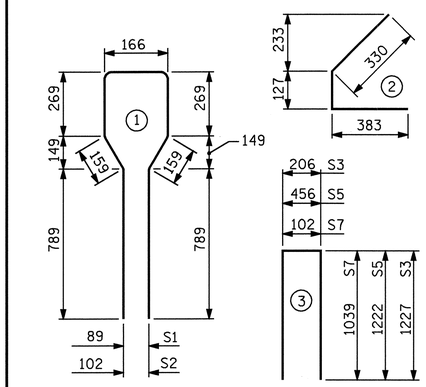

QUANTITIES FOR ONE GIRDER

	REINFORCING STEEL	35.0 MPa CONCRETE	12.70mm Ø L.R. STRANDS
	kg	m^3	No.
	261	3.5	16

GIRDERS REQUIRED

NUMBER	LENGTH	TOTAL LENGTH
4	9.678m	38.712m

PROJECT NO. U-2519DA

CUMBERLAND COUNTY

STATION: 12+10.929-LP1B-

SHEET 3 OF 4

STATE OF NORTH CAROLINA
DEPARTMENT OF TRANSPORTATION
RALEIGH

STANDARD

AASHTO TYPE III
PRESTRESSED CONCRETE GIRDER
CONTINUOUS FOR LIVE LOAD
SPAN "C"

NORTH CAROLINA PROFESSIONAL SEAL 21638 ENGINEER LAURA E. SUTTON
9/30/08

REVISIONS							SHEET NO.
NO.	BY:	DATE:	NO.	BY:	DATE:		S-384
1			3				TOTAL SHEETS
2			4				411

ASSEMBLED BY : A.S. CALLAWAY DATE : 12/5/07
CHECKED BY : P.C. BREWER DATE : 5/22/08

DRAWN BY : ELR 8/91
CHECKED BY : GRP 8/91

REV. 7/17/98 RWW/LES
REV. 10/17/00R RWW/LES
REV. 5/1/06 TLA/GM

06-AUG-2008 14:34
R:\Structures\gIrolaml\str16\scallaway\Microstation\u2519da_sd_g*_16.dgn
LSUTTON

STD. NO. PCG5SM

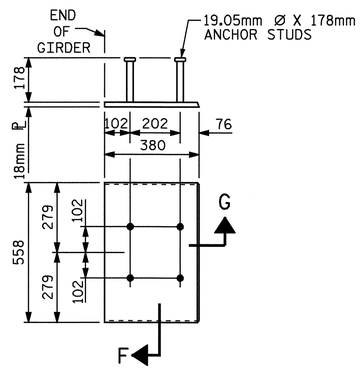

EMBEDDED PLATE "B-1" DETAILS
FOR AASHTO TYPE III GIRDER

(2 REQ'D PER GIRDER)

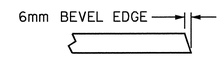

SECTION "G"

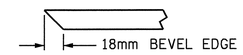

SECTION "F"

(SEE NOTES)

NOTES

ALL PRESTRESSING STRANDS SHALL BE 7-WIRE LOW-RELAXATION GRADE 270 STRANDS AND SHALL CONFORM TO AASHTO M203M EXCEPT FOR SAMPLING REQUIREMENTS WHICH SHALL BE IN ACCORDANCE WITH THE STANDARD SPECIFICATIONS.

ALL REINFORCING STEEL SHALL BE GRADE 420.

APPLY EPOXY PROTECTIVE COATING TO END OF GIRDER SURFACES INDICATED IN ELEVATION VIEW.

EMBEDDED PLATE "B-1" SHALL BE GALVANIZED IN ACCORDANCE WITH THE SPECIFICATIONS. BEVEL EDGES OF PLATE "B-1" TO GIVE CLOSE FIT BUT NOT TIGHT FIT TO STEEL CASTING FORM.

ANCHOR STUDS SHALL CONFORM TO AASHTO M169 GRADES 1010 THROUGH 1020 OR APPROVED EQUAL, AND SHALL MEET THE TYPE "B" REQUIREMENTS OF SUBSECTION 7.3 OF THE ANSI/AASHTO/AWS D1.5 BRIDGE WELDING CODE.

AT ENDS OF GIRDERS TO BE EMBEDDED IN CONCRETE DIAPHRAGMS OR END WALLS, PRESTRESSING STRANDS MAY EXTEND A MAXIMUM OF 50mm BEYOND THE GIRDER ENDS. OTHERWISE, PRESTRESSING STRANDS SHALL BE CUT FLUSH WITH THE GIRDER ENDS.

THE TRANSFER OF LOAD FROM THE ANCHORAGES TO THE GIRDER SHALL BE DONE WHEN CONCRETE HAS REACHED A COMPRESSIVE STRENGTH OF NOT LESS THAN 27.6 MPa.

DEPENDING ON THE TYPE OF SYSTEM USED TO SUPPORT THE DECK SLAB FORMS, PRESET ANCHORS MAY BE NECESSARY IN THE PRESTRESSED CONCRETE GIRDER.

THE TOP SURFACE OF THE GIRDER, EXCLUDING THE OUTSIDE 100mm, SHALL BE RAKED TO A DEPTH OF 6mm.

PROJECT NO. U-2519DA
CUMBERLAND COUNTY
STATION: 12+10.929-LP1B-

SHEET 4 OF 4

STATE OF NORTH CAROLINA
DEPARTMENT OF TRANSPORTATION
RALEIGH

STANDARD
PRESTRESSED CONCRETE
GIRDER CONTINUOUS
FOR LIVE LOAD
DETAILS

NORTH CAROLINA PROFESSIONAL SEAL 21638 ENGINEER LAURA E. SUTTON
9/30/08

REVISIONS							
NO.	BY:	DATE:	NO.	BY:	DATE:		SHEET NO. 5-385
1			3				TOTAL SHEETS 411
2			4				

ASSEMBLED BY : A.S. CALLAWAY	DATE : 12/5/07
CHECKED BY : P.C. BREWER	DATE : 5/22/08
DRAWN BY : ELR 11/91	REV. 10/17/00 RWW/LES
CHECKED BY : GRP 11/91	REV. 7/10/01RR LES/RDR
	REV. 5/1/06 TLA/GM

06-AUG-2008 14:34
R:\Structures\girolaml\str16\scallaway\Microstation\u2519da_sd_g*_16.dgn
LSUTTON

STD. NO. PCG11SM

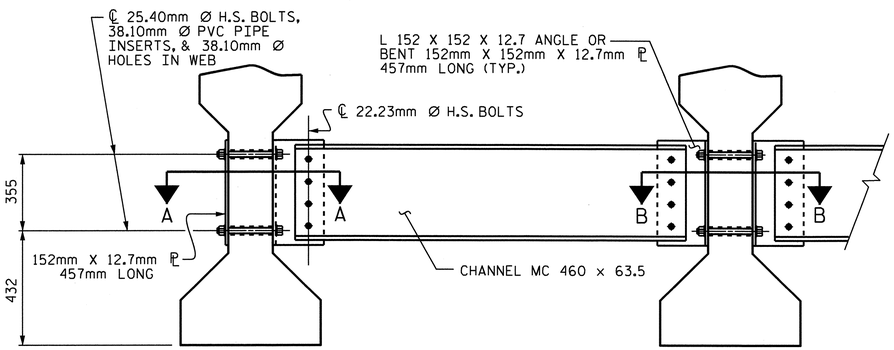

EXTERIOR GIRDER

INTERIOR GIRDER

PART SECTION AT INTERMEDIATE DIAPHRAGM

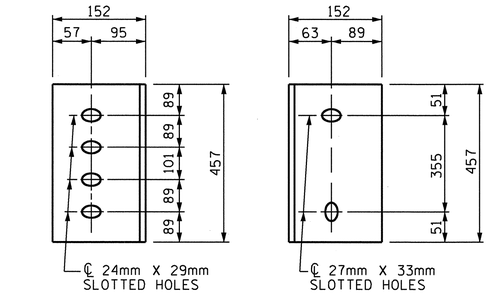

DIAPHRAGM FACE

WEB FACE

CONNECTOR PLATE DETAILS

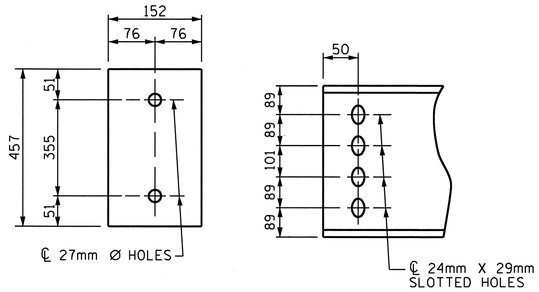

PLATE DETAILS

CHANNEL END

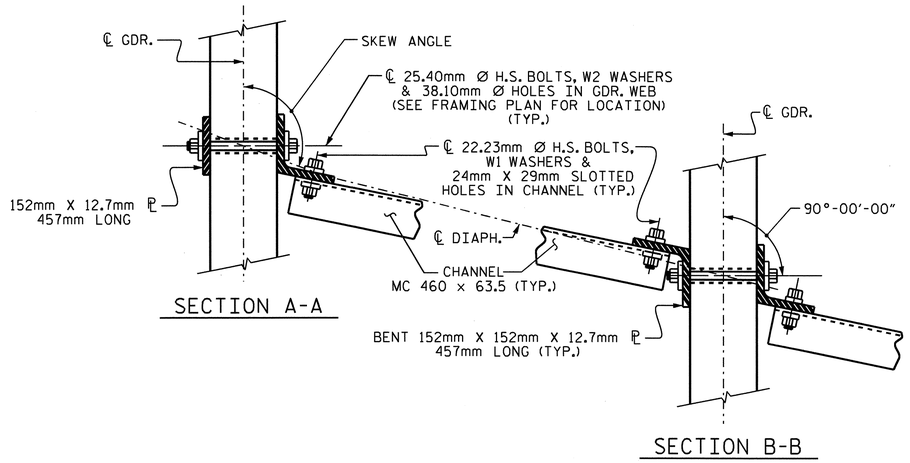

SECTION A-A

SECTION B-B

CONNECTION DETAILS

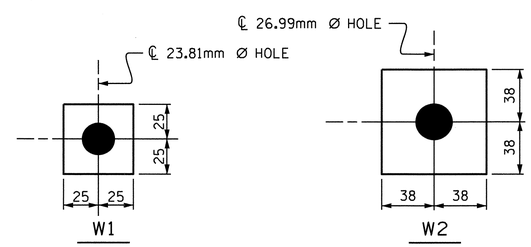

W1

ℙ 11.1 X 50 X 50

USE WITH 22.23mm Ø HVY. HEX NUTS & DIRECT TENSION INDICATOR WASHERS AT DIAPHRAGM CHANNEL TO CONNECTOR PLATE CONNECTIONS

W2

ℙ 11.1 X 76 X 76

USE WITH 25.40mm Ø HVY. HEX NUTS AT CONNECTOR PLATE TO GIRDER CONNECTIONS

WASHER DETAILS

STRUCTURAL STEEL NOTES

ALL INTERMEDIATE DIAPHRAGM STEEL, CONNECTOR PLATES AND PLATE WASHERS SHALL BE AASHTO M270 GRADE 345 OR APPROVED EQUAL.

TENSION ON THE AASHTO M164 BOLTS THROUGH THE CHANNEL MEMBER SHALL BE CALIBRATED USING DIRECT TENSION INDICATOR WASHERS IN ACCORDANCE WITH THE STANDARD SPECIFICATIONS. FOR DIRECT TENSION INDICATORS, SEE SPECIAL PROVISIONS.

TENSION ON THE AASHTO M164 BOLTS THROUGH THE GIRDER WEB SHALL BE SNUG TIGHTENED FOLLOWED BY AN ADDITIONAL 1/4 TURN.

THE PLATES, BENT PLATES, CHANNELS, ANGLES, AND PLATE WASHERS SHALL BE GALVANIZED OR METALLIZED IN ACCORDANCE WITH THE STANDARD SPECIFICATIONS. FOR THERMAL SPRAYED COATINGS (METALLIZATION), SEE SPECIAL PROVISIONS.

FOR METALLIZATION, APPLY AN 8 MIL THICK 99.99 PERCENT ZINC (W-Zn-1) THERMAL SPRAYED COATING WITH A 0.5 MIL THICK SEAL COAT TO ALL STEEL DIAPHRAGM SURFACES IN ACCORDANCE WITH THE THERMAL SPRAYED COATINGS SPECIAL PROVISIONS AND SECTION 442 OF THE STANDARD SPECIFICATIONS.

GALVANIZE THE HIGH STRENGTH BOLTS, NUTS, WASHERS AND DIRECT TENSION INDICATORS IN ACCORDANCE WITH THE STANDARD SPECIFICATIONS. FOR HIGH STRENGTH BOLTS, SEE SPECIAL PROVISIONS.

USE A MINIMUM 11mm THICK PLATE WASHER WITH STANDARD HOLES UNDER EACH BOLT HEAD AND NUT. THE PLATE WASHERS SHALL HAVE SUFFICIENT SIZE TO COVER THE HOLES AFTER INSTALLATION. HARDENED WASHERS AND DIRECT TENSION INDICATORS ARE TO BE USED IN CONJUNCTION WITH THE PLATE WASHERS IN THE CHANNEL MEMBER CONNECTION.

FOR BOLTS THROUGH THE GIRDER WEB, PROVIDE SUFFICIENT LENGTH OF ALL BOLTS TO ACCOMMODATE WASHERS AND THE THICKNESS OF CONNECTING MEMBER PLUS AT LEAST 6mm PROJECTION BEYOND THE NUT.

INTERMEDIATE DIAPHRAGM ASSEMBLY SHALL COMPLY WITH SECTION 1072 OF THE STANDARD SPECIFICATIONS.

CONTRACTOR SHALL SUBMIT TWO SETS OF WORKING DRAWINGS FOR THE INTERMEDIATE DIAPHRAGM ASSEMBLY FOR REVIEW, COMMENTS AND ACCEPTANCE. AFTER REVIEW, COMMENTS, AND ACCEPTANCE, SUBMIT SEVEN SETS FOR DISTRIBUTION.

IN THE EXTERIOR BAYS, TEMPORARY STRUTS SHALL BE PLACED BETWEEN PRESTRESSED GIRDERS ADJACENT TO THE STEEL DIAPHRAGMS. STRUTS SHALL REMAIN IN PLACE 3 DAYS AFTER CONCRETE IS PLACED. ALL AASHTO M164 H.S. BOLTS SHALL BE FULLY TIGHTENED AFTER THE STRUTS HAVE BEEN REMOVED.

THE COST OF THE STEEL DIAPHRAGMS AND ASSEMBLIES SHALL BE INCLUDED IN THE UNIT PRICE BID FOR PRESTRESSED CONCRETE GIRDERS.

PROJECT NO. U-2519DA
CUMBERLAND COUNTY
STATION: 12+10.929-LP1B-

NORTH CAROLINA PROFESSIONAL SEAL 16301 ENGINEER TING HSIUNG FANG
3/16/11

STATE OF NORTH CAROLINA
DEPARTMENT OF TRANSPORTATION
RALEIGH

STANDARD
INTERMEDIATE STEEL DIAPHRAGMS FOR TYPE III PRESTRESSED CONCRETE GIRDERS

REVISIONS						SHEET NO.
NO.	BY:	DATE:	NO.	BY:	DATE:	S-386
1			3			TOTAL SHEETS
2			4			411

ASSEMBLED BY : A.S. CALLAWAY	DATE : 12/5/07
CHECKED BY : P.C. BREWER	DATE : 5/22/08
DRAWN BY : TLA 6/05	ADDED 10/21/05
CHECKED BY : VC 6/05	REV. 5/1/06R KMM/GM

16-MAR-2011 09:23
K:\TIPProjects-U\U2519da\Structures\girolami\str16\scallaway\Microstation\u2519da_sd_g*_16.dgn
ttfang

STD.NO. PCG12SM

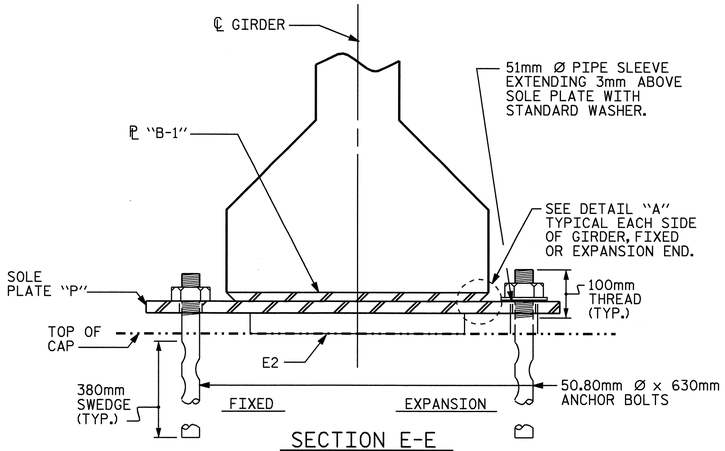

SECTION E-E

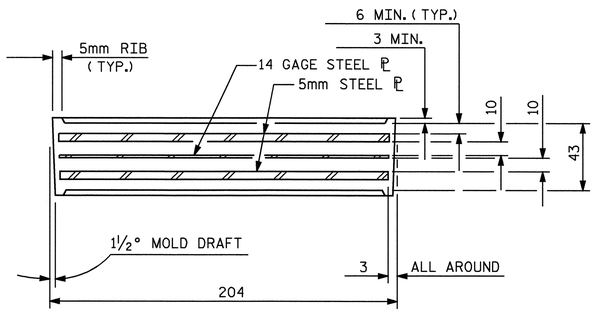

TYPICAL SECTION OF ELASTOMERIC BEARINGS

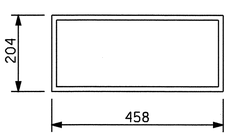

E2 (24 REQ'D.)

PLAN VIEW OF ELASTOMERIC BEARING

TYPE III

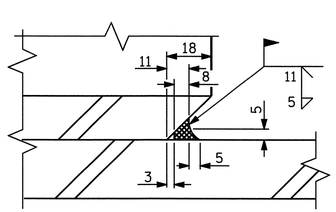

DETAIL "A"

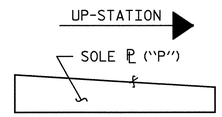

SOLE ℗ PLACEMENT DETAIL

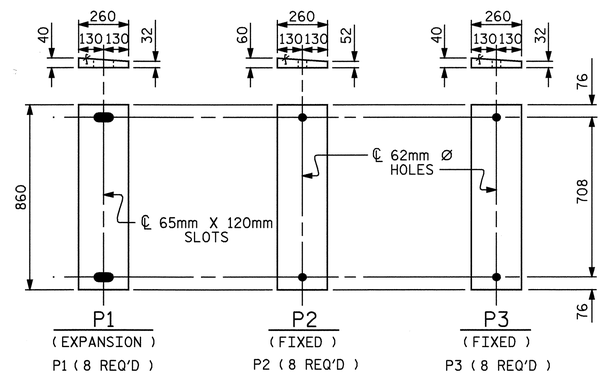

SOLE PLATE DETAILS ("P")

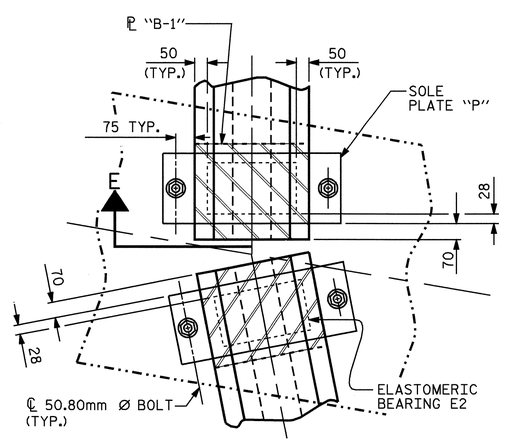

SECTION AT BENT

(FIXED)

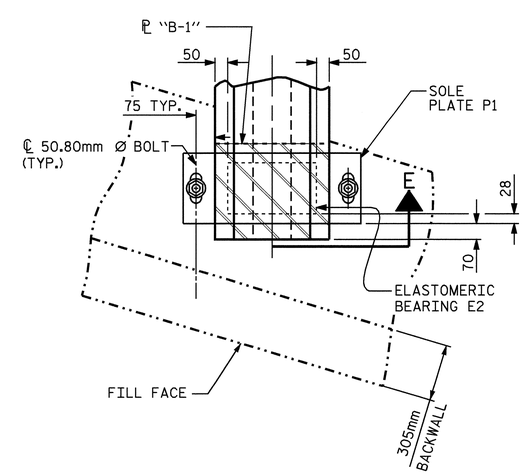

SECTION AT END BENT

(EXPANSION)

NOTES

AT ALL FIXED POINTS OF SUPPORT, NUTS FOR ANCHOR BOLTS ARE TO BE TIGHTENED FINGER TIGHT AND THEN BACKED OFF ½ TURN. THE THREAD OF THE NUT AND BOLT SHALL THEN BE BURRED WITH A SHARP POINTED TOOL.

THE 51mm Ø PIPE SLEEVE SHALL BE CUT FROM SCHEDULE 40 PVC PLASTIC PIPE. THE PVC PLASTIC PIPE SHALL MEET THE REQUIREMENTS OF ASTM D1785.

STEEL SOLE PLATES, ANCHOR BOLTS, NUTS, AND WASHERS SHALL BE GALVANIZED IN ACCORDANCE WITH THE STANDARD SPECIFICATIONS.

PRIOR TO WELDING, GRIND THE GALVANIZED SURFACE OF THE PORTION OF THE EMBEDDED PLATE AND SOLE PLATE THAT ARE TO BE WELDED. AFTER WELDING, DAMAGED GALVANIZED SURFACES SHALL BE REPAIRED IN ACCORDANCE WITH THE STANDARD SPECIFICATIONS.

WHEN WELDING THE SOLE PLATE TO THE EMBEDDED PLATE IN THE GIRDER, USE TEMPERATURE INDICATING WAX PENS, OR OTHER SUITABLE MEANS, TO ENSURE THAT THE TEMPERATURE OF THE SOLE PLATE DOES NOT EXCEED 149°C. TEMPERATURES ABOVE THIS MAY DAMAGE THE ELASTOMER.

SOLE PLATE "P", BOLTS, NUTS, WASHERS, AND PIPE SLEEVE SHALL BE INCLUDED IN THE PAY ITEM FOR PRESTRESSED CONCRETE GIRDERS.

ANCHOR BOLTS SHALL MEET THE REQUIREMENTS OF ASTM A449. NUTS SHALL MEET THE REQUIREMENTS OF AASHTO M291M-12 OR AASHTO M292M-2H. WASHERS SHALL MEET THE REQUIREMENTS OF AASHTO M293M. SHOP DRAWINGS ARE NOT REQUIRED FOR ANCHOR BOLTS, NUTS AND WASHERS. SHOP INSPECTION IS REQUIRED.

ALL SURFACES OF BEARING PLATES SHALL BE SMOOTH AND STRAIGHT.

LOAD RATINGS	
	MAX. D.L.+L.L.
1143mm PCG -TYPE III	512 kN

PROJECT NO. U-2519DA
CUMBERLAND COUNTY
STATION: 12+10.929-LP1B-

STATE OF NORTH CAROLINA
DEPARTMENT OF TRANSPORTATION
RALEIGH

STANDARD
ELASTOMERIC BEARING DETAILS
PRESTRESSED CONCRETE GIRDER SUPERSTRUCTURE

NORTH CAROLINA PROFESSIONAL SEAL 21638 ENGINEER LAURA E. SUTTON
11/20/08

REVISIONS						SHEET NO.
NO.	BY:	DATE:	NO.	BY:	DATE:	S-387
1			3			TOTAL SHEETS
2			4			411

ASSEMBLED BY : A.S. CALLAWAY	DATE : 12/4/07
CHECKED BY : P.C. BREWER	DATE : 5/22/08
DRAWN BY : WJH 8/89	REV. 10/17/00 RWW/LES
CHECKED BY : CRK 8/89	REV. 7/10/01 RWW/LES
	REV. 5/1/06 TLA/GM

06-AUG-2008 14:34
R:\Structures\glrolami\str16\scallaway\Microstation\u2519da_sd_bg_16.dgn
LSUTTON

STD. NO. EB3SM

DEAD LOAD DEFLECTION TABLE FOR GIRDERS

SPAN "A"

12.70mm Ø LOW RELAXATION	GIRDER #1											GIRDERS #2 & #3											GIRDER #4										
TENTH POINTS	BRG.	0.1	0.2	0.3	0.4	0.5	0.6	0.7	0.8	0.9	BRG.	BRG.	0.1	0.2	0.3	0.4	0.5	0.6	0.7	0.8	0.9	BRG.	BRG.	0.1	0.2	0.3	0.4	0.5	0.6	0.7	0.8	0.9	BRG.
CAMBER (GIRDER ALONE IN PLACE) ↑	0	0.003	0.007	0.009	0.010	0.011	0.010	0.009	0.007	0.003	0	0	0.003	0.007	0.009	0.011	0.011	0.011	0.009	0.007	0.003	0	0	0.003	0.007	0.009	0.011	0.011	0.011	0.009	0.007	0.003	0
* DEFLECTION DUE TO SUPERIMPOSED D.L. ↓	0	0.001	0.002	0.003	0.003	0.004	0.003	0.003	0.002	0.001	0	0	0.001	0.002	0.003	0.004	0.004	0.004	0.003	0.002	0.001	0	0	0.001	0.002	0.003	0.003	0.003	0.003	0.003	0.002	0.001	0
FINAL CAMBER ↑	0	2	5	6	7	7	7	6	5	2	0	0	2	5	6	7	7	7	6	5	2	0	0	2	5	6	8	8	8	6	5	2	0

SPAN "B"

12.70mm Ø LOW RELAXATION	GIRDER #1											GIRDERS #2 & #3											GIRDER #4										
TENTH POINTS	BRG.	0.1	0.2	0.3	0.4	0.5	0.6	0.7	0.8	0.9	BRG.	BRG.	0.1	0.2	0.3	0.4	0.5	0.6	0.7	0.8	0.9	BRG.	BRG.	0.1	0.2	0.3	0.4	0.5	0.6	0.7	0.8	0.9	BRG.
CAMBER (GIRDER ALONE IN PLACE) ↑	0	0.004	0.007	0.010	0.011	0.012	0.011	0.010	0.007	0.004	0	0	0.004	0.007	0.010	0.011	0.012	0.011	0.010	0.007	0.004	0	0	0.004	0.007	0.010	0.011	0.012	0.011	0.010	0.007	0.004	0
* DEFLECTION DUE TO SUPERIMPOSED D.L. ↓	0	0.001	0.003	0.004	0.005	0.006	0.005	0.004	0.003	0.001	0	0	0.002	0.003	0.005	0.006	0.007	0.006	0.005	0.003	0.002	0	0	0.001	0.003	0.004	0.005	0.006	0.005	0.004	0.003	0.001	0
FINAL CAMBER ↑	0	3	4	6	6	6	6	6	4	3	0	0	2	4	5	5	5	5	5	4	2	0	0	3	4	6	6	6	6	6	4	3	0

SPAN "C"

12.70mm Ø LOW RELAXATION	GIRDER #1											GIRDERS #2 & #3											GIRDER #4										
TENTH POINTS	BRG.	0.1	0.2	0.3	0.4	0.5	0.6	0.7	0.8	0.9	BRG.	BRG.	0.1	0.2	0.3	0.4	0.5	0.6	0.7	0.8	0.9	BRG.	BRG.	0.1	0.2	0.3	0.4	0.5	0.6	0.7	0.8	0.9	BRG.
CAMBER (GIRDER ALONE IN PLACE) ↑	0	0.002	0.004	0.006	0.007	0.007	0.007	0.006	0.004	0.002	0	0	0.002	0.004	0.006	0.007	0.007	0.007	0.006	0.004	0.002	0	0	0.002	0.004	0.006	0.007	0.007	0.007	0.006	0.004	0.002	0
* DEFLECTION DUE TO SUPERIMPOSED D.L. ↓	0	0.000	0.000	0.000	0.000	0.000	0.000	0.000	0.000	0.000	0	0	0.000	0.000	0.000	0.001	0.001	0.001	0.000	0.000	0.000	0	0	0.000	0.000	0.000	0.000	0.000	0.000	0.000	0.000	0.000	0
FINAL CAMBER ↑	0	2	4	6	7	7	7	6	4	2	0	0	2	4	6	6	6	6	6	4	2	0	0	2	4	6	7	7	7	6	4	2	0

* INCLUDES FUTURE WEARING SURFACE
ALL VALUES ARE SHOWN IN METERS, EXCEPT "FINAL CAMBER" WHICH IS SHOWN IN MILLIMETERS.

PROJECT NO. U-2519DA
CUMBERLAND COUNTY
STATION: 12+10.929-LP1B-

STATE OF NORTH CAROLINA
DEPARTMENT OF TRANSPORTATION
RALEIGH

SUPERSTRUCTURE

DEAD LOAD DEFLECTIONS

NORTH CAROLINA PROFESSIONAL SEAL 21638 ENGINEER LAURA E. SUTTON
9/30/08

REVISIONS						SHEET NO.
NO.	BY:	DATE:	NO.	BY:	DATE:	S-388
1			3			TOTAL SHEETS
2			4			411

DRAWN BY : A.S. CALLAWAY DATE : 12/7/07
CHECKED BY : P.C. BREWER DATE : 5/22/08

06-AUG-2008 14:34
R:\Structures\girolaml\str16\scallaway\Microstation\u2519da_sd_dl_16.dgn
LSUTTON

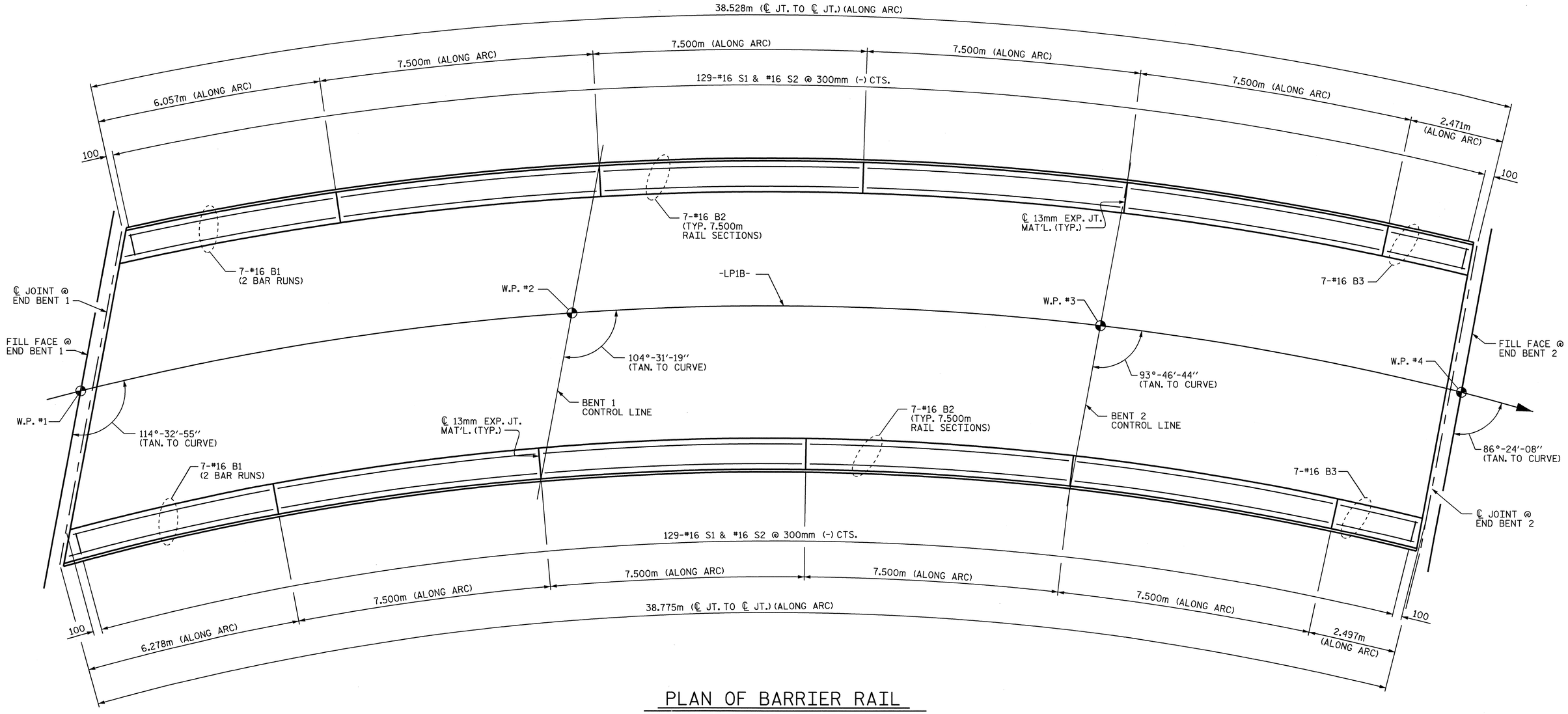

PLAN OF BARRIER RAIL

NOTE: ALL DIMENSIONS ARE TAKEN ALONG BACKFACE OF BARRIER RAIL.

PROJECT NO. U-2519DA
CUMBERLAND COUNTY
STATION: 12+10.929-LP1B-

SHEET 1 OF 2

STATE OF NORTH CAROLINA
DEPARTMENT OF TRANSPORTATION
RALEIGH

SUPERSTRUCTURE

CONCRETE BARRIER RAIL

NORTH CAROLINA PROFESSIONAL SEAL 21638 ENGINEER LAURA E. SUTTON
1/30/08

REVISIONS							SHEET NO.
NO.	BY:	DATE:	NO.	BY:	DATE:		S-389
1			3				TOTAL SHEETS
2			4				411

DRAWN BY : A.S. CALLAWAY DATE : 12/12/07
CHECKED BY : P.C. BREWER DATE : 5/22/08

25-AUG-2008 15:46
r:\structures\girolaml\str16\scallaway\Microstation\u2519da_sd_br_16.dgn
LSUTTON

NOTES

THE BARRIER RAIL IN A CONTINUOUS UNIT SHALL NOT BE CAST UNTIL ALL SLAB CONCRETE IN THAT UNIT HAS BEEN CAST AND HAS REACHED A MINIMUM COMPRESSIVE STRENGTH OF 20.7 MPa.

THE JOINT IN THE DECK SHALL BE FORMED PRIOR TO THE CASTING OF BARRIER RAIL.

ALL REINFORCING STEEL IN BARRIER RAILS SHALL BE EPOXY COATED.

VERTICAL GROOVED CONTRACTION JOINTS, 12mm IN DEPTH, SHALL BE TOOLED IN ALL EXPOSED FACES OF THE BARRIER RAIL AND IN ACCORDANCE WITH ARTICLE 825-10(B) OF THE STANDARD SPECIFICATIONS. THE CONTRACTION JOINT SHALL BE LOCATED AT EACH THIRD POINT BETWEEN BARRIER RAIL EXPANSION JOINTS. ONLY ONE CONTRACTION JOINT IS REQUIRED AT MIDPOINT OF BARRIER RAIL SEGMENTS LESS THAN 6.1m IN LENGTH AND NO CONTRACTION JOINTS ARE REQUIRED FOR THOSE SEGMENTS LESS THAN 3.5m IN LENGTH.

THE #16 S1 AND #16 S2 BARS MAY BE ADJUSTED SLIGHTLY IN ORDER TO MAINTAIN A 50mm MINIMUM CLEARANCE TO THE 13mm EXPANSION JOINT MATERIAL.

BAR TYPES

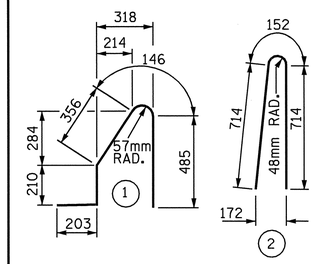

ALL BAR DIMENSIONS ARE OUT TO OUT.

BILL OF MATERIAL

FOR CONCRETE BARRIER RAIL ONLY

BAR	NO.	SIZE	TYPE	LENGTH	WEIGHT
*S1	258	#16	1	1400	561
*S2	258	#16	2	1580	633
*B1	28	#16	STR	3600	156
*B2	56	#16	STR	7380	641
*B3	14	#16	STR	2340	51

*EPOXY COATED REINFORCING STEEL	kg	2,042
CLASS AA CONCRETE	m3	19.4
CONC. BARRIER RAIL	METERS	77.303

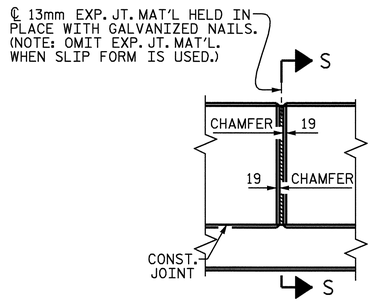

ELEVATION AT EXPANSION JOINTS

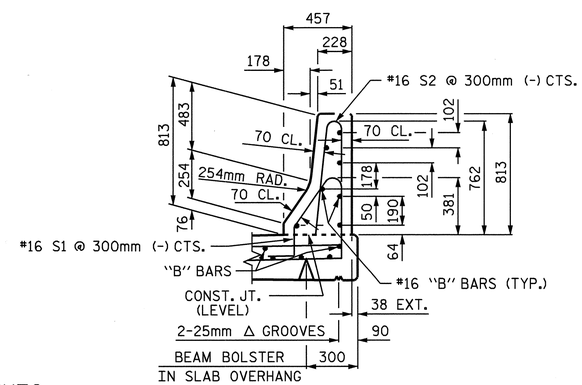

SECTION THRU RAIL

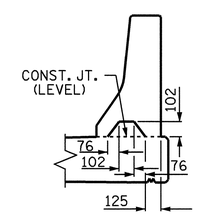

SECTION S-S

AT DAM IN OPEN JOINT (THIS IS TO BE USED ONLY WHEN SLIP FORM IS USED)

BARRIER RAIL DETAILS

PROJECT NO. U-2519DA

CUMBERLAND COUNTY

STATION: 12+10.929-LP1B-

SHEET 2 OF 2

STATE OF NORTH CAROLINA
DEPARTMENT OF TRANSPORTATION
RALEIGH

STANDARD

CONCRETE BARRIER RAIL

NORTH CAROLINA PROFESSIONAL SEAL 21638 ENGINEER LAURA E. SUTTON
9/30/08

REVISIONS						SHEET NO.
NO.	BY:	DATE:	NO.	BY:	DATE:	S-390
1			3			TOTAL SHEETS
2			4			411

ASSEMBLED BY : A.S. CALLAWAY DATE : 12/12/07
CHECKED BY : P.C. BREWER DATE : 5/22/08

DRAWN BY : ARB 5/87
CHECKED BY : SJD 9/87

REV. 10/17/00 RWW/LES
REV. 5/7/03R RWW/JTE
REV. 5/1/06 TLA/GM

25-AUG-2008 14:02
r:\structures\girolami\str16\scallaway\Microstation\u2519da_sd_br_16.dgn
LSUTTON

STD. NO. CBR1SM

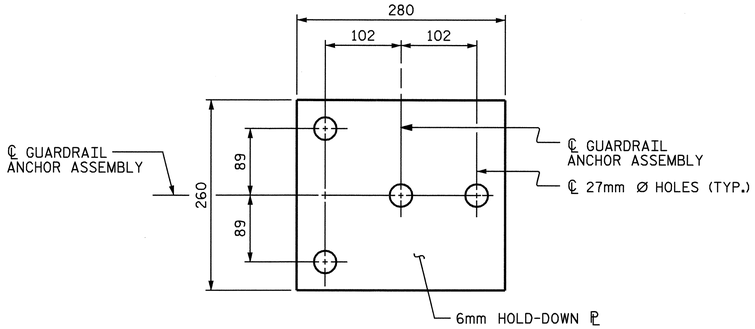

PLAN

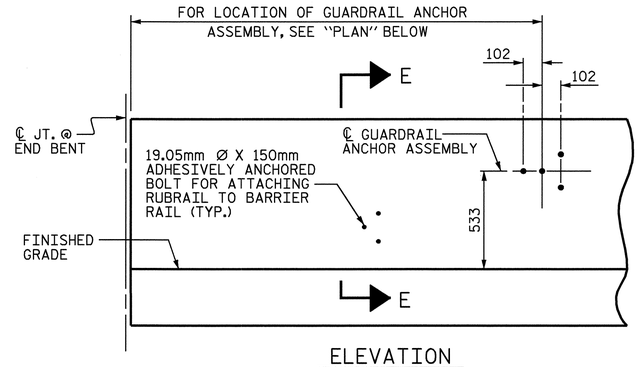

ELEVATION

FOR LOCATION OF RUBRAIL, SEE ROADWAY STD. 862.03

NOTES

THE GUARDRAIL ANCHOR ASSEMBLY SHALL CONSIST OF A 6mm HOLD DOWN PLATE AND 4-22.23mm Ø BOLTS WITH NUTS AND WASHERS, RUBRAIL, AND ADHESIVELY ANCHORED BOLTS.

THE HOLD-DOWN PLATE SHALL CONFORM TO AASHTO M270 GRADE 250. AFTER FABRICATION, THE HOLD-DOWN PLATE SHALL BE HOT-DIP GALVANIZED IN ACCORDANCE WITH AASHTO M111.

BOLTS SHALL CONFORM TO THE REQUIREMENTS OF ASTM A307 AND NUTS SHALL CONFORM TO THE REQUIREMENTS OF AASHTO M291. BOLTS, NUTS AND WASHERS SHALL BE GALVANIZED. (AT THE CONTRACTOR'S OPTION, STAINLESS STEEL BOLTS, NUTS AND WASHERS MAY BE USED AS AN ALTERNATE FOR THE 22.23mm Ø GALVANIZED BOLTS, NUTS AND WASHERS. THEY SHALL CONFORM TO OR EXCEED THE MECHANICAL REQUIREMENTS OF ASTM A307. THE USE OF THIS ALTERNATE SHALL BE APPROVED BY THE ENGINEER.)

THE GUARDRAIL ANCHOR ASSEMBLY IS REQUIRED AT ALL POINTS WHERE APPROACH GUARDRAIL IS TO BE ATTACHED TO THE END OF BARRIER RAIL. FOR POINTS OF ATTACHMENT, SEE SKETCH.

AFTER INSTALLATION, THE EXPOSED THREAD OF THE BOLT SHALL BE BURRED WITH A SHARP POINTED TOOL.

THE COST OF THE GUARDRAIL ANCHOR ASSEMBLY SHALL BE INCLUDED IN THE UNIT CONTRACT PRICE BID FOR CONCRETE BARRIER RAIL.

THE 32mm Ø HOLES SHALL BE FORMED OR DRILLED WITH A CORE BIT. IMPACT TOOLS WILL NOT BE PERMITTED. ANY CONCRETE DAMAGED BY THIS WORK SHALL BE REPAIRED TO THE SATISFACTION OF THE ENGINEER.

THE C150 X 12 RUBRAIL IS TO BE ADHESIVELY ANCHORED TO THE RAIL USING THREE 19.05mm Ø X 150mm BOLTS WITH WASHERS. LEVEL ONE FIELD TESTING IS REQUIRED, AND THE YIELD LOAD OF THE 19.05mm Ø BOLTS IS 53.4kN. FOR ADHESIVELY ANCHORED ANCHOR BOLTS OR DOWELS, SEE SPECIAL PROVISIONS. SEE ROADWAY STANDARD 862.03 FOR DETAILS AND LOCATION OF THE RUBRAIL.

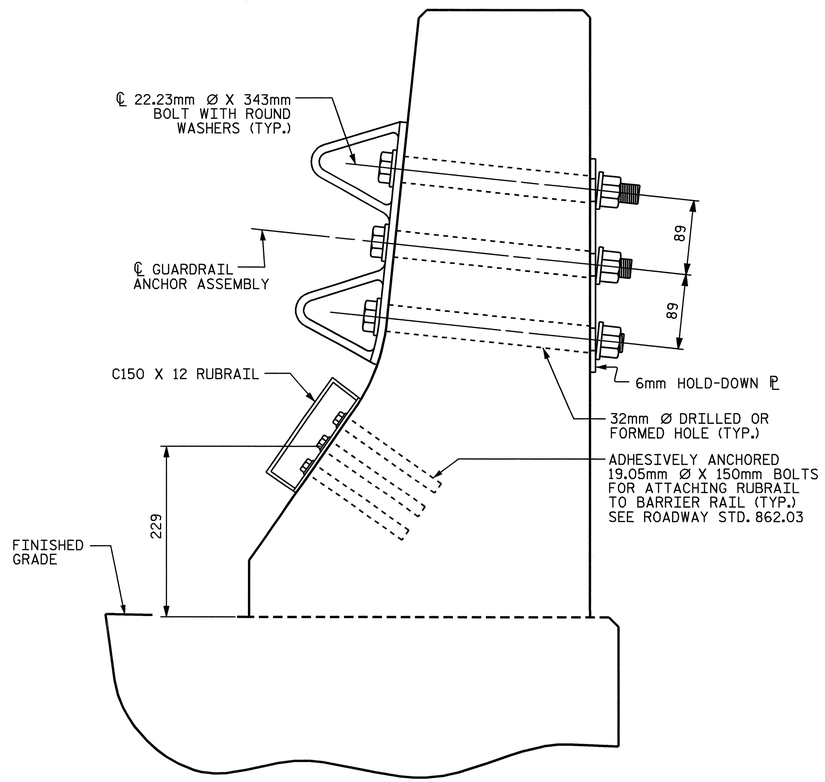

SECTION E-E

GUARDRAIL ANCHOR ASSEMBLY DETAILS

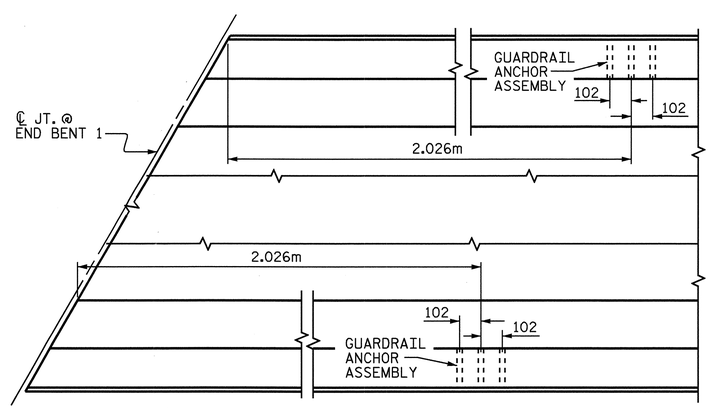

PLAN

LOCATION OF ANCHORS FOR GUARDRAIL

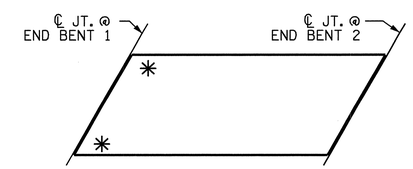

SKETCH SHOWING POINTS OF ATTACHMENTS

✳ DENOTES GUARDRAIL ANCHOR ASSEMBLY.

PROJECT NO. U-2519DA
CUMBERLAND COUNTY
STATION: 12+10.929-LP1B-

STATE OF NORTH CAROLINA
DEPARTMENT OF TRANSPORTATION
RALEIGH

STANDARD
GUARDRAIL ANCHORAGE FOR BARRIER RAIL

NORTH CAROLINA PROFESSIONAL SEAL 21638 ENGINEER LAURA E. SUTTON
9/30/08

REVISIONS							SHEET NO.
NO.	BY:	DATE:	NO.	BY:	DATE:		5-391
1			3				TOTAL SHEETS
2			4				411

ASSEMBLED BY : A.S. CALLAWAY DATE : 7/29/08
CHECKED BY : P.C. BREWER DATE : 8/4/08
DRAWN BY : TLA 5/06
CHECKED BY : GM 5/06
ADDED 5/1/06R KMM/GM

06-AUG-2008 14:34
R:\Structures\girolami\str16\scallaway\Microstation\u2519da_sd_gr_16.dgn
LSUTTON

STD. NO. GRA2

THIS SHEET
INTENTIONALLY
LEFT BLANK

PROJECT NO. U-2519DA
CUMBERLAND COUNTY
STATION: 12+10.929-LP1B-

STATE OF NORTH CAROLINA
DEPARTMENT OF TRANSPORTATION
RALEIGH

BLANK SHEET

REVISIONS						SHEET NO.
NO.	BY:	DATE:	NO.	BY:	DATE:	S-392
1			3			TOTAL SHEETS
2			4			411

ASSEMBLED BY :	DATE :
CHECKED BY :	DATE :
DRAWN BY : EEM 1/96	REV. 7/10/01 LES/RDR
CHECKED BY : RGW 1/96	REV. 5/7/03RR RWW/JTE
	REV. 5/1/06 TLA/GM

STD. NO. AEJ1SM

18-MAR-2011 16:01
k:\TIPProjects-U\U2519da\Structures\girolami\str16\scalloway\Microstation\u2519da_sd_js_16.dgn
tfang

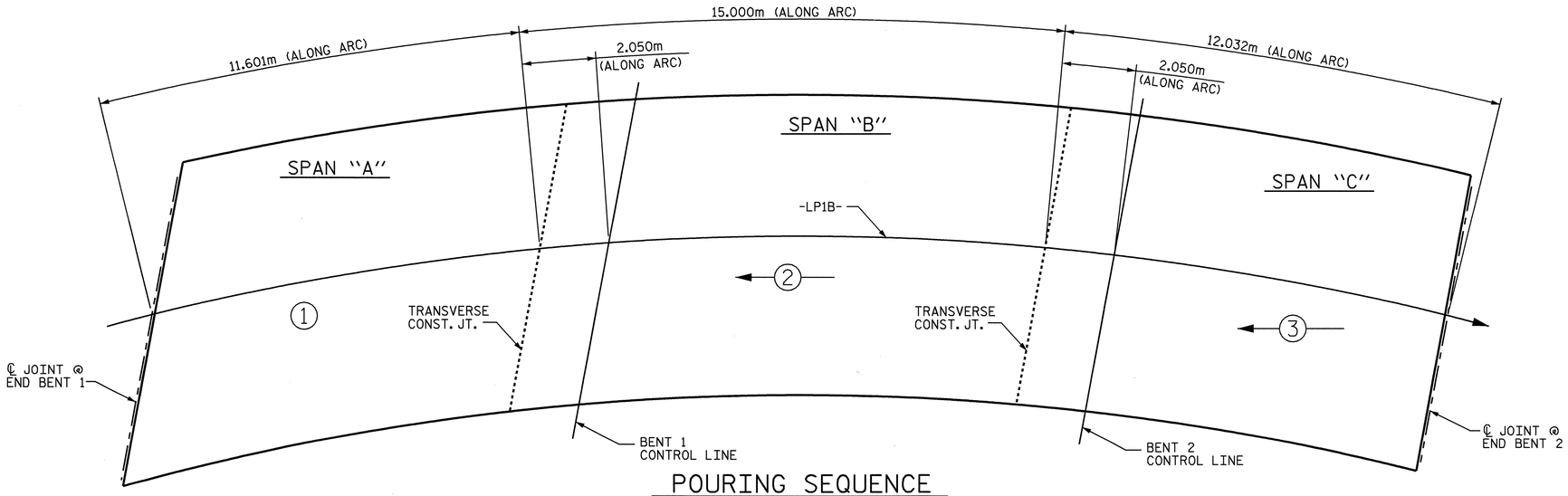

POURING SEQUENCE

(#) INDICATES POUR NUMBER AND DIRECTION OF POUR

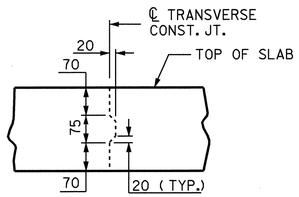

TRANSVERSE CONSTRUCTION JOINT DETAIL

NOTE: REINFORCING STEEL IN SLAB NOT SHOWN. LONGITUDINAL REINFORCING STEEL SHALL BE CONTINUOUS THROUGH JOINT.

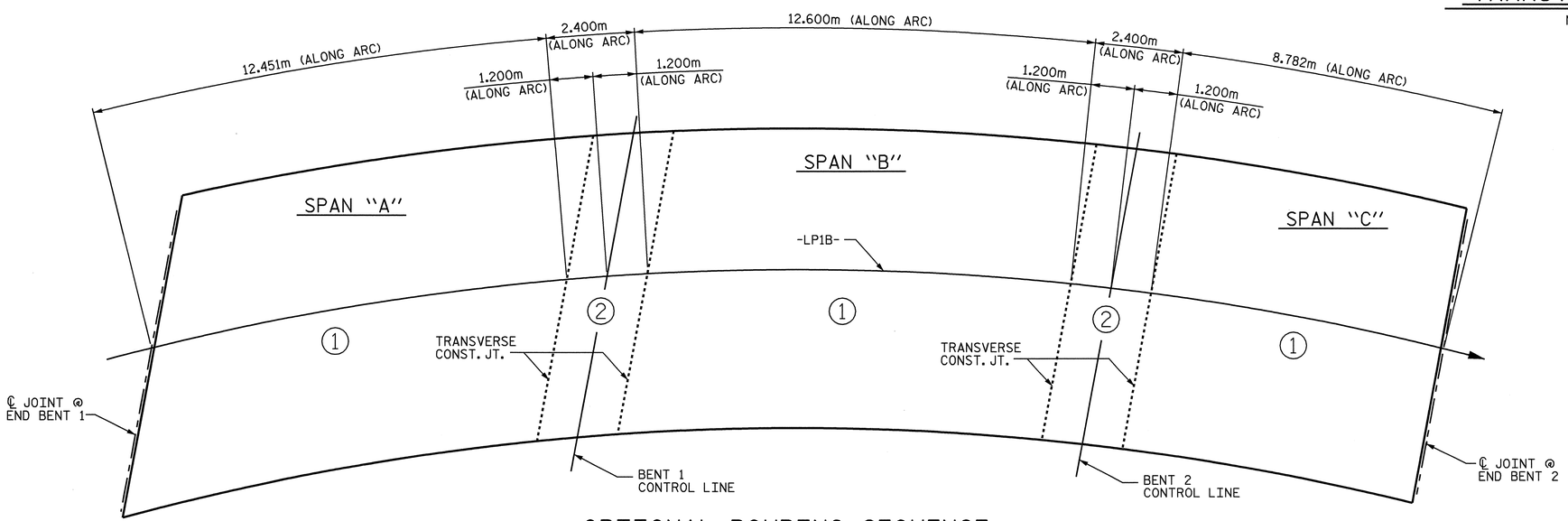

OPTIONAL POURING SEQUENCE

POUR (2) CAN NOT BE STARTED UNTIL BOTH ADJACENT (1) POURS REACH A MINIMUM OF 20.7 MPa.

PROJECT NO. U-2519DA
CUMBERLAND COUNTY
STATION: 12+10.929-LP1B-

STATE OF NORTH CAROLINA
DEPARTMENT OF TRANSPORTATION
RALEIGH

SUPERSTRUCTURE

POURING SEQUENCE

NORTH CAROLINA PROFESSIONAL SEAL 21638 ENGINEER LAURA E. SUTTON
9/26/08

REVISIONS						SHEET NO.
NO.	BY:	DATE:	NO.	BY:	DATE:	S-393
1			3			TOTAL SHEETS
2			4			411

DRAWN BY : A.S. CALLAWAY DATE : 12/18/07
CHECKED BY : P.C. BREWER DATE : 5/22/08

25-AUG-2008 15:34
r:\structures\girolami\str16\scallaway\Microstation\u2519da_sd_bm_16.dgn
LSUTTON

SUPERSTRUCTURE REINFORCING STEEL LENGTHS ARE BASED ON THE FOLLOWING MINIMUM SPLICE LENGTHS

BAR SIZE	SUPERSTRUCTURE EXCEPT APPROACH SLABS, PARAPET, AND BARRIER RAIL		APPROACH SLABS		PARAPET AND BARRIER RAIL
	EPOXY COATED	UNCOATED	EPOXY COATED	UNCOATED	
#13	610	540	610	540	840
#16	770	660	770	660	1050
#19	920	790	1190	790	1330
#22	1580	1060			
#25	2080	1390			

SUPERSTRUCTURE BILL OF MATERIAL

SPANS "A", "B", & "C"	CLASS AA CONCRETE	REINFORCING STEEL	EPOXY COATED REINFORCING STEEL
	(CU. METER)	(kg)	(kg)
POUR #1	27.8	———	———
POUR #2	40.2	———	———
POUR #3	34.3	———	———
TOTALS ✳✳	102.3	5,291	5,716

✳✳ QUANTITIES FOR BARRIER RAIL ARE NOT INCLUDED

GROOVING BRIDGE FLOORS

APPROACH SLABS	100.5	SQ.METER
BRIDGE DECK	266.6	SQ.METER
TOTAL	367.1	SQ.METER

BILL OF MATERIAL

BAR	NO.	SIZE	TYPE	LENGTH	WEIGHT	BAR	NO.	SIZE	TYPE	LENGTH	WEIGHT
✳ A1	212	#16	STR	8780	2889	A219	1	#16	STR	1240	2
A2	212	#16	STR	8780	2889	A220	1	#16	STR	860	1
						A221	1	#16	STR	8780	14
✳ A101	1	#16	STR	8500	13	A222	1	#16	STR	5760	9
✳ A102	1	#16	STR	8080	13	A223	1	#16	STR	2620	4
✳ A103	1	#16	STR	7640	12						
✳ A104	1	#16	STR	7220	11	✳ B1	19	#13	STR	8600	162
✳ A105	1	#16	STR	6800	11	B2	90	#16	STR	13320	1861
✳ A106	1	#16	STR	6360	10	✳ B3	37	#16	STR	11700	672
✳ A107	1	#16	STR	5940	9	✳ B4	36	#16	STR	4360	244
✳ A108	1	#16	STR	5520	9	✳ B5	19	#13	STR	4260	80
✳ A109	1	#16	STR	5100	8	✳ B6	37	#16	STR	10600	609
✳ A110	1	#16	STR	4660	7	✳ B7	36	#16	STR	3800	212
✳ A111	1	#16	STR	4240	7	✳ B8	19	#13	STR	5940	112
✳ A112	1	#16	STR	3820	6	✳ B9	10	#13	STR	8220	82
✳ A113	1	#16	STR	3400	5						
✳ A114	1	#16	STR	2980	5	✳ G1	1	#16	STR	9660	15
✳ A115	1	#16	STR	2560	4	✳ G2	1	#16	STR	8800	14
✳ A116	1	#16	STR	2140	3						
✳ A117	1	#16	STR	1720	3	✳ K1	2	#25	1	3560	28
✳ A118	1	#16	STR	1300	2	✳ K2	4	#25	2	5680	90
✳ A119	1	#16	STR	880	1	✳ K3	2	#25	1	3820	30
✳ A121	1	#16	STR	6500	10	✳ K4	6	#19	STR	2080	28
✳ A122	1	#16	STR	3080	5	✳ K5	2	#25	1	3260	26
						✳ K6	4	#25	2	5240	83
A201	1	#16	STR	8780	14	✳ K7	2	#25	1	3540	28
A202	1	#16	STR	8460	13	✳ K8	6	#19	STR	1880	25
A203	1	#16	STR	8040	12	K9	4	#13	STR	7500	30
A204	1	#16	STR	7600	12	K10	36	#13	STR	1900	68
A205	1	#16	STR	7180	11	K11	12	#13	STR	1400	17
A206	1	#16	STR	6740	10	K12	4	#13	STR	7280	29
A207	1	#16	STR	6320	10						
A208	1	#16	STR	5900	9	✳ S1	21	#13	4	990	21
A209	1	#16	STR	5460	8	✳ S2	42	#16	3	1480	96
A210	1	#16	STR	5040	8	✳ S3	21	#13	4	770	16
A211	1	#16	STR	4620	7	S4	96	#13	5	860	82
A212	1	#16	STR	4200	7						
A213	1	#16	STR	3780	6	U1	12	#13	2	3460	41
A214	1	#16	STR	3340	5	U2	24	#13	2	4060	97
A215	1	#16	STR	2920	5						
A216	1	#16	STR	2500	4	REINFORCING STEEL				Kg	5,291
A217	1	#16	STR	2080	3	✳EPOXY COATED REINFORCING STEEL				Kg	5,716
A218	1	#16	STR	1660	3						

BAR TYPES

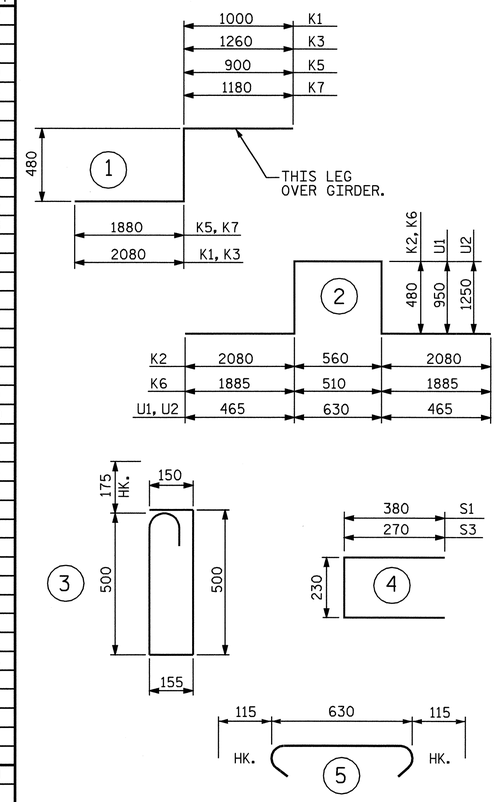

ALL BAR DIMENSIONS ARE OUT TO OUT.

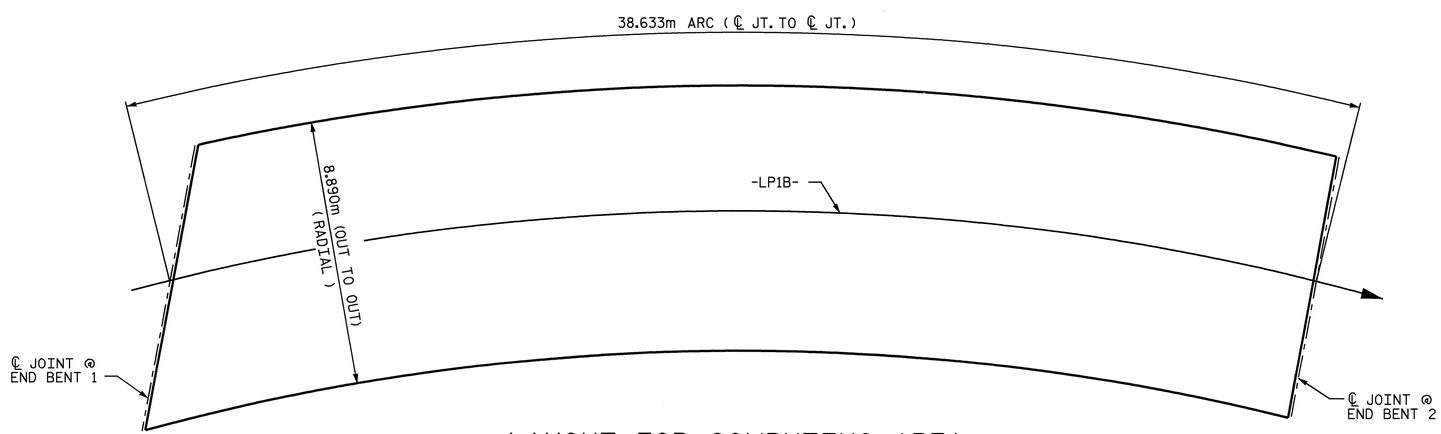

LAYOUT FOR COMPUTING AREA OF REINFORCED CONCRETE DECK SLAB
(SQ. METER = 343.5)

PROJECT NO. U-2519DA
CUMBERLAND COUNTY
STATION: 12+10.929-LP1B-

STATE OF NORTH CAROLINA
DEPARTMENT OF TRANSPORTATION
RALEIGH

STANDARD

SUPERSTRUCTURE BILL OF MATERIAL

NORTH CAROLINA PROFESSIONAL SEAL 21638 ENGINEER LAURA E. SUTTON
9/30/08

ASSEMBLED BY : A.S. CALLAWAY	DATE : 12/18/07
CHECKED BY : P.C. BREWER	DATE : 5/22/08
DRAWN BY : JMB 5/87	REV. 5/16/97 EEM/RGW
CHECKED BY : SJD 9/87	REV. 5/1/06 TLA/GM

REVISIONS							SHEET NO.
NO.	BY:	DATE:	NO.	BY:	DATE:		5-399
1			3				TOTAL SHEETS
2			4				411

25-AUG-2008 15:34
r:\structures\girolaml\str16\scallaway\Microstation\u2519da_sd_bm_16.dgn
LSUTTON

STD. NO. BOM2SM

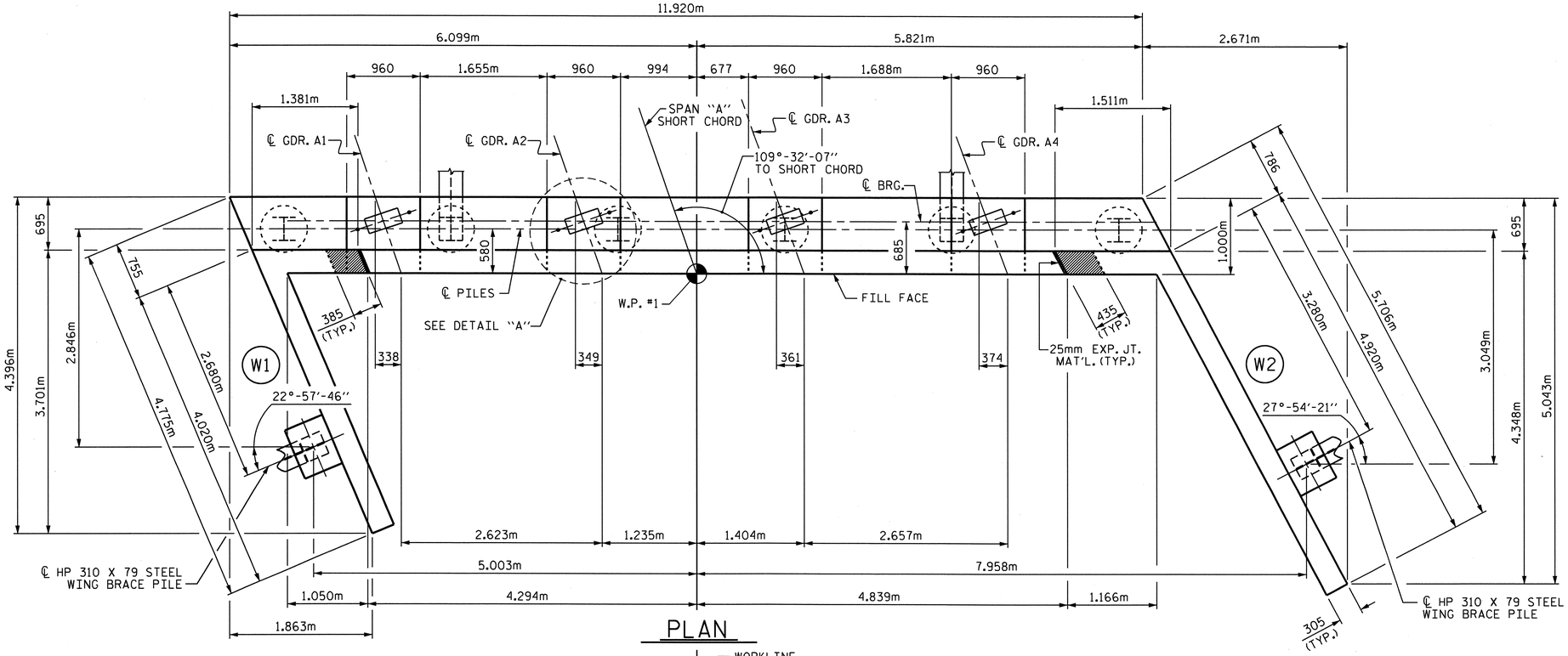

PLAN

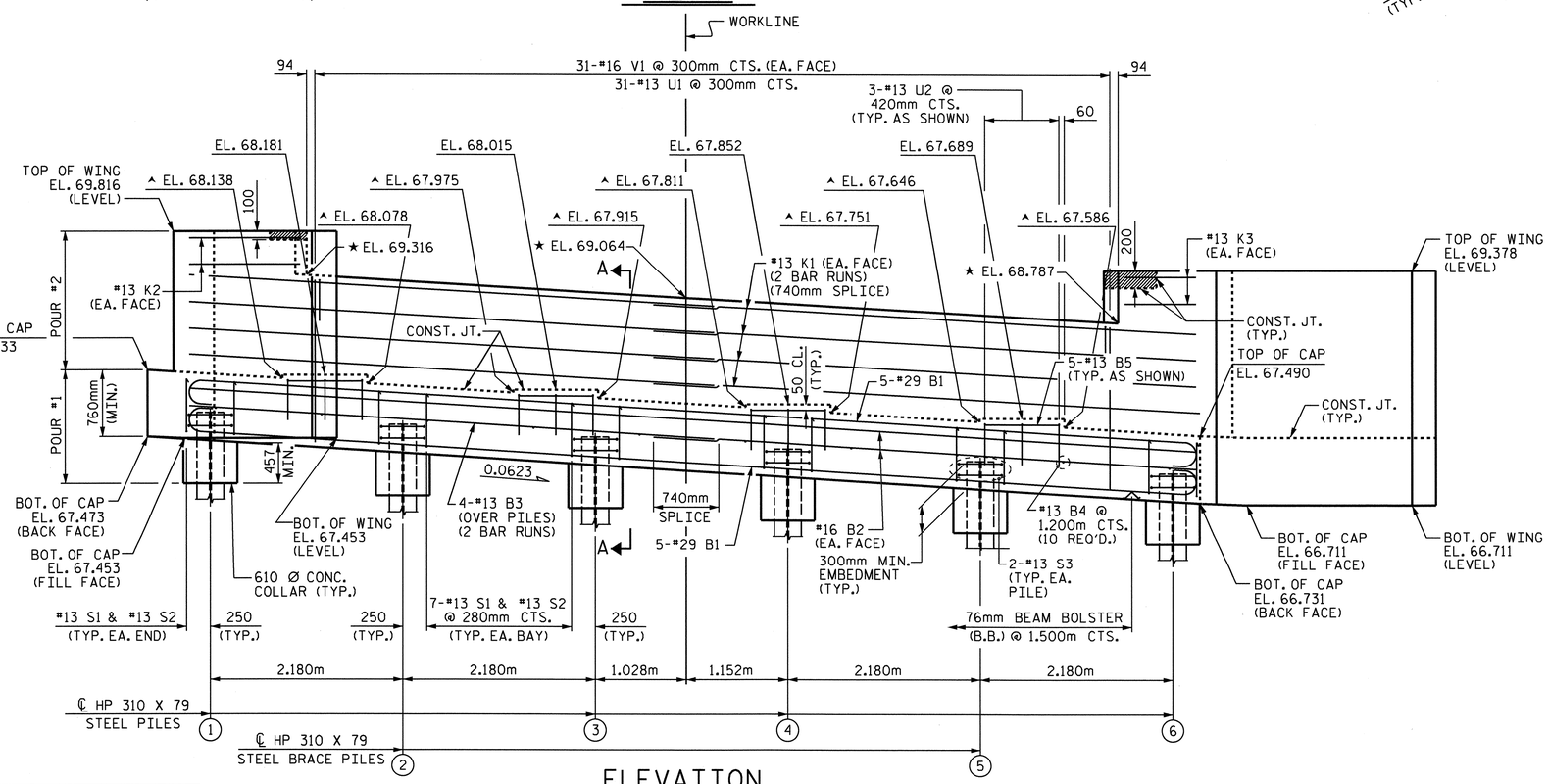

ELEVATION

(FOR CLARITY, BRACE PILE CAPS AT WINGS NOT SHOWN)

NOTES:

STIRRUPS AND U2 BARS IN CAP MAY BE SHIFTED AS NECESSARY TO CLEAR ANCHOR BOLTS.

THE #16 V1 BARS SHALL BE PLACED 50mm CLEAR FROM THE TOP OF THE BACKWALL.

BACKWALL SHALL BE PLACED BEFORE APPLYING THE EPOXY PROTECTIVE COATING.

THE TOP SURFACE AREAS OF THE END BENT CAPS SHALL BE CURED IN ACCORDANCE WITH THE STANDARD SPECIFICATIONS EXCEPT THE MEMBRANE CURING COMPOUND METHOD SHALL NOT BE USED.

THE TOP SURFACE OF THE CAP EXCEPT THE BRIDGE SEAT BUILDUPS SHALL BE SLOPED TRANSVERSELY FROM THE FILL FACE TO THE BACK FACE AT THE RATE OF 2 %.

THE CONCRETE IN THE CROSS-HATCH AREA OF THE WING SHALL BE POURED AFTER THE JOINT BETWEEN THE DECK AND THE APPROACH SLAB HAS BEEN FORMED AND THE BARRIER RAIL HAS BEEN CAST IF SLIP FORMING IS USED.

THE CONTRACTOR SHALL PROVIDE FOR INSTALLATION OF THE 102mm DIAMETER DRAIN PIPE THROUGH THE WING WALL AS REQUIRED FOR REINFORCED BRIDGE APPROACH FILLS, SEE THE ROADWAY PLANS. REINFORCING STEEL IN THE WING WALL MAY BE SHIFTED AS NECESSARY TO CLEAR THE DRAIN PIPE.

▲ FOR LOCATION OF ELEVATIONS BETWEEN BUILDUPS, SEE SECTION A-A SHEET 3 OF 3.

★ THIS ELEVATION TAKEN ON THE FILL FACE OF THE BACKWALL.

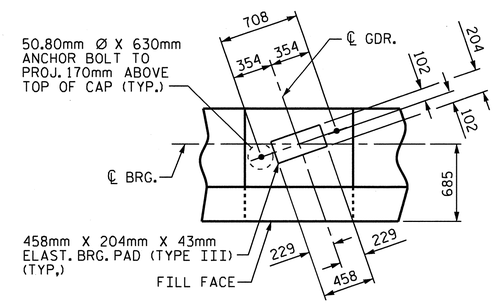

DETAIL "A"

(TYP. EA. GIRDER)

TOP OF PILE ELEVATION	
1	67.739
2	67.603
3	67.467
4	67.331
5	67.196
6	67.060

PROJECT NO. U-2519DA
CUMBERLAND COUNTY
STATION: 12+10.929-LP1B-

SHEET 1 OF 3

STATE OF NORTH CAROLINA
DEPARTMENT OF TRANSPORTATION
RALEIGH

SUBSTRUCTURE

END BENT 1

NORTH CAROLINA PROFESSIONAL SEAL 16301 ENGINEER TING-HSUNG FANG
3/22/11

REVISIONS								SHEET NO.
NO.	BY:	DATE:	NO.	BY:	DATE:			S-395
1			3					TOTAL SHEETS
2			4					411

DRAWN BY : A.S. CALLAWAY DATE : 6/23/08
CHECKED BY : P.C. BREWER DATE : 7/09/08

22-MAR-2011 13:46
K:\TIPProjects-U\U2519da\Structures\girolami\str16\scallaway\Microstation\u2519da_sd_e*_16.dgn
tfang

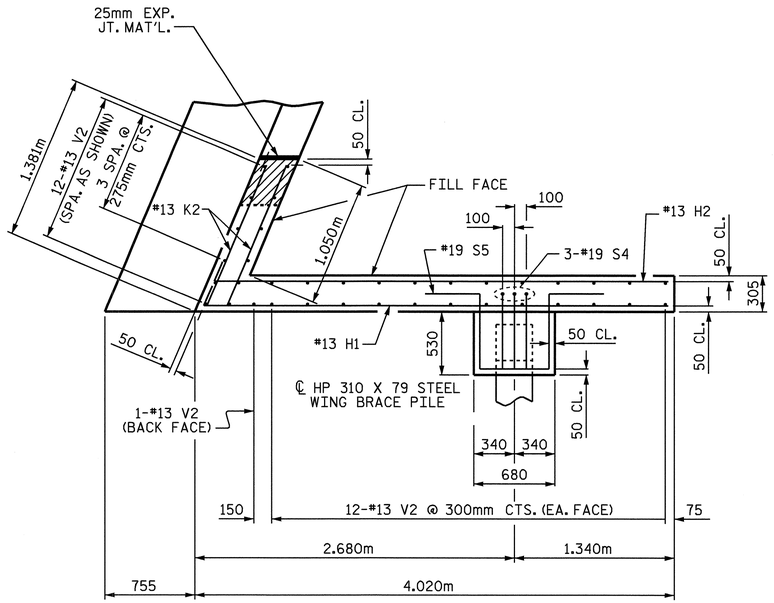

PLAN OF WING (W1)

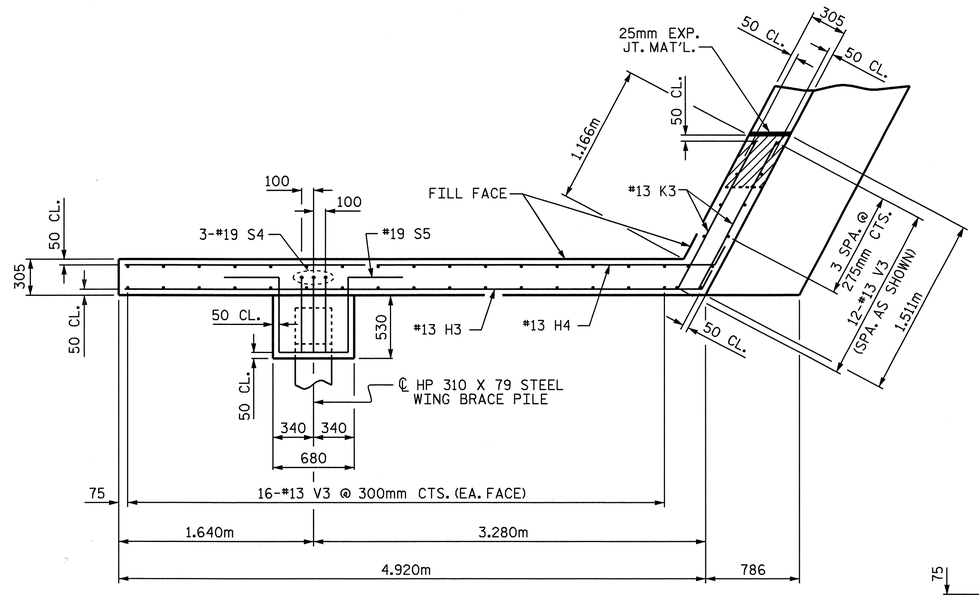

PLAN OF WING (W2)

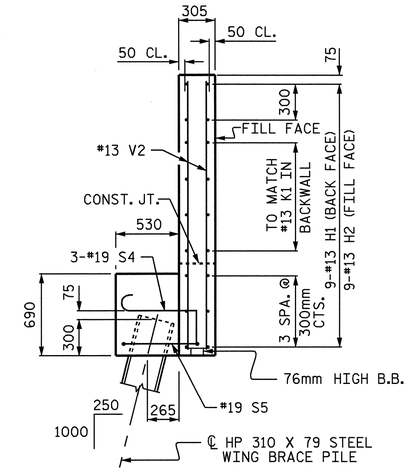

SECTION X-X

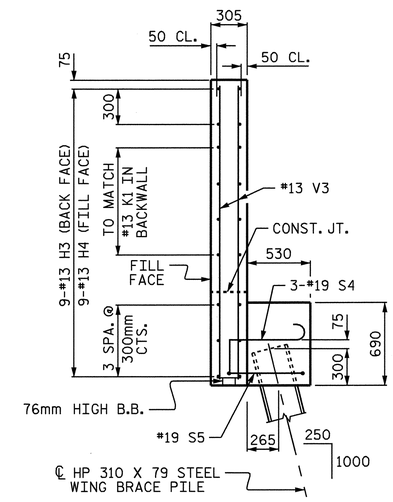

SECTION Y-Y

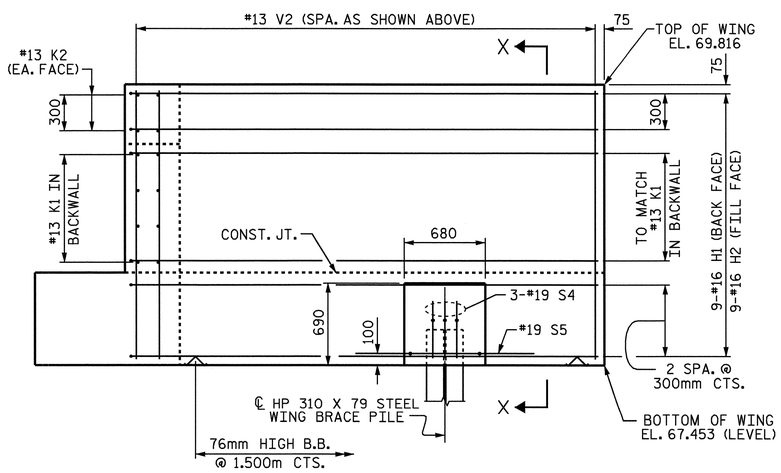

ELEVATION OF WING (W1)

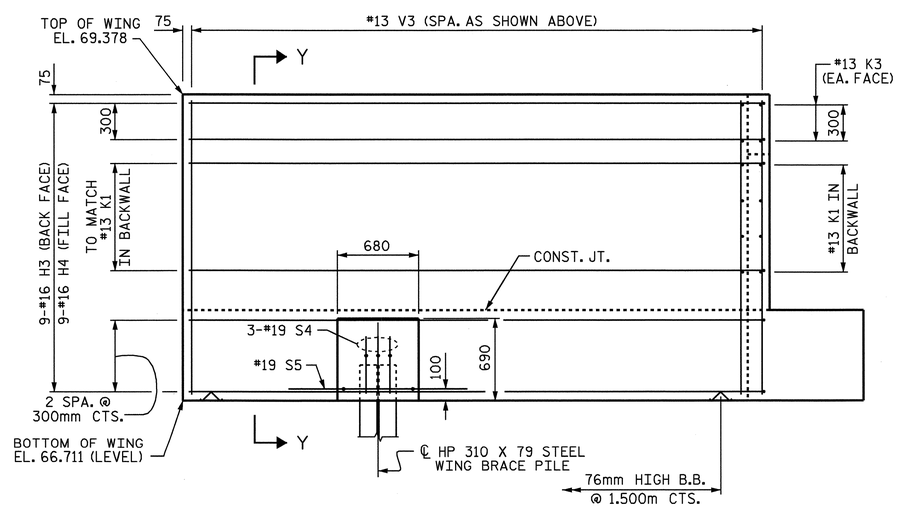

ELEVATION OF WING (W2)

PROJECT NO. U-2519DA
CUMBERLAND COUNTY
STATION: 12+10.929-LP1B-

SHEET 2 OF 3

STATE OF NORTH CAROLINA
DEPARTMENT OF TRANSPORTATION
RALEIGH

SUBSTRUCTURE

END BENT 1

NORTH CAROLINA PROFESSIONAL SEAL 21638 ENGINEER LAURA E. SUTTON 8/26/08

REVISIONS						SHEET NO.
NO.	BY:	DATE:	NO.	BY:	DATE:	5-396
1			3			TOTAL SHEETS
2			4			411

DRAWN BY : A.S. CALLAWAY DATE : 6/23/08
CHECKED BY : P.C. BREWER DATE : 7/09/08

25-AUG-2008 14:01
r:\structures\girolaml\str16\scallaway\Microstation\u2519da_sd_e*_16.dgn
LSUTTON

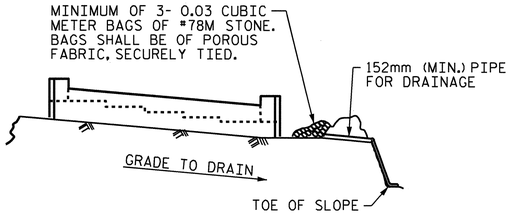

BAGGED STONE AND PIPE SHALL BE PLACED IMMEDIATELY AFTER COMPLETION OF END BENT EXCAVATION. PIPE MAY BE EITHER CONCRETE, CORRUGATED STEEL, CORRUGATED ALUMINUM ALLOY, OR CORRUGATED PLASTIC. PERFORATED PIPE WILL NOT BE ALLOWED.

BAGGED STONE SHALL REMAIN IN PLACE UNTIL THE ENGINEER DIRECTS THAT IT BE REMOVED. THE CONTRACTOR SHALL REMOVE AND DISPOSE OF SILT ACCUMULATIONS AT BAGGED STONE WHEN SO DIRECTED BY THE ENGINEER. BAGS SHALL BE REMOVED AND REPLACED WHENEVER THE ENGINEER DETERMINES THAT THEY HAVE DETERIORATED AND LOST THEIR EFFECTIVENESS.

NO SEPARATE PAYMENT WILL BE MADE FOR THIS WORK AND THE ENTIRE COST OF THIS WORK SHALL BE INCLUDED IN THE UNIT CONTRACT PRICE BID FOR THE SEVERAL PAY ITEMS.

TEMPORARY DRAINAGE AT END BENT

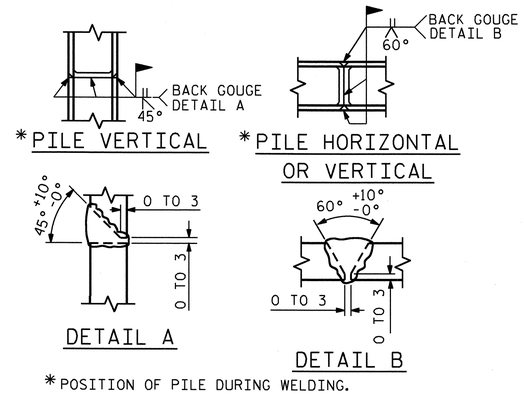

*POSITION OF PILE DURING WELDING.

PILE SPLICE DETAILS

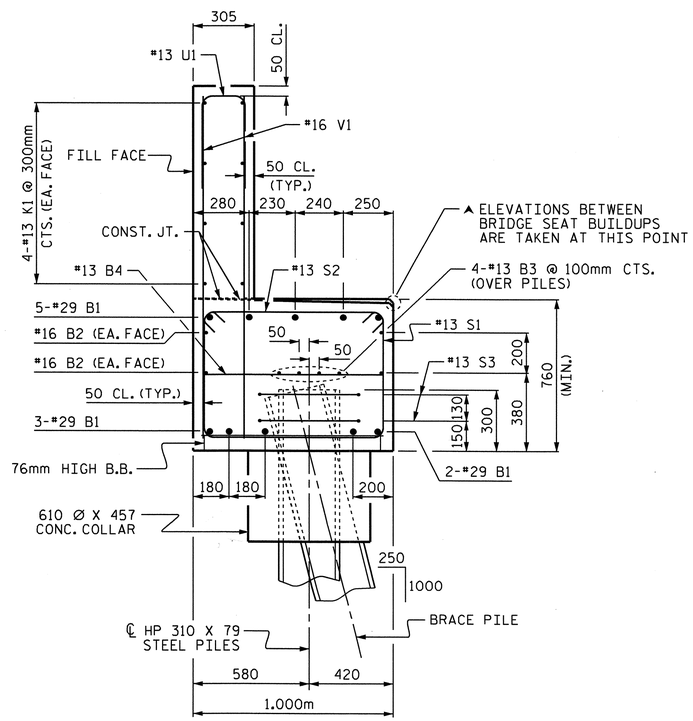

SECTION A-A

BAR TYPES

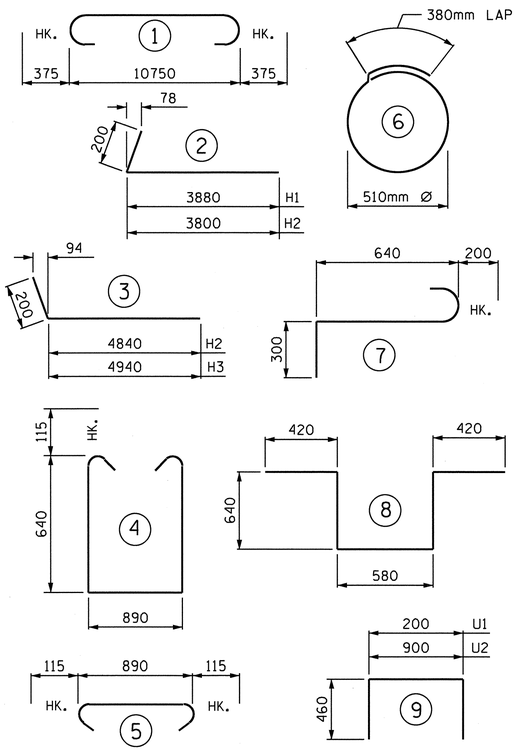

ALL BAR DIMENSIONS ARE OUT TO OUT.

BILL OF MATERIAL

END BENT 1

BAR	NO.	SIZE	TYPE	LENGTH	WEIGHT
B1	10	#29	1	12500	633
B2	4	#16	STR	11800	73
B3	8	#13	STR	6280	50
B4	10	#13	STR	900	9
B5	20	#13	STR	860	17
H1	9	#13	2	4080	36
H2	9	#13	2	4000	36
H3	9	#13	3	5040	45
H4	9	#13	3	5140	46
K1	16	#13	STR	6280	100
K2	4	#13	STR	1260	5
K3	4	#13	STR	1340	5
S1	37	#13	4	2400	88
S2	37	#13	5	1120	41
S3	12	#13	6	1980	24
S4	6	#19	7	1140	15
S5	2	#19	8	2700	12
U1	31	#13	9	1120	35
U2	12	#13	9	1820	22
V1	62	#16	STR	1800	173
V2	37	#13	STR	2220	82
V3	44	#13	STR	2540	111
REINFORCING STEEL				kg	1,658

CLASS A CONCRETE BREAKDOWN

POUR #1	CAP, LOWER WINGS & WING BRACE PILE CAP & COLLARS	m3	12.6
POUR #2	BACKWALL & UPPER WINGS	m3	9.3
TOTAL		m3	21.9

HP 310 x 79 STEEL PILES NO. 8	METERS	96

PROJECT NO. U2519DA

CUMBERLAND COUNTY

STATION: 12+10.929-LP1B-

SHEET 3 OF 3

STATE OF NORTH CAROLINA
DEPARTMENT OF TRANSPORTATION
RALEIGH

SUBSTRUCTURE

END BENT 1

NORTH CAROLINA PROFESSIONAL SEAL 16301 ENGINEER TING HSIUNG FANG

3/16/11

REVISIONS						SHEET NO.
NO.	BY:	DATE:	NO.	BY:	DATE:	S-397
1			3			TOTAL SHEETS
2			4			411

DRAWN BY : A.S. CALLAWAY DATE : 6/23/08
CHECKED BY : P.C. BREWER DATE : 7/09/08

16-MAR-2011 09:34
K:\TIPProjects-U\U2519da\Structures\girolami\str16\scallaway\Microstation\u2519da_sd_e*_16.dgn
ttfang

NOTES:

STIRRUPS AND U1 BARS IN CAP MAY BE SHIFTED AS NECESSARY TO CLEAR ANCHOR BOLTS.

HOOKS ON V1 BARS MAY BE TURNED AS NECESSARY FOR PLACING REINFORCING STEEL.

FOR PILE SPLICE DETAILS, SEE END BENT 1.

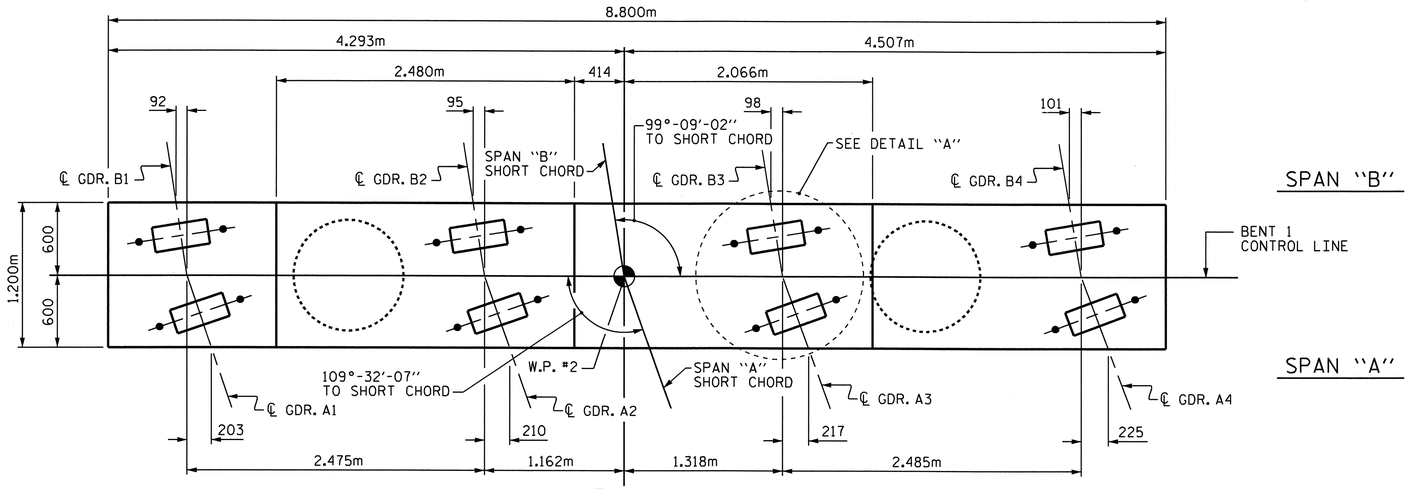

PLAN

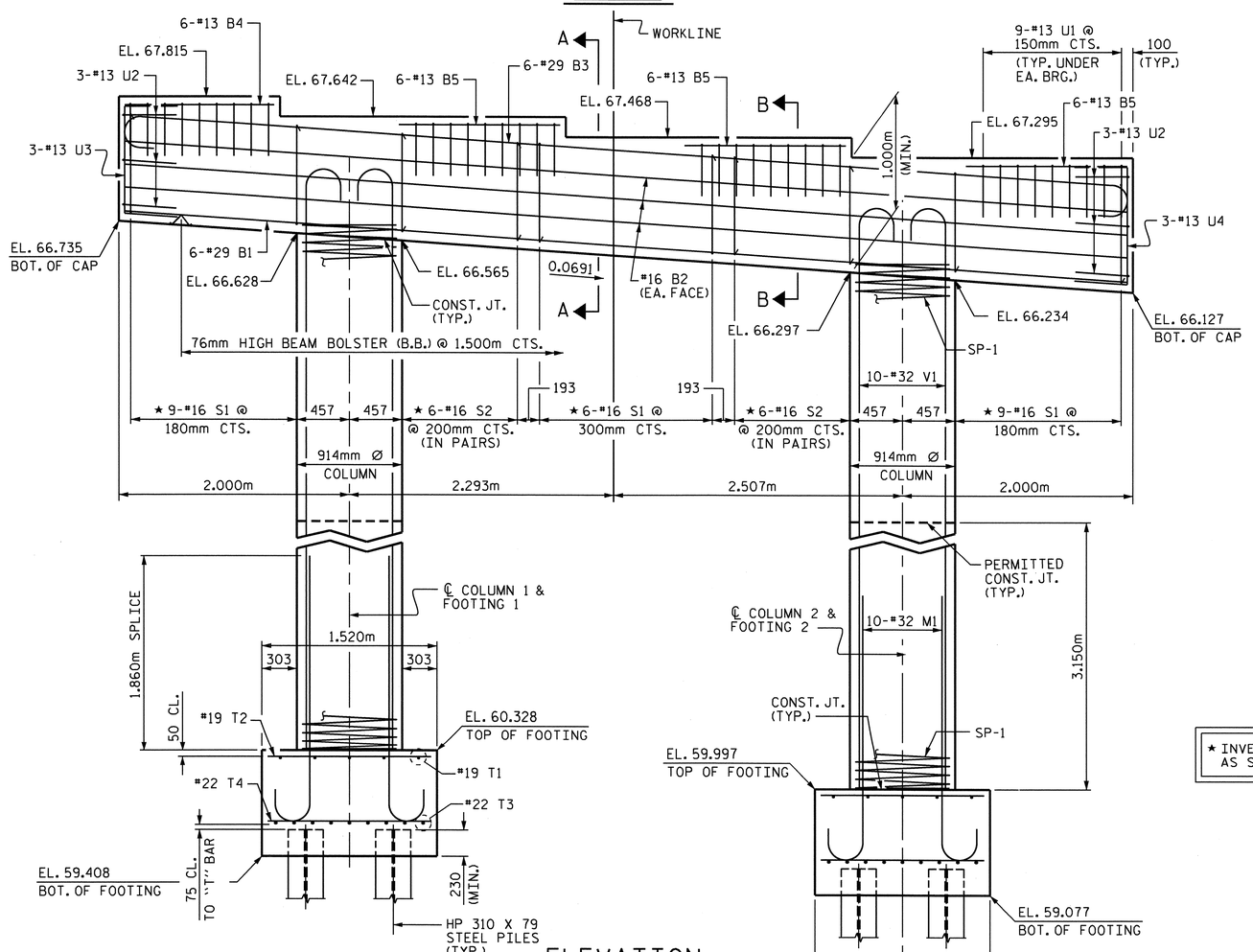

ELEVATION

DIMENSIONS & REINFORCING STEEL ARE TYPICAL FOR EACH COLUMN & FOOTING.

★ INVERT ALTERNATE STIRRUPS AS SHOWN.

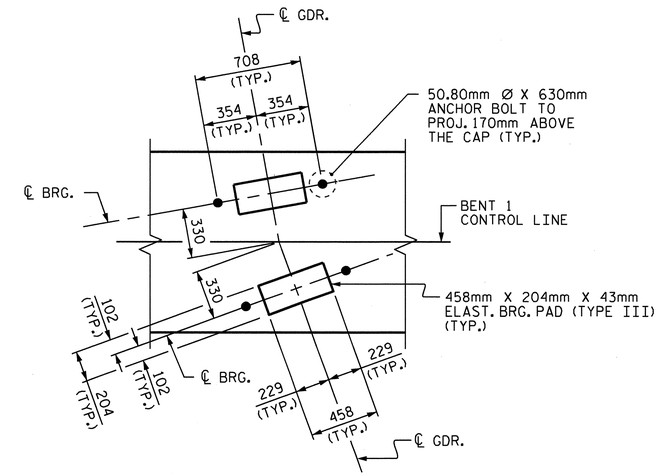

DETAIL "A"

(TYP. EA. GIRDER)

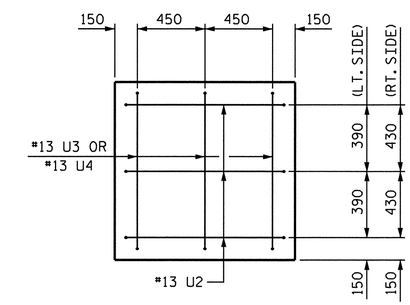

END VIEW

PROJECT NO. U-2519DA

CUMBERLAND COUNTY

STATION: 12+10.929-LP1B-

SHEET 1 OF 2

STATE OF NORTH CAROLINA
DEPARTMENT OF TRANSPORTATION
RALEIGH

SUBSTRUCTURE

BENT 1

NORTH CAROLINA PROFESSIONAL SEAL 16301 ENGINEER TING HSIUNG FANG

3/28/11

REVISIONS							SHEET NO.
NO.	BY:	DATE:	NO.	BY:	DATE:		5-378
1			3				TOTAL SHEETS
2			4				411

DRAWN BY : A.S. CALLAWAY DATE : 6/11/08
CHECKED BY : P.C. BREWER DATE : 6/23/08

28-MAR-2011 16:08
K:\TIPProjects-U\U2519da\Structures\girolami\str16\scallaway\Microstation\u2519da_sd_b*_16.dgn
kpnewton

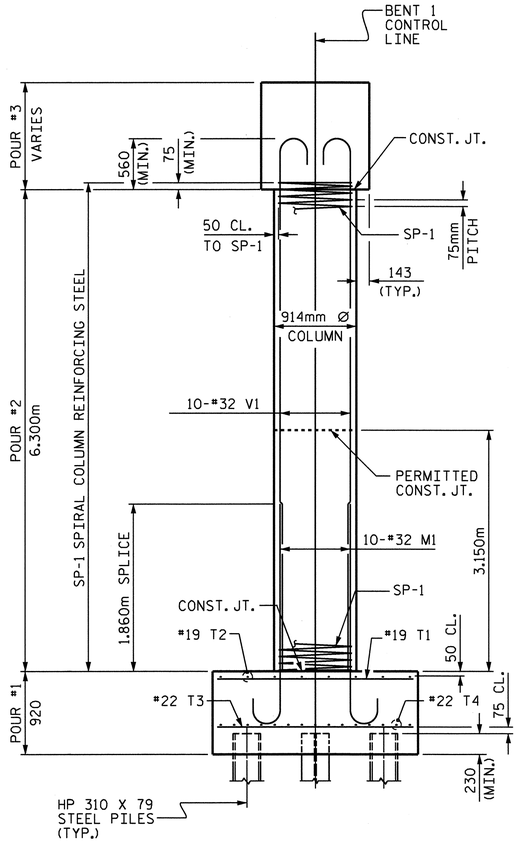

END ELEVATION

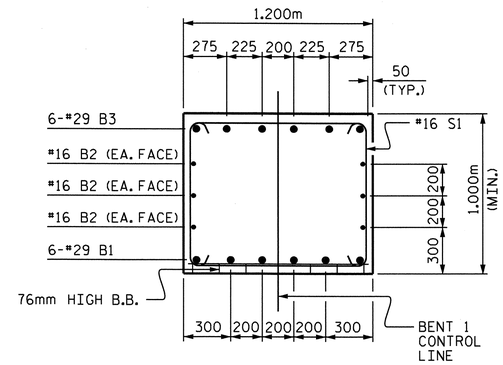

SECTION A-A

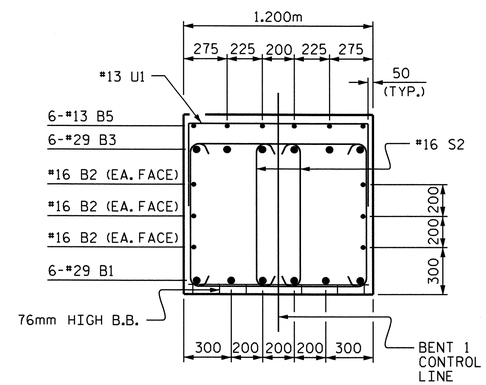

SECTION B-B

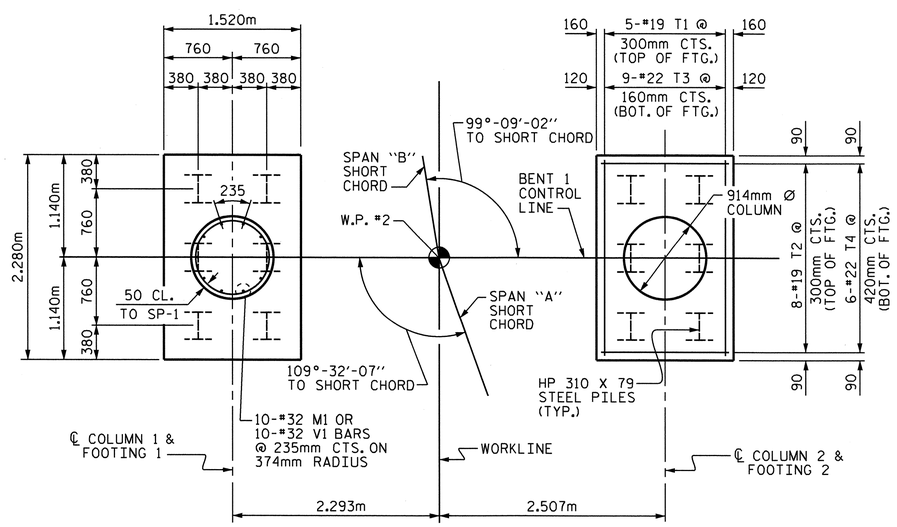

PLAN OF FOOTINGS & COLUMNS

DIMENSIONS AND REINFORCING STEEL ARE TYPICAL FOR EACH COLUMN & FOOTING.

BAR TYPES

ALL BAR DIMENSIONS ARE OUT TO OUT.

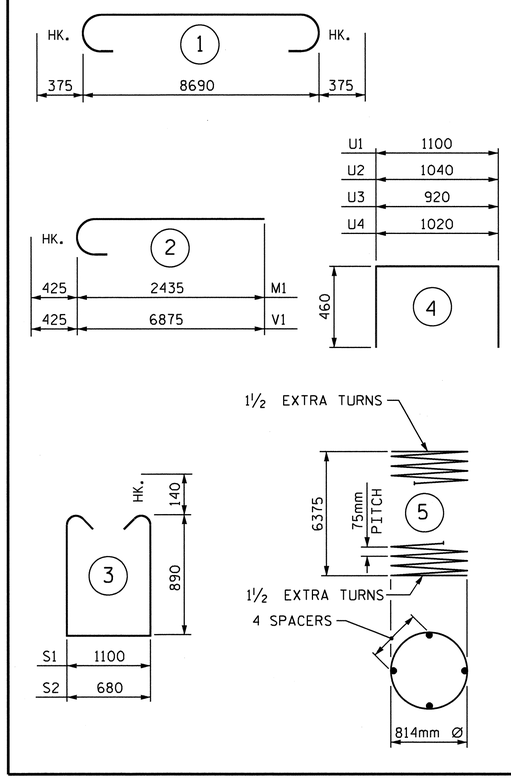

BILL OF MATERIAL

BENT 1

BAR	NO.	SIZE	TYPE	LENGTH	WEIGHT
B1	6	#29	STR	8700	264
B2	6	#16	STR	8700	81
B3	6	#29	1	9440	287
B4	6	#13	STR	1280	8
B5	18	#13	STR	1400	25
M1	20	#32	2	2860	366
S1	24	#16	3	3160	118
S2	24	#16	3	2740	102
T1	10	#19	STR	2180	49
T2	16	#19	STR	1420	51
T3	18	#22	STR	2180	119
T4	12	#22	STR	1420	52
U1	36	#13	4	2020	72
U2	6	#13	4	1960	12
U3	3	#13	4	1840	5
U4	3	#13	4	1940	6
V1	20	#32	2	7300	935
REINFORCING STEEL				kg	2,552
SP-1	2	✱✱	5	221400	441
SPIRAL COLUMN REINFORCING STEEL				kg	441

CLASS A CONCRETE BREAKDOWN

POUR #1 - FOOTINGS	m3	6.4
POUR #2 - COLUMNS	m3	8.2
POUR #3 - CAP	m3	11.5
TOTAL	m3.	26.1

HP 310 x 79 STEEL PILES
NO. 12 METERS 132

FOUNDATION EXCAVATION LUMP SUM

✱✱ THE SP-1 SPIRAL REINFORCING STEEL SHALL BE W20 OR D-20 COLD DRAWN WIRE OR #13 PLAIN OR DEFORMED BAR.

PROJECT NO. U-2519DA
CUMBERLAND COUNTY
STATION: 12+10.929-LP1B-

SHEET 2 OF 2

STATE OF NORTH CAROLINA
DEPARTMENT OF TRANSPORTATION
RALEIGH

SUBSTRUCTURE
BENT 1

NORTH CAROLINA PROFESSIONAL SEAL 16301 ENGINEER TING HSIUNG FANG
3/28/11

REVISIONS						SHEET NO.
NO.	BY:	DATE:	NO.	BY:	DATE:	S-399
1			3			TOTAL SHEETS
2			4			411

DRAWN BY : A.S. CALLAWAY DATE : 6/11/08
CHECKED BY : P.C. BREWER DATE : 6/23/08

28-MAR-2011 16:08
K:\TIPProjects-U\U2519da\Structures\girolami\str16\scallaway\Microstation\u2519da_sd_b*_16.dgn
kpnewton

NOTES:

STIRRUPS AND U1 BARS IN CAP MAY BE SHIFTED AS NECESSARY TO CLEAR ANCHOR BOLTS.

HOOKS ON V1 BARS MAY BE TURNED AS NECESSARY FOR PLACING REINFORCING STEEL.

FOR PILE SPLICE DETAILS, SEE END BENT 1.

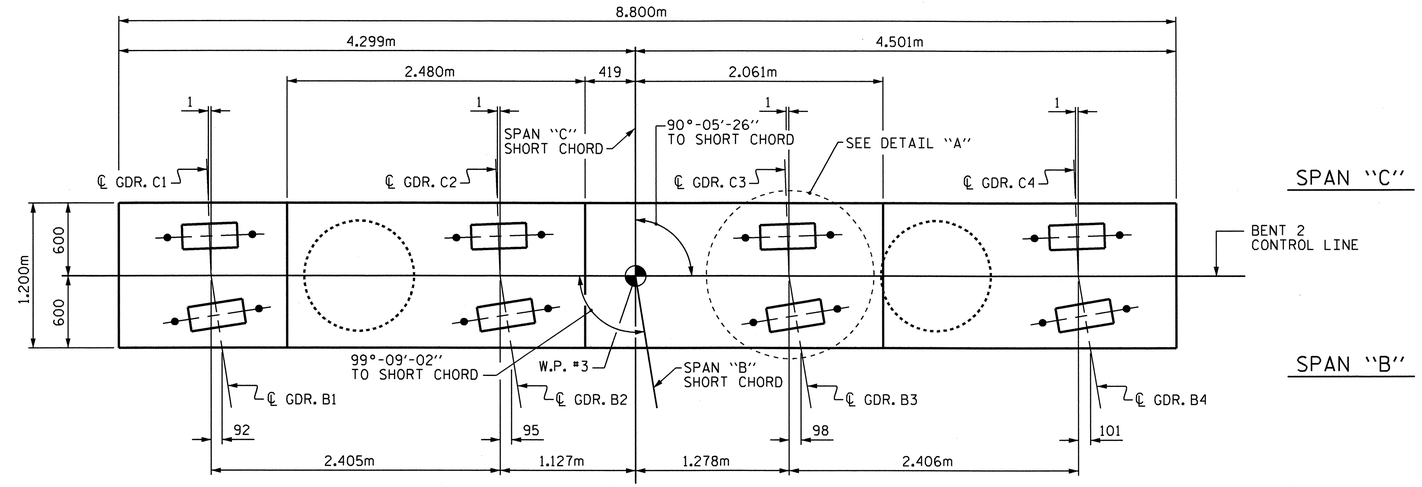

PLAN

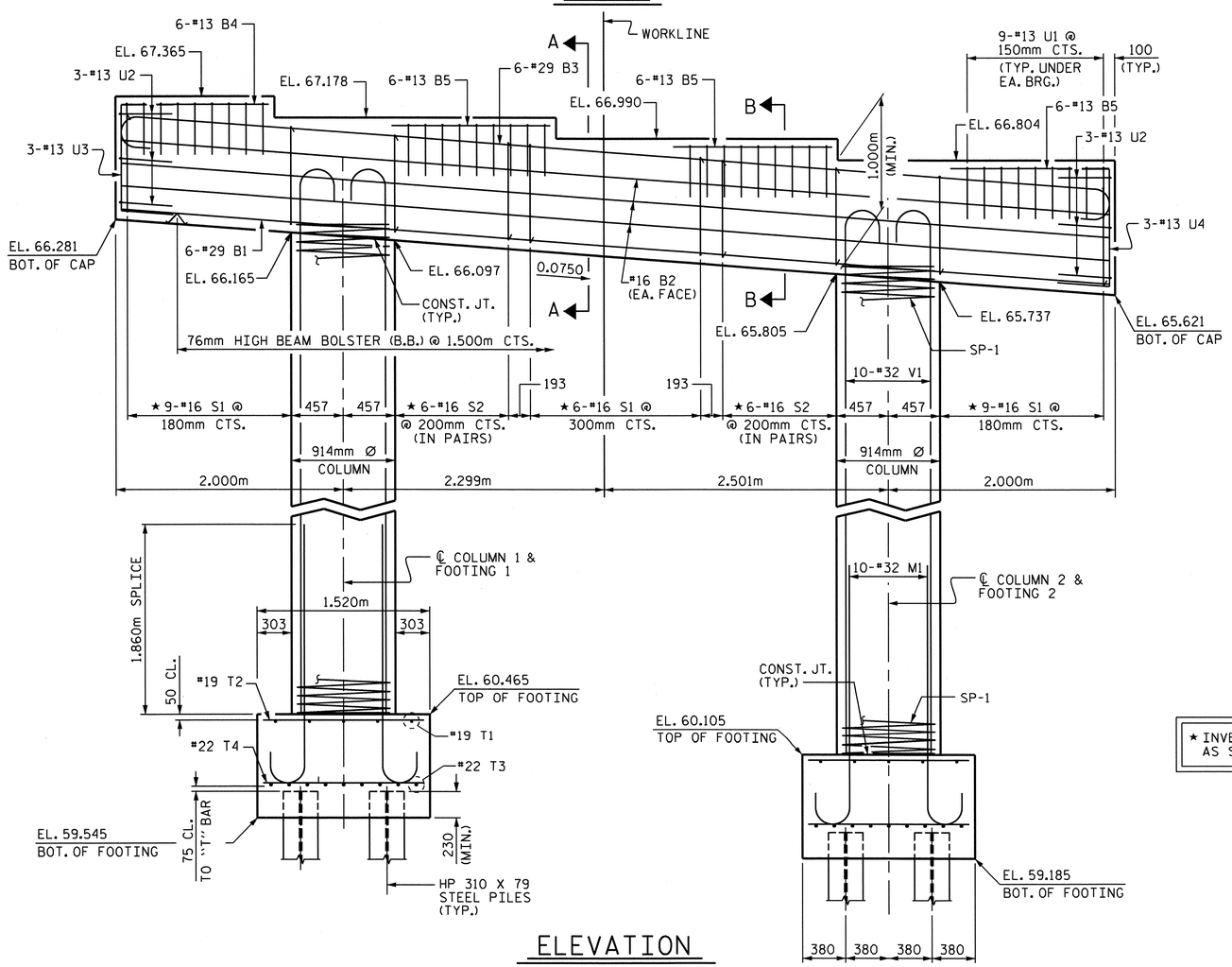

ELEVATION

DIMENSIONS & REINFORCING STEEL ARE TYPICAL FOR EACH COLUMN & FOOTING.

★ INVERT ALTERNATE STIRRUPS AS SHOWN.

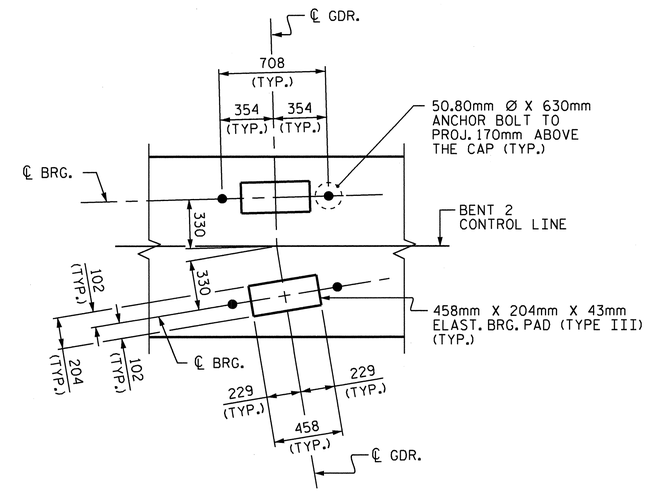

DETAIL "A"

(TYP. EA. GIRDER)

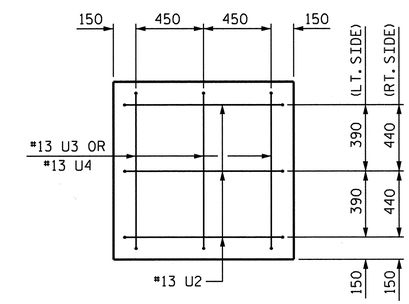

END VIEW

PROJECT NO. U-2519DA
CUMBERLAND COUNTY
STATION: 12+10.929-LP1B-

SHEET 1 OF 2

STATE OF NORTH CAROLINA
DEPARTMENT OF TRANSPORTATION
RALEIGH

SUBSTRUCTURE

BENT 2

NORTH CAROLINA PROFESSIONAL SEAL 16301 ENGINEER TING HSIUNG FANG
3/28/11

REVISIONS						SHEET NO.
NO.	BY:	DATE:	NO.	BY:	DATE:	S-400
1			3			TOTAL SHEETS
2			4			411

DRAWN BY : A.S. CALLAWAY DATE : 6/11/08
CHECKED BY : P.C. BREWER DATE : 6/24/08

28-MAR-2011 16:08
K:\TIPProjects-U\U2519da\Structures\girolami\str16\scallaway\Microstation\u2519da_sd_b*_16.dgn
kpnewton

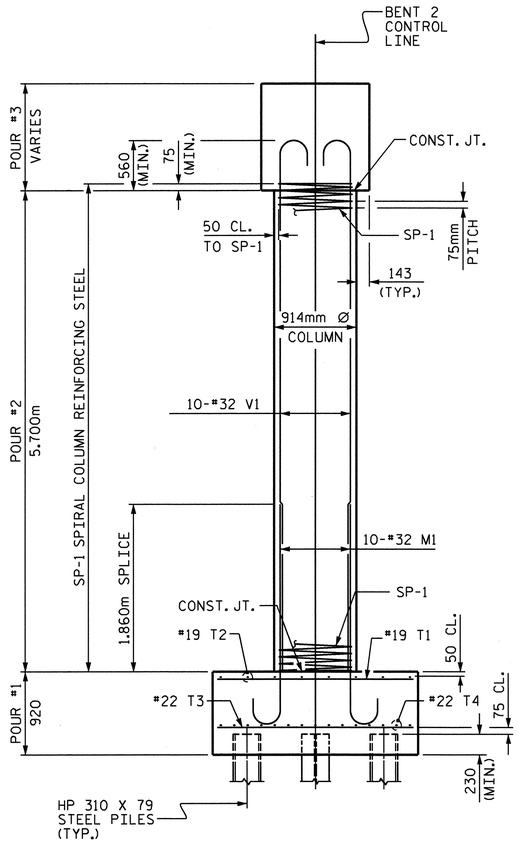

END ELEVATION

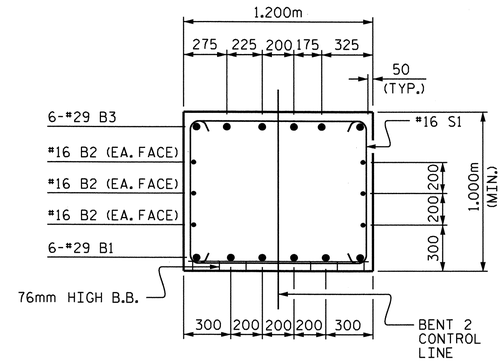

SECTION A-A

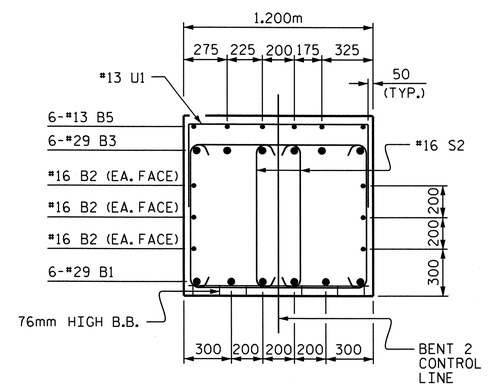

SECTION B-B

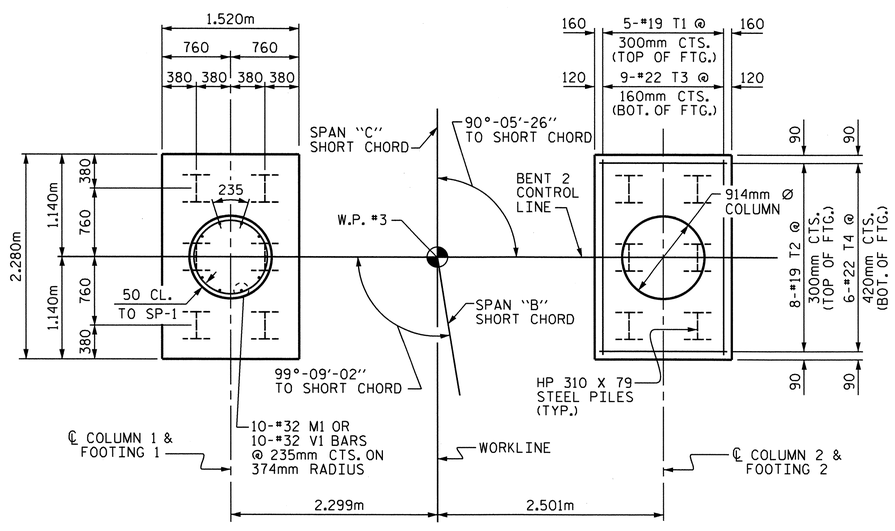

PLAN OF FOOTINGS & COLUMNS

DIMENSIONS AND REINFORCING STEEL ARE TYPICAL FOR EACH COLUMN & FOOTING.

BAR TYPES

ALL BAR DIMENSIONS ARE OUT TO OUT.

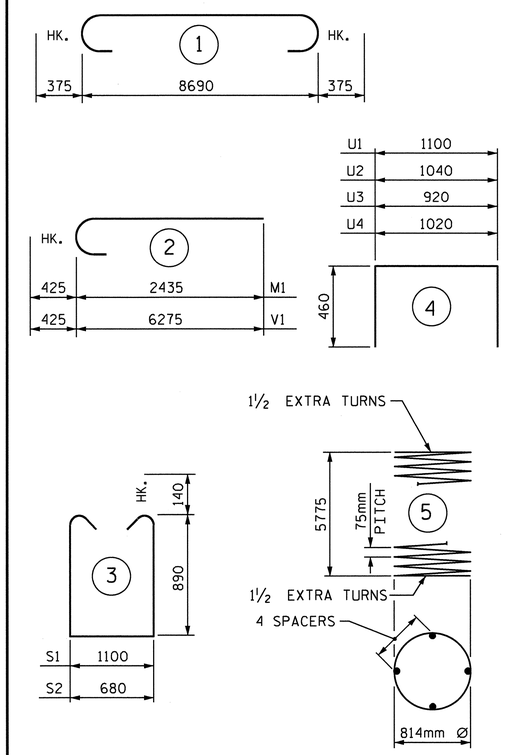

BILL OF MATERIAL

BENT 2

BAR	NO.	SIZE	TYPE	LENGTH	WEIGHT
B1	6	#29	STR	8700	264
B2	6	#16	STR	8700	81
B3	6	#29	1	9440	287
B4	6	#13	STR	1300	8
B5	18	#13	STR	1400	25
M1	20	#32	2	2860	366
S1	24	#16	3	3160	118
S2	24	#16	3	2740	102
T1	10	#19	STR	2180	49
T2	16	#19	STR	1420	51
T3	18	#22	STR	2180	119
T4	12	#22	STR	1420	52
U1	36	#13	4	2020	72
U2	6	#13	4	1960	12
U3	3	#13	4	1840	5
U4	3	#13	4	1940	6
V1	20	#32	2	6700	858
REINFORCING STEEL				kg	2,475
SP-1	2	✱✱	5	201480	401
SPIRAL COLUMN REINFORCING STEEL				kg	401

CLASS A CONCRETE BREAKDOWN

POUR #1 - FOOTINGS	m3	6.4
POUR #2 - COLUMNS	m3	7.4
POUR #3 - CAP	m3	11.6
TOTAL	m3	25.4

HP 310 x 79 STEEL PILES NO. 12	METERS	120
FOUNDATION EXCAVATION		LUMP SUM

✱✱ THE SP-1 SPIRAL REINFORCING STEEL SHALL BE W20 OR D-20 COLD DRAWN WIRE OR #13 PLAIN OR DEFORMED BAR.

PROJECT NO. U-2519DA
CUMBERLAND COUNTY
STATION: 12+10.929-LP1B-

SHEET 2 OF 2

STATE OF NORTH CAROLINA
DEPARTMENT OF TRANSPORTATION
RALEIGH

SUBSTRUCTURE
BENT 2

NORTH CAROLINA PROFESSIONAL SEAL 16301 ENGINEER KING HSIUNG FANG
3/28/11

REVISIONS						SHEET NO.
NO.	BY:	DATE:	NO.	BY:	DATE:	S-401
1			3			TOTAL SHEETS
2			4			411

DRAWN BY : A.S. CALLAWAY DATE : 6/11/08
CHECKED BY : P.C. BREWER DATE : 6/24/08

28-MAR-2011 16:09
K:\TIPProjects-U\U2519da\Structures\girolami\str16\scallaway\Microstation\u2519da_sd_b*_16.dgn
kpnewton

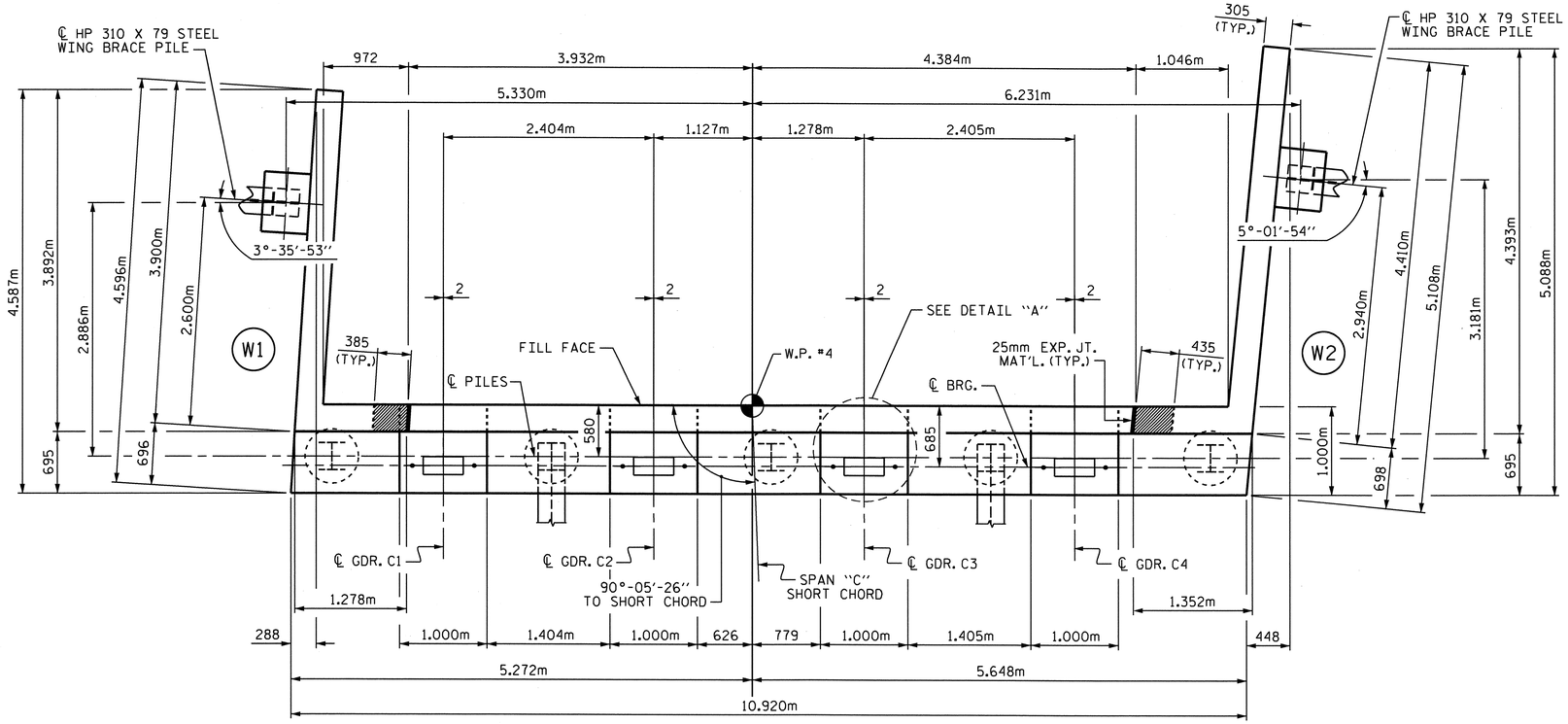

PLAN

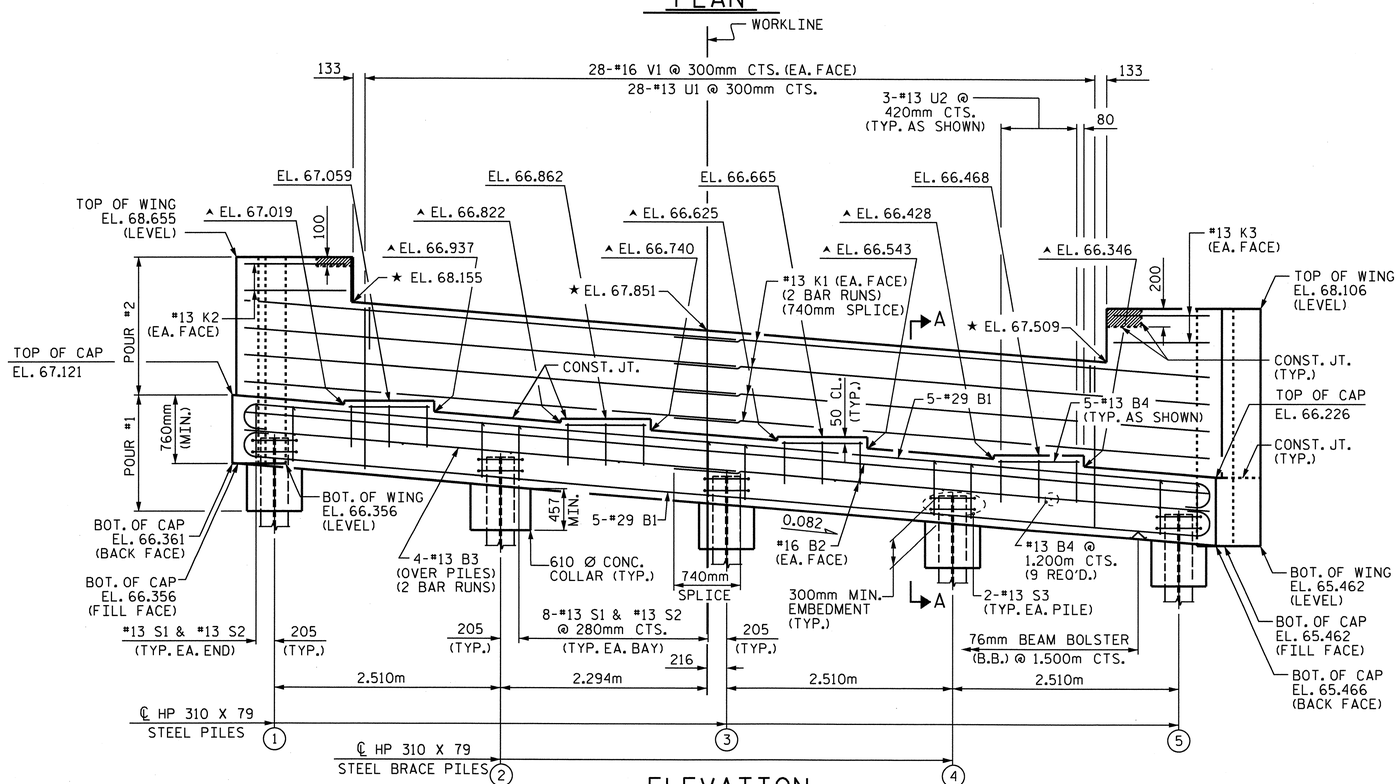

ELEVATION

(FOR CLARITY, BRACE PILE CAPS AT WINGS NOT SHOWN)

NOTES:

STIRRUPS AND U2 BARS IN CAP MAY BE SHIFTED AS NECESSARY TO CLEAR ANCHOR BOLTS.

THE #16 V1 BARS SHALL BE PLACED 50mm CLEAR FROM THE TOP OF THE BACKWALL.

BACKWALL SHALL BE PLACED BEFORE APPLYING THE EPOXY PROTECTIVE COATING.

THE TOP SURFACE AREAS OF THE END BENT CAPS SHALL BE CURED IN ACCORDANCE WITH THE STANDARD SPECIFICATIONS EXCEPT THE MEMBRANE CURING COMPOUND METHOD SHALL NOT BE USED.

THE TOP SURFACE OF THE CAP EXCEPT THE BRIDGE SEAT BUILDUPS SHALL BE SLOPED TRANSVERSELY FROM THE FILL FACE TO THE BACK FACE AT THE RATE OF 2 %.

THE CONCRETE IN THE CROSS-HATCH AREA OF THE WING SHALL BE POURED AFTER THE JOINT BETWEEN THE DECK AND THE APPROACH SLAB HAS BEEN FORMED AND THE BARRIER RAIL HAS BEEN CAST IF SLIP FORMING IS USED.

THE CONTRACTOR SHALL PROVIDE FOR INSTALLATION OF THE 102mm DIAMETER DRAIN PIPE THROUGH THE WING WALL AS REQUIRED FOR REINFORCED BRIDGE APPROACH FILLS, SEE THE ROADWAY PLANS. REINFORCING STEEL IN THE WING WALL MAY BE SHIFTED AS NECESSARY TO CLEAR THE DRAIN PIPE.

▲ FOR LOCATION OF ELEVATIONS BETWEEN BUILDUPS, SEE SECTION A-A SHEET 3 OF 3.

★ THIS ELEVATION TAKEN ON THE FILL FACE OF THE BACKWALL.

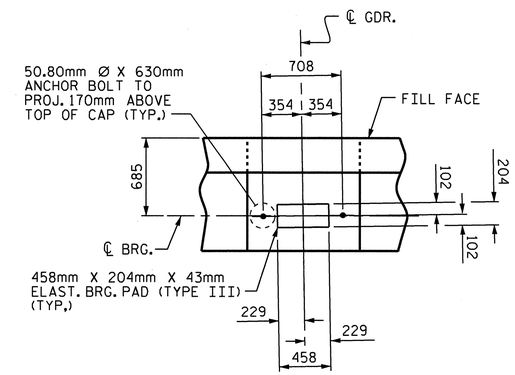

DETAIL "A"

(TYP. EA. GIRDER)

TOP OF PILE ELEVATION	
1	66.636
2	66.430
3	66.224
4	66.019
5	65.813

PROJECT NO. U-2519DA

CUMBERLAND COUNTY

STATION: 12+10.929-LP1B-

SHEET 1 OF 3

STATE OF NORTH CAROLINA
DEPARTMENT OF TRANSPORTATION
RALEIGH

SUBSTRUCTURE

END BENT 2

NORTH CAROLINA PROFESSIONAL SEAL 16301 ENGINEER TING HSIUNG FANG

3/22/11

REVISIONS								SHEET NO.
NO.	BY:	DATE:	NO.	BY:	DATE:			S-402
1			3					TOTAL SHEETS
2			4					411

DRAWN BY : A.S. CALLAWAY DATE : 6/30/08
CHECKED BY : P.C. BREWER DATE : 7/10/08

22-MAR-2011 13:46
K:\TIPProjects-U\U2519da\Structures\girolami\str16\scallaway\Microstation\u2519da_sd_e*_16.dgn
tfang

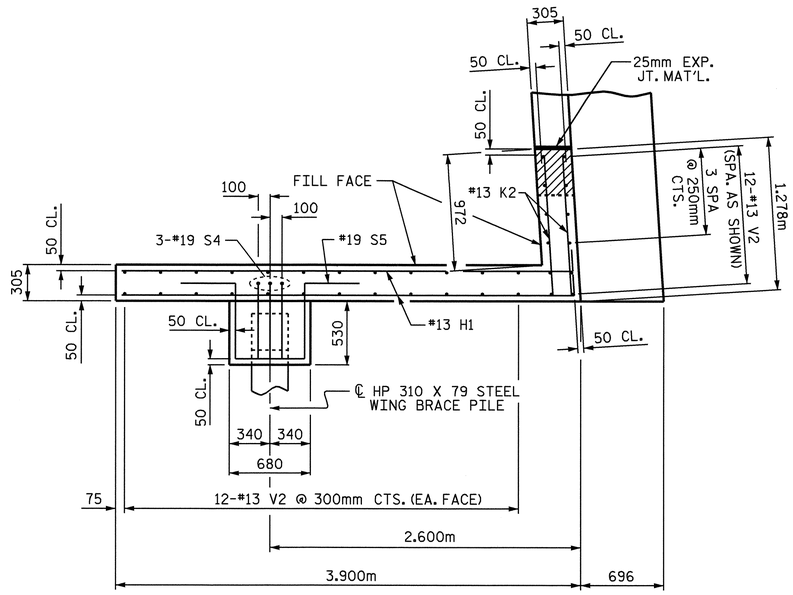

PLAN OF WING (W1)

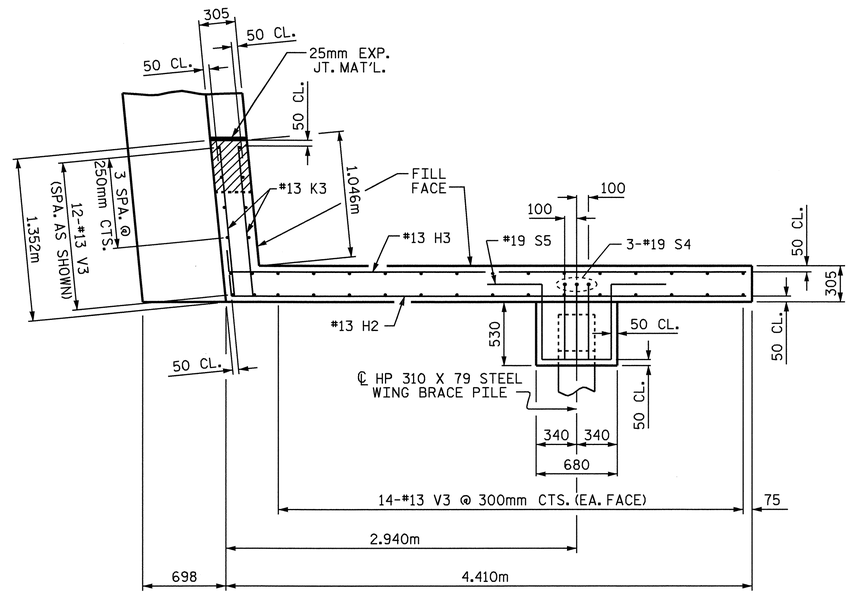

PLAN OF WING (W2)

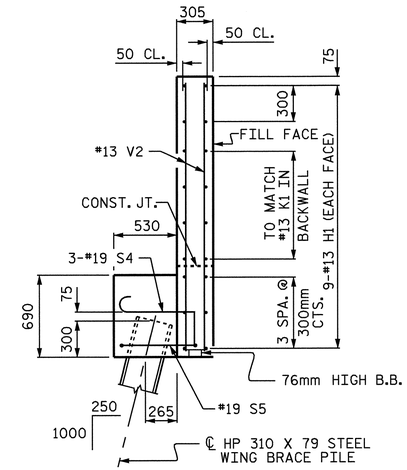

SECTION X-X

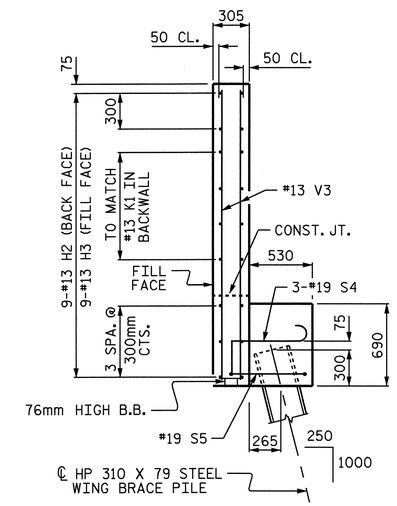

SECTION Y-Y

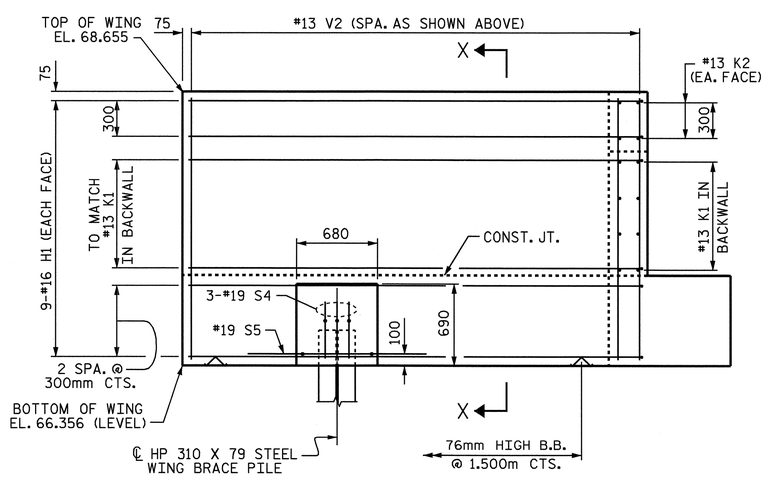

ELEVATION OF WING (W1)

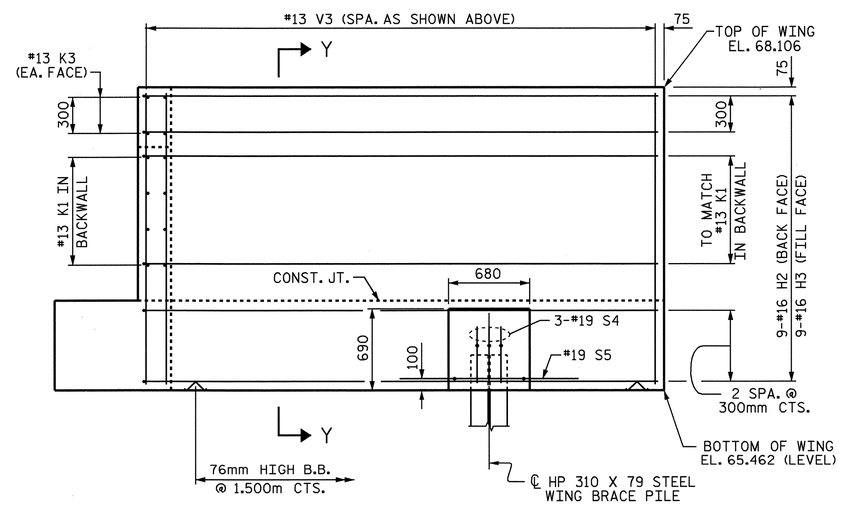

ELEVATION OF WING (W2)

PROJECT NO. U-2519DA
CUMBERLAND COUNTY
STATION: 12+10.929-LP1B-

SHEET 2 OF 3

STATE OF NORTH CAROLINA
DEPARTMENT OF TRANSPORTATION
RALEIGH

SUBSTRUCTURE

END BENT 2

NORTH CAROLINA PROFESSIONAL SEAL 21638 ENGINEER LAURA E. SUTTON 8/20/08

REVISIONS						SHEET NO.
NO.	BY:	DATE:	NO.	BY:	DATE:	S-403
1			3			TOTAL SHEETS
2			4			411

DRAWN BY : A.S. CALLAWAY DATE : 6/30/08
CHECKED BY : P.C. BREWER DATE : 7/10/08

25-AUG-2008 14:00
r:\structures\girolami\str16\scallaway\Microstation\u2519da_sd_e*_16.dgn
LSUTTON

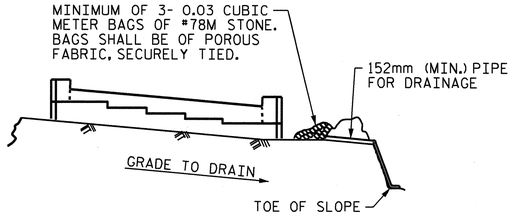

BAGGED STONE AND PIPE SHALL BE PLACED IMMEDIATELY AFTER COMPLETION OF END BENT EXCAVATION. PIPE MAY BE EITHER CONCRETE, CORRUGATED STEEL, CORRUGATED ALUMINUM ALLOY, OR CORRUGATED PLASTIC. PERFORATED PIPE WILL NOT BE ALLOWED.

BAGGED STONE SHALL REMAIN IN PLACE UNTIL THE ENGINEER DIRECTS THAT IT BE REMOVED. THE CONTRACTOR SHALL REMOVE AND DISPOSE OF SILT ACCUMULATIONS AT BAGGED STONE WHEN SO DIRECTED BY THE ENGINEER. BAGS SHALL BE REMOVED AND REPLACED WHENEVER THE ENGINEER DETERMINES THAT THEY HAVE DETERIORATED AND LOST THEIR EFFECTIVENESS.

NO SEPARATE PAYMENT WILL BE MADE FOR THIS WORK AND THE ENTIRE COST OF THIS WORK SHALL BE INCLUDED IN THE UNIT CONTRACT PRICE BID FOR THE SEVERAL PAY ITEMS.

TEMPORARY DRAINAGE AT END BENT

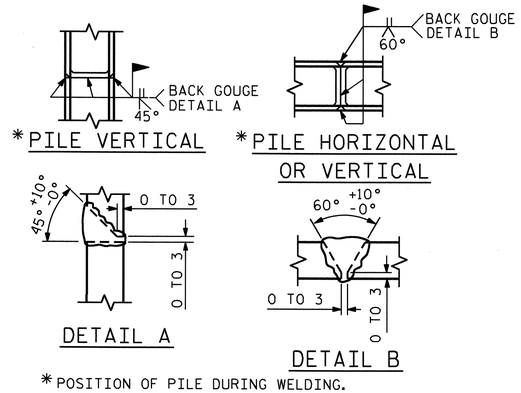

*POSITION OF PILE DURING WELDING.

PILE SPLICE DETAILS

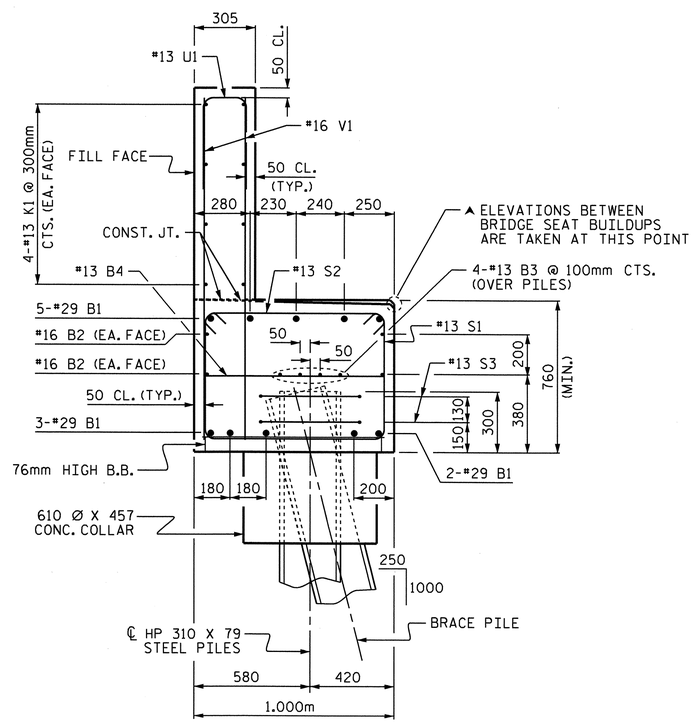

SECTION A-A

BAR TYPES

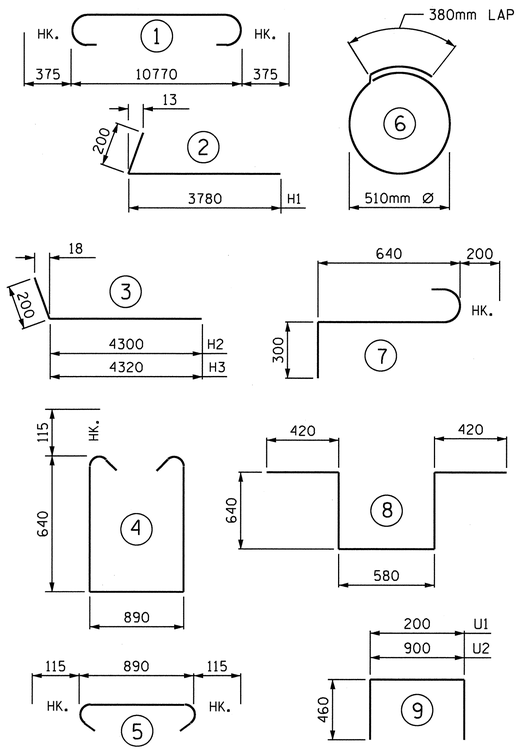

ALL BAR DIMENSIONS ARE OUT TO OUT.

BILL OF MATERIAL

END BENT 2

BAR	NO.	SIZE	TYPE	LENGTH	WEIGHT
B1	10	#29	1	11520	583
B2	4	#16	STR	10820	67
B3	8	#13	STR	5780	46
B4	29	#13	STR	900	26
H1	18	#13	2	3980	71
H2	9	#13	3	4500	40
H3	9	#13	3	4520	40
K1	16	#13	STR	5780	92
K2	4	#13	STR	1160	5
K3	4	#13	STR	1200	5
S1	34	#13	4	2400	81
S2	34	#13	5	1120	38
S3	10	#13	6	1980	20
S4	6	#19	7	1140	15
S5	2	#19	8	2700	12
U1	28	#13	9	1120	31
U2	12	#13	9	1820	22
V1	56	#16	STR	1760	153
V2	36	#13	STR	2160	77
V3	40	#13	STR	2500	99
REINFORCING STEEL				kg	1,523

CLASS A CONCRETE BREAKDOWN

POUR #1	CAP, LOWER WINGS & WING BRACE PILE CAP & COLLARS	m3	11.6
POUR #2	BACKWALL & UPPER WINGS	m3	8.1
TOTAL		m3	19.7

HP 310 x 79 STEEL PILES NO. 7	METERS	84

PROJECT NO. U2519DA

CUMBERLAND COUNTY

STATION: 12+10.929-LP1B-

SHEET 3 OF 3

STATE OF NORTH CAROLINA
DEPARTMENT OF TRANSPORTATION
RALEIGH

SUBSTRUCTURE

END BENT 2

NORTH CAROLINA PROFESSIONAL SEAL 16301 ENGINEER TING HSIONG FANG

3/16/11

REVISIONS						SHEET NO.
NO.	BY:	DATE:	NO.	BY:	DATE:	S-404
1			3			TOTAL SHEETS
2			4			411

DRAWN BY : A.S. CALLAWAY DATE : 6/30/08
CHECKED BY : P.C. BREWER DATE : 7/10/08

16-MAR-2011 09:33
K:\TIPProjects-U\U2519da\Structures\girolami\str16\scallaway\Microstation\u2519da_sd_e*_16.dgn
ttfang

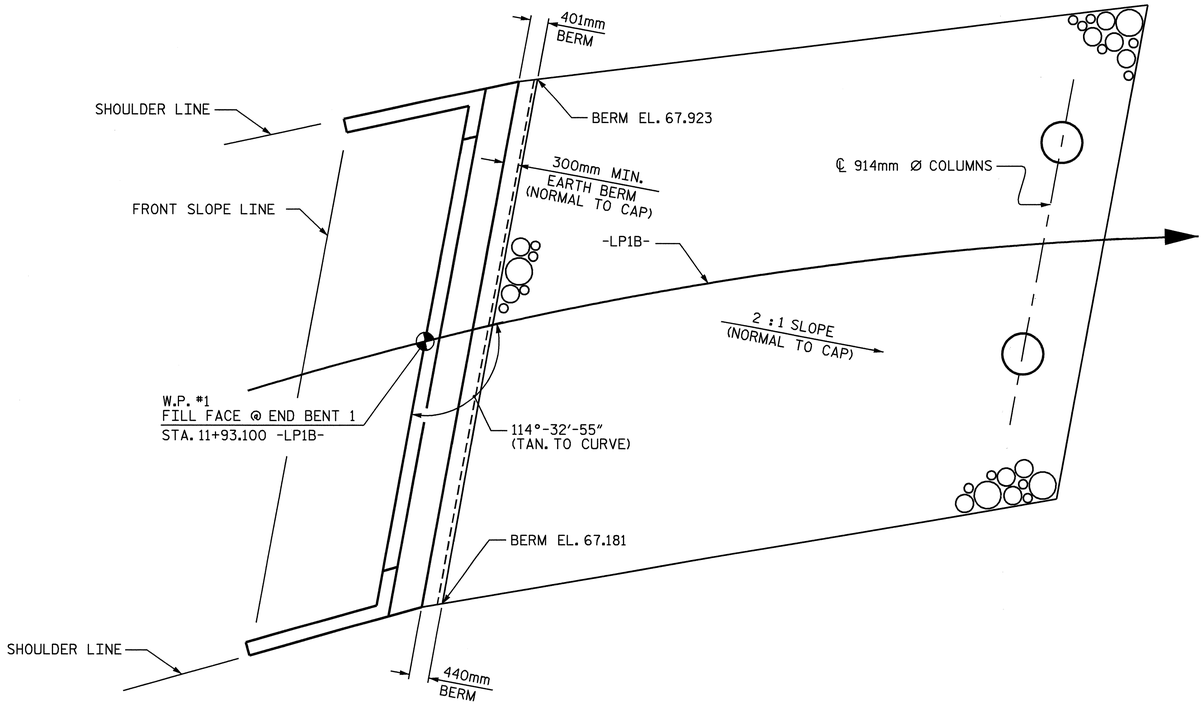

PLAN AT END BENT 1

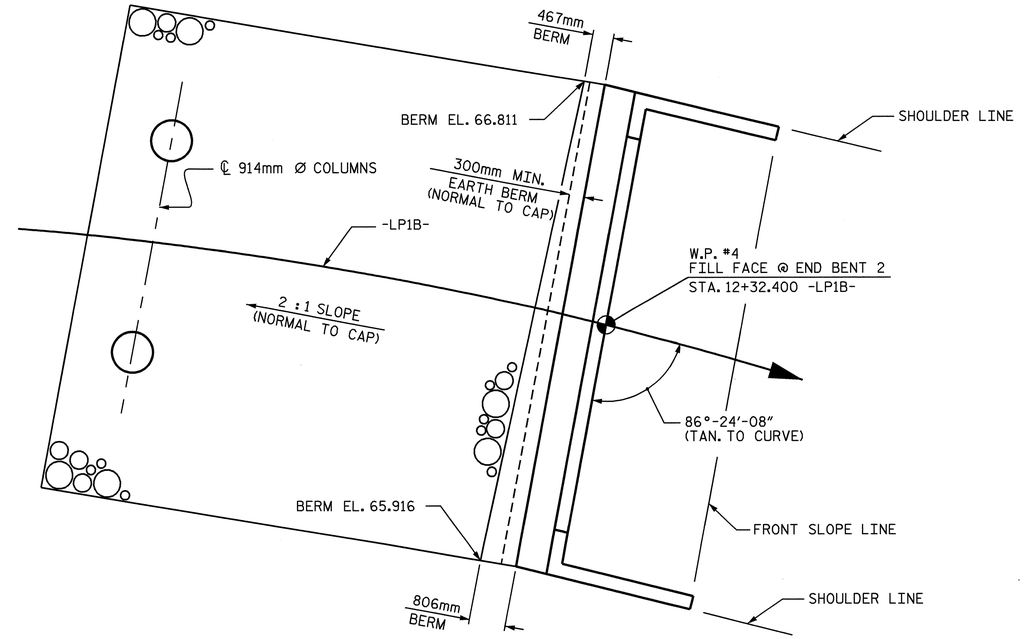

PLAN AT END BENT 2

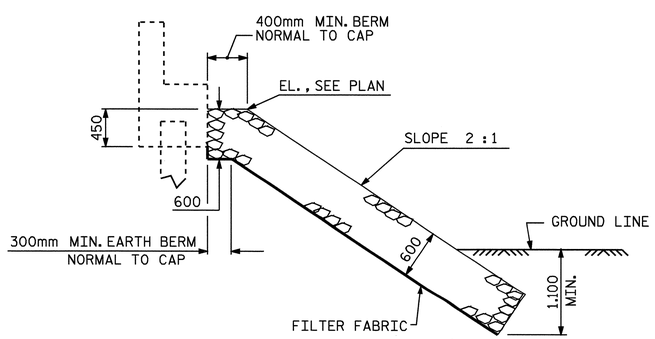

℄ SECTION
BERM RIP RAPPED

ESTIMATED QUANTITIES		
BRIDGE @ STA. 12+10.929 -LP1B-	RIP RAP CLASS II	FILTER FABRIC FOR DRAINAGE
	METRIC TON	SQUARE METERS
END BENT 1	212	217
END BENT 2	171	175

PROJECT NO. U-2519DA
CUMBERLAND COUNTY
STATION: 12+10.929-LP1B-

STATE OF NORTH CAROLINA
DEPARTMENT OF TRANSPORTATION
RALEIGH

RIP RAP DETAILS

NORTH CAROLINA PROFESSIONAL SEAL 21638 ENGINEER LAURA E. SUTTON
9/20/08

REVISIONS							SHEET NO.
NO.	BY:	DATE:	NO.	BY:	DATE:		S-405
1			3				TOTAL SHEETS
2			4				411

DRAWN BY : A.S. CALLAWAY DATE : 7/04/08
CHECKED BY : P.C. BREWER DATE : 7/15/08

06-AUG-2008 14:32
R:\Structures\girolami\str16\scallaway\Microstation\u2519da_sd_rr_16.dgn
LSUTTON

SEE PLAN OF APPROACH SLABS
ON SHEET 2 OF 3

NOTES:

APPROACH SLAB SHALL NOT BE CONSTRUCTED PRIOR TO COMPLETION OF THE BRIDGE DECK.

FOR REINFORCED BRIDGE APPROACH FILL INCLUDING FABRIC, IMPERMEABLE GEOMEMBRANE, 102mm Ø DRAINAGE PIPE, #78M STONE, AND SELECT MATERIAL, SEE ROADWAY PLANS.

AREA BETWEEN THE WINGWALL AND APPROACH SLAB SHALL BE GRADED TO DRAIN THE WATER AWAY FROM THE FILL FACE OF THE BRIDGE AND SHALL BE PAVED. SEE ROADWAY PLANS.

THE 150mm COMP. A.B.C. SHALL BE FLUSH WITH THE ROADWAY END OF THE APPROACH SLAB AND SHALL EXTEND 300mm OUTSIDE OF EACH EDGE OF THE APPROACH SLAB.

THE CONTRACTOR MAY USE 100mm TYPE B-25.0B ASPHALT CONCRETE COURSE IN LIEU OF 150mm COMP. A.B.C. IF THIS OPTION IS USED, THE BASE COURSE SHALL BE FLUSH WITH THE ROADWAY END OF THE APPROACH SLAB AND THE WIDTH SHALL BE THE SAME AS THAT OF THE APPROACH SLAB.

THE CONTRACTOR MAY USE 125mm CLASS "A" CONCRETE BASE IN LIEU OF 150mm COMP. A.B.C. IF THIS OPTION IS USED, THE CONCRETE BASE SHALL BE FLUSH WITH THE ROADWAY END OF THE APPROACH SLAB AND THE WIDTH SHALL BE THE SAME AS THAT OF THE APPROACH SLAB. THE CONCRETE SHALL BE FINISHED TO A SMOOTH SURFACE AND A LAYER OF 13.6 kg ROOFING FELT SHALL BE PLACED BETWEEN THE CONCRETE BASE AND THE APPROACH SLAB TO PREVENT BOND. THE APPROACH SLAB SHALL NOT BE CAST UNTIL THE CONCRETE BASE HAS REACHED AN AGE OF THREE CURING DAYS.

WITH EVAZOTE JOINT SEAL

FOR EVAZOTE JOINT SEALS, SEE SPECIAL PROVISIONS.

THE NOMINAL UNCOMPRESSED SEAL WIDTH OF THE EVAZOTE JOINT SEALS AT END BENTS 1 & 2 SHALL BE 64mm.

FOR ELASTOMERIC CONCRETE, SEE SPECIAL PROVISIONS.

BILL OF MATERIAL

APPROACH SLAB AT END BENT 1

BAR	NO.	SIZE	TYPE	LENGTH	WEIGHT
* A1	50	#13	STR	4880	243
A2	52	#13	STR	4840	250
* B1	110	#16	STR	4100	700
B2	110	#19	STR	4220	1037
* B5	1	#13	STR	7620	8
* D1	17	#13	STR	220	4
REINFORCING STEEL					1,287
* EPOXY COATED REINFORCING STEEL					955
CLASS AA CONCRETE					19.7

APPROACH SLAB AT END BENT 2

BAR	NO.	SIZE	TYPE	LENGTH	WEIGHT
* A3	25	#13	STR	8180	203
A4	26	#13	STR	8180	211
* B3	55	#16	STR	7320	625
B4	55	#19	STR	7520	924
* B6	1	#13	STR	7520	7
* D1	17	#13	STR	220	4
REINFORCING STEEL				kg	1,135
* EPOXY COATED REINFORCING STEEL				kg	839
CLASS AA CONCRETE				m3	19.7

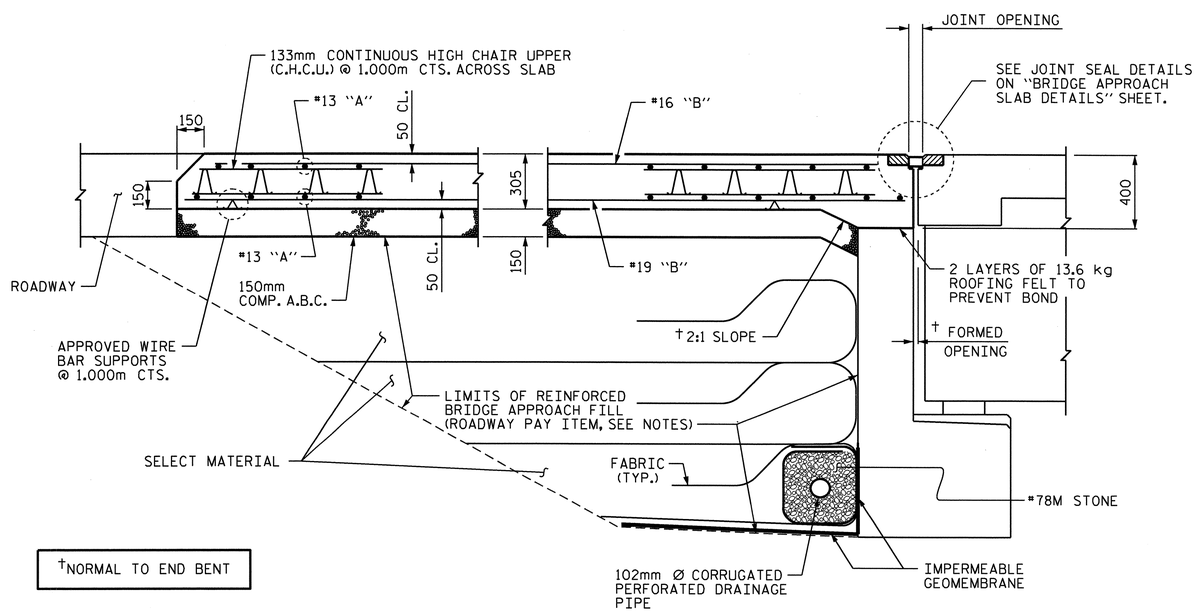

†NORMAL TO END BENT

SECTION THRU SLAB

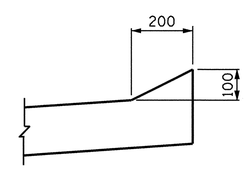

SECTION N-N

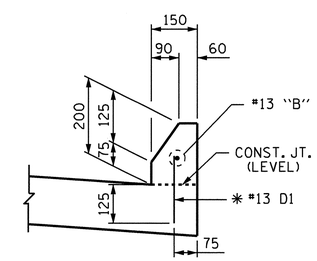

SECTION M-M

* DOWELS MAY BE PUSHED INTO GREEN CONCRETE AFTER THE SLAB HAS BEEN SCREEDED AND FLOAT FINISHED.

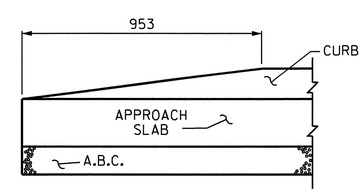

END OF CURB WITHOUT SHOULDER BERM GUTTER

CURB DETAILS

PROJECT NO. U-2519DA
CUMBERLAND COUNTY
STATION: 12+10.929-LP1B-

SHEET 1 OF 3

STATE OF NORTH CAROLINA
DEPARTMENT OF TRANSPORTATION
RALEIGH

STANDARD
BRIDGE APPROACH SLAB FOR FLEXIBLE PAVEMENT

NORTH CAROLINA PROFESSIONAL SEAL 16301 ENGINEER TING HSIUNG FANG
3/24/11

REVISIONS						SHEET NO.
NO.	BY:	DATE:	NO.	BY:	DATE:	S-406
1			3			TOTAL SHEETS
2			4			411

STD. NO. BAS4SM

ASSEMBLED BY : A.S. CALLAWAY	DATE : 6/06/08
CHECKED BY : P.C. BREWER	DATE : 6/11/08
DRAWN BY : FCJ 6/87	REV. 7/10/01 RWW/LES
CHECKED BY : EGA 6/87	REV. 5/7/03R RWW/JTE
	REV. 5/1/06R KMM/GM

24-MAR-2011 13:47
K:\TIPProjects-U\U2519da\Structures\girolami\str16\scallaway\Microstation\u2519da_sd_as_16.dgn
tfang

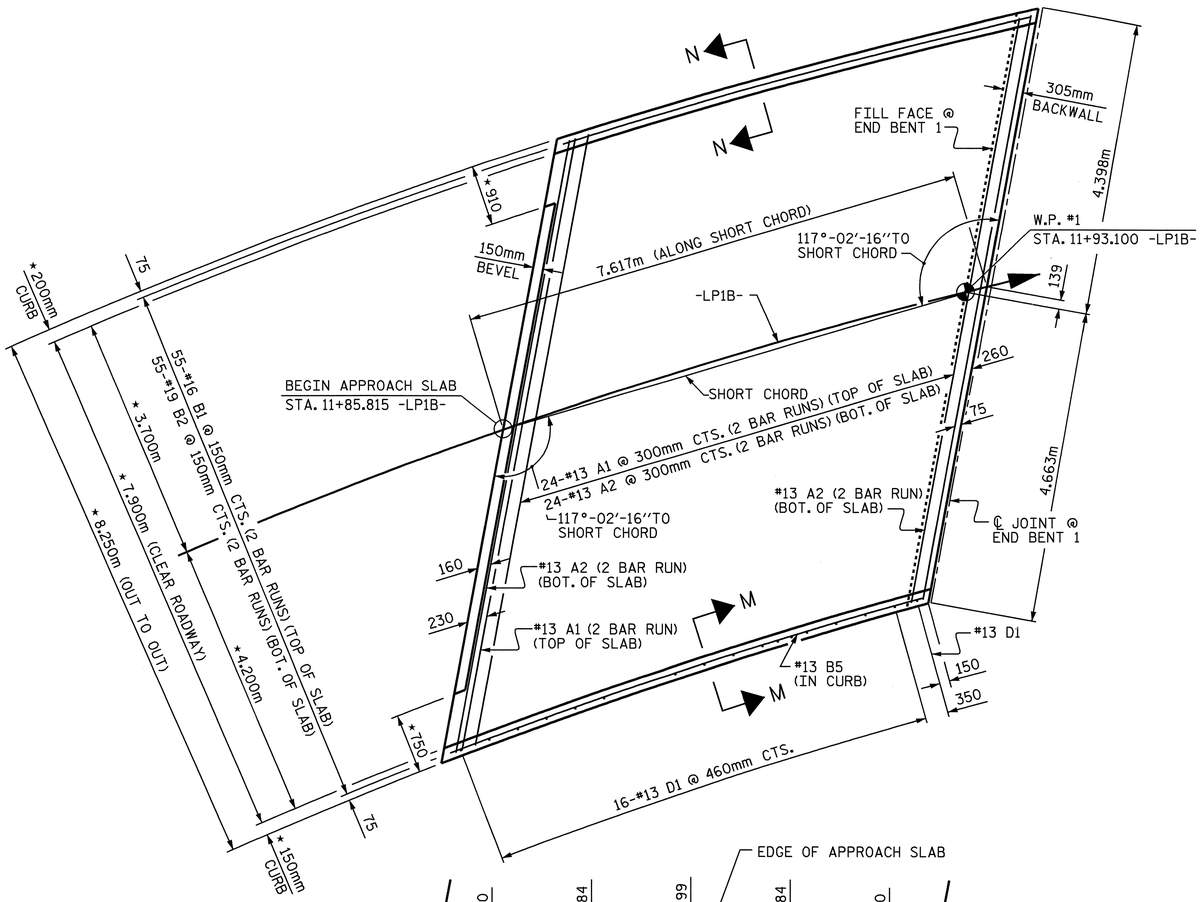

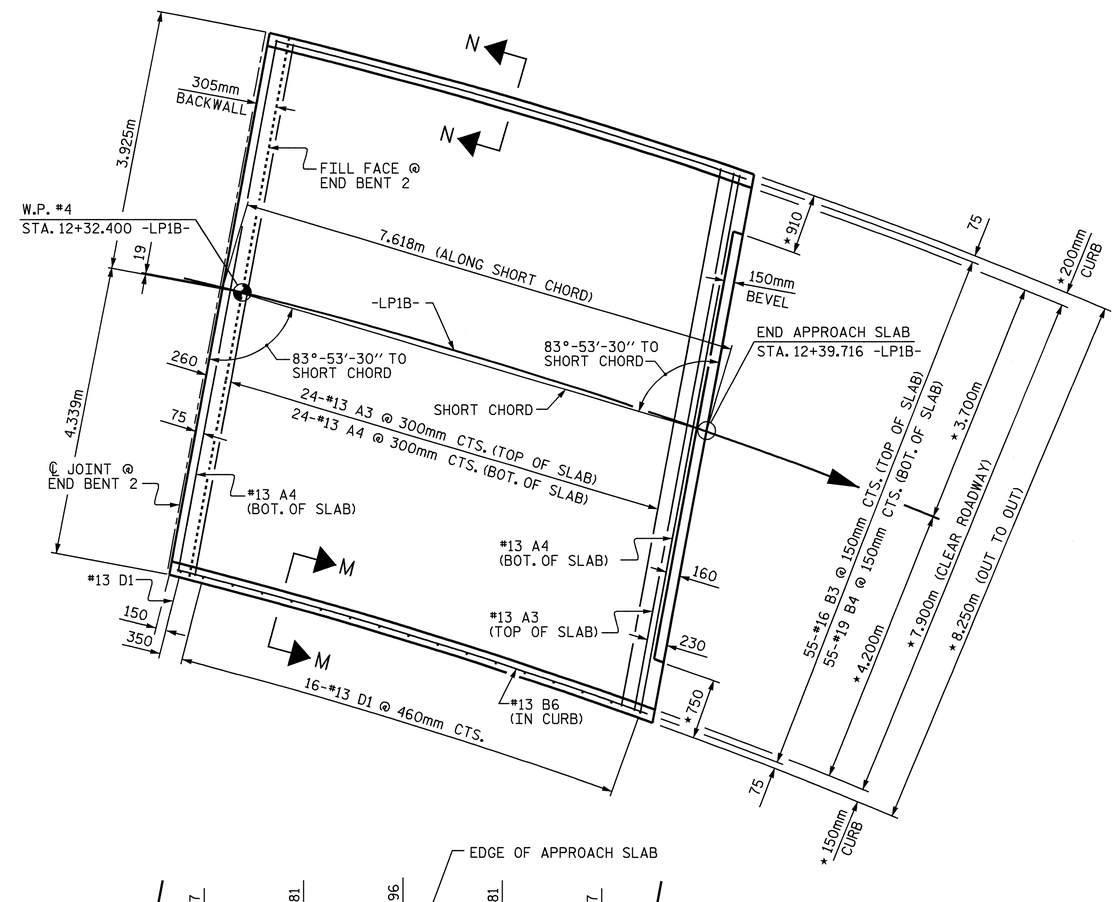

PLAN OF APPROACH SLAB

★ RADIAL DIMENSIONS

PROJECT NO. U-2519DA
CUMBERLAND COUNTY
STATION: 12+10.929-LP1B-

SHEET 2 OF 3

STATE OF NORTH CAROLINA
DEPARTMENT OF TRANSPORTATION
RALEIGH

BRIDGE APPROACH SLAB FOR FLEXIBLE PAVEMENT

NORTH CAROLINA PROFESSIONAL SEAL 21638 ENGINEER LAURA E. SUTTON
9/30/08

REVISIONS						SHEET NO.
NO.	BY:	DATE:	NO.	BY:	DATE:	S-407
1			3			TOTAL SHEETS
2			4			41

DRAWN BY : A.S. CALLAWAY DATE : 6/06/08
CHECKED BY : P.C. BREWER DATE : 6/11/08

30-SEP-2008 08:08
r:\structures\glrolaml\str16\scallaway\microstation\u2519da_sd_as_16.dgn
lsutton

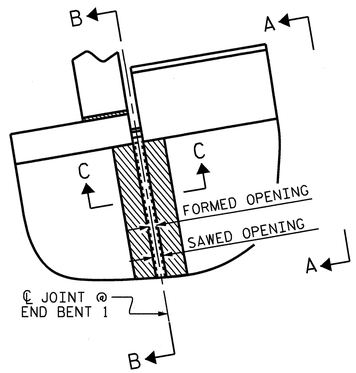

PLAN OF LEFT SIDE

(END BENT 1 SHOWN, END BENT 2 SIMILAR)

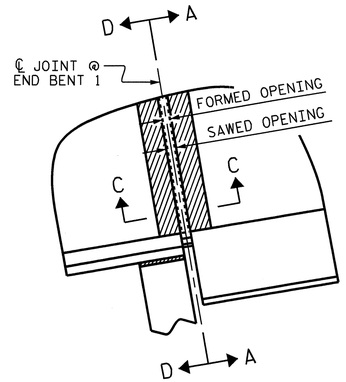

PLAN OF RIGHT SIDE

(END BENT 1 SHOWN, END BENT 2 SIMILAR)

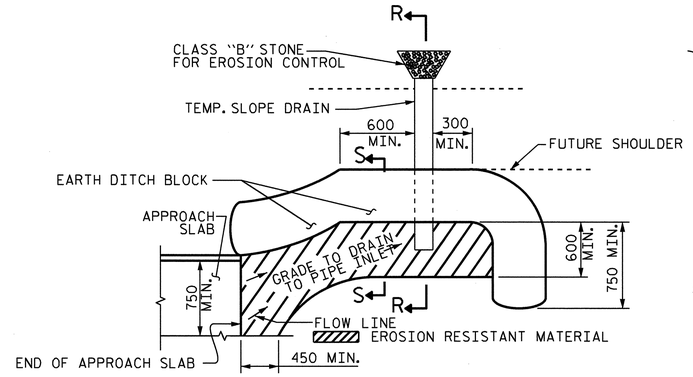

NOTE: IMMEDIATELY AFTER THE CONSTRUCTION OF THE APPROACH SLAB, THE CONTRACTOR SHALL PROVIDE TEMPORARY BERM AND SLOPE DRAIN. CONTRACTOR SHALL GRADE TO PIPE INLET AND PROVIDE EROSION RESISTANT MATERIAL AS SHOWN. THE EROSION RESISTANT MATERIAL SHALL BE EITHER 1) ASPHALT PLANT MIX, TYPE 1 OR TYPE 2, MIN. 50mm DEPTH, 2) EROSION CONTROL MAT, OR 3) CONCRETE, AS DIRECTED BY THE ENGINEER. THE SLOPE DRAIN SHALL CONSIST OF A NON-PERFORATED TEMPORARY DRAINAGE PIPE, 305mm IN DIAMETER.

PLAN VIEW

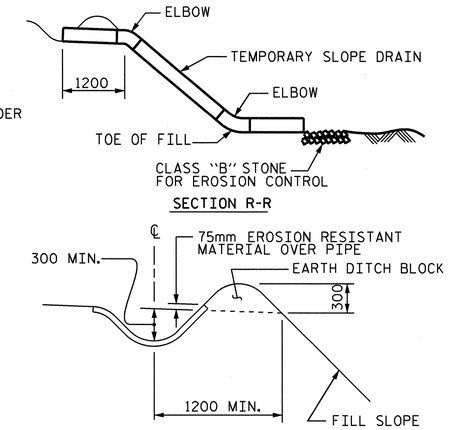

SECTION S-S

TEMPORARY BERM AND SLOPE DRAIN DETAILS

(TO BE USED WHEN SHOULDER BERM GUTTER IS REQUIRED)

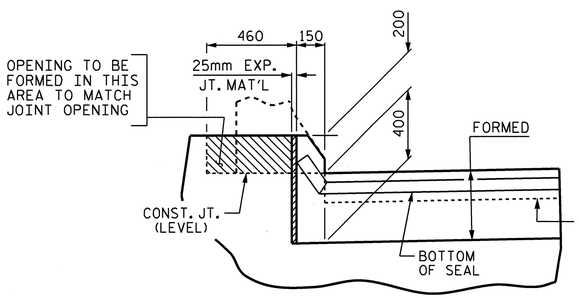

SECTION D-D

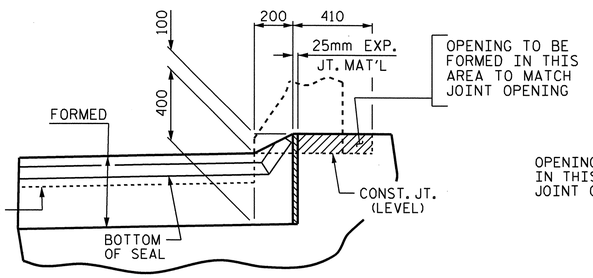

SECTION B-B

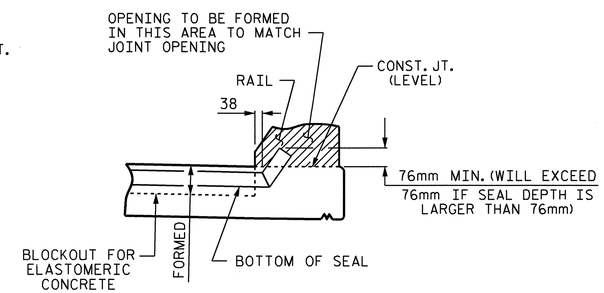

SECTION A-A

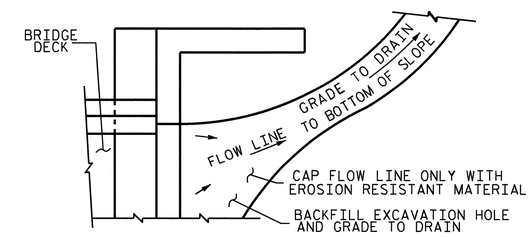

NOTE: IF THE APPROACH SLAB IS NOT CONSTRUCTED IMMEDIATELY AFTER THE BACKFILLING OF THE END BENT EXCAVATION, GRADE TO DRAIN TO THE BOTTOM OF THE SLOPE AND PROVIDE EROSION RESISTANT MATERIAL, SUCH AS FIBERGLASS ROVING OR AS DIRECTED BY THE ENGINEER TO PREVENT SOIL EROSION AND TO PROTECT THE AREA ADJACENT TO THE STRUCTURE. THE CONTRACTOR WILL BE REQUIRED TO REMOVE THESE MATERIALS PRIOR TO CONSTRUCTION OF THE APPROACH SLAB.

TEMPORARY DRAINAGE DETAIL

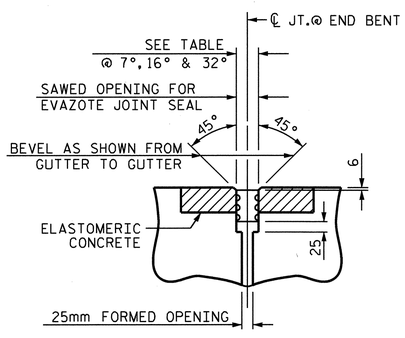

SECTION C-C

EVAZOTE JOINT SEAL

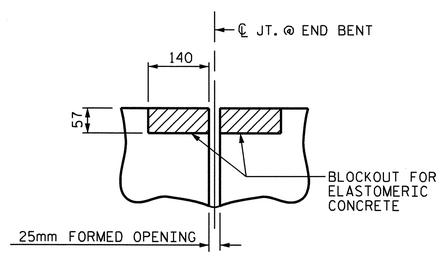

SECTION C-C

EVAZOTE JOINT SEAL
(PRE-SAWED ELASTOMERIC
CONCRETE DIMENSIONS)

SAWED OPENING FOR EVAZOTE JOINT SEAL			
	AT 7° C	AT 16° C	AT 32° C
END BENT 1	54mm	51mm	46mm
END BENT 2	53mm	51mm	47mm

ELASTOMERIC CONCRETE	
	* ELASTOMERIC CONCRETE (CU. m)
END BENT 1	0.4
END BENT 2	0.3

* BASED ON THE MINIMUM BLOCKOUT SHOWN.

JOINT SEAL DETAILS AT END BENTS

EVAZOTE JOINT SEAL TO BE CUT, HEAT WELDED AND TURNED UP PARALLEL TO SLOPED FACE OF THE BARRIER RAIL.

PROJECT NO. U-2519DA

CUMBERLAND COUNTY

STATION: 12+10.929-LP1B-

SHEET 3 OF 3

STATE OF NORTH CAROLINA
DEPARTMENT OF TRANSPORTATION
RALEIGH

STANDARD

BRIDGE APPROACH SLAB DETAILS

NORTH CAROLINA PROFESSIONAL SEAL 16301 ENGINEER TING-PENG FANG

3/18/11

REVISIONS							SHEET NO.
NO.	BY:	DATE:	NO.	BY:	DATE:		S-408
1			3				TOTAL SHEETS
2			4				411

ASSEMBLED BY : A.S. CALLAWAY	DATE : 6/06/08	
CHECKED BY : P.C. BREWER	DATE : 6/11/08	
DRAWN BY : FCJ 11/88	REV. 10/17/00 RWW/LES	
CHECKED BY : ARB 11/88	REV. 5/7/03 RWW/JTE	
	REV. 5/1/06R MAA/KMM	

18-MAR-2011 16:18
K:\TIPProjects-U\U2519da\Structures\girolami\str16\scallaway\Microstation\u2519da_sd_as_16.dgn
ttfang

STD. NO. BAS10SM

OVERHANG BRACKET CALCULATION INSTRUCTIONS

AASHTO SHAPES - TYPES III, IV, V, AND VI

1. RECORD KNOWN INFORMATION ON "BRIDGE OVERHANG BRACKET SUMMARY" ON SHEET 2
2. CALCULATE THE MAXIMUM SCREED LOAD PER BRACKET (SLPB) WITH AN ESTIMATED R = 1.5. SLPB = R X W. ROUND VALUE UP TO NEAREST SLPB VALUE INDICATED ON APPROPRIATE TABLE 1-1, 1-2, 1-3, OR 1-4.
3. WITH THE ESTIMATED SLPB, OVERHANG SLAB THICKNESS, "K" VALUE, AND 45° HANGER SAFE WORKING LOAD (SWL), ENTER THE APPROPRIATE TABLE 1-1, 1-2, 1-3, OR 1-4 (BASED ON OVERHANG DIMENSION) AND DETERMINE THE BRACKET SPACING, S.
4. CALCULATE S/D1 AND S/D2, ROUNDING UP TO NEAREST VALUE IN TABLE 2. ENTER TABLE 2 AND DETERMINE R VALUE.
5. CALCULATE REVISED SLPB. ROUND VALUE UP TO NEAREST SLPB VALUE INDICATED ON APPROPRIATE TABLE 1-1, 1-2, 1-3, OR 1-4.
6. WITH THE REVISED SLPB, OVERHANG SLAB THICKNESS, "K" VALUE AND 45 HANGER SAFE WORKING LOAD (SWL), ENTER THE APPROPRIATE TABLE 1-1, 1-2, 1-3 OR 1-4 (BASED ON OVERHANG DIMENSION) AND DETERMINE REVISED BRACKET SPACING, S.
7. CONTINUE ITERATIONS OF STEPS 4-6 UNTIL THE REVISED BRACKET SPACING, S, IS THE SAME AS THE PREVIOUS S VALUE.
8. CHECK LUMBER JOIST SPACING: WITH BRACKET SPACING VALUE, S, ROUND THIS VALUE UP TO THE NEAREST VALUE OF ALLOWABLE SPAN LENGTH OF JOIST OF TABLE 3. USING THIS VALUE, ALONG WITH THE AVERAGE OVERHANG SLAB THICKNESS AND THE LUMBER JOIST SIZE, DETERMINE JOIST SPACING FROM TABLE 3. IF NECESSARY, ADJUST LUMBER JOIST SIZE AND/OR JOIST SPACING TO MEET ALLOWABLE SPAN LENGTH OF JOIST.
9. CONVERSELY, IF THE DESIRED JOIST SPACING IS KNOWN, USE THIS ALONG WITH THE AVERAGE OVERHANG SLAB THICKNESS AND THE LUMBER JOIST SIZE TO DETERMINE IF ALLOWABLE SPAN LENGTH OF JOIST IS GREATER THAN THE BRACKET SPACING, S. IF NECESSARY, ADJUST LUMBER JOIST SIZE TO MEET REQUIREMENTS OF ALLOWABLE SPAN LENGTH OF JOIST AND JOIST SPACING.
10. RECORD REMAINING INFORMATION ON "BRIDGE OVERHANG BRACKET SUMMARY" FORM.
11. SUBMIT FORM AND CALCULATIONS FOR REVIEW AND APPROVAL.

TABLE 1-1

(FOR USE ON **UP TO 2'-0" OVERHANG Ⓛ** & 54" HORIZONTAL LEG LENGTH OF THE OVERHANG BRACKET)

AVG. SLAB THICKNESS Ⓣ (In)	BRACKET Ⓚ DIMENSION (In)	SCREED LOAD PER BRACKET									45° HANGER SWL (lbs)
		2500 lbs.	2250 lbs.	2000 lbs.	1750 lbs.	1500 lbs.	1250 lbs.	1000 lbs.	750 lbs.	0 lbs.	
		BRACKET SPACING									
10	30				2'-1"	2'-7"	3'-2"	3'-8"	4'-2"	5'-9"	4000
		3'-6"	4'-0"	4'-5"	4'-9"	5'-1"	5'-3"	5'-5"	5'-7"	6'-7"	6000
	40				2'-1"	2'-7"	3'-2"	3'-8"	4'-2"	5'-9"	4000
		3'-6"	4'-0"	4'-5"	4'-9"	5'-1"	5'-3"	5'-5"	5'-7"	6'-7"	6000
	50				2'-1"	2'-7"	3'-2"	3'-8"	4'-2"	5'-9"	4000
		3'-6"	4'-0"	4'-5"	4'-9"	5'-1"	5'-3"	5'-5"	5'-7"	6'-7"	6000
12	30					2'-4"	2'-10"	3'-4"	3'-9"	5'-2"	4000
		3'-2"	3'-7"	4'-1"	4'-7"	5'-0"	5'-2"	5'-4"	5'-7"	6'-5"	6000
	40					2'-4"	2'-10"	3'-4"	3'-9"	5'-2"	4000
		3'-2"	3'-7"	4'-1"	4'-7"	5'-0"	5'-2"	5'-4"	5'-7"	6'-5"	6000
	50					2'-4"	2'-10"	3'-4"	3'-9"	5'-2"	4000
		3'-2"	3'-7"	4'-1"	4'-7"	5'-0"	5'-2"	5'-4"	5'-7"	6'-5"	6000
14	30					2'-2"	2'-7"	3'-0"	3'-5"	4'-9"	4000
		2'-10"	3'-4"	3'-9"	4'-2"	4'-7"	5'-0"	5'-4"	5'-7"	6'-4"	6000
	40					2'-2"	2'-7"	3'-0"	3'-5"	4'-9"	4000
		2'-10"	3'-4"	3'-9"	4'-2"	4'-7"	5'-0"	5'-4"	5'-7"	6'-4"	6000
	50					2'-2"	2'-7"	3'-0"	3'-5"	4'-9"	4000
		2'-10"	3'-4"	3'-9"	4'-2"	4'-7"	5'-0"	5'-4"	5'-7"	6'-4"	6000
16	30					2'-0"	2'-4"	2'-9"	3'-2"	4'-4"	4000
		2'-8"	3'-0"	3'-5"	3'-10"	4'-3"	4'-7"	5'-0"	5'-5"	6'-3"	6000
	40					2'-0"	2'-4"	2'-9"	3'-2"	4'-4"	4000
		2'-8"	3'-0"	3'-5"	3'-10"	4'-3"	4'-7"	5'-0"	5'-5"	6'-3"	6000
	50					2'-0"	2'-4"	2'-9"	3'-2"	4'-4"	4000
		2'-8"	3'-0"	3'-5"	3'-10"	4'-3"	4'-7"	5'-0"	5'-5"	6'-3"	6000

TABLE 1-2

(FOR USE ON **OVER 2'-0" TO 2'-6" OVERHANG Ⓛ** & 54" HORIZONTAL LEG LENGTH OF THE OVERHANG BRACKET)

AVG. SLAB THICKNESS Ⓣ (In)	BRACKET Ⓚ DIMENSION (In)	SCREED LOAD PER BRACKET									45° HANGER SWL (lbs)
		2500 lbs.	2250 lbs.	2000 lbs.	1750 lbs.	1500 lbs.	1250 lbs.	1000 lbs.	750 lbs.	0 lbs.	
		BRACKET SPACING									
10	30					2'-4"	2'-9"	3'-3"	3'-8"	5'-1"	4000
		3'-1"	3'-6"	4'-0"	4'-5"	4'-11"	5'-3"	5'-5"	5'-7"	6'-7"	6000
	40					2'-4"	2'-9"	3'-3"	3'-8"	5'-1"	4000
		3'-1"	3'-6"	4'-0"	4'-5"	4'-11"	5'-3"	5'-5"	5'-7"	6'-7"	6000
	50					2'-4"	2'-9"	3'-3"	3'-8"	5'-1"	4000
		3'-1"	3'-6"	4'-0"	4'-5"	4'-11"	5'-3"	5'-5"	5'-7"	6'-7"	6000
12	30					2'-1"	2'-6"	2'-11"	3'-4"	4'-6"	4000
		2'-9"	3'-2"	3'-7"	4'-0"	4'-5"	4'-10"	5'-3"	5'-7"	6'-5"	6000
	40					2'-1"	2'-6"	2'-11"	3'-4"	4'-6"	4000
		2'-9"	3'-2"	3'-7"	4'-0"	4'-5"	4'-10"	5'-3"	5'-7"	6'-5"	6000
	50					2'-1"	2'-6"	2'-11"	3'-4"	4'-6"	4000
		2'-9"	3'-2"	3'-7"	4'-0"	4'-5"	4'-10"	5'-3"	5'-7"	6'-5"	6000
14	30						2'-3"	2'-7"	3'-0"	4'-1"	4000
		2'-6"	2'-10"	3'-3"	3'-7"	4'-0"	4'-4"	4'-9"	5'-1"	6'-3"	6000
	40						2'-3"	2'-7"	3'-0"	4'-1"	4000
		2'-6"	2'-10"	3'-3"	3'-7"	4'-0"	4'-4"	4'-9"	5'-1"	6'-3"	6000
	50						2'-3"	2'-7"	3'-0"	4'-1"	4000
		2'-6"	2'-10"	3'-3"	3'-7"	4'-0"	4'-4"	4'-9"	5'-1"	6'-3"	6000
16	30						2'-1"	2'-5"	2'-9"	3'-9"	4000
		2'-3"	2'-7"	2'-11"	3'-4"	3'-8"	4'-0"	4'-4"	4'-8"	5'-8"	6000
	40						2'-1"	2'-5"	2'-9"	3'-9"	4000
		2'-3"	2'-7"	2'-11"	3'-4"	3'-8"	4'-0"	4'-4"	4'-8"	5'-8"	6000
	50						2'-1"	2'-5"	2'-9"	3'-9"	4000
		2'-3"	2'-7"	2'-11"	3'-4"	3'-8"	4'-0"	4'-4"	4'-8"	5'-8"	6000

TABLE 1-3

(FOR USE ON **OVER 2'-6" TO 3'-0" OVERHANG Ⓛ** & 54" HORIZONTAL LEG LENGTH OF THE OVERHANG BRACKET)

AVG. SLAB THICKNESS Ⓣ (In)	BRACKET Ⓚ DIMENSION (In)	SCREED LOAD PER BRACKET									45° HANGER SWL (lbs)
		2500 lbs.	2250 lbs.	2000 lbs.	1750 lbs.	1500 lbs.	1250 lbs.	1000 lbs.	750 lbs.	0 lbs.	
		BRACKET SPACING									
10	30					2'-1"	2'-6"	2'-11"	3'-4"	4'-6"	4000
						4'-5"	4'-10"	5'-3"	5'-7"	6'-7"	6000
	40					2'-1"	2'-6"	2'-11"	3'-4"	4'-6"	4000
		2'-9"	3'-2"	3'-7"	4'-0"	4'-5"	4'-10"	5'-3"	5'-7"	6'-7"	6000
	50					2'-1"	2'-6"	2'-11"	3'-4"	4'-6"	4000
		2'-9"	3'-2"	3'-7"	4'-0"	4'-5"	4'-10"	5'-3"	5'-7"	6'-7"	6000
12	30						2'-2"	2'-7"	2'-11"	4'-0"	4000
						3'-11"	4'-3"	4'-8"	5'-0"	6'-1"	6000
	40						2'-2"	2'-7"	2'-11"	4'-0"	4000
		2'-5"	2'-10"	3'-2"	3'-6"	3'-11"	4'-3"	4'-8"	5'-0"	6'-1"	6000
	50						2'-2"	2'-7"	2'-11"	4'-0"	4000
		2'-5"	2'-10"	3'-2"	3'-6"	3'-11"	4'-3"	4'-8"	5'-0"	6'-1"	6000
14	30						2'-0"	2'-4"	2'-8"	3'-8"	4000
					3'-2"	3'-6"	3'-10"	4'-2"	4'-6"	5'-6"	6000
	40						2'-0"	2'-4"	2'-8"	3'-8"	4000
		2'-2"	2'-6"	2'-10"	3'-2"	3'-6"	3'-10"	4'-2"	4'-6"	5'-6"	6000
	50						2'-0"	2'-4"	2'-8"	3'-8"	4000
		2'-2"	2'-6"	2'-10"	3'-2"	3'-6"	3'-10"	4'-2"	4'-6"	5'-6"	6000
16	30							2'-1"	2'-5"	3'-4"	4000
					2'-11"	3'-2"	3'-6"	3'-10"	4'-1"	5'-0"	6000
	40							2'-1"	2'-5"	3'-4"	4000
		2'-0"	2'-4"	2'-7"	2'-11"	3'-2"	3'-6"	3'-10"	4'-1"	5'-0"	6000
	50							2'-1"	2'-5"	3'-4"	4000
		2'-0"	2'-4"	2'-7"	2'-11"	3'-2"	3'-6"	3'-10"	4'-1"	5'-0"	6000

TABLE 1-4

(FOR USE ON **OVER 3'-0" TO 3'-6" OVERHANG Ⓛ** & 54" HORIZONTAL LEG LENGTH OF THE OVERHANG BRACKET)

AVG. SLAB THICKNESS Ⓣ (In)	BRACKET Ⓚ DIMENSION (In)	SCREED LOAD PER BRACKET									45° HANGER SWL (lbs)
		2500 lbs.	2250 lbs.	2000 lbs.	1750 lbs.	1500 lbs.	1250 lbs.	1000 lbs.	750 lbs.	0 lbs.	
		BRACKET SPACING									
10	30						2'-1"	2'-5"	2'-9"	3'-10"	4000
						2'-3"	2'-11"	3'-7"	4'-3"	5'-9"	6000
	40						2'-1"	2'-5"	2'-9"	3'-10"	4000
				2'-4"	3'-0"	3'-7"	4'-1"	4'-5"	4'-9"	5'-9"	6000
	50						2'-1"	2'-5"	2'-9"	3'-10"	4000
		2'-4"	2'-8"	3'-0"	3'-4"	3'-8"	4'-1"	4'-5"	4'-9"	5'-9"	6000
12	30							2'-2"	2'-6"	3'-5"	4000
						2'-1"	2'-8"	3'-4"	3'-11"	5'-2"	6000
	40							2'-2"	2'-6"	3'-5"	4000
				2'-2"	2'-9"	3'-4"	3'-7"	3'-11"	4'-3"	5'-2"	6000
	50							2'-2"	2'-6"	3'-5"	4000
		2'-1"	2'-4"	2'-8"	3'-0"	3'-4"	3'-7"	3'-11"	4'-3"	5'-2"	6000
14	30								2'-3"	3'-1"	4000
						2'-0"	2'-6"	3'-1"	3'-8"	4'-8"	6000
	40								2'-3"	3'-1"	4000
				2'-0"	2'-7"	3'-0"	3'-3"	3'-6"	3'-10"	4'-8"	6000
	50								2'-3"	3'-1"	4000
			2'-2"	2'-5"	2'-8"	3'-0"	3'-3"	3'-6"	3'-10"	4'-8"	6000
16	30								2'-0"	2'-9"	4000
							2'-4"	2'-10"	3'-5"	4'-3"	6000
	40								2'-0"	2'-9"	4000
					2'-5"	2'-8"	2'-11"	3'-3"	3'-6"	4'-3"	6000
	50								2'-0"	2'-9"	4000
				2'-2"	2'-5"	2'-8"	2'-11"	3'-3"	3'-6"	4'-3"	6000

DEFINITIONS

SLPB = SCREED LOAD PER BRACKET (R x W)
R = SCREED LOAD FACTOR, OBTAINED FROM TABLE 2
W = WHEEL LOAD
S = BRACKET SPACING
T = AVERAGE SLAB THICKNESS
SWL = SAFE WORKING LOAD
K = DIMENSION DEFINED ON "BRIDGE OVERHANG BRACKET SUMMARY" ON SHEET 2
L = OVERHANG MEASURED FROM EDGE OF TOP FLANGE TO EDGE OF SUPERSTRUCTURE

PROJECT NO. U-2519DA
CUMBERLAND COUNTY
STATION: 12+10.929-LP1B-

SHEET 1 OF 3

STATE OF NORTH CAROLINA
DEPARTMENT OF TRANSPORTATION
RALEIGH

STANDARD OVERHANG FALSEWORK
AASHTO TYPES
III, IV, V, AND VI

NORTH CAROLINA PROFESSIONAL SEAL 18788 ENGINEER CHANG-CHUAN VICTOR CHAO
Chang-Chuan Victor Chao 9/30/2008

REVISIONS						SHEET NO.
NO.	BY:	DATE:	NO.	BY:	DATE:	S-409
1			3			TOTAL SHEETS
2			4			411

ASSEMBLED BY:	DATE:
CHECKED BY:	DATE:
DRAWN BY: R. WRIGHT 06/04	REV.
CHECKED BY: C. V. CHAO 06/04	

06-AUG-2008 14:32
R:\Structures\ghrolaml\str16\u2519da_sd_oh_16.dgn
LSUTTON

BRIDGE OVERHANG BRACKET SUMMARY

TOTAL SCREED WEIGHT = _____ LBS.
NUMBER OF SCREED WHEELS = _____
SCREED WHEEL LOAD (W) = _____ LBS.
SCREED LOAD PER BRACKET = _____ LBS.

PROJECT No. : _____
COUNTY : _____
STATION : _____
DESCRIPTION : _____

DATE : _____
DESIGN BY : _____
CHECK BY : _____

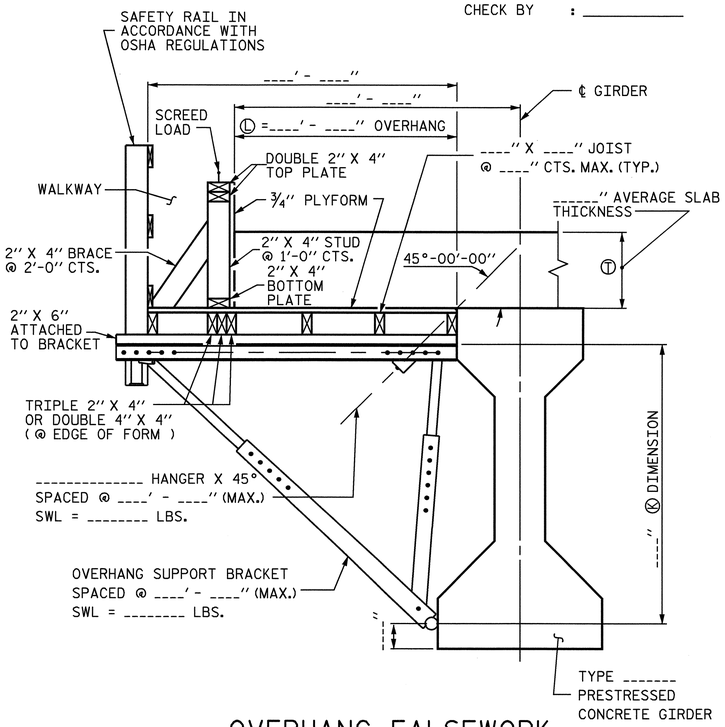

OVERHANG FALSEWORK

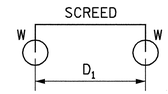

4-WHEEL MACHINE

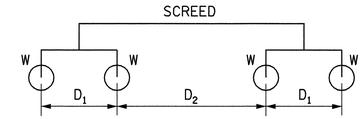

8-WHEEL MACHINE

4 WHEEL MACHINE	
S/D1	R
<= 1.0	1.00
1.1	1.09
1.2	1.17
1.3	1.23
1.4	1.29
1.5	1.33
1.6	1.38
1.7	1.41
1.8	1.44
1.9	1.47
2.0	1.50
2.2	1.55
2.4	1.58
2.6	1.62
2.8	1.64
3.0	1.67
3.5	1.71
4.0	1.75

TABLE 2: SCREED LOAD FACTOR "R"

		THE SCREED LOAD FACTOR R (FOR 8 WHEEL MACHINE)																	
		S/D_2																	
		<= 1.0	1.1	1.2	1.3	1.4	1.5	1.6	1.7	1.8	1.9	2.0	2.2	2.4	2.6	2.8	3.0	3.5	4.0
S/D_1	<= 1.0	1.00	1.09	1.17	1.23	1.29	1.33	1.38	1.41	1.44	1.47	1.50	1.55	1.58	1.62	1.64	1.67	1.71	1.75
	1.1	1.09	1.18	1.26	1.32	1.38	1.42	1.47	1.50	1.54	1.56	1.59	1.64	1.67	1.71	1.73	1.76	1.81	1.84
	1.2	1.17	1.26	1.33	1.40	1.45	1.50	1.54	1.58	1.61	1.64	1.67	1.71	1.75	1.78	1.81	1.83	1.88	1.92
	1.3	1.23	1.32	1.40	1.46	1.52	1.56	1.61	1.64	1.68	1.70	1.73	1.78	1.81	1.85	1.87	1.90	1.95	1.98
	1.4	1.29	1.38	1.45	1.52	1.57	1.62	1.66	1.70	1.73	1.76	1.79	1.83	1.87	1.90	1.93	1.95	2.00	2.07
	1.5	1.33	1.42	1.50	1.56	1.62	1.67	1.71	1.75	1.78	1.81	1.83	1.88	1.92	1.95	1.98	2.00	2.10	2.17
	1.6	1.38	1.47	1.54	1.61	1.66	1.71	1.75	1.79	1.82	1.85	1.88	1.92	1.96	1.99	2.04	2.08	2.18	2.25
	1.7	1.41	1.50	1.58	1.64	1.70	1.75	1.79	1.82	1.86	1.89	1.91	1.96	2.00	2.05	2.11	2.16	2.25	2.32
	1.8	1.44	1.54	1.61	1.68	1.73	1.78	1.82	1.86	1.89	1.92	1.94	1.99	2.06	2.12	2.17	2.22	2.32	2.39
	1.9	1.47	1.56	1.64	1.70	1.76	1.81	1.85	1.89	1.92	1.95	1.97	2.04	2.11	2.18	2.23	2.28	2.38	2.45
	2.0	1.50	1.59	1.67	1.73	1.79	1.83	1.88	1.91	1.94	1.97	2.00	2.09	2.17	2.23	2.29	2.33	2.43	2.50
	2.2	1.55	1.64	1.71	1.78	1.83	1.88	1.92	1.96	1.99	2.04	2.09	2.18	2.26	2.32	2.38	2.42	2.52	2.59
	2.4	1.58	1.67	1.75	1.81	1.87	1.92	1.96	2.00	2.06	2.11	2.17	2.26	2.33	2.40	2.45	2.50	2.60	2.67
	2.6	1.62	1.71	1.78	1.85	1.90	1.95	1.99	2.05	2.12	2.18	2.23	2.32	2.40	2.46	2.52	2.56	2.66	2.73
	2.8	1.64	1.73	1.81	1.87	1.93	1.98	2.04	2.11	2.17	2.23	2.29	2.38	2.45	2.52	2.57	2.62	2.71	2.79
	3.0	1.67	1.76	1.83	1.90	1.95	2.00	2.08	2.16	2.22	2.28	2.33	2.42	2.50	2.56	2.62	2.67	2.76	2.83
	3.5	1.71	1.81	1.88	1.95	2.00	2.10	2.18	2.25	2.32	2.38	2.43	2.52	2.60	2.66	2.71	2.76	2.86	2.93
	4.0	1.75	1.84	1.92	1.98	2.07	2.17	2.25	2.32	2.39	2.45	2.50	2.59	2.67	2.73	2.79	2.83	2.93	3.00

TABLE 3: ALLOWABLE SPAN LENGTH OF JOISTS AND JOIST SPACINGS

AVG. SLAB THICKNESS Ⓣ (IN)	LUMBER JOIST SIZE (IN X IN)	JOIST SPACINGS			
		15 IN	12 IN	10 IN	8 IN
		THE ALLOWABLE SPAN LENGTH OF JOISTS			
10	2 X 4	———	4' - 6"	4' - 9"	5' - 0"
	4 X 4	5' - 9"	6' - 3"	6' - 6"	6' - 7"
12	2 X 4	———	4' - 3"	4' - 9"	5' - 0"
	4 X 4	5' - 3"	6' - 0"	6' - 3"	6' - 5"
14	2 X 4	———	4' - 0"	4' - 6"	5' - 0"
	4 X 4	———	5' - 6"	6' - 0"	6' - 4"
16	2 X 4	———	4' - 0"	4' - 3"	4' - 9"
	4 X 4	———	5' - 3"	5' - 9"	6' - 3"

NOTES

DESIGN INCLUDES CONSTRUCTION LIVE LOAD 20 PSF ON THE AREA SUPPORTED AND 75 PLF AT THE OUTSIDE DECK OF OVERHANGS.

REQUIRED MINIMUM DIAGONAL LEG CAPACITY: 3600 LB WORKING LOAD

THE CONTRACTOR HAS THE OPTION OF SUBMITTING HIS OWN DESIGN FOR OVERHANG FALSEWORK IN ACCORDANCE WITH THE SPECIAL PROVISIONS.

SUBMITTALS UTILIZING THE INSTRUCTIONS AND PROCEDURES DESCRIBED ON SHEET 1 OF 3 SHALL BE IN ACCORDANCE WITH THE APPLICABLE SECTIONS OF THE SPECIFICATIONS AND SPECIAL PROVISIONS, EXCEPT THAT CALCULATIONS FOR OVERHANG FALSEWORK NEED NOT BE SEALED BY A REGISTERED ENGINEER.

FOR OVERHANG FALSEWORK BRACING DESIGN, SEE SHEET 3 OF 3.

PROJECT NO. U-2519DA
CUMBERLAND COUNTY
STATION: 12+10.929-LP1B-

SHEET 2 OF 3

STATE OF NORTH CAROLINA
DEPARTMENT OF TRANSPORTATION
RALEIGH

STANDARD OVERHANG FALSEWORK
AASHTO TYPES
III, IV, V, AND VI

NORTH CAROLINA PROFESSIONAL SEAL 18788 ENGINEER CHANG-CHUAN VICTOR CHAO

Chang-Chuan Victor Chao
9/30/2008

REVISIONS						SHEET NO.
NO.	BY:	DATE:	NO.	BY:	DATE:	S-410
1			3			TOTAL SHEETS
2			4			411

ASSEMBLED BY:	DATE:
CHECKED BY:	DATE:
DRAWN BY: R. WRIGHT 06/04	REV.
CHECKED BY: C. V. CHAO 06/04	

06-AUG-2008 14:32
R:\Structures\glrolaml\str16\u2519da_sd_oh_16.dgn
LSUTTON

OF2

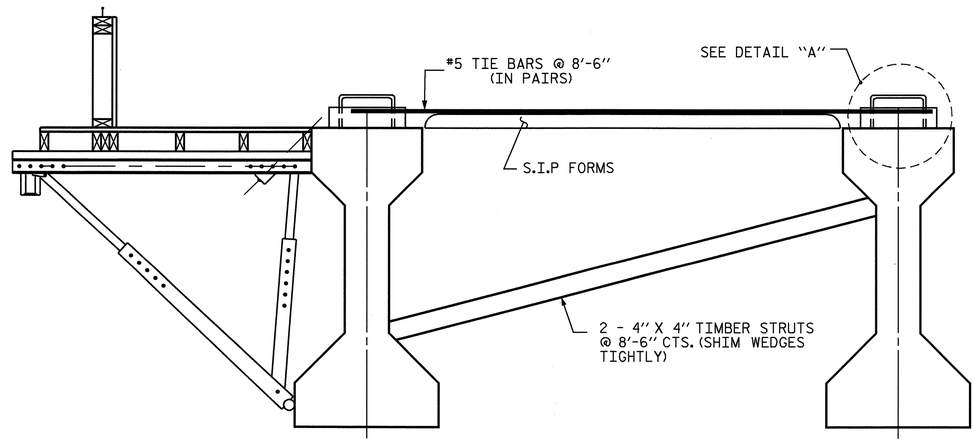

EXTERIOR GIRDER

INTERIOR GIRDER

DETAIL OF REQUIRED OVERHANG FALSEWORK BRACING SYSTEM

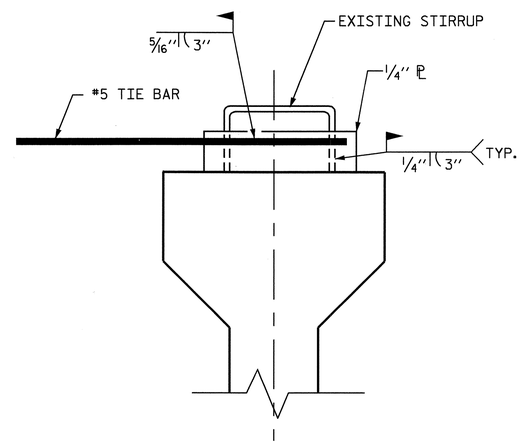

DETAIL "A"

PROJECT NO. U-2519DA

CUMBERLAND COUNTY

STATION: 12+10.929-LP1B-

SHEET 3 OF 3

NOTES:

EACH #5 TIE BAR SHALL BE WELDED TO ONE STIRRUP LOOP AS SHOWN IN DETAIL "A". #5 TIE BARS SHALL BE WELDED TO TWO ADJACENT STIRRUPS OF THE EXTERIOR GIRDER AND THE ADJACENT INTERIOR GIRDER BETWEEN PERMANENT DIAPHRAGMS. WELD STEEL PLATES IN BETWEEN THE TIE BARS AND THE STIRRUP LOOP. WELDING TWO TIE BARS TO THE SAME STIRRUP LOOP SHALL NOT BE PERMITTED.

MAXIMUM SPACING BETWEEN THE BRACING (TIE BARS-TIMBER STRUT) IS 8'-6" CTS. #5 TIE BARS SHALL BE LOCATED OVER A TIMBER STRUT.

INSTALL TIE BARS AND TIMBER STRUTS PRIOR TO PLACEMENT OF CONCRETE OR SCREED WEIGHT ONTO THE OVERHANG FALSEWORK.

NORTH CAROLINA PROFESSIONAL SEAL 18788 ENGINEER CHANG-CHUAN VICTOR CHAO

Chang-Chuan Victor Chao
9/30/2008

STATE OF NORTH CAROLINA
DEPARTMENT OF TRANSPORTATION
RALEIGH

STANDARD OVERHANG FALSEWORK
AASHTO TYPES
III, IV, V, AND VI

REVISIONS						SHEET NO.
NO.	BY:	DATE:	NO.	BY:	DATE:	S-411
1			3			TOTAL SHEETS
2			4			411

ASSEMBLED BY:	DATE:
CHECKED BY:	DATE:
DRAWN BY: R. WRIGHT 06/04	REV.
CHECKED BY: C. V. CHAO 06/04	

25-AUG-2008 15:02
r:\structures\girolaml\str16\u2519da_sd_oh_16.dgn
LSUTTON

FA PROJECT NO. NHF-0100 (21)

METRIC

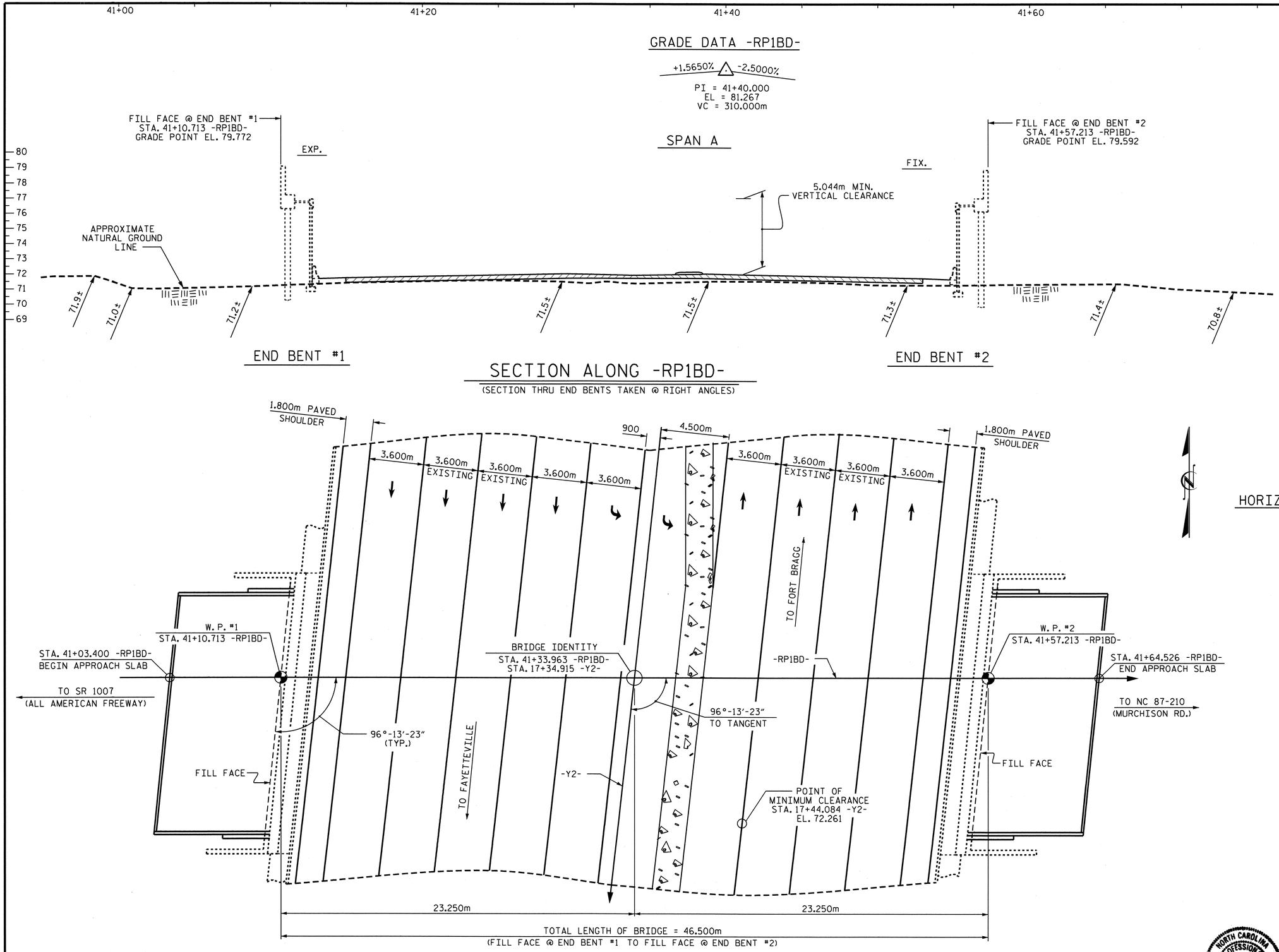

PLAN

PILES NOT SHOWN FOR CLARITY

HORIZONTAL CURVE DATA -Y2-

PI STA. = 17+85.309
Δ = 3°-48'-12.0" (RT)
L = 331.904m
T = 166.013m
R = 5000.000m

CONSTRUCTION CONSISTS ONLY OF SUPERSTRUCTURE AND APPROACH SLABS

PROJECT NO. U-2519DA

CUMBERLAND COUNTY

STATION: 41+33.963-RP1BD-
17+34.915 -Y2-

SHEET 1 OF 2 BRIDGE NO. 380

STATE OF NORTH CAROLINA
DEPARTMENT OF TRANSPORTATION
RALEIGH

GENERAL DRAWING
FOR BRIDGE ON
FAYETTEVILLE OUTER LOOP
(RAMP 1BD) OVER
BRAGG BLVD. (NC 24) BETWEEN
SR 1007 AND NC 87-210

NORTH CAROLINA PROFESSIONAL SEAL 14091 ENGINEER UBUCY CHARLES HUNT

2/14/11

REVISIONS						SHEET NO.
NO.	BY:	DATE:	NO.	BY:	DATE:	SS-1
1			3			TOTAL SHEETS
2			4			17

DRAWN BY : J.P. ADAMS DATE : 6/9/08
CHECKED BY : H.A. LOCKLEAR DATE : 6/11/08

14-FEB-2011 09:39
R:\Structures\hunt\Str. #14-Revised\U-2519DA_sd_GD_14.dgn
wkfischer

BM: #11 NAIL IN BASE OF 10" PINE 105' RT. OF STA. 36+58, EL. 72.098

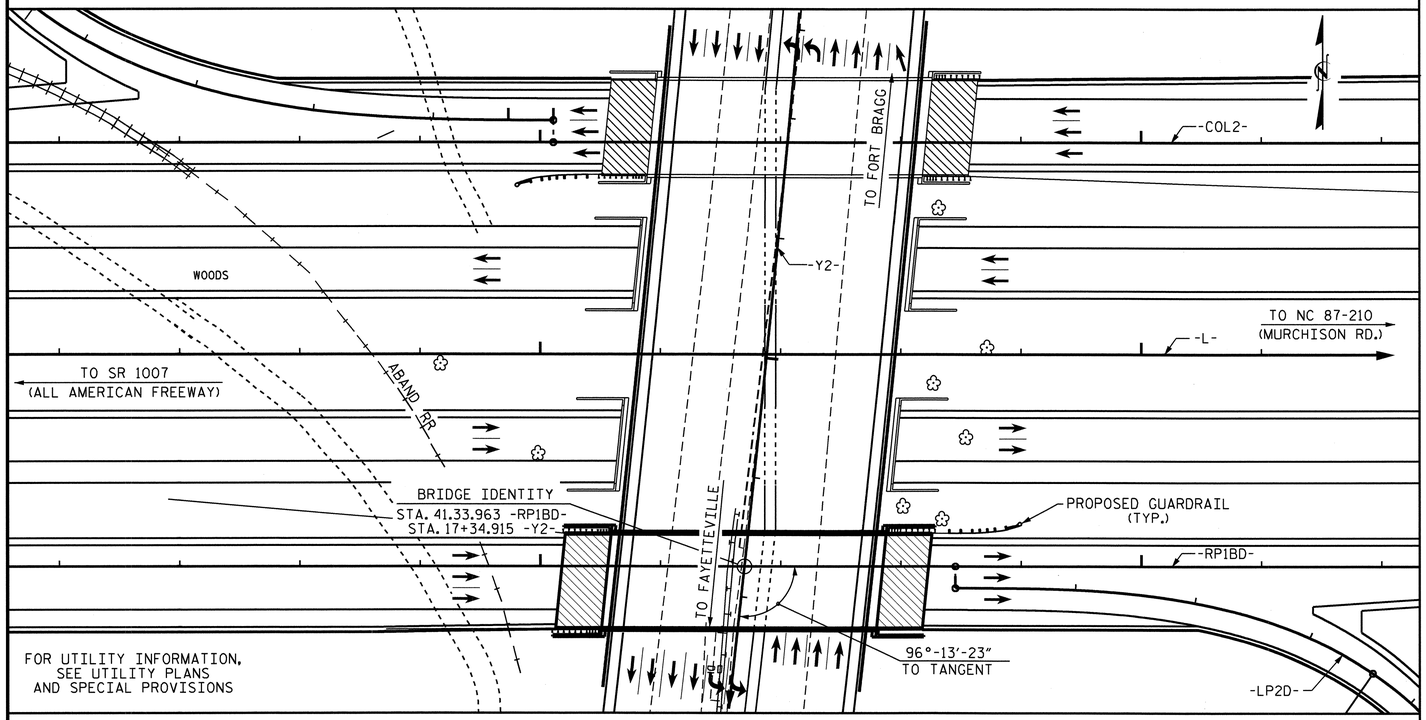

LOCATION SKETCH

NOTES

ALL DIMENSIONS ARE IN MILLIMETERS UNLESS OTHERWISE NOTED.

ALL ELEVATIONS ARE IN METERS.

ASSUMED LIVE LOAD = MS 22.5 OR ALTERNATE LOADING.

FOR OTHER DESIGN DATA AND GENERAL NOTES, SEE SHEET SNSM.

FOR EROSION CONTROL MEASURES SEE EROSION CONTROL PLANS.

THIS BRIDGE HAS BEEN DESIGNED BY THE STRENGTH DESIGN METHOD AS SPECIFIED IN AASHTO STANDARD SPECIFICATIONS.

ALL STRUCTURAL STEEL SHALL BE AASHTO M270 GRADE 345W AND PAINTED IN ACCORDANCE WITH SYSTEM 4 OF ARTICLE 442-7 OF THE STANDARD SPECIFICATIONS UNLESS OTHERWISE NOTED ON THE PLANS.

REMOVABLE FORMS MAY BE USED IN LIEU OF METAL STAY-IN-PLACE FORMS IN ACCORDANCE WITH ARTICLE 420-3 OF THE STANDARD SPECIFICATIONS.

NEEDLE BEAMS WILL NOT BE ALLOWED UNLESS OTHERWISE CALLED FOR ON THE PLANS OR APPROVED BY THE ENGINEER.

FOR SUBMITTAL OF WORKING DRAWINGS, SEE SPECIAL PROVISIONS.

FOR METRIC STRUCTURAL STEEL, SEE SPECIAL PROVISIONS.

FOR FALSEWORK AND FORMWORK, SEE SPECIAL PROVISIONS.

THIS BRIDGE HAS BEEN DESIGNED BY THE STRENGTH DESIGN METHOD AS SPECIFIED IN AASHTO STANDARD SPECIFICATIONS.

THIS BRIDGE HAS BEEN DESIGNED IN ACCORDANCE WITH THE REQUIREMENTS OF THE AASHTO STANDARD SPECIFICATIONS FOR SEISMIC DESIGN OF HIGHWAY BRIDGES FOR SEISMIC PERFORMANCE CATEGORY A.

FOR CRANE SAFETY, SEE SPECIAL PROVISIONS.

FOR GROUT FOR STRUCTURES, SEE SPECIAL PROVISIONS.

FOR MAINTENANCE AND PROTECTION OF TRAFFIC BENEATH PROPOSED STRUCTURE, SEE SPECIAL PROVISIONS.

FOR EXPANSION JOINT SEALS, SEE SPECIAL PROVISIONS.

FOR PLACING LOAD ON STRUCTURE MEMBERS, SEE SPECIAL PROVISIONS.

FOR CURING CONCRETE, SEE SPECIAL PROVISIONS.

THE CONTRACTOR SHALL PROVIDE INDEPENDENT ASSURANCE SAMPLES OF REINFORCING STEEL AS FOLLOWS: FOR PROJECTS REQUIRING UP TO 360,000 kg OF REINFORCING STEEL, ONE 760mm SAMPLE OF EACH SIZE BAR USED, AND FOR PROJECTS REQUIRING OVER 360,000 kg OF REINFORCING STEEL, TWO 760mm SAMPLES OF EACH SIZE BAR USED. THE BARS FROM WHICH THE SAMPLES ARE TAKEN MUST THEN BE SPLICED WITH REPLACEMENT BARS OF THE SIZE AND LENGTH OF THE SAMPLE PLUS A MINIMUM LAP SPLICE OF THIRTY BAR DIAMETERS.

TOTAL BILL OF MATERIAL

	REINFORCED CONCRETE DECK SLAB	GROOVING BRIDGE FLOORS	BRIDGE APPROACH SLABS	STRUCTURAL STEEL (APPROX.)	CONCRETE BARRIER RAIL	ELASTOMERIC BEARINGS	EXPANSION JOINT SEALS
	SQ. METERS	SQ. METERS	LUMP SUM	KGS	METERS	LUMP SUM	LUMP SUM
SUPERSTRUCTURE	760.5	880.1		146300	103.90		
TOTAL	760.5	880.1	LUMP SUM	146300	103.90	LUMP SUM	LUMP SUM

PROJECT NO. U-2519DA
CUMBERLAND COUNTY
STATION: 41+33.963-RP1BD-

SHEET 2 OF 2

STATE OF NORTH CAROLINA
DEPARTMENT OF TRANSPORTATION
RALEIGH

GENERAL DRAWING
FOR BRIDGE ON
FAYETTEVILLE OUTER LOOP
(RAMP 1BD) OVER
BRAGG BLVD. (NC 24) BETWEEN
SR 1007 AND NC 87-210

NORTH CAROLINA PROFESSIONAL SEAL 14021 ENGINEER BRICK CHARLES HUNT
3/23/11

REVISIONS						SHEET NO.
NO.	BY:	DATE:	NO.	BY:	DATE:	SS-2
1			3			TOTAL SHEETS
2			4			17

DRAWN BY : J.P. ADAMS DATE : 6/9/08
CHECKED BY : H.A. LOCKLEAR DATE : 6/11/08

29-MAR-2011 10:07
R:\Structures\hunt\Str. #14-Revised\U-2519DA_sd_GD_14.dgn
jpadams

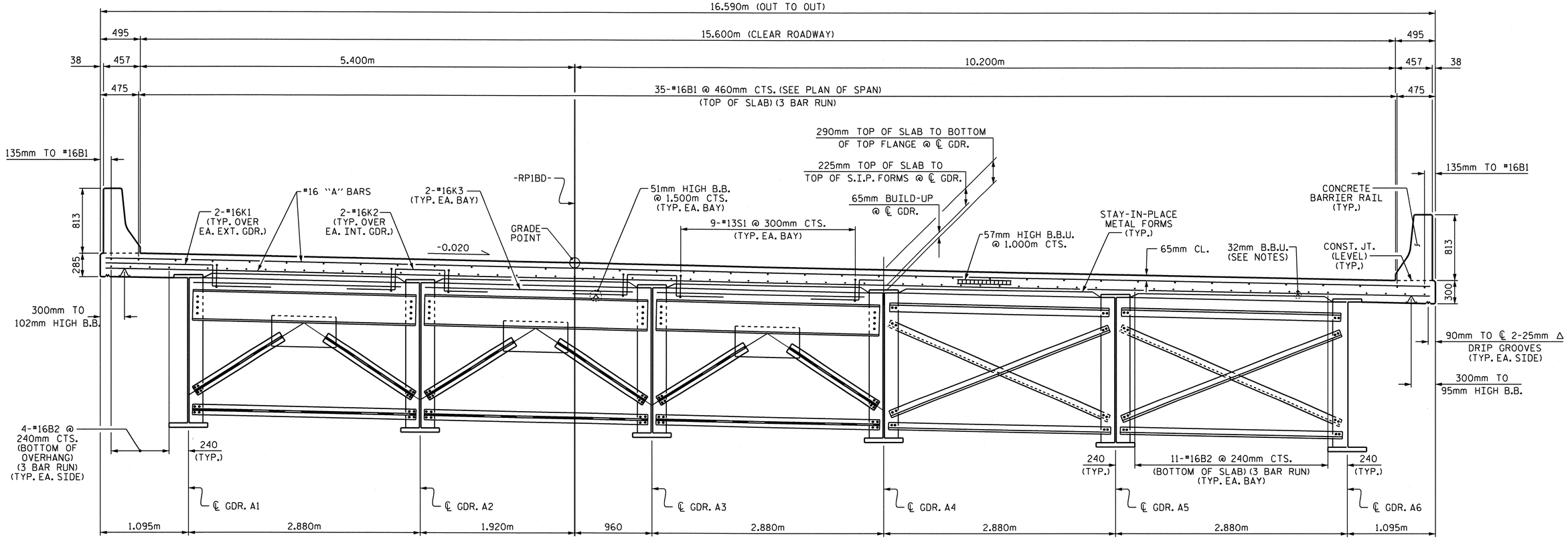

PARTIAL SECTION SHOWING END BENT DIAPHRAGMS

PARTIAL SECTION SHOWING INTERMEDIATE DIAPHRAGMS

TYPICAL SECTION

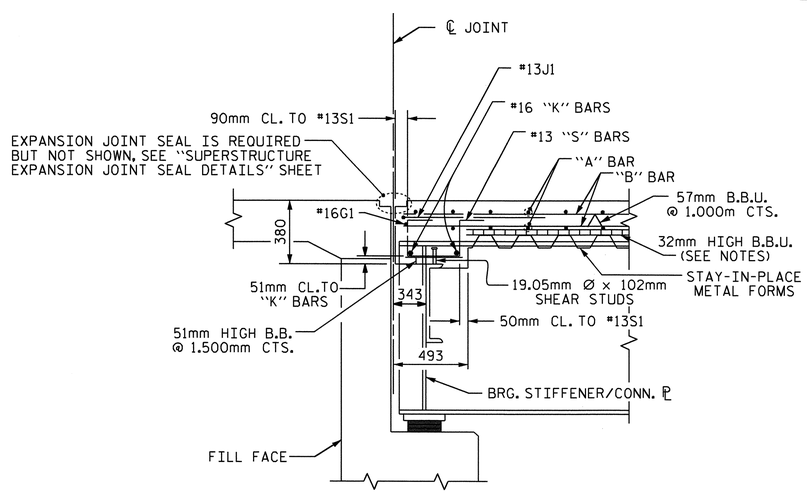

SECTION THRU END BENT DIAPHRAGM

NOTES

PROVIDE 32mm HIGH BEAM BOLSTERS UPPER AT 1.200m CTS. ATOP THE METAL STAY-IN-PLACE FORMS TO SUPPORT THE BOTTOM MAT OF "A" BARS. WHEN USING REMOVABLE FORMS, PROVIDE CONTINUOUS HIGH CHAIRS FOR METAL DECK (C.H.C.M.) @ 1.200m CTS. WITH A HEIGHT TO SUPPORT THE BOTTOM MAT OF "A" BARS A CLEAR DISTANCE OF 65mm ABOVE THE TOP OF THE REMOVABLE FORM.

BARRIER RAIL SHALL NOT BE CAST UNTIL ALL SLAB CONCRETE HAS BEEN CAST AND HAS REACHED A MINIMUM COMPRESSIVE STRENGTH OF 20.7 MPa.

#16G1 BAR MAY BE SHIFTED SLIGHTLY, AS NECESSARY, TO CLEAR REINFORCING STEEL AND STIRRUPS.

THE CONTRACTOR MAY, WHEN NECESSARY, PROPOSE A SCHEME FOR AVOIDING INTERFERENCE BETWEEN METAL STAY-IN-PLACE FORM SUPPORTS OR FORMS AND BEAM/GIRDER STIFFENERS OR CONNECTOR PLATES. THE PROPOSAL SHALL BE INDICATED, AS APPROPRIATE, ON EITHER THE STEEL WORKING DRAWINGS OR THE METAL STAY-IN-PLACE FORM WORKING DRAWINGS.

NO SEPARATE PAYMENT WILL BE MADE FOR FURNISHING AND INSTALLING THE COVER PLATE. THE ENTIRE COST OF THIS WORK SHALL BE INCLUDED IN THE LUMP SUM PRICE FOR "EXPANSION JOINT SEALS".

PROJECT NO. U-2519DA
CUMBERLAND COUNTY
STATION: 41+33.963-RP1BD-

STATE OF NORTH CAROLINA
DEPARTMENT OF TRANSPORTATION
RALEIGH

SUPERSTRUCTURE

TYPICAL SECTION

NORTH CAROLINA PROFESSIONAL SEAL ENGINEER BRUCE CHARLES HUNT
3/29/11

REVISIONS						SHEET NO.
NO.	BY:	DATE:	NO.	BY:	DATE:	SS-3
1			3			TOTAL SHEETS
2			4			17

DRAWN BY : J.P. ADAMS DATE : 4/15/08
CHECKED BY : H.A. LOCKLEAR DATE : 5/2/08

29-MAR-2011 10:07
R:\Structures\hunt\Str. #14-Revised\U-2519DA_sd_TS_14.dgn
jpadams

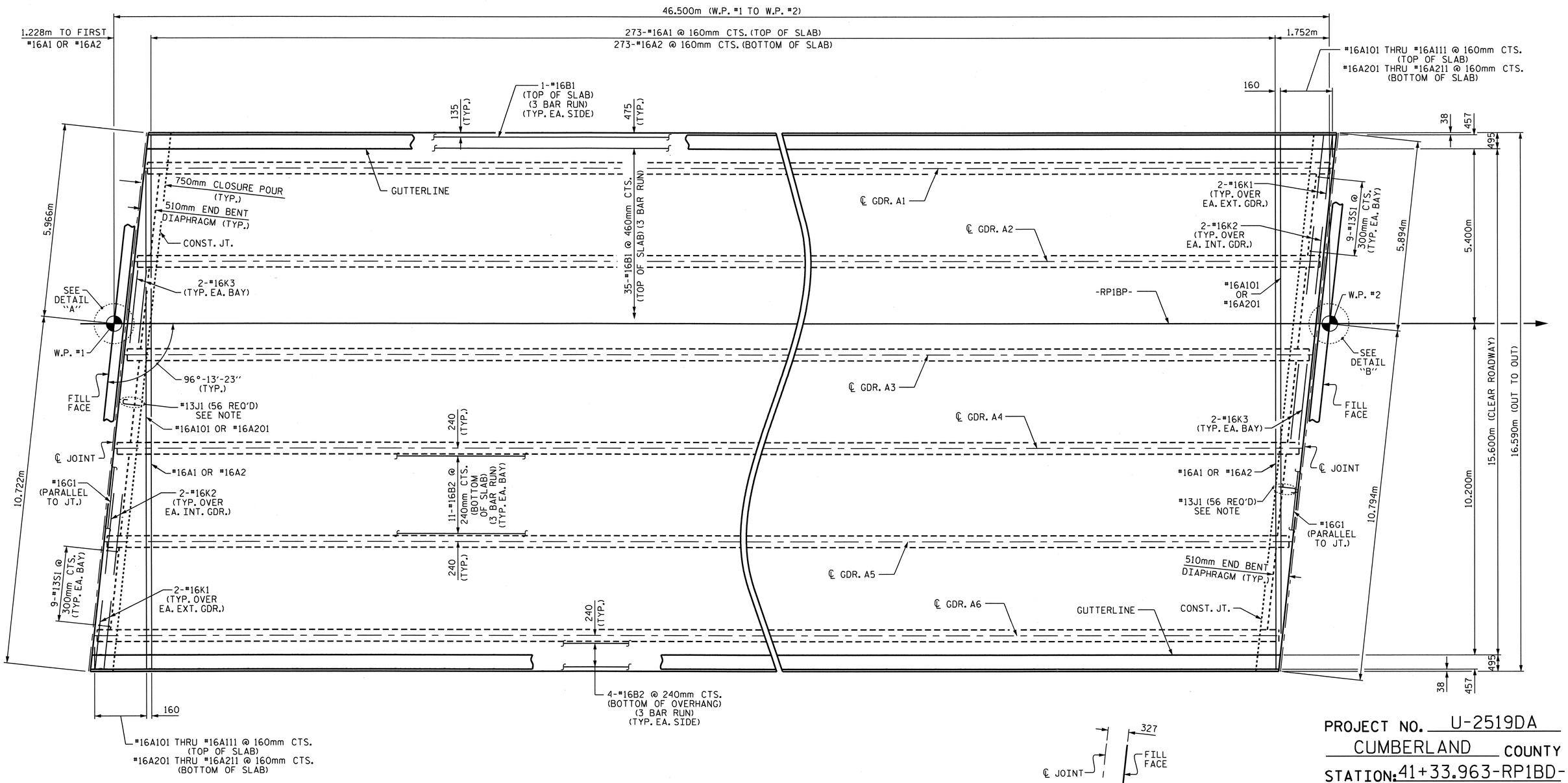

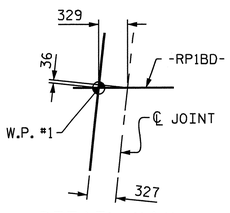

DETAIL "A"

SPAN A

FOR BARRIER RAIL REINFORCING STEEL & DETAILS, SEE CONCRETE BARRIER RAIL SHEET.

THE #13J1 BARS ARE TO BE PLACED AS SPECIFIED ON THE "EXPANSION JOINT SEAL DETAILS" SHEET.

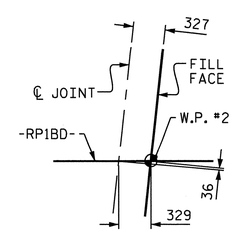

DETAIL "B"

PROJECT NO. U-2519DA
CUMBERLAND COUNTY
STATION: 41+33.963-RP1BD-

STATE OF NORTH CAROLINA
DEPARTMENT OF TRANSPORTATION
RALEIGH

SUPERSTRUCTURE

PLAN OF SPAN A

NORTH CAROLINA PROFESSIONAL SEAL 24091 ENGINEER BUCK CHARLES HUNT
2/14/11

REVISIONS						SHEET NO.
NO.	BY:	DATE:	NO.	BY:	DATE:	SS-4
1			3			TOTAL SHEETS
2			4			17

DRAWN BY : J.P. ADAMS DATE : 4/8/08
CHECKED BY : H.A. LOCKLEAR DATE : 5/2/08

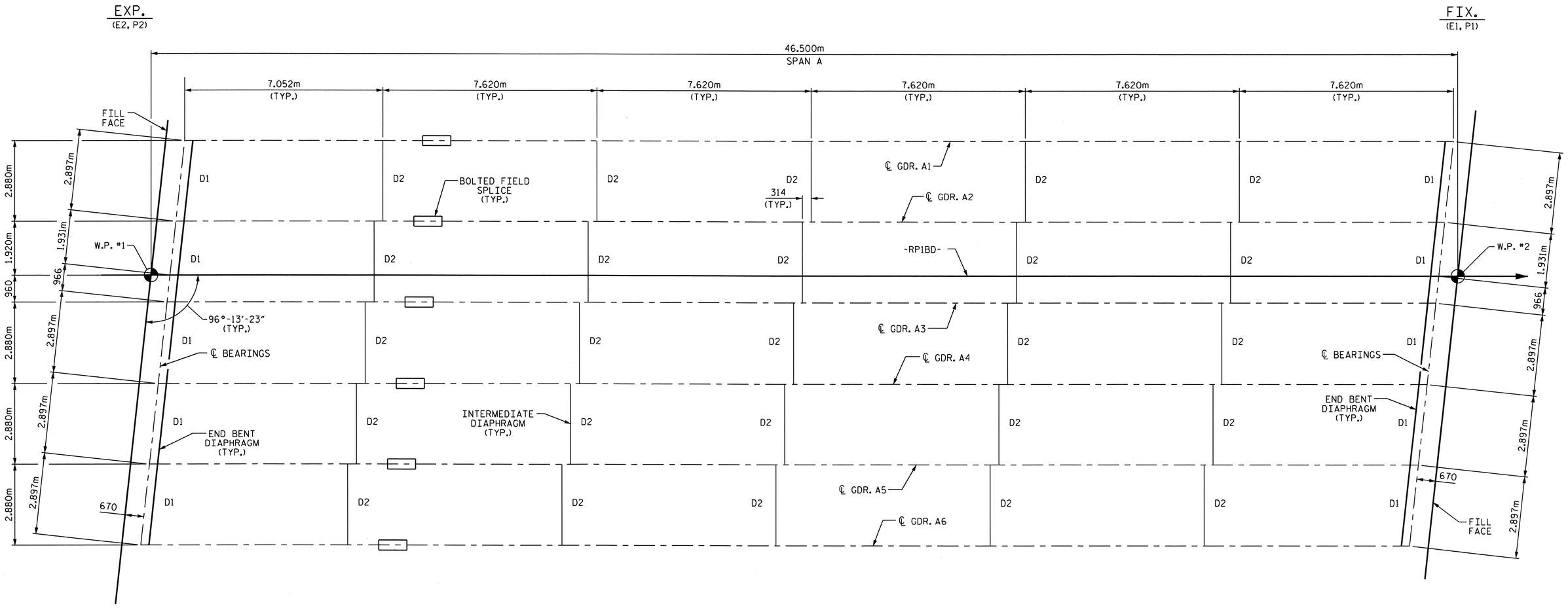

FRAMING PLAN

PROJECT NO. U-2519DA
CUMBERLAND COUNTY
STATION: 41+33.963-RP1BD-

STATE OF NORTH CAROLINA
DEPARTMENT OF TRANSPORTATION
RALEIGH

SUPERSTRUCTURE

FRAMING PLAN

NORTH CAROLINA PROFESSIONAL SEAL 19081 ENGINEER BUCK CHARLES HUNT
2/14/11

REVISIONS						SHEET NO.
NO.	BY:	DATE:	NO.	BY:	DATE:	SS-5
1			3			TOTAL SHEETS
2			4			17

DRAWN BY : J.P. ADAMS DATE : 4/14/08
CHECKED BY : H.A. LOCKLEAR DATE : 5/2/08

08-FEB-2011 15:26
R:\Structures\hunt\Str. #14-Revised\U-2519E_sd_S#_14.dgn
klayne

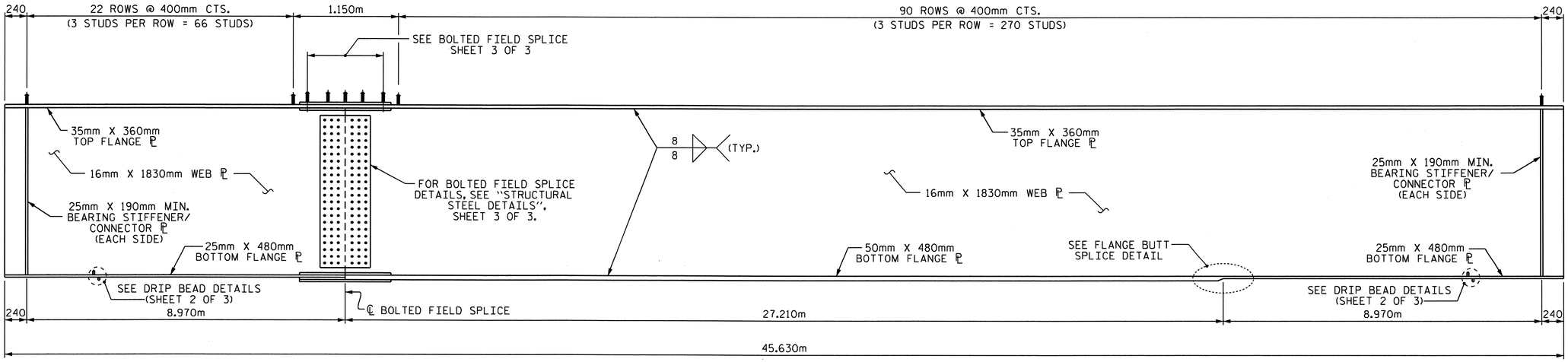

GIRDER ELEVATION

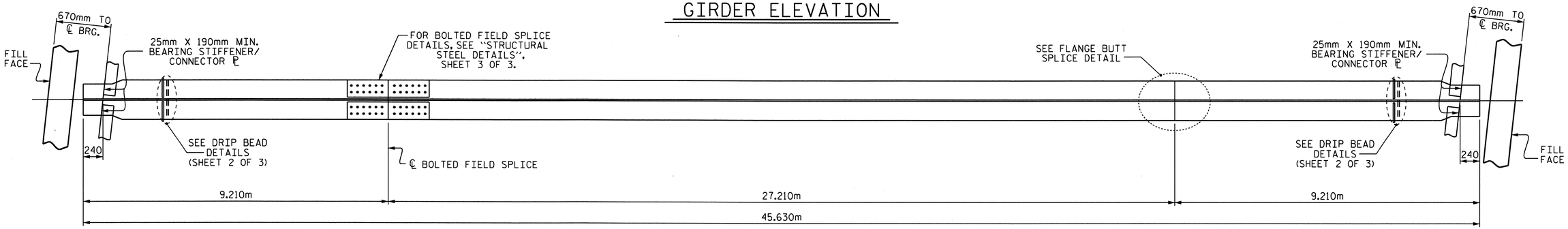

BOTTOM FLANGE DETAIL

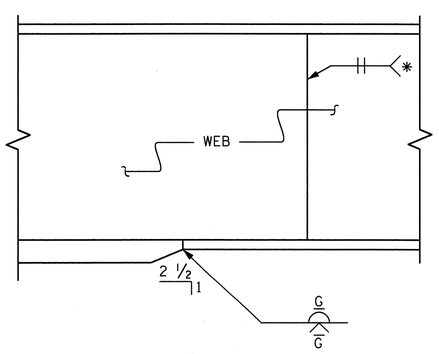

TYPICAL FLANGE AND WEB BUTT SPLICE

* GRIND SMOOTH AND FLUSH ON OUTSIDE OF EXTERIOR GIRDERS

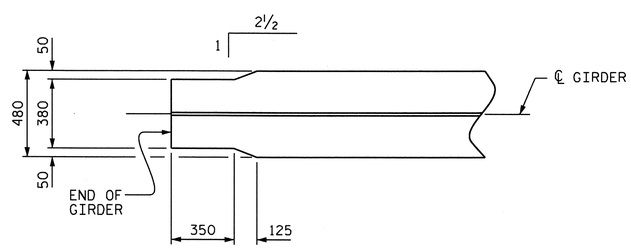

END OF GIRDER DETAIL

BOTTOM FLANGE ONLY

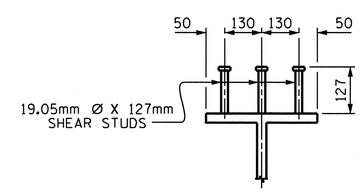

SHEAR STUD DETAILS

PROJECT NO. U-2519DA
CUMBERLAND COUNTY
STATION: 41+33.963-RP1BD-

SHEET 1 OF 3

STATE OF NORTH CAROLINA
DEPARTMENT OF TRANSPORTATION
RALEIGH

SUPERSTRUCTURE

STRUCTURAL STEEL DETAILS

NORTH CAROLINA PROFESSIONAL SEAL 14092 ENGINEER BRUCE CHARLES HUNT
3/14/11

REVISIONS						SHEET NO.
NO.	BY:	DATE:	NO.	BY:	DATE:	SS-6
1			3			TOTAL SHEETS
2			4			17

DRAWN BY : J.P. ADAMS DATE : 4/3/08
CHECKED BY : H.A. LOCKLEAR DATE : 5/2/08

08-FEB-2011 15:26
R:\Structures\hunt\Str. #14-Revised\U-2519E_sd_SS_14.dgn
klayne

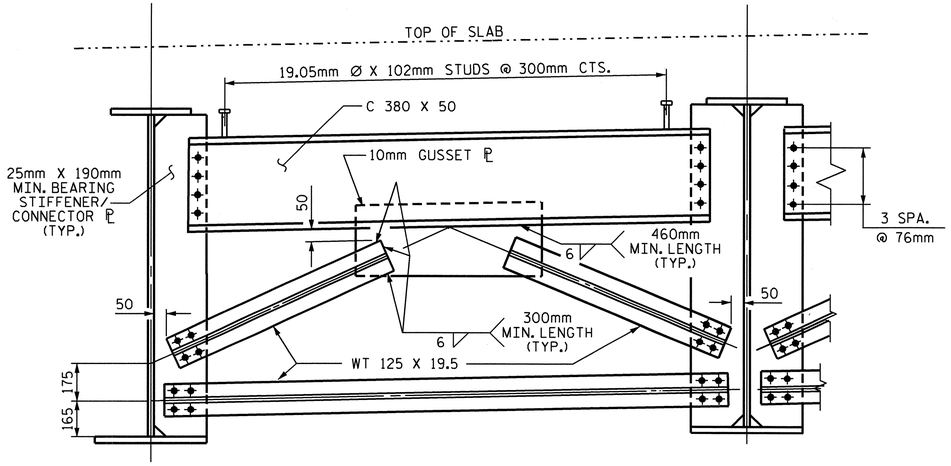

TYPICAL END BENT DIAPHRAGM - (D1)

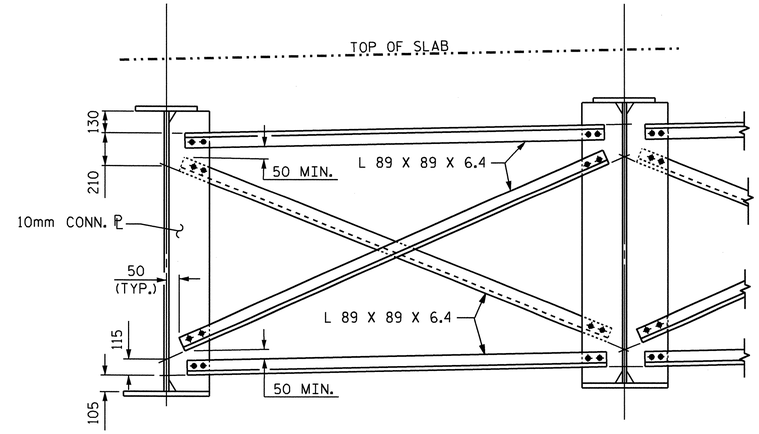

TYPICAL INTERMEDIATE DIAPHRAGM - (D2)

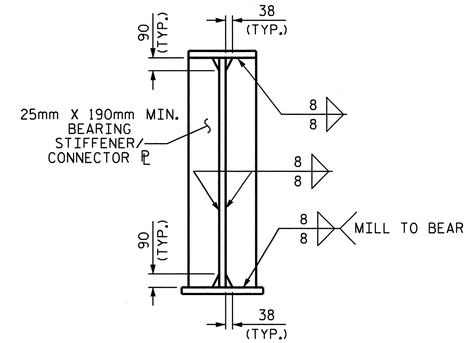

BEARING STIFFENER

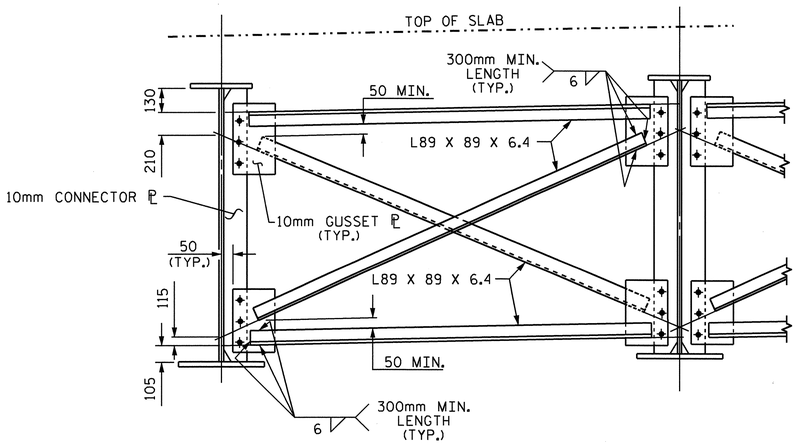

TYPICAL OPTIONAL INTERMEDIATE DIAPHRAGM

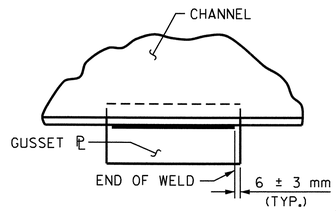

TYPICAL GUSSET PLATE CONNECTION

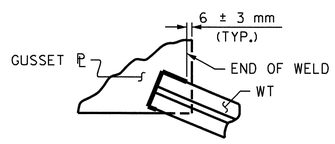

TYPICAL "TEE" TO GUSSET PLATE CONNECTION

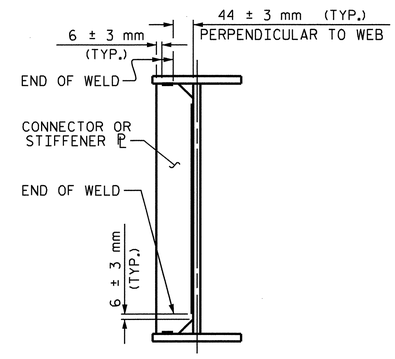

TYPICAL STIFFENER OR CONNECTOR PLATE CONNECTIONS

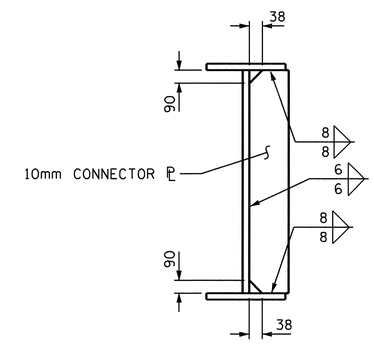

CONNECTOR PLATE

WELD TERMINATION DETAILS

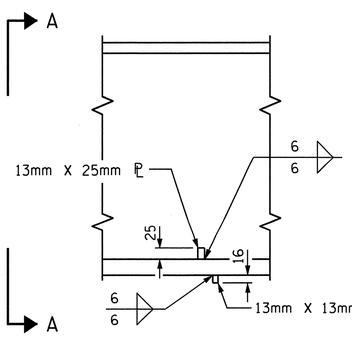

SECTION

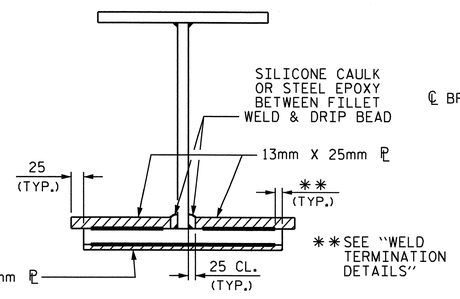

VIEW A-A

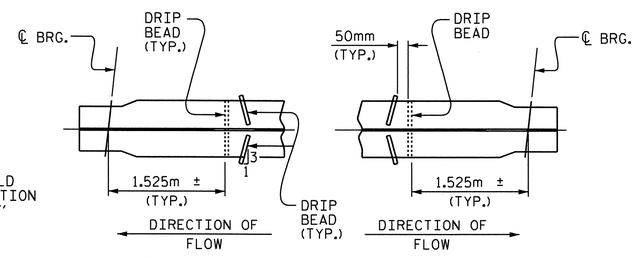

PART PLAN OF BOTTOM FLANGE

DRIP BEAD DETAILS

TYPICAL ALL GIRDERS

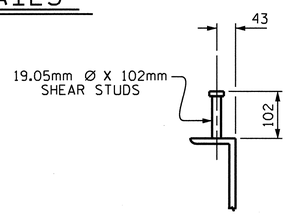

SHEAR STUD DETAILS

PROJECT NO. U-2519DA
CUMBERLAND COUNTY
STATION: 41+33.963-RP1BD-

SHEET 2 OF 3

STATE OF NORTH CAROLINA
DEPARTMENT OF TRANSPORTATION
RALEIGH

SUPERSTRUCTURE

STRUCTURAL STEEL DETAILS

REVISIONS						SHEET NO.
NO.	BY:	DATE:	NO.	BY:	DATE:	SS-7
1			3			TOTAL SHEETS
2			4			17

DRAWN BY : J.P. ADAMS DATE : 3/25/08
CHECKED BY : H.A. LOCKLEAR DATE : 5/2/08

29-MAR-2011 10:07
R:\Structures\hunt\Str. #14-Revised\U-2519DA_sd_SS_14.dgn
jpadams

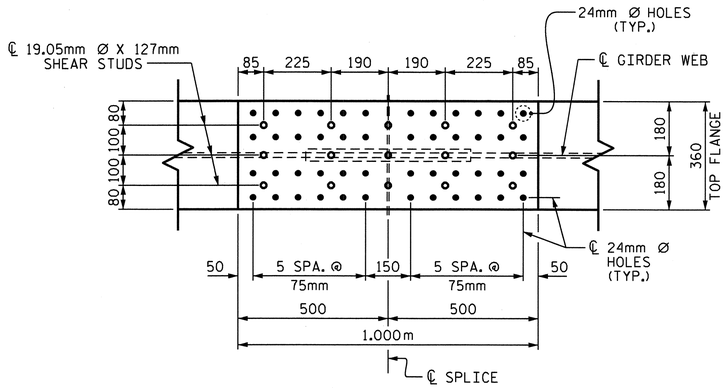

PLAN (TOP OF TOP FLANGE)

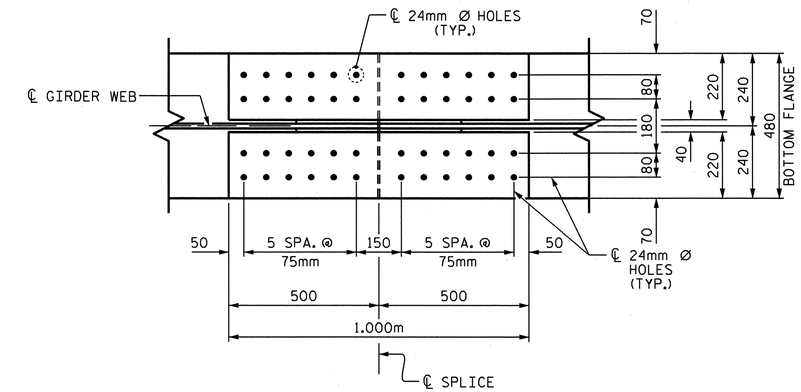

PLAN (TOP OF BOTTOM FLANGE)

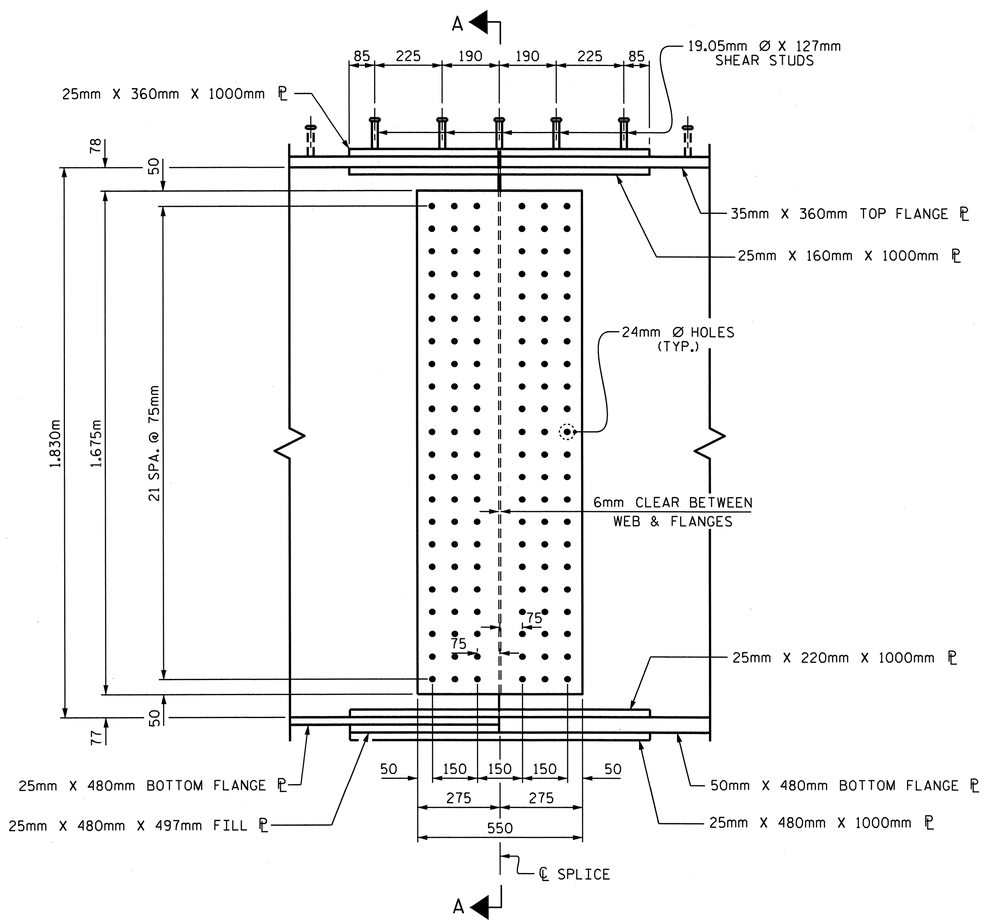

ELEVATION

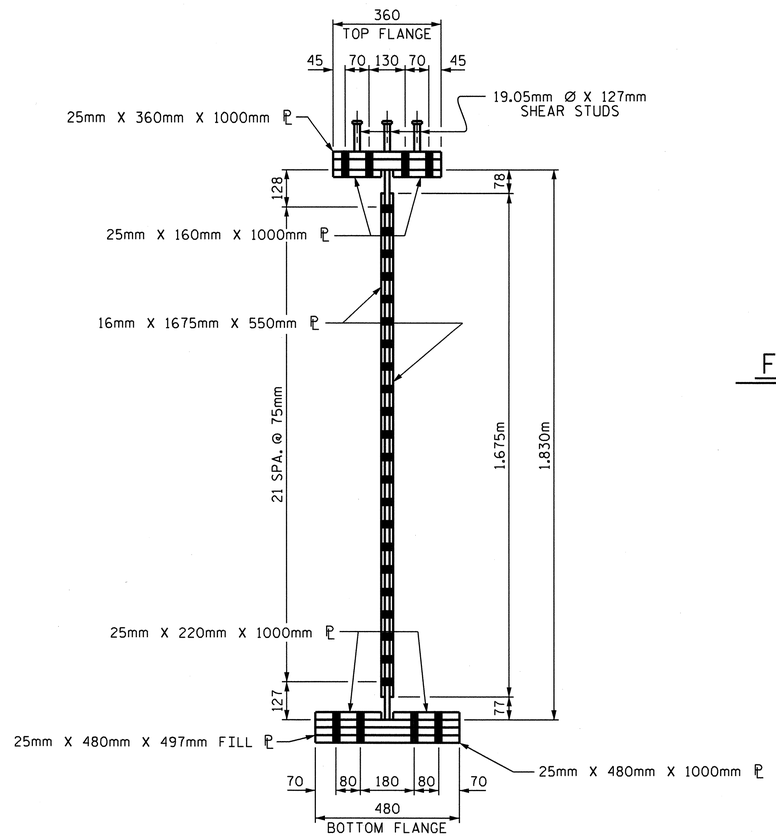

SECTION A-A

BOLTED FIELD SPLICE DETAILS

NOTES

ALL STRUCTURAL STEEL SHALL BE AASHTO M270 GRADE 345W AND PAINTED IN ACCORDANCE WITH SYSTEM 4 OF ARTICLE 442-7 OF THE STANDARD SPECIFICATIONS UNLESS OTHERWISE NOTED ON THE PLANS.

ALL DIMENSIONS SHOWN ARE HORIZONTAL OR VERTICAL, UNLESS OTHERWISE NOTED.

ALL FIELD CONNECTIONS TO BE 22.23mm DIA. HIGH STRENGTH BOLTS UNLESS OTHERWISE NOTED.

A CHARPY V-NOTCH TEST IS REQUIRED FOR WEB PLATES, BOTTOM FLANGE PLATES, BOTTOM FLANGE SPLICE PLATES AND WEB SPLICE PLATES (IF USED) FOR ALL GIRDERS AND IN ACCORDANCE WITH ARTICLE 1072-9 OF THE STANDARD SPECIFICATIONS.

SHOP SPLICES ARE PERMITTED TO LIMIT THE MAXIMUM REQUIRED FLANGE PIECE LENGTHS TO 18 METERS AND WEB PIECE LENGTHS TO 14 METERS. PERMITTED FLANGE AND WEB SHOP SPLICES SHALL NOT BE LOCATED WITHIN 4.5 METERS OF MAXIMUM DEAD LOAD DEFLECTION (NOR WITHIN 4.5 METERS OF INTERMEDIATE BEARINGS OF CONTINUOUS UNITS). KEEP 600mm MINIMUM BETWEEN WEB AND FLANGE SHOP SPLICES. KEEP 150mm MINIMUM BETWEEN CONNECTOR PLATE OR TRANSVERSE STIFFENER WELDS AND WEB OR FLANGE SHOP SPLICES.

TENSION ON THE AASHTO M164 BOLTS SHALL BE CALIBRATED USING DIRECT TENSION INDICATOR WASHERS. FOR DIRECT TENSION INDICATOR WASHERS, SEE SPECIAL PROVISIONS.

BEARING STIFFENER MAY REQUIRE COPING IF WIDER THAN BOTTOM FLANGE.

AT THE CONTRACTOR'S OPTION, THE DIAPHRAGM WITH THE WELDED GUSSET PLATES MAY BE USED IN LIEU OF THE DIAPHRAGM WITH BOLTED ANGLES AT NO ADDITIONAL COST TO THE DEPARTMENT.

FOR SHIPPING STEEL STRUCTURAL MEMBERS, SEE SPECIAL PROVISIONS.

FOR HIGH STRENGTH BOLTS, SEE SPECIAL PROVISIONS.

STUDS ON GIRDERS MAY BE SHIFTED UP TO 25mm IF NECESSARY TO CLEAR FLANGE SPLICE PLATE.

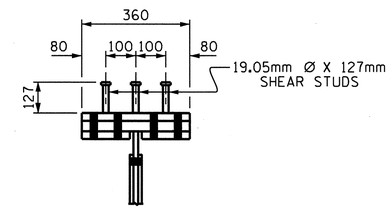

SHEAR STUD DETAIL FOR TOP FLANGE SPLICE PLATE

SHEAR STUDS ARE TO BE SHOP WELDED ON TOP OF PLATE BEFORE FIELD ASSEMBLY.

PROJECT NO. U-2519DA
CUMBERLAND COUNTY
STATION: 41+33.963-RP1BD-

SHEET 3 OF 3

STATE OF NORTH CAROLINA
DEPARTMENT OF TRANSPORTATION
RALEIGH

SUPERSTRUCTURE

STRUCTURAL STEEL DETAILS

NORTH CAROLINA PROFESSIONAL SEAL 14001 ENGINEER BRUCE CHARLES HUNT
2/14/16

REVISIONS						SHEET NO.
NO.	BY:	DATE:	NO.	BY:	DATE:	SS-8
1			3			TOTAL SHEETS
2			4			17

DRAWN BY : J.P. ADAMS DATE : 3/19/08
CHECKED BY : H.A. LOCKLEAR DATE : 5/2/08

16-FEB-2011 11:32
R:\Structures\hunt\Str. #14-Revised\U-2519DA_sd_SS_14.dgn
chunt

DEAD LOAD DEFLECTION TABLE FOR GIRDERS

	SPAN A																				
	GIRDERS 1 & 6																				
TWENTIETH POINTS	0	.05	.10	.15	.20	.25	.30	.35	.40	.45	.50	.55	.60	.65	.70	.75	.80	.85	.90	.95	0
DEFLECTION DUE TO WEIGHT OF GIRDER	0.000	-0.006	-0.012	-0.018	-0.023	-0.027	-0.030	-0.033	-0.036	-0.037	-0.037	-0.037	-0.036	-0.033	-0.030	-0.027	-0.023	-0.018	-0.012	-0.006	0.000
DEFLECTION DUE TO WEIGHT OF SLAB *	0.000	-0.015	-0.036	-0.055	-0.072	-0.087	-0.100	-0.110	-0.117	-0.122	-0.123	-0.122	-0.117	-0.110	-0.100	-0.087	-0.072	-0.055	-0.036	-0.015	0.000
DEFLECTION DUE TO WEIGHT OF BARRIER RAIL	0.000	-0.001	-0.003	-0.004	-0.005	-0.006	-0.007	-0.008	-0.008	-0.009	-0.009	-0.009	-0.008	-0.008	-0.007	-0.006	-0.005	-0.004	-0.003	-0.001	0.000
TOTAL DEAD LOAD DEFLECTION	0.000	-0.022	-0.051	-0.077	-0.100	-0.120	-0.137	-0.151	-0.161	-0.168	-0.169	-0.168	-0.161	-0.151	-0.137	-0.120	-0.100	-0.077	-0.051	-0.022	0.000
VERTICAL CURVE ORDINATE	0.000	0.006	0.012	0.017	0.021	0.025	0.028	0.030	0.032	0.033	0.033	0.033	0.032	0.030	0.028	0.025	0.021	0.017	0.012	0.006	0.000
REQUIRED CAMBER	0	28	63	94	121	145	165	181	193	201	202	201	193	181	165	145	121	94	63	28	0

* INCLUDES SLAB, BUILDUPS & STAY-IN-PLACE FORMS.
ALL VALUES ARE SHOWN IN METERS, EXCEPT "FINAL CAMBER" WHICH IS SHOWN IN MILLIMETERS.

SIGN CONVENTION FOR DEAD LOAD DEFLECTION TABLES + 0 -

DEAD LOAD DEFLECTION TABLE FOR GIRDERS

	SPAN A																				
	GIRDERS 2 & 5																				
TWENTIETH POINTS	0	.05	.10	.15	.20	.25	.30	.35	.40	.45	.50	.55	.60	.65	.70	.75	.80	.85	.90	.95	0
DEFLECTION DUE TO WEIGHT OF GIRDER	0.000	-0.007	-0.013	-0.019	-0.025	-0.029	-0.033	-0.036	-0.039	-0.040	-0.041	-0.040	-0.039	-0.036	-0.033	-0.029	-0.025	-0.019	-0.013	-0.007	0.000
DEFLECTION DUE TO WEIGHT OF SLAB *	0.000	-0.015	-0.036	-0.056	-0.073	-0.088	-0.101	-0.111	-0.119	-0.123	-0.125	-0.123	-0.119	-0.111	-0.101	-0.088	-0.073	-0.056	-0.036	-0.015	0.000
DEFLECTION DUE TO WEIGHT OF BARRIER RAIL	0.000	-0.001	-0.003	-0.004	-0.005	-0.006	-0.007	-0.008	-0.008	-0.008	-0.009	-0.008	-0.008	-0.008	-0.007	-0.006	-0.005	-0.004	-0.003	-0.001	0.000
TOTAL DEAD LOAD DEFLECTION	0.000	-0.023	-0.052	-0.079	-0.103	-0.123	-0.141	-0.155	-0.166	-0.171	-0.175	-0.171	-0.166	-0.155	-0.141	-0.123	-0.103	-0.079	-0.052	-0.023	0.000
VERTICAL CURVE ORDINATE	0.000	0.006	0.012	0.017	0.021	0.025	0.028	0.030	0.032	0.033	0.033	0.033	0.032	0.030	0.028	0.025	0.021	0.017	0.012	0.006	0.000
REQUIRED CAMBER	0	29	64	96	124	148	169	185	198	204	208	204	198	185	169	148	124	96	64	29	0

* INCLUDES SLAB, BUILDUPS & STAY-IN-PLACE FORMS.
ALL VALUES ARE SHOWN IN METERS, EXCEPT "FINAL CAMBER" WHICH IS SHOWN IN MILLIMETERS.

SIGN CONVENTION FOR DEAD LOAD DEFLECTION TABLES + 0 -

DEAD LOAD DEFLECTION TABLE FOR GIRDERS

	SPAN A																				
	GIRDERS 3 & 4																				
TWENTIETH POINTS	0	.05	.10	.15	.20	.25	.30	.35	.40	.45	.50	.55	.60	.65	.70	.75	.80	.85	.90	.95	0
DEFLECTION DUE TO WEIGHT OF GIRDER	0.000	-0.007	-0.013	-0.019	-0.025	-0.029	-0.033	-0.036	-0.039	-0.040	-0.041	-0.040	-0.039	-0.036	-0.033	-0.029	-0.025	-0.019	-0.013	-0.007	0.000
DEFLECTION DUE TO WEIGHT OF SLAB *	0.000	-0.016	-0.037	-0.056	-0.074	-0.089	-0.102	-0.112	-0.120	-0.125	-0.126	-0.125	-0.120	-0.112	-0.102	-0.089	-0.074	-0.056	-0.037	-0.016	0.000
DEFLECTION DUE TO WEIGHT OF BARRIER RAIL	0.000	-0.001	-0.003	-0.004	-0.005	-0.006	-0.007	-0.008	-0.008	-0.008	-0.009	-0.008	-0.008	-0.008	-0.007	-0.006	-0.005	-0.004	-0.003	-0.001	0.000
TOTAL DEAD LOAD DEFLECTION	0.000	-0.024	-0.053	-0.079	-0.104	-0.124	-0.142	-0.156	-0.167	-0.173	-0.176	-0.173	-0.167	-0.156	-0.142	-0.124	-0.104	-0.079	-0.053	-0.024	0.000
VERTICAL CURVE ORDINATE	0.000	0.006	0.012	0.017	0.021	0.025	0.028	0.030	0.032	0.033	0.033	0.033	0.032	0.030	0.028	0.025	0.021	0.017	0.012	0.006	0.000
REQUIRED CAMBER	0	30	65	96	125	149	170	186	199	206	209	206	199	186	170	149	125	96	65	30	0

* INCLUDES SLAB, BUILDUPS & STAY-IN-PLACE FORMS.
ALL VALUES ARE SHOWN IN METERS, EXCEPT "FINAL CAMBER" WHICH IS SHOWN IN MILLIMETERS.

SIGN CONVENTION FOR DEAD LOAD DEFLECTION TABLES + 0 -

PROJECT NO. U-2519DA
CUMBERLAND COUNTY
STATION: 41+33.963-RP1BD-

STATE OF NORTH CAROLINA
DEPARTMENT OF TRANSPORTATION
RALEIGH

SUPERSTRUCTURE

DEAD LOAD DEFLECTIONS

NORTH CAROLINA PROFESSIONAL SEAL 19091 ENGINEER BUCKY CHARLES HUNT
2/14/11

REVISIONS						SHEET NO.
NO.	BY:	DATE:	NO.	BY:	DATE:	SS-9
1			3			TOTAL SHEETS
2			4			17

DRAWN BY : J.P. ADAMS DATE : 4/3/08
CHECKED BY : H.A. LOCKLEAR DATE : 5/2/08

08-FEB-2011 15:26
R:\Structures\hunt\Str. #14-Revised\U-2519E_sd_SS_14.dgn
klayne

THE CLOSURE PLATE, GROUT PIPE AND STANDARD PIPE FOR THE EXPANSION ASSEMBLY NEED NOT BE GALVANIZED.

THE CONTRACTOR'S ATTENTION IS CALLED TO THE FOLLOWING PROCEDURES TO ACCOMODATE GIRDER TRANSLATION AND END ROTATION:

1. ONCE THE DECK HAS CURED, THE GIRDERS SHALL BE JACKED THEN THE ANCHOR BOLTS AND ELASTOMERIC BEARING SLOTS SHALL BE CENTERED AS NEARLY AS PRACTICAL ABOUT THE BEARING STIFFENER. THIS OPERATION SHALL BE PERFORMED AT APPROXIMATELY 16° C.
2. AFTER CENTERING THE ELASTOMERIC BEARING SLOTS AND ANCHOR BOLTS, THE ANCHOR BOLTS SHALL BE GROUTED.

   THE CONTRACTOR MAY PROPOSE ALTERNATE METHODS, PROVIDED DETAILS ARE SUBMITTED TO THE ENGINEER FOR REVIEW AND APPROVAL.

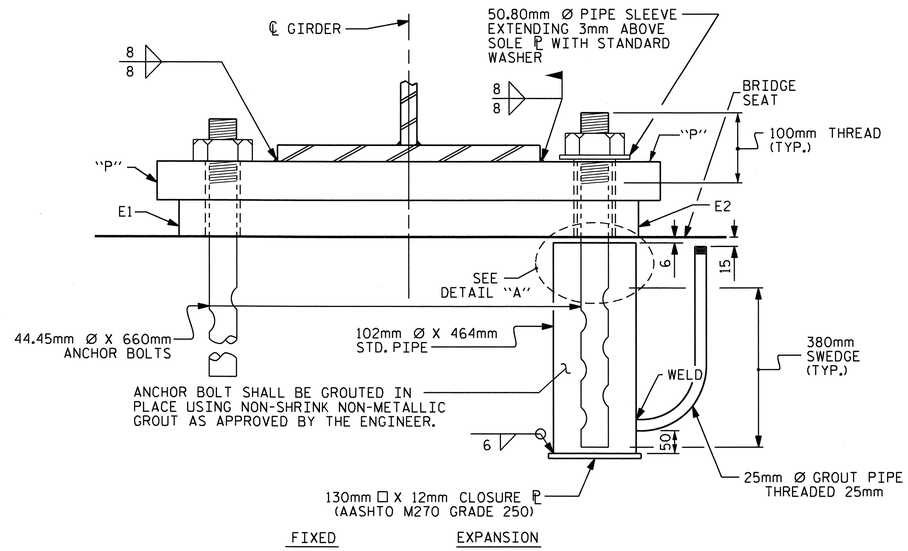

END VIEW

NOTES

AT ALL FIXED POINTS OF SUPPORT, NUTS FOR ANCHOR BOLTS ARE TO BE TIGHTENED FINGER TIGHT AND THEN BACKED OFF ½ TURN. THE THREAD OF THE NUT AND BOLT SHALL THEN BE BURRED WITH A SHARP POINTED TOOL.

THE 51mm Ø PIPE SLEEVE SHALL BE CUT FROM SCHEDULE 40 PVC PLASTIC PIPE. THE PVC PLASTIC PIPE SHALL MEET THE REQUIREMENTS OF ASTM D1785.

THE PAYMENT FOR THE PIPE SLEEVES SHALL BE INCLUDED IN THE SEVERAL PAY ITEMS.

FOR PAINTED STRUCTURAL STEEL (EXCLUDING AASHTO M270 GRADE 345W), SOLE PLATES, ANCHOR BOLTS NUTS AND WASHERS SHALL BE GALVANIZED IN ACCORDANCE WITH THE STANDARD SPECIFICATIONS.

FOR AASHTO M270 GRADE 345W STRUCTURAL STEEL, SOLE PLATE SHALL BE AASHTO M270 GRADE 345W AND SHALL NOT BE GALVANIZED, ANCHOR BOLTS AND NUTS SHALL BE GALVANIZED IN ACCORDANCE WITH THE STANDARD SPECIFICATIONS.

ANCHOR BOLTS SHALL MEET THE REQUIREMENTS OF ASTM A449. NUTS SHALL MEET THE REQUIREMENTS OF AASHTO M291M-12 OR AASHTO M292M-2H. WASHERS SHALL MEET THE REQUIREMENTS OF AASHTO M293M. SHOP DRAWINGS ARE NOT REQUIRED FOR ANCHOR BOLTS, NUTS AND WASHERS. SHOP INSPECTION IS REQUIRED.

WHEN FIELD WELDING THE SOLE PLATE TO THE GIRDER FLANGE, USE TEMPERATURE INDICATING WAX PENS, OR OTHER SUITABLE MEANS, TO ENSURE THAT THE TEMPERATURE OF THE SOLE PLATE DOES NOT EXCEED 149°C. TEMPERATURES ABOVE THIS MAY DAMAGE THE ELASTOMER.

ALL SURFACES OF BEARING PLATES SHALL BE SMOOTH AND STRAIGHT.

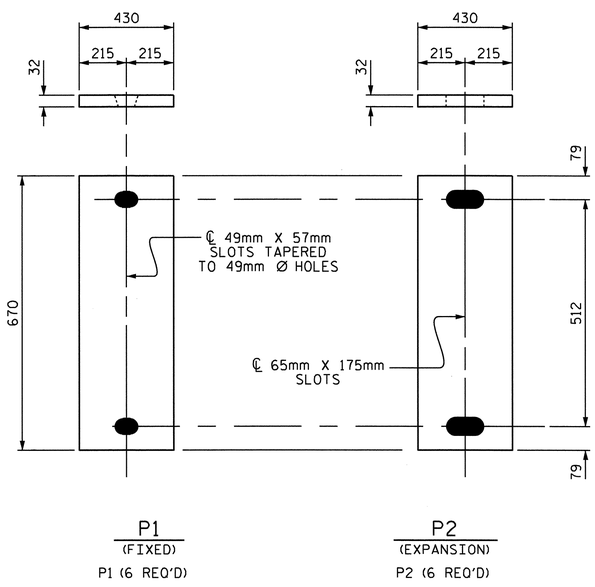

SOLE PLATE DETAILS ("P")

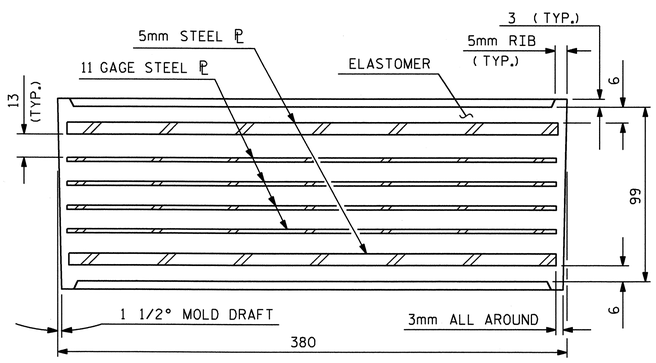

TYPICAL SECTION OF ELASTOMERIC BEARING

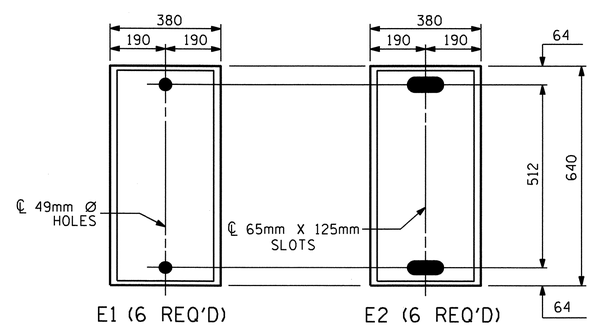

PLAN VIEW OF ELASTOMERIC BEARING

TYPE VI

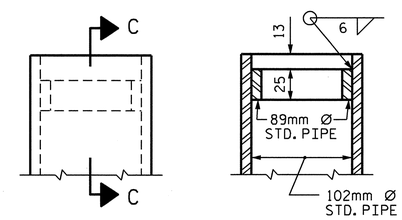

SECTION C-C

DETAIL "A"

— LOAD RATING —	
	MAX.D.L.+ L.L.
TYPE VI	1134 kN

PROJECT NO. U-2519DA
CUMBERLAND COUNTY
STATION: 41+33.963-RP1BD-

STATE OF NORTH CAROLINA
DEPARTMENT OF TRANSPORTATION
RALEIGH

STANDARD
ELASTOMERIC BEARING DETAILS
(STEEL SUPERSTRUCTURE)

NORTH CAROLINA PROFESSIONAL SEAL 14094 ENGINEER LUCY CHARLES HUNT
2/14/4

REVISIONS						SHEET NO.
NO.	BY:	DATE:	NO.	BY:	DATE:	SS-10
1			3			TOTAL SHEETS
2			4			17

ASSEMBLED BY : J.P. ADAMS		DATE : 3/18/08
CHECKED BY : H.A. LOCKLEAR		DATE : 5/2/08
DRAWN BY : EEM 10/95	REV. 8/16/99	MAB/LES
CHECKED BY : PEK 10/95	REV. 10/17/00	RWW/LES
	REV. 5/1/06	TLA/GM

08-FEB-2011 15:26
R:\Structures\hunt\Str. #14-Revised\U-2519E_sd_BG_14.dgn
kloyne

STD. NO. EB2SM

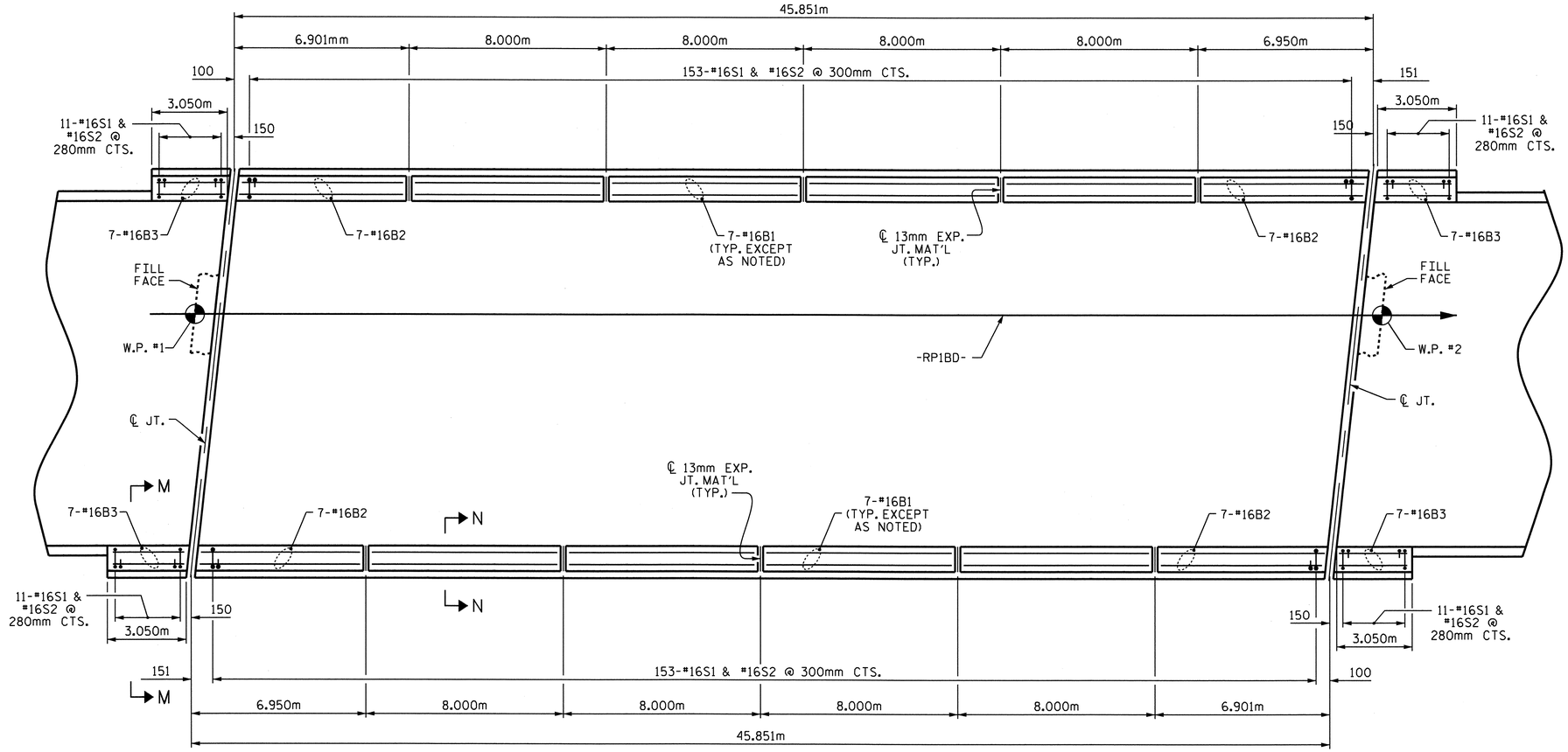

PLAN

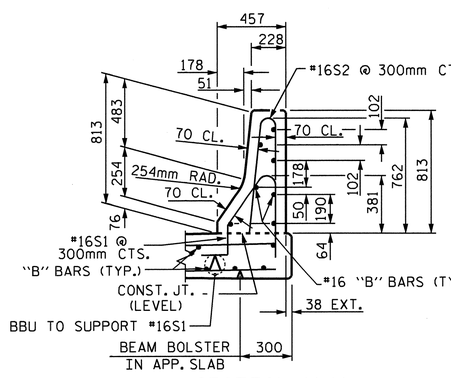

SECTION M-M

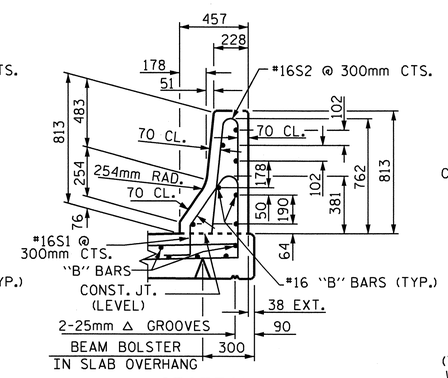

SECTION N-N

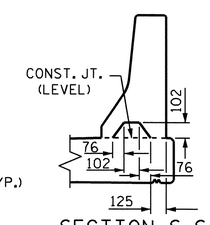

SECTION S-S

AT DAM IN OPEN JOINT
(THIS IS TO BE USED ONLY WHEN SLIP FORM IS USED)

℄ 13mm EXP.JT.MAT'L HELD IN PLACE WITH GALVANIZED NAILS. (NOTE: OMIT EXP. JT. MAT'L. WHEN SLIP FORM IS USED.)

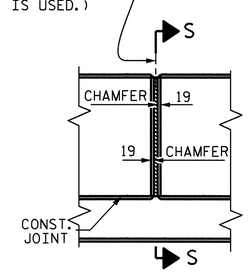

ELEVATION AT EXPANSION JOINTS

BARRIER RAIL DETAILS

NOTES

THE BARRIER RAIL SHALL NOT BE CAST UNTIL ALL SLAB CONCRETE HAS BEEN CAST AND HAS REACHED A MINIMUM COMPRESSIVE STRENGTH OF 20.7 MPa.

ALL REINFORCING STEEL IN BARRIER RAILS SHALL BE EPOXY COATED.

VERTICAL GROOVED CONTRACTION JOINTS, 12mm IN DEPTH, SHALL BE TOOLED IN ALL EXPOSED FACES OF THE BARRIER RAIL AND IN ACCORDANCE WITH ARTICLE 825-10(B) OF THE STANDARD SPECIFICATIONS. THE CONTRACTION JOINT SHALL BE LOCATED AT EACH THIRD POINT BETWEEN BARRIER RAIL EXPANSION JOINTS. ONLY ONE CONTRACTION JOINT IS REQUIRED AT MIDPOINT OF BARRIER RAIL SEGMENTS LESS THAN 6.100m IN LENGTH AND NO CONTRACTION JOINTS ARE REQUIRED FOR THOSE SEGMENTS LESS THAN 3.500m IN LENGTH.

BAR TYPES

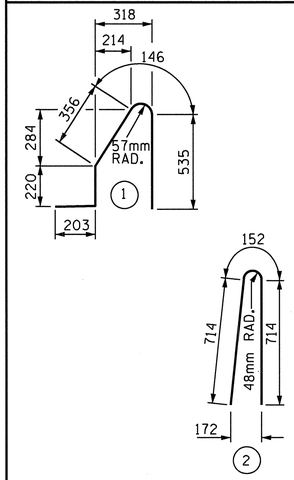

ALL BAR DIMENSIONS ARE OUT TO OUT

BILL OF MATERIAL

FOR CONCRETE BARRIER RAIL ONLY

BAR	NO.	SIZE	TYPE	LENGTH	WEIGHT
* S1	350	#16	1	1460	793
* S2	350	#16	2	1580	858
* B1	56	#16	STR	7880	685
* B2	28	#16	STR	6780	295
* B3	28	#16	STR	2960	129

* EPOXY COATED REINFORCING STEEL	2760 kg
CLASS AA CONCRETE	26.1 CU. METER
CONCRETE BARRIER RAIL	103.90 METERS

PROJECT NO. U-2519DA
CUMBERLAND COUNTY
STATION: 41+33.963-RP1BD-

STATE OF NORTH CAROLINA
DEPARTMENT OF TRANSPORTATION
RALEIGH

STANDARD

CONCRETE BARRIER RAIL

NORTH CAROLINA PROFESSIONAL SEAL ENGINEER BRUCE CHARLES HUNT
2/14/11

REVISIONS							SHEET NO.
NO.	BY:	DATE:	NO.	BY:	DATE:		SS-11
1			3				TOTAL SHEETS
2			4				17

ASSEMBLED BY : J.P. ADAMS	DATE : 4/17/08
CHECKED BY : KDL/HAL	DATE : 2/2/11
DRAWN BY : ARB 5/87	REV. 10/17/00 RWW/LES
CHECKED BY : SJD 9/87	REV. 5/7/03R RWW/JTE
	REV. 5/1/06 TLA/GM

09-FEB-2011 10:03
R:\Structures\hunt\Str. #14-Revised\U-2519DA_sd_BR_14.dgn
wkfischer

STD. No. CBR1SM

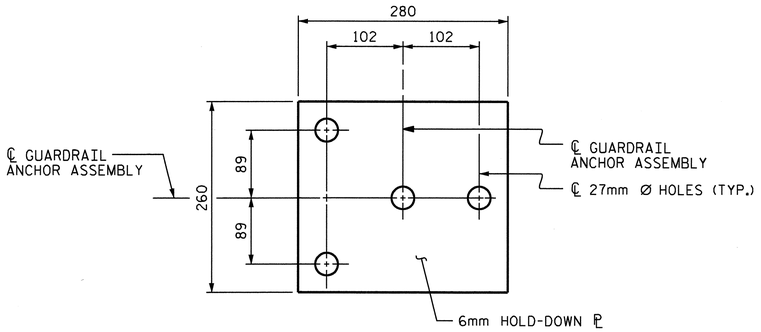

PLAN

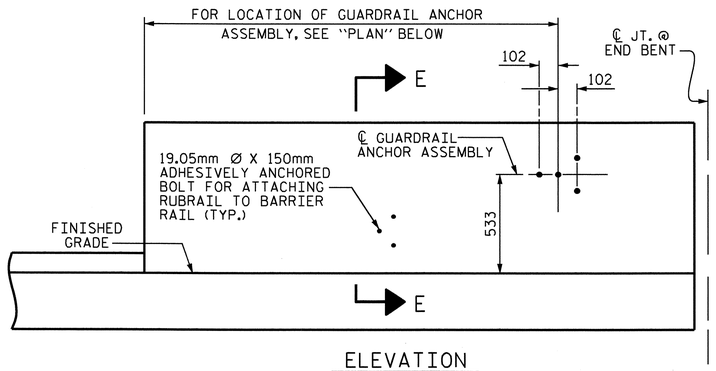

ELEVATION

FOR LOCATION OF RUBRAIL, SEE ROADWAY STD. 862.03

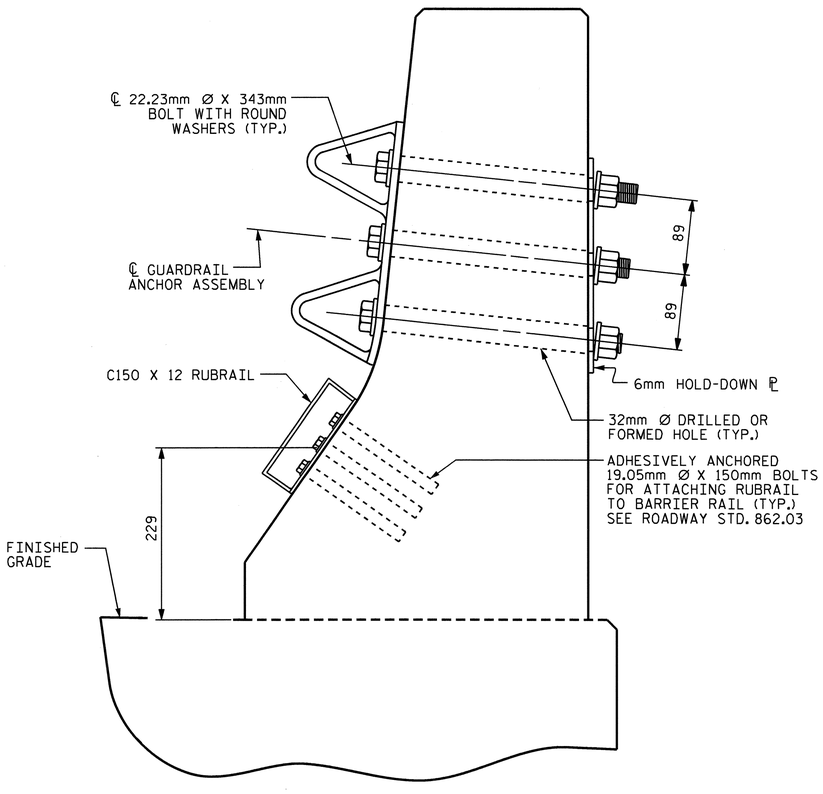

SECTION E-E

GUARDRAIL ANCHOR ASSEMBLY DETAILS

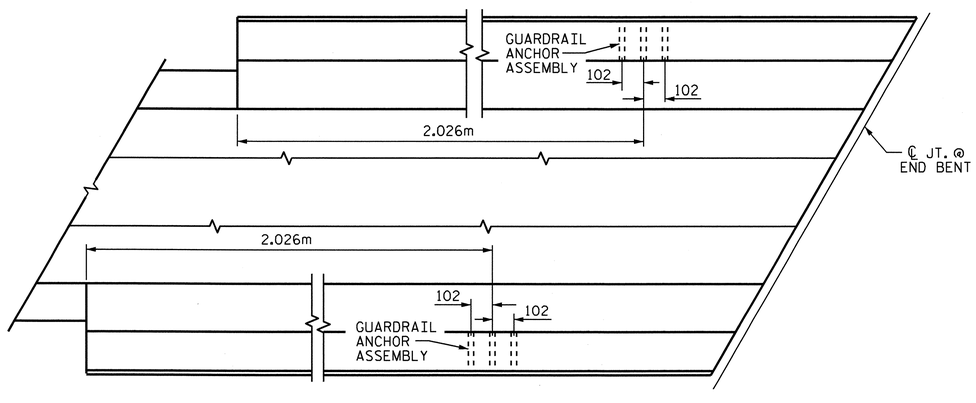

LOCATION OF ANCHORS FOR GUARDRAIL

END BENT #1 SHOWN, END BENT #2 SIMILAR.

NOTES

THE GUARDRAIL ANCHOR ASSEMBLY SHALL CONSIST OF A 6mm HOLD DOWN PLATE AND 4 - 22.23mm Ø BOLTS WITH NUTS AND WASHERS, RUBRAIL, AND ADHESIVELY ANCHORED BOLTS.

THE HOLD-DOWN PLATE SHALL CONFORM TO AASHTO M270 GRADE 36. AFTER FABRICATION, THE HOLD-DOWN PLATE SHALL BE HOT-DIP GALVANIZED IN ACCORDANCE WITH AASHTO M111.

BOLTS SHALL CONFORM TO THE REQUIREMENTS OF ASTM A307 AND NUTS SHALL CONFORM TO THE REQUIREMENTS OF AASHTO M291. BOLTS, NUTS AND WASHERS SHALL BE GALVANIZED. (AT THE CONTRACTOR'S OPTION, STAINLESS STEEL BOLTS, NUTS AND WASHERS MAY BE USED AS AN ALTERNATE FOR THE 22.23mm Ø GALVANIZED BOLTS, NUTS AND WASHERS. THEY SHALL CONFORM TO OR EXCEED THE MECHANICAL REQUIREMENTS OF ASTM A307. THE USE OF THIS ALTERNATE SHALL BE APPROVED BY THE ENGINEER.)

THE GUARDRAIL ANCHOR ASSEMBLY IS REQUIRED AT ALL POINTS WHERE APPROACH GUARDRAIL IS TO BE ATTACHED TO THE END OF BARRIER RAIL. FOR POINTS OF ATTACHMENT, SEE SKETCH.

AFTER INSTALLATION, THE EXPOSED THREAD OF THE BOLT SHALL BE BURRED WITH A SHARP POINTED TOOL.

THE COST OF THE GUARDRAIL ANCHOR ASSEMBLY SHALL BE INCLUDED IN THE UNIT CONTRACT PRICE BID FOR CONCRETE BARRIER RAIL.

THE 32mm Ø HOLES SHALL BE FORMED OR DRILLED WITH A CORE BIT. IMPACT TOOLS WILL NOT BE PERMITTED. ANY CONCRETE DAMAGED BY THIS WORK SHALL BE REPAIRED TO THE SATISFACTION OF THE ENGINEER.

THE C150 X 12 RUBRAIL IS TO BE ADHESIVELY ANCHORED TO THE RAIL USING THREE 19.05mm Ø X 150mm BOLTS WITH WASHERS. LEVEL ONE FIELD TESTING IS REQUIRED, AND THE YIELD LOAD OF THE 19.05mm Ø BOLTS IS 53.4kN. FOR ADHESIVELY ANCHORED ANCHOR BOLTS OR DOWELS, SEE SPECIAL PROVISIONS. SEE ROADWAY STANDARD 862.03 FOR DETAILS AND LOCATION OF THE RUBRAIL.

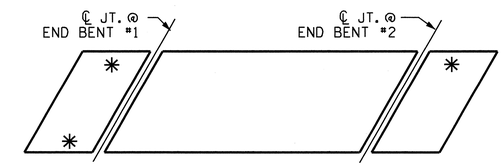

SKETCH SHOWING POINTS OF ATTACHMENTS

* DENOTES GUARDRAIL ANCHOR ASSEMBLY

PROJECT NO. U-2519DA
CUMBERLAND COUNTY
STATION: 41+33.963-RP1BD-

STATE OF NORTH CAROLINA
DEPARTMENT OF TRANSPORTATION
RALEIGH

STANDARD
GUARDRAIL ANCHORAGE FOR BARRIER RAIL

NORTH CAROLINA PROFESSIONAL SEAL 19091 ENGINEER BRICKY CHARLES HUNT
2/14/11

REVISIONS						SHEET NO.
NO.	BY:	DATE:	NO.	BY:	DATE:	SS-12
1			3			TOTAL SHEETS
2			4			17

STD. NO. GRA2

ASSEMBLED BY : J.P. ADAMS	DATE : 3/18/08
CHECKED BY : H.A. LOCKLEAR	DATE : 5/2/08
DRAWN BY : TLA 5/06	ADDED 5/1/06R KMM/GM
CHECKED BY : GM 5/06	

08-FEB-2011 15:27
R:\Structures\hunt\Str. #14-Revised\U-2519E_sd_BR_14.dgn
klayne

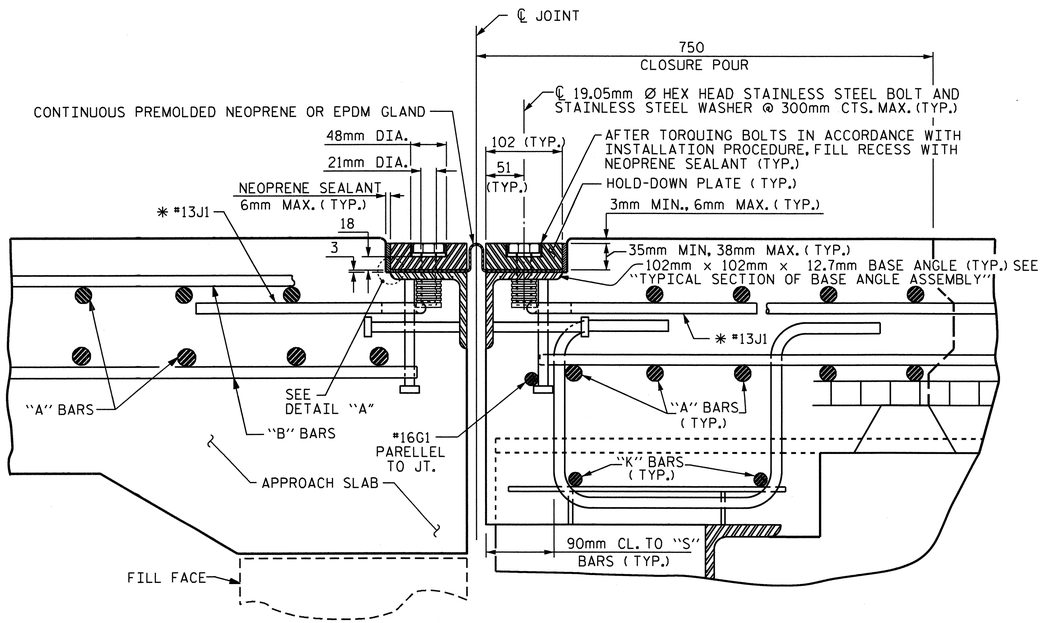

EXPANSION JOINT DETAILS

SECTION NORMAL TO JOINT
END BENT #1 SHOWN, END BENT #2 SIMILAR

✱ THE QUANTITY OF #13 J1 BARS ON THE BILL OF MATERIAL IS BASED ON 300mm CENTERS. J1 BARS SHALL BE PLACED AT EACH VERTICAL STUD ANCHOR BOLT. IN THE EVENT THAT THE NUMBER OF VERTICAL STUD ANCHOR BOLTS EXCEEDS THE NUMBER OF J1 BARS SPECIFIED, ADDITIONAL J1 BARS WILL NOT BE REQUIRED.

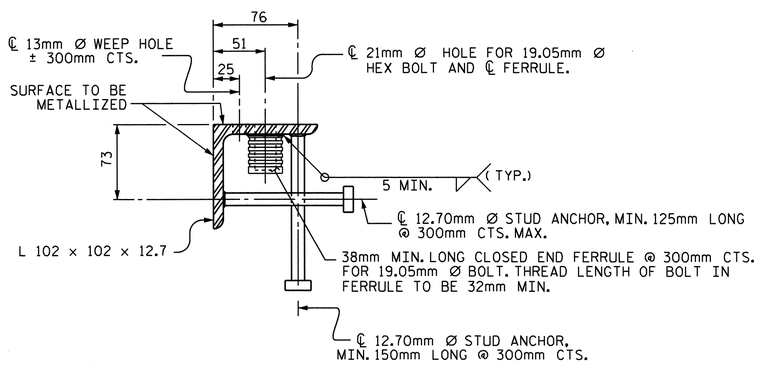

TYPICAL SECTION OF BASE ANGLE ASSEMBLY

MOVEMENT AND SETTING AT JOINT					
LOCATION	SKEW ANGLE	TOTAL MOVEMENT (ALONG ℄ RDWY)	PERPENDICULAR JOINT OPENING AT 7° C	PERPENDICULAR JOINT OPENING AT 16° C	PERPENDICULAR JOINT OPENING AT 32° C
END BENT #1	96°-13'-23"	39mm	50mm	44mm	33mm
END BENT #2	96°-13'-23"	0mm	44mm	44mm	44mm

INSTALLATION PROCEDURE

1. A TEMPLATE OR OTHER SUITABLE DEVICE SHALL BE USED TO FORM THE TOP OF THE EXPANSION JOINT SEAL BLOCKOUT TO THE PROPER DEPTH AND WIDTH. THE TEMPLATE SHALL BE 105mm TO 108mm WIDE AND OF SUCH THICKNESS AS TO PROVIDE FOR CORRECT FINAL ELEVATION OF TOP OF HOLD-DOWN PLATES. THE TEMPLATE SHALL BE ATTACHED TO THE BASE ANGLE ASSEMBLY WITH THE 19.05mm Ø HEX HEAD BOLTS PROVIDED FOR THE HOLD-DOWN PLATES. A 25mm Ø HOLE SHALL BE PROVIDED IN THE TEMPLATE CENTERED OVER EACH WEEP HOLE IN THE 102mm X 102mm X 12.7mm BASE ANGLE. OTHER METHODS OF INSURING DRAINAGE THROUGH WEEP HOLES MAY BE EMPLOYED SUBJECT TO ENGINEER'S APPROVAL.
2. AFTER THE CONCRETE HAS BEEN CAST ON BOTH SIDES OF THE JOINT, REMOVE THE TEMPLATE. THOROUGHLY CLEAN THE BOLT HOLES AND THE ANGLE PLATE. REMOVE ANY EXCESS CONCRETE THAT COMES OUT OF THE WEEP HOLES. ANY DAMAGED STEEL SHALL BE COATED WITH A MINIMUM THICKNESS OF 0.100mm (DRY) OF ZINC-RICH PAINT IN ACCORDANCE WITH THE STANDARD SPECIFICATIONS.
3. LAY THE GLAND ON THE BASE ANGLE AND FIELD MARK THE GLAND FOR THE BOLT HOLES. HOLES IN THE GLAND SHALL BE PUNCHED 22mm IN DIAMETER WITH A HAND PUNCH.
4. IN ORDER TO CHECK FOR PROPER ALIGNMENT, PLACE THE GLAND AND HOLD-DOWN PLATES ON THE BASE ANGLE. DO NOT APPLY NEOPRENE SEALANT. BOLT THE HOLD-DOWN PLATES TO THE BASE ANGLE BUT DO NOT TIGHTEN. THE ENGINEER SHALL INSPECT THE JOINT SEAL DEVICE FOR PROPER ALIGNMENT.
5. AFTER INSPECTION, REMOVE THE HOLD-DOWN PLATES AND GLAND. APPLY NEOPRENE SEALANT TO THE BASE ANGLE IN ACCORDANCE WITH THE "INSTALLATION SKETCH". PLACE GLAND AND HOLD-DOWN PLATES ON THE BASE ANGLE. BOLT THE HOLD-DOWN PLATES TO THE BASE ANGLE ASSEMBLY AND TORQUE THE BOLTS TO 119.3 N-m WITH A TORQUE WRENCH. THE TORQUE WRENCH SHALL BE CALIBRATED IN ACCORDANCE WITH SECTION 440-10 (D) OF THE STANDARD SPECIFICATIONS. CHECK THE TORQUE AFTER THREE (3) HOURS AND, IF NECESSARY, RETIGHTEN TO 119.3 N-m. A FINAL CHECK SHALL BE MADE AT SEVEN (7) DAYS. TORQUE SHALL NOT BE LESS THAN 108.5 N-m AFTER SEVEN (7) DAYS.
6. AFTER PROPER TORQUING, CLEAN THE BOLT HOLE RECESSES AND THE RECESS BETWEEN THE JOINT SEAL DEVICE AND CONCRETE, COMPLETELY FILL THESE RECESSES WITH NEOPRENE SEALANT.

GENERAL NOTES

1. FOR EXPANSION JOINT SEALS, SEE SPECIAL PROVISIONS.
2. ALL PLATES AND ANGLES SHALL CONFORM TO AASHTO M270 GRADE 250 STEEL OR APPROVED EQUAL. ALL HOLD-DOWN BOLTS SHALL CONFORM TO ASTM F593 ALLOY 304 STAINLESS STEEL. WASHERS SHALL CONFORM TO ASTM F844 EXCEPT THEY SHALL BE MADE FROM ALLOY 304 STAINLESS STEEL. ALL STUD ANCHORS SHALL CONFORM TO AASHTO M169, GRADES 1010 THRU 1020 OR APPROVED EQUAL. ALL CONCRETE INSERTS SHALL BE CLOSED END AND SHALL CONFORM TO AASHTO M169, GRADE 12L14. TENSILE CAPACITY SHALL BE 13.3 kN MIN.
3. A PREMOLDED CORRUGATED OR NON-CORRUGATED GLAND SHALL BE USED FOR JOINTS SKEWED BETWEEN 50° THRU 130° . FOR JOINTS SKEWED LESS THAN 50° OR MORE THAN 130° , ONLY A CORRUGATED GLAND SHALL BE USED.
4. CLOSED END FERRULES AND STUD ANCHORS SHALL BE SHOP WELDED AND ALL HOLES SHALL BE SHOP DRILLED AS SHOWN ON PLANS. STUD ANCHORS SHALL BE ELECTRIC ARC END WELDED WITH COMPLETE FUSION.
5. SURFACES COMING IN CONTACT WITH NEOPRENE SHALL BE GROUND SMOOTH PRIOR TO METALLIZING.
6. UPON COMPLETION OF SHOP FABRICATION, THE HOLD DOWN PLATE AND BASE ANGLE ASSEMBLY AS SHOWN IN THE "TYPICAL SECTION OF BASE ANGLE ASSEMBLY", SHALL BE METALLIZED. SEE SPECIAL PROVISION FOR THERMAL SPRAYED COATINGS (METALLIZATION).
7. BASE ANGLE ASSEMBLY SHALL BE CONTINUOUS FOR THE LENGTH OF THE JOINT. AT CROWN BREAKS, THE ENDS OF THE BASE ANGLE ASSEMBLY SHALL BE CUT PARALLEL TO THE BRIDGE CENTERLINE FOR SKEWS LESS THAN 80° AND GREATER THAN 100°. FINISHED WELD SHALL BE GROUND SMOOTH AND COATED WITH A MINIMUM THICKNESS OF 0.100mm (DRY) OF ZINC-RICH PAINT IN ACCORDANCE WITH THE STANDARD SPECIFICATIONS.
8. FIELD SPLICES OF HOLD-DOWN PLATES SHALL BE KEPT TO A MINIMUM. CONTRACTOR SHALL FURNISH DETAILED PLANS SHOWING PROPOSED SPLICE LOCATIONS FOR APPROVAL. HOLD-DOWN PLATES SHALL NOT EXCEED 6.1m LENGTHS UNLESS APPROVED BY THE ENGINEER.
9. NO ALTERNATE JOINT DETAILS SHALL BE PERMITTED IN LIEU OF THOSE SHOWN ON THESE PLANS.
10. THE CONTRACTOR MAY, AT HIS OPTION, USE ADHESIVELY ANCHORED ANCHOR BOLTS IN PLACE OF CONCRETE INSERTS FOR COVER PLATES. THE YIELD LOAD OF THE 19.05mm DIA. BOLT IS 44.5 kN. FIELD TESTING OF THE ADHESIVE BONDING SYSTEM IS NOT REQUIRED.

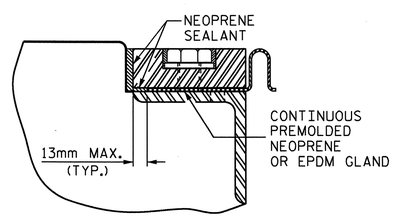

DETAIL "A"

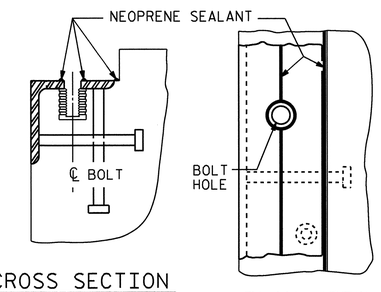

CROSS SECTION

PLAN VIEW

INSTALLATION SKETCH

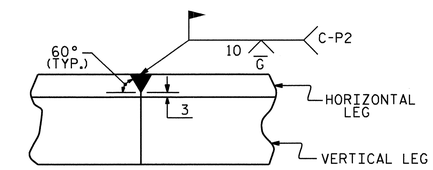

DETAIL - FIELD WELD SPLICE OF BASE ANGLE

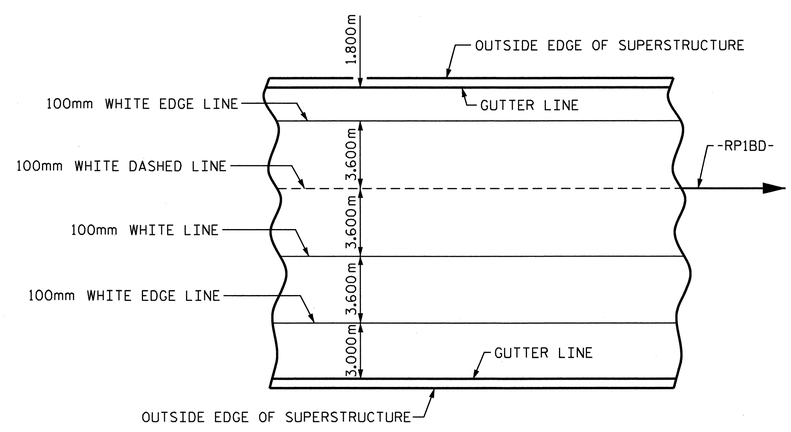

PAVEMENT MARKING ALIGNMENT

PROJECT NO. U-2519DA
CUMBERLAND COUNTY
STATION: 41+33.963-RP1BD-

SHEET 1 OF 2

STATE OF NORTH CAROLINA
DEPARTMENT OF TRANSPORTATION
RALEIGH

STANDARD

EXPANSION JOINT SEAL DETAILS

NORTH CAROLINA PROFESSIONAL SEAL 30878 ENGINEER W. KENIN FISCHER
2/11/11

REVISIONS						SHEET NO.
NO.	BY:	DATE:	NO.	BY:	DATE:	SS-13
1			3			TOTAL SHEETS
2			4			17

ASSEMBLED BY : J.P. ADAMS DATE : 1/13/11
CHECKED BY : W.K. FISCHER DATE : 1/11

DRAWN BY : REK 9/87
CHECKED BY : CRK 10/87

REV. 10/17/00 RWW/LES
REV. 5/7/03R RWW/JTE
REV. 5/1/06 TLA/GM

08-FEB-2011 15:26
R:\Structures\hunt\Str. #14-Revised\U-2519E_sd_JS_14.dgn
klayne

STD. NO. EJS1SM

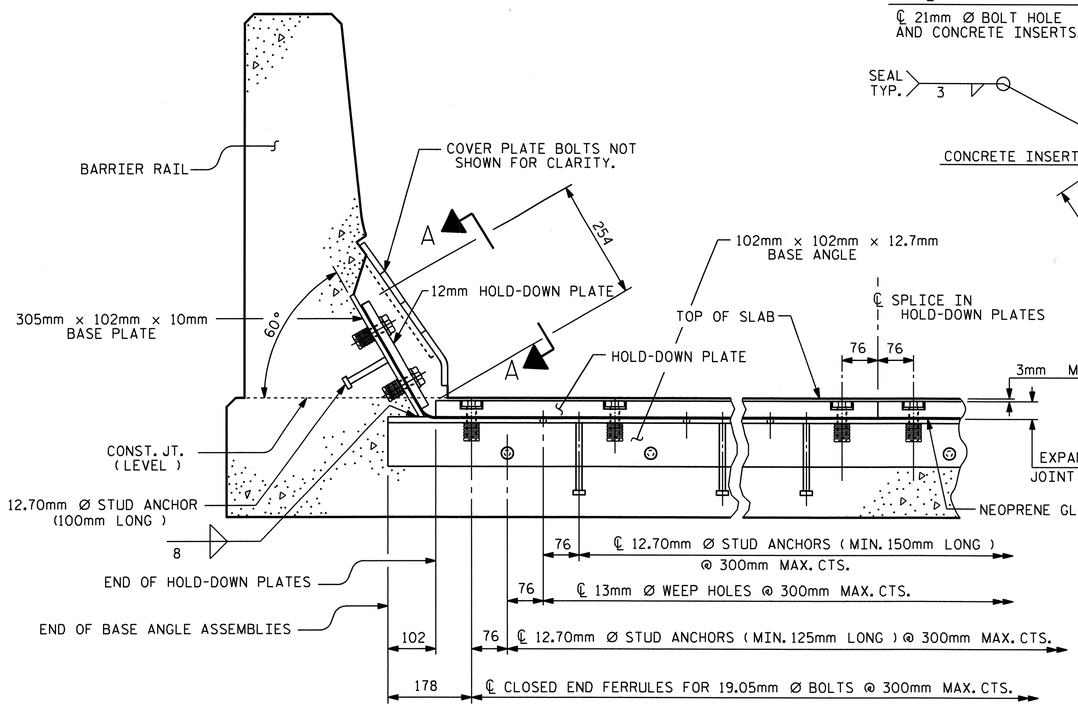

SECTION THRU RAIL NORMAL TO JOINT

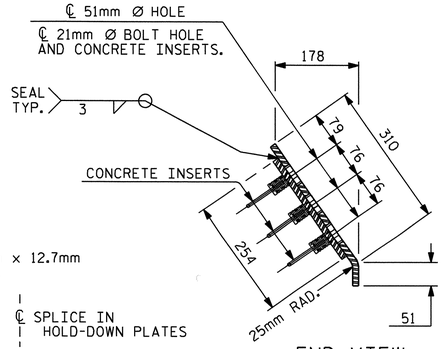

END VIEW

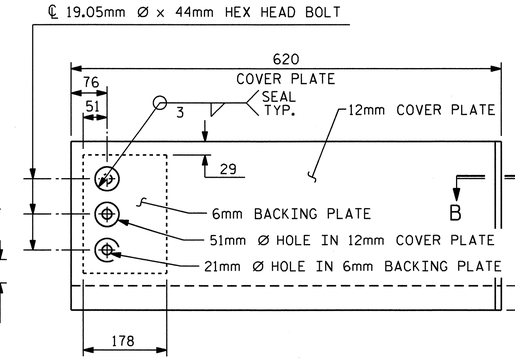

TYPE I - ELEVATION VIEW

BEND ALONG THIS LINE

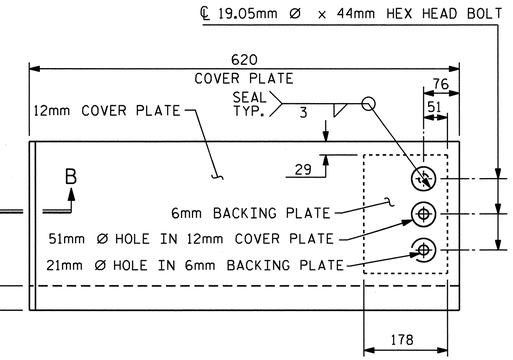

TYPE II - ELEVATION VIEW

COVER PLATE DETAILS

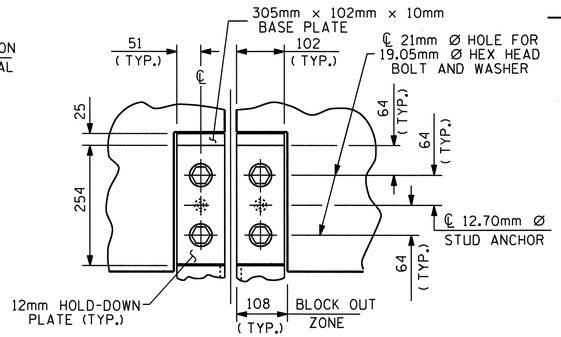

SECTION A-A

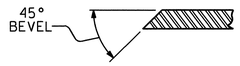

SECTION B-B

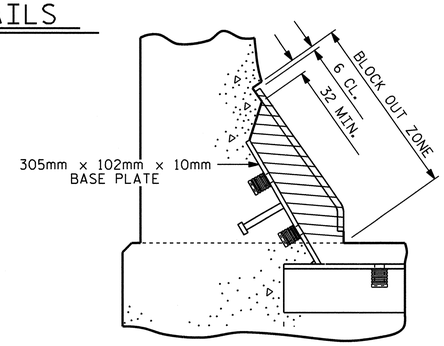

BLOCK OUT DETAIL

SEE "SECTION A-A" FOR OTHER DETAILS

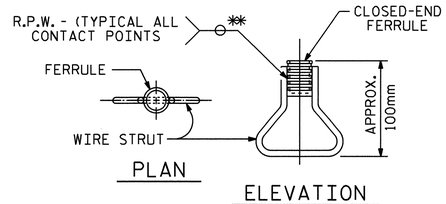

CONCRETE INSERT

** EACH WELDED ATTACHMENT OF WIRE TO FERRULE SHALL DEVELOP THE TENSILE STRENGTH OF THE WIRE.

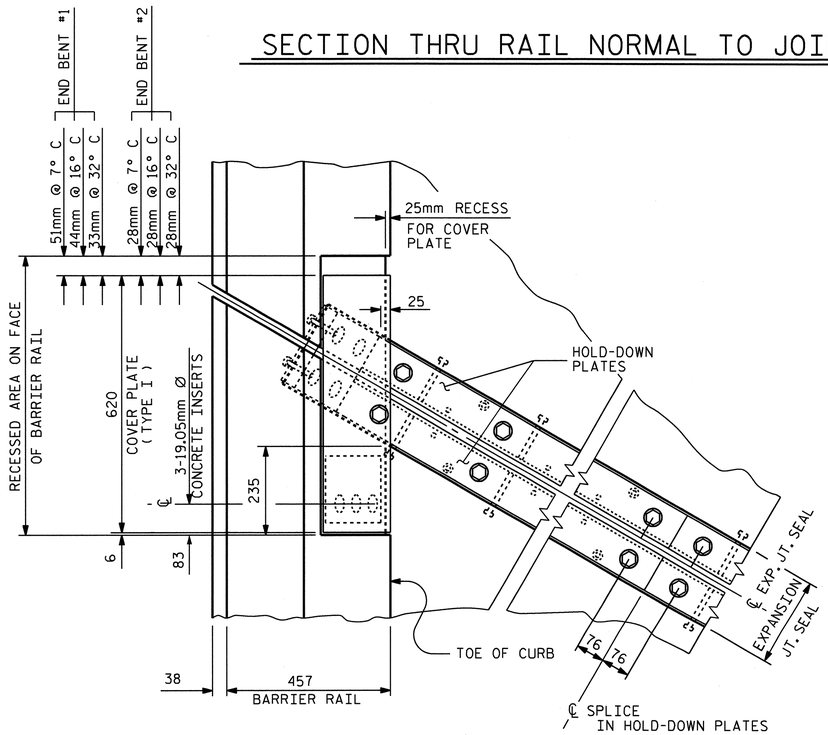

PLAN OF EXPANSION JOINT SEAL-LEFT SIDE

FLOW OF TRAFFIC

FLOW OF TRAFFIC

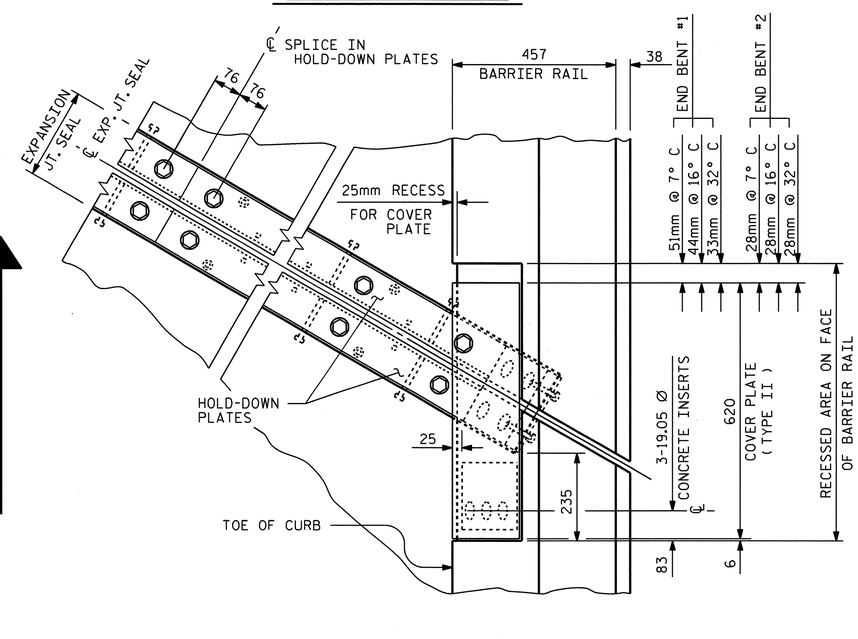

PLAN OF EXPANSION JOINT SEAL-RIGHT SIDE

PROJECT NO. U-2519DA

CUMBERLAND COUNTY

STATION: 41+33.963-RP1BD-

SHEET 2 OF 2

STATE OF NORTH CAROLINA
DEPARTMENT OF TRANSPORTATION
RALEIGH

STANDARD

EXPANSION JOINT SEAL DETAILS FOR BARRIER RAIL

NORTH CAROLINA PROFESSIONAL SEAL 30878 ENGINEER W. KEVIN FISCHER
2/11/11

ASSEMBLED BY : J.P. ADAMS	DATE : 1/13/11
CHECKED BY : W.K. FISCHER	DATE : 1/11
DRAWN BY : REK 9/87	REV. 7/17/98 RWW/LES
CHECKED BY : CRK 10/87	REV. 10/17/00 RWW/LES
	REV. 5/1/06 TLA/GM

REVISIONS						SHEET NO.
NO.	BY:	DATE:	NO.	BY:	DATE:	SS-14
1			3			TOTAL SHEETS
2			4			17

08-FEB-2011 15:26
R:\Structures\hunt\Str. #14-Revised\U-2519E_sd_JS_14.dgn
klayne

STD. NO. EJS2SM

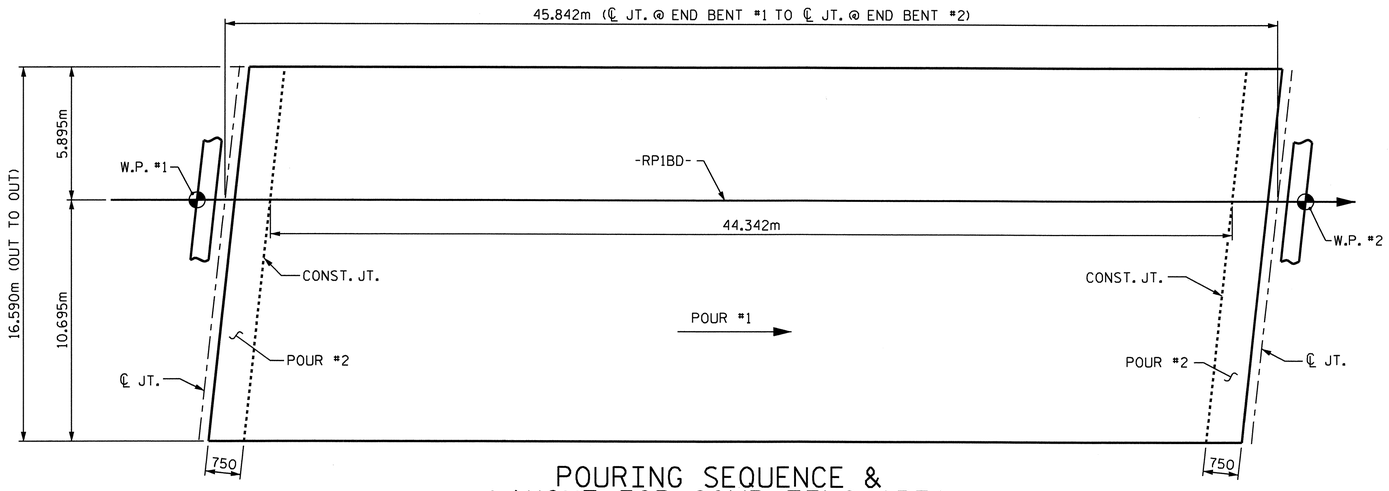

POURING SEQUENCE & LAYOUT FOR COMPUTING AREA OF REINFORCED CONCRETE DECK SLAB
(SQ. METER = 760.5)

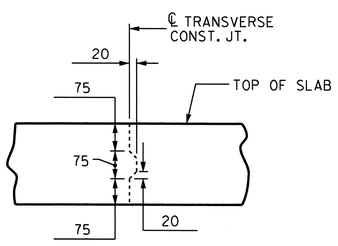

TRANSVERSE CONSTRUCTION JOINT DETAIL

NOTE: REINFORCING STEEL IN SLAB NOT SHOWN. LONGITUDINAL REINFORCING STEEL SHALL BE CONTINUOUS THRU JOINT

REINFORCING BAR SCHEDULE

BAR	NO.	SIZE	TYPE	LENGTH	WEIGHT
* A1	273	#16	STR	16480	6983
A2	273	#16	STR	16480	6983
* A101	2	#16	STR	15540	48
* A102	2	#16	STR	14080	44
* A103	2	#16	STR	12600	39
* A104	2	#16	STR	11140	35
* A105	2	#16	STR	9680	30
* A106	2	#16	STR	8200	25
* A107	2	#16	STR	6740	21
* A108	2	#16	STR	5260	16
* A109	2	#16	STR	3800	12
* A110	2	#16	STR	2340	7
* A111	2	#16	STR	860	3
A201	2	#16	STR	15540	48
A202	2	#16	STR	14080	44
A203	2	#16	STR	12600	39
A204	2	#16	STR	11140	35
A205	2	#16	STR	9680	30
A206	2	#16	STR	8200	25
A207	2	#16	STR	6740	21
A208	2	#16	STR	5260	16
A209	2	#16	STR	3800	12
A210	2	#16	STR	2340	7
A211	2	#16	STR	860	3
* B1	111	#16	STR	15720	2708
B2	189	#16	STR	15680	4599
* G1	2	#16	STR	16580	51
* J1	112	#13	4	440	49
* K1	8	#16	1	2260	28
* K2	16	#16	2	2420	60
* K3	20	#16	STR	2760	86
* S1	90	#13	3	1080	97

REINFORCING STEEL 11862 kg
* EPOXY COATED
REINFORCING STEEL 10342 kg

BAR TYPES

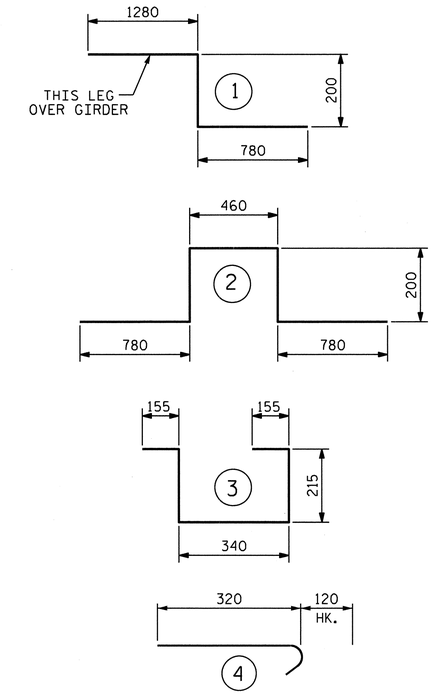

ALL BAR DIMENSIONS ARE OUT TO OUT

SUPERSTRUCTURE BILL OF MATERIAL

	CLASS AA CONCRETE	REINFORCING STEEL	EPOXY COATED REINFORCING STEEL
	(CU.METER)	(kg)	(kg)
SPAN A	201.2	11862	10342
TOTALS**	201.2	11862	10342

** QUANTITIES FOR BARRIER RAIL ARE NOT INCLUDED

GROOVING BRIDGE FLOORS

APPROACH SLABS	212.3	SQ.METER
BRIDGE DECK	667.8	SQ.METER
TOTAL	880.1	SQ.METER

SUPERSTRUCTURE REINFORCING STEEL LENGTHS ARE BASED ON THE FOLLOWING MINIMUM SPLICE LENGTHS

BAR SIZE	SUPERSTRUCTURE EXCEPT APPROACH SLABS, PARAPET, AND BARRIER RAIL		APPROACH SLABS		PARAPET AND BARRIER RAIL
	EPOXY COATED	UNCOATED	EPOXY COATED	UNCOATED	
#13	610	540	610	540	840
#16	770	660	770	660	1050
#19	920	790	1190	790	1330
#22	1580	1060			
#25	2080	1390			

PROJECT NO. U-2519DA
CUMBERLAND COUNTY
STATION: 41+33.963-RP1BD-

STATE OF NORTH CAROLINA
DEPARTMENT OF TRANSPORTATION
RALEIGH

STANDARD
SUPERSTRUCTURE BILL OF MATERIAL

NORTH CAROLINA PROFESSIONAL SEAL 4309 ENGINEER JACK CHARLES HUNT
2/14/11

REVISIONS						SHEET NO.
NO.	BY:	DATE:	NO.	BY:	DATE:	SS-15
1			3			TOTAL SHEETS
2			4			17

ASSEMBLED BY : J.P. ADAMS		DATE : 4/16/08	
CHECKED BY : H.A. LOCKLEAR		DATE : 5/2/08	
DRAWN BY : JMB 5/87	REV. 5/16/97	EEM/RGW	
CHECKED BY : SJD 9/87	REV. 5/1/06	TLA/GM	

08-FEB-2011 15:27
R:\Structures\hunt\Str. #14-Revised\U-2519E_sd_BM_14.dgn
klayne

STD. NO. BOM1SM

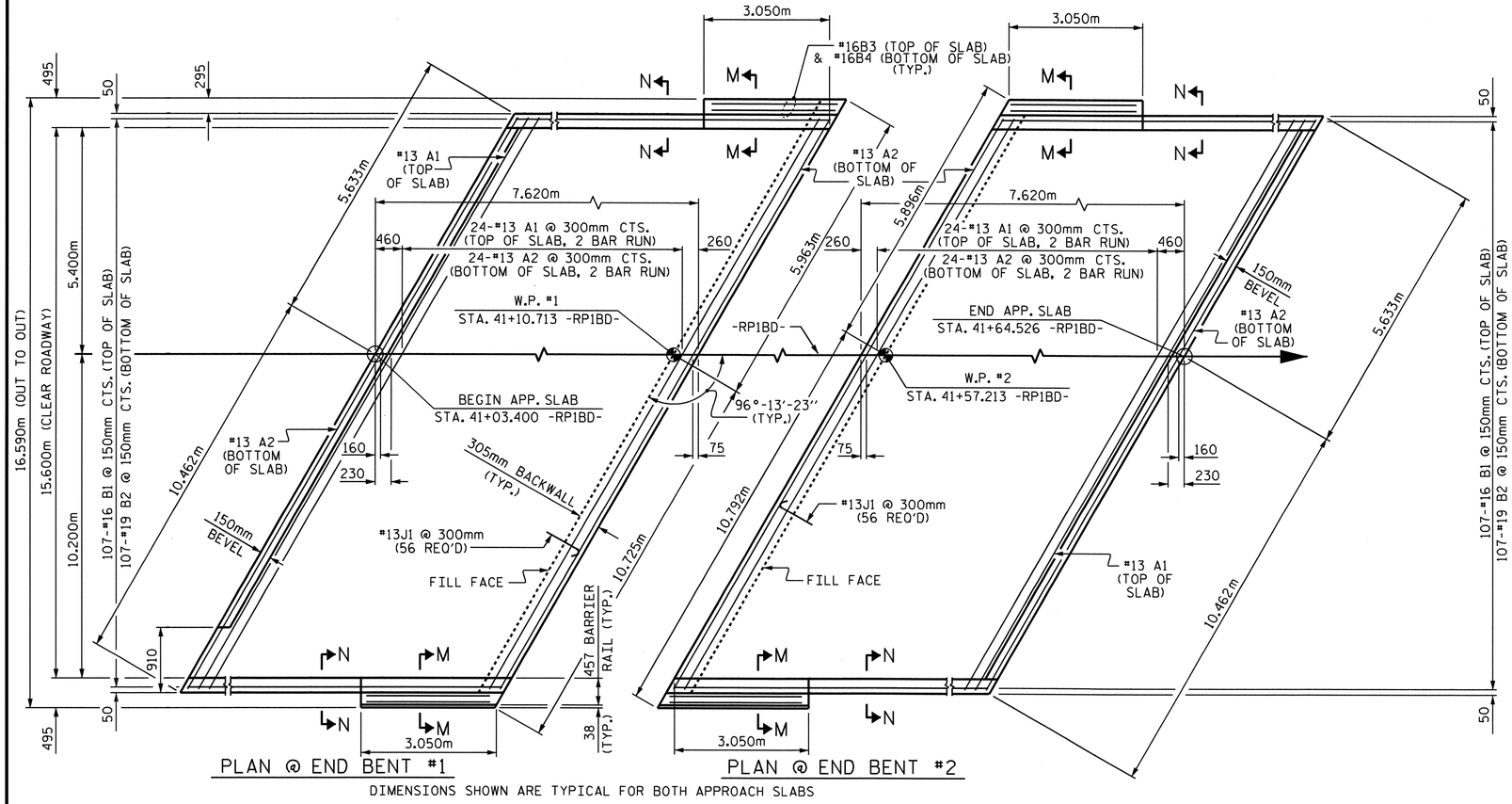

PLAN @ END BENT #1

PLAN @ END BENT #2

DIMENSIONS SHOWN ARE TYPICAL FOR BOTH APPROACH SLABS

NOTES

APPROACH SLAB SHALL NOT BE CONSTRUCTED PRIOR TO COMPLETION OF THE BRIDGE DECK.

AREA BETWEEN THE WINGWALL AND APPROACH SLAB SHALL BE GRADED TO DRAIN THE WATER AWAY FROM THE FILL FACE OF THE BRIDGE AND SHALL BE PAVED. SEE ROADWAY PLANS.

THE 150mm COMP. A.B.C. SHALL BE FLUSH WITH THE ROADWAY END OF THE APPROACH SLAB AND SHALL EXTEND 300mm OUTSIDE OF EACH EDGE OF THE APPROACH SLAB.

THE CONTRACTOR MAY USE 100mm TYPE B-25.0B ASPHALT CONCRETE COURSE IN LIEU OF 150mm COMP. A.B.C. IF THIS OPTION IS USED, THE BASE COURSE SHALL BE FLUSH WITH THE ROADWAY END OF THE APPROACH SLAB, AND THE WIDTH SHALL BE THE SAME AS THAT OF THE APPROACH SLAB.

THE CONTRACTOR MAY USE 125mm CLASS "A" CONCRETE BASE IN LIEU OF 150mm COMP. A.B.C. IF THIS OPTION IS USED, THE CONCRETE BASE SHALL BE FLUSH WITH THE ROADWAY END OF THE APPROACH SLAB, AND THE WIDTH SHALL BE THE SAME AS THAT OF THE APPROACH SLAB. THE CONCRETE SHALL BE FINISHED TO A SMOOTH SURFACE AND A LAYER OF 13.6 kg ROOFING FELT SHALL BE PLACED BETWEEN THE CONCRETE BASE AND THE APPROACH SLAB TO PREVENT BOND. THE APPROACH SLAB SHALL NOT BE CAST UNTIL THE CONCRETE BASE HAS REACHED AN AGE OF THREE CURING DAYS.

FOR EXPANSION JOINT SEALS, SEE SPECIAL PROVISIONS.

BILL OF MATERIAL

APPROACH SLAB AT EB #1

BAR	NO.	SIZE	TYPE	LENGTH	WEIGHT
* A1	50	#13	STR	8600	427
A2	52	#13	STR	8560	442
* B1	107	#16	STR	7220	1199
B2	107	#19	STR	7520	1798
* B3	8	#16	STR	2940	37
B4	8	#16	STR	2940	37
* J1	56	#13	1	440	24
REINFORCING STEEL				kg.	2277
* EPOXY COATED REINFORCING STEEL				kg.	1687
CLASS AA CONCRETE				C.M.	38.0

APPROACH SLAB AT EB #2

BAR	NO.	SIZE	TYPE	LENGTH	WEIGHT
* A1	50	#13	STR	8600	427
A2	52	#13	STR	8560	442
* B1	107	#16	STR	7220	1199
B2	107	#19	STR	7520	1798
* B3	8	#16	STR	2940	37
B4	8	#16	STR	2940	37
* J1	56	#13	1	440	24
REINFORCING STEEL				kg.	2277
* EPOXY COATED REINFORCING STEEL				kg.	1687
CLASS AA CONCRETE				C.M.	38.0

BAR TYPES

ALL BAR DIMENSIONS ARE OUT TO OUT

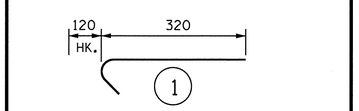

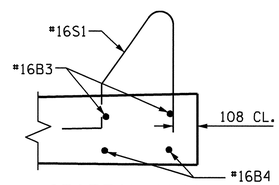

SECTION M-M

FOR BARRIER RAIL DETAILS & PAY ITEM, SEE "CONCRETE BARRIER RAIL" SHEET.

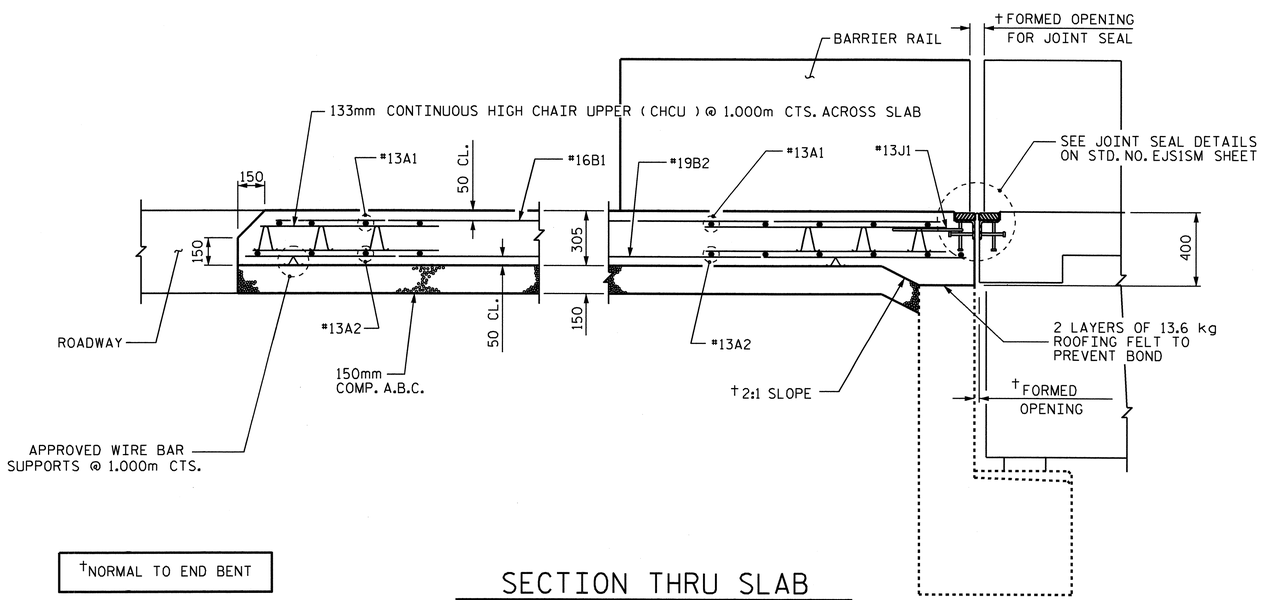

†NORMAL TO END BENT

SECTION THRU SLAB

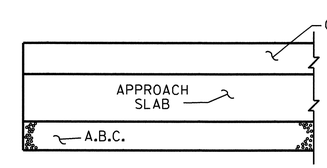

END OF CURB WITH SHOULDER BERM GUTTER

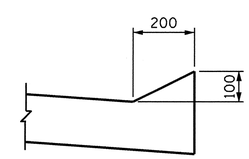

SECTION N-N

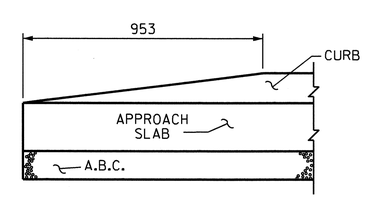

END OF CURB WITHOUT SHOULDER BERM GUTTER

CURB DETAILS

PROJECT NO. U-2519DA

CUMBERLAND COUNTY

STATION: 41+33.963-RP1BD-

SHEET 1 OF 2

STATE OF NORTH CAROLINA
DEPARTMENT OF TRANSPORTATION
RALEIGH

STANDARD

BRIDGE APPROACH SLAB FOR FLEXIBLE PAVEMENT

NORTH CAROLINA PROFESSIONAL SEAL 009 ENGINEER BUCK CHARLES HUNT 2/14/11

REVISIONS						SHEET NO.
NO.	BY:	DATE:	NO.	BY:	DATE:	SS-16
1			3			TOTAL SHEETS
2			4			17

STD. NO. BAS4SM

ASSEMBLED BY : J.P. ADAMS	DATE : 4/24/08
CHECKED BY : KDL/HAL	DATE : 2/2/11
DRAWN BY : FCJ 6/87	REV. 7/10/01 RWW/LES
CHECKED BY : EGA 6/87	REV. 5/7/03R RWW/JTE
	REV. 5/1/06R KMM/GM

09-FEB-2011 10:03
R:\Structures\hunt\Str. #14-Revised\U-2519DA_sd_AS_14.dgn
wkfischer

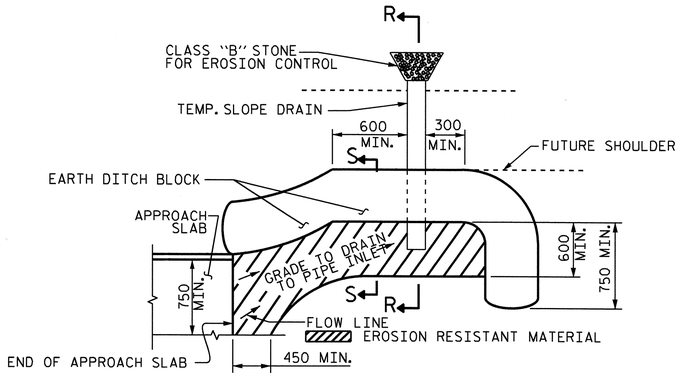

NOTE: IMMEDIATELY AFTER THE CONSTRUCTION OF THE APPROACH SLAB, THE CONTRACTOR SHALL PROVIDE TEMPORARY BERM AND SLOPE DRAIN. CONTRACTOR SHALL GRADE TO PIPE INLET AND PROVIDE EROSION RESISTANT MATERIAL AS SHOWN. THE EROSION RESISTANT MATERIAL SHALL BE EITHER 1) ASPHALT PLANT MIX, TYPE 1 OR TYPE 2, MIN. 50mm DEPTH, 2) EROSION CONTROL MAT, OR 3) CONCRETE, AS DIRECTED BY THE ENGINEER. THE SLOPE DRAIN SHALL CONSIST OF A NON-PERFORATED TEMPORARY DRAINAGE PIPE, 305mm IN DIAMETER.

PLAN VIEW

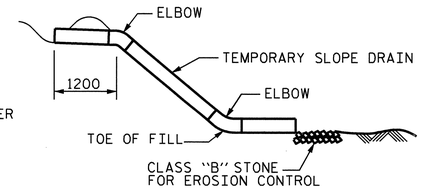

SECTION R-R

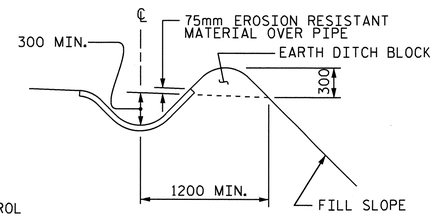

SECTION S-S

TEMPORARY BERM AND SLOPE DRAIN DETAILS

(TO BE USED WHEN SHOULDER BERM GUTTER IS REQUIRED)

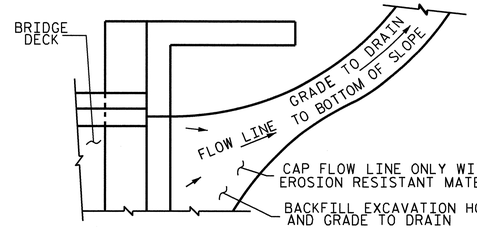

NOTE: IF THE APPROACH SLAB IS NOT CONSTRUCTED IMMEDIATELY AFTER THE BACKFILLING OF THE END BENT EXCAVATION, GRADE TO DRAIN TO THE BOTTOM OF THE SLOPE AND PROVIDE EROSION RESISTANT MATERIAL, SUCH AS FIBERGLASS ROVING OR AS DIRECTED BY THE ENGINEER TO PREVENT SOIL EROSION AND TO PROTECT THE AREA ADJACENT TO THE STRUCTURE. THE CONTRACTOR WILL BE REQUIRED TO REMOVE THESE MATERIALS PRIOR TO CONSTRUCTION OF THE APPROACH SLAB.

TEMPORARY DRAINAGE DETAIL

PROJECT NO. U-2519DA
CUMBERLAND COUNTY
STATION: 41+33.963-RP1BD-

SHEET 2 OF 2

STATE OF NORTH CAROLINA
DEPARTMENT OF TRANSPORTATION
RALEIGH

STANDARD
BRIDGE APPROACH
SLAB DETAILS

NORTH CAROLINA PROFESSIONAL SEAL 19091 ENGINEER BUCK CHARLES HUNTER
2/14/14

REVISIONS							SHEET NO.
NO.	BY:	DATE:	NO.	BY:	DATE:		SS-17
1			3				TOTAL SHEETS
2			4				17

ASSEMBLED BY : J.P. ADAMS		DATE : 4/24/08	
CHECKED BY : H.A. LOCKLEAR		DATE : 5/5/08	
DRAWN BY : FCJ 11/88	REV. 10/17/00	RWW/LES	
CHECKED BY : ARB 11/88	REV. 5/7/03	RWW/JTE	
	REV. 5/1/06R	MAA/KMM	

08-FEB-2011 15:27
R:\Structures\hunt\Str. #14-Revised\U-2519E_sd_AS_14.dgn
klayne

STD. NO. BAS10SM

BENCHMARK IS BL-8 ALUMINUM DISK 34.623m LEFT STA. 22+38.29 -L-
ELEV 59.231 ; NGVD 1929

NOTE: 1200mm RC PIPE, DRAINAGE SYSTEMS AND GUARDRAIL ARE ROADWAY PAY ITEMS.

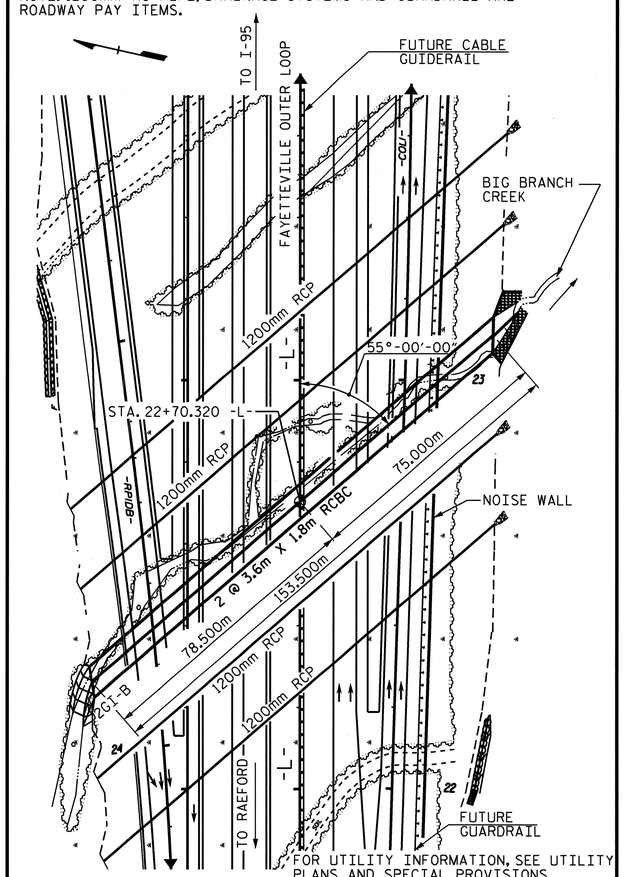

LOCATION SKETCH

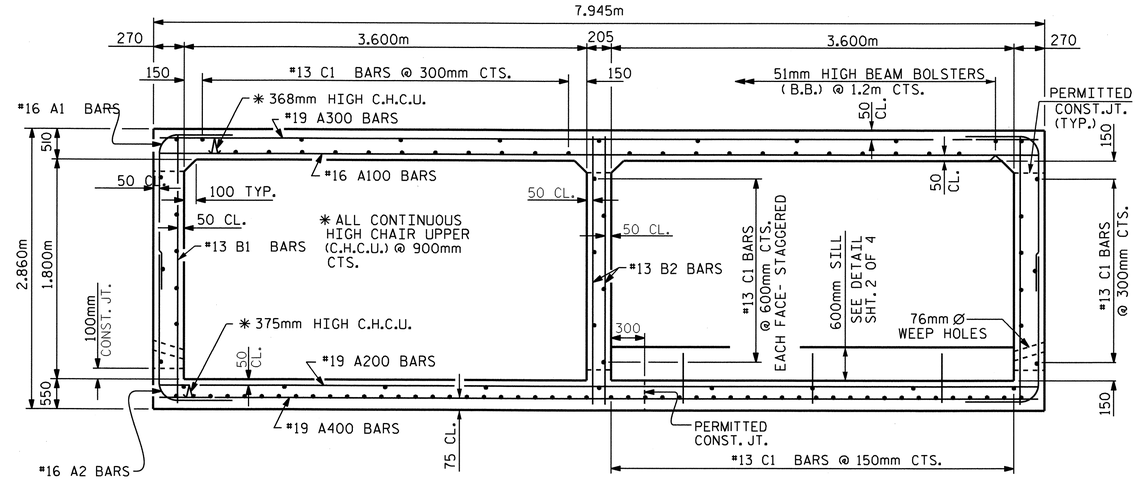

RIGHT ANGLE SECTION OF BARREL LOOKING DOWNSTREAM

THERE ARE 112 "C" BARS IN SECTION OF BARREL.

GRADE DATA

GRADE POINT ELEVATION AT STATION 22+70.320 -L- 65.352
BED ELEVATION AT STATION 22+70.320 -L- 57.570
ROADWAY SLOPES 1 1/2:1 (LT. SIDE RDW'Y.) & 3:1 (RT. SIDE RDW'Y.)

HYDRAULIC DATA

DESIGN DISCHARGE	= 20.5 m^3/s
FREQUENCY OF DESIGN FLOOD	= 50 YR.
DESIGN HIGHWATER ELEVATION	= 59.99
DRAINAGE AREA	= 4.9 Sq.Km.
BASIC DISCHARGE (Q100)	= 23.6 m^3/s
BASIC HIGH WATER ELEVATION	= 60.14

OVERTOPPING FLOOD DATA

OVERTOPPING DISCHARGE	> 37.8 m^3/s
FREQUENCY OF OVERTOPPING FLOOD	> 500 YR.
OVERTOPPING FLOOD ELEVATION	= 65.02

TOTAL STRUCTURE QUANTITIES

CLASS A CONCRETE	
BARREL @ 9.78 m^3/m	1501.2 m^3
WINGS ETC.	15.6 m^3
TOTAL	1516.8 m^3
REINFORCING STEEL	
BARREL	97481 kg
WINGS ETC.	391 kg
TOTAL	97872 kg
CULVERT EXCAVATION	LUMP SUM
FOUNDATION COND. MAT'L	827 METRIC TONS

BILL OF MATERIAL

BAR	NO.	SIZE	TYPE	LENGTH	WEIGHT
A1	2048	16	6	2620	8328
A2	2048	16	6	2280	7247
A100	779	16	STR	7800	9430
A101	4	16	STR	7240	45
A102	4	16	STR	6700	42
A103	4	16	STR	6140	38
A104	4	16	STR	5620	35
A105	4	16	STR	5060	31
A106	4	16	STR	4520	28
A107	4	16	STR	3980	25
A108	4	16	STR	3420	21
A109	4	16	STR	2900	18
A110	4	16	STR	2360	15
A111	4	16	STR	1800	11
A112	4	16	STR	1260	8
A113	4	16	STR	740	5
A200	592	19	STR	7800	10320
A201	2	19	STR	7420	33
A202	2	19	STR	7060	32
A203	2	19	STR	6700	30
A204	2	19	STR	6340	28
A205	2	19	STR	6000	27
A206	2	19	STR	5640	25
A207	2	19	STR	5280	24
A208	2	19	STR	4920	22
A209	2	19	STR	4580	20
A210	2	19	STR	4220	19
A211	2	19	STR	3860	17
A212	2	19	STR	3500	16
A213	2	19	STR	3140	14
A214	2	19	STR	2800	13
A215	2	19	STR	2420	11
A216	2	19	STR	2060	9
A217	2	19	STR	1700	8
A218	2	19	STR	1340	6
A219	2	19	STR	1000	4
A220	2	19	STR	640	3
A300	987	19	STR	7800	17206
A301	6	19	STR	7140	96
A302	6	19	STR	6500	87
A303	6	19	STR	5840	78
A304	6	19	STR	5200	70
A305	6	19	STR	4580	61
A306	6	19	STR	3920	53
A307	6	19	STR	3280	44
A308	6	19	STR	2640	35
A309	6	19	STR	2000	27
A310	6	19	STR	1340	18
A311	6	19	STR	720	10
A400	987	19	STR	7800	17206
A401	6	19	STR	7140	96
A402	6	19	STR	6500	87
A403	6	19	STR	5840	78
A404	6	19	STR	5200	70
A405	6	19	STR	4580	61
A406	6	19	STR	3920	53
A407	6	19	STR	3280	44
A408	6	19	STR	2640	35
A409	6	19	STR	2000	27
A410	6	19	STR	1340	18
A411	6	19	STR	720	10
B1	1396	13	STR	2700	3747
B2	1228	13	STR	2700	3296
C1	2128	13	STR	8640	18276
D1	4	19	STR	1020	9
G1	8	16	STR	9560	119
S2	12	25	STR	9560	456
REINFORCING STEEL					97481 kg

F.A. PROJECT NO. NHF-0100(21)

NOTES

ASSUMED LIVE LOAD ----------MS18 OR ALTERNATE LOADING.

DESIGN FILL----------6.040m

FOR OTHER DESIGN DATA AND NOTES SEE STANDARD NOTE SHEET.

76mm Ø WEEP HOLES INDICATED TO BE IN ACCORDANCE WITH THE SPECIFICATIONS.

CONCRETE IN CULVERTS TO BE POURED IN THE FOLLOWING ORDER:

1. WING FOOTINGS AND FLOOR SLAB INCLUDING 100mm OF ALL VERTICAL WALLS.
2. THE REMAINING PORTIONS OF THE WALLS AND WINGS FULL HEIGHT FOLLOWED BY ROOF SLAB AND HEADWALLS.

THE RESIDENT ENGINEER SHALL CHECK THE LENGTH OF CULVERT BEFORE STAKING IT OUT TO MAKE CERTAIN THAT IT WILL PROPERLY TAKE CARE OF THE FILL.

DIMENSIONS FOR WING LAYOUT AS WELL AS ADDITIONAL REINFORCING STEEL EMBEDDED IN BARREL ARE SHOWN ON WING SHEET.

TRANSVERSE CONSTRUCTION JOINTS SHALL BE USED IN THE BARREL, SPACED TO LIMIT THE POURS TO A MAXIMUM OF 21.0m. LOCATION OF JOINTS SHALL BE SUBJECT TO APPROVAL OF THE ENGINEER.

STEEL IN THE BOTTOM SLAB MAY BE SPLICED AT THE PERMITTED CONSTRUCTION JOINT AT THE CONTRACTOR'S OPTION. EXTRA WEIGHT OF STEEL DUE TO THE SPLICES SHALL BE PAID FOR BY THE CONTRACTOR.

AT THE CONTRACTOR'S OPTION, HE MAY SPLICE THE VERTICAL REINFORCING STEEL IN THE INTERIOR FACE OF EXTERIOR WALL AND BOTH FACES OF INTERIOR WALLS ABOVE LOWER WALL CONSTRUCTION JOINT. THE SPLICE LENGTH SHALL BE AS PROVIDED IN THE SPLICE LENGTH CHART SHOWN ON THE PLANS. EXTRA WEIGHT OF STEEL DUE TO THE SPLICES SHALL BE PAID FOR BY THE CONTRACTOR.

A 900mm STRIP OF FILTER FABRIC SHALL BE ATTACHED TO THE FILL FACE OF THE WING COVERING THE ENTIRE LENGTH OF THE EXPANSION JOINT.

FOR SUBMITTAL OF WORKING DRAWINGS, SEE SPECIAL PROVSIONS.

NO PRECAST REINFORCED BOX CULVERT OPTION WILL BE ALLOWED.

FOR FALSEWORK AND FORMWORK, SEE SPECIAL PROVISIONS.

ALL DIMENSIONS ARE IN MILLIMETERS UNLESS OTHERWISE NOTED.

ALL ELEVATIONS ARE IN METERS.

THE CONTRACTOR SHALL PROVIDE INDEPENDENT ASSURANCE SAMPLES OF REINFORCING STEEL AS FOLLOWS: FOR PROJECTS REQUIRING UP TO 360,000kg OF REINFORCING STEEL, ONE 760mm SAMPLE OF EACH SIZE BAR USED. AND FOR PROJECTS REQUIRING OVER 360,000kg OF REINFORCING STEEL, TWO 760mm SAMPLES OF EACH SIZE BAR USED. THE BARS FROM WHICH THE SAMPLES ARE TAKEN MUST THEN BE SPLICED WITH REPLACMENT BARS OF THE SIZE AND LENGTH OF THE SAMPLE, PLUS A MINIMUM LAP SPLICE OF THIRTY BAR DIAMETERS.

FOR CULVERT DIVERSION DETAILS AND PAY ITEM, SEE EROSION CONTROL PLANS.

FOR CRANE SAFETY, SEE SPECIAL PROVISIONS.

FOR GROUT FOR STRUCTURES, SEE SPECIAL PROVISIONS.

DETAILED DRAWINGS FOR FALSEWORK AND FORMS FOR THIS CULVERT SHALL BE SUBMITTED. SEE SHEET SNSM.

FOR CURING CONCRETE, SEE SPECIAL PROVISIONS.

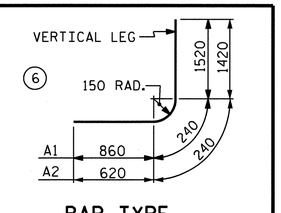

BAR TYPE
DIMENSIONS ARE OUT TO OUT

SPLICE LENGTHS CHART

BAR	SIZE	LENGTH
A200	19	940
A400	19	690
B1	13	540
B2	13	540
C1	13	590

METRIC

PROJECT NO. U-2519DA
CUMBERLAND COUNTY
STATION: 22+70.320 -L-

SHEET 1 OF 4 BRIDGE NO. C408

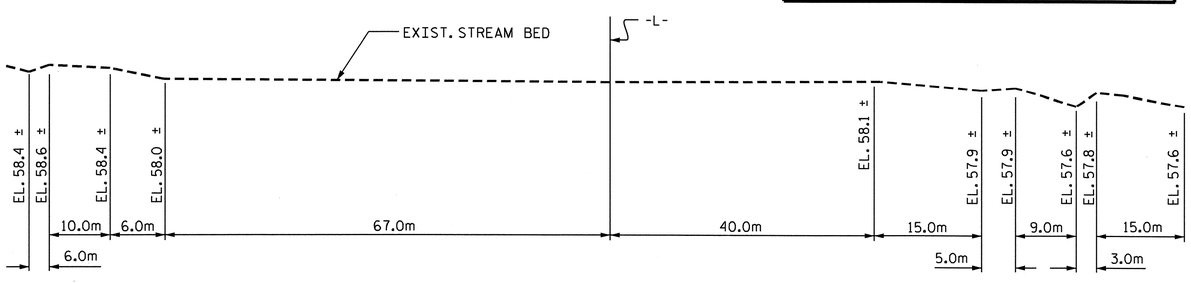

PROFILE ALONG ℄ CULVERT

ASSEMBLED BY : M.D.PISO DATE : 09/2008
CHECKED BY : GR.KOUCHEKI DATE : 09/2008
DRAWN BY : EEM 6/97
CHECKED BY : ARB 7/97

NORTH CAROLINA PROFESSIONAL SEAL 12274 ENGINEER OMAR R. AZIZI
3-29-11

NORTH CAROLINA PROFESSIONAL SEAL 14045 ENGINEER TIMOTHY J. CROCONIS
3/29/11

STATE OF NORTH CAROLINA
DEPARTMENT OF TRANSPORTATION
RALEIGH

BARREL STANDARD
DOUBLE 3.600m X 1.800m
CONCRETE BOX CULVERT
55° SKEW

REVISIONS						SHEET NO.
NO.	BY:	DATE:	NO.	BY:	DATE:	C-1
1			3			TOTAL SHEETS
2			4			8

STR. #11 STD. No. CB260SM

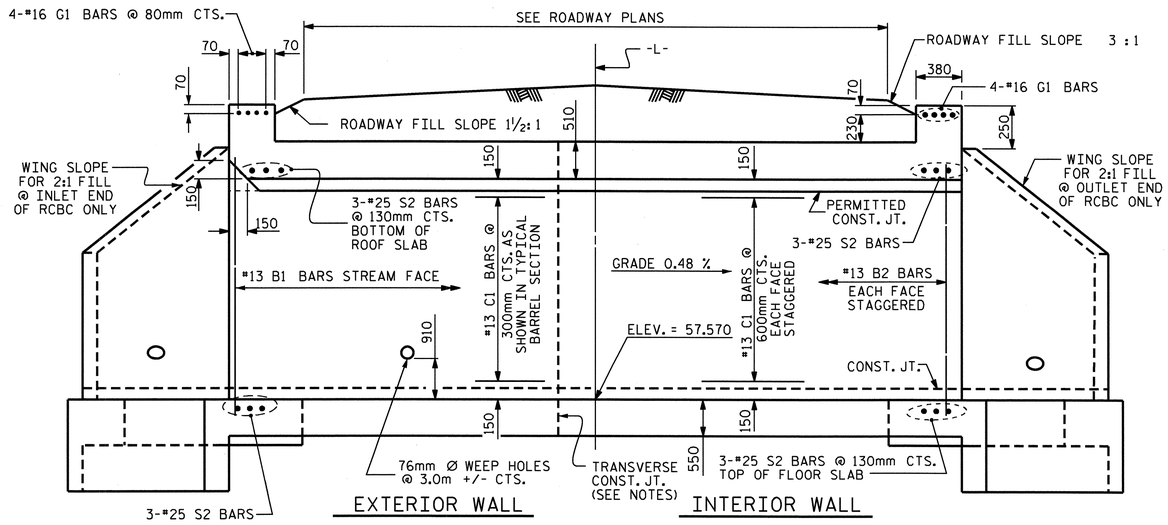

CULVERT SECTION NORMAL TO ROADWAY

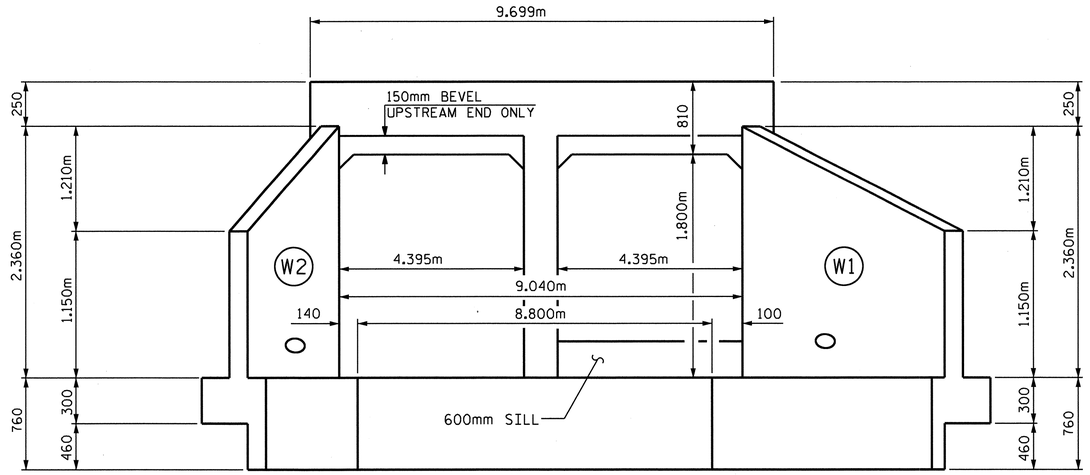

INLET END ELEVATION NORMAL TO SKEW

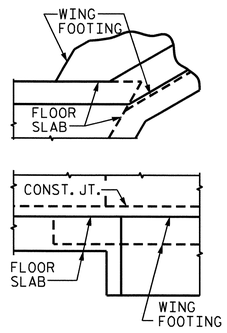

DETAIL

CONNECTION OF WING FOOTING AND FLOOR SLAB WHEN SLAB IS THICKER THAN FOOTING

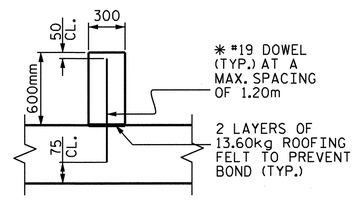

SECTION THROUGH SILL

* DOWELS MAY BE PUSHED INTO GREEN CONCRETE AFTER SLAB HAS BEEN FLOAT FINISHED.

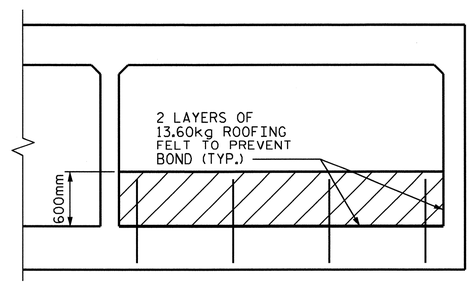

ELEVATION

CULVERT SILL DETAILS

(LOOKING DOWNSTREAM)

PROJECT NO. U-2519DA

CUMBERLAND COUNTY

STATION: 22+70.320 -L-

SHEET 2 OF 4

STATE OF NORTH CAROLINA
DEPARTMENT OF TRANSPORTATION
RALEIGH

BARREL STANDARD
DOUBLE 3.60m X 1.800m
CONCRETE BOX CULVERT
55° SKEW

NORTH CAROLINA PROFESSIONAL SEAL 14045 ENGINEER TIMOTHY L. COGGINS
3/25/11

REVISIONS						SHEET NO.
NO.	BY:	DATE:	NO.	BY:	DATE:	C-2
1			3			TOTAL SHEETS
2			4			8

ASSEMBLED BY :	M.D.PISO	DATE : 09/2008	
CHECKED BY :	GR.KOUCHEKI	DATE : 09/2008	
DRAWN BY :	EEM	6/97	
CHECKED BY :	ARB	7/97	

STR. #11 STD. No. CB260SM

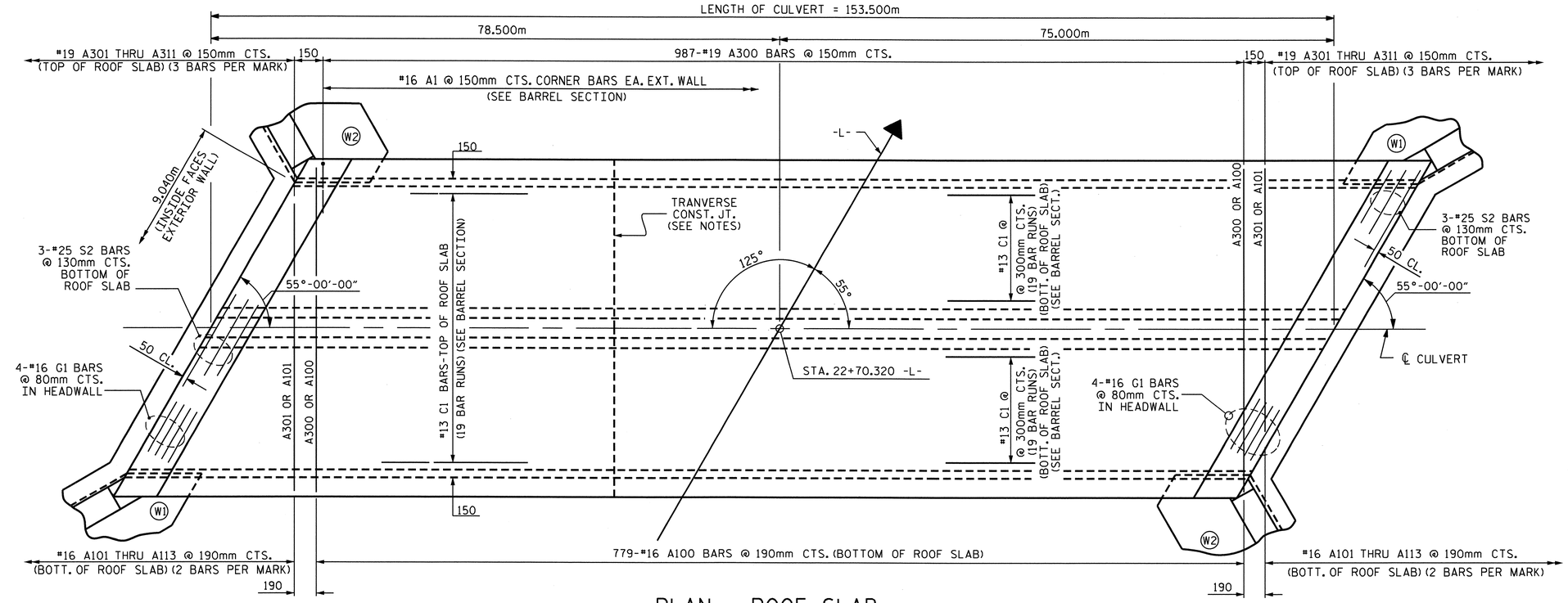

PLAN - ROOF SLAB

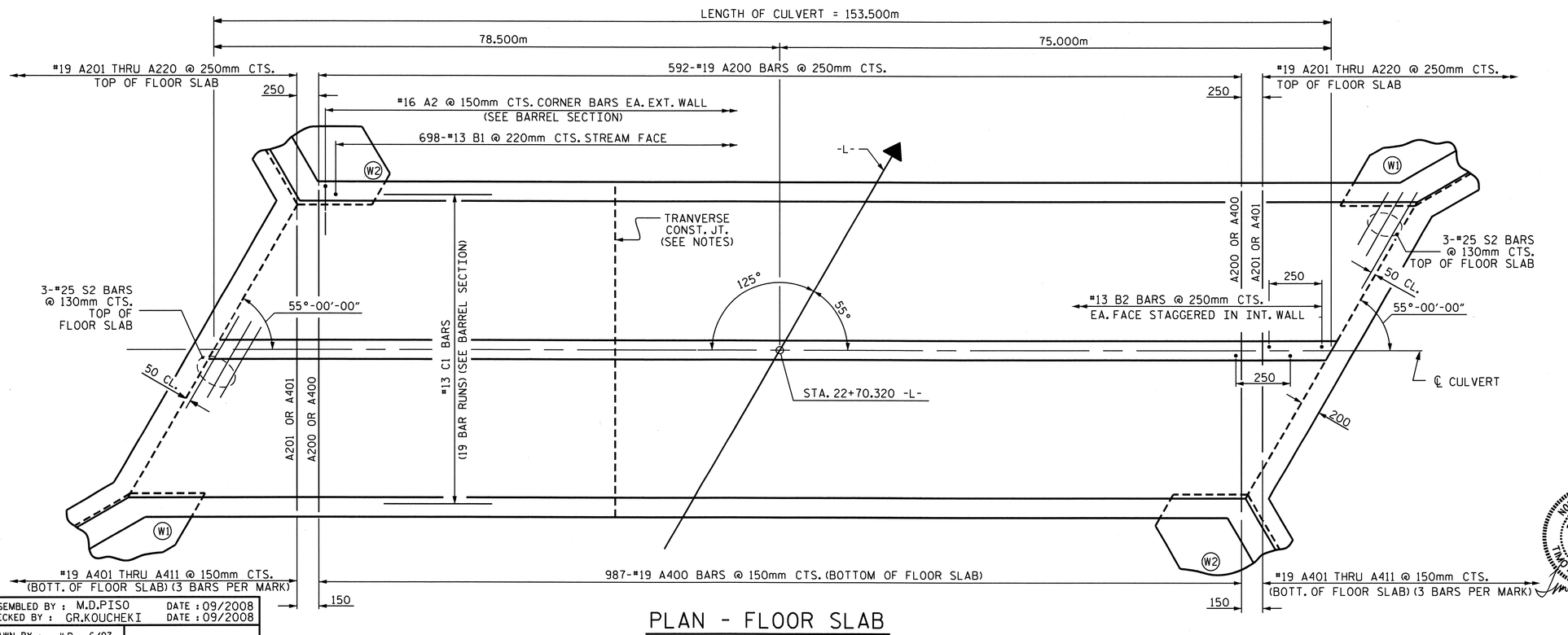

PLAN - FLOOR SLAB

ASSEMBLED BY : M.D.PISO	DATE : 09/2008
CHECKED BY : GR.KOUCHEKI	DATE : 09/2008
DRAWN BY : JLR 6/97	
CHECKED BY : VAP 6/97	

23-MAR-2011 09:49
R:\TIPProjects-U\U2519da\Structures\azizi\Final Plans\STR 11\u2519da_sd_cu_11(6).dgn
taverette

PROJECT NO. U-2519DA
CUMBERLAND COUNTY
STATION: 22+70.320 -L-

SHEET 3 OF 4

STATE OF NORTH CAROLINA
DEPARTMENT OF TRANSPORTATION
RALEIGH

DOUBLE 3.600m X 1.800m CONCRETE BOX CULVERT

55° SKEW

NORTH CAROLINA PROFESSIONAL SEAL 14045 ENGINEER TIMOTHY A. LEGGINS
3/28/11

REVISIONS						
NO.	BY:	DATE:	NO.	BY:	DATE:	SHEET NO. C-3
1			3			TOTAL SHEETS 8
2			4			

STR. #11 STD. No. CB260SM

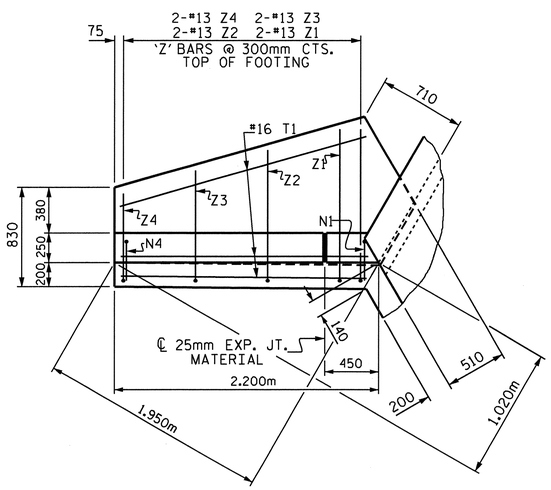

PLAN W2

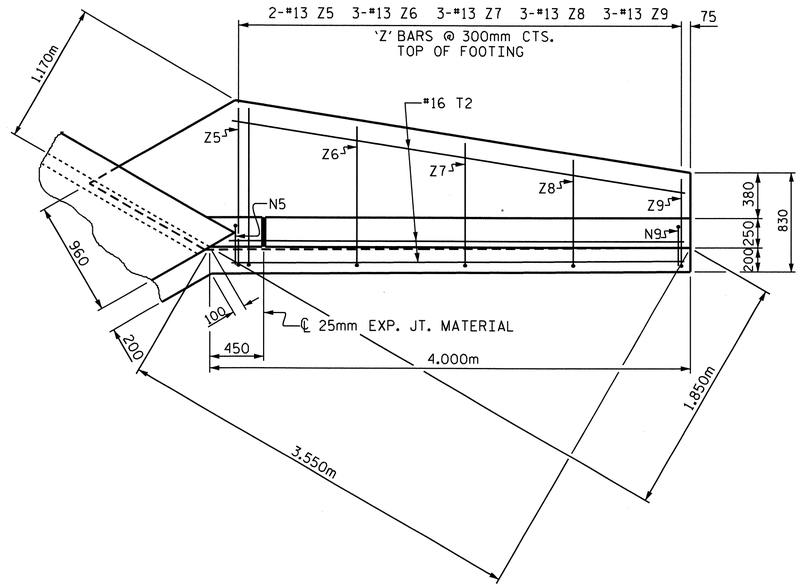

PLAN W1

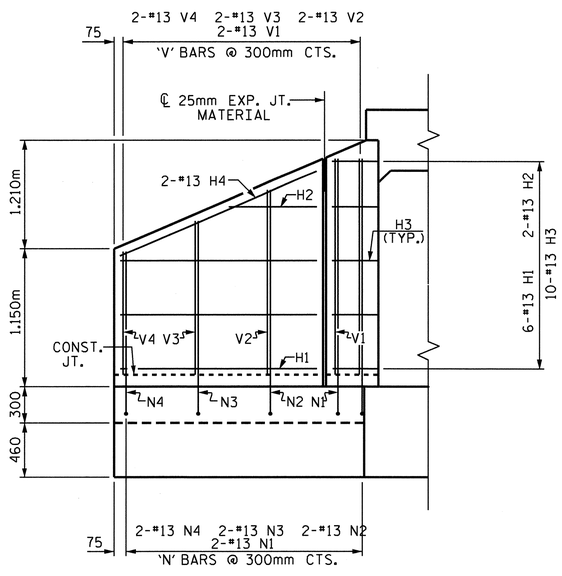

ELEVATION W2

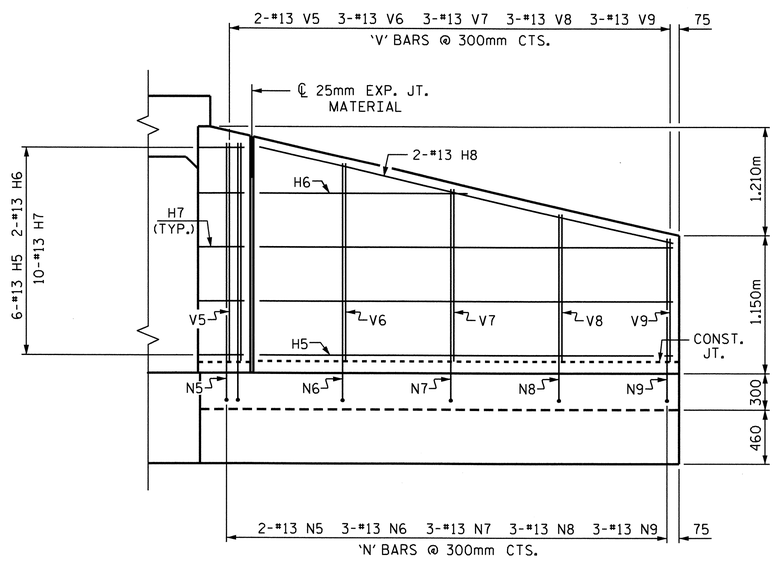

ELEVATION W1

FOR WING ORIENTATION, SEE BARREL STANDARD SHEET.

BAR TYPES

ALL BAR DIMENSIONS ARE OUT TO OUT.

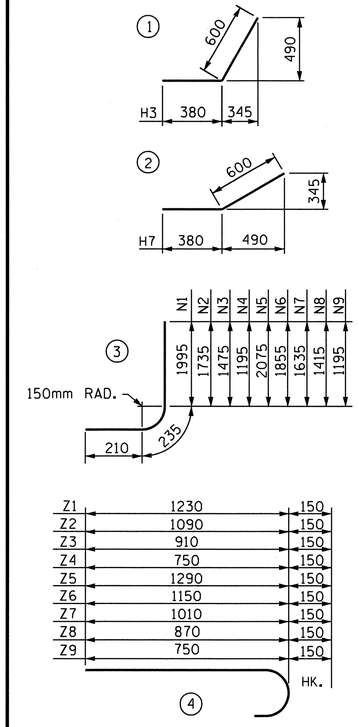

BILL OF MATERIAL

BAR	NO.	SIZE	TYPE	LENGTH	WEIGHT
H1	12	13	STR	1640	20
H2	4	13	STR	780	3
H3	20	13	1	980	19
H4	4	13	STR	1780	7
H5	12	13	STR	3440	41
H6	4	13	STR	1940	8
H7	20	13	2	980	19
H8	4	13	STR	3520	14
N1	4	13	3	2440	10
N2	4	13	3	2180	9
N3	4	13	3	1920	8
N4	4	13	3	1640	7
N5	4	13	3	2520	10
N6	6	13	3	2300	14
N7	6	13	3	2080	12
N8	6	13	3	1860	11
N9	6	13	3	1640	10
T1	6	16	STR	2200	20
T2	6	16	STR	4000	37
V1	4	13	STR	1820	7
V2	4	13	STR	1560	6
V3	4	13	STR	1300	5
V4	4	13	STR	1020	4
V5	4	13	STR	1900	8
V6	6	13	STR	1680	10
V7	6	13	STR	1460	9
V8	6	13	STR	1240	7
V9	6	13	STR	1020	6
Z1	4	13	4	1380	5
Z2	4	13	4	1240	5
Z3	4	13	4	1060	4
Z4	4	13	4	900	4
Z5	4	13	4	1440	6
Z6	6	13	4	1300	8
Z7	6	13	4	1160	7
Z8	6	13	4	1020	6
Z9	6	13	4	900	5

REINFORCING STEEL FOR 4 WING WALLS 391 kg

CLASS A CONCRETE
4 WINGS 10.6 m^3
2 HEADWALLS 2.2 m^3
2 END CURTAIN WALLS 2.8 m^3
TOTAL 15.6 m^3

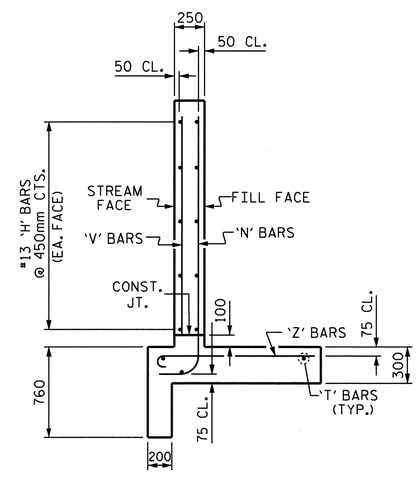

TYPICAL WING SECTION

PROJECT NO. U-2519DA
CUMBERLAND COUNTY
STATION: 22+70.320 -L-

SHEET 4 OF 4

STATE OF NORTH CAROLINA
DEPARTMENT OF TRANSPORTATION
RALEIGH

# WINGS FOR CONCRETE BOX CULVERT
H=1.800m SLOPE=2:1
55° OR 125° SKEW

NORTH CAROLINA PROFESSIONAL SEAL 14045 ENGINEER TIMOTHY L. COGGINS
3/28/11

REVISIONS						SHEET NO.
NO.	BY:	DATE:	NO.	BY:	DATE:	C-4
1			3			TOTAL SHEETS
2			4			8

ASSEMBLED BY : M.D.PISO	DATE : 09/2008
CHECKED BY : GR.KOUCHEKI	DATE : 09/2008
DRAWN BY : JLR 6/97	
CHECKED BY : VAP 6/97	

STR. #11

STD. NO. CW6018

BENCH MARK IS BL-16 -L- STA 30+57.488, 31.782m LEFT, EL. 57.625; NGVD 1929

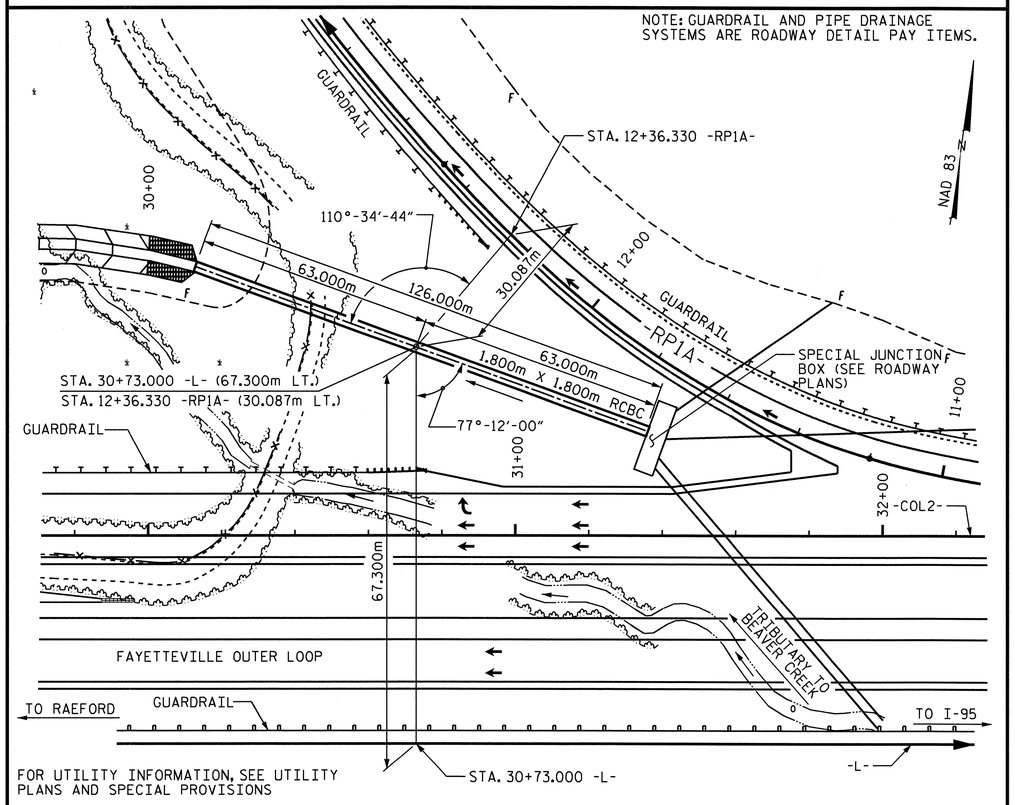

LOCATION SKETCH

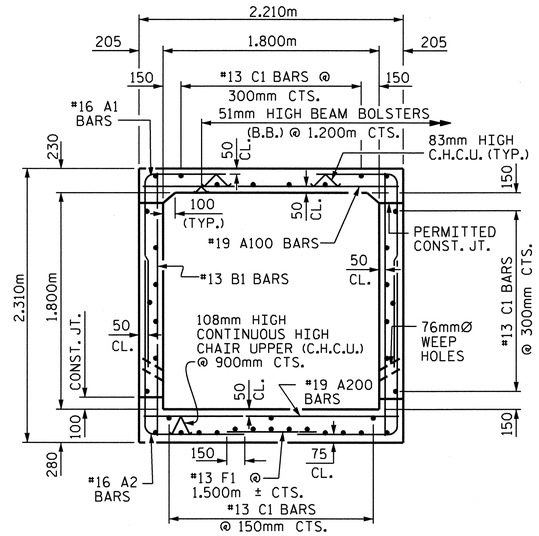

RIGHT ANGLE SECTION OF BARREL

THERE ARE 38 "C" BARS IN SECTION OF BARREL.

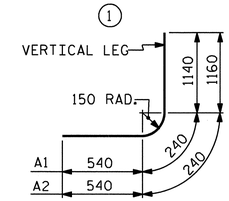

BAR TYPE

DIMENSIONS ARE OUT TO OUT

BILL OF MATERIAL

FOR CULVERT BARREL

BAR	NO.	SIZE	TYPE	LENGTH	WEIGHT
A1	1200	16	1	1920	3576
A2	1200	16	1	1940	3613
A100	630	19	STR	2060	2901
A200	630	19	STR	2060	2901
B1	840	13	STR	2140	1787
C1	570	13	STR	8960	5077
G1	4	13	STR	2100	8
F1	84	13	STR	1300	109
REINFORCING STEEL					19,972 kg.

F.A. PROJECT NO. NHF-0100(21)

NOTES

ASSUMED LIVE LOAD ----------MS18 OR ALTERNATE LOADING.

DESIGN FILL---------- 8.07m

FOR OTHER DESIGN DATA AND NOTES SEE STANDARD NOTE SHEET.

76mm Ø WEEP HOLES INDICATED TO BE IN ACCORDANCE WITH THE SPECIFICATIONS.

CONCRETE IN CULVERTS TO BE POURED IN THE FOLLOWING ORDER:

1. WING FOOTINGS AND FLOOR SLAB INCLUDING 100mm OF ALL VERTICAL WALLS.
2. THE REMAINING PORTIONS OF THE WALLS AND WINGS FULL HEIGHT FOLLOWED BY ROOF SLAB AND HEADWALLS.

THE RESIDENT ENGINEER SHALL CHECK THE LENGTH OF CULVERT BEFORE STAKING IT OUT TO MAKE CERTAIN THAT IT WILL PROPERLY TAKE CARE OF THE FILL.

DIMENSIONS FOR WING LAYOUT AS WELL AS ADDITIONAL REINFORCING STEEL EMBEDDED IN BARREL ARE SHOWN ON WING SHEET.

TRANSVERSE CONSTRUCTION JOINTS SHALL BE USED IN THE BARREL, SPACED TO LIMIT THE POURS TO A MAXIMUM OF 21.0m. LOCATION OF JOINTS SHALL BE SUBJECT TO APPROVAL OF THE ENGINEER.

AT THE CONTRACTOR'S OPTION, HE MAY SPLICE THE VERTICAL REINFORCING STEEL IN THE INTERIOR FACE OF EXTERIOR WALL ABOVE LOWER WALL COSTRUCTION JOINT. THE SPLICE LENGTH SHALL BE AS PROVIDED IN THE SPLICE LENGTH CHART SHOWN ON THE PLANS. EXTRA WEIGHT OF STEEL DUE TO THE SPLICES SHALL BE PAID FOR BY THE CONTRACTOR.

THE CONTRACTOR SHALL PROVIDE INDEPENDENT ASSURANCE SAMPLES OF REINFORCING STEEL AS FOLLOWS: FOR PROJECTS REQUIRING UP TO 360,000kg OF REINFORCING STEEL, ONE 760mm SAMPLE OF EACH SIZE BAR USED, AND FOR PROJECTS REQUIRING OVER 360,000kg OF REINFORCING STEEL, TWO 760mm SAMPLES OF EACH SIZE BAR USED. THE BARS FROM WHICH THE SAMPLES ARE TAKEN MUST THEN BE SPLICED WITH REPLACMENT BARS OF THE SIZE AND LENGTH OF THE SAMPLE, PLUS A MINIMUM LAP SPLICE OF THIRTY BAR DIAMETERS.

FOR CULVERT DIVERSION DETAILS AND PAY ITEM, SEE EROSION CONTROL PLANS.

A 900mm STRIP OF FILTER FABRIC SHALL BE ATTACHED TO THE FILL FACE OF THE WING COVERING THE ENTIRE LENGTH OF THE EXPANSION JOINT.

FOR SUBMITTAL OF WORKING DRAWINGS, SEE SPECIAL PROVISIONS.

NO PRECAST REINFORCED BOX CULVERT OPTION WILL BE ALLOWED.

FOR FALSEWORK AND FORMWORK, SEE SPECIAL PROVISIONS.

ALL DIMENSIONS ARE IN MILLIMETERS UNLESS OTHERWISE NOTED.

ALL ELEVATIONS ARE IN METERS.

FOR CRANE SAFETY, SEE SPECIAL PROVISIONS.

FOR GROUT FOR STRUCTURES, SEE SPECIAL PROVISIONS.

FOR CURING CONCRETE, SEE SPECIAL PROVISIONS.

TOTAL STRUCTURE QUANTITIES

CLASS A CONCRETE		
BARREL @ 1.86 m^3/m	234.4	m^3
WINGS ETC.	5.5	m^3
TOTAL	239.9	m^3
REINFORCING STEEL		
BARREL	19,972	kg
WINGS ETC.	174	kg
TOTAL	20,146	kg
CULVERT EXCAVATION ---------- LUMP SUM		
FOUNDATION COND. MAT'L ---- 189 METRIC TONS		

ROADWAY DATA

GRADE POINT ELEVATION AT STA 30+73.000 -L-	=	71.954
BED ELEVATION AT STA. 30+73.00 -L- (67.300m LT.)	=	57.504
ROADWAY SLOPES	=	SEE ROADWAY PLANS

HYDRAULIC DATA

DESIGN DISCHARGE	=	8.12m3/s
FREQUENCY OF DESIGN FLOOD	=	50 YEAR
DESIGN HIGHWATER ELEVATION	=	61.06
DRAINAGE AREA	=	0.65 Sq.Km.
BASIC DISCHARGE (Q100)	=	9.17 m3/s
BASIC HIGH WATER ELEVATION	=	61.33

OVERTOPPING FLOOD DATA

OVERTOPPING DISCHARGE	=	> 19.18 m3/s
FREQUENCY OF OVERTOPPING FLOOD	=	> 500 YEARS
OVERTOPPING FLOOD ELEVATION	=	68.32

SPLICE LENGTH CHART

BAR	SIZE	SPLICE LENGTH
B1	13	540
C1	13	590

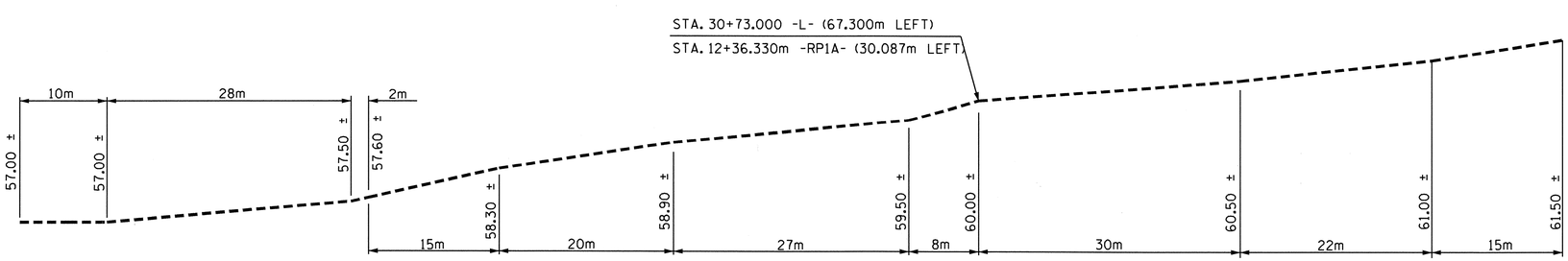

PROFILE ALONG ℄ CULVERT

PROJECT NO. U-2519DA

CUMBERLAND COUNTY

STATION: 30+73.000 -L- (LT.)
12+36.330 -RP1A- (LT.)

SHEET 1 OF 4

NORTH CAROLINA PROFESSIONAL SEAL 12274 ENGINEER OMAR R. AZIZI
3-29-11

NORTH CAROLINA PROFESSIONAL SEAL 14045 ENGINEER TIMOTHY L. COGGINS
3/28/11

STATE OF NORTH CAROLINA
DEPARTMENT OF TRANSPORTATION
RALEIGH

BARREL STANDARD
SINGLE 1.800mm X 1.800m
CONCRETE BOX CULVERT

REVISIONS						SHEET NO.
NO.	BY:	DATE:	NO.	BY:	DATE:	C-5
1			3			TOTAL SHEETS
2			4			8

ASSEMBLED BY : M.D.PISO DATE : AUG. 2008
CHECKED BY : REZA KOUCHEKI DATE : SEP. 2008

DRAWN BY : EEM 6/97
CHECKED BY : ARB 7/97

STR. #12 STD. No. CBI90SM

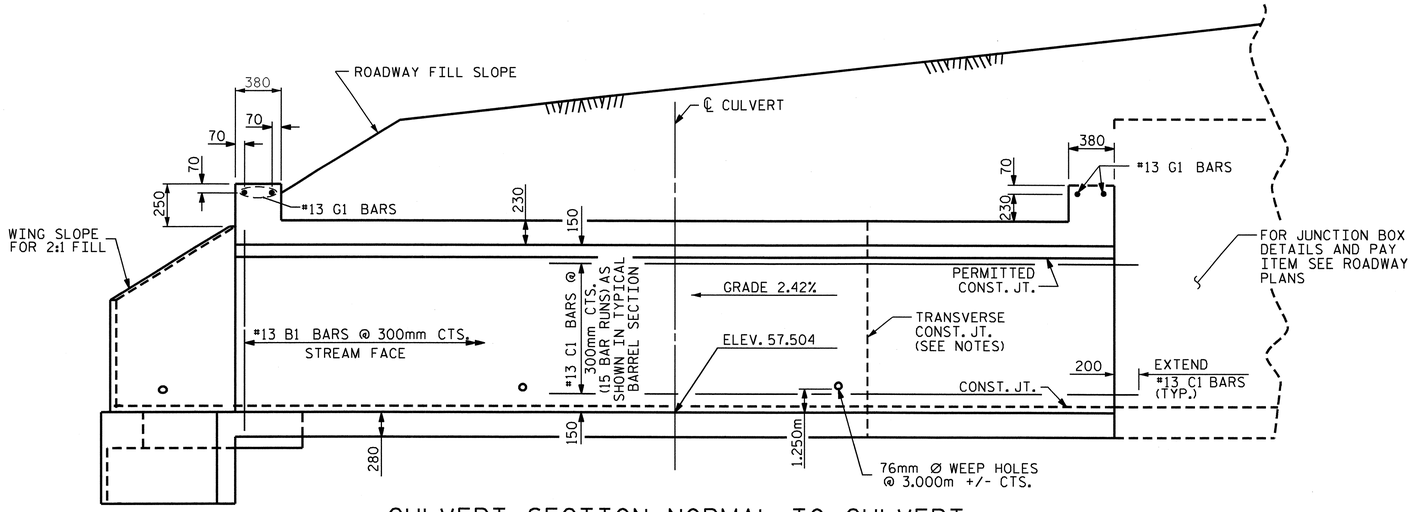

CULVERT SECTION NORMAL TO CULVERT

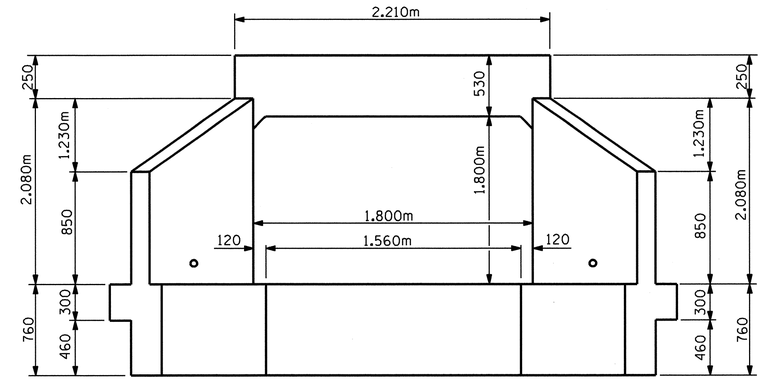

OUTLET END ELEVATION NORMAL TO SKEW

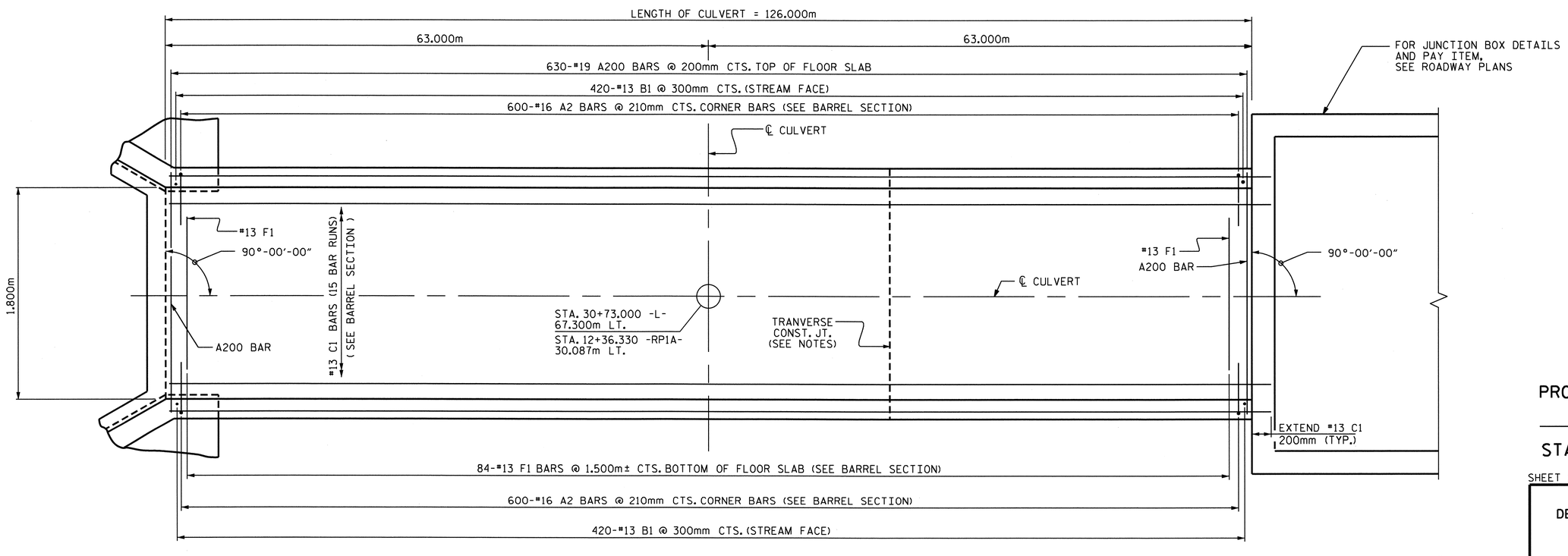

PLAN - FLOOR SLAB

FOR CULVERT LAYOUT IN REFERENCE TO -L- AND -RP1A-, SEE SHEET 3 OF 4.

PROJECT NO. U-2519DA
CUMBERLAND COUNTY
STATION: 30+73.000 -L- (LT.)
12+36.330 -RP1A- (LT.)

SHEET 2 OF 4

STATE OF NORTH CAROLINA
DEPARTMENT OF TRANSPORTATION
RALEIGH

BARREL STANDARD
SINGLE 1.800m X 1.800m
CONCRETE BOX CULVERT
90° SKEW

NORTH CAROLINA PROFESSIONAL SEAL 14045 ENGINEER TIMOTHY L. COGGINS
3/28/11

REVISIONS						SHEET NO.
NO.	BY:	DATE:	NO.	BY:	DATE:	C-6
1			3			TOTAL SHEETS
2			4			8

ASSEMBLED BY : M.D.PISO	DATE : AUG. 2008
CHECKED BY : REZA KOUCHEKI	DATE : SEP. 2008
DRAWN BY : EEM 6/97	
CHECKED BY : ARB 7/97	

STR. #12

STD. No. CBI90sm

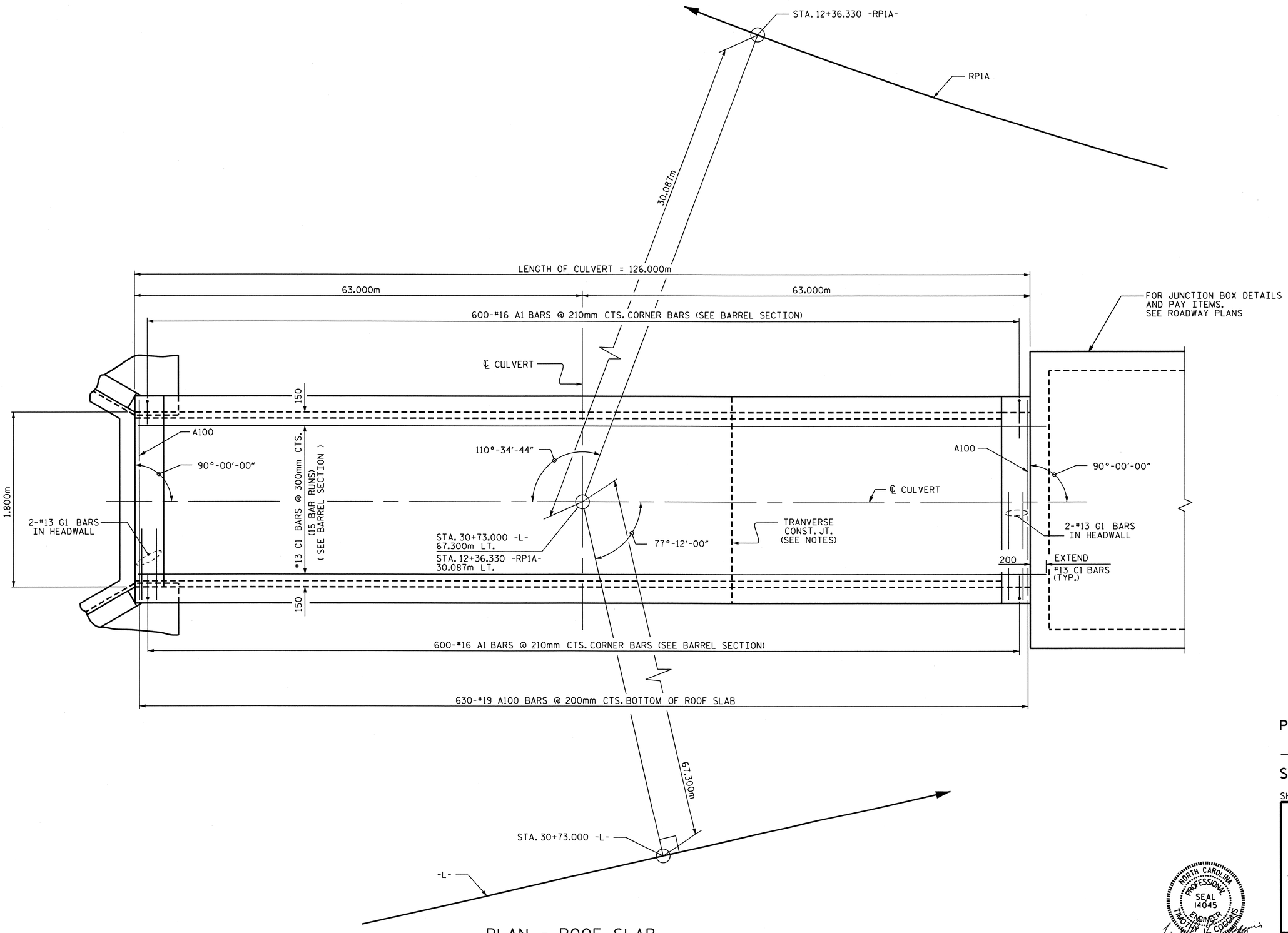

PLAN - ROOF SLAB

PROJECT NO. U-2519DA
CUMBERLAND COUNTY
STATION: 30+73.000 -L- (LT.)
12+36.330 -RP1A- (LT.)
SHEET 3 OF 4

STATE OF NORTH CAROLINA
DEPARTMENT OF TRANSPORTATION
RALEIGH

BARREL STANDARD
SINGLE 1.800m X 1.800m
CONCRETE BOX CULVERT

NORTH CAROLINA PROFESSIONAL SEAL 14045 ENGINEER TIMOTHY W. COGGINS
3/23/11

REVISIONS						SHEET NO.
NO.	BY:	DATE:	NO.	BY:	DATE:	C-7
1			3			TOTAL SHEETS
2			4			8

DRAWN BY : M.D.PISO DATE : AUG. 2008
CHECKED BY : REZA KOUCHEKI DATE : SEP. 2008

23-MAR-2011 09:56
R:\TIPProjects-U\U2519da\Structures\azizi\Final Plans\STR 12\u2519da_sd_cu_12.dgn
taverette

STR. #12

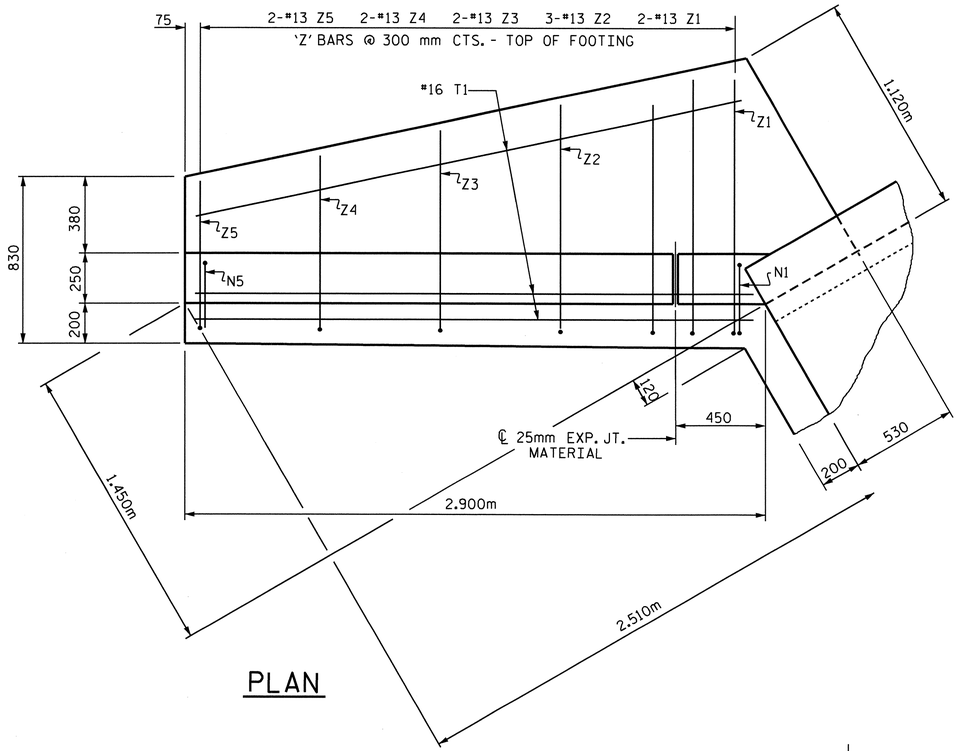

PLAN

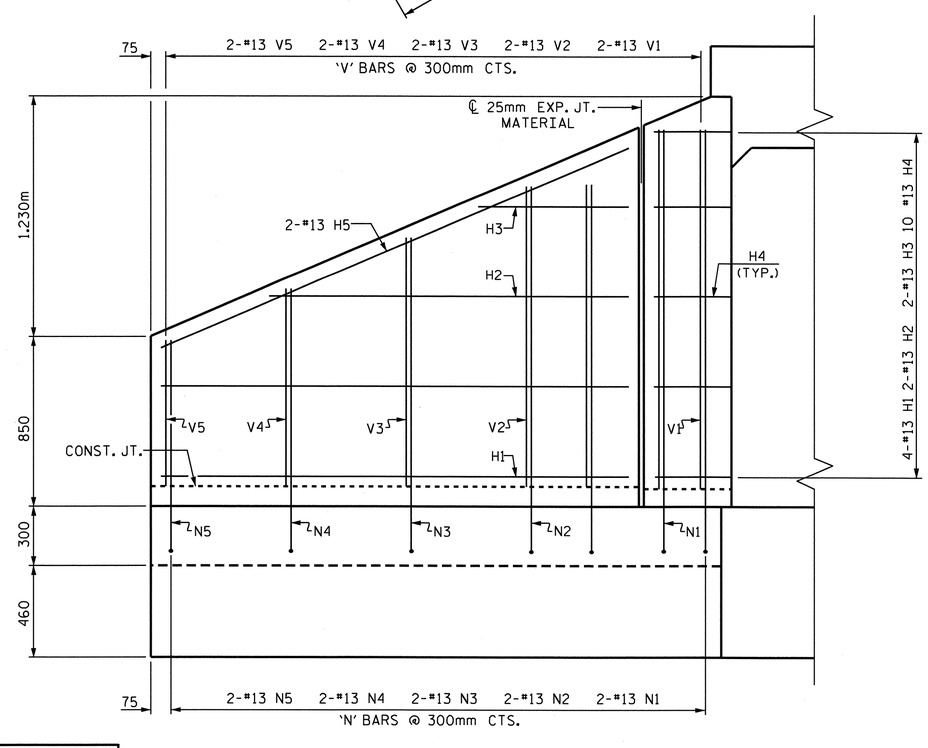

ELEVATION

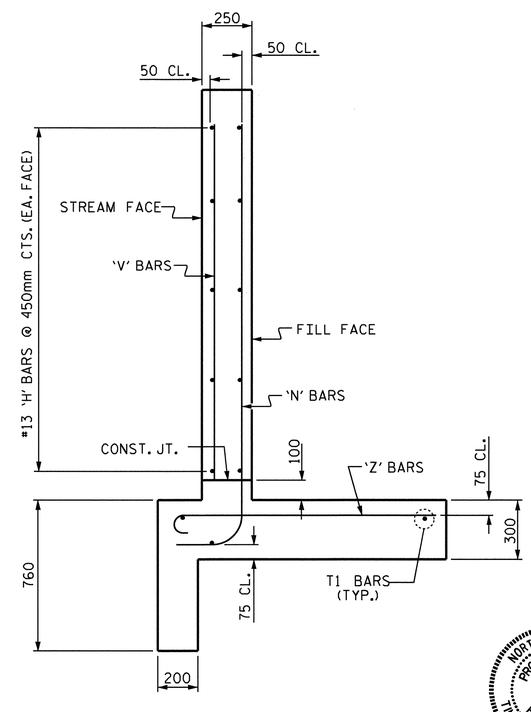

TYPICAL WING SECTION

BAR TYPES

ALL BAR DIMENSIONS ARE OUT TO OUT.

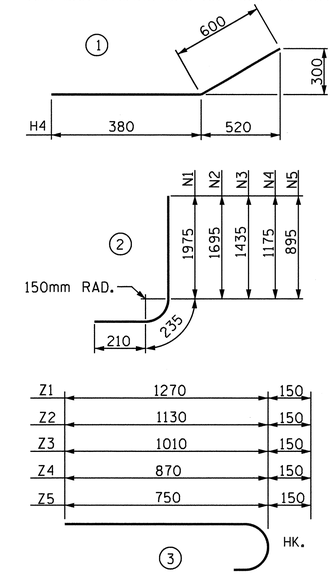

BILL OF MATERIAL

BAR	NO.	SIZE	TYPE	LENGTH	WEIGHT
H1	8	13	STR	2340	19
H2	4	13	STR	1800	7
H3	4	13	STR	800	3
H4	20	13	1	980	19
H5	4	13	STR	2540	10
N1	4	13	2	2420	10
N2	4	13	2	2140	9
N3	4	13	2	1880	7
N4	4	13	2	1620	6
N5	4	13	2	1340	5
T1	6	16	STR	2900	27
V1	4	13	STR	1800	7
V2	4	13	STR	1520	6
V3	4	13	STR	1260	5
V4	4	13	STR	1000	4
V5	4	13	STR	720	3
Z1	4	13	3	1420	6
Z2	6	13	3	1280	8
Z3	4	13	3	1160	5
Z4	4	13	3	1020	4
Z5	4	13	3	900	4

REINFORCING STEEL IN 2 WINGS 174 kg

CLASS A CONCRETE

2 WINGS	4.8	m^3
2 HEADWALLS	0.5	m^3
1 END CURTAIN WALL	0.2	m^3
TOTAL	5.5	m^3

PROJECT NO. U-2519DA

CUMBERLAND COUNTY

STATION: 30+73.000 -L- (LT.)
12+36.330 -RP1A- (LT.)

SHEET 4 OF 4

STATE OF NORTH CAROLINA
DEPARTMENT OF TRANSPORTATION
RALEIGH

STANDARD WINGS FOR CONCRETE BOX CULVERT

H = 1.800m SLOPE = 2 : 1
90° SKEW

NORTH CAROLINA PROFESSIONAL SEAL 14045 ENGINEER TIMOTHY K. COGGINS
3/28/11

REVISIONS								SHEET NO.
NO.	BY:	DATE:	NO.	BY:	DATE:			C-8
1			3					TOTAL SHEETS
2			4					8

ASSEMBLED BY : M.D.PISO DATE : AUG. 2008	
CHECKED BY : REZA KOUCHEKI DATE : SEP. 2008	
DRAWN BY : KJA 06/97	
CHECKED BY : VAP 06/97	

STR. #12

STD. NO. CW9018

GEOTECHNICAL ENGINEER	ENGINEER
NORTH CAROLINA PROFESSIONAL SEAL 30943 ENGINEER THEIN TUN ZAN	
9/5/08	
SIGNATURE DATE	SIGNATURE DATE

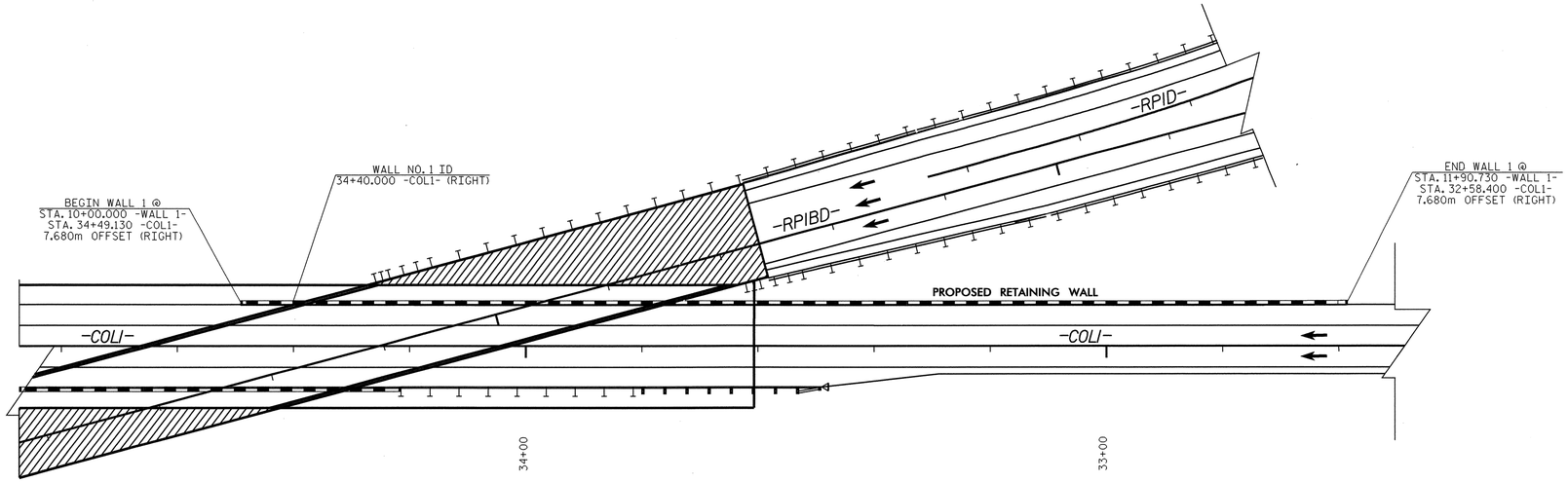

PLAN

RETAINING WALL NO. 1

N.T.S.

NOTES:

1. WALL ELEVATION IS SHOWN LOOKING AT EXPOSED FACE OF WALL.
2. OFFSET FROM -COL1- REMAINS CONSTANT ACROSS ENTIRE WALL.

WALL NO.	ESTIMATED EXPOSED AREA (SQ. M.)
1	889

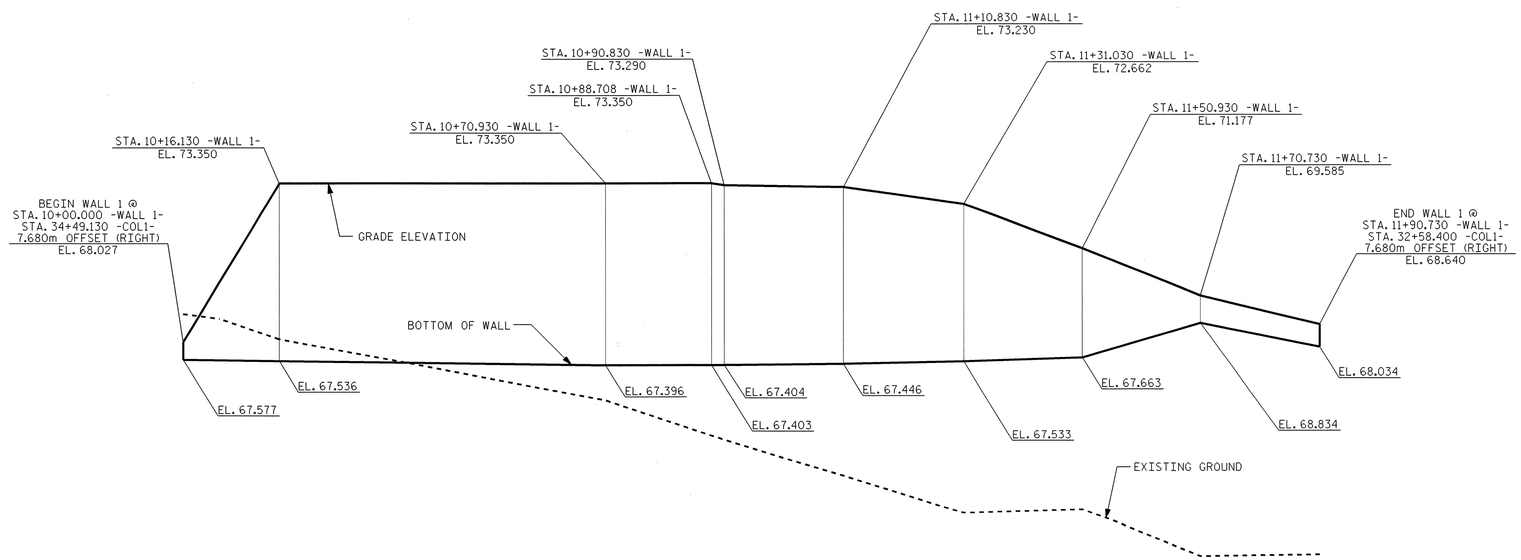

ELEVATION

RETAINING WALL NO. 1

N.T.S.

PROJECT NO.: U-2519DA

CUMBERLAND **COUNTY**

STATION: 34+40.000 -COL1- (RIGHT)

SHEET 1 OF 3

GEOTECHNICAL ENGINEERING UNIT

■ EASTERN REGIONAL OFFICE

□ WESTERN REGIONAL OFFICE

STATE OF NORTH CAROLINA
DEPARTMENT OF TRANSPORTATION
RALEIGH

RETAINING WALL NO. 1
PLAN AND ELEVATION

REVISIONS						SHEET NO.
NO.	BY	DATE	NO.	BY	DATE	W-1
1			3			TOTAL SHEETS
2			4			3

PREPARED BY: GMG	DATE: 8/08
REVIEWED BY: TTZ	DATE: 8/08

GEJ221406 9/4/2008 u2519da_geo_rwall tzan RD-Oce34

GEOTECHNICAL ENGINEER	ENGINEER
NORTH CAROLINA PROFESSIONAL SEAL 30943 ENGINEER THEIN TUN ZAN	
SIGNATURE 9/5/08 DATE	SIGNATURE DATE

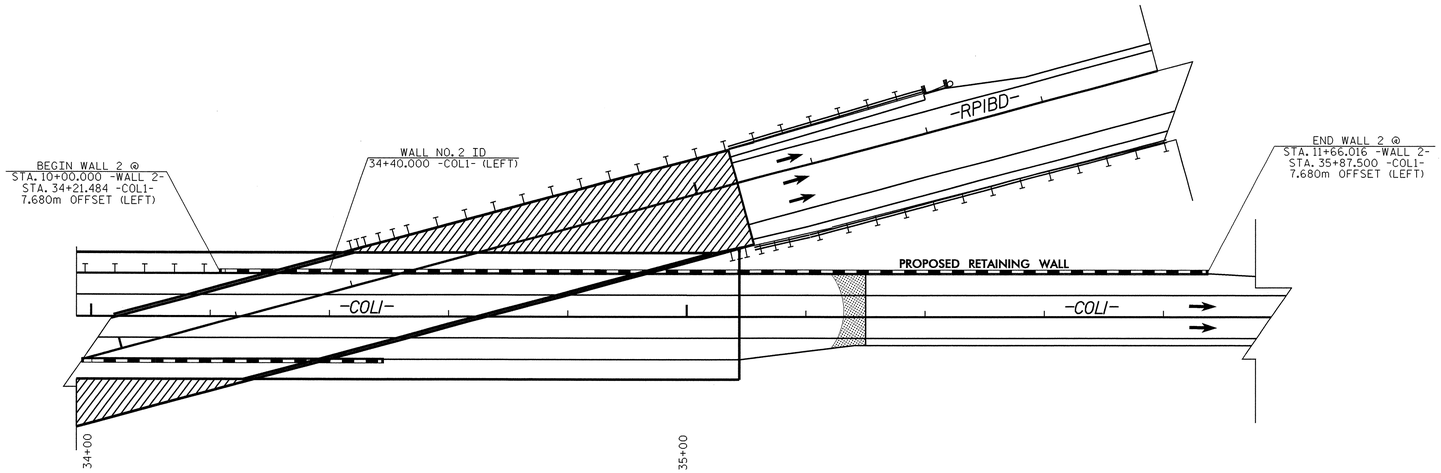

PLAN

RETAINING WALL NO. 2

N.T.S.

NOTES:

1. WALL ELEVATION IS SHOWN LOOKING AT EXPOSED FACE OF WALL.
2. OFFSET FROM -COL1- REMAINS CONSTANT ACROSS ENTIRE WALL.

WALL NO.	ESTIMATED EXPOSED AREA (SQ. M.)
2	735

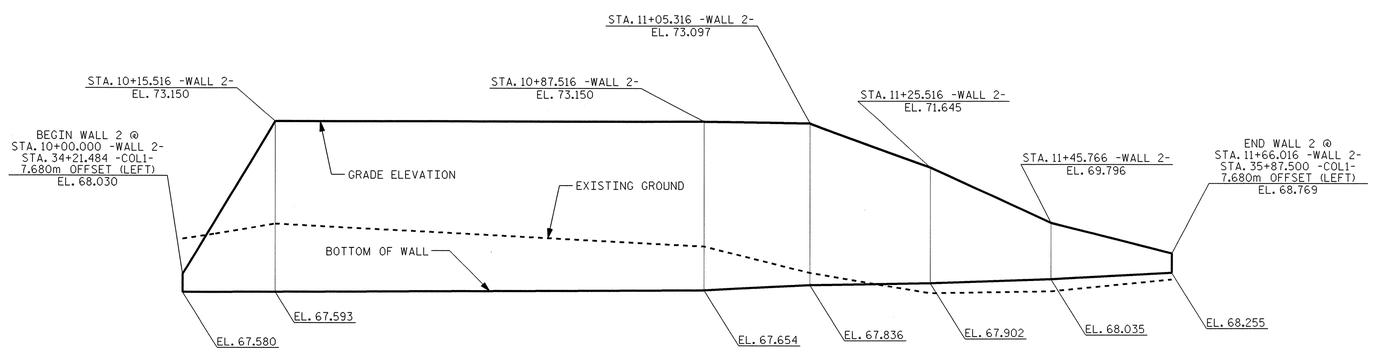

ELEVATION

RETAINING WALL NO. 2

N.T.S.

PROJECT NO.: U-2519DA

CUMBERLAND **COUNTY**

STATION: 34+40.000 -COL1- (LEFT)

SHEET 2 OF 3

GEOTECHNICAL ENGINEERING UNIT

■ EASTERN REGIONAL OFFICE

□ WESTERN REGIONAL OFFICE

STATE OF NORTH CAROLINA
DEPARTMENT OF TRANSPORTATION
RALEIGH

RETAINING WALL NO. 2
PLAN AND ELEVATION

REVISIONS						SHEET NO.
NO.	BY	DATE	NO.	BY	DATE	W-2
1			3			TOTAL SHEETS
2			4			3

PREPARED BY: GMG	DATE: 8/08
REVIEWED BY: TTZ	DATE: 8/08

GEJ221406 9/4/2008 u2519da_geo_rwall tzan RD-Oce34

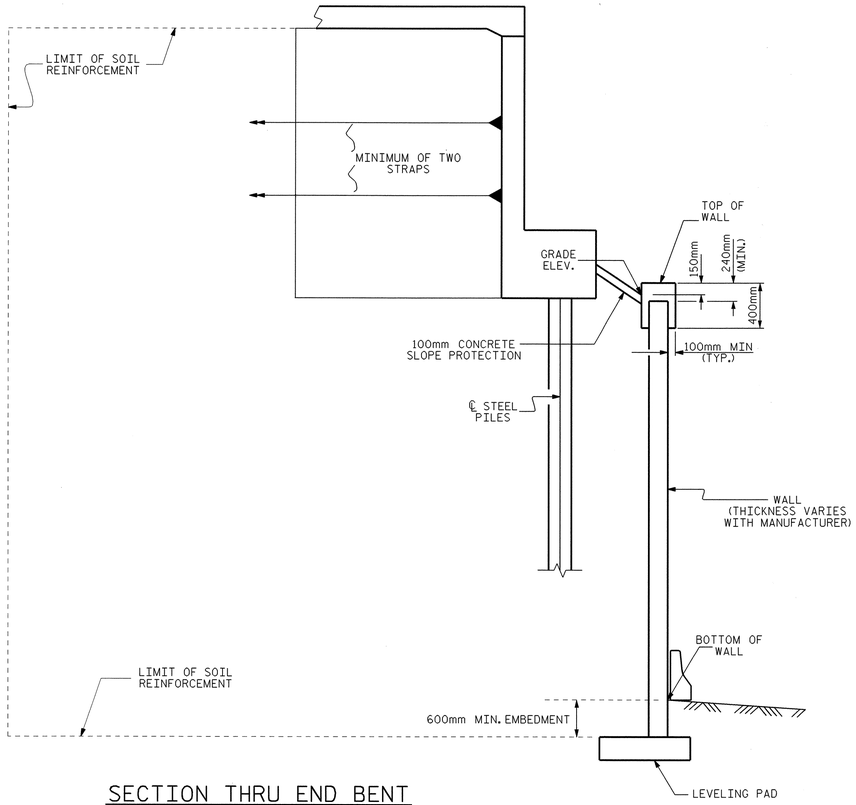

SECTION THRU END BENT

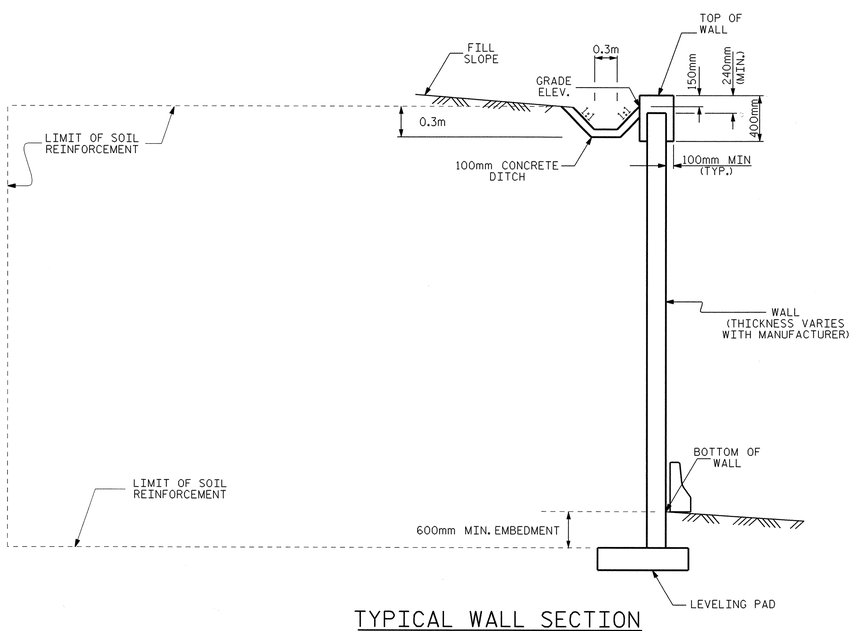

TYPICAL WALL SECTION

MSE RETAINING WALL NOTES

FOR MECHANICALLY STABILIZED EARTH (MSE) RETAINING WALLS, SEE MECHANICALLY STABILIZED EARTH RETAINING WALLS SPECIAL PROVISION.

FOR GUARDRAIL, SEE ROADWAY PLANS AND SECTION 862 OF THE STANDARD SPECIFICATIONS.

FOR SINGLE FACED PRECAST CONCRETE BARRIER, SEE ROADWAY PLANS AND SECTION 857 OF THE STANDARD SPECIFICATIONS.

DO NOT USE STANDARD SIZE NO.2S OR 2MS FOR WALL BACKFILL FOR RETAINING WALL NO. 1 AND RETAINING WALL NO. 2.

DO NOT USE AN MSE WALL SYSTEM WITH SEGMENTAL RETAINING WALL UNITS FOR RETAINING WALL NO. 1 AND RETAINING WALL NO. 2.

BEFORE BEGINNING MSE WALL DESIGN FOR RETAINING WALL NO. 1 AND RETAINING WALL NO. 2, SURVEY ALL EXISTING GROUND ELEVATIONS SHOWN ON THE PLANS AND SUBMIT A REVISED WALL ENVELOPE FOR REVIEW. DO NOT START WALL DESIGN OR CONSTRUCTION UNTIL THIS ENVELOPE IS ACCEPTED.

CAST-IN-PLACE CONCRETE COPING IS REQUIRED FOR RETAINING WALL NO. 1 AND RETAINING WALL NO. 2.

A PLAIN SURFACE FINISH IS REQUIRED ON THE FRONT FACE OF THE PRECAST CONCRETE PANELS FOR RETAINING WALL NO. 1 AND RETAINING WALL NO. 2.

DESIGN RETAINING WALL NO. 1 AND RETAINING WALL NO. 2 FOR A WALL HEIGHT EQUAL TO THE DESIGN HEIGHT (DIFFERENCE BETWEEN GRADE ELEVATION AND BOTTOM OF WALL ELEVATION) PLUS EMBEDMENT (DIFFERENCE BETWEEN BOTTOM OF WALL ELEVATION AND TOP OF LEVELING PAD ELEVATION).

DESIGN RETAINING WALL NO. 1 AND RETAINING WALL NO. 2 FOR THE FOLLOWING:

1) MINIMUM SERVICE LIFE = 100 YEARS
2) ALLOWABLE BEARING CAPACITY = 190 kPa
3) WALL BACKFILL MATERIAL PARAMETERS:

MATERIAL STANDARD SIZE NO. (IN ACCORDANCE WITH SECTIONS 1005 AND 1014 OF THE STANDARD SPECIFICATIONS)	UNIT WEIGHT (γ) (kN/m^3)	FRICTION ANGLE (ϕ) DEGREES	COHESION (c) kPa
57,67 AND 78M	17.2	38	0

4) IN-SITU ASSUMED MATERIAL PARAMETERS:

MATERIAL TYPE	UNIT WEIGHT (γ) (kN/m^3)	FRICTION ANGLE (ϕ) DEGREES	COHESION (c) kPa
RETAINED AND RANDOM BACKFILL	18.8	30	0
FOUNDATION	18.8	28	0

DESIGN RETAINING WALL NO.1 AND RETAINING WALL NO.2 FOR A LIVE LOAD (TRAFFIC) SURCHARGE.

DESIGN REINFORCEMENT CONNECTED TO END BENT CAPS FOR THE SPECIFIED SERVICE LOAD AND CAST THE REINFORCEMENT CONNECTION HARDWARE INTO THE CAP BACKWALL. MAINTAIN A MINIMUM CLEARANCE OF 75mm BETWEEN THE HARDWARE AND REINFORCING STEEL IN THE CAP.

A MINIMUM OF TWO LAYERS OF MSE STRAPS ARE REQUIRED BEHIND END BENT NO.1 AND END BENT NO. 2 BACKWALLS. THE MSE STRAPS ARE REQUIRED TO RESIST A SERVICE LOAD NO LESS THAN 28 KILONEWTONS PER LINER METER. APPLIED TO THE END BENT CAP 940 MILILIMETERS FROM THE BOTTOM OF THE CAP.

EXISTING OR FUTURE STRUCTURES SUCH AS FOUNDATIONS, GUARDRAIL POSTS, PAVEMENTS, PIPES, INLETS OR UTILITIES MAY INTERFERE WITH REINFORCEMENT FOR RETAINING WALL NO. 1 AND RETAINING WALL NO. 2.

FOUNDATIONS FOR EACH END BENT MAY INTERFERE WITH REINFORCEMENT FOR RETAINING WALL NO. 1 AND RETAINING WALL NO. 2. SEE "FOUNDATION LAYOUT" SHEET FOR FOUNDATION LOCATIONS.

DO NOT PLACE LEVELING PAD CONCRETE, WALL BACKFILL OR FIRST REINFORCEMENT LAYER FOR RETAINING WALL NO. 1 AND RETAINING WALL NO. 2 UNTIL OBTAINING APPROVAL OF THE EXCAVATION DEPTH AND FOUNDATION MATERIAL.

A MINIMUM PANEL EMBEDMENT OF 600 MILLIMETERS BELOW THE GRADE LINE IS REQUIRED.

DO NOT BEGIN CONSTRUCTION OF MSE RETAINING WALL NO.1 OR MSE RETAINING WALL NO.2 UNTIL END BENT PILES HAVE BEEN DRIVEN.

GEOTECHNICAL ENGINEER	ENGINEER
NORTH CAROLINA PROFESSIONAL SEAL 30943 ENGINEER THEIN TUN ZAW	
SIGNATURE 7/15/08 DATE	SIGNATURE DATE

PROJECT NO.: U-2519DA
CUMBERLAND COUNTY
STATION: 34+40.000 -COL1-
SHEET 3 OF 3

GEOTECHNICAL ENGINEERING UNIT
■ EASTERN REGIONAL OFFICE
☐ WESTERN REGIONAL OFFICE

STATE OF NORTH CAROLINA
DEPARTMENT OF TRANSPORTATION
RALEIGH

RETAINING WALL NO. 1 AND NO. 2 DETAILS

REVISIONS						SHEET NO.
NO.	BY	DATE	NO.	BY	DATE	W-3
1			3			TOTAL SHEETS
2			4			3

PREPARED BY: GMG	DATE: 8/08
REVIEWED BY: TTZ	DATE: 8/08

STANDARD NOTES

DESIGN DATA:

SPECIFICATIONS	A.A.S.H.T.O. (CURRENT)
LIVE LOAD	SEE PLANS
IMPACT ALLOWANCE	SEE A.A.S.H.T.O.
STRESS IN EXTREME FIBER OF	
STRUCTURAL STEEL - AASHTO M270 GRADE 250	140 MPa
- AASHTO M270 GRADE 345W	190 MPa
- AASHTO M270 GRADE 345	190 MPa
REINFORCING STEEL IN TENSION	
GRADE 420	165 MPa
CONCRETE IN COMPRESSION	8.3 MPa
CONCRETE IN SHEAR	SEE A.A.S.H.T.O.
STRUCTURAL TIMBER - TREATED OR	
UNTREATED - EXTREME FIBER STRESS	12 MPa
COMPRESSION PERPENDICULAR TO GRAIN OF TIMBER	2.6 MPa
EQUIVALENT FLUID PRESSURE OF EARTH	480 kg/m^3 (MINIMUM)

MATERIAL AND WORKMANSHIP:

EXCEPT AS MAY OTHERWISE BE SPECIFIED ON PLANS OR IN THE SPECIAL PROVISIONS, ALL MATERIAL AND WORKMANSHIP SHALL BE IN ACCORDANCE WITH THE 2006 "STANDARD SPECIFICATIONS FOR ROADS AND STRUCTURES" OF THE N. C. DEPARTMENT OF TRANSPORTATION.

STEEL SHEET PILING FOR PERMANENT OR TEMPORARY APPLICATIONS SHALL BE HOT ROLLED.

CONCRETE:

UNLESS OTHERWISE REQUIRED ON PLANS, CLASS A CONCRETE SHALL BE USED FOR ALL PORTIONS OF ALL STRUCTURES WITH THE EXCEPTION THAT: CLASS AA CONCRETE SHALL BE USED IN BRIDGE SUPERSTRUCTURES, ABUTMENT BACKWALLS, AND APPROACH SLABS; CLASS B CONCRETE SHALL BE USED FOR SLOPE PROTECTION AND RIP RAP; AND CLASS S SHALL BE USED FOR UNDERWATER FOOTING SEALS.

CONCRETE CHAMFERS:

UNLESS OTHERWISE NOTED ON THE PLANS, ALL EXPOSED CORNERS ON STRUCTURES SHALL BE CHAMFERED 19mm WITH THE FOLLOWING EXCEPTIONS: TOP CORNERS OF CURBS MAY BE ROUNDED TO 38mm RADIUS WHICH IS BUILT INTO CURB FORMS; CORNERS OF TRANSVERSE FLOOR EXPANSION JOINTS SHALL BE ROUNDED WITH A 6mm FINISHING TOOL UNLESS OTHERWISE REQUIRED ON PLANS; AND CORNERS OF EXPANSION JOINTS IN THE ROADWAY FACES AND TOPS OF CURBS AND SIDEWALKS SHALL BE ROUNDED TO A 6mm RADIUS WITH A FINISHING STONE OR TOOL UNLESS OTHERWISE REQUIRED ON PLANS.

DOWELS:

DOWELS WHEN INDICATED ON PLANS AS FOR CULVERT EXTENSIONS, SHALL BE EMBEDDED AT LEAST 300mm INTO THE OLD CONCRETE AND GROUTED INTO PLACE WITH 1 :2 CEMENT MORTAR.

ALLOWANCE FOR DEAD LOAD DEFLECTION, SETTLEMENT, ETC. IN CASTING SUPERSTRUCTURES:

BRIDGES SHALL BE BUILT ON THE GRADE OR VERTICAL CURVE SHOWN ON PLANS. SLABS, CURBS AND PARAPETS SHALL CONFORM TO THE GRADE OR CURVE.

ALL DIMENSIONS WHICH ARE GIVEN IN SECTION AND ARE AFFECTED BY DEAD LOAD DEFLECTIONS ARE DIMENSIONS AT CENTER LINE OF BEARING UNLESS OTHERWISE NOTED ON PLANS. IN SETTING FORMS FOR STEEL BEAM BRIDGES AND PRESTRESSED CONCRETE GIRDER BRIDGES, ADJUSTMENTS SHALL BE MADE DUE TO THE DEAD LOAD DEFLECTIONS FOR THE ELEVATIONS SHOWN. WHERE BLOCKS ARE SHOWN OVER BEAMS FOR BUILDING UP TO THE SLAB, THE VERTICAL DIMENSIONS OF THE BLOCKS SHALL BE ADJUSTED BETWEEN BEARINGS TO COMPENSATE FOR DEAD LOAD DEFLECTIONS, VERTICAL CURVE ORDINATE, AND ACTUAL BEAM CAMBER. WHERE BOTTOM OF SLAB IS IN LINE WITH BOTTOM OF TOP FLANGES, DEPTH OF SLAB BETWEEN BEARINGS SHALL BE ADJUSTED TO COMPENSATE FOR DEAD LOAD DEFLECTION, VERTICAL CURVE ORDINATE, AND ACTUAL BEAM CAMBER.

IN SETTING FALSEWORK AND FORMS FOR REINFORCED CONCRETE SPANS, AN ALLOWANCE SHALL BE MADE FOR DEAD LOAD DEFLECTIONS, SETTLEMENT OF FALSEWORK, AND PERMANENT CAMBER WHICH SHALL BE PROVIDED FOR IN ADDITION TO THE ELEVATIONS SHOWN. AFTER REMOVAL OF THE FALSEWORK, THE FINISHED STRUCTURES SHALL CONFORM TO THE PROFILE AND ELEVATIONS SHOWN ON THE PLANS AND CONSTRUCTION ELEVATIONS FURNISHED BY THE ENGINEER.

DETAILED DRAWINGS FOR FALSEWORK OR FORMS FOR BRIDGE SUPERSTRUCTURE AND ANY STRUCTURE OR PARTS OF A STRUCTURE AS NOTED ON THE PLANS SHALL BE SUBMITTED TO THE ENGINEER FOR APPROVAL BEFORE CONSTRUCTION OF THE FALSEWORK OR FORMS IS STARTED.

REINFORCING STEEL:

ALL REINFORCING STEEL SHALL BE DEFORMED. DIMENSIONS RELATIVE TO PLACEMENT OF REINFORCING ARE TO CENTERS OF BARS UNLESS OTHERWISE INDICATED IN THE PLANS. DIMENSIONS ON BAR DETAILS ARE TO CENTERS OF BARS OR ARE OUT TO OUT AS INDICATED ON PLANS.

WIRE BAR SUPPORTS SHALL BE PROVIDED FOR REINFORCING STEEL WHERE INDICATED ON THE PLANS. WHEN BAR SUPPORT PIECES ARE PLACED IN CONTINUOUS LINES, THEY SHALL BE SO PLACED THAT THE ENDS OF THE SUPPORTING WIRES SHALL BE LAPPED TO LOCK LEGS ON ADJOINING PIECES.

STRUCTURAL STEEL:

AT THE CONTRACTOR'S OPTION, HE MAY SUBSTITUTE 22.23mm Ø SHEAR STUDS FOR THE 19.05mm Ø STUDS SPECIFIED ON THE PLANS. THIS SUBSTITUTION SHALL BE MADE AT THE RATE OF 3 -22.23mm Ø STUDS FOR 4 - 19.05mm Ø STUDS, AND STUD SPACING CHANGES SHALL BE MADE AS NECESSARY TO PROVIDE THE SAME EQUIVALENT NUMBER OF 22.23mm Ø STUDS ALONG THE BEAM AS SHOWN FOR 19.05mm Ø STUDS BASED ON THE RATIO OF 3 - 22.23mm Ø STUDS FOR 4 - 19.05mm Ø STUDS. STUDS OF THE LENGTH SPECIFIED ON THE PLANS MUST BE PROVIDED. THE MAXIMUM SPACING SHALL BE 610mm.

EXCEPT AT THE INTERIOR SUPPORTS OF CONTINUOUS BEAMS WHERE THE COVER PLATE IS IN CONTACT WITH BEARING PLATE, THE CONTRACTOR MAY, AT HIS OPTION, SUBSTITUTE FOR THE COVER PLATES DESIGNATED ON THE PLANS COVER PLATES OF THE EQUIVALENT AREA PROVIDED THESE PLATES ARE AT LEAST 8mm IN THICKNESS AND DO NOT EXCEED A WIDTH EQUAL TO THE FLANGE WIDTH LESS 50mm OR A THICKNESS EQUAL TO 2 TIMES THE FLANGE THICKNESS. THE SIZE OF FILLET WELDS SHALL CONFORM TO THE REQUIREMENTS OF THE CURRENT ANSI/AASHTO/AWS "BRIDGE WELDING CODE". ELECTROSLAG WELDING WILL NOT BE PERMITTED.

PLACEMENT OF BEAM OR GIRDER MEMBERS ON TRUCKS FOR HAULING SHALL BE DONE IN COMPLIANCE WITH LIMITS SHOWN ON SKETCHES PROVIDED TO THE MATERIALS AND TEST UNIT APPROVED BY THE STRUCTURE DESIGN UNIT DATED MAY 8, 1991. THESE SKETCHES PRIMARILY LIMIT THE UNSUPPORTED CANTILEVER LENGTH OF MEMBERS. WHEN THE CONTRACTOR WISHES TO PLACE MEMBERS ON TRUCKS NOT IN ACCORDANCE WITH THESE LIMITS, TO SHIP BY RAIL, TO ATTACH SHIPPING RESTRAINTS TO THE MEMBERS OR TO INVERT MEMBERS, HE SHALL SUBMIT A SKETCH FOR APPROVAL PRIOR TO SHIPPING. SEE ALSO ARTICLE 1072-11.

WITH THE SOLE EXCEPTION OF EDGES AT SURFACES WHICH BEAR ON OTHER SURFACES, ALL SHARP EDGES AND ENDS OF SHAPES AND PLATES SHALL BE SLIGHTLY ROUNDED BY SUITABLE MEANS TO A RADIUS OF APPROXIMATELY 2mm OR EQUIVALENT FLAT SURFACE AT A SUITABLE ANGLE PRIOR TO PAINTING, GALVANIZING, OR METALLIZING.

HANDRAILS AND POSTS:

METAL STANDARDS AND FACES OF THE CONCRETE END POSTS FOR THE METAL RAIL SHALL BE SET NORMAL TO THE GRADE OF THE CURB, UNLESS OTHERWISE SHOWN ON PLANS. THE METAL RAIL AND TOPS OF CONCRETE POSTS USED WITH THE ALUMINUM RAIL SHALL BE BUILT PARALLEL TO THE GRADE OF THE CURB.

METAL HANDRAILS SHALL BE IN ACCORDANCE WITH THE PLANS. RAILS SHALL BE AS MANUFACTURED FOR BRIDGE RAILING. CASTINGS SHALL BE OF A UNIFORM APPEARANCE. FINS AND OTHER DEFORMATIONS RESULTING FROM CASTING OR OTHERWISE SHALL BE REMOVED IN A MANNER SO THAT A UNIFORM COLORING OF THE COMPLETED CASTING SHALL BE OBTAINED. CASTINGS WITH DISCOLORATIONS OR OF NON-UNIFORM COLORING WILL NOT BE ACCEPTED. CERTIFIED MILL REPORTS ARE REQUIRED FOR METAL RAILS AND POSTS.

SPECIAL NOTES:

GENERALLY, IN CASE OF DISCREPANCY, THIS STANDARD SHEET OF NOTES SHALL GOVERN OVER THE SPECIFICATIONS, BUT THE REMAINDER OF THE PLANS SHALL GOVERN OVER NOTES HEREON, AND SPECIAL PROVISIONS SHALL GOVERN OVER ALL. SEE SPECIFICATIONS ARTICLE 105-4.

METRIC

JANUARY, 1990