9/07/96

TIP PROJECT: U-2519DA

STRUCTURES, CULVERTS & RETAINING WALLS

CONTRACT: C202829

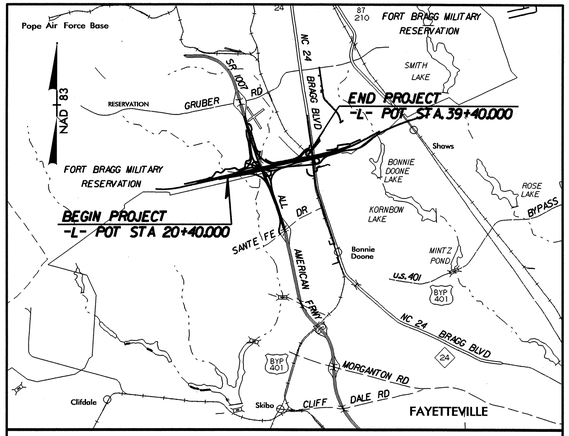

VICINITY MAP

STATE OF NORTH CAROLINA
DIVISION OF HIGHWAYS

CUMBERLAND COUNTY

STATE	STATE PROJECT REFERENCE NO.	SHEET NO.	TOTAL SHEETS
N.C.	U-2519DA		

STATE PROJ. NO.	F. A. PROJ. NO.	DESCRIPTION
34817.1.2	NHF-DPR-0100(001)	PE
34817.2.4	NHF-100(9)	ROW & UTILITIES
34817.3.12	NHF-0100(21)	CONST.

LOCATION: FAYETTEVILLE OUTER LOOP FROM EAST OF SR 1415 TO WEST OF NC 24 (BRAGG BOULEVARD)

TYPE OF WORK: GRADING, DRAINAGE, PAVING, STRUCTURES, CULVERTS, SIGNING, WIDENING, RETAINING WALLS & SIGNAL

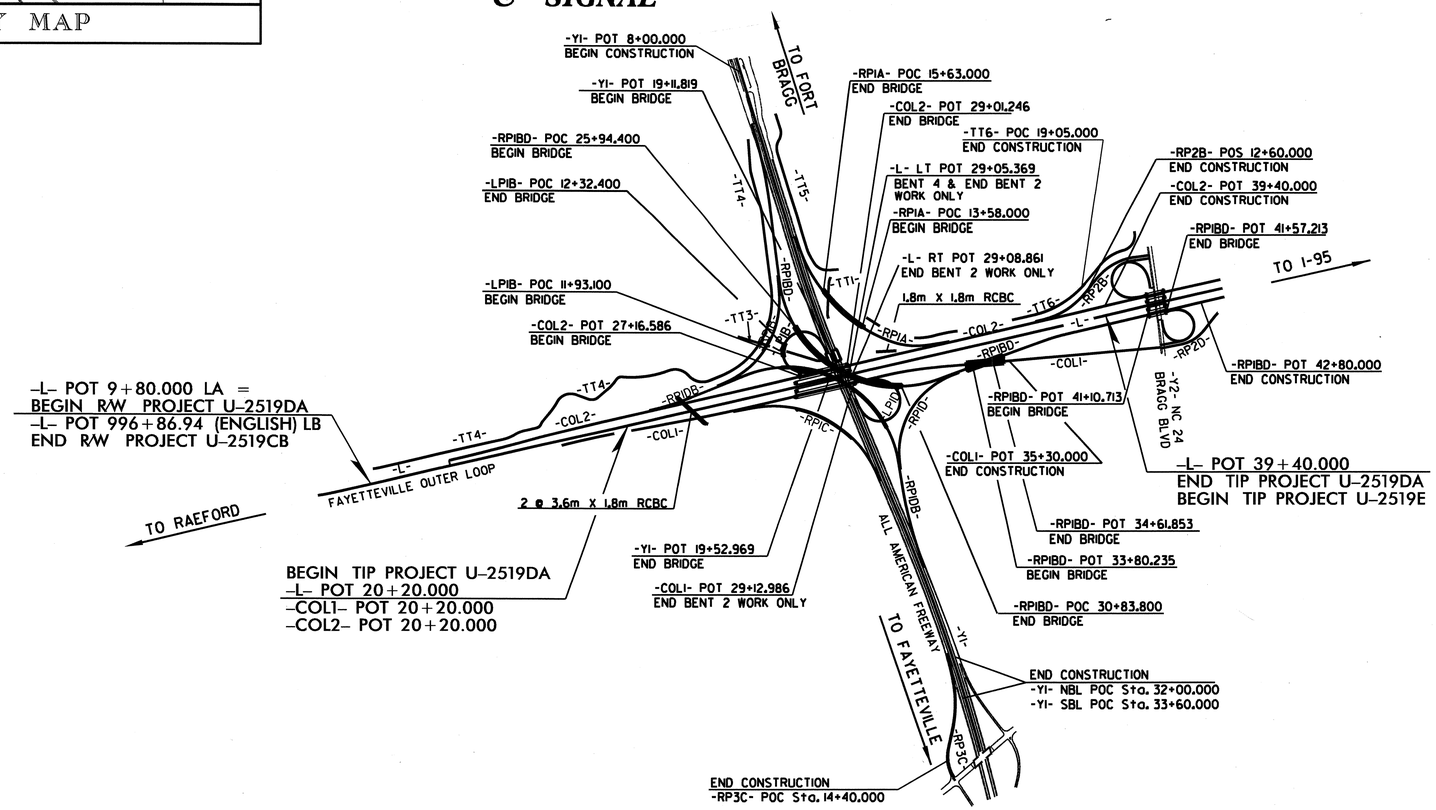

DESIGN DATA	
ADT 2007	= 27300
ADT 2030	= 66200
DHV	= 9 %
D	= 55 %
T	= 12 %
(DUALS 8 %, TTST 4 %)	
V	= 110 km/h
FUNCT CLASS	= INTERSTATE

PROJECT LENGTH

LENGTH ROADWAY TIP PROJECT U-2519DA	1.693	KM.
LENGTH STRUCTURES TIP PROJECT U-2519DA	0.227	KM.
TOTAL LENGTH TIP PROJECT U-2519DA	1.920	KM.

PREPARED IN THE OFFICE OF:

DIVISION OF HIGHWAYS

2006 STANDARD SPECIFICATIONS

LETTING DATE:

AUGUST 16, 2011

JOHN C. FRYE, P.E.
OMAR R. AZIZI, P.E.
B. CHARLES HUNT, P.E.
ROY M. GIROLAMI, P.E.
LONNIE I. BROOKS, P.E.
PROJECT ENGINEERS

TING H. FANG, P.E.
TIMOTHY L. COGGINS, P.E.
W. KEVIN FISCHER, P.E.
LAURA E. SUTTON, P.E.
THOMAS G. PAYNE, P.E.
PROJECT DESIGN ENGINEER

STRUCTURE DESIGN UNIT
1000 BIRCH RIDGE DR.
RALEIGH, NC 27610

DIVISION OF HIGHWAYS
STATE OF NORTH CAROLINA

P.E.
STATE DESIGN ENGINEER

DEPARTMENT OF TRANSPORTATION
FEDERAL HIGHWAY ADMINISTRATION

APPROVED
DIVISION ADMINISTRATOR *DATE*

18-MAR-2011 11:19
$$$$$$$$$$$$$$$$$$$$DGN$$$$$$$$$$$$$$$$$$$$
17.5KB

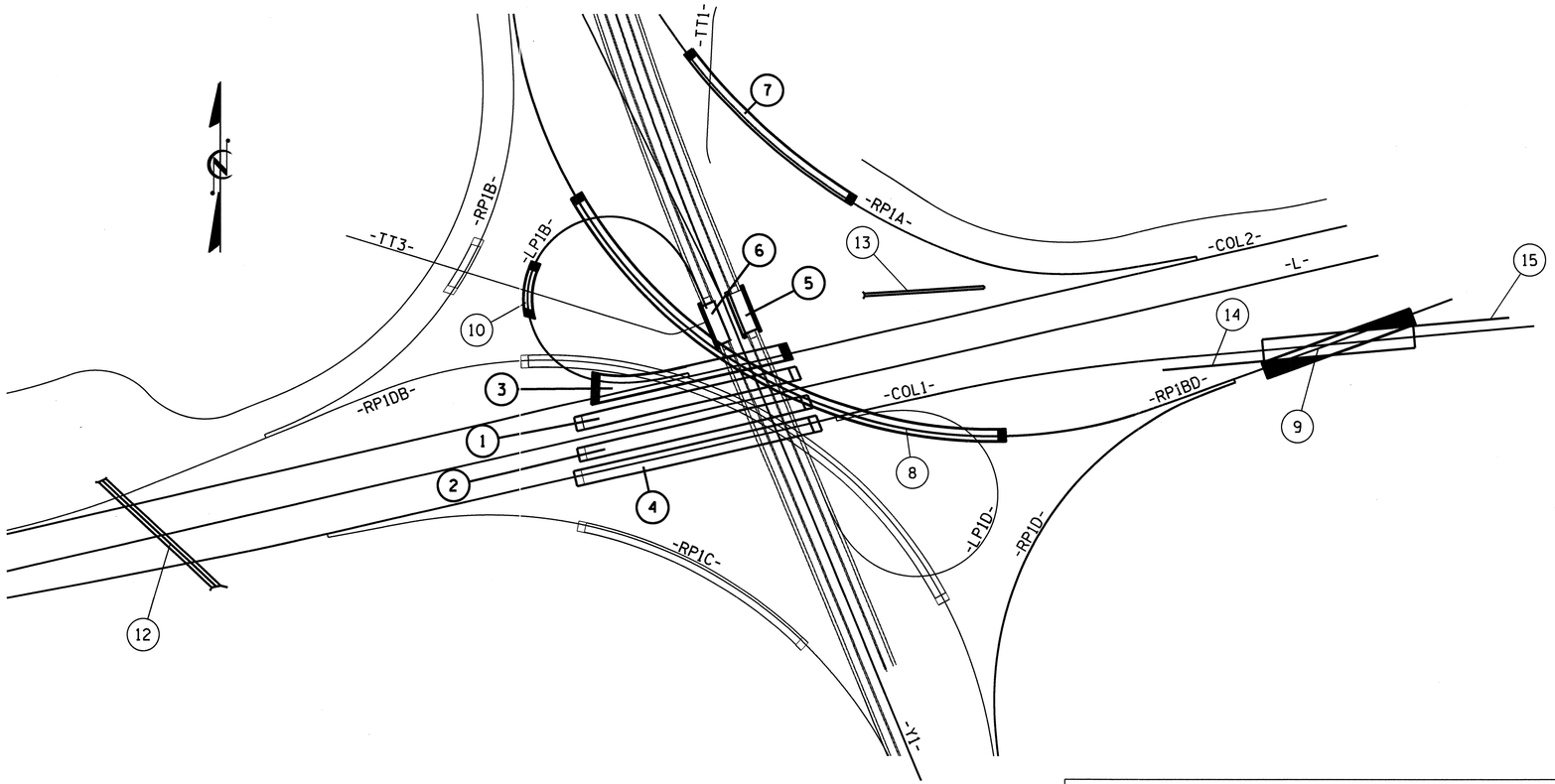

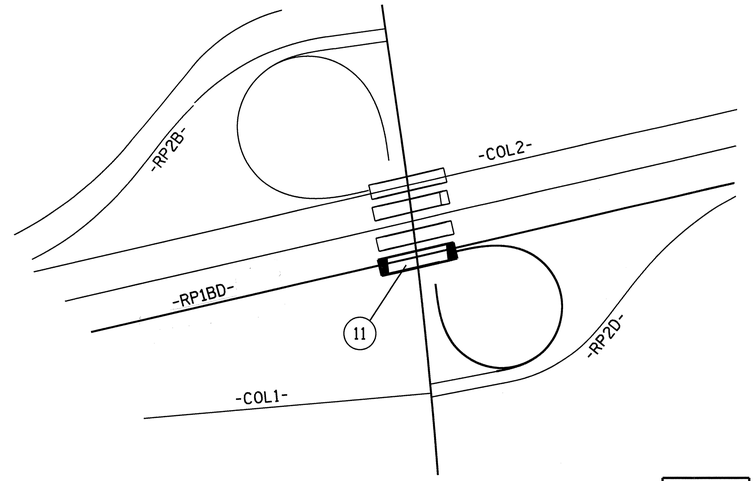

PART 1 OF 2

INDEX

STRUCTURE NO.	STATION	DESCRIPTION	SHEET NUMBERS
1	28+72.615 -L- POT = 20+16.038 -Y1- POT LEFT LANE	BRIDGE 366 OVER BEAVER CREEK AND ALL AMERICAN FREEWAY ON FAYETTEVILLE OUTER LOOP	S-1 THRU S-9
2	28+72.615 -L- POT = 20+16.038 -Y1- POT RIGHT LANE	BRIDGE 367 OVER BEAVER CREEK AND ALL AMERICAN FREEWAY ON FAYETTEVILLE OUTER LOOP	S-10 THRU S-16
3	28+66.746 -COL2- POT = 19+80.253 -Y1- POT	BRIDGE 369 OVER BEAVER CREEK AND ALL AMERICAN FREEWAY ON FAYETTEVILLE OUTER LOOP	S-17 THRU S-76
4	28+78.486 -COL1- POT = 20+51.823 -Y1- POT	BRIDGE 368 OVER BEAVER CREEK AND ALL AMERICAN FREEWAY ON FAYETTEVILLE OUTER LOOP	S-77 THRU S-83
5	19+34.958 -Y1- POT LEFT LANE	BRIDGE 235 OVER BEAVER CREEK ON ALL AMERICAN FREEWAY	S-84 THRU S-126
6	19+34.958 -Y1- POT RIGHT LANE	BRIDGE 4 OVER BEAVER CREEK ON ALL AMERICAN FREEWAY	S-127 THRU S-165
7	14+60.500 -RP1A- POC	BRIDGE 370 OVER BEAVER CREEK ON RAMP 1A	S-166 THRU S-225

PART 1

INDEX

STRUCTURE NO.	STATION	DESCRIPTION	SHEET NUMBERS
8	28+98.516 -L- POT = 28+72.626 -RP1BD- POC	BRIDGE 371 ON FLYOVER OVER BEAVER CREEK, FAYETTEVILLE OUTER LOOP, AND ALL AMERICAN FREEWAY	S-226 THRU S-314
9	34+25.491 -COL1- POT = 34+21.044 -RP1BD- POT	BRIDGE 376 ON RAMP 1BD OVER COL1	S-315 THRU S-371
10	12+10.929 -LP1B- POC = 11+57.976 -TT3- POT	BRIDGE 375 OVER TANK TRAIL 3 ON LOOP 1B	S-372 THRU S-411
11	41+33.963 -RP1BD- = 17+34.915 -Y2-	BRIDGE ON FAYETTEVILLE OUTER LOOP (RAMP 1BD) OVER BRAGG BLVD. (NC 24)	SS-1 THRU SS-17
12	22+70.320 -L- POT	DOUBLE 3.6M X 1.8M RCBC	C-1 THRU C-4
13	30+73.000 -L- POT 67.300M LT.	SINGLE 1.8M X 1.8M RCBC	C-6 THRU C-5
14	34+40.000 -COL1- 7.680M RT.	MSE RETAINING WALL	W-1 THRU W-3
15	34+40.000 -COL1- 7.680M LT.	MSE RETAINING WALL	W-1 THRU W-3

PART 2

PROJECT NO. U-2519DA

CUMBERLAND COUNTY

STATE OF NORTH CAROLINA
DEPARTMENT OF TRANSPORTATION
RALEIGH

INDEX

REVISIONS					
NO.	BY:	DATE:	NO.	BY:	DATE:
1			3		
2			4		

07-FEB-2011 07:35
R:\Structures\frye\str_L_LL\Final Plans\u2519da_sd_index.dgn
dcrutcher

F.A. PROJECT NO. NHF-0100(21)

METRIC

28+20 28+40 28+60 28+80 29+00 29+20

80 70 60 50

2.2300 % -1.6700 %

PI = 28+60.000 -L-
EL. = 75.511
VC = 380

GRADE DATA

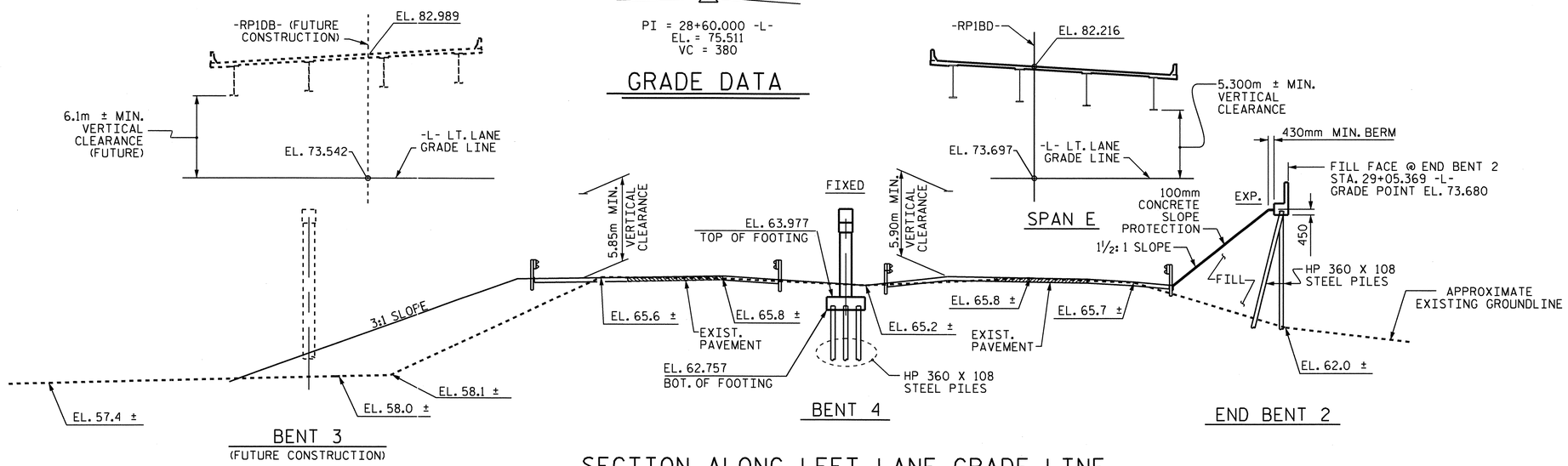

SECTION ALONG LEFT LANE GRADE LINE

(SECTIONS @ BENT 4 & END BENT 2 ARE TAKEN @ RIGHT ANGLES)

CONSTRUCTION CONSISTS OF BENT 4, END BENT 2 AND SLOPE PROTECTION

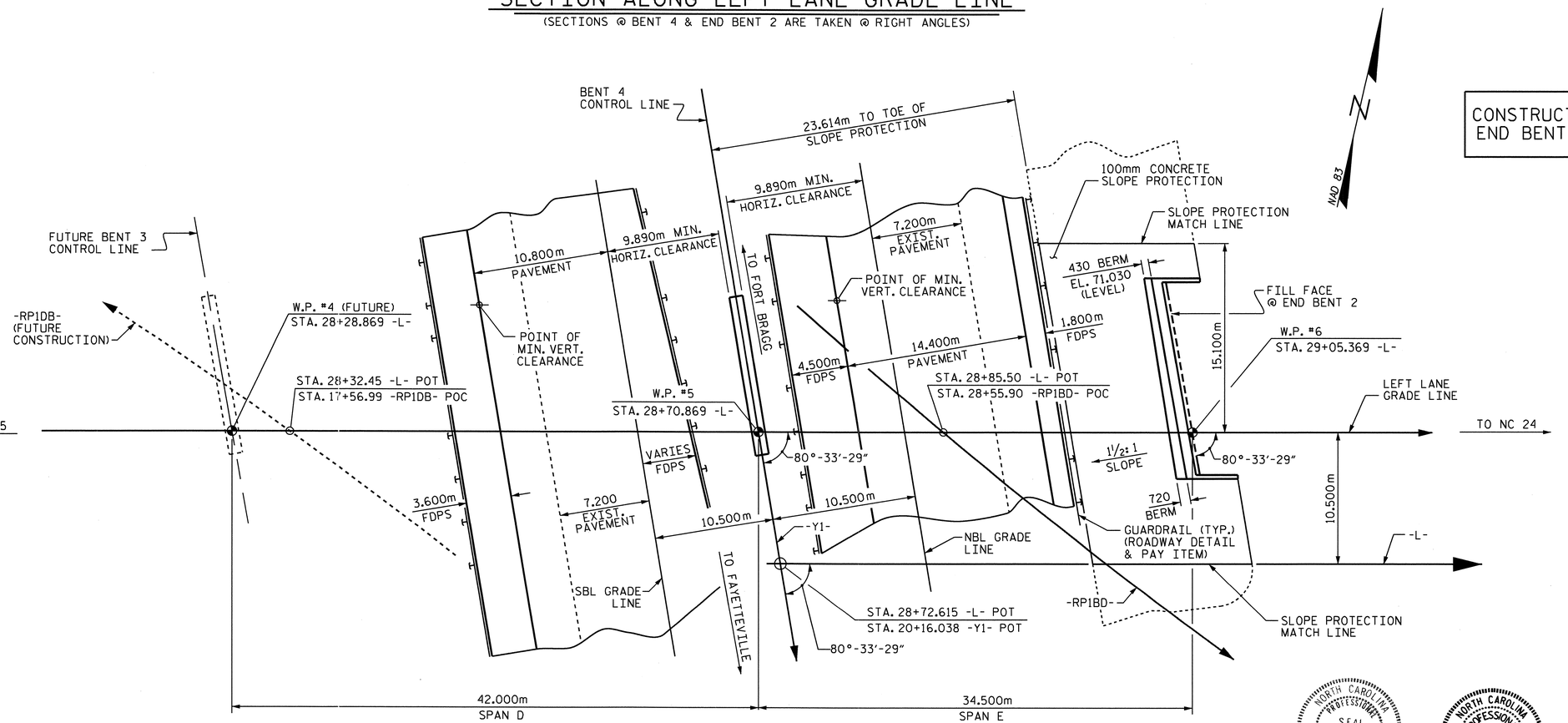

PLAN

PILES, FOOTINGS & COLUMNS NOT SHOWN FOR CLARITY.

NORTH CAROLINA PROFESSIONAL SEAL 11915 ENGINEER JOHN C. FRYE 3/28/11

NORTH CAROLINA PROFESSIONAL SEAL 16301 ENGINEER TING H. FANG 3/28/11

PROJECT NO. U-2519DA
CUMBERLAND COUNTY
STATION: 28+72.615 -L- POT
20+16.038 -Y1- POT
SHEET 1 OF 3 BRIDGE #366

STATE OF NORTH CAROLINA
DEPARTMENT OF TRANSPORTATION
RALEIGH

GENERAL DRAWING

BRIDGE OVER BEAVER CREEK AND ALL AMERICAN FREEWAY ON FAYETTEVILLE OUTER LOOP BETWEEN SR 1415 AND NC 24

-L- LEFT LANE

REVISIONS						SHEET NO.
NO.	BY:	DATE:	NO.	BY:	DATE:	S-1
1			3			TOTAL SHEETS
2			4			411

DRAWN BY : A.R.CHESSON DATE : 6-06
CHECKED BY : T.H.FANG DATE : 1-07

28-MAR-2011 14:19
K:\TIPProjects-U\U2519da\Structures\frye\str1_LL\FinalPlans\u2519da_sd_01_gd.dgn
tfang

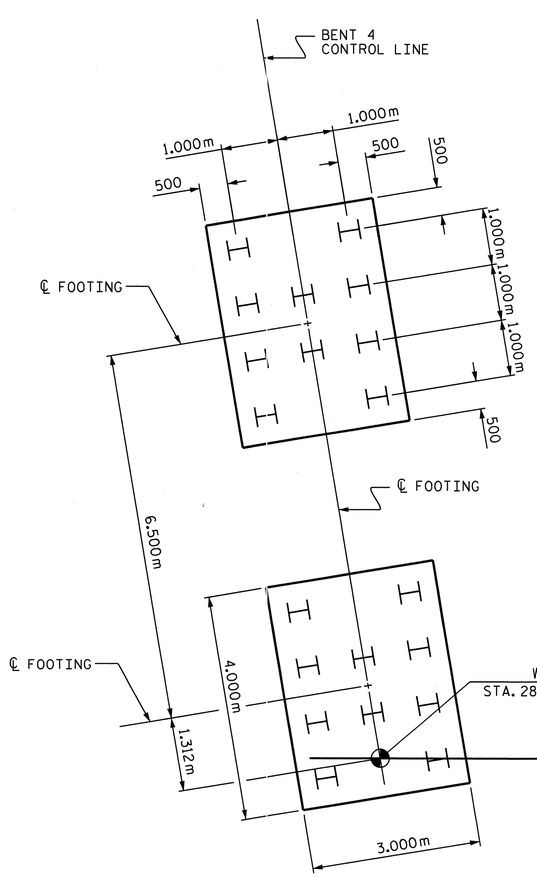

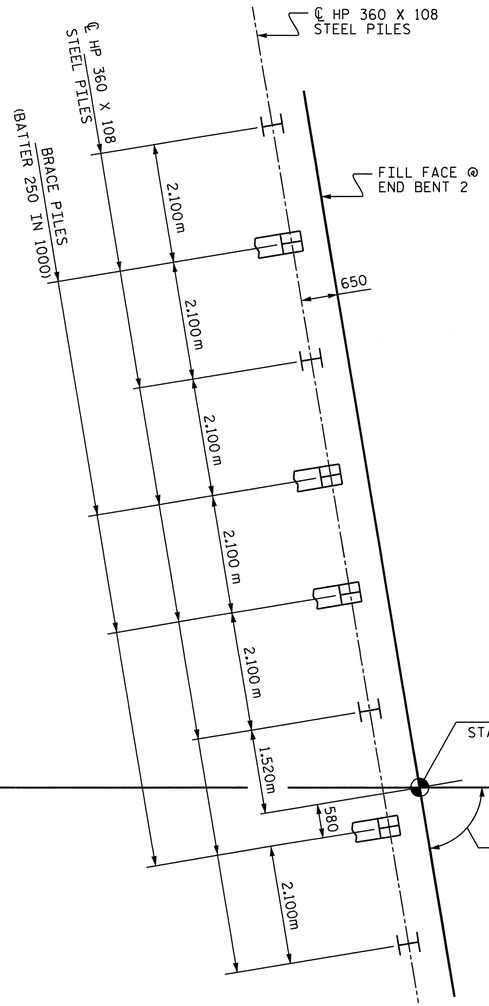

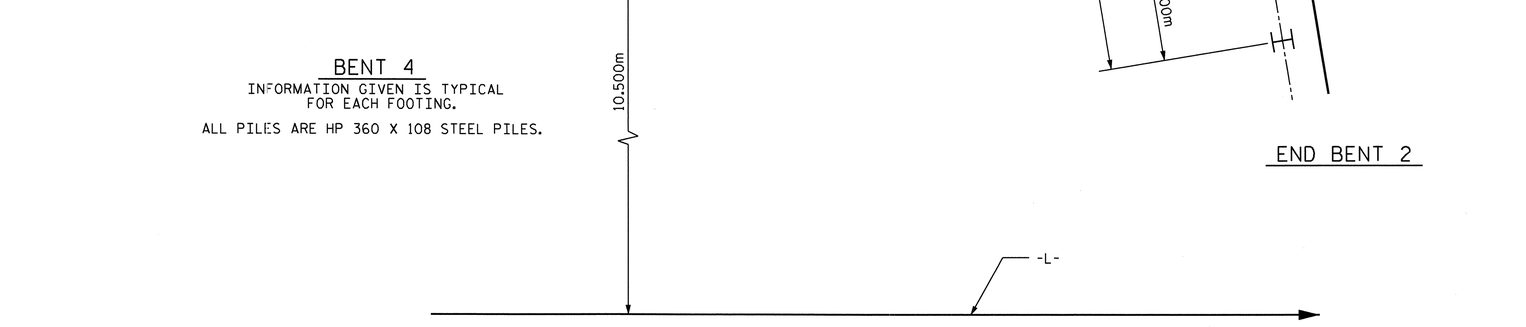

BENT 4

INFORMATION GIVEN IS TYPICAL FOR EACH FOOTING.

ALL PILES ARE HP 360 X 108 STEEL PILES.

END BENT 2

NOTES:

DRIVE PILES AT BENT 4 AND END BENT 2 TO A MINIMUM BEARING CAPACITY OF 1340 KN PER PILE. THE REQUIRED BEARING CAPACITY IS EQUAL TO THE ALLOWABLE BEARING CAPACITY WITH A MINIMUM FACTOR OF SAFETY OF TWO.

THE ALLOWABLE BEARING CAPACITY FOR PILES AT BENT 4 AND END BENT 2 ARE 670 KN PER PILE.

TESTING PILES WITH THE PILE DRIVING ANALYZER (PDA) DURING DRIVING, RESTRIKING OR REDRIVING MAY BE REQUIRED. THE ENGINEER WILL DETERMINE THE NEED FOR PDA TESTING. SEE PILE DRIVING ANALYZER SPECIAL PROVISION.

PILE RESTRIKES FOR LRFD MAY BE REQUIRED. SEE PILE RESTRIKE FOR LRFD SPECIAL PROVISION.

FOR PILES, SEE SPECIAL PROVISION.

FOUNDATION LAYOUT

DIMENSIONS LOCATING PILES ARE SHOWN TO PILE CENTERLINE AT THE BOTTOM OF FOOTINGS AND END BENT 2 CAP.

NORTH CAROLINA PROFESSIONAL SEAL 16301 ENGINEER YING HSIUNG FANG
3/28/11

PROJECT NO. U-2519DA

CUMBERLAND COUNTY

STATION: 28+72.615 -L-

SHEET 2 OF 3

STATE OF NORTH CAROLINA
DEPARTMENT OF TRANSPORTATION
RALEIGH

GENERAL DRAWING

BRIDGE OVER BEAVER CREEK AND ALL AMERICAN FREEWAY ON FAYETTEVILLE OUTER LOOP BETWEEN SR 1415 AND NC 24

-L- LEFT LANE

REVISIONS						SHEET NO.
NO.	BY:	DATE:	NO.	BY:	DATE:	S-2
1			3			TOTAL SHEETS
2			4			411

DRAWN BY : Z. H. BROWN DATE : 5-22-08
CHECKED BY : T.H. FANG DATE : 6-1-08

28-MAR-2011 14:18
K:\TIPProjects-U\U2519da\Structures\frye\strl_L_LL\Final Plans\u2519da_sd_01_gd.dgn
tfang

TOTAL BILL OF MATERIAL

	FOUNDATION EXCAVATION FOR BENT	PDA TESTING	PDA ASSISTANCE	CLASS A CONCRETE	REINFORCING STEEL	SPIRAL COLUMN REINFORCING STEEL	HP 360 X 108 STEEL PILES		PILE REDRIVES	100mm SLOPE PROTECTION
	LUMP SUM	EACH	EACH	CU. METERS	KG	KG	NO.	METERS	EACH	SQ. METERS
BENT 4	LUMP SUM			69.3	5,449	444	20	200.0	5	
END BENT 2				29.8	2,539		8	168.0	2	450.0
TOTAL	LUMP SUM	1	1	99.1	7,988	444	28	368.0	7	450.0

CONSTRUCTION CONSISTS OF BENT 4, END BENT 2 AND SLOPE PROTECTION

B.M. #12: POINT BL12, ALUMINUM DISK 65.137m LT. OF STA. 27+21.030 -L-, ELEV. 59.506

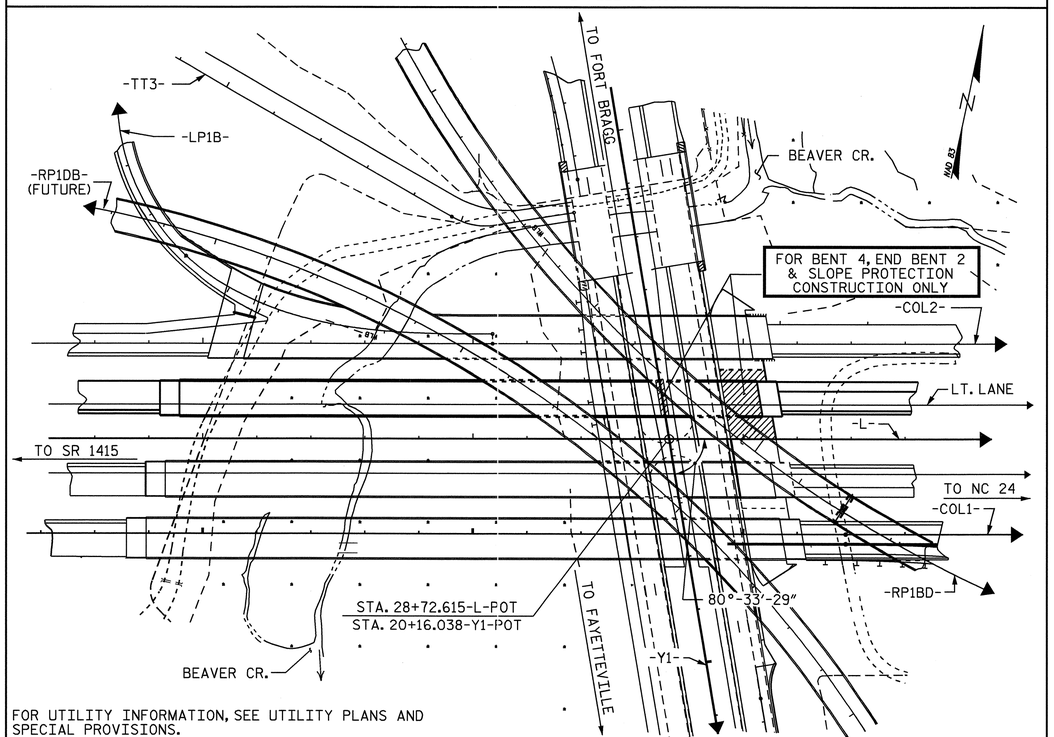

FOR UTILITY INFORMATION, SEE UTILITY PLANS AND SPECIAL PROVISIONS.

LOCATION SKETCH

NOTES

ALL DIMENSIONS ARE IN MILLIMETERS UNLESS OTHERWISE NOTED.

ALL ELEVATIONS ARE IN METERS.

ASSUMED LIVE LOAD = MS 22.5 OR ALTERNATE LOADING.

FOR OTHER DESIGN DATA AND GENERAL NOTES, SEE SHEET SNSM.

FOR EROSION CONTROL MEASURES, SEE EROSION CONTROL PLANS.

THIS BRIDGE HAS BEEN DESIGNED BY THE STRENGTH DESIGN METHOD AS SPECIFIED IN AASHTO STANDARD SPECIFICATIONS.

THIS BRIDGE HAS BEEN DESIGNED IN ACCORDANCE WITH THE REQUIREMENTS OF THE AASHTO STANDARD SPECIFICATIONS FOR SEISMIC DESIGN OF HIGHWAY BRIDGES FOR SEISMIC PERFORMANCE CATEGORY A.

THE CONTRACTOR SHALL PROVIDE INDEPENDENT ASSURANCE SAMPLES OF REINFORCING STEEL AS FOLLOWS: FOR PROJECTS REQUIRING UP TO 360,000 kg OF REINFORCING STEEL, ONE 760mm SAMPLE OF EACH SIZE BAR USED, AND FOR PROJECTS REQUIRING OVER 360,000 kg OF REINFORCING STEEL, TWO 760mm SAMPLES OF EACH SIZE BAR USED. THE BARS FROM WHICH THE SAMPLES ARE TAKEN MUST THEN BE SPLICED WITH REPLACEMENT BARS OF THE SIZE AND LENGTH OF THE SAMPLE PLUS A MINIMUM LAP SPLICE OF THIRTY BAR DIAMETERS.

FOR SUBMITTAL OF WORKING DRAWINGS, SEE SPECIAL PROVISIONS.

FOR FALSEWORK AND FORMWORK, SEE SPECIAL PROVISIONS.

FOR CRANE SAFETY, SEE SPECIAL PROVISIONS.

FOR CURING CONCRETE, SEE SPECIAL PROVISIONS.

HYDRAULIC DATA

DESIGN DISCHARGE---------- 52.7 m^3/s
FREQUENCY OF DESIGN FLOOD---- 50 YR.
DESIGN HIGH WATER EL.-------- 58.72
DRAINAGE AREA---------- 15.0 SQ. Km
BASIC DISCHARGE (Q100)------- 58.9 m^3/s
BASIC HIGH WATER EL.--------- 59.17

OVERTOPPING FLOOD DATA

OVERTOPPING DISCHARGE---------- **
FREQUENCY OF OVERTOPPING FLOOD--- >500 YR.
OVERTOPPING FLOOD EL.---------- 63.03

** OVERTOPPING FLOOD IS GREATER THAN THE 500+ YEAR EVENT.
OVERTOPPING LOCATION AT -RP1A- 16+34.207

NORTH CAROLINA PROFESSIONAL SEAL 16301 ENGINEER TING HSILUNG FANG
10/03/08

PROJECT NO. U-2519DA
CUMBERLAND COUNTY
STATION: 28+72.615 -L-

SHEET 3 OF 3

STATE OF NORTH CAROLINA
DEPARTMENT OF TRANSPORTATION
RALEIGH

GENERAL DRAWING

BRIDGE OVER BEAVER CREEK AND ALL AMERICAN FREEWAY ON FAYETTEVILLE OUTER LOOP BETWEEN SR 1415 AND NC 24

-L- LEFT LANE

REVISIONS						SHEET NO.
NO.	BY:	DATE:	NO.	BY:	DATE:	S-3
1			3			TOTAL SHEETS
2			4			411

DRAWN BY : D. G. ELY DATE : 2-07
CHECKED BY : T. H. FANG DATE : 3-08

03-OCT-2008 12:37
z:\u2519da\structures\frye\str_I_II\final plans\u2519da_sd_01_gd.dgn
tfang

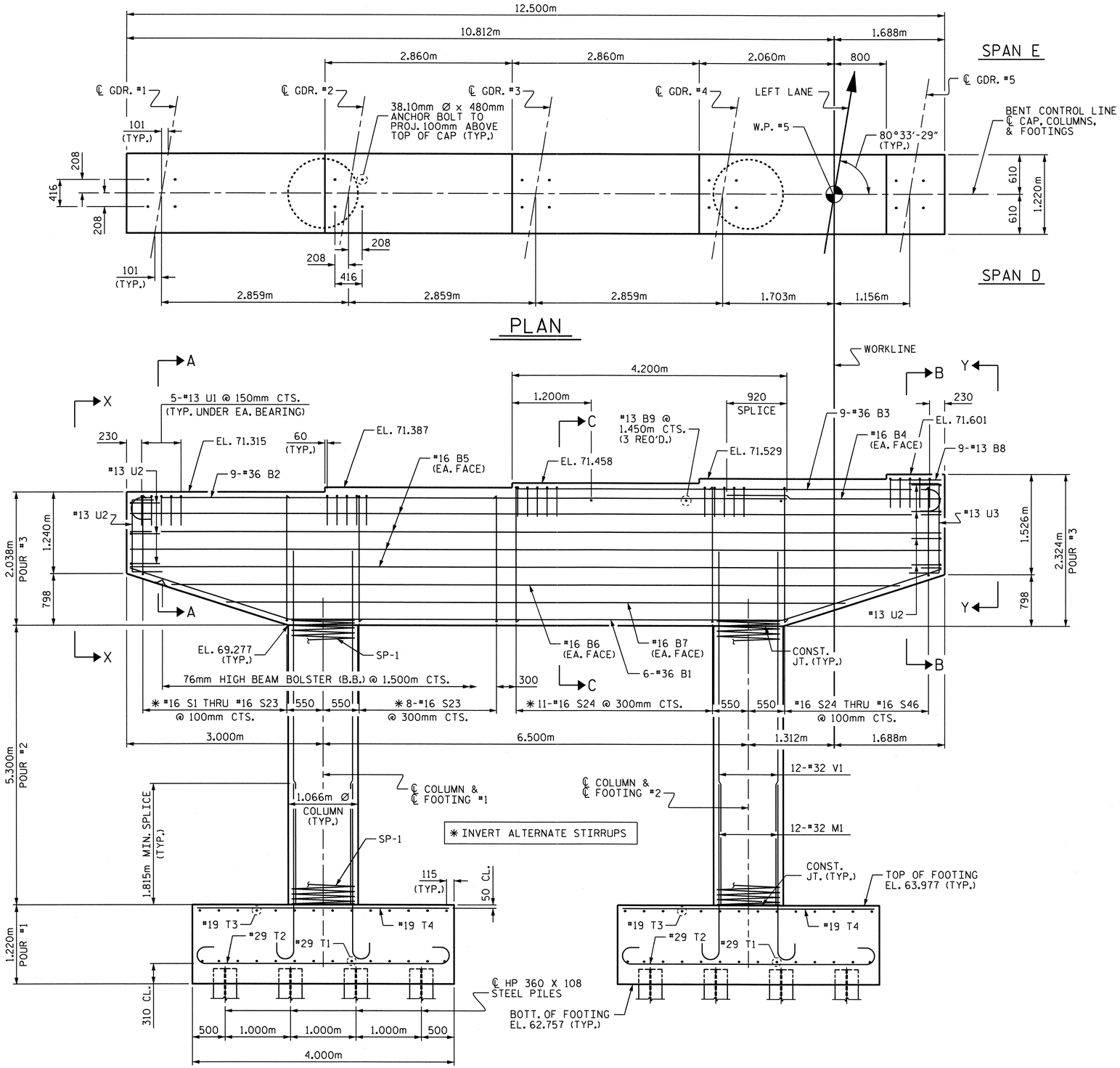

ELEVATION

DIMENSIONS & REINFORCING STEEL ARE TYPICAL FOR EACH COLUMN & FOOTING

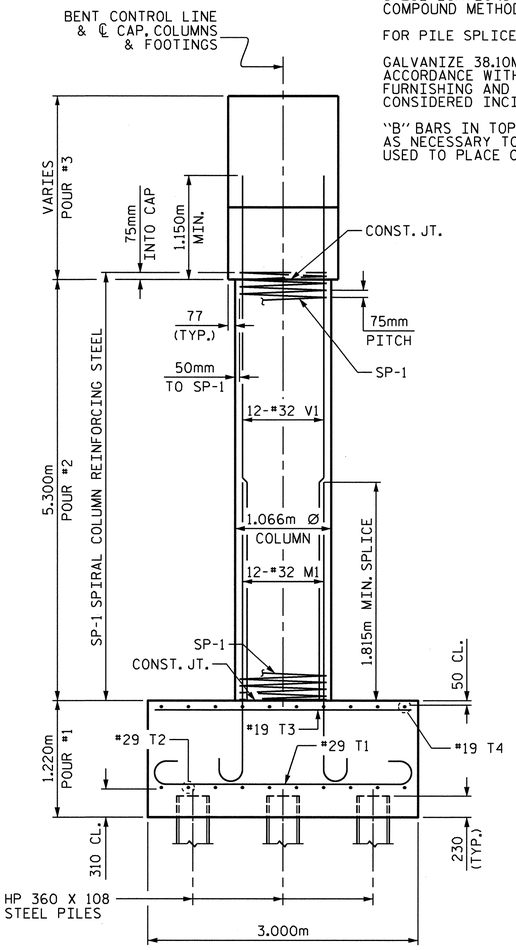

END ELEVATION

NOTES

STIRRUPS AND U1 BARS IN CAP MAY BE SHIFTED AS NECESSARY TO CLEAR ANCHOR BOLTS.

HOOKS ON M1 BARS MAY BE TURNED AS NECESSARY FOR PLACING REINFORCING STEEL.

THE TOP SURFACE AREAS OF THE BENT CAPS SHALL BE CURED IN ACCORDANCE WITH THE STANDARD SPECIFICATIONS EXCEPT THE MEMBRANE CURING COMPOUND METHOD SHALL NOT BE USED.

FOR PILE SPLICE DETAILS, SEE SHEET 2 OF 2.

GALVANIZE 38.10MM DIAMETER ANCHOR BOLTS IN ACCORDANCE WITH THE STANDARD SPECIFICATIONS. FURNISHING AND INSTALLING ANCHOR BOLTS IS CONSIDERED INCIDENTAL TO BENT CONSTRUCTION.

"B" BARS IN TOP OF BENT CAP MAY BE SHIFTED AS NECESSARY TO CLEAR CLOSED CHUTES OR PIPES USED TO PLACE CONCRETE.

PROJECT NO. U-2519DA

CUMBERLAND COUNTY

STATION: 28+72.615-L-

SHEET 1 OF 2

NORTH CAROLINA PROFESSIONAL SEAL 26449 ENGINEER KOREY NEWTON

3/28/2011

STATE OF NORTH CAROLINA
DEPARTMENT OF TRANSPORTATION
RALEIGH

SUBSTRUCTURE

BENT 4
-L- LEFT LANE

REVISIONS						SHEET NO.
NO.	BY:	DATE:	NO.	BY:	DATE:	S-4
1			3			TOTAL SHEETS
2			4			411

DRAWN BY : E.C. LOCKLEAR DATE : 5-7-08
CHECKED BY : P. K. NEWTON DATE : 8-27-08

28-MAR-2011 15:08
K:\TIPProjects-U\U2519da\Structures\frye\strl_L_LL\FinalPlans\u2519da_sd_b*_04.dgn
kpnewton

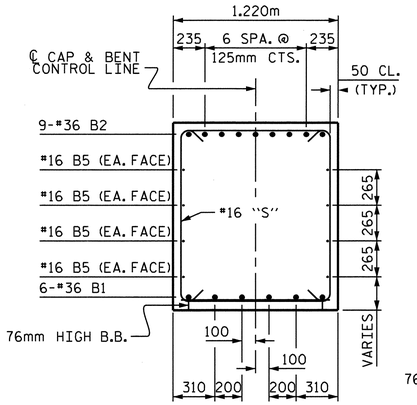

SECTION A-A

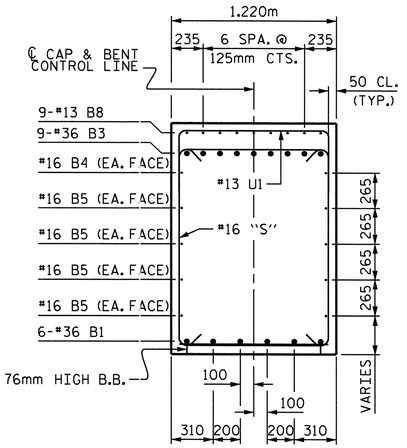

SECTION B-B

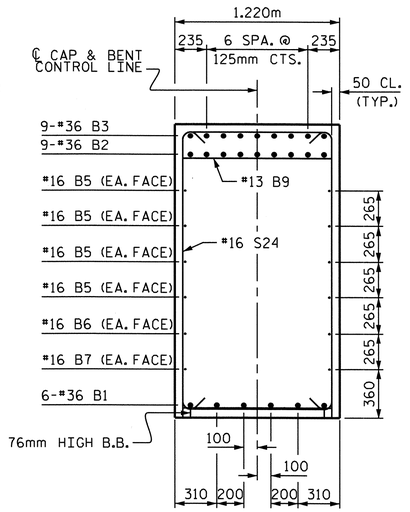

SECTION C-C

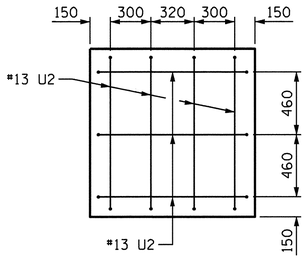

VIEW X-X

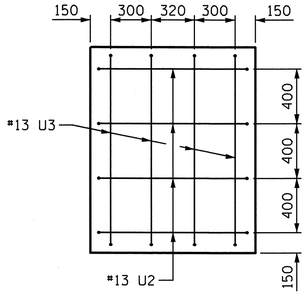

VIEW Y-Y

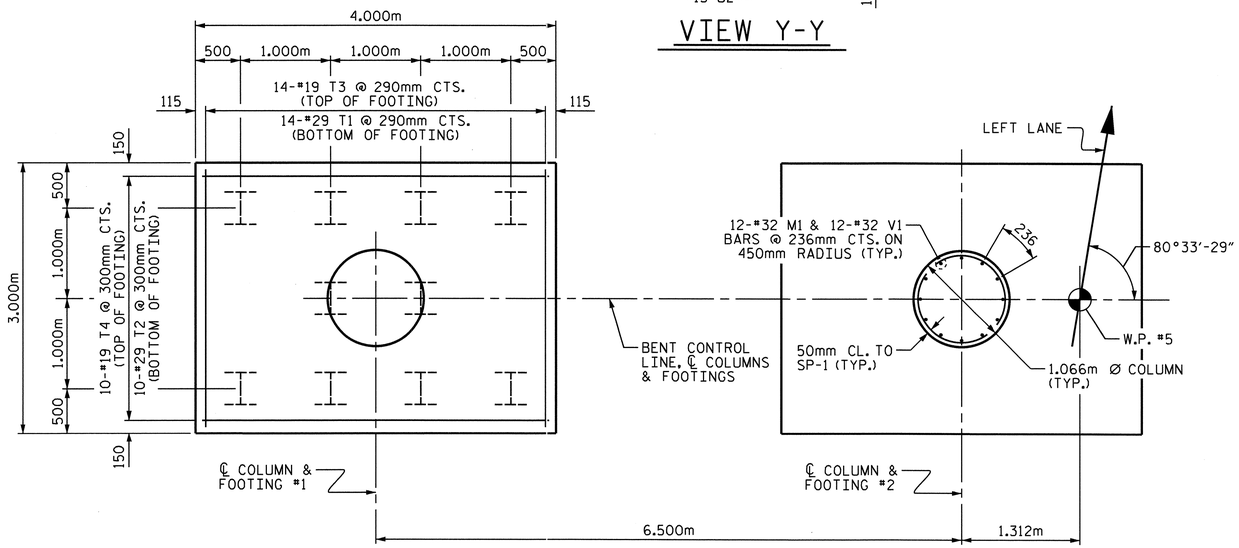

PLAN OF FOOTINGS AND COLUMNS

INFORMATION GIVEN IS TYPICAL FOR EACH COLUMN & FOOTING.

BAR TYPES

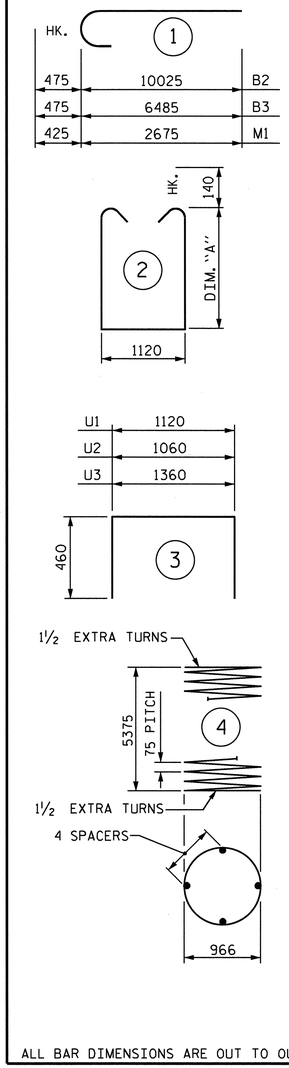

ALL BAR DIMENSIONS ARE OUT TO OUT.

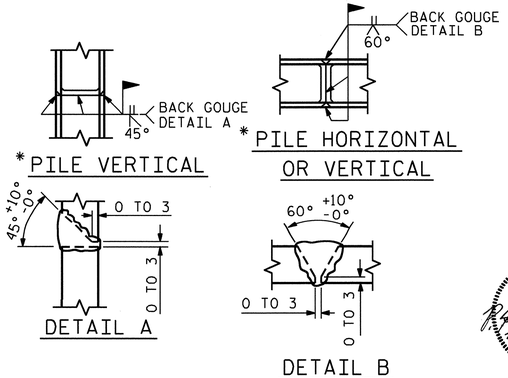

* POSITION OF PILE DURING WELDING.

PILE SPLICE DETAILS

BILL OF MATERIAL

BENT 4

BAR	NO.	SIZE	TYPE	DIM. "A"	LENGTH	WEIGHT
B1	6	#36	5	—	12640	600
B2	9	#36	1	—	10500	747
B3	9	#36	1	—	6960	495
B4	2	#16	STR.	—	3280	10
B5	8	#16	STR.	—	12400	154
B6	2	#16	STR.	—	11040	34
B7	2	#16	STR.	—	9400	29
B8	9	#13	STR.	—	780	7
B9	3	#13	STR.	—	1120	3
M1	24	#32	1	—	3100	476
S1	1	#16	2	1210	3820	6
S2	1	#16	2	1250	3900	6
S3	1	#16	2	1280	3960	6
S4	1	#16	2	1310	4020	6
S5	1	#16	2	1340	4080	6
S6	1	#16	2	1370	4140	6
S7	1	#16	2	1410	4220	7
S8	1	#16	2	1440	4280	7
S9	1	#16	2	1470	4340	7
S10	1	#16	2	1500	4400	7
S11	1	#16	2	1540	4480	7
S12	1	#16	2	1570	4540	7
S13	1	#16	2	1600	4600	7
S14	1	#16	2	1630	4660	7
S15	1	#16	2	1670	4740	7
S16	1	#16	2	1700	4800	7
S17	1	#16	2	1730	4860	8
S18	1	#16	2	1760	4920	8
S19	1	#16	2	1800	5000	8
S20	1	#16	2	1830	5060	8
S21	1	#16	2	1860	5120	8
S22	1	#16	2	1890	5180	8
S23	9	#16	2	1920	5240	73
S24	12	#16	2	2070	5540	103
S25	1	#16	2	2040	5480	9
S26	1	#16	2	2000	5400	8
S27	1	#16	2	1970	5340	8
S28	1	#16	2	1940	5280	8
S29	1	#16	2	1910	5220	8
S30	1	#16	2	1870	5140	8
S31	1	#16	2	1840	5080	8
S32	1	#16	2	1810	5020	8
S33	1	#16	2	1780	4960	8
S34	1	#16	2	1740	4880	8
S35	1	#16	2	1710	4820	7
S36	1	#16	2	1680	4760	7
S37	1	#16	2	1650	4700	7
S38	1	#16	2	1620	4640	7
S39	1	#16	2	1580	4560	7
S40	1	#16	2	1550	4500	7
S41	1	#16	2	1520	4440	7
S42	1	#16	2	1490	4380	7
S43	1	#16	2	1450	4300	7
S44	1	#16	2	1420	4240	7
S45	1	#16	2	1390	4180	6
S46	1	#16	2	1360	4120	6
T1	28	#29	6	—	3600	510
T2	20	#29	6	—	4600	466
T3	28	#19	STR.	—	2840	178
T4	20	#19	STR	—	3840	172
U1	25	#13	3	—	2040	51
U2	11	#13	3	—	1980	22
U3	4	#13	3	—	2280	9
V1	24	#32	STR.	—	6460	993
REINFORCING STEEL					kg	5449
SP-1	2	*	4		223380	444
SPIRAL COLUMN REINFORCING STEEL					kg	444

CLASS A CONCRETE BREAKDOWN

POUR #1 - FOOTINGS	C.M.	29.3
POUR #2 - COLUMNS	C.M.	9.5
POUR #3 - CAP	C.M.	30.5
TOTAL	C.M.	69.3

HP 360 x 108 STEEL PILES NO. 20	METERS	200
PILE REDRIVES	EA.	5

* THE SP-1 SPIRAL REINFORCING STEEL SHALL BE W20 OR D-20 COLD DRAWN WIRE OR #13 PLAIN OR DEFORMED BAR.

PROJECT NO. U-2519DA

CUMBERLAND COUNTY

STATION: 28+72.615-L-

SHEET 2 OF 2

STATE OF NORTH CAROLINA
DEPARTMENT OF TRANSPORTATION
RALEIGH

SUBSTRUCTURE

BENT 4

-L- LEFT LANE

REVISIONS						SHEET NO.
NO.	BY:	DATE:	NO.	BY:	DATE:	S-5
1			3			TOTAL SHEETS
2			4			411

NORTH CAROLINA PROFESSIONAL SEAL 030444 ENGINEER KOREY NEWTON

3/28/2011

DRAWN BY : E.C. LOCKLEAR DATE : 5-7-08

CHECKED BY : P. K. NEWTON DATE : 8-27-08

28-MAR-2011 15:09
K:\TIPProjects-U\U2519da\Structures\frye\strl_L_LL\FinalPlans\u2519da_sd_b*_04.dgn
kpnewton

R:\TIPProjects-U\U2519da\Structures\frye\str2_L_RL\Final
tfang

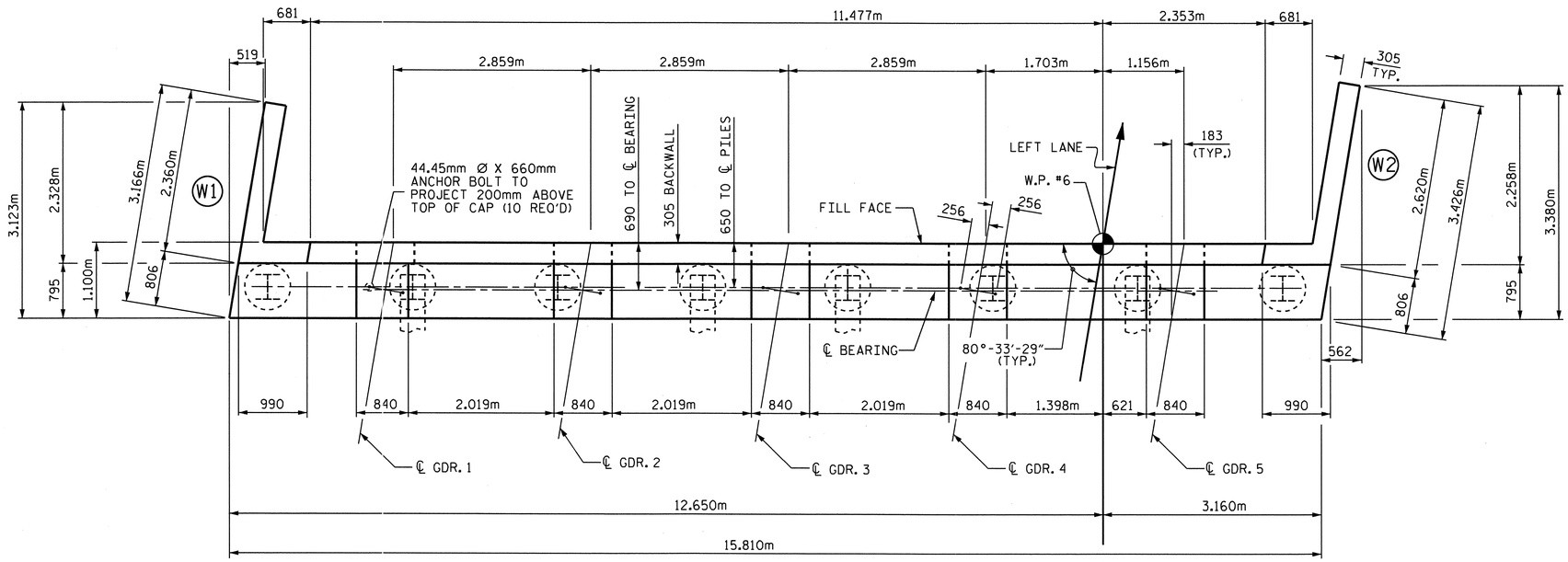

PLAN

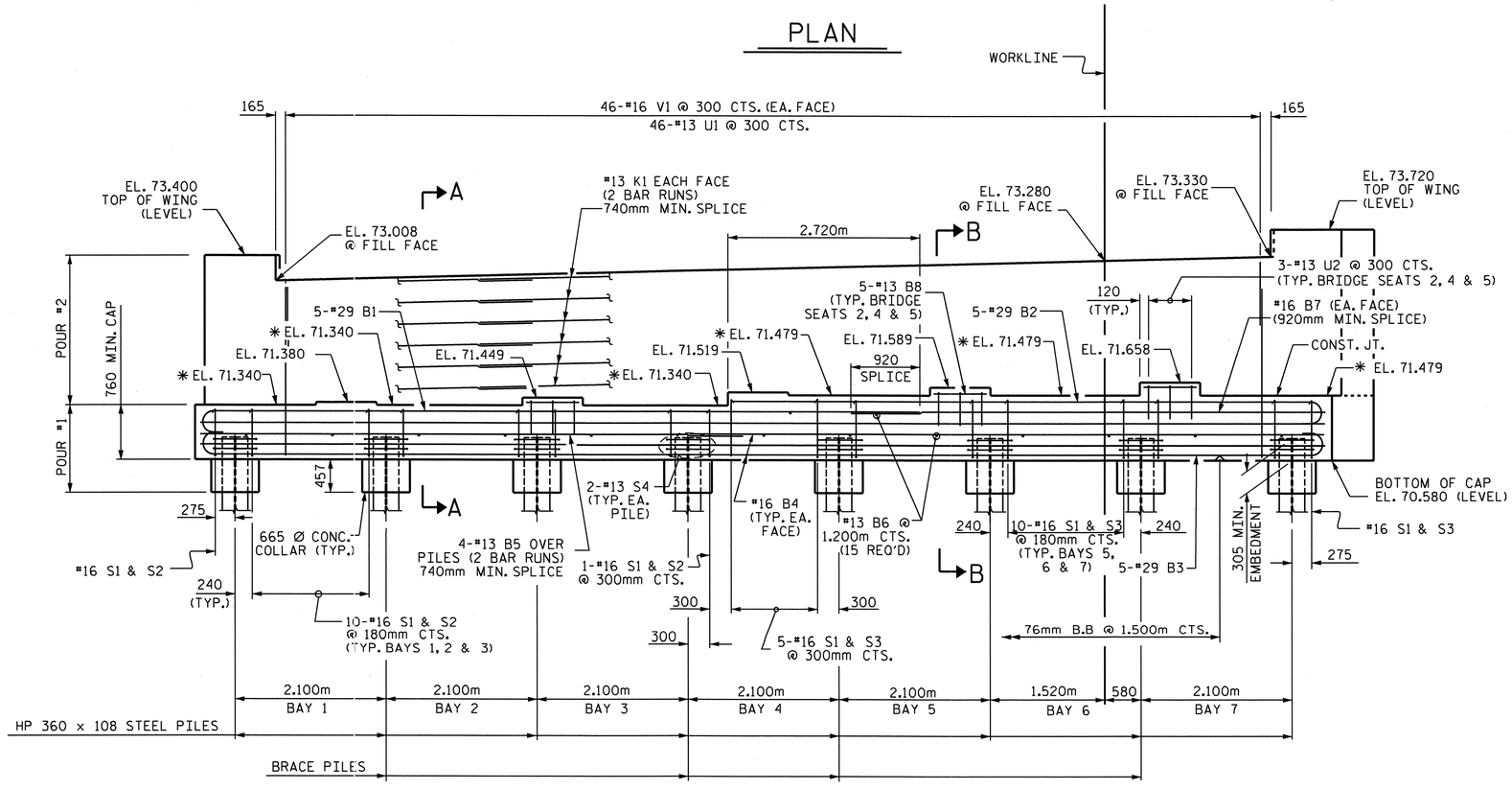

ELEVATION

WINGS NOT SHOWN FOR CLARITY

NOTES

STIRRUPS IN CAP MAY BE SHIFTED AS NECESSARY TO CLEAR ANCHOR BOLTS.

BACKWALL SHALL BE PLACED BEFORE APPLYING THE EPOXY PROTECTIVE COATING.

FOR PILE SPLICE DETAILS, SEE END BENT 2, SHEET 3 OF 3.

THE TOP SURFACE AREAS OF THE END BENT CAPS SHALL BE CURED IN ACCORDANCE WITH THE STANDARD SPECIFICATIONS EXCEPT THE MEMBRANE CURING COMPOUND METHOD SHALL NOT BE USED.

* THE TOP SURFACE OF THE CAP EXCEPT THE BRIDGE SEAT BUILDUPS SHALL BE SLOPED TRANSVERSELY FROM THE FILL FACE TO THE BACK FACE AT THE RATE OF 2 %.

THE PAYMENT FOR ANCHOR BOLTS SHALL BE INCLUDED IN THE SEVERAL PAY ITEMS.

THE CONTRACTOR SHALL PROVIDE FOR INSTALLATION OF THE 102mm DIAMETER DRAIN THROUGH THE WING WALL. SEE ROADWAY PLANS. REINFORCING STEEL IN THE WING WALL MAYBE SHIFTED AS NECESSARY TO CLEAR THE DRAIN PIPE.

GALVANIZE 44.45mm DIAMETER ANCHOR BOLTS IN ACCORDANCE WITH THE STANDARD SPECIFICATIONS. FURNISHING AND INSTALLING ANCHOR BOLTS IS CONSIDERED INCIDENTAL TO THE END BENT CONSTRUCTION.

NORTH CAROLINA PROFESSIONAL SEAL 16301 ENGINEER TING HSIUNG FANG
3/22/11

DRAWN BY : Neil M. Raffin DATE : 4/08
CHECKED BY : T. H. FANG DATE : 4/18/08

PROJECT NO. U-2519DA
CUMBERLAND COUNTY
STATION: 28+72.615 -L-

SHEET 1 OF 3

STATE OF NORTH CAROLINA
DEPARTMENT OF TRANSPORTATION
RALEIGH
SUBSTRUCTURE

END BENT 2
-L- LEFT LANE

REVISIONS						SHEET NO.
NO.	BY:	DATE:	NO.	BY:	DATE:	S-6
1			3			TOTAL SHEETS
2			4			411

Plotted: 21-MAR-2011 14:42
K:\TIPProjects-U\U2519da\Structures\frye\str2_L_RL\Final
ttang

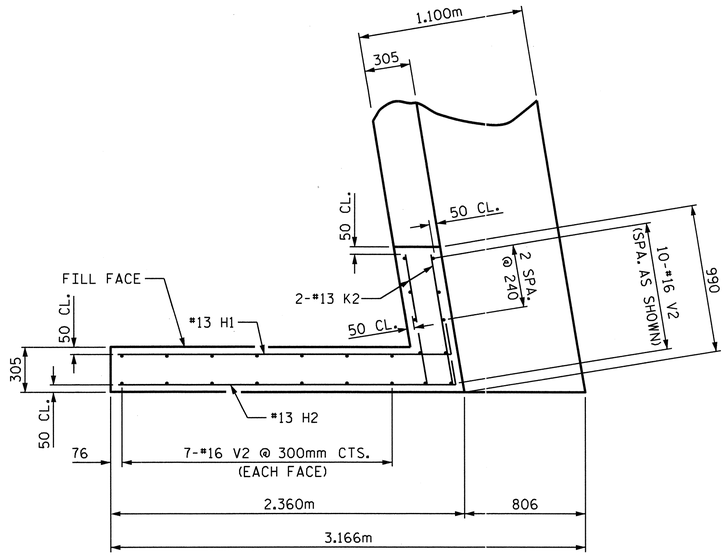

PLAN OF WING (W1)

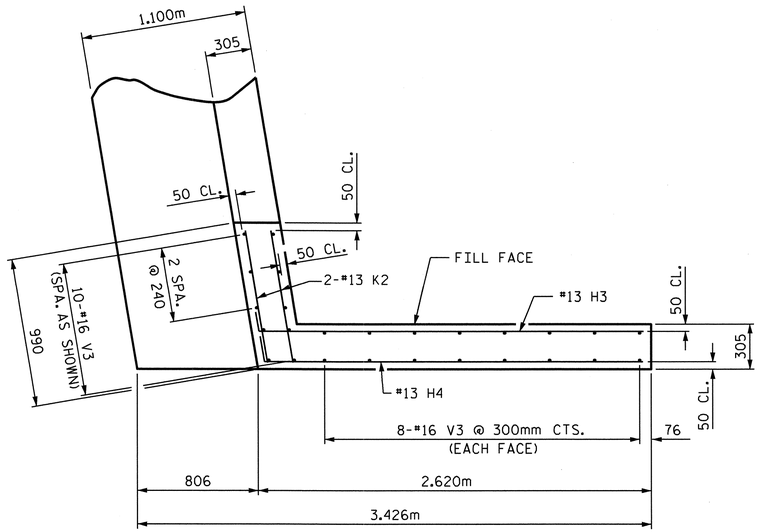

PLAN OF WING (W2)

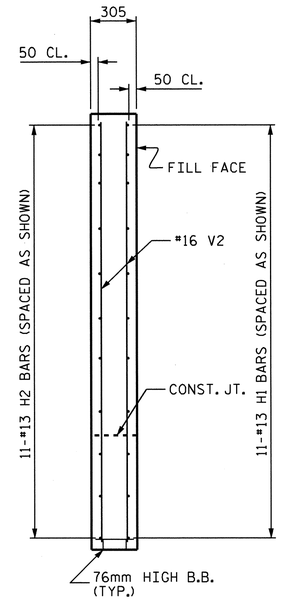

SECTION X-X

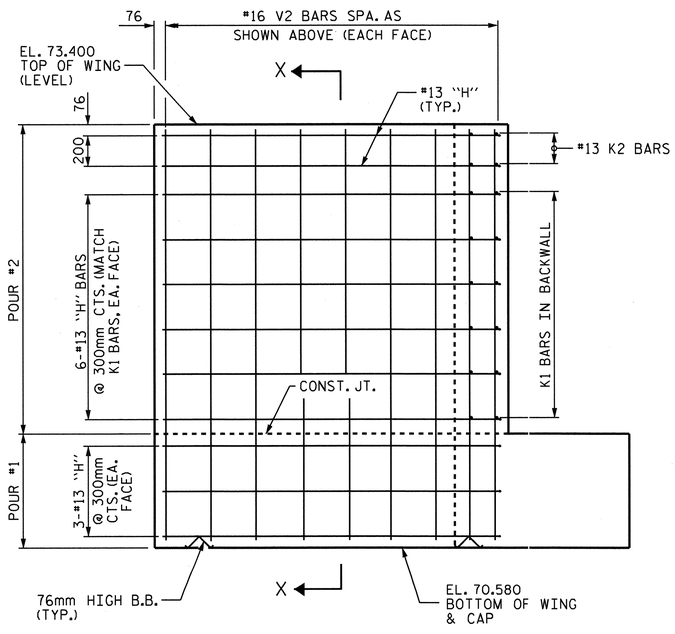

ELEVATION OF WING (W1)

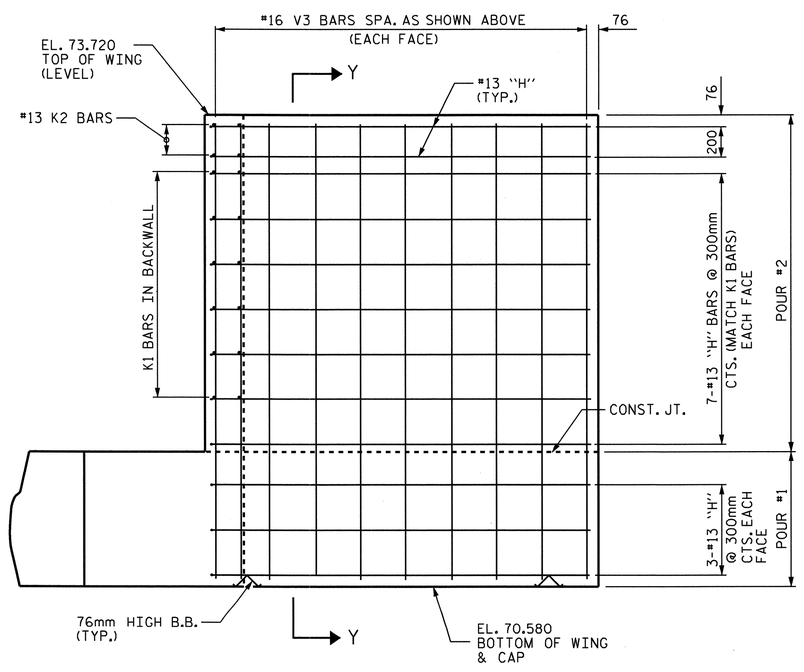

ELEVATION OF WING (W2)

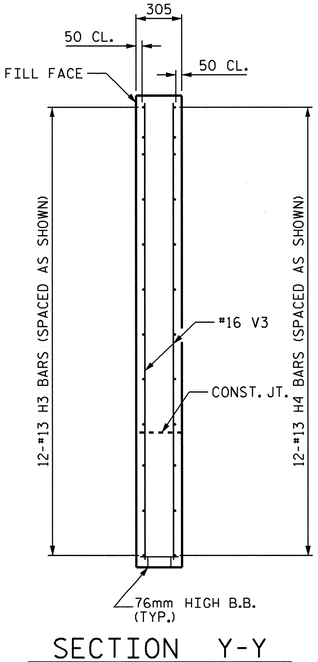

SECTION Y-Y

NORTH CAROLINA PROFESSIONAL SEAL 16301 ENGINEER TING HSIUNG FANG

3/8/11

PROJECT NO. U-2519DA

CUMBERLAND COUNTY

STATION: 28+72.615 -L-

SHEET 2 OF 3

STATE OF NORTH CAROLINA
DEPARTMENT OF TRANSPORTATION
RALEIGH

SUBSTRUCTURE

END BENT 2

-L- LEFT LANE

REVISIONS						SHEET NO.
NO.	BY:	DATE:	NO.	BY:	DATE:	S-7
1			3			TOTAL SHEETS
2			4			

DRAWN BY : Neil M. Ruffin DATE : 4/2/08
CHECKED BY : T. H. FANG DATE : 4/21/08

K:\TIPProjects-U\U2519da\Structures\frye\str2_L_RL\Finishes\u2519da_end2_2205.dgn tfang

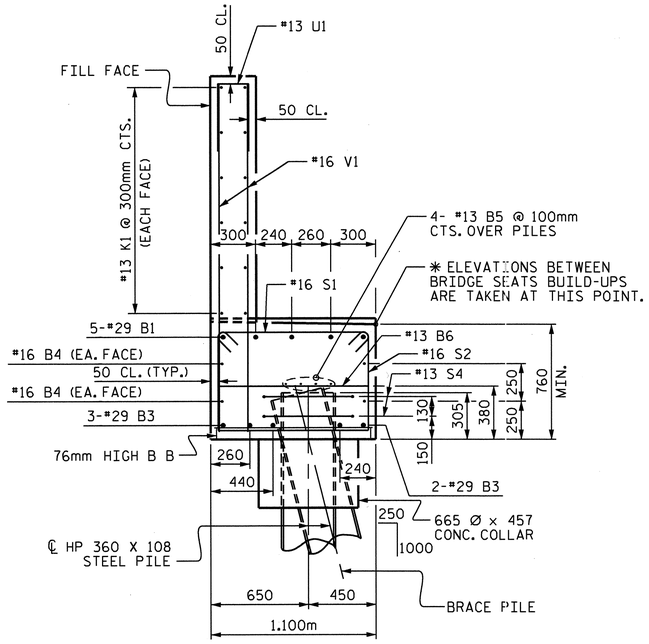

SECTION A-A

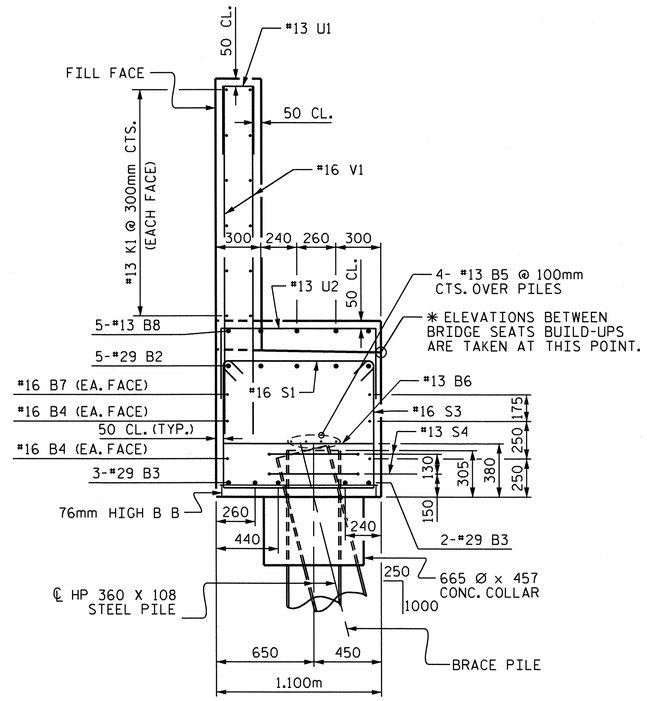

SECTION B-B

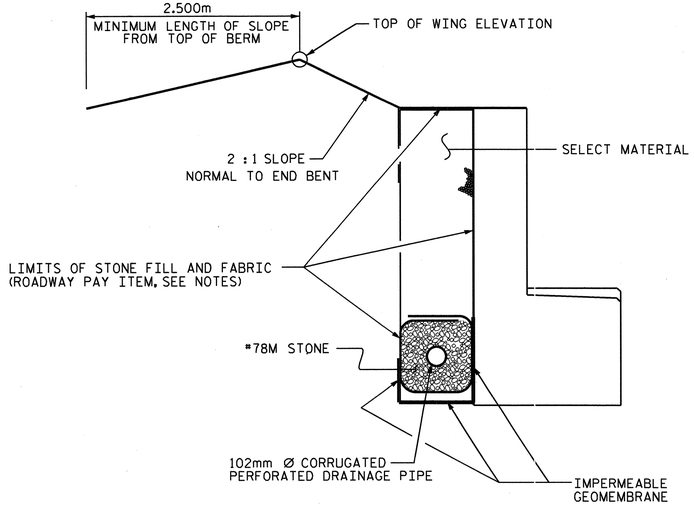

TEMPORARY DRAINAGE @ END BENT 2

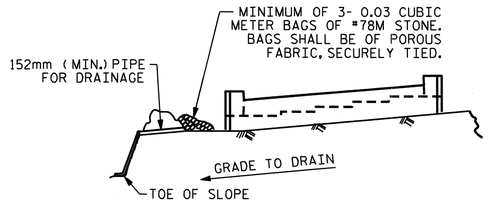

BAGGED STONE AND PIPE SHALL BE PLACED IMMEDIATELY AFTER COMPLETION OF END BENT EXCAVATION. PIPE MAY BE EITHER CONCRETE, CORRUGATED STEEL, CORRUGATED ALUMINUM ALLOY, OR CORRUGATED PLASTIC. PERFORATED PIPE WILL NOT BE ALLOWED.

BAGGED STONE SHALL REMAIN IN PLACE UNTIL THE ENGINEER DIRECTS THAT IT BE REMOVED. THE CONTRACTOR SHALL REMOVE AND DISPOSE OF SILT ACCUMULATIONS AT BAGGED STONE WHEN SO DIRECTED BY THE ENGINEER. BAGS SHALL BE REMOVED AND REPLACED WHENEVER THE ENGINEER DETERMINES THAT THEY HAVE DETERIORATED AND LOST THEIR EFFECTIVENESS.

NO SEPARATE PAYMENT WILL BE MADE FOR THIS WORK AND THE ENTIRE COST OF THIS WORK SHALL BE INCLUDED IN THE UNIT CONTRACT PRICE BID FOR THE SEVERAL PAY ITEMS.

TEMPORARY DRAINAGE AT END BENT

BAR TYPES

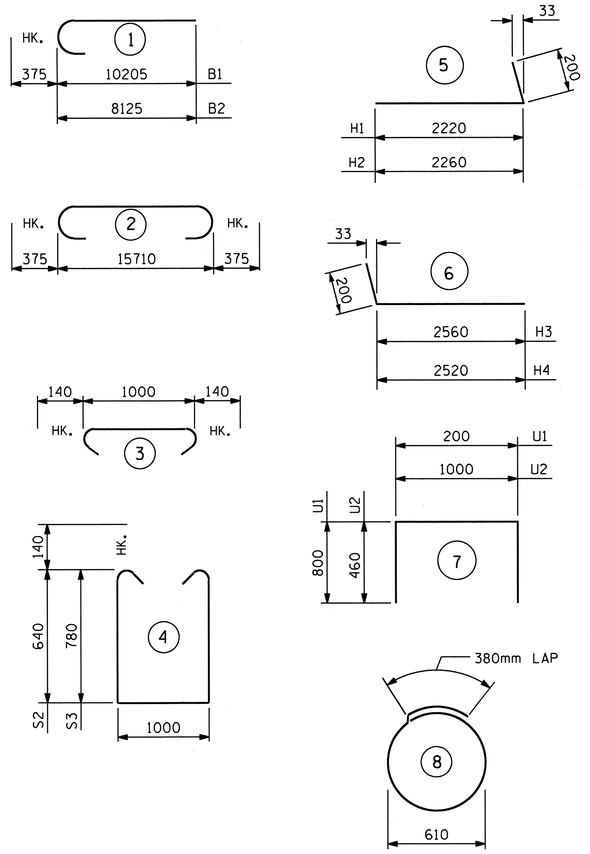

ALL BAR DIMENSIONS ARE OUT TO OUT.

BILL OF MATERIAL

END BENT 2

BAR	NO.	SIZE	TYPE	LENGTH	WEIGHT
B1	5	#29	1	10580	268
B2	5	#29	1	8500	215
B3	5	#29	2	16460	416
B4	4	#16	STR	15700	97
B5	8	#13	STR	8240	66
B6	15	#13	STR	1000	15
B7	2	#16	STR	6400	20
B8	15	#13	STR	740	11
H1	11	#13	5	2420	26
H2	11	#13	5	2460	27
H3	12	#13	6	2760	33
H4	12	#13	6	2720	32
K1	24	#13	STR	8240	197
K2	8	#13	STR	880	7
S1	68	#16	3	1280	135
S2	32	#16	4	2560	127
S3	36	#16	4	2840	159
S4	16	#13	8	2300	37
U1	46	#13	7	1800	82
U2	9	#13	7	1920	17
V1	92	#16	STR	2300	328
V2	24	#16	STR	2720	101
V3	26	#16	STR	3040	123

REINFORCING STEEL = 2539 KG

CLASS "A" CONCRETE BREAKDOWN

POUR #1 CAP & LOWER WINGS & COLLARS 18.0 m3

POUR #2 BACKWALL & UPPER WINGS 11.8 m3

TOTAL 29.80 m3

HP 360 x 108 STEEL PILES
No. 8 METERS 168

PILE REDRIVES
EACH 2

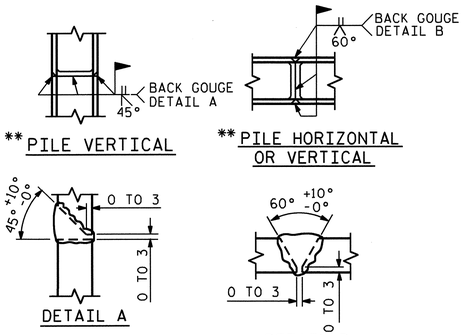

** POSITION OF PILE DURING WELDING.

PILE SPLICE DETAILS

NORTH CAROLINA PROFESSIONAL SEAL 16301 ENGINEER TING HSIUNG FANG
3/8/11

PROJECT NO. U-2519DA
CUMBERLAND COUNTY
STATION: 28+72.615 -L-

SHEET 3 OF 3

STATE OF NORTH CAROLINA
DEPARTMENT OF TRANSPORTATION
RALEIGH
SUBSTRUCTURE
END BENT 2
-L- LEFT LANE

REVISIONS						SHEET NO.
NO.	BY:	DATE:	NO.	BY:	DATE:	S-8
1			3			TOTAL SHEETS
2			4			

DRAWN BY : Neil M Ruffin DATE : 4/2/08
CHECKED BY : T. H. FANG DATE : 4/21/08

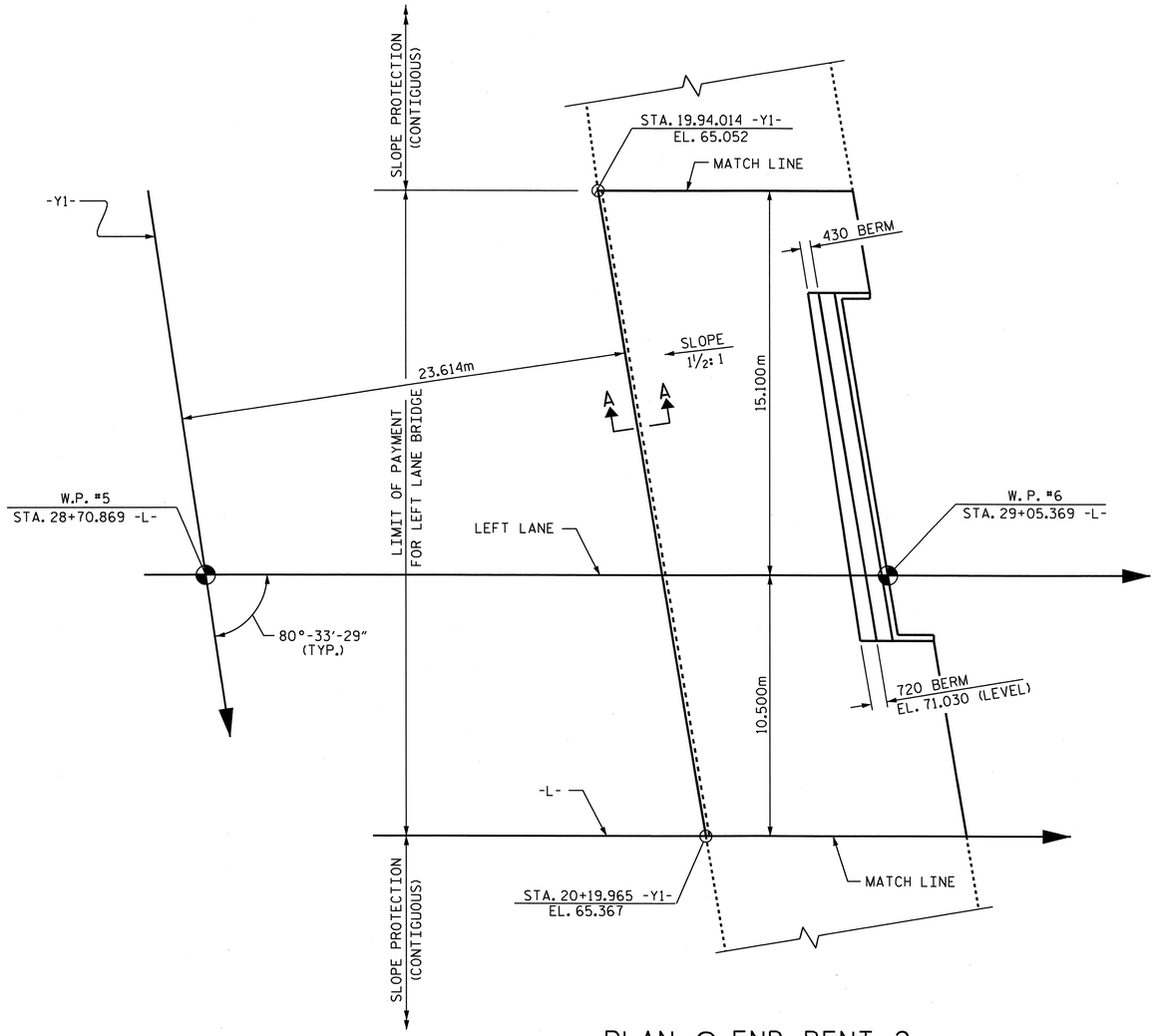

PLAN @ END BENT 2

GENERAL NOTES

SLOPE PROTECTION SHALL BE PLACED UNDER THE ENDS OF THE BRIDGE AS SHOWN IN THE DETAILS. STRAIGHT EDGING WILL NOT BE REQUIRED UNLESS, IN THE OPINION OF THE ENGINEER, VISUAL INSPECTION INDICATES A NEED FOR IT. MEASUREMENT AND PAYMENT SHALL BE AS PRESCRIBED IN SECTION 462 OF THE STANDARD SPECIFICATIONS.

SLOPE PROTECTION SHALL CONSIST OF 100mm POURED-IN-PLACE CONCRETE PAVING AS SHOWN IN THE DETAILS ON THIS SHEET. CONCRETE SHALL BE CLASS "B". THE CONCRETE SURFACE SHALL BE FLOATED WITH A WOODEN FLOAT AND FINISHED. WELDED WIRE FABRIC REINFORCING SHALL BE 152 X 152 - MW9.1 X MW9.1, 1520mm WIDE. SLOPE PROTECTION SHALL BE POURED IN 1520mm STRIPS AS SHOWN IN THE "POURING DETAIL" WITH 600mm LONG #13 BARS PLACED ALONG THE SLOPE BETWEEN STRIPS AT 450mm MAXIMUM SPACING. SLOPE PROTECTION MAY BE POURED IN ALTERNATE 1220mm AND 1520mm STRIPS AS SHOWN IN THE "OPTIONAL POURING DETAIL" WITH ADJACENT RUNS OF WELDED WIRE FABRIC LAPPING AT LEAST 152mm. THE COST OF THE WELDED WIRE FABRIC AND #13 BARS, IF USED, SHALL BE INCLUDED IN THE CONTRACT UNIT PRICE BID PER SQUARE METER FOR SLOPE PROTECTION.

BRIDGE @ STA. 28+72.615 -L- LEFT LANE	100mm SLOPE PROTECTION	* WELDED WIRE FABRIC 1520mm WIDE
	SQUARE METERS	APPROX. METERS
END BENT 2	450	330

* QUANTITY SHOWN IS BASED ON 1520mm POURS.

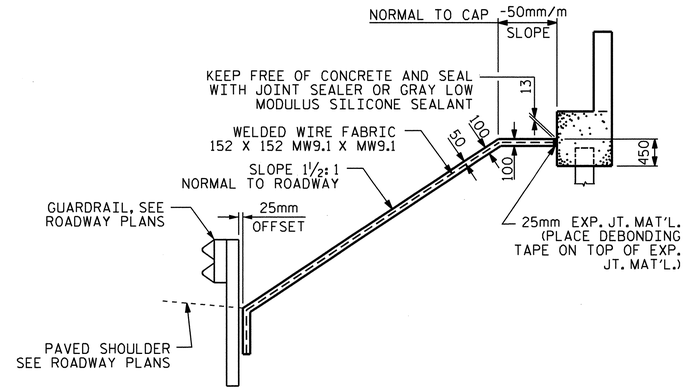

SECTION ALONG -L- LEFT LANE

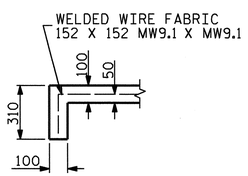

SECTION A-A

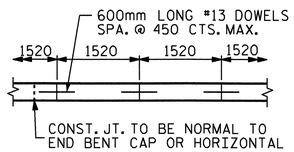

STRIP WIDTHS MAY VARY IN CURVED PORTION.

POURING DETAIL

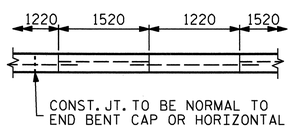

POUR A 1220mm STRIP FIRST. STRIP WIDTHS MAY VARY IN CURVED PORTION.

OPTIONAL POURING DETAIL

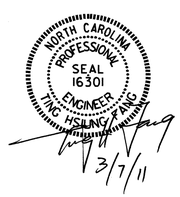

PROJECT NO. U-2519DA

CUMBERLAND COUNTY

STATION: 28+72.615 -L-

STATE OF NORTH CAROLINA
DEPARTMENT OF TRANSPORTATION
RALEIGH

STANDARD SLOPE PROTECTION DETAILS

-L- LEFT LANE

ASSEMBLED BY : Z. H. BROWN	DATE : 5-22-08
CHECKED BY : T.H. FANG	DATE : 6-14-08
DRAWN BY : ELR 5/92	REV. 7/10/01 LES/RDR
CHECKED BY : GRP 6/92	REV. 5/7/03 RWW/JTE
	REV. 5/1/06 TLA/GM

REVISIONS						SHEET NO.
NO.	BY:	DATE:	NO.	BY:	DATE:	S-9
1			3			TOTAL SHEETS
2			4			411

07-MAR-2011 08:34
K:\TIPProjects-U\U2519da\Structures\frye\strl_LL\Final Plans\u2519da_sd_sp_01.dgn
ttfang

STD. NO. SP1SM

F. A. PROJECT NO. NHF-0100(21)

METRIC

2.2300 % -1.6700 %

PI = 28+60.000 -L-
EL. = 75.511
VC = 380

GRADE DATA

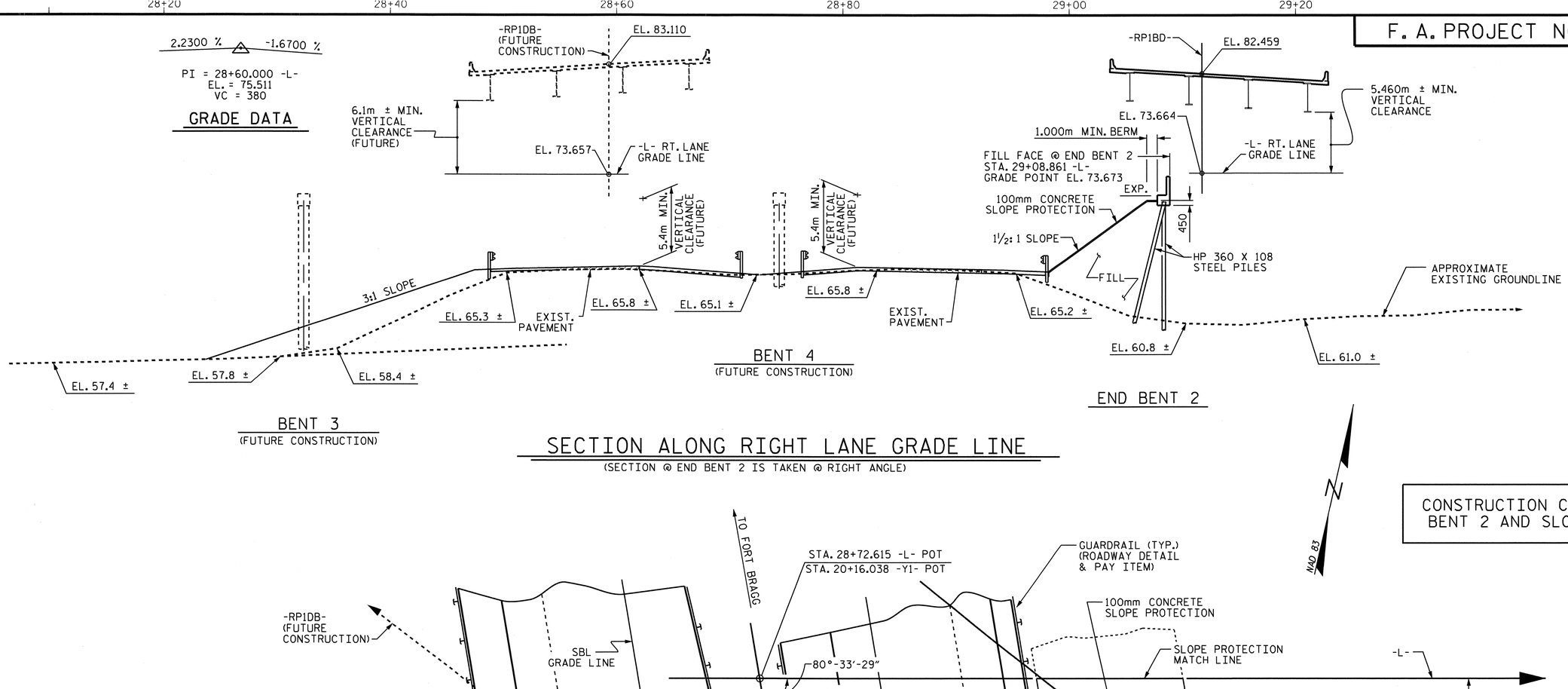

SECTION ALONG RIGHT LANE GRADE LINE

(SECTION @ END BENT 2 IS TAKEN @ RIGHT ANGLE)

CONSTRUCTION CONSISTS OF END BENT 2 AND SLOPE PROTECTION

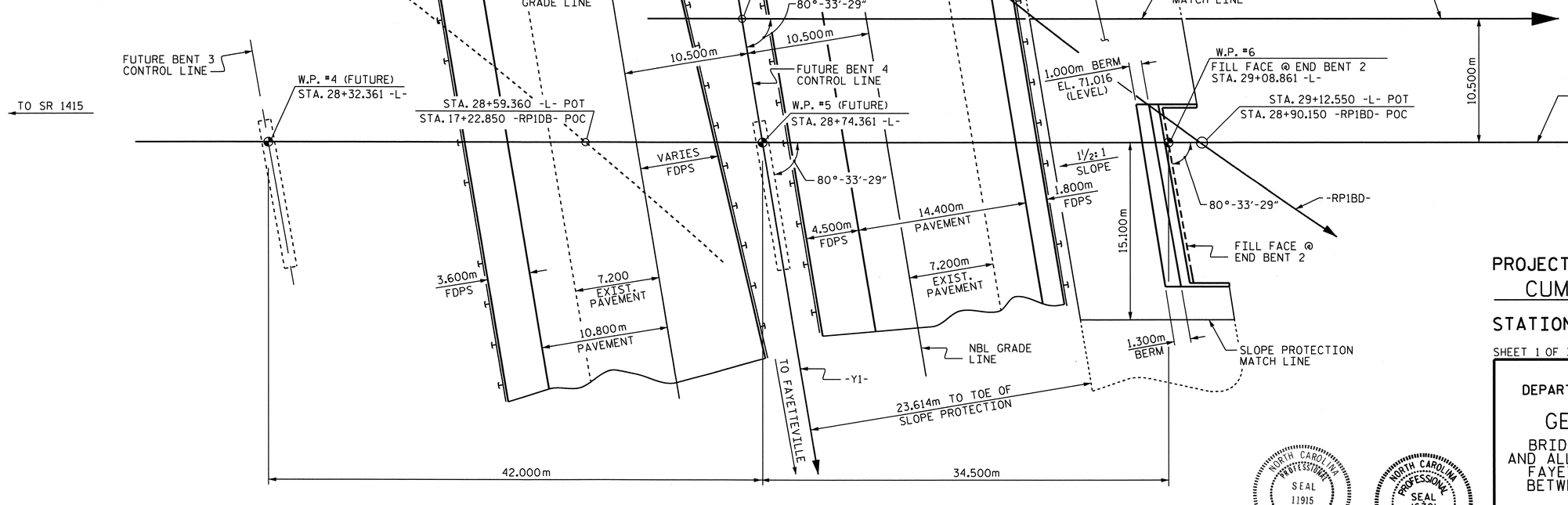

PLAN

PILES NOT SHOWN FOR CLARITY.

NORTH CAROLINA PROFESSIONAL SEAL 11915 ENGINEER JOHN C. FRYE
3/28/11

NORTH CAROLINA PROFESSIONAL SEAL 16301 ENGINEER TING HSIUNG FANG
3/28/11

PROJECT NO. U-2519DA

CUMBERLAND COUNTY

STATION: 28+72.615-L-POT
= 20+16.038-Y1-POT

SHEET 1 OF 3 BRIDGE #367

STATE OF NORTH CAROLINA
DEPARTMENT OF TRANSPORTATION
RALEIGH

GENERAL DRAWING

BRIDGE OVER BEAVER CREEK AND ALL AMERICAN FREEWAY ON FAYETTEVILLE OUTER LOOP BETWEEN SR 1415 AND NC 24

-L- RIGHT LANE

REVISIONS						SHEET NO.
NO.	BY:	DATE:	NO.	BY:	DATE:	S-10
1			3			TOTAL SHEETS
2			4			411

DRAWN BY : D. G. ELY DATE : 2/07
CHECKED BY : R. D. MARTIN DATE : 3/07

28-MAR-2011 14:12
K:\TIPProjects-U\U2519da\Structures\frye\str2_L_RL\Final Plans\u-2519da_sd_gd_02.dgn
tfang

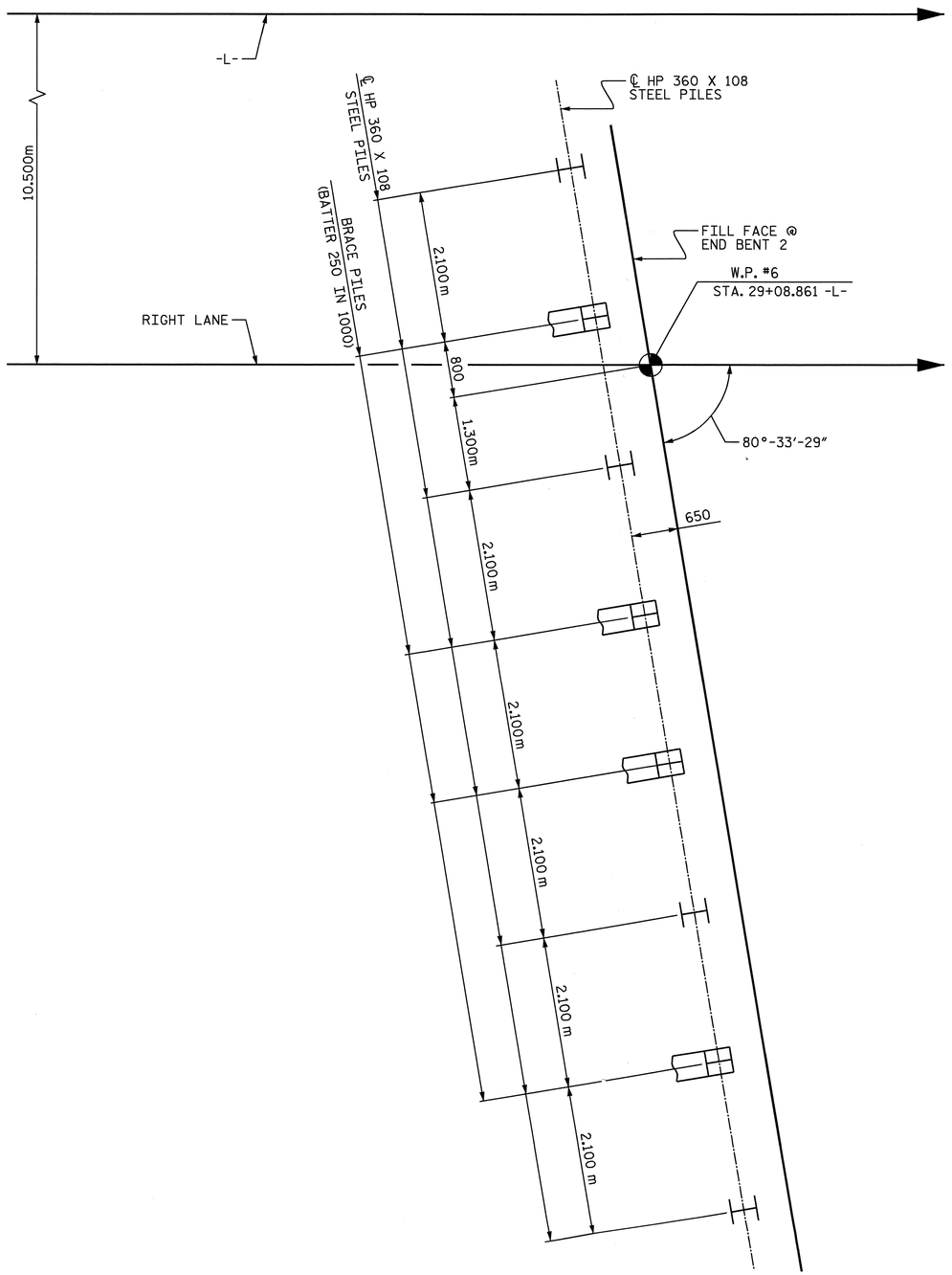

END BENT 2

FOUNDATION LAYOUT

DIMENSIONS LOCATING PILES ARE SHOWN TO PILE CENTERLINE AT THE BOTTOM OF THE CAP.

NAD 83

NOTES:

DRIVE PILES AT END BENT 2 TO A MINIMUM BEARING CAPACITY OF 1340 KN PER PILE. THE REQUIRED BEARING CAPACITY IS EQUAL TO THE ALLOWABLE BEARING CAPACITY WITH A MINIMUM FACTOR OF SAFETY OF TWO.

THE ALLOWABLE BEARING CAPACITY FOR PILES AT END BENT 2 IS 670 KN PER PILE.

TESTING PILES WITH THE PILE DRIVING ANALYZER (PDA) DURING DRIVING, RESTRIKING OR REDRIVING MAY BE REQUIRED. THE ENGINEER WILL DETERMINE THE NEED FOR PDA TESTING. SEE PILE DRIVING ANALYZER SPECIAL PROVISION.

PILE RESTRIKES FOR LRFD MAY BE REQUIRED. SEE PILE RESTRIKE FOR LRFD SPECIAL PROVISION.

FOR PILES, SEE SPECIAL PROVISIONS.

NORTH CAROLINA PROFESSIONAL SEAL 16301 ENGINEER TING HSIUNG FANG

T. H. Fang 9/12/08

PROJECT NO. U-2519DA

CUMBERLAND COUNTY

STATION: 28+72.615 -L-

SHEET 2 OF 3

STATE OF NORTH CAROLINA
DEPARTMENT OF TRANSPORTATION
RALEIGH

GENERAL DRAWING

BRIDGE OVER BEAVER CREEK AND ALL AMERICAN FREEWAY ON FAYETTEVILLE OUTER LOOP BETWEEN SR 1415 AND NC 24

-L- RIGHT LANE

REVISIONS						SHEET NO.
NO.	BY:	DATE:	NO.	BY:	DATE:	S-11
1			3			TOTAL SHEETS
2			4			411

DRAWN BY : E.C. LOCKLEAR DATE : 3-20-08
CHECKED BY : T. H. FANG DATE : 4-1-08

12-SEP-2008 07:43
y:\tipprojects-u\u2519da\structures\frye\str2_l_rl\finalplans\u-2519da_sd_gd_02.dgn
qtnguyen

TOTAL BILL OF MATERIAL

	PDA TESTING	PDA ASSISTANCE	CLASS A CONCRETE	REINFORCING STEEL	HP 360 X 108 STEEL PILES		PILE REDRIVES	100mm SLOPE PROTECTION
	EACH	EACH	CU. METERS	KG	NO.	METERS	EACH	SQ. METERS
END BENT 2			29.0	2,492	8	224.0	2	440.0
TOTAL	1	1	29.0	2,492	8	224.0	2	440.0

CONSTRUCTION CONSISTS OF END BENT 2 AND SLOPE PROTECTION

B.M. #12: POINT BL12, ALUMINUM DISK 65.137m LT. OF STA. 27+21.030 -L-, ELEV. 59.506

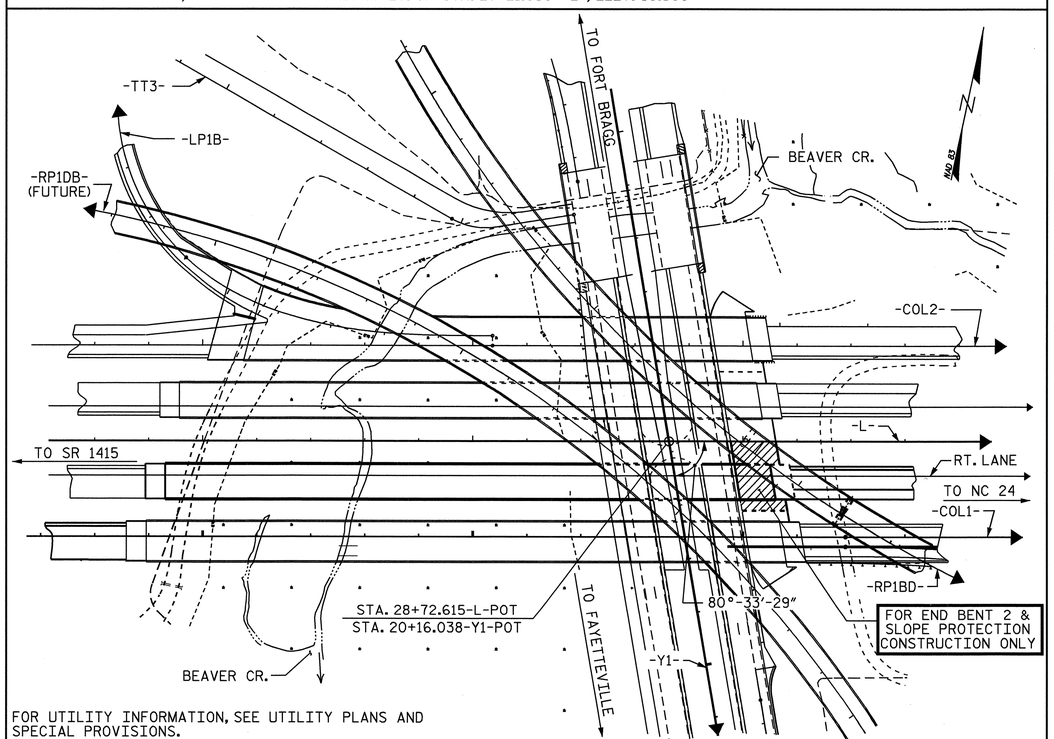

FOR UTILITY INFORMATION, SEE UTILITY PLANS AND SPECIAL PROVISIONS.

LOCATION SKETCH

NOTES

ALL DIMENSIONS ARE IN MILLIMETERS UNLESS OTHERWISE NOTED.

ALL ELEVATIONS ARE IN METERS.

ASSUMED LIVE LOAD = MS 22.5 OR ALTERNATE LOADING.

FOR OTHER DESIGN DATA AND GENERAL NOTES, SEE SHEET SNSM.

FOR EROSION CONTROL MEASURES, SEE EROSION CONTROL PLANS.

THIS BRIDGE HAS BEEN DESIGNED BY THE STRENGTH DESIGN METHOD AS SPECIFIED IN AASHTO STANDARD SPECIFICATIONS.

THIS BRIDGE HAS BEEN DESIGNED IN ACCORDANCE WITH THE REQUIREMENTS OF THE AASHTO STANDARD SPECIFICATIONS FOR SEISMIC DESIGN OF HIGHWAY BRIDGES FOR SEISMIC PERFORMANCE CATEGORY A.

THE CONTRACTOR SHALL PROVIDE INDEPENDENT ASSURANCE SAMPLES OF REINFORCING STEEL AS FOLLOWS: FOR PROJECTS REQUIRING UP TO 360,000 kg OF REINFORCING STEEL, ONE 760mm SAMPLE OF EACH SIZE BAR USED, AND FOR PROJECTS REQUIRING OVER 360,000 kg OF REINFORCING STEEL, TWO 760mm SAMPLES OF EACH SIZE BAR USED. THE BARS FROM WHICH THE SAMPLES ARE TAKEN MUST THEN BE SPLICED WITH REPLACEMENT BARS OF THE SIZE AND LENGTH OF THE SAMPLE PLUS A MINIMUM LAP SPLICE OF THIRTY BAR DIAMETERS.

FOR SUBMITTAL OF WORKING DRAWINGS, SEE SPECIAL PROVISIONS.

FOR FALSEWORK AND FORMWORK, SEE SPECIAL PROVISIONS.

FOR CRANE SAFETY, SEE SPECIAL PROVISIONS.

FOR CURING CONCRETE, SEE SPECIAL PROVISIONS.

HYDRAULIC DATA

DESIGN DISCHARGE---------- 52.7 m³/s
FREQUENCY OF DESIGN FLOOD---- 50 YR.
DESIGN HIGH WATER EL.-------- 58.72
DRAINAGE AREA---------- 15.0 SQ.Km
BASIC DISCHARGE (Q100)------- 58.9 m³/s
BASIC HIGH WATER EL.--------- 59.17

OVERTOPPING FLOOD DATA

OVERTOPPING DISCHARGE---------- **
FREQUENCY OF OVERTOPPING FLOOD--- >500 YR.
OVERTOPPING FLOOD EL.---------- 63.03

** OVERTOPPING FLOOD IS GREATER THAN THE 500+ YEAR EVENT.
OVERTOPPING LOCATION AT -RP1A- 16+34.207

PROJECT NO. U-2519DA
CUMBERLAND COUNTY
STATION: 28+72.615 -L-

SHEET 3 OF 3

STATE OF NORTH CAROLINA
DEPARTMENT OF TRANSPORTATION
RALEIGH

GENERAL DRAWING

BRIDGE OVER BEAVER CREEK AND ALL AMERICAN FREEWAY ON FAYETTEVILLE OUTER LOOP BETWEEN SR 1415 AND NC 24

-L- RIGHT LANE

NORTH CAROLINA PROFESSIONAL SEAL 16301 ENGINEER TING HSIUNG FANG
9/12/08

REVISIONS						SHEET NO.
NO.	BY:	DATE:	NO.	BY:	DATE:	S-12
1			3			TOTAL SHEETS
2			4			411

DRAWN BY : D. G. ELY DATE : 2-07
CHECKED BY : T. H. FANG DATE : 3-08

12-SEP-2008 07:43
y:\tlpprojects-u\u2519da\structures\frye\str2_l_rl\finalplans\u-2519da_sd_gd_02.dgn
qtnguyen

K:\TIPProjects-U\U2519da\Structures\frye\str2_L_RL\Final
tfang

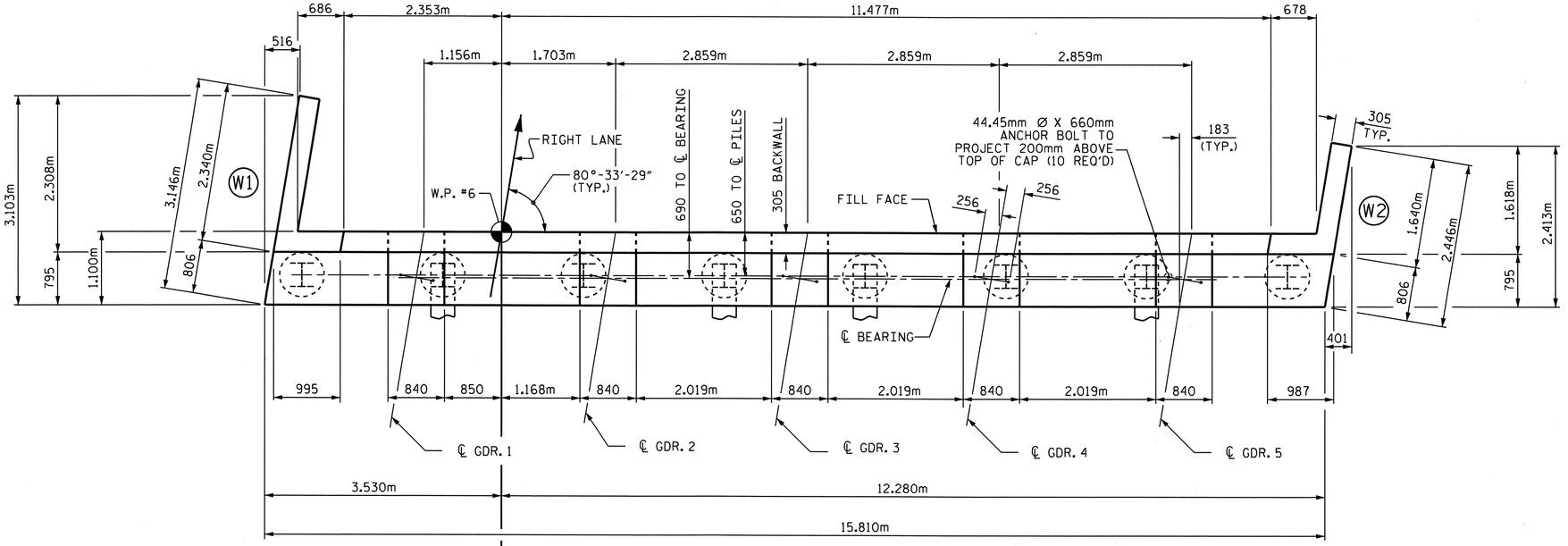

PLAN

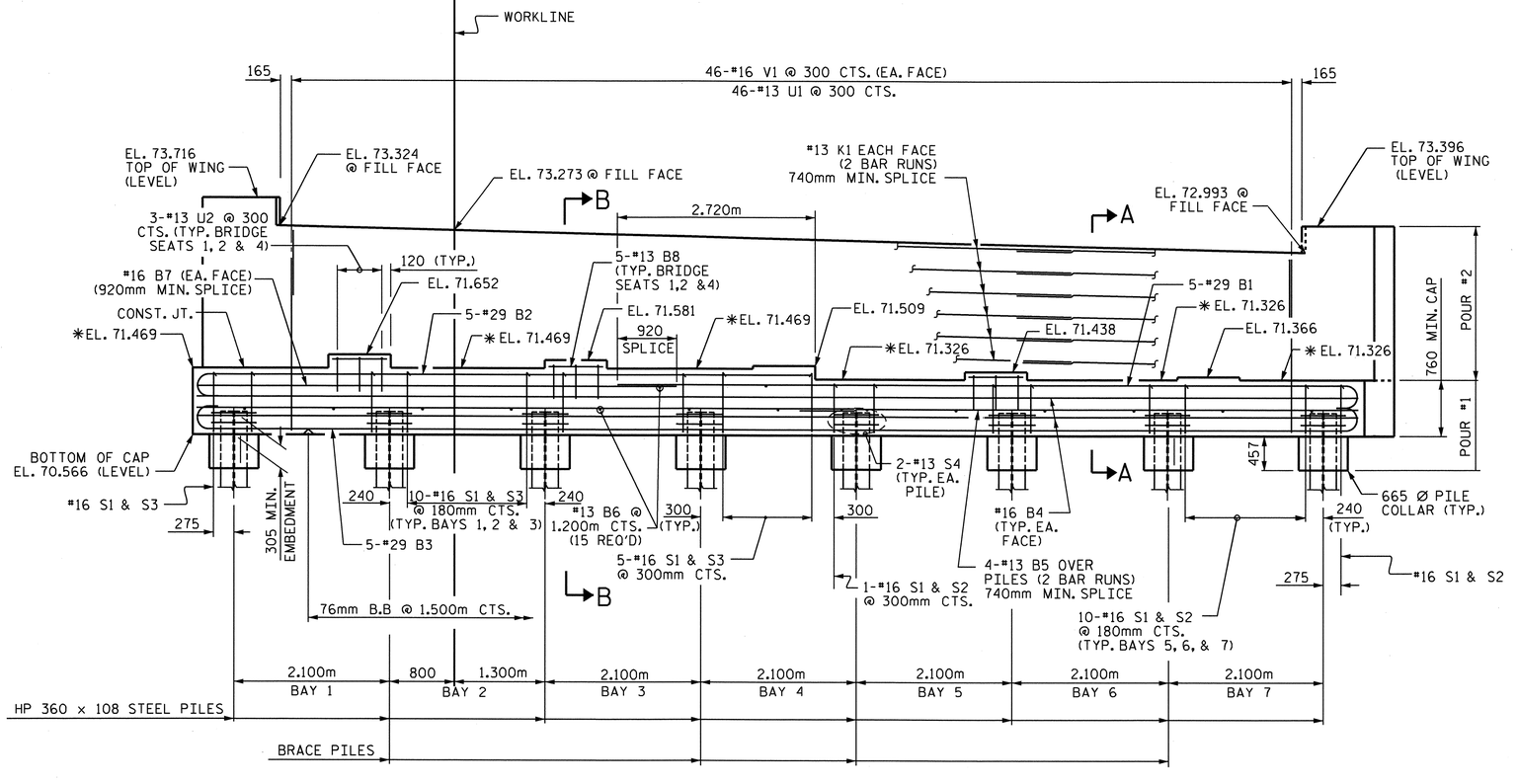

ELEVATION

WINGS NOT SHOWN FOR CLARITY

NOTES

STIRRUPS IN CAP MAY BE SHIFTED AS NECESSARY TO CLEAR ANCHOR BOLTS.

BACKWALL SHALL BE PLACED BEFORE APPLYING THE EPOXY PROTECTIVE COATING.

FOR PILE SPLICE DETAILS, SEE END BENT 2, SHEET 3 OF 3.

THE TOP SURFACE AREAS OF THE END BENT CAPS SHALL BE CURED IN ACCORDANCE WITH THE STANDARD SPECIFICATIONS EXCEPT THE MEMBRANE CURING COMPOUND METHOD SHALL NOT BE USED.

* THE TOP SURFACE OF THE CAP EXCEPT THE BRIDGE SEAT BUILDUPS SHALL BE SLOPED TRANSVERSELY FROM THE FILL FACE TO THE BACK FACE AT THE RATE OF 2 %.

THE PAYMENT FOR ANCHOR BOLTS SHALL BE INCLUDED IN THE SEVERAL PAY ITEMS.

THE CONTRACTOR SHALL PROVIDE FOR INSTALLATION OF THE 102mm DIAMETER DRAIN THROUGH THE WING WALL. SEE ROADWAY PLANS. REINFORCING STEEL IN THE WING WALL MAYBE SHIFTED AS NECESSARY TO CLEAR THE DRAIN PIPE.

GALVANIZE 44.45mm DIAMETER ANCHOR BOLTS IN ACCORDANCE WITH THE STANDARD SPECIFICATIONS. FURNISHING AND INSTALLING ANCHOR BOLTS IS CONSIDERED INCIDENTAL TO THE END BENT CONSTRUCTION.

NORTH CAROLINA PROFESSIONAL SEAL 16301 ENGINEER TING HSIUNG FANG
3/22/11

DRAWN BY : Neil M. Raffin DATE : 4/08
CHECKED BY : T. H. FANG DATE : 4/18/08

PROJECT NO. U-2519DA
CUMBERLAND COUNTY
STATION: 28+72.615 -L-

SHEET 1 OF 3

STATE OF NORTH CAROLINA
DEPARTMENT OF TRANSPORTATION
RALEIGH

SUBSTRUCTURE

END BENT 2

-L- RIGHT LANE

REVISIONS					
NO.	BY:	DATE:	NO.	BY:	DATE:
1			3		
2			4		

SHEET NO. S-13
TOTAL SHEETS 411

K:\TIPProjects-U\U2519do\Structures\frye\str2_L_RL\Final
tfang

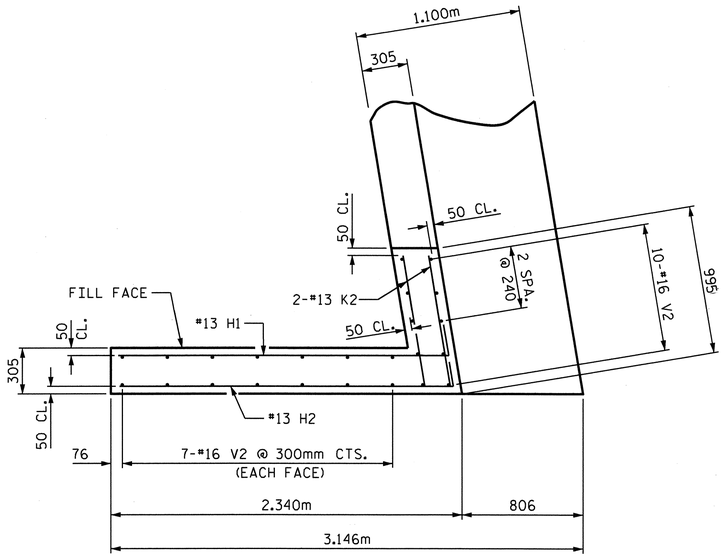

PLAN OF WING (W1)

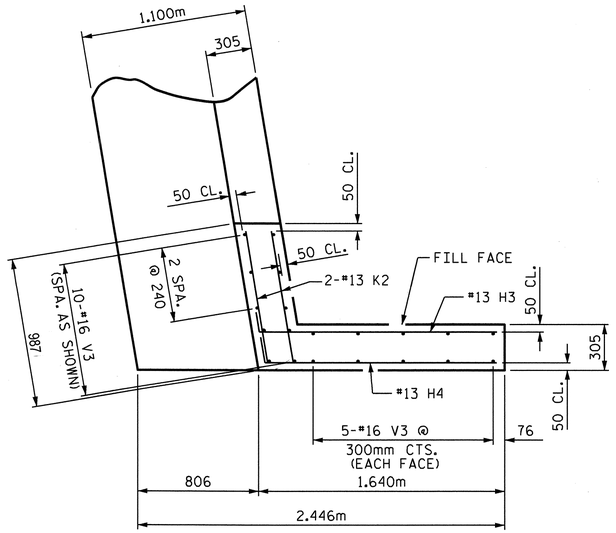

PLAN OF WING (W2)

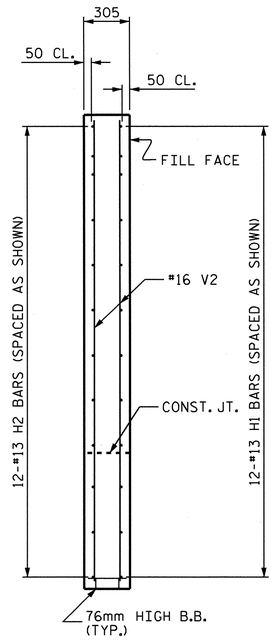

SECTION X-X

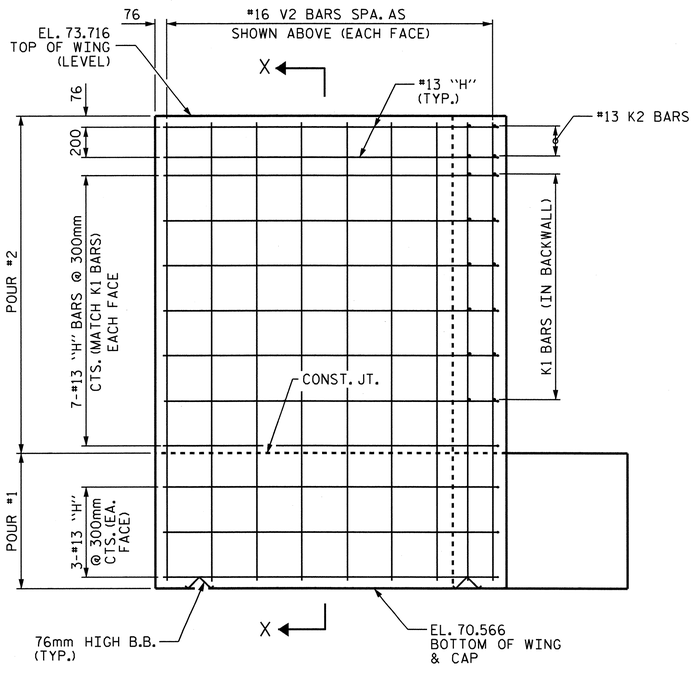

ELEVATION OF WING (W1)

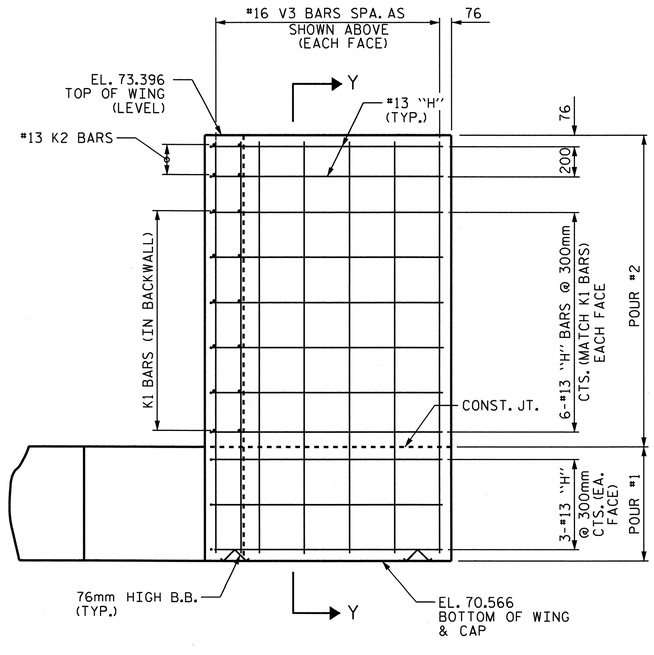

ELEVATION OF WING (W2)

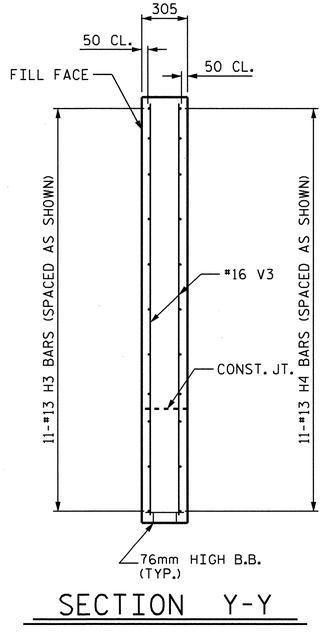

SECTION Y-Y

NORTH CAROLINA PROFESSIONAL SEAL 16301 ENGINEER TING HSIANG FANG
3/8/11

PROJECT NO. U-2519DA

CUMBERLAND COUNTY

STATION: 28+72.615 -L-

SHEET 2 OF 3

STATE OF NORTH CAROLINA
DEPARTMENT OF TRANSPORTATION
RALEIGH

SUBSTRUCTURE

END BENT 2

-L- RIGHT LANE

REVISIONS						SHEET NO.
NO.	BY:	DATE:	NO.	BY:	DATE:	S-14
1			3			TOTAL SHEETS
2			4			411

DRAWN BY : Neil M. Ruffin DATE : 4/2/08
CHECKED BY : T. H. FANG DATE : 4/21/08

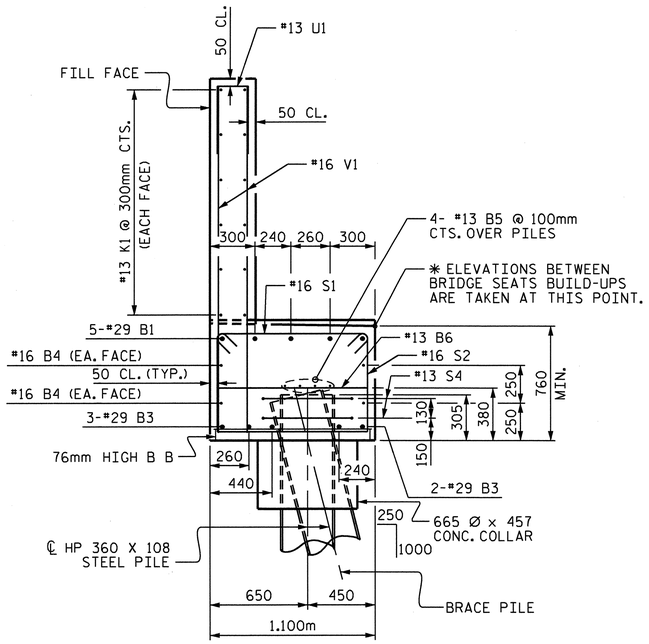

SECTION A-A

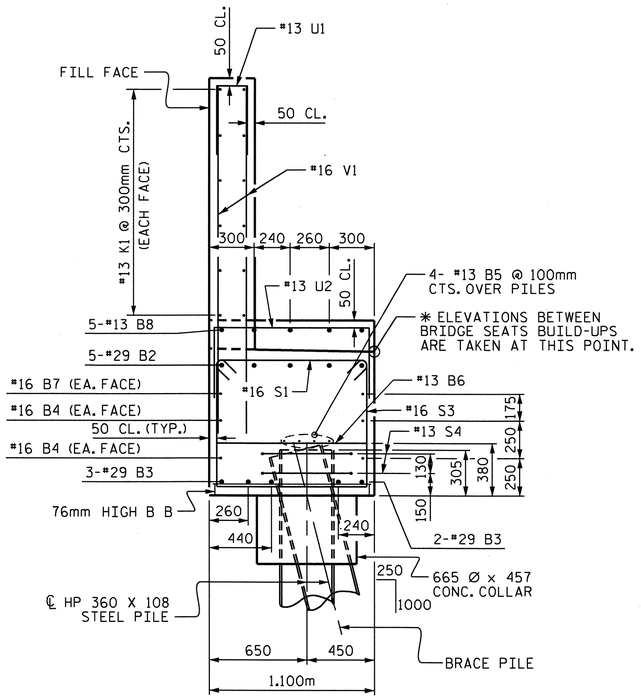

SECTION B-B

BAR TYPES

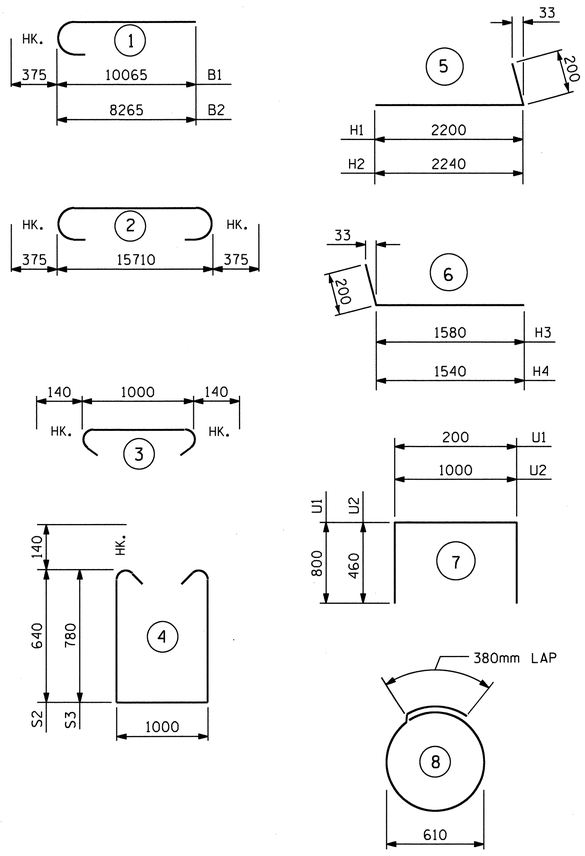

ALL BAR DIMENSIONS ARE OUT TO OUT.

BILL OF MATERIAL

END BENT 2

BAR	NO.	SIZE	TYPE	LENGTH	WEIGHT
B1	5	#29	1	10440	264
B2	5	#29	1	8640	219
B3	5	#29	2	16460	416
B4	4	#16	STR	15700	97
B5	8	#13	STR	8240	66
B6	15	#13	STR	1000	15
B7	2	#16	STR	6560	20
B8	15	#13	STR	740	11
H1	12	#13	5	2400	29
H2	12	#13	5	2440	29
H3	11	#13	6	1780	19
H4	11	#13	6	1740	19
K1	24	#13	STR	8240	197
K2	8	#13	STR	880	7
S1	68	#16	3	1280	135
S2	32	#16	4	2560	127
S3	36	#16	4	2840	159
S4	16	#13	8	2300	37
U1	46	#13	7	1800	82
U2	9	#13	7	1920	17
V1	92	#16	STR	2300	328
V2	24	#16	STR	3040	113
V3	20	#16	STR	2720	85

REINFORCING STEEL = 2492 KG

CLASS "A" CONCRETE BREAKDOWN

POUR #1 CAP & LOWER WINGS & COLLARS 17.8 m3

POUR #2 BACKWALL & UPPER WINGS 11.2 m3

TOTAL 29.0 m3

HP 360 x 108 STEEL PILES
No. 8 METERS 224

PILE REDRIVES
EACH 2

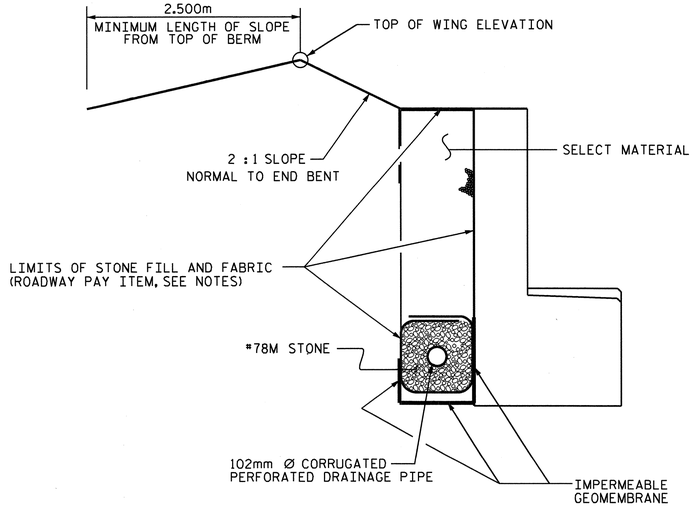

TEMPORARY DRAINAGE @ END BENT 2

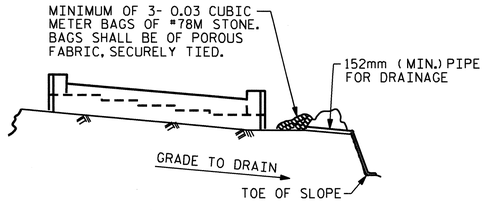

BAGGED STONE AND PIPE SHALL BE PLACED IMMEDIATELY AFTER COMPLETION OF END BENT EXCAVATION. PIPE MAY BE EITHER CONCRETE, CORRUGATED STEEL, CORRUGATED ALUMINUM ALLOY, OR CORRUGATED PLASTIC. PERFORATED PIPE WILL NOT BE ALLOWED.

BAGGED STONE SHALL REMAIN IN PLACE UNTIL THE ENGINEER DIRECTS THAT IT BE REMOVED. THE CONTRACTOR SHALL REMOVE AND DISPOSE OF SILT ACCUMULATIONS AT BAGGED STONE WHEN SO DIRECTED BY THE ENGINEER. BAGS SHALL BE REMOVED AND REPLACED WHENEVER THE ENGINEER DETERMINES THAT THEY HAVE DETERIORATED AND LOST THEIR EFFECTIVENESS.

NO SEPARATE PAYMENT WILL BE MADE FOR THIS WORK AND THE ENTIRE COST OF THIS WORK SHALL BE INCLUDED IN THE UNIT CONTRACT PRICE BID FOR THE SEVERAL PAY ITEMS.

TEMPORARY DRAINAGE AT END BENT

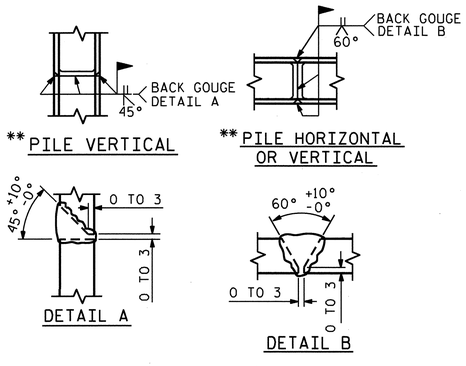

** POSITION OF PILE DURING WELDING.

PILE SPLICE DETAILS

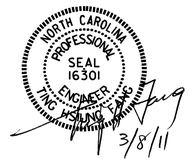

PROJECT NO. U-2519DA
CUMBERLAND COUNTY
STATION: 28+72.615 -L-

SHEET 3 OF 3

STATE OF NORTH CAROLINA
DEPARTMENT OF TRANSPORTATION
RALEIGH

SUBSTRUCTURE

END BENT 2

-L- RIGHT LANE

REVISIONS						SHEET NO.
NO.	BY:	DATE:	NO.	BY:	DATE:	S-15
1			3			TOTAL SHEETS
2			4			411

DRAWN BY : Neil M. Ruffin DATE : 4/2/08
CHECKED BY : T. H. FANG DATE : 4/21/08

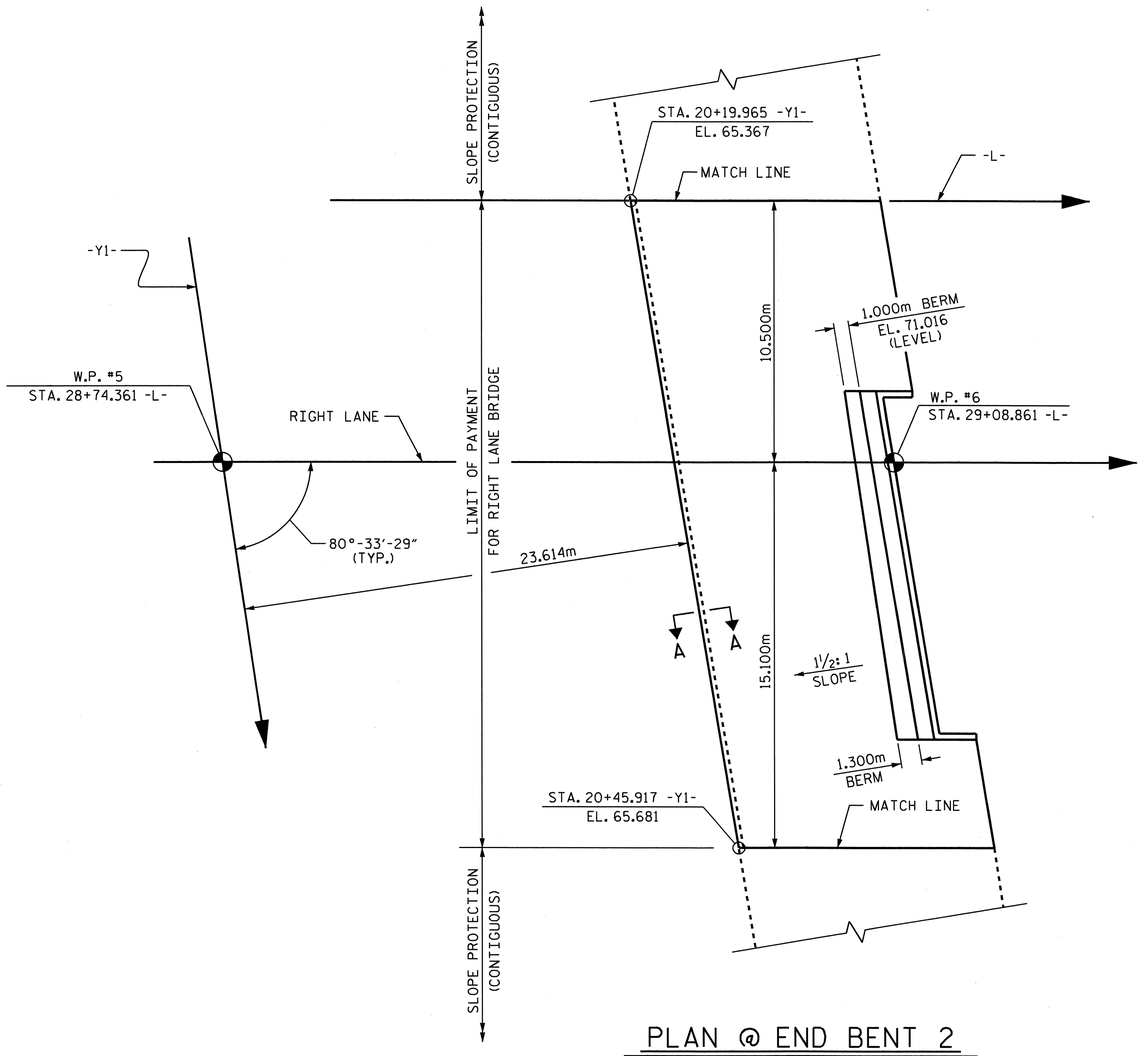

PLAN @ END BENT 2

GENERAL NOTES

SLOPE PROTECTION SHALL BE PLACED UNDER THE ENDS OF THE BRIDGE AS SHOWN IN THE DETAILS. STRAIGHT EDGING WILL NOT BE REQUIRED UNLESS, IN THE OPINION OF THE ENGINEER, VISUAL INSPECTION INDICATES A NEED FOR IT. MEASUREMENT AND PAYMENT SHALL BE AS PRESCRIBED IN SECTION 462 OF THE STANDARD SPECIFICATIONS.

SLOPE PROTECTION SHALL CONSIST OF 100mm POURED-IN-PLACE CONCRETE PAVING AS SHOWN IN THE DETAILS ON THIS SHEET. CONCRETE SHALL BE CLASS "B". THE CONCRETE SURFACE SHALL BE FLOATED WITH A WOODEN FLOAT AND FINISHED. WELDED WIRE FABRIC REINFORCING SHALL BE 152 X 152 - MW9.1 X MW9.1, 1520mm WIDE. SLOPE PROTECTION SHALL BE POURED IN 1520mm STRIPS AS SHOWN IN THE "POURING DETAIL" WITH 600mm LONG #13 BARS PLACED ALONG THE SLOPE BETWEEN STRIPS AT 450mm MAXIMUM SPACING. SLOPE PROTECTION MAY BE POURED IN ALTERNATE 1220mm AND 1520mm STRIPS AS SHOWN IN THE "OPTIONAL POURING DETAIL" WITH ADJACENT RUNS OF WELDED WIRE FABRIC LAPPING AT LEAST 152mm. THE COST OF THE WELDED WIRE FABRIC AND #13 BARS, IF USED, SHALL BE INCLUDED IN THE CONTRACT UNIT PRICE BID PER SQUARE METER FOR SLOPE PROTECTION.

BRIDGE @ STA. 28+72.615 -L- RIGHT LANE	100mm SLOPE PROTECTION	* WELDED WIRE FABRIC 1520mm WIDE
	SQUARE METERS	APPROX. METERS
END BENT 2	440	320

* QUANTITY SHOWN IS BASED ON 1520mm POURS.

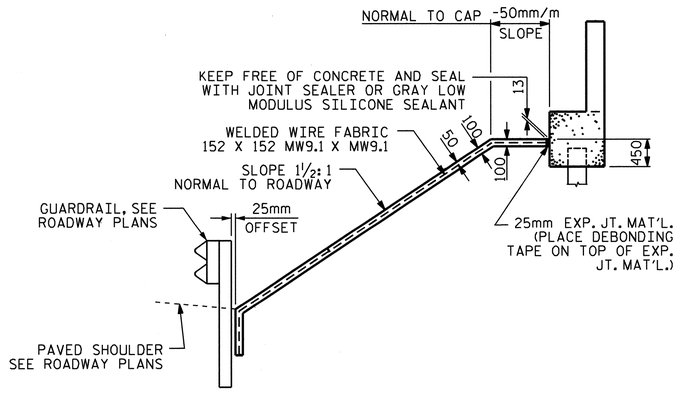

SECTION ALONG -L- RIGHT LANE

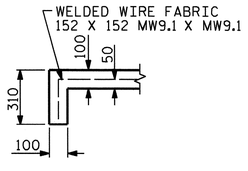

SECTION A-A

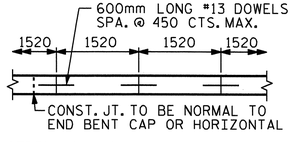

STRIP WIDTHS MAY VARY IN CURVED PORTION.

POURING DETAIL

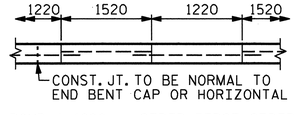

POUR A 1220mm STRIP FIRST. STRIP WIDTHS MAY VARY IN CURVED PORTION.

OPTIONAL POURING DETAIL

PROJECT NO. U-2519DA

CUMBERLAND COUNTY

STATION: 28+72.615 -L-

STATE OF NORTH CAROLINA
DEPARTMENT OF TRANSPORTATION
RALEIGH

STANDARD SLOPE PROTECTION DETAILS

-L- RIGHT LANE

REVISIONS						SHEET NO.
NO.	BY:	DATE:	NO.	BY:	DATE:	S-16
1			3			TOTAL SHEETS 411
2			4			

ASSEMBLED BY : E.C. LOCKLEAR	DATE : 3-13-08	
CHECKED BY : T. H. FANG	DATE : 4-14-08	
DRAWN BY : ELR 5/92	REV. 7/10/01	LES/RDR
CHECKED BY : GRP 6/92	REV. 5/7/03	RWW/JTE
	REV. 5/1/06	TLA/GM

07-MAR-2011 08:36
K:\TIPProjects-U\U2519da\Structures\frye\str2_L_RL\FinalPlans\U2519DA_sd_SP_02.dgn
ttfang

STD. NO. SP1SM

F.A. PROJECT No. NHF-0100(21)

METRIC

VERTICAL CURVE DATA (-LP1B-)

-0.7200% △ -1.6000%

PI = 10+30.000 -LP1B-
EL= 72.294
VC= 40m

VERTICAL CURVE DATA (-COL2-)

+2.2300% △ -1.6700%

PI = 28+60.000 -COL2-
EL= 75.387
VC= 520m

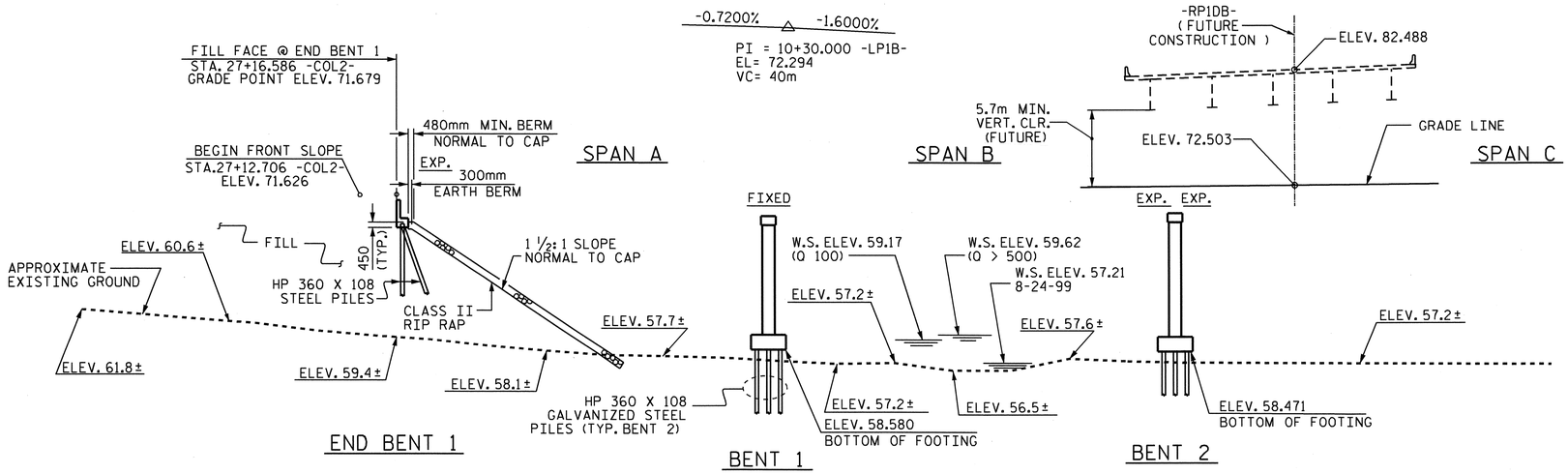

SECTION ALONG -COL2-

(SECTIONS AT END BENT AND BENTS ARE AT RIGHT ANGLES)

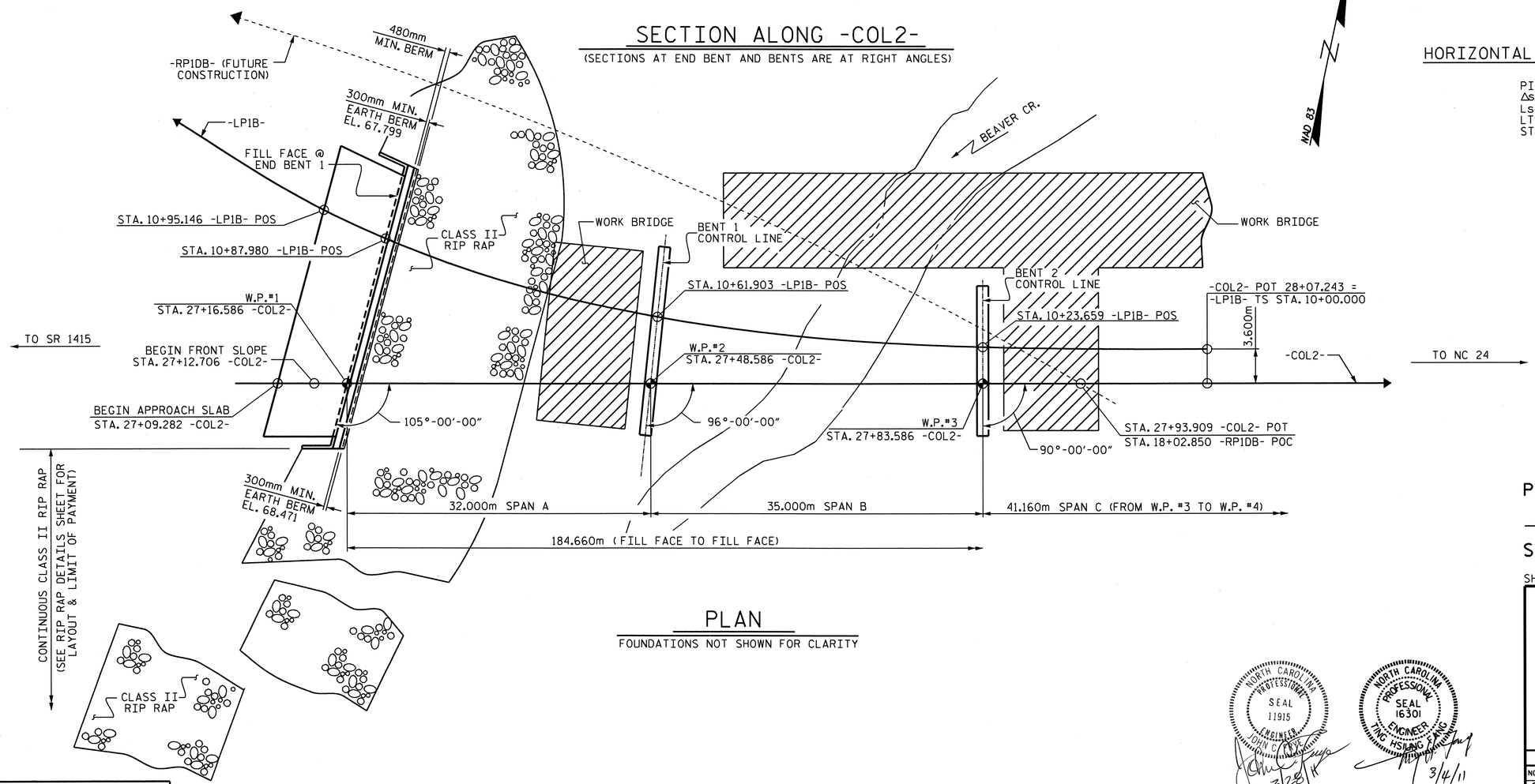

PLAN

FOUNDATIONS NOT SHOWN FOR CLARITY

NAD 83

HORIZONTAL CURVE DATA (-LP1B-)

PIS STA. 10+82.492 -LP1B-
Δs= 42°-58'-19"
Ls= 120.0000
LT= 82.492
ST= 42.275

PROJECT NO. U-2519DA

CUMBERLAND COUNTY

STATION: 28+66.746-COL2- POT
19+80.253 -Y1- POT

SHEET 1 OF 5 BRIDGE No. 369

STATE OF NORTH CAROLINA
DEPARTMENT OF TRANSPORTATION
RALEIGH

GENERAL DRAWING

BRIDGE OVER BEAVER CREEK AND ALL AMERICAN FREEWAY ON FAYETTEVILLE OUTER LOOP BETWEEN SR 1415 AND NC 24

REVISIONS						SHEET NO.
NO.	BY:	DATE:	NO.	BY:	DATE:	S-17
1			3			TOTAL SHEETS
2			4			411

NORTH CAROLINA PROFESSIONAL SEAL 11915 ENGINEER JOHN C. [illegible] 3/28/11

NORTH CAROLINA PROFESSIONAL SEAL 16301 ENGINEER TING HSIANG FANG 3/4/11

DRAWN BY : R. W. WRIGHT DATE : 10/06
CHECKED BY : T. H. FANG DATE : 3/07

04-MAR-2011 09:41
K:\TIPProjects-U\U2519da\Structures\frye\str3_COL2\FinalPlans\u2519da_sd_gd_03.dgn
ttfang

VERTICAL CURVE DATA (-COL2-)

+2.2300% △ -1.6700%

PI = 28+60.000 -COL2-
EL= 75.387
VC= 520m

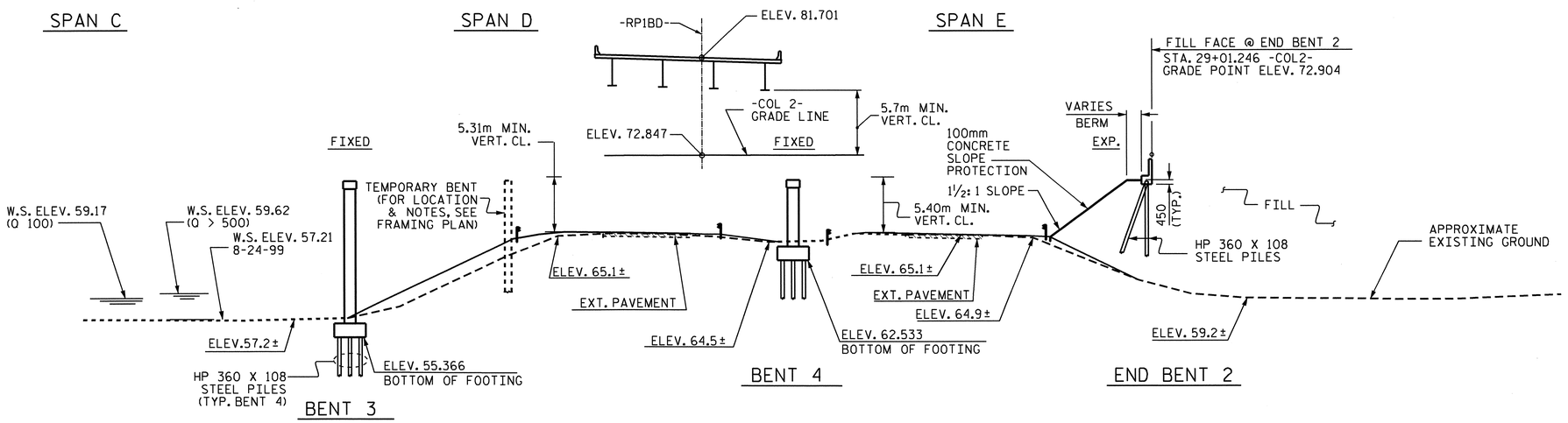

SECTION ALONG -COL2-

(SECTIONS AT END BENT AND BENTS ARE AT RIGHT ANGLES)

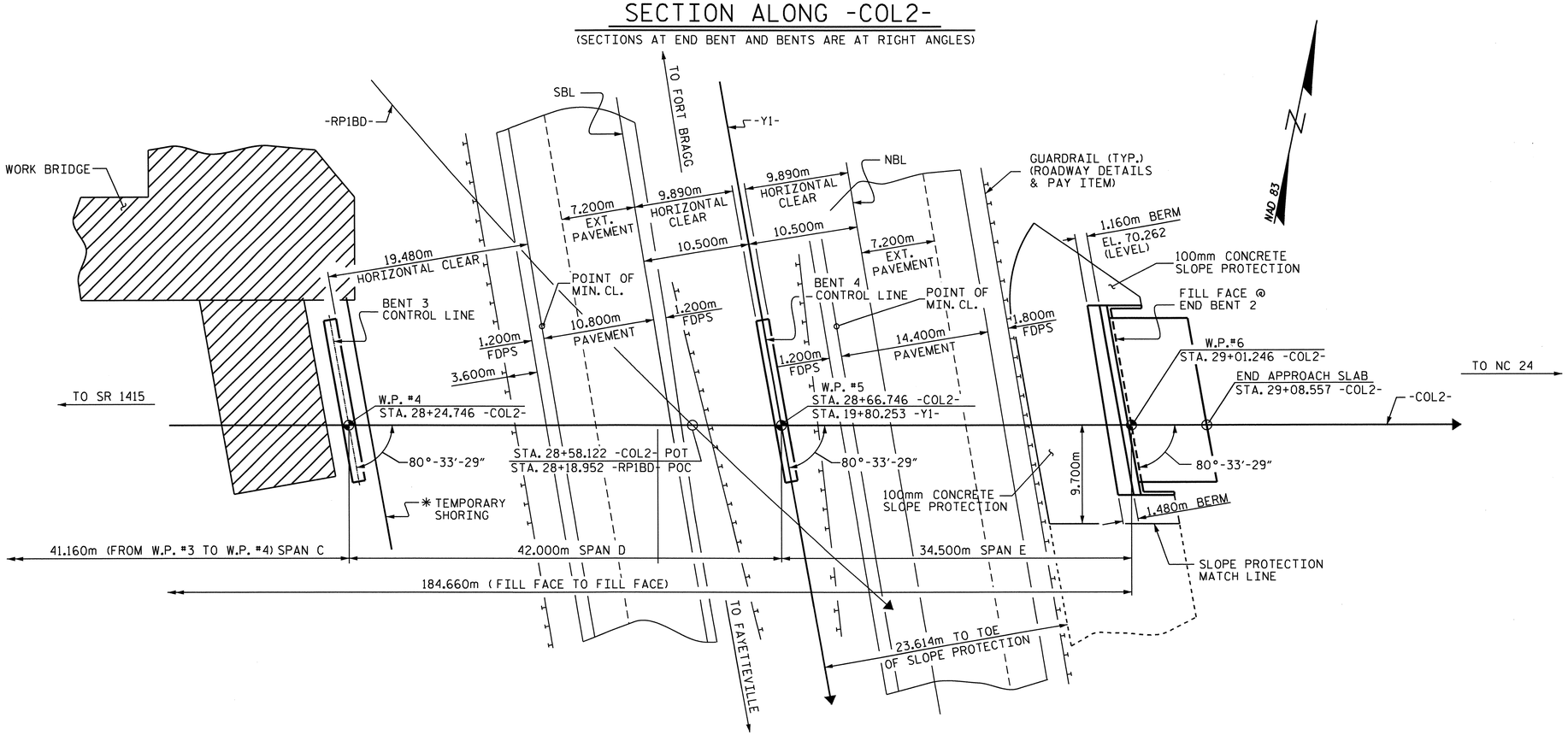

PLAN

FOUNDATIONS NOT SHOWN FOR CLARITY

* TEMPORARY SHORING FOR MAINTENANCE OF TRAFFIC, SEE ROADWAY PLANS.

NORTH CAROLINA PROFESSIONAL SEAL 16301 ENGINEER TING HSIUNG FANG
6/9/11

PROJECT NO. U-2519DA
CUMBERLAND COUNTY
STATION: 28+66.746-COL2-

SHEET 2 OF 5

STATE OF NORTH CAROLINA
DEPARTMENT OF TRANSPORTATION
RALEIGH

GENERAL DRAWING

BRIDGE OVER BEAVER CREEK AND ALL AMERICAN FREEWAY ON FAYETTEVILLE OUTER LOOP BETWEEN SR 1415 AND NC 24

REVISIONS						SHEET NO.
NO.	BY:	DATE:	NO.	BY:	DATE:	S-18
1			3			TOTAL SHEETS
2			4			411

DRAWN BY : R.W. WRIGHT DATE : 10-11-06
CHECKED BY : T.H. FANG DATE : 3/07

09-JUN-2011 11:42
K:\TIPProjects-U\U2519da\Structures\frye\str3_COL2\Final Plans\u2519da_sd_gd_03.dgn
ttfang

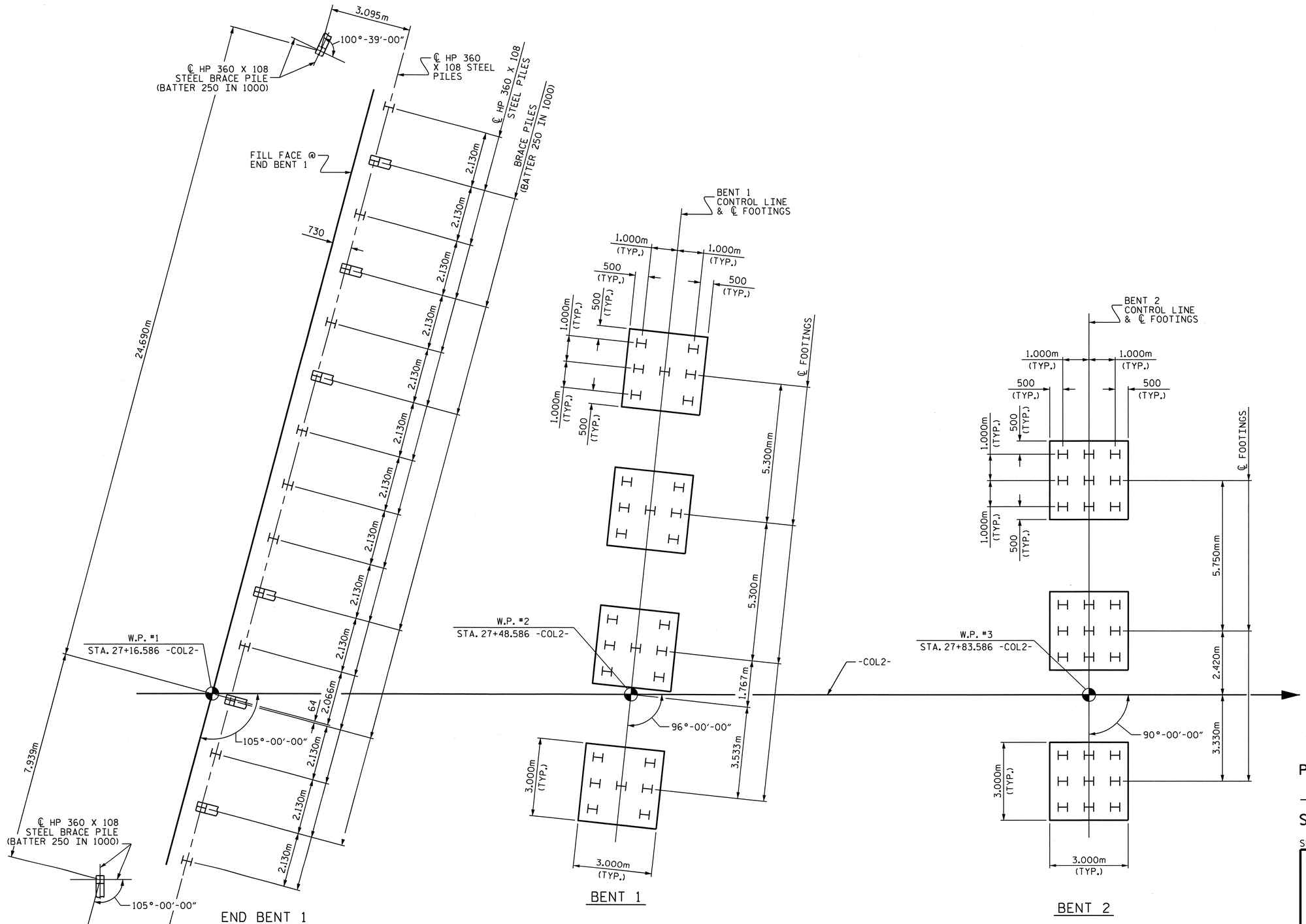

FOUNDATION LAYOUT

DIMENSIONS LOCATING PILES ARE SHOWN TO PILE CENTERLINE AT THE BOTTOM OF CAP OR FOOTING.

ALL PILES AT END BENTS & BENTS 3 & 4 ARE HP 360 X 108 STEEL PILES
ALL PILES AT BENTS 1 & 2 ARE HP 360 X 108 GALVANIZED STEEL PILES.

NORTH CAROLINA PROFESSIONAL SEAL 16301 ENGINEER TING-HSIUNG FANG
3/28/11

PROJECT NO. U-2519DA
CUMBERLAND COUNTY
STATION: 28+66.746 -COL2-

SHEET 3 OF 5

STATE OF NORTH CAROLINA
DEPARTMENT OF TRANSPORTATION
RALEIGH

GENERAL DRAWING
BRIDGE OVER BEAVER CREEK AND ALL AMERICAN FREEWAY ON FAYETTEVILLE OUTER LOOP BETWEEN SR 1415 AND NC 24

REVISIONS						SHEET NO.
NO.	BY:	DATE:	NO.	BY:	DATE:	S-19
1			3			TOTAL SHEETS
2			4			411

DRAWN BY : E.C. LOCKLEAR DATE : 4-4-08
CHECKED BY : T. H. FANG DATE : 7-28-08

28-MAR-2011 14:43
K:\TIPProjects-U\U2519da\Structures\frye\str3_COL2\FinalPlans\u2519da_sd_fl_03.dgn
ttfang

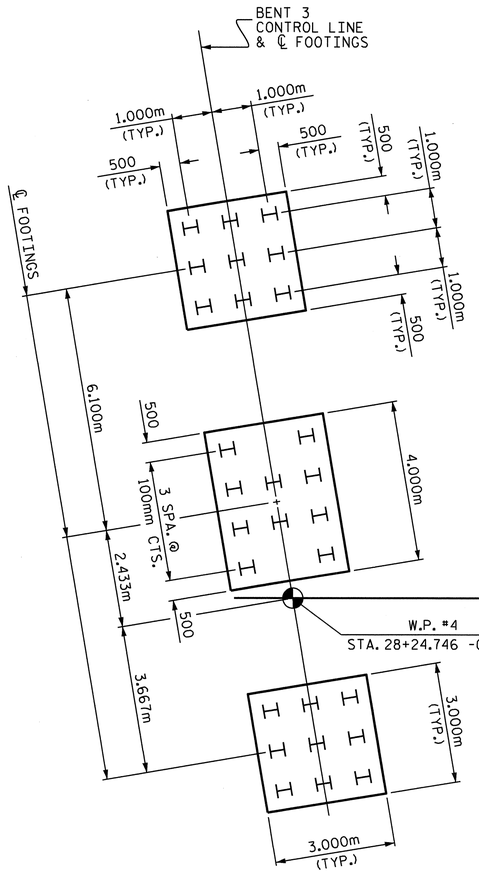

BENT 3

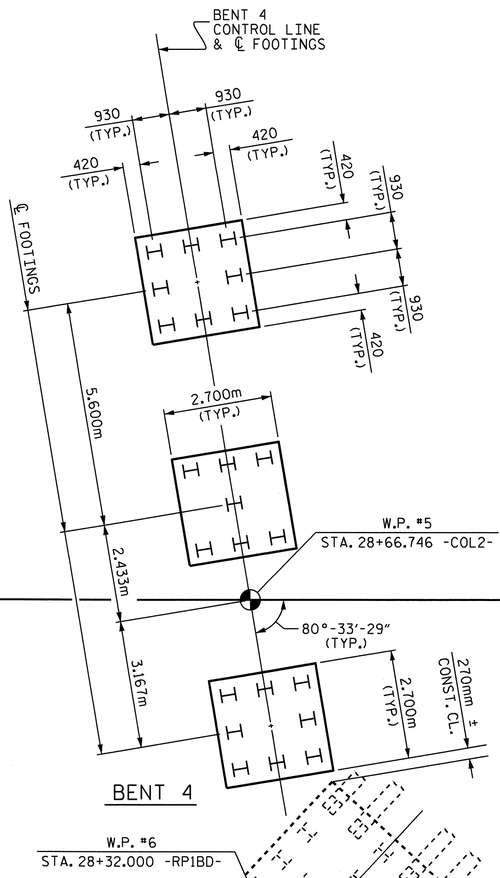

BENT 4

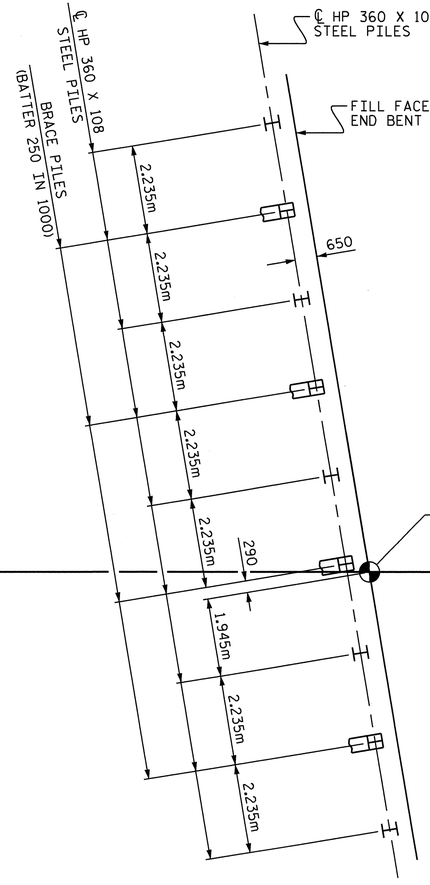

END BENT 2

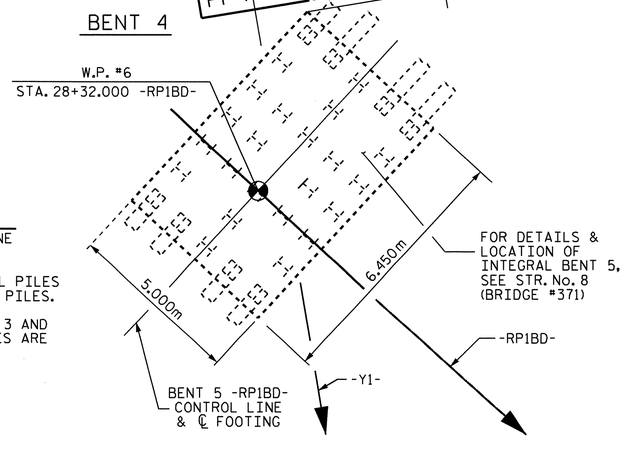

FOUNDATION LAYOUT

DIMENSIONS LOCATING PILES ARE SHOWN TO PILE CENTERLINE AT THE BOTTOM OF CAP OR FOOTING.

ALL PILES AT END BENTS & BENTS 3 & 4 ARE HP 360 X 108 STEEL PILES
ALL PILES AT BENTS 1 & 2 ARE HP 360 X 108 GALVANIZED STEEL PILES.

THE ENGINEER SHOULD CONFIRM THE LAYOUT OF BENT 4 FOOTING 3 AND STRUCTURE No. 8 (BRIDGE #371) BENT 5 FOOTING BEFORE ANY PILES ARE DRIVEN IN EITHER FOOTING.

NOTES:

DRIVE PILES AT END BENT 1, END BENT 2 AND BENT 4 TO A REQUIRED BEARING CAPACITY OF 1340 KN PER PILE. THE REQUIRED BEARING CAPACITY IS EQUAL TO THE ALLOWABLE BEARING CAPACITY WITH A MINIMUM FACTOR OF SAFETY OF TWO.

DRIVE PILES AT BENT 1, BENT 2 AND BENT 3 TO A REQUIRED BEARING CAPACITY OF 1370 KN PER PILE. THE REQUIRED BEARING CAPACITY IS EQUAL TO THE ALLOWABLE BEARING CAPACITY WITH A MINIMUM FACTOR OF SAFETY OF TWO PLUS ANY ADDITIONAL CAPACITY TO ACCOUNT FOR DRAG OR NEGATIVE SKIN FRICTION AND SCOUR.

THE ALLOWABLE BEARING CAPACITY FOR PILES AT END BENTS 1 AND 2, BENT 1 THRU BENT 4 IS 670 kN PER PILE.

THE SCOUR CRITICAL ELEVATION FOR BENT 1, BENT 2 AND BENT 3 IS ELEVATION 52m. SCOUR CRITICAL ELEVATIONS ARE USED TO MONITOR POSSIBLE SCOUR PROBLEMS DURING THE LIFE OF THE STRUCTURE.

TESTING PILES WITH THE PILE DRIVING ANALYZER (PDA) DURING DRIVING, RESTRIKING OR REDRIVING MAY BE REQUIRED. THE ENGINEER WILL DETERMINE THE NEED FOR PDA TESTING. SEE PILE DRIVING ANALYZER SPECIAL PROVISION.

PILE RESTRIKES FOR LRFD MAY BE REQUIRED. SEE PILE RESTRIKE FOR LRFD SPECIAL PROVISION.

FOR PILES, SEE SPECIAL PROVISION.

NORTH CAROLINA PROFESSIONAL SEAL 16301 ENGINEER TING HSIUNG FANG
3/28/11

PROJECT NO. U-2519DA
CUMBERLAND COUNTY
STATION: 28+66.746 -COL2-

SHEET 4 OF 5

STATE OF NORTH CAROLINA
DEPARTMENT OF TRANSPORTATION
RALEIGH

GENERAL DRAWING

BRIDGE OVER BEAVER CREEK AND ALL AMERICAN FREEWAY ON FAYETTEVILLE OUTER LOOP BETWEEN SR 1415 AND NC 24

REVISIONS						SHEET NO.
NO.	BY:	DATE:	NO.	BY:	DATE:	S-20
1			3			TOTAL SHEETS
2			4			411

DRAWN BY : E.C. LOCKLEAR DATE : 4-4-08
CHECKED BY : T. H. FANG DATE : 7-28-08

28-MAR-2011 14:43
K:\TIPProjects-U\U2519da\Structures\frye\str3_COL2\FinalPlans\u2519da_sd_fl_03.dgn
tfang

K:\TIPProjects-U\U2519da\Structures\frye\str3_COL2\Final
tfang

TOTAL BILL OF MATERIAL

	CONST., MAINT. & REMOVAL OF TEMP. ACCESS	FOUNDATION EXCAVATION FOR BENT	PDA TESTING	PDA ASSISTANCE	REINFORCED CONCRETE DECK SLAB	GROOVING BRIDGE FLOORS	CLASS A CONCRETE	BRIDGE APPROACH SLABS	REINFORCING STEEL	SPIRAL COLUMN REINFORCING STEEL	STRUCTURAL STEEL	HP 360 X 108 STEEL PILES		HP 360 X 108 GALVANIZED STEEL PILES		PILE REDRIVES	CONCRETE BARRIER RAIL	RIP RAP CLASS II (610mm THK.)	FILTER FABRIC FOR DRAINAGE	100mm SLOPE PROTECTION	POT BEARINGS	ELASTOMERIC BEARINGS	EVAZOTE JOINT SEALS
	LUMP SUM	LUMP SUM	EACH	EACH	SQ. METERS	SQ. METERS	CU. METERS	LUMP SUM	kg	kg	APPROX. kg	NO.	METERS	NO.	METERS	EACH	METERS	METRIC TONS	SQ. METERS	SQ. METERS	LUMP SUM	LUMP SUM	LUMP SUM
SUPERSTRUCTURE					3,316	3,464					726,500						364.069				LUMP SUM	LUMP SUM	LUMP SUM
END BENT 1							65.2		4,956			17	357			4		2,350	2,400				
BENT 1							115.8		9,337	1,316				28	280	7							
BENT 2							91.8		7,380	1,094				27	486	7							
BENT 3		LUMP SUM					104.1		8,608	1,463		28	448			7							
BENT 4		LUMP SUM					78.8		6,427	642		23	230			6							
END BENT 2							34.1		2,832			9	189			2				470			
TOTAL	LUMP SUM	LUMP SUM	1	1	3,316	3,464	489.8	LUMP SUM	39,540	4,515	726,500	77	1,224	55	766	33	364.069	2,350	2,400	470	LUMP SUM	LUMP SUM	LUMP SUM

B.M. #12: POINT BL12, ALUMINUM DISK 65.137m LT. OF STA. 27+21.030 -L-, ELEV. 59.506

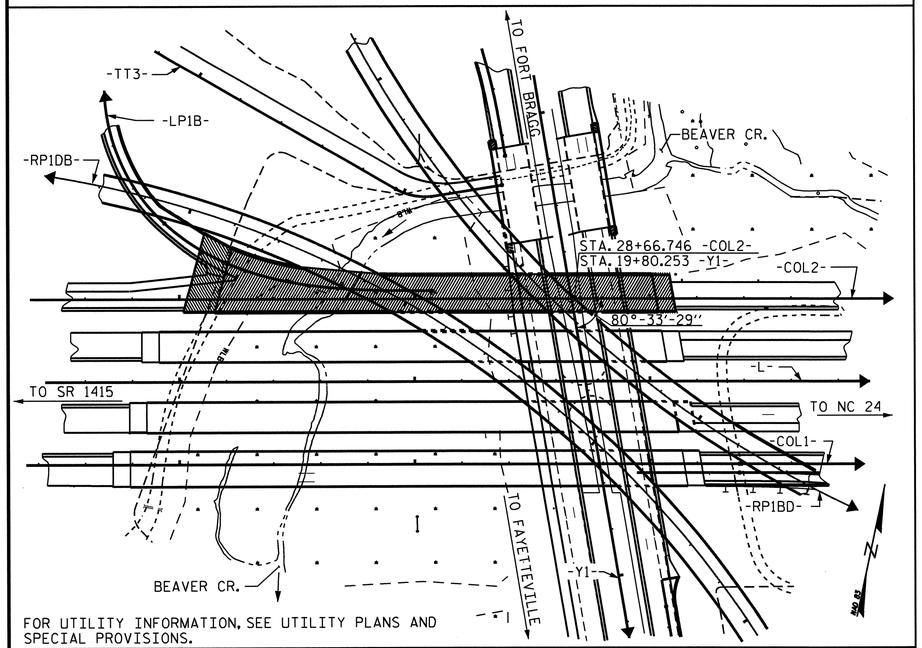

FOR UTILITY INFORMATION, SEE UTILITY PLANS AND SPECIAL PROVISIONS.

LOCATION SKETCH

HYDRAULIC DATA

DESIGN DISCHARGE	= 52.7 m^3/s
FREQUENCY OF DESIGN FLOOD	= 50 YEARS
DESIGN HIGH WATER ELEVATION	= 58.72
DRAINAGE AREA	= 15.0 SQ. km.
BASIC DISCHARGE(Q100)	= 58.9 m^3/s
BASIC HIGH WATER ELEVATION	= 59.17

OVERTOPPING FLOOD DATA

OVERTOPPING DISCHARGE	= ** CU. METERS/SEC.
FREQUENCY OF OVERTOPPING FLOOD	= > 500 YRS.
OVERTOPPING FLOOD ELEVATION	= 63.03

** OVERTOPPING FLOOD IS GREATER THAN THE 500+ YEAR EVENT. OVERTOPPING LOCATION AT -RP1A- 16+34.207

DRAWN BY : R.W. WRIGHT DATE : 10-11-06
CHECKED BY : T.H. FANG DATE : 7/25/08

NOTES

ALL DIMENSIONS ARE IN MILLIMETERS UNLESS OTHERWISE NOTED.

ALL ELEVATIONS ARE IN METERS.

ASSUMED LIVE LOAD = MS 22.5 OR ALTERNATE LOADING.

FOR OTHER DESIGN DATA AND GENERAL NOTES, SEE SHEET SNSM.

FOR EROSION CONTROL MEASURES, SEE EROSION CONTROL PLANS.

THIS BRIDGE HAS BEEN DESIGNED BY THE STRENGTH DESIGN METHOD AS SPECIFIED IN AASHTO STANDARD SPECIFICATIONS.

ALL STRUCTURAL STEEL SHALL BE AASHTO M270 GRADE 345W AND PAINTED IN ACCORDANCE WITH SYSTEM 4 OF ARTICLE 442-7 OF THE STANDARD SPECIFICATIONS UNLESS OTHERWISE NOTED ON THE PLANS.

REMOVABLE FORMS MAY BE USED IN LIEU OF METAL STAY-IN-PLACE FORMS IN ACCORDANCE WITH ARTICLE 420-3 OF THE STANDARD SPECIFICATIONS.

FOR MAINTENANCE AND PROTECTION OF TRAFFIC BENEATH PROPOSED STRUCTURE, SEE SPECIAL PROVISIONS.

THIS BRIDGE HAS BEEN DESIGNED IN ACCORDANCE WITH THE REQUIREMENTS OF THE AASHTO STANDARD SPECIFICATIONS FOR SEISMIC DESIGN OF HIGHWAY BRIDGES FOR SEISMIC PERFORMANCE CATEGORY A.

THIS STRUCTURE HAS BEEN DESIGNED IN ACCORDANCE WITH HEC 18, "EVALUATING SCOUR AT BRIDGES", MAY, 2001.

NEEDLE BEAMS WILL NOT BE ALLOWED UNLESS OTHERWISE CALLED FOR ON THE PLANS OR APPROVED BY THE ENGINEER.

FOR HP 360 X 108 GALVANIZED STEEL PILES, A MINIMUM OF 5 METERS OF THE TOP OF EACH PILE SHALL BE GALVANIZED IN ACCORDANCE WITH SECTION 1076 OF THE STANDARD SPECIFICATIONS.

FOR LIMITS OF TEMPORARY SHORING FOR MAINTENANCE OF TRAFFIC, SEE TRAFFIC CONTROL PLANS. FOR TEMPORARY SHORING PAY ITEM, SEE ROADWAY PLANS.

STEEL SHEET PILING REQUIRED FOR SHORING SHALL BE HOT ROLLED.

THE CONTRACTOR SHALL PROVIDE INDEPENDENT ASSURANCE SAMPLES OF REINFORCING STEEL AS FOLLOWS: FOR PROJECTS REQUIRING UP TO 360,000 kg OF REINFORCING STEEL, ONE 760mm SAMPLE OF EACH SIZE BAR USED, AND FOR PROJECTS REQUIRING OVER 360,000 kg OF REINFORCING STEEL, TWO 760mm SAMPLES OF EACH SIZE BAR USED. THE BARS FROM WHICH THE SAMPLES ARE TAKEN MUST THEN BE SPLICED WITH REPLACEMENT BARS OF THE SIZE AND LENGTH OF THE SAMPLE PLUS A MINIMUM LAP SPLICE OF THIRTY BAR DIAMETERS.

FOR ELASTOMERIC CONCRETE, SEE SPECIAL PROVISIONS.

FOR EVAZOTE JOINT SEALS, SEE SPECIAL PROVISIONS.

FOR POT BEARINGS, SEE SPECIAL PROVISIONS.

THE CONTRACTOR MAY SUBSTITUTE DISC BEARINGS FOR THE POT BEARINGS SHOWN. FOR OPTIONAL DISC BEARINGS, SEE SPECIAL PROVISIONS.

FOR HIGH STRENGTH BOLTS, SEE SPECIAL PROVISIONS.

FOR THERMAL SPRAY COATINGS, SEE SPECIAL PROVISIONS.

FOR ADHESIVE ANCHORED ANCHOR BOLTS OR DOWELS, SEE SPECIAL PROVISIONS.

FOR GROUT FOR STRUCTURES, SEE SPECIAL PROVISIONS.

FOR CURING CONCRETE, SEE SPECIAL PROVISIONS.

FOR SHIPPING STEEL STRUCTURAL MEMBERS, SEE SPECIAL PROVISIONS.

FOR SUBMITTAL OF WORKING DRAWINGS, SEE SPECIAL PROVISIONS.

FOR METRIC STRUCTURAL STEEL, SEE SPECIAL PROVISIONS.

FOR FALSEWORK AND FORMWORK, SEE SPECIAL PROVISIONS.

FOR CRANE SAFETY, SEE SPECIAL PROVISIONS.

FOR CONSTRUCTION, MAINTENANCE & REMOVAL OF TEMPORARY ACCESS, SEE SPECIAL PROVISIONS.

FOR PLACING LOAD ON STRUCTURE MEMBERS, SEE SPECIAL PROVISIONS.

NORTH CAROLINA PROFESSIONAL SEAL 16301 ENGINEER TING HSIUNG FANG
6/9/11

PROJECT NO. U-2519DA
CUMBERLAND COUNTY
STATION: 28+66.746-COL2- POT

SHEET 5 OF 5

STATE OF NORTH CAROLINA
DEPARTMENT OF TRANSPORTATION
RALEIGH

GENERAL DRAWING

BRIDGE OVER BEAVER CREEK AND ALL AMERICAN FREEWAY ON FAYETTEVILLE OUTER LOOP BETWEEN SR 1415 AND NC 24

REVISIONS						SHEET NO.
NO.	BY:	DATE:	NO.	BY:	DATE:	S-21
1			3			TOTAL SHEETS
2			4			411

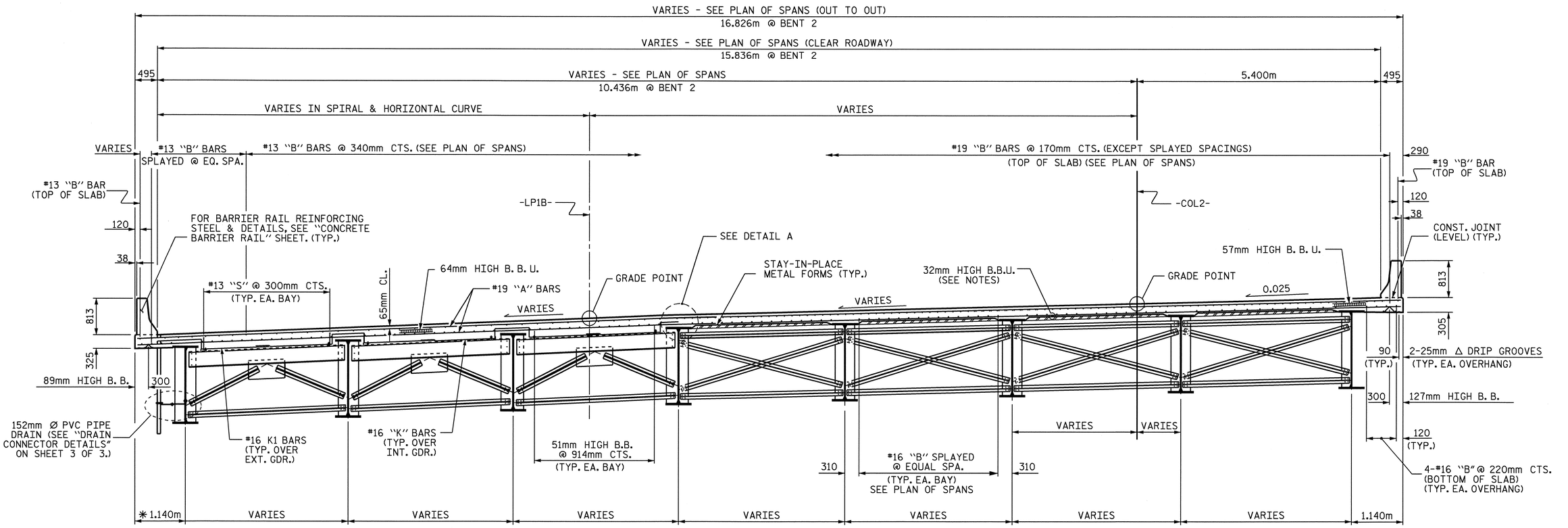

✳RADIAL DIMENSIONS

PARTIAL SECTION

SHOWING END BENT 1 & BENT 2 DIAPHRAGMS.
FOR GIRDER SPACING, SEE "FRAMING PLAN" SHEET.

PARTIAL SECTION

SHOWING INTERMEDIATE DIAPHRAGMS, DIAPHRAGMS @ BENT 1 SIMILAR.
FOR GIRDER SPACING, SEE "FRAMING PLAN" SHEET.

TYPICAL SECTION

FOR SPANS A & B

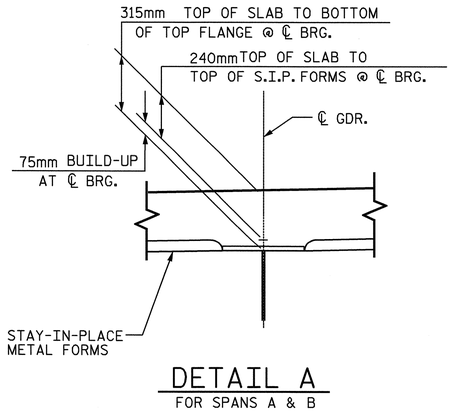

DETAIL A

FOR SPANS A & B

PROJECT NO. U-2519DA
CUMBERLAND COUNTY
STATION: 28+66.746-COL2-

SHEET 1 OF 3

STATE OF NORTH CAROLINA
DEPARTMENT OF TRANSPORTATION
RALEIGH
SUPERSTRUCTURE

TYPICAL SECTION
SPANS A & B

NORTH CAROLINA PROFESSIONAL SEAL 16301 ENGINEER TING HSIANG FANG
10/10/08

REVISIONS						SHEET NO.
NO.	BY:	DATE:	NO.	BY:	DATE:	S-22
1			3			TOTAL SHEETS
2			4			411

DRAWN BY : D. G. ELY DATE : 1/15/08
CHECKED BY : T.H. FANG DATE : 07-08

10-OCT-2008 15:25
r:\structures\frye\str3_col2\final plans\u-2519da_sd_ts_03.dgn
sdombrowski

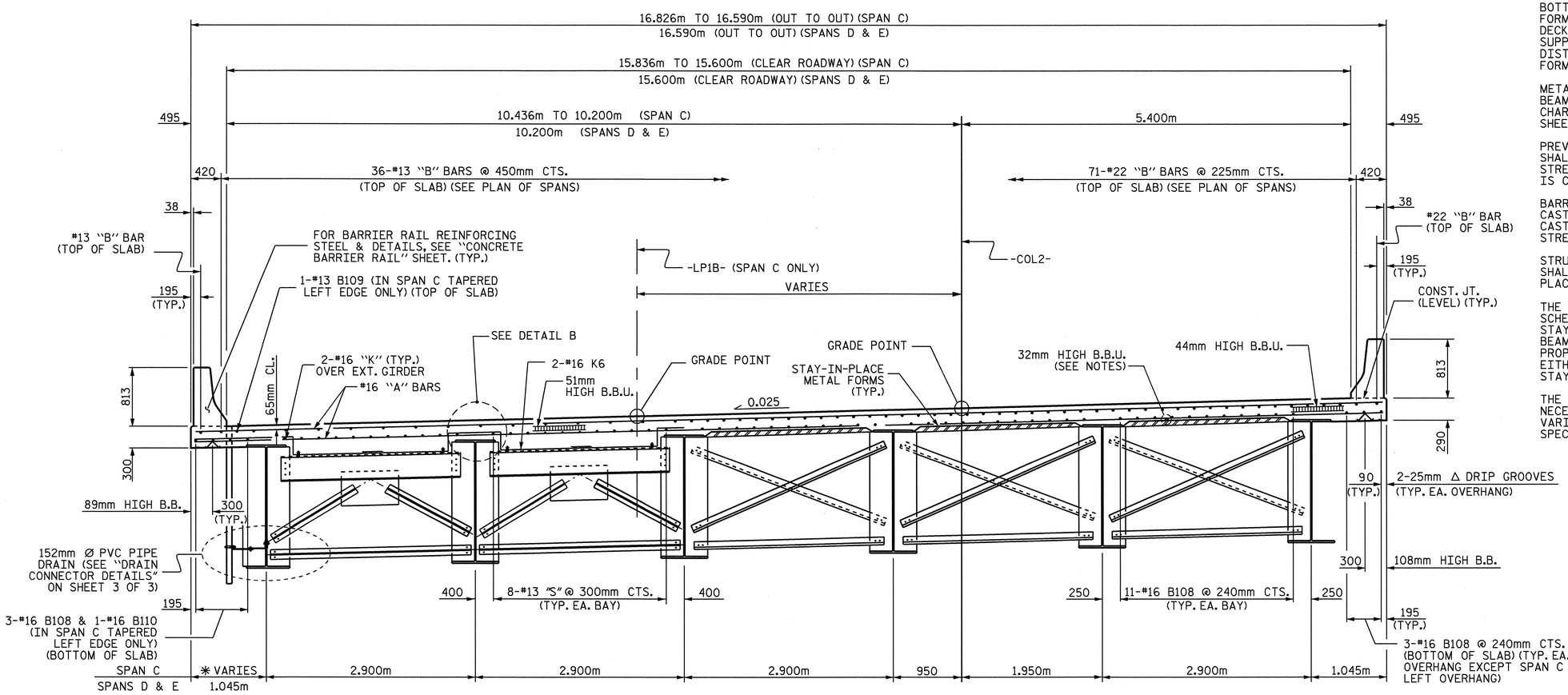

* FROM 1.281m TO 1.045m
IN SPAN C ONLY

PARTIAL SECTION
SHOWING BENT 2 & END BENT 2 DIAPHRAGMS

PARTIAL SECTION
SHOWING INTERMEDIATE DIAPHRAGMS
(DIAPHRAGMS @ BENTS 3 & 4 SIMILAR)

TYPICAL SECTION
FOR SPANS C, D & E

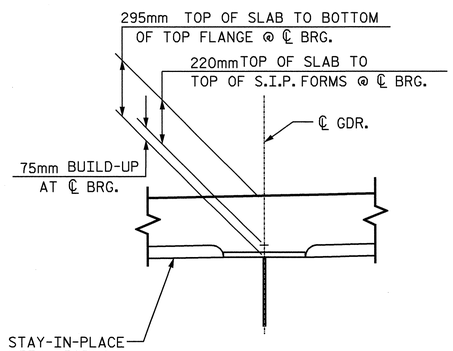

DETAIL B
FOR SPANS C, D & E

NOTES

PROVIDE 32mm HIGH BEAM BOLSTERS UPPER AT 1.2m CTS. ATOP THE METAL STAY-IN-PLACE FORMS TO SUPPORT THE BOTTOM MAT OF 'A' BARS. WHEN USING REMOVABLE FORMS, PROVIDE CONTINUOUS HIGH CHAIRS FOR METAL DECK (C.H.C.M.) @ 1.2m CTS. WITH A HEIGHT TO SUPPORT THE BOTTOM MAT OF 'A' BARS A CLEAR DISTANCE OF 65mm ABOVE THE TOP OF THE REMOVABLE FORM.

METAL STAY-IN-PLACE FORMS SHALL NOT BE WELDED TO BEAM OR GIRDER FLANGES IN THE ZONES REQUIRING CHARPY V-NOTCH TEST. SEE STRUCTURAL STEEL DETAIL SHEETS.

PREVIOUSLY CAST CONCRETE IN A CONTINUOUS UNIT SHALL HAVE ATTAINED A MINIMUM COMPRESSIVE STRENGTH OF 20.7 MPa BEFORE ADDITIONAL CONCRETE IS CAST IN THE UNIT.

BARRIER RAIL IN A CONTINUOUS UNIT SHALL NOT BE CAST UNTIL ALL SLAB CONCRETE IN THE UNIT HAS BEEN CAST AND HAS REACHED A MINIMUM COMPRESSIVE STRENGTH OF 20.7 MPa.

STRUCTURAL STEEL ERECTION IN A CONTINUOUS UNIT SHALL BE COMPLETE BEFORE FALSEWORK OR FORMS ARE PLACED ON THE UNIT.

THE CONTRACTOR MAY, WHEN NECESSARY, PROPOSE A SCHEME FOR AVOIDING INTERFERENCE BETWEEN METAL STAY-IN-PLACE FORM SUPPORTS OR FORMS AND BEAM/GIRDER STIFFENERS OR CONNECTOR PLATES. THE PROPOSAL SHALL BE INDICATED, AS APPROPRIATE, ON EITHER THE STEEL WORKING DRAWINGS OR THE METAL STAY-IN-PLACE FORM WORKING DRAWINGS.

THE CONTRACTOR SHALL ADJUST THE GIRDER BUILDUPS AS NECESSARY TO INCORPORATE A MAXIMUM PERMISSIBLE VARIATION IN POT BEARING DEPTH OF 13mm, SEE SPECIAL PROVISION FOR POT BEARINGS.

NORTH CAROLINA PROFESSIONAL SEAL 16301 ENGINEER HSIUNG HENRY FANG
10/03/08

PROJECT NO. U-2519DA
CUMBERLAND COUNTY
STATION: 28+66.746-COL2-

SHEET 2 OF 3

STATE OF NORTH CAROLINA
DEPARTMENT OF TRANSPORTATION
RALEIGH
SUPERSTRUCTURE

TYPICAL SECTION
SPANS C, D & E

REVISIONS						SHEET NO.
NO.	BY:	DATE:	NO.	BY:	DATE:	S-23
1			3			TOTAL SHEETS
2			4			411

DRAWN BY : D. G. ELY DATE : 1/15/08
CHECKED BY : T. H. FANG DATE : 1/7/08

03-OCT-2008 11:08
R:\Structures\frye\str3_COL2\Final Plans\u-2519da_sd_ts_03.dgn
sdombrowski

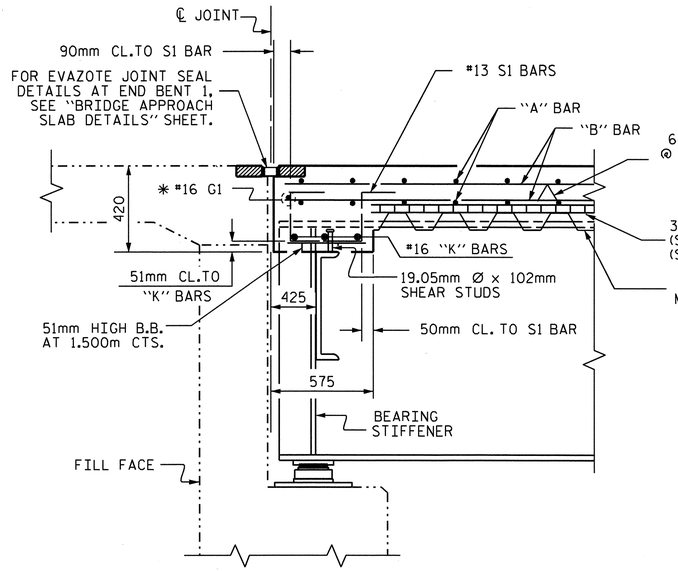

SECTION @ END BENT 1

* #16 G1 BAR MAY BE SHIFTED SLIGHTLY, AS NECESSARY, TO CLEAR DIAPHRAGM AND REINFORCING STEEL.

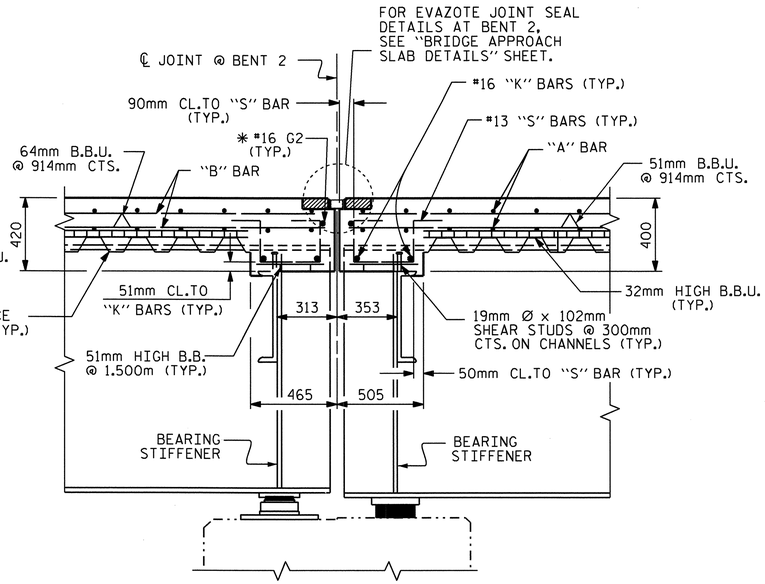

SECTION @ BENT 2

* #16 G2 BAR MAY BE SHIFTED SLIGHTLY, AS NECESSARY, TO CLEAR REINFORCING STEEL AND STIRRUPS. REINFORCING STEEL IS TYPICAL FOR BOTH SIDES.

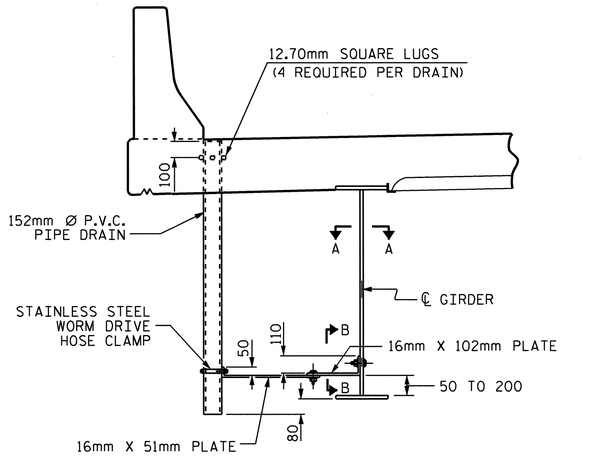

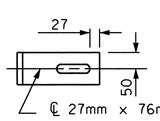

SECTION A-A

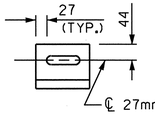

SECTION B-B

DRAIN CONNECTOR DETAIL

COUPLING IN DRAIN PIPE WILL BE PERMITTED AS APPROVED BY THE ENGINEER.

TOP OF FLOOR DRAINS TO BE SET 10mm BELOW SURFACE OF SLAB.

4- 13mm SQ. LUGS TO BE GLUED TO THE P.V.C. PLASTIC PIPE AT EQUAL SPACES AROUND THE PIPE DRAIN APPROXIMATELY 100mm FROM THE TOP OF THE PIPE.

BOLT SIZE TO BE SAME AS DIAPHRAGM AND CROSSFRAME CONNECTIONS. STAINLESS STEEL WORM HOSE CLAMP SHALL BE COMMERCIAL QUALITY.

THE 152mm Ø PVC PLASTIC PIPE AND FITTINGS SHALL BE SCHEDULE 40 AND CONFORM TO ASTM D1785.

PVC DECK DRAINS SHALL BE PAINTED WITH TWO COATS OF BROWN PRIMER MEETING THE REQUIREMENTS OF ARTICLE 1080-12 OF THE STANDARD SPECIFICATIONS. EACH COAT SHALL BE 2 DRY MILS (0.050mm) THICK. DECK DRAINS SHALL BE ROUGHENED PRIOR TO PAINTING. NO SEPARATE PAYMENT SHALL BE MADE FOR PAINTING PVC DECK DRAINS AS THIS IS CONSIDERED INCIDENTAL TO THE PAY ITEM FOR REINFORCED CONCRETE DECK SLAB.

PLATES SHALL CONFORM TO AASHTO M270 STEEL OR APPROVED EQUAL.

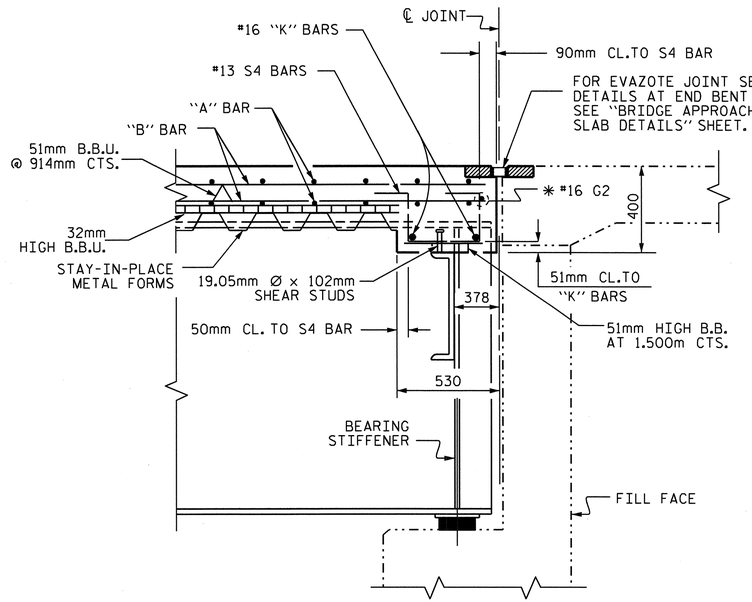

SECTION @ END BENT 2

* #16 G2 BAR MAY BE SHIFTED SLIGHTLY, AS NECESSARY, TO CLEAR DIAPHRAGM AND REINFORCING STEEL.

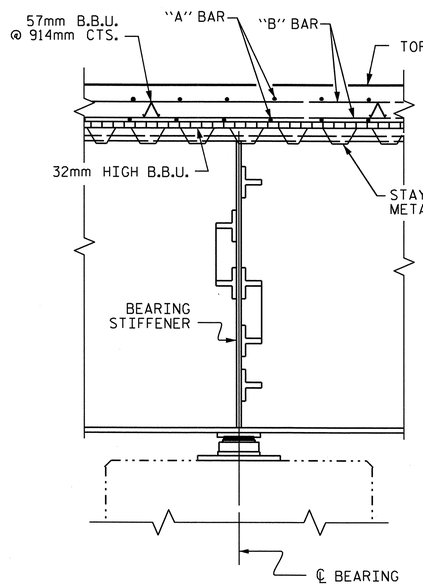

SECTION @ BENT 1

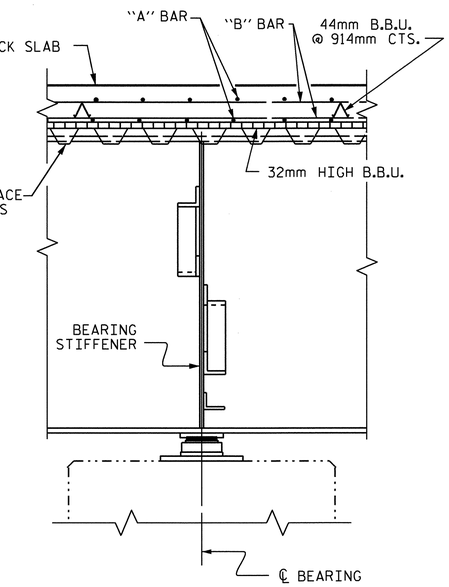

SECTION @ BENTS 3 & 4

PROJECT NO. U-2519DA

CUMBERLAND COUNTY

STATION: 28+66.746-COL2-

SHEET 3 OF 3

STATE OF NORTH CAROLINA
DEPARTMENT OF TRANSPORTATION
RALEIGH

SUPERSTRUCTURE

TYPICAL SECTION AND DETAILS

NORTH CAROLINA PROFESSIONAL SEAL 16301 ENGINEER TING HSIUNG FANG

3/9/11

REVISIONS						SHEET NO.
NO.	BY:	DATE:	NO.	BY:	DATE:	S-24
1			3			TOTAL SHEETS
2			4			411

DRAWN BY : D. G. ELY DATE : 1/15/08
CHECKED BY : T.H. FANG DATE : 7/24/08

09-MAR-2011 16:10
K:\TIPProjects-U\U2519da\Structures\frye\str3_COL2\Final Plans\u-2519da_sd_ts_03.dgn
tfang

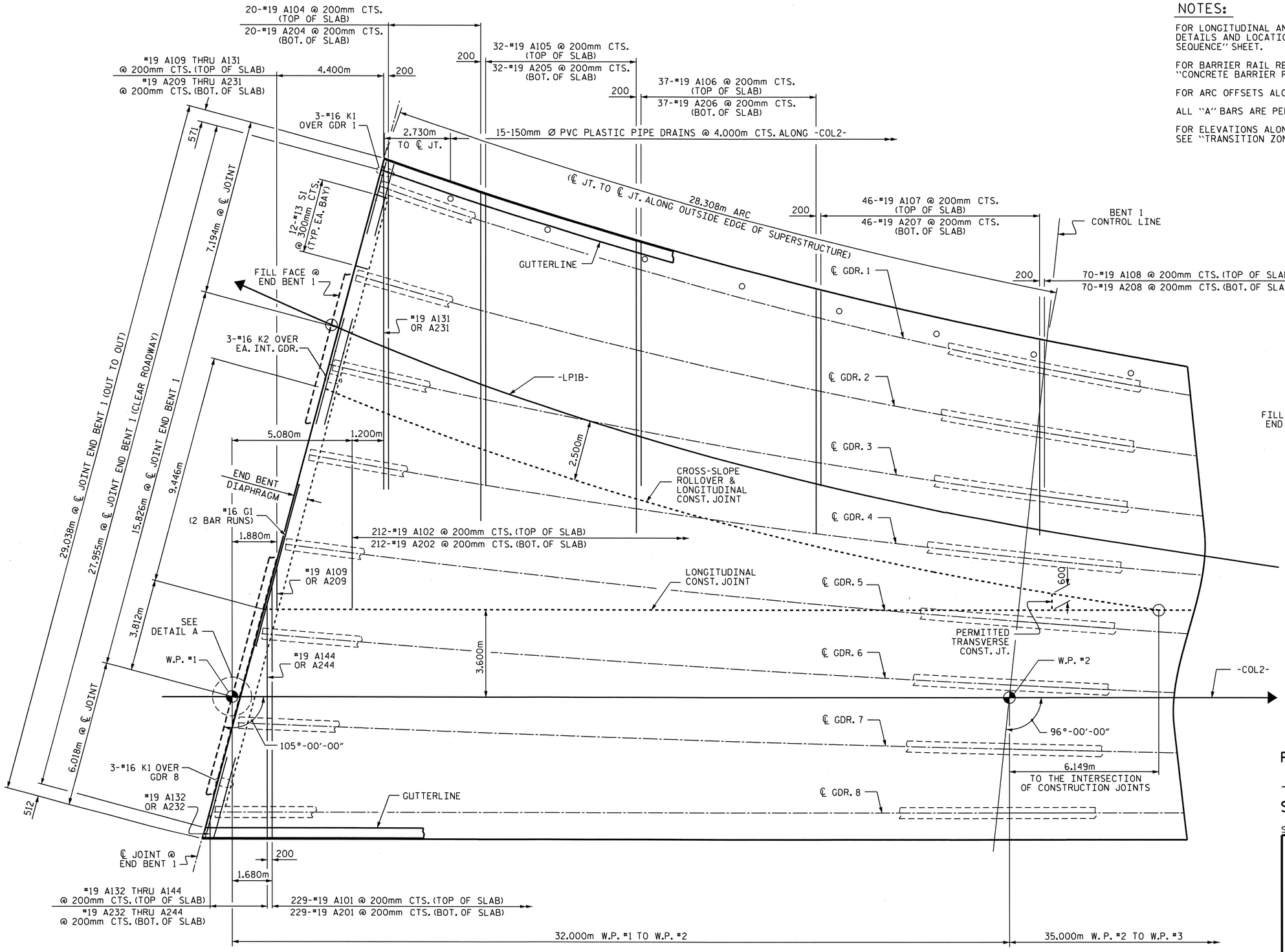

NOTES:

FOR LONGITUDINAL AND TRANSVERSE CONSTRUCTION JOINTS DETAILS AND LOCATION, SEE "CONCRETE DECK POURING SEQUENCE" SHEET.

FOR BARRIER RAIL REINFORCING STEEL AND DETAILS, SEE "CONCRETE BARRIER RAIL" SHEETS.

FOR ARC OFFSETS ALONG LEFT EDGE OF DECK, SEE SHEET 2 OF 9

ALL "A" BARS ARE PERPENDICULAR TO -COL2-.

FOR ELEVATIONS ALONG LONGITUDINAL CONSTRUCTION JOINTS, SEE "TRANSITION ZONE DETAILS" SHEET.

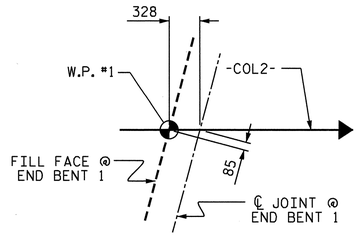

DETAIL A

PLAN OF SPAN A

"A" BAR PLACEMENT

FOR "B" BAR PLACEMENT, SEE SHEETS 2 & 3 OF 9.

MINIMUM SPLICE LENGTH FOR #19 "A" BARS ON THIS SHEET IS 920mm.

NORTH CAROLINA PROFESSIONAL SEAL 16301 ENGINEER TING HSIUNG FANG 3/22/11

PROJECT NO. U-2519DA

CUMBERLAND COUNTY

STATION: 28+66.746-COL2-

SHEET 1 OF 9

STATE OF NORTH CAROLINA
DEPARTMENT OF TRANSPORTATION
RALEIGH

SUPERSTRUCTURE

PLAN OF SPANS

SPAN A

REVISIONS						SHEET NO.
NO.	BY:	DATE:	NO.	BY:	DATE:	S-25
1			3			TOTAL SHEETS
2			4			411

DRAWN BY : D. G. ELY DATE : 1/22/08
CHECKED BY : T. H. FANG DATE : 8/04/08

22-MAR-2011 7:07
K:\TIPProjects-U\U2519da\Structures\frye\str3_COL2\FinalPlans\u-2519da_sd_ps_03.dgn
ttfang

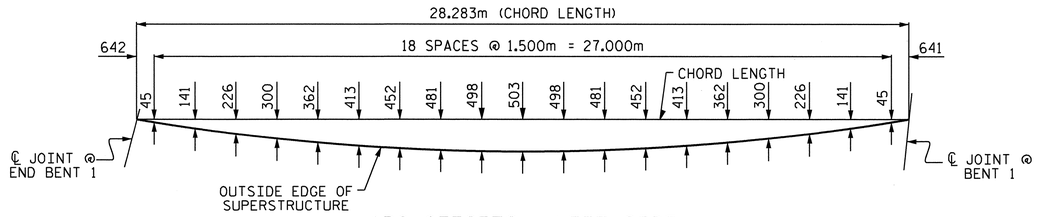

ARC OFFSETS - LEFT SIDE

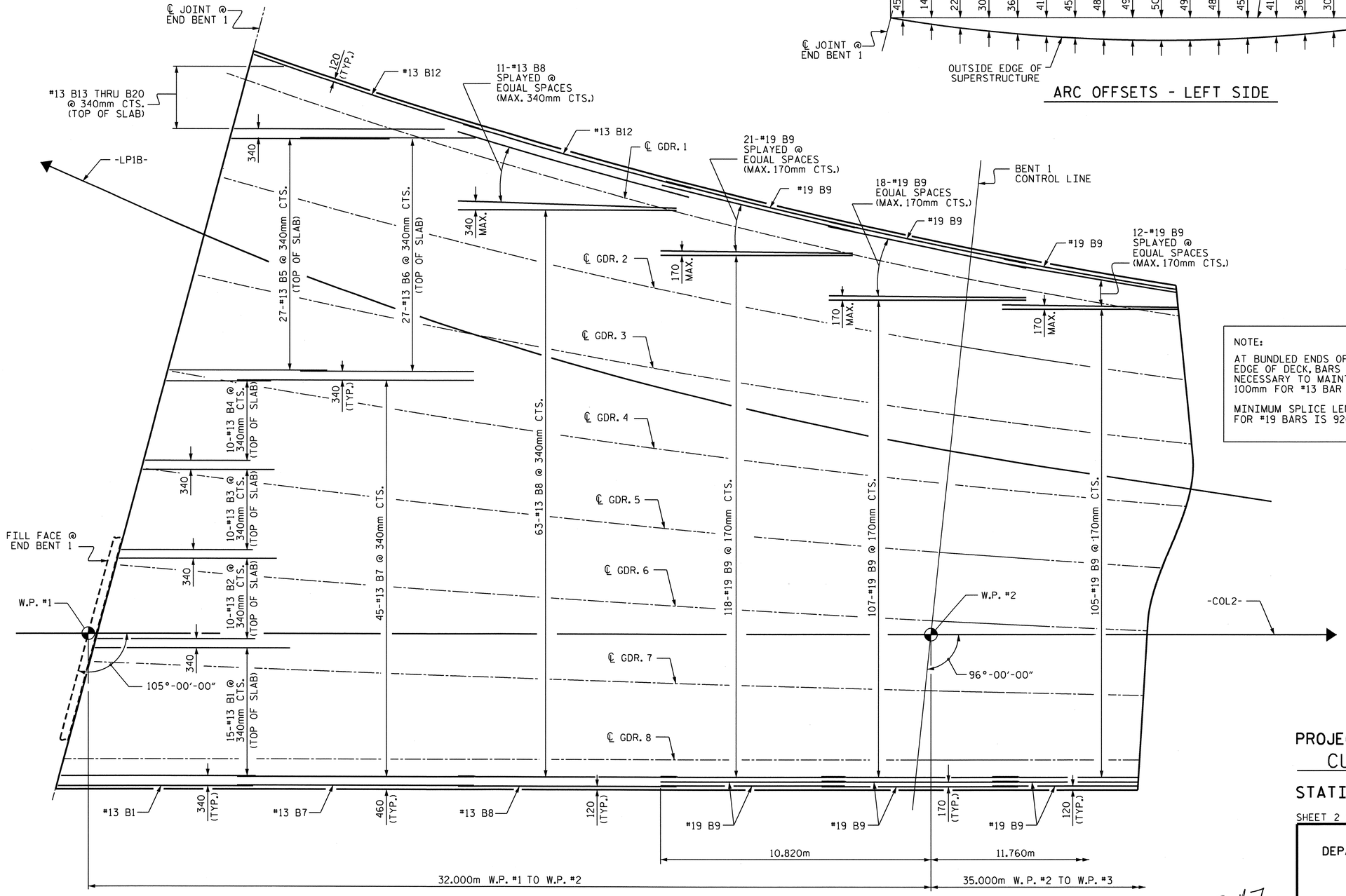

NOTE:

AT BUNDLED ENDS OF SPLAYED "B" BARS IN LEFT EDGE OF DECK, BARS MAY BE FIELD CUT AS NECESSARY TO MAINTAIN A MINIMUM SPACING OF 100mm FOR #13 BAR AND 200mm FOR #19 BAR.

MINIMUM SPLICE LENGTH FOR #13 BARS IS 610mm, FOR #19 BARS IS 920mm ON THIS SHEET.

SPAN A

"B" BAR PLACEMENT - TOP OF SLAB

150mm Ø PVC PLASTIC PIPE DRAINS, CONSTRUCTION JOINTS & END BENT 1 DIAPHRAGM NOT SHOWN FOR CLARITY

PROJECT NO. U-2519DA

CUMBERLAND COUNTY

STATION: 28+66.746-COL2-

SHEET 2 OF 9

STATE OF NORTH CAROLINA
DEPARTMENT OF TRANSPORTATION
RALEIGH

SUPERSTRUCTURE

PLAN OF SPANS

SPAN A

REVISIONS						SHEET NO.
NO.	BY:	DATE:	NO.	BY:	DATE:	S-26
1			3			TOTAL SHEETS
2			4			411

NORTH CAROLINA PROFESSIONAL SEAL 16301 ENGINEER TING HSIUNG FANG 3/24/11

DRAWN BY : D. G. ELY DATE : 1/22/08
CHECKED BY : T. H. FANG DATE : 7/22/08

24-MAR-2011 11:01
K:\TIPProjects-U\U2519da\Structures\frye\str3_COL2\Final Plans\u-2519da_sd_ps_03.dgn
ttfang

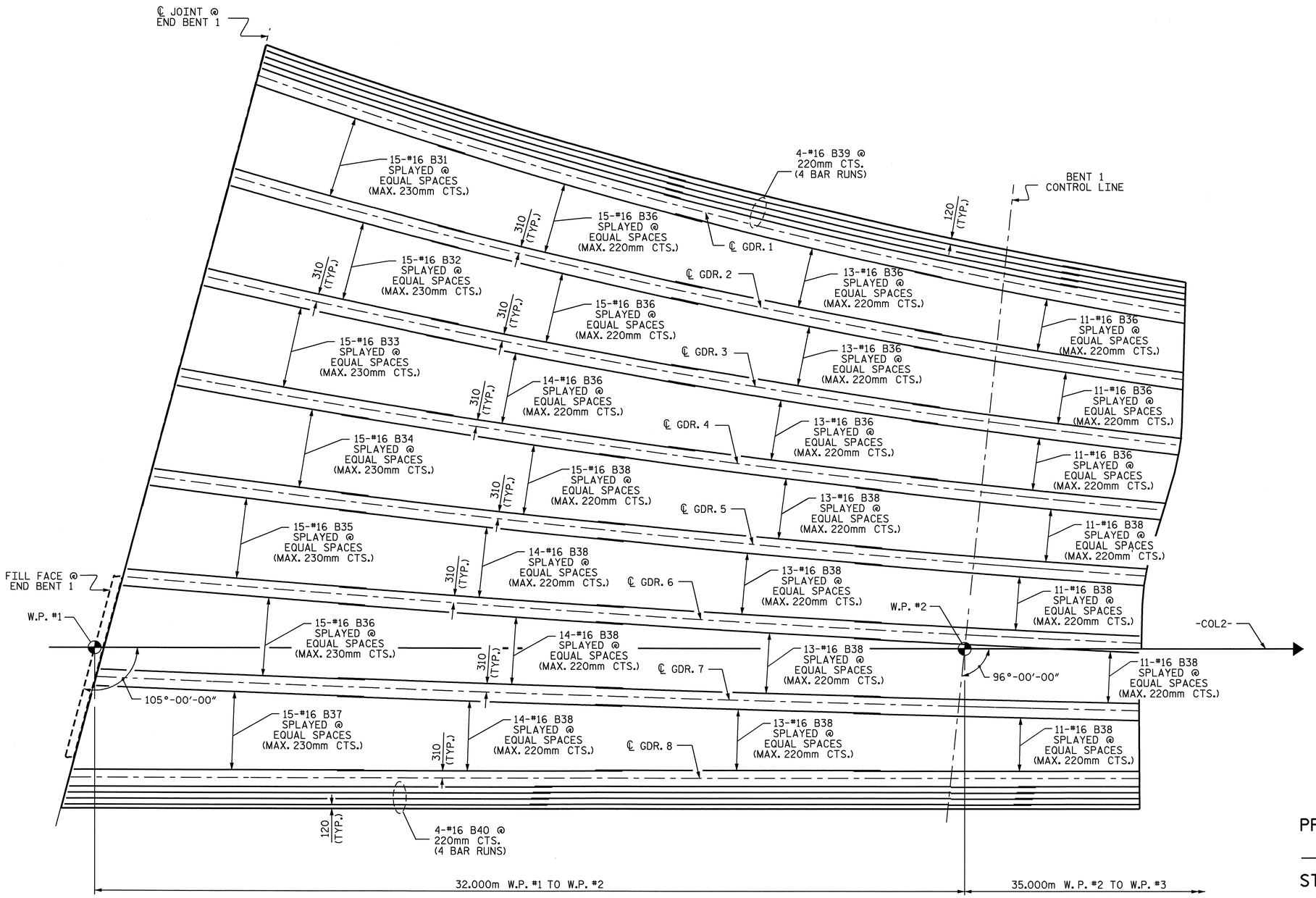

MINIMUM SPLICE LENGTH FOR ALL #16 "B" BARS ON THIS SHEET IS 660mm.

SPAN A

"B" BAR PLACEMENT - BOTTOM OF SLAB

150mm Ø PVC PLASTIC PIPIE DRAINS, CONSTRUCTION JOINTS & END BENT 1 DIAPHRAGM NOT SHOWN FOR CLARITY

PROJECT NO. U-2519DA

CUMBERLAND COUNTY

STATION: 28+66.746-COL2-

SHEET 3 OF 9

STATE OF NORTH CAROLINA
DEPARTMENT OF TRANSPORTATION
RALEIGH
SUPERSTRUCTURE

PLAN OF SPANS

SPAN A

NORTH CAROLINA PROFESSIONAL SEAL 16301 ENGINEER TING HSIUNG FANG
10/03/08

REVISIONS						SHEET NO.
NO.	BY:	DATE:	NO.	BY:	DATE:	S-27
1			3			TOTAL SHEETS
2			4			411

DRAWN BY : D. G. ELY DATE : 1/22/08
CHECKED BY : T. H. FANG DATE : 7/22/08

03-OCT-2008 11:08
R:\Structures\frye\str3_COL2\Final Plans\u-2519da_sd_ps_03.dgn
sdombrowski

NOTES:

FOR LONGITUDINAL AND TRANSVERSE CONSTRUCTION JOINTS DETAILS AND LOCATION, SEE "CONCRETE DECK POURING SEQUENCE" SHEET.

FOR BARRIER RAIL REINFORCING STEEL AND DETAILS, SEE "CONCRETE BARRIER RAIL" SHEETS.

FOR ARC OFFSETS ALONG LEFT EDGE OF DECK, SEE SHEET 5 OF 9.

ALL "A" BARS ARE PERPENDICULAR TO -COL2-.

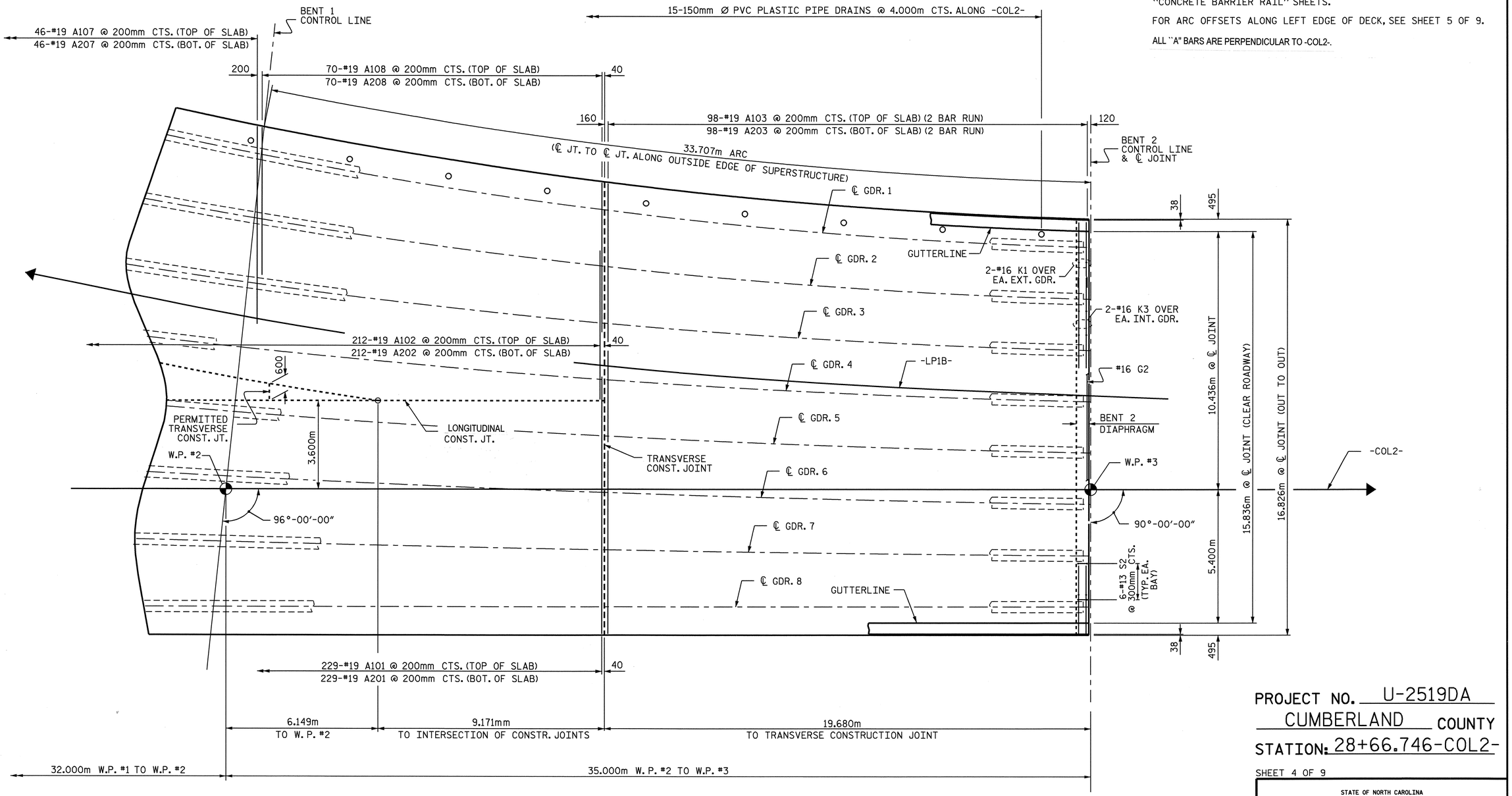

PLAN OF SPAN B

"A" BAR PLACEMENT - TOP OF SLAB

FOR "B" BAR PLACEMENT, SEE SHEETS 5 & 6 OF 9.

MINIMUM SPLICE LENGTH FOR #19 "A" BARS ON THIS SHEET IS 920mm.

NORTH CAROLINA PROFESSIONAL SEAL 16301 ENGINEER TING HSIUNG FANG
10/03/08

PROJECT NO. U-2519DA

CUMBERLAND COUNTY

STATION: 28+66.746-COL2-

SHEET 4 OF 9

STATE OF NORTH CAROLINA
DEPARTMENT OF TRANSPORTATION
RALEIGH

SUPERSTRUCTURE

PLAN OF SPANS

SPAN B

REVISIONS						SHEET NO.
NO.	BY:	DATE:	NO.	BY:	DATE:	S-28
1			3			TOTAL SHEETS
2			4			411

DRAWN BY : D. G. ELY DATE : 1/22/08
CHECKED BY : T. H. FANG DATE : 8/04/08

03-OCT-2008 11:08
R:\Structures\frye\str3_COL2\Final Plans\u-2519da_sd_ps_03.dgn
sdombrowski

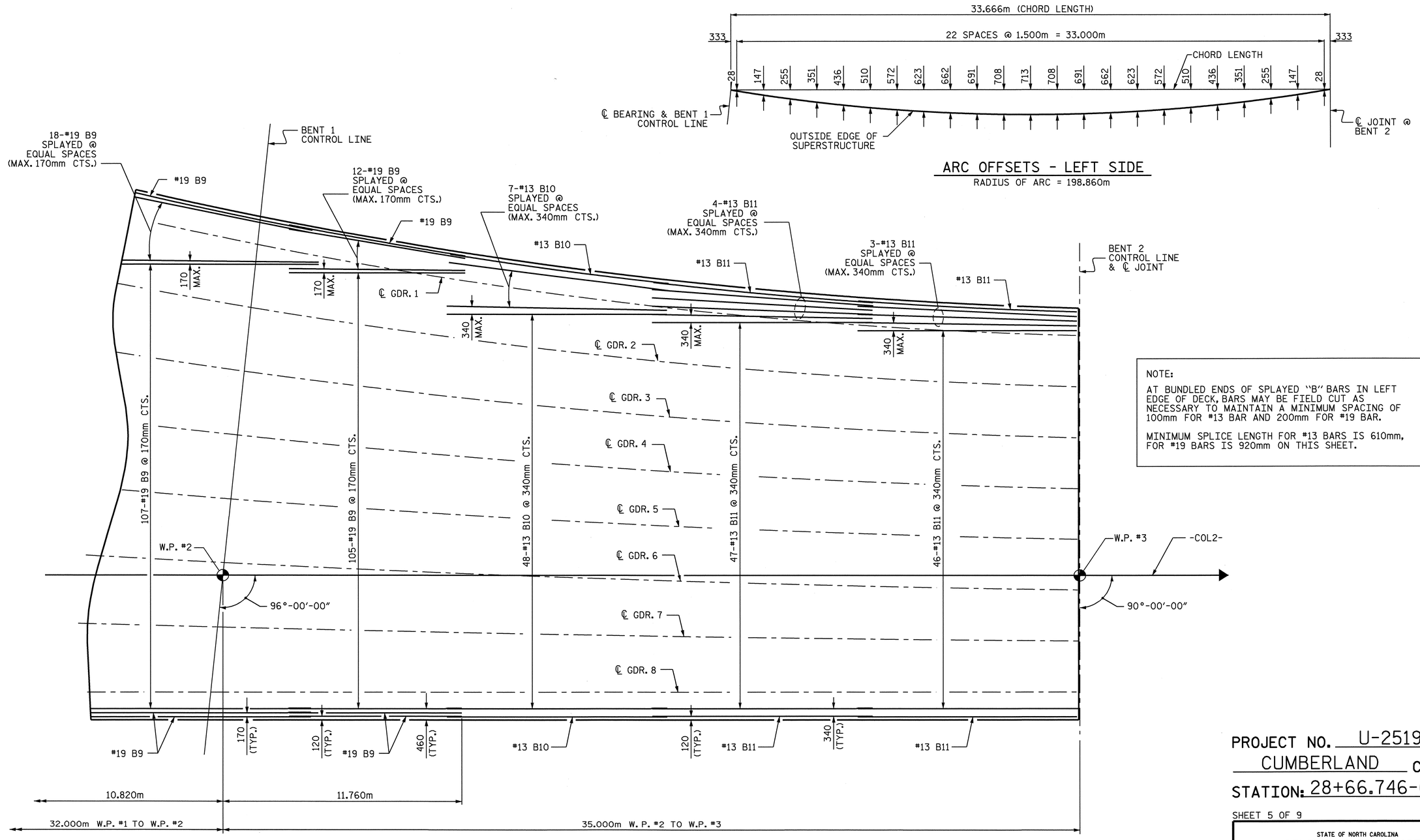

NOTE:

AT BUNDLED ENDS OF SPLAYED "B" BARS IN LEFT EDGE OF DECK, BARS MAY BE FIELD CUT AS NECESSARY TO MAINTAIN A MINIMUM SPACING OF 100mm FOR #13 BAR AND 200mm FOR #19 BAR.

MINIMUM SPLICE LENGTH FOR #13 BARS IS 610mm, FOR #19 BARS IS 920mm ON THIS SHEET.

SPAN B

"B" BAR PLACEMENT - TOP OF SLAB

150mm Ø PVC PLASTIC PIPE DRAINS, CONSTRUCTION JOINTS & BENT 2 DIAPHRAGM NOT SHOWN FOR CLARITY.

PROJECT NO. U-2519DA

CUMBERLAND COUNTY

STATION: 28+66.746-COL2-

SHEET 5 OF 9

STATE OF NORTH CAROLINA
DEPARTMENT OF TRANSPORTATION
RALEIGH

SUPERSTRUCTURE

PLAN OF SPANS

SPAN B

REVISIONS						SHEET NO.
NO.	BY:	DATE:	NO.	BY:	DATE:	S-29
1			3			TOTAL SHEETS
2			4			411

NORTH CAROLINA PROFESSIONAL SEAL 16301 ENGINEER TING HSIUNG FANG

10/03/08

DRAWN BY : D. G. ELY DATE : 1/22/08
CHECKED BY : T. H. FANG DATE : 7/22/08

03-OCT-2008 11:08
R:\Structures\frye\str3_COL2\Final Plans\u-2519da_sd_ps_03.dgn
sdombrowski

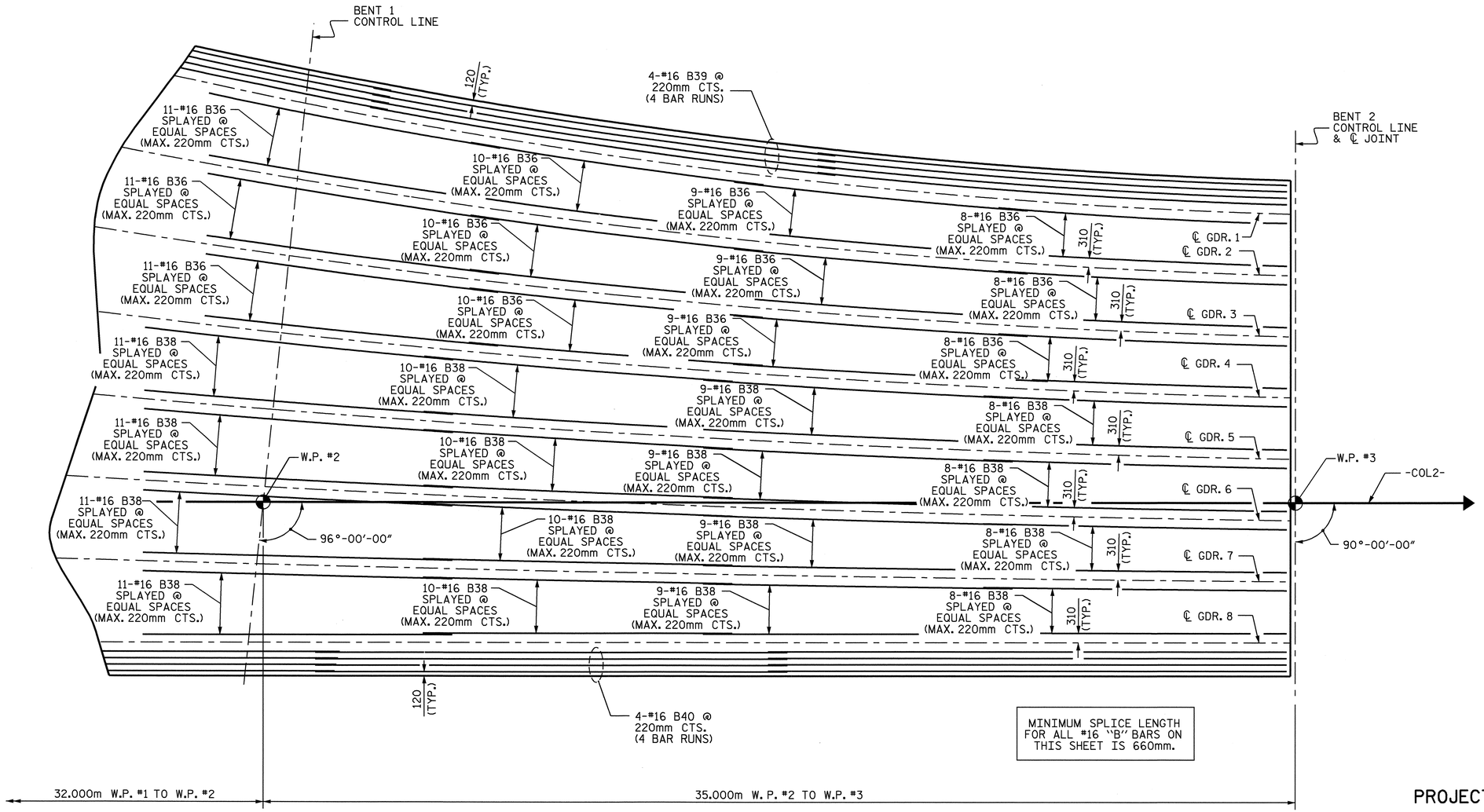

SPAN B

"B" BAR PLACEMENT - BOTTOM OF SLAB

150mm Ø PVC PLASTIC PIPE DRAINS, CONSTRUCTION JOINTS & BENT 2 DIAPHRAGM NOT SHOWN FOR CLARITY

NORTH CAROLINA PROFESSIONAL SEAL 16301 ENGINEER TING HSIUNG FANG

10/03/08

PROJECT NO. U-2519DA

CUMBERLAND COUNTY

STATION: 28+66.746-COL2-

SHEET 6 OF 9

STATE OF NORTH CAROLINA
DEPARTMENT OF TRANSPORTATION
RALEIGH

SUPERSTRUCTURE

PLAN OF SPANS

SPAN B

REVISIONS						SHEET NO.
NO.	BY:	DATE:	NO.	BY:	DATE:	S-30
1			3			TOTAL SHEETS
2			4			411

DRAWN BY : D. G. ELY DATE : 1/22/08
CHECKED BY : T. H. FANG DATE : 7/31/08

03-OCT-2008 11:08
R:\Structures\frye\str3_COL2\Final Plans\u-2519da_sd_ps_03.dgn
sdombrowski

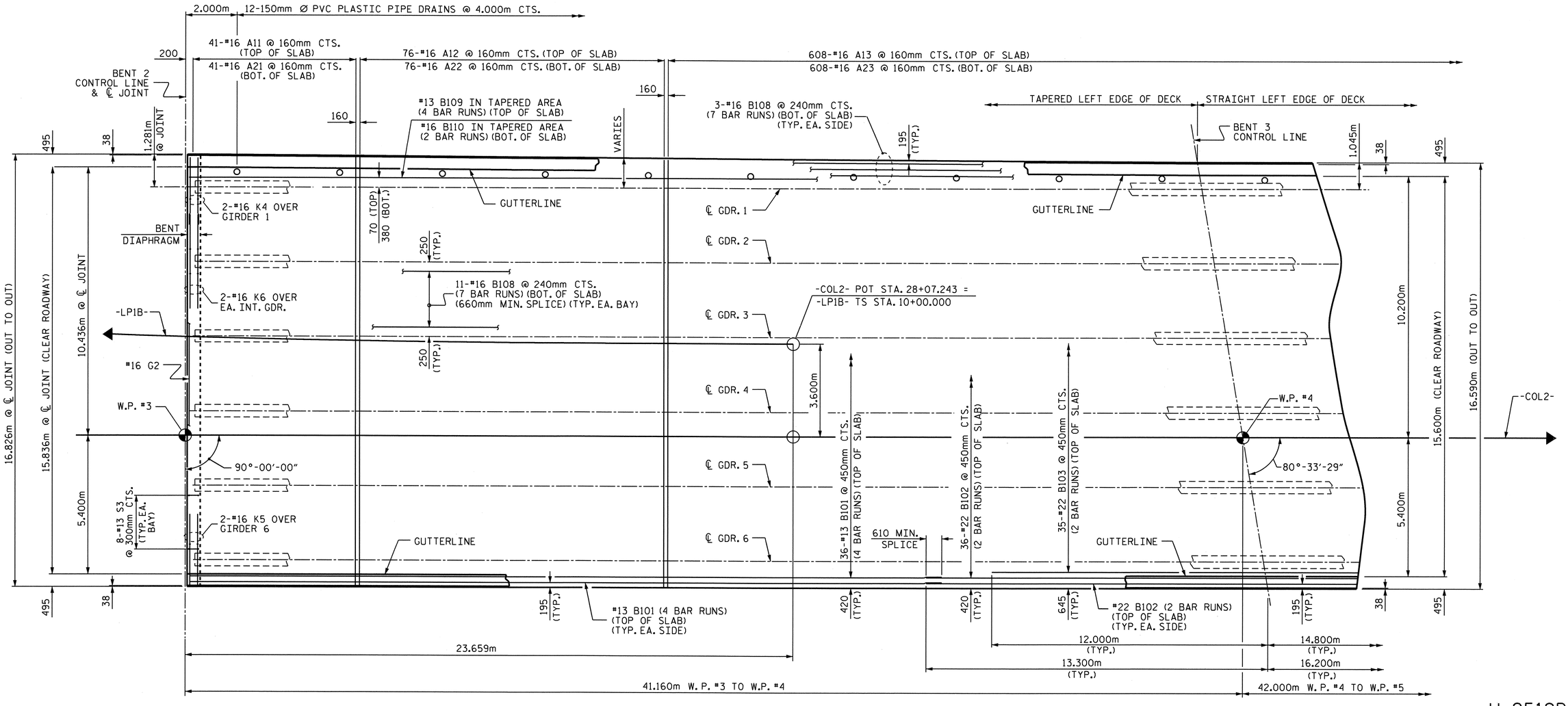

PLAN OF SPAN C

PROJECT NO. U-2519DA

CUMBERLAND COUNTY

STATION: 28+66.746-COL2-

SHEET 7 OF 9

STATE OF NORTH CAROLINA
DEPARTMENT OF TRANSPORTATION
RALEIGH

SUPERSTRUCTURE

PLAN OF SPANS

SPAN C

REVISIONS						SHEET NO.
NO.	BY:	DATE:	NO.	BY:	DATE:	S-31
1			3			TOTAL SHEETS
2			4			411

NORTH CAROLINA PROFESSIONAL SEAL 16301 ENGINEER TING HSING FANG
3/24/11

DRAWN BY : D. G. ELY DATE : 1/22/08
CHECKED BY : T.H. FANG DATE : 7/15/08

24-MAR-2011 10:04
K:\TIPProjects-U\U2519da\Structures\frye\str3_COL2\FinalPlans\u-2519da_sd_ps_03.dgn
ttfang

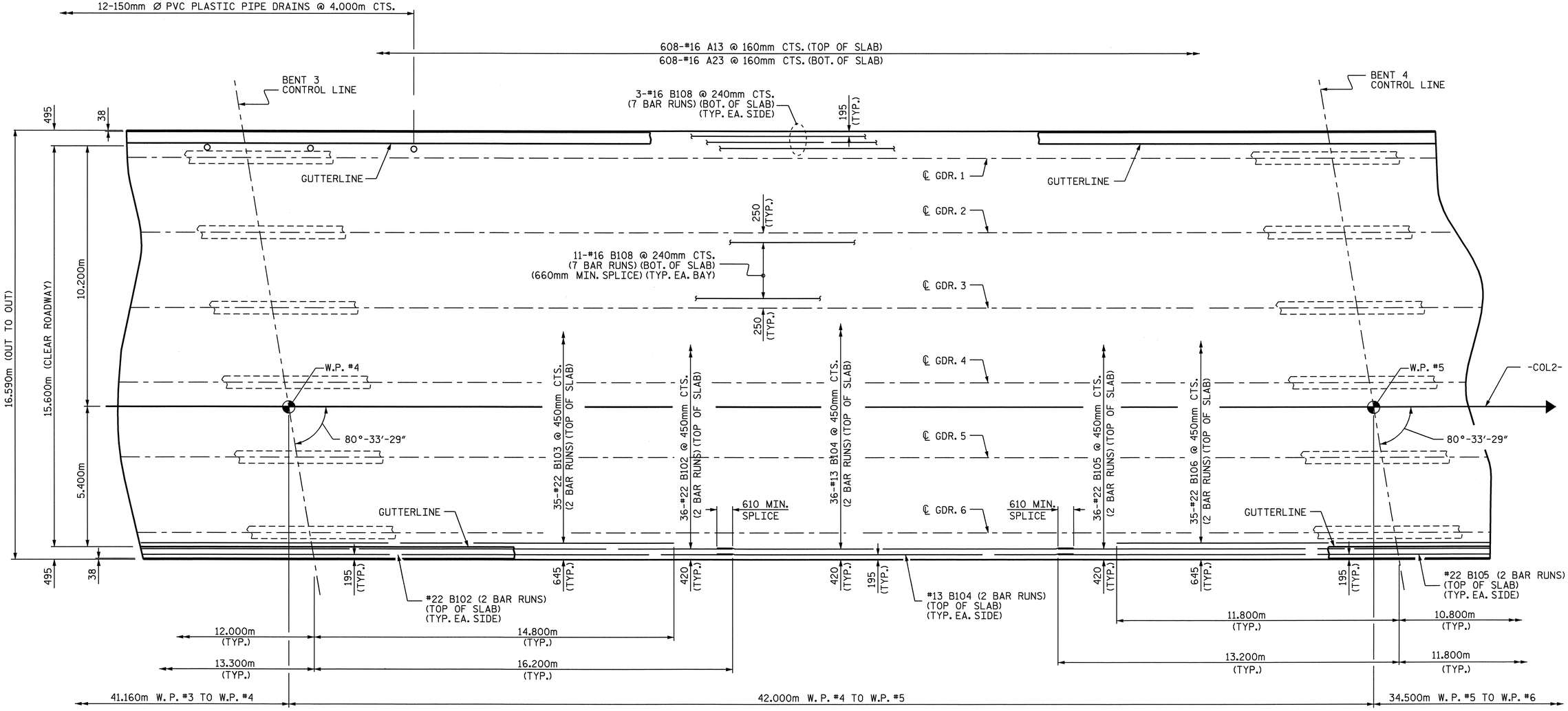

PLAN OF SPAN D

PROJECT NO. U-2519DA

CUMBERLAND COUNTY

STATION: 28+66.746-COL2-

SHEET 8 OF 9

STATE OF NORTH CAROLINA
DEPARTMENT OF TRANSPORTATION
RALEIGH

SUPERSTRUCTURE

PLAN OF SPANS

SPAN D

REVISIONS						SHEET NO.
NO.	BY:	DATE:	NO.	BY:	DATE:	S-32
1			3			TOTAL SHEETS
2			4			411

NORTH CAROLINA PROFESSIONAL SEAL 16301 ENGINEER TING HSIUNG FANG

10/03/08

DRAWN BY : D. G. ELY DATE : 1/22/08
CHECKED BY : T.H. FANG DATE : 7/15/08

03-OCT-2008 11:07
R:\Structures\frye\str3_COL2\Final Plans\u-2519da_sd_ps_03.dgn
sdombrowski

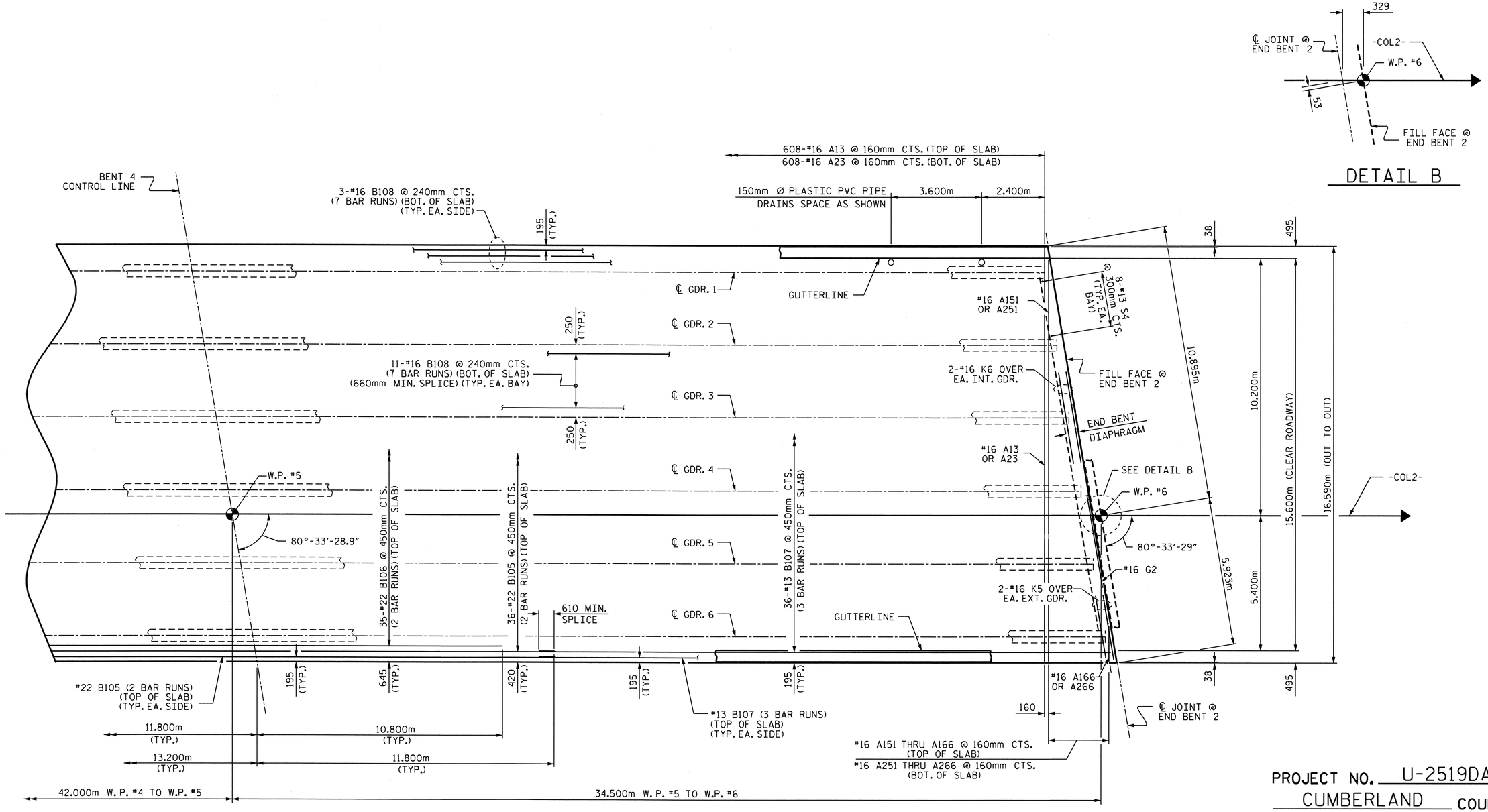

PLAN OF SPAN E

PROJECT NO. U-2519DA

CUMBERLAND COUNTY

STATION: 28+66.746-COL2-

SHEET 9 OF 9

STATE OF NORTH CAROLINA
DEPARTMENT OF TRANSPORTATION
RALEIGH

SUPERSTRUCTURE

PLAN OF SPANS

SPAN E

REVISIONS						SHEET NO.
NO.	BY:	DATE:	NO.	BY:	DATE:	S-33
1			3			TOTAL SHEETS
2			4			411

NORTH CAROLINA PROFESSIONAL SEAL 16301 ENGINEER TIMOTHY H. FANG
3/24/11

DRAWN BY : D. G. ELY DATE : 1/22/08
CHECKED BY : T.H. FANG DATE : 7/15/08

24-MAR-2011 09:18
K:\TIPProjects-U\U2519da\Structures\frye\str3_COL2\FinalPlans\u-2519da_sd_ps_03.dgn
ttfang

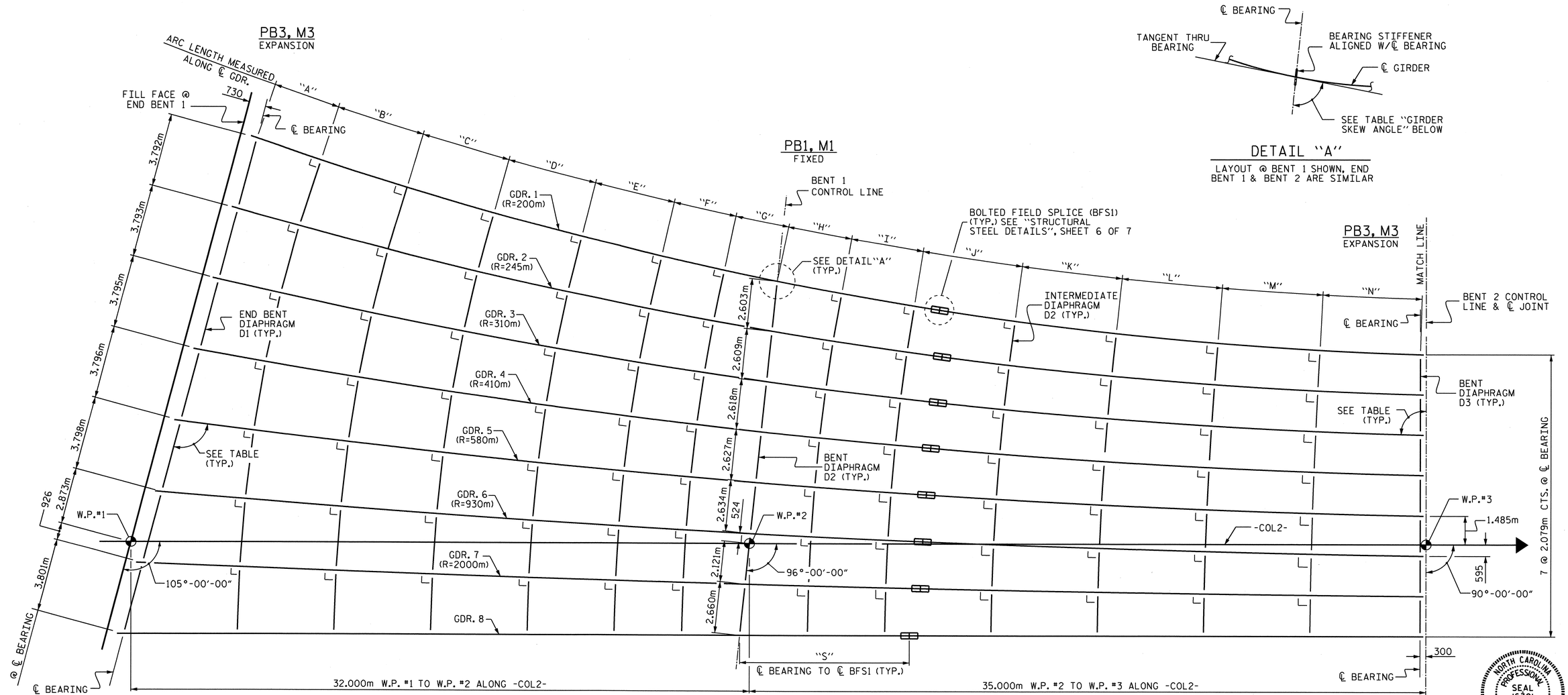

DETAIL "A"

LAYOUT @ BENT 1 SHOWN, END BENT 1 & BENT 2 ARE SIMILAR

SPAN A

SPAN B

FRAMING PLAN

" L" INDICATES DIAPHRAGM IS TAKEN 90° ANGLE TO THIS SIDE OF GIRDER ONLY

ALL GIRDERS ARE SIMPLE CIRCULAR CURVED GIRDERS EXCEPT GIRDER 8 IS A STRAIGHT GIRDER.

INTERMEDIATE DIAPHRAGM DIMENSIONS

	A	B	C	D	E	F	G	H	I	J	K	L	M	N	S
GDR. 1	3.646	4.666	4.688	4.709	4.255	3.319	2.790	3.395	3.818	5.262	5.275	5.285	5.292	5.199	8.527
GDR. 2	3.436	4.753	4.770	4.785	4.319	3.366	3.066	3.202	3.866	5.326	5.334	5.343	5.348	5.311	8.905
GDR. 3	3.420	4.826	4.838	4.849	4.373	3.406	3.257	3.081	3.906	5.378	5.384	5.391	5.394	5.414	8.931
GDR. 4	3.591	4.886	4.894	4.901	4.417	3.438	3.366	3.028	3.939	5.420	5.425	5.429	5.431	5.503	8.807
GDR. 5	3.947	4.933	4.937	4.941	4.451	3.463	3.392	3.046	3.964	5.453	5.456	5.458	5.460	5.578	8.836
GDR. 6	4.476	4.967	4.968	4.971	4.475	3.482	3.338	3.131	3.982	5.477	5.478	5.480	5.481	5.636	8.923
GDR. 7	5.172	4.988	4.989	4.990	4.491	3.494	3.206	3.284	3.994	5.492	5.493	5.493	5.494	5.677	9.070
GDR. 8	6.019	5.000	5.000	5.000	4.500	3.500	3.000	3.500	4.000	5.500	5.500	5.500	5.500	5.699	8.781

DIMENSIONS SHOWN IN THE TABLE ARE IN METERS AND MEASURED ALONG ℄ GIRDER.

GIRDER SKEW ANGLE

	END BENT 1	BENT 1	BENT 2
GDR. 1	85°-31'-53"	84°-47'-01"	88°-28'-26"
GDR. 2	88°-43'-14"	86°-33'-18"	88°-30'-48"
GDR. 3	91°-47'-05"	88°-16'-26"	88°-36'-14"
GDR. 4	94°-42'-46"	89°-56'-12"	88°-45'-17"
GDR. 5	97°-29'-55"	91°-32'-28"	88°-58'-14"
GDR. 6	100°-09'-04"	93°-05'-12"	89°-14'-27"
GDR. 7	102°-39'-13"	94°-34'-22"	89°-34'-55"
GDR. 8	105°-00'-00"	96°-00'-00"	90°-00'-00"

NORTH CAROLINA PROFESSIONAL SEAL 16301 ENGINEER TING HSIUNG FANG

3/3/11

PROJECT NO. U-2519DA

CUMBERLAND COUNTY

STATION: 28+66.746-COL2-

SHEET 1 OF 2

STATE OF NORTH CAROLINA
DEPARTMENT OF TRANSPORTATION
RALEIGH

SUPERSTRUCTURE

FRAMING PLAN
SPANS A & B

REVISIONS						SHEET NO.
NO.	BY:	DATE:	NO.	BY:	DATE:	S-34
1			3			TOTAL SHEETS
2			4			411

DRAWN BY : D. G. ELY DATE : 11/07
CHECKED BY : T.H. FANG DATE : 7/17/08

03-MAR-2011 15:11
K:\TIPProjects-U\U2519da\Structures\frye\str3_COL2\FinalPlans\u-2519da_sd_fp_03.dgn
ttfang

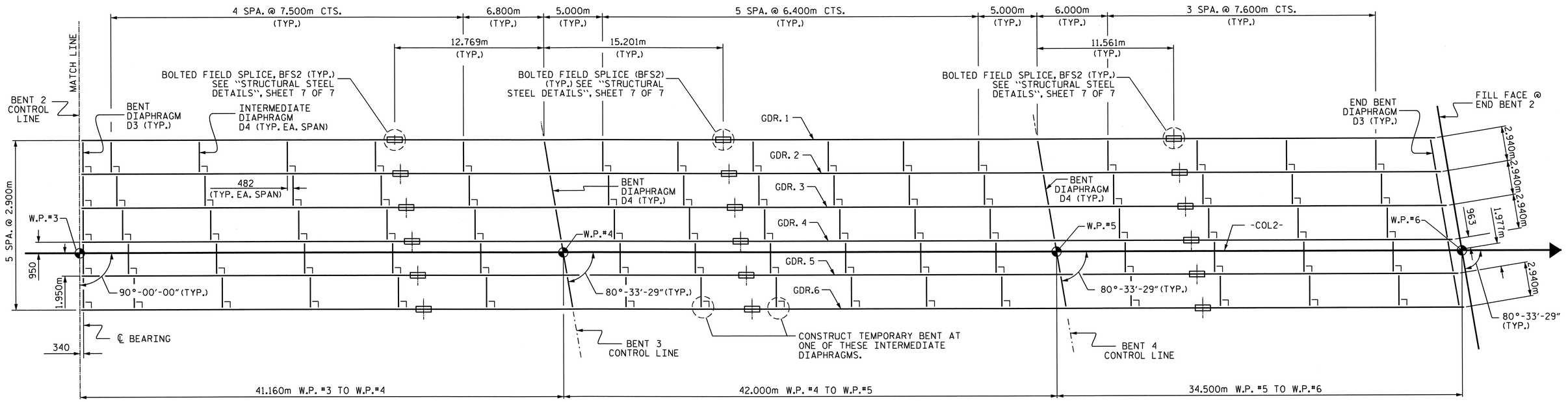

SPAN C SPAN D SPAN E

FRAMING PLAN

NOTES

A TEMPORARY BENT IS REQUIRED NEAR THE BOLTED FIELD SPLICE IN SPAN D REGARDLESS OF THE DIRECTION OF THE GIRDER ERECTION.

ERECT A MINIMUM OF TWO GIRDERS WITH ALL DIAPHRAGMS/CROSSFRAMES BETWEEN THE GIRDERS IN PLACE AND THE BOLTS TIGHTENED PRIOR TO RELEASING THE GIRDERS.

ERECT EACH SUBSEQUENT GIRDER WITH DIAPHRAGMS/CROSSFRAMES CONNECTING TO THE ADJACENT PREVIOUSLY ERECTED GIRDER AND TIGHTEN ALL BOLTS BEFORE RELEASING THE GIRDER.

THE STRUCTURAL STEEL SHALL BE SUPPORTED DURING ERECTION IN ITS CAMBERED POSITION.

THE TEMPORARY BENT SHALL REMAIN IN PLACE UNTIL ALL DIAPHRAGMS/CROSSFRAMES ARE IN PLACE AND ALL HIGH STRENGTH BOLTS ARE TIGHTENED.

TEMPORARY BENTS SHALL PROVIDE BEARING AT CONNECTOR PLATE LOCATIONS. WHEN CONNECTOR PLATES ARE USED AS TEMPORARY BEARING STIFFENERS, DIAPHRAGMS MUST BE ATTACHED.

THE CONTRACTOR'S ERECTION PLANS SHALL INCLUDE A METHOD OF TEMPORARY BENT REMOVAL THAT WILL UNIFORMLY TRANSFER THE STRUCTURAL WEIGHT TO THE DIAPHRAGMS/CROSSFRAMES AND THE GIRDERS WILL REMAIN IN THE CAMBERED POSITIONS.

PLANS FOR TEMPORARY BENT ERECTION AND REMOVAL SHALL BE SUBMITTED TO THE ENGINEER FOR REVIEW.

THE CONTRACTOR IS RESPONSIBLE FOR DESIGNING THE TEMPORARY BENT. THE DESIGNS SHALL BE COMPLETED BY A PROFESSIONAL ENGINEER REGISTERED IN THE STATE OF NORTH CAROLINA. THE CONTRACTOR SHALL SUBMIT SIGNED AND SEALED WORKING DRAWINGS AND CALCULATIONS FOR APPROVAL BY THE ENGINEER.

DURING THE GIRDER ERECTION PROCEDURE, THE CONTRACTOR IS RESPONSIBLE FOR PROVIDING TEMPORARY LATERAL BRACING AND OTHER MEANS OF SUPPORT, AS REQUIRED, TO ENSURE STABILITY OF THE GIRDERS, AVOID UPLIFT OF THE GIRDERS AT THE TEMPORARY BENTS AND TO ENSURE PLUMBNESS OF THE GIRDERS IN THE FINAL CONDITION.

NO SEPARATE MEASUREMENT OR PAYMENT WILL BE MADE FOR PROVIDING THE TEMPORARY BENT. THE COST FOR ALL MATERIALS, EQUIPMENT, TOOLS, LABOR AND ANY INCIDENTALS NECESSARY TO PROVIDE THE TEMPORARY BENT SHALL BE CONSIDERED INCIDENTAL TO THE LUMP SUM BID PRICE FOR STRUCTURAL STEEL.

THE CONTRACTOR MAY SUBMIT AN ALTERNATE ERECTION METHOD TO THE ENGINEER FOR REVIEW AND APPROVAL.

NORTH CAROLINA PROFESSIONAL SEAL 16301 ENGINEER TING HSIUNG FANG
6/9/11

PROJECT NO. U-2519DA
CUMBERLAND COUNTY
STATION: 28+66.746-COL2-

SHEET 2 OF 2

STATE OF NORTH CAROLINA
DEPARTMENT OF TRANSPORTATION
RALEIGH
SUPERSTRUCTURE

FRAMING PLAN
SPANS C, D & E

REVISIONS						SHEET NO.
NO.	BY:	DATE:	NO.	BY:	DATE:	S-35
1			3			TOTAL SHEETS
2			4			411

DRAWN BY : D. G. ELY DATE : 11/07
CHECKED BY : T.H. FANG DATE : 7/17/08

09-JUN-2011 11:44
K:\TIPProjects-U\U2519da\Structures\frye\str3_COL2\Final Plans\u-2519da_sd_fp_03.dgn
tfang

R:\Structures\frye\str3_COL2\Final Plans\U-2519DA_sd_ss_03
sdombrowski

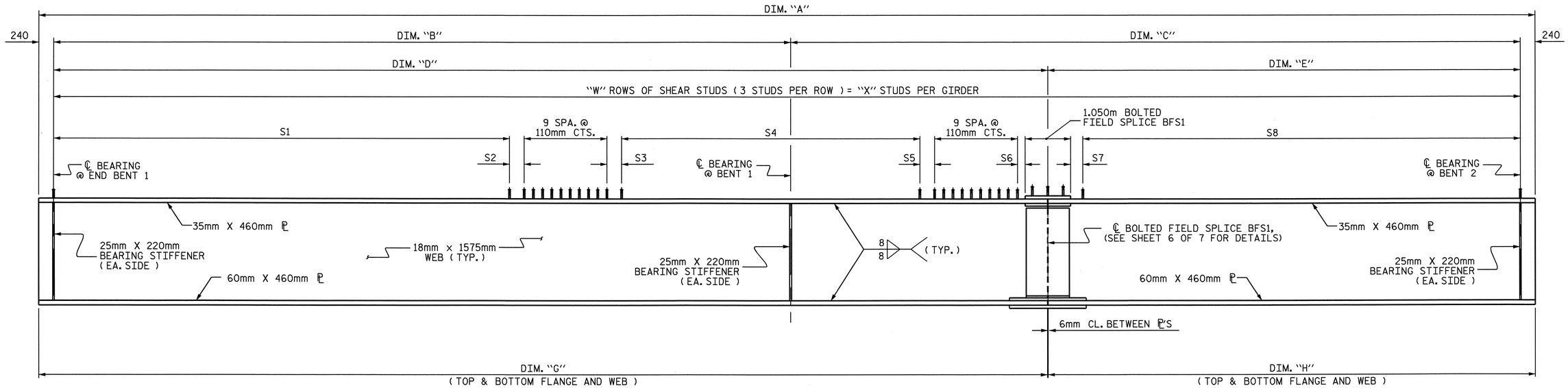

GIRDER ELEVATION

SPANS A & B

ALL DIMENSIONS ARE ALONG ARC LENGTH

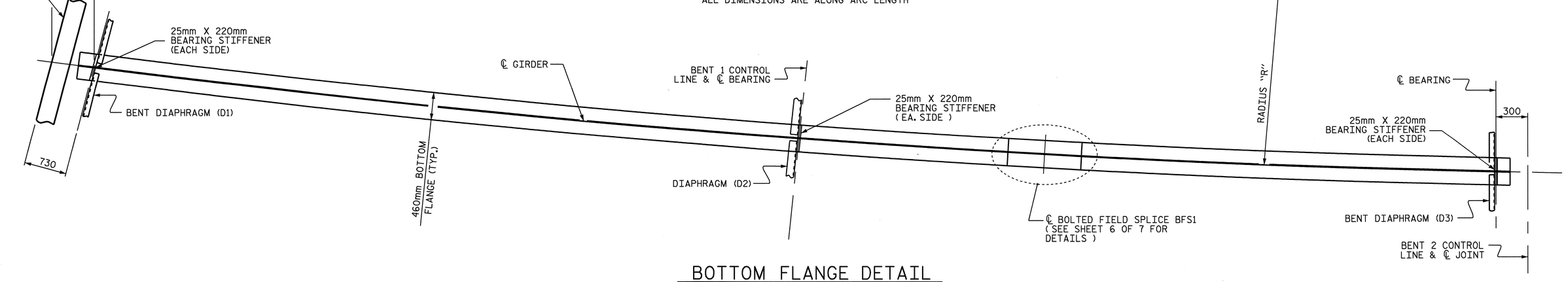

BOTTOM FLANGE DETAIL

SPANS A & B

SHEAR STUD ARRANGEMENT

	S1	S2	S3	S4	S5	S6	S7	S8	"W"	"X"
GDR. 1	100 ROWS @ 195mm CTS.	440	600	23 ROWS @ 600mm CTS.	450	100	234	102 ROWS @ 240mm CTS.	248	744
GDR. 2	102 ROWS @ 195mm CTS.	450	520	27 ROWS @ 520mm CTS.	560	150	290	99 ROWS @ 245mm CTS.	251	753
GDR. 3	105 ROWS @ 195mm CTS.	345	500	28 ROWS @ 500mm CTS.	500	270	492	97 ROWS @ 250mm CTS.	253	759
GDR. 4	104 ROWS @ 200mm CTS.	495	500	28 ROWS @ 500mm CTS.	600	100	343	99 ROWS @ 250mm CTS.	254	762
GDR. 5	102 ROWS @ 210mm CTS.	485	500	28 ROWS @ 500mm CTS.	600	100	304	100 ROWS @ 250mm CTS.	253	759
GDR. 6	100 ROWS @ 220mm CTS.	355	500	29 ROWS @ 500mm CTS.	360	100	482	98 ROWS @ 255mm CTS.	250	750
GDR. 7	98 ROWS @ 230mm CTS.	345	520	28 ROWS @ 520mm CTS.	580	100	342	99 ROWS @ 255mm CTS.	248	744
GDR. 8	110 ROWS @ 205mm CTS.	600	600	25 ROWS @ 600mm CTS.	300	50	393	101 ROWS @ 255mm CTS.	259	777

GIRDER DIMENSIONS

	RADIUS	DIM. "A"	DIM. "B"	DIM. "C"	DIM. "D"	DIM. "E"	DIM. "G"	DIM. "H"
GDR. 1	200.000m	62.079m	28.073m	33.526m	36.600m	24.999m	36.837m	25.236m
GDR. 2	245.000m	62.705m	28.495m	33.730m	37.400m	24.825m	37.637m	25.062m
GDR. 3	310.000m	63.397m	28.969m	33.948m	37.900m	25.017m	38.137m	25.254m
GDR. 4	410.000m	64.148m	29.493m	34.175m	38.300m	25.368m	38.537m	25.605m
GDR. 5	580.000m	64.959m	30.064m	34.415m	38.900m	25.579m	39.137m	25.816m
GDR. 6	930.000m	65.822m	30.677m	34.665m	39.600m	25.742m	39.837m	25.979m
GDR. 7	2000.000m	66.737m	31.330m	34.927m	40.400m	25.857m	40.637m	26.094m
GDR. 8	STRAIGHT	67.698m	32.019m	35.199m	40.800m	26.418m	41.037m	26.655m

DRAWN BY : D. G. ELY DATE : 2/8/08
CHECKED BY : T.H. FANG DATE : 7-08

NORTH CAROLINA PROFESSIONAL SEAL 16301 ENGINEER TING HSIUNG FANG 10/23/08

PROJECT NO. U-2519DA
CUMBERLAND COUNTY
STATION: 28+66.746-COL2-

SHEET 1 OF 7

STATE OF NORTH CAROLINA
DEPARTMENT OF TRANSPORTATION
RALEIGH

SUPERSTRUCTURE

STRUCTURAL STEEL DETAILS

SPANS A & B

REVISIONS						SHEET NO.
NO.	BY:	DATE:	NO.	BY:	DATE:	S-36
1			3			TOTAL SHEETS
2			4			411

R:\Structures\frye\str3_COL2\Final Plans\U-2519DA_sd_ss_03
sdombrowski

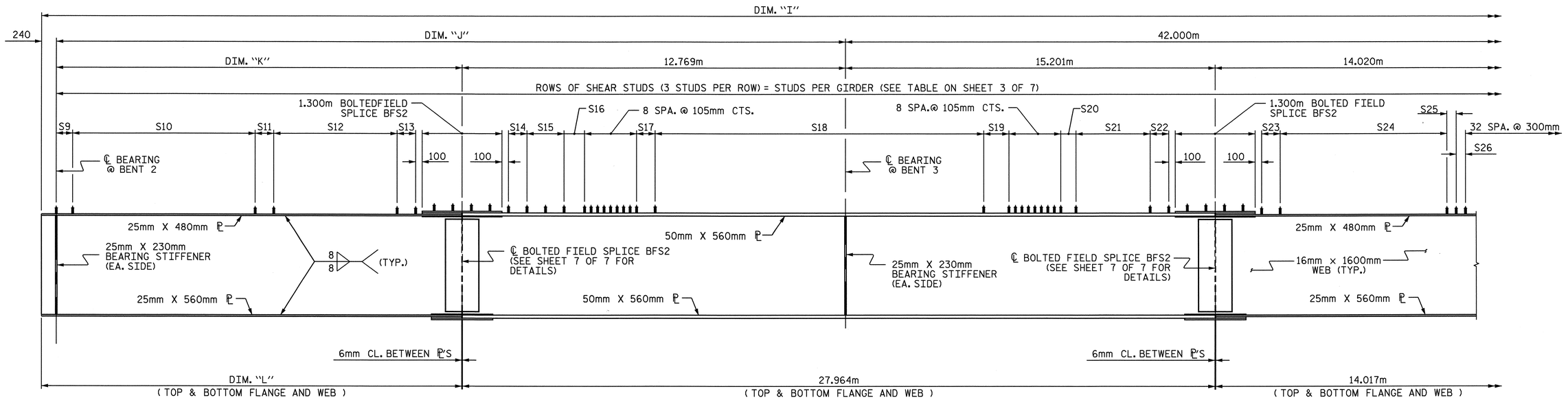

GIRDER ELEVATION
SPANS C AND D

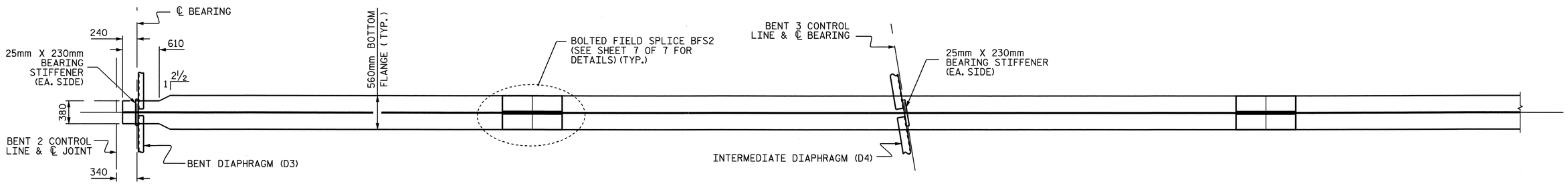

BOTTOM FLANGE DETAIL
SPANS C AND D

GIRDER DIMENSIONS				
	DIM. "I"	DIM. "J"	DIM. "K"	DIM. "L"
GDR. 1	115.496m	39.215m	26.446m	26.683m
GDR. 2	115.979m	39.698m	26.929m	27.166m
GDR. 3	116.461m	40.180m	27.411m	27.648m
GDR. 4	116.943m	40.662m	27.893m	28.130m
GDR. 5	117.425m	41.144m	28.375m	28.612m
GDR. 6	117.908m	41.627m	28.858m	29.095m

SHEAR STUDS ARRANGEMENT																		
	S9	S10	S11	S12	S13	S14	S15	S16	S17	S18	S19	S20	S21	S22	S23	S24	S25	S26
GDR. 1	196	52 ROWS @ 300mm CTS.	300	33 ROWS @ 300mm CTS.	300	300	3 ROWS @ 300mm CTS.	282	505	36 ROWS @ 600mm CTS.	506	197	5 ROWS @ 300mm CTS.	200	224	17 ROWS @ 300mm CTS.	150	150
GDR. 2	228	63 ROWS @ 250mm CTS.	250	34 ROWS @ 300mm CTS.	300	300	3 ROWS @ 270mm CTS.	300	578	36 ROWS @ 600mm CTS.	600	272	4 ROWS @ 300mm CTS.	300	300	16 ROWS @ 300mm CTS.	218	219
GDR. 3	230	64 ROWS @ 250mm CTS.	250	35 ROWS @ 300mm CTS.	231	300	3 ROWS @ 250mm CTS.	287	506	37 ROWS @ 600mm CTS.	450	248	3 ROWS @ 300mm CTS.	299	300	16 ROWS @ 300mm CTS.	214	214
GDR. 4	230	65 ROWS @ 250mm CTS.	250	36 ROWS @ 300mm CTS.	163	250	3 ROWS @ 250mm CTS.	275	560	37 ROWS @ 600mm CTS.	468	264	3 ROWS @ 300mm CTS.	253	300	16 ROWS @ 300mm CTS.	214	213
GDR. 5	125	66 ROWS @ 250mm CTS.	150	37 ROWS @ 300mm CTS.	300	250	3 ROWS @ 300mm CTS.	228	251	38 ROWS @ 600mm CTS.	459	105	3 ROWS @ 250mm CTS.	197	300	16 ROWS @ 300mm CTS.	214	213
GDR. 6	208	55 ROWS @ 300mm CTS.	300	38 ROWS @ 300mm CTS.	300	210	3 ROWS @ 300mm CTS.	204	152	39 ROWS @ 600mm CTS.	600	224	--	0	300	16 ROWS @ 300mm CTS.	208	208

NORTH CAROLINA PROFESSIONAL SEAL 16301 ENGINEER TING HSIUNG FANG
10/03/08

PROJECT NO. U-2519DA
CUMBERLAND COUNTY
STATION: 28+66.746-COL2-

SHEET 2 OF 7

STATE OF NORTH CAROLINA
DEPARTMENT OF TRANSPORTATION
RALEIGH
SUPERSTRUCTURE

STRUCTURAL STEEL DETAILS

SPANS C THRU E

REVISIONS						SHEET NO.
NO.	BY:	DATE:	NO.	BY:	DATE:	S-37
1			3			TOTAL SHEETS
2			4			411

DRAWN BY : D. G. ELY DATE : 2/8/08
CHECKED BY : T.H. FANG DATE : 7-08

r:\structures\frye\str3_col2\final plans\u-2519da_sd_ss_03
sdombrowski

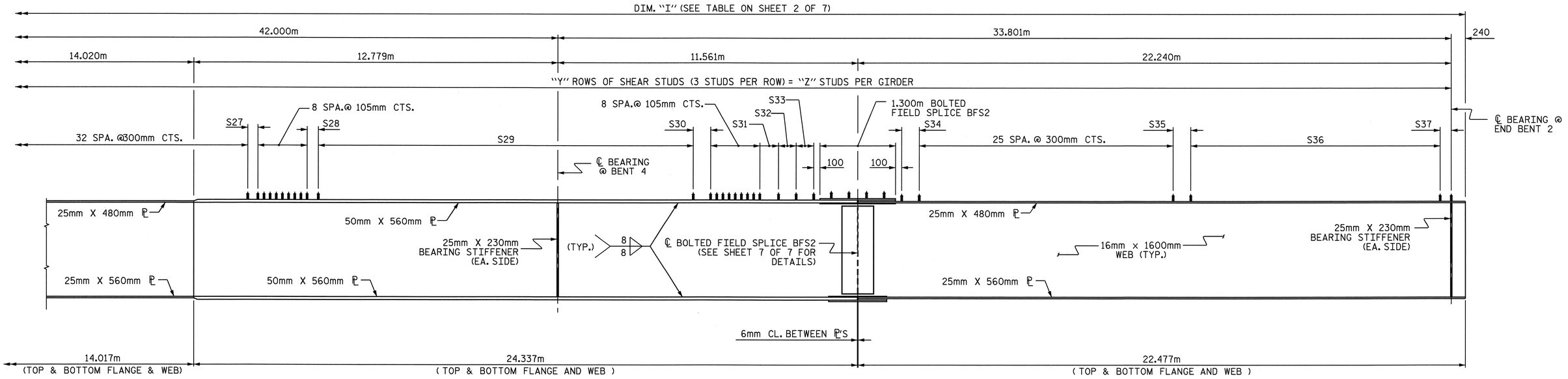

GIRDER ELEVATION
SPANS D AND E

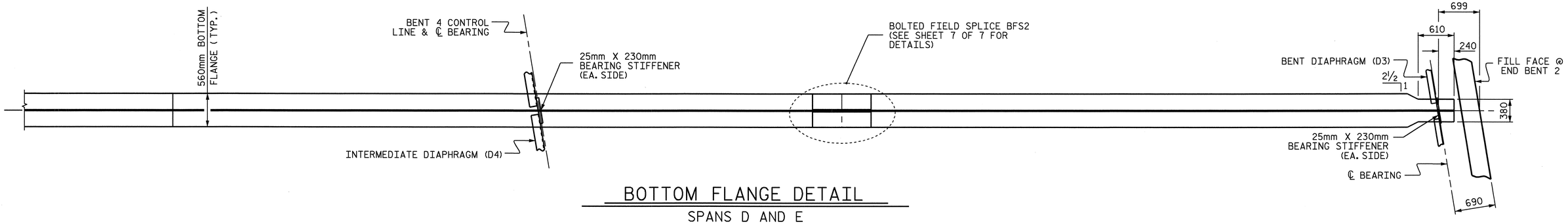

BOTTOM FLANGE DETAIL
SPANS D AND E

SHEAR STUD													
	S27	S28	S29	S30	S31	S32	S33	S34	S35	S36	S37	"Y"	"Z"
GDR. 1	223	287	32 ROWS @ 600mm CTS.	287	180	3 ROWS @ 250mm CTS.	179	300	300	45 ROWS @ 300mm CTS.	190	341	1023
GDR. 2	300	453	31 ROWS @ 600mm CTS.	552	337	3 ROWS @ 250mm CTS.	201	300	250	54 ROWS @ 250mm CTS.	190	359	1077
GDR. 3	300	480	31 ROWS @ 600mm CTS.	565	256	3 ROWS @ 250mm CTS.	251	210	250	54 ROWS @ 250mm CTS.	280	361	1083
GDR. 4	300	493	31 ROWS @ 600mm CTS.	492	168	3 ROWS @ 300mm CTS.	300	300	250	54 ROWS @ 250mm CTS.	190	363	1089
GDR. 5	300	350	31 ROWS @ 600mm CTS.	530	188	4 ROWS @ 250mm CTS.	235	300	250	54 ROWS @ 250mm CTS.	190	367	1101
GDR. 6	300	350	31 ROWS @ 600mm CTS.	505	158	4 ROWS @ 250mm CTS.	301	300	300	45 ROWS @ 300mm CTS.	190	346	1038

NORTH CAROLINA PROFESSIONAL SEAL 16301 ENGINEER TING HSILING FANG
10/10/08

PROJECT NO. U-2519DA
CUMBERLAND COUNTY
STATION: 28+66.746-COL2-

SHEET 3 OF 7

STATE OF NORTH CAROLINA
DEPARTMENT OF TRANSPORTATION
RALEIGH

SUPERSTRUCTURE

STRUCTURAL STEEL DETAILS

SPANS C THRU E

REVISIONS						SHEET NO.
NO.	BY:	DATE:	NO.	BY:	DATE:	S-38
1			3			TOTAL SHEETS
2			4			411

DRAWN BY : D. G. ELY DATE : 2/8/08
CHECKED BY : T.H. FANG DATE : 7-08

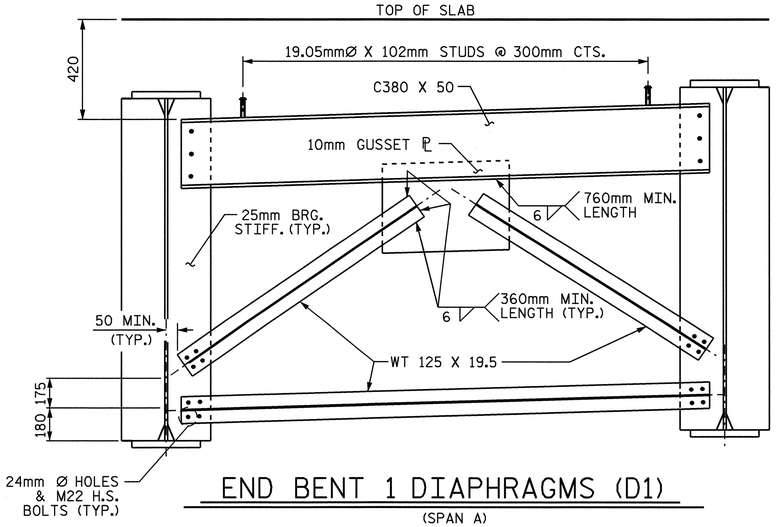

END BENT 1 DIAPHRAGMS (D1)

(SPAN A)

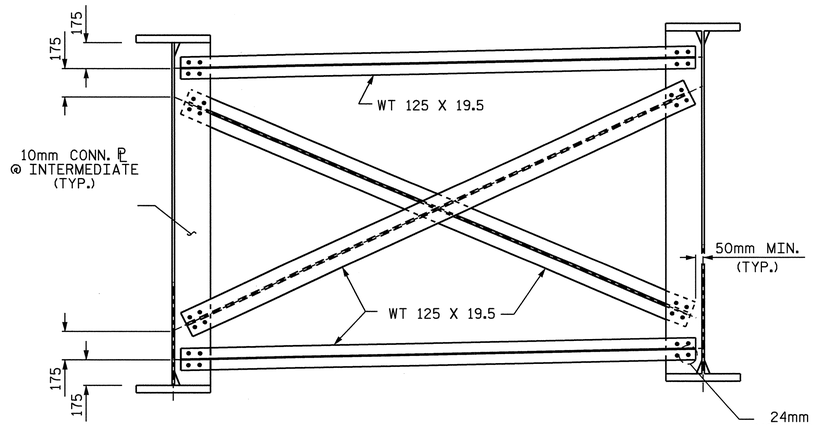

INTERMEDIATE DIAPHRAGM (D2)

(FOR SPANS A & B, INCLUDING DIAPHRAGMS @ BENT 1)

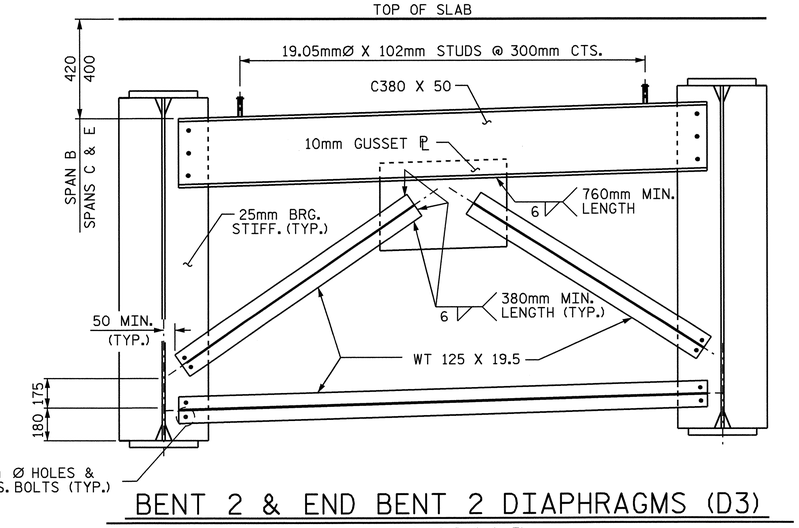

BENT 2 & END BENT 2 DIAPHRAGMS (D3)

(SPANS B, C & E)

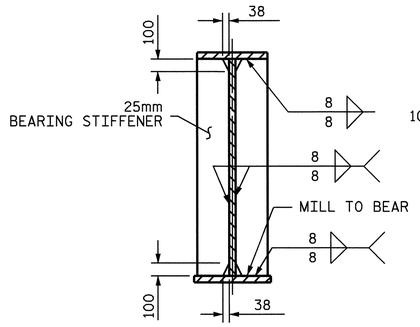

BEARING STIFFENER

FOR WIDTHS OF BEARING STIFFENERS, SEE GIRDER ELEVATIONS AND BOTTOM FLANGE DETAILS

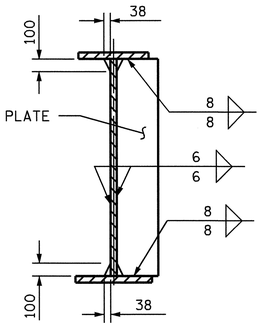

CONNECTOR PLATE

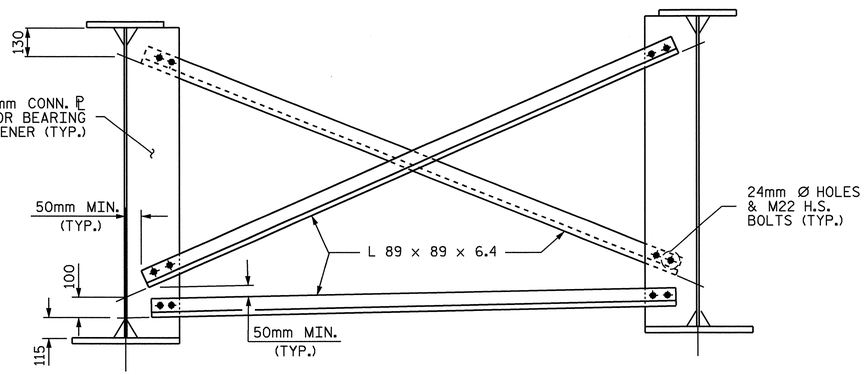

INTERMEDIATE DIAPHRAGM (D4)

(FOR SPANS C THRU E, INCLUDING DIAPHRAGMS @ BENTS 3 & 4)

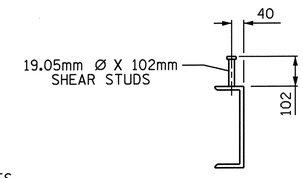

SHEAR STUD DETAILS

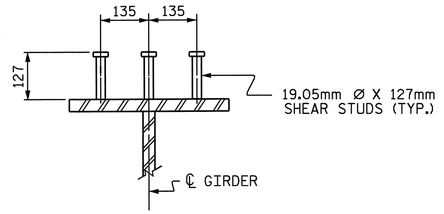

SHEAR STUD DETAILS

(TYP. EA. GDR.)

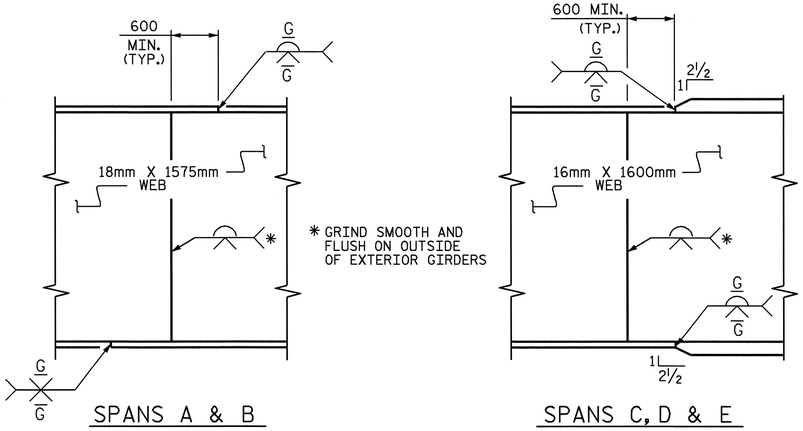

PERMISSIBLE SHOP FLANGE AND WEB SPLICE

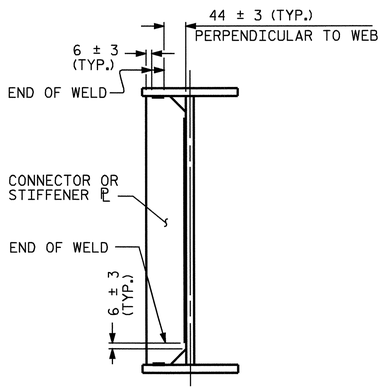

TYPICAL STIFFENER OR CONNECTOR PLATE CONNECTIONS

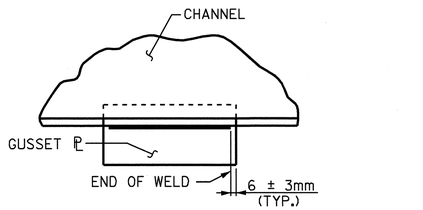

TYPICAL GUSSET PLATE CONNECTION

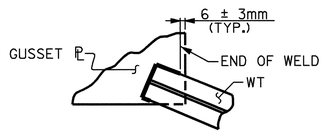

TYPICAL "TEE" TO GUSSET PLATE CONNECTIONS

WELD TERMINATION DETAILS

PROJECT NO. U-2519DA

CUMBERLAND COUNTY

STATION: 28+66.746-COL2-

SHEET 4 OF 7

STATE OF NORTH CAROLINA
DEPARTMENT OF TRANSPORTATION
RALEIGH

SUPERSTRUCTURE

STRUCTURAL STEEL DETAILS

REVISIONS						SHEET NO.
NO.	BY:	DATE:	NO.	BY:	DATE:	S-39
1			3			TOTAL SHEETS
2			4			411

Ting H. Fang 10/03/08
NORTH CAROLINA PROFESSIONAL SEAL 16301 ENGINEER TING HSIUNG FANG

DRAWN BY : D. G. ELY DATE : 12/07
CHECKED BY : T.H. FANG DATE : 7-08

03-OCT-2008 11:07
R:\Structures\frye\str3_COL2\Final Plans\U-2519DA_sd_ss_03.dgn
sdombrowski

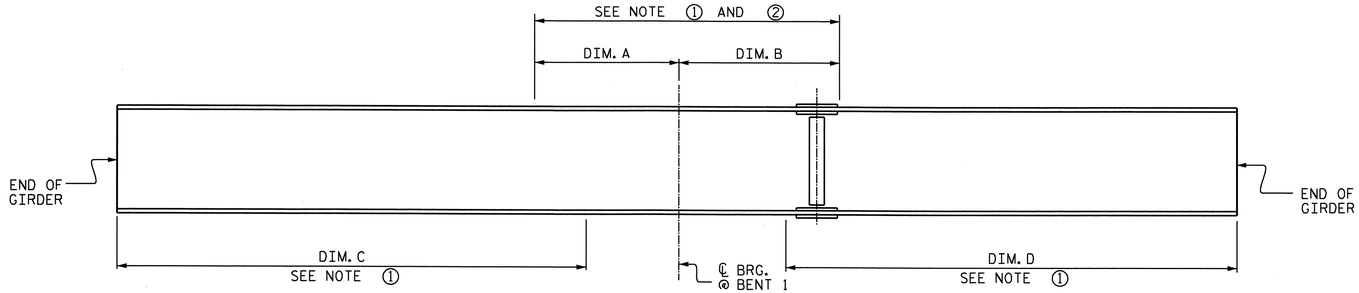

GIRDER MAKE UP

SPANS A & B

DIMENSIONS				
GIRDER	A	B	C	D
1	12.100m	10.900m	23.000m	28.100m
2	11.700m	10.600m	23.300m	28.200m
3	11.700m	11.200m	23.900m	28.300m
4	11.700m	11.500m	24.300m	28.500m
5	11.800m	11.600m	24.800m	28.700m
6	11.900m	11.600m	25.300m	28.800m
7	11.900m	11.500m	25.800m	28.900m
8	12.700m	12.200m	26.300m	29.200m

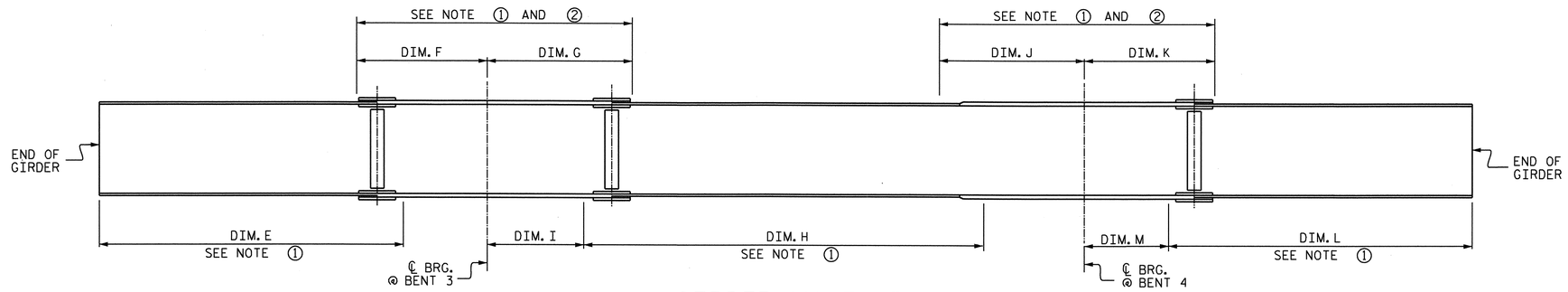

GIRDER MAKE UP

SPANS C THRU E

DIMENSIONS									
GIRDER	E	F	G	H	I	J	K	L	M
1	31.700m	11.500m	13.900m	26.200m	8.500m	11.600m	10.400m	27.341m	6.700m
2	32.200m	11.600m	14.200m	26.600m	8.300m	11.700m	10.400m	27.541m	6.500m
3	32.600m	11.700m	14.700m	26.500m	8.400m	11.700m	10.300m	27.641m	6.400m
4	33.100m	11.800m	14.800m	26.300m	8.600m	11.800m	10.300m	27.741m	6.300m
5	33.500m	11.900m	14.900m	26.200m	8.700m	11.800m	10.300m	27.741m	6.300m
6	33.700m	12.000m	15.000m	25.800m	9.000m	11.800m	10.200m	27.741m	6.300m

CHARPY V-NOTCH TESTS FOR CONTINUOUS PLATE GIRDERS

① CHARPY V-NOTCH TESTS ARE REQUIRED FOR ALL TOP OR BOTTOM FLANGE PLATES WHICH FALL WITHIN THESE LIMITS, CHARPY V-NOTCH TESTS WILL BE REQUIRED FOR ALL WEB PLATES, ALL SPLICE PLATES AND ALL CROSSFRAME COMPONENTS AND CONNECTOR PLATES. IF A PERMITTED SHOP FLANGE SPLICE IS NOT USED, CHARPY V-NOTCH TESTS WILL BE REQUIRED FOR THE ENTIRE FLANGE PLATE. FOR CHARPY V-NOTCH TESTS, SEE ARTICLE 1072-9 OF THE STANDARD SPECIFICATIONS.

② NO WELDING OF FORMS OR FALSEWORK TO THE TOP FLANGE WILL BE PERMITTED IN THIS REGION.

NOTES :

ALL STRUCTURAL STEEL SHALL BE AASHTO M270 GRADE 345W AND PAINTED IN ACCORDANCE WITH SYSTEM 4 OF ARTICLE 442-7 OF THE STANDARD SPECIFICATIONS UNLESS OTHERWISE NOTED ON THE PLANS.

ALL DIMENSIONS SHOWN ARE HORIZONTAL OR VERTICAL, UNLESS OTHERWISE NOTED.

ALL FIELD CONNECTIONS TO BE 22.23mm Ø HIGH STRENGTH BOLTS UNLESS OTHERWISE NOTED.

SHOP SPLICES ARE PERMITTED TO LIMIT THE MAXIMUM REQUIRED FLANGE PIECE LENGTHS TO 18 METERS AND WEB PIECE LENGTHS TO 14 METERS. PERMITTED FLANGE AND WEB SHOP SPLICES SHALL NOT BE LOCATED WITHIN 4.5 METERS OF MAXIMUM DEAD LOAD DEFLECTION (NOR WITHIN 4.5 METERS OF INTERMEDIATE BEARINGS OF CONTINUOUS UNITS). KEEP 600mm MINIMUM BETWEEN WEB AND FLANGE SHOP SPLICES. KEEP 150mm MINIMUM BETWEEN CONNECTOR PLATE WELDS AND WEB OR FLANGE SHOP SPLICES.

STUDS ON GIRDERS MAY BE SHIFTED UP TO 25mm IF NECESSARY TO CLEAR FLANGE SPLICE WELD.

TENSION ON THE AASHTO M164 BOLTS SHALL BE CALIBRATED USING DIRECT TENSION INDICATOR WASHERS. FOR DIRECT TENSION INDICATORS, SEE SPECIAL PROVISIONS.

BEARING STIFFENER MAY REQUIRE COPING IF WIDER THAN BOTTOM FLANGE TO AVOID INTERFERENCE WITH THE ANCHOR BOLT.

END OF GIRDERS SHALL BE PLUMB.

BEARING STIFFENERS ARE TO BE PLACED NORMAL TO THE WEB OF THE GIRDER AND SHALL BE PLUMB.

THE CONTRACTOR SHALL MAINTAIN STABILITY OF THE CURVED GIRDERS UNTIL ALL FIELD SPLICES AND CROSSFRAME CONNECTIONS HAVE BEEN COMPLETED. STRUCTURAL STEEL ERECTION IN A CONTINUOUS UNIT SHALL BE COMPLETE BEFORE FALSEWORK OR FORMS ARE PLACED ON THE UNIT.

CURVATURE OF STEEL FLANGE PLATES MAY BE ACCOMPLISHED BY CUTTING PLATES TO THE REQUIRED CURVATURE OR BY HEAT TREATMENT.

CAMBERED GIRDER LENGTHS SHALL BE ADJUSTED AND BEARINGS ARE TO BE PLACED ON THE CAMBERED GIRDER SO AS TO BE ALIGNED WITH THE ANCHORS AFTER THE DEAD LOAD DEFLECTION HAS OCCURED. SHOP DRAWINGS SHALL BE PREPARED ACCORDINGLY.

FOR HIGH STRENGTH BOLTS, SEE SPECIAL PROVISIONS.

FOR SHIPPING STEEL STRUCTURAL MEMBERS, SEE SPECIAL PROVISIONS.

NORTH CAROLINA PROFESSIONAL SEAL 16301 ENGINEER TING HSIANG FANG
3/3/11

PROJECT NO. U-2519DA
CUMBERLAND COUNTY
STATION: 28+66.746-COL2-

SHEET 5 OF 7

STATE OF NORTH CAROLINA
DEPARTMENT OF TRANSPORTATION
RALEIGH
SUPERSTRUCTURE

STRUCTURAL STEEL DETAILS

REVISIONS						SHEET NO.
NO.	BY:	DATE:	NO.	BY:	DATE:	S-40
1			3			TOTAL SHEETS
2			4			411

DRAWN BY : D. G. ELY DATE : 12/07
CHECKED BY : T.H. FANG DATE : 7-08

03-MAR-2011 15:33
K:\TIPProjects-U\U2519da\Structures\frye\str3_COL2\Final Plans\U-2519DA_sd_ss_03.dgn
ttfang

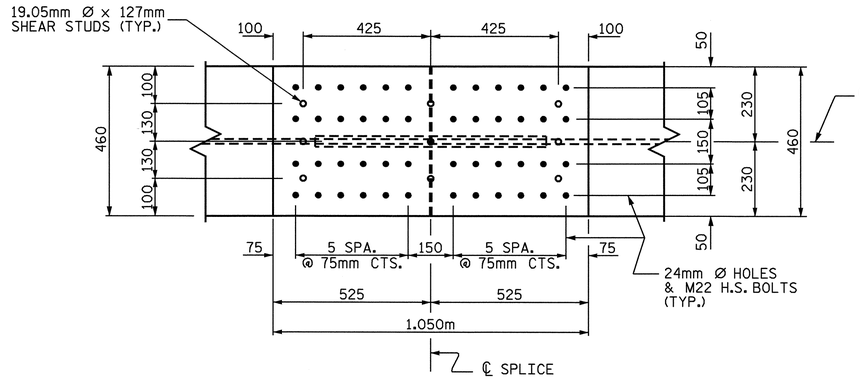

PLAN (TOP OF TOP FLANGE)

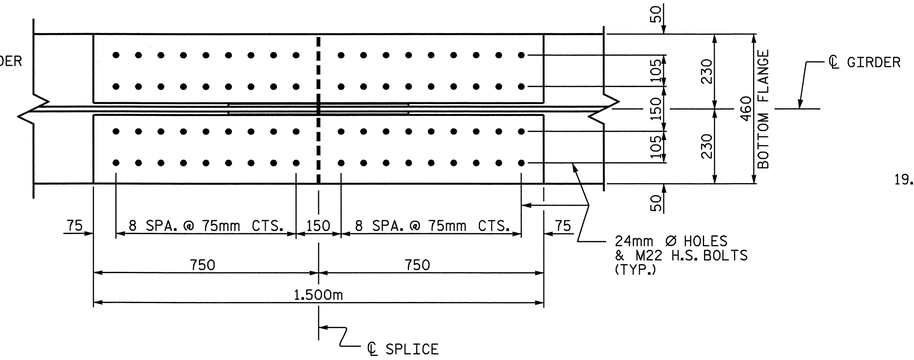

PLAN (TOP OF BOTTOM FLANGE)

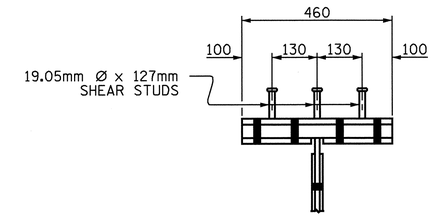

SHEAR STUD DETAIL
FOR TOP FLANGE SPLICE PLATE

✳SHEAR STUDS ARE TO BE SHOP WELDED ON TOP OF PLATE BEFORE FIELD ASSEMBLY.

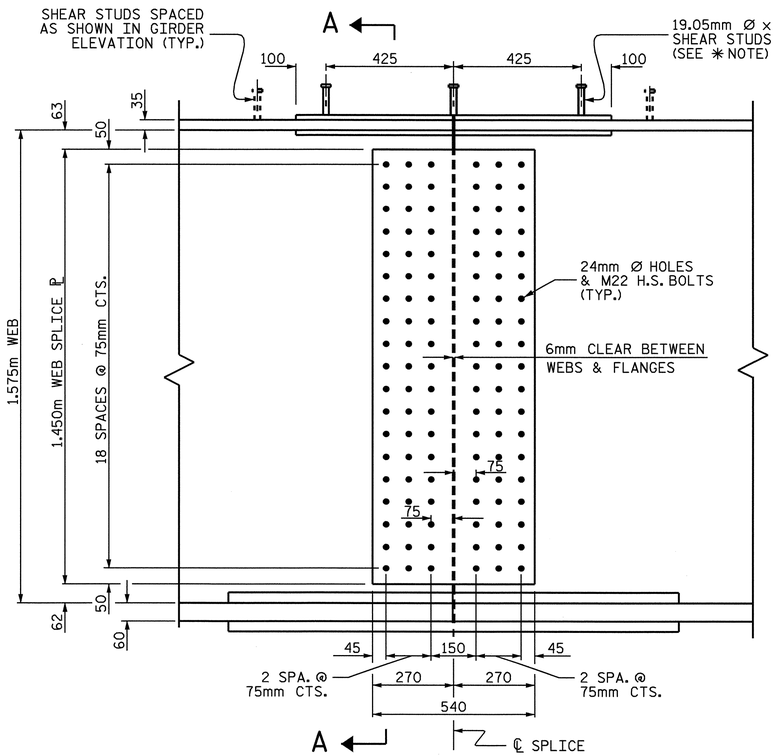

ELEVATION

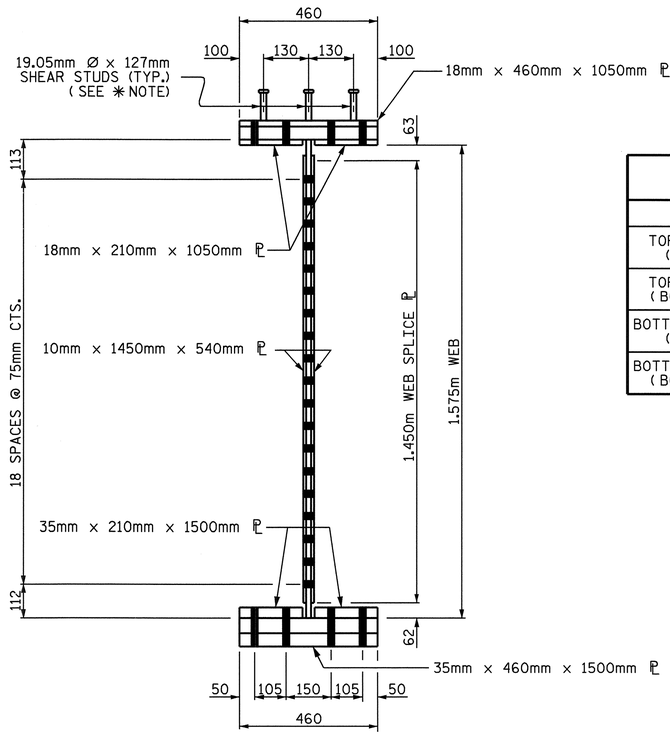

SECTION A-A

DESCRIPTION	SIZE	NO. REQ'D FOR ONE FIELD SPLICE	TOTAL REQ'D
WEB SPLICE ℄	10mm X 1450mm X 540mm	2	16
TOP FLANGE SPLICE ℄ (TOP OF FLANGE)	18mm X 460mm X 1050mm	1	8
TOP FLANGE SPLICE ℄ (BOTTOM OF FLANGE)	18mm X 210mm X 1050mm	2	16
BOTTOM FLANGE SPLICE ℄ (TOP OF FLANGE)	35mm X 210mm X 1500mm	2	16
BOTTOM FLANGE SPLICE ℄ (BOTTOM OF FLANGE)	35mm X 460mm X 1500mm	1	8

BOLTED FIELD SPLICE (BFS1) DETAILS

(TYPICAL EACH BOLTED FIELD SPLICE IN SPAN B)

DRAWN BY : D. G. ELY DATE : 2/28/08
CHECKED BY : T.H.FANG DATE : 7/15/08

03-OCT-2008 11:07
R:\Structures\frye\str3_COL2\Final Plans\U-2519DA_sd_ss_03.dgn
sdombrowski

Tung H Fang 10/03/08
NORTH CAROLINA PROFESSIONAL SEAL 16301 ENGINEER TUNG HSIUNG FANG

PROJECT NO. U-2519DA
CUMBERLAND COUNTY
STATION: 28+66.746-COL2-

SHEET 6 OF 7

STATE OF NORTH CAROLINA
DEPARTMENT OF TRANSPORTATION
RALEIGH
SUPERSTRUCTURE

STRUCTURAL STEEL DETAILS

BFS1

REVISIONS						SHEET NO.
NO.	BY:	DATE:	NO.	BY:	DATE:	S-41
1			3			TOTAL SHEETS
2			4			411

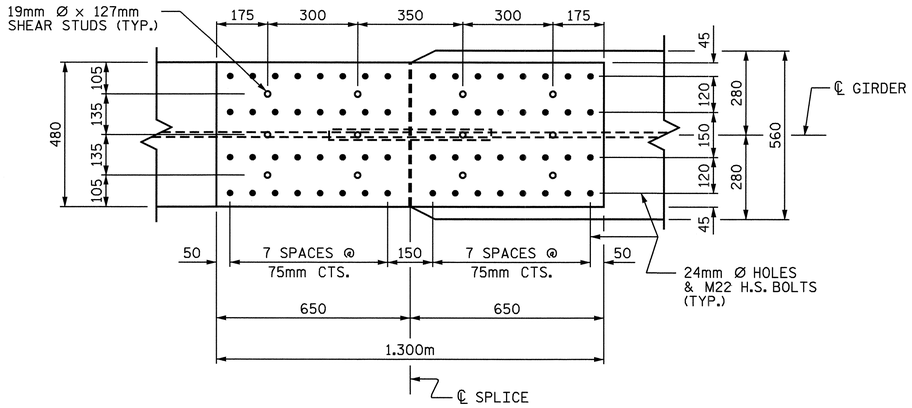

PLAN (TOP OF TOP FLANGE)

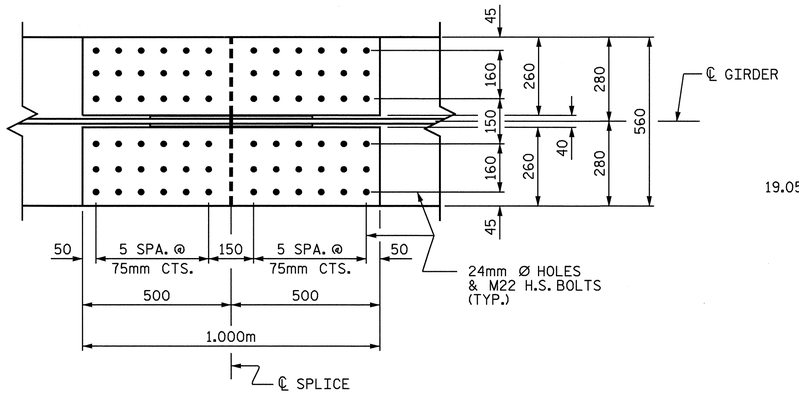

PLAN (TOP OF BOTTOM FLANGE)

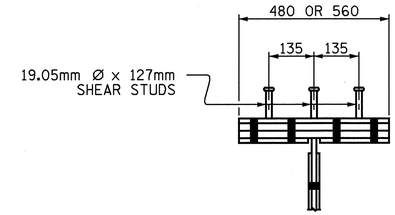

SHEAR STUD DETAIL
FOR TOP FLANGE SPLICE PLATE

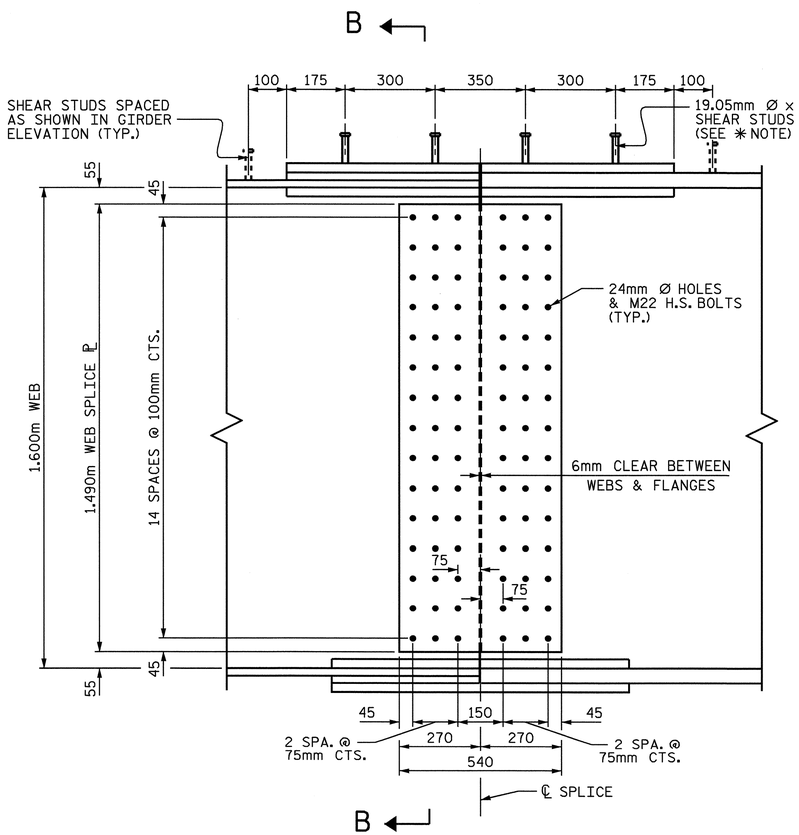

ELEVATION

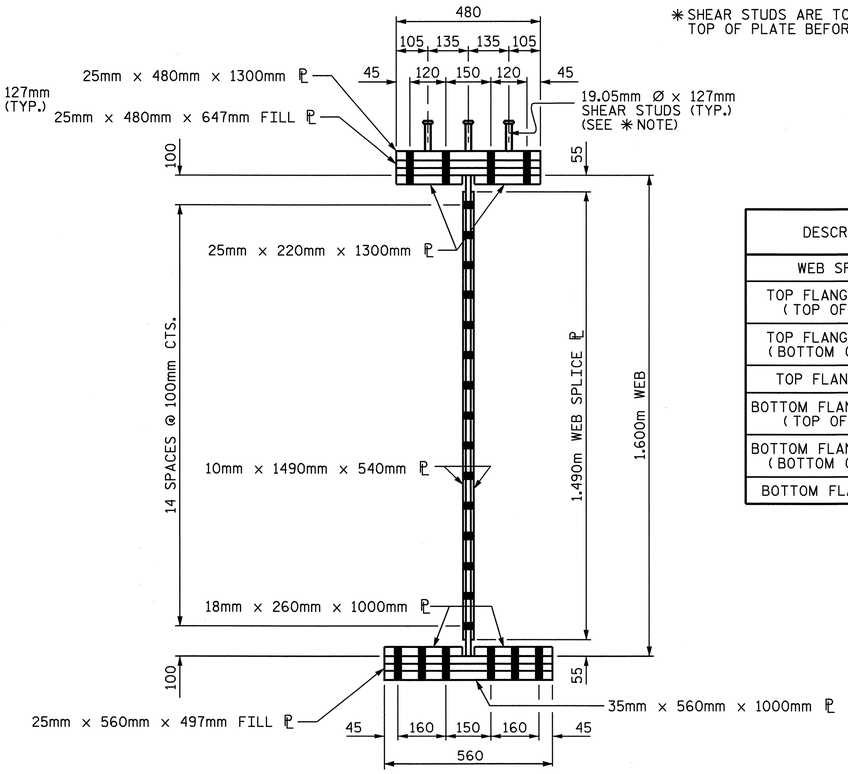

SECTION B-B

✳ SHEAR STUDS ARE TO BE SHOP WELDED ON TOP OF PLATE BEFORE FIELD ASSEMBLY.

DESCRIPTION	SIZE	NO. REQ'D FOR ONE FIELD SPLICE	TOTAL REQ'D
WEB SPLICE ℄	10mm X 1490mm X 540mm	2	36
TOP FLANGE SPLICE ℄ (TOP OF FLANGE)	25mm X 480mm X 1300mm	1	18
TOP FLANGE SPLICE ℄ (BOTTOM OF FLANGE)	25mm X 220mm X 1300mm	2	36
TOP FLANGE FILL ℄	25mm X 480mm X 647mm	1	18
BOTTOM FLANGE SPLICE ℄ (TOP OF FLANGE)	18mm X 260mm X 1000mm	2	36
BOTTOM FLANGE SPLICE ℄ (BOTTOM OF FLANGE)	35mm X 560mm X 1000mm	1	18
BOTTOM FLANGE FILL ℄	25mm X 560mm X 497mm	1	18

BOLTED FIELD SPLICE (BFS2) DETAILS

(TYPICAL EACH BOLTED FIELD SPLICE IN SPANS C THRU E)

PROJECT NO. U-2519DA
CUMBERLAND COUNTY
STATION: 28+66.746-COL2-

SHEET 7 OF 7

STATE OF NORTH CAROLINA
DEPARTMENT OF TRANSPORTATION
RALEIGH
SUPERSTRUCTURE

STRUCTURAL STEEL DETAILS

BFS2

NORTH CAROLINA PROFESSIONAL SEAL 16301 ENGINEER TING HSIUNG FANG
10/03/08

REVISIONS						SHEET NO.
NO.	BY:	DATE:	NO.	BY:	DATE:	S-42
1			3			TOTAL SHEETS
2			4			411

DRAWN BY : D. G. ELY DATE : 2/28/08
CHECKED BY : T. H. FANG DATE : 7/15/08

03-OCT-2008 11:07
R:\Structures\frye\str3_COL2\Final Plans\U-2519DA_sd_ss_03.dgn
sdombrowski

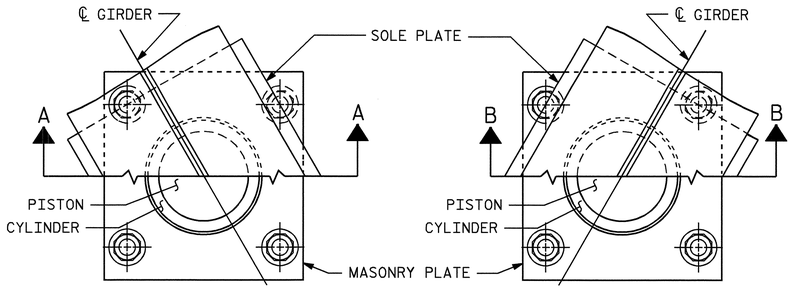

CUT-AWAY PLAN
PB1 @ BENT 1

CUT-AWAY PLAN
PB2 @ BENTS 3 & 4

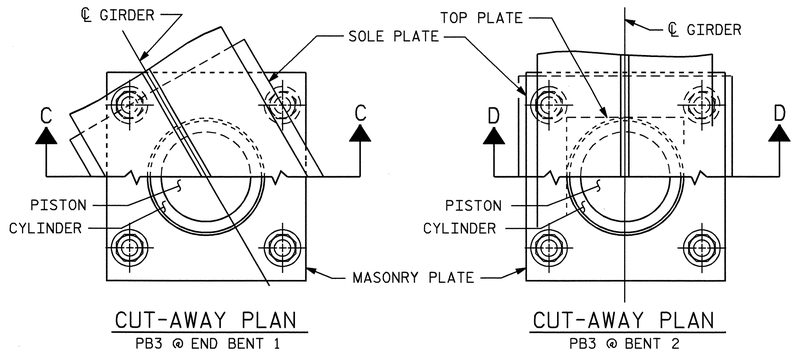

CUT-AWAY PLAN
PB3 @ END BENT 1

CUT-AWAY PLAN
PB3 @ BENT 2

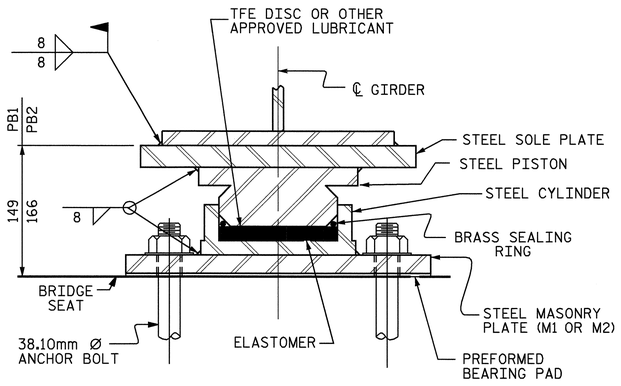

SECTIONS A-A AND B-B

PB1, FIXED
(8 REQ'D.)

PB2, FIXED
(12 REQ'D.)

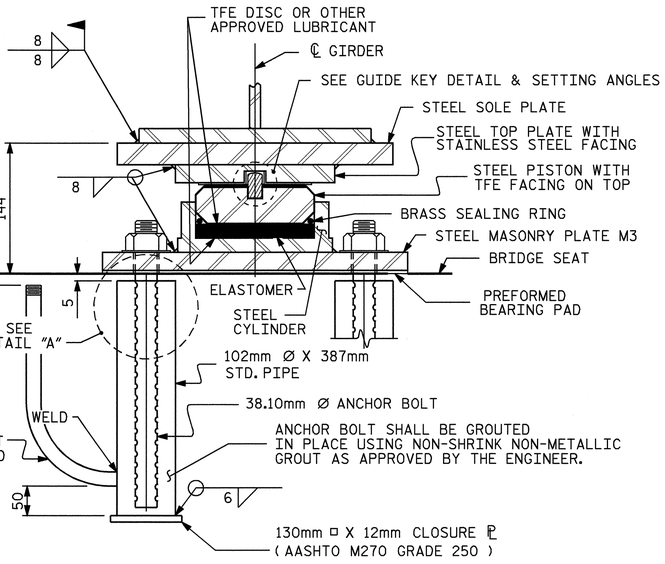

SECTIONS C-C AND D-D

PB3, EXP.
(16 REQ'D.)

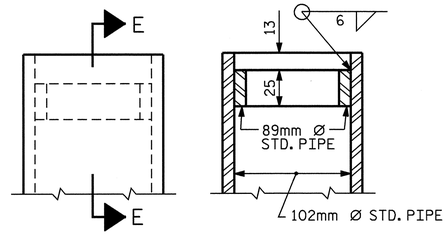

SECTION E-E

DETAIL "A"

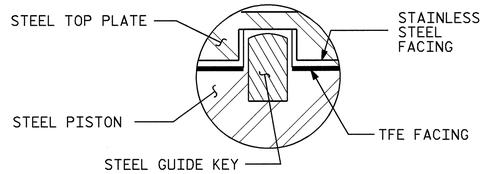

GUIDE KEY DETAIL

POT BEARING DETAILS

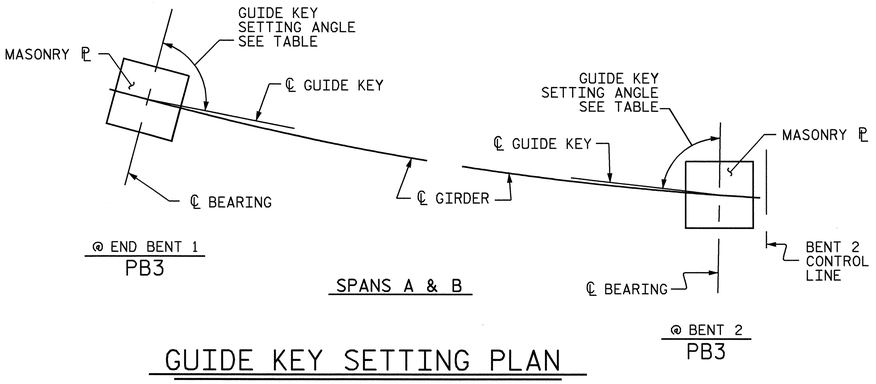

GUIDE KEY SETTING PLAN

GUIDE KEY SETTING ANGLES		
GIRDER	END BENT 1	BENT 2
1	90°-14'-16"	83°-35'-08"
2	87°-46'-37"	84°-29'-56"
3	85°-24'-11"	85°-24'-40"
4	83°-07'-26"	86°-19'-29"
5	80°-56'-38"	87°-14'-27"
6	78°-51'-30"	88°-09'-16"
7	76°-52'-34"	89°-04'-23"
8	75°-00'-00"	90°-00'-00"

NORTH CAROLINA PROFESSIONAL SEAL 16301 ENGINEER TING HSIONG FANG
10/03/08

PROJECT NO. U-2519DA
CUMBERLAND COUNTY
STATION: 28+66.746-COL2-

SHEET 1 OF 2

STATE OF NORTH CAROLINA
DEPARTMENT OF TRANSPORTATION
RALEIGH

SUPERSTRUCTURE

POT BEARING DETAILS

REVISIONS						SHEET NO.
NO.	BY:	DATE:	NO.	BY:	DATE:	S-43
1			3			TOTAL SHEETS
2			4			411

ASSEMBLED BY : D. G. ELY	DATE : 11/07	
CHECKED BY : T. H. FANG	DATE : 7/24/08	
DRAWN BY : RWW 8/99	REV. 7/10/01	LES/RWW
CHECKED BY : LES 8/99	REV. 5/7/03	RWW/JTE
	REV. 5/1/06	TLA/GM

03-OCT-2008 11:07
R:\Structures\frye\str3_COL2\Final Plans\u-2519da_sd_bg_03.dgn
sdombrowski

PB1SM.STD

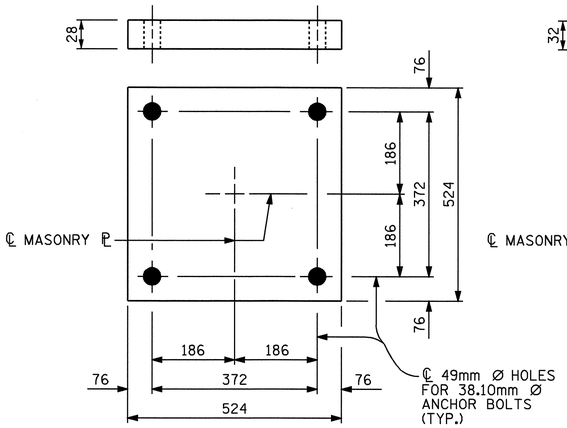

PLAN

M1 (8 REQ'D.)

@ BENT 1

PB1. FIXED

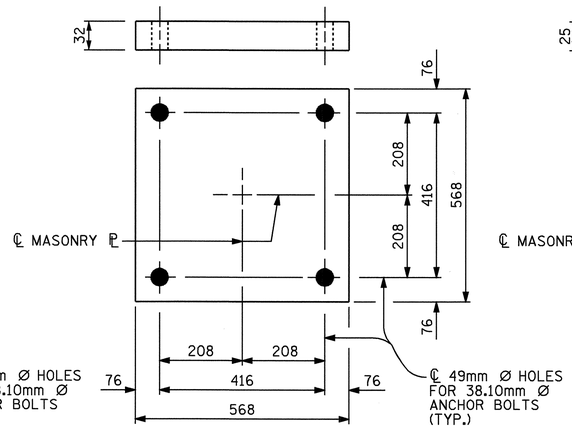

PLAN

M2 (12 REQ'D.)

@ BENTS 3 & 4

PB2. FIXED

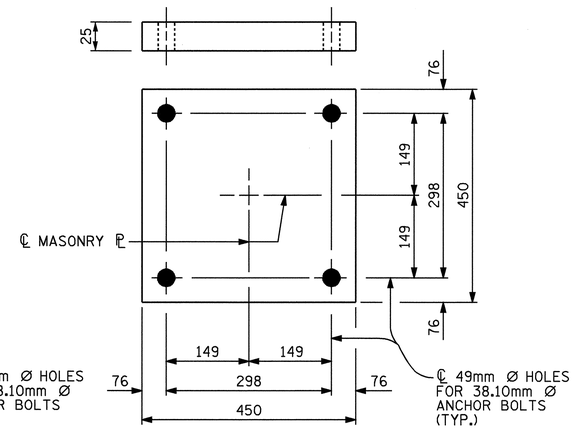

PLAN

M3 (16 REQ'D.)

@ END BENT 1 & BENT 2

PB3. EXPANSION

NOTES

FOR POT BEARINGS, SEE SPECIAL PROVISIONS.

AT ALL POINTS OF SUPPORT IN SPANS A THRU E, NUTS FOR ANCHOR BOLTS SHALL BE TIGHTENED FINGER TIGHT AND GIVEN AN ADDITIONAL 1/4 TURN. THE THREAD OF THE NUT AND BOLT SHALL THEN BE BURRED WITH A SHARP POINTED TOOL.

WHEN WELDING THE SOLE PLATE TO THE GIRDER, USE TEMPERATURE INDICATING WAX PENS, OR OTHER SUITABLE MEANS, TO ENSURE THAT THE TEMPERATURE OF THE BEARING DOES NOT EXCEED 121°C TEMPERATURES ABOVE THIS MAY DAMAGE THE TFE OR ELASTOMER.

AFTER BEARING ASSEMBLY IS IN PLACE AND ANCHOR BOLTS HAVE BEEN FINALLY POSITIONED. THEY SHALL BE GROUTED IN PLACE AS SHOWN.

THE CLOSURE PLATE, GROUT PIPE AND STANDARD PIPE FOR THIS ASSEMBLY NEED NOT BE GALVANIZED.

SOLE PLATES SHOULD BE WELDED TO BEAM FLANGES AND ANCHOR BOLTS SHOULD BE GROUTED BEFORE FALSEWORK IS PLACED.

ALL SURFACES OF BEARING PLATES SHALL BE SMOOTH AND STRAIGHT.

FOR THERMAL SPRAYED COATINGS (METALLIZATION), SEE SPECIAL PROVISIONS.

THE CONTRACTOR MAY SUBSTITUTE DISC BEARINGS FOR THE POT BEARINGS SHOWN. FOR OPTIONAL DISC BEARINGS, SEE SPECIAL PROVISIONS.

TABLE FOR LOADS AND MOVEMENTS

BEARING	LOCATION	VERTICAL LOAD (kN)			LATERAL LOAD (kN)	TOTAL MOVEMENT (mm)
		DEAD	LIVE	TOTAL		
PB3 (EXP.)	END BENT 1	388	334	722	78	27
PB1 (FIXED)	BENT 1	1212	522	1734	242	0
PB3 (EXP.)	BENT 2 (NEAR)	365	277	642	73	30
PB2 (FIXED)	BENT 3	1359	651	2010	272	0
PB2 (FIXED)	BENT 4	1171	604	1775	235	0

MASONRY PLATE DETAILS

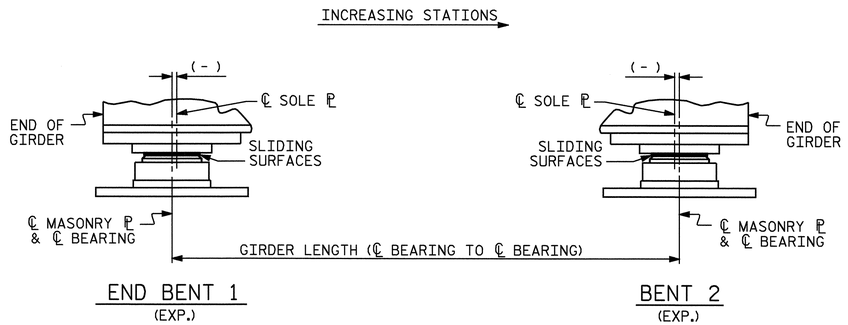

END BENT 1 (EXP.)

BENT 2 (EXP.)

TABLE FOR PLATE SETTING DATA

(EXPANSION POT BEARINGS)

TEMPERATURE AT TIME OF SETTING	0° C	16° C	32° C	*
END BENT 1	-7	0	7	-2
BENT 2 (NEAR)	-8	0	8	-3

*CORRECTION FOR END ROTATION DUE TO WEIGHT OF SLAB AND COMPOSITE DEAD LOAD.

TEMPERATURE SETTING DETAILS

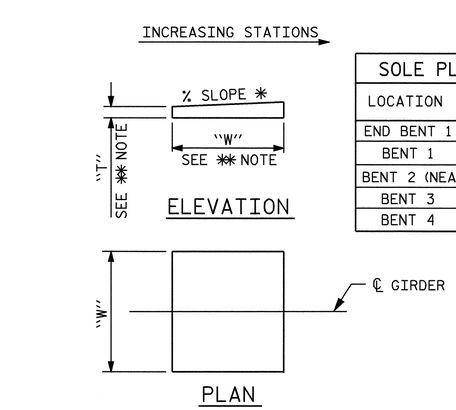

SOLE PLATE SLOPE	
LOCATION	% SLOPE
END BENT 1	1.500%
BENT 1	1.300%
BENT 2 (NEAR)	1.100%
BENT 3	0.000%
BENT 4	0.000%

** NOTE:
DIMENSIONS "W" AND "T" ARE TO BE DETERMINED BY THE MANUFACTURER.

SOLE PLATE DETAILS

PROJECT NO. U-2519DA

CUMBERLAND COUNTY

STATION: 28+66.746-COL2-

SHEET 2 OF 2

STATE OF NORTH CAROLINA
DEPARTMENT OF TRANSPORTATION
RALEIGH

SUPERSTRUCTURE

POT BEARING DETAILS

NORTH CAROLINA PROFESSIONAL SEAL 16301 ENGINEER TING HSILING FANG

10/03/08

REVISIONS						SHEET NO.
NO.	BY:	DATE:	NO.	BY:	DATE:	S-44
1			3			TOTAL SHEETS
2			4			411

ASSEMBLED BY :	D. G. ELY	DATE :	11/07
CHECKED BY :	T. H. FANG	DATE :	7/7/08
DRAWN BY : RWW	8/99	REV. 7/10/01	LES/RWW
CHECKED BY : LES	8/99	REV. 5/7/03	RWW/JTE
		REV. 5/1/06	TLA/GM

03-OCT-2008 11:07
R:\Structures\frye\str3_COL2\Final Plans\u-2519da_sd_bg_03.dgn
sdombrowski

PB1SM.STD

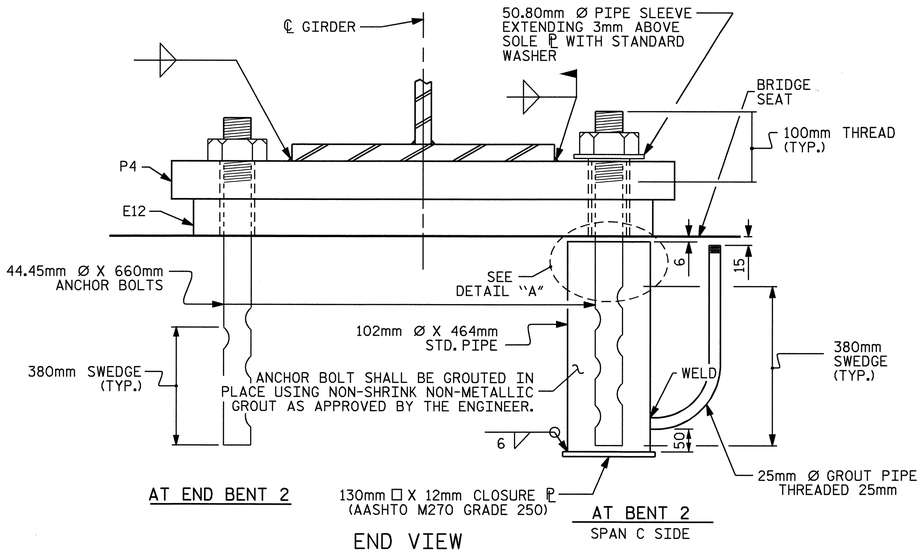

AT END BENT 2

AT BENT 2
SPAN C SIDE

END VIEW

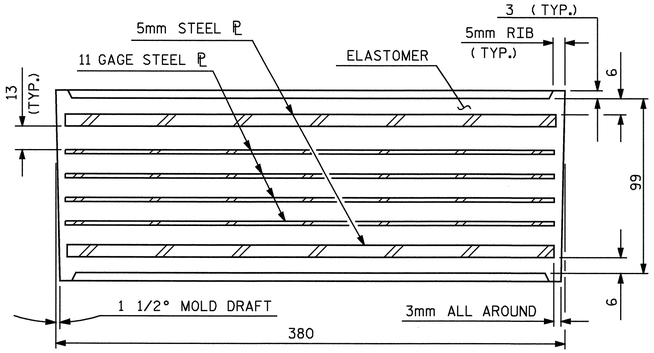

TYPICAL SECTION OF ELASTOMERIC BEARING

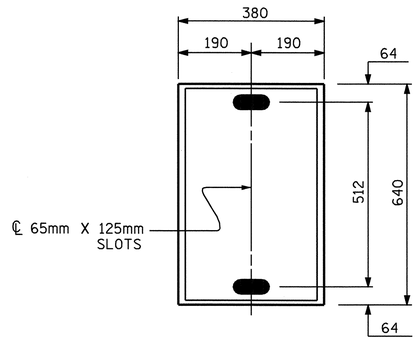

E12

PLAN VIEW

ELASTOMERIC BEARING DETAILS

TYPE VI

(EXPANSION)
(12 REQ'D)

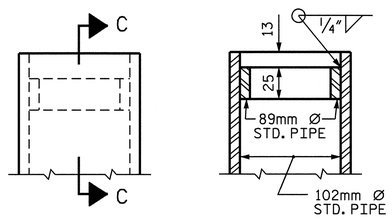

SECTION C-C

DETAIL "A"

THE CLOSURE PLATE, GROUT PIPE AND STANDARD PIPE FOR THE EXPANSION ASSEMBLY NEED NOT BE GALVANIZED.

THE CONTRACTOR'S ATTENTION IS CALLED TO THE FOLLOWING PROCEDURES TO ACCOMMODATE GIRDER TRANSLATION AND END ROTATION:

1. ONCE THE DECK HAS CURED, THE GIRDERS SHALL BE JACKED AND THE ANCHOR BOLTS, SOLE PLATE, AND ELASTOMERIC BEARING SLOTS SHALL BE CENTERED AS NEARLY AS PRACTICAL ABOUT THE BEARING STIFFENER. THIS OPERATION SHALL BE PERFORMED AT APPROXIMATELY 60° F.
2. AFTER CENTERING THE SLOTS AND ANCHOR BOLTS, THE SOLE PLATES SHALL BE FIELD WELDED TO THE GIRDER FLANGES AND ANCHOR BOLTS GROUTED.

   THE CONTRACTOR MAY PROPOSE ALTERNATE METHODS, PROVIDED DETAILS ARE SUBMITTED TO THE ENGINEER FOR REVIEW AND APPROVAL.

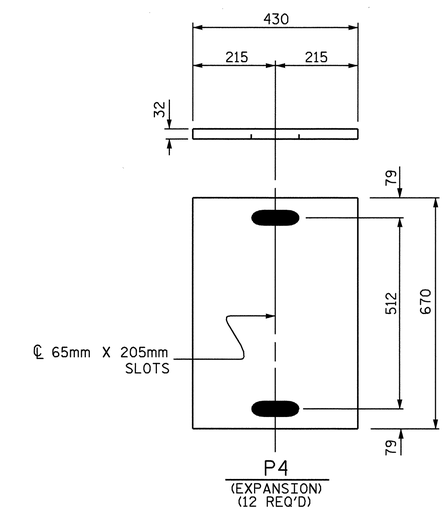

P4
(EXPANSION)
(12 REQ'D)

SOLE PLATE DETAILS

NOTES

AT ALL FIXED POINTS OF SUPPORT, NUTS FOR ANCHOR BOLTS ARE TO BE TIGHTENED FINGER TIGHT AND THEN BACKED OFF 1/2 TURN. THE THREAD OF THE NUT AND BOLT SHALL THEN BE BURRED WITH A SHARP POINTED TOOL.

THE 51mm Ø PIPE SLEEVE SHALL BE CUT FROM SCHEDULE 40 PVC PLASTIC PIPE. THE PVC PLASTIC PIPE SHALL MEET THE REQUIREMENTS OF ASTM D1785.

THE PAYMENT FOR THE PIPE SLEEVES SHALL BE INCLUDED IN THE SEVERAL PAY ITEMS.

FOR AASHTO M270 GRADE 345W STRUCTURAL STEEL, SOLE PLATE SHALL BE AASHTO M270 GRADE 345W AND SHALL NOT BE GALVANIZED, ANCHOR BOLTS AND NUTS SHALL BE GALVANIZED IN ACCORDANCE WITH THE STANDARD SPECIFICATIONS.

ANCHOR BOLTS SHALL MEET THE REQUIREMENTS OF ASTM A449. NUTS SHALL MEET THE REQUIREMENTS OF AASHTO M291M-12 OR AASHTO M292M-2H. WASHERS SHALL MEET THE REQUIREMENTS OF AASHTO M293M. SHOP DRAWINGS ARE NOT REQUIRED FOR ANCHOR BOLTS, NUTS AND WASHERS. SHOP INSPECTION IS REQUIRED.

WHEN FIELD WELDING THE SOLE PLATE TO THE GIRDER FLANGE, USE TEMPERATURE INDICATING WAX PENS, OR OTHER SUITABLE MEANS, TO ENSURE THAT THE TEMPERATURE OF THE SOLE PLATE DOES NOT EXCEED 149°C. TEMPERATURES ABOVE THIS MAY DAMAGE THE ELASTOMER.

ALL SURFACES OF BEARING PLATES SHALL BE SMOOTH AND STRAIGHT.

—LOAD RATINGS—	
	MAX.D.L.+ L.L.
TYPE VI	1134 kN

PROJECT NO. U-2519DA
CUMBERLAND COUNTY
STATION: 28+66.746-COL2-

NORTH CAROLINA PROFESSIONAL SEAL 16301 ENGINEER TING HSILING FANG
Ting H. Fang
10/03/08

STATE OF NORTH CAROLINA
DEPARTMENT OF TRANSPORTATION
RALEIGH
SUPERSTRUCTURE

ELASTOMERIC BEARING DETAILS

REVISIONS						SHEET NO.
NO.	BY:	DATE:	NO.	BY:	DATE:	S-45
1			3			TOTAL SHEETS
2			4			411

ASSEMBLED BY : D. G. ELY		DATE : 11/07	
CHECKED BY : T. H. FANG		DATE : 7/25/08	
DRAWN BY : EEM 10/95	REV. 8/16/99	MAB/LES	
CHECKED BY : PEK 10/95	REV. 10/17/00	RWW/LES	
	REV. 5/1/06	TLA/GM	

03-OCT-2008 11:07
R:\Structures\frye\str3_COL2\Final Plans\u-2519da_sd_bg_03.dgn
sdombrowski

STD. NO. EB2SM

DEAD LOAD DEFLECTION TABLE FOR GIRDERS

SPAN A

GIRDER 1

TWENTIETH POINTS	0	.05	.10	.15	.20	.25	.30	.35	.40	.45	.50	.55	.60	.65	.70	.75	.80	.85	.90	.95	0
DEFLECTION DUE TO WEIGHT OF GIRDER	0.000	-0.001	-0.001	-0.001	-0.002	-0.002	-0.002	-0.002	-0.002	-0.002	-0.002	-0.002	-0.002	-0.001	-0.001	-0.001	0.000	0.000	0.000	0.000	0.000
DEFLECTION DUE TO WEIGHT OF SLAB *	0.000	-0.001	-0.003	-0.005	-0.006	-0.007	-0.008	-0.009	-0.009	-0.009	-0.008	-0.008	-0.006	-0.006	-0.005	-0.003	-0.003	-0.001	0.000	0.000	0.000
DEFLECTION DUE TO WEIGHT OF BARRIER RAIL	0.000	0.000	0.000	0.000	0.000	0.000	0.000	0.000	0.000	0.000	0.000	0.000	0.000	0.000	0.000	0.000	0.000	0.000	0.000	0.000	0.000
TOTAL DEAD LOAD DEFLECTION	0.000	-0.002	-0.004	-0.006	-0.008	-0.009	-0.010	-0.011	-0.011	-0.011	-0.010	-0.010	-0.008	-0.007	-0.006	-0.004	-0.003	-0.001	0.000	0.000	0.000
VERTICAL CURVE ORDINATE	0.000	-0.001	-0.001	-0.001	-0.001	-0.001	-0.001	-0.001	-0.001	-0.001	-0.001	-0.001	-0.001	-0.001	-0.001	-0.001	0.000	0.000	0.000	0.000	0.000
ORDINATE DUE TO SUPERELEVATION	0.000	0.000	0.000	0.000	0.000	0.000	0.000	0.000	0.000	0.000	0.000	0.000	0.000	0.000	0.000	0.000	0.000	0.000	0.000	0.000	0.000
HEAT	0.000	0.001	0.003	0.004	0.005	0.006	0.006	0.007	0.007	0.007	0.006	0.006	0.005	0.004	0.004	0.003	0.002	0.001	0.000	0.000	0.000
REQUIRED CAMBER	0	2	6	9	12	14	15	17	17	17	15	15	12	10	9	6	5	2	0	0	0

GIRDER 2

TWENTIETH POINTS	0	.05	.10	.15	.20	.25	.30	.35	.40	.45	.50	.55	.60	.65	.70	.75	.80	.85	.90	.95	0
DEFLECTION DUE TO WEIGHT OF GIRDER	0.000	-0.001	-0.001	-0.002	-0.002	-0.002	-0.002	-0.003	-0.003	-0.003	-0.002	-0.002	-0.002	-0.001	-0.001	-0.001	0.000	0.000	0.000	0.000	0.000
DEFLECTION DUE TO WEIGHT OF SLAB *	0.000	-0.002	-0.004	-0.006	-0.008	-0.009	-0.010	-0.010	-0.010	-0.010	-0.011	-0.010	-0.008	-0.008	-0.006	-0.004	-0.003	-0.002	-0.001	0.000	0.000
DEFLECTION DUE TO WEIGHT OF BARRIER RAIL	0.000	0.000	0.000	0.000	0.000	0.000	0.000	0.000	0.000	0.000	0.000	0.000	0.000	0.000	0.000	0.000	0.000	0.000	0.000	0.000	0.000
TOTAL DEAD LOAD DEFLECTION	0.000	-0.003	-0.005	-0.008	-0.010	-0.011	-0.012	-0.013	-0.013	-0.013	-0.013	-0.012	-0.010	-0.009	-0.007	-0.005	-0.003	-0.002	-0.001	0.000	0.000
VERTICAL CURVE ORDINATE	0.000	-0.005	-0.007	-0.009	-0.010	-0.011	-0.012	-0.012	-0.013	-0.013	-0.013	-0.012	-0.012	-0.011	-0.010	-0.009	-0.008	-0.007	-0.005	-0.004	-0.002
ORDINATE DUE TO SUPERELEVATION	0.000	0.000	0.000	0.000	0.000	0.000	0.000	0.000	0.000	0.000	0.000	0.000	0.000	0.000	0.000	0.000	0.000	0.000	0.000	0.000	0.000
HEAT	0.000	0.001	0.002	0.003	0.003	0.003	0.004	0.004	0.004	0.004	0.004	0.004	0.003	0.003	0.002	0.002	0.001	0.001	0.000	0.000	0.000
REQUIRED CAMBER	0	-1	0	2	3	3	4	5	4	4	5	4	2	2	0	-1	-3	-2	-3	-2	0

GIRDER 3

TWENTIETH POINTS	0	.05	.10	.15	.20	.25	.30	.35	.40	.45	.50	.55	.60	.65	.70	.75	.80	.85	.90	.95	0
DEFLECTION DUE TO WEIGHT OF GIRDER	0.000	-0.001	-0.001	-0.002	-0.002	-0.002	-0.003	-0.003	-0.003	-0.003	-0.003	-0.002	-0.002	-0.002	-0.001	-0.001	0.000	0.000	0.000	0.000	0.000
DEFLECTION DUE TO WEIGHT OF SLAB *	0.000	-0.002	-0.005	-0.006	-0.009	-0.010	-0.011	-0.012	-0.012	-0.012	-0.011	-0.011	-0.010	-0.008	-0.007	-0.005	-0.004	-0.002	-0.001	0.000	0.000
DEFLECTION DUE TO WEIGHT OF BARRIER RAIL	0.000	0.000	0.000	0.000	0.000	0.000	0.000	0.000	0.000	0.000	0.000	0.000	0.000	0.000	0.000	0.000	0.000	0.000	0.000	0.000	0.000
TOTAL DEAD LOAD DEFLECTION	0.000	-0.003	-0.006	-0.008	-0.011	-0.012	-0.014	-0.015	-0.015	-0.015	-0.014	-0.013	-0.012	-0.010	-0.008	-0.006	-0.004	-0.002	-0.001	0.000	0.000
VERTICAL CURVE ORDINATE	0.000	-0.005	-0.009	-0.012	-0.015	-0.017	-0.019	-0.020	-0.021	-0.021	-0.021	-0.020	-0.019	-0.018	-0.016	-0.014	-0.012	-0.009	-0.006	-0.003	0.000
ORDINATE DUE TO SUPERELEVATION	0.000	0.000	0.000	0.000	0.000	0.000	0.000	0.000	0.000	0.000	0.000	0.000	0.000	0.000	0.000	0.000	0.000	0.000	0.000	0.000	0.000
HEAT	0.000	0.000	0.000	0.000	0.000	0.000	0.000	0.000	0.000	0.000	0.000	0.000	0.000	0.000	0.000	0.000	0.000	0.000	0.000	0.000	0.000
REQUIRED CAMBER (SAG)	0	-2	-3	-4	-4	-5	-5	-5	-6	-6	-7	-7	-7	-8	-8	-8	-8	-7	-5	-3	0

GIRDER 4

TWENTIETH POINTS	0	.05	.10	.15	.20	.25	.30	.35	.40	.45	.50	.55	.60	.65	.70	.75	.80	.85	.90	.95	0
DEFLECTION DUE TO WEIGHT OF GIRDER	0.000	-0.001	-0.001	-0.002	-0.002	-0.003	-0.003	-0.003	-0.003	-0.003	-0.003	-0.003	-0.002	-0.002	-0.001	-0.001	-0.001	0.000	0.000	0.000	0.000
DEFLECTION DUE TO WEIGHT OF SLAB *	0.000	-0.002	-0.005	-0.007	-0.010	-0.011	-0.012	-0.013	-0.013	-0.013	-0.013	-0.012	-0.011	-0.009	-0.008	-0.006	-0.004	-0.003	-0.001	0.000	0.000
DEFLECTION DUE TO WEIGHT OF BARRIER RAIL	0.000	0.000	0.000	0.000	0.000	0.000	0.000	0.000	0.000	0.000	0.000	0.000	0.000	0.000	0.000	0.000	0.000	0.000	0.000	0.000	0.000
TOTAL DEAD LOAD DEFLECTION	0.000	-0.003	-0.006	-0.009	-0.012	-0.014	-0.015	-0.016	-0.016	-0.016	-0.016	-0.015	-0.013	-0.011	-0.009	-0.007	-0.005	-0.003	-0.001	0.000	0.000
VERTICAL CURVE ORDINATE	0.000	0.001	0.001	0.001	0.002	0.002	0.002	0.002	0.001	0.001	0.001	0.000	-0.01	-0.003	-0.004	-0.004	-0.004	-0.003	-0.003	-0.001	0.000
ORDINATE DUE TO SUPERELEVATION	0.000	0.000	0.000	0.000	0.000	0.000	0.000	0.000	0.000	0.000	0.000	0.000	0.000	0.000	0.000	0.000	0.000	0.000	0.000	0.000	0.000
HEAT	0.000	0.000	0.000	0.000	0.000	0.000	0.000	0.000	0.000	0.000	0.000	0.000	0.000	0.000	0.000	0.000	0.000	0.000	0.000	0.000	0.000
REQUIRED CAMBER	0	4	7	10	14	16	17	18	17	17	17	15	12	8	5	3	1	0	-2	-1	0

GIRDER 5

TWENTIETH POINTS	0	.05	.10	.15	.20	.25	.30	.35	.40	.45	.50	.55	.60	.65	.70	.75	.80	.85	.90	.95	0
DEFLECTION DUE TO WEIGHT OF GIRDER	0.000	-0.001	-0.001	-0.002	-0.003	-0.003	-0.003	-0.003	-0.003	-0.003	-0.003	-0.003	-0.003	-0.002	-0.002	-0.001	-0.001	0.000	0.000	0.000	0.000
DEFLECTION DUE TO WEIGHT OF SLAB *	0.000	-0.003	-0.006	-0.008	-0.010	-0.012	-0.013	-0.014	-0.015	-0.015	-0.014	-0.013	-0.011	-0.010	-0.008	-0.006	-0.004	-0.003	-0.001	0.000	0.000
DEFLECTION DUE TO WEIGHT OF BARRIER RAIL	0.000	0.000	0.000	0.000	0.000	0.000	0.000	0.000	0.000	0.000	0.000	0.000	0.000	0.000	0.000	0.000	0.000	0.000	0.000	0.000	0.000
TOTAL DEAD LOAD DEFLECTION	0.000	-0.004	-0.007	-0.010	-0.013	-0.015	-0.016	-0.017	-0.018	-0.018	-0.017	-0.016	-0.014	-0.012	-0.010	-0.007	-0.005	-0.003	-0.001	0.000	0.000
VERTICAL CURVE ORDINATE	0.000	0.001	0.001	0.002	0.003	0.003	0.003	0.004	0.004	0.004	0.004	0.004	0.004	0.004	0.004	0.004	0.004	0.003	0.002	0.000	0.000
ORDINATE DUE TO SUPERELEVATION	0.000	0.000	0.000	0.000	0.000	0.000	0.000	0.000	0.000	0.000	0.000	0.000	0.000	0.000	0.000	0.000	0.000	0.000	0.000	0.000	0.000
HEAT	0.000	0.000	0.000	0.000	0.000	0.000	0.000	0.000	0.000	0.000	0.000	0.000	0.000	0.000	0.000	0.000	0.000	0.000	0.000	0.000	0.000
REQUIRED CAMBER	0	5	8	12	16	18	19	21	22	22	21	20	18	16	14	11	7	7	4	2	0

GIRDER 6

TWENTIETH POINTS	0	.05	.10	.15	.20	.25	.30	.35	.40	.45	.50	.55	.60	.65	.70	.75	.80	.85	.90	.95	0
DEFLECTION DUE TO WEIGHT OF GIRDER	0.000	-0.001	-0.002	-0.002	-0.003	-0.003	-0.004	-0.004	-0.004	-0.004	-0.004	-0.003	-0.003	-0.002	-0.002	-0.001	-0.001	0.000	0.000	0.000	0.000
DEFLECTION DUE TO WEIGHT OF SLAB *	0.000	-0.003	-0.006	-0.009	-0.011	-0.013	-0.014	-0.014	-0.014	-0.014	-0.015	-0.014	-0.012	-0.011	-0.009	-0.007	-0.005	-0.003	-0.001	0.000	0.000
DEFLECTION DUE TO WEIGHT OF BARRIER RAIL	0.000	0.000	0.000	0.000	0.000	0.000	0.000	-0.001	-0.001	-0.001	0.000	0.000	0.000	0.000	0.000	0.000	0.000	0.000	0.000	0.000	0.000
TOTAL DEAD LOAD DEFLECTION	0.000	-0.004	-0.008	-0.011	-0.014	-0.016	-0.018	-0.019	-0.019	-0.019	-0.019	-0.017	-0.015	-0.013	-0.011	-0.008	-0.006	-0.003	-0.001	0.000	0.000
VERTICAL CURVE ORDINATE	0.000	0.002	0.004	0.006	0.008	0.009	0.010	0.011	0.011	0.012	0.012	0.012	0.011	0.011	0.010	0.009	0.008	0.006	0.004	0.002	0.000
ORDINATE DUE TO SUPERELEVATION	0.000	0.000	0.000	0.000	0.000	0.000	0.000	0.000	0.000	0.000	0.000	0.000	0.000	0.000	0.000	0.000	0.000	0.000	0.000	0.000	0.000
HEAT	0.000	0.000	0.000	0.000	0.000	0.000	0.000	0.000	0.000	0.000	0.000	0.000	0.000	0.000	0.000	0.000	0.000	0.000	0.000	0.000	0.000
REQUIRED CAMBER	0	6	12	17	22	25	28	30	30	31	31	29	26	24	21	17	14	9	5	2	0

GIRDER 7

TWENTIETH POINTS	0	.05	.10	.15	.20	.25	.30	.35	.40	.45	.50	.55	.60	.65	.70	.75	.80	.85	.90	.95	0
DEFLECTION DUE TO WEIGHT OF GIRDER	0.000	-0.001	-0.002	-0.002	-0.003	-0.004	-0.004	-0.004	-0.004	-0.004	-0.004	-0.004	-0.003	-0.003	-0.002	-0.001	-0.001	0.000	0.000	0.000	0.000
DEFLECTION DUE TO WEIGHT OF SLAB *	0.000	-0.003	-0.006	-0.010	-0.012	-0.012	-0.014	-0.015	-0.016	-0.016	-0.015	-0.014	-0.014	-0.011	-0.010	-0.008	-0.005	-0.004	-0.002	0.000	0.000
DEFLECTION DUE TO WEIGHT OF BARRIER RAIL	0.000	0.000	0.000	0.000	0.000	-0.001	-0.001	-0.001	-0.001	-0.001	-0.001	-0.001	0.000	0.000	0.000	0.000	0.000	0.000	0.000	0.000	0.000
TOTAL DEAD LOAD DEFLECTION	0.000	-0.004	-0.008	-0.012	-0.015	-0.017	-0.019	-0.020	-0.021	-0.021	-0.020	-0.019	-0.017	-0.014	-0.012	-0.009	-0.006	-0.004	-0.002	0.000	0.000
VERTICAL CURVE ORDINATE	0.000	0.002	0.004	0.005	0.007	0.008	0.009	0.010	0.010	0.011	0.011	0.011	0.010	0.010	0.009	0.008	0.007	0.005	0.004	0.002	0.000
ORDINATE DUE TO SUPERELEVATION	0.000	0.000	0.000	0.000	0.000	0.000	0.000	0.000	0.000	0.000	0.000	0.000	0.000	0.000	0.000	0.000	0.000	0.000	0.000	0.000	0.000
HEAT	0.000	0.000	0.000	0.000	0.000	0.000	0.000	0.000	0.000	0.000	0.000	0.000	0.000	0.000	0.000	0.000	0.000	0.000	0.000	0.000	0.000
REQUIRED CAMBER	0	6	12	17	22	25	28	30	31	32	31	30	27	24	21	17	13	9	6	2	0

GIRDER 8

TWENTIETH POINTS	0	.05	.10	.15	.20	.25	.30	.35	.40	.45	.50	.55	.60	.65	.70	.75	.80	.85	.90	.95	0
DEFLECTION DUE TO WEIGHT OF GIRDER	0.000	-0.001	-0.002	-0.003	-0.003	-0.004	-0.004	-0.005	-0.005	-0.005	-0.004	-0.004	-0.004	-0.003	-0.002	-0.002	-0.001	-0.001	0.000	0.000	0.000
DEFLECTION DUE TO WEIGHT OF SLAB *	0.000	-0.004	-0.007	-0.009	-0.012	-0.013	-0.015	-0.016	-0.016	-0.016	-0.016	-0.015	-0.013	-0.012	-0.010	-0.007	-0.005	-0.003	-0.002	0.000	0.000
DEFLECTION DUE TO WEIGHT OF BARRIER RAIL	0.000	0.000	0.000	0.000	0.000	-0.001	-0.001	-0.001	-0.001	-0.001	-0.001	-0.001	-0.001	0.000	0.000	0.000	0.000	0.000	0.000	0.000	0.000
TOTAL DEAD LOAD DEFLECTION	0.000	-0.005	-0.009	-0.012	-0.015	-0.018	-0.020	-0.022	-0.022	-0.022	-0.021	-0.020	-0.018	-0.015	-0.012	-0.009	-0.006	-0.004	-0.002	0.000	0.000
VERTICAL CURVE ORDINATE	0.000	0.002	0.003	0.005	0.006	0.007	0.008	0.009	0.009	0.010	0.010	0.010	0.009	0.009	0.008	0.007	0.006	0.005	0.003	0.002	0.000
ORDINATE DUE TO SUPERELEVATION	0.000	0.000	0.000	0.000	0.000	0.000	0.000	0.000	0.000	0.000	0.000	0.000	0.000	0.000	0.000	0.000	0.000	0.000	0.000	0.000	0.000
HEAT	0.000	0.000	0.000	0.000	0.000	0.000	0.000	0.000	0.000	0.000	0.000	0.000	0.000	0.000	0.000	0.000	0.000	0.000	0.000	0.000	0.000
REQUIRED CAMBER	0	7	12	17	21	25	28	31	31	32	31	30	27	24	20	16	12	9	5	2	0

* INCLUDES SLAB, BUILDUPS & STAY-IN-PLACE FORMS.
ALL VALUES ARE SHOWN IN METERS, EXCEPT "FINAL CAMBER" WHICH IS SHOWN IN MILLIMETERS.
VALUES GIVEN IN TABLE ARE AT TWENTIETH POINTS BETWEEN ℄ BEARINGS.

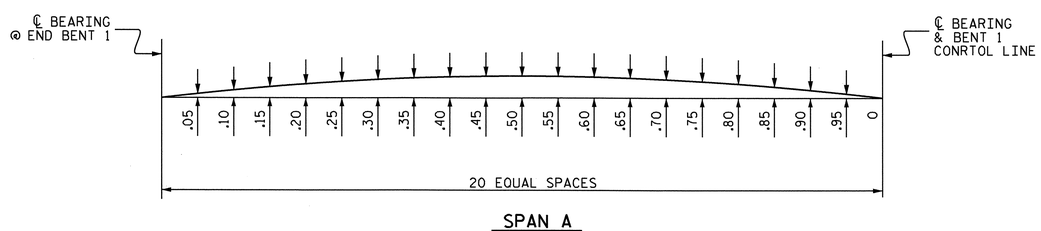

SPAN A

SCHEMATIC OF CAMBER ORDINATES

FOR CAMBER VALUES AT EACH GIDER TWENTIETH POINTS, SEE TABLE ABOVE.
SLOPE FOR ZERO CAMBER BASE LINE VARIES.

NORTH CAROLINA PROFESSIONAL SEAL 16301 ENGINEER TING HSIUNG FANG
3/23/11

PROJECT NO. U-2519DA
CUMBERLAND COUNTY
STATION: 28+66.746 -COL2-

SHEET 1 OF 5

STATE OF NORTH CAROLINA
DEPARTMENT OF TRANSPORTATION
RALEIGH
SUPERSTRUCTURE

DEAD LOAD DEFLECTION TABLES

SPAN A

REVISIONS						SHEET NO.
NO.	BY:	DATE:	NO.	BY:	DATE:	S-46
1			3			TOTAL SHEETS
2			4			411

DRAWN BY : Z. H. BROWN DATE : 7/22/08
CHECKED BY : T. H. FANG DATE : 7/25/08

23-MAR-2011 15:43
R:\Structures\frye\str3_COL2\Final Plans\u-2519da_sd_dl_03.dgn
rppatel

DEAD LOAD DEFLECTION TABLE FOR GIRDERS

SPAN B

GIRDER 1

TWENTIETH POINTS	0	.05	.10	.15	.20	.25	.30	.35	.40	.45	.50	.55	.60	.65	.70	.75	.80	.85	.90	.95	0
DEFLECTION DUE TO WEIGHT OF GIRDER	0.000	-0.001	-0.001	-0.002	-0.003	-0.004	-0.005	-0.006	-0.006	-0.007	-0.007	-0.007	-0.007	-0.007	-0.007	-0.006	-0.005	-0.004	-0.003	-0.001	0.000
DEFLECTION DUE TO WEIGHT OF SLAB *	0.000	-0.001	-0.003	-0.004	-0.006	-0.008	-0.010	-0.012	-0.014	-0.015	-0.016	-0.017	-0.017	-0.016	-0.014	-0.013	-0.011	-0.008	-0.006	-0.004	0.000
DEFLECTION DUE TO WEIGHT OF BARRIER RAIL	0.000	0.000	0.000	0.000	0.000	-0.001	-0.001	-0.001	-0.001	-0.001	-0.001	-0.001	-0.001	-0.001	-0.001	-0.001	-0.001	-0.001	0.000	0.000	0.000
TOTAL DEAD LOAD DEFLECTION	0.000	-0.002	-0.004	-0.006	-0.009	-0.013	-0.016	-0.019	-0.021	-0.023	-0.024	-0.025	-0.025	-0.024	-0.022	-0.020	-0.017	-0.013	-0.009	-0.005	0.000
VERTICAL CURVE ORDINATE	0.000	0.011	0.022	0.032	0.040	0.043	0.045	0.046	0.046	0.046	0.045	0.043	0.041	0.038	0.034	0.030	0.025	0.020	0.014	0.007	0.000
ORDINATE DUE TO SUPERELEVATION	0.000	0.000	0.000	0.000	0.000	0.000	0.000	0.000	0.000	0.000	0.000	0.000	0.000	0.000	0.000	0.000	0.000	0.000	0.000	0.000	0.000
HEAT	0.000	0.001	0.002	0.003	0.004	0.006	0.007	0.009	0.010	0.011	0.011	0.012	0.012	0.011	0.010	0.009	0.008	0.006	0.004	0.002	0.000
REQUIRED CAMBER	0	13	26	38	49	56	61	65	67	69	69	68	66	62	56	50	42	33	23	12	0

GIRDER 2

TWENTIETH POINTS	0	.05	.10	.15	.20	.25	.30	.35	.40	.45	.50	.55	.60	.65	.70	.75	.80	.85	.90	.95	0
DEFLECTION DUE TO WEIGHT OF GIRDER	0.000	-0.001	-0.001	-0.002	-0.003	-0.004	-0.005	-0.006	-0.007	-0.007	-0.008	-0.008	-0.008	-0.008	-0.008	-0.007	-0.006	-0.005	-0.004	-0.003	0.000
DEFLECTION DUE TO WEIGHT OF SLAB *	0.000	0.000	-0.003	-0.005	-0.007	-0.008	-0.011	-0.013	-0.014	-0.016	-0.017	-0.017	-0.017	-0.016	-0.016	-0.014	-0.012	-0.009	-0.007	-0.003	0.000
DEFLECTION DUE TO WEIGHT OF BARRIER RAIL	0.000	0.000	0.000	0.000	0.000	-0.001	-0.001	-0.001	-0.001	-0.001	-0.001	-0.001	-0.001	-0.001	-0.001	-0.001	-0.001	-0.001	0.000	0.000	0.000
TOTAL DEAD LOAD DEFLECTION	0.000	-0.001	-0.004	-0.007	-0.010	-0.013	-0.017	-0.020	-0.022	-0.024	-0.026	-0.026	-0.026	-0.025	-0.024	-0.021	-0.018	-0.014	-0.010	-0.005	0.000
VERTICAL CURVE ORDINATE	0.000	0.009	0.018	0.027	0.034	0.036	0.038	0.039	0.039	0.039	0.038	0.037	0.035	0.032	0.029	0.026	0.022	0.017	0.012	0.006	0.000
ORDINATE DUE TO SUPERELEVATION	0.000	0.000	0.000	0.000	0.000	0.000	0.000	0.000	0.000	0.000	0.000	0.000	0.000	0.000	0.000	0.000	0.000	0.000	0.000	0.000	0.000
HEAT	0.000	0.000	0.001	0.002	0.003	0.003	0.004	0.005	0.006	0.006	0.007	0.007	0.007	0.006	0.006	0.005	0.005	0.004	0.003	0.001	0.000
REQUIRED CAMBER	0	10	23	36	47	52	59	64	67	69	71	70	68	63	59	52	45	35	25	12	0

GIRDER 3

TWENTIETH POINTS	0	.05	.10	.15	.20	.25	.30	.35	.40	.45	.50	.55	.60	.65	.70	.75	.80	.85	.90	.95	0
DEFLECTION DUE TO WEIGHT OF GIRDER	0.000	-0.001	-0.001	-0.002	-0.003	-0.004	-0.005	-0.006	-0.007	-0.008	-0.008	-0.008	-0.008	-0.008	-0.007	-0.007	-0.006	-0.004	-0.003	-0.002	0.000
DEFLECTION DUE TO WEIGHT OF SLAB *	0.000	0.000	-0.003	-0.005	-0.006	-0.009	-0.011	-0.013	-0.015	-0.016	-0.018	-0.018	-0.019	-0.018	-0.018	-0.017	-0.014	-0.012	-0.010	-0.007	0.000
DEFLECTION DUE TO WEIGHT OF BARRIER RAIL	0.000	0.000	0.000	0.000	-0.001	-0.001	-0.001	-0.001	-0.001	-0.001	-0.001	-0.001	-0.001	-0.001	-0.001	-0.001	-0.001	-0.001	0.000	0.000	0.000
TOTAL DEAD LOAD DEFLECTION	0.000	-0.001	-0.004	-0.007	-0.010	-0.014	-0.017	-0.020	-0.023	-0.025	-0.027	-0.028	-0.027	-0.027	-0.025	-0.022	-0.019	-0.015	-0.010	-0.005	0.000
VERTICAL CURVE ORDINATE	0.000	0.007	0.015	0.022	0.027	0.029	0.031	0.032	0.032	0.032	0.032	0.031	0.029	0.027	0.025	.022	0.018	0.015	0.010	0.005	0.000
ORDINATE DUE TO SUPERELEVATION	0.000	0.000	0.000	0.000	0.000	0.000	0.000	0.000	0.000	0.000	0.000	0.000	0.000	0.000	0.000	0.000	0.000	0.000	0.000	0.000	0.000
HEAT	0.000	0.000	0.000	0.000	0.000	0.000	0.000	0.000	0.000	0.000	0.000	0.000	0.000	0.000	0.000	0.000	0.000	0.000	0.000	0.000	0.000
REQUIRED CAMBER	0	8	19	29	37	43	48	52	55	57	59	59	56	54	50	44	37	30	20	10	0

GIRDER 4

TWENTIETH POINTS	0	.05	.10	.15	.20	.25	.30	.35	.40	.45	.50	.55	.60	.65	.70	.75	.80	.85	.90	.95	0
DEFLECTION DUE TO WEIGHT OF GIRDER	0.000	-0.001	-0.001	-0.002	-0.003	-0.005	-0.006	-0.007	-0.007	-0.008	-0.008	-0.009	-0.009	-0.008	-0.008	-0.007	-0.006	-0.005	-0.003	-0.002	0.000
DEFLECTION DUE TO WEIGHT OF SLAB *	0.000	0.000	-0.003	-0.005	-0.006	-0.008	-0.011	-0.013	-0.016	-0.017	-0.019	-0.018	-0.018	-0.018	-0.017	-0.015	-0.012	-0.009	-0.008	-0.004	0.000
DEFLECTION DUE TO WEIGHT OF BARRIER RAIL	0.000	0.000	0.000	0.000	-0.001	-0.001	-0.001	-0.001	-0.001	-0.001	-0.001	-0.001	-0.001	-0.001	-0.001	-0.001	-0.001	-0.001	0.000	0.000	0.000
TOTAL DEAD LOAD DEFLECTION	0.000	-0.001	-0.004	-0.007	-0.010	-0.014	-0.018	-0.021	-0.024	-0.026	-0.028	-0.028	-0.028	-0.027	-0.026	-0.023	-0.019	-0.015	-0.011	-0.006	0.000
VERTICAL CURVE ORDINATE	0.000	0.006	0.011	0.018	0.021	0.023	0.025	0.026	0.026	0.026	0.026	0.025	0.024	0.023	0.021	0.018	0.015	0.012	0.008	0.004	0.000
ORDINATE DUE TO SUPERELEVATION	0.000	0.000	0.000	0.000	0.000	0.000	0.000	0.000	0.000	0.000	0.000	0.000	0.000	0.000	0.000	0.000	0.000	0.000	0.000	0.000	0.000
HEAT	0.000	0.000	0.000	0.000	0.000	0.000	0.000	0.000	0.000	0.000	0.000	0.000	0.000	0.000	0.000	0.000	0.000	0.000	0.000	0.000	0.000
REQUIRED CAMBER	0	7	15	25	31	37	43	47	50	52	54	53	52	50	47	41	34	27	19	10	0

GIRDER 5

TWENTIETH POINTS	0	.05	.10	.15	.20	.25	.30	.35	.40	.45	.50	.55	.60	.65	.70	.75	.80	.85	.90	.95	0
DEFLECTION DUE TO WEIGHT OF GIRDER	0.000	-0.001	-0.001	-0.002	-0.003	-0.005	-0.006	-0.007	-0.008	-0.008	-0.009	-0.009	-0.009	-0.008	-0.008	-0.007	-0.006	-0.005	-0.003	-0.002	0.000
DEFLECTION DUE TO WEIGHT OF SLAB *	0.000	0.000	-0.003	-0.005	-0.006	-0.008	-0.011	-0.013	-0.015	-0.018	-0.018	-0.019	-0.019	-0.019	-0.017	-0.016	-0.013	-0.010	-0.007	-0.004	0.000
DEFLECTION DUE TO WEIGHT OF BARRIER RAIL	0.000	0.000	0.000	0.000	-0.001	-0.001	-0.001	-0.001	-0.001	-0.001	-0.001	-0.001	-0.001	-0.001	-0.001	-0.001	-0.001	-0.001	0.000	0.000	0.000
TOTAL DEAD LOAD DEFLECTION	0.000	-0.001	-0.004	-0.007	-0.010	-0.014	-0.018	-0.021	-0.024	-0.027	-0.028	-0.029	-0.029	-0.028	-0.026	-0.024	-0.020	-0.016	-0.011	-0.006	0.000
VERTICAL CURVE ORDINATE	0.000	0.003	0.006	0.009	0.011	0.013	0.015	0.016	0.017	0.017	0.017	0.017	0.017	0.016	0.015	0.013	0.011	0.009	0.006	0.003	0.000
ORDINATE DUE TO SUPERELEVATION	0.000	0.000	0.000	0.000	0.000	0.000	0.000	0.000	0.000	0.000	0.000	0.000	0.000	0.000	0.000	0.000	0.000	0.000	0.000	0.000	0.000
HEAT	0.000	0.000	0.000	0.000	0.000	0.000	0.000	0.000	0.000	0.000	0.000	0.000	0.000	0.000	0.000	0.000	0.000	0.000	0.000	0.000	0.000
REQUIRED CAMBER	0	4	10	16	21	27	33	37	41	44	45	46	46	44	41	37	31	25	17	9	0

GIRDER 6

TWENTIETH POINTS	0	.05	.10	.15	.20	.25	.30	.35	.40	.45	.50	.55	.60	.65	.70	.75	.80	.85	.90	.95	0
DEFLECTION DUE TO WEIGHT OF GIRDER	0.000	-0.001	-0.001	-0.002	-0.004	-0.005	-0.006	-0.007	-0.008	-0.008	-0.009	-0.009	-0.009	-0.009	-0.008	-0.007	-0.006	-0.005	-0.003	-0.002	0.000
DEFLECTION DUE TO WEIGHT OF SLAB *	0.000	0.000	-0.003	-0.005	-0.006	-0.008	-0.012	-0.014	-0.016	-0.018	-0.019	-0.020	-0.020	-0.019	-0.018	-0.016	-0.013	-0.010	-0.007	-0.004	0.000
DEFLECTION DUE TO WEIGHT OF BARRIER RAIL	0.000	0.000	0.000	0.000	-0.001	-0.001	-0.001	-0.001	-0.001	-0.001	-0.001	-0.001	-0.001	-0.001	-0.001	-0.001	-0.001	-0.001	0.000	0.000	0.000
TOTAL DEAD LOAD DEFLECTION	0.000	-0.001	-0.004	-0.007	-0.011	-0.014	-0.019	-0.022	-0.025	-0.027	-0.029	-0.030	-0.030	-0.029	-0.027	-0.024	-0.020	-0.016	-0.011	-0.006	0.000
VERTICAL CURVE ORDINATE	0.000	0.003	0.005	0.008	0.010	0.011	0.013	0.014	0.015	0.015	0.015	0.015	0.015	0.014	0.013	0.011	0.010	0.008	0.005	0.003	0.000
ORDINATE DUE TO SUPERELEVATION	0.000	0.000	0.000	0.000	0.000	0.000	0.000	0.000	0.000	0.000	0.000	0.000	0.000	0.000	0.000	0.000	0.000	0.000	0.000	0.000	0.000
HEAT	0.000	0.000	0.000	0.000	0.000	0.000	0.000	0.000	0.000	0.000	0.000	0.000	0.000	0.000	0.000	0.000	0.000	0.000	0.000	0.000	0.000
REQUIRED CAMBER	0	4	9	15	21	25	32	36	40	42	44	45	45	43	40	35	30	24	16	9	0

GIRDER 7

TWENTIETH POINTS	0	.05	.10	.15	.20	.25	.30	.35	.40	.45	.50	.55	.60	.65	.70	.75	.80	.85	.90	.95	0
DEFLECTION DUE TO WEIGHT OF GIRDER	0.000	-0.001	-0.001	-0.002	-0.004	-0.005	-0.006	-0.007	-0.008	-0.008	-0.009	-0.009	-0.009	-0.009	-0.008	-0.007	-0.006	-0.005	-0.003	-0.002	0.000
DEFLECTION DUE TO WEIGHT OF SLAB *	0.000	0.000	-0.003	-0.005	-0.006	-0.009	-0.012	-0.014	-0.017	-0.019	-0.020	-0.021	-0.021	-0.020	-0.019	-0.017	-0.014	-0.011	-0.008	-0.004	0.000
DEFLECTION DUE TO WEIGHT OF BARRIER RAIL	0.000	0.000	0.000	0.000	-0.001	-0.001	-0.001	-0.001	-0.001	-0.001	-0.001	-0.001	-0.001	-0.001	-0.001	-0.001	-0.001	-0.001	0.000	0.000	0.000
TOTAL DEAD LOAD DEFLECTION	0.000	-0.001	-0.004	-0.007	-0.011	-0.015	-0.019	-0.022	-0.026	-0.028	-0.030	-0.031	-0.031	-0.030	-0.028	-0.025	-0.021	-0.017	-0.012	-0.006	0.000
VERTICAL CURVE ORDINATE	0.000	0.003	0.005	0.007	0.009	0.010	0.011	0.012	0.013	0.013	0.013	0.013	0.013	0.012	0.011	0.010	0.009	0.007	0.005	0.003	0.000
ORDINATE DUE TO SUPERELEVATION	0.000	0.000	0.000	0.000	0.000	0.000	0.000	0.000	0.000	0.000	0.000	0.000	0.000	0.000	0.000	0.000	0.000	0.000	0.000	0.000	0.000
HEAT	0.000	0.000	0.000	0.000	0.000	0.000	0.000	0.000	0.000	0.000	0.000	0.000	0.000	0.000	0.000	0.000	0.000	0.000	0.000	0.000	0.000
REQUIRED CAMBER	0	4	9	14	20	25	30	34	39	41	43	44	44	42	39	35	30	24	17	9	0

GIRDER 8

TWENTIETH POINTS	0	.05	.10	.15	.20	.25	.30	.35	.40	.45	.50	.55	.60	.65	.70	.75	.80	.85	.90	.95	0
DEFLECTION DUE TO WEIGHT OF GIRDER	0.000	-0.001	-0.001	-0.002	-0.004	-0.005	-0.006	-0.007	-0.008	-0.009	-0.009	-0.009	-0.009	-0.009	-0.008	-0.008	-0.006	-0.005	-0.004	-0.002	0.000
DEFLECTION DUE TO WEIGHT OF SLAB *	0.000	0.000	-0.003	-0.005	-0.006	-0.009	-0.012	-0.015	-0.017	-0.019	-0.021	-0.022	-0.022	-0.021	-0.020	-0.017	-0.015	-0.011	-0.007	-0.004	0.000
DEFLECTION DUE TO WEIGHT OF BARRIER RAIL	0.000	0.000	0.000	0.000	-0.001	-0.001	-0.001	-0.001	-0.001	-0.001	-0.001	-0.001	-0.001	-0.001	-0.001	-0.001	-0.001	-0.001	0.000	0.000	0.000
TOTAL DEAD LOAD DEFLECTION	0.000	-0.001	-0.004	-0.007	-0.011	-0.015	-0.019	-0.023	-0.026	-0.029	-0.031	-0.032	-0.032	-0.031	-0.029	-0.026	-0.022	-0.017	-0.012	-0.006	0.000
VERTICAL CURVE ORDINATE	0.000	0.002	0.004	0.006	0.007	0.009	0.010	0.011	0.011	0.011	0.012	0.011	0.011	0.011	0.010	0.009	0.007	0.006	0.004	0.002	0.000
ORDINATE DUE TO SUPERELEVATION	0.000	0.000	0.000	0.000	0.000	0.000	0.000	0.000	0.000	0.000	0.000	0.000	0.000	0.000	0.000	0.000	0.000	0.000	0.000	0.000	0.000
HEAT	0.000	0.000	0.000	0.000	0.000	0.000	0.000	0.000	0.000	0.000	0.000	0.000	0.000	0.000	0.000	0.000	0.000	0.000	0.000	0.000	0.000
REQUIRED CAMBER	0	3	8	13	18	24	29	34	37	40	43	43	43	42	39	35	29	23	16	8	0

* INCLUDES SLAB, BUILDUPS & STAY-IN-PLACE FORMS.
ALL VALUES ARE SHOWN IN METERS, EXCEPT "FINAL CAMBER" WHICH IS SHOWN IN MILLIMETERS.
VALUES GIVEN IN TABLE ARE AT TWENTIETH POINTS BETWEEN ℄ BEARINGS.

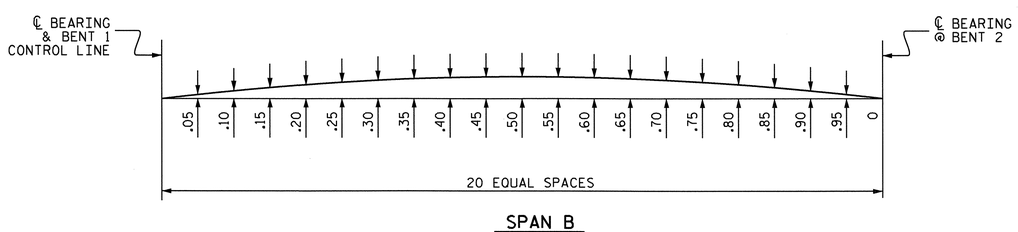

SPAN B

SCHEMATIC OF CAMBER ORDINATES

FOR CAMBER VALUES AT EACH GIDER TWENTIETH POINTS, SEE TABLE ABOVE.
SLOPE FOR ZERO CAMBER BASE LINE VARIES.

NORTH CAROLINA PROFESSIONAL SEAL 16301 ENGINEER HSIANG-LING FANG
3/23/11

PROJECT NO. U-2519DA
CUMBERLAND COUNTY
STATION: 28+66.746 -COL2-

SHEET 2 OF 5

STATE OF NORTH CAROLINA
DEPARTMENT OF TRANSPORTATION
RALEIGH
SUPERSTRUCTURE

DEAD LOAD DEFLECTION TABLES

SPAN B

REVISIONS						SHEET NO.
NO.	BY:	DATE:	NO.	BY:	DATE:	S-47
1			3			TOTAL SHEETS
2			4			411

DRAWN BY : Z. H. BROWN DATE : 7/22/08
CHECKED BY : T. H. FANG DATE : 7/25/08

23-MAR-2011 15:42
R:\Structures\frye\str3_COL2\Final Plans\u-2519da_sd_dl_03.dgn
rppatel

DEAD LOAD DEFLECTION TABLE FOR GIRDERS

SPAN C

GIRDER 1

TWENTIETH POINTS	0	.05	.10	.15	.20	.25	.30	.35	.40	.45	.50	.55	.60	.65	.70	.75	.80	.85	.90	.95	0
DEFLECTION DUE TO WEIGHT OF GIRDER	0.000	-0.003	-0.005	-0.007	-0.009	-0.011	-0.012	-0.013	-0.013	-0.013	-0.013	-0.012	-0.011	-0.009	-0.008	-0.006	-0.004	-0.003	-0.002	-0.001	0.000
DEFLECTION DUE TO WEIGHT OF SLAB *	0.000	-0.009	-0.018	-0.026	-0.033	-0.038	-0.043	-0.046	-0.047	-0.047	-0.046	-0.043	-0.039	-0.034	-0.029	-0.023	-0.017	-0.012	-0.007	-0.003	0.000
DEFLECTION DUE TO WEIGHT OF BARRIER RAIL	0.000	-0.001	-0.001	-0.002	-0.002	-0.003	-0.003	-0.003	-0.004	-0.004	-0.003	-0.003	-0.003	-0.003	-0.002	-0.002	-0.001	-0.001	-0.001	0.000	0.000
TOTAL DEAD LOAD DEFLECTION	0.000	-0.013	-0.024	-0.035	-0.044	-0.052	-0.058	-0.062	-0.064	-0.064	-0.062	-0.058	-0.053	-0.046	-0.039	-0.031	-0.022	-0.016	-0.010	-0.004	0.000
VERTICAL CURVE ORDINATE	0.000	0.003	0.005	0.007	0.009	0.011	0.012	0.013	0.014	0.014	0.014	0.014	0.014	0.013	0.012	0.011	0.009	0.007	0.005	0.003	0.000
ORDINATE DUE TO SUPERELEVATION	0.000	0.000	0.000	0.000	0.000	0.000	0.000	0.000	0.000	0.000	0.000	0.000	0.000	0.000	0.000	0.000	0.000	0.000	0.000	0.000	0.000
REQUIRED CAMBER	0	16	29	42	53	63	70	75	78	78	76	72	67	59	51	42	31	23	15	7	0

GIRDER 2

TWENTIETH POINTS	0	.05	.10	.15	.20	.25	.30	.35	.40	.45	.50	.55	.60	.65	.70	.75	.80	.85	.90	.95	0
DEFLECTION DUE TO WEIGHT OF GIRDER	0.000	-0.003	-0.005	-0.008	-0.010	-0.012	-0.013	-0.014	-0.014	-0.014	-0.013	-0.013	-0.011	-0.010	-0.008	-0.006	-0.005	-0.003	-0.002	-0.001	0.000
DEFLECTION DUE TO WEIGHT OF SLAB *	0.000	-0.009	-0.019	-0.027	-0.035	-0.040	-0.045	-0.048	-0.050	-0.050	-0.048	-0.045	-0.041	-0.036	-0.031	-0.024	-0.018	-0.013	-0.007	-0.003	0.000
DEFLECTION DUE TO WEIGHT OF BARRIER RAIL	0.000	-0.001	-0.001	-0.002	-0.003	-0.003	-0.003	-0.004	-0.004	-0.004	-0.004	-0.003	-0.003	-0.003	-0.002	-0.002	-0.001	-0.001	-0.001	0.000	0.000
TOTAL DEAD LOAD DEFLECTION	0.000	-0.013	-0.025	-0.037	-0.048	-0.055	-0.061	-0.066	-0.068	-0.068	-0.065	-0.061	-0.055	-0.049	-0.041	-0.032	-0.024	-0.017	-0.010	-0.004	0.000
VERTICAL CURVE ORDINATE	0.000	0.003	0.005	0.008	0.010	0.011	0.012	0.013	0.014	0.015	0.015	0.015	0.014	0.013	0.012	0.011	0.010	0.008	0.005	0.003	0.000
ORDINATE DUE TO SUPERELEVATION	0.000	0.000	0.000	0.000	0.000	0.000	0.000	0.000	0.000	0.000	0.000	0.000	0.000	0.000	0.000	0.000	0.000	0.000	0.000	0.000	0.000
REQUIRED CAMBER	0	16	30	45	58	66	73	79	82	83	80	76	69	62	53	43	34	25	15	7	0

GIRDER 3

TWENTIETH POINTS	0	.05	.10	.15	.20	.25	.30	.35	.40	.45	.50	.55	.60	.65	.70	.75	.80	.85	.90	.95	0
DEFLECTION DUE TO WEIGHT OF GIRDER	0.000	-0.003	-0.006	-0.008	-0.010	-0.012	-0.014	-0.014	-0.015	-0.014	-0.014	-0.013	-0.012	-0.010	-0.009	-0.007	-0.005	-0.003	-0.002	-0.001	0.000
DEFLECTION DUE TO WEIGHT OF SLAB *	0.000	-0.010	-0.020	-0.028	-0.036	-0.042	-0.047	-0.051	-0.052	-0.052	-0.051	-0.048	-0.043	-0.038	-0.032	-0.026	-0.019	-0.014	-0.008	-0.003	0.000
DEFLECTION DUE TO WEIGHT OF BARRIER RAIL	0.000	-0.001	-0.001	-0.002	-0.003	-0.003	-0.004	-0.004	-0.004	-0.004	-0.004	-0.004	-0.003	-0.003	-0.002	-0.002	-0.002	-0.001	-0.001	0.000	0.000
TOTAL DEAD LOAD DEFLECTION	0.000	-0.014	-0.027	-0.038	-0.049	-0.057	-0.065	-0.069	-0.071	-0.071	-0.069	-0.065	-0.058	-0.051	-0.043	-0.035	-0.026	-0.018	-0.011	-0.004	0.000
VERTICAL CURVE ORDINATE	0.000	0.003	0.005	0.008	0.010	0.011	0.013	0.014	0.015	0.015	0.015	0.015	0.015	0.014	0.013	0.011	0.010	0.008	0.005	0.003	0.000
ORDINATE DUE TO SUPERELEVATION	0.000	0.000	0.000	0.000	0.000	0.000	0.000	0.000	0.000	0.000	0.000	0.000	0.000	0.000	0.000	0.000	0.000	0.000	0.000	0.000	0.000
REQUIRED CAMBER	0	17	32	46	59	68	78	83	86	86	84	80	73	65	56	46	36	26	16	7	0

GIRDER 4

TWENTIETH POINTS	0	.05	.10	.15	.20	.25	.30	.35	.40	.45	.50	.55	.60	.65	.70	.75	.80	.85	.90	.95	0
DEFLECTION DUE TO WEIGHT OF GIRDER	0.000	-0.003	-0.006	-0.009	-0.011	-0.013	-0.014	-0.015	-0.016	-0.016	-0.015	-0.014	-0.013	-0.011	-0.009	-0.007	-0.005	-0.004	-0.002	-0.001	0.000
DEFLECTION DUE TO WEIGHT OF SLAB *	0.000	-0.010	-0.020	-0.030	-0.038	-0.044	-0.050	-0.053	-0.055	-0.055	-0.053	0.050	-0.046	-0.040	-0.034	-0.027	-0.021	-0.014	-0.008	-0.004	0.000
DEFLECTION DUE TO WEIGHT OF BARRIER RAIL	0.000	-0.001	-0.002	-0.002	-0.003	-0.003	-0.004	-0.004	-0.004	-0.004	-0.004	-0.004	-0.003	-0.003	-0.003	-0.002	-0.002	-0.001	-0.001	0.000	0.000
TOTAL DEAD LOAD DEFLECTION	0.000	-0.014	-0.028	-0.041	-0.052	-0.060	-0.068	-0.072	-0.075	-0.075	-0.072	-0.068	-0.062	-0.054	-0.046	-0.036	-0.028	-0.019	-0.011	-0.005	0.000
VERTICAL CURVE ORDINATE	0.000	0.003	0.006	0.008	0.010	0.012	0.013	0.014	-0.015	0.015	0.016	0.015	0.015	0.014	0.013	0.012	0.010	0.008	0.006	0.003	0.000
ORDINATE DUE TO SUPERELEVATION	0.000	0.000	0.000	0.000	0.000	0.000	0.000	0.000	0.000	0.000	0.000	0.000	0.000	0.000	0.000	0.000	0.000	0.000	0.000	0.000	0.000
REQUIRED CAMBER	0	17	34	49	62	72	81	86	90	90	88	83	77	68	59	48	38	27	17	8	0

GIRDER 5

TWENTIETH POINTS	0	.05	.10	.15	.20	.25	.30	.35	.40	.45	.50	.55	.60	.65	.70	.75	.80	.85	.90	.95	0
DEFLECTION DUE TO WEIGHT OF GIRDER	0.000	-0.003	-0.006	-0.009	-0.012	-0.014	-0.015	-0.016	-0.017	-0.017	-0.016	-0.015	-0.013	-0.012	-0.010	-0.008	-0.006	-0.004	-0.002	-0.001	0.000
DEFLECTION DUE TO WEIGHT OF SLAB *	0.000	-0.011	-0.021	-0.031	-0.039	-0.046	-0.052	-0.056	-0.057	-0.057	-0.056	-0.053	-0.048	-0.042	-0.035	-0.029	-0.022	-0.015	-0.009	-0.004	0.000
DEFLECTION DUE TO WEIGHT OF BARRIER RAIL	0.000	-0.001	-0.002	-0.002	-0.003	-0.004	-0.004	-0.004	-0.004	-0.004	-0.004	-0.004	-0.004	-0.003	-0.003	-0.002	-0.002	-0.001	-0.001	0.000	0.000
TOTAL DEAD LOAD DEFLECTION	0.000	-0.015	-0.029	-0.042	-0.054	-0.064	-0.071	-0.076	-0.078	-0.078	-0.076	-0.072	-0.065	-0.057	-0.048	-0.039	-0.030	-0.020	-0.012	-0.005	0.000
VERTICAL CURVE ORDINATE	0.000	0.003	0.006	0.008	0.010	0.012	0.013	0.014	0.015	0.016	0.016	0.016	0.015	0.014	0.013	0.012	0.010	0.008	0.006	0.003	0.000
ORDINATE DUE TO SUPERELEVATION	0.000	0.000	0.000	0.000	0.000	0.000	0.000	0.000	0.000	0.000	0.000	0.000	0.000	0.000	0.000	0.000	0.000	0.000	0.000	0.000	0.000
REQUIRED CAMBER	0	18	35	50	64	75	84	90	93	94	92	87	80	71	61	50	39	28	17	8	0

GIRDER 6

TWENTIETH POINTS	0	.05	.10	.15	.20	.25	.30	.35	.40	.45	.50	.55	.60	.65	.70	.75	.80	.85	.90	.95	0
DEFLECTION DUE TO WEIGHT OF GIRDER	0.000	-0.003	-0.007	-0.010	-0.012	-0.014	-0.016	-0.017	-0.018	-0.017	-0.017	-0.016	-0.014	-0.012	-0.010	-0.008	-0.006	-0.004	-0.002	-0.001	0.000
DEFLECTION DUE TO WEIGHT OF SLAB *	0.000	-0.011	-0.022	-0.032	-0.041	-0.048	-0.054	-0.058	-0.060	-0.060	-0.058	-0.055	-0.050	-0.044	-0.037	0.030	-0.023	-0.016	-0.009	-0.004	0.000
DEFLECTION DUE TO WEIGHT OF BARRIER RAIL	0.000	-0.001	-0.002	-0.003	-0.003	-0.004	-0.004	-0.005	-0.005	-0.005	-0.005	-0.004	-0.004	-0.004	-0.003	-0.002	-0.002	-0.001	-0.001	0.000	0.000
TOTAL DEAD LOAD DEFLECTION	0.000	-0.015	-0.031	-0.045	-0.056	-0.066	-0.074	-0.080	-0.083	-0.082	-0.080	-0.075	-0.068	-0.060	-0.050	-0.040	-0.031	-0.021	-0.012	-0.005	0.000
VERTICAL CURVE ORDINATE	0.000	0.003	0.006	0.008	0.010	0.012	0.014	0.015	0.016	0.016	0.016	0.016	0.016	0.015	0.014	0.012	0.010	0.008	0.006	0.003	0.000
ORDINATE DUE TO SUPERELEVATION	0.000	0.000	0.000	0.000	0.000	0.000	0.000	0.000	0.000	0.000	0.000	0.000	0.000	0.000	0.000	0.000	0.000	0.000	0.000	0.000	0.000
REQUIRED CAMBER	0	18	37	53	66	78	88	95	99	98	96	91	83	75	64	52	41	29	18	8	0

* INCLUDES SLAB, BUILDUPS & STAY-IN-PLACE FORMS.
ALL VALUES ARE SHOWN IN METERS, EXCEPT "FINAL CAMBER" WHICH IS SHOWN IN MILLIMETERS.
VALUES GIVEN IN TABLE ARE AT TWENTIETH POINTS BETWEEN ℄ BEARINGS.

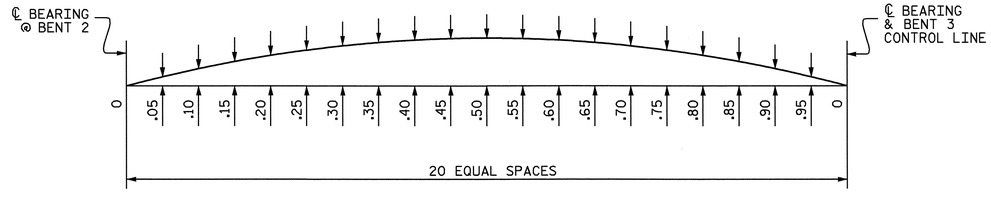

SPAN C

SCHEMATIC OF CAMBER ORDINATES

FOR CAMBER VALUES AT EACH GIDER TWENTIETH POINTS, SEE TABLE ABOVE.
SLOPE FOR ZERO CAMBER BASE LINE VARIES.

NORTH CAROLINA PROFESSIONAL SEAL 16301 ENGINEER TING HSILING FANG
10/03/08

PROJECT NO. U-2519DA
CUMBERLAND COUNTY
STATION: 28+66.746 -COL2-

SHEET 3 OF 5

STATE OF NORTH CAROLINA
DEPARTMENT OF TRANSPORTATION
RALEIGH
SUPERSTRUCTURE

DEAD LOAD DEFLECTION TABLES

SPAN C

REVISIONS						SHEET NO.
NO.	BY:	DATE:	NO.	BY:	DATE:	S-48
1			3			TOTAL SHEETS
2			4			411

DRAWN BY : Z. H. BROWN DATE : 7/10/08
CHECKED BY : T. H. FANG DATE : 7/17/08

03-OCT-2008 11:07
R:\Structures\frye\str3_COL2\Final Plans\u-2519da_sd_dl_03.dgn
sdombrowski

DEAD LOAD DEFLECTION TABLE FOR GIRDERS

SPAN D

GIRDER 1

TWENTIETH POINTS	0	.05	.10	.15	.20	.25	.30	.35	.40	.45	.50	.55	.60	.65	.70	.75	.80	.85	.90	.95	0
DEFLECTION DUE TO WEIGHT OF GIRDER	0.000	0.000	0.000	-0.001	-0.002	-0.003	-0.004	-0.004	-0.005	-0.006	-0.006	-0.006	-0.006	-0.005	-0.004	-0.003	-0.003	-0.002	-0.001	0.000	0.000
DEFLECTION DUE TO WEIGHT OF SLAB *	0.000	0.002	0.002	0.001	0.000	-0.002	-0.004	-0.006	-0.008	-0.010	-0.011	-0.011	-0.010	-0.009	-0.007	-0.005	-0.003	-0.002	0.000	0.000	0.000
DEFLECTION DUE TO WEIGHT OF BARRIER RAIL	0.000	0.000	0.000	0.000	0.000	0.000	-0.001	-0.001	-0.001	-0.001	-0.001	-0.001	-0.001	-0.001	-0.001	-0.001	0.000	0.000	0.000	0.000	0.000
TOTAL DEAD LOAD DEFLECTION	0.000	0.002	0.002	0.000	-0.002	-0.005	-0.009	-0.011	-0.014	-0.017	-0.018	-0.018	-0.017	-0.015	-0.012	-0.009	-0.006	-0.004	-0.001	0.000	0.000
VERTICAL CURVE ORDINATE	0.000	0.003	0.006	0.008	0.011	0.012	0.014	0.015	0.016	0.016	0.017	0.016	0.016	0.015	0.014	0.012	0.011	0.008	0.006	0.003	0.000
ORDINATE DUE TO SUPERELEVATION	0.000	0.000	0.000	0.000	0.000	0.000	0.000	0.000	0.000	0.000	0.000	0.000	0.000	0.000	0.000	0.000	0.000	0.000	0.000	0.000	0.000
REQUIRED CAMBER	0	1	4	8	13	17	23	26	30	33	35	34	33	30	26	21	17	12	7	3	0

GIRDER 2

TWENTIETH POINTS	0	.05	.10	.15	.20	.25	.30	.35	.40	.45	.50	.55	.60	.65	.70	.75	.80	.85	.90	.95	0
DEFLECTION DUE TO WEIGHT OF GIRDER	0.000	0.000	0.000	-0.001	-0.002	-0.002	-0.003	-0.004	-0.005	-0.006	-0.006	-0.006	-0.006	-0.005	-0.004	-0.003	-0.002	-0.002	-0.001	0.000	0.000
DEFLECTION DUE TO WEIGHT OF SLAB *	0.000	0.002	0.002	0.001	0.001	-0.001	-0.003	-0.005	-0.007	-0.009	-0.010	-0.010	-0.009	-0.008	-0.006	-0.005	-0.003	-0.002	0.000	0.000	0.000
DEFLECTION DUE TO WEIGHT OF BARRIER RAIL	0.000	0.000	0.000	0.000	0.000	0.000	0.000	-0.001	-0.001	-0.001	-0.001	-0.001	-0.001	-0.001	-0.001	0.000	0.000	0.000	0.000	0.000	0.000
TOTAL DEAD LOAD DEFLECTION	0.000	0.002	0.002	0.000	-0.001	-0.003	-0.006	-0.010	-0.013	-0.016	-0.017	-0.017	-0.016	-0.014	-0.011	-0.009	-0.005	-0.004	-0.001	0.000	0.000
VERTICAL CURVE ORDINATE	0.000	0.003	0.006	0.008	0.011	0.012	0.014	0.015	0.016	0.016	0.017	0.016	0.016	0.015	0.014	0.012	0.011	0.008	0.006	0.003	0.000
ORDINATE DUE TO SUPERELEVATION	0.000	0.000	0.000	0.000	0.000	0.000	0.000	0.000	0.000	0.000	0.000	0.000	0.000	0.000	0.000	0.000	0.000	0.000	0.000	0.000	0.000
REQUIRED CAMBER	0	1	4	8	12	15	20	25	29	32	34	33	32	29	25	21	16	12	7	3	0

GIRDER 3

TWENTIETH POINTS	0	.05	.10	.15	.20	.25	.30	.35	.40	.45	.50	.55	.60	.65	.70	.75	.80	.85	.90	.95	0
DEFLECTION DUE TO WEIGHT OF GIRDER	0.000	0.000	0.000	-0.001	-0.001	-0.002	-0.003	-0.004	-0.005	-0.005	-0.006	-0.006	-0.005	-0.005	-0.004	-0.003	-0.002	-0.001	-0.001	0.000	0.000
DEFLECTION DUE TO WEIGHT OF SLAB *	0.000	0.002	0.002	0.002	0.001	-0.001	-0.003	-0.004	-0.006	-0.008	-0.009	-0.009	-0.008	-0.008	-0.006	-0.004	-0.003	-0.001	0.000	0.000	0.000
DEFLECTION DUE TO WEIGHT OF BARRIER RAIL	0.000	0.000	0.000	0.000	0.000	0.000	0.000	-0.001	-0.001	-0.001	-0.001	-0.001	-0.001	-0.001	-0.001	-0.001	0.000	0.000	0.000	0.000	0.000
TOTAL DEAD LOAD DEFLECTION	0.000	0.002	0.002	0.001	0.000	-0.003	-0.006	-0.009	-0.012	-0.014	-0.016	-0.016	-0.014	-0.014	-0.011	-0.008	-0.005	-0.002	-0.001	0.000	0.000
VERTICAL CURVE ORDINATE	0.000	0.003	0.006	0.008	0.011	0.012	0.014	0.015	0.016	0.016	0.017	0.016	0.016	0.015	0.014	0.012	0.011	0.008	0.006	0.003	0.000
ORDINATE DUE TO SUPERELEVATION	0.000	0.000	0.000	0.000	0.000	0.000	0.000	0.000	0.000	0.000	0.000	0.000	0.000	0.000	0.000	0.000	0.000	0.000	0.000	0.000	0.000
REQUIRED CAMBER	0	1	4	7	11	15	20	24	28	30	33	32	30	29	25	20	16	10	7	3	0

GIRDER 4

TWENTIETH POINTS	0	.05	.10	.15	.20	.25	.30	.35	.40	.45	.50	.55	.60	.65	.70	.75	.80	.85	.90	.95	0
DEFLECTION DUE TO WEIGHT OF GIRDER	0.000	0.000	0.000	0.000	-0.001	-0.002	-0.003	-0.004	-0.005	-0.005	-0.006	-0.006	-0.005	-0.005	-0.004	-0.003	-0.002	-0.001	-0.001	0.000	0.000
DEFLECTION DUE TO WEIGHT OF SLAB *	0.000	0.002	0.003	0.002	0.002	0.000	-0.002	-0.004	-0.006	-0.007	-0.008	-0.009	-0.008	-0.007	-0.005	-0.004	-0.002	-0.001	0.001	0.001	0.000
DEFLECTION DUE TO WEIGHT OF BARRIER RAIL	0.000	0.000	0.000	0.000	0.000	0.000	0.000	-0.001	-0.001	-0.001	-0.001	-0.001	-0.001	-0.001	-0.001	-0.001	0.000	0.000	0.000	0.000	0.000
TOTAL DEAD LOAD DEFLECTION	0.000	0.002	0.003	0.002	0.001	-0.002	-0.005	-0.009	-0.012	-0.013	-0.015	-0.016	-0.014	-0.013	-0.010	-0.007	-0.004	-0.002	0.000	0.001	0.000
VERTICAL CURVE ORDINATE	0.000	0.003	0.006	0.008	0.011	0.012	0.014	0.015	0.016	0.016	0.017	0.016	0.016	0.015	0.014	0.012	0.011	0.008	0.006	0.003	0.000
ORDINATE DUE TO SUPERELEVATION	0.000	0.000	0.000	0.000	0.000	0.000	0.000	0.000	0.000	0.000	0.000	0.000	0.000	0.000	0.000	0.000	0.000	0.000	0.000	0.000	0.000
REQUIRED CAMBER	0	1	3	6	10	14	19	24	28	29	32	32	30	28	24	19	15	10	6	2	0

GIRDER 5

TWENTIETH POINTS	0	.05	.10	.15	.20	.25	.30	.35	.40	.45	.50	.55	.60	.65	.70	.75	.80	.85	.90	.95	0
DEFLECTION DUE TO WEIGHT OF GIRDER	0.000	0.000	0.000	0.000	-0.001	-0.002	-0.003	-0.004	-0.004	-0.005	-0.005	-0.005	-0.005	-0.005	-0.004	-0.003	-0.002	-0.001	-0.001	0.000	0.000
DEFLECTION DUE TO WEIGHT OF SLAB *	0.000	0.002	0.003	0.003	0.002	0.000	-0.002	-0.003	-0.005	-0.006	-0.007	-0.008	-0.007	-0.007	-0.005	-0.003	-0.002	0.000	0.001	0.001	0.000
DEFLECTION DUE TO WEIGHT OF BARRIER RAIL	0.000	0.000	0.000	0.000	0.000	0.000	0.000	0.000	-0.001	-0.001	-0.001	-0.001	-0.001	-0.001	-0.001	0.000	0.000	0.000	0.000	0.000	0.000
TOTAL DEAD LOAD DEFLECTION	0.000	0.002	0.003	0.003	0.001	-0.002	-0.005	-0.007	-0.010	-0.012	-0.013	-0.014	-0.013	-0.013	-0.010	-0.006	-0.004	-0.001	0.000	0.001	0.000
VERTICAL CURVE ORDINATE	0.000	0.003	0.006	0.008	0.011	0.012	0.014	0.015	0.016	0.016	0.017	0.016	0.016	0.015	0.014	0.012	0.011	0.008	0.006	0.003	0.000
ORDINATE DUE TO SUPERELEVATION	0.000	0.000	0.000	0.000	0.000	0.000	0.000	0.000	0.000	0.000	0.000	0.000	0.000	0.000	0.000	0.000	0.000	0.000	0.000	0.000	0.000
REQUIRED CAMBER	0	1	3	5	10	14	19	22	26	28	30	30	29	28	24	18	15	9	6	2	0

GIRDER 6

TWENTIETH POINTS	0	.05	.10	.15	.20	.25	.30	.35	.40	.45	.50	.55	.60	.65	.70	.75	.80	.85	.90	.95	0
DEFLECTION DUE TO WEIGHT OF GIRDER	0.000	0.000	0.000	0.000	-0.001	-0.002	-0.003	-0.003	-0.004	-0.005	-0.005	-0.005	-0.005	-0.004	-0.004	-0.003	-0.002	-0.001	-0.001	0.000	0.000
DEFLECTION DUE TO WEIGHT OF SLAB *	0.000	0.002	0.003	0.003	0.003	0.001	-0.001	-0.002	-0.004	-0.005	-0.006	-0.007	-0.006	-0.006	-0.004	-0.003	-0.002	0.000	0.001	0.001	0.000
DEFLECTION DUE TO WEIGHT OF BARRIER RAIL	0.000	0.000	0.000	0.000	0.000	0.000	0.000	0.000	-0.001	-0.001	-0.001	-0.001	-0.001	-0.001	-0.001	0.000	0.000	0.000	0.000	0.000	0.000
TOTAL DEAD LOAD DEFLECTION	0.000	0.002	0.003	0.003	0.002	-0.001	-0.004	-0.005	-0.009	-0.011	-0.012	-0.013	-0.012	-0.011	-0.009	-0.006	-0.004	-0.001	0.000	0.001	0.000
VERTICAL CURVE ORDINATE	0.000	0.003	0.006	0.008	0.011	0.012	0.014	0.015	0.016	0.016	0.017	0.016	0.016	0.015	0.014	0.012	0.011	0.008	0.006	0.003	0.000
ORDINATE DUE TO SUPERELEVATION	0.000	0.000	0.000	0.000	0.000	0.000	0.000	0.000	0.000	0.000	0.000	0.000	0.000	0.000	0.000	0.000	0.000	0.000	0.000	0.000	0.000
REQUIRED CAMBER	0	1	3	5	9	13	18	20	25	27	29	29	28	26	23	18	15	9	6	2	0

* INCLUDES SLAB, BUILDUPS & STAY-IN-PLACE FORMS.
ALL VALUES ARE SHOWN IN METERS, EXCEPT "FINAL CAMBER" WHICH IS SHOWN IN MILLIMETERS.
VALUES GIVEN IN TABLE ARE AT TWENTIETH POINTS BETWEEN ℄ BEARINGS.

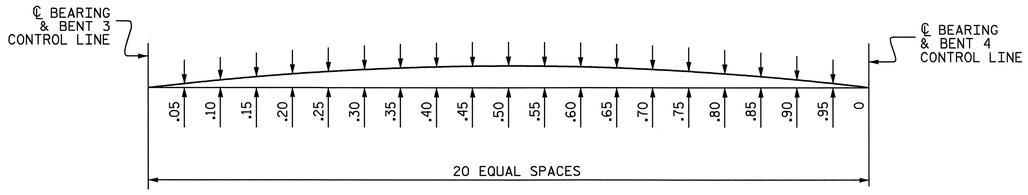

SPAN D

SCHEMATIC OF CAMBER ORDINATES

FOR CAMBER VALUES AT EACH GIDER TWENTIETH POINTS, SEE TABLE ABOVE.
SLOPE FOR ZERO CAMBER BASE LINE VARIES.

NORTH CAROLINA PROFESSIONAL SEAL 16301 ENGINEER TING HSIANG FANG
10/03/08

PROJECT NO. U-2519DA
CUMBERLAND COUNTY
STATION: 28+66.746 -COL2-

SHEET 4 OF 5

STATE OF NORTH CAROLINA
DEPARTMENT OF TRANSPORTATION
RALEIGH
SUPERSTRUCTURE

DEAD LOAD DEFLECTION TABLES

SPAN D

REVISIONS						SHEET NO.
NO.	BY:	DATE:	NO.	BY:	DATE:	S-49
1			3			TOTAL SHEETS
2			4			411

DRAWN BY : Z. H. BROWN DATE : 7/10/08
CHECKED BY : T. H. FANG DATE : 7/17/08

03-OCT-2008 11:06
R:\Structures\frye\str3_COL2\Final Plans\u-2519da_sd_dl_03.dgn
sdombrowski

DEAD LOAD DEFLECTION TABLE FOR GIRDERS

SPAN E

GIRDER 1

TWENTIETH POINTS	0	.05	.10	.15	.20	.25	.30	.35	.40	.45	.50	.55	.60	.65	.70	.75	.80	.85	.90	.95	0
DEFLECTION DUE TO WEIGHT OF GIRDER	0.000	0.000	-0.001	-0.001	-0.002	-0.003	-0.003	-0.004	-0.005	-0.006	-0.006	-0.006	-0.006	-0.006	-0.006	-0.005	-0.005	-0.004	-0.003	-0.001	0.000
DEFLECTION DUE TO WEIGHT OF SLAB *	0.000	-0.001	-0.003	-0.006	-0.008	-0.011	-0.014	-0.017	-0.020	-0.022	-0.023	-0.024	-0.024	-0.024	-0.022	-0.020	-0.017	-0.013	-0.009	-0.005	0.000
DEFLECTION DUE TO WEIGHT OF BARRIER RAIL	0.000	0.000	0.000	0.000	-0.001	-0.001	-0.001	-0.001	-0.002	-0.002	-0.002	-0.002	-0.002	-0.002	-0.002	-0.002	-0.001	-0.001	-0.001	0.000	0.000
TOTAL DEAD LOAD DEFLECTION	0.000	-0.001	-0.004	-0.007	-0.011	-0.015	-0.018	-0.022	-0.027	-0.030	-0.031	-0.032	-0.032	-0.032	-0.030	-0.027	-0.023	-0.018	-0.013	-0.006	0.000
VERTICAL CURVE ORDINATE	0.000	0.002	0.004	0.006	0.007	0.008	0.009	0.010	0.010	0.011	0.011	0.011	0.010	0.010	0.009	0.008	0.007	0.006	0.004	0.002	0.000
ORDINATE DUE TO SUPERELEVATION	0.000	0.000	0.000	0.000	0.000	0.000	0.000	0.000	0.000	0.000	0.000	0.000	0.000	0.000	0.000	0.000	0.000	0.000	0.000	0.000	0.000
REQUIRED CAMBER	0	3	8	13	18	23	27	32	37	41	42	43	42	42	39	35	30	24	17	8	0

GIRDER 2

TWENTIETH POINTS	0	.05	.10	.15	.20	.25	.30	.35	.40	.45	.50	.55	.60	.65	.70	.75	.80	.85	.90	.95	0
DEFLECTION DUE TO WEIGHT OF GIRDER	0.000	0.000	-0.001	-0.001	-0.002	-0.003	-0.003	-0.004	-0.005	-0.006	-0.006	-0.006	-0.007	-0.006	-0.006	-0.005	-0.005	-0.004	-0.003	-0.001	0.000
DEFLECTION DUE TO WEIGHT OF SLAB *	0.000	-0.001	-0.003	-0.006	-0.008	-0.011	-0.014	-0.017	-0.020	-0.022	-0.023	-0.024	-0.024	-0.024	-0.022	-0.020	-0.017	-0.013	-0.009	-0.005	0.000
DEFLECTION DUE TO WEIGHT OF BARRIER RAIL	0.000	0.000	0.000	0.000	-0.001	-0.001	-0.001	-0.001	-0.001	-0.002	-0.002	-0.002	-0.002	-0.002	-0.002	-0.002	-0.001	-0.001	-0.001	0.000	0.000
TOTAL DEAD LOAD DEFLECTION	0.000	-0.001	-0.004	-0.007	-0.011	-0.015	-0.018	-0.022	-0.026	-0.030	-0.031	-0.032	-0.033	-0.032	-0.030	-0.026	-0.023	-0.018	-0.013	-0.006	0.000
VERTICAL CURVE ORDINATE	0.000	0.002	0.004	0.006	0.007	0.008	0.009	0.010	0.010	0.011	0.011	0.011	0.010	0.010	0.009	0.008	0.007	0.006	0.004	0.002	0.000
ORDINATE DUE TO SUPERELEVATION	0.000	0.000	0.000	0.000	0.000	0.000	0.000	0.000	0.000	0.000	0.000	0.000	0.000	0.000	0.000	0.000	0.000	0.000	0.000	0.000	0.000
REQUIRED CAMBER	0	3	8	13	18	23	27	32	36	41	42	43	43	42	39	34	30	24	17	8	0

GIRDER 3

TWENTIETH POINTS	0	.05	.10	.15	.20	.25	.30	.35	.40	.45	.50	.55	.60	.65	.70	.75	.80	.85	.90	.95	0
DEFLECTION DUE TO WEIGHT OF GIRDER	0.000	0.000	-0.001	-0.001	-0.002	-0.003	-0.003	-0.004	-0.005	-0.006	-0.006	-0.007	-0.007	-0.006	-0.006	-0.006	-0.005	-0.004	-0.003	-0.001	0.000
DEFLECTION DUE TO WEIGHT OF SLAB *	0.000	-0.001	-0.003	-0.006	-0.008	-0.011	-0.014	-0.017	-0.020	-0.022	-0.023	-0.024	-0.024	-0.024	-0.022	-0.020	-0.017	-0.013	-0.009	-0.005	0.000
DEFLECTION DUE TO WEIGHT OF BARRIER RAIL	0.000	0.000	0.000	0.000	-0.001	-0.001	-0.001	-0.001	-0.002	-0.002	-0.002	-0.002	-0.002	-0.002	-0.002	-0.002	-0.001	-0.001	-0.001	0.000	0.000
TOTAL DEAD LOAD DEFLECTION	0.000	-0.001	-0.004	-0.007	-0.011	-0.015	-0.018	-0.022	-0.027	-0.030	-0.031	-0.033	-0.033	-0.032	-0.030	-0.028	-0.023	-0.018	-0.013	-0.006	0.000
VERTICAL CURVE ORDINATE	0.000	0.002	0.004	0.006	0.007	0.008	0.009	0.010	0.010	0.011	0.011	0.011	0.010	0.010	0.009	0.008	0.007	0.006	0.004	0.002	0.000
ORDINATE DUE TO SUPERELEVATION	0.000	0.000	0.000	0.000	0.000	0.000	0.000	0.000	0.000	0.000	0.000	0.000	0.000	0.000	0.000	0.000	0.000	0.000	0.000	0.000	0.000
REQUIRED CAMBER	0	3	8	13	18	23	27	32	37	41	42	44	43	42	39	36	30	24	17	8	0

GIRDER 4

TWENTIETH POINTS	0	.05	.10	.15	.20	.25	.30	.35	.40	.45	.50	.55	.60	.65	.70	.75	.80	.85	.90	.95	0
DEFLECTION DUE TO WEIGHT OF GIRDER	0.000	0.000	-0.001	-0.001	-0.002	-0.003	-0.004	-0.004	-0.005	-0.006	-0.006	-0.007	-0.007	-0.007	-0.006	-0.006	-0.005	-0.004	-0.003	-0.001	0.000
DEFLECTION DUE TO WEIGHT OF SLAB *	0.000	-0.001	-0.003	-0.006	-0.009	-0.012	-0.015	-0.017	-0.020	-0.022	-0.024	-0.024	-0.025	-0.024	-0.022	-0.020	-0.017	-0.013	-0.009	-0.005	0.000
DEFLECTION DUE TO WEIGHT OF BARRIER RAIL	0.000	0.000	0.000	0.000	-0.001	-0.001	-0.001	-0.001	-0.002	-0.002	-0.002	-0.002	-0.002	-0.002	-0.002	-0.002	-0.001	-0.001	-0.001	0.000	0.000
TOTAL DEAD LOAD DEFLECTION	0.000	-0.001	-0.004	-0.007	-0.012	-0.016	-0.020	-0.022	-0.027	-0.030	-0.032	-0.033	-0.034	-0.033	-0.030	-0.028	-0.023	-0.018	-0.013	-0.006	0.000
VERTICAL CURVE ORDINATE	0.000	0.002	0.004	0.006	0.007	0.008	0.009	0.010	0.010	0.011	0.011	0.011	0.010	0.010	0.009	0.008	0.007	0.006	0.004	0.002	0.000
ORDINATE DUE TO SUPERELEVATION	0.000	0.000	0.000	0.000	0.000	0.000	0.000	0.000	0.000	0.000	0.000	0.000	0.000	0.000	0.000	0.000	0.000	0.000	0.000	0.000	0.000
REQUIRED CAMBER	0	3	8	13	19	24	29	32	37	41	43	44	44	43	39	36	30	24	17	8	0

GIRDER 5

TWENTIETH POINTS	0	.05	.10	.15	.20	.25	.30	.35	.40	.45	.50	.55	.60	.65	.70	.75	.80	.85	.90	.95	0
DEFLECTION DUE TO WEIGHT OF GIRDER	0.000	0.000	-0.001	-0.001	-0.002	-0.003	-0.004	-0.004	-0.005	-0.006	-0.006	-0.007	-0.007	-0.007	-0.006	-0.006	-0.005	-0.004	-0.003	-0.001	0.000
DEFLECTION DUE TO WEIGHT OF SLAB *	0.000	-0.001	-0.003	-0.006	-0.009	-0.012	-0.015	-0.017	-0.020	-0.022	-0.024	-0.024	-0.025	-0.024	-0.022	-0.020	-0.017	-0.013	-0.009	-0.005	0.000
DEFLECTION DUE TO WEIGHT OF BARRIER RAIL	0.000	0.000	0.000	0.000	-0.001	-0.001	-0.001	-0.001	-0.002	-0.002	-0.002	-0.002	-0.002	-0.002	-0.002	-0.002	-0.001	-0.001	-0.001	0.000	0.000
TOTAL DEAD LOAD DEFLECTION	0.000	-0.001	-0.004	-0.007	-0.011	-0.016	-0.020	-0.022	-0.027	-0.030	-0.032	-0.033	-0.034	-0.033	-0.030	-0.028	-0.023	-0.018	-0.013	-0.006	0.000
VERTICAL CURVE ORDINATE	0.000	0.002	0.004	0.006	0.007	0.008	0.009	0.010	0.010	0.011	0.011	0.011	0.010	0.010	0.009	0.008	0.007	0.006	0.004	0.002	0.000
ORDINATE DUE TO SUPERELEVATION	0.000	0.000	0.000	0.000	0.000	0.000	0.000	0.000	0.000	0.000	0.000	0.000	0.000	0.000	0.000	0.000	0.000	0.000	0.000	0.000	0.000
REQUIRED CAMBER	0	3	8	13	18	24	29	32	37	41	43	44	44	43	39	36	30	24	17	8	0

GIRDER 6

TWENTIETH POINTS	0	.05	.10	.15	.20	.25	.30	.35	.40	.45	.50	.55	.60	.65	.70	.75	.80	.85	.90	.95	0
DEFLECTION DUE TO WEIGHT OF GIRDER	0.000	0.000	-0.001	-0.001	-0.002	-0.003	-0.004	-0.004	-0.005	-0.006	-0.006	-0.007	-0.007	-0.007	-0.006	-0.006	-0.005	-0.004	-0.003	-0.001	0.000
DEFLECTION DUE TO WEIGHT OF SLAB *	0.000	-0.001	-0.003	-0.006	-0.009	-0.012	-0.015	-0.017	-0.020	-0.022	-0.024	-0.024	-0.025	-0.024	-0.022	-0.020	-0.017	-0.013	-0.009	-0.005	0.000
DEFLECTION DUE TO WEIGHT OF BARRIER RAIL	0.000	0.000	0.000	0.000	-0.001	-0.001	-0.001	-0.001	-0.002	-0.002	-0.002	-0.002	-0.002	-0.002	-0.002	-0.002	-0.001	-0.001	-0.001	0.000	0.000
TOTAL DEAD LOAD DEFLECTION	0.000	-0.001	-0.004	-0.007	-0.012	-0.016	-0.020	-0.022	-0.027	-0.030	-0.032	-0.033	-0.034	-0.033	-0.030	-0.028	-0.023	-0.018	-0.013	-0.006	0.000
VERTICAL CURVE ORDINATE	0.000	0.002	0.004	0.006	0.007	0.008	0.009	0.010	0.010	0.011	0.010	0.011	0.010	0.010	0.009	0.008	0.007	0.006	0.004	0.002	0.000
ORDINATE DUE TO SUPERELEVATION	0.000	0.000	0.000	0.000	0.000	0.000	0.000	0.000	0.000	0.000	0.000	0.000	0.000	0.000	0.000	0.000	0.000	0.000	0.000	0.000	0.000
REQUIRED CAMBER	0	3	8	13	19	24	29	32	37	41	42	44	44	43	39	36	30	24	17	8	0

* INCLUDES SLAB, BUILDUPS & STAY-IN-PLACE FORMS.
ALL VALUES ARE SHOWN IN METERS, EXCEPT "FINAL CAMBER" WHICH IS SHOWN IN MILLIMETERS.
VALUES GIVEN IN TABLE ARE AT TWENTIETH POINTS BETWEEN ℄ BEARINGS.

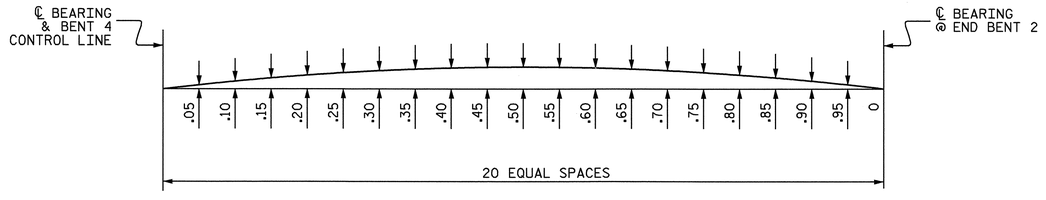

SPAN E

SCHEMATIC OF CAMBER ORDINATES

FOR CAMBER VALUES AT EACH GIDER TWENTIETH POINTS, SEE TABLE ABOVE.
SLOPE FOR ZERO CAMBER BASE LINE VARIES.

NORTH CAROLINA PROFESSIONAL SEAL 16301 ENGINEER TING HSIUNG FANG
Ting H. Fang 10/03/08

PROJECT NO. U-2519DA
CUMBERLAND COUNTY
STATION: 28+66.746 -COL2-

SHEET 5 OF 5

STATE OF NORTH CAROLINA
DEPARTMENT OF TRANSPORTATION
RALEIGH
SUPERSTRUCTURE

DEAD LOAD DEFLECTION TABLES

SPAN E

REVISIONS						SHEET NO.
NO.	BY:	DATE:	NO.	BY:	DATE:	S-50
1			3			TOTAL SHEETS
2			4			411

DRAWN BY : Z. H. BROWN DATE : 7/11/08
CHECKED BY : T. H. FANG DATE : 7/11/08

03-OCT-2008 11:06
R:\Structures\frye\str3_COL2\Final Plans\u-2519da_sd_dl_03.dgn
sdombrowski

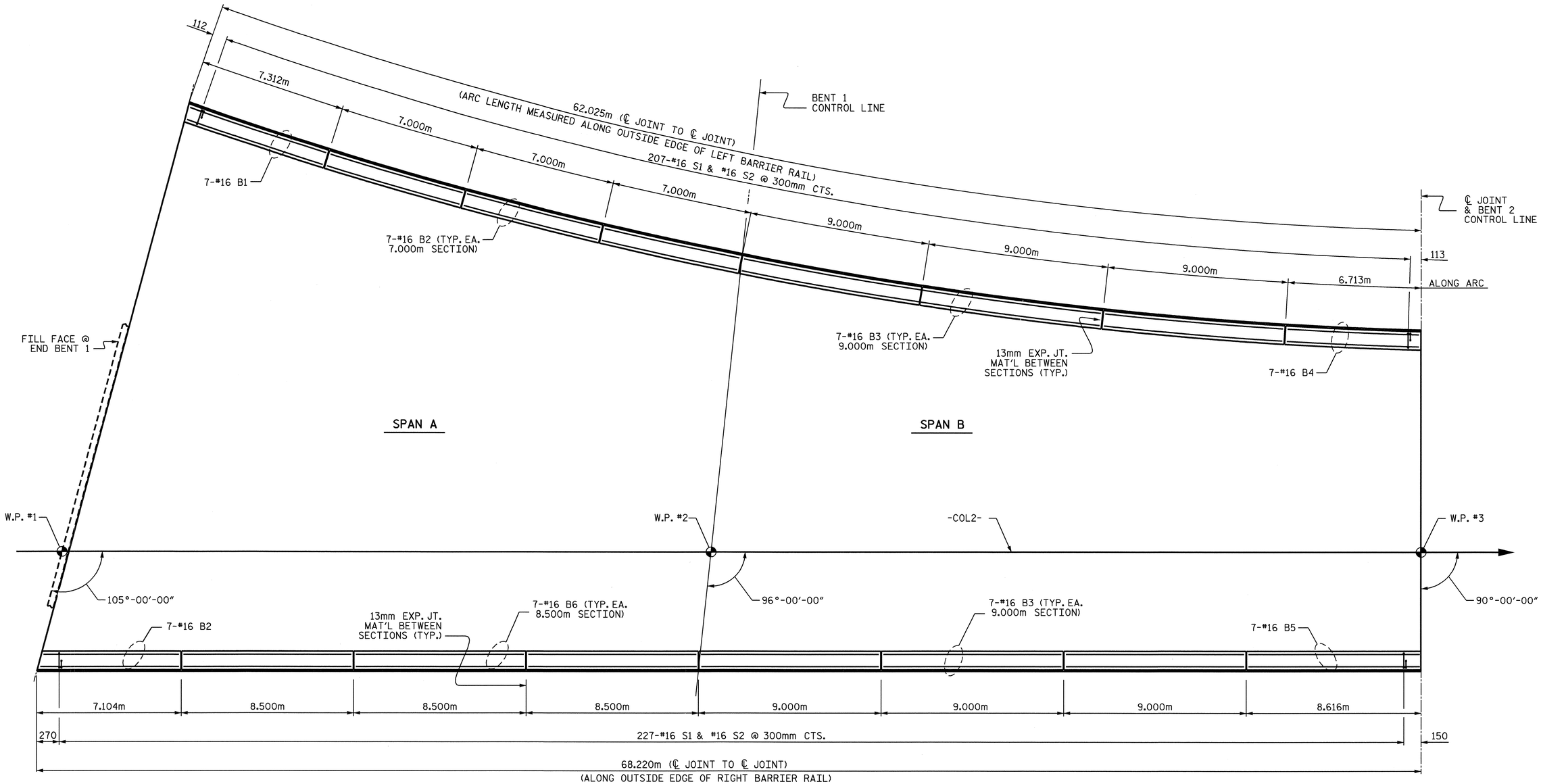

PLAN OF BARRIER RAIL

SPANS A & B

PROJECT NO. U-2519DA

CUMBERLAND COUNTY

STATION: 28+66.746-COL2-

SHEET 1 OF 4

STATE OF NORTH CAROLINA
DEPARTMENT OF TRANSPORTATION
RALEIGH

SUPERSTRUCTURE

CONCRETE BARRIER RAIL

SPANS A & B

REVISIONS						SHEET NO.
NO.	BY:	DATE:	NO.	BY:	DATE:	S-51
1			3			TOTAL SHEETS
2			4			411

NORTH CAROLINA PROFESSIONAL SEAL 16301 ENGINEER TING HSIUNG FANG

10/10/08

DRAWN BY : D. G. ELY DATE : 3/3/08
CHECKED BY : T. H. FANG DATE : 7/25/08

10-OCT-2008 16:37
r:\structures\frye\str3_col2\final plans\u-2519da_sd_br_03.dgn
sdombrowski

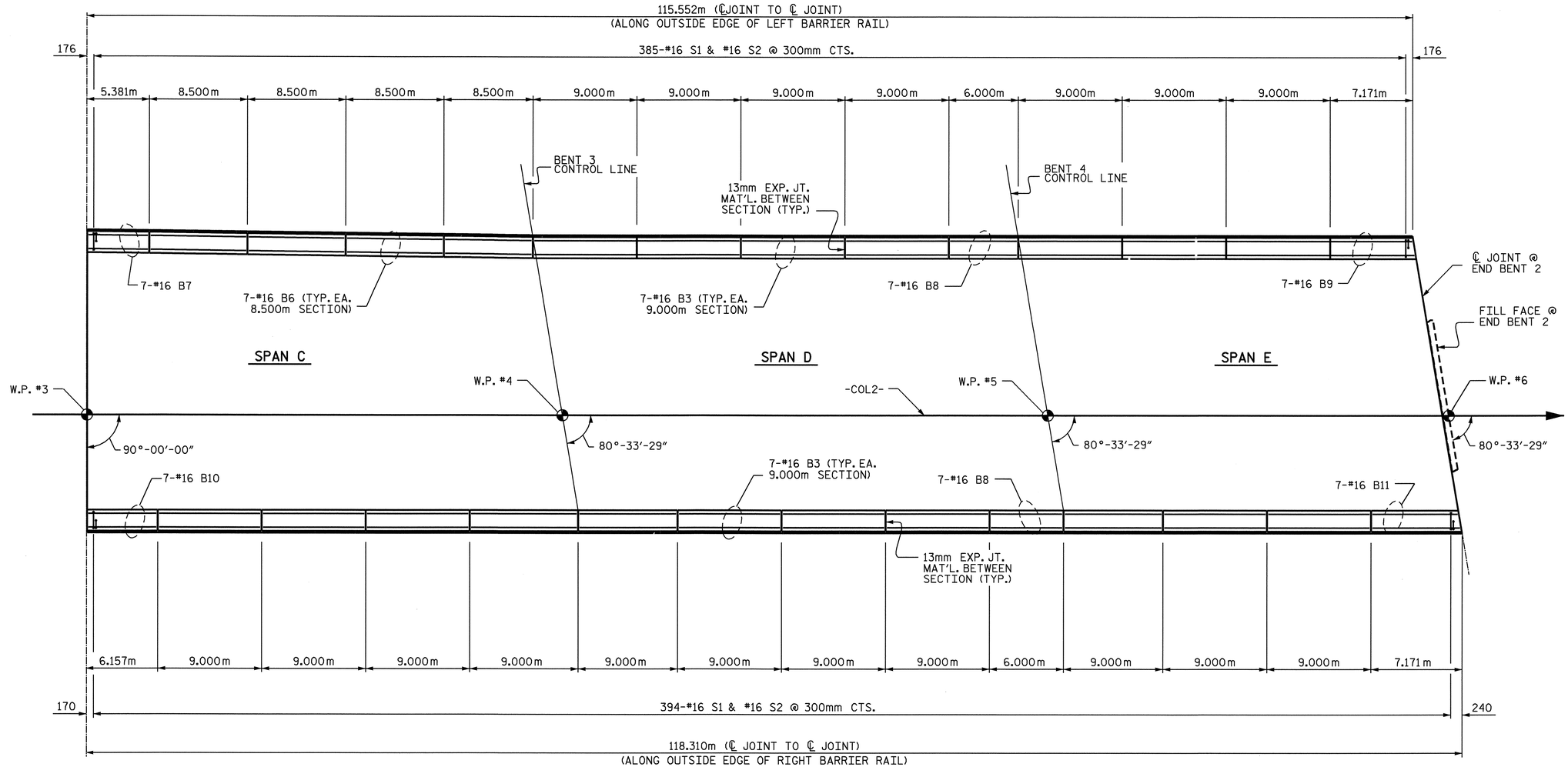

PLAN OF BARRIER RAIL

SPANS C THRU E

PROJECT NO. U-2519DA

CUMBERLAND COUNTY

STATION: 28+66.746-COL2-

SHEET 2 OF 4

STATE OF NORTH CAROLINA
DEPARTMENT OF TRANSPORTATION
RALEIGH

SUPERSTRUCTURE

CONCRETE BARRIER RAIL

SPANS C THRU E

REVISIONS						SHEET NO.
NO.	BY:	DATE:	NO.	BY:	DATE:	S-52
1			3			TOTAL SHEETS
2			4			411

NORTH CAROLINA PROFESSIONAL SEAL 16301 ENGINEER TING HSIUNG FANG

10/10/08

DRAWN BY : D. G. ELY DATE : 3/3/08
CHECKED BY : T. H. FANG DATE : 7/24/08

10-OCT-2008 16:38
r:\structures\frye\str3_col2\final plans\u-2519da_sd_br_03.dgn
sdombrowski

NOTES

BARRIER RAIL IN A CONTINUOUS UNIT SHALL NOT BE CAST UNTIL ALL SLAB CONCRETE IN THAT UNIT HAS BEEN CAST AND HAS REACHED A MINIMUM COMPRESSIVE STRENGTH OF 20.7 MPa.

THE JOINTS IN THE DECK SHALL BE FORMED PRIOR TO THE CASTING OF BARRIER RAIL.

ALL REINFORCING STEEL IN BARRIER RAILS SHALL BE EPOXY COATED.

THE #16 S1 AND #16 S2 BARS MAY BE ADJUSTED SLIGHTLY IN ORDER TO MAINTAIN A 50mm MINIMUM CLEARANCE TO THE 13mm EXPANSION JOINT MATERIAL.

VERTICAL GROOVED CONTRACTION JOINTS, 12mm IN DEPTH, SHALL BE TOOLED IN ALL EXPOSED FACES OF THE BARRIER RAIL AND IN ACCORDANCE WITH ARTICLE 825-10(B) OF THE STANDARD SPECIFICATIONS. THE CONTRACTION JOINT SHALL BE LOCATED AT EACH THIRD POINT BETWEEN BARRIER RAIL EXPANSION JOINTS. ONLY ONE CONTRACTION JOINT IS REQUIRED AT MIDPOINT OF BARRIER RAIL SEGMENTS LESS THAN 6.1m IN LENGTH AND NO CONTRACTION JOINTS ARE REQUIRED FOR THOSE SEGMENTS LESS THAN 3.5m IN LENGTH.

BILL OF MATERIAL

SPANS A & B

FOR CONCRETE BARRIER RAIL ONLY

BAR	NO.	SIZE	TYPE	LENGTH	WEIGHT
✳ B1	7	#16	STR	7180	78
✳ B2	28	#16	STR	6880	299
✳ B3	42	#16	STR	8880	579
✳ B4	7	#16	STR	6560	71
✳ B5	7	#16	STR	8460	92
✳ B6	21	#16	STR	8380	273
✳ S1	434	#16	1	1500	1010
✳ S2	434	#16	2	1580	1064

✳ EPOXY COATED REINFORCING STEEL 3467 kg

CLASS AA CONCRETE 32.7 CU. METER

CONCRETE BARRIER RAIL 130.246 METERS

SPANS C, D & E

FOR CONCRETE BARRIER RAIL ONLY

BAR	NO.	SIZE	TYPE	LENGTH	WEIGHT
✳ B3	126	#16	STR	8880	1737
✳ B6	28	#16	STR	8380	364
✳ B7	7	#16	STR	5240	57
✳ B8	14	#16	STR	5860	127
✳ B9	7	#16	STR	7020	76
✳ B10	7	#16	STR	6000	65
✳ B11	7	#16	STR	6960	76
✳ S1	779	#16	1	1500	1814
✳ S2	779	#16	2	1580	1910

✳ EPOXY COATED REINFORCING STEEL 6227 kg

CLASS AA CONCRETE 58.6 CU. METER

CONCRETE BARRIER RAIL 233.823 METERS

TOTAL LENTH OF CONCRETE BARRIER RAIL 364.069 METERS

BAR TYPES

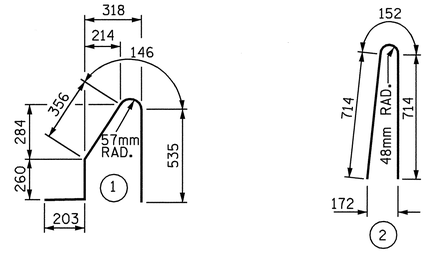

ALL BAR DIMENSIONS ARE OUT TO OUT

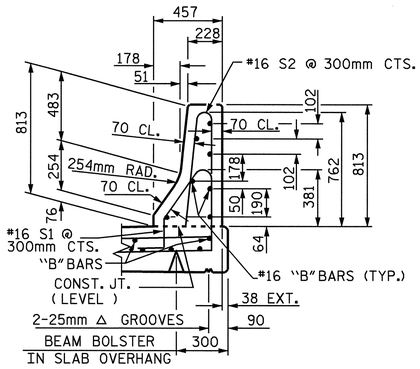

SECTION THRU RAIL

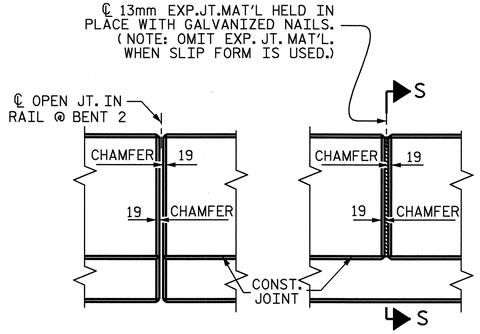

ELEVATION AT EXPANSION JOINTS

BARRIER RAIL DETAILS

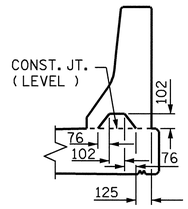

SECTION S-S

AT DAM IN OPEN JOINT
(THIS IS TO BE USED ONLY WHEN SLIP FORM IS USED)

PROJECT NO. U-2519DA

CUMBERLAND COUNTY

STATION: 28+66.746-COL2-

SHEET 3 OF 4

STATE OF NORTH CAROLINA
DEPARTMENT OF TRANSPORTATION
RALEIGH

SUPERSTRUCTURE

CONCRETE BARRIER RAIL

REVISIONS					
NO.	BY:	DATE:	NO.	BY:	DATE:
1			3		
2			4		

SHEET NO. S-53

TOTAL SHEETS 411

ASSEMBLED BY : D. G. ELY		DATE : 3/3/08	
CHECKED BY : T. H. FANG		DATE : 7/10/08	
DRAWN BY : ARB 5/87	REV. 10/17/00	RWW/LES	
CHECKED BY : SJD 9/87	REV. 5/7/03R	RWW/JTE	
	REV. 5/1/06	TLA/GM	

10-OCT-2008 16:38
r:\structures\frye\str3_col2\final plans\u-2519da_sd_br_03.dgn
sdombrowski

STD. No. CBR1SM

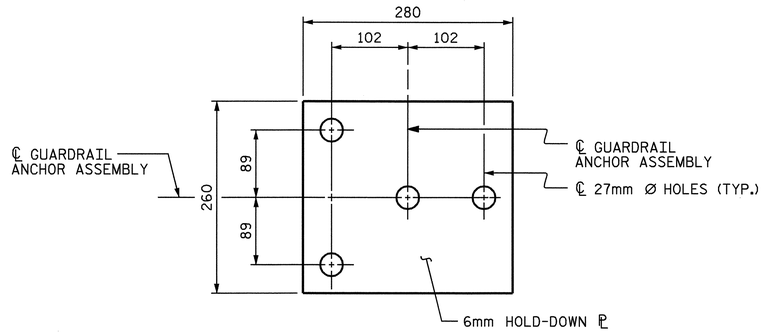

PLAN

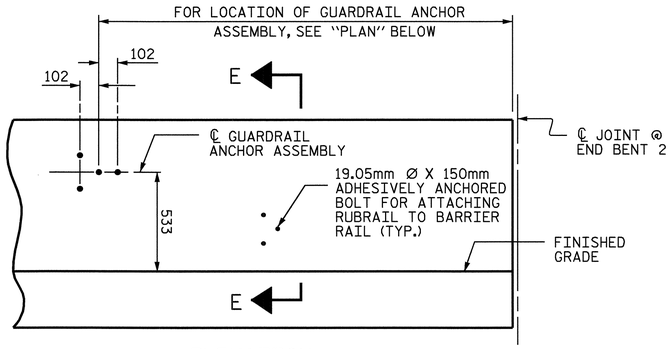

ELEVATION

FOR LOCATION OF RUBRAIL, SEE ROADWAY STD. 862.03

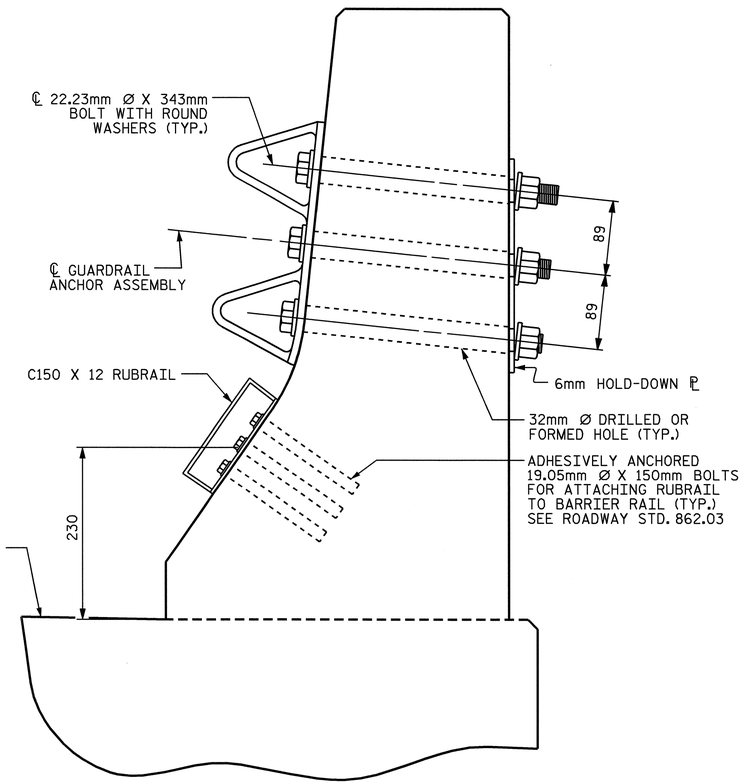

SECTION E-E

GUARDRAIL ANCHOR ASSEMBLY DETAILS

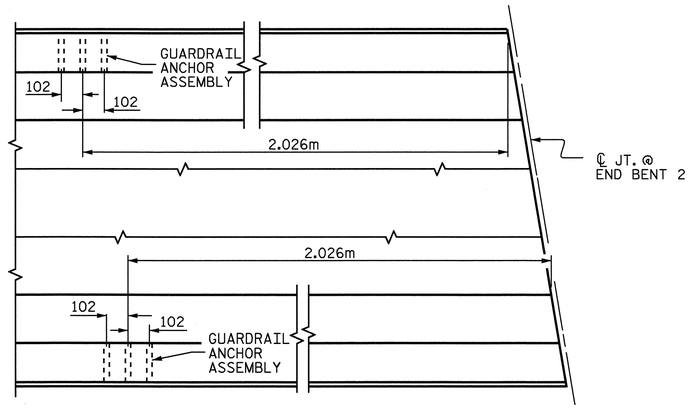

LOCATION OF ANCHORS FOR GUARDRAIL

AT END BENT 2 ONLY

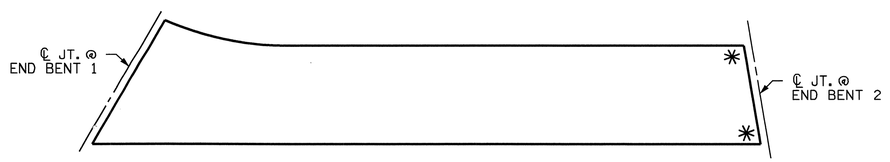

SKETCH SHOWING POINTS OF ATTACHMENTS

✳ DENOTES GUARDRAIL ANCHOR ASSEMBLY

NOTES

THE GUARDRAIL ANCHOR ASSEMBLY SHALL CONSIST OF A 6mm HOLD DOWN PLATE AND 4 - 22.23mm Ø BOLTS WITH NUTS AND WASHERS, RUBRAIL, AND ADHESIVELY ANCHORED BOLTS.

THE HOLD-DOWN PLATE SHALL CONFORM TO AASHTO M270 GRADE 36. AFTER FABRICATION, THE HOLD-DOWN PLATE SHALL BE HOT-DIP GALVANIZED IN ACCORDANCE WITH AASHTO M111.

BOLTS SHALL CONFORM TO THE REQUIREMENTS OF ASTM A307 AND NUTS SHALL CONFORM TO THE REQUIREMENTS OF AASHTO M291. BOLTS, NUTS AND WASHERS SHALL BE GALVANIZED. (AT THE CONTRACTOR'S OPTION, STAINLESS STEEL BOLTS, NUTS AND WASHERS MAY BE USED AS AN ALTERNATE FOR THE 22.23mm Ø GALVANIZED BOLTS, NUTS AND WASHERS. THEY SHALL CONFORM TO OR EXCEED THE MECHANICAL REQUIREMENTS OF ASTM A307. THE USE OF THIS ALTERNATE SHALL BE APPROVED BY THE ENGINEER.)

THE GUARDRAIL ANCHOR ASSEMBLY IS REQUIRED AT ALL POINTS WHERE APPROACH GUARDRAIL IS TO BE ATTACHED TO THE END OF BARRIER RAIL. FOR POINTS OF ATTACHMENT, SEE SKETCH.

AFTER INSTALLATION, THE EXPOSED THREAD OF THE BOLT SHALL BE BURRED WITH A SHARP POINTED TOOL.

THE COST OF THE GUARDRAIL ANCHOR ASSEMBLY SHALL BE INCLUDED IN THE UNIT CONTRACT PRICE BID FOR CONCRETE BARRIER RAIL.

THE 32mm Ø HOLES SHALL BE FORMED OR DRILLED WITH A CORE BIT. IMPACT TOOLS WILL NOT BE PERMITTED. ANY CONCRETE DAMAGED BY THIS WORK SHALL BE REPAIRED TO THE SATISFACTION OF THE ENGINEER.

THE C150 X 12 RUBRAIL IS TO BE ADHESIVELY ANCHORED TO THE RAIL USING THREE 19.05mm Ø X 150mm BOLTS WITH WASHERS. LEVEL ONE FIELD TESTING IS REQUIRED, AND THE YIELD LOAD OF THE 19.05mm Ø BOLTS IS 53.4kN. FOR ADHESIVELY ANCHORED ANCHOR BOLTS OR DOWELS, SEE SPECIAL PROVISIONS. SEE ROADWAY STANDARD 862.03 FOR DETAILS AND LOCATION OF THE RUBRAIL.

NORTH CAROLINA PROFESSIONAL SEAL 16301 ENGINEER TING HSIUNG FANG

10/03/08

PROJECT NO. U-2519DA

CUMBERLAND COUNTY

STATION: 28+66.746-COL2-

SHEET 4 OF 4

STATE OF NORTH CAROLINA
DEPARTMENT OF TRANSPORTATION
RALEIGH

STANDARD

GUARDRAIL ANCHORAGE FOR BARRIER RAIL

REVISIONS						SHEET NO.
NO.	BY:	DATE:	NO.	BY:	DATE:	S-54
1			3			TOTAL SHEETS
2			4			411

STD. NO. GRA2

ASSEMBLED BY : D. G. ELY	DATE : 1/3/08	
CHECKED BY : T. H. FANG	DATE : 4/16/08	
DRAWN BY : TLA 5/06	ADDED 5/1/06R KMM/GM	
CHECKED BY : GM 5/06		

03-OCT-2008 11:06
R:\Structures\frye\str3_COL2\Final Plans\u-2519da_sd_br_03.dgn
sdombrowski

NOTE

THE GRADE SUPERELEVATION ALONG -LP1B- FROM STA. 10+00.00 -LP1B- TO STA. 10+87.66 -LP1B- HAS BEEN SLIGHTLY ADJUSTED FOR BRIDGE CONSTRUCTIBILITY. SEE ELEVATION TABLE ON TRANSITION ZONE DETAILS AND FIELD CONSTRUCTION ELEVATIONS.

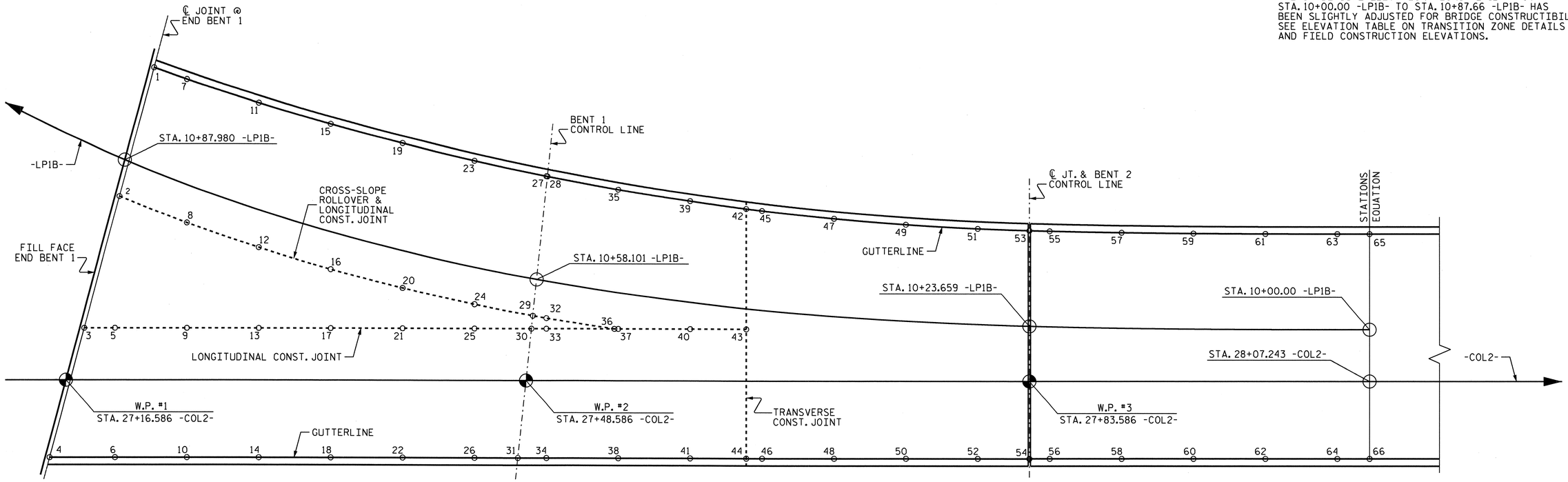

PLAN OF DECK ELEVATIONS

TABLE OF ELEVATIONS

POINT	GRADE LINE	STATION	OFFSET (m)	TOP OF SLAB ELEVATION	POINT	GRADE LINE	STATION	OFFSET (m)	TOP OF SLAB ELEVATION	POINT	GRADE LINE	STATION	OFFSET (m)	TOP OF SLAB ELEVATION
1	-LP1B-	10+88.651	6.675 RT	71.101	23	-LP1B-	10+64.080	7.274 RT	71.579	45	-LP1B-	10+42.940	6.861 RT	71.944
2	-LP1B-	10+87.319	2.500 LT	71.468	24	-LP1B-	10+61.994	2.500 LT	71.890	46	-COL2-	27+65.000	5.400 RT	72.383
3	-COL2-	27+17.879	3.600 LT	71.607	25	-COL2-	27+45.000	3.600 LT	71.944	47	-LP1B-	10+37.766	6.747 RT	72.009
4	-COL2-	27+15.468	5.400 RT	71.799	26	-COL2-	27+45.000	5.400 RT	72.169	48	-COL2-	27+70.000	5.400 RT	72.431
5	-COL2-	27+20.000	3.600 LT	71.635	27	-LP1B-	10+58.720	7.208 RT	71.684	49	-LP1B-	10+32.622	6.657 RT	72.068
6	-COL2-	27+20.000	5.400 RT	71.860	28	-LP1B-	10+58.638	7.207 RT	71.686	50	-COL2-	27+75.000	5.400 RT	72.478
7	-LP1B-	10+86.089	6.832 RT	71.150	29	-LP1B-	10+57.925	2.500 LT	71.958	51	-LP1B-	10+27.508	6.606 RT	72.121
8	-LP1B-	10+82.403	2.500 LT	71.550	30	-COL2-	27+48.964	3.600 LT	71.989	52	-COL2-	27+80.000	5.400 RT	72.523
9	-COL2-	27+25.000	3.600 LT	71.701	31	-COL2-	27+48.018	5.400 RT	72.203	53	-LP1B-	10+23.855	6.601 RT	72.156
10	-COL2-	27+25.000	5.400 RT	71.926	32	-LP1B-	10+56.986	2.500 LT	71.973	54	-COL2-	27+83.586	5.400 RT	72.554
11	-LP1B-	10+80.502	7.086 RT	71.259	33	-COL2-	27+50.000	3.600 LT	72.000	55	-LP1B-	10+22.418	6.600 RT	72.171
12	-LP1B-	10+77.221	2.500 LT	71.637	34	-COL2-	27+50.000	5.400 RT	72.225	56	-COL2-	27+85.000	5.400 RT	72.566
13	-COL2-	27+30.000	3.600 LT	71.764	35	-LP1B-	10+53.414	7.107 RT	71.789	57	-LP1B-	10+17.347	6.600 RT	72.215
14	-COL2-	27+30.000	5.400 RT	71.989	36	-COL2-	27+54.735	3.600 LT	72.052	58	-COL2-	27+90.000	5.400 RT	72.607
15	-LP1B-	10+74.971	7.231 RT	71.366	37	-COL2-	27+55.000	3.600 LT	72.055	59	-LP1B-	10+12.296	6.600 RT	72.256
16	-LP1B-	10+72.101	2.500 LT	71.722	38	-COL2-	27+55.000	5.400 RT	72.280	60	-COL2-	27+95.000	5.400 RT	72.647
17	-COL2-	27+35.000	3.600 LT	71.826	39	-LP1B-	10+48.155	6.986 RT	71.873	61	-LP1B-	10+07.262	6.600 RT	72.294
18	-COL2-	27+35.000	5.400 RT	72.051	40	-COL2-	27+60.000	3.600 LT	72.107	62	-COL2-	28+00.000	5.400 RT	72.684
19	-LP1B-	10+69.496	7.288 RT	71.473	41	-COL2-	27+60.000	5.400 RT	72.332	63	-LP1B-	10+02.245	6.600 RT	72.330
20	-LP1B-	10+67.029	2.500 LT	71.806	42	-LP1B-	10+44.077	6.888 RT	71.929	64	-COL2-	28+05.000	5.400 RT	72.720
21	-COL2-	27+40.000	3.600 LT	71.886	43	-COL2-	27+63.906	3.600 LT	72.147	65	-LP1B-	10+00.000	6.600 RT	72.345
22	-COL2-	27+40.000	5.400 RT	72.111	44	-COL2-	27+63.906	5.400 RT	72.372	66	-COL2-	28+07.243	5.400 RT	72.735

PROJECT NO. U-2519DA

CUMBERLAND COUNTY

STATION: 28+66.746 -COL2-

STATE OF NORTH CAROLINA
DEPARTMENT OF TRANSPORTATION
RALEIGH

TRANSITION ZONE DETAILS

REVISIONS						SHEET NO.
NO.	BY:	DATE:	NO.	BY:	DATE:	S-55
1			3			TOTAL SHEETS
2			4			411

DRAWN BY : J.A. YANNACCONE DATE : 2/15/11
CHECKED BY : E. I. OMILE DATE : 3/9/11

28-MAR-2011 11:03
K:\TIPProjects-U\U2519da\Structures\frye\str3_COL2\Final Plans\u-2519da_sd_tzd.dgn
tfang

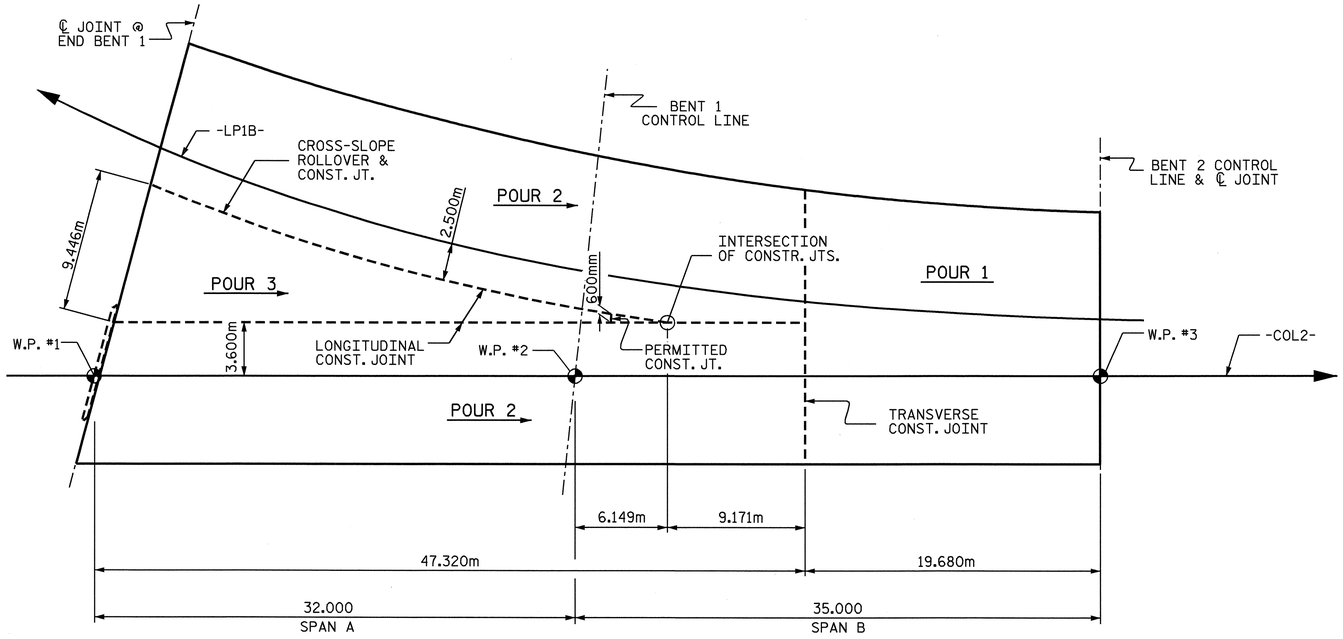

SPANS A & B

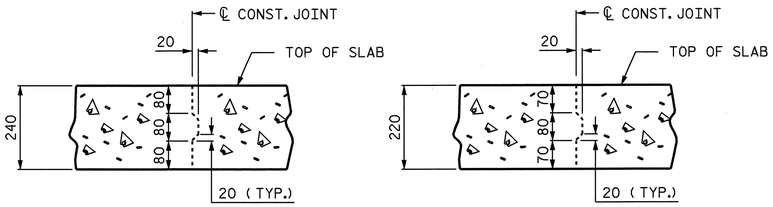

TYP. CONSTRUCTION JOINT

FOR LONGITUDINAL & TRANSVERSE CONSTRUCTION JOINTS

NOTE: REINFORCING STEEL IN SLAB NOT SHOWN. LONGITUDINAL OR TRANSVERSE REINFORCING STEEL SHALL BE CONTINUOUS THRU JOINT.

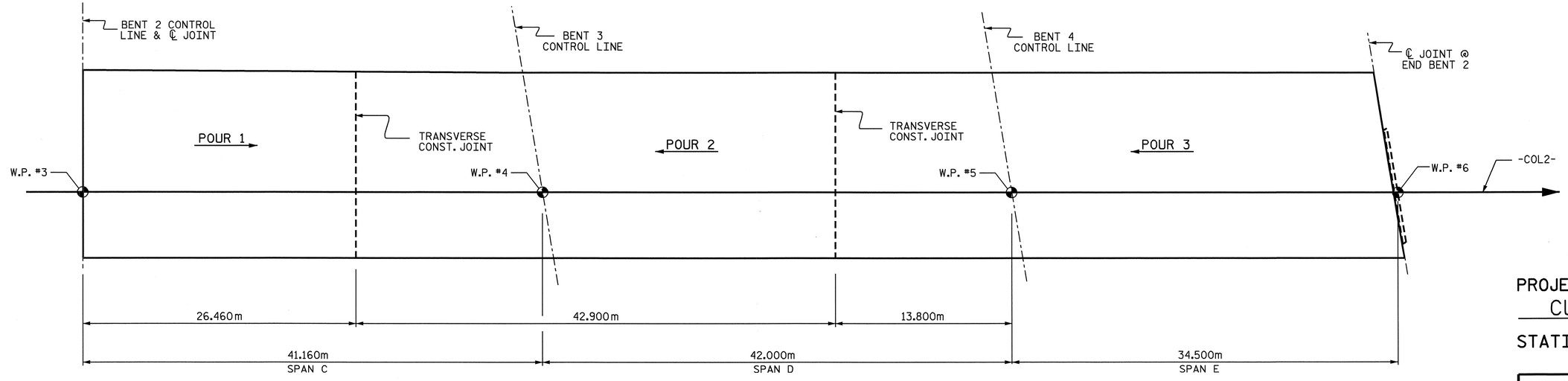

SPANS C, D & E

PROJECT NO. U-2519DA

CUMBERLAND COUNTY

STATION: 28+66.746-COL2-

STATE OF NORTH CAROLINA
DEPARTMENT OF TRANSPORTATION
RALEIGH

SUPERSTRUCTURE

CONCRETE DECK POURING SEQUENCE

NORTH CAROLINA PROFESSIONAL SEAL 11915 ENGINEER JOHN C. FRYE

REVISIONS						SHEET NO.
NO.	BY:	DATE:	NO.	BY:	DATE:	S-56
1			3			TOTAL SHEETS
2			4			411

DRAWN BY : D. G. ELY DATE : 3/5/08
CHECKED BY : J. C. FRYE DATE : 9/24/08

03-OCT-2008 11:06
R:\Structures\frye\str3_COL2\Final Plans\u-2519da_sd_bm_03.dgn
sdombrowski

BILL OF MATERIAL

SPANS A & B

BAR	NO.	SIZE	TYPE	LENGTH	WEIGHT	BAR	NO.	SIZE	TYPE	LENGTH	WEIGHT	BAR	NO.	SIZE	TYPE	LENGTH	WEIGHT
* A101	229	19	STR	10420	5333	A201	229	19	STR	10420	5333	* B1	16	13	STR	7400	118
* A102	212	19	STR	6000	2843	A202	212	19	STR	6000	2843	* B2	10	13	STR	6000	60
* A103	196	19	STR	9580	4197	A203	196	19	STR	9520	4170	* B3	10	13	STR	5020	50
* A104	20	19	STR	13500	603	A204	20	19	STR	13500	603	* B4	10	13	STR	4120	41
* A105	32	19	STR	12000	858	A205	32	19	STR	12000	858	* B5	27	13	STR	5600	150
* A106	37	19	STR	10000	827	A206	37	19	STR	10000	827	* B6	27	13	STR	6600	177
* A107	46	19	STR	8000	822	A207	46	19	STR	8000	822	* B7	46	13	STR	9000	412
* A108	70	19	STR	6000	939	A208	70	19	STR	6000	939	* B8	75	13	STR	8000	596
* A109	1	19	STR	1760	4	A209	1	19	STR	1760	4	* B9	381	19	STR	8140	6931
* A110	1	19	STR	2500	6	A210	1	19	STR	2500	6	* B10	57	13	STR	8160	462
* A111	1	19	STR	3260	7	A211	1	19	STR	3260	7	* B11	104	13	STR	9000	930
* A112	1	19	STR	4000	9	A212	1	19	STR	4000	9	* B12	2	13	STR	8460	17
* A113	1	19	STR	4740	11	A213	1	19	STR	4740	11	* B13	1	13	STR	1260	1
* A114	1	19	STR	5480	12	A214	1	19	STR	5480	12	* B14	1	13	STR	2340	2
* A115	1	19	STR	6240	14	A215	1	19	STR	6240	14	* B15	1	13	STR	3440	3
* A116	1	19	STR	6980	16	A216	1	19	STR	6980	16	* B16	1	13	STR	4560	5
* A117	1	19	STR	7720	17	A217	1	19	STR	7720	17	* B17	1	13	STR	5700	6
* A118	1	19	STR	8480	19	A218	1	19	STR	8480	19	* B18	1	13	STR	6860	7
* A119	1	19	STR	9220	21	A219	1	19	STR	9220	21	* B19	1	13	STR	8020	8
* A120	1	19	STR	9960	22	A220	1	19	STR	9960	22	* B20	1	13	STR	8000	8
* A121	1	19	STR	10720	24	A221	1	19	STR	10720	24						
* A122	1	19	STR	11460	26	A222	1	19	STR	11460	26	B31	15	16	STR	8800	205
* A123	1	19	STR	12200	27	A223	1	19	STR	12200	27	B32	15	16	STR	9500	221
* A124	1	19	STR	12960	29	A224	1	19	STR	12960	29	B33	15	16	STR	10200	237
* A125	1	19	STR	8820	20	A225	1	19	STR	8820	20	B34	15	16	STR	8000	186
* A126	1	19	STR	9560	21	A226	1	19	STR	9560	21	B35	15	16	STR	9000	210
* A127	1	19	STR	10300	23	A227	1	19	STR	10300	23	B36	212	16	STR	10000	3290
* A128	1	19	STR	11060	25	A228	1	19	STR	11060	25	B37	15	16	STR	10700	249
* A129	1	19	STR	11800	26	A229	1	19	STR	11800	26	B38	265	16	STR	10500	4318
* A130	1	19	STR	12540	28	A230	1	19	STR	12540	28	B39	16	16	STR	16200	402
* A131	1	19	STR	13300	30	A231	1	19	STR	13300	30	B40	16	16	STR	17800	442
* A132	1	19	STR	800	2	A232	1	19	STR	800	2						
* A133	1	19	STR	1540	3	A233	1	19	STR	1540	3	* G1	2	16	STR	14860	45
* A134	1	19	STR	2300	5	A234	1	19	STR	2300	5	* G2	1	16	STR	16700	25
* A135	1	19	STR	3040	7	A235	1	19	STR	3040	7						
* A136	1	19	STR	3780	8	A236	1	19	STR	3780	8	* K1	10	16	1	3720	57
* A137	1	19	STR	4540	10	A237	1	19	STR	4540	10	* K2	18	16	2	5240	144
* A138	1	19	STR	5280	12	A238	1	19	STR	5280	12	* K3	12	16	2	3560	65
* A139	1	19	STR	6020	13	A239	1	19	STR	6020	13						
* A140	1	19	STR	6780	15	A240	1	19	STR	6780	15	* S1	84	13	3	1240	104
* A141	1	19	STR	7520	17	A241	1	19	STR	7520	17	* S2	42	13	3	1100	46
* A142	1	19	STR	8260	18	A242	1	19	STR	8260	18						
* A143	1	19	STR	9020	20	A243	1	19	STR	9020	20						
* A144	1	19	STR	9760	22	A244	1	19	STR	9760	22						

REINFORCING STEEL	26,747 kg
*EPOXY COATED REINFORCING STEEL	27,645 kg

SPANS C, D & E

BAR	NO.	SIZE	TYPE	LENGTH	WEIGHT
* A11	41	16	STR	16660	1060
* A12	76	16	STR	16540	1951
* A13	608	16	STR	16480	15551
A21	41	16	STR	16660	1060
A22	76	16	STR	16540	1951
A23	608	16	STR	16480	15551
* A151	1	16	STR	15980	25
* A152	1	16	STR	15020	23
* A153	1	16	STR	14060	22
* A154	1	16	STR	13100	20
* A155	1	16	STR	12140	19
* A156	1	16	STR	11180	17
* A157	1	16	STR	10200	16
* A158	1	16	STR	9240	14
* A159	1	16	STR	8280	13
* A160	1	16	STR	7320	11
* A161	1	16	STR	6360	10
* A162	1	16	STR	5400	8
* A163	1	16	STR	4440	7
* A164	1	16	STR	3480	5
* A165	1	16	STR	2520	4
* A166	1	16	STR	1540	2
A251	1	16	STR	15980	25
A252	1	16	STR	15020	23
A253	1	16	STR	14060	22
A254	1	16	STR	13100	20
A255	1	16	STR	12140	19
A256	1	16	STR	11180	17
A257	1	16	STR	10200	16
A258	1	16	STR	9240	14
A259	1	16	STR	8280	13
A260	1	16	STR	7320	11
A261	1	16	STR	6360	10
A262	1	16	STR	5400	8
A263	1	16	STR	4440	7
A264	1	16	STR	3480	5
A265	1	16	STR	2520	4
A266	1	16	STR	1540	2

BAR	NO.	SIZE	TYPE	LENGTH	WEIGHT
* B101	152	13	STR	7920	1197
* B102	76	22	STR	15540	3593
* B103	74	22	STR	14200	3197
* B104	76	13	STR	7220	545
* B105	76	22	STR	13300	3075
* B106	74	22	STR	12100	2724
* B107	114	13	STR	8160	925
B108	427	16	STR	17540	11624
* B109	4	13	STR	7960	32
B110	2	16	STR	15400	48
* G2	2	16	STR	16700	52
* K4	2	16	1	4300	13
* K5	6	16	1	4060	38
* K6	16	16	2	4140	103
* S3	40	13	3	1100	44
* S4	40	13	3	1120	45

REINFORCING STEEL	30,451 kg
*EPOXY COATED REINFORCING STEEL	34,361 kg

SUPERSTRUCTURE REINFORCING STEEL LENGTHS ARE BASED ON THE FOLLOWING MINIMUM SPLICE LENGTHS

BAR SIZE	SUPERSTRUCTURE EXCEPT APPROACH SLABS, PARAPET, AND BARRIER RAIL		APPROACH SLABS		PARAPET AND BARRIER RAIL
	EPOXY COATED	UNCOATED	EPOXY COATED	UNCOATED	
#13	610	540	610	540	840
#16	770	660	770	660	1050
#19	920	790	1190	790	1330
#22	1580	1060			
#25	2080	1390			

GROOVING BRIDGE FLOORS

APPROACH SLABS	306.0	SQ.METER
BRIDGE DECK	3158.0	SQ.METER
TOTAL	3464.0	SQ.METER

BAR TYPES

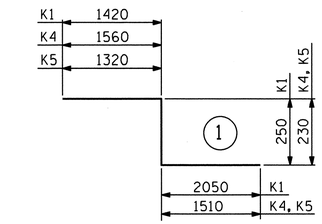

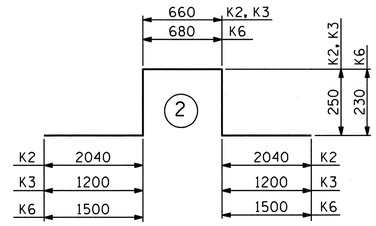

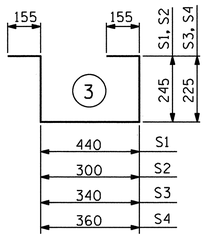

ALL BAR DIMENSIONS ARE OUT TO OUT

SUPERSTRUCTURE BILL OF MATERIAL

	CLASS AA CONCRETE	CLASS AA CONCRETE	REINFORCING STEEL	EPOXY COATED REINFORCING STEEL
	(CU.METER)	(CU.METER)	(kg)	(kg)
			57,198	62,006
	SPANS A & B	SPANS C, D & E		
POUR #1	99.1	117.1		
POUR #2	254.7	186.7		
POUR #3	40.1	205.6		
TOTALS **	393.9	509.4	57,198	62,006

** QUANTITIES FOR BARRIER RAIL ARE NOT INCLUDED

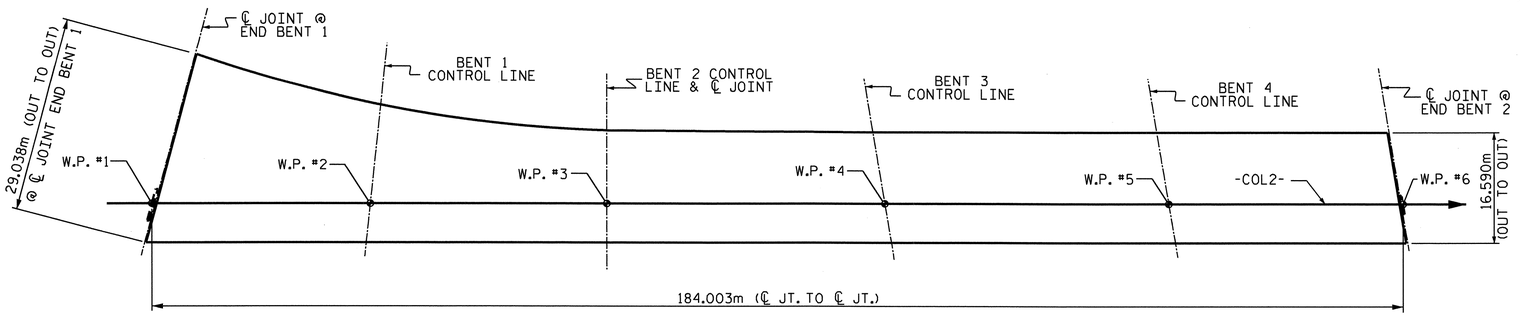

LAYOUT FOR COMPUTING AREA
OF REINFORCED CONCRETE DECK SLAB
(SQ. METER = 3316.0)

PROJECT NO. U-2519DA
CUMBERLAND COUNTY
STATION: 28+66.746-COL2-

STATE OF NORTH CAROLINA
DEPARTMENT OF TRANSPORTATION
RALEIGH

SUPERSTRUCTURE

BILL OF MATERIAL

NORTH CAROLINA PROFESSIONAL SEAL 16301 ENGINEER TING HSIANG FANG
3/24/11

REVISIONS						SHEET NO.
NO.	BY:	DATE:	NO.	BY:	DATE:	S-57
1			3			TOTAL SHEETS
2			4			411

DRAWN BY : D. G. ELY DATE : 2/19/08
CHECKED BY : T.H. FANG DATE : 7/15/08

24-MAR-2011 12:03
K:\TIPProjects-U\U2519da\Structures\frye\str3_COL2\FinalPlans\u-2519da_sd_bm_03.dgn
ttfang

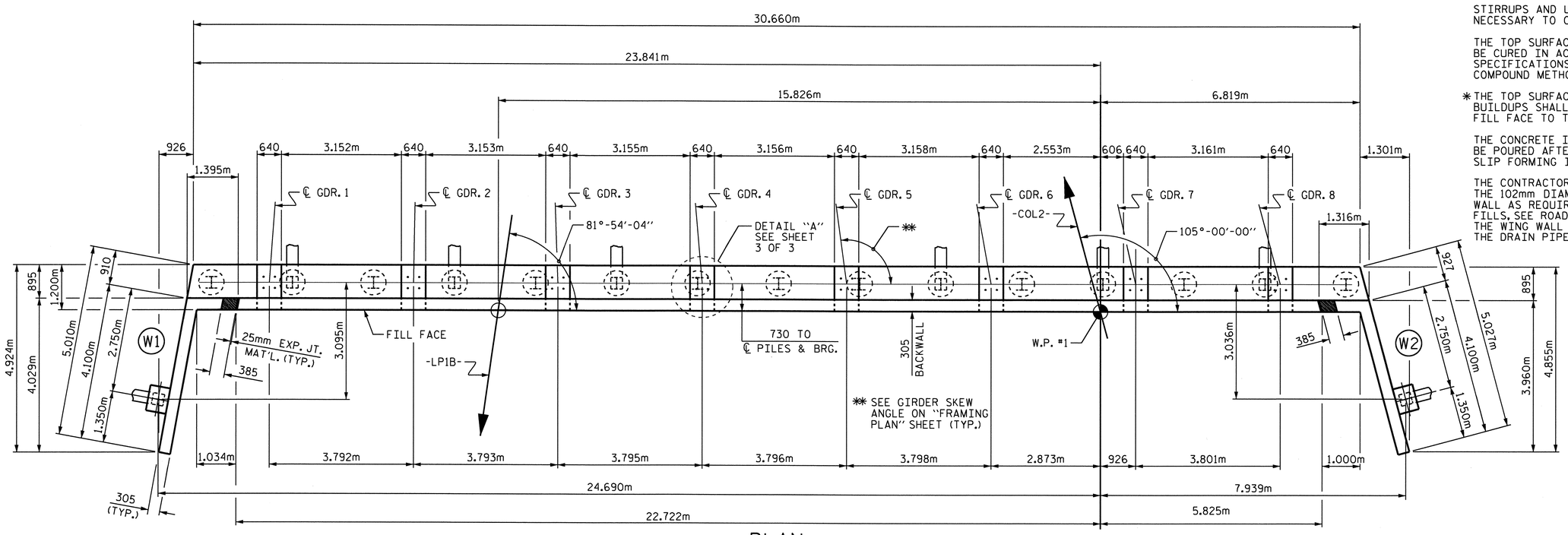

PLAN

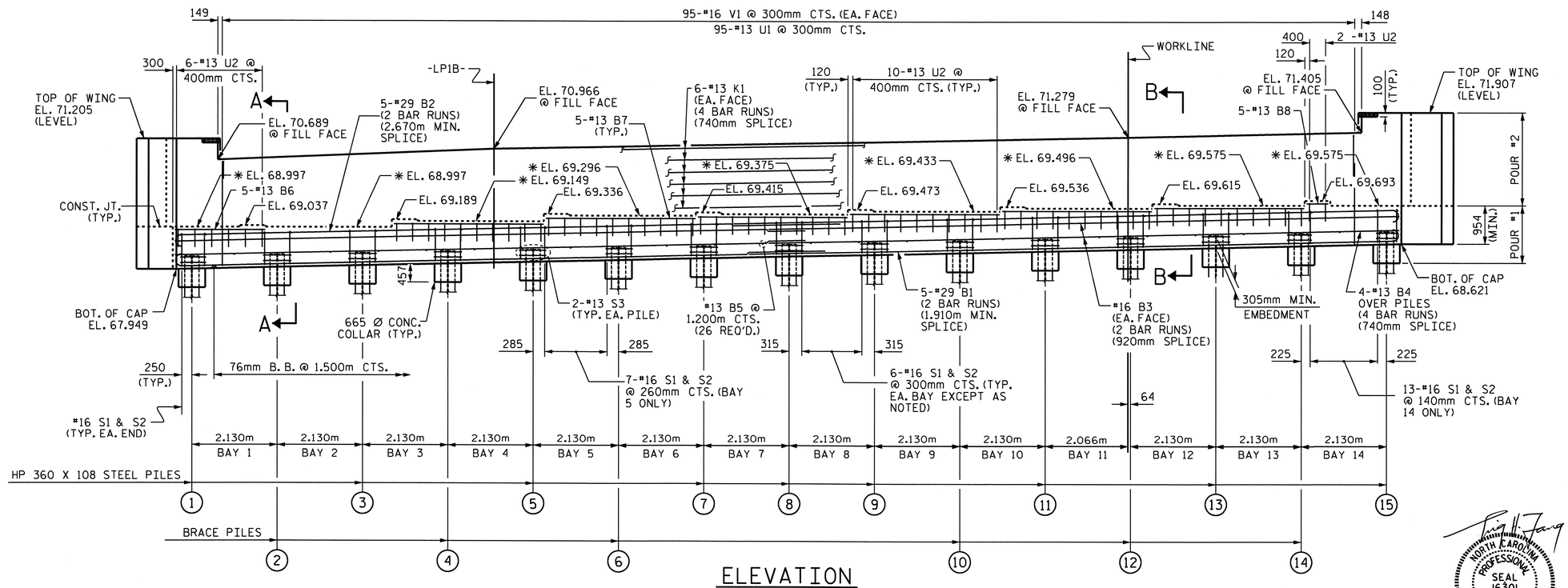

ELEVATION

FOR PILE SPLICE DETAILS, SEE END BENT 1, SHEET 3 OF 3.

REINFORCING STEEL (V AND K BARS) IN THE AREA OF THE BLOCKOUT SHALL BE CUT TO MAINTAIN A MINIMUM CLEARANCE OF 50mm.

NOTES:

STIRRUPS AND U2 BARS IN CAP MAY BE SHIFTED AS NECESSARY TO CLEAR ANCHOR BOLTS.

THE TOP SURFACE AREAS OF THE END BENT CAPS SHALL BE CURED IN ACCORDANCE WITH THE STANDARD SPECIFICATIONS EXCEPT THE MEMBRANE CURING COMPOUND METHOD SHALL NOT BE USED.

* THE TOP SURFACE OF THE CAP EXCEPT THE BRIDGE SEAT BUILDUPS SHALL BE SLOPED TRANSVERSELY FROM THE FILL FACE TO THE BACK FACE AT THE RATE OF 2 %.

THE CONCRETE IN THE SHADED AREA OF THE WING SHALL BE POURED AFTER THE BARRIER RAIL HAS BEEN CAST IF SLIP FORMING IS USED.

THE CONTRACTOR SHALL PROVIDE FOR INSTALLATION OF THE 102mm DIAMETER DRAIN PIPE THROUGH THE WING WALL AS REQUIRED FOR REINFORCED BRIDGE APPROACH FILLS, SEE ROADWAY PLANS. REINFORCING STEEL IN THE WING WALL MAY BE SHIFTED AS NECESSARY TO CLEAR THE DRAIN PIPE.

BACKWALL SHALL BE PLACED BEFORE APPLYING THE EPOXY PROTECTIVE COATING.

TOP OF PILE ELEVATIONS	
①	68.267
②	68.314
③	68.361
④	68.407
⑤	68.454
⑥	68.501
⑦	68.547
⑧	68.594
⑨	68.641
⑩	68.687
⑪	68.734
⑫	68.781
⑬	68.827
⑭	68.874
⑮	68.921

PROJECT NO. U-2519DA

CUMBERLAND COUNTY

STATION: 28+66.746-COL2-

SHEET 1 OF 3

STATE OF NORTH CAROLINA
DEPARTMENT OF TRANSPORTATION
RALEIGH

SUBSTRUCTURE

END BENT 1

NORTH CAROLINA PROFESSIONAL SEAL 16301 ENGINEER TING-HSIUNG FANG

3/22/11

REVISIONS						SHEET NO.
NO.	BY:	DATE:	NO.	BY:	DATE:	S-58
1			3			TOTAL SHEETS
2			4			411

DRAWN BY : E.C. LOCKLEAR DATE : 6-27-08
CHECKED BY : T. H. FANG DATE : 8-27-08

22-MAR-2011 16:44
K:\TIPProjects-U\U2519da\Structures\frye\str3_COL2\FinalPlans\u2519da_sd_ebl_03.dgn
ttfang

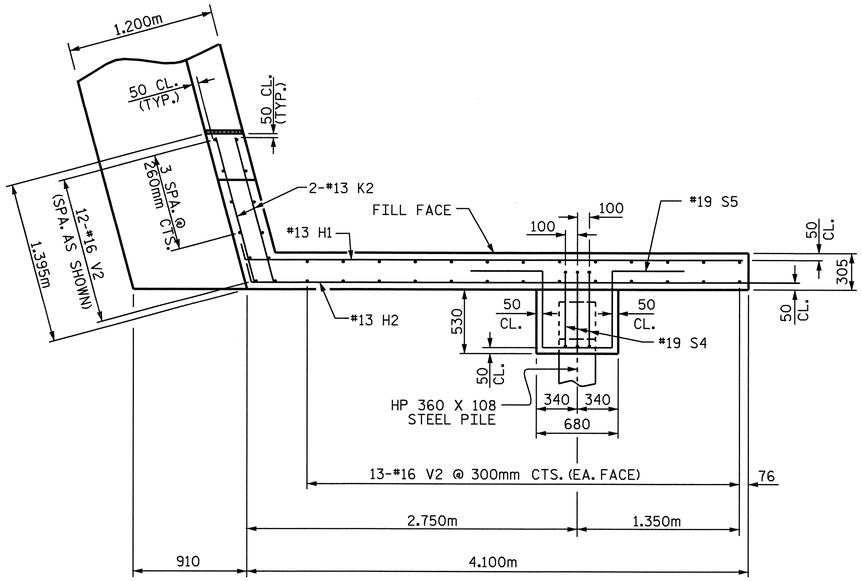

PLAN (W1)

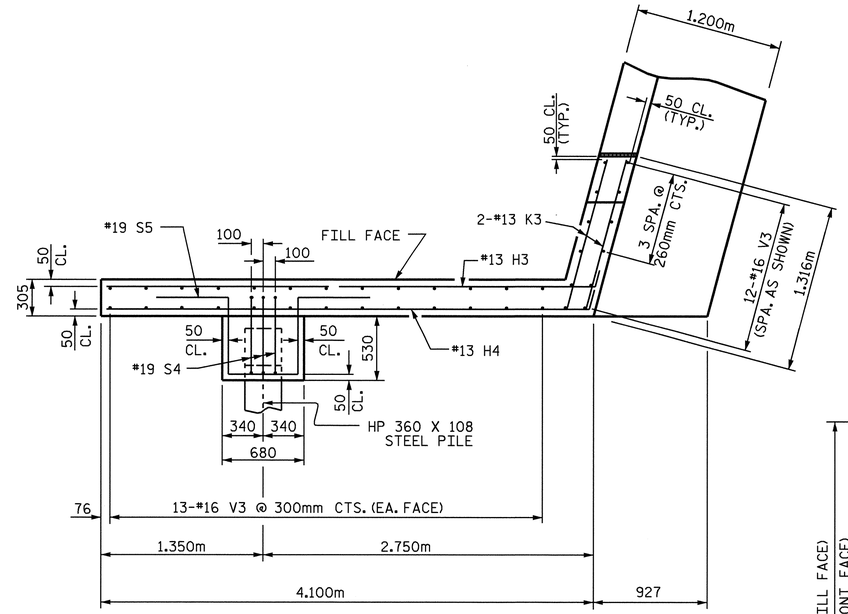

PLAN (W2)

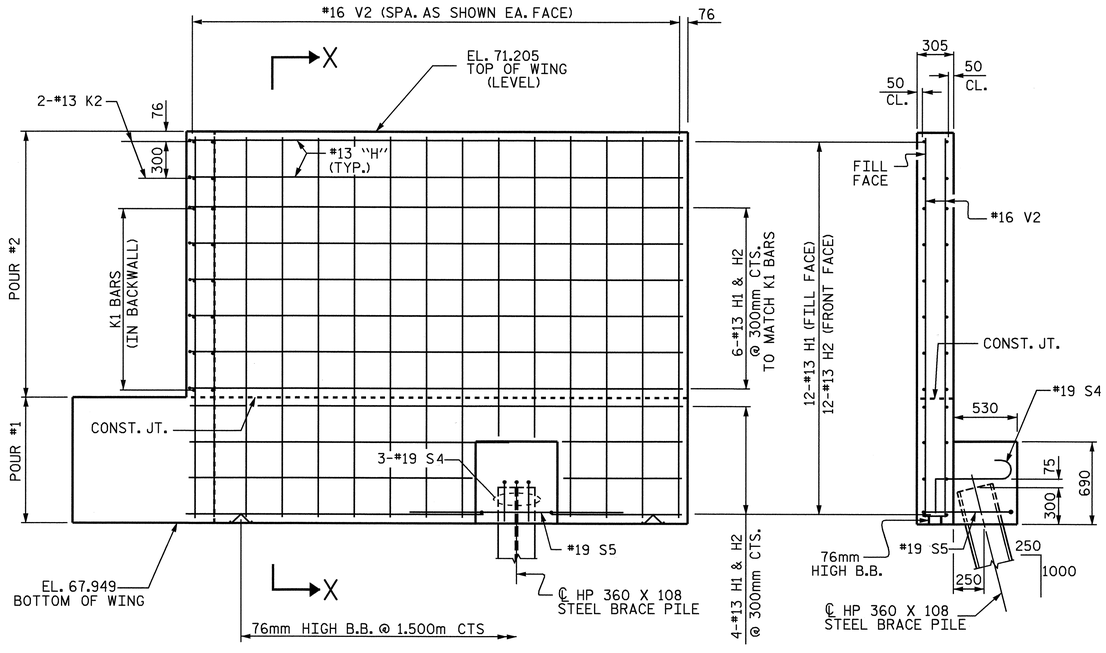

ELEVATION (W1)

SECTION X-X

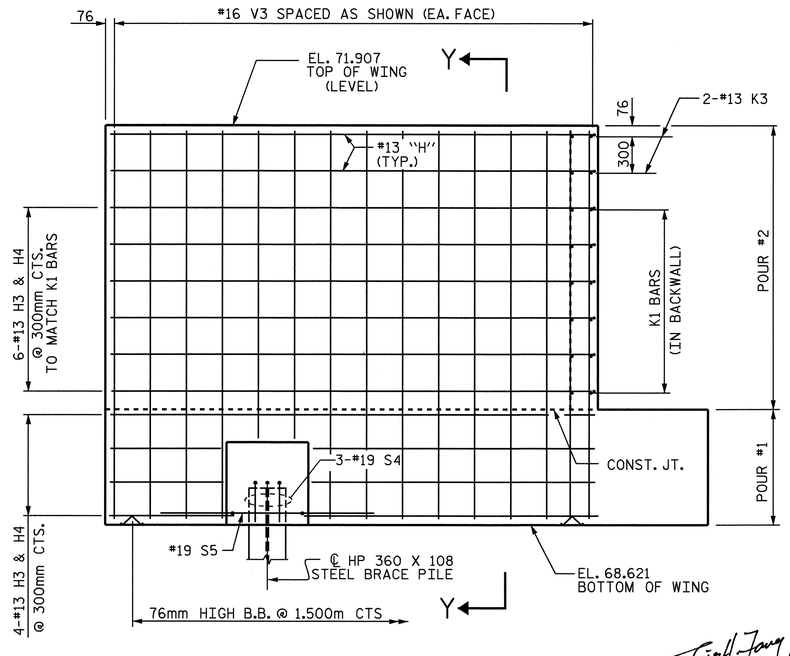

ELEVATION (W2)

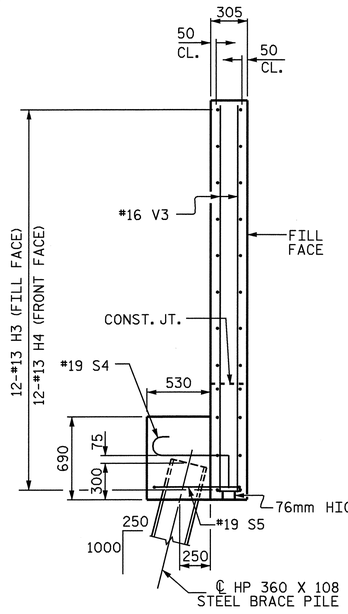

SECTION Y-Y

PROJECT NO. U-2519DA

CUMBERLAND COUNTY

STATION: 28+76.746 -COL2-

SHEET 2 OF 3

STATE OF NORTH CAROLINA
DEPARTMENT OF TRANSPORTATION
RALEIGH

SUBSTRUCTURE

END BENT 1

REVISIONS						SHEET NO.
NO.	BY:	DATE:	NO.	BY:	DATE:	S-59
1			3			TOTAL SHEETS
2			4			411

DRAWN BY : H. B. SHAH DATE : 7-08
CHECKED BY : T. H. FANG DATE : 7-08

03-OCT-2008 11:06
R:\Structures\frye\str3_COL2\Final Plans\u2519da_sd_eb1_03.dgn
sdombrowski

Ting H. Fang 10/03/08
NORTH CAROLINA PROFESSIONAL SEAL 16301 ENGINEER TING HSIUNG FANG

K:\TIPProjects-U\U2519da\Structures\frye\str3_COL2\FinalPlans\u2519da_col2_bill03.dgn tfang

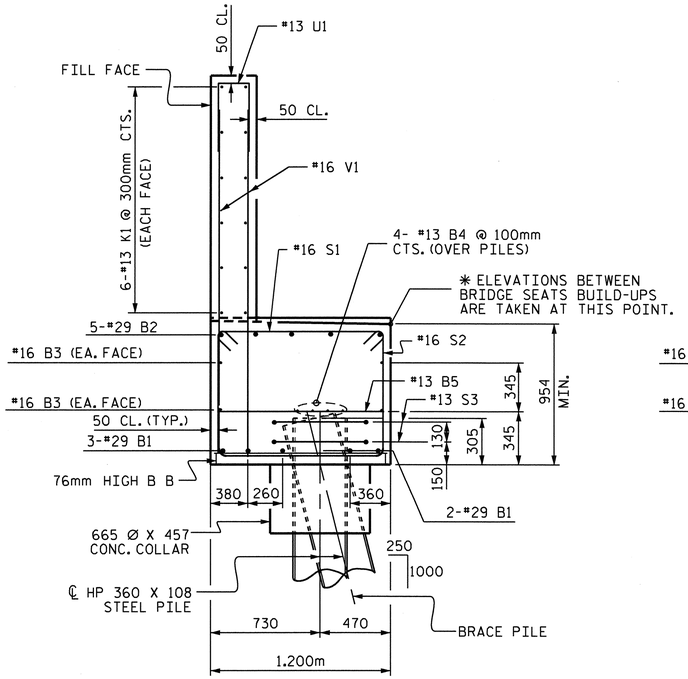

SECTION A-A

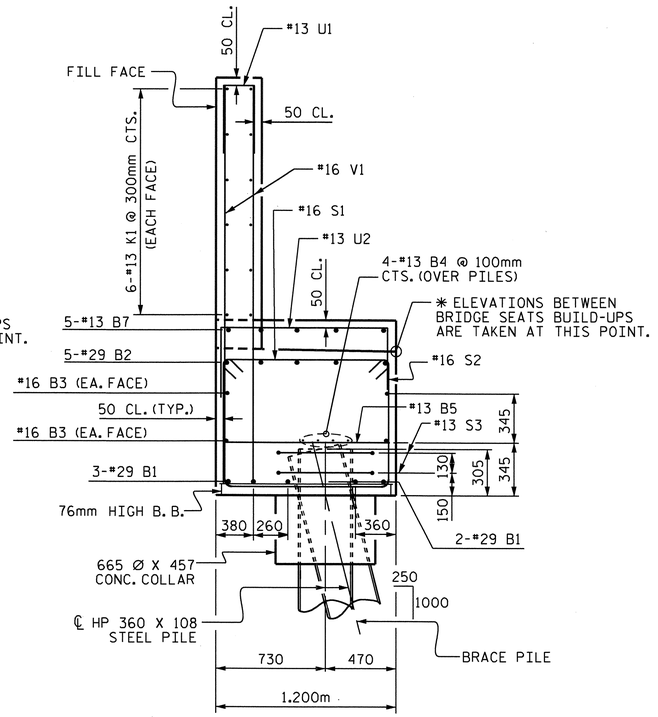

SECTION B-B

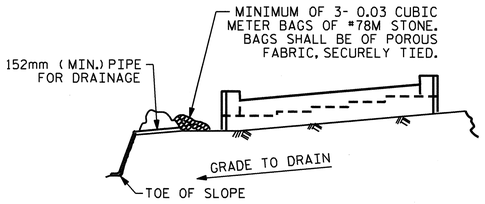

BAGGED STONE AND PIPE SHALL BE PLACED IMMEDIATELY AFTER COMPLETION OF END BENT EXCAVATION. PIPE MAY BE EITHER CONCRETE, CORRUGATED STEEL, CORRUGATED ALUMINUM ALLOY, OR CORRUGATED PLASTIC. PERFORATED PIPE WILL NOT BE ALLOWED.

BAGGED STONE SHALL REMAIN IN PLACE UNTIL THE ENGINEER DIRECTS THAT IT BE REMOVED. THE CONTRACTOR SHALL REMOVE AND DISPOSE OF SILT ACCUMULATIONS AT BAGGED STONE WHEN SO DIRECTED BY THE ENGINEER. BAGS SHALL BE REMOVED AND REPLACED WHENEVER THE ENGINEER DETERMINES THAT THEY HAVE DETERIORATED AND LOST THEIR EFFECTIVENESS.

NO SEPARATE PAYMENT WILL BE MADE FOR THIS WORK AND THE ENTIRE COST OF THIS WORK SHALL BE INCLUDED IN THE UNIT CONTRACT PRICE BID FOR THE SEVERAL PAY ITEMS.

TEMPORARY DRAINAGE AT END BENT

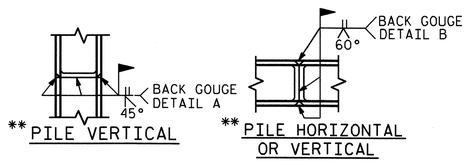

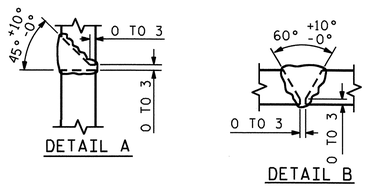

** POSITION OF PILE DURING WELDING.

PILE SPLICE DETAILS

BAR TYPES

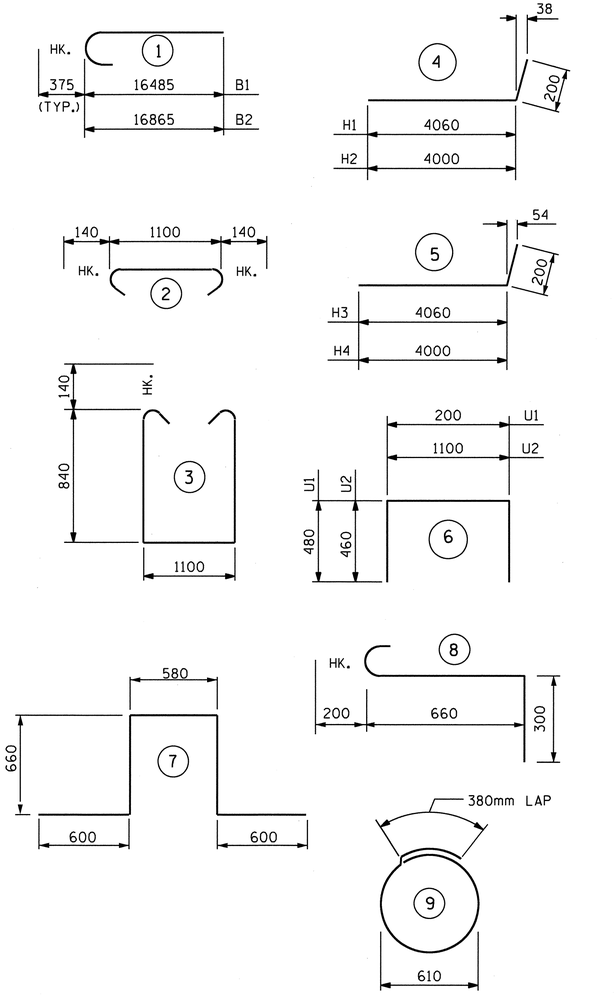

ALL BAR DIMENSIONS ARE OUT TO OUT.

BILL OF MATERIAL

END BENT 1

BAR	NO.	SIZE	TYPE	LENGTH	WEIGHT
B1	10	#29	1	16860	853
B2	10	#29	1	17240	872
B3	8	#16	STR	16020	199
B4	16	#13	STR	8300	132
B5	26	#13	STR	1100	28
B6	5	#13	STR	2160	11
B7	30	#13	STR	3700	110
B8	5	#13	STR	540	3
H1	12	#13	4	4260	51
H2	12	#13	4	4200	50
H3	12	#13	5	4260	51
H4	12	#13	5	4200	50
K1	48	#13	STR	8340	398
K2	4	#13	STR	1300	5
K3	4	#13	STR	1200	5
S1	94	#16	2	3060	446
S2	94	#16	3	1380	201
S3	30	#13	9	2300	69
S4	6	#19	8	1160	16
S5	2	#19	7	3100	14
U1	95	#13	6	1160	110
U2	68	#13	6	2020	137
V1	190	#16	STR	2620	773
V2	38	#16	STR	3140	185
V3	38	#16	STR	3180	189
REINFORCING STEEL				=	4956 KG

CLASS "A" CONCRETE BREAKDOWN

POUR #1 CAP & LOWER WINGS & COLLAR 42.8 m3

POUR #2 BACKWALL & UPPER WINGS 22.4 m3

TOTAL 65.2 m3

HP 360 x 108 STEEL PILES

No. 17 METERS 357

PILE REDRIVES

EACH 4

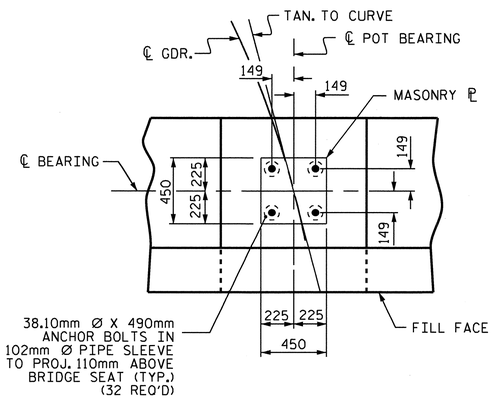

DETAIL A

NORTH CAROLINA PROFESSIONAL SEAL 16301 ENGINEER TING HSIUNG FANG
3/7/11

PROJECT NO. U-2519DA

CUMBERLAND COUNTY

STATION: 28+66.746 -COL2-

SHEET 3 OF 3

STATE OF NORTH CAROLINA
DEPARTMENT OF TRANSPORTATION
RALEIGH

SUBSTRUCTURE

END BENT 1

REVISIONS						SHEET NO.
NO.	BY:	DATE:	NO.	BY:	DATE:	S-60
1			3			TOTAL SHEETS
2			4			411

DRAWN BY : Neil M Ruffin DATE : 4/2/08
CHECKED BY : T. H. FANG DATE : 4/21/08

NOTES

STIRRUPS AND "U" BARS IN CAP MAY BE SHIFTED AS NECESSARY TO CLEAR ANCHOR BOLTS.

HOOKS ON M1 BARS MAY BE TURNED AS NECESSARY FOR PLACING REINFORCING STEEL.

THE TOP SURFACE AREAS OF THE BENT CAP SHALL BE CURED IN ACCORDANCE WITH THE STANDARD SPECIFICATIONS EXCEPT THE MEMBRANE CURING COMPOUND METHOD SHALL NOT BE USED.

GALVANIZE THE FULL LENGTH OF EACH INTERIOR BENT PILE IN ACCORDANCE WITH SECTION 1076 OF THE STANDARD SPECIFICATIONS.

FOR PILE SPLICE DETAILS, SEE SHEET 2 OF 2.

FOOTINGS IN THE WETLANDS SHALL BE PLACED A MINIMUM OF 1 METER ABOVE THE EXISTING GROUND ELEVATION. THE PROPOSED FOOTING ELEVATIONS MAY BE ADJUSTED AS NEEDED. THE M1 BARS ARE DETAILED WITH 1 METER OF EXTRA SPLICE TO COMPENSATE FOR LOWERING OF THE FOOTINGS. IF THE FOOTING ELEVATIONS ARE RAISED ABOVE THE PROPOSED ELEVATIONS THE "V" BARS SHALL BE CUT OFF TO AVOID BARS EXTENDING TOO FAR INTO THE BENT CAP.

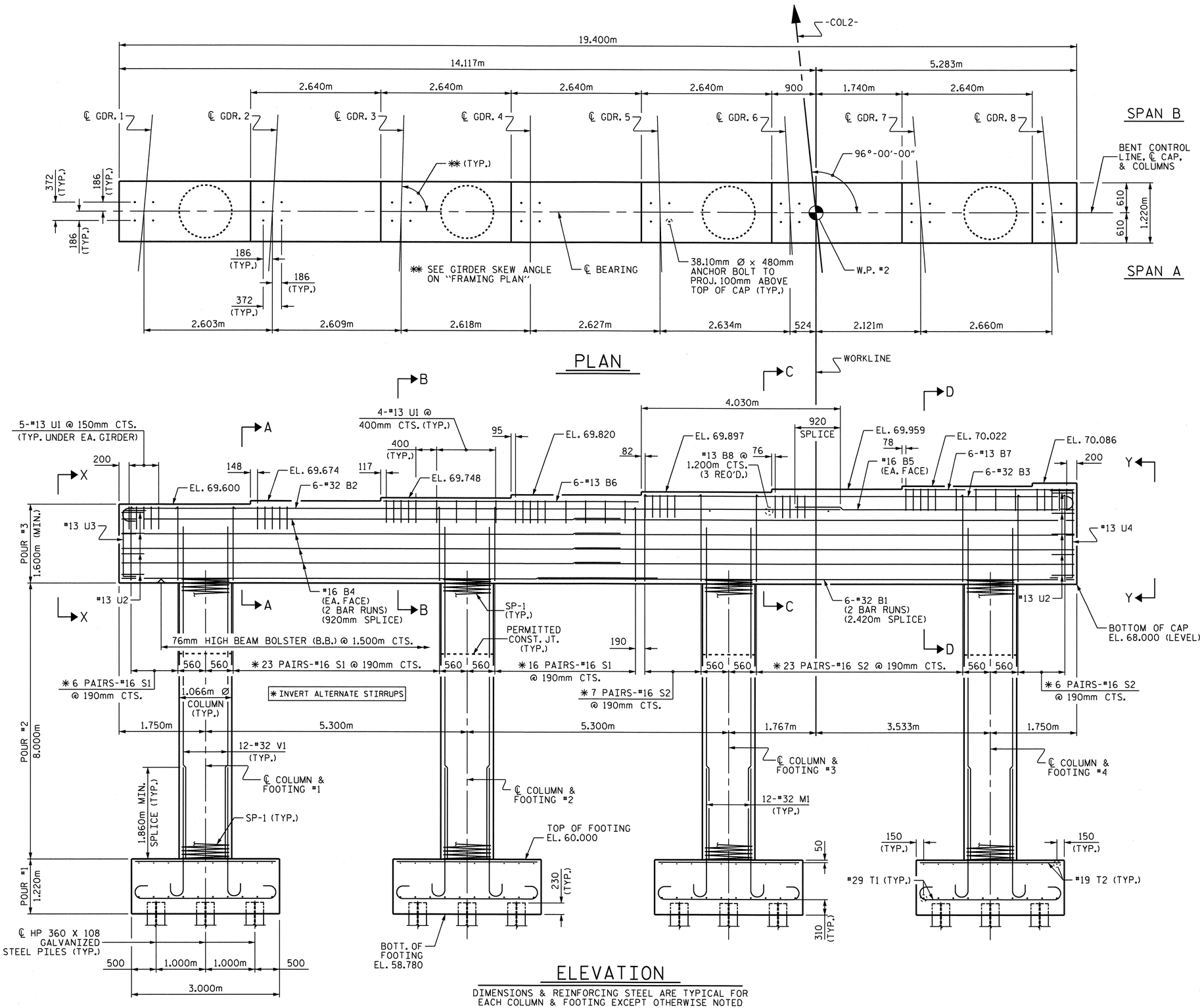

ELEVATION

DIMENSIONS & REINFORCING STEEL ARE TYPICAL FOR EACH COLUMN & FOOTING EXCEPT OTHERWISE NOTED

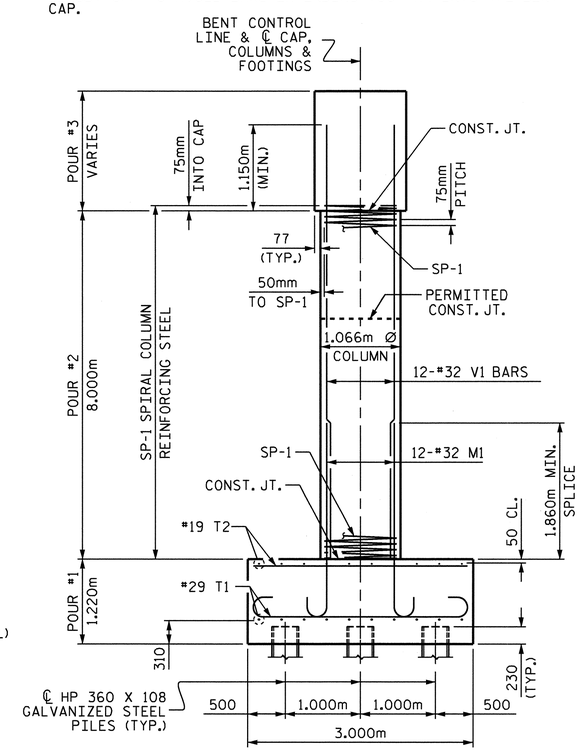

END ELEVATION

PROJECT NO. U-2519DA

CUMBERLAND COUNTY

STATION: 28+66.746-COL2-

SHEET 1 OF 2

STATE OF NORTH CAROLINA
DEPARTMENT OF TRANSPORTATION
RALEIGH

SUBSTRUCTURE

BENT 1

NORTH CAROLINA PROFESSIONAL SEAL 16301 ENGINEER T. H. FANG
3/28/11

REVISIONS						SHEET NO.
NO.	BY:	DATE:	NO.	BY:	DATE:	S-61
1			3			TOTAL SHEETS
2			4			411

DRAWN BY : E.C. LOCKLEAR DATE : 5-15-08
CHECKED BY : T. H. FANG DATE : 7-30-08

28-MAR-2011 15:09
K:\TIPProjects-U\U2519da\Structures\frye\str3_COL2\FinalPlans\u2519da_sd_bt#_03.dgn
kpnewton

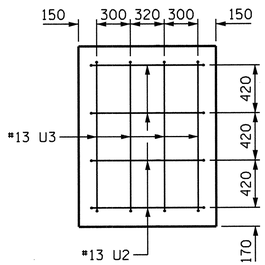

VIEW X-X

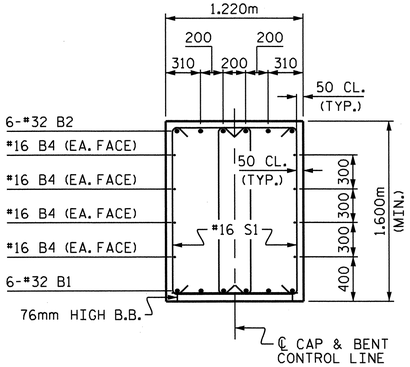

SECTION A-A

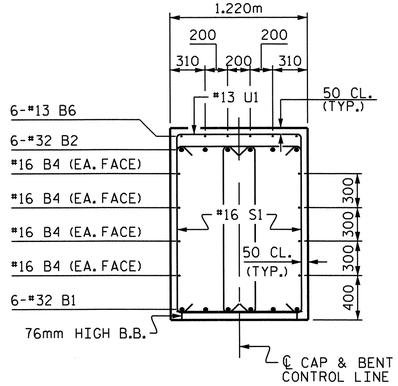

SECTION B-B

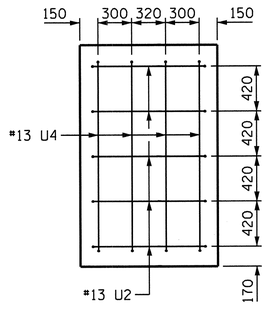

VIEW Y-Y

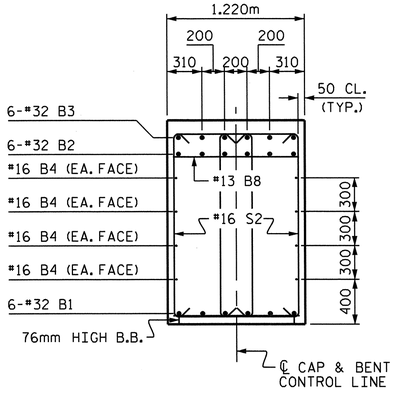

SECTION C-C

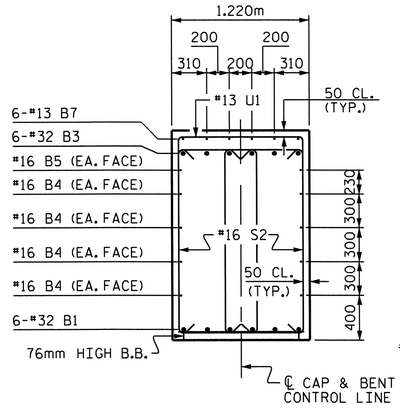

SECTION D-D

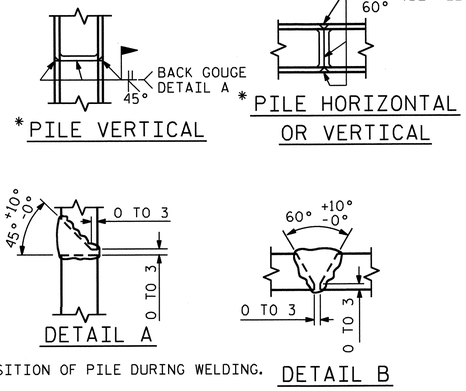

* POSITION OF PILE DURING WELDING.

PILE SPLICE DETAILS

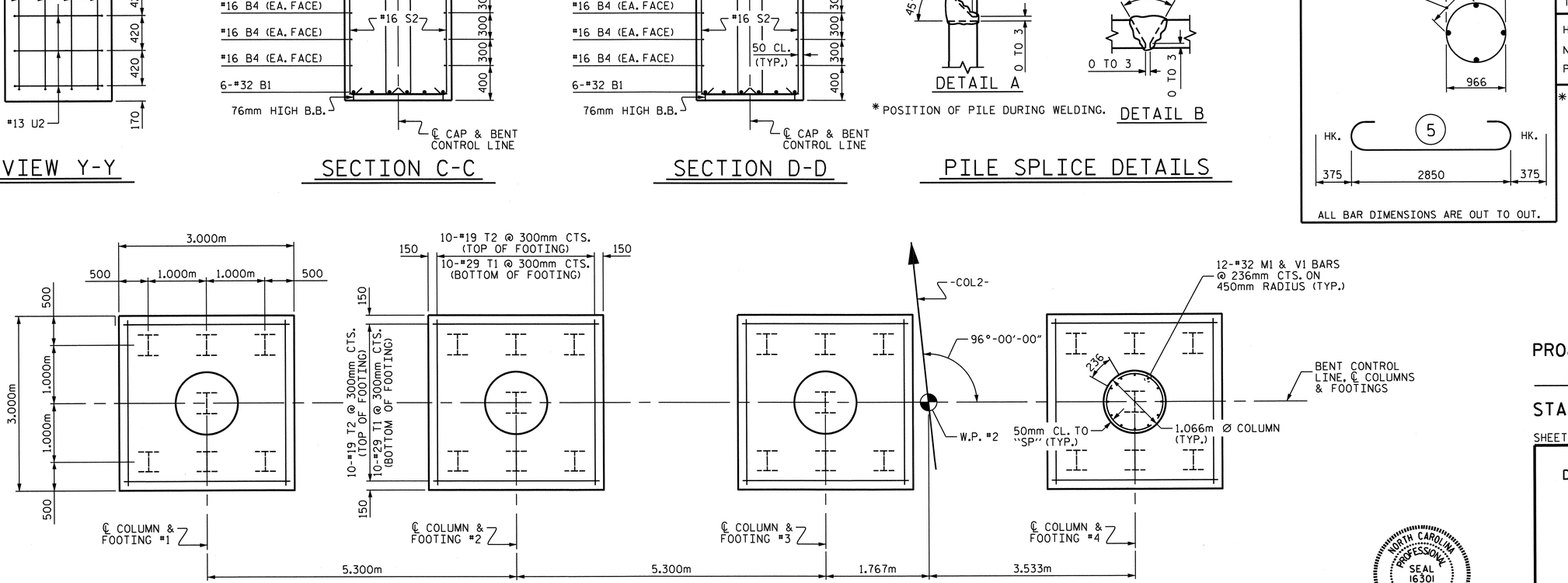

PLAN OF FOOTINGS AND COLUMNS

DIMENSIONS & REINFORCING STEEL ARE TYPICAL FOR EACH COLUMN & FOOTING

BAR TYPES

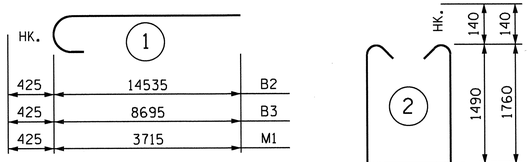

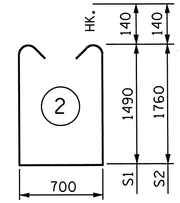

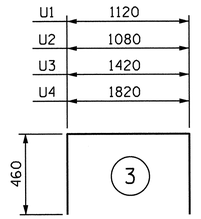

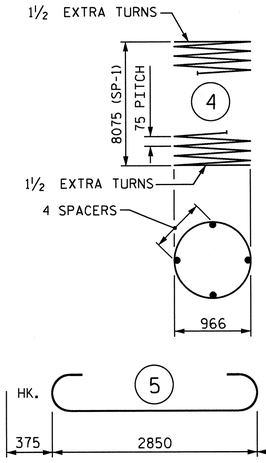

ALL BAR DIMENSIONS ARE OUT TO OUT.

BILL OF MATERIAL

BENT 1

BAR	NO.	SIZE	TYPE	LENGTH	WEIGHT
B1	12	#32	STR.	10860	835
B2	6	#32	1	14960	575
B3	6	#32	1	9120	350
B4	16	#16	STR.	10120	251
B5	2	#16	STR.	5660	18
B6	6	#13	STR.	5240	31
B7	6	#13	STR.	3440	21
B8	3	#13	STR.	1120	3
M1	48	#32	1	4140	1273
S1	90	#16	2	3960	553
S2	72	#16	2	4500	503
T1	80	#29	5	3600	1457
T2	80	#19	STR.	2840	508
U1	52	#13	3	2040	105
U2	9	#13	3	2000	18
U3	4	#13	3	2340	9
U4	4	#13	3	2740	11
V1	48	#32	STR.	9160	2816

REINFORCING STEEL				kg	9337
SP-1	4	*	4	330981	1316

SPIRAL COLUMN REINFORCING STEEL kg 1316

CLASS A CONCRETE BREAKDOWN

POUR #1 - FOOTINGS	C.M.	43.9
POUR #2 - COLUMNS	C.M.	28.6
POUR #3 - CAP	C.M.	43.3
TOTAL	C.M.	115.8

HP 360 x 108 GALVANIZED STEEL PILES

NO. 28	METERS	280
PILE REDRIVES	EACH	7

* THE "SP" SPIRAL REINFORCING STEEL SHALL BE W20 OR D-20 COLD DRAWN WIRE OR #13 PLAIN OR DEFORMED BAR.

PROJECT NO. U-2519DA

CUMBERLAND COUNTY

STATION: 28+66.746-COL2-

SHEET 2 OF 2

STATE OF NORTH CAROLINA
DEPARTMENT OF TRANSPORTATION
RALEIGH

SUBSTRUCTURE

BENT 1

NORTH CAROLINA PROFESSIONAL SEAL 16301 ENGINEER TING HSIUNG FANG

3/28/11

REVISIONS						SHEET NO.
NO.	BY:	DATE:	NO.	BY:	DATE:	S-62
1			3			TOTAL SHEETS
2			4			411

DRAWN BY : E.C. LOCKLEAR DATE : 5-15-08
CHECKED BY : T. H. FANG DATE : 7-25-08

28-MAR-2011 15:09
K:\TIPProjects-U\U2519da\Structures\frye\str3_COL2\FinalPlans\u2519da_sd_bt*_03.dgn
kpnewton

K:\TIPProjects-U\U2519da\Structures\frye\str3_COL2\Final
kpnewton

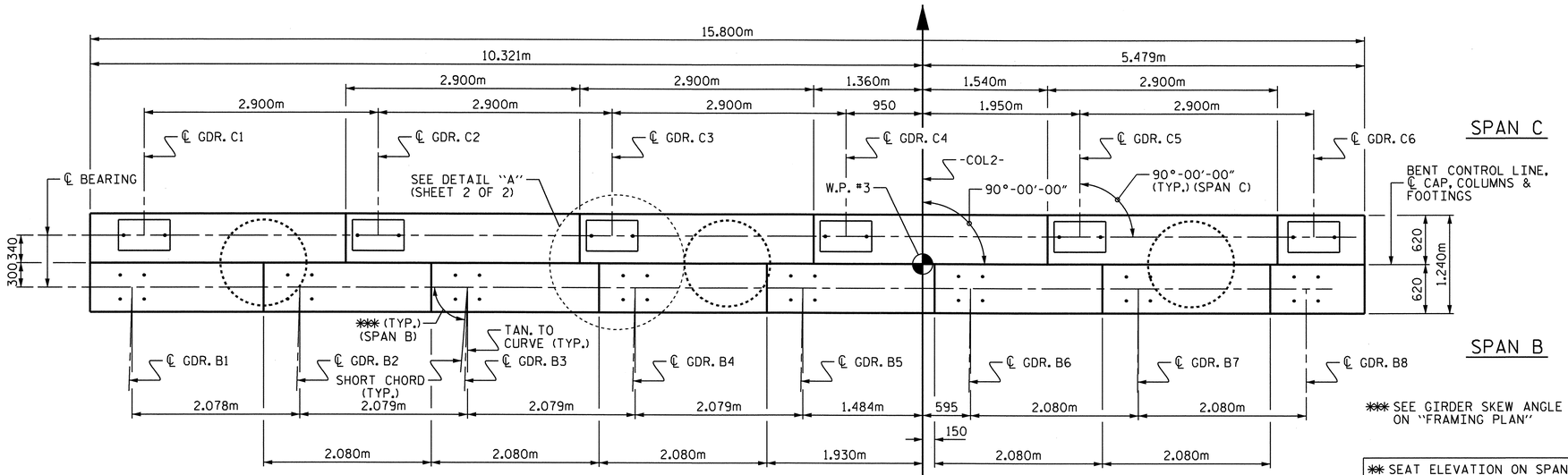

PLAN

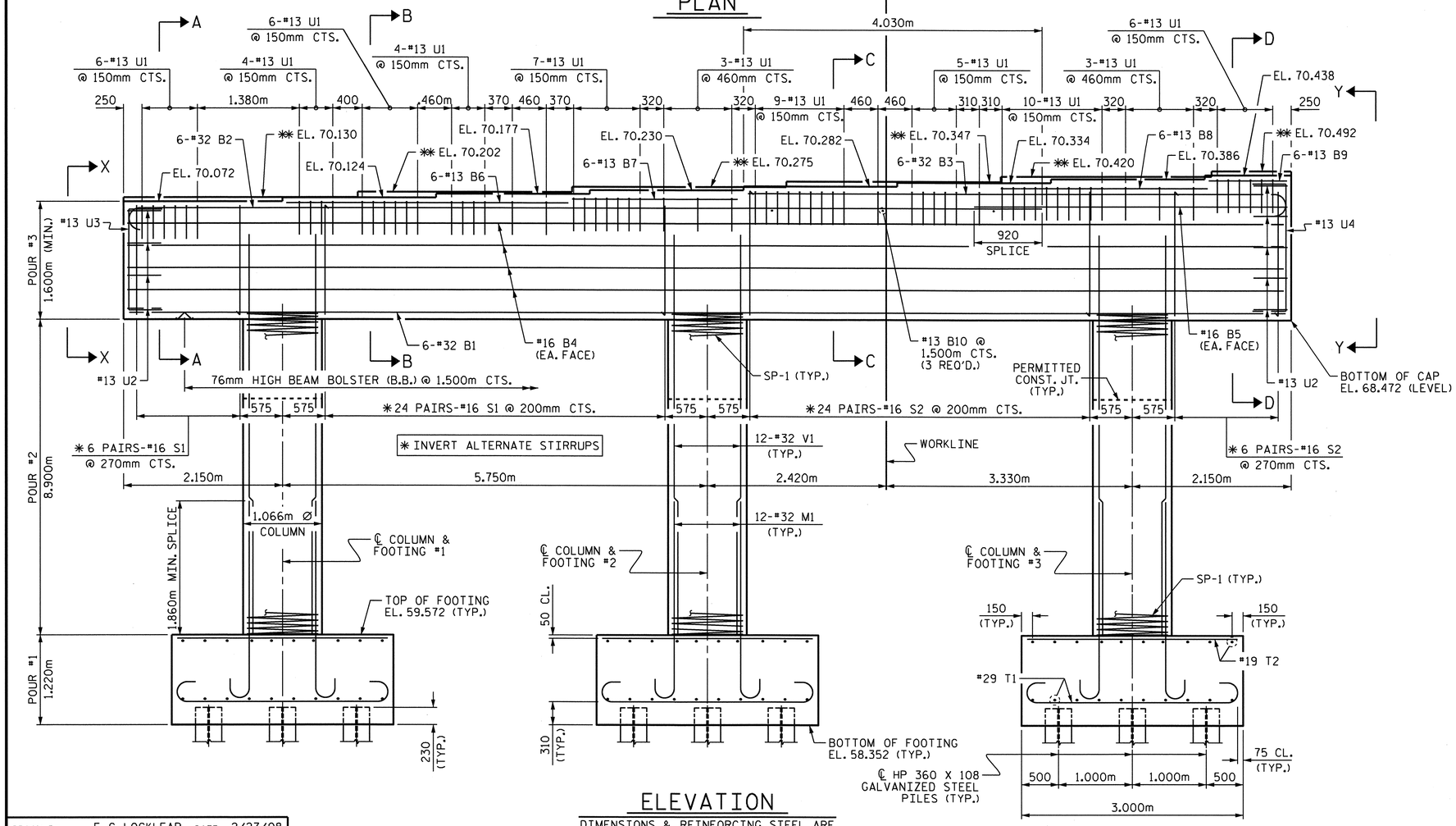

ELEVATION

DIMENSIONS & REINFORCING STEEL ARE TYPICAL FOR EACH COLUMN & FOOTING

NOTES

STIRRUPS AND "U" BARS IN CAP MAY BE SHIFTED AS NECESSARY TO CLEAR ANCHOR BOLTS.

HOOKS ON M1 BARS MAY BE TURNED AS NECESSARY FOR PLACING REINFORCING STEEL.

THE TOP SURFACE AREAS OF THE BENT CAPS SHALL BE CURED IN ACCORDANCE WITH THE STANDARD SPECIFICATIONS EXCEPT THE MEMBRANE CURING COMPOUND METHOD SHALL NOT BE USED.

GALVANIZE THE TOP OF EACH INTERIOR BENT PILE A MINIMUM OF 7.2 METERS. GALVANIZE IN ACCORDANCE WITH SECTION 1076 OF THE STANDARD SPECIFICATIONS.

FOR PILE SPLICE DETAILS, SEE BENT 1, SHEET 2 OF 2.

EPOXY COAT THE BENT CAP ON SPAN C SIDE AFTER ADJUSTMENTS ARE MADE TO BEARINGS AND ANCHOR BOLTS ARE GROUTED.

THE FOOTINGS SHALL BE PLACED 1 METER ABOVE THE EXISTING GROUND ELEVATION. THE PROPOSED FOOTING ELEVATIONS MAY BE ADJUSTED AS NEEDED. THE M1 BARS ARE DETAILED WITH 1 METER OF EXTRA SPLICE TO COMPENSATE FOR LOWERING OF THE FOOTINGS. IF THE FOOTING ELEVATIONS ARE RAISED ABOVE THE PROPOSED ELEVATIONS THE V1 BARS SHALL BE CUT OFF TO AVOID BARS EXTENDING TOO FAR INTO THE BENT CAP.

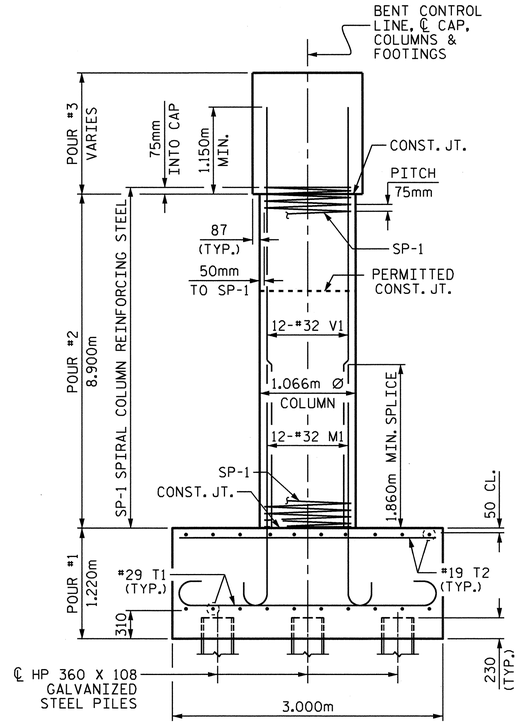

END ELEVATION

PROJECT NO. U-2519DA

CUMBERLAND COUNTY

STATION: 28+66.746-COL2-

SHEET 1 OF 2

STATE OF NORTH CAROLINA
DEPARTMENT OF TRANSPORTATION
RALEIGH

SUBSTRUCTURE

BENT 2

NORTH CAROLINA PROFESSIONAL SEAL 26045 ENGINEER KOREY NEWTON

3/28/2011

REVISIONS						SHEET NO.
NO.	BY:	DATE:	NO.	BY:	DATE:	S-63
1			3			TOTAL SHEETS
2			4			411

DRAWN BY : E. C. LOCKLEAR DATE : 2/27/08
CHECKED BY : P. K. NEWTON DATE : 8/25/08

K:\TIPProjects\U2519da\Structures\frye\str3.COL2\Final
kpnewton

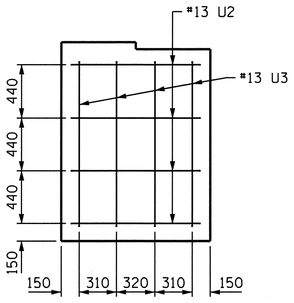

VIEW X-X

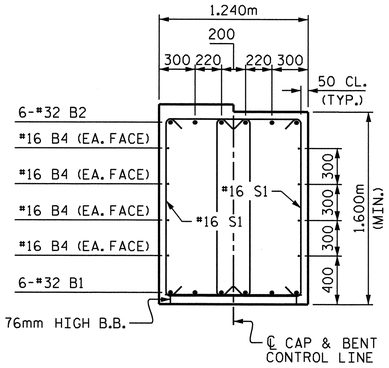

SECTION A-A

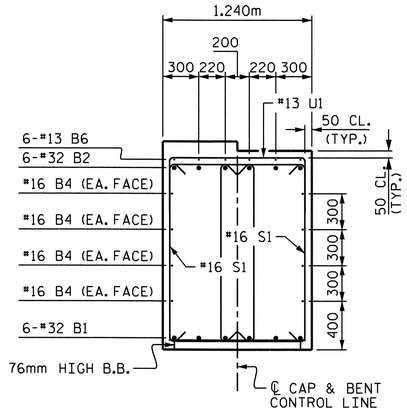

SECTION B-B

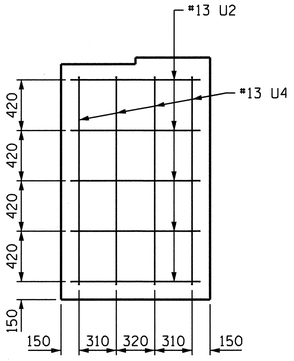

VIEW Y-Y

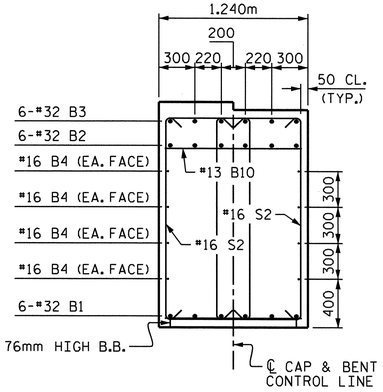

SECTION C-C

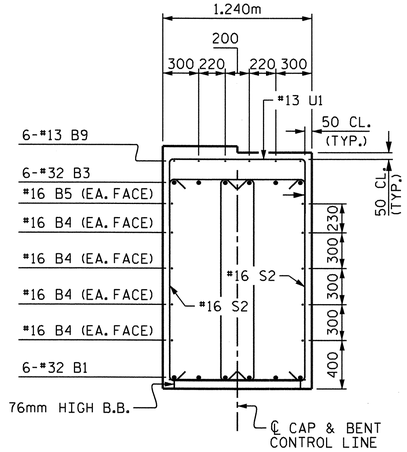

SECTION D-D

BAR TYPES

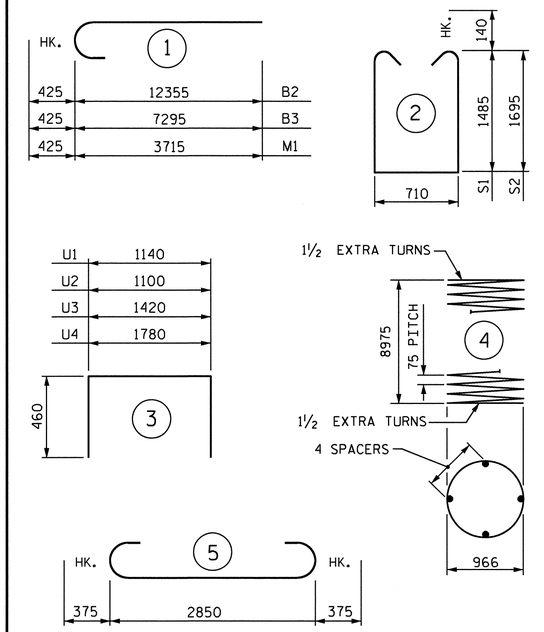

ALL BAR DIMENSIONS ARE OUT TO OUT.

BILL OF MATERIAL

BENT 2

BAR	NO.	SIZE	TYPE	LENGTH	WEIGHT
B1	6	*32	STR.	15700	603
B2	6	*32	1	12780	491
B3	6	*32	1	7720	297
B4	8	*16	STR.	15700	195
B5	2	*16	STR.	4240	13
B6	6	*13	STR.	4120	25
B7	6	*13	STR.	2240	13
B8	6	*13	STR.	2800	17
B9	6	*13	STR.	1060	6
B10	3	*13	STR.	1140	3
M1	36	*32	1	4140	954
S1	60	*16	2	3960	369
S2	60	*16	2	4380	408
T1	60	*29	5	3600	1093
T2	60	*19	STR.	2840	381
U1	67	*13	3	2060	137
U2	9	*13	3	2020	18
U3	4	*13	3	2340	9
U4	4	*13	3	2700	11
V1	36	*32	STR.	10160	2342

REINFORCING STEEL				kg	7380
SP-1	3	*	4	366870	1094

SPIRAL COLUMN REINFORCING STEEL kg 1094

CLASS A CONCRETE BREAKDOWN

POUR *1 - FOOTING	C.M.	32.9
POUR *2 - COLUMN	C.M.	23.8
POUR *3 - CAP	C.M.	35.1
TOTAL	C.M.	91.8

HP 360 x 108 GALVANIZED STEEL PILES

NO. 27	METERS	486
PILE REDRIVES	EACH	7

* THE SP-1 SPIRAL REINFORCING STEEL SHALL BE W20 OR D-20 COLD DRAWN WIRE OR *13 PLAIN OR DEFORMED BAR.

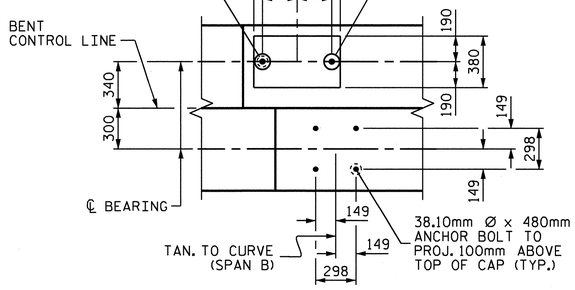

DETAIL "A"

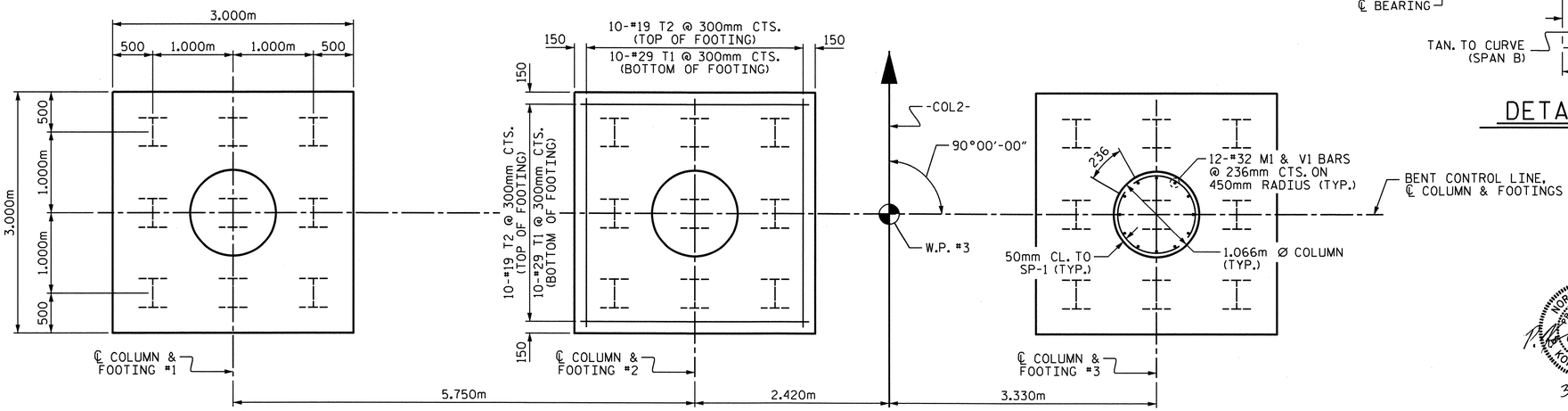

PLAN OF FOOTINGS AND COLUMNS

DIMENSIONS & REINFORCING STEEL ARE TYPICAL FOR EACH COLUMN & FOOTING

NORTH CAROLINA PROFESSIONAL SEAL 28448 ENGINEER KOREY NEWTON

3/28/2011

DRAWN BY : E. C. LOCKLEAR DATE : 2/27/08
CHECKED BY : P. K. NEWTON DATE : 8/25/08

PROJECT NO. U-2519DA
CUMBERLAND COUNTY
STATION: 28+66.746-COL2-

SHEET 2 OF 2

STATE OF NORTH CAROLINA
DEPARTMENT OF TRANSPORTATION
RALEIGH

SUBSTRUCTURE

BENT 2

REVISIONS						SHEET NO.
NO.	BY:	DATE:	NO.	BY:	DATE:	S-64
1			3			TOTAL SHEETS
2			4			411

NOTES

STIRRUPS AND "U" BARS IN CAP MAY BE SHIFTED AS NECESSARY TO CLEAR ANCHOR BOLTS.

HOOKS ON M1 BARS MAY BE TURNED AS NECESSARY FOR PLACING REINFORCING STEEL.

THE TOP SURFACE AREAS OF THE BENT CAP SHALL BE CURED IN ACCORDANCE WITH THE STANDARD SPECIFICATIONS EXCEPT THE MEMBRANE CURING COMPOUND METHOD SHALL NOT BE USED.

FOR PILE SPLICE DETAILS, SEE SHEET 2 OF 2.

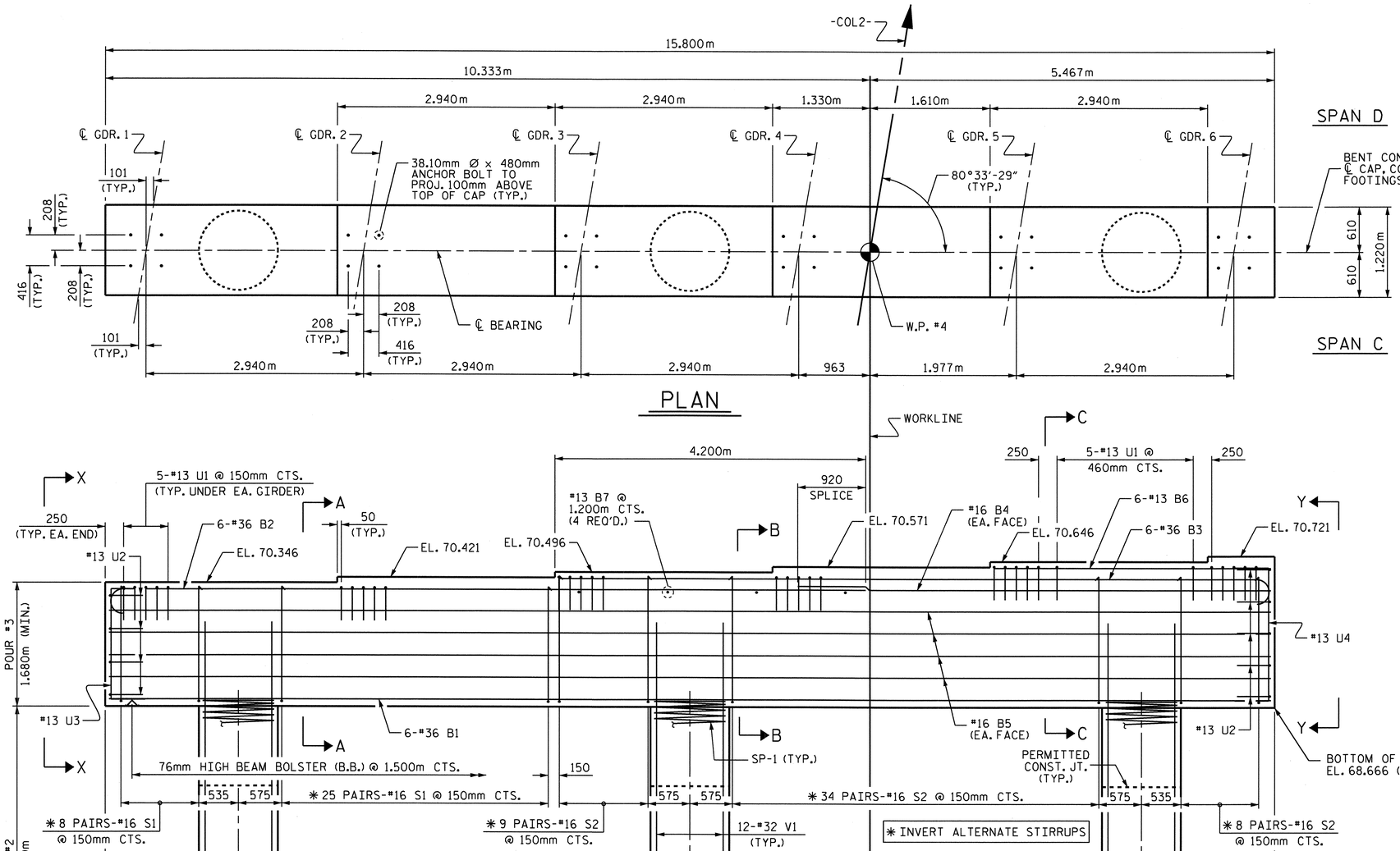

PLAN

ELEVATION

DIMENSIONS & REINFORCING STEEL SHOWN ON FOOTING #3 ARE TYPICAL FOR FOOTING #1

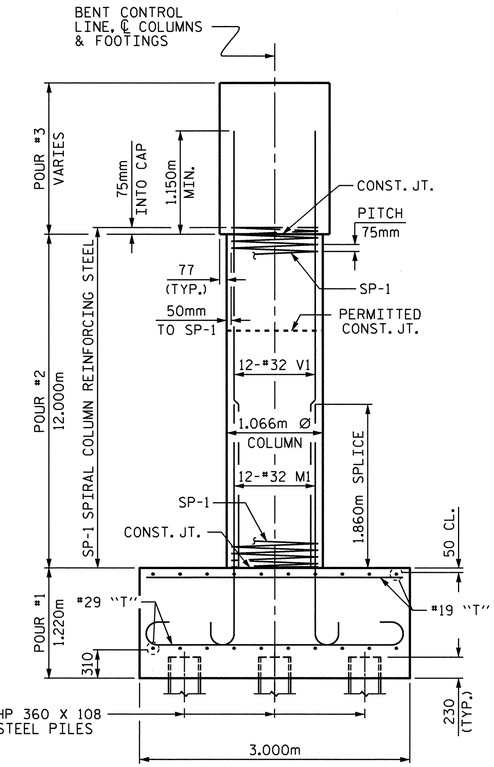

END ELEVATION

PROJECT NO. U-2519DA

CUMBERLAND COUNTY

STATION: 28+66.746-COL2-

SHEET 1 OF 2

STATE OF NORTH CAROLINA
DEPARTMENT OF TRANSPORTATION
RALEIGH

SUBSTRUCTURE

BENT 3

NORTH CAROLINA PROFESSIONAL SEAL 26415 ENGINEER KOREY NEWTON

3/28/2011

REVISIONS						SHEET NO.
NO.	BY:	DATE:	NO.	BY:	DATE:	S-65
1			3			TOTAL SHEETS
2			4			411

DRAWN BY : E.C. LOCKLEAR DATE : 2-18-08

CHECKED BY : P.K. NEWTON DATE : 8-11-08

28-MAR-2011 15:10
K:\TIPProjects-U\U2519da\Structures\frye\str3_COL2\Final Plans\u2519da_sd_bt*_03.dgn
kpnewton

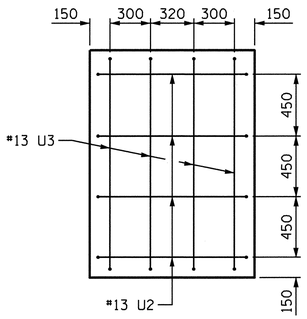

VIEW X-X

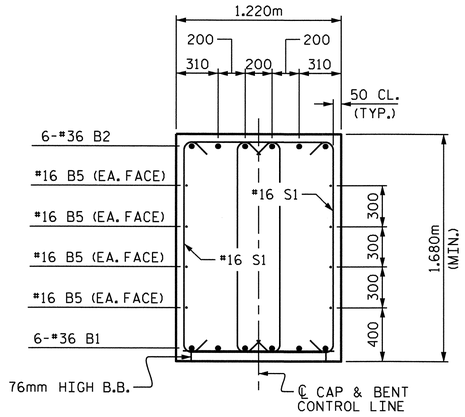

SECTION A-A

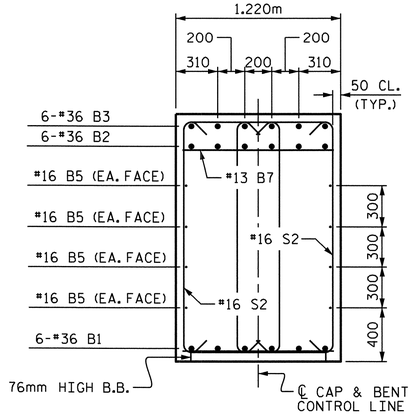

SECTION B-B

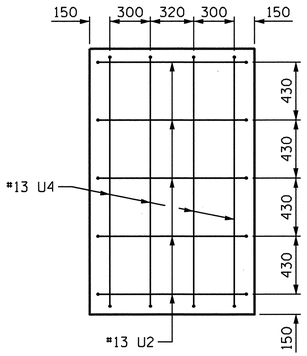

VIEW Y-Y

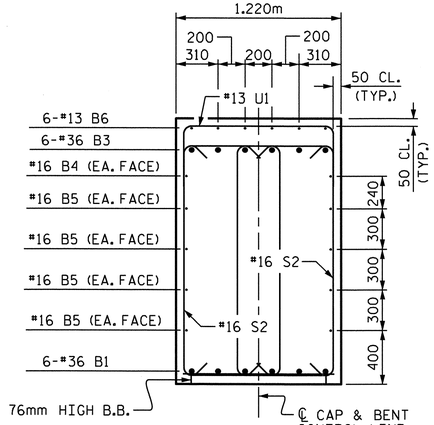

SECTION C-C

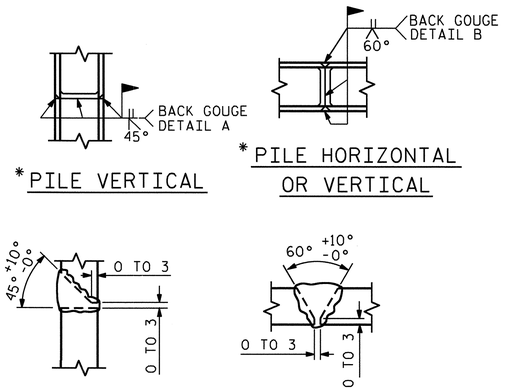

*PILE VERTICAL

*PILE HORIZONTAL OR VERTICAL

DETAIL A

DETAIL B

*POSITION OF PILE DURING WELDING.

PILE SPLICE DETAILS

BAR TYPES

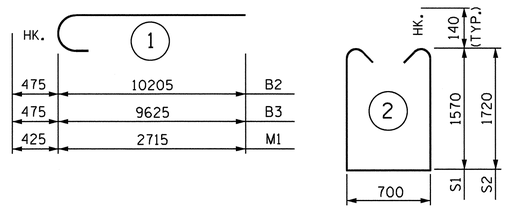

ALL BAR DIMENSIONS ARE OUT TO OUT.

BILL OF MATERIAL

BENT 3

BAR	NO.	SIZE	TYPE	LENGTH	WEIGHT
B1	6	#36	STR.	15700	745
B2	6	#36	1	10680	507
B3	6	#36	1	10100	479
B4	2	#16	STR.	6380	20
B5	8	#16	STR.	15700	195
B6	6	#13	STR.	3740	22
B7	4	#13	STR.	1120	4
M1	36	#32	1	3140	724
S1	66	#16	2	4120	422
S2	102	#16	2	4420	700
T1	54	#29	5	3600	984
T2	10	#29	5	4600	233
T3	54	#19	STR.	2840	343
T4	10	#19	STR.	3840	86
U1	35	#13	3	2040	71
U2	9	#13	3	2000	18
U3	4	#13	3	2440	10
U4	4	#13	3	2820	11
V1	36	#32	STR.	13160	3034

REINFORCING STEEL				kg	8608
SP-1	3	*	4	490500	1463

SPIRAL COLUMN REINFORCING STEEL kg 1463

CLASS A CONCRETE BREAKDOWN

POUR #1 - FOOTINGS	C.M.	36.6
POUR #2 - COLUMNS	C.M.	32.1
POUR #3 - CAP	C.M.	35.4
TOTAL	C.M.	104.1

HP 360 x 108 STEEL PILES NO. 28	METERS	448
PILE REDRIVES	EACH	7

* THE SP-1 SPIRAL REINFORCING STEEL SHALL BE W20 OR D-20 COLD DRAWN WIRE OR #13 PLAIN OR DEFORMED BAR.

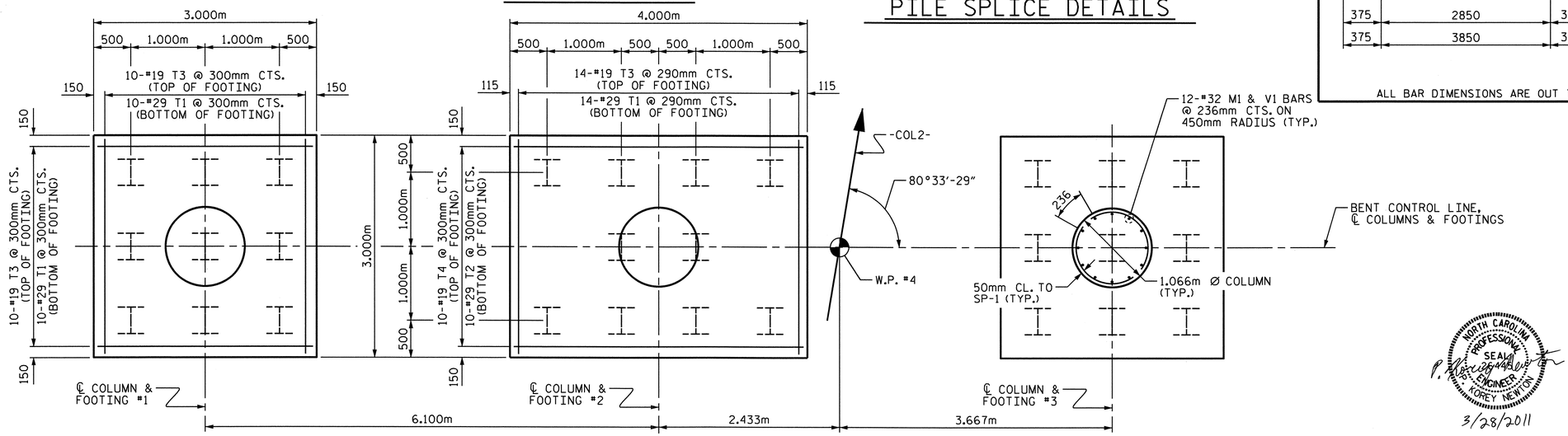

PLAN OF FOOTINGS AND COLUMNS

DIMENSIONS & REINFORCING STEEL ARE TYPICAL FOR FOOTINGS #1 & #3, REINFORCING STEEL IS TYPICAL FOR EACH COLUMN

3/28/2011

PROJECT NO. U-2519DA

CUMBERLAND COUNTY

STATION: 28+66.746-COL2-

SHEET 2 OF 2

STATE OF NORTH CAROLINA
DEPARTMENT OF TRANSPORTATION
RALEIGH

SUBSTRUCTURE

BENT 3

REVISIONS						SHEET NO.
NO.	BY:	DATE:	NO.	BY:	DATE:	S-66
1			3			TOTAL SHEETS
2			4			411

DRAWN BY : E.C. LOCKLEAR DATE : 2-18-08

CHECKED BY : P.K. NEWTON DATE : 8-11-08

28-MAR-2011 15:10
K:\TIPProjects-U\U2519da\Structures\frye\str3_COL2\FinalPlans\u2519da_sd_bt*_03.dgn
kpnewton

NOTES

STIRRUPS AND "U" BARS IN CAP MAY BE SHIFTED AS NECESSARY TO CLEAR ANCHOR BOLTS.

HOOKS ON M1 BARS MAY BE TURNED AS NECESSARY FOR PLACING REINFORCING STEEL.

THE TOP SURFACE AREAS OF THE BENT CAP SHALL BE CURED IN ACCORDANCE WITH THE STANDARD SPECIFICATIONS EXCEPT THE MEMBRANE CURING COMPOUND METHOD SHALL NOT BE USED.

FOR PILE SPLICE DETAILS, SEE SHEET 2 OF 2.

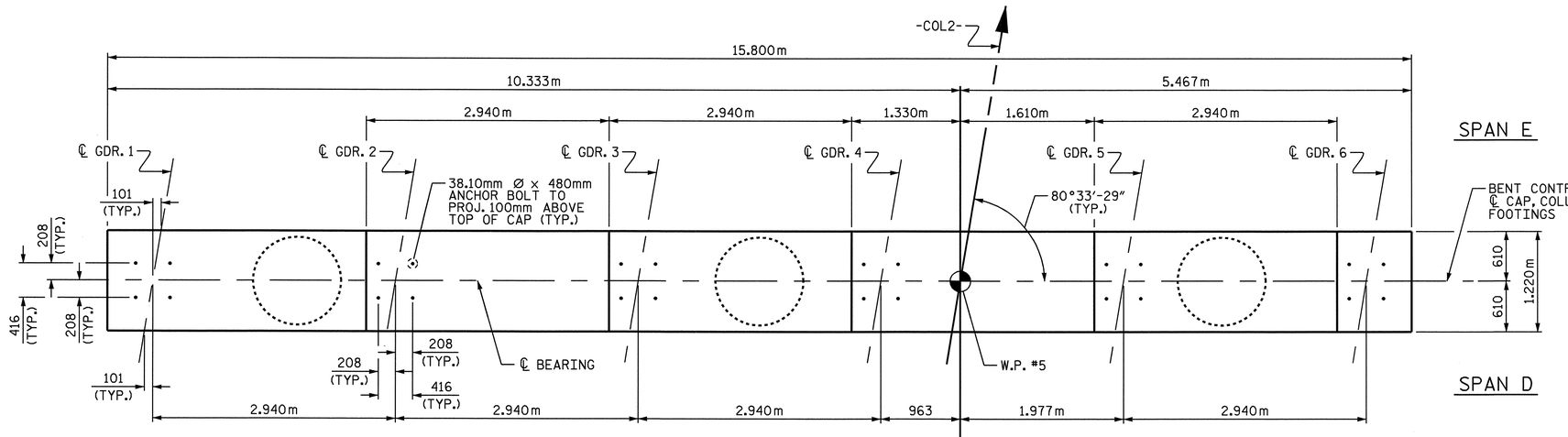

PLAN

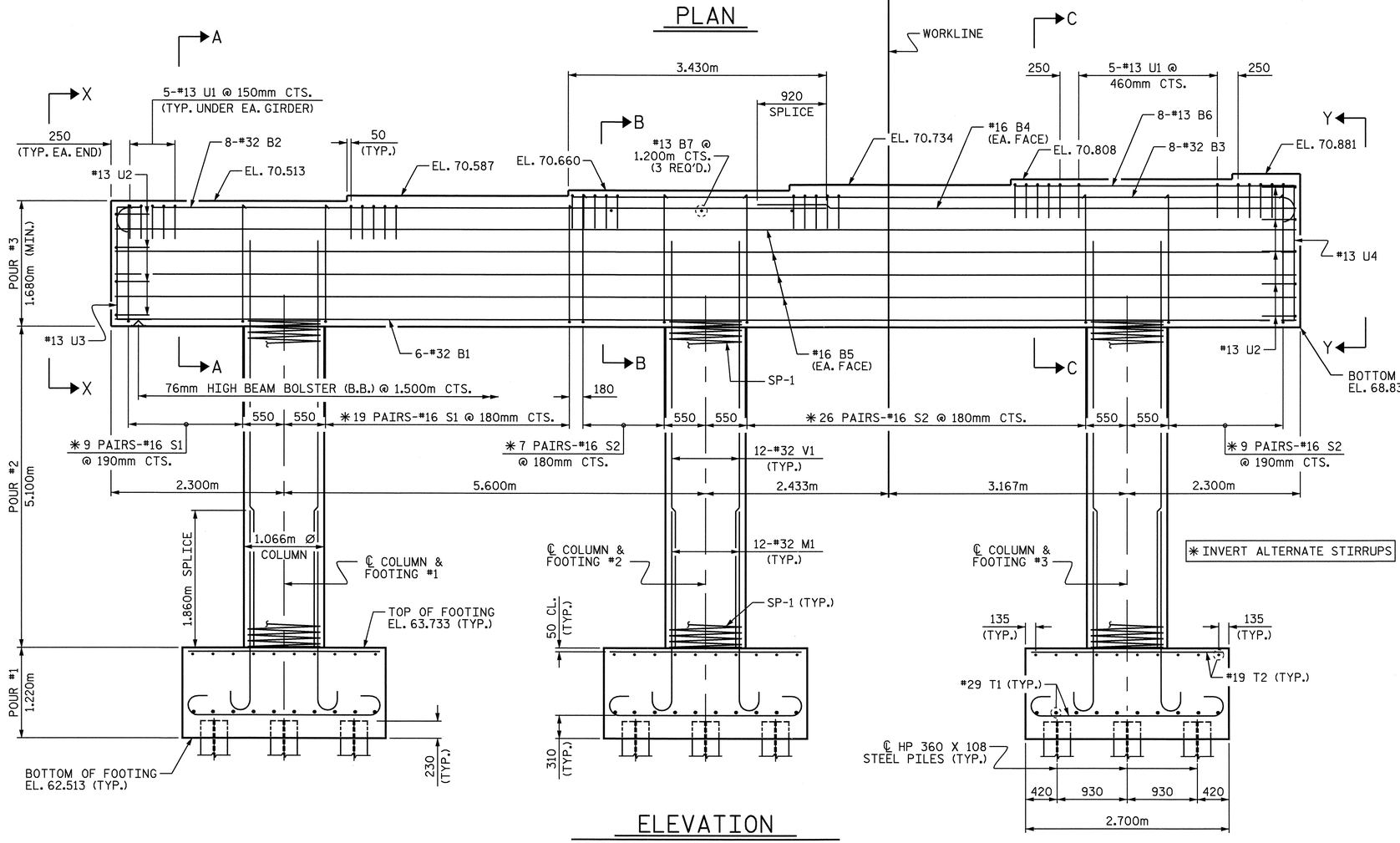

ELEVATION

DIMENSIONS & REINFORCING STEEL ARE TYPICAL FOR EACH COLUMN & FOOTING

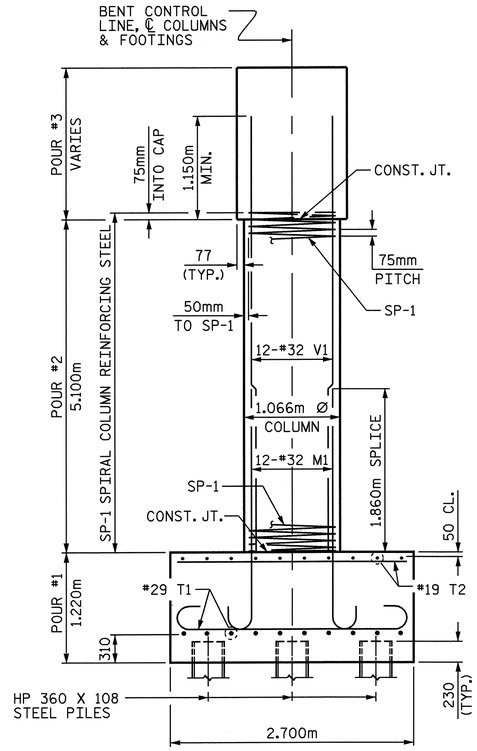

END ELEVATION

PROJECT NO. U-2519DA

CUMBERLAND COUNTY

STATION: 28+66.746-COL2-

SHEET 1 OF 2

STATE OF NORTH CAROLINA
DEPARTMENT OF TRANSPORTATION
RALEIGH

SUBSTRUCTURE

BENT 4

NORTH CAROLINA PROFESSIONAL SEAL 26445 ENGINEER P.K. NEWTON

10/3/08

REVISIONS						SHEET NO.
NO.	BY:	DATE:	NO.	BY:	DATE:	S-67
1			3			TOTAL SHEETS
2			4			411

DRAWN BY : E.C. LOCKLEAR DATE : 2-18-08

CHECKED BY : P.K. NEWTON DATE : 8-13-08

03-OCT-2008 11:06
R:\Structures\frye\str3_COL2\Final Plans\u2519da_sd_bt#_03.dgn
sdombrowski

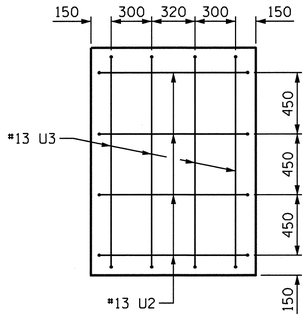

VIEW X-X

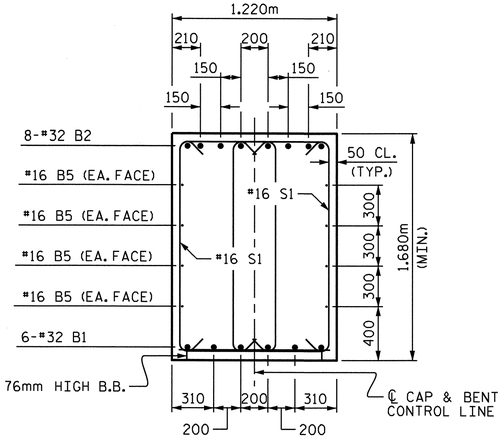

SECTION A-A

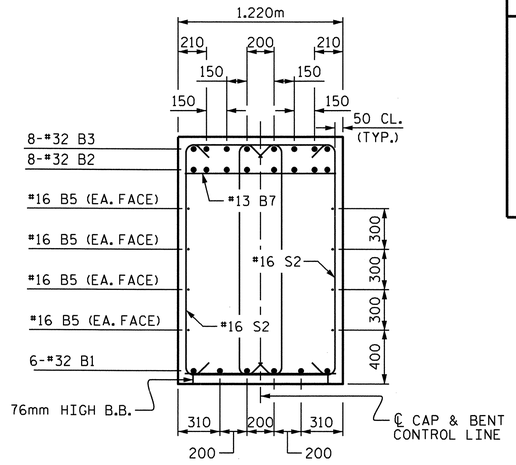

SECTION B-B

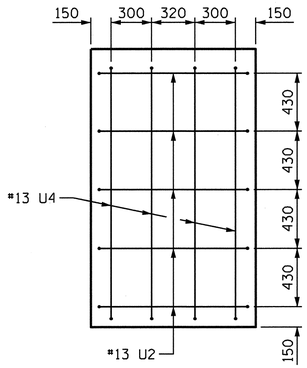

VIEW Y-Y

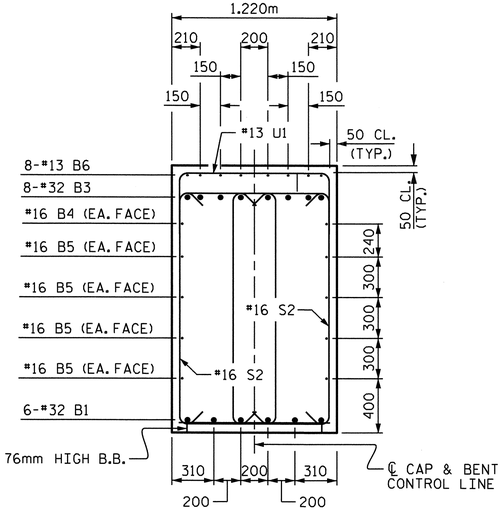

SECTION C-C

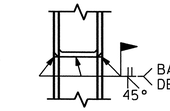

*PILE VERTICAL

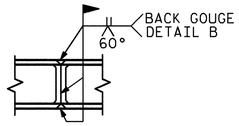

*PILE HORIZONTAL
OR VERTICAL

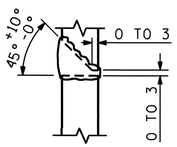

DETAIL A

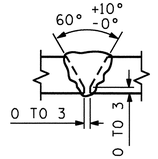

DETAIL B

*POSITION OF PILE DURING WELDING.

PILE SPLICE DETAILS

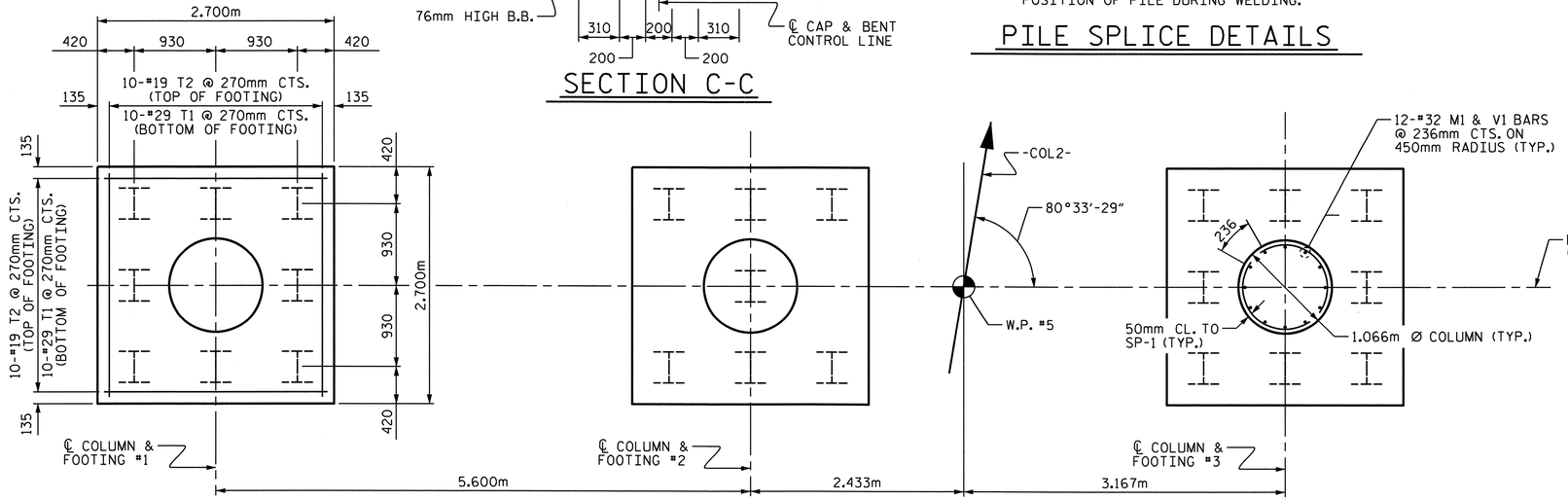

PLAN OF FOOTINGS AND COLUMNS

DIMENSIONS & REINFORCING STEEL ARE TYPICAL FOR EACH COLUMN & FOOTING

BAR TYPES

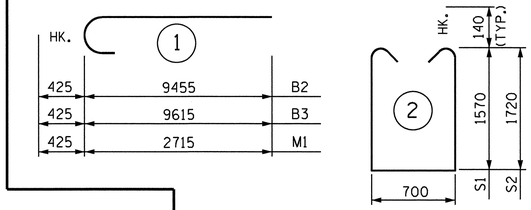

ALL BAR DIMENSIONS ARE OUT TO OUT.

BILL OF MATERIAL

BENT 4

BAR	NO.	SIZE	TYPE	LENGTH	WEIGHT
B1	6	#32	STR.	15700	603
B2	8	#32	1	9880	506
B3	8	#32	1	10040	514
B4	2	#16	STR.	7180	22
B5	8	#16	STR.	15700	195
B6	8	#13	STR.	3740	30
B7	3	#13	STR.	1120	3
M1	36	#32	1	3140	724
S1	56	#16	2	4120	358
S2	84	#16	2	4420	576
T1	60	#29	5	3300	1002
T2	60	#19	STR.	2540	341
U1	35	#13	3	2040	71
U2	9	#13	3	2000	18
U3	4	#13	3	2440	10
U4	4	#13	3	2820	11
V1	36	#32	STR.	6260	1443

REINFORCING STEEL				kg	6427
SP-1	3	*	4	215340	642

SPIRAL COLUMN REINFORCING STEEL	kg	642

CLASS A CONCRETE BREAKDOWN

POUR #1 - FOOTINGS	C.M.	29.7
POUR #2 - COLUMNS	C.M.	13.7
POUR #3 - CAP	C.M.	35.4
TOTAL	C.M.	78.8

HP 360 x 108 STEEL PILES NO. 23	METERS	230
PILE REDRIVES	EACH	6

* THE SP-1 SPIRAL REINFORCING STEEL SHALL BE W20 OR D-20 COLD DRAWN WIRE OR #13 PLAIN OR DEFORMED BAR.

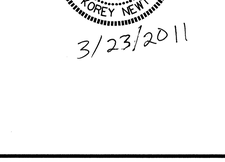

3/23/2011

PROJECT NO. U-2519DA

CUMBERLAND COUNTY

STATION: 28+66.746-COL2-

SHEET 2 OF 2

STATE OF NORTH CAROLINA
DEPARTMENT OF TRANSPORTATION
RALEIGH

SUBSTRUCTURE

BENT 4

REVISIONS						SHEET NO.
NO.	BY:	DATE:	NO.	BY:	DATE:	S-68
1			3			TOTAL SHEETS
2			4			411

DRAWN BY : E.C. LOCKLEAR DATE : 2-18-08

CHECKED BY : P.K. NEWTON DATE : 8-13-08

23-MAR-2011 16:22
K:\TIPProjects-U\U2519da\Structures\frye\str3_COL2\FinalPlans\u2519da_sd_bt*_03.dgn
kpnewton

K:\TIPProjects-U\U2519da\Structures\frye\str3_COL2\Final
tfang

NOTES

STIRRUPS AND U2 BARS IN CAP MAY BE SHIFTED AS NECESSARY TO CLEAR ANCHOR BOLTS.

BACKWALL SHOULD BE PLACED BEFORE APPLYING THE EPOXY PROTECTIVE COATING.

FOR PILE SPLICE DETAILS, SEE END BENT 2, SHEET 3 OF 3.

THE TOP SURFACE AREAS OF THE END BENT CAPS SHALL BE CURED IN ACCORDANCE WITH THE STANDARD SPECIFICATIONS EXCEPT THE MEMBRANE CURING COMPOUND METHOD SHALL NOT BE USED.

* THE TOP SURFACE OF THE CAP EXCEPT THE BRIDGE SEAT BUILDUPS SHALL BE SLOPED TRANSVERSELY FROM THE FILL FACE TO THE BACK FACE AT THE RATE OF 2 %.

THE CONCRETE IN THE SHADED AREA OF THE WING SHALL BE POURED AFTER THE BARRIER RAIL HAS BEEN CAST IF SLIP FORMING IS USED.

THE CONTRACTOR SHALL PROVIDE FOR INSTALLATION OF THE 102mm DIAMETER DRAIN PIPE THROUGH THE WING WALL AS REQUIRED FOR REINFORCED BRIDGE APPROACH FILLS. SEE ROADWAY PLANS. REINFORCING STEEL IN THE WING MAY BE SHIFTED AS NECESSARY TO CLEAR THE DRAIN PIPE.

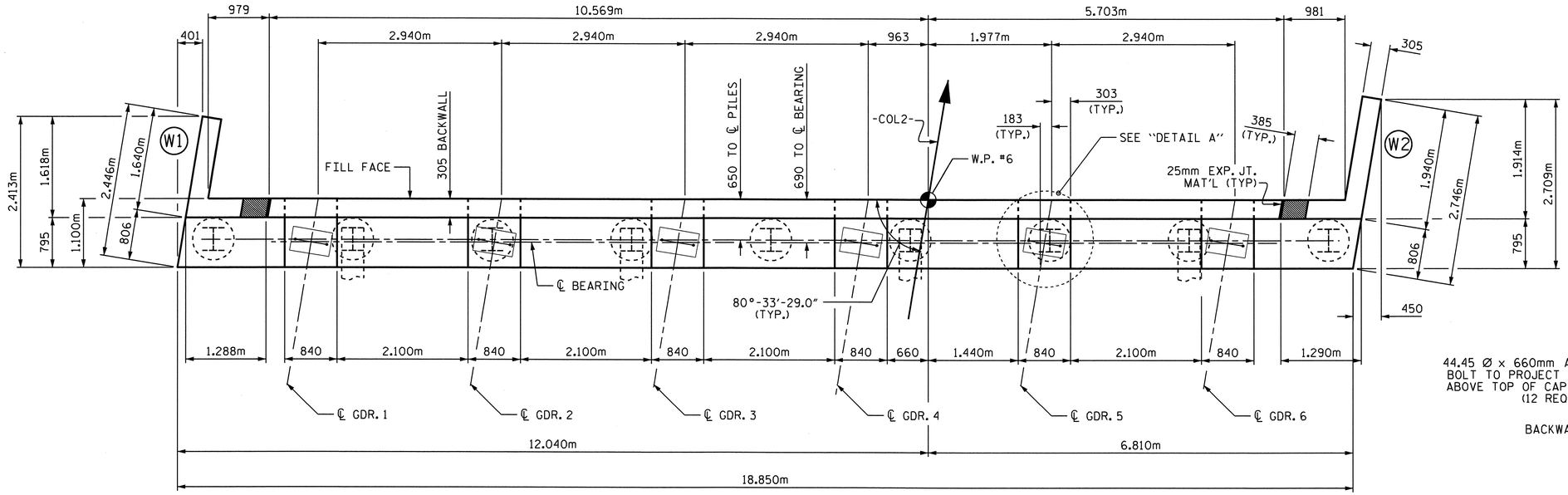

PLAN

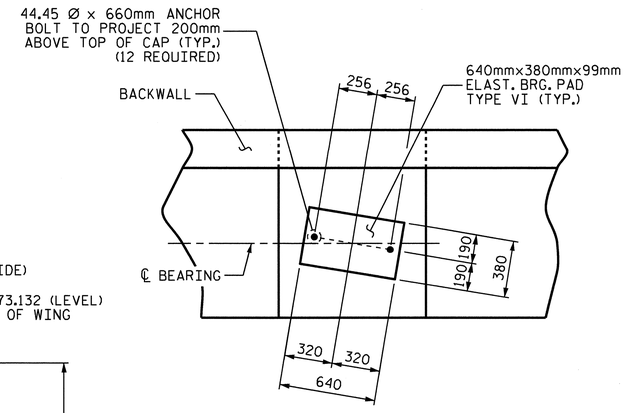

DETAIL A

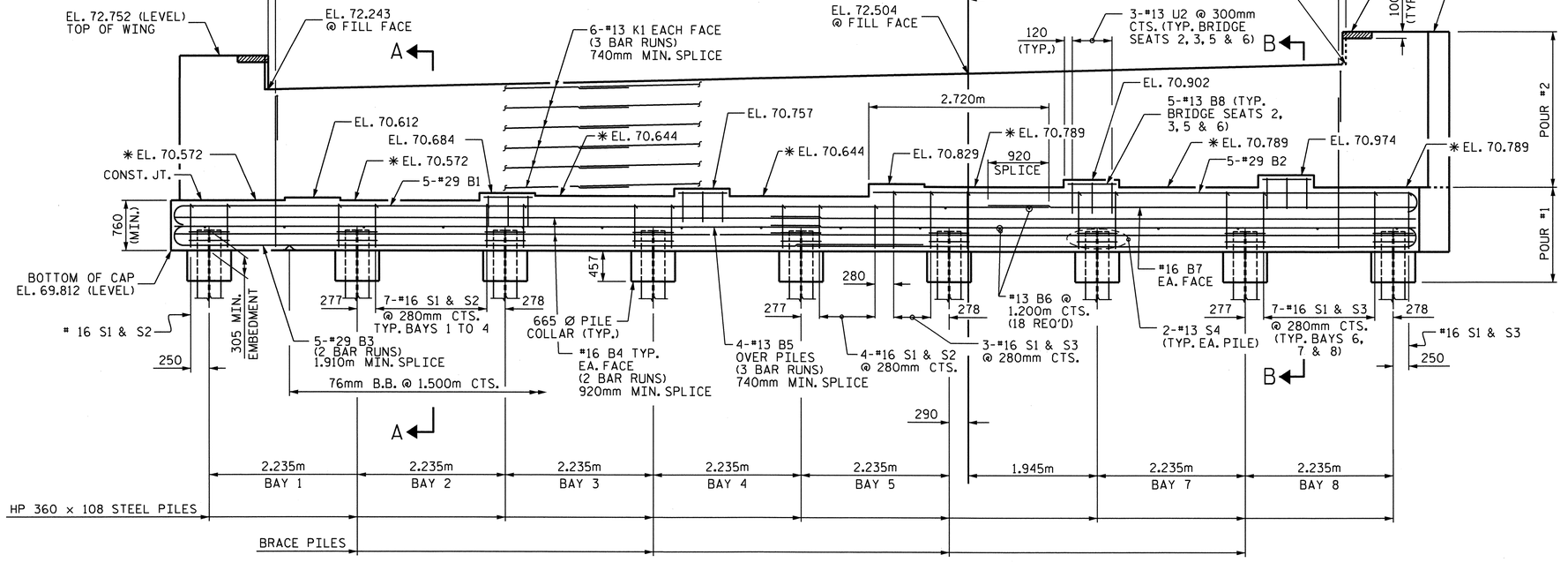

ELEVATION

WINGS ARE NOT SHOWN FOR CLARITY

NORTH CAROLINA PROFESSIONAL SEAL 16301 ENGINEER TING HSIUNG FANG
3/22/11

DRAWN BY : Neil M. Ruffin DATE : 2/28/08
CHECKED BY : T.H. FANG DATE : 7/7/08

PROJECT NO. U-2519DA
CUMBERLAND COUNTY
STATION: 28+66.746 -COL2-

SHEET 1 OF 3

STATE OF NORTH CAROLINA
DEPARTMENT OF TRANSPORTATION
RALEIGH

SUBSTRUCTURE

END BENT 2

REVISIONS						SHEET NO.
NO.	BY:	DATE:	NO.	BY:	DATE:	S-69
1			3			TOTAL SHEETS
2			4			411

r:\structures\frye\str3_col2\finalplans\u2519da_sd_eb2_03
sdombrowski

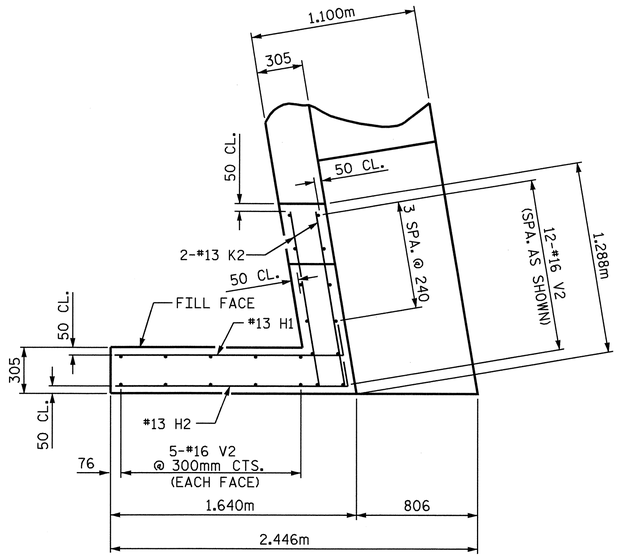

PLAN OF WING (W1)

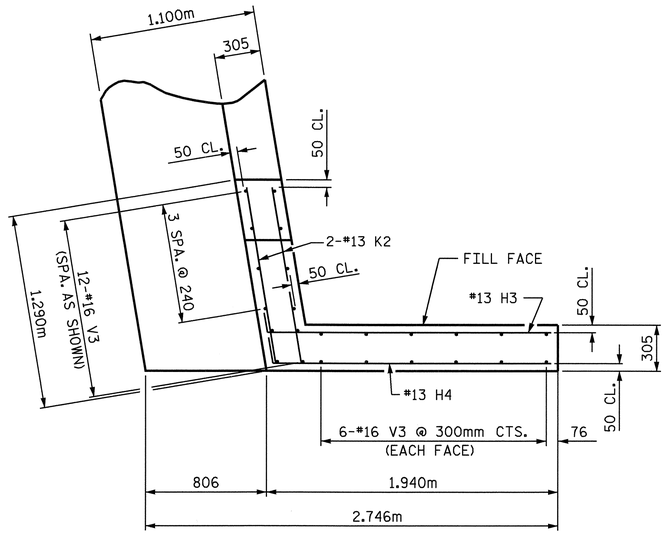

PLAN OF WING (W2)

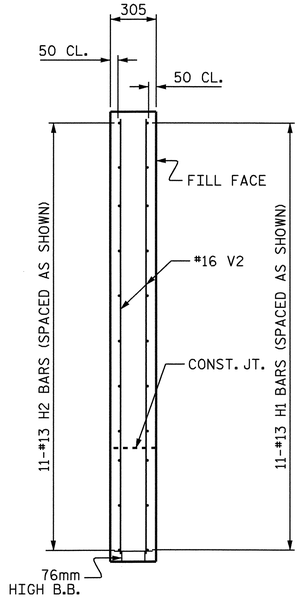

SECTION X-X

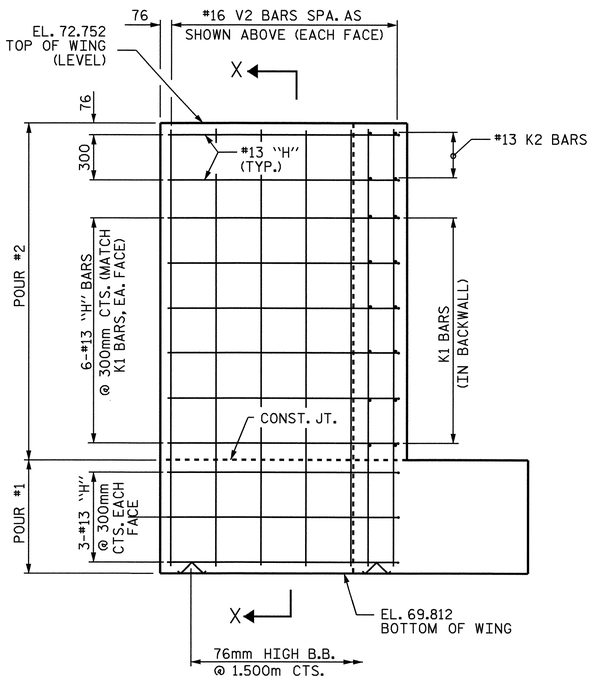

ELEVATION OF WING (W1)

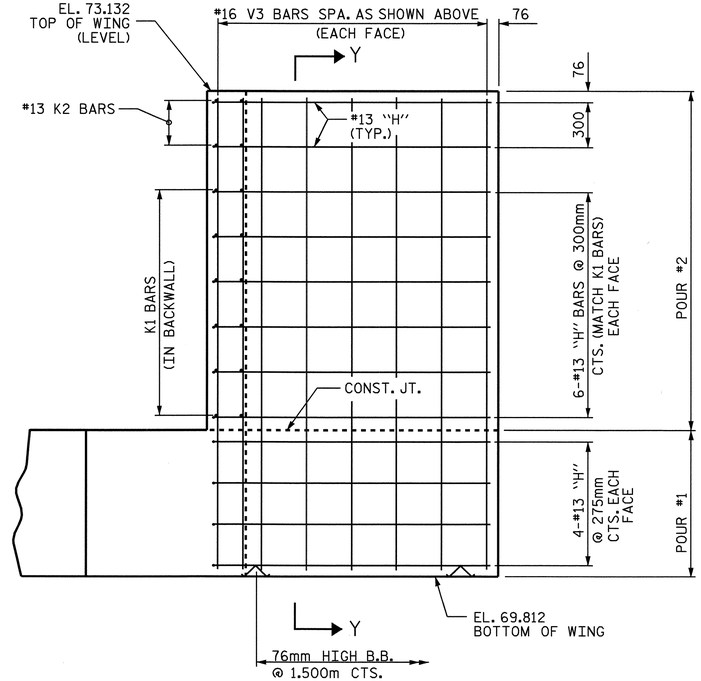

ELEVATION OF WING (W2)

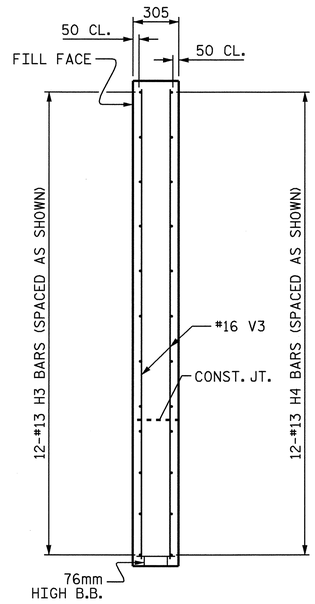

SECTION Y-Y

NORTH CAROLINA PROFESSIONAL SEAL 16301 ENGINEER TING HSILING FANG
10/10/08

PROJECT NO. U-2519DA

CUMBERLAND COUNTY

STATION: 28+66.746 -COL2-

SHEET 2 OF 3

STATE OF NORTH CAROLINA
DEPARTMENT OF TRANSPORTATION
RALEIGH

SUBSTRUCTURE

END BENT 2

REVISIONS						SHEET NO.
NO.	BY:	DATE:	NO.	BY:	DATE:	S-70
1			3			TOTAL SHEETS
2			4			411

DRAWN BY : Neil M Raffin DATE : 4/2/08
CHECKED BY : T.H. FANG DATE : 4/21/08

K:\TIPProjects-U\U2519da\Structures\frye\str3_COL2\Final Plans\u2519da_e2d12636.dgn tfang

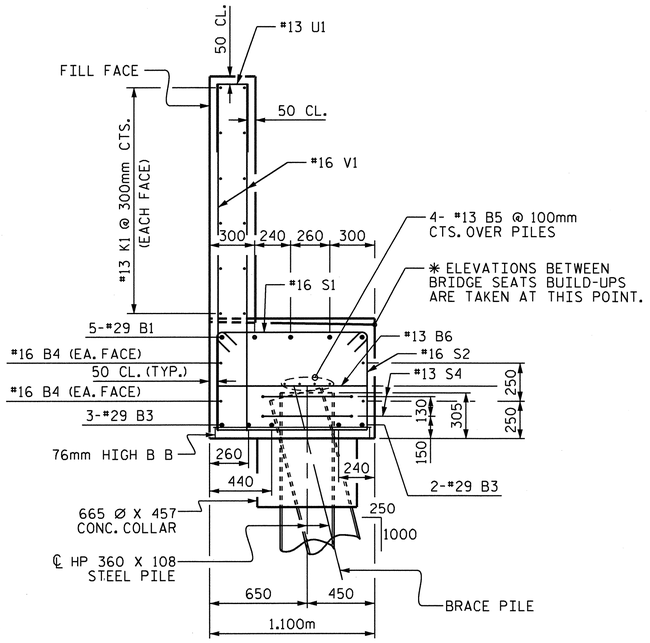

SECTION A-A

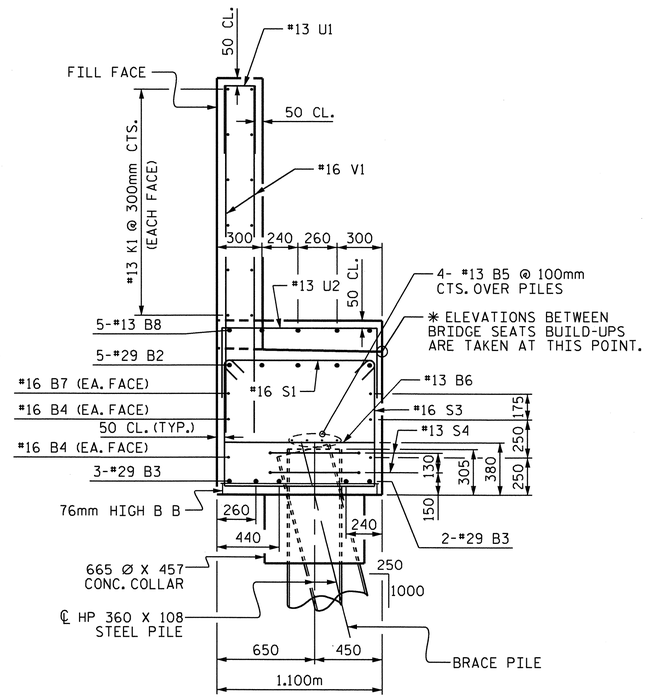

SECTION B-B

BAR TYPES

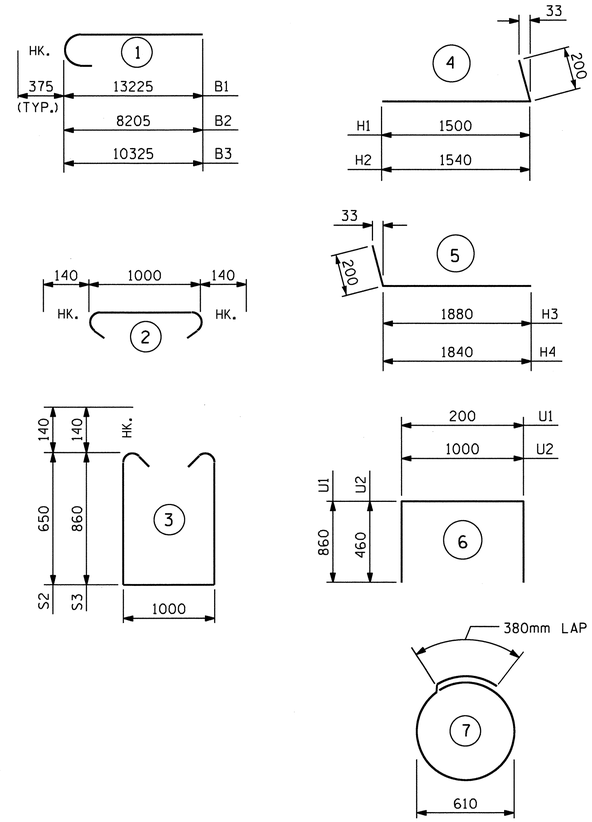

ALL BAR DIMENSIONS ARE OUT TO OUT.

BILL OF MATERIAL

END BENT 2

BAR	NO.	SIZE	TYPE	LENGTH	WEIGHT
B1	5	#29	1	13600	344
B2	5	#29	1	8580	217
B3	10	#29	1	10700	541
B4	8	#16	STR	9840	80
B5	12	#13	STR	6740	80
B6	18	#13	STR	1000	18
B7	2	#16	STR	6440	20
B8	20	#13	STR	740	15
H1	11	#13	4	1700	19
H2	11	#13	4	1740	19
H3	12	#13	5	2080	25
H4	12	#13	5	2040	24
K1	36	#13	STR	6740	241
K2	8	#13	STR	1180	9
S1	58	#16	2	1280	115
S2	33	#16	3	2580	131
S3	25	#16	3	3000	116
S4	18	#13	7	2300	41
U1	54	#13	6	1920	103
U2	12	#13	6	1920	23
V1	108	#16	STR	2320	389
V2	22	#16	STR	2820	96
V3	24	#16	STR	3200	120

REINFORCING STEEL = 2832 KG

CLASS "A" CONCRETE BREAKDOWN

POUR #1 CAP & LOWER WINGS & COLLARS 22.0 m3

POUR #2 BACKWALL & UPPER WINGS 12.1 m3

TOTAL 34.1 m3

HP 360 x 108 STEEL PILES
No. 9 METERS 189

PILE REDRIVES
EACH 2

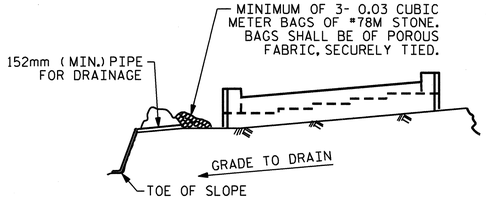

BAGGED STONE AND PIPE SHALL BE PLACED IMMEDIATELY AFTER COMPLETION OF END BENT EXCAVATION. PIPE MAY BE EITHER CONCRETE, CORRUGATED STEEL, CORRUGATED ALUMINUM ALLOY, OR CORRUGATED PLASTIC. PERFORATED PIPE WILL NOT BE ALLOWED.

BAGGED STONE SHALL REMAIN IN PLACE UNTIL THE ENGINEER DIRECTS THAT IT BE REMOVED. THE CONTRACTOR SHALL REMOVE AND DISPOSE OF SILT ACCUMULATIONS AT BAGGED STONE WHEN SO DIRECTED BY THE ENGINEER. BAGS SHALL BE REMOVED AND REPLACED WHENEVER THE ENGINEER DETERMINES THAT THEY HAVE DETERIORATED AND LOST THEIR EFFECTIVENESS.

NO SEPARATE PAYMENT WILL BE MADE FOR THIS WORK AND THE ENTIRE COST OF THIS WORK SHALL BE INCLUDED IN THE UNIT CONTRACT PRICE BID FOR THE SEVERAL PAY ITEMS.

TEMPORARY DRAINAGE AT END BENT

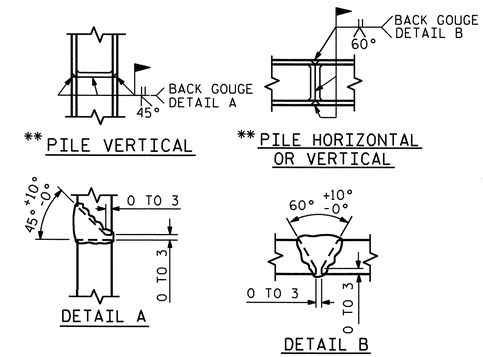

** POSITION OF PILE DURING WELDING.

PILE SPLICE DETAILS

PROJECT NO. U-2519DA

CUMBERLAND COUNTY

STATION: 28+66.746 -COL2-

SHEET 3 OF 3

STATE OF NORTH CAROLINA
DEPARTMENT OF TRANSPORTATION
RALEIGH

SUBSTRUCTURE

END BENT 2

NORTH CAROLINA PROFESSIONAL SEAL 16301 ENGINEER TING HSIANG FANG
3/7/11

REVISIONS						SHEET NO.
NO.	BY:	DATE:	NO.	BY:	DATE:	S-71
1			3			TOTAL SHEETS
2			4			411

DRAWN BY : Neil M. Ruffin DATE : 4/2/08
CHECKED BY : T. H. FANG DATE : 4/21/08

ESTIMATED QUANTITIES		
BRIDGE @ STA. 28+66.746 -COL2-	RIP RAP CLASS II	FILTER FABRIC FOR DRAINAGE
	METRIC TONS	SQUARE METERS
END BENT 1	✳2350	✳2400

✳ ESTIMATED VALUES MAY BE ADJUSTED IN THE FIELD AS DIRECTED BY THE ENGINEER.

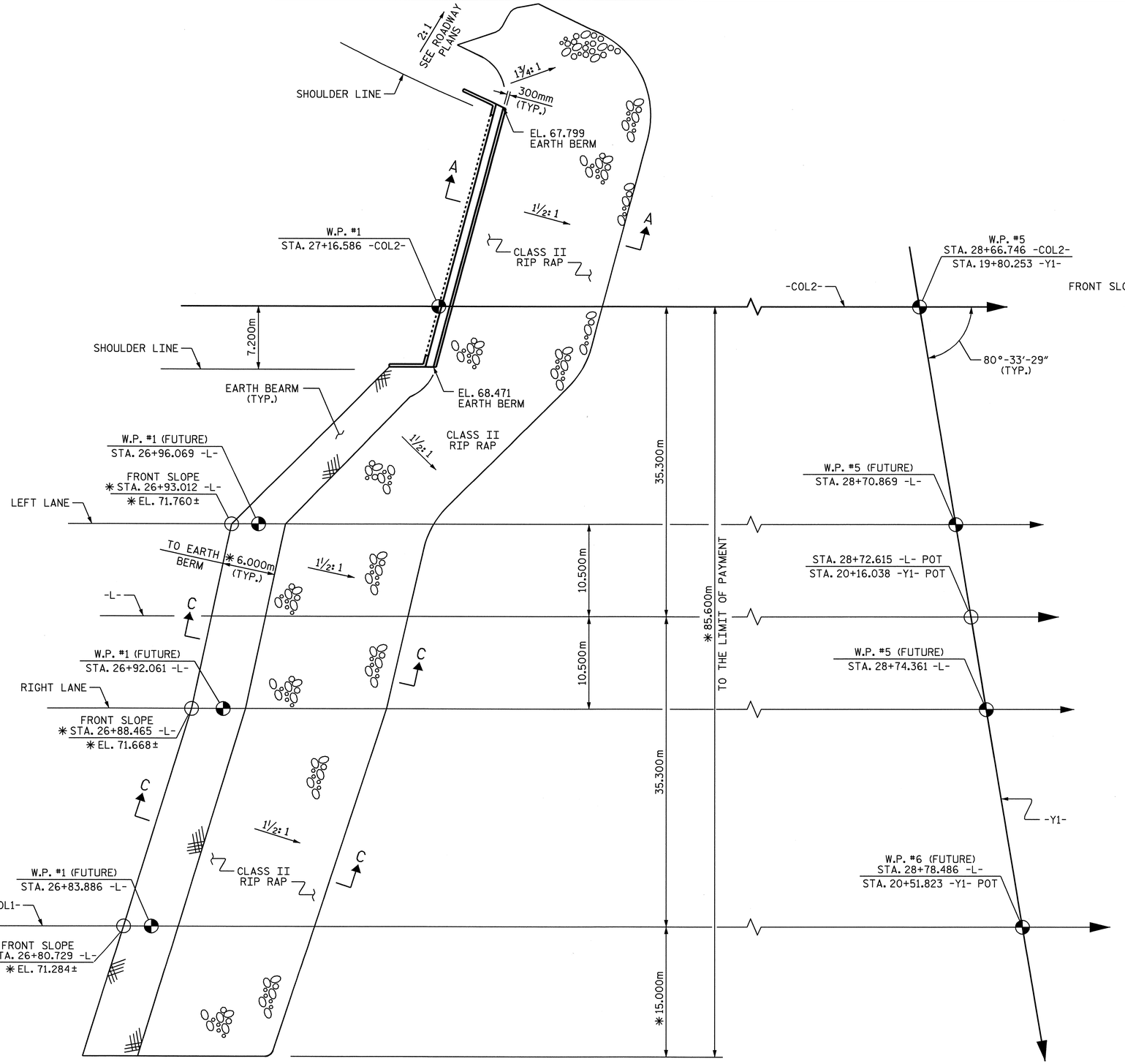

PLAN
AT END BENT 1

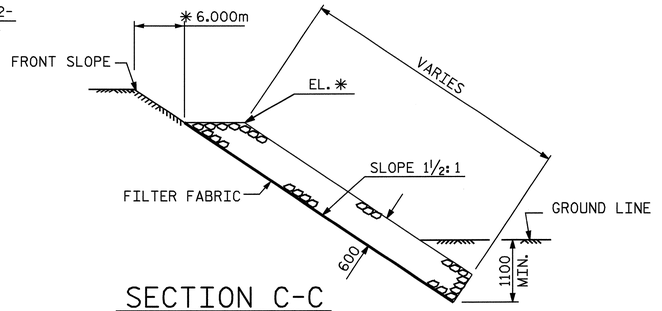

SECTION C-C

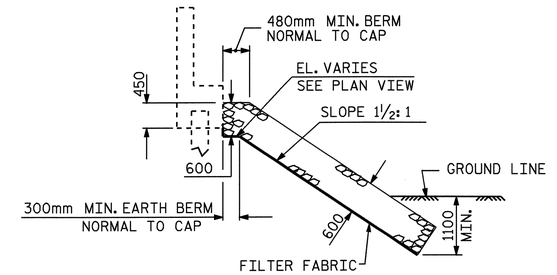

SECTION A-A

PROJECT NO. U-2519DA
CUMBERLAND COUNTY
STATION: 28+66.746 -COL2-

NORTH CAROLINA PROFESSIONAL SEAL 16301 ENGINEER TING HSIUNG FANG
10/03/08

STATE OF NORTH CAROLINA
DEPARTMENT OF TRANSPORTATION
RALEIGH

RIP RAP DETAILS
AT END BENT 1

REVISIONS						SHEET NO.
NO.	BY:	DATE:	NO.	BY:	DATE:	S-72
1			3			TOTAL SHEETS
2			4			411

DRAWN BY : E.C. LOCKLEAR DATE : 7-10-08
CHECKED BY : T. H. FANG DATE : 7-24-08

03-OCT-2008 11:05
R:\Structures\frye\str3_COL2\Final Plans\u2519da_sd_rr_03.dgn
sdombrowski

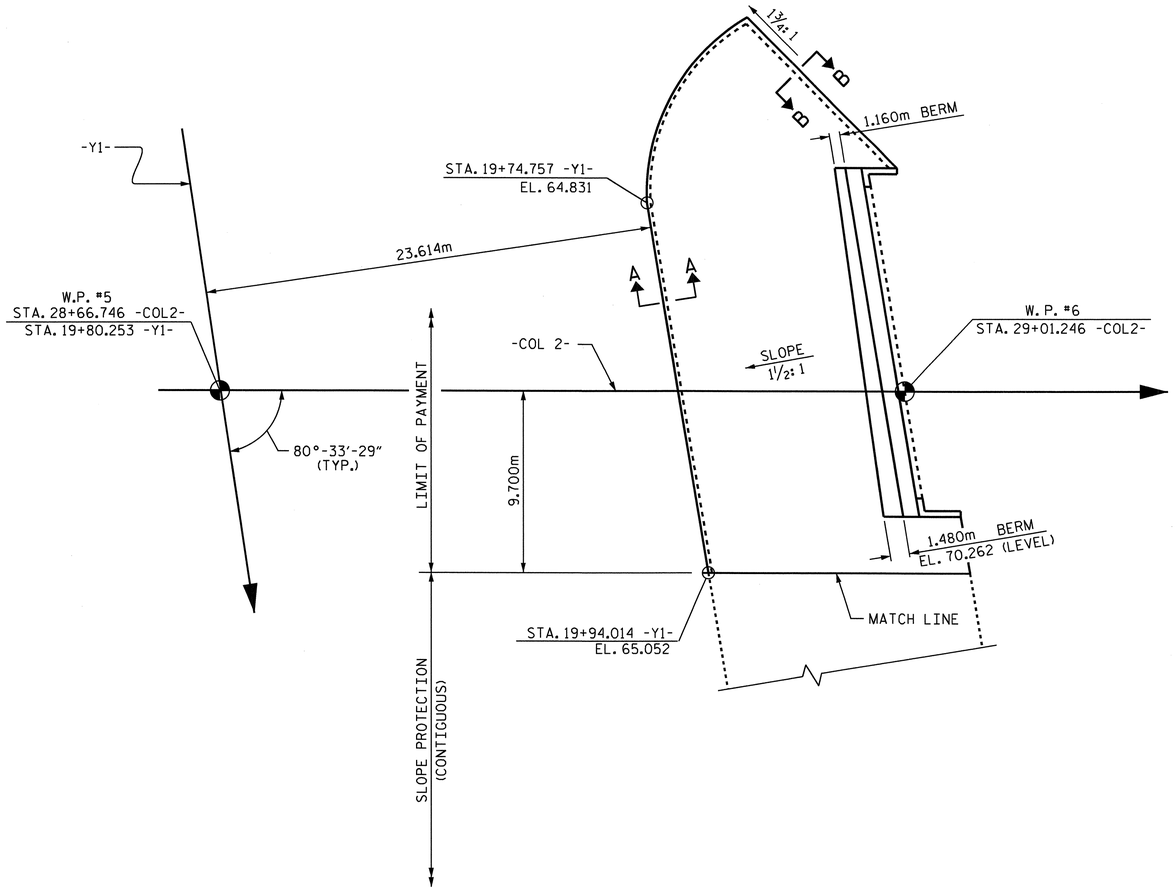

PLAN @ END BENT 2

GENERAL NOTES

SLOPE PROTECTION SHALL BE PLACED UNDER THE ENDS OF THE BRIDGE AS SHOWN IN THE DETAILS. STRAIGHT EDGING WILL NOT BE REQUIRED UNLESS, IN THE OPINION OF THE ENGINEER, VISUAL INSPECTION INDICATES A NEED FOR IT. MEASUREMENT AND PAYMENT SHALL BE AS PRESCRIBED IN SECTION 462 OF THE STANDARD SPECIFICATIONS.

SLOPE PROTECTION SHALL CONSIST OF 100mm POURED-IN-PLACE CONCRETE PAVING AS SHOWN IN THE DETAILS ON THIS SHEET. CONCRETE SHALL BE CLASS "B". THE CONCRETE SURFACE SHALL BE FLOATED WITH A WOODEN FLOAT AND FINISHED. WELDED WIRE FABRIC REINFORCING SHALL BE 152 X 152 - MW9.1 X MW9.1, 1520mm WIDE. SLOPE PROTECTION SHALL BE POURED IN 1520mm STRIPS AS SHOWN IN THE "POURING DETAIL" WITH 600mm LONG #13 BARS PLACED ALONG THE SLOPE BETWEEN STRIPS AT 450mm MAXIMUM SPACING. SLOPE PROTECTION MAY BE POURED IN ALTERNATE 1220mm AND 1520mm STRIPS AS SHOWN IN THE "OPTIONAL POURING DETAIL" WITH ADJACENT RUNS OF WELDED WIRE FABRIC LAPPING AT LEAST 152mm. THE COST OF THE WELDED WIRE FABRIC AND #13 BARS, IF USED, SHALL BE INCLUDED IN THE CONTRACT UNIT PRICE BID PER SQUARE METER FOR SLOPE PROTECTION.

BRIDGE @ STA. 28+66.746 -COL2-	100mm SLOPE PROTECTION	* WELDED WIRE FABRIC 1520mm WIDE
	SQUARE METERS	APPROX. METERS
END BENT 2	470	345

* QUANTITY SHOWN IS BASED ON 1520mm POURS.

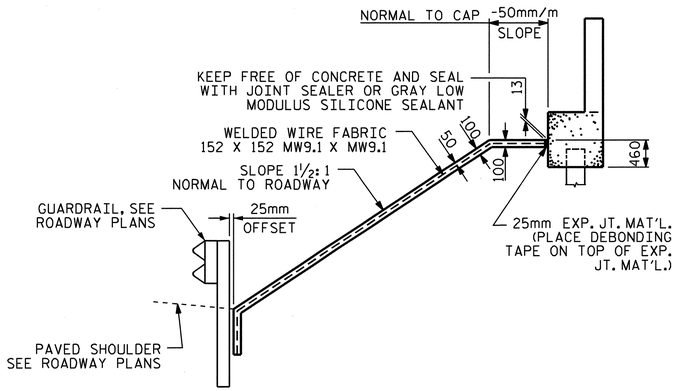

SECTION ALONG -COL2-

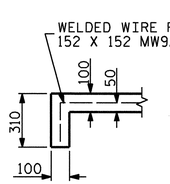

SECTION A-A

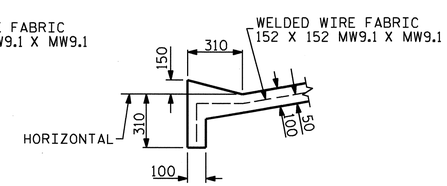

SECTION B-B

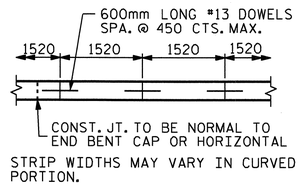

STRIP WIDTHS MAY VARY IN CURVED PORTION.

POURING DETAIL

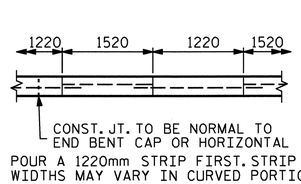

POUR A 1220mm STRIP FIRST. STRIP WIDTHS MAY VARY IN CURVED PORTION.

OPTIONAL POURING DETAIL

NORTH CAROLINA PROFESSIONAL SEAL 16301 ENGINEER TING-HSIUNG FANG
3/28/11

PROJECT NO. U-2519DA
CUMBERLAND COUNTY
STATION: 28+66.746 -COL2-

STATE OF NORTH CAROLINA
DEPARTMENT OF TRANSPORTATION
RALEIGH

STANDARD SLOPE PROTECTION DETAILS

AT END BENT 2

REVISIONS						SHEET NO.
NO.	BY:	DATE:	NO.	BY:	DATE:	S-73
1			3			TOTAL SHEETS
2			4			411

STD. NO. SP1SM

ASSEMBLED BY : Z. H. BROWN	DATE : 7-21-08		
CHECKED BY : T.H. FANG	DATE : 7-21-08		
DRAWN BY : ELR 5/92	REV. 7/10/01	LES/RDR	
CHECKED BY : GRP 6/92	REV. 5/7/03	RWW/JTE	
	REV. 5/1/06	TLA/GM	

28-MAR-2011 11:11
K:\TIPProjects-U\U2519da\Structures\frye\str3_COL2\FinalPlans\U2519DA_sd_SP_03.dgn
ttfang

SEE PLAN OF APPROACH SLABS
ON SHEET 2 OF 3

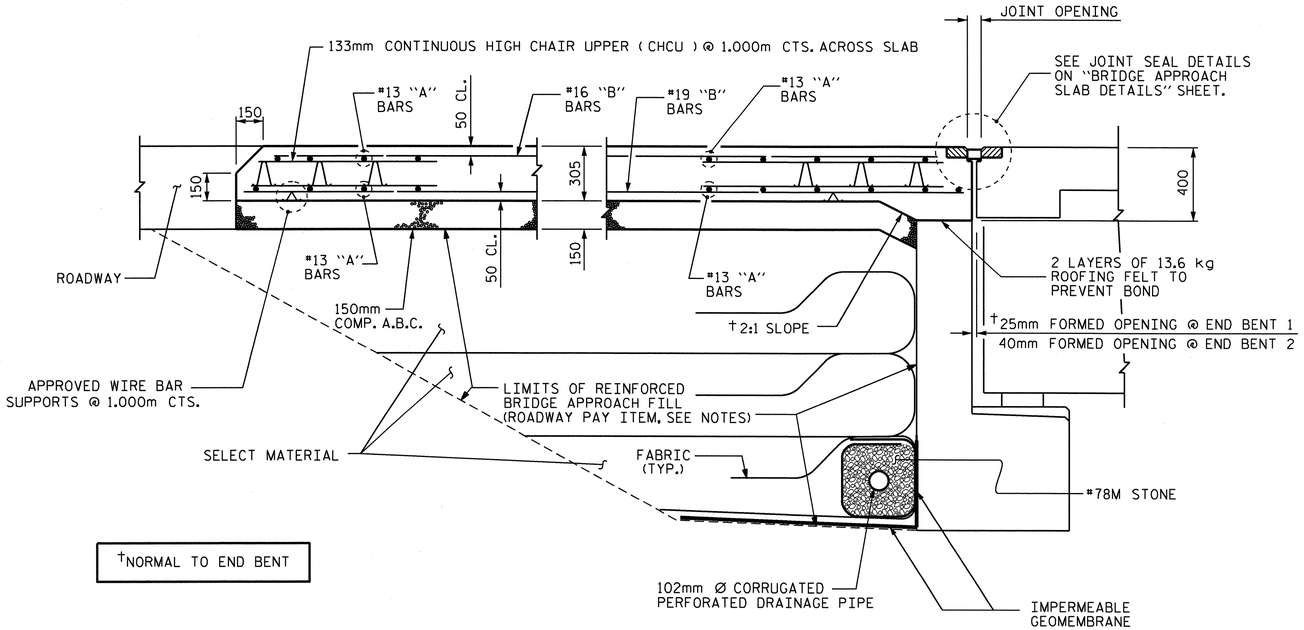

†NORMAL TO END BENT

SECTION THRU SLAB

NOTES:

APPROACH SLAB SHALL NOT BE CONSTRUCTED PRIOR TO COMPLETION OF THE BRIDGE DECK.

FOR REINFORCED BRIDGE APPROACH FILL INCLUDING FABRIC, IMPERMEABLE GEOMEMBRANE, 102mm Ø DRAINAGE PIPE, #78M STONE, AND SELECT MATERIAL, SEE ROADWAY PLANS.

AREA BETWEEN THE WINGWALL AND APPROACH SLAB SHALL BE GRADED TO DRAIN THE WATER AWAY FROM THE FILL FACE OF THE BRIDGE AND SHALL BE PAVED. SEE ROADWAY PLANS.

THE 150mm COMP. A.B.C. SHALL BE FLUSH WITH THE ROADWAY END OF THE APPROACH SLAB AND SHALL EXTEND 300mm OUTSIDE OF EACH EDGE OF THE APPROACH SLAB.

THE CONTRACTOR MAY USE 100mm TYPE B-25.0B ASPHALT CONCRETE COURSE IN LIEU OF 150mm COMP. A.B.C. IF THIS OPTION IS USED, THE BASE COURSE SHALL BE FLUSH WITH THE ROADWAY END OF THE APPROACH SLAB, AND THE WIDTH SHALL BE THE SAME AS THAT OF THE APPROACH SLAB.

THE CONTRACTOR MAY USE 125mm CLASS "A" CONCRETE BASE IN LIEU OF 150mm COMP. A.B.C. IF THIS OPTION IS USED, THE CONCRETE BASE SHALL BE FLUSH WITH THE ROADWAY END OF THE APPROACH SLAB, AND THE WIDTH SHALL BE THE SAME AS THAT OF THE APPROACH SLAB. THE CONCRETE SHALL BE FINISHED TO A SMOOTH SURFACE AND A LAYER OF 13.6 kg ROOFING FELT SHALL BE PLACED BETWEEN THE CONCRETE BASE AND THE APPROACH SLAB TO PREVENT BOND. THE APPROACH SLAB SHALL NOT BE CAST UNTIL THE CONCRETE BASE HAS REACHED AN AGE OF THREE CURING DAYS.

WITH EVAZOTE JOINT SEAL

FOR EVAZOTE JOINT SEALS, SEE SPECIAL PROVISIONS.

THE NOMINAL UNCOMPRESSED SEAL WIDTH OF THE EVAZOTE JOINT SEAL SHALL BE 64mm @ END BENT 1 AND 87mm @ END BENT 2.

FOR ELASTOMERIC CONCRETE, SEE SPECIAL PROVISIONS.

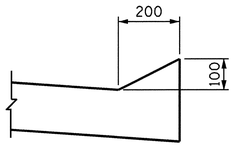

SECTION N-N

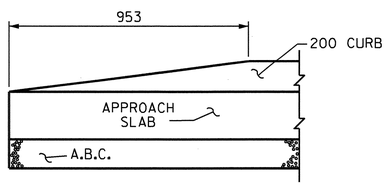

END OF 200 X 100 CURB
WITHOUT SHOULDER BERM GUTTER

CURB DETAILS

FOR RIGHT SIDE OF BEGINNING APPROACH SLAB, AND BOTH SIDES OF ENDING APPROACH SLAB.

SPLICE CHART		
	EPOXY COATED	UNCOATED
#13	610	540
#16	770	660
#19	1190	790

BILL OF MATERIAL

APPROACH SLAB AT END BENT 1

BAR	NO.	SIZE	TYPE	LENGTH	WEIGHT
✳ A11	4	#13	STR	8340	33
✳ A12	16	#13	STR	8300	132
✳ A13	16	#13	STR	8180	130
✳ A14	16	#13	STR	8040	128
✳ A15	16	#13	STR	7900	126
✳ A16	16	#13	STR	7760	123
✳ A17	16	#13	STR	7640	122
A21	4	#13	STR	8280	33
A22	16	#13	STR	8260	131
A23	16	#13	STR	8120	129
A24	16	#13	STR	7980	127
A25	16	#13	STR	7860	125
A26	16	#13	STR	7720	123
A27	16	#13	STR	7580	121
A28	4	#13	STR	7560	30
✳ B11	183	#16	STR	7240	2056
✳ B12	10	#16	STR	4000	62
✳ B13	10	#16	STR	3060	47
✳ B14	10	#16	STR	2160	34
✳ B15	1	#16	STR	1800	3
✳ B16	1	#16	STR	1400	2
✳ B17	1	#16	STR	1080	2
✳ B18	1	#16	STR	720	1
✳ B19	1	#16	STR	7380	11
✳ B20	1	#13	STR	7380	7
B21	183	#19	STR	7520	3076
B22	10	#19	STR	4060	91
B23	10	#19	STR	3240	72
B24	10	#19	STR	2340	52
B25	1	#19	STR	1800	4
B26	1	#19	STR	1400	3
B27	1	#19	STR	1080	2
B28	1	#19	STR	720	2
B29	1	#19	STR	7380	16
✳ D1	17	#13	STR	280	5

REINFORCING STEEL	kg.	4138
✳ EPOXY COATED REINFORCING STEEL	kg.	3024
CLASS AA CONCRETE	C.M.	68.6

APPROACH SLAB AT END BENT 2

BAR	NO.	SIZE	TYPE	LENGTH	WEIGHT
✳ A1	50	#13	STR	8380	416
A2	52	#13	STR	8340	431
✳ B1	107	#16	STR	7220	1199
B2	107	#19	STR	7500	1794

REINFORCING STEEL	kg.	2225
✳ EPOXY COATED REINFORCING STEEL	kg.	1615
CLASS AA CONCRETE	C.M.	37.8

PROJECT NO. U-2519DA
CUMBERLAND COUNTY
STATION: 28+66.746-COL2-

SHEET 1 OF 3

STATE OF NORTH CAROLINA
DEPARTMENT OF TRANSPORTATION
RALEIGH

STANDARD

BRIDGE APPROACH SLAB
FOR FLEXIBLE PAVEMENT

NORTH CAROLINA PROFESSIONAL SEAL 16301 ENGINEER TING-HSIUNG FANG
3/9/11

REVISIONS						SHEET NO.
NO.	BY:	DATE:	NO.	BY:	DATE:	S-74
1			3			TOTAL SHEETS
2			4			411

STD. NO. BAS4SM

ASSEMBLED BY : E.C. LOCKLEAR	DATE : 7-31-08
CHECKED BY : T.H. FANG	DATE : 8-04-08
DRAWN BY : FCJ 6/87	REV. 7/10/01 RWW/LES
CHECKED BY : EGA 6/87	REV. 5/7/03R RWW/JTE
	REV. 5/1/06R KMM/GM

09-MAR-2011 15:57
K:\TIPProjects-U\U2519da\Structures\frye\str3_COL2\FinalPlans\u2519da_sd_as_03.dgn
tfang

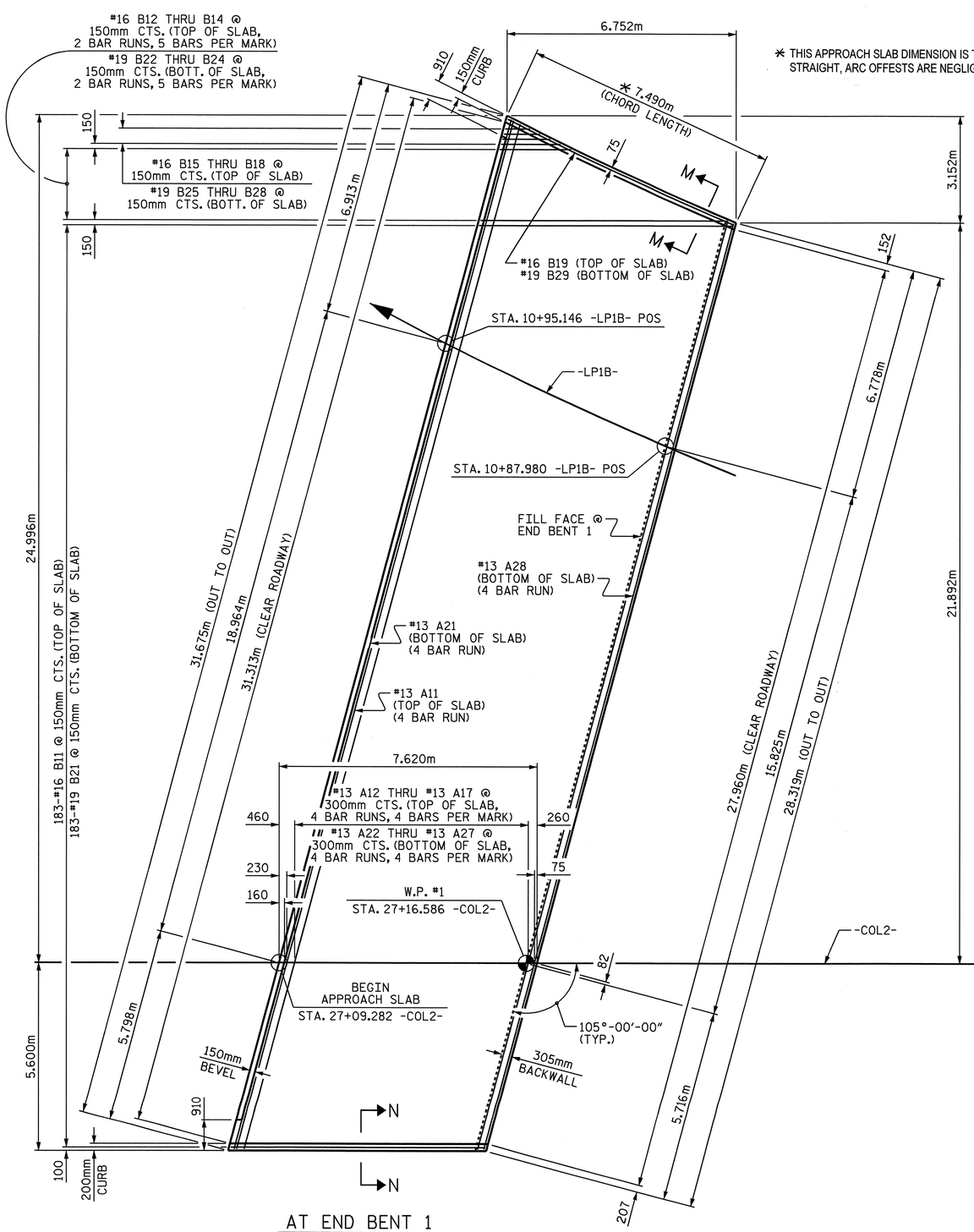

PLAN OF APPROACH SLAB

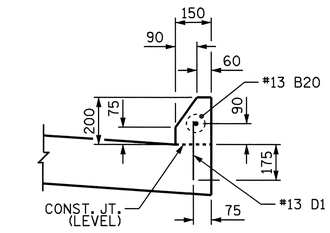

SECTION M-M

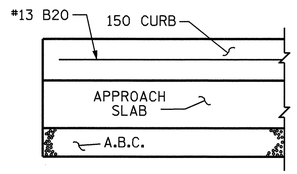

END OF 150 X 200 CURB

SEE ROADWAY PLANS FOR TRANSITION SECTION TO SHOULDER BERM GUTTER

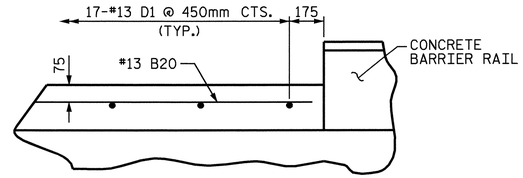

PARTIAL PLAN

CURB DETAILS

FOR LEFT SIDE OF BEGINNING APPROACH SLAB ONLY.

PROJECT NO. U-2519DA

CUMBERLAND COUNTY

STATION: 28+66.746-COL2-

SHEET 2 OF 3

STATE OF NORTH CAROLINA
DEPARTMENT OF TRANSPORTATION
RALEIGH

BRIDGE APPROACH SLABS

REVISIONS						SHEET NO.
NO.	BY:	DATE:	NO.	BY:	DATE:	S-75
1			3			TOTAL SHEETS
2			4			411

DRAWN BY : E.C. LOCKLEAR DATE : 7-31-08
CHECKED BY : T.H. FANG DATE : 8-04-08

03-OCT-2008 11:05
R:\Structures\frye\str3_COL2\Final Plans\u2519da_sd_as_03.dgn
sdombrowski

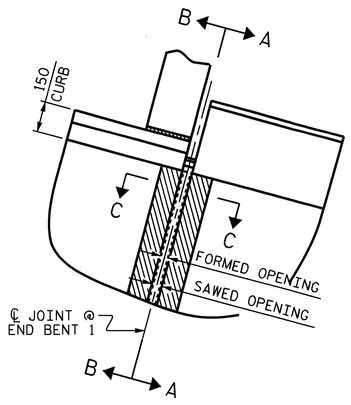

@ END BENT 1

LEFT SIDE ONLY

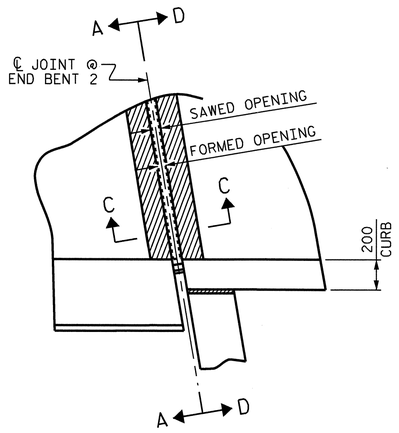

@ END BENT 2

RIGHT SIDE SHOWN, LEFT SIDE & RIGHT SIDE @ END BENT 1 SIMILAR

PLAN

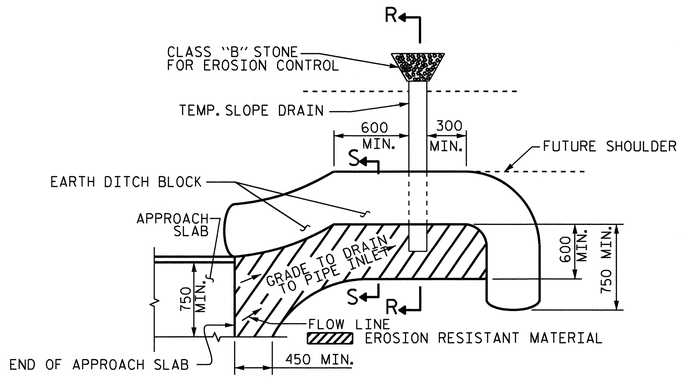

NOTE: IMMEDIATELY AFTER THE CONSTRUCTION OF THE APPROACH SLAB, THE CONTRACTOR SHALL PROVIDE TEMPORARY BERM AND SLOPE DRAIN. CONTRACTOR SHALL GRADE TO PIPE INLET AND PROVIDE EROSION RESISTANT MATERIAL AS SHOWN. THE EROSION RESISTANT MATERIAL SHALL BE EITHER 1) ASPHALT PLANT MIX, TYPE 1 OR TYPE 2, MIN. 50mm DEPTH, 2) EROSION CONTROL MAT, OR 3) CONCRETE, AS DIRECTED BY THE ENGINEER. THE SLOPE DRAIN SHALL CONSIST OF A NON-PERFORATED TEMPORARY DRAINAGE PIPE, 305mm IN DIAMETER.

PLAN VIEW

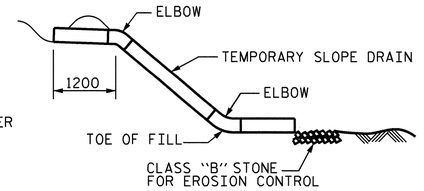

SECTION R-R

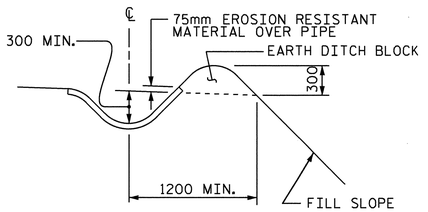

SECTION S-S

TEMPORARY BERM AND SLOPE DRAIN DETAILS

(TO BE USED WHEN SHOULDER BERM GUTTER IS REQUIRED)

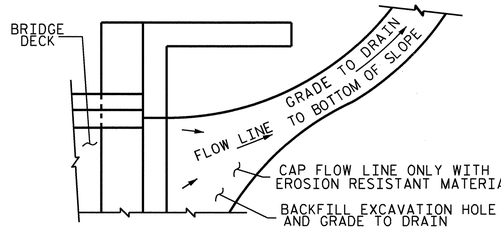

NOTE: IF THE APPROACH SLAB IS NOT CONSTRUCTED IMMEDIATELY AFTER THE BACKFILLING OF THE END BENT EXCAVATION, GRADE TO DRAIN TO THE BOTTOM OF THE SLOPE AND PROVIDE EROSION RESISTANT MATERIAL, SUCH AS FIBERGLASS ROVING OR AS DIRECTED BY THE ENGINEER TO PREVENT SOIL EROSION AND TO PROTECT THE AREA ADJACENT TO THE STRUCTURE. THE CONTRACTOR WILL BE REQUIRED TO REMOVE THESE MATERIALS PRIOR TO CONSTRUCTION OF THE APPROACH SLAB.

TEMPORARY DRAINAGE DETAIL

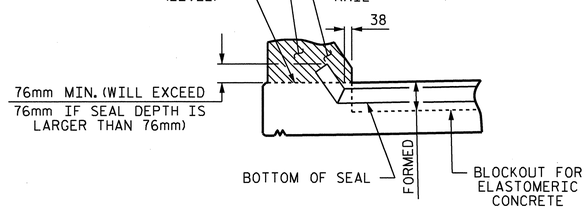

SECTION A-A

EVAZOTE JOINT SEAL TO BE CUT, HEAT WELDED AND TURNED UP PARALLEL TO SLOPED FACE OF THE BARRIER RAIL.

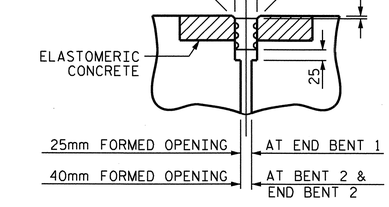

SECTION C-C

EVAZOTE JOINT SEAL

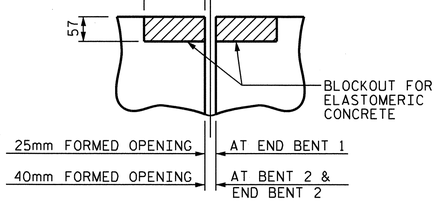

SECTION C-C

EVAZOTE JOINT SEAL
(PRE-SAWED ELASTOMERIC
CONCRETE DIMENSIONS)

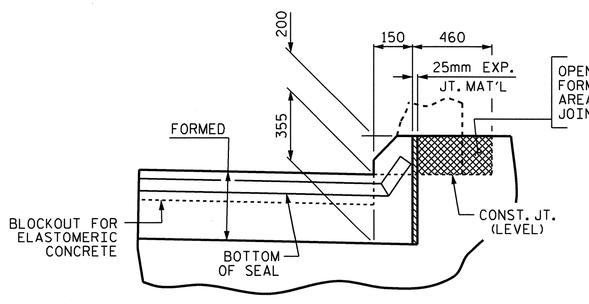

SECTION B-B

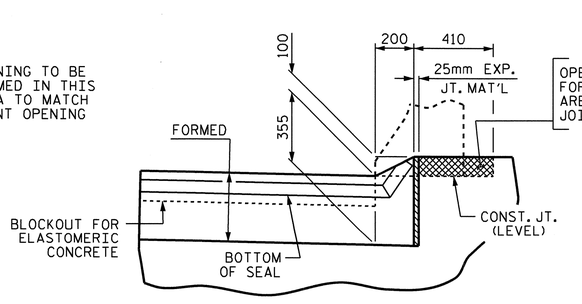

SECTION D-D

SAWED OPENING FOR EVAZOTE JOINT SEAL			
	AT 7° C	AT 16° C	AT 32° C
END BENT 1	52mm	48mm	40mm
BENT 2	78mm	67mm	46mm
END BENT 2	72mm	64mm	51mm

ELASTOMERIC CONCRETE	
	* ELASTOMERIC CONCRETE (CU. m)
END BENT 1	0.59
BENT 2	0.33
END BENT 2	0.33

* BASED ON THE MINIMUM BLOCKOUT SHOWN.

JOINT SEAL DETAILS

NORTH CAROLINA PROFESSIONAL SEAL 16301 ENGINEER TING FANG

3/18/11

PROJECT NO. U-2519DA

CUMBERLAND COUNTY

STATION: 28+66.746 -COL2-

SHEET 3 OF 3

STATE OF NORTH CAROLINA
DEPARTMENT OF TRANSPORTATION
RALEIGH

STANDARD

BRIDGE APPROACH SLAB DETAILS

REVISIONS						SHEET NO.
NO.	BY:	DATE:	NO.	BY:	DATE:	S-76
1			3			TOTAL SHEETS
2			4			411

STD. NO. BAS10SM

ASSEMBLED BY : E. C. LOCKLEAR	DATE : 6/25/08	
CHECKED BY : T. H. FANG	DATE : 7/03/08	
DRAWN BY : FCJ 11/88	REV. 10/17/00	RWW/LES
CHECKED BY : ARB 11/88	REV. 5/7/03	RWW/JTE
	REV. 5/1/06R	MAA/KMM

18-MAR-2011 13:59
K:\TIPProjects-U\U2519da\Structures\frye\str3_COL2\FinalPlans\u2519da_sd_as_03.dgn
ttfang

F.A. PROJECT NO. NHF-0100(21)

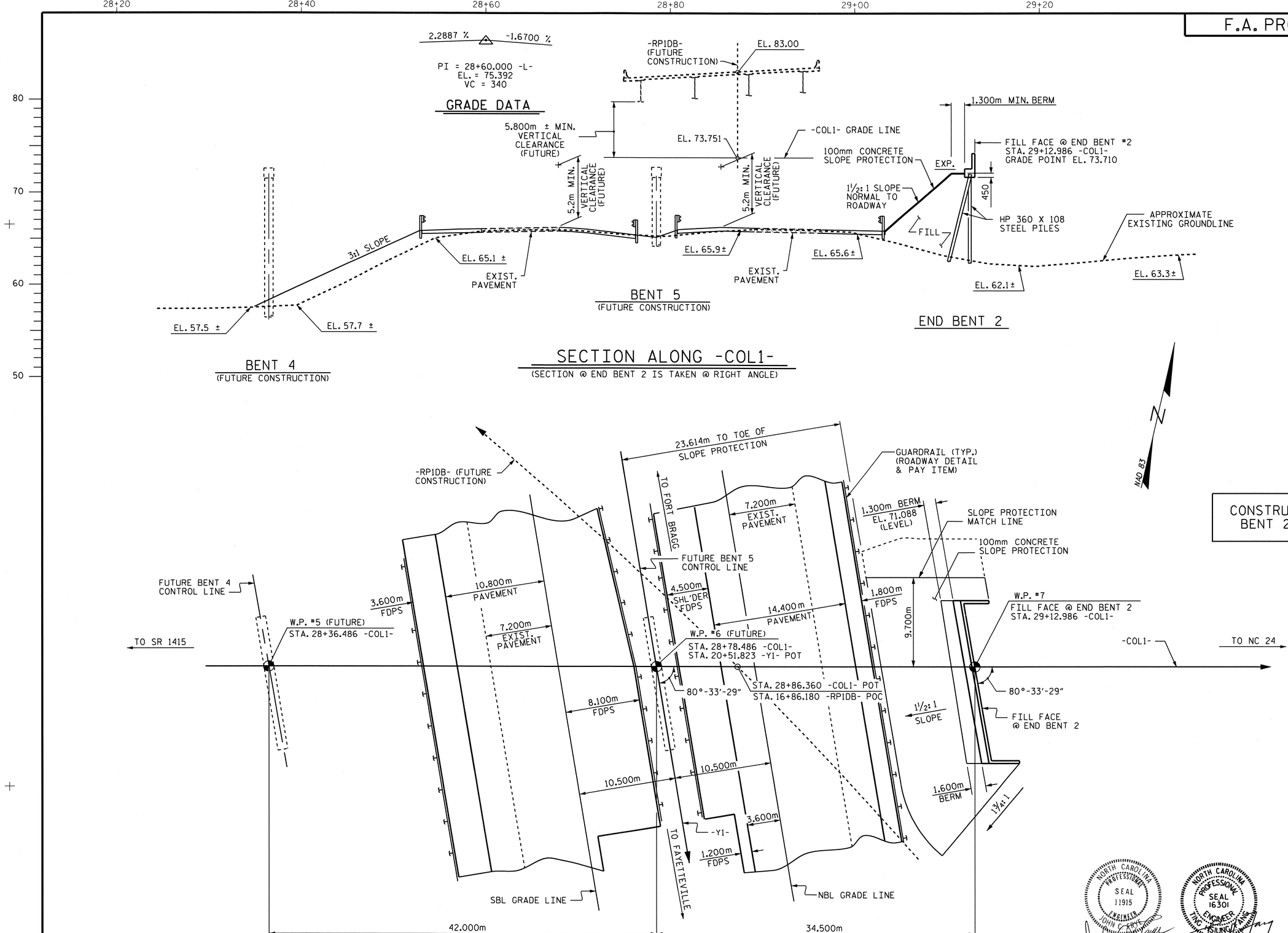

PLAN

PILES NOT SHOWN FOR CLARITY.

CONSTRUCTION CONSISTS OF END BENT 2 AND SLOPE PROTECTION

PROJECT NO. U-2519DA

CUMBERLAND COUNTY

STATION: 28+78.486-COL1-POT
= 20+51.823 -Y1- POT

SHEET 1 OF 3 BRIDGE #368

STATE OF NORTH CAROLINA
DEPARTMENT OF TRANSPORTATION
RALEIGH

GENERAL DRAWING

BRIDGE OVER BEAVER CREEK AND ALL AMERICAN FREEWAY ON FAYETTEVILLE OUTER LOOP BETWEEN SR 1415 AND NC 24

-COL1-

REVISIONS						SHEET NO.
NO.	BY:	DATE:	NO.	BY:	DATE:	S-77
1			3			TOTAL SHEETS
2			4			411

NORTH CAROLINA PROFESSIONAL SEAL 11915 ENGINEER JOHN C. FRYE 3/28/11

NORTH CAROLINA PROFESSIONAL SEAL 16301 ENGINEER TING HSIUNG FANG 3/28/11

DRAWN BY : D. G. ELY DATE : 2/07
CHECKED BY : R. D. MARTIN DATE : 3/07

28-MAR-2011 14:09
K:\TIPProjects-U\U2519da\Structures\frye\str4_COL1\FinalPlans\u-2519da_sd_gd_04.dgn
tfang

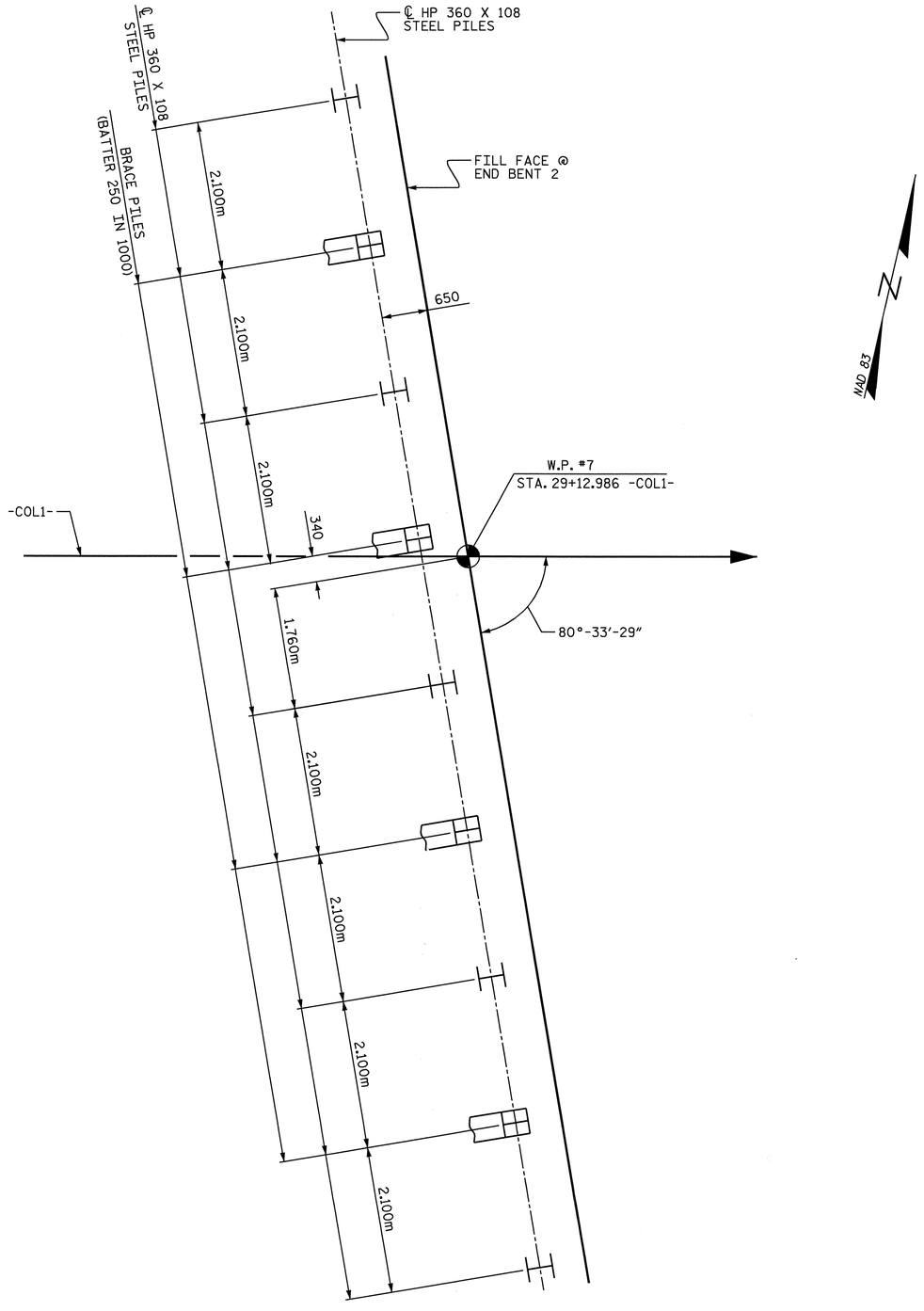

END BENT 2

FOUNDATION LAYOUT

DIMENSIONS LOCATING PILES ARE SHOWN TO PILE CENTERLINE AT THE BOTTOM OF THE CAP.

NOTES:

DRIVE PILES AT END BENT 2 TO A MINIMUM BEARING CAPACITY OF 1340 KN PER PILE. THE REQUIRED BEARING CAPACITY IS EQUAL TO THE ALLOWABLE BEARING CAPACITY WITH A MINIMUM FACTOR OF SAFETY OF TWO.

THE ALLOWABLE BEARING CAPACITY FOR PILES AT END BENT 2 IS 670 KN PER PILE.

TESTING PILES WITH THE PILE DRIVING ANALYZER (PDA) DURING DRIVING, RESTRIKING OR REDRIVING MAY BE REQUIRED. THE ENGINEER WILL DETERMINE THE NEED FOR PDA TESTING. SEE PILE DRIVING ANALYZER SPECIAL PROVISION.

PILE RESTRIKES FOR LRFD MAY BE REQUIRED. SEE PILE RESTRIKE FOR LRFD SPECIAL PROVISION.

FOR PILES, SEE SPECIAL PROVISIONS.

NORTH CAROLINA PROFESSIONAL SEAL 16301 ENGINEER TING HSILING FANG

Ting H. Fang 9/12/08

PROJECT NO. U-2519DA

CUMBERLAND COUNTY

STATION: 28+78.486-COL1-

SHEET 2 OF 3

STATE OF NORTH CAROLINA
DEPARTMENT OF TRANSPORTATION
RALEIGH

GENERAL DRAWING

BRIDGE OVER BEAVER CREEK AND ALL AMERICAN FREEWAY ON FAYETTEVILLE OUTER LOOP BETWEEN SR 1415 AND NC 24

-COL1-

REVISIONS						SHEET NO.
NO.	BY:	DATE:	NO.	BY:	DATE:	S-78
1			3			TOTAL SHEETS
2			4			411

DRAWN BY : E.C. LOCKLEAR DATE : 3-20-08
CHECKED BY : T.H. FANG DATE : 4-1-08

12-SEP-2008 07:40
y:\tlpprojects-u\u2519da\structures\frye\str4_coll\finalplans\u-2519da_sd_gd_04.dgn
qtnguyen

TOTAL BILL OF MATERIAL

	PDA TESTING	PDA ASSISTANCE	CLASS A CONCRETE	REINFORCING STEEL	HP 360 X 108 STEEL PILES		PILE REDRIVES	100mm SLOPE PROTECTION
	EACH	EACH	CU. METERS	KG	NO.	METERS	EACH	SQ. METERS
END BENT 2			31.7	2,729	9	207.0	2	410.0
TOTAL	1	1	31.7	2,729	9	207.0	2	410.0

CONSTRUCTION CONSISTS OF END BENT 2 AND SLOPE PROTECTION

B.M. #12: POINT BL12, ALUMINUM DISK 65.137m LT. OF STA. 27+21.030 -L-, ELEV. 59.506

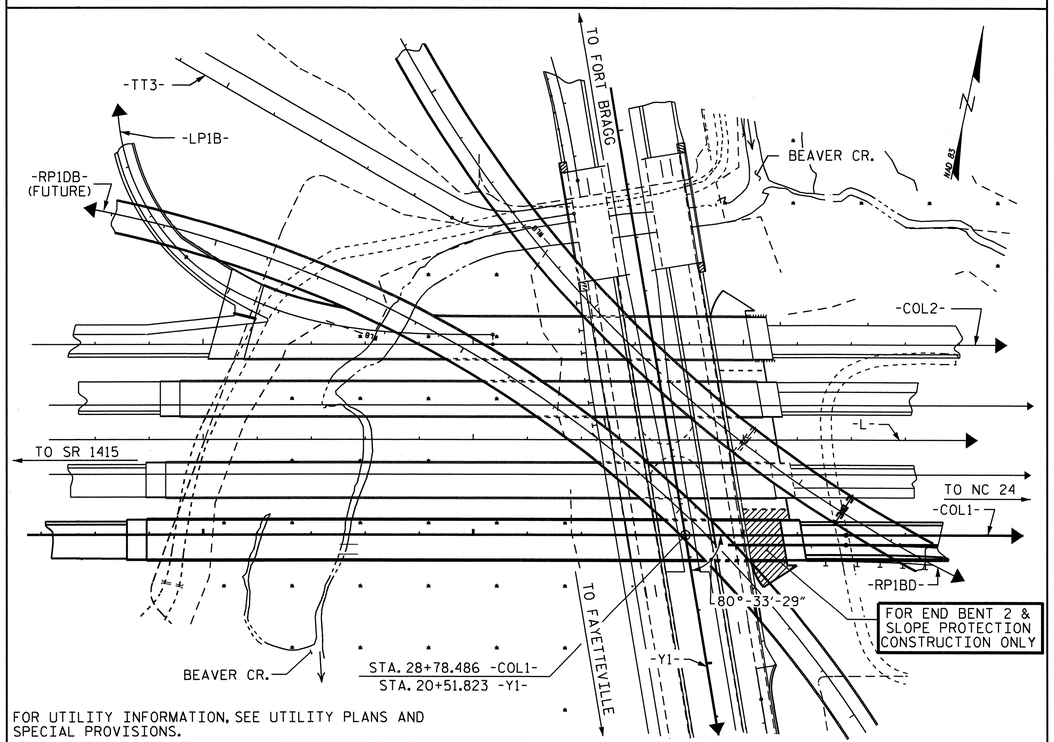

FOR UTILITY INFORMATION, SEE UTILITY PLANS AND SPECIAL PROVISIONS.

LOCATION SKETCH

NOTES

ALL DIMENSIONS ARE IN MILLIMETERS UNLESS OTHERWISE NOTED.

ALL ELEVATIONS ARE IN METERS.

ASSUMED LIVE LOAD = MS 22.5 OR ALTERNATE LOADING.

FOR OTHER DESIGN DATA AND GENERAL NOTES, SEE SHEET SNSM.

FOR EROSION CONTROL MEASURES, SEE EROSION CONTROL PLANS.

THIS BRIDGE HAS BEEN DESIGNED BY THE STRENGTH DESIGN METHOD AS SPECIFIED IN AASHTO STANDARD SPECIFICATIONS.

THIS BRIDGE HAS BEEN DESIGNED IN ACCORDANCE WITH THE REQUIREMENTS OF THE AASHTO STANDARD SPECIFICATIONS FOR SEISMIC DESIGN OF HIGHWAY BRIDGES FOR SEISMIC PERFORMANCE CATEGORY A.

THE CONTRACTOR SHALL PROVIDE INDEPENDENT ASSURANCE SAMPLES OF REINFORCING STEEL AS FOLLOWS: FOR PROJECTS REQUIRING UP TO 360,000 kg OF REINFORCING STEEL, ONE 760mm SAMPLE OF EACH SIZE BAR USED, AND FOR PROJECTS REQUIRING OVER 360,000 kg OF REINFORCING STEEL, TWO 760mm SAMPLES OF EACH SIZE BAR USED. THE BARS FROM WHICH THE SAMPLES ARE TAKEN MUST THEN BE SPLICED WITH REPLACEMENT BARS OF THE SIZE AND LENGTH OF THE SAMPLE PLUS A MINIMUM LAP SPLICE OF THIRTY BAR DIAMETERS.

FOR SUBMITTAL OF WORKING DRAWINGS, SEE SPECIAL PROVISIONS.

FOR FALSEWORK AND FORMWORK, SEE SPECIAL PROVISIONS.

FOR CRANE SAFETY, SEE SPECIAL PROVISIONS.

FOR CURING CONCRETE, SEE SPECIAL PROVISIONS.

HYDRAULIC DATA

DESIGN DISCHARGE---------- 52.7 m^3/s
FREQUENCY OF DESIGN FLOOD---- 50 YR.
DESIGN HIGH WATER EL.-------- 58.72
DRAINAGE AREA---------- 15.0 SQ.Km
BASIC DISCHARGE (0100)------- 58.9 m^3/s
BASIC HIGH WATER EL.--------- 59.17

OVERTOPPING FLOOD DATA

OVERTOPPING DISCHARGE---------- **
FREQUENCY OF OVERTOPPING FLOOD--- >500 YR.
OVERTOPPING FLOOD EL.---------- 63.03

** OVERTOPPING FLOOD IS GREATER THAN THE 500+ YEAR EVENT.
OVERTOPPING LOCATION AT -RP1A- 16+34.207

NORTH CAROLINA PROFESSIONAL SEAL 16301 ENGINEER TING HSIUNG FANG
3/22/11

PROJECT NO. U-2519DA
CUMBERLAND COUNTY
STATION: 28+78.486 -COL1-

SHEET 3 OF 3

STATE OF NORTH CAROLINA
DEPARTMENT OF TRANSPORTATION
RALEIGH

GENERAL DRAWING

BRIDGE OVER BEAVER CREEK AND ALL AMERICAN FREEWAY ON FAYETTEVILLE OUTER LOOP BETWEEN SR 1415 AND NC 24

-COL1-

REVISIONS						SHEET NO.
NO.	BY:	DATE:	NO.	BY:	DATE:	S-79
1			3			TOTAL SHEETS
2			4			411

DRAWN BY : D. G. ELY DATE : 2-07
CHECKED BY : T. H. FANG DATE : 3-08

22-MAR-2011 11:39
K:\TIPProjects-U\U2519da\Structures\frye\str4_COL1\Final Plans\u-2519da_sd_gd_04.dgn
tfang

K:\TIPProjects-U\U2519do\Structures\frye\str4.COL1\Final
tfang

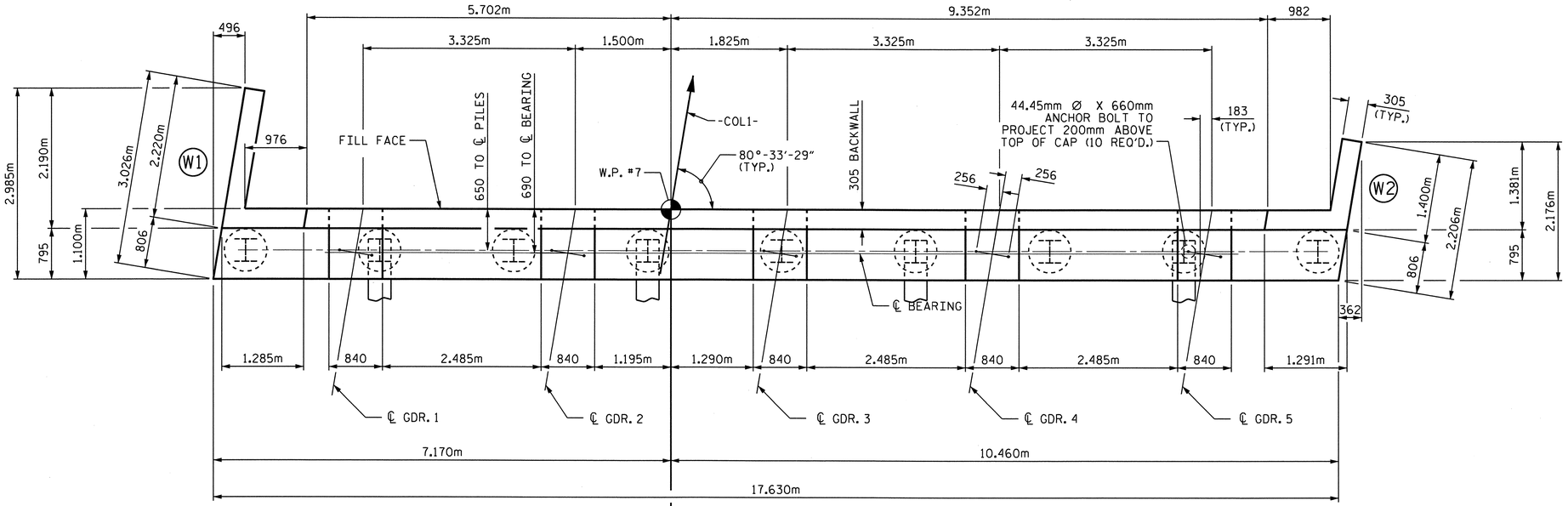

PLAN

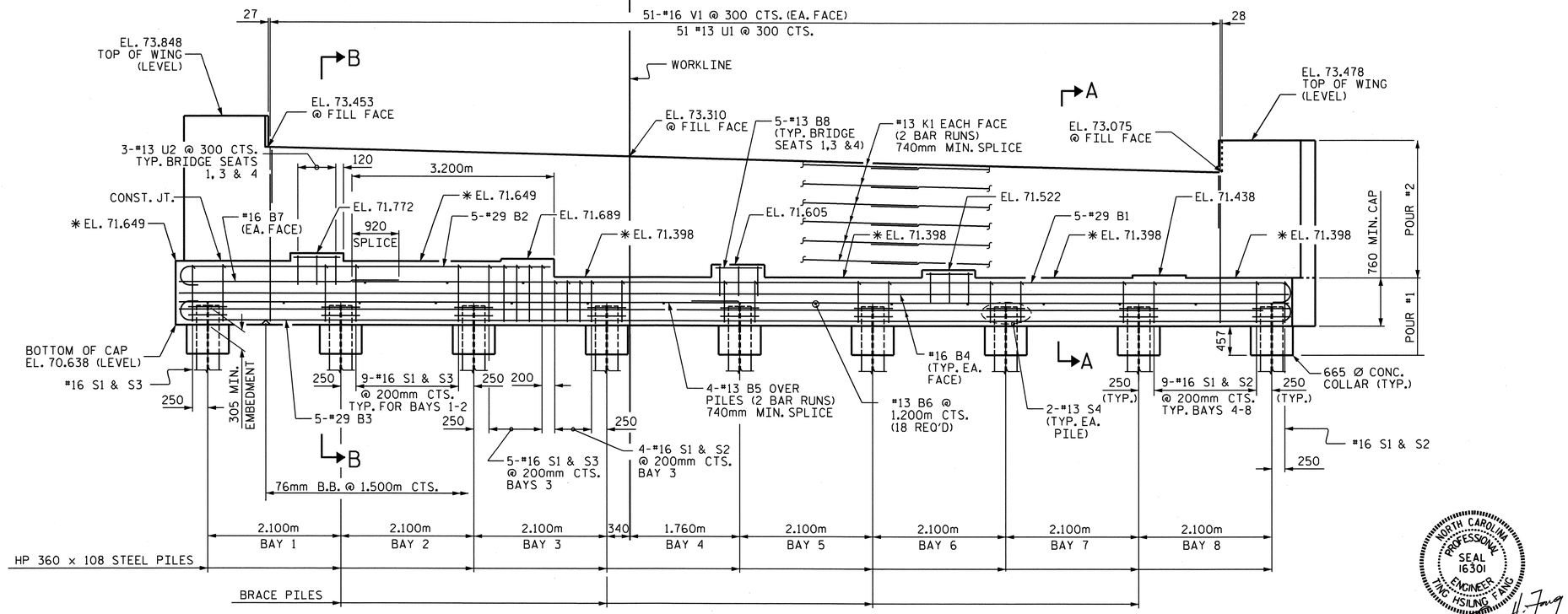

ELEVATION

WINGS NOT SHOWN FOR CLARITY

NOTES

STIRRUPS IN CAP MAY BE SHIFTED AS NECESSARY TO CLEAR ANCHOR BOLTS.

BACKWALL SHALL BE PLACED BEFORE APPLYING THE EPOXY PROTECTIVE COATING.

FOR PILE SPLICE DETAILS, SEE END BENT 2, SHEET 3 OF 3.

THE TOP SURFACE AREAS OF THE END BENT CAPS SHALL BE CURED IN ACCORDANCE WITH THE STANDARD SPECIFICATIONS EXCEPT THE MEMBRANE CURING COMPOUND METHOD SHALL NOT BE USED.

* THE TOP SURFACE OF THE CAP EXCEPT THE BRIDGE SEAT BUILDUPS SHALL BE SLOPED TRANSVERSELY FROM THE FILL FACE TO THE BACK FACE AT THE RATE OF 2 %.

THE PAYMENT FOR ANCHOR BOLTS SHALL BE INCLUDED IN THE SEVERAL PAY ITEMS.

THE CONTRACTOR SHALL PROVIDE FOR INSTALLATION OF THE 102MM DIAMETER DRAIN THROUGH THE WING WALL. SEE ROADWAY PLANS. REINFORCING STEEL IN THE WING WALL MAYBE SHIFTED AS NECESSARY TO CLEAR THE DRAIN PIPE.

GALVANIZE 44.45MM DIAMETER ANCHOR BOLTS IN ACCORDANCE WITH THE STANDARD SPECIFICATIONS. FURNISHING AND INSTALLING ANCHOR BOLTS IS CONSIDERED INCIDENTAL TO THE END BENT CONSTRUCTION.

NORTH CAROLINA PROFESSIONAL SEAL 16301 ENGINEER TAG HSILUNG FANG

Tag H. Fang 3/22/11

DRAWN BY : Neil M. Raffin DATE : 4/2/08
CHECKED BY : T. H. FANG DATE : 4/18/08

PROJECT NO. U-2519DA
CUMBERLAND COUNTY
STATION: 28+78.486 -COL1-

SHEET 1 OF 3

STATE OF NORTH CAROLINA
DEPARTMENT OF TRANSPORTATION
RALEIGH
SUBSTRUCTURE

END BENT 2

REVISIONS						SHEET NO.
NO.	BY:	DATE:	NO.	BY:	DATE:	S-80
1			3			TOTAL SHEETS
2			4			411

K:\TIPProjects-U\U2519da\Structures\frye\str4_COL1\Final
tfang

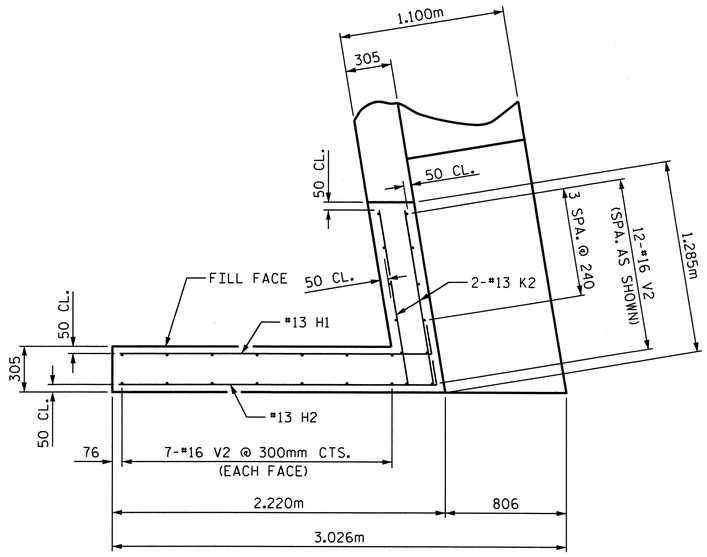

PLAN OF WING (W1)

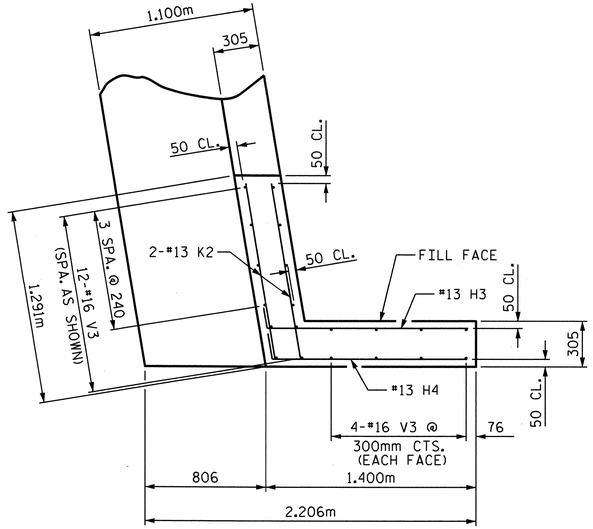

PLAN OF WING (W2)

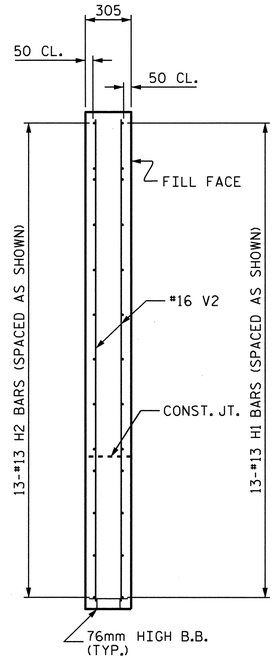

SECTION X-X

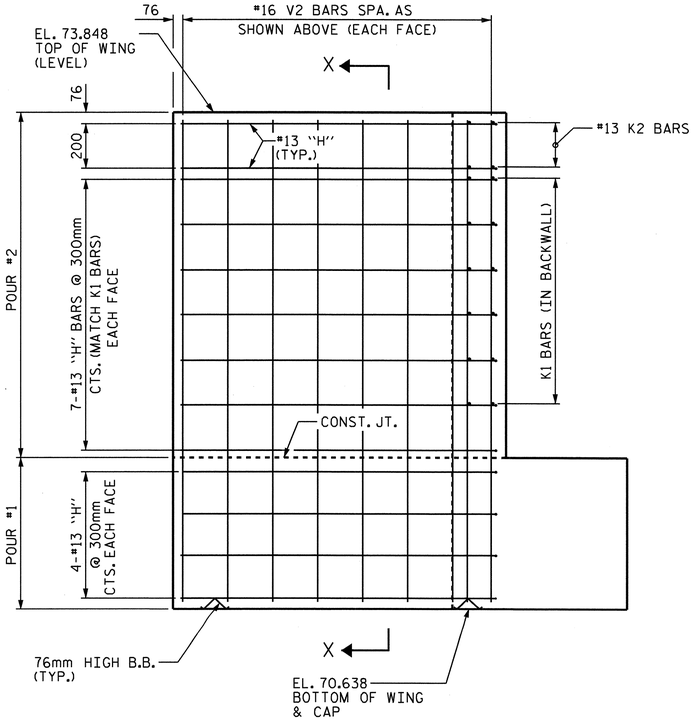

ELEVATION OF WING (W1)

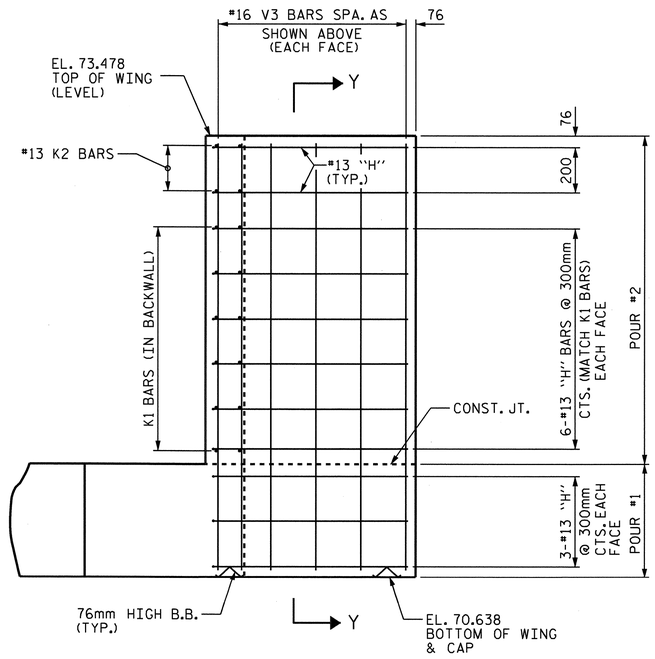

ELEVATION OF WING (W2)

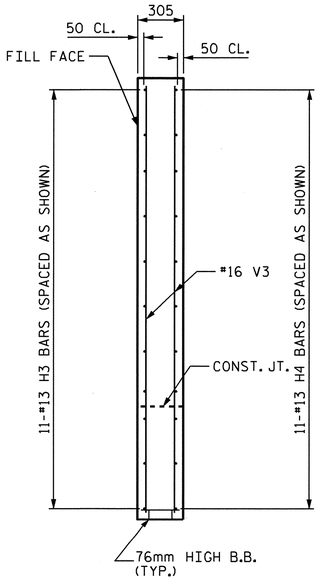

SECTION Y-Y

NORTH CAROLINA PROFESSIONAL SEAL 16301 ENGINEER TING HSIUNG FANG
3/22/11

PROJECT NO. U-2519DA

CUMBERLAND COUNTY

STATION: 28+78.486 -COL1-

SHEET 2 OF 3

STATE OF NORTH CAROLINA
DEPARTMENT OF TRANSPORTATION
RALEIGH

SUBSTRUCTURE

END BENT 2

REVISIONS						SHEET NO.
NO.	BY:	DATE:	NO.	BY:	DATE:	S-81
1			3			TOTAL SHEETS
2			4			411

DRAWN BY : Neil M. Ruffin DATE : 4/2/08
CHECKED BY : T. H. FANG DATE : 4/21/08

K:\TIPProjects-U\U2519da\Structures\frye\str4_COL1\Final Plans\u2519da_str4_col1_280.dgn tfang

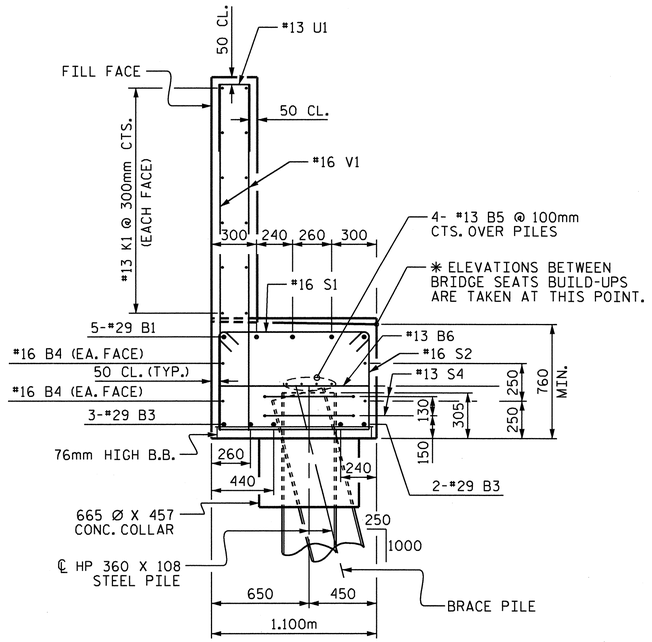

SECTION A-A

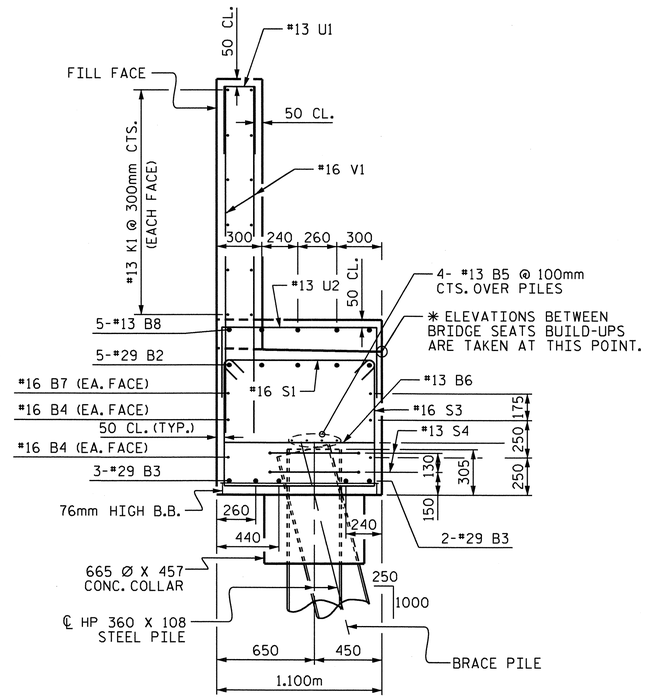

SECTION B-B

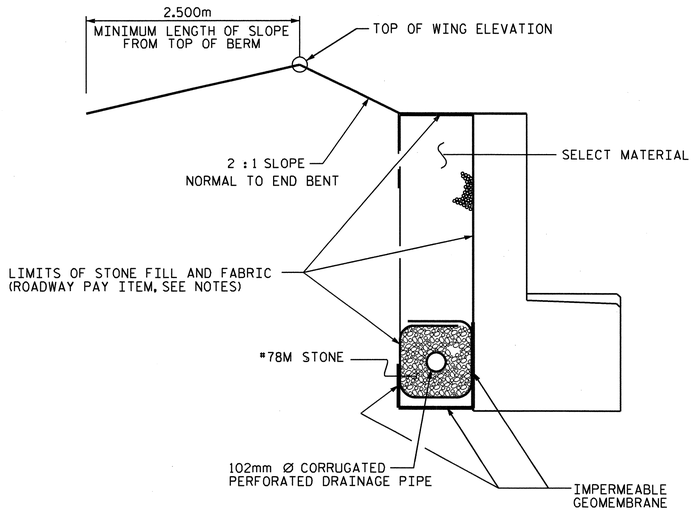

TEMPORARY DRAINAGE @ END BENT 2

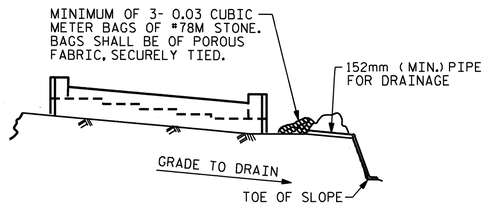

BAGGED STONE AND PIPE SHALL BE PLACED IMMEDIATELY AFTER COMPLETION OF END BENT EXCAVATION. PIPE MAY BE EITHER CONCRETE, CORRUGATED STEEL, CORRUGATED ALUMINUM ALLOY, OR CORRUGATED PLASTIC. PERFORATED PIPE WILL NOT BE ALLOWED.

BAGGED STONE SHALL REMAIN IN PLACE UNTIL THE ENGINEER DIRECTS THAT IT BE REMOVED. THE CONTRACTOR SHALL REMOVE AND DISPOSE OF SILT ACCUMULATIONS AT BAGGED STONE WHEN SO DIRECTED BY THE ENGINEER. BAGS SHALL BE REMOVED AND REPLACED WHENEVER THE ENGINEER DETERMINES THAT THEY HAVE DETERIORATED AND LOST THEIR EFFECTIVENESS.

NO SEPARATE PAYMENT WILL BE MADE FOR THIS WORK AND THE ENTIRE COST OF THIS WORK SHALL BE INCLUDED IN THE UNIT CONTRACT PRICE BID FOR THE SEVERAL PAY ITEMS.

TEMPORARY DRAINAGE AT END BENT

BAR TYPES

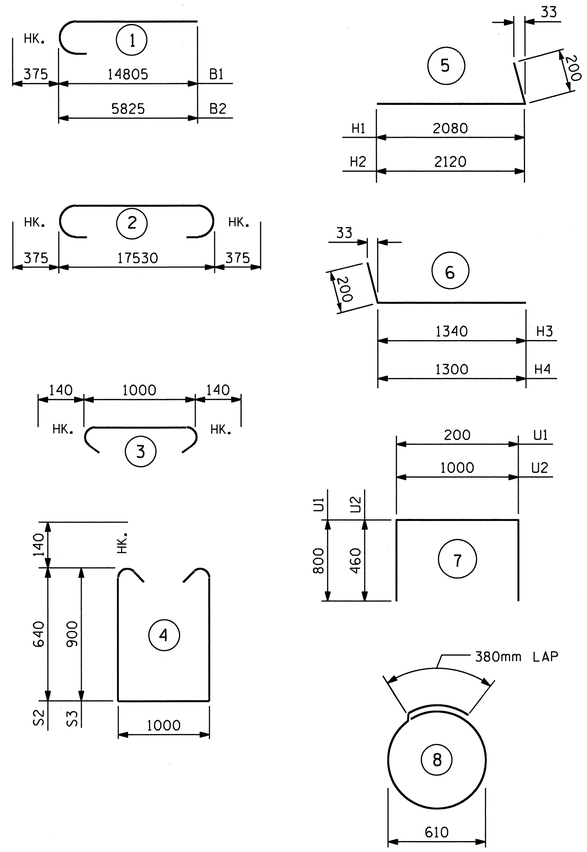

ALL BAR DIMENSIONS ARE OUT TO OUT.

BILL OF MATERIAL

END BENT 2

BAR	NO.	SIZE	TYPE	LENGTH	WEIGHT
B1	5	#29	1	15180	384
B2	5	#29	1	6200	157
B3	5	#29	2	18280	462
B4	4	#16	STR	17520	109
B5	8	#13	STR	9140	73
B6	18	#13	STR	1000	18
B7	2	#16	STR	3300	10
B8	15	#13	STR	740	11
H1	13	#13	5	2280	29
H2	13	#13	5	2320	30
H3	11	#13	6	1540	17
H4	11	#13	6	1500	16
K1	24	#13	STR	9140	218
K2	8	#13	STR	1180	9
S1	74	#16	3	1280	147
S2	50	#16	4	2560	199
S3	24	#16	4	3080	115
S4	18	#13	8	2300	41
U1	51	#13	7	1800	91
U2	9	#13	7	1920	17
V1	102	#16	STR	2300	364
V2	26	#16	STR	3100	125
V3	20	#16	STR	2720	85
REINFORCING STEEL				=	2729 KG

CLASS "A" CONCRETE BREAKDOWN

POUR #1 CAP & LOWER WINGS & COLLARS	19.8 m3
POUR #2 BACKWALL & UPPER WINGS	11.9 m3
TOTAL	31.7 m3

HP 360 x 108 STEEL PILES
No. 9 METERS 207

PILE REDRIVES
EACH 2

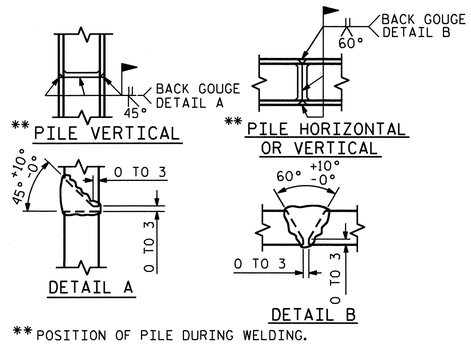

** POSITION OF PILE DURING WELDING.

PILE SPLICE DETAILS

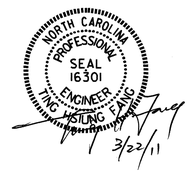

PROJECT NO. U-2519DA
CUMBERLAND COUNTY
STATION: 28+78.486 -COL1-

SHEET 3 OF 3

STATE OF NORTH CAROLINA
DEPARTMENT OF TRANSPORTATION
RALEIGH

SUBSTRUCTURE

END BENT 2

REVISIONS						SHEET NO.
NO.	BY:	DATE:	NO.	BY:	DATE:	S-82
1			3			TOTAL SHEETS
2			4			411

DRAWN BY : Neil M. Ruffin DATE : 4/2/08
CHECKED BY : T. H. FANG DATE : 4/21/08

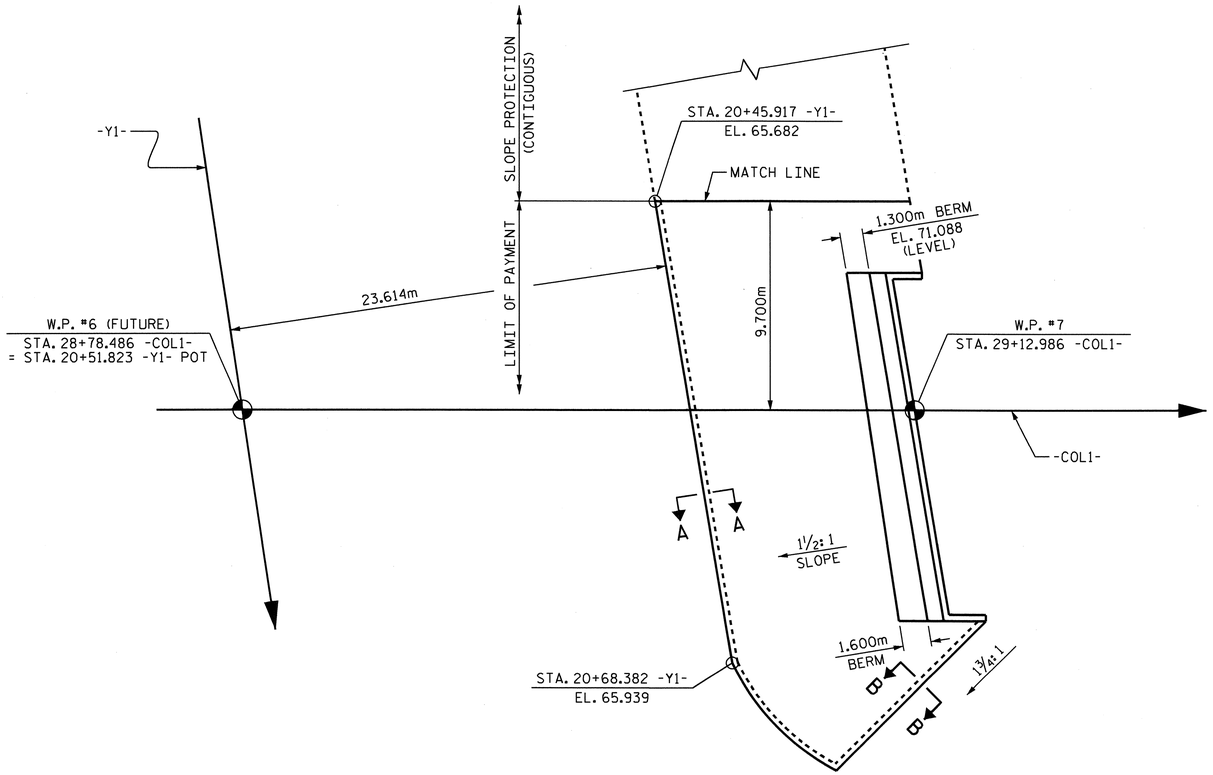

PLAN @ END BENT 2

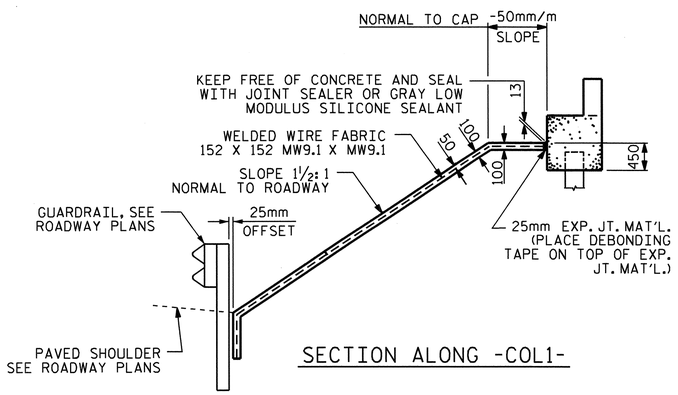

SECTION ALONG -COL1-

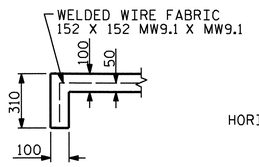

SECTION A-A

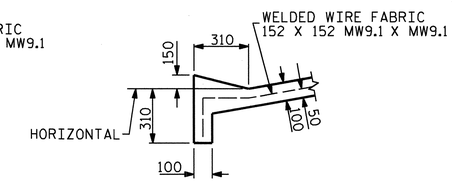

SECTION B-B

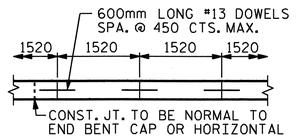

STRIP WIDTHS MAY VARY IN CURVED PORTION.

POURING DETAIL

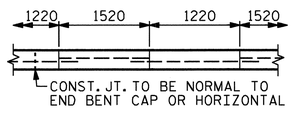

POUR A 1220mm STRIP FIRST. STRIP WIDTHS MAY VARY IN CURVED PORTION.

OPTIONAL POURING DETAIL

GENERAL NOTES

SLOPE PROTECTION SHALL BE PLACED UNDER THE ENDS OF THE BRIDGE AS SHOWN IN THE DETAILS. STRAIGHT EDGING WILL NOT BE REQUIRED UNLESS, IN THE OPINION OF THE ENGINEER, VISUAL INSPECTION INDICATES A NEED FOR IT. MEASUREMENT AND PAYMENT SHALL BE AS PRESCRIBED IN SECTION 462 OF THE STANDARD SPECIFICATIONS.

SLOPE PROTECTION SHALL CONSIST OF 100mm POURED-IN-PLACE CONCRETE PAVING AS SHOWN IN THE DETAILS ON THIS SHEET. CONCRETE SHALL BE CLASS "B". THE CONCRETE SURFACE SHALL BE FLOATED WITH A WOODEN FLOAT AND FINISHED. WELDED WIRE FABRIC REINFORCING SHALL BE 152 X 152 - MW9.1 X MW9.1, 1520mm WIDE. SLOPE PROTECTION SHALL BE POURED IN 1520mm STRIPS AS SHOWN IN THE "POURING DETAIL" WITH 600mm LONG #13 BARS PLACED ALONG THE SLOPE BETWEEN STRIPS AT 450mm MAXIMUM SPACING. SLOPE PROTECTION MAY BE POURED IN ALTERNATE 1220mm AND 1520mm STRIPS AS SHOWN IN THE "OPTIONAL POURING DETAIL" WITH ADJACENT RUNS OF WELDED WIRE FABRIC LAPPING AT LEAST 152mm. THE COST OF THE WELDED WIRE FABRIC AND #13 BARS, IF USED, SHALL BE INCLUDED IN THE CONTRACT UNIT PRICE BID PER SQUARE METER FOR SLOPE PROTECTION.

BRIDGE @ STA. 28+78.486 -COL1-	100mm SLOPE PROTECTION	* WELDED WIRE FABRIC 1520mm WIDE
	SQUARE METERS	APPROX. METERS
END BENT 2	410	300

* QUANTITY SHOWN IS BASED ON 1520mm POURS.

NORTH CAROLINA PROFESSIONAL SEAL 16301 ENGINEER TING-HSIANG FANG
3/7/11

PROJECT NO. U-2519DA
CUMBERLAND COUNTY
STATION: 28+78.486-COL1-

STATE OF NORTH CAROLINA
DEPARTMENT OF TRANSPORTATION
RALEIGH

STANDARD SLOPE PROTECTION DETAILS

REVISIONS						SHEET NO.
NO.	BY:	DATE:	NO.	BY:	DATE:	S-83
1			3			TOTAL SHEETS
2			4			411

ASSEMBLED BY : E.C. LOCKLEAR	DATE : 3-13-08		
CHECKED BY : T.H. FANG	DATE : 4-14-08		
DRAWN BY : ELR 5/92	REV. 7/10/01	LES/RDR	
CHECKED BY : GRP 6/92	REV. 5/7/03	RWW/JTE	
	REV. 5/1/06	TLA/GM	

07-MAR-2011 08:20
K:\TIPProjects-U\U2519da\Structures\frye\str4_COL1\Final Plans\U2519DA_sd_SP_04.dgn

STD. NO. SP1SM

F. A. PROJECT NO. NHF-0100(21)

19+10 19+20 19+30 19+40 19+50 19+60

GRADE DATA

(+) 0.5934% (+) 1.0800%

PI = 18+67.982 -Y1-
E. = 64.037m
VC = 60m

FILL FACE @ END BENT #1
STA. 19+11.884 -Y1-
G. P. EL. 64.511

FILL FACE @ END BENT #2
STA. 19+53.034 -Y1-
G. P. EL. 64.956

SPAN A SPAN B SPAN C

FIXED EXP. FIXED EXP. EXP. FIXED

68 66 64 62 60 58 56

EL. 64.2± EL. 64.4± 1.8 : 1 (±) SLOPE 457mm GALVANIZED STEEL PIPE PILES HP 310 X 79 STEEL PILES HW EL. 58.90 9/1990 EL. 58.3± WS EL. 57.21 3-4-98 EL. 57.9± EL. 57.0± EL. 55.7± EL. 56.0± 457mm GALVANIZED STEEL PIPE PILES 1.7 : 1 (±) SLOPE CONCRETE SLOPE PROTECTION (TYP.) EL. 57.6± EL. 57.8± EL. 64.7± HP 310 X 79 STEEL PILES NATURAL GROUND LINE EL. 65.0±

END BENT #1 BENT #1 BENT #2 END BENT #2

SECTION ALONG GRADE LINE

(EXISTING STRUCTURE NOT SHOWN FOR CLARITY)

100mm CONCRETE SLOPE PROTECTION

EXISTING SOIL ROAD

℄ BENT #1

BEAVER CREEK

℄ BENT #2

100mm CONCRETE SLOPE PROTECTION

EXISTING END BENT #2

EXISTING END BENT #1

W. P. #1
FILL FACE @ END BENT #1
STA. 19+11.884 -Y1-

W. P. #2
STA. 19+21.334 -Y1-

W. P. #3
STA. 19+41.756 -Y1-

W. P. #4
FILL FACE @ END BENT #2
STA. 19+53.034 -Y1-

END APPROACH SLAB
STA. 19+59.130 -Y1-

BEGIN APPROACH SLAB
STA. 19+05.788 -Y1-

EXISTING BENT #1

GRADE LINE LEFT LANE

89°-53'-41" (TYP.)

EXISTING BENT #2

10.500m

13.624m 6.798m

TO GRUBER RD.

1.6m± BERM
EL. 62.765

℄ -Y1-

BRIDGE I.D.
STA. 19+34.958 -Y1-

89°-53'-41"

1.7m± BERM
EL. 63.201

TO SANTA FE DR.

9.450m SPAN A 20.422m SPAN B 11.278m SPAN C

41.150m TOTAL LENGTH OF BRIDGE
(FILL FACE @ END BENT #1 TO FILL FACE @ END BENT #2)

EXISTING PORTION TO BE REMOVED, FOR DETAILS, SEE SHEET "END BENT #1 EXISTING CAP" & "END BENT #2 EXISTING CAP"

PLAN

PILES NOT SHOWN FOR CLARITY.

NORTH CAROLINA PROFESSIONAL SEAL 12274 ENGINEER OMAR R. AZIZI
3-30-11

NORTH CAROLINA PROFESSIONAL SEAL 14045 ENGINEER TIMOTHY L. COBBINS
3/29/11

METRIC

PROJECT NO. U-2519DA
CUMBERLAND COUNTY
STATION: 19+34.958 -Y1-
SHEET 1 OF 3 WIDENING AND REHABILITATION OF BRIDGE NO. 235

STATE OF NORTH CAROLINA
DEPARTMENT OF TRANSPORTATION
RALEIGH

GENERAL DRAWING

FOR BRIDGE WIDENING OVER BEAVER CREEK ON ALL AMERICAN FREEWAY BETWEEN GRUBER ROAD AND SANTA FE DRIVE
(LEFT LANE)

REVISIONS						SHEET NO.
NO.	BY:	DATE:	NO.	BY:	DATE:	S-84
1			3			TOTAL SHEETS
2			4			411

STR. #5

DRAWN BY : PEGGY ADKINS DATE : 3-07
CHECKED BY : B.N. BARODAWALA DATE : 5-07

29-MAR-2011 16:07
R:\Structures\azizi\Final Plans\STR 05\U2519DA_sd_GD_05.dgn
mruffin

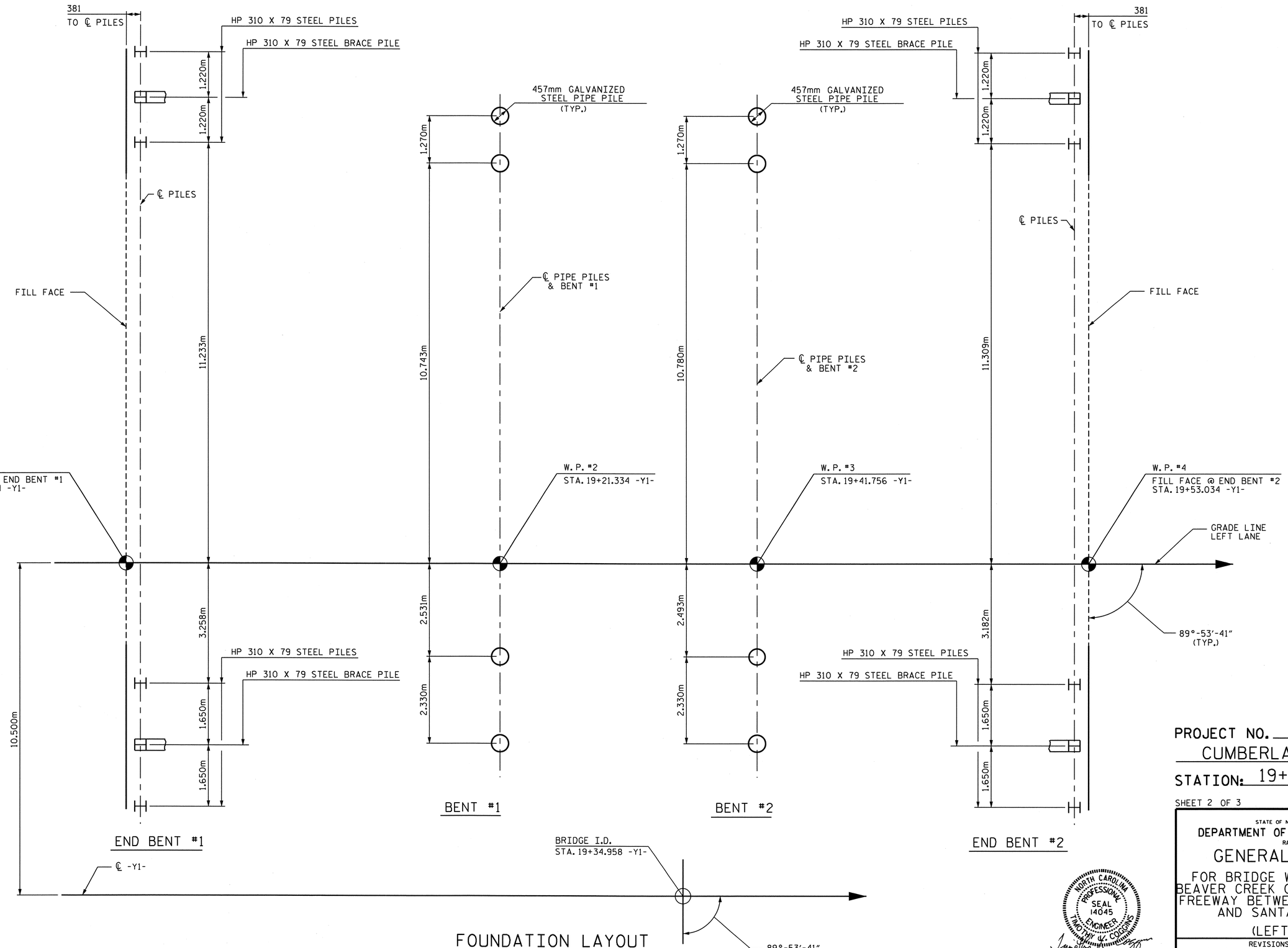

FOUNDATION LAYOUT

DIMENSIONS LOCATING PILES ARE SHOWN TO THE PILE CENTERLINE.
BRACE PILES AT END BENTS ARE TO BE BATTERED @ 250:1000.
EXISTING PILES & COLUMNS NOT SHOWN FOR CLARITY.

DRAWN BY : PEGGY ADKINS DATE : 9-08
CHECKED BY : B.N. BARODAWALA DATE : 9-08

29-MAR-2011 14:41
R:\Structures\aziz1\Final Plans\STR 05\U2519DA_sd_FL_05.dgn
nruffin

NORTH CAROLINA PROFESSIONAL SEAL 14045 ENGINEER TIMOTHY W. COGGINS
3/29/11

PROJECT NO. U-2519DA
CUMBERLAND COUNTY
STATION: 19+34.958 -Y1-

SHEET 2 OF 3

STATE OF NORTH CAROLINA
DEPARTMENT OF TRANSPORTATION
RALEIGH

GENERAL DRAWING

FOR BRIDGE WIDENING OVER BEAVER CREEK ON ALL AMERICAN FREEWAY BETWEEN GRUBER ROAD AND SANTA FE DRIVE

(LEFT LANE)

REVISIONS						SHEET NO.
NO.	BY:	DATE:	NO.	BY:	DATE:	S-85
1			3			TOTAL SHEETS
2			4			411

STR. #5

BM #36: BY-5 ALUMINUM DISK 1.718m RT. -Y1- STA. 19+11.827, EL. 64.338, NAVD 29.

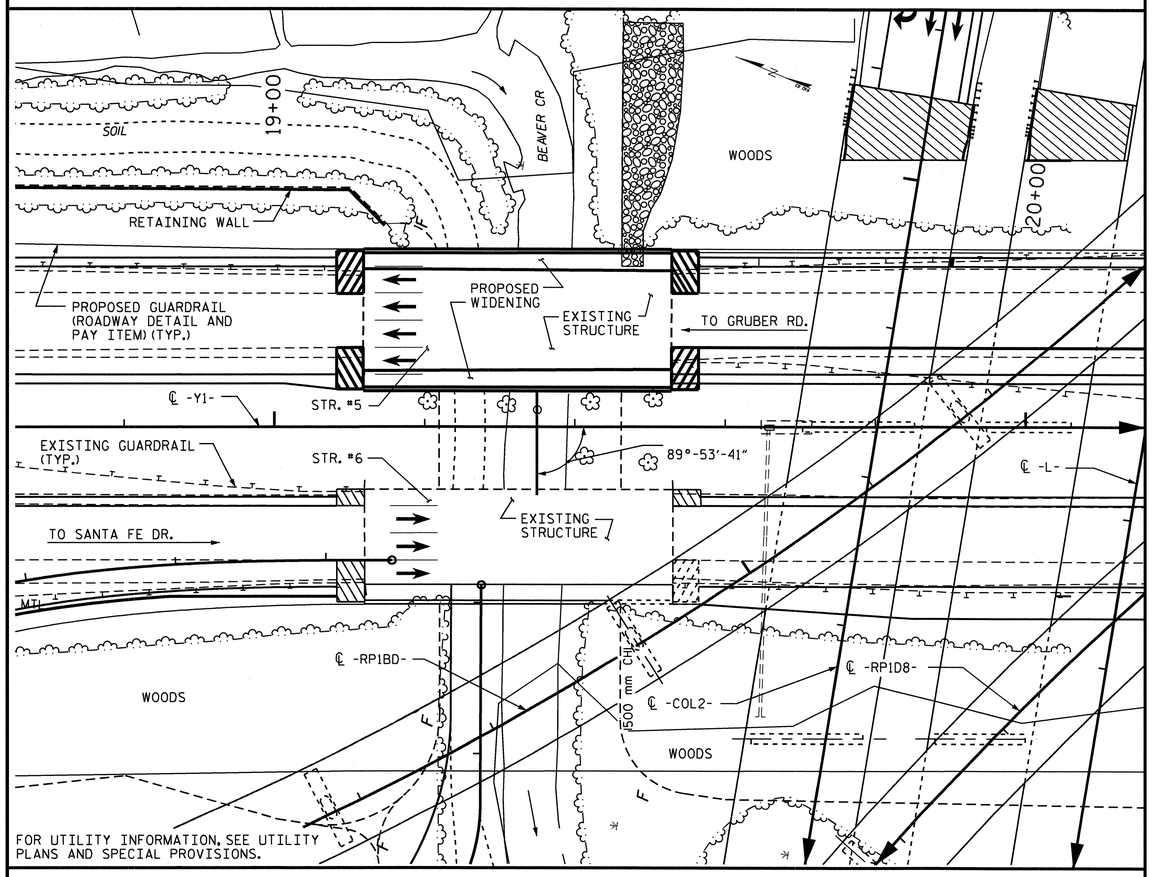

LOCATION SKETCH

NOTES:

ASSUMED LIVE LOAD = MS18 OR ALTERNATE LOADING.

THIS BRIDGE HAS BEEN DESIGNED IN ACCORDANCE WITH THE REQUIREMENTS OF THE AASHTO STANDARD SPECIFICATIONS FOR SEISMIC DESIGN OF HIGHWAY BRIDGES FOR SEISMIC PERFORMANCE CATEGORY A.

ALL DIMENSIONS ARE IN MILLIMETERS UNLESS OTHERWISE NOTED.

ALL ELEVATIONS ARE IN METERS.

FOR OTHER DESIGN DATA AND GENERAL NOTES, SEE SHEET SNSM.

FOR EROSION CONTROL MEASURES, SEE EROSION CONTROL PLANS

REMOVABLE FORMS MAY BE USED IN LIEU OF METAL STAY-IN-PLACE FORMS IN ACCORDANCE WITH ARTICLE 420-3 OF THE STANDARD SPECIFICATIONS.

PARTIAL REMOVAL OF THE EXISTING BRIDGE SHALL BE PERFORMED SO AS NOT TO ALLOW DEBRIS TO FALL INTO THE WATER. THE CONTRACTOR SHALL PERFORM PARTIAL BRIDGE REMOVAL AND SUBMIT PLANS FOR DEMOLITION IN ACCORDANCE WITH ARTICLE 402-2 OF THE STANDARD SPECIFICATIONS. FOR REMOVAL OF EXISTING STRUCTURE, SEE SPECIAL PROVISIONS.

FOR MAINTENANCE AND PROTECTION OF TRAFFIC BENEATH PROPOSED STRUCTURE, SEE SPECIAL PROVISIONS.

THE SUBSTRUCTURE OF THE EXISTING BRIDGE INDICATED ON THE PLANS IS FROM THE BEST INFORMATION AVAILABLE. SINCE THIS INFORMATION IS SHOWN FOR THE CONVENIENCE OF THE CONTRACTOR, THE CONTRACTOR SHALL HAVE NO CLAIM WHATSOEVER AGAINST THE DEPARTMENT OF TRANSPORTATION FOR ANY DELAYS OR ADDITIONAL COST INCURRED BASED ON DIFFERENCES BETWEEN THE EXISTING BRIDGE SUBSTRUCTURE SHOWN ON THE PLANS AND THE ACTUAL CONDITIONS AT THE PROJECT SITE.

THIS STRUCTURE HAS BEEN DESIGNED IN ACCORDANCE WITH HEC 18, "EVALUATING SCOUR AT BRIDGES", MAY, 2001.

THE CONTRACTOR SHALL PROVIDE INDEPENDENT ASSURANCE SAMPLES OF REINFORCING STEEL AS FOLLOWS: FOR PROJECTS REQUIRING UP TO 360,000 kg OF REINFORCING STEEL, ONE 760mm SAMPLE OF EACH SIZE BAR USED, AND FOR PROJECTS REQUIRING OVER 360,000 kg OF REINFORCING STEEL, TWO 760mm SAMPLES OF EACH SIZE BAR USED. THE BARS FROM WHICH THE SAMPLES ARE TAKEN MUST THEN BE SPLICED WITH REPLACEMENT BARS OF THE SIZE AND LENGTH OF THE SAMPLE PLUS A MINIMUM LAP SPLICE OF THIRTY BAR DIAMETERS.

FOR SUBMITTAL OF WORKING DRAWINGS, SEE SPECIAL PROVISIONS.

FOR FALSEWORK AND FORMWORK, SEE SPECIAL PROVISIONS.

FOR PRESTRESSED CONCRETE MEMBERS, SEE SPECIAL PROVISIONS.

THIS BRIDGE HAS BEEN DESIGNED BY THE STRENGTH DESIGN METHOD AS SPECIFIED IN AASHTO STANDARD SPECIFICATIONS.

NEEDLE BEAMS WILL NOT BE ALLOWED UNLESS OTHERWISE CALLED FOR ON THE PLANS OR APPROVED BY THE ENGINEER.

FOR GROUT FOR STRUCTURES, SEE SPECIAL PROVISIONS.

FOR CRANE SAFETY, SEE SPECIAL PROVISIONS.

FOR CURING CONCRETE, SEE SPECIAL PROVISIONS.

FOR PLACING LOAD ON STRUCTURE MEMBERS, SEE SPECIAL PROVISIONS.

FOR PILES, SEE SPECIAL PROVISIONS.

DRIVE PILES AT END BENT NO. 1 AND END BENT NO. 2 TO A REQUIRED BEARING CAPACITY OF 900 KN PER PILE. THE REQUIRED BEARING CAPACITY IS EQUAL TO THE ALLOWABLE BEARING CAPACITY WITH A MINIMUM FACTOR OF SAFETY OF TWO.

DRIVE PILES AT BENT NO. 1 AND BENT NO. 2 TO A REQUIRED BEARING CAPACITY OF 1300 KN PER PILE. THE REQUIRED BEARING CAPACITY IS EQUAL TO THE ALLOWABLE BEARING CAPACITY WITH A MINIMUM FACTOR OF SAFETY OF TWO PLUS ANY ADDITIONAL CAPACITY TO ACCOUNT FOR DOWN DRAG OR NEGATIVE SKIN FRICTION OR SCOUR.

INSTALL PILES AT BENT NO. 1 AND BENT NO. 2 TO A TIP ELEVATION NO HIGHER THAN 51 M.

THE ALLOWABLE BEARING CAPACITY FOR PILES AT END BENT NO. 1 AND END BENT NO. 2 IS 450 KN PER PILE.

THE ALLOWABLE BEARING CAPACITY FOR PILES AT BENT NO. 1 AND BENT NO. 2 IS 620 KN PER PILE.

THE SCOUR CRITICAL ELEVATION FOR BENT NO. 1 AND BENT NO. 2 IS 56 M AND 54 M, RESPECTIVELY. THE SCOUR CRITICAL ELEVATIONS ARE USED TO MONITOR POSSIBLE SCOUR PROBLEMS DURING THE LIFE OF THE STRUCTURE.

FOR INTERIOR BENTS 1 & 2, ONLY PARTIAL GALVANIZING OF THE PILES IS REQUIRED. SEE INTERIOR BENT SHEETS FOR REQUIRED GALVANIZED LENGTHS. PAYMENT FOR PARTIALLY GALVANIZED PILES WILL BE MADE UNDER THE CONTRACT UNIT PRICE FOR PP457 X 12.70 GALVANIZED STEEL PILES.

TOTAL BILL OF MATERIAL

	REMOVAL OF EXISTING STRUCTURE	REINFORCED CONCRETE DECK SLAB	GROOVING BRIDGE FLOORS	CLASS A CONCRETE	BRIDGE APPROACH SLABS	REINFORCING STEEL	914mm PRESTRESSED CONCRETE GIRDERS		1143mm PRESTRESSED CONCRETE GIRDERS		HP 310 X 79 STEEL PILES		PP457 X 12.70 GALVANIZED STEEL PILES		PILE REDRIVES	CONCRETE BARRIER RAIL	100mm SLOPE PROTECTION	CLASS I SURFACE PREP	CLASS IA SURFACE PREP	CLASS II SURFACE PREP	LATEX MODIFIED CONCRETE OVERLAY	PLACING AND FINISHING OF LATEX MODIFIED CONCRETE OVERLAY	ELASTOMERIC BEARINGS	EVAZOTE JOINT SEALS
	LUMP SUM	SQ. METERS	SQ. METERS	CU. METERS	LUMP SUM	kg	NO.	METERS	NO.	METERS	NO.	METERS	NO.	METERS	EACH	METERS	SQ. METERS	SQ. METERS	SQ. METERS	SQ. METERS	CU. METERS	SQ. METERS	LUMP SUM	LUMP SUM
SUPERSTRUCTURE	LUMP SUM	292.3	887.3		LUMP SUM		8	81.064	4	81.280						82.300		489.2	89.2	24.5	30.7	960.2	LUMP SUM	LUMP SUM
END BENT 1				8.9		753					6	126			1		340							
BENT 1				5.1		606							4	88	1									
BENT 2				5.1		606							4	80	1									
END BENT 2				8.9		753					6	84			1		419							
TOTAL	LUMP SUM	292.3	887.3	28.0	LUMP SUM	2718	8	81.064	4	81.280	12	210	8	168	4	82.300	759	489.2	89.2	24.5	30.7	960.2	LUMP SUM	LUMP SUM

HYDRAULIC DATA

DESIGN DISCHARGE	=	52.7 m3/s
FREQUENCY OF DESIGN FLOOD	=	50 YR.
DESIGN HIGH WATER ELEVATION	=	59.05m
DRAINAGE AREA	=	15.0 sq. km.
BASIC DISCHARGE (0100)	=	58.9 m3/s
BASIC HIGH WATER ELEVATION	=	59.36m

OVERTOPPING FLOOD DATA

OVERTOPPING DISCHARGE	*
FREQUENCY OF OVERTOPPING FLOOD	>500+ YR.
OVERTOPPING FLOOD ELEVATION	63.03m

* OVERTOPPING FLOOD IS GREATER THAN 500+ YR. EVENT. OVERTOPPING LOCATION AT -RPIA- 16+34.207

NORTH CAROLINA PROFESSIONAL SEAL 14045 ENGINEER TIMOTHY K. COGGINS
4/14/11

PROJECT NO. U-2519DA
CUMBERLAND COUNTY
STATION: 19+34.958 -Y1-

SHEET 3 OF 3

STATE OF NORTH CAROLINA
DEPARTMENT OF TRANSPORTATION
RALEIGH

GENERAL DRAWING

FOR BRIDGE WIDENING OVER BEAVER CREEK ON ALL AMERICAN FREEWAY BETWEEN GRUBER ROAD AND SANTA FE DRIVE (LEFT LANE)

REVISIONS						SHEET NO.
NO.	BY:	DATE:	NO.	BY:	DATE:	S-86
1			3			TOTAL SHEETS
2			4			411

DRAWN BY : PEGGY ADKINS DATE : 2-07
CHECKED BY : B.N. BARODAWALA DATE : 5-07

04-APR-2011 09:12
R:\TIPProjects-U\U2519da\Structures\azlzl\FinalPlans\STR 05\U2519DA_sd_GD_05.dgn
tcoggins

STR. #5

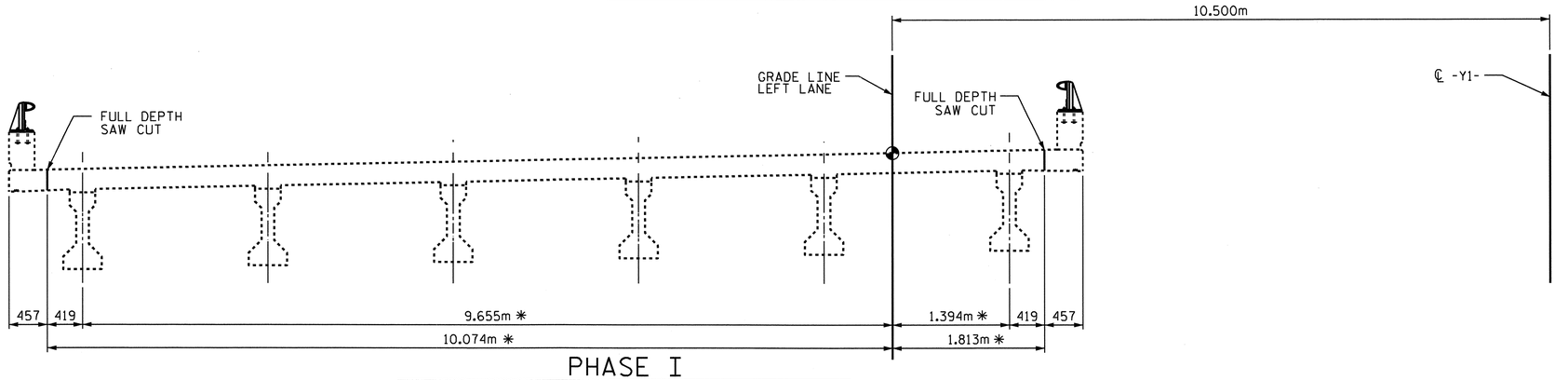

PHASE I

DIVERT TRAFFIC AS PER TRAFFIC CONTROL PLANS.
REMOVE EXISTING ONE-BAR METAL RAIL, PARAPET, AND PARTIAL DECK OVERHANG TO SAW CUT LINE. STOCKPILE RAIL, POST, AND POST BASE.

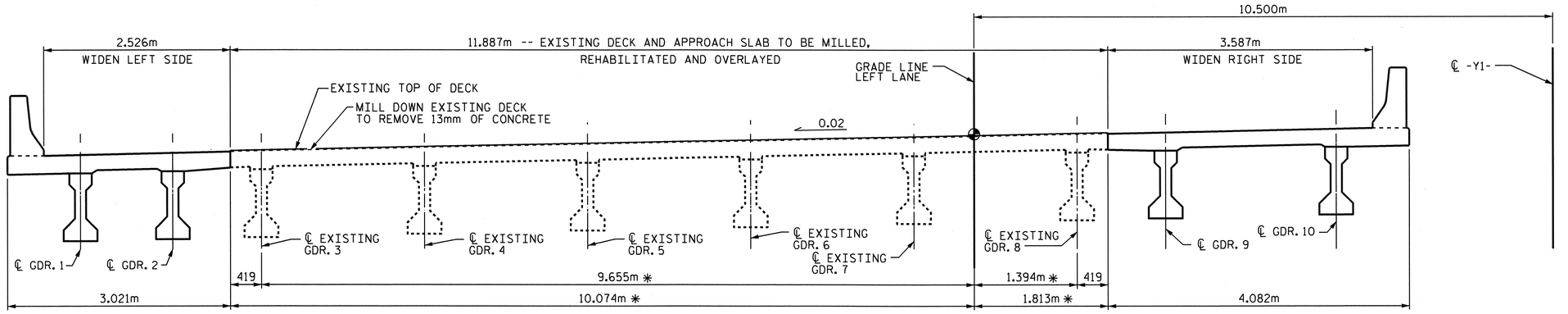

PHASE II

MAKE ALL NECESSARY DECK AND APPROACH SLAB REPAIR (CLASS IA, I, AND II SURFACE PERPARATION).
CONSTRUCT PROPOSED WIDENING OF DECK AND APPROACH SLABS AS SHOWN.
REMOVE ONE-BAR METAL RAIL. STOCKPILE RAIL, POST, AND POST BASE.
CUT AND BLOCKOUT FOR ARMORED EVAZOTE JOINT AT EACH INTERIOR BENT.

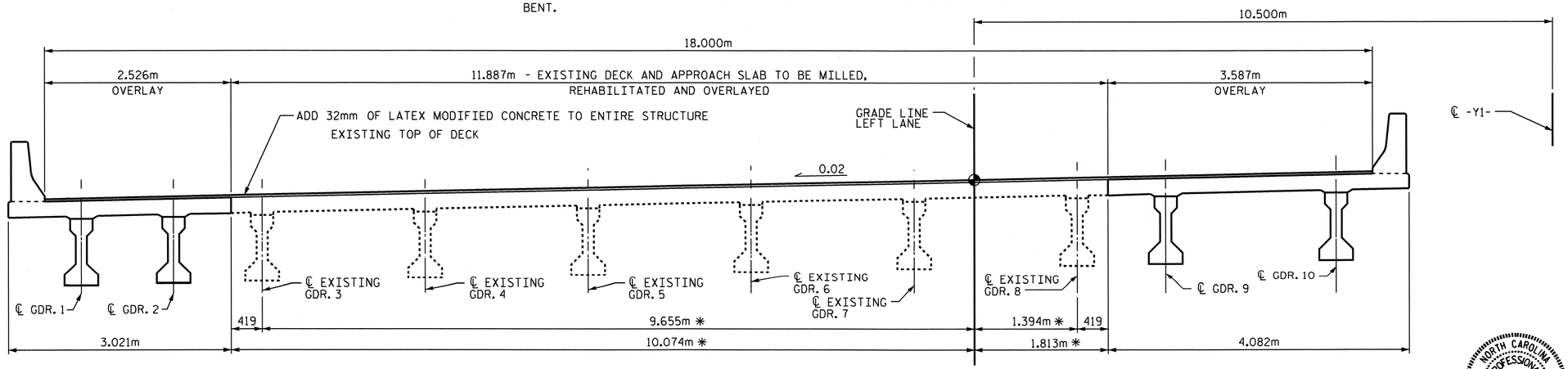

PHASE III

PLACE LATEX MODIFIED CONCRETE OVERLAY AS SHOWN AND OVERLAY APPROACH SLABS.
INSTALL ARMORED EVAZOTE JOINT SEALS.

NOTES:

FOR TRAFFIC CONTROL, SEE TRAFFIC CONTROL PLANS.

✱ THESE DIMENSIONS ARE ONLY ACCURATE AT THE I.D. STATION 19+34.958 -Y1-.

NORTH CAROLINA PROFESSIONAL SEAL 14045 ENGINEER TIMOTHY L. COGGINS
3/29/11

PROJECT NO. U-2519DA
CUMBERLAND COUNTY
STATION: 19+34.958 -Y1-

STATE OF NORTH CAROLINA
DEPARTMENT OF TRANSPORTATION
RALEIGH

SUPERSTRUCTURE
CONSTRUCTION SEQUENCE

(LEFT LANE)

REVISIONS						SHEET NO.
NO.	BY:	DATE:	NO.	BY:	DATE:	S-87
1			3			TOTAL SHEETS
2			4			411

DRAWN BY : PEGGY PARISI DATE : 7-08
CHECKED BY : N. RUFFIN DATE : 9-08

29-MAR-2011 13:11
R:\TIPProjects-U\U2519da\Structures\azizi\Final Plans\STR 05\U2519DA_sd_TS_05.dgn
tcoggins

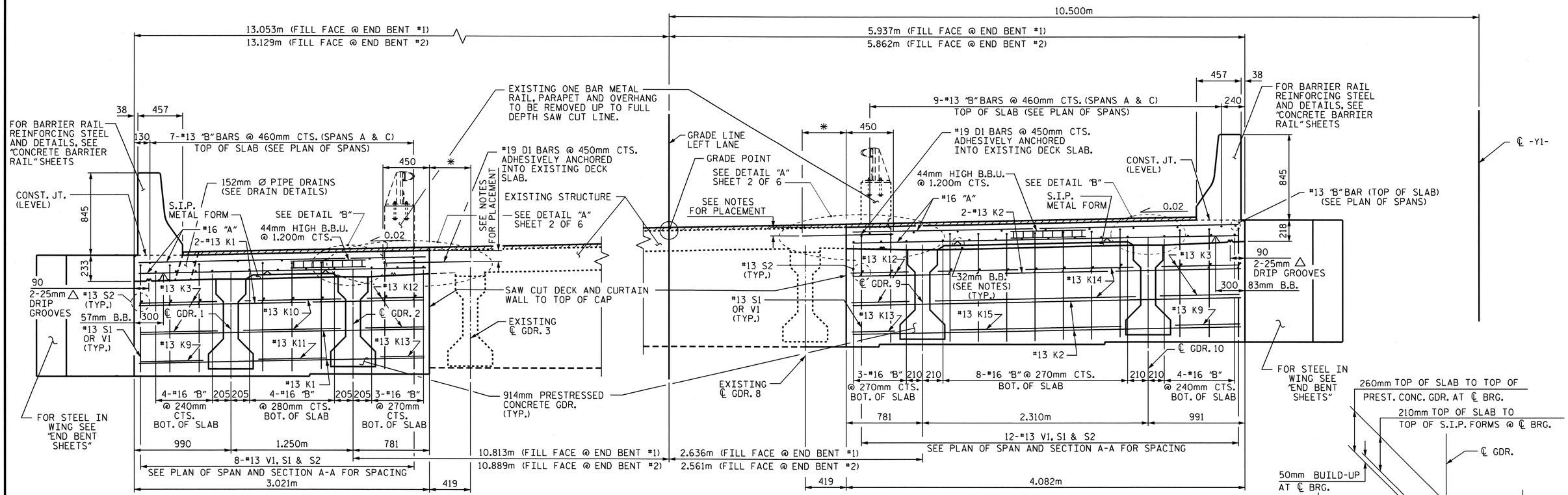

TYPICAL SECTION LEFT SIDE

TYPICAL SECTION RIGHT SIDE

TYPICAL SECTION

SPANS "A" AND "C" SHOWING CURTAIN WALL WITH PAVEMENT BRACKET
(END BENT #1 SHOWN, END BENT #2 SIMILAR)

SEE SECTION A-A FOR PLACEMENT OF S1, K1 AND K2 BARS, SHEET 6 OF 6.

* EMBEDMENT LENGTH TO BE DETERMINED BY THE SELECTED MANUFACTURER

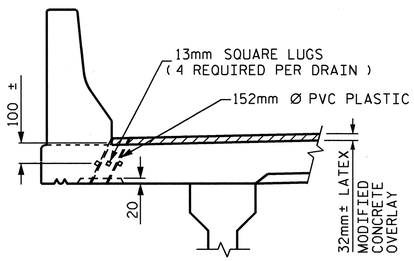

ELEVATION

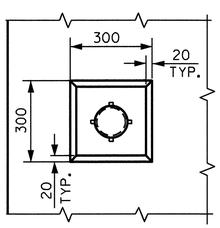

PLAN OF RECESS

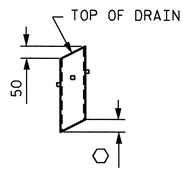

⬡ TO BE SET TO MATCH SLOPE OF BOTTOM OF OVERHANG (11 DRAINS REQUIRED)

PIPE DETAIL

TOP OF FLOOR DRAINS TO SET 10mm BELOW FINISHED SURFACE OF SLAB.

4 - 13mm SQUARE LUGS TO BE GLUED TO THE PVC PLASTIC PIPE AT EQUAL SPACES AROUND THE PIPE DRAIN APPROXIMATELY 100mm FROM THE TOP OF THE PIPE.

THE 152mm Ø PVC PIPE AND FITTINGS SHALL BE SCHEDULE 40 AND CONFORM TO ASTM D1785.

DRAIN DETAILS

NOTES:

PROVIDE 32mm HIGH BEAM BOLSTERS UPPER AT 800mm CTS. ATOP THE METAL STAY-IN-PLACE FORMS TO SUPPORT THE BOTTOM MAT OF 'A' BARS. WHEN USING REMOVABLE FORMS, PROVIDE CONTINUOUS HIGH CHAIRS FOR METAL DECK (C.H.C.M.) @ 800mm CTS. WITH A HEIGHT TO SUPPORT THE BOTTOM MAT OF 'A' BARS A CLEAR DISTANCE OF 65mm ABOVE THE TOP OF THE REMOVABLE FORM.

LONGITUDINAL STEEL MAY BE SHIFTED SLIGHTLY, AS NECESSARY, TO AVOID INTERFERENCE WITH STIRRUPS IN PRESTRESSED CONCRETE GIRDERS.

BARRIER RAIL IN EACH SPAN SHALL NOT BE CAST UNTIL ALL SLAB CONCRETE IN THE UNIT HAS BEEN CAST AND HAS REACHED A MINIMUM COMPRESSIVE STRENGTH OF 20.7 MPa.

A FULL DEPTH SAW CUT SHALL BE MADE AND EXISTING CONCRETE REMOVED IN ACCORDANCE WITH PLAN DETAILS.

DOWELS SHALL BE PLACED IN THE SAME HORIZONTAL PLANE AS THE MAIN STEEL.

CONCRETE IN BENT AND INTERMEDIATE DIAPHRAGMS MAY BE CLASS A IN LIEU OF CLASS AA. PAYMENT SHALL BE MADE UNDER THE UNIT CONTRACT PRICE FOR REINFORCED CONCRETE DECK SLAB.

DURING THE JOINT INSTALLATION PROCEDURE, THE JOINT AND SURROUNDING AREA SHALL BE KEPT CLEAN AND FREE OF DEBRIS.

THE CONCRETE SURFACE OF THE PROPOSED DECK WIDENINGS SHALL HAVE A RAKED FINISH.

* LEVEL 1 FIELD TESTING IS REQUIRED, AND THE YIELD LOAD OF THE DOWELS IS 120 KN. FOR ADHESIVELY ANCHORED ANCHOR BOLTS OR DOWELS, SEE SPECIAL PROVISIONS.

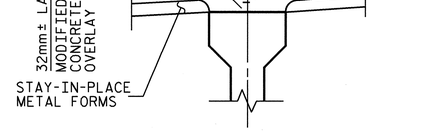

DETAIL "B"
(FINISHED SLAB)

PROJECT NO. U-2519DA
CUMBERLAND COUNTY
STATION: 19+34.958 -Y1-

SHEET 1 OF 6

STATE OF NORTH CAROLINA
DEPARTMENT OF TRANSPORTATION
RALEIGH

SUPERSTRUCTURE
TYPICAL SECTION

(LEFT LANE)

REVISIONS						SHEET NO.
NO.	BY:	DATE:	NO.	BY:	DATE:	S-88
1			3			TOTAL SHEETS
2			4			411

NORTH CAROLINA PROFESSIONAL SEAL 14045 ENGINEER TIMOTHY J. COGGINS
4/4/11

DRAWN BY : PEGGY PARISI DATE : 7-08
CHECKED BY : N. RUFFIN DATE : 9-08

04-APR-2011 09:13
R:\TIPProjects-U\U2519da\Structures\azizi\Final Plans\STR 05\U2519DA_sd_TS_05.dgn
tcoggins

STR. #5

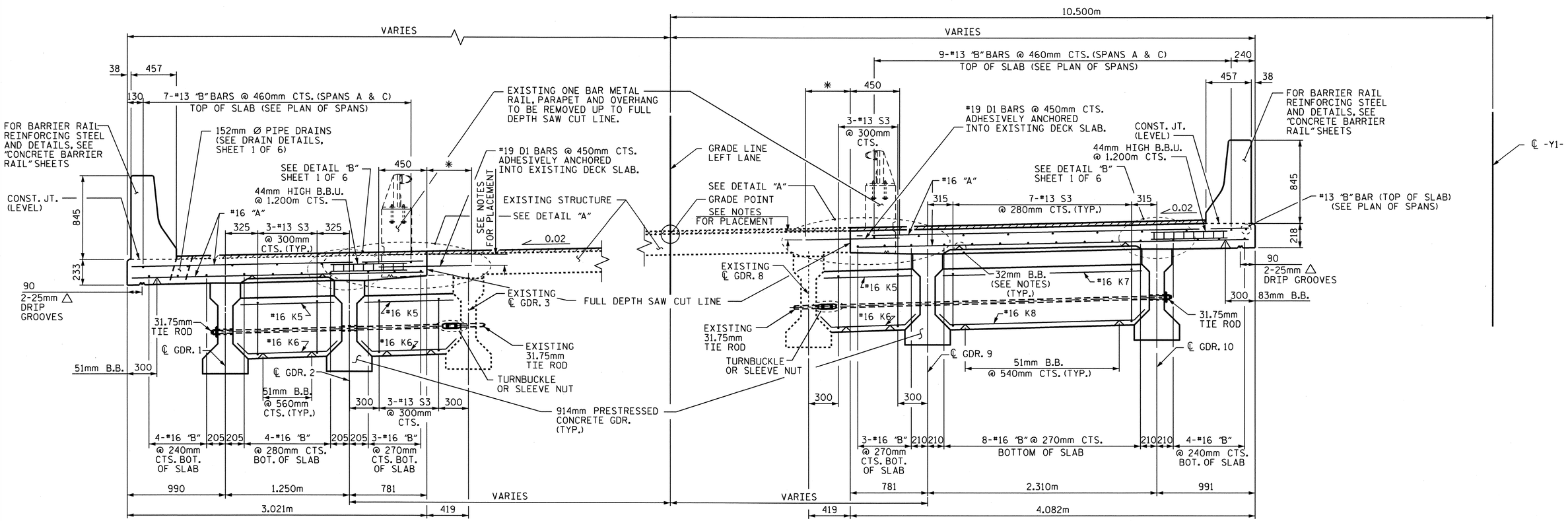

TYPICAL SECTION LEFT SIDE

TYPICAL SECTION RIGHT SIDE

TYPICAL SECTION

SPAN "A" AND "C" INTERMEDIATE DIAPHRAGMS

*EMBEDMENT LENGTH TO BE DETERMINED BY THE SELECTED MANUFACTURER

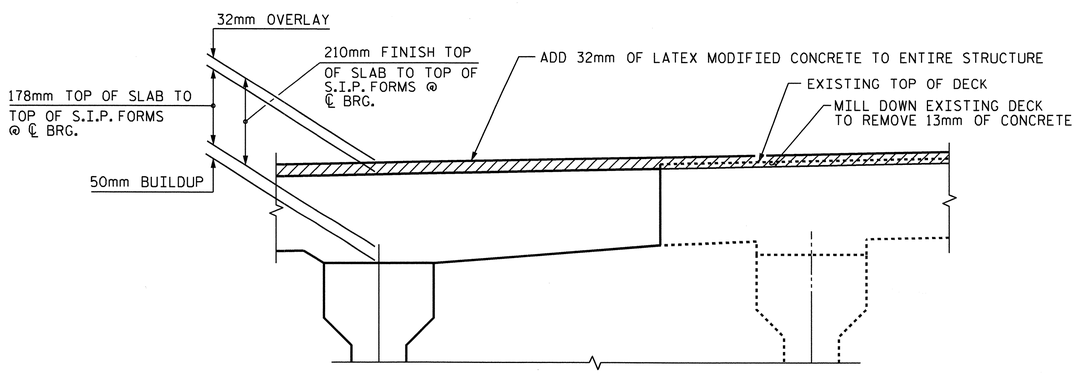

DETAIL A

LEFT SIDE SHOWN, RIGHT SIDE SIMILAR

PROJECT NO. U-2519DA

CUMBERLAND COUNTY

STATION: 19+34.958 -Y1-

SHEET 2 OF 6

STATE OF NORTH CAROLINA
DEPARTMENT OF TRANSPORTATION
RALEIGH

SUPERSTRUCTURE

TYPICAL SECTION

(LEFT LANE)

REVISIONS						SHEET NO.
NO.	BY:	DATE:	NO.	BY:	DATE:	S-89
1			3			TOTAL SHEETS
2			4			411

NORTH CAROLINA PROFESSIONAL SEAL 14045 ENGINEER TIMOTHY LYCOGGINS

3/29/11

DRAWN BY : PEGGY PARISI DATE : 7-08
CHECKED BY : N. RUFFIN DATE : 9-08

28-MAR-2011 15:24
R:\Structures\azizi\Final Plans\STR 05\U2519DA_sd_TS_05.dgn
nruffin

STR. #5

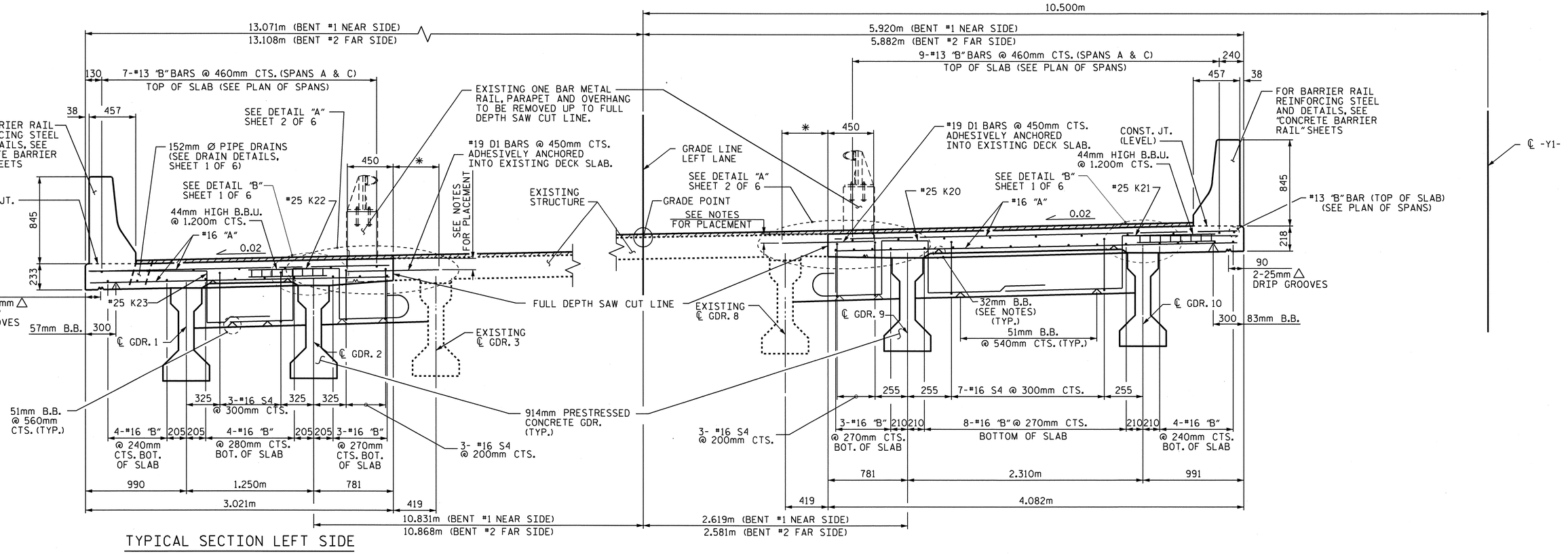

TYPICAL SECTION LEFT SIDE

TYPICAL SECTION RIGHT SIDE

TYPICAL SECTION

BENT DIAPHRAGMS AT SPANS "A" AND "C"

* EMBEDMENT LENGTH TO BE DETERMINED BY THE SELECTED MANUFACTURER

PROJECT NO. U-2519DA

CUMBERLAND COUNTY

STATION: 19+34.958 -Y1-

SHEET 3 OF 6

STATE OF NORTH CAROLINA
DEPARTMENT OF TRANSPORTATION
RALEIGH

SUPERSTRUCTURE

TYPICAL SECTION

(LEFT LANE)

REVISIONS						SHEET NO.
NO.	BY:	DATE:	NO.	BY:	DATE:	S-90
1			3			TOTAL SHEETS
2			4			411

NORTH CAROLINA PROFESSIONAL SEAL 14045 ENGINEER TIMOTHY J. COGGINS
4/4/11

DRAWN BY : PEGGY PARISI DATE : 7-08
CHECKED BY : N. RUFFIN DATE : 9-08

04-APR-2011 12:41
R:\TIPProjects-U\U2519da\Structures\azizi\FinalPlans\STR 05\U2519DA_sd_TS_05.dgn
tcoggins

STR. #5

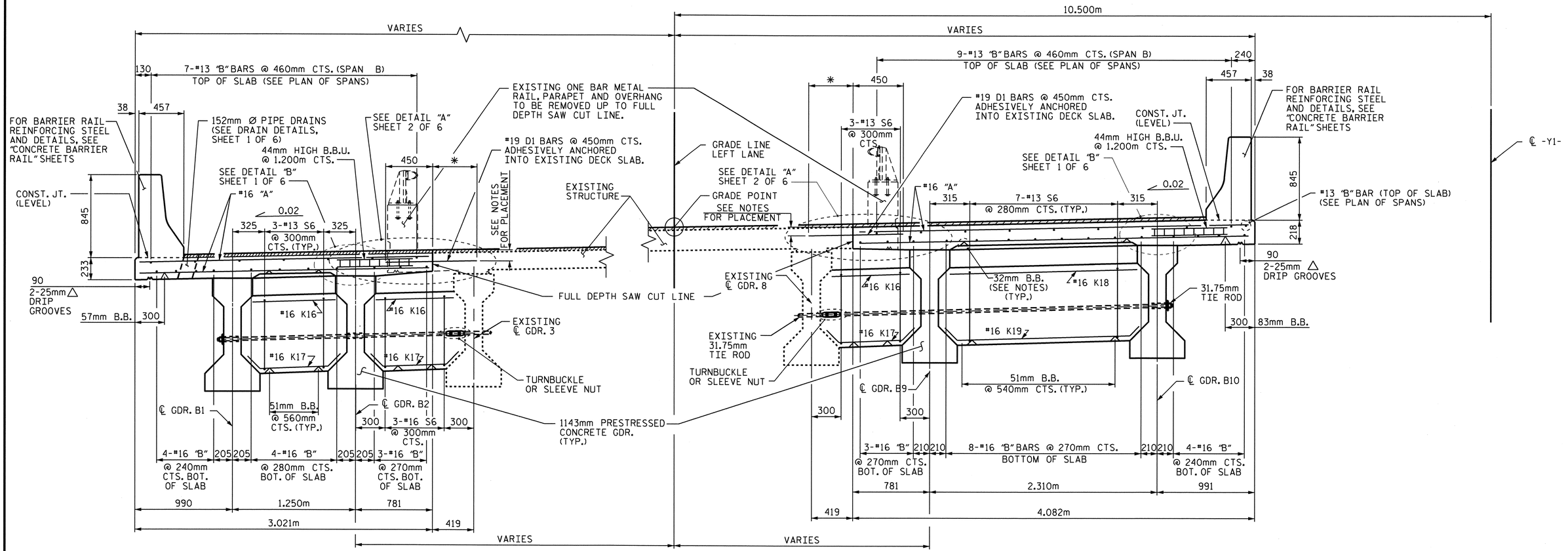

TYPICAL SECTION LEFT SIDE

TYPICAL SECTION RIGHT SIDE

TYPICAL SECTION

SPAN "B" INTERMEDIATE DIAPHRAGMS

* EMBEDMENT LENGTH TO BE DETERMINED BY THE SELECTED MANUFACTURER

PROJECT NO. U-2519DA

CUMBERLAND COUNTY

STATION: 19+34.958 -Y1-

SHEET 4 OF 6

STATE OF NORTH CAROLINA
DEPARTMENT OF TRANSPORTATION
RALEIGH

SUPERSTRUCTURE

TYPICAL SECTION

(LEFT LANE)

REVISIONS						SHEET NO.
NO.	BY:	DATE:	NO.	BY:	DATE:	S-91
1			3			TOTAL SHEETS
2			4			411

NORTH CAROLINA PROFESSIONAL SEAL 14045 ENGINEER TIMOTHY L. COGGINS

3/29/11

DRAWN BY : PEGGY PARISI DATE : 7-08
CHECKED BY : N. RUFFIN DATE : 9-08

28-MAR-2011 15:24
R:\Structures\azizi\Final Plans\STR 05\U2519DA_sd_TS_05.dgn
nruffin

STR. #5

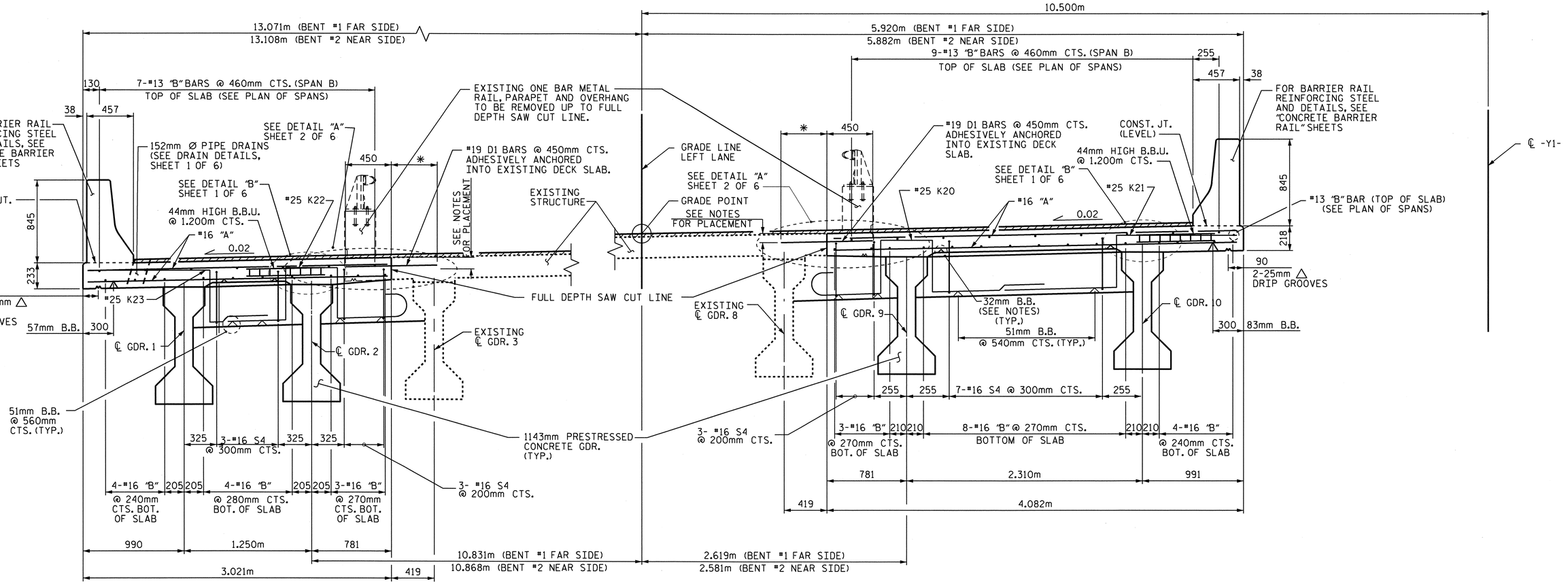

TYPICAL SECTION LEFT SIDE

TYPICAL SECTION RIGHT SIDE

TYPICAL SECTION

BENT DIAPHRAGMS SPAN "B"

* EMBEDMENT LENGTH TO BE DETERMINED BY THE SELECTED MANUFACTURER

PROJECT NO. U-2519DA

CUMBERLAND COUNTY

STATION: 19+34.958 -Y1-

SHEET 5 OF 6

STATE OF NORTH CAROLINA
DEPARTMENT OF TRANSPORTATION
RALEIGH

SUPERSTRUCTURE

TYPICAL SECTION

(LEFT LANE)

REVISIONS						SHEET NO.
NO.	BY:	DATE:	NO.	BY:	DATE:	S-92
1			3			TOTAL SHEETS
2			4			411

NORTH CAROLINA PROFESSIONAL SEAL 14045 ENGINEER TIMOTHY L. COGGINS
4/4/11

DRAWN BY : PEGGY PARISI DATE : 7-08
CHECKED BY : N. RUFFIN DATE : 9-08

04-APR-2011 15:15
R:\Structures\azizi\FinalPlans\STR 05\U2519DA_sd_TS_05.dgn
nruffin

STR. #5

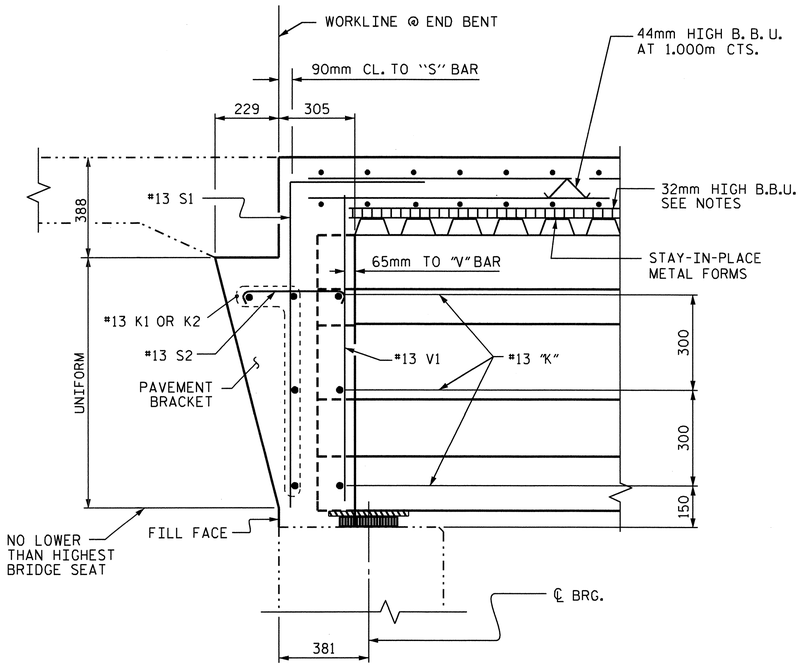

SECTION A-A

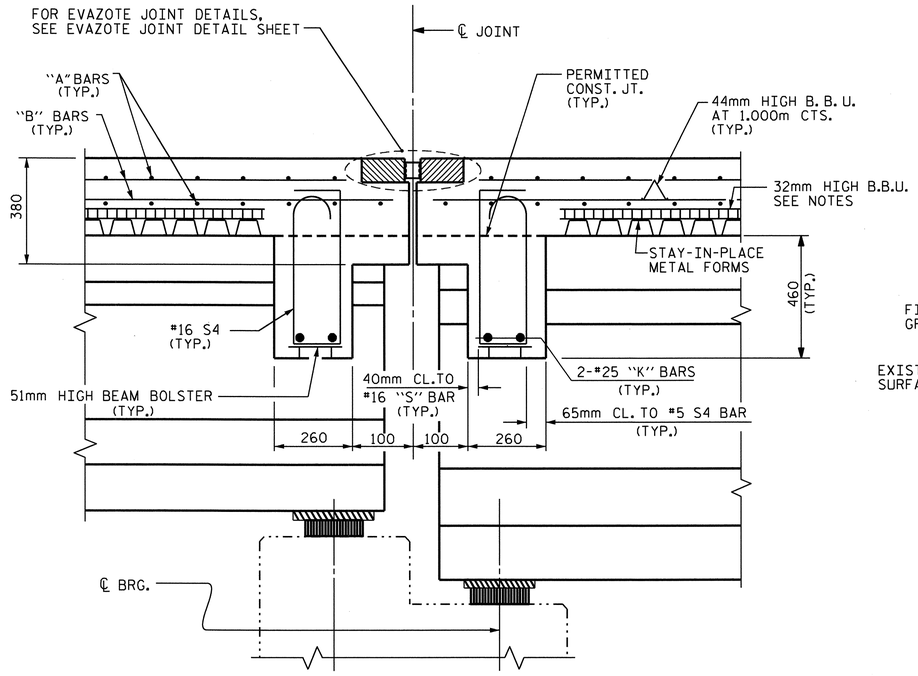

SECTION B-B

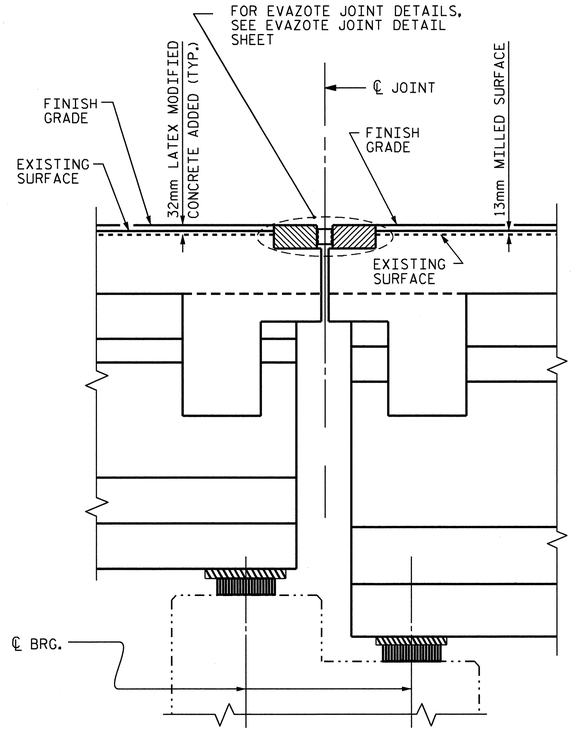

SECTION E-E

THE LATEX MODIFIED CONCRETE IS TO BE PUT ON EXISTING AND NEW SURFACE.
SHADED AREA TO BE REMOVED ON EXISTING STRUCTURE

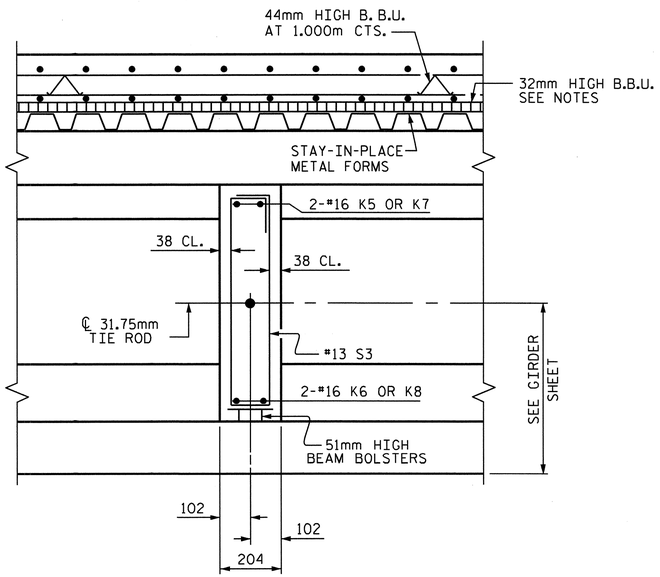

SECTION C-C

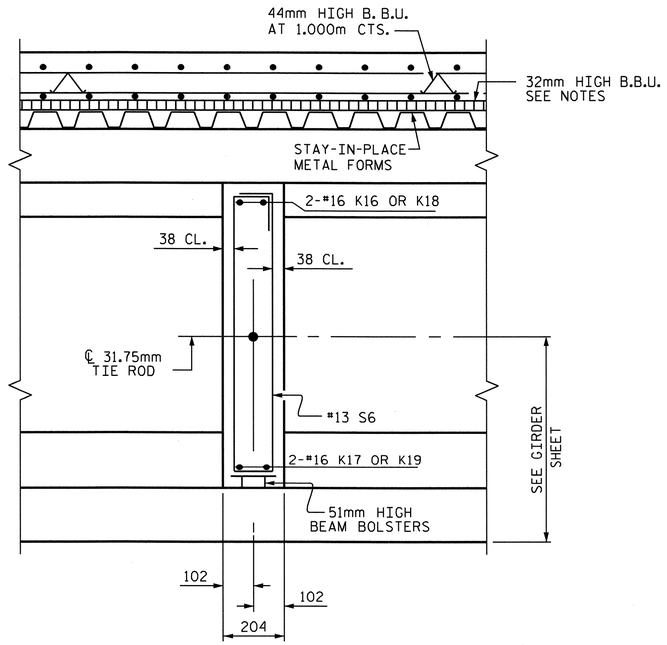

SECTION D-D

PROJECT NO. U-2519DA
CUMBERLAND COUNTY
STATION: 19+34.958 -Y1-

SHEET 6 OF 6

STATE OF NORTH CAROLINA
DEPARTMENT OF TRANSPORTATION
RALEIGH

SUPERSTRUCTURE
TYPICAL SECTION

(LEFT LANE)

REVISIONS						SHEET NO.
NO.	BY:	DATE:	NO.	BY:	DATE:	S-93
1			3			TOTAL SHEETS
2			4			411

NORTH CAROLINA PROFESSIONAL SEAL 14045 ENGINEER TIMOTHY L. COGGINS
4/4/11

DRAWN BY : PEGGY PARISI DATE : 7-08
CHECKED BY : N. RUFFIN DATE : 9-08

04-APR-2011 09:15
R:\TIPProjects-U\U2519da\Structures\azizi\Final Plans\STR 05\U2519DA_sd_TS_05.dgn
tcoggins

STR. #5

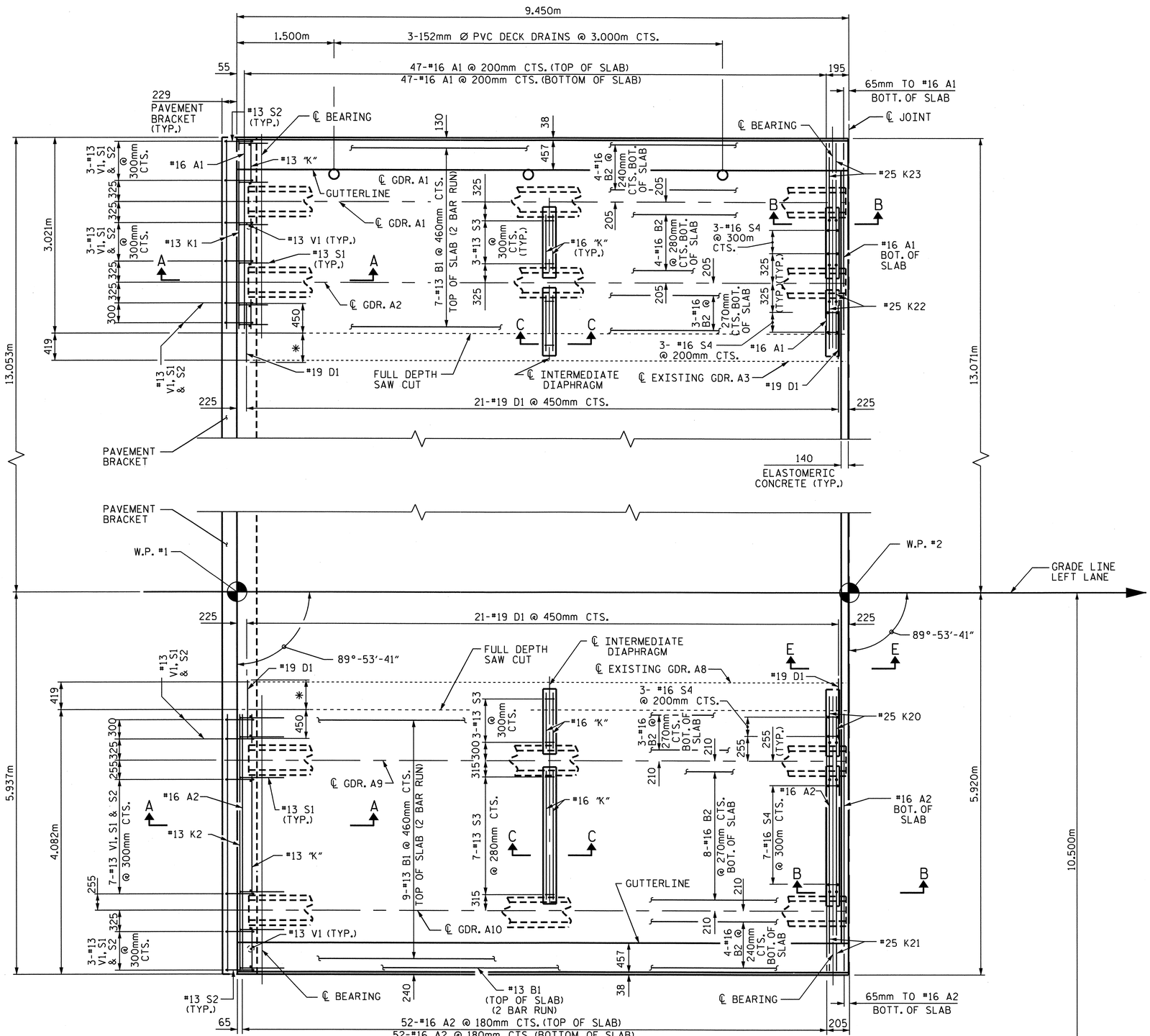

PLAN OF SPAN A

*EMBEDMENT LENGTH TO BE DETERMINED BY THE SELECTED MANUFACTURER.
FOR LOCATION OF INTERMEDIATE DIAPHRAGMS, SEE "GIRDER LAYOUT PLAN" SHEET.

DRAWN BY : PEGGY PARISI DATE : 7-08
CHECKED BY : N. RUFFIN DATE : 9-08

04-APR-2011 15:34
R:\Structures\azizi\FinalPlans\STR 05\U2519DA_sd_S*_05.dgn
nruffin

PROJECT NO. U-2519DA
CUMBERLAND COUNTY
STATION: 19+34.958 -Y1-

SHEET 1 OF 3

STATE OF NORTH CAROLINA
DEPARTMENT OF TRANSPORTATION
RALEIGH

SUPERSTRUCTURE

PLAN OF SPAN A

(LEFT LANE)

REVISIONS						SHEET NO.
NO.	BY:	DATE:	NO.	BY:	DATE:	S-94
1			3			TOTAL SHEETS
2			4			411

NORTH CAROLINA PROFESSIONAL SEAL 14045 ENGINEER TIMOTHY L. COCCONIS
4/4/11

STR. #5

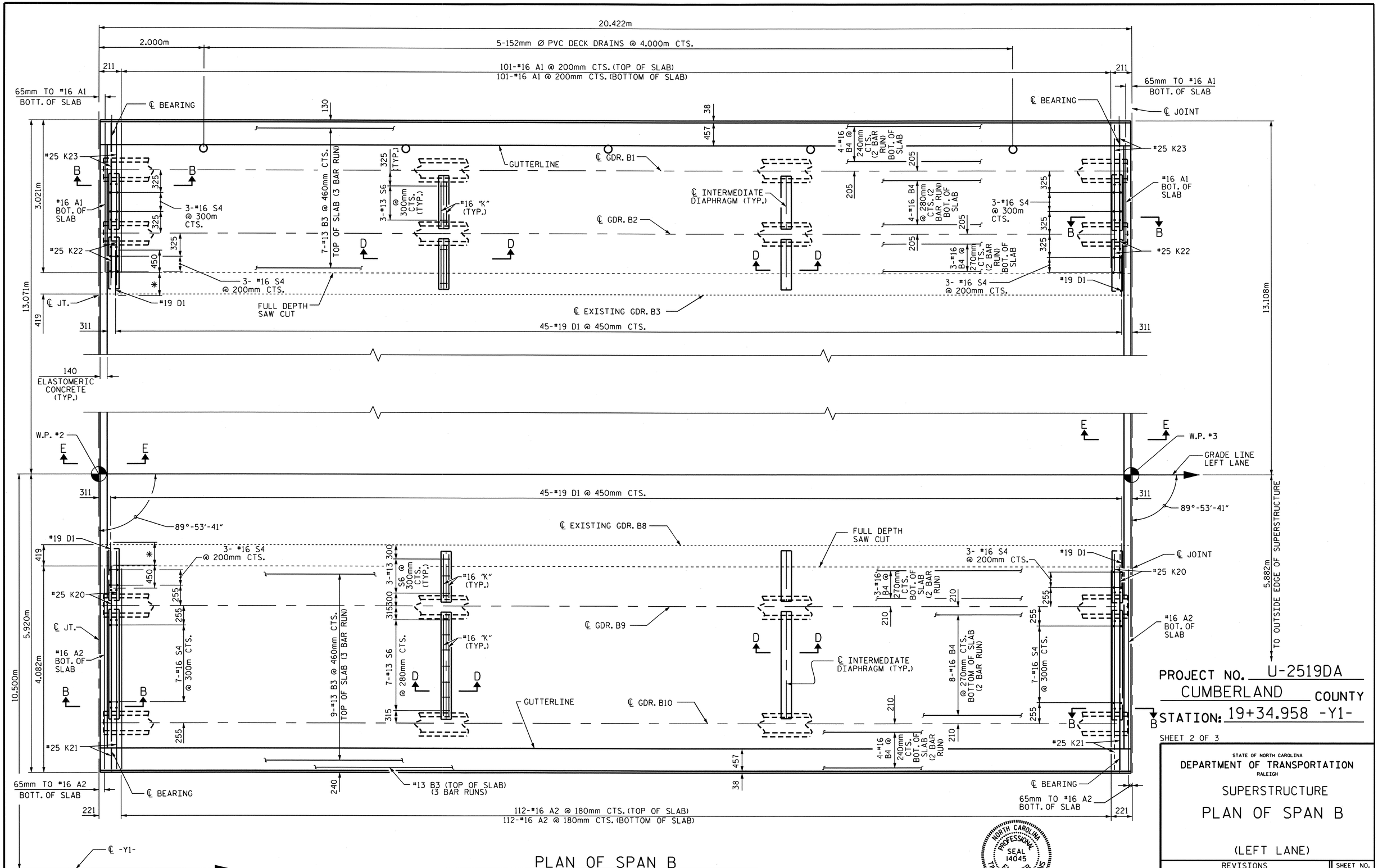

PLAN OF SPAN B

* EMBEDMENT LENGTH TO BE DETERMINED BY THE SELECTED MANUFACTURER.
FOR LOCATION OF INTERMEDIATE DIAPHRAGMS, SEE "GIRDER LAYOUT PLAN" SHEET.

PROJECT NO. U-2519DA
CUMBERLAND COUNTY
STATION: 19+34.958 -Y1-

SHEET 2 OF 3

STATE OF NORTH CAROLINA
DEPARTMENT OF TRANSPORTATION
RALEIGH

SUPERSTRUCTURE
PLAN OF SPAN B
(LEFT LANE)

REVISIONS						SHEET NO.
NO.	BY:	DATE:	NO.	BY:	DATE:	S-95
1			3			TOTAL SHEETS
2			4			411

NORTH CAROLINA PROFESSIONAL SEAL 14045 ENGINEER TIMOTHY A. COGGINS
4/4/11

DRAWN BY : PEGGY PARISI DATE : 7-08
CHECKED BY : N. RUFFIN DATE : 9-08

04-APR-2011 14:34
R:\Structures\azizi\FinalPlans\STR 05\U2519DA_sd_S#_05.dgn
nruffin

STR. #5

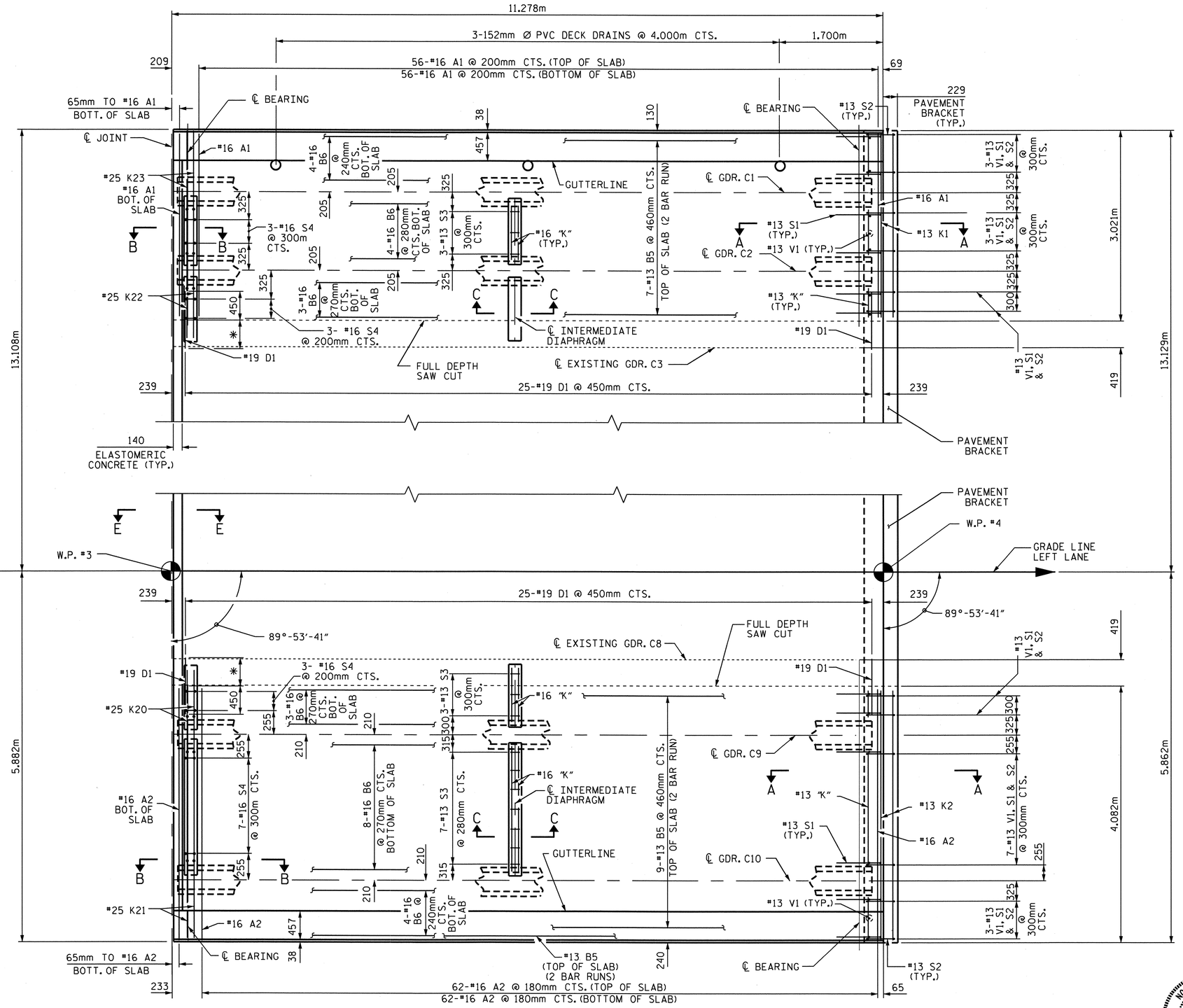

PLAN OF SPAN C

* EMBEDMENT LENGTH TO BE DETERMINED BY THE SELECTED MANUFACTURER.
FOR LOCATION OF INTERMEDIATE DIAPHRAGMS, SEE "GIRDER LAYOUT PLAN" SHEET.

DRAWN BY : PEGGY PARISI DATE : 7-08
CHECKED BY : N. RUFFIN DATE : 9-08

04-APR-2011 12:40
R:\TIPProjects-U\U2519da\Structures\azizi\Final Plans\STR 05\U2519DA_sd_S*_05.dgn
tcoggins

PROJECT NO. U-2519DA
CUMBERLAND COUNTY
STATION: 19+34.958 -Y1-

SHEET 3 OF 3

STATE OF NORTH CAROLINA
DEPARTMENT OF TRANSPORTATION
RALEIGH

SUPERSTRUCTURE

PLAN OF SPAN C

(LEFT LANE)

REVISIONS						SHEET NO.
NO.	BY:	DATE:	NO.	BY:	DATE:	S-96
1			3			TOTAL SHEETS
2			4			411

STR. #5

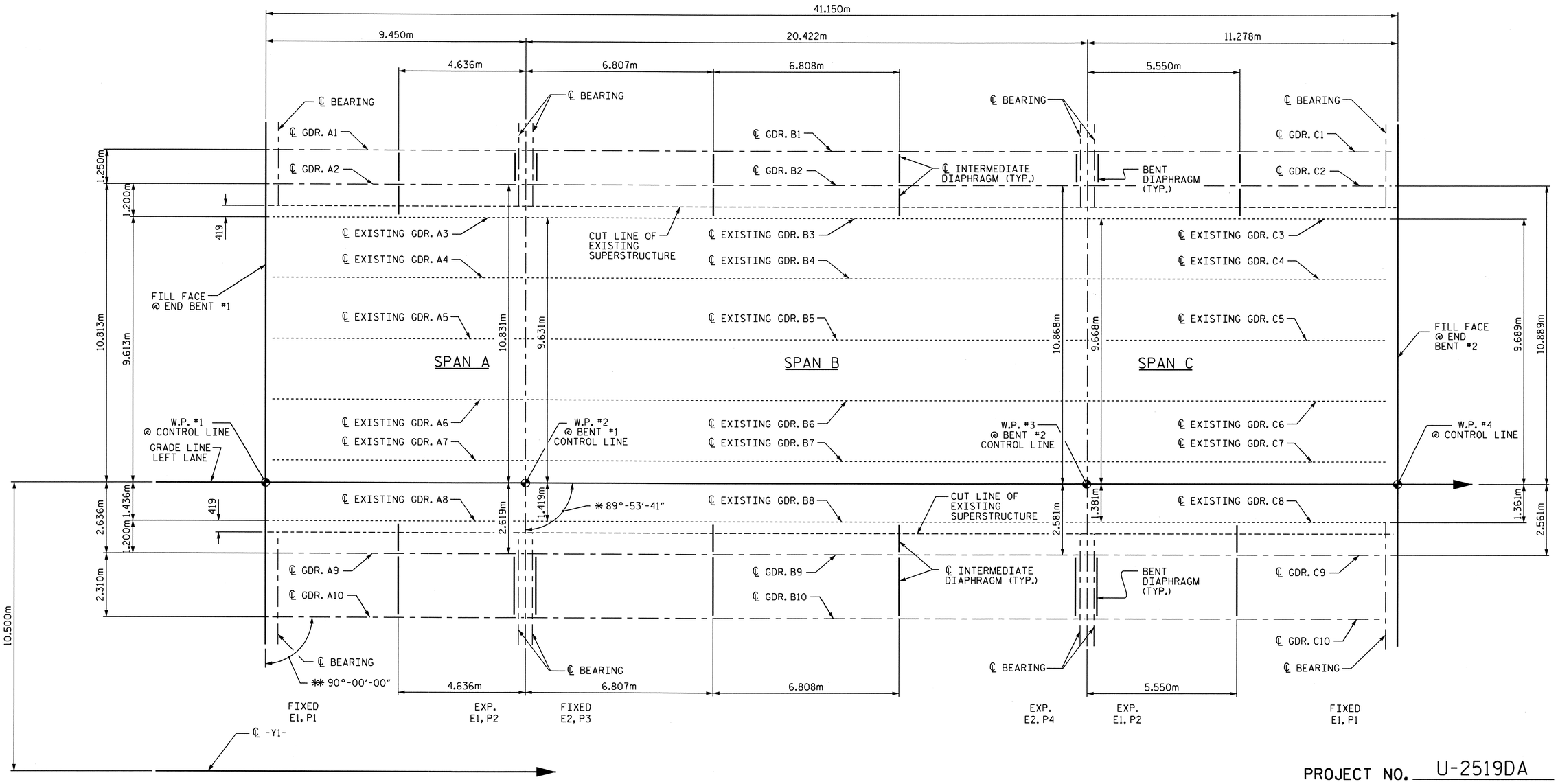

GIRDER LAYOUT PLAN

✳ TYPICAL @ INTERSECTION GRADE LINE AND EACH SUBSTRUCTURE CONTROL LINE.

✳✳ TYPICAL @ ℄ GIRDER AND EACH CONTROL LINE INTERSECTION.

PROJECT NO. U-2519DA

CUMBERLAND COUNTY

STATION: 19+34.958 -Y1-

STATE OF NORTH CAROLINA
DEPARTMENT OF TRANSPORTATION
RALEIGH

SUPERSTRUCTURE

GIRDER LAYOUT PLAN

(LEFT LANE)

NORTH CAROLINA PROFESSIONAL SEAL 14045 ENGINEER TIMOTHY L. COGGINS
3/29/11

REVISIONS						SHEET NO.
NO.	BY:	DATE:	NO.	BY:	DATE:	S-97
1			3			TOTAL SHEETS
2			4			411

DRAWN BY : PEGGY PARISI DATE : 7-08
CHECKED BY : N. RUFFIN DATE : 9-08

28-MAR-2011 15:24
R:\Structures\azizi\Final Plans\STR 05\U2519DA_sd_FP_05.dgn
nruffin

STR. #5

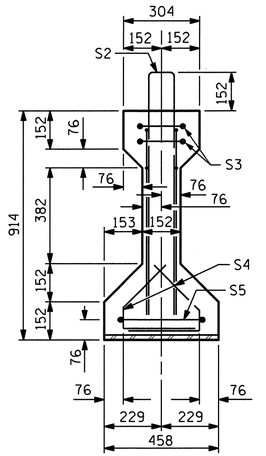

SECTION A-A

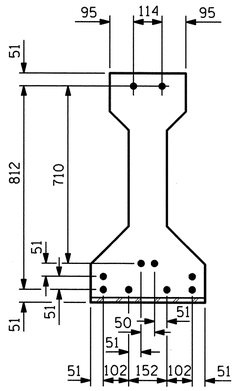

AT END OF GIRDER

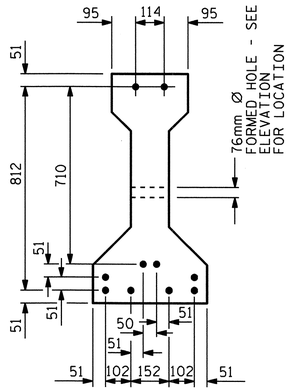

AT ℄ OF GIRDER

12.70mm Ø LOW RELAXATION STRAND LAYOUT

NOTES

ALL PRESTRESSING STRANDS SHALL BE 7-WIRE LOW-RELAXATION GRADE 270 STRANDS AND SHALL CONFORM TO AASHTO M203M EXCEPT FOR SAMPLING REQUIREMENTS WHICH SHALL BE IN ACCORDANCE WITH THE STANDARD SPECIFICATIONS.

ALL REINFORCING STEEL SHALL BE GRADE 420.

APPLY EPOXY PROTECTIVE COATING TO END OF GIRDER SURFACE, SPAN A FAR END ONLY.

EMBEDDED PLATE "B-1" SHALL BE GALVANIZED IN ACCORDANCE WITH THE SPECIFICATIONS. BEVEL EDGES OF PLATE "B-1" TO GIVE CLOSE FIT BUT NOT TIGHT FIT TO STEEL CASTING FORM.

ANCHOR STUDS SHALL CONFORM TO AASHTO M169 GRADES 1010 THROUGH 1020 OR APPROVED EQUAL, AND SHALL MEET THE TYPE "B" REQUIREMENTS OF SUBSECTION 7.3 OF THE ANSI/AASHTO/AWS D1.5 BRIDGE WELDING CODE.

ALL PRESTRESSED STRANDS SHALL BE CUT FLUSH WITH THE GIRDER ENDS.

THE TRANSFER OF LOAD FROM THE ANCHORAGES TO THE GIRDER SHALL BE DONE WHEN CONCRETE HAS REACHED A COMPRESSIVE STRENGTH OF NOT LESS THAN 27.6 MPa.

DEPENDING ON THE TYPE OF SYSTEM USED TO SUPPORT THE DECK SLAB FORMS, PRESET ANCHORS MAY BE NECESSARY IN THE PRESTRESSED CONCRETE GIRDER.

THE TOP SURFACE OF THE GIRDER SHALL BE RAKED TO A DEPTH OF 6mm EXCEPT IN THE AREA BETWEEN THE STIRRUP AND THE EDGE OF THE GIRDER.

FOR PRESTRESSED CONCRETE MEMBERS, SEE SPECIAL PROVISIONS.

LOCATION OF THE PROPOSED 31.75mm Ø TIE RODS FOR THE INTERIOR DIAPHRAGMS IS TO LINE UP, AS NEAR AS POSSIBLE, WITH EXISTING 31.75mm Ø TIE RODS. THESE DIMENSIONS SHOWN ON THE PLANS SHALL BE CHECKED BY THE RESIDENT ENGINEER AND SUBMITTED, ALONG WITH SPAN LENGTHS, TO THE STRUCTURE DESIGN UNIT.

NUTS ON EXISTING TIE RODS SHALL NOT BE REMOVED UNLESS TIE ROD PROJECTION BEYOND THE NUT IS LESS THAN 29mm. TURNBUCKLES SHALL BE TIGHTENED AGAINST THE EXISTING NUTS EXCEPT AS NOTED ABOVE.

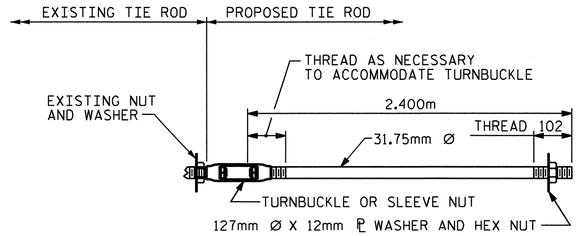

31.75mm Ø TIE ROD ASSEMBLY

(1 COMPLETE ASSEMBLY REQUIRED)

NOTE: THE CONTRACTOR SHALL CHECK TYPE OF THREADS ON EXISTING RODS BEFORE ORDERING TURNBUCKLES.

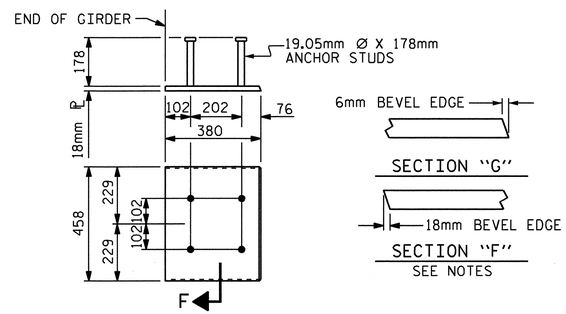

EMBEDDED PLATE "B-1" DETAILS

TWO EMBEDDED PLATES "B-1" ARE REQUIRED FOR EACH GIRDER.

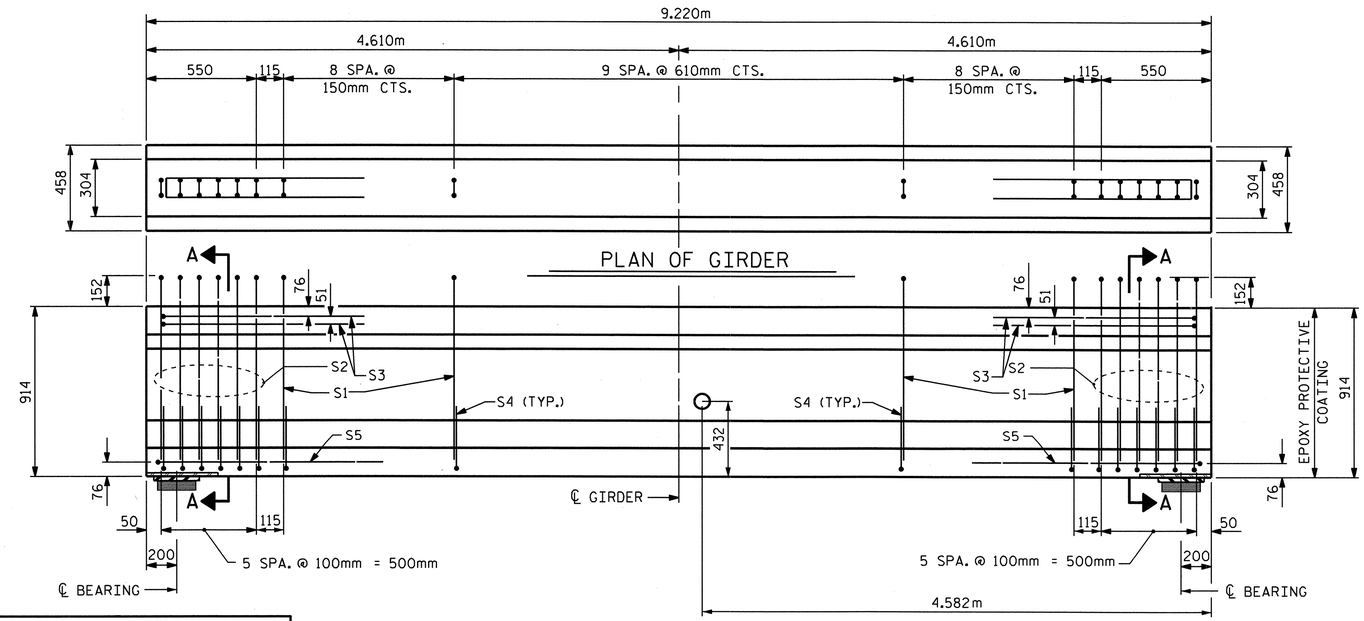

ELEVATION OF GIRDER

ASSEMBLED BY : PEGGY ADKINS	DATE : 7-08		
CHECKED BY : N. RUFFIN	DATE : 9-08		
DRAWN BY : JMB 11/87	REV. 7/17/98	RWW/LES	
CHECKED BY : GRP 11/87	REV. 8/16/99RR	RWW/LES	
	REV. 5/1/06	TLA/GM	

24-MAR-2011 16:18
R:\TIPProjects-U\U2519da\Structures\azlzl\FinalPlans\STR 05\U2519DA_sd_G*_05.dgn
tcoggins

12.70mm Ø L. R. GRADE 270 STRANDS

AREA (mm^2)	ULTIMATE STRENGTH (kN PER STRAND)	APPLIED PRESTRESS (kN PER STRAND)
98.71	183.7	137.8

REINFORCING STEEL FOR ONE GDR.

BAR	NUMBER	SIZE	TYPE	LENGTH	WEIGHT
S1	26	#13	1	2080	54
S2	12	#16	1	2080	39
S3	4	#13	3	2640	10
S4	60	#13	2	720	43
S5	2	#13	3	2800	6

BAR TYPES

ALL BAR DIMENSIONS ARE OUT-TO-OUT

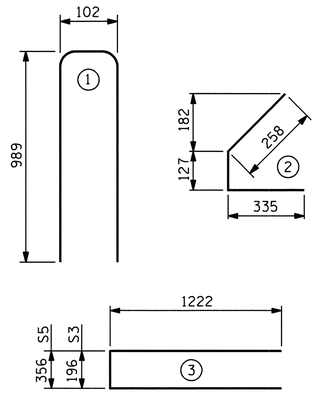

QUANTITIES FOR ONE GIRDER

	REINFORCING STEEL (kg)	34.5 MPa CONCRETE (m^3)	12.70mm Ø L.R. STRANDS (No.)
EXTERIOR GDR.	152	2.2	10
INTERIOR GDR.	152	2.2	10

GIRDERS REQUIRED

NUMBER	LENGTH	TOTAL LENGTH
2	9.220	18.440

PROJECT NO. U-2519DA

CUMBERLAND COUNTY

STATION: 19+34.958 -Y1-

STATE OF NORTH CAROLINA
DEPARTMENT OF TRANSPORTATION
RALEIGH

SUPERSTRUCTURE
SPAN A LEFT SIDE
AASHTO TYPE II
PRESTRESSED CONCRETE GIRDER

(LEFT LANE)

NORTH CAROLINA PROFESSIONAL SEAL 14045 ENGINEER TIMOTHY A. COGGINS
3/29/11

REVISIONS						SHEET NO.
NO.	BY:	DATE:	NO.	BY:	DATE:	S-98
1			3			TOTAL SHEETS
2			4			411

STR. #5

STD. NO. PCG1SM

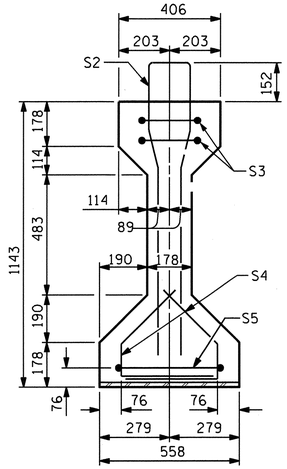

SECTION A-A

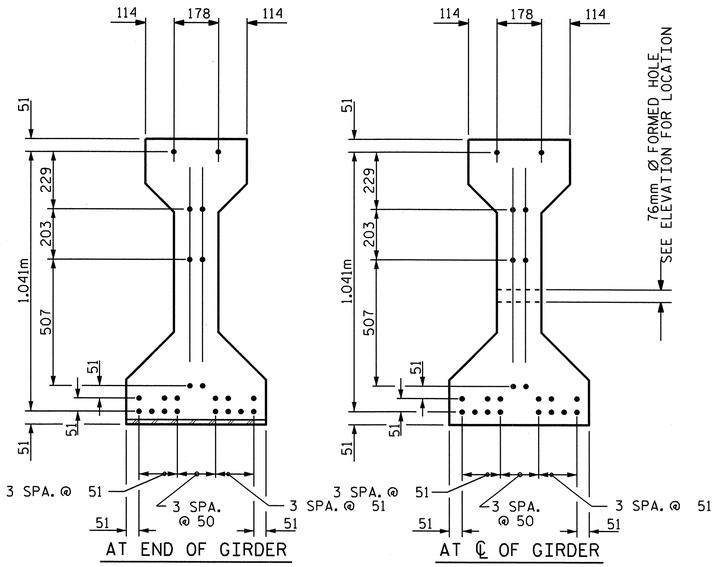

AT END OF GIRDER

AT ℄ OF GIRDER

12.70mm Ø LOW RELAXATION STRAND LAYOUT

NOTES

ALL PRESTRESSING STRANDS SHALL BE 7-WIRE LOW-RELAXATION GRADE 270 STRANDS AND SHALL CONFORM TO AASHTO M203M EXCEPT FOR SAMPLING REQUIREMENTS WHICH SHALL BE IN ACCORDANCE WITH THE STANDARD SPECIFICATIONS.

ALL REINFORCING STEEL SHALL BE GRADE 420.

APPLY EPOXY PROTECTIVE COATING TO END OF GIRDER SURFACES.

EMBEDDED PLATE "B-1" SHALL BE GALVANIZED IN ACCORDANCE WITH THE SPECIFICATIONS. BEVEL EDGES OF PLATE "B-1" TO GIVE CLOSE FIT BUT NOT TIGHT FIT TO STEEL CASTING FORM.

ANCHOR STUDS SHALL CONFORM TO AASHTO M169 GRADES 1010 THROUGH 1020 OR APPROVED EQUAL, AND SHALL MEET THE TYPE "B" REQUIREMENTS OF SUBSECTION 7.3 OF THE ANSI/AASHTO/AWS D1.5 BRIDGE WELDING CODE.

ALL PRESTRESSED STRANDS SHALL BE CUT FLUSH WITH THE GIRDER ENDS.

THE TRANSFER OF LOAD FROM THE ANCHORAGES TO THE GIRDER SHALL BE DONE WHEN CONCRETE HAS REACHED A COMPRESSIVE STRENGTH OF NOT LESS THAN 27.6 MPa.

DEPENDING ON THE TYPE OF SYSTEM USED TO SUPPORT THE DECK SLAB FORMS, PRESET ANCHORS MAY BE NECESSARY IN THE PRESTRESSED CONCRETE GIRDER.

THE TOP SURFACE OF THE GIRDER SHALL BE RAKED TO A DEPTH OF 6mm EXCEPT IN THE AREA BETWEEN THE STIRRUP AND THE EDGE OF THE GIRDER.

FOR PRESTRESSED CONCRETE MEMBERS, SEE SPECIAL PROVISIONS.

LOCATION OF THE PROPOSED 31.75mm Ø TIE RODS FOR THE INTERIOR DIAPHRAGMS IS TO LINE UP, AS NEAR AS POSSIBLE, WITH EXISTING 31.75mm Ø TIE RODS. THESE DIMENSIONS SHOWN ON THE PLANS SHALL BE CHECKED BY THE RESIDENT ENGINEER AND SUBMITTED, ALONG WITH SPAN LENGTHS, TO THE STRUCTURE DESIGN UNIT.

NUTS ON EXISTING TIE RODS SHALL NOT BE REMOVED UNLESS TIE ROD PROJECTION BEYOND THE NUT IS LESS THAN 29mm. TURNBUCKLES SHALL BE TIGHTENED AGAINST THE EXISTING NUTS EXCEPT AS NOTED ABOVE.

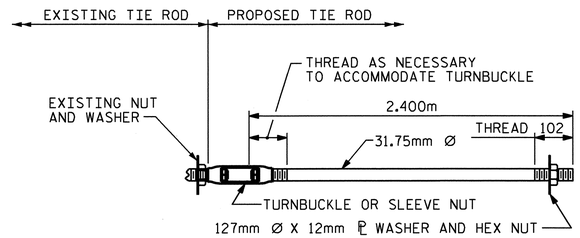

31.75mm Ø TIE ROD ASSEMBLY

(COMPLETE ASSEMBLIES REQUIRED)

NOTE: THE CONTRACTOR SHALL CHECK TYPE OF THREADS ON EXISTING RODS BEFORE ORDERING TURNBUCKLES.

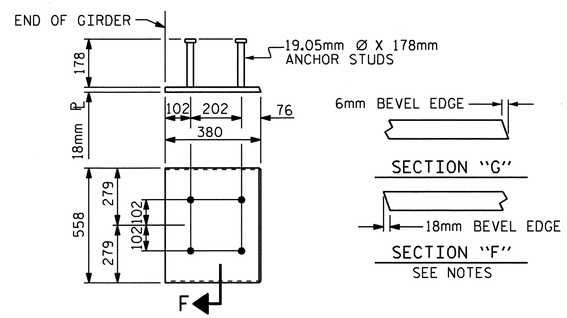

EMBEDDED PLATE "B-1" DETAILS

TWO EMBEDDED PLATES "B-1" ARE REQUIRED FOR EACH GIRDER.

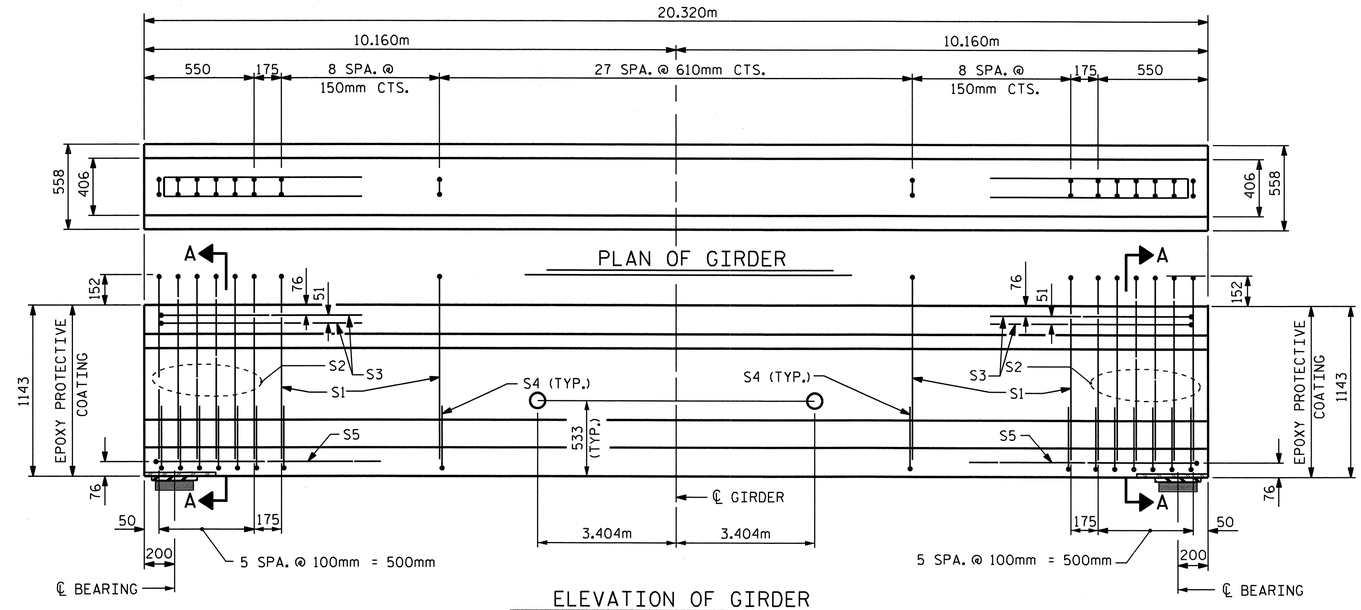

PLAN OF GIRDER

ELEVATION OF GIRDER

12.70mm Ø L. R. GRADE 270 STRANDS		
AREA (mm^2)	ULTIMATE STRENGTH (kN PER STRAND)	APPLIED PRESTRESS (kN PER STRAND)
98.71	183.7	137.8

REINFORCING STEEL FOR ONE GDR.

BAR	NUMBER	SIZE	TYPE	LENGTH	WEIGHT
S1	44	#13	1	2600	114
S2	12	#19	1	2600	70
S3	4	#13	3	2660	11
S4	60	#13	2	840	50
S5	2	#13	3	2900	6

BAR TYPES

ALL BAR DIMENSIONS ARE OUT-TO-OUT

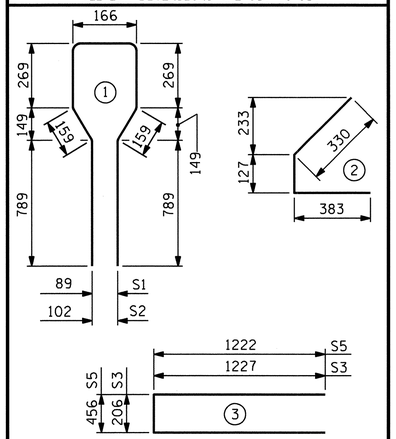

QUANTITIES FOR ONE GIRDER

	REINFORCING STEEL	34.5 MPa CONCRETE	12.70mm Ø L.R. STRANDS
	kg	m^3	No.
EXTERIOR GDR.	251	7.3	22
INTERIOR GDR.	251	7.3	22

GIRDERS REQUIRED

NUMBER	LENGTH	TOTAL LENGTH
2	20.320	40.640

PROJECT NO. U-2519DA

CUMBERLAND COUNTY

STATION: 19+34.958 -Y1-

STATE OF NORTH CAROLINA
DEPARTMENT OF TRANSPORTATION
RALEIGH

SUPERSTRUCTURE
SPAN B LEFT SIDE
AASHTO TYPE III
PRESTRESSED CONCRETE GIRDER
(LEFT LANE)

NORTH CAROLINA PROFESSIONAL SEAL 14045 ENGINEER TIMOTHY W. COGGINS
3/29/11

ASSEMBLED BY : PEGGY ADKINS DATE : 7-08	
CHECKED BY : N. RUFFIN DATE : 9-08	
DRAWN BY : JMB 10/87	REV. 7/17/98 RWW/LES
CHECKED BY : GRP 10/87	REV. 8/16/99RR RWW/LES
	REV. 5/1/06 TLA/GM

REVISIONS						SHEET NO.
NO.	BY:	DATE:	NO.	BY:	DATE:	S-99
1			3			TOTAL SHEETS
2			4			411

STR. #5

STD. NO. PCG2SM

24-MAR-2011 16:18
R:\TIPProjects-U\U2519da\Structures\azizi\Final Plans\STR 05\U2519DA_sd_G*_05.dgn
tcoggins

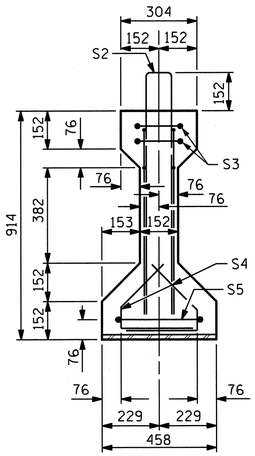

SECTION A-A

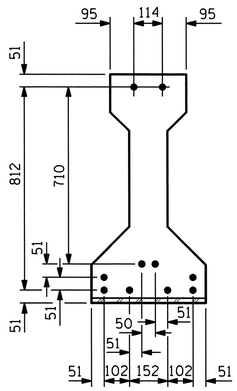

AT END OF GIRDER

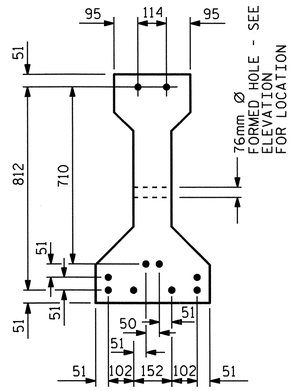

AT ℄ OF GIRDER

12.70mm Ø LOW RELAXATION STRAND LAYOUT

NOTES

ALL PRESTRESSING STRANDS SHALL BE 7-WIRE LOW-RELAXATION GRADE 270 STRANDS AND SHALL CONFORM TO AASHTO M203M EXCEPT FOR SAMPLING REQUIREMENTS WHICH SHALL BE IN ACCORDANCE WITH THE STANDARD SPECIFICATIONS.

ALL REINFORCING STEEL SHALL BE GRADE 420.

APPLY EPOXY PROTECTIVE COATING TO END OF GIRDER SURFACE, SPAN C NEAR END ONLY.

EMBEDDED PLATE "B-1" SHALL BE GALVANIZED IN ACCORDANCE WITH THE SPECIFICATIONS. BEVEL EDGES OF PLATE "B-1" TO GIVE CLOSE FIT BUT NOT TIGHT FIT TO STEEL CASTING FORM.

ANCHOR STUDS SHALL CONFORM TO AASHTO M169 GRADES 1010 THROUGH 1020 OR APPROVED EQUAL, AND SHALL MEET THE TYPE "B" REQUIREMENTS OF SUBSECTION 7.3 OF THE ANSI/AASHTO/AWS D1.5 BRIDGE WELDING CODE.

ALL PRESTRESSED STRANDS SHALL BE CUT FLUSH WITH THE GIRDER ENDS.

THE TRANSFER OF LOAD FROM THE ANCHORAGES TO THE GIRDER SHALL BE DONE WHEN CONCRETE HAS REACHED A COMPRESSIVE STRENGTH OF NOT LESS THAN 27.6 MPa.

DEPENDING ON THE TYPE OF SYSTEM USED TO SUPPORT THE DECK SLAB FORMS, PRESET ANCHORS MAY BE NECESSARY IN THE PRESTRESSED CONCRETE GIRDER.

THE TOP SURFACE OF THE GIRDER SHALL BE RAKED TO A DEPTH OF 6mm EXCEPT IN THE AREA BETWEEN THE STIRRUP AND THE EDGE OF THE GIRDER.

FOR PRESTRESSED CONCRETE MEMBERS, SEE SPECIAL PROVISIONS.

LOCATION OF THE PROPOSED 31.75mm Ø TIE RODS FOR THE INTERIOR DIAPHRAGMS IS TO LINE UP, AS NEAR AS POSSIBLE, WITH EXISTING 31.75mm Ø TIE RODS. THESE DIMENSIONS SHOWN ON THE PLANS SHALL BE CHECKED BY THE RESIDENT ENGINEER AND SUBMITTED, ALONG WITH SPAN LENGTHS, TO THE STRUCTURE DESIGN UNIT.

NUTS ON EXISTING TIE RODS SHALL NOT BE REMOVED UNLESS TIE ROD PROJECTION BEYOND THE NUT IS LESS THAN 29mm. TURNBUCKLES SHALL BE TIGHTENED AGAINST THE EXISTING NUTS EXCEPT AS NOTED ABOVE.

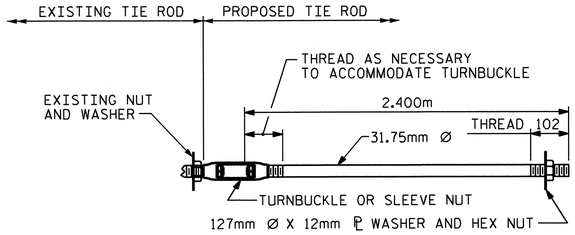

31.75mm Ø TIE ROD ASSEMBLY

(1 COMPLETE ASSEMBLY REQUIRED)

NOTE: THE CONTRACTOR SHALL CHECK TYPE OF THREADS ON EXISTING RODS BEFORE ORDERING TURNBUCKLES.

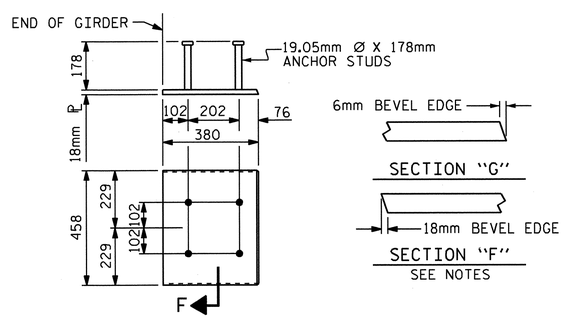

EMBEDDED PLATE "B-1" DETAILS

TWO EMBEDDED PLATES "B-1" ARE REQUIRED FOR EACH GIRDER.

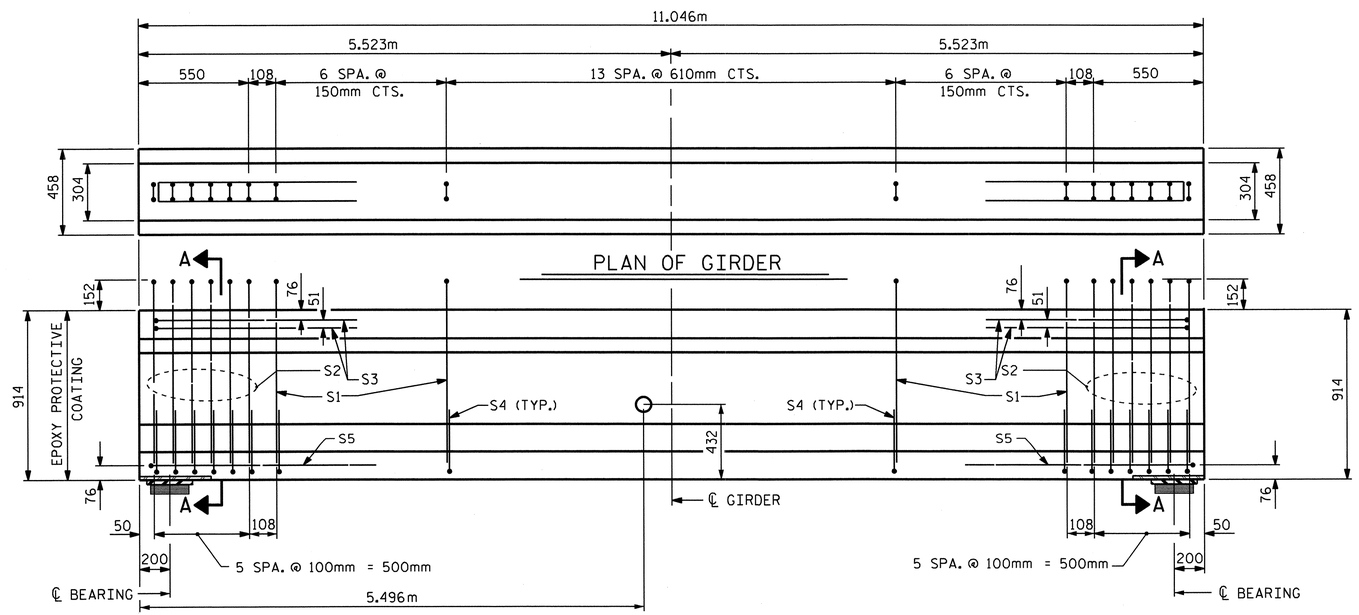

ELEVATION OF GIRDER

ASSEMBLED BY : PEGGY ADKINS	DATE : 7-08		
CHECKED BY : N. RUFFIN	DATE : 9-08		
DRAWN BY : JMB 11/87	REV. 7/17/98	RWW/LES	
CHECKED BY : GRP 11/87	REV. 8/16/99RR	RWW/LES	
	REV. 5/1/06	TLA/GM	

12.70mm Ø L. R. GRADE 270 STRANDS

AREA (mm^2)	ULTIMATE STRENGTH (kN PER STRAND)	APPLIED PRESTRESS (kN PER STRAND)
98.71	183.7	137.8

REINFORCING STEEL FOR ONE GDR.

BAR	NUMBER	SIZE	TYPE	LENGTH	WEIGHT
S1	26	#13	1	2080	54
S2	12	#16	1	2080	39
S3	4	#13	3	2640	10
S4	52	#13	2	720	37
S5	2	#13	3	2800	6

BAR TYPES

ALL BAR DIMENSIONS ARE OUT-TO-OUT

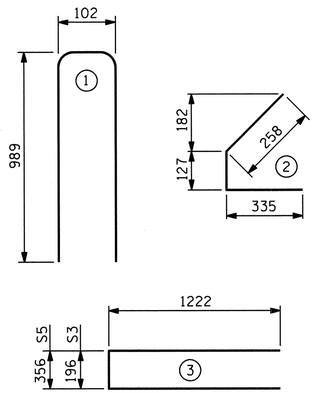

QUANTITIES FOR ONE GIRDER

	REINFORCING STEEL (kg)	34.5 MPa CONCRETE (m^3)	12.70mm Ø L.R. STRANDS (No.)
EXTERIOR GDR.	146	2.6	10
INTERIOR GDR.	146	2.6	10

GIRDERS REQUIRED

NUMBER	LENGTH	TOTAL LENGTH
2	11.046	22.092

PROJECT NO. U-2519DA

CUMBERLAND COUNTY

STATION: 19+34.958 -Y1-

STATE OF NORTH CAROLINA
DEPARTMENT OF TRANSPORTATION
RALEIGH

SUPERSTRUCTURE
SPAN C LEFT SIDE
AASHTO TYPE II
PRESTRESSED CONCRETE GIRDER

(LEFT LANE)

NORTH CAROLINA PROFESSIONAL SEAL 14045 ENGINEER TIMOTHY L. COGGINS 3/29/11

REVISIONS						SHEET NO.
NO.	BY:	DATE:	NO.	BY:	DATE:	S-100
1			3			TOTAL SHEETS
2			4			411

STR. #5

STD. NO. PCG1SM

24-MAR-2011 16:18
R:\TIPProjects-U\U2519da\Structures\azizi\Final Plans\STR 05\U2519DA_sd_G*_05.dgn
tcoggins

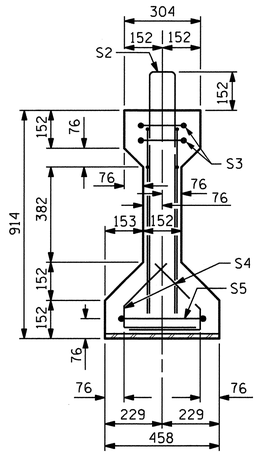

SECTION A-A

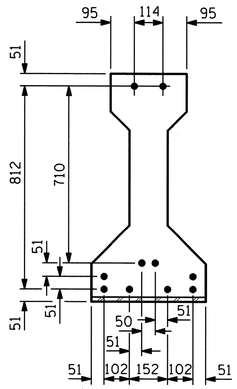

AT END OF GIRDER

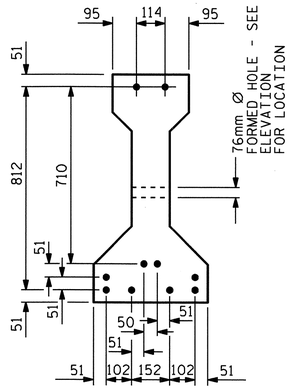

AT ℄ OF GIRDER

12.70mm Ø LOW RELAXATION STRAND LAYOUT

NOTES

ALL PRESTRESSING STRANDS SHALL BE 7-WIRE LOW-RELAXATION GRADE 270 STRANDS AND SHALL CONFORM TO AASHTO M203M EXCEPT FOR SAMPLING REQUIREMENTS WHICH SHALL BE IN ACCORDANCE WITH THE STANDARD SPECIFICATIONS.

ALL REINFORCING STEEL SHALL BE GRADE 420.

APPLY EPOXY PROTECTIVE COATING TO END OF GIRDER SURFACE, SPAN A FAR END ONLY.

EMBEDDED PLATE "B-1" SHALL BE GALVANIZED IN ACCORDANCE WITH THE SPECIFICATIONS. BEVEL EDGES OF PLATE "B-1" TO GIVE CLOSE FIT BUT NOT TIGHT FIT TO STEEL CASTING FORM.

ANCHOR STUDS SHALL CONFORM TO AASHTO M169 GRADES 1010 THROUGH 1020 OR APPROVED EQUAL, AND SHALL MEET THE TYPE "B" REQUIREMENTS OF SUBSECTION 7.3 OF THE ANSI/AASHTO/AWS D1.5 BRIDGE WELDING CODE.

ALL PRESTRESSED STRANDS SHALL BE CUT FLUSH WITH THE GIRDER ENDS.

THE TRANSFER OF LOAD FROM THE ANCHORAGES TO THE GIRDER SHALL BE DONE WHEN CONCRETE HAS REACHED A COMPRESSIVE STRENGTH OF NOT LESS THAN 27.6 MPa.

DEPENDING ON THE TYPE OF SYSTEM USED TO SUPPORT THE DECK SLAB FORMS, PRESET ANCHORS MAY BE NECESSARY IN THE PRESTRESSED CONCRETE GIRDER.

THE TOP SURFACE OF THE GIRDER SHALL BE RAKED TO A DEPTH OF 6mm EXCEPT IN THE AREA BETWEEN THE STIRRUP AND THE EDGE OF THE GIRDER.

FOR PRESTRESSED CONCRETE MEMBERS, SEE SPECIAL PROVISIONS.

LOCATION OF THE PROPOSED 31.75mm Ø TIE RODS FOR THE INTERIOR DIAPHRAGMS IS TO LINE UP, AS NEAR AS POSSIBLE, WITH EXISTING 31.75mm Ø TIE RODS. THESE DIMENSIONS SHOWN ON THE PLANS SHALL BE CHECKED BY THE RESIDENT ENGINEER AND SUBMITTED, ALONG WITH SPAN LENGTHS, TO THE STRUCTURE DESIGN UNIT.

NUTS ON EXISTING TIE RODS SHALL NOT BE REMOVED UNLESS TIE ROD PROJECTION BEYOND THE NUT IS LESS THAN 29mm. TURNBUCKLES SHALL BE TIGHTENED AGAINST THE EXISTING NUTS EXCEPT AS NOTED ABOVE.

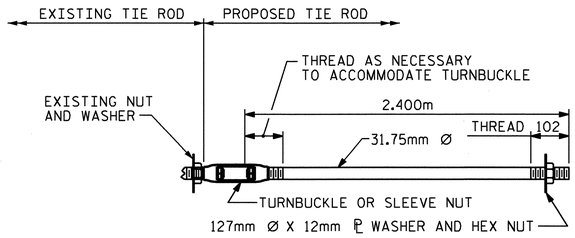

31.75mm Ø TIE ROD ASSEMBLY

(1 COMPLETE ASSEMBLY REQUIRED)

NOTE: THE CONTRACTOR SHALL CHECK TYPE OF THREADS ON EXISTING RODS BEFORE ORDERING TURNBUCKLES.

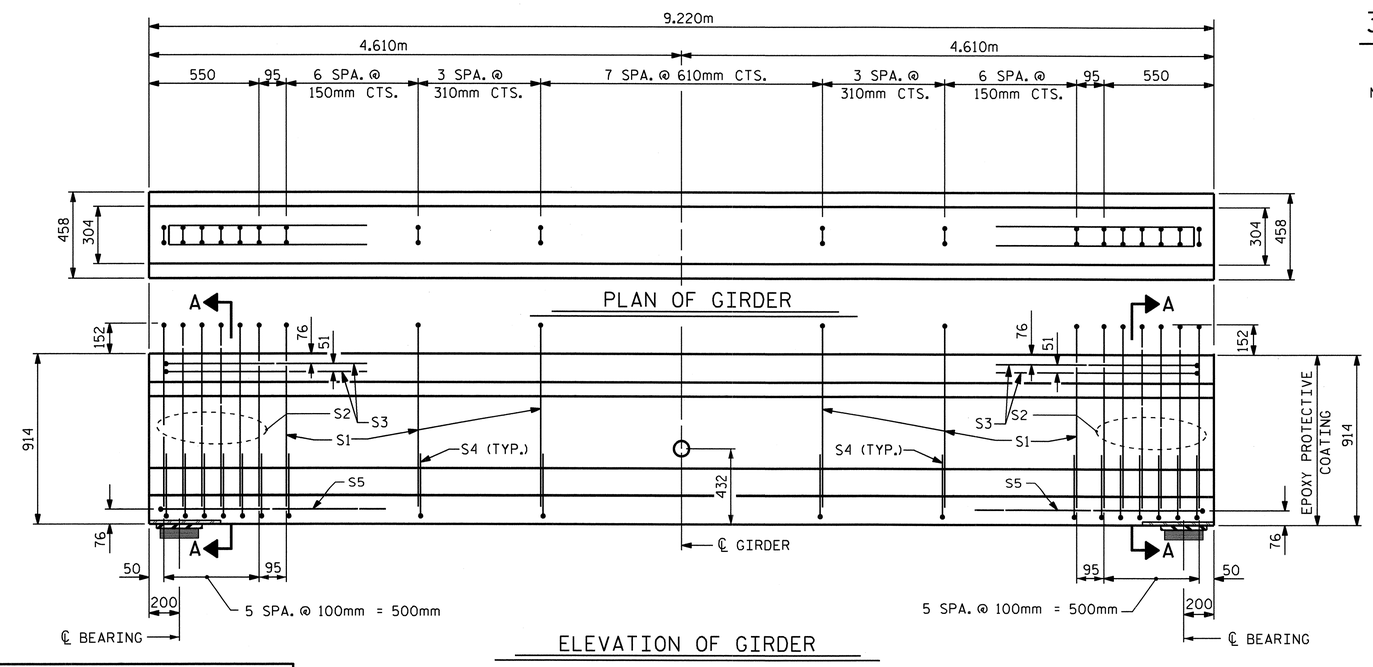

ELEVATION OF GIRDER

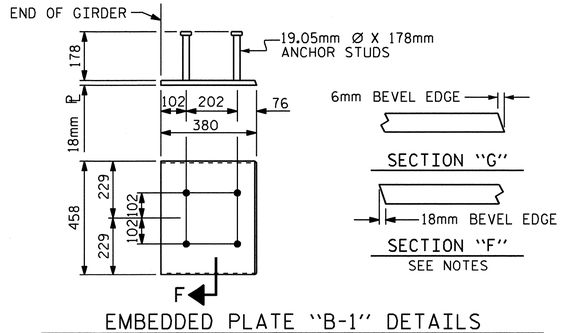

EMBEDDED PLATE "B-1" DETAILS

TWO EMBEDDED PLATES "B-1" ARE REQUIRED FOR EACH GIRDER.

12.70mm Ø L. R. GRADE 270 STRANDS		
AREA (mm^2)	ULTIMATE STRENGTH (kN PER STRAND)	APPLIED PRESTRESS (kN PER STRAND)
98.71	183.7	137.8

REINFORCING STEEL FOR ONE GDR.

BAR	NUMBER	SIZE	TYPE	LENGTH	WEIGHT
S1	26	#13	1	2080	54
S2	12	#16	1	2080	39
S3	4	#13	3	2640	10
S4	64	#13	2	720	46
S5	2	#13	3	2800	6

BAR TYPES

ALL BAR DIMENSIONS ARE OUT-TO-OUT

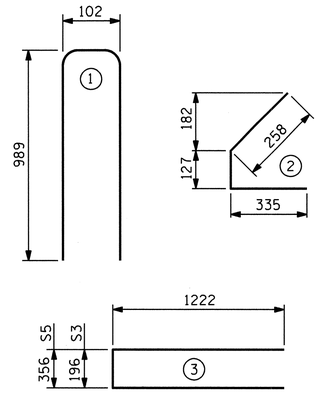

QUANTITIES FOR ONE GIRDER

	REINFORCING STEEL	34.5 MPa CONCRETE	12.70mm Ø L.R. STRANDS
	kg	m^3	No.
EXTERIOR GDR.	155	2.2	10
INTERIOR GDR.	155	2.2	10

GIRDERS REQUIRED

NUMBER	LENGTH	TOTAL LENGTH
2	9.220	18.440

PROJECT NO. U-2519DA

CUMBERLAND COUNTY

STATION: 19+34.958 -Y1-

STATE OF NORTH CAROLINA
DEPARTMENT OF TRANSPORTATION
RALEIGH

SUPERSTRUCTURE
SPAN A RIGHT SIDE
AASHTO TYPE II
PRESTRESSED CONCRETE GIRDER

(LEFT LANE)

NORTH CAROLINA PROFESSIONAL SEAL 14045 ENGINEER TIMOTHY W. COGGINS
5/9/11

ASSEMBLED BY : PEGGY ADKINS	DATE : 7-08
CHECKED BY : N. RUFFIN	DATE : 9-08
DRAWN BY : JMB 11/87	REV. 7/17/98 RWW/LES
CHECKED BY : GRP 11/87	REV. 8/16/99RR RWW/LES
	REV. 5/1/06 TLA/GM

REVISIONS						SHEET NO.
NO.	BY:	DATE:	NO.	BY:	DATE:	S-101
1			3			TOTAL SHEETS
2			4			411

STR. #5

STD. NO. PCG1SM

24-MAR-2011 16:19
R:\TIPProjects-U\U2519da\Structures\azizi\FinalPlans\STR 05\U2519DA_sd_G*_05.dgn
tcoggins

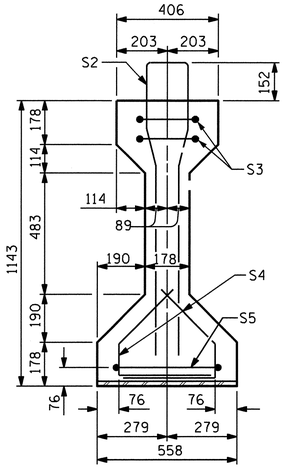

SECTION A-A

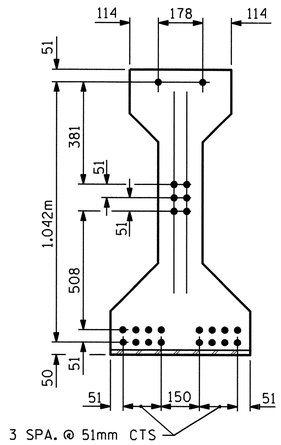

AT END OF GIRDER

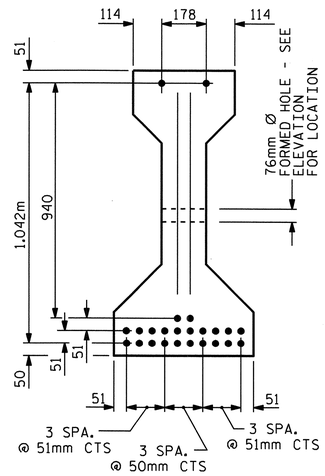

AT ℄ OF GIRDER

12.70mm Ø LOW RELAXATION STRAND LAYOUT

NOTES

ALL PRESTRESSING STRANDS SHALL BE 7-WIRE LOW-RELAXATION GRADE 270 STRANDS AND SHALL CONFORM TO AASHTO M203M EXCEPT FOR SAMPLING REQUIREMENTS WHICH SHALL BE IN ACCORDANCE WITH THE STANDARD SPECIFICATIONS.

ALL REINFORCING STEEL SHALL BE GRADE 420.

APPLY EPOXY PROTECTIVE COATING TO END OF GIRDER SURFACES.

EMBEDDED PLATE "B-1" SHALL BE GALVANIZED IN ACCORDANCE WITH THE SPECIFICATIONS. BEVEL EDGES OF PLATE "B-1" TO GIVE CLOSE FIT BUT NOT TIGHT FIT TO STEEL CASTING FORM.

ANCHOR STUDS SHALL CONFORM TO AASHTO M169 GRADES 1010 THROUGH 1020 OR APPROVED EQUAL, AND SHALL MEET THE TYPE "B" REQUIREMENTS OF SUBSECTION 7.3 OF THE ANSI/AASHTO/AWS D1.5 BRIDGE WELDING CODE.

ALL PRESTRESSED STRANDS SHALL BE CUT FLUSH WITH THE GIRDER ENDS.

THE TRANSFER OF LOAD FROM THE ANCHORAGES TO THE GIRDER SHALL BE DONE WHEN CONCRETE HAS REACHED A COMPRESSIVE STRENGTH OF NOT LESS THAN 27.6 MPa.

DEPENDING ON THE TYPE OF SYSTEM USED TO SUPPORT THE DECK SLAB FORMS, PRESET ANCHORS MAY BE NECESSARY IN THE PRESTRESSED CONCRETE GIRDER.

THE TOP SURFACE OF THE GIRDER SHALL BE RAKED TO A DEPTH OF 6mm EXCEPT IN THE AREA BETWEEN THE STIRRUP AND THE EDGE OF THE GIRDER.

WHEN DRAPED STRANDS ARE DETAILED, THE LONGITUDINAL LOCATION OF THE HOLD DOWN DEVICES SHALL BE WITHIN 150mm OF THE LOCATION SHOWN AND THE CENTER OF GRAVITY OF THE GROUP OF DRAPED STRANDS SHALL BE LOCATED WITHIN 13mm OF THE THEORETICAL LOCATION SHOWN.

FOR PRESTRESSED CONCRETE MEMBERS, SEE SPECIAL PROVISIONS.

LOCATION OF THE PROPOSED 31.75mm Ø TIE RODS FOR THE INTERIOR DIAPHRAGMS IS TO LINE UP, AS NEAR AS POSSIBLE, WITH EXISTING 31.75mm Ø TIE RODS. THESE DIMENSIONS SHOWN ON THE PLANS SHALL BE CHECKED BY THE RESIDENT ENGINEER AND SUBMITTED, ALONG WITH SPAN LENGTHS, TO THE STRUCTURE DESIGN UNIT.

NUTS ON EXISTING TIE RODS SHALL NOT BE REMOVED UNLESS TIE ROD PROJECTION BEYOND THE NUT IS LESS THAN 29mm. TURNBUCKLES SHALL BE TIGHTENED AGAINST THE EXISTING NUTS EXCEPT AS NOTED ABOVE.

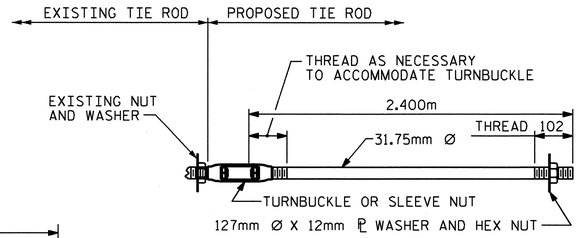

31.75mm Ø TIE ROD ASSEMBLY

(COMPLETE ASSEMBLIES REQUIRED)

NOTE: THE CONTRACTOR SHALL CHECK TYPE OF THREADS ON EXISTING RODS BEFORE ORDERING TURNBUCKLES.

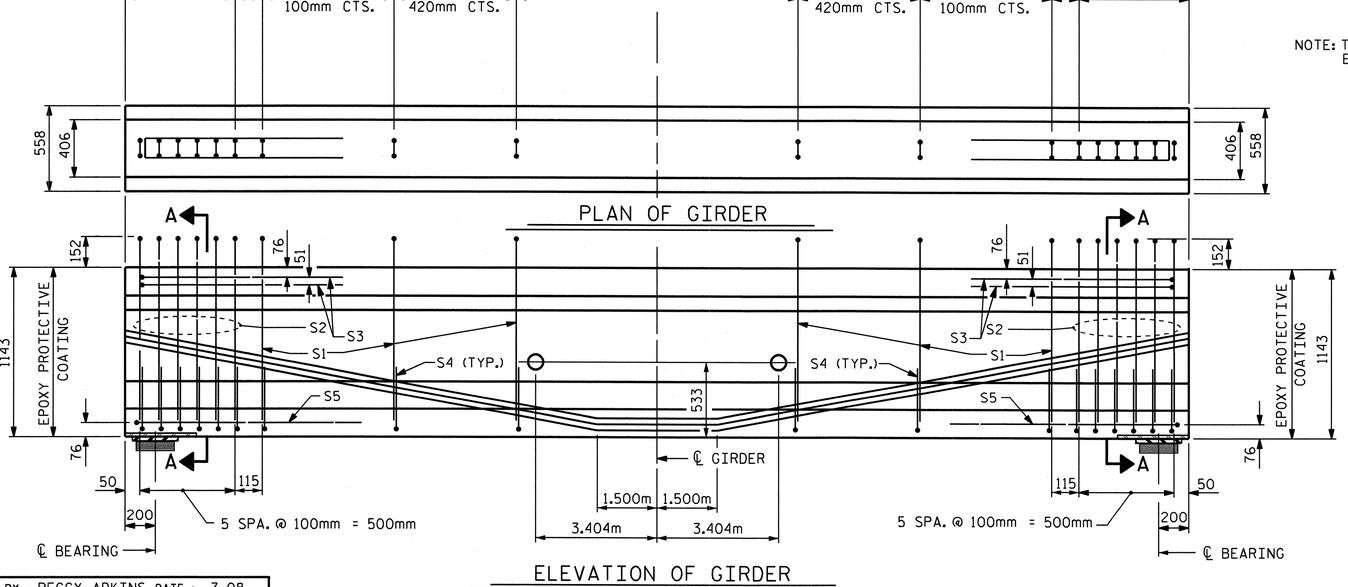

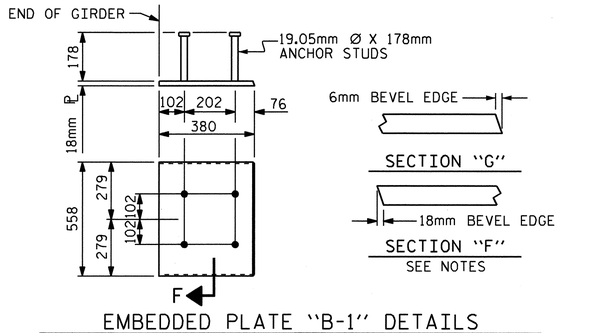

EMBEDDED PLATE "B-1" DETAILS

TWO EMBEDDED PLATES "B-1" ARE REQUIRED FOR EACH GIRDER.

12.70mm Ø L. R. GRADE 270 STRANDS		
AREA (mm^2)	ULTIMATE STRENGTH (kN PER STRAND)	APPLIED PRESTRESS (kN PER STRAND)
98.71	183.7	137.8

REINFORCING STEEL FOR ONE GDR.

BAR	NUMBER	SIZE	TYPE	LENGTH	WEIGHT
S1	62	#13	1	2600	160
S2	12	#19	1	2600	70
S3	4	#13	3	2660	11
S4	112	#13	2	840	94
S5	2	#13	3	2900	6

BAR TYPES

ALL BAR DIMENSIONS ARE OUT-TO-OUT

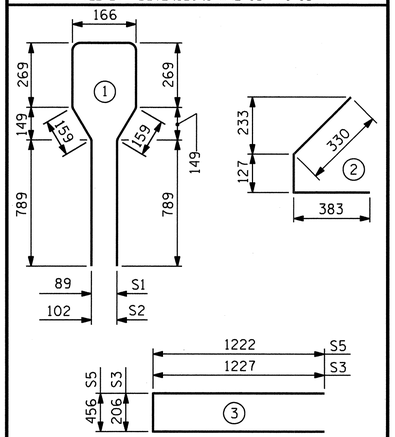

QUANTITIES FOR ONE GIRDER

	REINFORCING STEEL	34.5 MPa CONCRETE	12.70mm Ø L.R. STRANDS
	kg	m^3	No.
EXTERIOR GDR.	341	7.3	24
INTERIOR GDR.	341	7.3	24

GIRDERS REQUIRED

NUMBER	LENGTH	TOTAL LENGTH
2	20.320m	40.640m

PROJECT NO. U-2519DA

CUMBERLAND COUNTY

STATION: 19+34.958 -Y1-

STATE OF NORTH CAROLINA
DEPARTMENT OF TRANSPORTATION
RALEIGH

SUPERSTRUCTURE

SPAN B RIGHT SIDE

AASHTO TYPE III
PRESTRESSED CONCRETE GIRDER

(LEFT LANE)

NORTH CAROLINA PROFESSIONAL SEAL 14045 ENGINEER TIMOTHY G. COGGINS
3/29/11

ASSEMBLED BY : PEGGY ADKINS	DATE : 7-08
CHECKED BY : N. RUFFIN	DATE : 9-08
DRAWN BY : JMB 10/87	REV. 7/17/98 RWW/LES
CHECKED BY : GRP 10/87	REV. 8/16/99RR RWW/LES
	REV. 5/1/06 TLA/GM

REVISIONS						SHEET NO.
NO.	BY:	DATE:	NO.	BY:	DATE:	S-102
1			3			TOTAL SHEETS
2			4			411

24-MAR-2011 16:19
R:\TIPProjects-U\U2519da\Structures\azizi\Final Plans\STR 05\U2519DA_sd_G*_05.dgn
tcoggins

STR. #5

STD. NO. PCG2SM

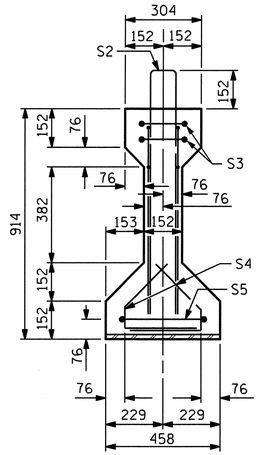

SECTION A-A

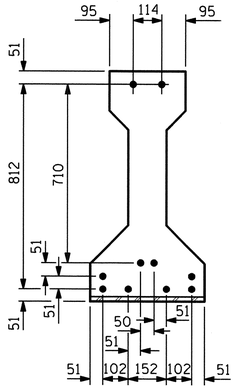

AT END OF GIRDER

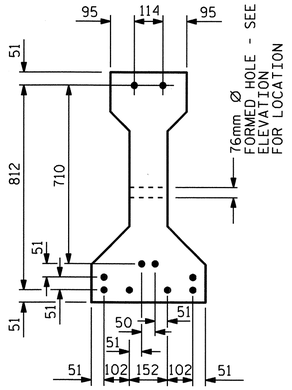

AT ℄ OF GIRDER

12.70mm Ø LOW RELAXATION STRAND LAYOUT

NOTES

ALL PRESTRESSING STRANDS SHALL BE 7-WIRE LOW-RELAXATION GRADE 270 STRANDS AND SHALL CONFORM TO AASHTO M203M EXCEPT FOR SAMPLING REQUIREMENTS WHICH SHALL BE IN ACCORDANCE WITH THE STANDARD SPECIFICATIONS.

ALL REINFORCING STEEL SHALL BE GRADE 420.

APPLY EPOXY PROTECTIVE COATING TO END OF GIRDER SURFACE, SPAN C NEAR END ONLY.

EMBEDDED PLATE "B-1" SHALL BE GALVANIZED IN ACCORDANCE WITH THE SPECIFICATIONS. BEVEL EDGES OF PLATE "B-1" TO GIVE CLOSE FIT BUT NOT TIGHT FIT TO STEEL CASTING FORM.

ANCHOR STUDS SHALL CONFORM TO AASHTO M169 GRADES 1010 THROUGH 1020 OR APPROVED EQUAL, AND SHALL MEET THE TYPE "B" REQUIREMENTS OF SUBSECTION 7.3 OF THE ANSI/AASHTO/AWS D1.5 BRIDGE WELDING CODE.

ALL PRESTRESSED STRANDS SHALL BE CUT FLUSH WITH THE GIRDER ENDS.

THE TRANSFER OF LOAD FROM THE ANCHORAGES TO THE GIRDER SHALL BE DONE WHEN CONCRETE HAS REACHED A COMPRESSIVE STRENGTH OF NOT LESS THAN 27.6 MPa.

DEPENDING ON THE TYPE OF SYSTEM USED TO SUPPORT THE DECK SLAB FORMS, PRESET ANCHORS MAY BE NECESSARY IN THE PRESTRESSED CONCRETE GIRDER.

THE TOP SURFACE OF THE GIRDER SHALL BE RAKED TO A DEPTH OF 6mm EXCEPT IN THE AREA BETWEEN THE STIRRUP AND THE EDGE OF THE GIRDER.

FOR PRESTRESSED CONCRETE MEMBERS, SEE SPECIAL PROVISIONS.

LOCATION OF THE PROPOSED 31.75mm Ø TIE RODS FOR THE INTERIOR DIAPHRAGMS IS TO LINE UP, AS NEAR AS POSSIBLE, WITH EXISTING 31.75mm Ø TIE RODS. THESE DIMENSIONS SHOWN ON THE PLANS SHALL BE CHECKED BY THE RESIDENT ENGINEER AND SUBMITTED, ALONG WITH SPAN LENGTHS, TO THE STRUCTURE DESIGN UNIT.

NUTS ON EXISTING TIE RODS SHALL NOT BE REMOVED UNLESS TIE ROD PROJECTION BEYOND THE NUT IS LESS THAN 29mm. TURNBUCKLES SHALL BE TIGHTENED AGAINST THE EXISTING NUTS EXCEPT AS NOTED ABOVE.

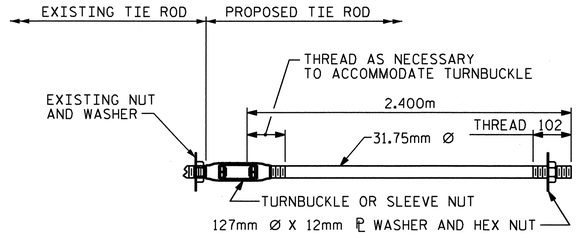

31.75mm Ø TIE ROD ASSEMBLY

(1 COMPLETE ASSEMBLY REQUIRED)

NOTE: THE CONTRACTOR SHALL CHECK TYPE OF THREADS ON EXISTING RODS BEFORE ORDERING TURNBUCKLES.

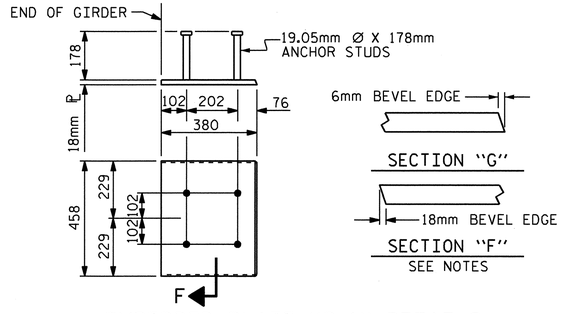

EMBEDDED PLATE "B-1" DETAILS

TWO EMBEDDED PLATES "B-1" ARE REQUIRED FOR EACH GIRDER.

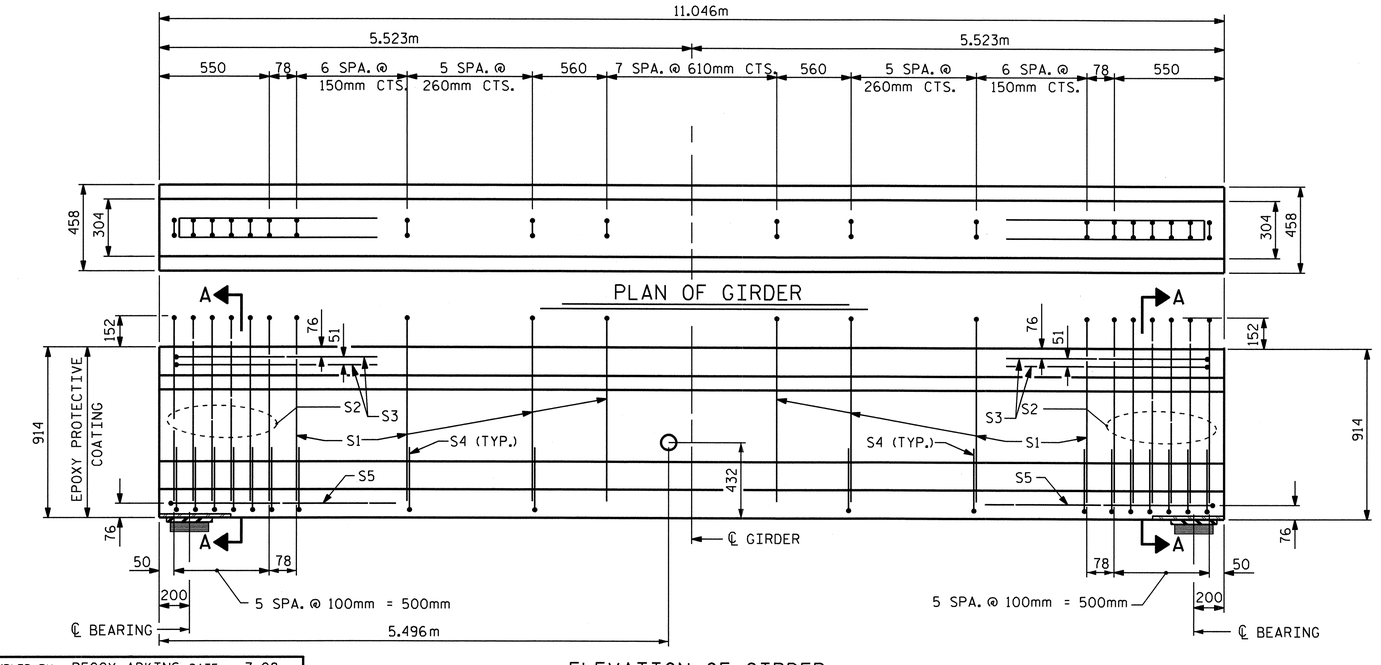

ELEVATION OF GIRDER

ASSEMBLED BY : PEGGY ADKINS	DATE : 7-08		
CHECKED BY : N. RUFFIN	DATE : 9-08		
DRAWN BY : JMB 11/87	REV. 7/17/98	RWW/LES	
CHECKED BY : GRP 11/87	REV. 8/16/99RR	RWW/LES	
	REV. 5/1/06	TLA/GM	

12.70mm Ø L. R. GRADE 270 STRANDS

AREA (mm^2)	ULTIMATE STRENGTH (kN PER STRAND)	APPLIED PRESTRESS (kN PER STRAND)
98.71	183.7	137.8

REINFORCING STEEL FOR ONE GDR.

BAR	NUMBER	SIZE	TYPE	LENGTH	WEIGHT
S1	32	#13	1	2080	66
S2	12	#16	1	2080	39
S3	4	#13	3	2640	10
S4	72	#13	2	720	52
S5	2	#13	3	2800	6

BAR TYPES

ALL BAR DIMENSIONS ARE OUT-TO-OUT

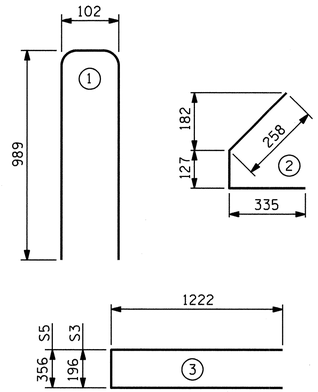

QUANTITIES FOR ONE GIRDER

	REINFORCING STEEL (kg)	34.5 MPa CONCRETE (m^3)	12.70mm Ø L.R. STRANDS (No.)
EXTERIOR GDR.	173	2.6	10
INTERIOR GDR.	173	2.6	10

GIRDERS REQUIRED

NUMBER	LENGTH	TOTAL LENGTH
2	11.046	22.092

PROJECT NO. U-2519DA

CUMBERLAND COUNTY

STATION: 19+34.958 -Y1-

STATE OF NORTH CAROLINA
DEPARTMENT OF TRANSPORTATION
RALEIGH

SUPERSTRUCTURE
SPAN C RIGHT SIDE
AASHTO TYPE II
PRESTRESSED CONCRETE GIRDER

(LEFT LANE)

NORTH CAROLINA PROFESSIONAL SEAL 14045 ENGINEER TIMOTHY U. COGGINS
3/23/11

REVISIONS						SHEET NO.
NO.	BY:	DATE:	NO.	BY:	DATE:	S-103
1			3			TOTAL SHEETS
2			4			411

STR. #5

STD. NO. PCG1SM

24-MAR-2011 16:19
R:\TIPProjects-U\U2519da\Structures\azizi\Final Plans\STR 05\U2519DA_sd_G*_05.dgn
tcoggins

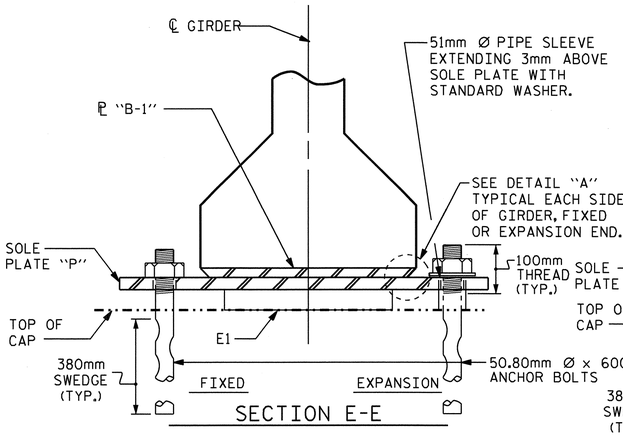

SECTION E-E

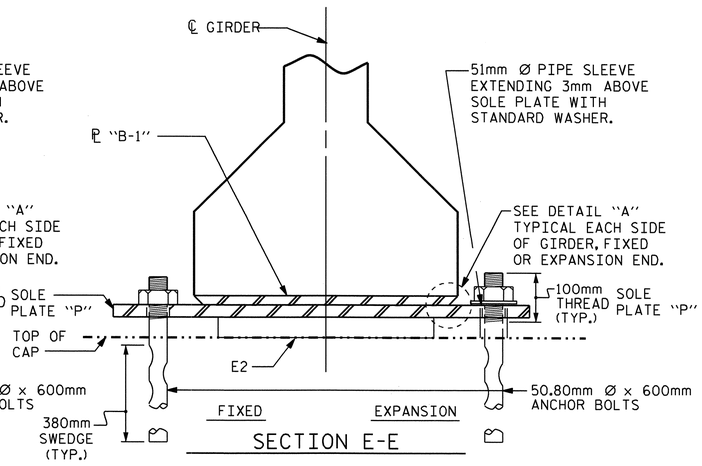

SECTION E-E

— LOAD RATINGS —	
	MAX.D.L.+L.L.
914mm PCG -TYPE II	366 kN
1143mm PCG -TYPE III	512 kN

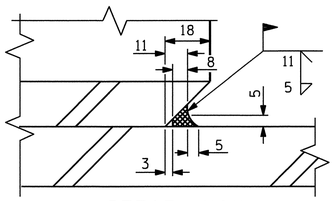

DETAIL "A"

NOTES

AT ALL FIXED POINTS OF SUPPORT, NUTS FOR ANCHOR BOLTS ARE TO BE TIGHTENED FINGER TIGHT AND THEN BACKED OFF ½ TURN. THE THREAD OF THE NUT AND BOLT SHALL THEN BE BURRED WITH A SHARP POINTED TOOL.

THE 51mm Ø PIPE SLEEVE SHALL BE CUT FROM SCHEDULE 40 PVC PLASTIC PIPE. THE PVC PLASTIC PIPE SHALL MEET THE REQUIREMENTS OF ASTM D1785.

STEEL SOLE PLATES, ANCHOR BOLTS, NUTS, AND WASHERS SHALL BE GALVANIZED IN ACCORDANCE WITH THE STANDARD SPECIFICATIONS.

PRIOR TO WELDING, GRIND THE GALVANIZED SURFACE OF THE PORTION OF THE EMBEDDED PLATE AND SOLE PLATE THAT ARE TO BE WELDED. AFTER WELDING, DAMAGED GALVANIZED SURFACES SHALL BE REPAIRED IN ACCORDANCE WITH THE STANDARD SPECIFICATIONS.

WHEN WELDING THE SOLE PLATE TO THE EMBEDDED PLATE IN THE GIRDER, USE TEMPERATURE INDICATING WAX PENS, OR OTHER SUITABLE MEANS, TO ENSURE THAT THE TEMPERATURE OF THE SOLE PLATE DOES NOT EXCEED 149°C. TEMPERATURES ABOVE THIS MAY DAMAGE THE ELASTOMER.

SOLE PLATE "P", BOLTS, NUTS, WASHERS, AND PIPE SLEEVE SHALL BE INCLUDED IN THE PAY ITEM FOR PRESTRESSED CONCRETE GIRDERS.

ANCHOR BOLTS SHALL MEET THE REQUIREMENTS OF ASTM A449. NUTS SHALL MEET THE REQUIREMENTS OF AASHTO M291M-12 OR AASHTO M292M-2H. WASHERS SHALL MEET THE REQUIREMENTS OF AASHTO M293M. SHOP DRAWINGS ARE NOT REQUIRED FOR ANCHOR BOLTS, NUTS AND WASHERS. SHOP INSPECTION IS REQUIRED.

ALL SURFACES OF BEARING PLATES SHALL BE SMOOTH AND STRAIGHT.

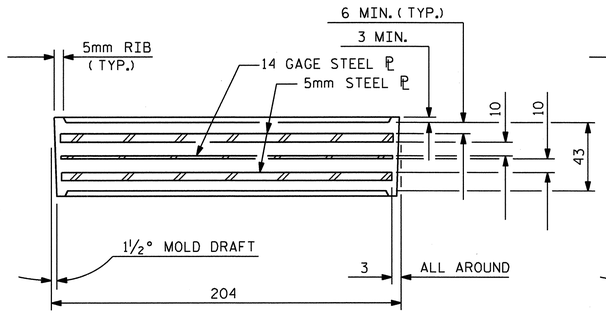

TYPICAL SECTION OF ELASTOMERIC BEARINGS

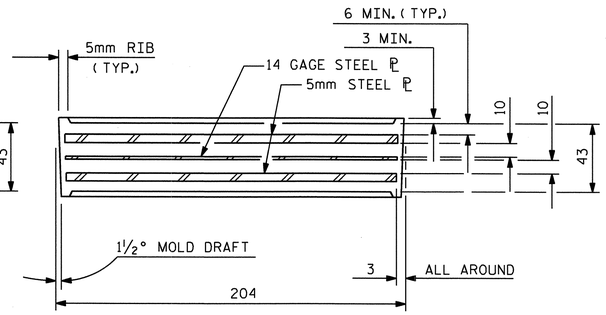

TYPICAL SECTION OF ELASTOMERIC BEARINGS

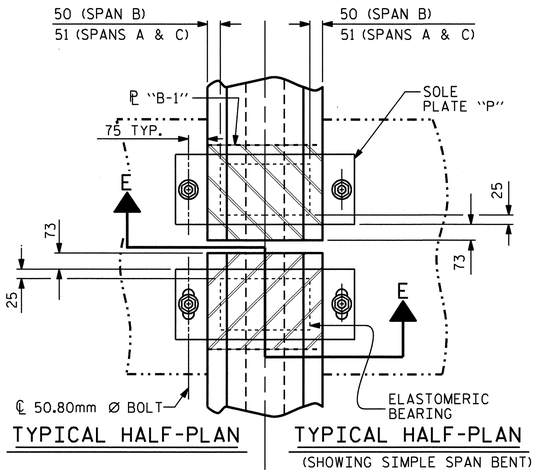

TYPICAL HALF-PLAN

TYPICAL HALF-PLAN
(SHOWING SIMPLE SPAN BENT)

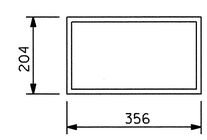

E1 (16 REQ'D)

PLAN VIEW OF ELASTOMERIC BEARING

TYPE II

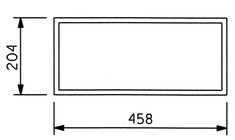

E2 (8 REQ'D)

PLAN VIEW OF ELASTOMERIC BEARING

TYPE III

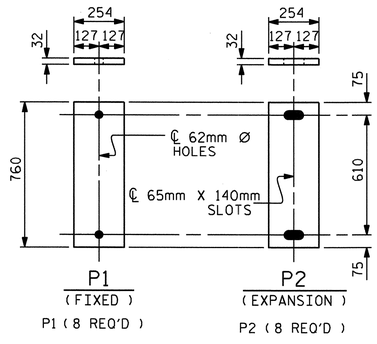

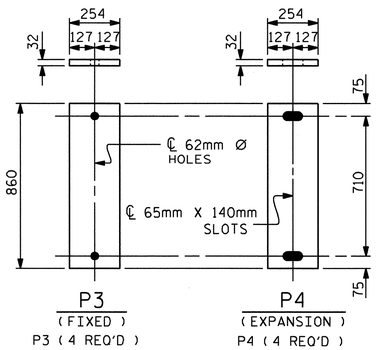

SOLE PLATE DETAILS ("P")

NORTH CAROLINA PROFESSIONAL SEAL 14045 ENGINEER TIMOTHY L. COGGINS
3/29/11

PROJECT NO. U-2519DA
CUMBERLAND COUNTY
STATION: 19+34.958 -Y1-

STATE OF NORTH CAROLINA
DEPARTMENT OF TRANSPORTATION
RALEIGH

STANDARD ELASTOMERIC BEARING DETAILS

(LEFT LANE)

REVISIONS						SHEET NO.
NO.	BY:	DATE:	NO.	BY:	DATE:	S-104
1			3			TOTAL SHEETS
2			4			411

ASSEMBLED BY : PEGGY PARISI	DATE : 8-08		
CHECKED BY : N. RUFFIN	DATE : 9-08		
DRAWN BY : WJH 8/89	REV. 10/17/00	RWW/LES	
CHECKED BY : CRK 8/89	REV. 7/10/01	RWW/LES	
	REV. 5/1/06	TLA/GM	

24-MAR-2011 16:15
R:\TIPProjects-U\U2519da\Structures\azizi\Final Plans\STR 05\U2519DA_sd_BG_05.dgn
tcoggins

STR. #5

STD. NO. EB3SM

DEAD LOAD DEFLECTION TABLE FOR GIRDERS

12.70mm Ø LOW RELAXATION	SPAN A LEFT SIDE GIRDER 1											SPAN A LEFT SIDE GIRDER 2										
TENTH POINTS	0	.1	.2	.3	.4	.5	.6	.7	.8	.9	0	0	.1	.2	.3	.4	.5	.6	.7	.8	.9	0
CAMBER (GIRDER ALONE IN PLACE) ↑	0.0	0.002	0.004	0.006	0.007	0.007	0.007	0.006	0.004	0.002	0.0	0.0	0.002	0.004	0.006	0.007	0.007	0.007	0.006	0.004	0.002	0.0
✱DEFLECTION DUE TO SUPERIMPOSED D.L. ↓	0.0	0.000	0.000	0.001	0.001	0.001	0.001	0.001	0.000	0.000	0.0	0.0	0.000	0.000	0.000	0.001	0.001	0.001	0.000	0.000	0.000	0.0
FINAL CAMBER ↑	0.0	2	4	5	6	6	6	5	4	2	0.0	0.0	2	4	6	6	6	6	6	4	2	0.0

DEAD LOAD DEFLECTION TABLE FOR GIRDERS

12.70mm Ø LOW RELAXATION	SPAN B LEFT SIDE GIRDER 1											SPAN B LEFT SIDE GIRDER 2										
TENTH POINTS	0	.1	.2	.3	.4	.5	.6	.7	.8	.9	0	0	.1	.2	.3	.4	.5	.6	.7	.8	.9	0
CAMBER (GIRDER ALONE IN PLACE) ↑	0.0	0.007	0.014	0.019	0.022	0.023	0.022	0.019	0.014	0.007	0.0	0.0	0.007	0.014	0.019	0.022	0.023	0.022	0.019	0.014	0.007	0.0
✱DEFLECTION DUE TO SUPERIMPOSED D.L. ↓	0.0	0.005	0.009	0.013	0.015	0.016	0.015	0.013	0.009	0.005	0.0	0.0	0.004	0.008	0.011	0.012	0.013	0.012	0.011	0.008	0.004	0.0
FINAL CAMBER ↑	0.0	2	5	6	7	7	7	6	5	2	0.0	0.0	3	6	8	10	10	10	8	6	3	0.0

DEAD LOAD DEFLECTION TABLE FOR GIRDERS

12.70mm Ø LOW RELAXATION	SPAN C LEFT SIDE GIRDER 1											SPAN C LEFT SIDE GIRDER 2										
TENTH POINTS	0	.1	.2	.3	.4	.5	.6	.7	.8	.9	0	0	.1	.2	.3	.4	.5	.6	.7	.8	.9	0
CAMBER (GIRDER ALONE IN PLACE) ↑	0.0	0.003	0.005	0.007	0.008	0.009	0.008	0.007	0.005	0.003	0.0	0.0	0.003	0.005	0.007	0.008	0.009	0.008	0.007	0.005	0.003	0.0
✱DEFLECTION DUE TO SUPERIMPOSED D.L. ↓	0.0	0.001	0.001	0.002	0.003	0.003	0.003	0.002	0.001	0.001	0.0	0.0	0.000	0.001	0.002	0.002	0.003	0.002	0.002	0.001	0.000	0.0
FINAL CAMBER ↑	0.0	2	4	5	5	6	5	5	4	2	0.0	0.0	3	4	5	6	6	6	5	4	3	0.0

DEAD LOAD DEFLECTION TABLE FOR GIRDERS

12.70mm Ø LOW RELAXATION	SPAN A RIGHT SIDE GIRDER 9											SPAN A RIGHT SIDE GIRDER 10										
TENTH POINTS	0	.1	.2	.3	.4	.5	.6	.7	.8	.9	0	0	.1	.2	.3	.4	.5	.6	.7	.8	.9	0
CAMBER (GIRDER ALONE IN PLACE) ↑	0.0	0.002	0.004	0.006	0.007	0.007	0.007	0.006	0.004	0.002	0.0	0.0	0.002	0.004	0.006	0.007	0.007	0.007	0.006	0.004	0.002	0.0
✱DEFLECTION DUE TO SUPERIMPOSED D.L. ↓	0.0	0.000	0.001	0.001	0.001	0.001	0.001	0.001	0.001	0.000	0.0	0.0	0.000	0.001	0.001	0.001	0.001	0.001	0.001	0.001	0.000	0.0
FINAL CAMBER ↑	0.0	2	3	5	6	6	6	5	3	2	0.0	0.0	2	3	5	6	6	6	5	3	2	0.0

DEAD LOAD DEFLECTION TABLE FOR GIRDERS

12.70mm Ø LOW RELAXATION	SPAN B RIGHT SIDE GIRDER 9											SPAN B RIGHT SIDE GIRDER 10										
TENTH POINTS	0	.1	.2	.3	.4	.5	.6	.7	.8	.9	0	0	.1	.2	.3	.4	.5	.6	.7	.8	.9	0
CAMBER (GIRDER ALONE IN PLACE) ↑	0.0	0.017	0.031	0.043	0.050	0.053	0.050	0.043	0.031	0.017	0.0	0.0	0.017	0.031	0.043	0.050	0.053	0.050	0.043	0.031	0.017	0.0
✱DEFLECTION DUE TO SUPERIMPOSED D.L. ↓	0.0	0.007	0.013	0.018	0.021	0.023	0.021	0.018	0.013	0.007	0.0	0.0	0.006	0.011	0.015	0.018	0.019	0.018	0.015	0.011	0.006	0.0
FINAL CAMBER ↑	0.0	10	18	25	29	30	29	25	18	10	0.0	0.0	11	20	28	32	34	32	28	20	11	0.0

DEAD LOAD DEFLECTION TABLE FOR GIRDERS

12.70mm Ø LOW RELAXATION	SPAN C RIGHT SIDE GIRDER 9											SPAN C RIGHT SIDE GIRDER 10										
TENTH POINTS	0	.1	.2	.3	.4	.5	.6	.7	.8	.9	0	0	.1	.2	.3	.4	.5	.6	.7	.8	.9	0
CAMBER (GIRDER ALONE IN PLACE) ↑	0.0	0.003	0.005	0.007	0.008	0.009	0.008	0.007	0.005	0.003	0.0	0.0	0.003	0.005	0.007	0.008	0.009	0.008	0.007	0.005	0.003	0.0
✱DEFLECTION DUE TO SUPERIMPOSED D.L. ↓	0.0	0.001	0.002	0.003	0.004	0.004	0.004	0.003	0.002	0.001	0.0	0.0	0.001	0.002	0.003	0.003	0.004	0.003	0.003	0.002	0.001	0.0
FINAL CAMBER ↑	0.0	2	3	4	4	5	4	4	3	2	0.0	0.0	2	3	4	5	5	5	4	3	2	0.0

✱ INCLUDES FUTURE WEARING SURFACE
ALL VALUES ARE SHOWN IN METERS, EXCEPT "FINAL CAMBER" WHICH IS SHOWN IN MILLIMETERS.

ASSEMBLED BY : PEGGY PARISI DATE : 7-08
CHECKED BY : N. RUFFIN DATE : 9-08

24-MAR-2011 16:17
R:\TIPProjects-U\U2519da\Structures\azizi\FinalPlans\STR 05\U2519DA_sd_DL_05.dgn

NORTH CAROLINA PROFESSIONAL SEAL 14045 ENGINEER TIMOTHY W. COGGINS
3/24/11

PROJECT NO. U-2519DA
CUMBERLAND COUNTY
STATION: 19+34.958 -Y1-

STATE OF NORTH CAROLINA
DEPARTMENT OF TRANSPORTATION
RALEIGH

SUPERSTRUCTURE

DEAD LOAD DEFLECTIONS

(LEFT LANE)

REVISIONS						SHEET NO.
NO.	BY:	DATE:	NO.	BY:	DATE:	S-105
1			3			TOTAL SHEETS
2			4			411

STR. #5

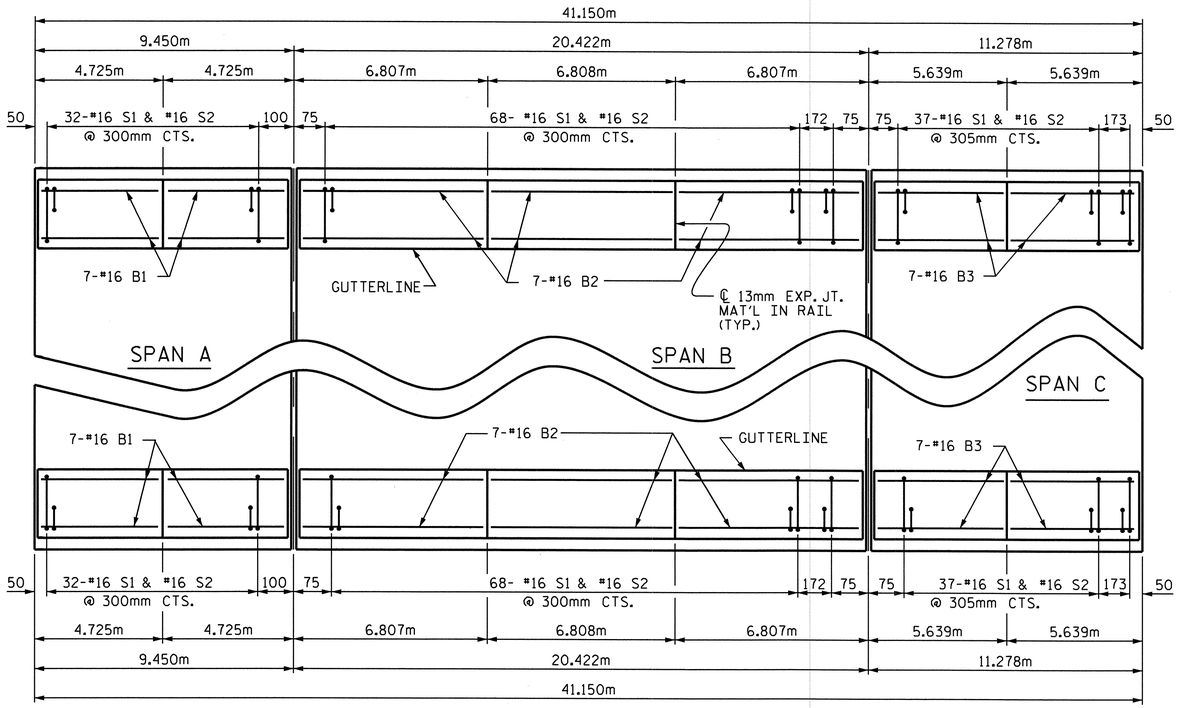

PLAN OF BARRIER RAIL

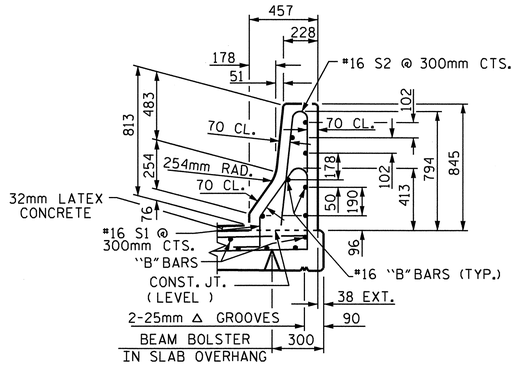

SECTION THRU RAIL

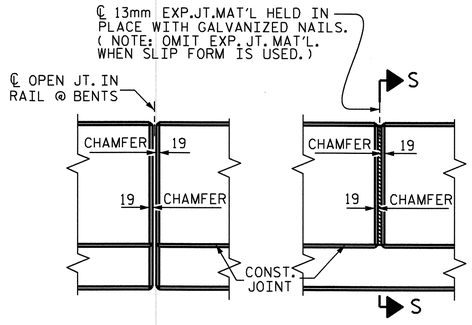

ELEVATION AT EXPANSION JOINTS

BARRIER RAIL DETAILS

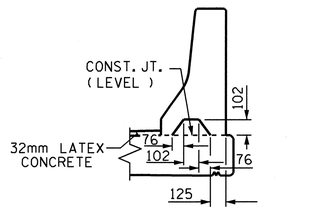

SECTION S-S
AT DAM IN OPEN JOINT
(THIS IS TO BE USED ONLY
WHEN SLIP FORM IS USED)

NOTES

THE BARRIER RAIL IN EACH SPAN SHALL NOT BE CAST UNTIL ALL SLAB CONCRETE IN THAT SPAN HAS BEEN CAST AND HAS REACHED A MINIMUM COMPRESSIVE STRENGTH OF 20.7 MPa.

ALL REINFORCING STEEL IN BARRIER RAILS SHALL BE EPOXY COATED.

GROOVED CONTRACTION JOINTS, 12mm IN DEPTH, SHALL BE TOOLED IN ALL EXPOSED FACES OF THE BARRIER RAIL AND IN ACCORDANCE WITH ARTICLE 825-10(B) OF THE STANDARD SPECIFICATIONS. THE CONTRACTION JOINT SHALL BE LOCATED AT EACH THIRD POINT BETWEEN BARRIER RAIL EXPANSION JOINTS. ONLY ONE CONTRACTION JOINT IS REQUIRED AT MIDPOINT OF BARRIER RAIL SEGMENTS LESS THAN 6.1m IN LENGTH AND NO CONTRACTION JOINTS ARE REQUIRED FOR THOSE SEGMENTS LESS THAN 3.5m IN LENGTH.

BAR TYPES

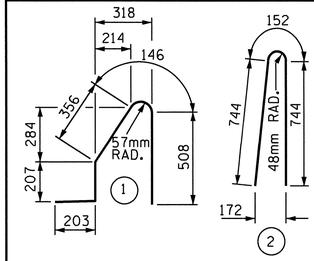

ALL BAR DIMENSIONS ARE OUT TO OUT

BILL OF MATERIAL

FOR CONCRETE BARRIER RAIL ONLY

BAR	NO.	SIZE	TYPE	LENGTH	WEIGHT
* B1	28	#16	STR	4600	200
* B2	42	#16	STR	6680	435
* B3	28	#16	STR	5520	240
* S1	278	#16	1	1420	613
* S2	278	#16	2	1640	708

*EPOXY COATED REINFORCING STEEL	2196 kg
CLASS AA CONCRETE	21.8 CU. METER
CONCRETE BARRIER RAIL	82.300 METERS

PROJECT NO. U-2519DA

CUMBERLAND COUNTY

STATION: 19+34.958 -Y1-

STATE OF NORTH CAROLINA
DEPARTMENT OF TRANSPORTATION
RALEIGH

SUPERSTRUCTURE

CONCRETE BARRIER RAIL
(LEFT LANE)

REVISIONS						SHEET NO.
NO.	BY:	DATE:	NO.	BY:	DATE:	S-106
1			3			TOTAL SHEETS
2			4			411

NORTH CAROLINA PROFESSIONAL SEAL 14045 ENGINEER TIMOTHY A. COGGINS
Timothy A. Coggins 3/24/11

ASSEMBLED BY : PEGGY PARISI	DATE :	7-08
CHECKED BY : N. RUFFIN	DATE :	9-08
DRAWN BY : ARB 5/87	REV. 10/17/00	RWW/LES
CHECKED BY : SJD 9/87	REV. 5/7/03R	RWW/JTE
	REV. 5/1/06	TLA/GM

24-MAR-2011 16:16
R:\TIPProjects-U\U2519da\Structures\azizi\Final Plans\STR 05\U2519DA_sd_BR_05.dgn
tcoggins

STR. #5

STD. No. CBR1SM

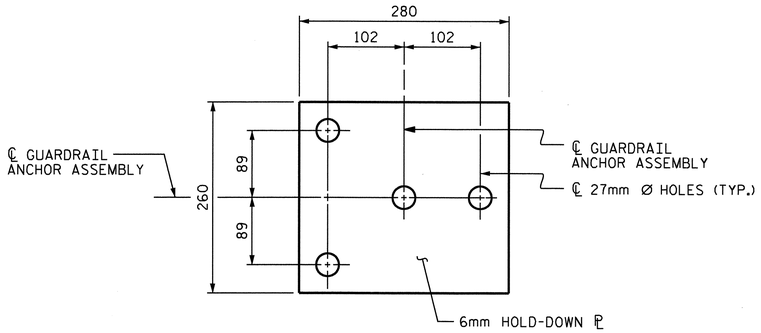

PLAN

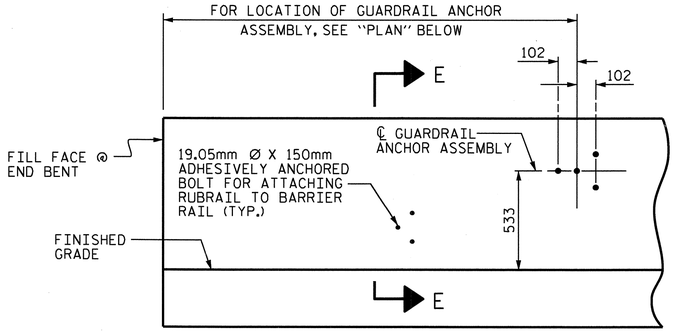

ELEVATION

FOR LOCATION OF RUBRAIL, SEE ROADWAY STD. 862.03

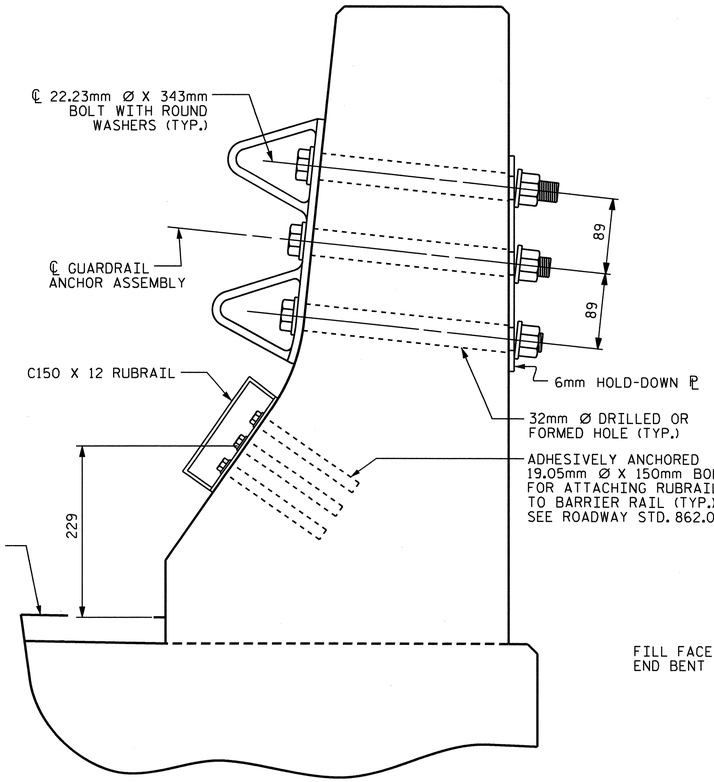

SECTION E-E

GUARDRAIL ANCHOR ASSEMBLY DETAILS

NOTES

THE GUARDRAIL ANCHOR ASSEMBLY SHALL CONSIST OF A 6mm HOLD DOWN PLATE AND 4 - 22.23mm Ø BOLTS WITH NUTS AND WASHERS, RUBRAIL, AND ADHESIVELY ANCHORED BOLTS.

THE HOLD-DOWN PLATE SHALL CONFORM TO AASHTO M270 GRADE 36. AFTER FABRICATION, THE HOLD-DOWN PLATE SHALL BE HOT-DIP GALVANIZED IN ACCORDANCE WITH AASHTO M111.

BOLTS SHALL CONFORM TO THE REQUIREMENTS OF ASTM A307 AND NUTS SHALL CONFORM TO THE REQUIREMENTS OF AASHTO M291. BOLTS, NUTS AND WASHERS SHALL BE GALVANIZED. (AT THE CONTRACTOR'S OPTION, STAINLESS STEEL BOLTS, NUTS AND WASHERS MAY BE USED AS AN ALTERNATE FOR THE 22.23mm Ø GALVANIZED BOLTS, NUTS AND WASHERS. THEY SHALL CONFORM TO OR EXCEED THE MECHANICAL REQUIREMENTS OF ASTM A307. THE USE OF THIS ALTERNATE SHALL BE APPROVED BY THE ENGINEER.)

THE GUARDRAIL ANCHOR ASSEMBLY IS REQUIRED AT ALL POINTS WHERE APPROACH GUARDRAIL IS TO BE ATTACHED TO THE END OF BARRIER RAIL. FOR POINTS OF ATTACHMENT, SEE SKETCH.

AFTER INSTALLATION, THE EXPOSED THREAD OF THE BOLT SHALL BE BURRED WITH A SHARP POINTED TOOL.

THE COST OF THE GUARDRAIL ANCHOR ASSEMBLY SHALL BE INCLUDED IN THE UNIT CONTRACT PRICE BID FOR CONCRETE BARRIER RAIL.

THE 32mm Ø HOLES SHALL BE FORMED OR DRILLED WITH A CORE BIT. IMPACT TOOLS WILL NOT BE PERMITTED. ANY CONCRETE DAMAGED BY THIS WORK SHALL BE REPAIRED TO THE SATISFACTION OF THE ENGINEER.

THE C150 X 12 RUBRAIL IS TO BE ADHESIVELY ANCHORED TO THE RAIL USING THREE 19.05mm Ø X 150mm BOLTS WITH WASHERS. LEVEL ONE FIELD TESTING IS REQUIRED, AND THE YIELD LOAD OF THE 19.05mm Ø BOLTS IS 53.4kN. FOR ADHESIVELY ANCHORED ANCHOR BOLTS OR DOWELS, SEE SPECIAL PROVISIONS. SEE ROADWAY STANDARD 862.03 FOR DETAILS AND LOCATION OF THE RUBRAIL.

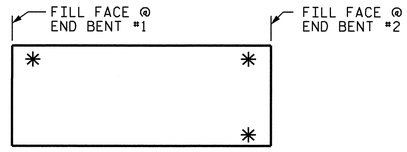

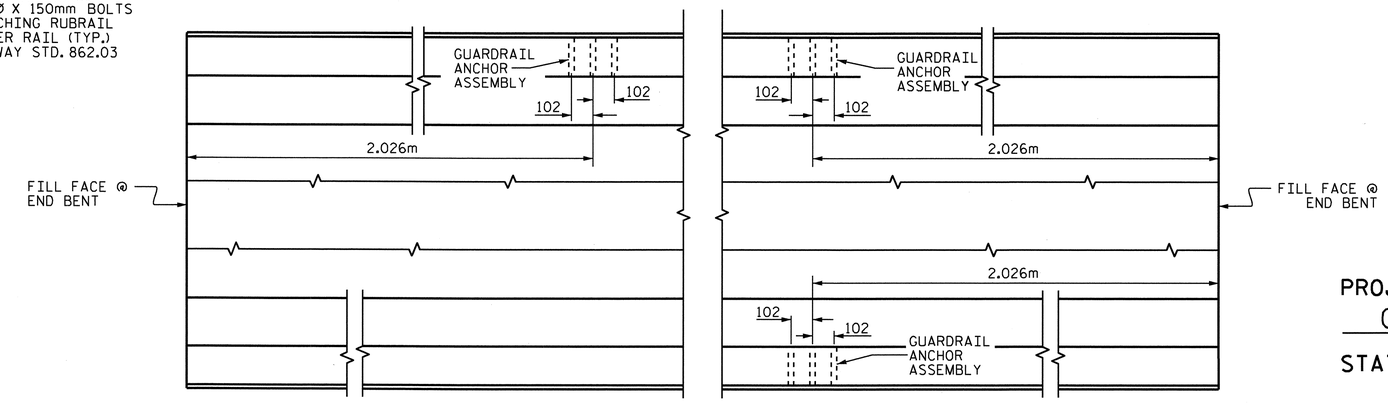

LOCATION OF ANCHORS FOR GUARDRAIL

PROJECT NO. U-2519DA

CUMBERLAND COUNTY

STATION: 19+34.958 -Y1-

STATE OF NORTH CAROLINA
DEPARTMENT OF TRANSPORTATION
RALEIGH

STANDARD

GUARDRAIL ANCHORAGE FOR BARRIER RAIL

(LEFT LANE)

REVISIONS						SHEET NO.
NO.	BY:	DATE:	NO.	BY:	DATE:	S-107
1			3			TOTAL SHEETS
2			4			411

NORTH CAROLINA PROFESSIONAL SEAL 14045 ENGINEER TIMOTHY U. COGGINS 3/29/11

ASSEMBLED BY : PEGGY PARISI	DATE :	7-08	
CHECKED BY : N. RUFFIN	DATE :	9-08	
DRAWN BY : TLA 5/06	ADDED 5/1/06R KMM/GM		
CHECKED BY : GM 5/06			

24-MAR-2011 16:20
R:\TIPProjects-U\U2519da\Structures\azizi\FinalPlans\STR 05\U2519DA_sd_GR_05.dgn
tcoggins

STR. #5

STD. NO. GRA2

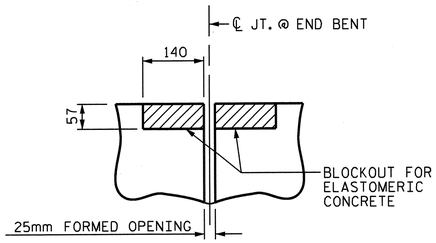

SECTION B-B

EVAZOTE JOINT SEAL
(PRE-SAWED ELASTOMERIC CONCRETE DIMENSIONS)

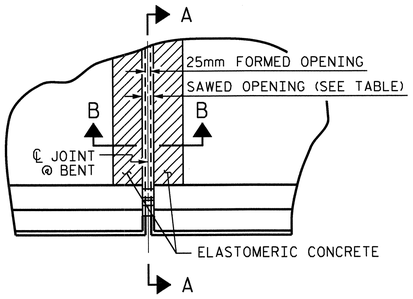

PLAN @ BENT

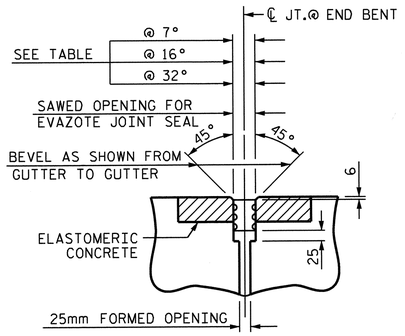

SECTION B-B
EVAZOTE JOINT SEAL

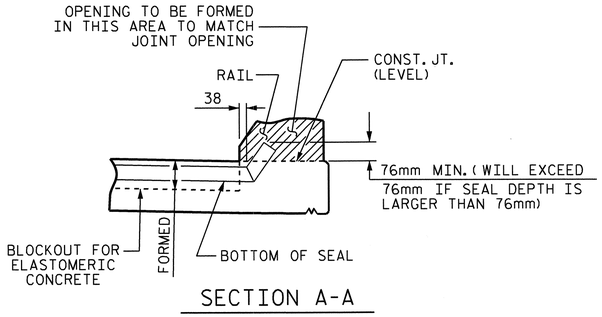

SECTION A-A

JOINT SEAL DETAILS @ BENT

EVAZOTE JOINT SEAL TO BE CUT, HEAT WELDED AND TURNED UP PARALLEL TO SLOPED FACE OF THE BARRIER RAIL.

BILL OF MATERIAL	
BENT NO.	ELASTOMERIC CONCRETE * (CU. m)
1	0.4
2	0.4

* BASED ON THE MINIMUM BLOCKOUT SHOWN.

NOTES

SEE SPECIAL PROVISIONS FOR EVAZOTE JOINT SEALS.

SEE SPECIAL PROVISIONS FOR ELASTOMERIC CONCRETE.

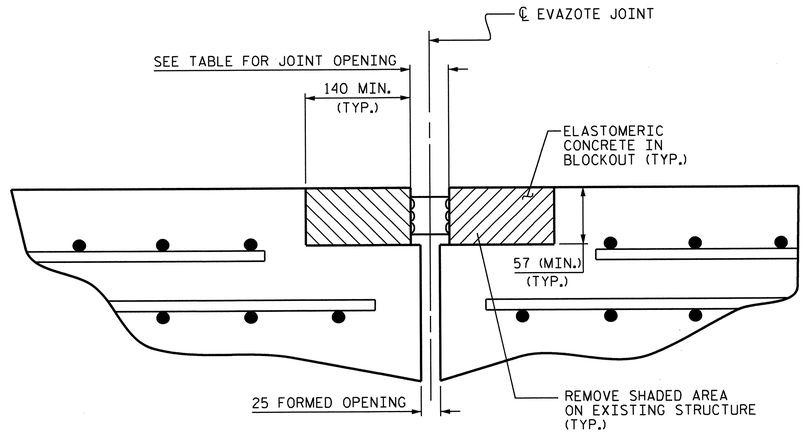

JOINT DETAILS

SECTION NORMAL TO JOINT AT BENT

MOVEMENT AND SETTING AT EVAZOTE JOINT						
BENT NO.	SKEW ANGLE	NOMINAL UNCOMPRESSED SEAL WIDTH	TOTAL MOVEMENT (ALONG ℄ RDWY)	PERPENDICULAR JOINT OPENING AT 7° C	PERPENDICULAR JOINT OPENING AT 16° C	PERPENDICULAR JOINT OPENING AT 32° C
1	90°	64	7	52	51	49
2	90°	64	22	55	51	44

TOTAL MOVEMENT IS CALCULATED ALONG THE CENTERLINE OF ROADWAY.
JOINT OPENINGS ARE MEASURED PERPENDICULAR TO THE JOINT.

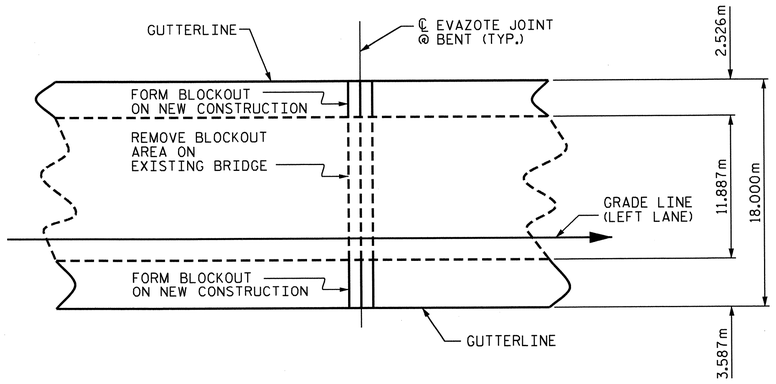

PLAN OF JOINT

TYP. EACH INTERIOR BENT

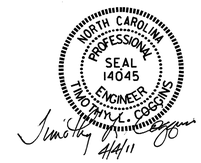

PROJECT NO. U-2519DA
CUMBERLAND COUNTY
STATION: 19+34.958 -Y1-

STATE OF NORTH CAROLINA
DEPARTMENT OF TRANSPORTATION
RALEIGH

STANDARD EVAZOTE JOINT DETAILS

(LEFT LANE)

REVISIONS						SHEET NO.
NO.	BY:	DATE:	NO.	BY:	DATE:	S-108
1			3			TOTAL SHEETS
2			4			411

ASSEMBLED BY : PEGGY PARISI	DATE : 7-08	
CHECKED BY : N. RUFFIN	DATE : 9-08	
DRAWN BY : EEM 1/96	REV. 7/10/01	LES/RDR
CHECKED BY : RGW 1/96	REV. 5/7/03RR	RWW/JTE
	REV. 5/1/06	TLA/GM

04-APR-2011 10:31
R:\TIPProjects-U\U2519da\Structures\azizi\Final Plans\STR 05\U2519DA_sd_JS_05.dgn
tcoggins

STR. #5

STD. NO. AEJ1SM

BILL OF MATERIAL
SPAN "A" LEFT SIDE

BAR	NO.	SIZE	TYPE	LENGTH	WEIGHT
A1	95	#16	STR	2920	431
B1	14	#13	STR	4880	68
B2	11	#16	STR	9340	159
D1	21	#19	STR	900	42
K1	4	#13	STR	2920	12
K3	2	#13	STR	780	2
K5	4	#16	STR	900	6
K6	4	#16	4	1040	6
K9	1	#13	STR	640	1
K10	2	#13	STR	940	2
K11	1	#13	STR	680	1
K12	2	#13	STR	580	1
K13	1	#13	STR	440	1
K22	2	#25	7	3440	27
K23	2	#25	1	2560	20
S1	8	#13	2	1720	14
S2	8	#13	5	620	5
S3	6	#13	6	1500	9
S4	6	#16	3	1520	14
V1	8	#13	STR	1020	8

REINFORCING STEEL 829 kg

CLASS AA CONCRETE 6.1 CU. METER

BILL OF MATERIAL
SPAN "A" RIGHT SIDE

BAR	NO.	SIZE	TYPE	LENGTH	WEIGHT
A2	105	#16	STR	3980	649
B1	20	#13	STR	4880	97
B2	15	#16	STR	9340	217
D1	21	#19	STR	900	42
K2	4	#13	STR	3980	16
K3	2	#13	STR	780	2
K5	2	#16	STR	900	3
K6	2	#16	4	1040	3
K7	2	#16	STR	2000	6
K8	2	#16	4	2140	7
K9	1	#13	STR	640	1
K12	2	#13	STR	580	1
K13	1	#13	STR	440	1
K14	2	#13	STR	2020	4
K15	1	#13	STR	1740	2
K20	2	#25	7	4400	35
K21	2	#25	1	3520	28
S1	12	#13	2	1720	21
S2	12	#13	5	620	7
S3	10	#13	6	1500	15
S4	10	#16	3	1520	24
V1	12	#13	STR	1020	12

REINFORCING STEEL 1193 kg

CLASS AA CONCRETE 8.2 CU. METER

BILL OF MATERIAL
SPAN "B" LEFT SIDE

BAR	NO.	SIZE	TYPE	LENGTH	WEIGHT
A1	204	#16	STR	2920	924
B3	21	#13	STR	7040	147
B4	22	#16	STR	10480	358
D1	45	#19	STR	900	91
K16	8	#16	STR	800	10
K17	8	#16	4	940	12
K22	4	#25	7	3440	55
K23	4	#25	1	2560	41
S4	12	#16	3	1520	28
S6	12	#13	6	1860	22

REINFORCING STEEL 1688 kg

CLASS AA CONCRETE 13.4 CU. METER

BILL OF MATERIAL
SPAN "B" RIGHT SIDE

BAR	NO.	SIZE	TYPE	LENGTH	WEIGHT
A2	226	#16	STR	3980	1396
B3	30	#13	STR	7040	210
B4	30	#16	STR	10480	488
D1	45	#19	STR	900	91
K16	4	#16	STR	800	5
K17	4	#16	4	940	6
K18	4	#16	STR	1900	12
K19	4	#16	4	2040	13
K20	4	#25	7	4400	70
K21	4	#25	1	3520	56
S4	20	#16	3	1520	47
S6	20	#13	6	1860	37

REINFORCING STEEL 2431 kg

CLASS AA CONCRETE 17.8 CU. METER

BILL OF MATERIAL
SPAN "C" LEFT SIDE

BAR	NO.	SIZE	TYPE	LENGTH	WEIGHT
A1	113	#16	STR	2920	512
B5	14	#13	STR	5780	80
B6	11	#16	STR	11160	191
D1	25	#19	STR	900	50
K1	4	#13	STR	2920	12
K3	2	#13	STR	780	2
K5	4	#16	STR	900	6
K6	4	#16	4	1040	6
K9	1	#13	STR	640	1
K10	2	#13	STR	940	2
K11	1	#13	STR	680	1
K12	2	#13	STR	580	1
K13	1	#13	STR	440	1
K22	2	#25	7	3440	27
K23	2	#25	1	2560	20
S1	8	#13	2	1720	14
S2	8	#13	5	620	5
S3	8	#13	6	1500	9
S4	6	#16	3	1520	14
V1	8	#13	STR	1020	8

REINFORCING STEEL 962 kg

CLASS AA CONCRETE 7.3 CU. METER

BILL OF MATERIAL
SPAN "C" RIGHT SIDE

BAR	NO.	SIZE	TYPE	LENGTH	WEIGHT
A2	125	#16	STR	3980	772
B5	20	#13	STR	5780	115
B6	15	#16	STR	11160	260
D1	25	#19	STR	900	50
K2	4	#13	STR	3980	16
K3	2	#13	STR	780	2
K5	2	#16	STR	900	3
K6	2	#16	4	1040	3
K7	2	#16	STR	2000	6
K8	2	#16	4	2140	7
K9	1	#13	STR	640	1
K12	2	#13	STR	580	1
K13	1	#13	STR	440	1
K14	2	#13	STR	2020	4
K15	1	#13	STR	1740	2
K20	2	#25	7	4400	35
K21	2	#25	1	3520	28
S1	12	#13	2	1720	21
S2	12	#13	5	620	7
S3	10	#13	6	1500	15
S4	10	#16	3	1520	24
V1	12	#13	STR	1020	12

REINFORCING STEEL 1385 kg

CLASS AA CONCRETE 9.8 CU. METER

BAR TYPES

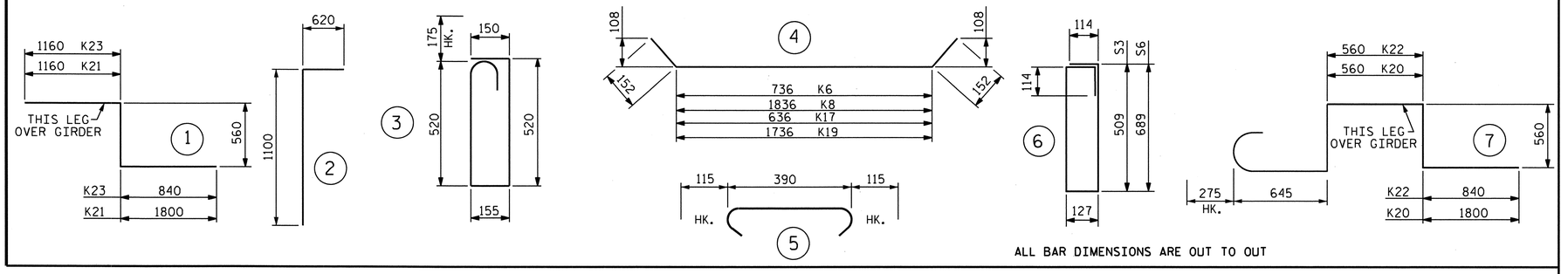

ALL BAR DIMENSIONS ARE OUT TO OUT

SUPERSTRUCTURE BILL OF MATERIAL

	CLASS AA CONCRETE	REINFORCING STEEL
	(CU. METER)	(kg)
SPAN "A" LEFT	6.1	829
SPAN "A" RIGHT	8.2	1193
SPAN "B" LEFT	13.4	1688
SPAN "B" RIGHT	17.8	2431
SPAN "C" LEFT	7.3	962
SPAN "C" RIGHT	9.8	1385
TOTALS**	62.6	8488

** QUANTITIES FOR BARRIER RAIL ARE NOT INCLUDED

SUPERSTRUCTURE REINFORCING STEEL LENGTHS ARE BASED ON THE FOLLOWING MINIMUM SPLICE LENGTHS

BAR SIZE	SUPERSTRUCTURE EXCEPT APPROACH SLABS, PARAPET, AND BARRIER RAIL		APPROACH SLABS		PARAPET AND BARRIER RAIL
	EPOXY COATED	UNCOATED	EPOXY COATED	UNCOATED	
#13	610	540	610	540	840
#16	770	660	770	660	1050
#19	920	790	1190	790	1330
#22	1580	1060			
#25	2080	1390			

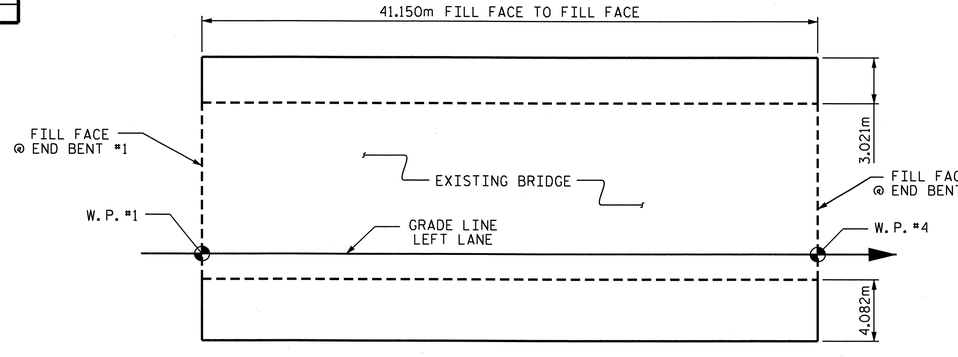

LAYOUT FOR COMPUTING AREA OF REINFORCED CONCRETE DECK SLAB
(SQ. METER = LEFT SIDE 124.3)
(SQ. METER = RIGHT SIDE 168.0)
(TOTAL = 292.3 SQ. METERS)

GROOVING BRIDGE FLOORS

APPROACH SLABS	199.8	SQ.METER
BRIDGE DECK	687.5	SQ.METER
TOTAL	887.3	SQ.METER

PROJECT NO. U-2519DA

CUMBERLAND COUNTY

STATION: 19+34.958 -Y1-

STATE OF NORTH CAROLINA
DEPARTMENT OF TRANSPORTATION
RALEIGH

STANDARD

SUPERSTRUCTURE BILL OF MATERIAL
(LEFT LANE)

NORTH CAROLINA PROFESSIONAL SEAL 14045 ENGINEER TIMOTHY A. COGGINS
4/4/11

REVISIONS						SHEET NO.
NO.	BY:	DATE:	NO.	BY:	DATE:	S-109
1			3			TOTAL SHEETS
2			4			411

ASSEMBLED BY : PEGGY PARISI DATE : 8-08
CHECKED BY : N. RUFFIN DATE : 9-08

DRAWN BY : JMB 5/87
CHECKED BY : SJD 9/87

REV. 5/16/97 EEM/RGW
REV. 5/1/06 TLA/GM

04-APR-2011 14:41
R:\Structures\azizi\Final Plans\STR 05\U2519DA_sd_BM_05.dgn
nruffin

STR. #5

STD. NO. BOM2SM

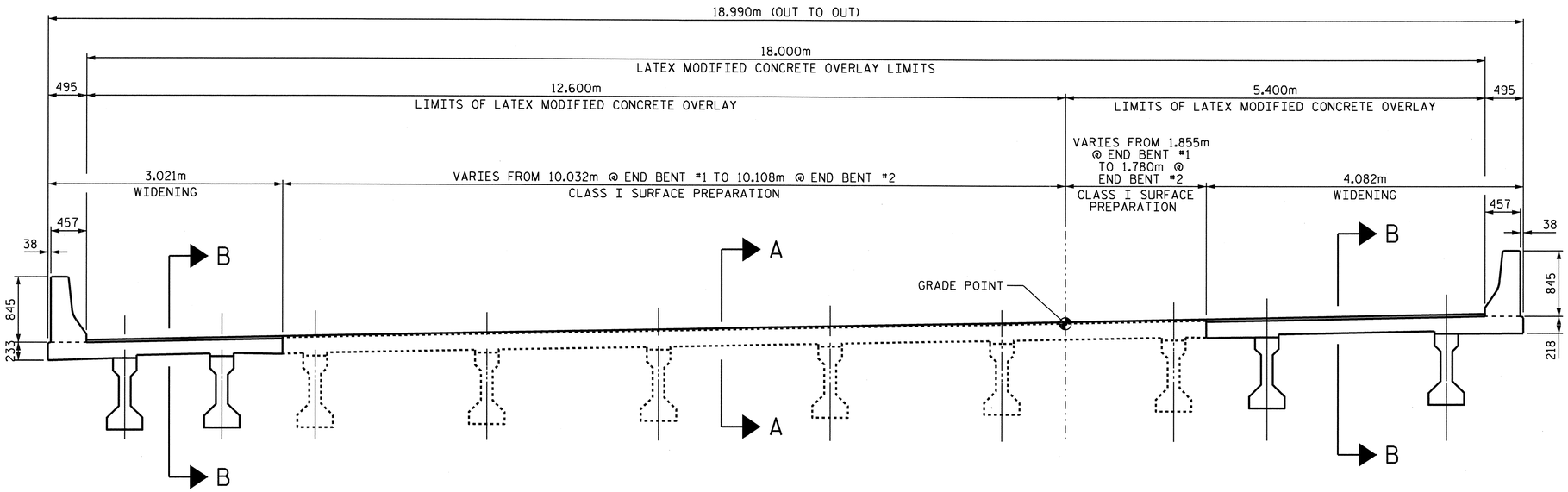

TYPICAL SECTION

NOTES:

QUANTITIES FOR CLASS II SURFACE PREPARATION ARE ESTIMATED. THE QUANTITIES TO BE PAID FOR WILL BE THE ACTUAL NUMBER OF SQUARE METERS OF CLASS II SURFACE PREPARATION COMPUTED BY THE ENGINEER FROM MEASUREMENTS OF THE AREAS THAT ARE PREPARED TO RECEIVE THE OVERLAY.

FOR CLASS I, IA, AND II SURFACE PREPARATION, SEE SPECIAL PROVISION FOR REPAIR OF BRIDGE DECKS AND APPROACH PAVEMENT WITH LATEX MODIFIED CONCRETE.

FOR LATEX MODIFIED CONCRETE AND PLACING AND FINISHING OF LATEX MODIFIED CONCRETE, SEE SPECIAL PROVISION FOR LATEX MODIFIED CONCRETE.

SPLICES FOR REINFORCING STEEL SHALL BE WELDED AS DETAILED AND ALL WELDING SHALL CONFORM TO THE LATEST EDITION OF THE AMERICAN WELDING SOCIETY REINFORCING STEEL CODE (AWS D12.1). CHEMICAL ANALYSIS OF THE EXISTING REINFORCING STEEL WILL NOT BE REQUIRED.

FOR PLACING SEQUENCE OF THE LATEX MODIFIED CONCRETE OVERLAY, SEE "CONSTRUCTION SEQUENCE" SHEET.

CLASS I SURFACE PREPARATION SHALL BE PERFORMED ON THE EXISTING DECK AND APPROACH SLABS. THE LATEX MODIFIED CONCRETE OVERLAY SHALL BE GROOVED IN ACCORDANCE WITH THE STANDARD SPECIFICATIONS.

FOR GROOVING BRIDGE FLOORS QUANTITIES, SEE "BILL OF MATERIAL" SHEET.

BILL OF MATERIAL

	CLASS I SURFACE PREPARATION	CLASS IA SURFACE PREPARATION	CLASS II SURFACE PREPARATION	LATEX MODIFIED CONCRETE OVERLAY	PLACING AND FINISHING OF LATEX MODIFIED CONCRETE OVERLAY
	SQ. METERS	SQ. METERS	SQ. METERS	CU. METERS	SQ. METERS
DECK REPAIR	489.2	0	24.5	23.7	740.7
APPROACH SLAB	0	89.2	0	7.0	219.5
TOTAL	489.2	89.2	24.5	30.7	960.2

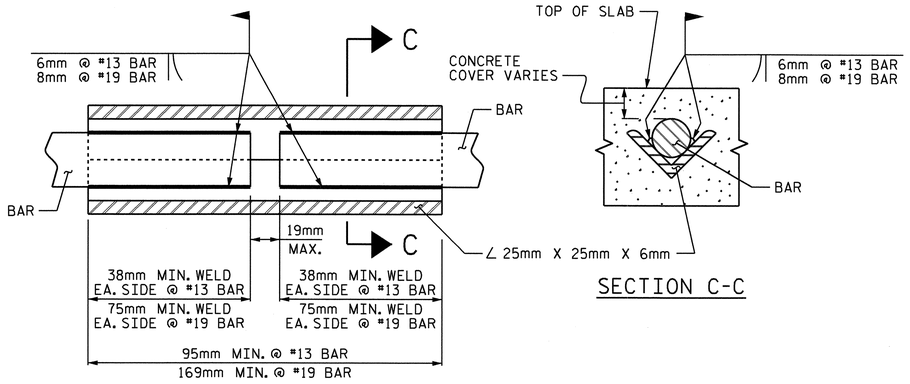

PLAN VIEW

SECTION C-C

WELD DETAILS FOR SPLICING REINFORCING STEEL

CLASS II SURFACE PREPARATION

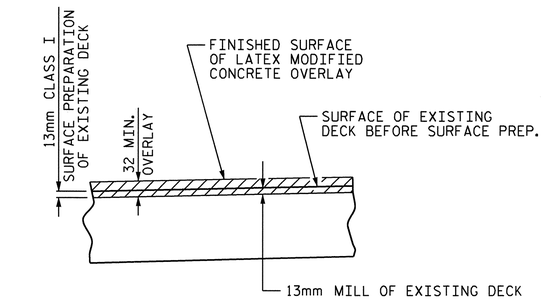

SECTION A-A

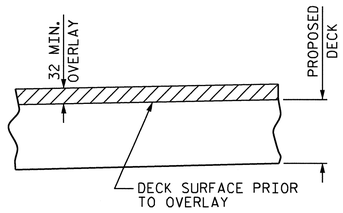

SECTION B-B

NORTH CAROLINA PROFESSIONAL SEAL 14045 ENGINEER TIMOTHY L. COGGINS 3/29/11

PROJECT NO. U-2519DA

CUMBERLAND COUNTY

STATION: 19+34.958 -Y1-

SHEET 1 OF 2

STATE OF NORTH CAROLINA
DEPARTMENT OF TRANSPORTATION
RALEIGH

SUPERSTRUCTURE

DECK WIDENING AND REHABILITATION

(LEFT LANE)

REVISIONS						SHEET NO.
NO.	BY:	DATE:	NO.	BY:	DATE:	S-110
1			3			TOTAL SHEETS
2			4			411

STR. #5

DRAWN BY : Neil M. Ruffin DATE : 9/25/08
CHECKED BY : T.L. COGGINS DATE : 10/2008

28-MAR-2011 15:24
R:\Structures\azizi\Final Plans\STR 05\U2519DA_sd_RH_05.dgn
nruffin

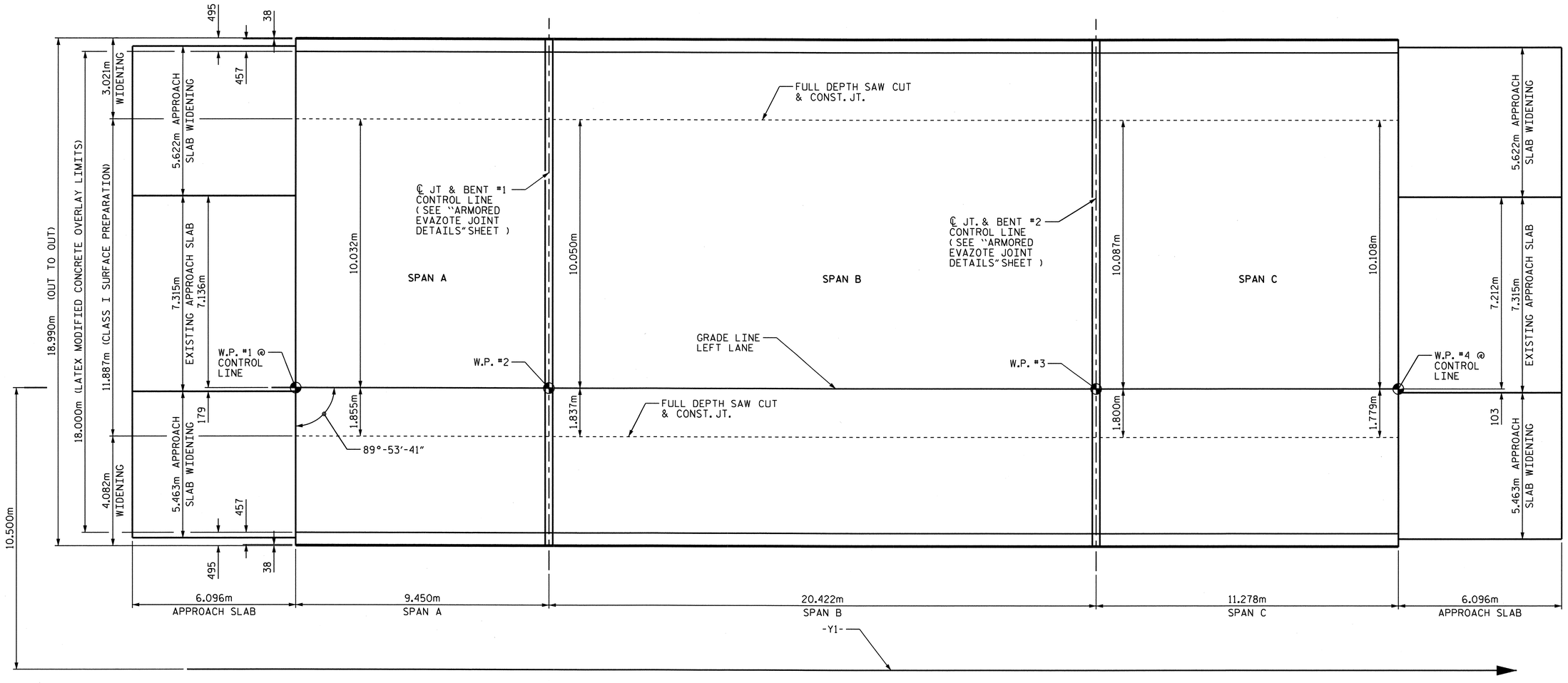

PROJECT NO. U-2519DA

CUMBERLAND COUNTY

STATION: 19+34.958 -Y1-

SHEET 2 OF 2

STATE OF NORTH CAROLINA
DEPARTMENT OF TRANSPORTATION
RALEIGH

SUPERSTRUCTURE

DECK WIDENING AND REHABILITATION

(LEFT LANE)

NORTH CAROLINA PROFESSIONAL SEAL 14045 ENGINEER TIMOTHY L. COGGINS

3/29/11

REVISIONS						SHEET NO.
NO.	BY:	DATE:	NO.	BY:	DATE:	S-111
1			3			TOTAL SHEETS
2			4			411

STR. #5

DRAWN BY : Neil M. Ruffin DATE : 9/29/08
CHECKED BY : T.L. COGGINS DATE : 10/2008

29-MAR-2011 10:54
R:\Structures\azizi\Final Plans\STR 05\U2519DA_sd_RH_05.dgn
nruffin

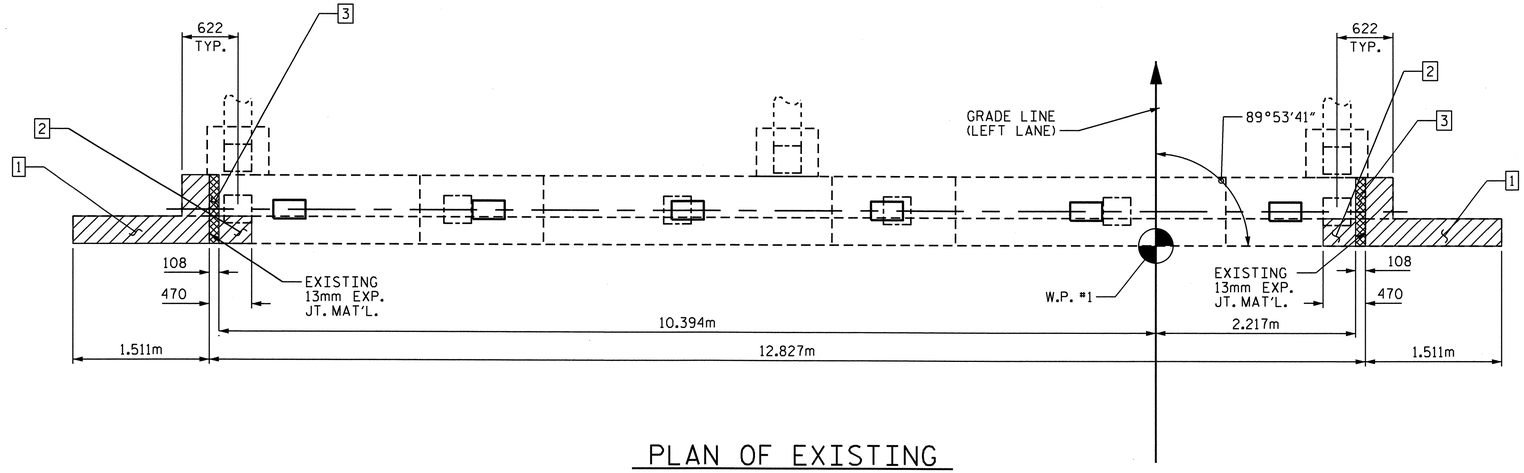

PLAN OF EXISTING

EAR WALL REMOVAL SEQUENCE

1. REMOVE EXISTING EAR WALL UP TO EXP. JOINT MATERIAL AND SAW CUT CAP, NOT TO DISTURB BRACE PILE BLOCK AND REINFORCEMENT WITHIN.
2. THE 470mm EXISTING CURTAIN WALL SHALL BE REMOVED BY SAW CUT DOWN TO TOP OF CAP, NOT TO DISTURB THE EXISTING CAP.
3. THE 108mm PORTION OF EXISTING CAP SHALL BE REMOVED BY HAND TOOLS NOT TO DISTURB THE BRACE PILE BLOCK, PRESTRESSED PILES AND REINFORCEMENT WITHIN THIS AREA.

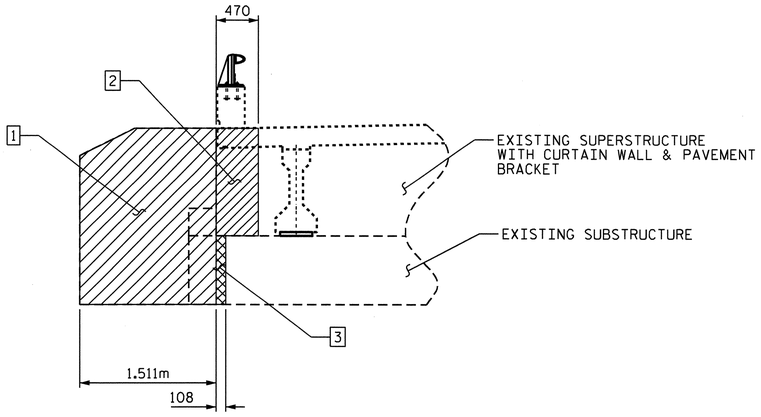

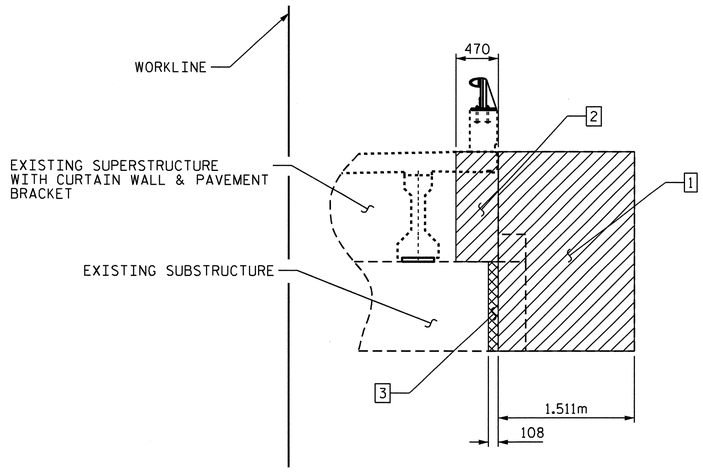

ELEVATION OF EXISTING

PROJECT NO. U-2519DA
CUMBERLAND COUNTY
STATION: 19+34.958 -Y1-

SHEET 1 OF 4

STATE OF NORTH CAROLINA
DEPARTMENT OF TRANSPORTATION
RALEIGH

SUBSTRUCTURE
END BENT #1
EXISTING CAP

(LEFT LANE)

REVISIONS						SHEET NO.
NO.	BY:	DATE:	NO.	BY:	DATE:	S-112
1			3			TOTAL SHEETS
2			4			411

NORTH CAROLINA PROFESSIONAL SEAL 14045 ENGINEER TIMOTHY L. COGGINS
3/6/11

DRAWN BY : Neil M Ruffin DATE : 8/19/08
CHECKED BY : J.B. WILSON DATE : 9/15/08

28-MAR-2011 15:24
R:\Structures\azizi\FinalPlans\STR 05\U2519DA_sd_E*_05.dgn
nruffin

STR #5

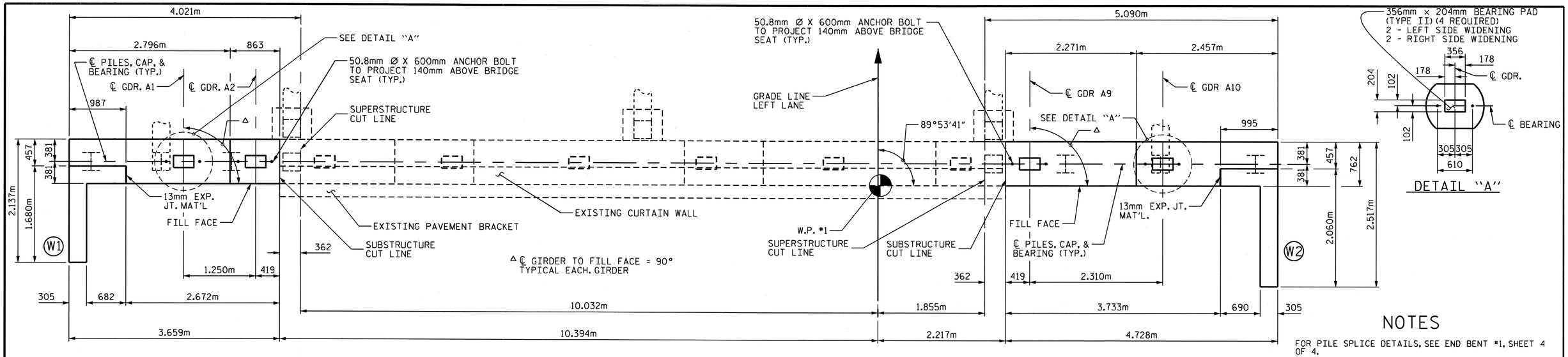

PLAN

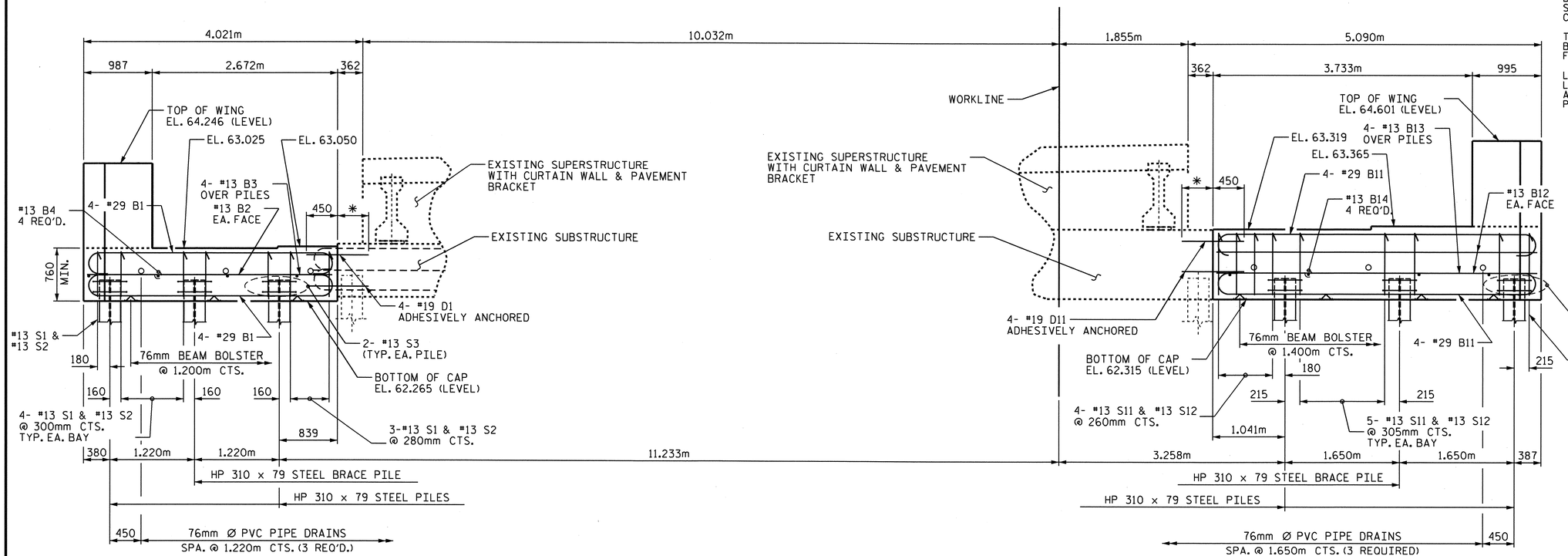

ELEVATION

*EMBEDMENT LENGTH TO BE DETERMINED BY THE SELECTED MANUFACTURER

NOTES

FOR PILE SPLICE DETAILS, SEE END BENT #1, SHEET 4 OF 4.

CURTAIN WALL SHALL BE PLACED BEFORE APPLYING THE EPOXY PROTECTIVE COATING.

THE TOP SURFACE AREAS OF THE END BENT CAPS SHALL BE CURED IN ACCORDANCE WITH THE STANDARD SPECIFICATIONS EXCEPT THE MEMBRANE CURING COMPOUND METHOD SHALL NOT BE USED.

THE TOP SURFACE OF THE CAP EXCEPT THE BRIDGE SEAT BUILDUPS SHALL BE SLOPED TRANSVERSELY FROM THE FILL FACE TO THE BACK FACE AT THE RATE OF 2 %.

LEVEL 1 FIELD TESTING IS REQUIRED, AND THE YIELD LOAD OF THE DOWELS IS 120 KN. FOR ADHESIVELY ANCHORED ANCHOR BOLTS OR DOWELS, SEE SPECIAL PROVISIONS.

NORTH CAROLINA PROFESSIONAL SEAL 14045 ENGINEER TIMOTHY L. COGGINS
4/4/11

DRAWN BY : Neil M Ruffin DATE : 8/19/08
CHECKED BY : J.B. WILSON DATE : 9/15/08

04-APR-2011 15:25
R:\Structures\azizi\FinalPlans\STR 05\U2519DA_sd_E*_05.dgn
nruffin

PROJECT NO. U-2519DA
CUMBERLAND COUNTY
STATION: 19+34.958 -Y1-

SHEET 2 OF 4

STATE OF NORTH CAROLINA
DEPARTMENT OF TRANSPORTATION
RALEIGH

SUBSTRUCTURE
END BENT #1
& DETAILS

(LEFT LANE)

REVISIONS						SHEET NO.
NO.	BY:	DATE:	NO.	BY:	DATE:	S-113
1			3			TOTAL SHEETS
2			4			411

STR #5

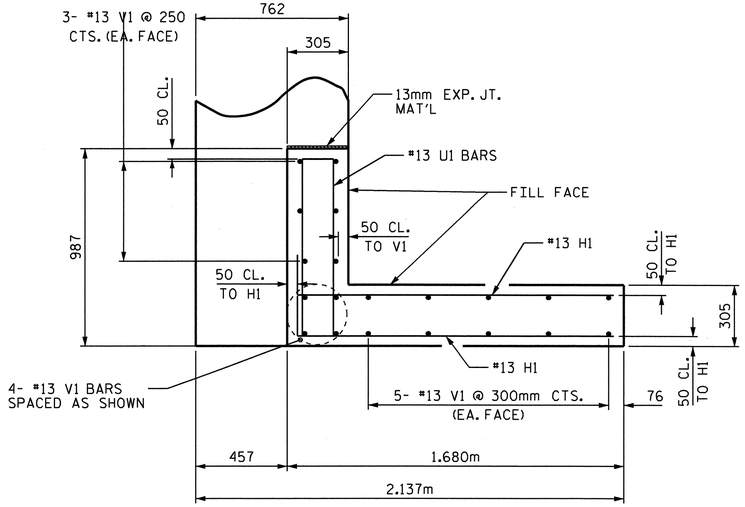

PLAN OF WING (W1)

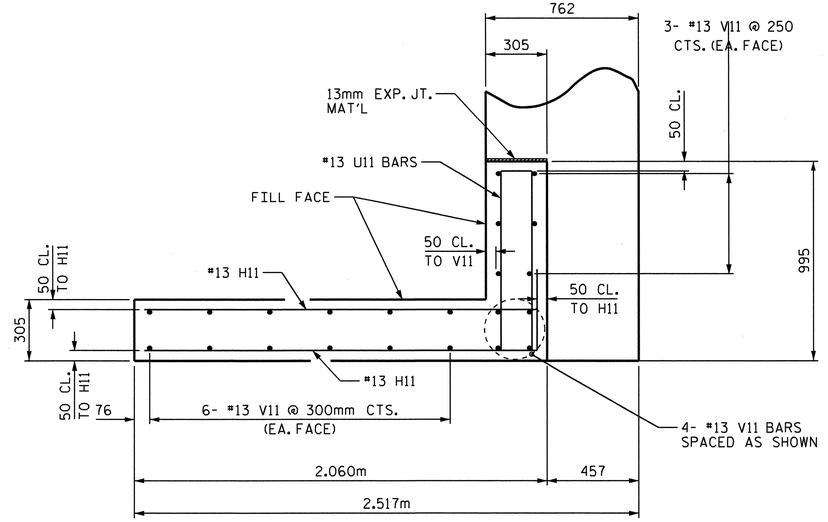

PLAN OF WING (W2)

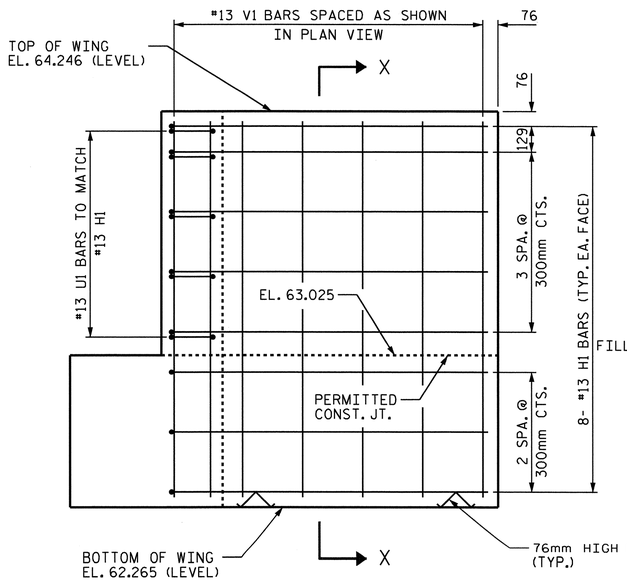

ELEVATION OF WING (W1)

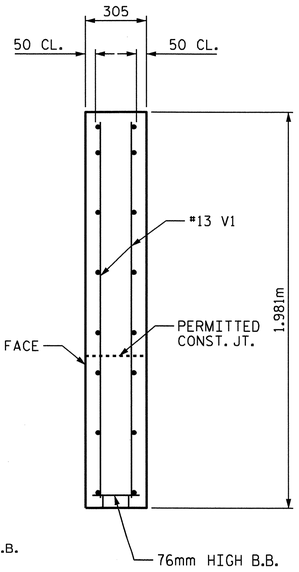

SECTION X-X

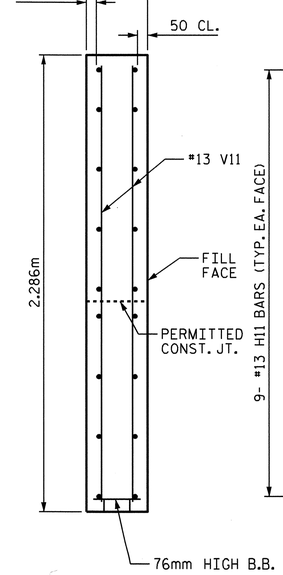

SECTION Y-Y

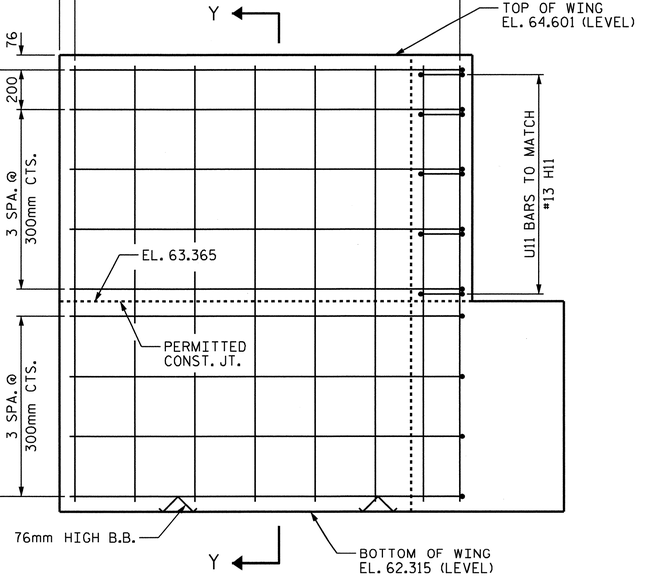

ELEVATION OF WING (W2)

LEFT SIDE WIDENING

RIGHT SIDE WIDENING

NORTH CAROLINA PROFESSIONAL SEAL 14045 ENGINEER TIMOTHY W. COGGINS 3/29/11

PROJECT NO. U-2519DA

CUMBERLAND COUNTY

STATION: 19+34.958 -Y1-

SHEET 3 OF 4

STATE OF NORTH CAROLINA
DEPARTMENT OF TRANSPORTATION
RALEIGH

SUBSTRUCTURE
END BENT #1
& DETAILS

(LEFT LANE)

REVISIONS						SHEET NO.
NO.	BY:	DATE:	NO.	BY:	DATE:	S-114
1			3			TOTAL SHEETS
2			4			411

STR. #5

DRAWN BY : Neil M. Ruffin DATE : 8/19/08
CHECKED BY : J.B. WILSON DATE : 9/15/08

28-MAR-2011 15:24
R:\Structures\azizi\Final Plans\STR 05\U2519DA_sd_E*_05.dgn
nruffin

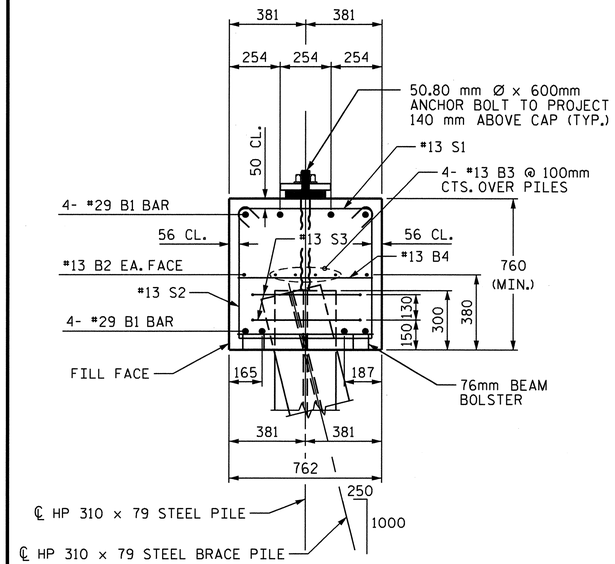

SECTION THRU CAP LEFT SIDE

MATCH EXISTING CAP

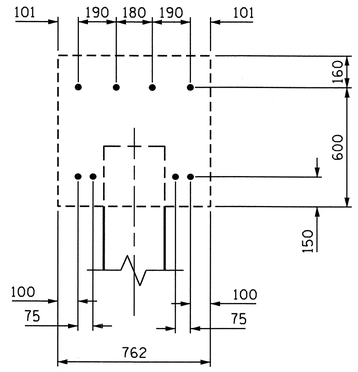

END VIEW

LEFT END ONLY

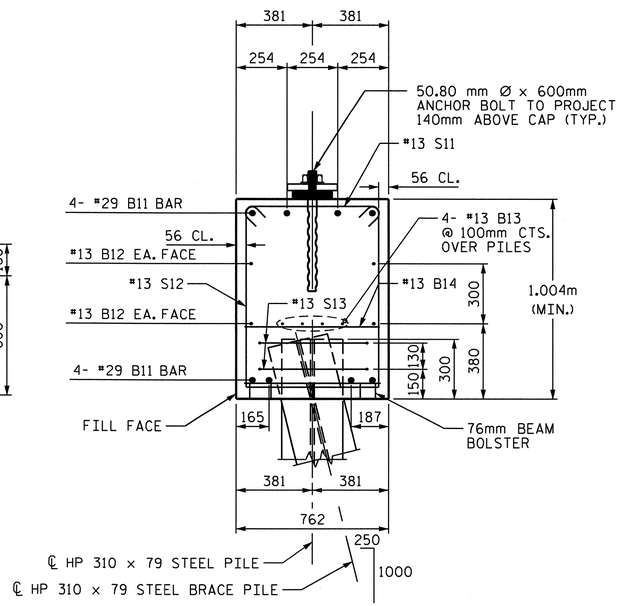

SECTION THRU CAP RIGHT SIDE

MATCH EXISTING CAP

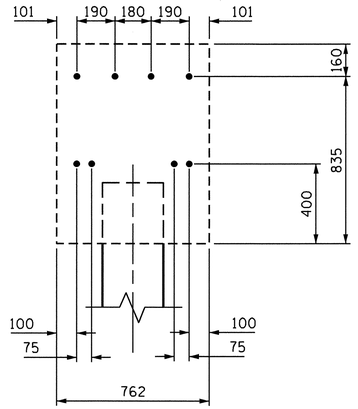

END VIEW

RIGHT END ONLY

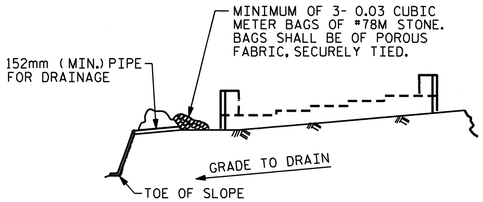

BAGGED STONE AND PIPE SHALL BE PLACED IMMEDIATELY AFTER COMPLETION OF END BENT EXCAVATION. PIPE MAY BE EITHER CONCRETE, CORRUGATED STEEL, CORRUGATED ALUMINUM ALLOY, OR CORRUGATED PLASTIC. PERFORATED PIPE WILL NOT BE ALLOWED.

BAGGED STONE SHALL REMAIN IN PLACE UNTIL THE ENGINEER DIRECTS THAT IT BE REMOVED. THE CONTRACTOR SHALL REMOVE AND DISPOSE OF SILT ACCUMULATIONS AT BAGGED STONE WHEN SO DIRECTED BY THE ENGINEER. BAGS SHALL BE REMOVED AND REPLACED WHENEVER THE ENGINEER DETERMINES THAT THEY HAVE DETERIORATED AND LOST THEIR EFFECTIVENESS.

NO SEPARATE PAYMENT WILL BE MADE FOR THIS WORK AND THE ENTIRE COST OF THIS WORK SHALL BE INCLUDED IN THE UNIT CONTRACT PRICE FOR THE SEVERAL PAY ITEMS.

TEMPORARY DRAINAGE AT END BENT

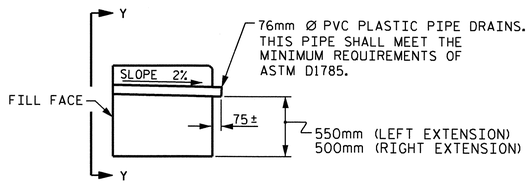

SECTION THRU CAP

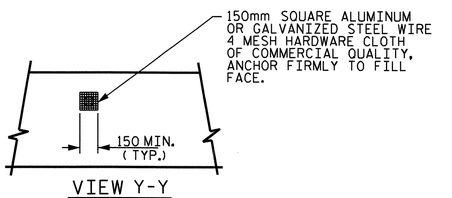

VIEW Y-Y

NOTE: NO SEPARATE PAYMENT WILL BE MADE FOR FURNISHING AND INSTALLING THE PVC PLASTIC PIPE DRAINS, HARDWARE CLOTH AND FASTENERS. THE ENTIRE COST OF THIS WORK SHALL BE INCLUDED IN THE UNIT CONTRACT PRICE BID FOR THE SEVERAL PAY ITEMS.

PIPE DRAIN DETAILS

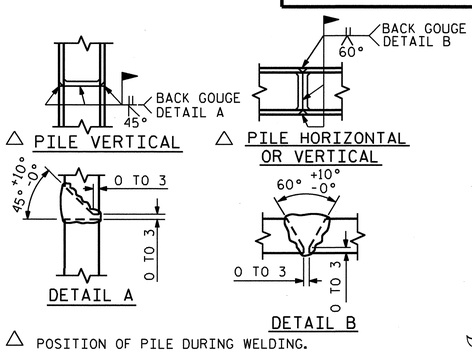

PILE SPLICE DETAILS

END BENT #1 LEFT SIDE WIDENING

BAR TYPES

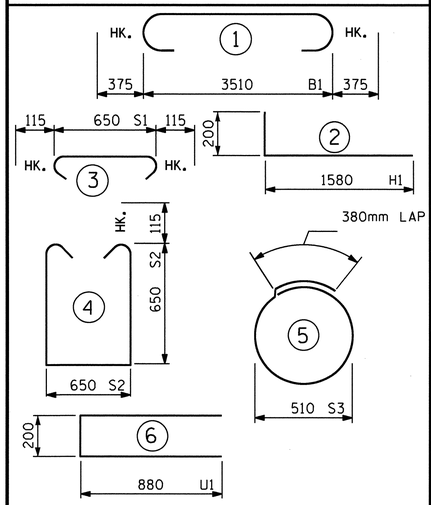

ALL BAR DIMENSIONS ARE OUT TO OUT.

BILL OF MATERIAL

BAR	NO	SIZE	TYPE	LENGTH	WEIGHT
B1	8	29	1	4260	172
B2	2	13	STR	3560	7
B3	4	13	STR	3560	14
B4	4	13	STR	660	3
D1	8	19	STR	900	16
H1	8	13	2	1780	14
S1	12	13	3	880	10
S2	12	13	4	2180	26
S3	6	13	5	1980	12
U1	5	13	6	1960	10
V1	20	13	STR	1880	37
REINFORCING STEEL			kg		321

CLASS "A" CONCRETE BREAKDOWN	
POUR #1 CAP & LOWER WING	2.5 m³
POUR #2 UPPER WING	1.0 m³
TOTAL	3.5 m³

HP 310 x 79 STEEL PILES		
No. 3	METERS	63
PILE REDRIVES	EACH	1

END BENT #1 RIGHT SIDE WIDENING

BAR TYPES

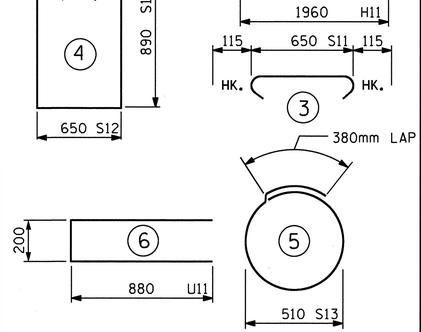

ALL BAR DIMENSIONS ARE OUT TO OUT.

BILL OF MATERIAL

BAR	NO	SIZE	TYPE	LENGTH	WEIGHT
B11	8	29	1	5320	215
B12	4	13	STR	4620	18
B13	4	13	STR	4620	18
B14	4	13	STR	660	3
D11	8	19	STR	900	16
H11	18	13	2	2160	39
S11	15	13	3	880	13
S12	15	13	4	2660	40
S13	6	13	5	1980	12
U11	5	13	6	1960	10
V11	22	13	STR	2180	48
REINFORCING STEEL			kg		432

CLASS "A" CONCRETE BREAKDOWN	
POUR #1 CAP & LOWER WING	4.3 m³
POUR #2 UPPER WING	1.1 m³
TOTAL	5.4 m³

HP 310 x 79 STEEL PILES		
No. 3	METERS	63

NORTH CAROLINA PROFESSIONAL SEAL 14045 ENGINEER TIMOTHY W. COGGINS 3/31/11

PROJECT NO. U-2519DA

CUMBERLAND COUNTY

STATION: 19+34.958 -Y1-

SHEET 4 OF 4

STATE OF NORTH CAROLINA
DEPARTMENT OF TRANSPORTATION
RALEIGH

SUBSTRUCTURE

END BENT #1 & DETAILS

(LEFT LANE)

REVISIONS						SHEET NO.
NO.	BY:	DATE:	NO.	BY:	DATE:	S-115
1			3			TOTAL SHEETS
2			4			411

DRAWN BY : Neil M. Ruffin DATE : 8/19/08
CHECKED BY : J.B. WILSON DATE : 9/15/08

STR #5

NOTES

STIRRUPS IN CAP MAY BE SHIFTED AS NECESSARY TO CLEAR ANCHOR BOLTS.

THE TOP SURFACE AREAS OF THE BENT CAPS SHALL BE CURED IN ACCORDANCE WITH THE STANDARD SPECIFICATIONS EXCEPT THE MEMBRANE CURING COMPOUND METHOD SHALL NOT BE USED.

GALVANIZE THE TOP OF EACH INTERIOR BENT PILE A MINIMUM OF 11 METERS. GALVANIZE IN ACCORDANCE WITH SECTION 1076 OF THE STANDARD SPECIFICATIONS.

FOR REINFORCING STEEL IN PIPE PILES, SEE "457mm STEEL PIPE PILE" SHEET.

CONCRETE DISPLACEMENT BY THE FILLED 457mm STEEL PIPE PILE HAS BEEN DEDUCTED FROM THE QUANTITY OF CLASS "A" CONCRETE FOR THE BENT CAP.

LEVEL 1 FIELD TESTING IS REQUIRED, AND THE YIELD LOAD OF THE DOWELS IS 120 KN. FOR ADHESIVELY ANCHORED ANCHOR BOLTS OR DOWELS, SEE SPECIAL PROVISIONS.

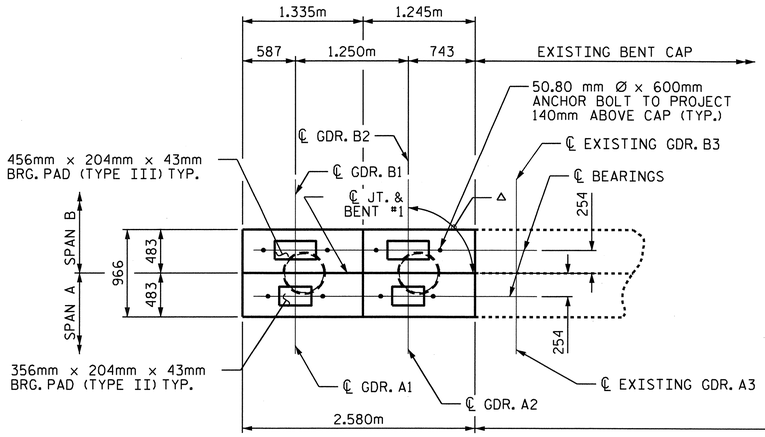

PLAN (LEFT SIDE)

△ ANGLE BETWEEN ℄ GIRDER AND ℄ BENT CONTROL LINE = 90°0'0" (TYP. ALL GIRDERS BOTH SPANS)

10.088m

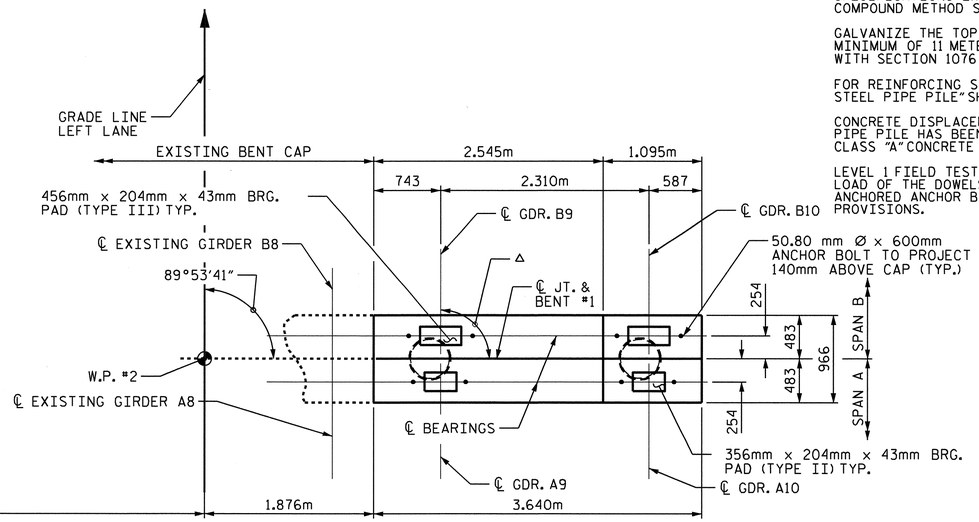

PLAN (RIGHT SIDE)

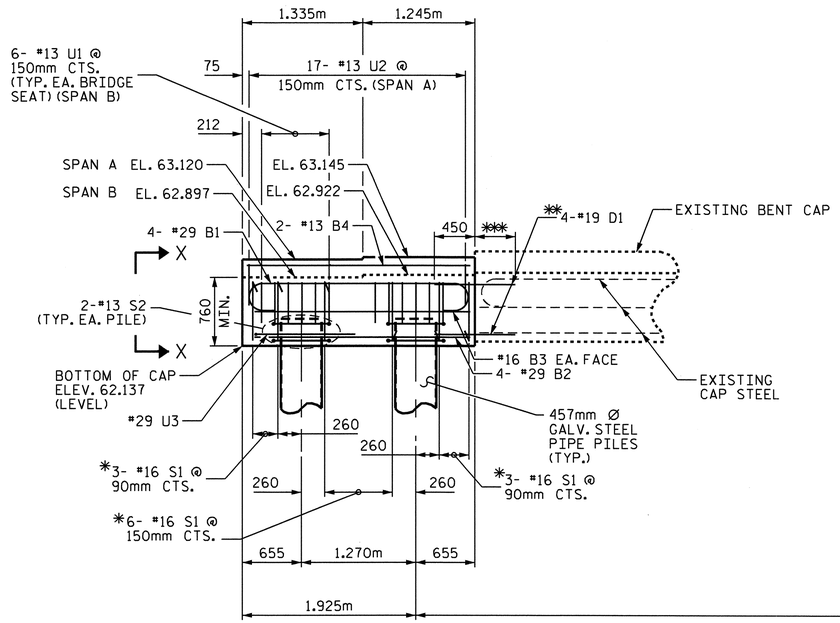

* INVERT ALTERNATE STIRRUPS

** ADHESIVE ANCHORED DOWELS INTO EXISTING CAP

*** EMBEDMENT LENGTH TO BE DETERMINED BY THE SELECTED MANUFACTURER

ELEVATION (LEFT SIDE)

SEE VIEW X-X, SHEET 2 OF 2, FOR ADDITIONAL REINFORCEMENT STEEL IN END OF CAP.

10.743m

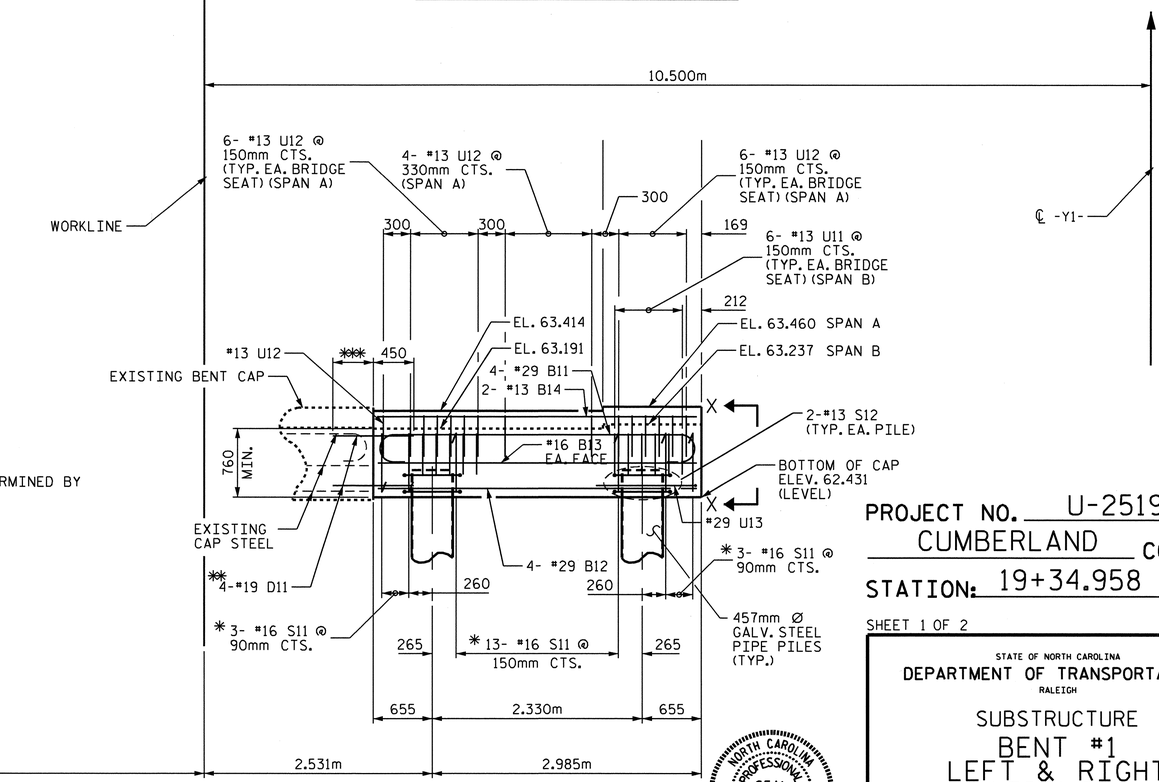

ELEVATION (RIGHT SIDE)

SEE VIEW X-X, SHEET 2 OF 2, FOR ADDITIONAL REINFORCEMENT STEEL IN END OF CAP.

NORTH CAROLINA PROFESSIONAL SEAL 14045 ENGINEER TIMOTHY D. COGGINS 4/19/11

PROJECT NO. U-2519DA

CUMBERLAND COUNTY

STATION: 19+34.958 -Y1-

SHEET 1 OF 2

STATE OF NORTH CAROLINA
DEPARTMENT OF TRANSPORTATION
RALEIGH

SUBSTRUCTURE
BENT #1
LEFT & RIGHT WIDENING
(LEFT LANE)

REVISIONS						SHEET NO.
NO.	BY:	DATE:	NO.	BY:	DATE:	S-116
1			3			TOTAL SHEETS
2			4			411

DRAWN BY : Neil M. Raffin DATE : 8/13/08
CHECKED BY : J.B. WILSON DATE : 9/17/08

04-APR-2011 09:05
R:\TIPProjects-U\U2519da\Structures\azlzl\Final Plans\STR 05\u2519da_sd_b*_05.dgn
tcoggins

STR. #5

SPAN A SPAN B

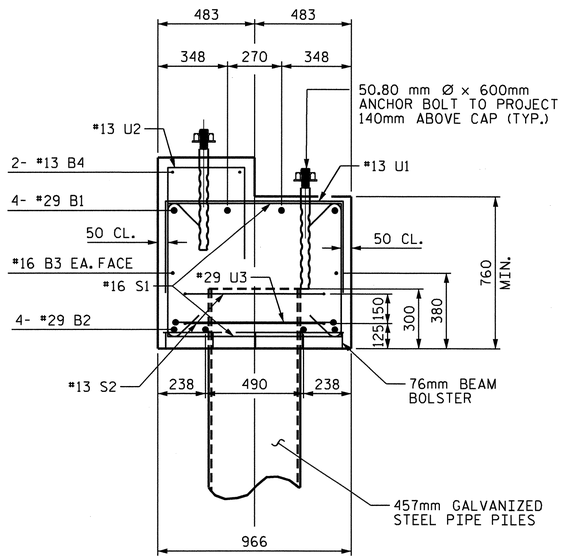

SECTION THRU CAP LEFT SIDE

MATCH EXISTING CAP LEFT SIDE

SPAN A SPAN B

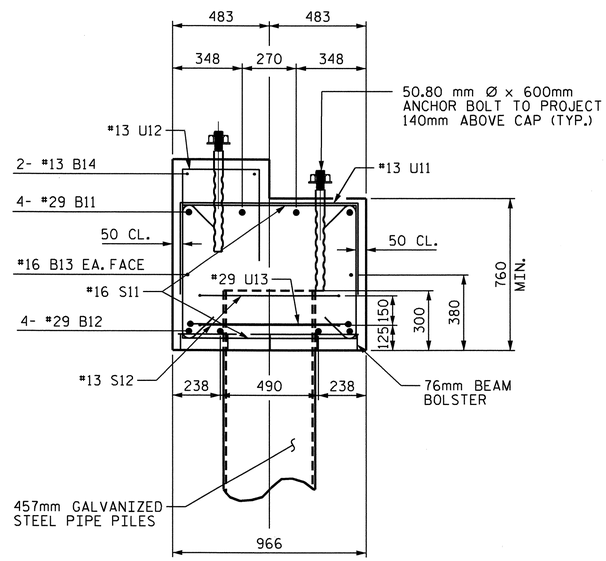

SECTION THRU CAP RIGHT SIDE

MATCH EXISTING CAP RIGHT SIDE

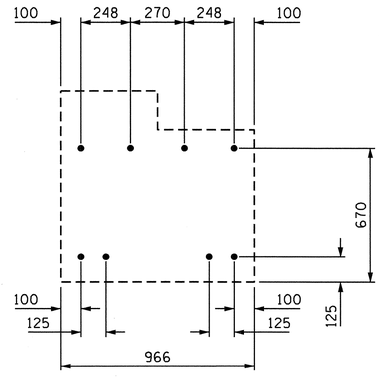

SECTION THRU EXISTING CAP

PROPOSED DOWELING OF #19 "D" BARS

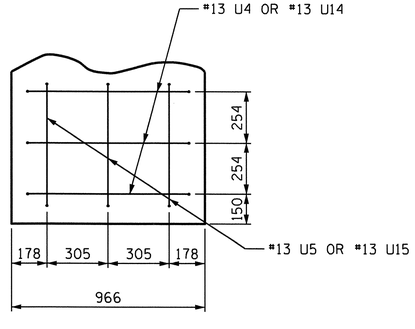

VIEW X-X

BENT NO. 1 LEFT SIDE

BILL OF MATERIAL

BAR	NO	SIZE	TYPE	LENGTH	WEIGHT
B1	4	29	1	3180	64
B2	4	29	STR	2480	50
B3	2	16	STR	2480	8
B4	2	13	STR	2480	5
D1	8	19	STR	900	16
S1	12	16	2	2440	45
S2	4	13	4	2620	10
U1	12	13	3	1760	21
U2	17	13	3	1280	22
U3	1	29	3	3060	15
U4	3	13	3	1720	5
U5	3	13	3	1480	4
REINFORCING STEEL			kg		265

CLASS "A" CONCRETE BREAKDOWN

POUR #1	(CAP)	2.1 m3
TOTAL		2.1 m3

PP 457 x 12.70 GALVANIZED STEEL PILES		
No. 2	METERS	44
PILE REDRIVES	EACH	1

BAR TYPES

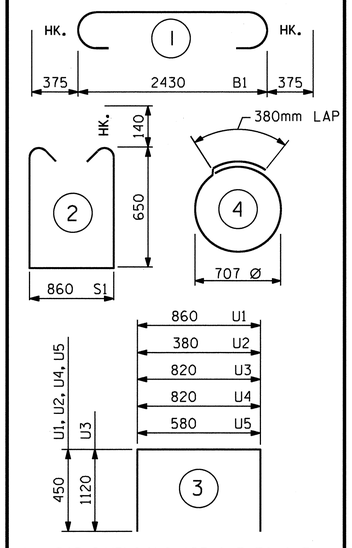

ALL BAR DIMENSIONS ARE OUT TO OUT.

BENT NO. 1 RIGHT SIDE

BILL OF MATERIAL

BAR	NO	SIZE	TYPE	LENGTH	WEIGHT
B11	4	29	1	4240	86
B12	4	29	STR	3540	72
B13	2	16	STR	3540	11
B14	2	13	STR	3540	7
D11	8	19	STR	900	16
S11	19	16	2	2440	72
S12	4	13	4	2620	10
U11	12	13	3	1760	21
U12	17	13	3	1280	22
U13	1	29	3	3060	15
U14	3	13	3	1720	5
U15	3	13	3	1480	4
REINFORCING STEEL			kg		341

CLASS "A" CONCRETE BREAKDOWN

POUR #1	(CAP)	3.0 m3
TOTAL		3.0 m3

PP 457 x 12.70 GALVANIZED STEEL PILES		
No. 2	METERS	44

BAR TYPES

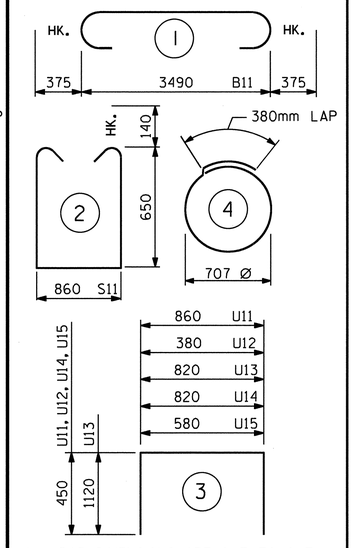

ALL BAR DIMENSIONS ARE OUT TO OUT.

PROJECT NO. U-2519DA

CUMBERLAND COUNTY

STATION: 19+34.958 -Y1-

SHEET 2 OF 2

STATE OF NORTH CAROLINA
DEPARTMENT OF TRANSPORTATION
RALEIGH

SUBSTRUCTURE

BENT #1 LEFT & RIGHT WIDENING (LEFT SIDE)

NORTH CAROLINA PROFESSIONAL SEAL 14045 ENGINEER TIMOTHY W. COGGINS 3/29/11

REVISIONS						SHEET NO.
NO.	BY:	DATE:	NO.	BY:	DATE:	S-117
1			3			TOTAL SHEETS
2			4			411

DRAWN BY : Neil M. Ruffin DATE : 8/13/08
CHECKED BY : J.B. WILSON DATE : 9/17/08

STR. #5

NOTES

STIRRUPS IN CAP MAY BE SHIFTED AS NECESSARY TO CLEAR ANCHOR BOLTS.

THE TOP SURFACE AREAS OF THE BENT CAPS SHALL BE CURED IN ACCORDANCE WITH THE STANDARD SPECIFICATIONS EXCEPT THE MEMBRANE CURING COMPOUND METHOD SHALL NOT BE USED.

GALVANIZE THE TOP OF EACH INTERIOR BENT PILE A MINIMUM OF 11 METERS. GALVANIZE IN ACCORDANCE WITH SECTION 1076 OF THE STANDARD SPECIFICATIONS.

FOR REINFORCING STEEL IN PIPE PILES, SEE "457mm STEEL PIPE PILE" SHEET.

CONCRETE DISPLACEMENT BY THE FILLED 457mm STEEL PIPE PILE HAS BEEN DEDUCTED FROM THE QUANTITY OF CLASS "A" CONCRETE FOR THE BENT CAP.

LEVEL 1 FIELD TESTING IS REQUIRED, AND THE YIELD LOAD OF THE DOWELS IS 120 KN. FOR ADHESIVELY ANCHORED ANCHOR BOLTS OR DOWELS, SEE SPECIAL PROVISIONS.

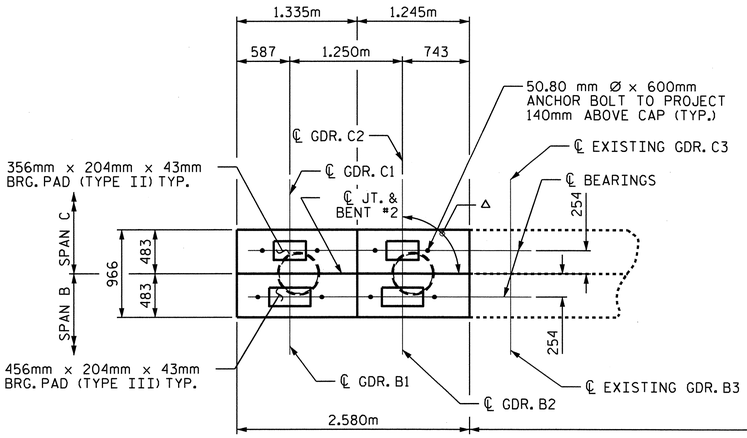

PLAN (LEFT SIDE)

△ ANGLE BETWEEN ℄ GIRDER AND ℄ BENT CONTROL LINE = 90°0'0" (TYP. ALL GIRDERS BOTH SPANS)

10.125m

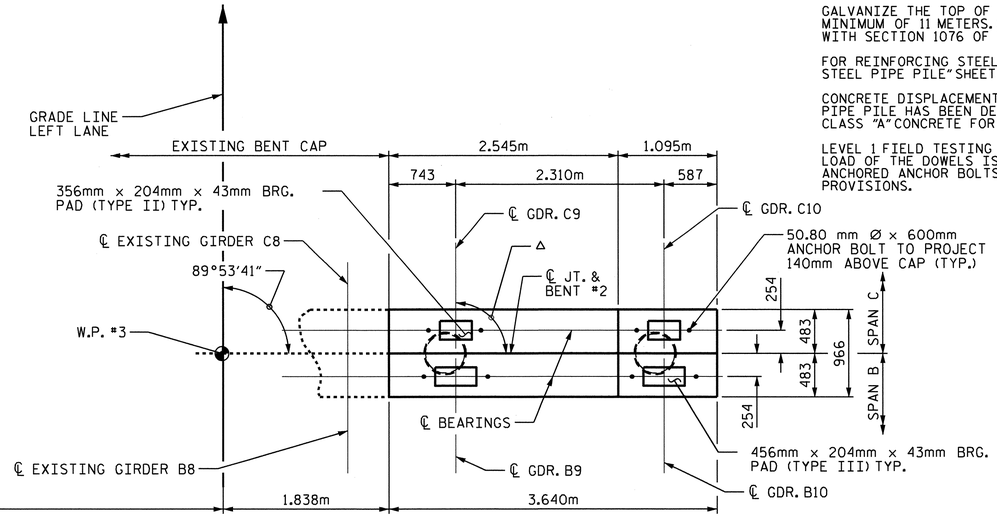

PLAN (RIGHT SIDE)

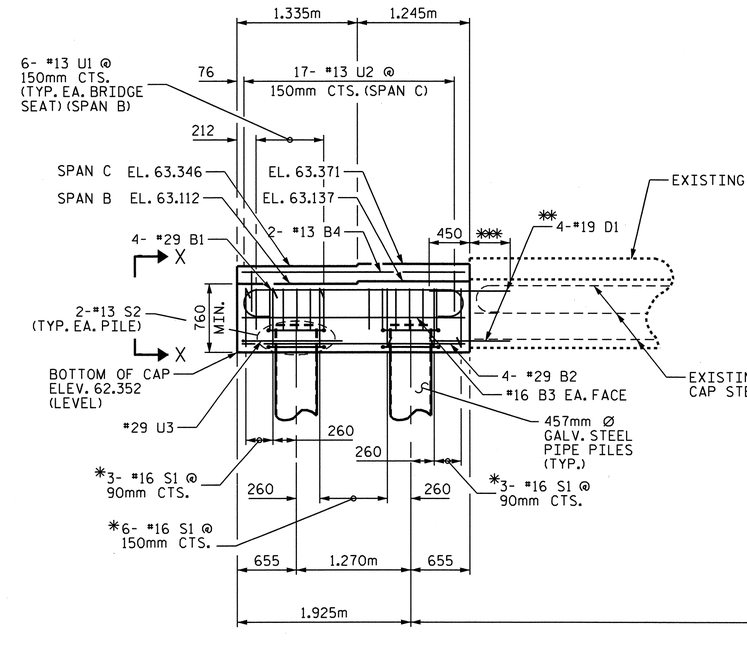

* INVERT ALTERNATE STIRRUPS

** ADHESIVE ANCHORED DOWELS INTO EXISTING CAP

*** EMBEDMENT LENGTH TO BE DETERMINED BY THE SELECTED MANUFACTURER

10.780m

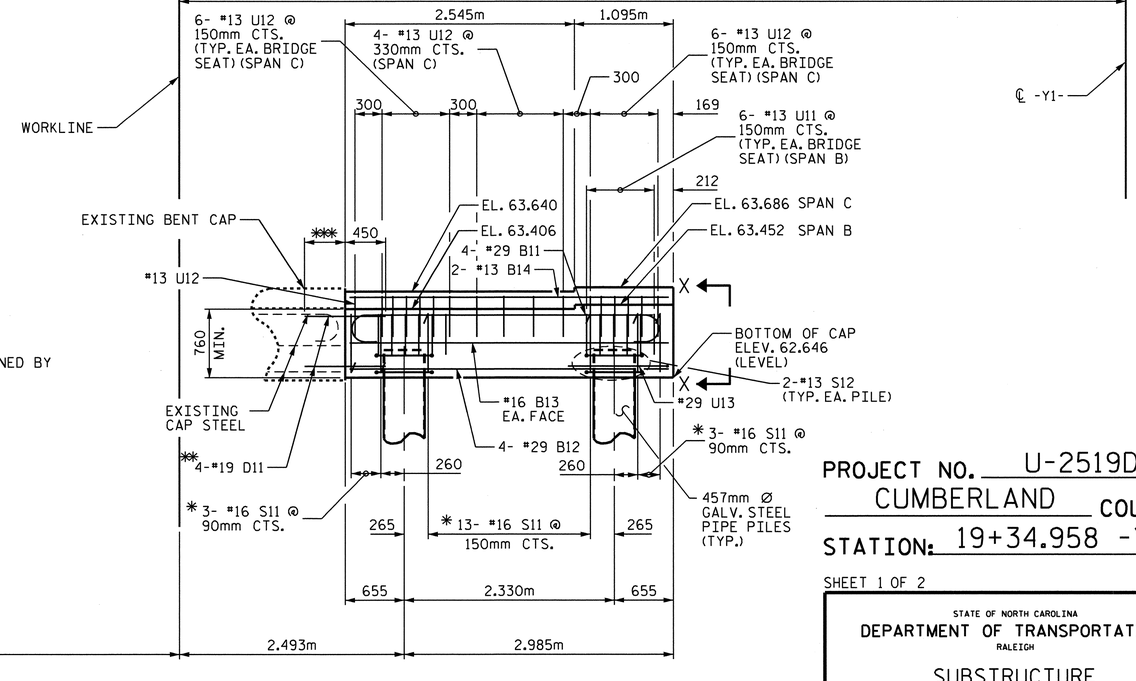

ELEVATION (LEFT SIDE)

SEE VIEW X-X, SHEET 2 OF 2, FOR ADDITIONAL REINFORCEMENT STEEL IN END OF CAP.

ELEVATION (RIGHT SIDE)

SEE VIEW X-X, SHEET 2 OF 2, FOR ADDITIONAL REINFORCEMENT STEEL IN END OF CAP.

NORTH CAROLINA PROFESSIONAL SEAL 14045 ENGINEER TIMOTHY W. COGGINS

Timothy W. Coggins 4/4/11

PROJECT NO. U-2519DA

CUMBERLAND COUNTY

STATION: 19+34.958 -Y1-

SHEET 1 OF 2

STATE OF NORTH CAROLINA
DEPARTMENT OF TRANSPORTATION
RALEIGH

SUBSTRUCTURE
BENT #2
LEFT & RIGHT WIDENING
(LEFT LANE)

REVISIONS						SHEET NO.
NO.	BY:	DATE:	NO.	BY:	DATE:	S-118
1			3			TOTAL SHEETS
2			4			411

STR. #5

DRAWN BY : Neil M. Ruffin DATE : 8/13/08
CHECKED BY : J.B. WILSON DATE : 9/17/08

04-APR-2011 09:05
R:\TIPProjects-U\U2519da\Structures\azizi\FinalPlans\STR 05\u2519da_sd_b*_05.dgn
tcoggins

SPAN C SPAN B

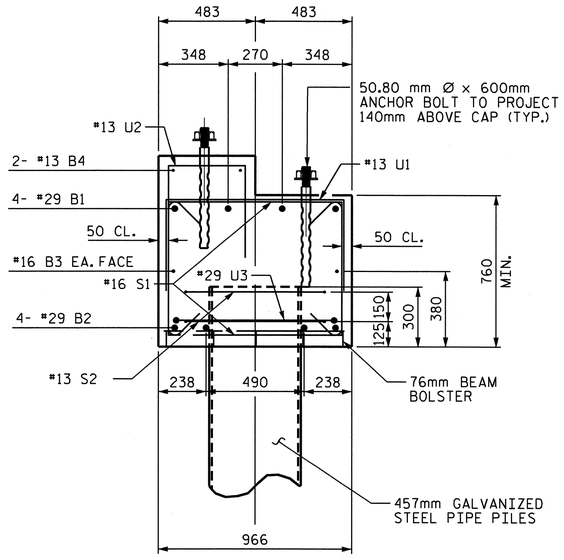

SECTION THRU CAP LEFT SIDE

MATCH EXISTING CAP LEFT SIDE

SPAN C SPAN B

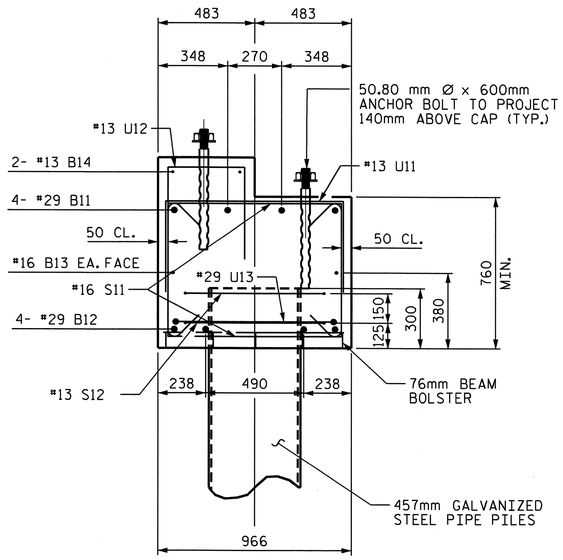

SECTION THRU CAP RIGHT SIDE

MATCH EXISTING CAP RIGHT SIDE

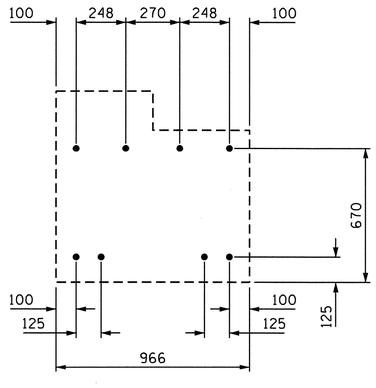

SECTION THRU EXISTING CAP

PROPOSED DOWELING OF #19 "D" BARS

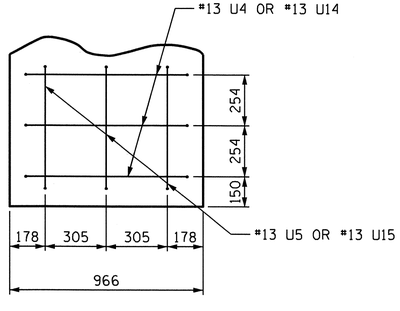

VIEW X-X

BENT NO. 2 LEFT SIDE

BILL OF MATERIAL

BAR	NO	SIZE	TYPE	LENGTH	WEIGHT
B1	4	29	1	3180	64
B2	4	29	STR	2480	50
B3	2	16	STR	2480	8
B4	2	13	STR	2480	5
D1	8	19	STR	900	16
S1	12	16	2	2440	45
S2	4	13	4	2620	10
U1	12	13	3	1760	21
U2	17	13	3	1280	22
U3	1	29	3	3060	15
U4	3	13	3	1720	5
U5	3	13	3	1480	4
REINFORCING STEEL			kg		265

CLASS "A" CONCRETE BREAKDOWN

POUR #1	(CAP)	2.1 m3
TOTAL		2.1 m3

PP 457 x 12.70 GALVANIZED STEEL PILES No. 2	METERS	40
PILE REDRIVES	EACH	1

BAR TYPES

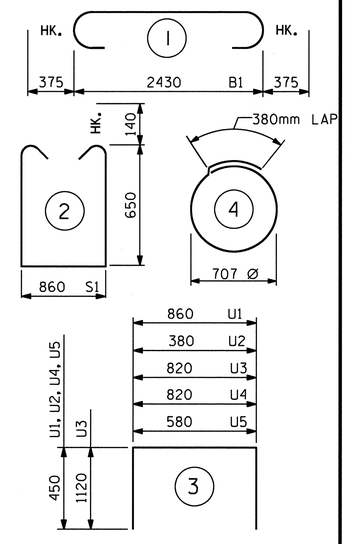

ALL BAR DIMENSIONS ARE OUT TO OUT.

BENT NO. 2 RIGHT SIDE

BILL OF MATERIAL

BAR	NO	SIZE	TYPE	LENGTH	WEIGHT
B11	4	29	1	4240	86
B12	4	29	STR	3540	72
B13	2	16	STR	3540	11
B14	2	13	STR	3540	7
D11	8	19	STR	900	16
S11	19	16	2	2440	72
S12	4	13	4	2620	10
U11	12	13	3	1760	21
U12	17	13	3	1280	22
U13	1	29	3	3060	15
U14	3	13	3	1720	5
U15	3	13	3	1480	4
REINFORCING STEEL			kg		341

CLASS "A" CONCRETE BREAKDOWN

POUR #1	(CAP)	3.0 m3
TOTAL		3.0 m3

PP 457 x 12.70 GALVANIZED STEEL PILES No. 2	METERS	40

BAR TYPES

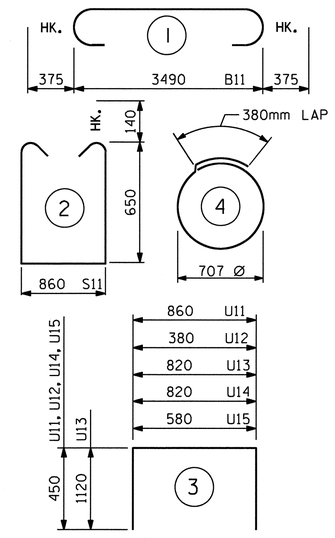

ALL BAR DIMENSIONS ARE OUT TO OUT.

PROJECT NO. U-2519DA

CUMBERLAND COUNTY

STATION: 19+34.958 -Y1-

SHEET 2 OF 2

STATE OF NORTH CAROLINA
DEPARTMENT OF TRANSPORTATION
RALEIGH

SUBSTRUCTURE

BENT #2 LEFT & RIGHT WIDENING (LEFT LANE)

NORTH CAROLINA PROFESSIONAL SEAL 14045 ENGINEER TIMOTHY W. COGGINS 3/29/11

REVISIONS						SHEET NO.
NO.	BY:	DATE:	NO.	BY:	DATE:	S-119
1			3			TOTAL SHEETS
2			4			411

DRAWN BY : Nat M Ruffin DATE : 8/13/08
CHECKED BY : J.B. WILSON DATE : 9/17/08

STR. #5

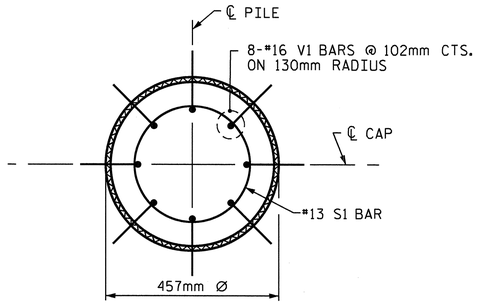

PLAN

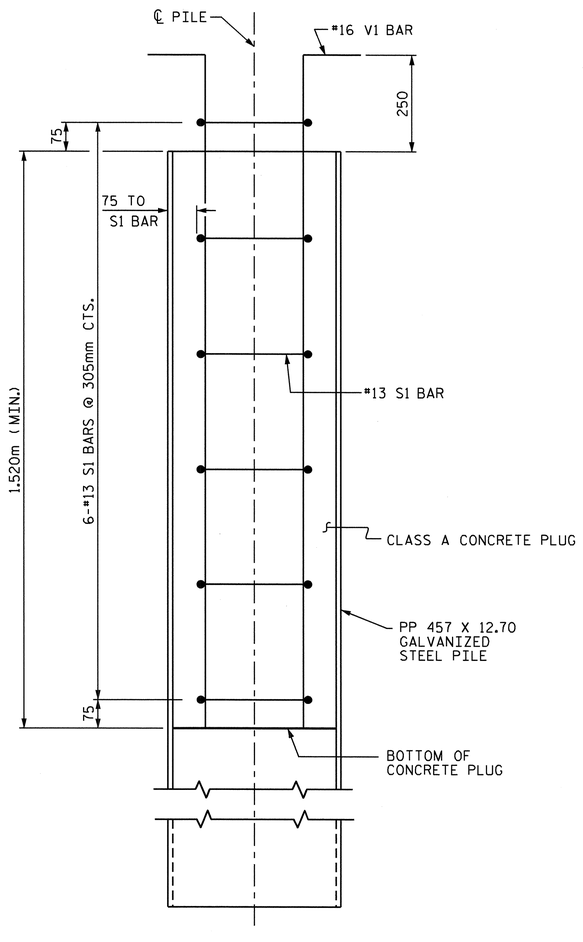

ELEVATION

PP 457 X 12.70 GALVANIZED STEEL PILE

(OPEN END)

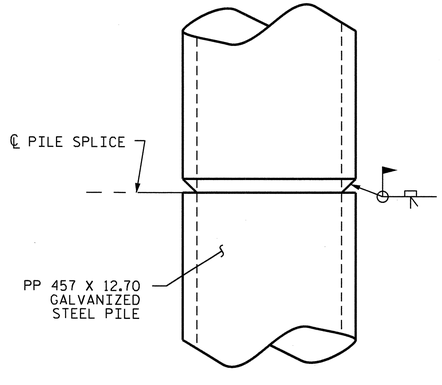

PIPE PILE SPLICE DETAIL

NOTES

PIPE PILES SHALL BE IN ACCORDANCE WITH SECTION 1084 OF THE STANDARD SPECIFICATIONS.

GALVANIZE STEEL PIPE PILES IN ACCORDANCE WITH SECTION 1076 OF THE STANDARD SPECIFICATIONS.

REMOVE AND REPLACE OR REPAIR TO THE SATISFACTION OF THE ENGINEER PILES THAT ARE DAMAGED, DEFORMED OR COLLAPSED DURING INSTALLATION OR DRIVING.

PILE SPLICES SHALL BE IN ACCORDANCE WITH THE STANDARD SPECIFICATIONS AND AWS D1.1.

FOR OPEN END PIPE PILES, REMOVE ENOUGH SOIL AND WATER FROM INSIDE THE PILES TO CONSTRUCT THE CONCRETE PLUG WITHOUT FOULING THE CONCRETE.

FORM THE CONCRETE PLUG SUCH THAT THE REINFORCING STEEL OR CONCRETE DOES NOT MOVE AND THE CLEARANCE FROM THE REINFORCING STEEL TO THE INSIDE OF THE PILE IS MAINTAINED AFTER CONCRETE PLACEMENT. DO NOT PLACE CONCRETE IN THE BENT CAP UNTIL THE CONCRETE PLUG HAS ATTAINED A MINIMUM COMPRESSIVE STRENGTH OF 10.3 MPa.

THE REINFORCING STEEL, CLASS A CONCRETE, AND GALVANIZING ARE CONSIDERED INCIDENTAL TO THE CONTRACT UNIT PRICE BID PER METER FOR PP 457 X 12.70 GALVANIZED STEEL PILES.

BILL OF MATERIAL FOR ONE PP 457 X 12.70 GALVANIZED STEEL PILE

BAR	NO.	SIZE	TYPE	LENGTH	WEIGHT
S1	6	#13	1	1340	8
V1	8	#16	2	2020	25
REINFORCING STEEL =					33 kg

CLASS A CONCRETE

1.520m MINIMUM PLUG 0.2 CU. METER

BAR TYPES

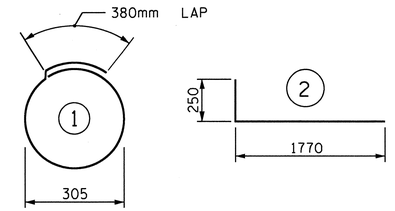

ALL BAR DIMENSIONS ARE OUT TO OUT.

PROJECT NO. U-2519DA

CUMBERLAND COUNTY

STATION: 19+34.958 -Y1-

STATE OF NORTH CAROLINA
DEPARTMENT OF TRANSPORTATION
RALEIGH

STANDARD

457mm STEEL PIPE PILE

(LEFT LANE)

ASSEMBLED BY : Neil M. Ruffin	DATE : 8/13/08
CHECKED BY : J.B. WILSON	DATE : 9/2008

DRAWN BY : RWW 1/01	REV. 5/7/03 RWW/JTE
CHECKED BY : LES 1/01	REV. 10/1/05 LBG/TLA
	REV. 5/1/06R MAA/KMM

NORTH CAROLINA PROFESSIONAL SEAL 14045 ENGINEER TIMOTHY E. COGGINS
3/29/11

REVISIONS						SHEET NO.
NO.	BY:	DATE:	NO.	BY:	DATE:	S-120
1			3			TOTAL SHEETS
2			4			411

STR. #5 STD. NO. SPP3SM

24-MAR-2011 16:21
R:\TIPProjects-U\U2519da\Structures\azlzl\FinalPlans\STR 05\U2519DA_sd_PP_05.dgn
tcoggins

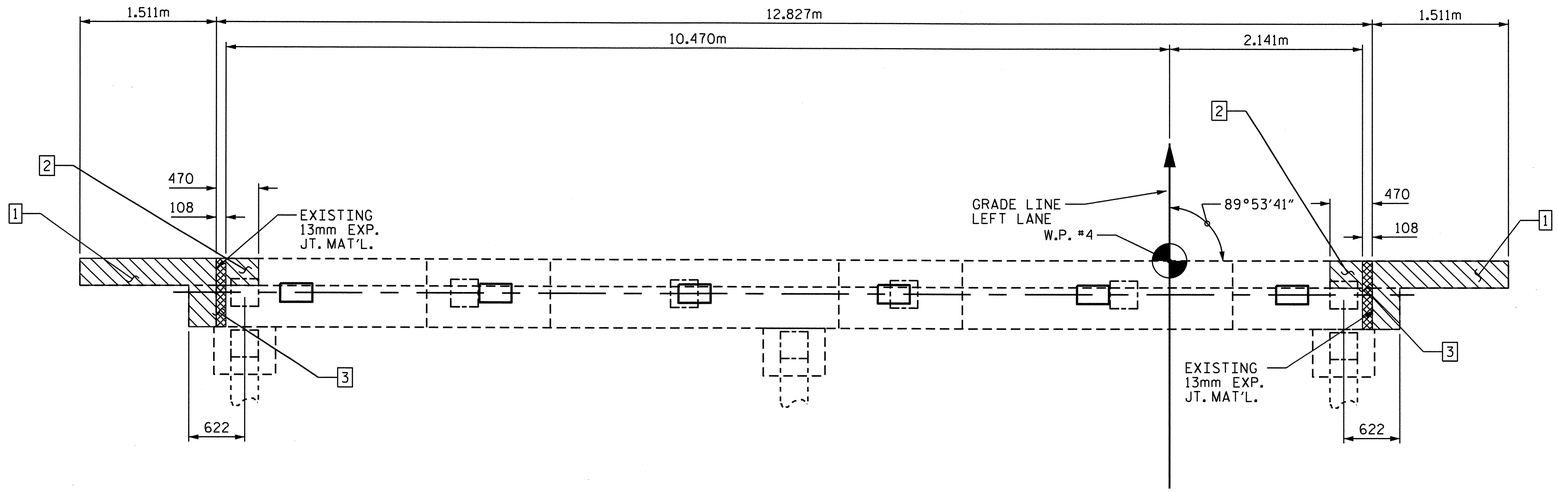

PLAN OF EXISTING

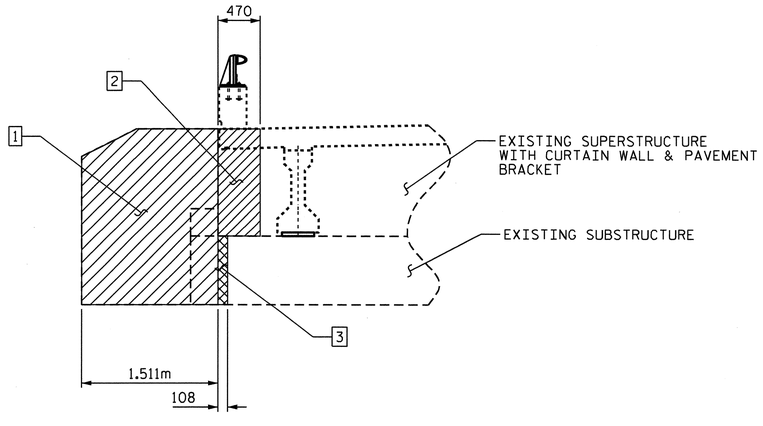

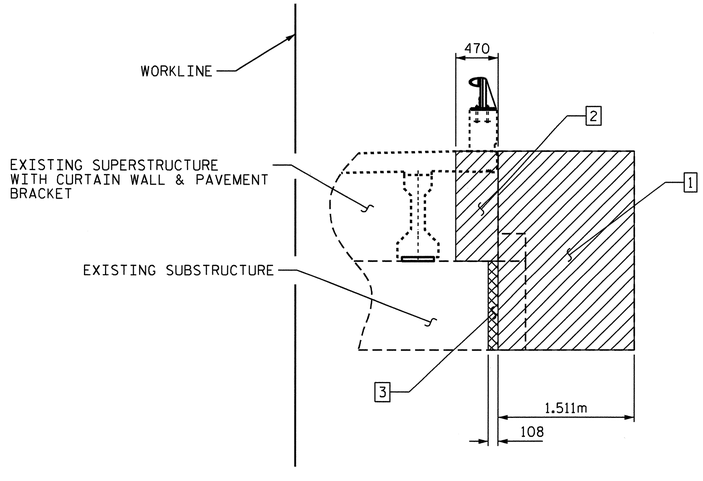

ELEVATION OF EXISTING

EAR WALL REMOVAL SEQUENCE

1. REMOVE EXISTING EAR WALL UP TO EXP. JOINT MATERIAL AND SAW CUT CAP, NOT TO DISTURB BRACE PILE BLOCK AND REINFORCEMENT WITHIN.
2. THE 470mm EXISTING CURTAIN WALL SHALL BE REMOVED BY SAW CUT DOWN TO TOP OF CAP, NOT TO DISTURB THE EXISTING CAP.
3. THE 108mm PORTION OF EXISTING CAP SHALL BE REMOVED BY HAND TOOLS NOT TO DISTURB THE BRACE PILE BLOCK, PRESTRESSED PILES AND REINFORCEMENT WITHIN THIS AREA.

PROJECT NO. U-2519DA
CUMBERLAND COUNTY
STATION: 19+34.958 -Y1-

SHEET 1 OF 4

STATE OF NORTH CAROLINA
DEPARTMENT OF TRANSPORTATION
RALEIGH

SUBSTRUCTURE
END BENT #2
EXISTING CAP

(LEFT LANE)

NORTH CAROLINA PROFESSIONAL SEAL 14045 ENGINEER TIMOTHY D. COGGINS
3/29/11

REVISIONS						SHEET NO.
NO.	BY:	DATE:	NO.	BY:	DATE:	S-121
1			3			TOTAL SHEETS
2			4			411

DRAWN BY : Neil M Ruffin DATE : 8/19/08
CHECKED BY : J.B. WILSON DATE : 9/16/08

28-MAR-2011 15:24
R:\Structures\azizi\Final Plans\STR 05\U2519DA_sd_E*_05.dgn
nruffin

STR #5

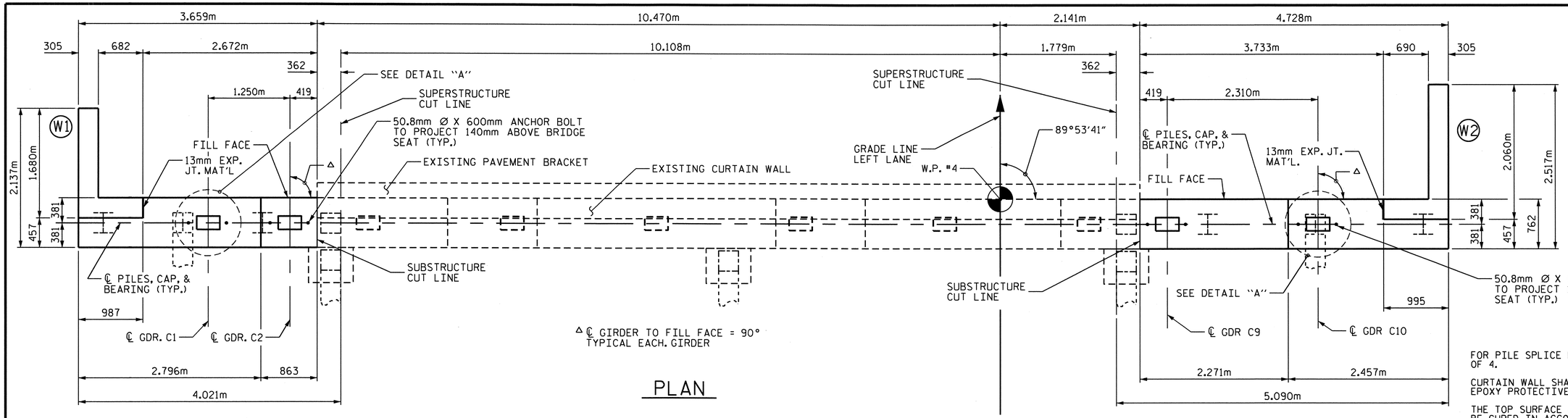

PLAN

NOTES

FOR PILE SPLICE DETAILS, SEE END BENT #2, SHEET 4 OF 4.

CURTAIN WALL SHALL BE PLACED BEFORE APPLYING THE EPOXY PROTECTIVE COATING.

THE TOP SURFACE AREAS OF THE END BENT CAPS SHALL BE CURED IN ACCORDANCE WITH THE STANDARD SPECIFICATIONS EXCEPT THE MEMBRANE CURING COMPOUND METHOD SHALL NOT BE USED.

THE TOP SURFACE OF THE CAP EXCEPT THE BRIDGE SEAT BUILDUPS SHALL BE SLOPED TRANSVERSELY FROM THE FILL FACE TO THE BACK FACE AT THE RATE OF 2 %.

LEVEL 1 FIELD TESTING IS REQUIRED, AND THE YIELD LOAD OF THE DOWELS IS 120 KN. FOR ADHESIVELY ANCHORED ANCHOR BOLTS OR DOWELS, SEE SPECIAL PROVISIONS.

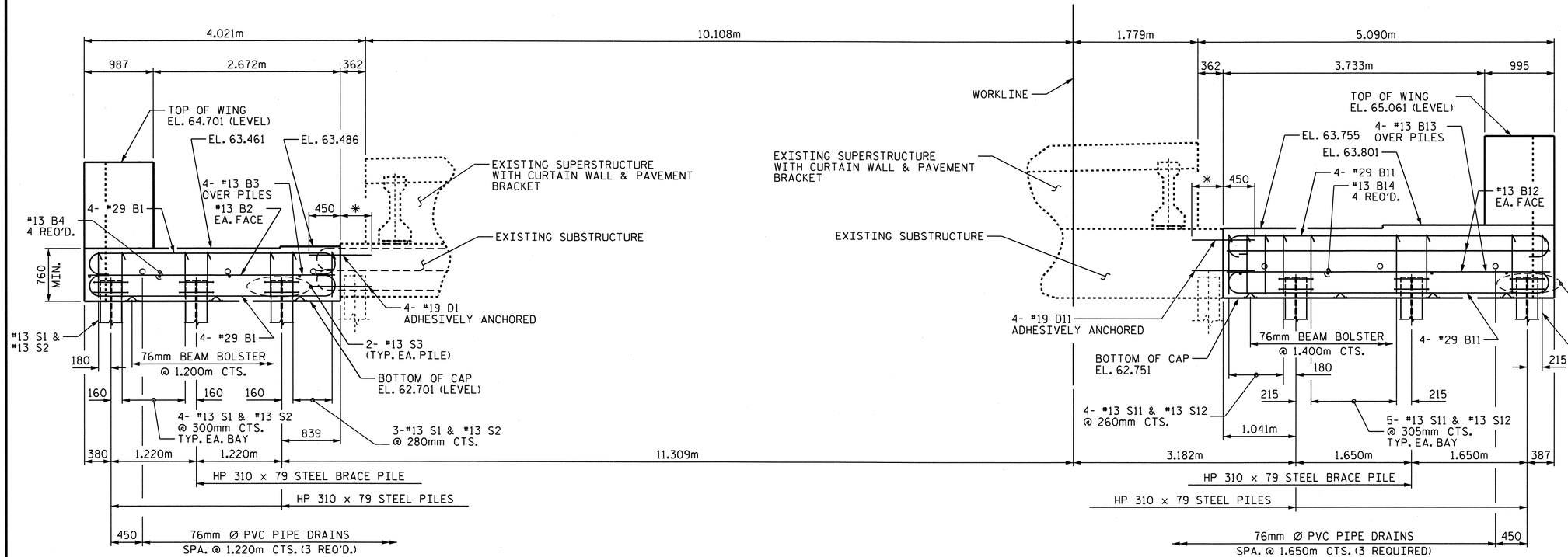

ELEVATION

* EMBEDMENT LENGTH TO BE DETERMINED BY THE SELECTED MANUFACTURER

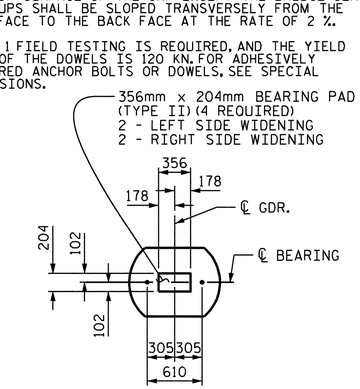

DETAIL "A"

PROJECT NO. U-2519DA

CUMBERLAND COUNTY

STATION: 19+34.958 -Y1-

SHEET 2 OF 4

STATE OF NORTH CAROLINA
DEPARTMENT OF TRANSPORTATION
RALEIGH

SUBSTRUCTURE
END BENT #2
& DETAILS

(LEFT LANE)

REVISIONS						SHEET NO.
NO.	BY:	DATE:	NO.	BY:	DATE:	S-122
1			3			TOTAL SHEETS
2			4			411

STR #5

NORTH CAROLINA PROFESSIONAL SEAL 14045 ENGINEER TIMOTHY C. COGGINS
4/4/11

DRAWN BY : Neil M Ruffin DATE : 8/19/08
CHECKED BY : J.B. WILSON DATE : 9/16/08

04-APR-2011 15:26
R:\Structures\azizi\FinalPlans\STR 05\U2519DA_sd_E*_05.dgn
nruffin

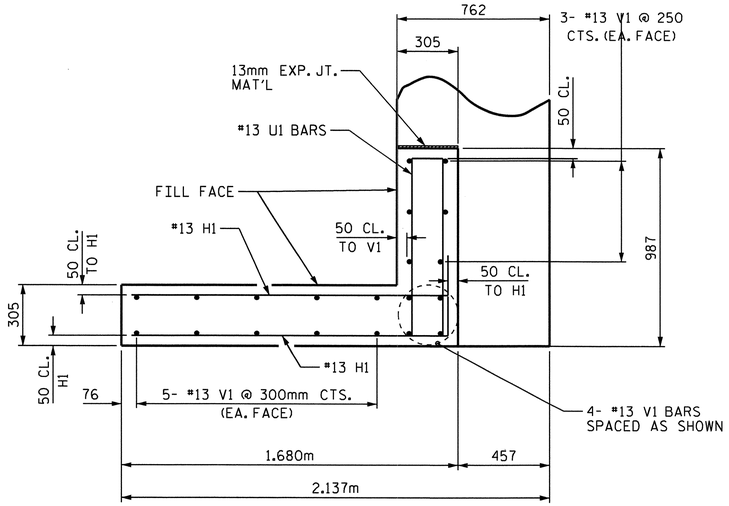

PLAN OF WING (W1)

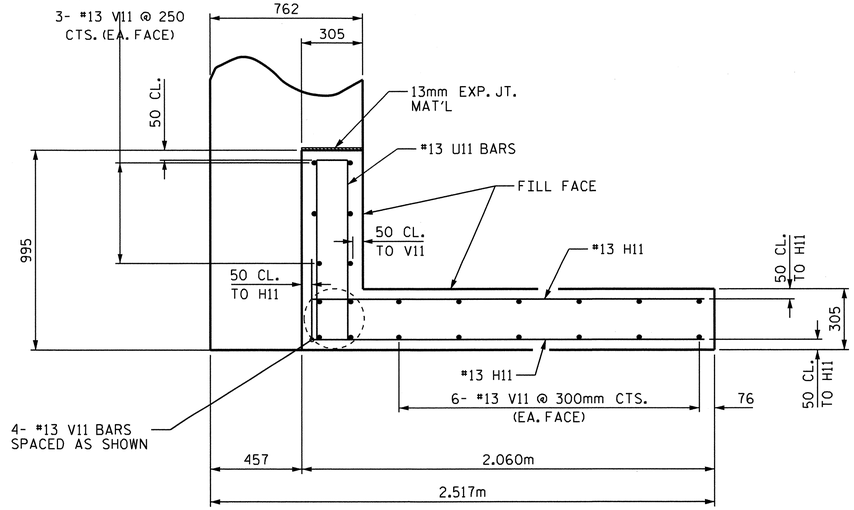

PLAN OF WING (W2)

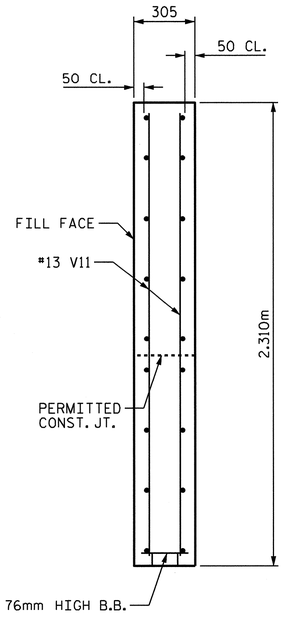

SECTION Y-Y

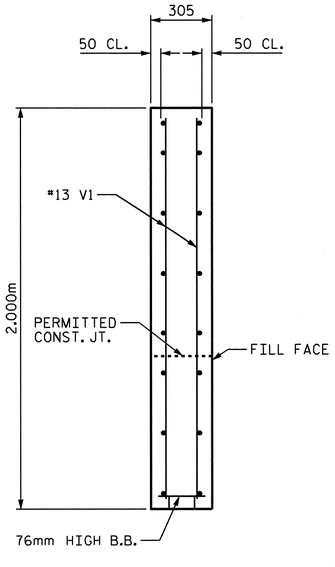

SECTION X-X

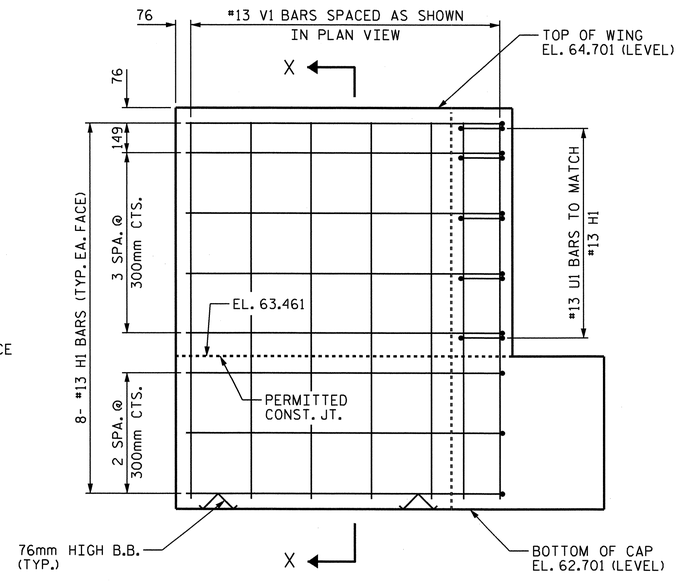

ELEVATION OF WING (W1)

LEFT SIDE WIDENING

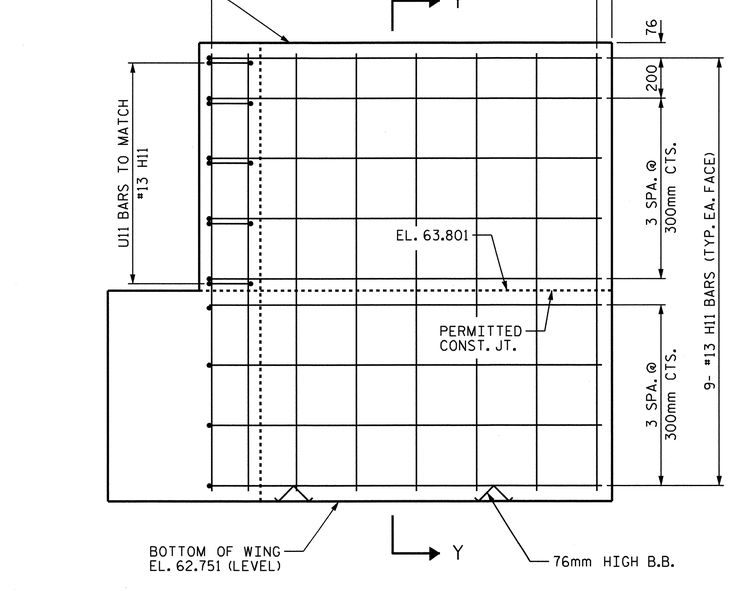

ELEVATION OF WING (W2)

RIGHT SIDE WIDENING

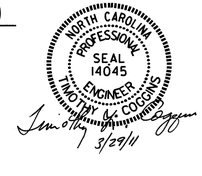

DRAWN BY : Neil M. Ruffin DATE : 8/19/08
CHECKED BY : J.B. WILSON DATE : 9/16/08

28-MAR-2011 15:24
R:\Structures\azizi\Final Plans\STR 05\U2519DA_sd_E*_05.dgn
nruffin

PROJECT NO. U-2519DA
CUMBERLAND COUNTY
STATION: 19+34.958 -Y1-

SHEET 3 OF 4

STATE OF NORTH CAROLINA
DEPARTMENT OF TRANSPORTATION
RALEIGH

SUBSTRUCTURE
END BENT #2
& DETAILS

(LEFT LANE)

REVISIONS						SHEET NO.
NO.	BY:	DATE:	NO.	BY:	DATE:	S-123
1			3			TOTAL SHEETS
2			4			411

STR. #5

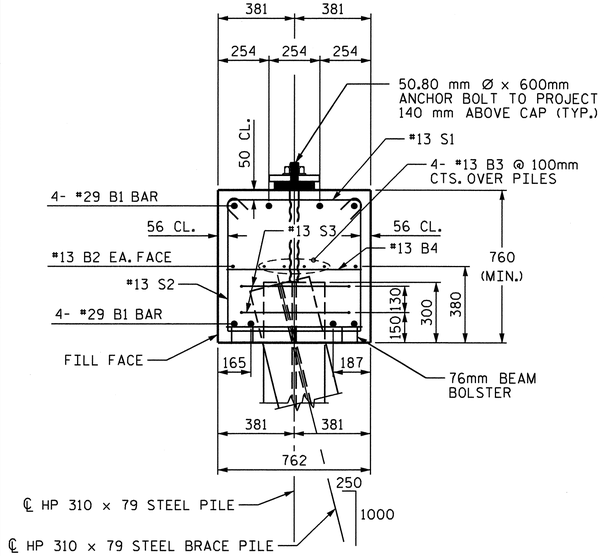

SECTION THRU CAP LEFT SIDE

MATCH EXISTING CAP

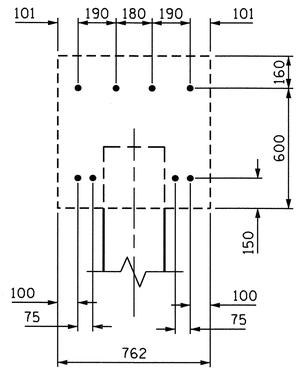

END VIEW

LEFT END ONLY

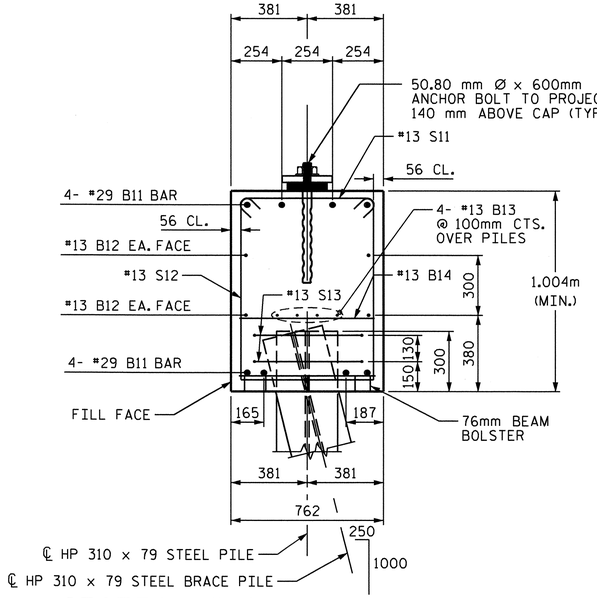

SECTION THRU CAP RIGHT SIDE

MATCH EXISTING CAP

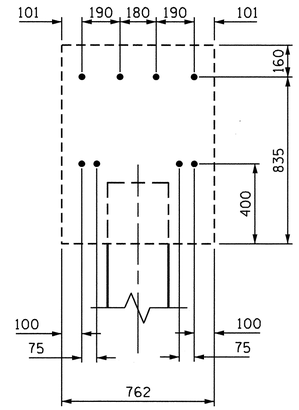

END VIEW

RIGHT END ONLY

END BENT #2 LEFT SIDE WIDENING

BAR TYPES

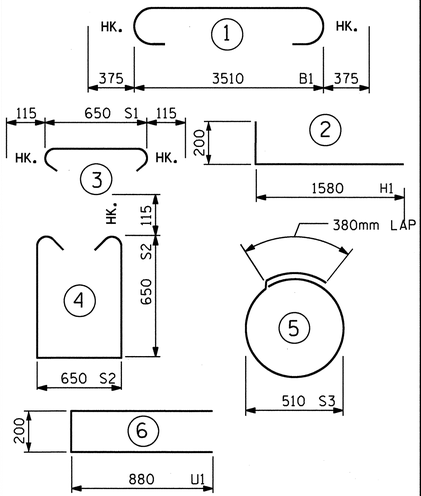

ALL BAR DIMENSIONS ARE OUT TO OUT.

BILL OF MATERIAL

BAR	NO	SIZE	TYPE	LENGTH	WEIGHT
B1	8	29	1	4260	172
B2	2	13	STR	3560	7
B3	4	13	STR	3560	14
B4	4	13	STR	660	3
D1	8	19	STR	900	16
H1	8	13	2	1780	14
S1	12	13	3	880	10
S2	12	13	4	2180	26
S3	6	13	5	1980	12
U1	5	13	6	1960	10
V1	20	13	STR	1880	37
REINFORCING STEEL			kg		321

CLASS "A" CONCRETE BREAKDOWN	
POUR #1 CAP & LOWER WING	2.5 m3
POUR #2 UPPER WING	1.0 m3
TOTAL	3.5 m3

HP 310 x 79 STEEL PILES		
No. 3	METERS	42
PILE REDRIVES	EACH	1

END BENT #2 RIGHT SIDE WIDENING

BAR TYPES

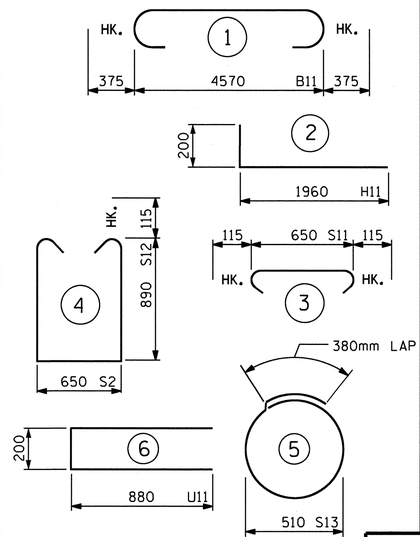

ALL BAR DIMENSIONS ARE OUT TO OUT.

BILL OF MATERIAL

BAR	NO	SIZE	TYPE	LENGTH	WEIGHT
B11	8	29	1	5320	215
B12	4	13	STR	4620	18
B13	4	13	STR	4620	18
B14	4	13	STR	660	3
D11	8	19	STR	900	16
H11	18	13	2	2160	39
S11	15	13	3	880	13
S12	15	13	4	2660	40
S13	6	13	5	1980	12
U11	5	13	6	1960	10
V11	22	13	STR	2180	48
REINFORCING STEEL			kg		432

CLASS "A" CONCRETE BREAKDOWN	
POUR #1 CAP & LOWER WING	4.3 m3
POUR #2 UPPER WING	1.1 m3
TOTAL	5.4 m3

HP 310 x 79 STEEL PILES		
No. 3	METERS	42

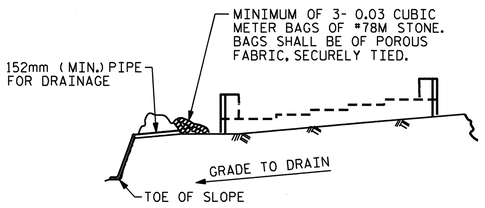

BAGGED STONE AND PIPE SHALL BE PLACED IMMEDIATELY AFTER COMPLETION OF END BENT EXCAVATION. PIPE MAY BE EITHER CONCRETE, CORRUGATED STEEL, CORRUGATED ALUMINUM ALLOY, OR CORRUGATED PLASTIC. PERFORATED PIPE WILL NOT BE ALLOWED.

BAGGED STONE SHALL REMAIN IN PLACE UNTIL THE ENGINEER DIRECTS THAT IT BE REMOVED. THE CONTRACTOR SHALL REMOVE AND DISPOSE OF SILT ACCUMULATIONS AT BAGGED STONE WHEN SO DIRECTED BY THE ENGINEER. BAGS SHALL BE REMOVED AND REPLACED WHENEVER THE ENGINEER DETERMINES THAT THEY HAVE DETERIORATED AND LOST THEIR EFFECTIVENESS.

NO SEPARATE PAYMENT WILL BE MADE FOR THIS WORK AND THE ENTIRE COST OF THIS WORK SHALL BE INCLUDED IN THE UNIT CONTRACT PRICE FOR THE SEVERAL PAY ITEMS.

TEMPORARY DRAINAGE AT END BENT

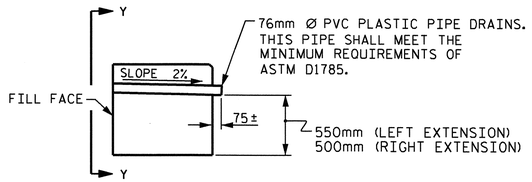

SECTION THRU CAP

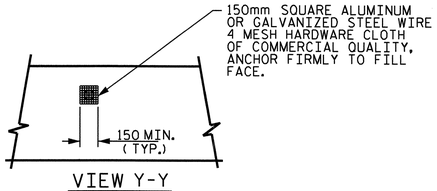

VIEW Y-Y

NOTE: NO SEPARATE PAYMENT WILL BE MADE FOR FURNISHING AND INSTALLING THE PVC PLASTIC PIPE DRAINS, HARDWARE CLOTH AND FASTENERS. THE ENTIRE COST OF THIS WORK SHALL BE INCLUDED IN THE UNIT CONTRACT PRICE BID FOR THE SEVERAL PAY ITEMS.

PIPE DRAIN DETAILS

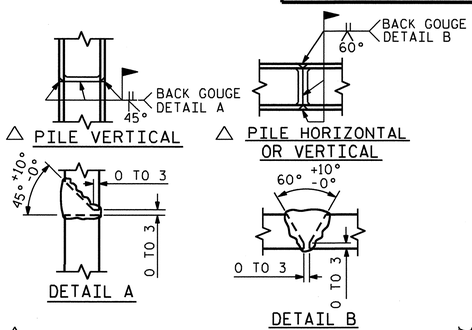

△ PILE VERTICAL

△ PILE HORIZONTAL OR VERTICAL

DETAIL A

DETAIL B

△ POSITION OF PILE DURING WELDING.

PILE SPLICE DETAILS

NORTH CAROLINA PROFESSIONAL SEAL 14045 ENGINEER TIMOTHY C COGGINS
3/29/11

PROJECT NO. U-2519DA

CUMBERLAND COUNTY

STATION: 19+34.958 -Y1-

SHEET 4 OF 4

STATE OF NORTH CAROLINA
DEPARTMENT OF TRANSPORTATION
RALEIGH

SUBSTRUCTURE

END BENT #2 & DETAILS

(LEFT LANE)

REVISIONS						SHEET NO.
NO.	BY:	DATE:	NO.	BY:	DATE:	S-124
1			3			TOTAL SHEETS
2			4			411

DRAWN BY : Neil M. Ruffin DATE : 8/19/08
CHECKED BY : J.B. WILSON DATE : 9/16/08

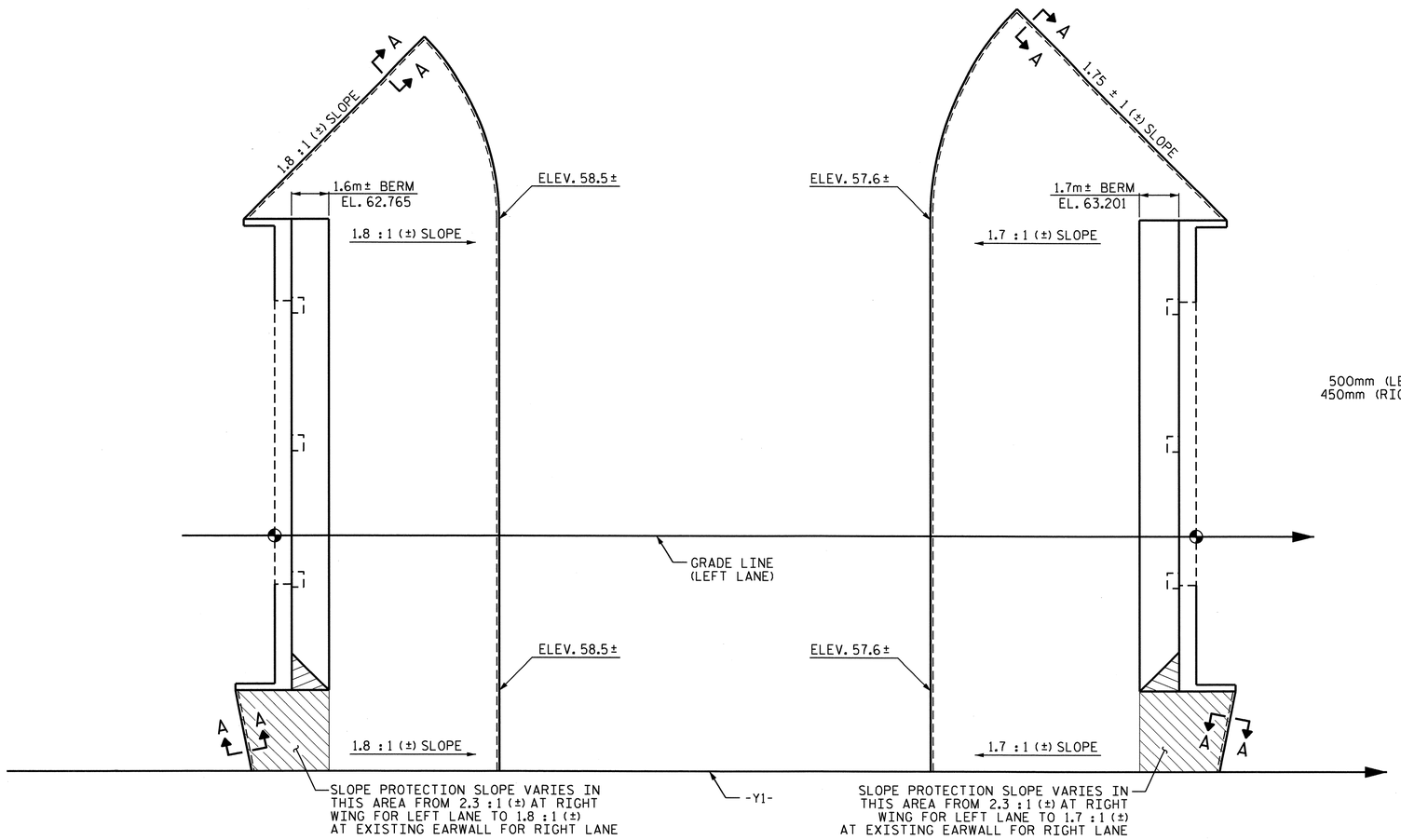

PLAN

BRIDGE @ STA. 19+34.958 -Y1- (LEFT LANE)	100mm SLOPE PROTECTION	* WELDED WIRE FABRIC 1520mm WIDE
	SQUARE METERS	APPROX. METERS
END BENT 1	340	248
END BENT 2	419	306

* QUANTITY SHOWN IS BASED ON 1520mm POURS.

GENERAL NOTES

SLOPE PROTECTION SHALL BE PLACED UNDER THE ENDS OF THE BRIDGE AS SHOWN IN THE DETAILS. STRAIGHT EDGING WILL NOT BE REQUIRED UNLESS, IN THE OPINION OF THE ENGINEER, VISUAL INSPECTION INDICATES A NEED FOR IT. MEASUREMENT AND PAYMENT SHALL BE AS PRESCRIBED IN SECTION 462 OF THE STANDARD SPECIFICATIONS.

ALTERNATE "A"

ALTERNATE "A" SHALL CONSIST OF 100mm POURED-IN-PLACE CONCRETE PAVING AS SHOWN IN THE DETAILS ON THIS SHEET. CONCRETE SHALL BE CLASS "B". THE CONCRETE SURFACE SHALL BE FLOATED WITH A WOODEN FLOAT AND FINISHED. WELDED WIRE FABRIC REINFORCING SHALL BE 152 X 152 - MW9.1 X MW9.1, 1520mm WIDE. SLOPE PROTECTION SHALL BE POURED IN 1520mm STRIPS AS SHOWN IN THE "POURING DETAIL" WITH 600mm LONG #13 BARS PLACED ALONG THE SLOPE BETWEEN STRIPS AT 450mm MAXIMUM SPACING. SLOPE PROTECTION MAY BE POURED IN ALTERNATE 1220mm AND 1520mm STRIPS AS SHOWN IN THE "OPTIONAL POURING DETAIL" WITH ADJACENT RUNS OF WELDED WIRE FABRIC LAPPING AT LEAST 152mm. THE COST OF THE WELDED WIRE FABRIC AND #13 BARS, IF USED, SHALL BE INCLUDED IN THE CONTRACT UNIT PRICE BID PER SQUARE METER FOR SLOPE PROTECTION.

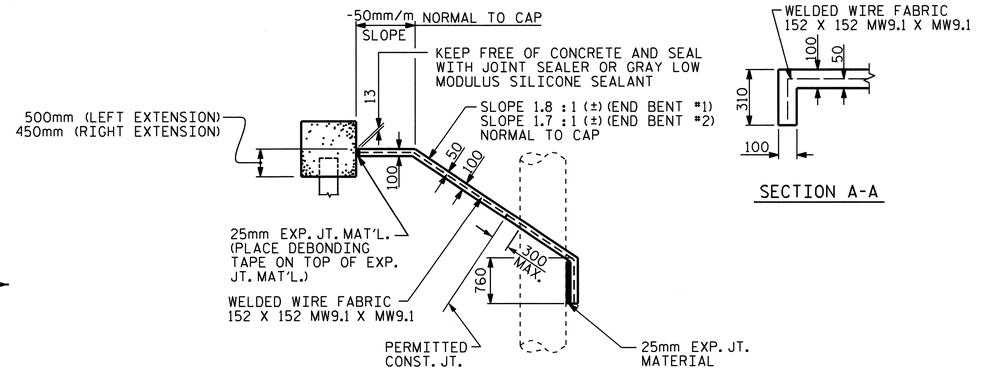

SECTION A-A

SECTION ALONG ℄ ROADWAY WITH SHOULDER PIER

DETAILS FOR ALTERNATE "A"

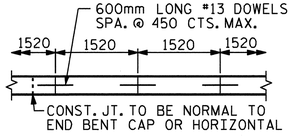

STRIP WIDTHS MAY VARY IN CURVED PORTION.

POURING DETAIL

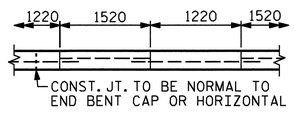

POUR A 1220mm STRIP FIRST. STRIP WIDTHS MAY VARY IN CURVED PORTION.

OPTIONAL POURING DETAIL

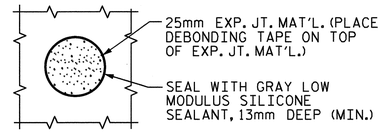

PLAN WHERE CONCRETE SLOPE PROTECTION MUST BE PLACED AROUND A BENT COLUMN

PROJECT NO. U-2519DA

CUMBERLAND COUNTY

STATION: 19+34.958 -Y1-

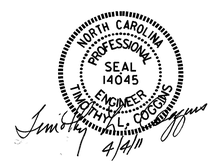

STATE OF NORTH CAROLINA
DEPARTMENT OF TRANSPORTATION
RALEIGH

STANDARD SLOPE PROTECTION DETAILS (LEFT LANE)

REVISIONS						SHEET NO.
NO.	BY:	DATE:	NO.	BY:	DATE:	S-125
1			3			TOTAL SHEETS
2			4			411

ASSEMBLED BY : T.L. AVERETTE	DATE : 03/17/11	
CHECKED BY : T.L. COGGINS	DATE : 03/22/11	
DRAWN BY : ELR 5/92	REV. 7/10/01	LES/RDR
CHECKED BY : GRP 6/92	REV. 5/7/03	RWW/JTE
	REV. 5/1/06	TLA/GM

04-APR-2011 09:17
R:\TIPProjects-U\U2519da\Structures\azizi\FinalPlans\STR 05\U2519DA_sd_SP_05.dgn
tcoggins

STR. #5

STD. NO. SP1SM

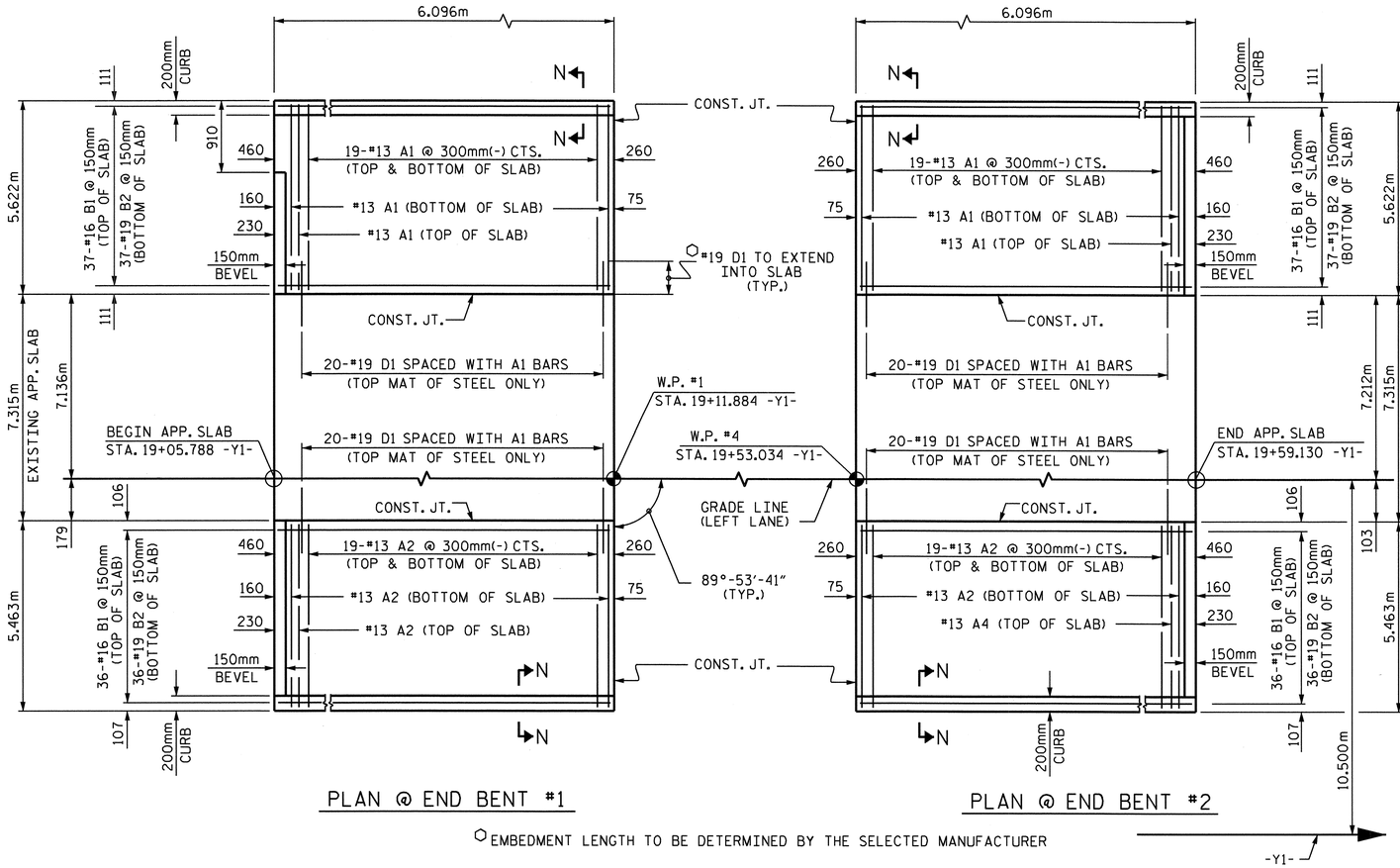

PLAN @ END BENT #1

PLAN @ END BENT #2

⬡ EMBEDMENT LENGTH TO BE DETERMINED BY THE SELECTED MANUFACTURER

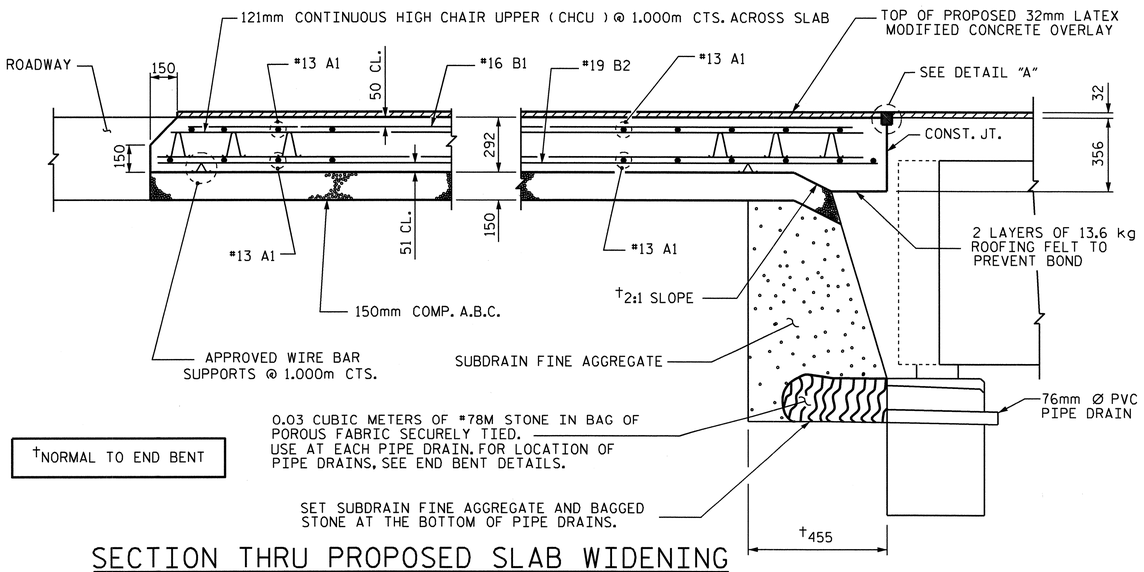

SECTION THRU PROPOSED SLAB WIDENING

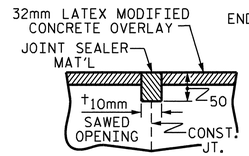

DETAIL "A"

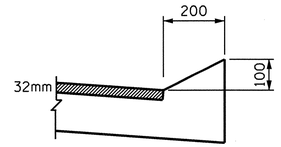

SECTION N-N

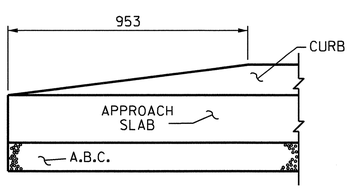

END OF CURB WITHOUT SHOULDER BERM GUTTER

CURB DETAILS

NOTES

APPROACH SLAB SHALL NOT BE CONSTRUCTED PRIOR TO COMPLETION OF THE BRIDGE DECK.

AREA BETWEEN THE WINGWALL AND APPROACH SLAB SHALL BE GRADED TO DRAIN THE WATER AWAY FROM THE FILL FACE OF THE BRIDGE AND SHALL BE PAVED. SEE ROADWAY PLANS.

THE 150mm COMP. A.B.C. SHALL BE FLUSH WITH THE ROADWAY END OF THE APPROACH SLAB AND SHALL EXTEND 300mm OUTSIDE OF EACH EDGE OF THE APPROACH SLAB.

THE CONTRACTOR MAY USE 100mm TYPE B-25.0B ASPHALT CONCRETE COURSE IN LIEU OF 150mm COMP. A.B.C. IF THIS OPTION IS USED, THE BASE COURSE SHALL BE FLUSH WITH THE ROADWAY END OF THE APPROACH SLAB, AND THE WIDTH SHALL BE THE SAME AS THAT OF THE APPROACH SLAB.

THE CONTRACTOR MAY USE 125mm CLASS "A" CONCRETE BASE IN LIEU OF 150mm COMP. A.B.C. IF THIS OPTION IS USED, THE CONCRETE BASE SHALL BE FLUSH WITH THE ROADWAY END OF THE APPROACH SLAB, AND THE WIDTH SHALL BE THE SAME AS THAT OF THE APPROACH SLAB. THE CONCRETE SHALL BE FINISHED TO A SMOOTH SURFACE AND A LAYER OF 13.6 kg ROOFING FELT SHALL BE PLACED BETWEEN THE CONCRETE BASE AND THE APPROACH SLAB TO PREVENT BOND. THE APPROACH SLAB SHALL NOT BE CAST UNTIL THE CONCRETE BASE HAS REACHED AN AGE OF THREE CURING DAYS.

SUBDRAIN FINE AGGREGATE IS TO BE CONTINUOUS ALONG FILL FACE OF BACKWALL AND END BENT FROM OUTSIDE EDGE TO OUTSIDE EDGE OF APPROACH SLAB.

CLASS 1A SURFACE PREPARATION SHALL BE A UNIFORM DEPTH OF 13mm FOR THE EXISTING APPROACH SLAB. THE LATEX MODIFIED CONCRETE OVERLAY SHALL BE PLACED OVER THE EXISTING PREPARED AND PROPOSED WIDENING OF THE APPROACH SLAB AT A UNIFORM DEPTH OF 32mm. SEE "DECK WIDENING AND REHABILITATION" SHEET FOR LIMITS AND QUANTITIES.
DOWELS SHALL BE PLACED IN THE SAME HORIZONTAL PLANE AS THE TOP SLAB REINFORCING STEEL.

BILL OF MATERIAL

APPROACH SLABS AT EB #1

BAR	NO.	SIZE	TYPE	LENGTH	WEIGHT
A1	41	#13	STR	5520	225
A2	41	#13	STR	5360	218
B1	73	#16	STR	5800	657
B2	73	#19	STR	5980	976
D1	40	#19	STR	900	80
REINFORCING STEEL				kg.	2156
CLASS AA CONCRETE				C.M.	19.9

APPROACH SLABS AT EB #2

BAR	NO.	SIZE	TYPE	LENGTH	WEIGHT
A1	41	#13	STR	5520	225
A2	41	#13	STR	5360	218
B1	73	#16	STR	5800	657
B2	73	#19	STR	5980	976
D1	40	#19	STR	900	80
REINFORCING STEEL				kg.	2156
CLASS AA CONCRETE				C.M.	19.9

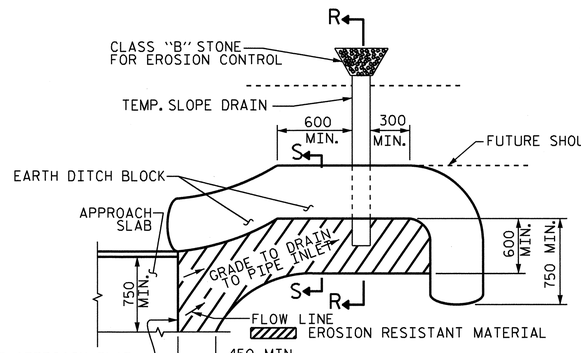

NOTE: IMMEDIATELY AFTER THE CONSTRUCTION OF THE APPROACH SLAB, THE CONTRACTOR SHALL PROVIDE TEMPORARY BERM AND SLOPE DRAIN. CONTRACTOR SHALL GRADE TO PIPE INLET AND PROVIDE EROSION RESISTANT MATERIAL AS SHOWN. THE EROSION RESISTANT MATERIAL SHALL BE EITHER 1) ASPHALT PLANT MIX, TYPE 1 OR TYPE 2, MIN. 50mm DEPTH, 2) EROSION CONTROL MAT, OR 3) CONCRETE, AS DIRECTED BY THE ENGINEER. THE SLOPE DRAIN SHALL CONSIST OF A NON-PERFORATED TEMPORARY DRAINAGE PIPE, 305mm IN DIAMETER.

TEMPORARY DRAINAGE DETAIL

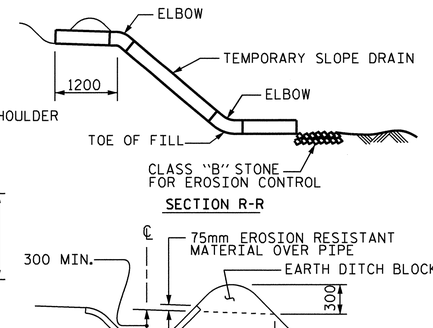

SECTION R-R

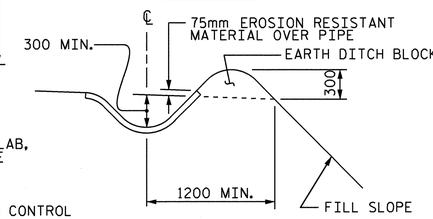

SECTION S-S

PLAN VIEW

TEMPORARY BERM AND SLOPE DRAIN DETAILS

(TO BE USED WHEN SHOULDER BERM GUTTER IS REQUIRED)

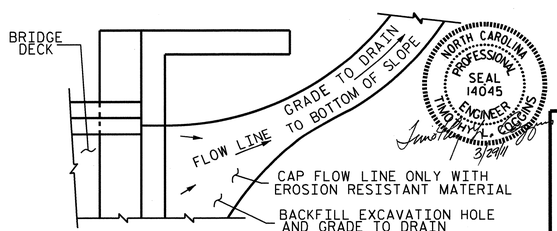

PROJECT NO. U-2519DA

CUMBERLAND COUNTY

STATION: 19+34.958 -Y1-

STATE OF NORTH CAROLINA
DEPARTMENT OF TRANSPORTATION
RALEIGH

BRIDGE APPROACH SLAB FOR FLEXIBLE PAVEMENT (LEFT LANE)

REVISIONS						SHEET NO.
NO.	BY:	DATE:	NO.	BY:	DATE:	S-126
1			3			TOTAL SHEETS
2			4			411

ASSEMBLED BY : M. GUDLAUGSSON	DATE : 08/2008
CHECKED BY : M. PISO	DATE : 09/2008
DRAWN BY : FCJ 6/87	REV. 7/10/01 RWW/LES
CHECKED BY : EGA 6/87	REV. 5/7/03R RWW/JTE
	REV. 5/1/06R KMM/GM

29-MAR-2011 14:41
R:\Structures\gz1z1\Final Plans\STR 05\U2519DA_sd_AS_05.dgn
gruffin

STR #5

STD. NO. BAS4SM

F. A. PROJECT NO. NHF-0100(21)

19+10 19+20 19+30 19+40 19+50 19+60

GRADE DATA

(+) 0.3059% (+) 1.0800%

PI = 18+58.919 -Y1-
E. = 63.947m
VC = 60m

FILL FACE @ END BENT #1
STA. 19+11.884 -Y1-
G. P. EL. 64.519

FILL FACE @ END BENT #2
STA. 19+53.034 -Y1-
G. P. EL. 64.963

68 66 64 62 60 58 56

SPAN A SPAN B SPAN C

FIXED EXP, FIXED EXP, EXP, FIXED

EL. 64.2±
EL. 64.4±
450 (TYP.)
1.8 : 1 (±) SLOPE
HP 310 X 79 STEEL PILES
457mm GALVANIZED STEEL PIPE PILES
HW EL. 58.90 9/1990
EL. 58.3±
EL. 57.9±
EL. 57.0±
WS EL. 57.21 3-4-98
EL. 55.7±
EL. 56.0±
EL. 57.6±
EL. 57.8±
1.7 : 1 (±) SLOPE
CONCRETE SLOPE PROTECTION (TYP.)
EL. 64.7±
NATURAL GROUND LINE
EL. 65.0±

END BENT #1 BENT #1 BENT #2 END BENT #2

SECTION ALONG GRADE LINE

(EXISTING STRUCTURE NOT SHOWN FOR CLARITY)

℄ -Y1-
BRIDGE I.D. STA. 19+34.958 -Y1-
89°-53'-41"

41.150m TOTAL LENGTH OF BRIDGE
(FILL FACE @ END BENT #1 TO FILL FACE @ END BENT #2)

9.450m SPAN A | 20.422m SPAN B | 11.278m SPAN C

13.624m | 6.798m

10.500m

TO GRUBER RD.

BEGIN APPROACH SLAB
STA. 19+05.788 -Y1-

1.3m± BERM
EL. 62.960

1.4m± BERM
EL. 63.410

EXISTING BENT #1
EXISTING SOIL ROAD
GRADE LINE RIGHT LANE
EXISTING BENT #2

W. P. #1
FILL FACE @ END BENT #1
STA. 19+11.884 -Y1-

W. P. #2
STA. 19+21.334 -Y1-

W. P. #3
STA. 19+41.756 -Y1-

W. P. #4
FILL FACE @ END BENT #2
STA. 19+53.034 -Y1-

END APPROACH SLAB
STA. 19+59.130 -Y1-

TO SANTA FE DR.

BEAVER CREEK

89°-53'-41" (TYP.)

℄ BENT #2

℄ BENT #1

EXISTING END BENT

EXISTING END BENT

100mm CONCRETE SLOPE PROTECTION

100mm CONCRETE SLOPE PROTECTION

EXISTING PORTION TO BE REMOVED, FOR DETAILS, SEE SHEET "END BENT #1 EXISTING CAP" & "END BENT #2 EXISTING CAP"

PLAN

PILES NOT SHOWN FOR CLARITY.

METRIC

PROJECT NO. U-2519DA
CUMBERLAND COUNTY
STATION: 19+34.958 -Y1-
WIDENING AND REHABILITATION OF BRIDGE NO. 4
SHEET 1 OF 3

STATE OF NORTH CAROLINA
DEPARTMENT OF TRANSPORTATION
RALEIGH

GENERAL DRAWING

FOR BRIDGE WIDENING OVER BEAVER CREEK ON ALL AMERICAN FREEWAY BETWEEN GRUBER ROAD AND SANTA FE DRIVE
(RIGHT LANE)

REVISIONS						SHEET NO.
NO.	BY:	DATE:	NO.	BY:	DATE:	S-127
1			3			TOTAL SHEETS
2			4			411

NORTH CAROLINA PROFESSIONAL SEAL 12274 ENGINEER OMAR R. AZIZI
3-30-11

NORTH CAROLINA PROFESSIONAL SEAL 14045 ENGINEER TIMOTHY W. COGGINS
3/29/11

DRAWN BY : PEGGY ADKINS DATE : 3-07
CHECKED BY : B.N. BARODAWALA DATE : 5-07

30-MAR-2011 07:32
R:\Structures\azizi\FinalPlans\STR 06\U2519DA_sd_GD_06.dgn
mruffin

STR. #6

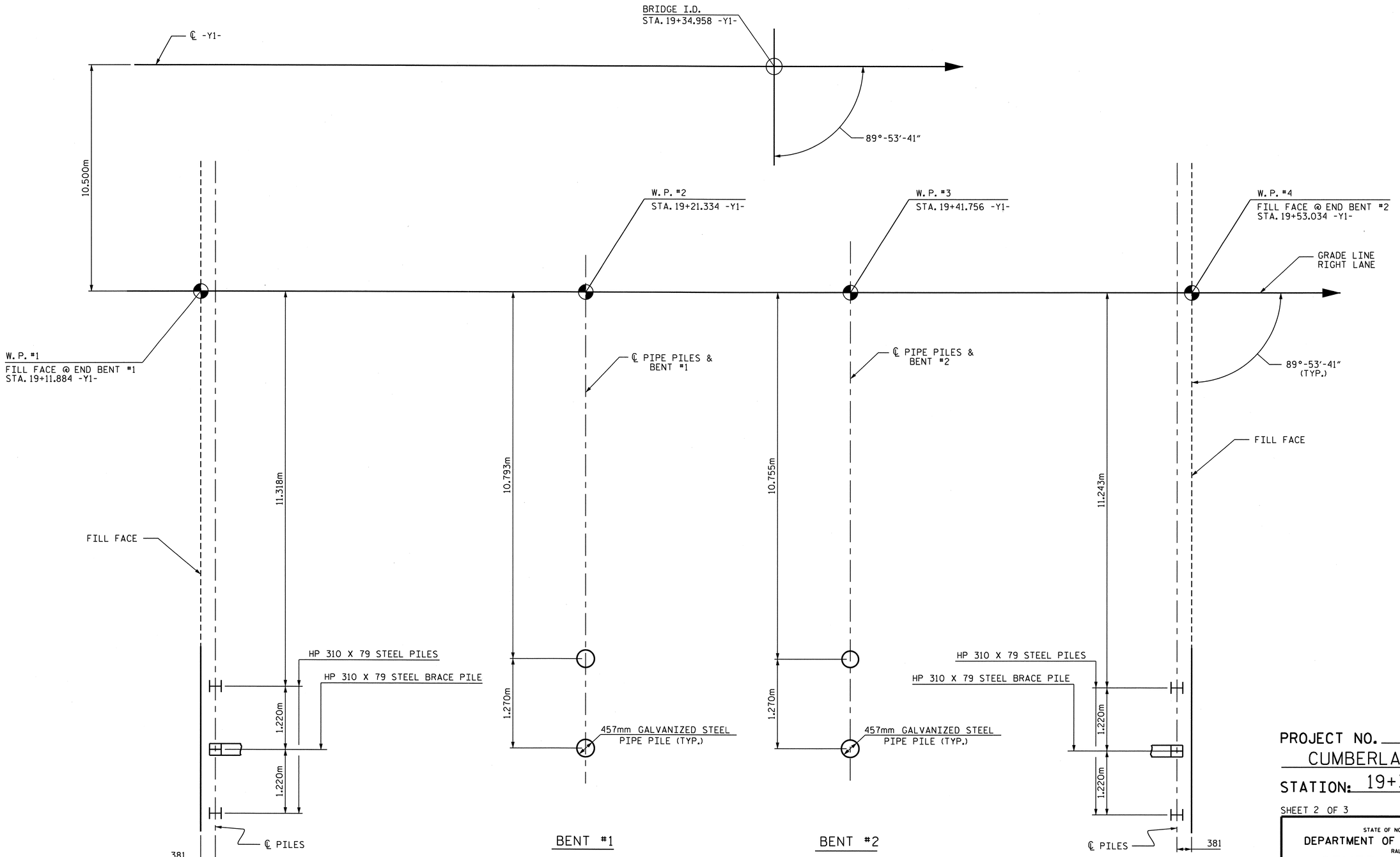

FOUNDATION LAYOUT

DIMENSIONS LOCATING PILES ARE SHOWN TO THE PILE CENTERLINE.
BRACE PILES AT END BENTS ARE TO BE BATTERED @ 250:1000.
EXISTING PILES & COLUMNS NOT SHOWN FOR CLARITY.

NORTH CAROLINA PROFESSIONAL SEAL 14045 ENGINEER TIMOTHY L. COGGINS
3/29/11

DRAWN BY : PEGGY ADKINS DATE : 9-08
CHECKED BY : B.N. BARODAWALA DATE : 9-08

29-MAR-2011 14:52
R:\Structures\azizi\Final Plans\STR 06\U2519DA_sd_FL_06.dgn
mruffin

PROJECT NO. U-2519DA
CUMBERLAND COUNTY
STATION: 19+34.958 -Y1-

SHEET 2 OF 3

STATE OF NORTH CAROLINA
DEPARTMENT OF TRANSPORTATION
RALEIGH

GENERAL DRAWING

FOR BRIDGE WIDENING OVER BEAVER CREEK ON ALL AMERICAN FREEWAY BETWEEN GRUBER ROAD AND SANTA FE DRIVE

(RIGHT LANE)

REVISIONS						SHEET NO.
NO.	BY:	DATE:	NO.	BY:	DATE:	S-128
1			3			TOTAL SHEETS
2			4			411

STR. #6

BM #36: BY-5 ALUMINUM DISK 1.718m RT. -Y1- STA. 19+11.827, EL. 64.338, NAVD 29.

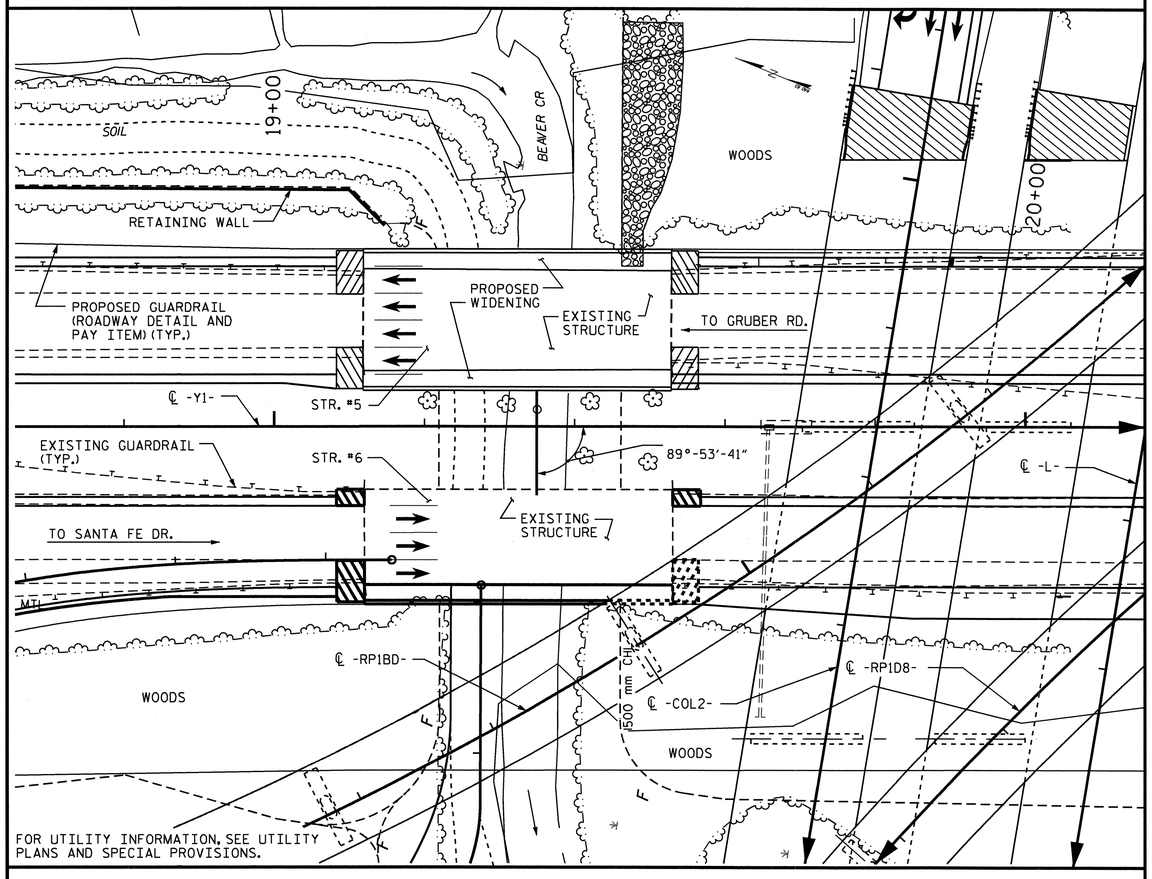

LOCATION SKETCH

NOTES:

ASSUMED LIVE LOAD = MS18 OR ALTERNATE LOADING.

THIS BRIDGE HAS BEEN DESIGNED IN ACCORDANCE WITH THE REQUIREMENTS OF THE AASHTO STANDARD SPECIFICATIONS FOR SEISMIC DESIGN OF HIGHWAY BRIDGES FOR SEISMIC PERFORMANCE CATEGORY A.

ALL DIMENSIONS ARE IN MILLIMETERS UNLESS OTHERWISE NOTED.

ALL ELEVATIONS ARE IN METERS.

FOR OTHER DESIGN DATA AND GENERAL NOTES, SEE SHEET SNSM.

FOR EROSION CONTROL MEASURES SEE EROSION CONTROL PLANS

REMOVABLE FORMS MAY BE USED IN LIEU OF METAL STAY-IN-PLACE FORMS IN ACCORDANCE WITH ARTICLE 420-3 OF THE STANDARD SPECIFICATIONS.

PARTIAL REMOVAL OF THE EXISTING BRIDGE SHALL BE PERFORMED SO AS NOT TO ALLOW DEBRIS TO FALL INTO THE WATER. THE CONTRACTOR SHALL PERFORM PARTIAL BRIDGE REMOVAL AND SUBMIT PLANS FOR DEMOLITION IN ACCORDANCE WITH ARTICLE 402-2 OF THE STANDARD SPECIFICATIONS. FOR REMOVAL OF EXISTING STRUCTURE, SEE SPECIAL PROVISIONS.

FOR MAINTENANCE AND PROTECTION OF TRAFFIC BENEATH PROPOSED STRUCTURE, SEE SPECIAL PROVISIONS.

THE SUBSTRUCTURE OF THE EXISTING BRIDGE INDICATED ON THE PLANS IS FROM THE BEST INFORMATION AVAILABLE. SINCE THIS INFORMATION IS SHOWN FOR THE CONVENIENCE OF THE CONTRACTOR, THE CONTRACTOR SHALL HAVE NO CLAIM WHATSOEVER AGAINST THE DEPARTMENT OF TRANSPORTATION FOR ANY DELAYS OR ADDITIONAL COST INCURRED BASED ON DIFFERENCES BETWEEN THE EXISTING BRIDGE SUBSTRUCTURE SHOWN ON THE PLANS AND THE ACTUAL CONDITIONS AT THE PROJECT SITE.

THIS STRUCTURE HAS BEEN DESIGNED IN ACCORDANCE WITH HEC 18, "EVALUATING SCOUR AT BRIDGES", MAY, 2001.

THE CONTRACTOR SHALL PROVIDE INDEPENDENT ASSURANCE SAMPLES OF REINFORCING STEEL AS FOLLOWS: FOR PROJECTS REQUIRING UP TO 360,000 kg OF REINFORCING STEEL, ONE 760mm SAMPLE OF EACH SIZE BAR USED, AND FOR PROJECTS REQUIRING OVER 360,000 kg OF REINFORCING STEEL, TWO 760mm SAMPLES OF EACH SIZE BAR USED. THE BARS FROM WHICH THE SAMPLES ARE TAKEN MUST THEN BE SPLICED WITH REPLACEMENT BARS OF THE SIZE AND LENGTH OF THE SAMPLE PLUS A MINIMUM LAP SPLICE OF THIRTY BAR DIAMETERS.

FOR SUBMITTAL OF WORKING DRAWINGS, SEE SPECIAL PROVISIONS.

FOR FALSEWORK AND FORMWORK, SEE SPECIAL PROVISIONS.

FOR PRESTRESSED CONCRETE MEMBERS, SEE SPECIAL PROVISIONS.

THIS BRIDGE HAS BEEN DESIGNED BY THE STRENGTH DESIGN METHOD AS SPECIFIED IN AASHTO STANDARD SPECIFICATIONS.

NEEDLE BEAMS WILL NOT BE ALLOWED UNLESS OTHERWISE CALLED FOR ON THE PLANS OR APPROVED BY THE ENGINEER.

FOR GROUT FOR STRUCTURES, SEE SPECIAL PROVISIONS.

FOR CRANE SAFETY, SEE SPECIAL PROVISIONS.

FOR CURING CONCRETE, SEE SPECIAL PROVISIONS.

FOR PLACING LOAD ON STRUCTURE MEMBERS, SEE SPECIAL PROVISIONS.

FOR PILES, SEE SPECIAL PROVISIONS.

DRIVE PILES AT END BENT NO. 1 AND END BENT NO. 2 TO A REQUIRED BEARING CAPACITY OF 900 KN PER PILE. THE REQUIRED BEARING CAPACITY IS EQUAL TO THE ALLOWABLE BEARING CAPACITY WITH A MINIMUM FACTOR OF SAFETY OF TWO.

DRIVE PILES AT BENT NO. 1 AND BENT NO. 2 TO A REQUIRED BEARING CAPACITY OF 1300 KN PER PILE. THE REQUIRED BEARING CAPACITY IS EQUAL TO THE ALLOWABLE BEARING CAPACITY WITH A MINIMUM FACTOR OF SAFETY OF TWO PLUS ANY ADDITIONAL CAPACITY TO ACCOUNT FOR DOWN DRAG OR NEGATIVE SKIN FRICTION OR SCOUR.

INSTALL PILES AT BENT NO. 1 AND BENT NO. 2 TO A TIP ELEVATION NO HIGHER THAN 51 M.

THE ALLOWABLE BEARING CAPACITY FOR PILES AT END BENT NO. 1 AND END BENT NO. 2 IS 450 KN PER PILE.

THE ALLOWABLE BEARING CAPACITY FOR PILES AT BENT NO. 1 AND BENT NO. 2 IS 620 KN PER PILE.

THE SCOUR CRITICAL ELEVATION FOR BENT NO. 1 AND BENT NO. 2 IS 56 M AND 54 M, RESPECTIVELY. THE SCOUR CRITICAL ELEVATIONS ARE USED TO MONITOR POSSIBLE SCOUR PROBLEMS DURING THE LIFE OF THE STRUCTURE.

FOR INTERIOR BENTS 1 & 2, ONLY PARTIAL GALVANIZING OF THE PILES IS REQUIRED. SEE INTERIOR BENT SHEETS FOR REQUIRED GALVANIZED LENGTHS. PAYMENT FOR PARTIALLY GALVANIZED PILES WILL BE MADE UNDER THE CONTRACT UNIT PRICE FOR PP457 X 12.70 GALVANIZED STEEL PILES.

TOTAL BILL OF MATERIAL

	REMOVAL OF EXISTING STRUCTURE	REINFORCED CONCRETE DECK SLAB	GROOVING BRIDGE FLOORS	CLASS A CONCRETE	BRIDGE APPROACH SLABS	REINFORCING STEEL	914mm PRESTRESSED CONCRETE GIRDERS		1143mm PRESTRESSED CONCRETE GIRDERS		HP 310 X 79 STEEL PILES		PP457 X 12.70 GALVANIZED STEEL PILES		PILE REDRIVES	CONCRETE BARRIER RAIL	100mm SLOPE PROTECTION	CLASS I SURFACE PREP	CLASS IA SURFACE PREP	CLASS II SURFACE PREP	LATEX MODIFIED CONCRETE OVERLAY	PLACING AND FINISHING OF LATEX MODIFIED CONCRETE OVERLAY	ELASTOMERIC BEARINGS	EVAZOTE JOINT SEALS	ONE BAR METAL RAIL REATTACHMENT
	LUMP SUM	SQ. METERS	SQ. METERS	CU. METERS	LUMP SUM	kg	NO.	METERS	NO.	METERS	NO.	METERS	NO.	METERS	EACH	METERS	SQ. METERS	SQ. METERS	SQ. METERS	SQ. METERS	CU. METERS	SQ. METERS	LUMP SUM	LUMP SUM	METERS
SUPERSTRUCTURE	LUMP SUM	124.3	708.9		LUMP SUM		4	40.532	2	40.640						41.150		495.4	89.2	24.8	24.9	776.1	LUMP SUM	LUMP SUM	39.372
END BENT 1				4.3		367					3	66			1		354								
BENT 1				2.1		265							2	46	1										
BENT 2				2.1		265							2	46	1										
END BENT 2				4.3		367					3	63			1		432								
TOTAL	LUMP SUM	124.3	708.9	12.8	LUMP SUM	1264	4	40.532	2	40.640	6	129	4	92	4	41.150	786	495.4	89.2	24.8	24.9	776.1	LUMP SUM	LUMP SUM	39.372

HYDRAULIC DATA

DESIGN DISCHARGE	=	52.7 m3/s
FREQUENCY OF DESIGN FLOOD	=	50 YR.
DESIGN HIGH WATER ELEVATION	=	59.05m
DRAINAGE AREA	=	15.0 sq. km.
BASIC DISCHARGE (0100)	=	58.9 m3/s
BASIC HIGH WATER ELEVATION	=	59.36m

OVERTOPPING FLOOD DATA

OVERTOPPING DISCHARGE	*
FREQUENCY OF OVERTOPPING FLOOD	>500+ YR.
OVERTOPPING FLOOD ELEVATION	63.03m

* OVERTOPPING FLOOD IS GREATER THAN 500+ YR. EVENT. OVERTOPPING LOCATION AT -RPIA- 16+34.207

NORTH CAROLINA PROFESSIONAL SEAL 14045 ENGINEER TIMOTHY L. COGGINS 4/4/11

PROJECT NO. U-2519DA

CUMBERLAND COUNTY

STATION: 19+34.958 -Y1-

SHEET 3 OF 3

STATE OF NORTH CAROLINA
DEPARTMENT OF TRANSPORTATION
RALEIGH

GENERAL DRAWING

FOR BRIDGE WIDENING OVER BEAVER CREEK ON ALL AMERICAN FREEWAY BETWEEN GRUBER ROAD AND SANTA FE DRIVE (RIGHT LANE)

REVISIONS						SHEET NO.
NO.	BY:	DATE:	NO.	BY:	DATE:	S-129
1			3			TOTAL SHEETS
2			4			411

DRAWN BY : PEGGY ADKINS DATE : 2-07
CHECKED BY : B.N. BARODAWALA DATE : 9-08

04-APR-2011 09:55
R:\TIPProjects-U\U2519da\Structures\azizi\FinalPlans\STR 06\U2519DA_sd_GD_06.dgn
tcoggins

STR. #6

NOTE:
FOR TRAFFIC CONTROL, SEE TRAFFIC CONTROL PLANS.

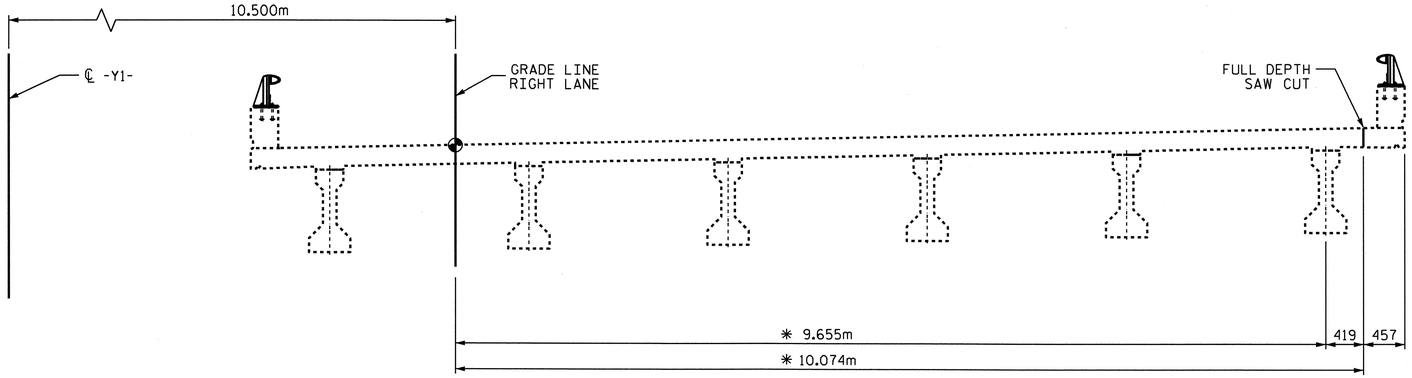

PHASE I

DIVERT TRAFFIC AS PER TRAFFIC CONTROL PLANS.
REMOVE EXISTING ONE-BAR METAL RAIL, PARAPET, AND PARTIAL DECK OVERHANG TO SAW CUT LINE. STOCKPILE RAIL, POST, AND POST BASE.

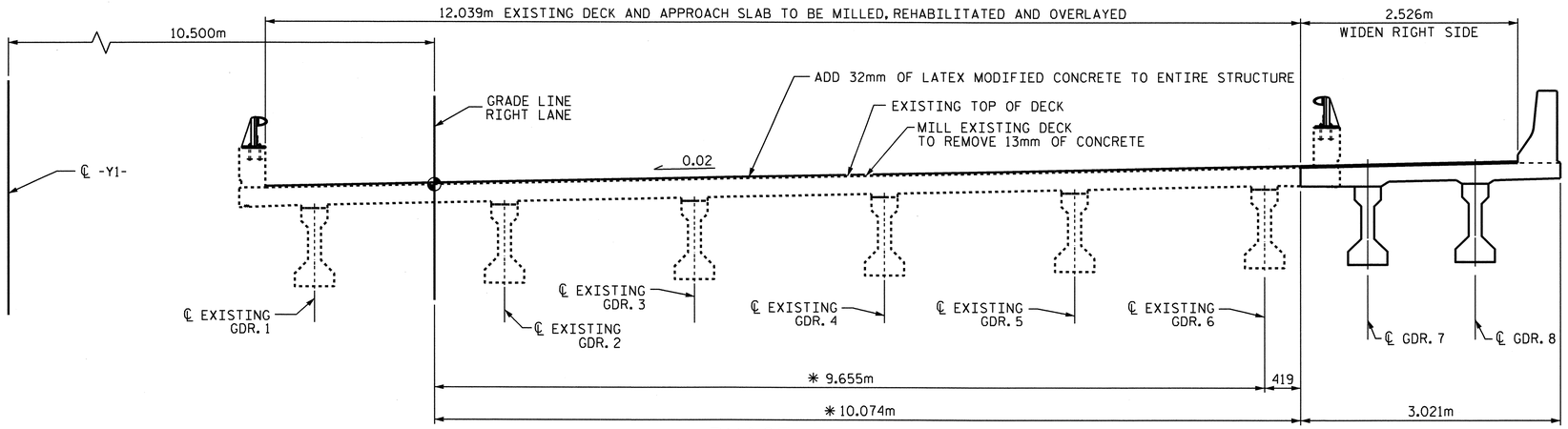

PHASE II

MAKE ALL NECESSARY DECK AND APPROACH SLAB REPAIR (CLASS IA, I, AND II SURFACE PERPARATION).
CONSTRUCT PROPOSED WIDENING OF DECK AND APPROACH SLABS AS SHOWN.
REMOVE ONE-BAR METAL RAIL. STOCKPILE RAIL, POST, AND POST BASE. RESPACE POST AND REPLACE ONE-BAR METAL RAIL ON LEFT SIDE.
CUT AND BLOCKOUT FOR ARMORED EVAZOTE JOINT AT EACH INTERIOR BENT.

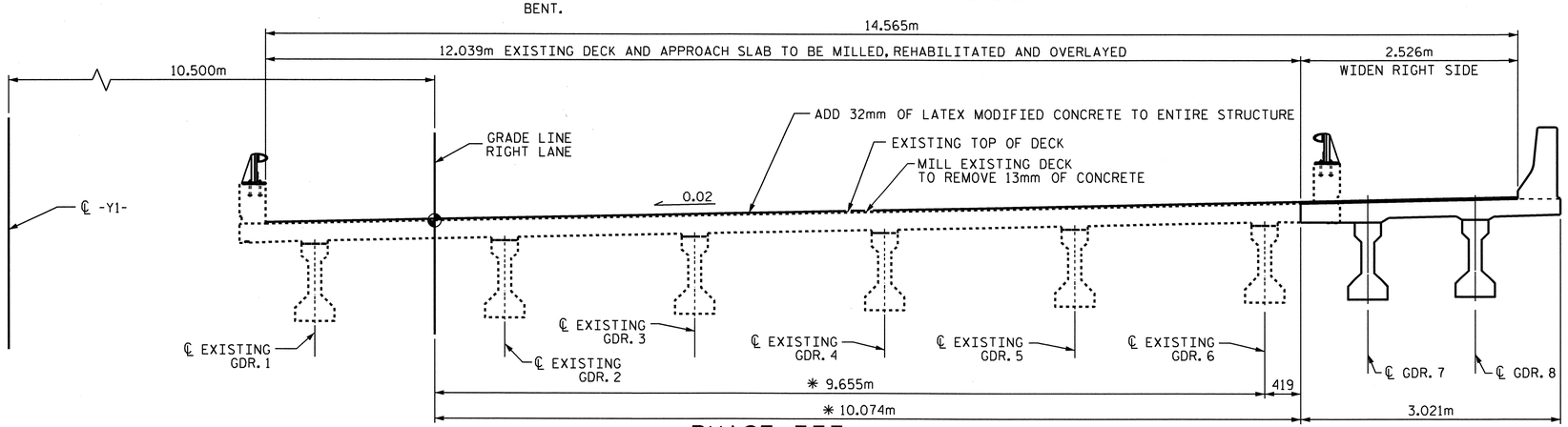

PHASE III

PLACE LATEX MODIFIED CONCRETE OVERLAY AS SHOWN AND OVERLAY APPROACH SLABS.
INSTALL ARMORED EVAZOTE JOINT SEALS.

* THESE DIMENSIONS ARE ONLY ACCURATE AT THE I.D. STATION 19+34.958 -Y1-.

PROJECT NO. U-2519DA
CUMBERLAND COUNTY
STATION: 19+34.958 -Y1-

STATE OF NORTH CAROLINA
DEPARTMENT OF TRANSPORTATION
RALEIGH

SUPERSTRUCTURE
CONSTRUCTION
SEQUENCE

(RIGHT LANE)

REVISIONS						SHEET NO.
NO.	BY:	DATE:	NO.	BY:	DATE:	S-130
1			3			TOTAL SHEETS
2			4			411

NORTH CAROLINA PROFESSIONAL SEAL 14045 ENGINEER TIMOTHY V. COGGINS
3/29/11

DRAWN BY : PEGGY PARISI DATE : 7-08
CHECKED BY : N. RUFFIN DATE : 9-08

29-MAR-2011 13:15
R:\TIPProjects-U\U2519da\Structures\azizi\Final Plans\STR 06\U2519DA_sd_TS_06.dgn
tcoggins

STR. #6

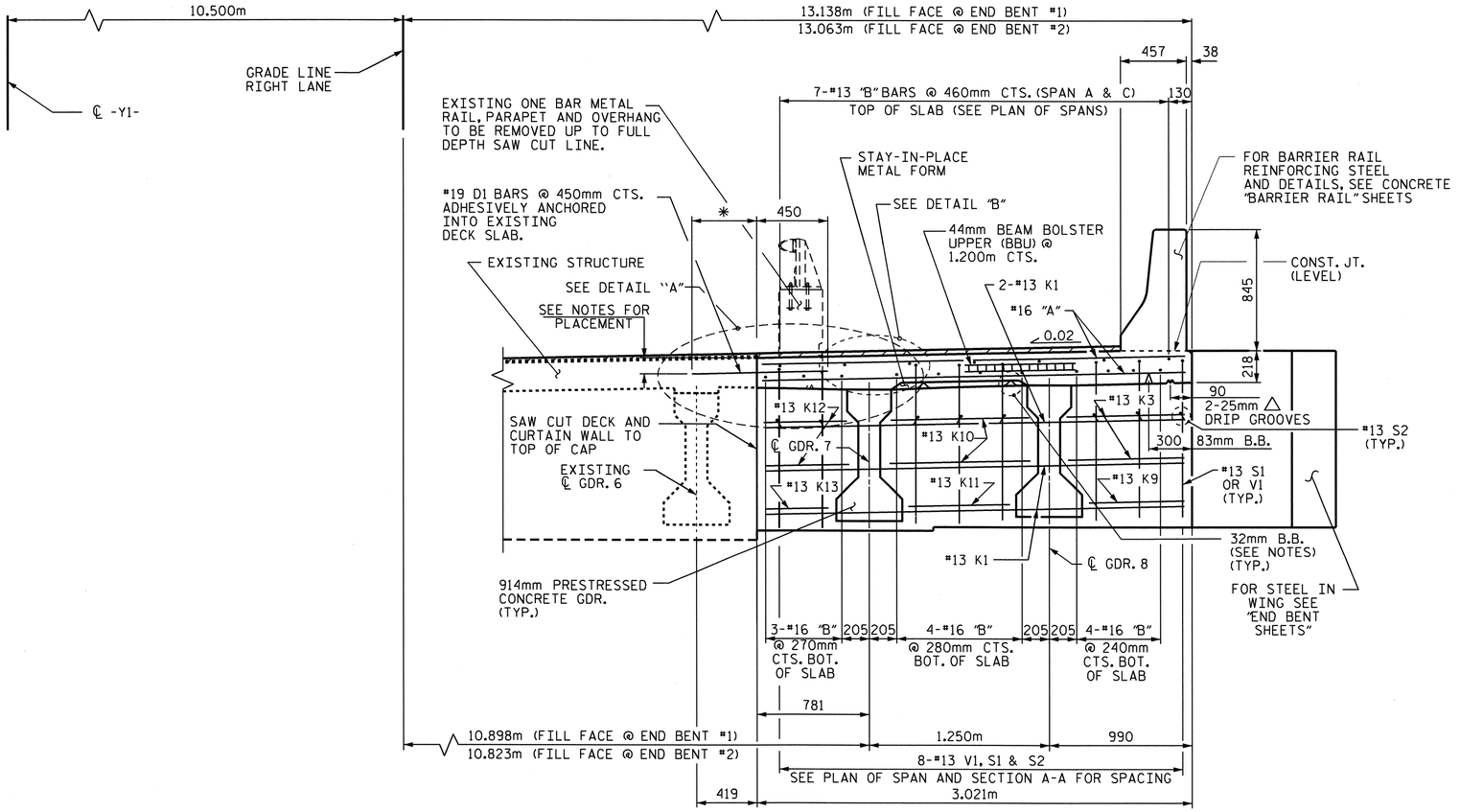

TYPICAL SECTION

SPANS "A" AND "C" SHOWING CURTAIN WALL WITH PAVEMENT BRACKET
(END BENT #1 SHOWN, END BENT #2 SIMILAR)

SEE SECTION A-A FOR PLACEMENT OF V1, S1 AND K1 BARS, SHEET 4 OF 4.

* EMBEDMENT LENGTH TO BE DETERMINED BY SELECTED MANUFACTURER.

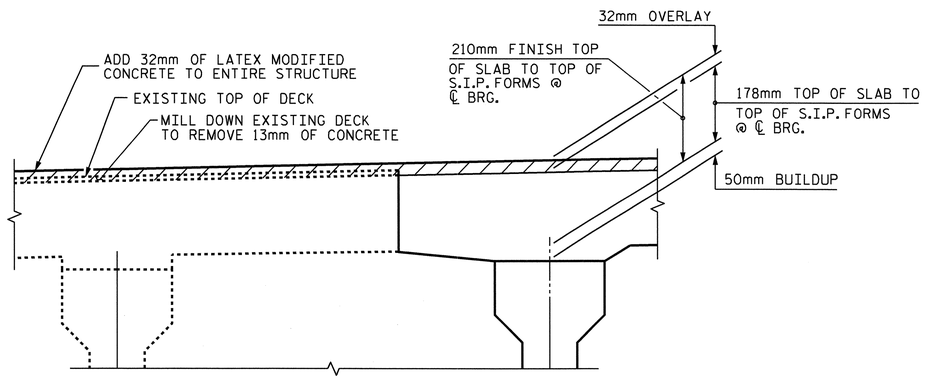

DETAIL A

NOTES:

PROVIDE 32mm HIGH BEAM BOLSTERS UPPER AT 800mm CTS. ATOP THE METAL STAY-IN-PLACE FORMS TO SUPPORT THE BOTTOM MAT OF 'A' BARS. WHEN USING REMOVABLE FORMS, PROVIDE CONTINUOUS HIGH CHAIRS FOR METAL DECK (C.H.C.M.) @ 800mm CTS. WITH A HEIGHT TO SUPPORT THE BOTTOM MAT OF 'A' BARS A CLEAR DISTANCE OF 65mm ABOVE THE TOP OF THE REMOVABLE FORM. FORM.

LONGITUDINAL STEEL MAY BE SHIFTED SLIGHTLY, AS NECESSARY, TO AVOID INTERFERENCE WITH STIRRUPS IN PRESTRESSED CONCRETE GIRDERS.

BARRIER RAIL IN EACH SPAN SHALL NOT BE CAST UNTIL ALL SLAB CONCRETE IN THAT SPAN HAS BEEN CAST AND HAS REACHED A MINIMUM COMPRESSIVE STRENGTH OF 20.7 MPa.

DOWELS SHALL BE PLACED IN THE SAME HORIZONTAL PLANE AS THE TOP SLAB REINFORCING STEEL.

A FULL DEPTH SAW CUT SHALL BE MADE AND EXISTING THE MAIN STEEL. CONCRETE REMOVED IN ACCORDANCE WITH PLAN DETAILS.

CONCRETE IN BENT AND INTERMEDIATE DIAPHRAGMS MAY BE CLASS A IN LIEU OF CLASS AA. PAYMENT SHALL BE MADE UNDER THE UNIT CONTRACT PRICE FOR REINFORCED CONCRETE DECK SLAB. SLAB.

DURING THE JOINT INSTALLATION PROCEDURE, THE JOINT AND SURROUNDING AREA SHALL BE KEPT CLEAN AND FREE OF DEBRIS.

THE CONCRETE SURFACE OF THE PROPOSED DECK WIDENING SHALL HAVE A RAKED FINISH.

* LEVEL 1 FIELD TESTING IS REQUIRED, AND THE YIELD LOAD OF THE DOWELS IS 120 KN. FOR ADHESIVELY ANCHORED ANCHOR BOLTS OR DOWELS, SEE SPECIAL PROVISIONS.

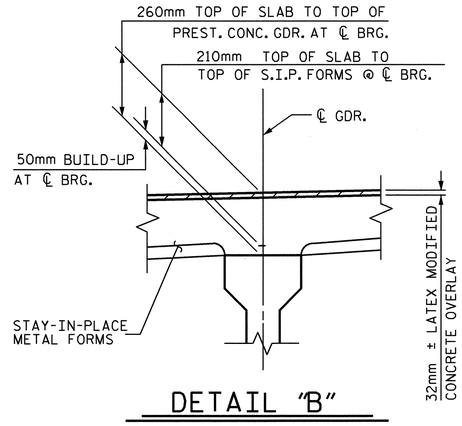

DETAIL "B"

PROJECT NO. U-2519DA

CUMBERLAND COUNTY

STATION: 19+34.958 -Y1-

SHEET 1 OF 4

STATE OF NORTH CAROLINA
DEPARTMENT OF TRANSPORTATION
RALEIGH

SUPERSTRUCTURE

TYPICAL SECTION

(RIGHT LANE)

REVISIONS						SHEET NO.
NO.	BY:	DATE:	NO.	BY:	DATE:	S-131
1			3			TOTAL SHEETS
2			4			411

NORTH CAROLINA PROFESSIONAL SEAL 14045 ENGINEER TIMOTHY W. COGGINS
4/4/11

DRAWN BY : PEGGY PARISI DATE : 7-08
CHECKED BY : N. RUFFIN DATE : 9-08

04-APR-2011 11:28
R:\TIPProjects-U\U2519da\Structures\azizi\Final Plans\STR 06\U2519DA_sd_TS_06.dgn
tcoggins

STR. #6

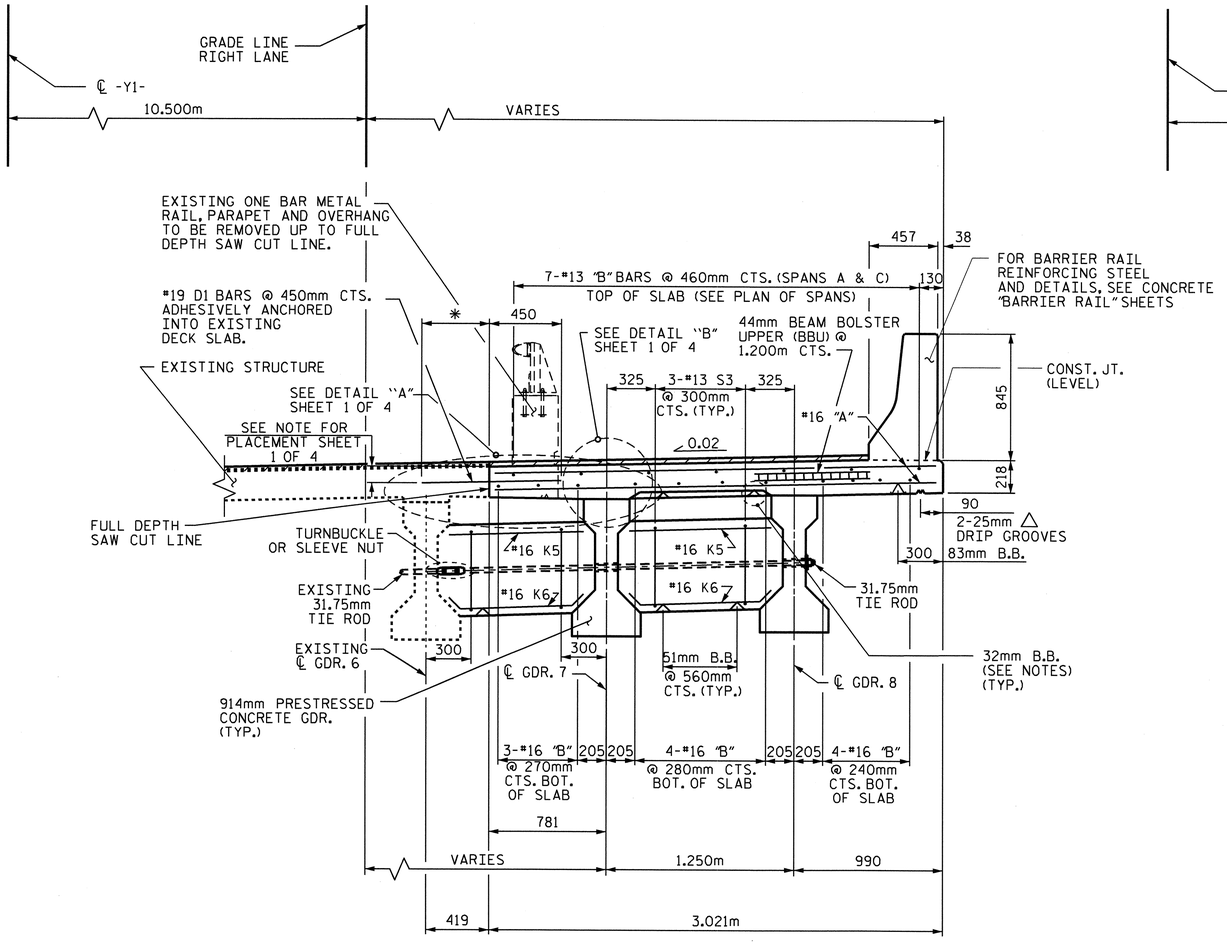

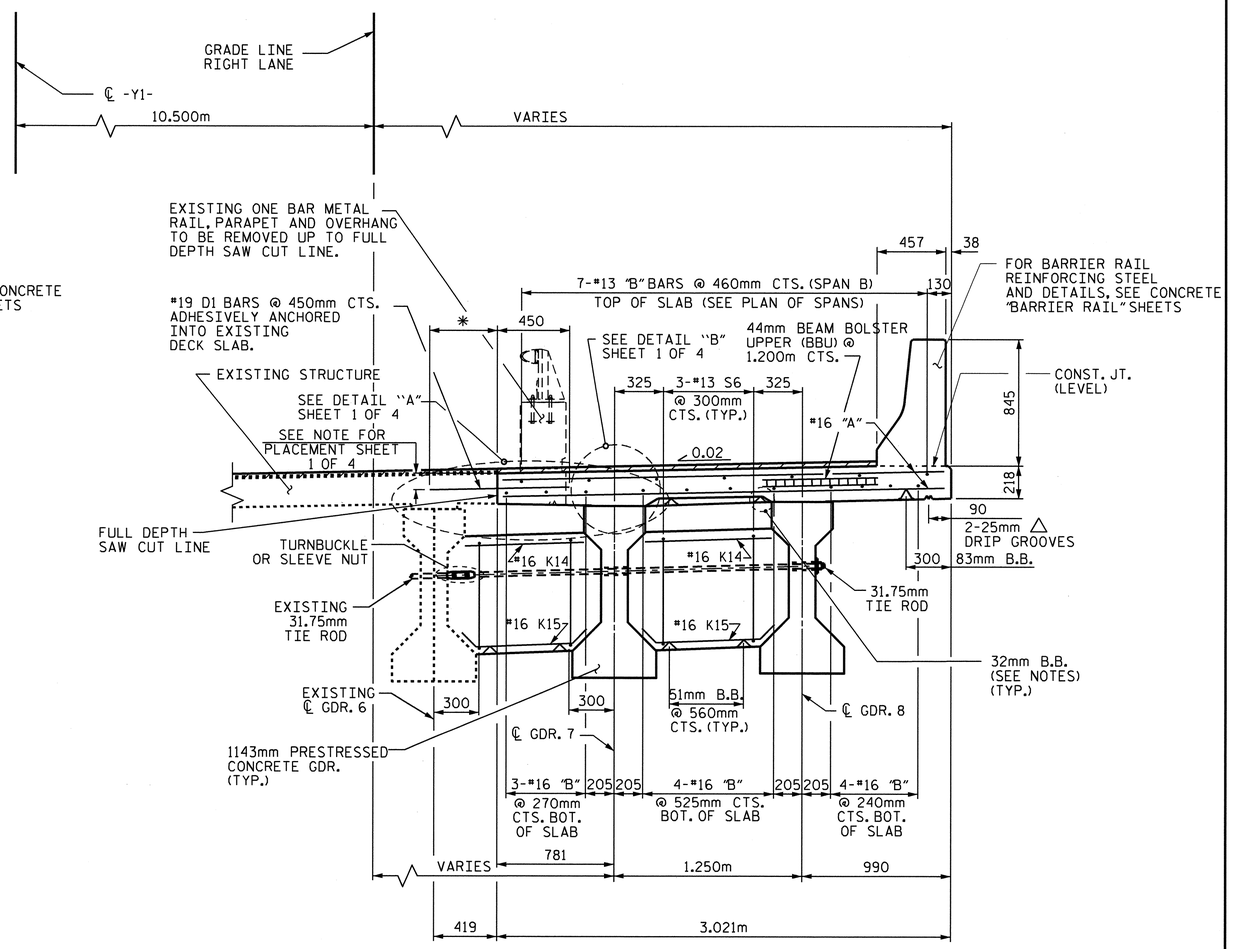

*EMBEDMENT LENGTH TO BE DETERMINED BY SELECTED MANUFACTURER.

TYPICAL SECTION

SPAN "A" AND "C" INTERMEDIATE DIAPHRAGMS

TYPICAL SECTION

SPAN "B" INTERMEDIATE DIAPHRAGMS

PROJECT NO. U-2519DA

CUMBERLAND COUNTY

STATION: 19+34.958 -Y1-

SHEET 2 OF 4

STATE OF NORTH CAROLINA
DEPARTMENT OF TRANSPORTATION
RALEIGH

SUPERSTRUCTURE

TYPICAL SECTION

(RIGHT LANE)

NORTH CAROLINA PROFESSIONAL SEAL 14045 ENGINEER TIMOTHY U. COGGINS
3/29/11

REVISIONS						SHEET NO.
NO.	BY:	DATE:	NO.	BY:	DATE:	S-132
1			3			TOTAL SHEETS
2			4			411

DRAWN BY : PEGGY PARISI DATE : 7-08
CHECKED BY : N. RUFFIN DATE : 9-08

29-MAR-2011 11:36
R:\Structures\azizi\FinalPlans\STR 06\U2519DA_sd_TS_06.dgn
nruffin

STR. #6

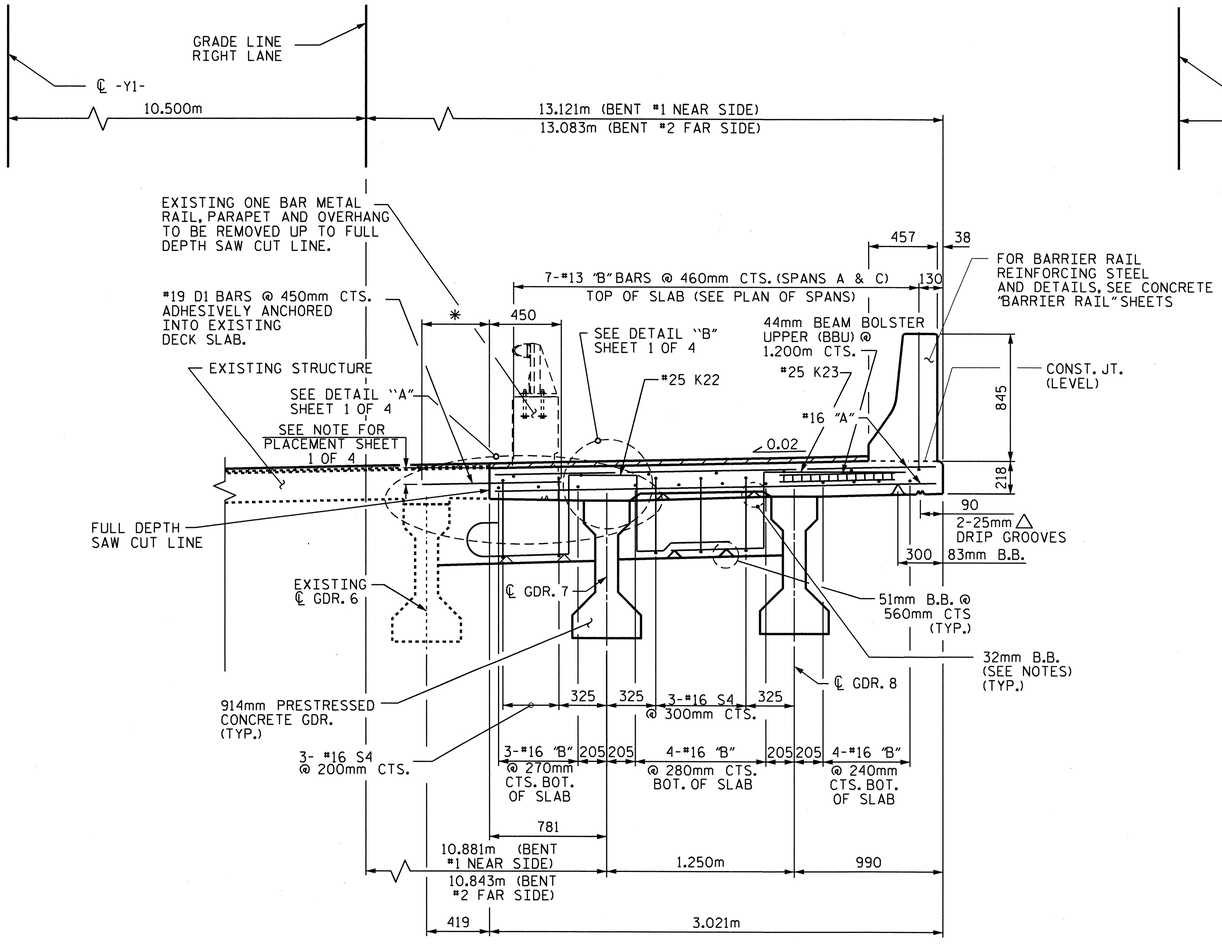

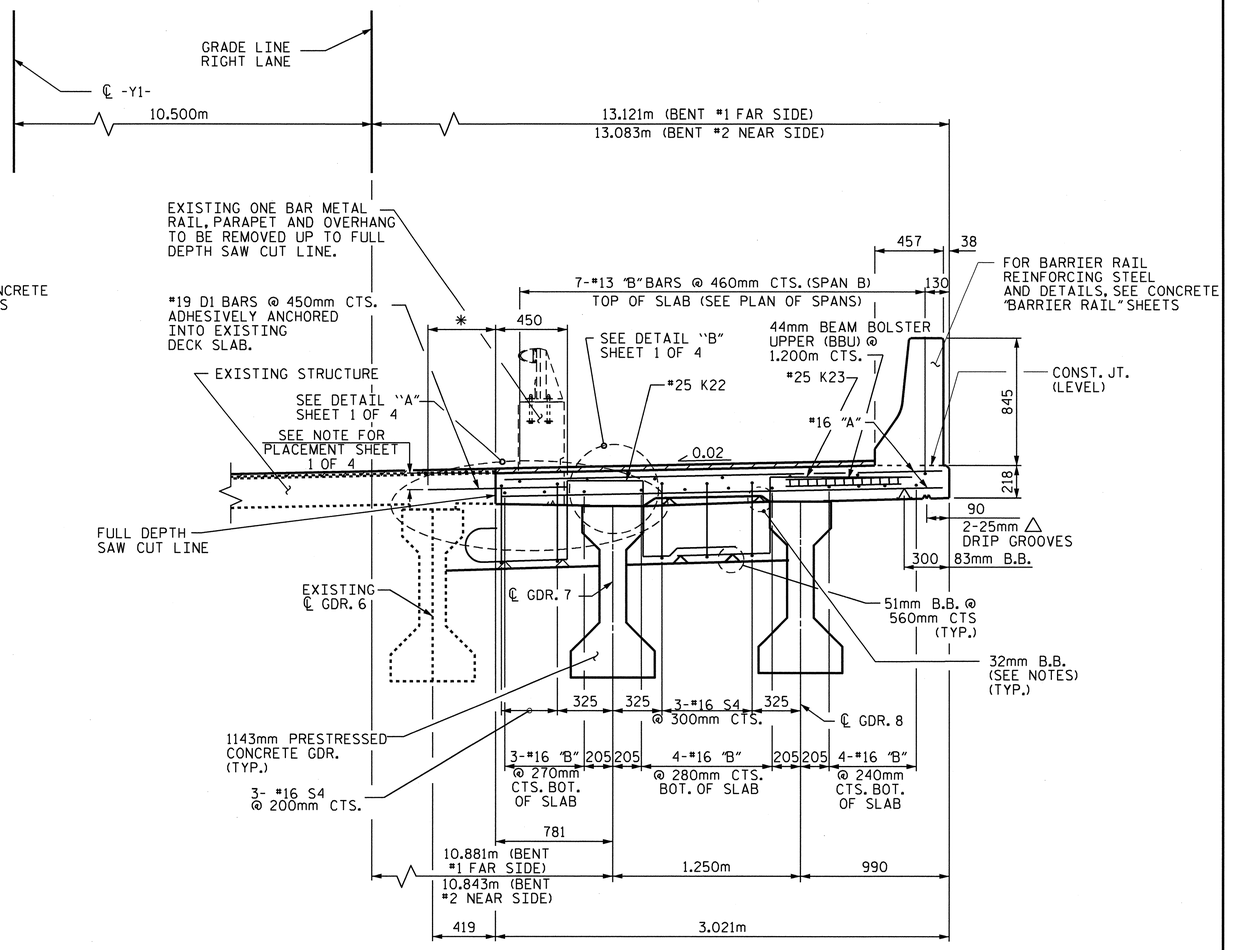

TYPICAL SECTION

BENT DIAPHRAGMS AT SPANS "A" AND "C"

*EMBEDMENT LENGTH TO BE DETERMINED BY SELECTED MANUFACTURER.

TYPICAL SECTION

BENT DIAPHRAGMS SPAN "B"

PROJECT NO. U-2519DA

CUMBERLAND COUNTY

STATION: 19+34.958 -Y1-

SHEET 3 OF 4

STATE OF NORTH CAROLINA
DEPARTMENT OF TRANSPORTATION
RALEIGH

SUPERSTRUCTURE

TYPICAL SECTION

(RIGHT LANE)

NORTH CAROLINA PROFESSIONAL SEAL 14045 ENGINEER TIMOTHY L. COGGINS
4/4/11

REVISIONS						SHEET NO.
NO.	BY:	DATE:	NO.	BY:	DATE:	S-133
1			3			TOTAL SHEETS
2			4			411

DRAWN BY : PEGGY PARISI DATE : 7-08
CHECKED BY : N. RUFFIN DATE : 9-08

04-APR-2011 5:35
R:\Structures\azizi\Final Plans\STR 06\U2519DA_sd_TS_06.dgn
nruffin

STR. #6

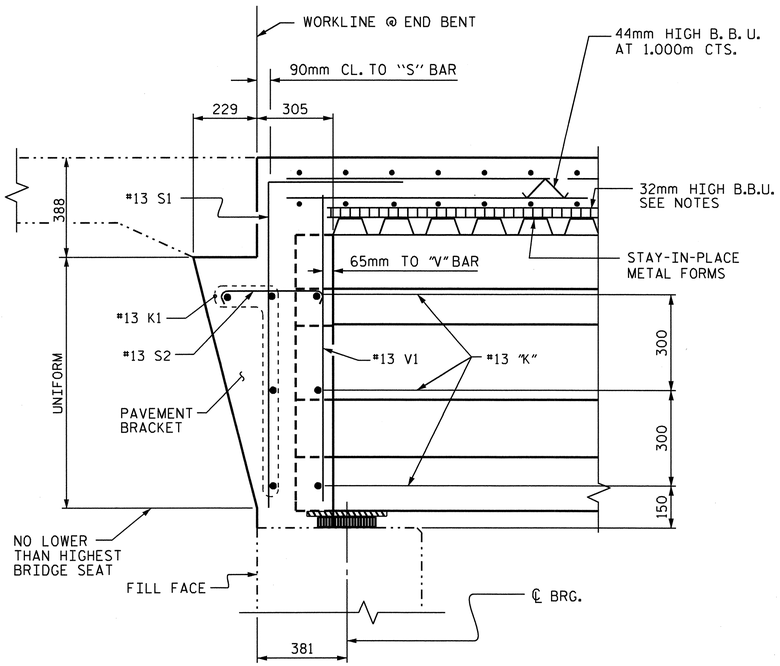

SECTION A-A

(TYP.)

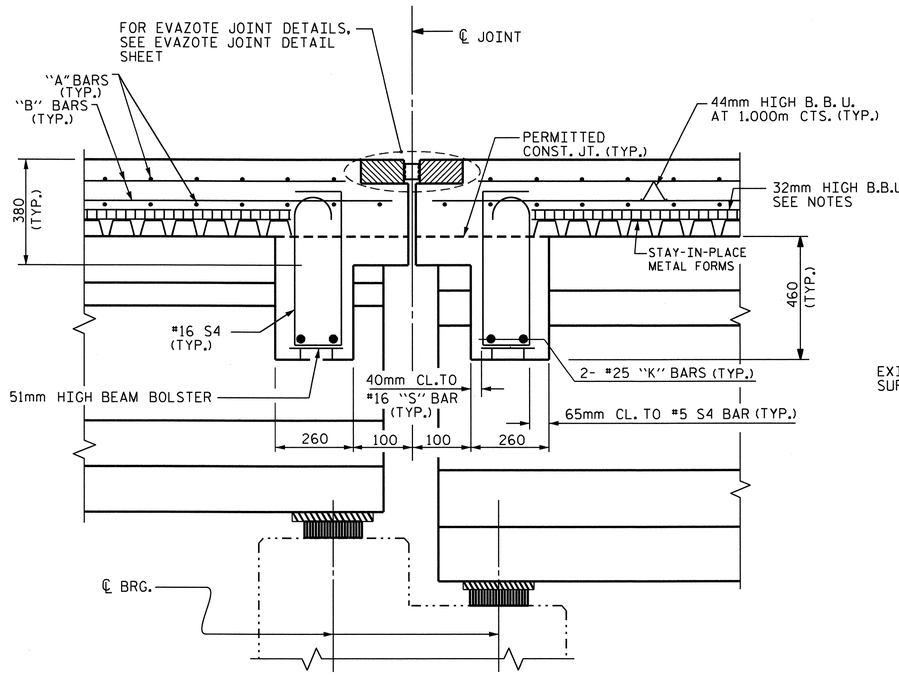

SECTION B-B

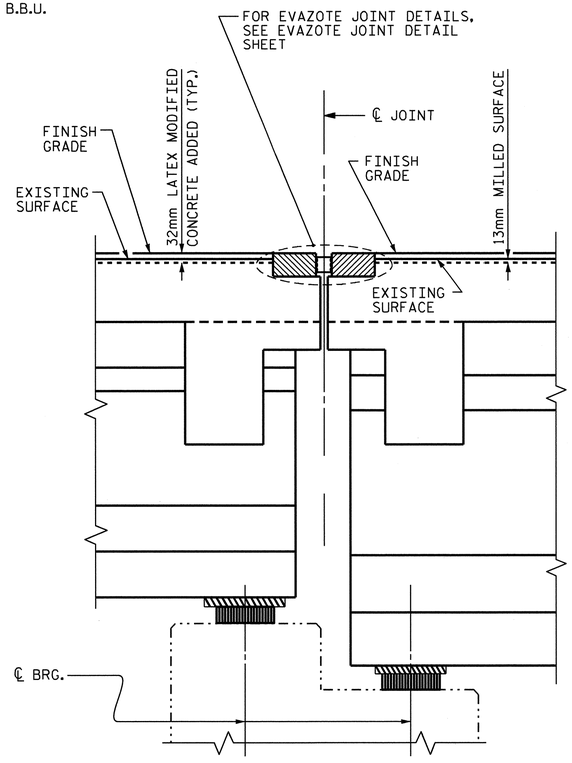

SECTION E-E

THE LATEX MODIFIED CONCRETE IS TO BE PUT ON EXISTING AND NEW SURFACE.

SHADED AREA TO BE REMOVED ON EXISTING STRUCTURE.

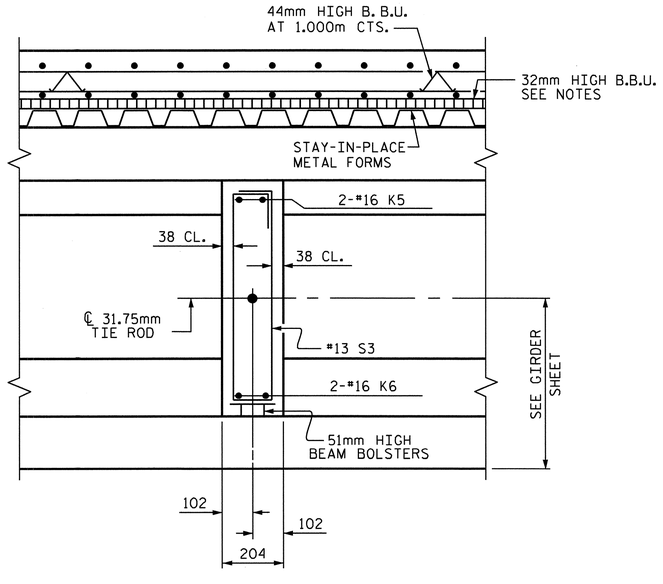

SECTION C-C

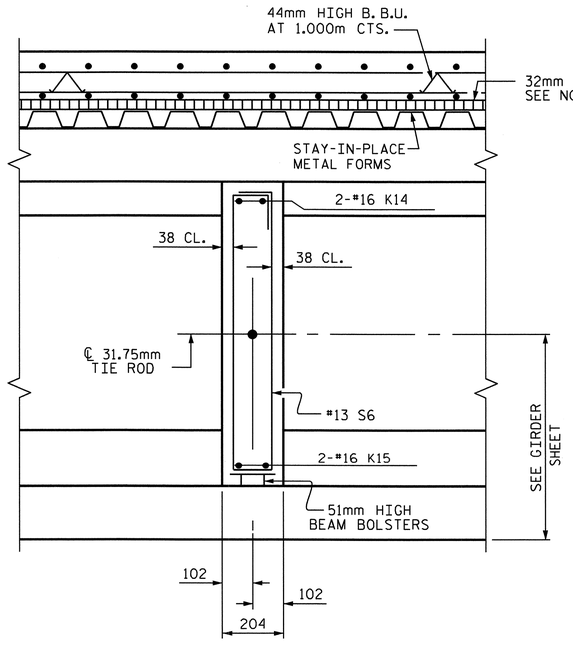

SECTION D-D

PROJECT NO. U-2519DA

CUMBERLAND COUNTY

STATION: 19+34.958 -Y1-

SHEET 4 OF 4

STATE OF NORTH CAROLINA
DEPARTMENT OF TRANSPORTATION
RALEIGH

SUPERSTRUCTURE

TYPICAL SECTION

(RIGHT LANE)

REVISIONS						SHEET NO.
NO.	BY:	DATE:	NO.	BY:	DATE:	S-134
1			3			TOTAL SHEETS
2			4			411

STR. #6

DRAWN BY : PEGGY PARISI DATE : 7-08
CHECKED BY : N. RUFFIN DATE : 9-08

04-APR-2011 09:57
R:\TIPProjects-U\U2519da\Structures\azizi\Final Plans\STR 06\U2519DA_sd_TS_06.dgn
tcoggins

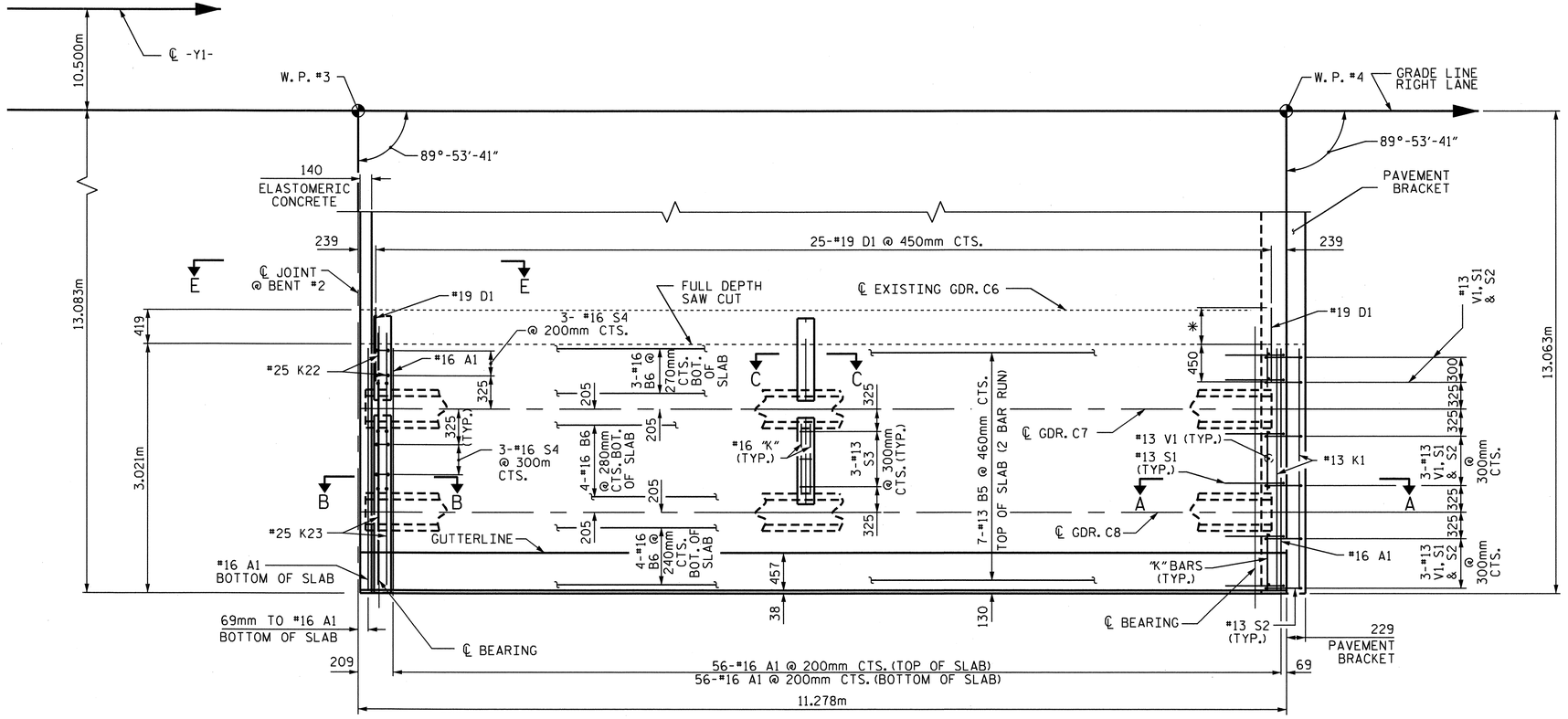

PLAN OF SPAN C

*EMBEDMENT LENGTH TO BE DETERMINED BY SELECTED MANUFACTURER.

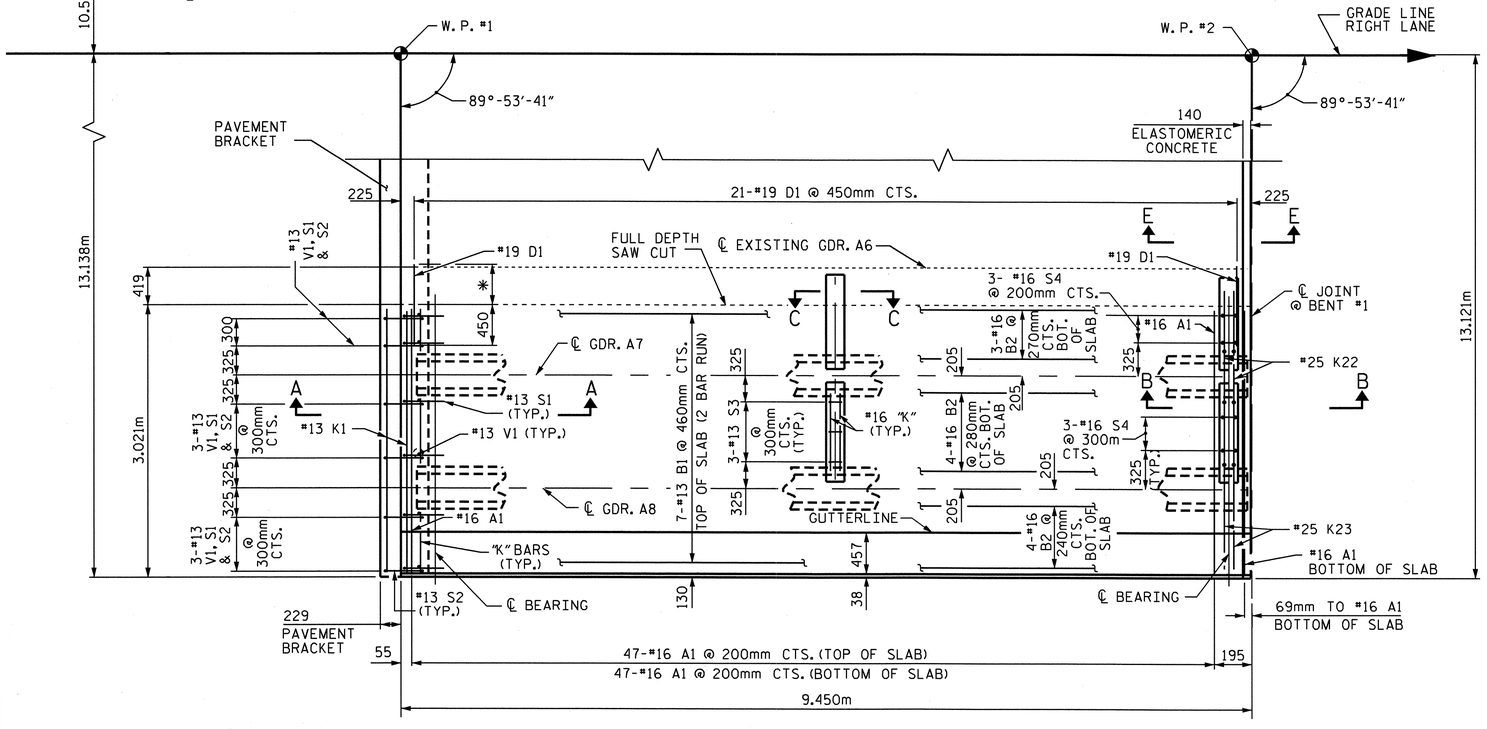

PLAN OF SPAN A

PROJECT NO. U-2519DA

CUMBERLAND COUNTY

STATION: 19+34.958 -Y1-

SHEET 1 OF 2

STATE OF NORTH CAROLINA
DEPARTMENT OF TRANSPORTATION
RALEIGH

SUPERSTRUCTURE
PLAN OF SPANS A AND C

(RIGHT LANE)

REVISIONS						SHEET NO.
NO.	BY:	DATE:	NO.	BY:	DATE:	S-135
1			3			TOTAL SHEETS
2			4			411

NORTH CAROLINA PROFESSIONAL SEAL 14045 ENGINEER TIMOTHY L. COGGINS
4/4/11

STR. #6

DRAWN BY : PEGGY PARISI DATE : 7-08
CHECKED BY : N. RUFFIN DATE : 9-08

04-APR-2011 15:24
R:\TIPProjects-U\U2519da\Structures\azizi\Final Plans\STR 06\U2519DA_sd_S*_06.dgn
tcoggins

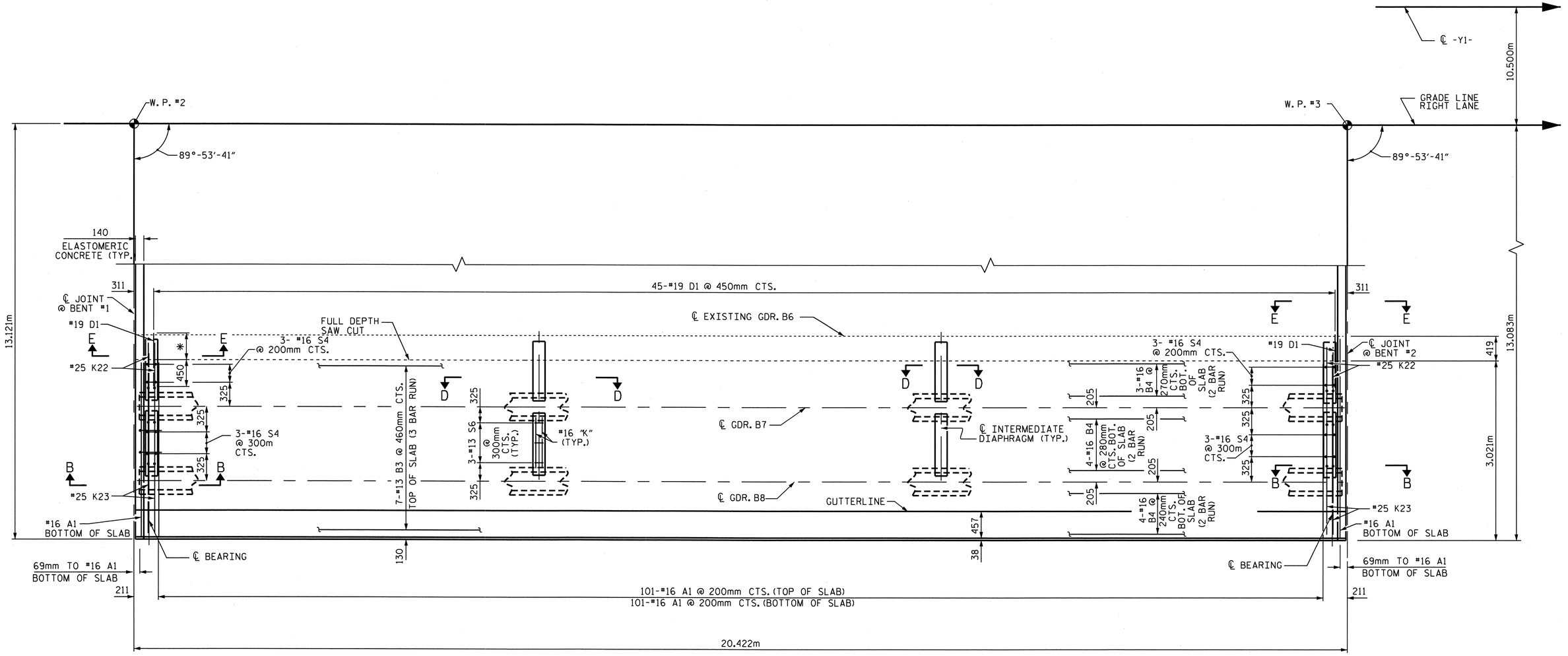

PLAN OF SPAN B

*EMBEDMENT LENGTH TO BE DETERMINED BY SELECTED MANUFACTURER.

PROJECT NO. U-2519DA

CUMBERLAND COUNTY

STATION: 19+34.958 -Y1-

SHEET 2 OF 2

STATE OF NORTH CAROLINA
DEPARTMENT OF TRANSPORTATION
RALEIGH

SUPERSTRUCTURE

PLAN OF SPAN B

(RIGHT LANE)

REVISIONS						SHEET NO.
NO.	BY:	DATE:	NO.	BY:	DATE:	S-136
1			3			TOTAL SHEETS
2			4			411

NORTH CAROLINA PROFESSIONAL SEAL 14045 ENGINEER TIMOTHY W. COGGINS

4/4/11

DRAWN BY : PEGGY PARISI DATE : 7-08
CHECKED BY : N. RUFFIN DATE : 9-08

04-APR-2011 14:59
R:\TIPProjects-U\U2519da\Structures\azizi\Final Plans\STR 06\U2519DA_sd_S*_06.dgn
tcoggins

STR. #6

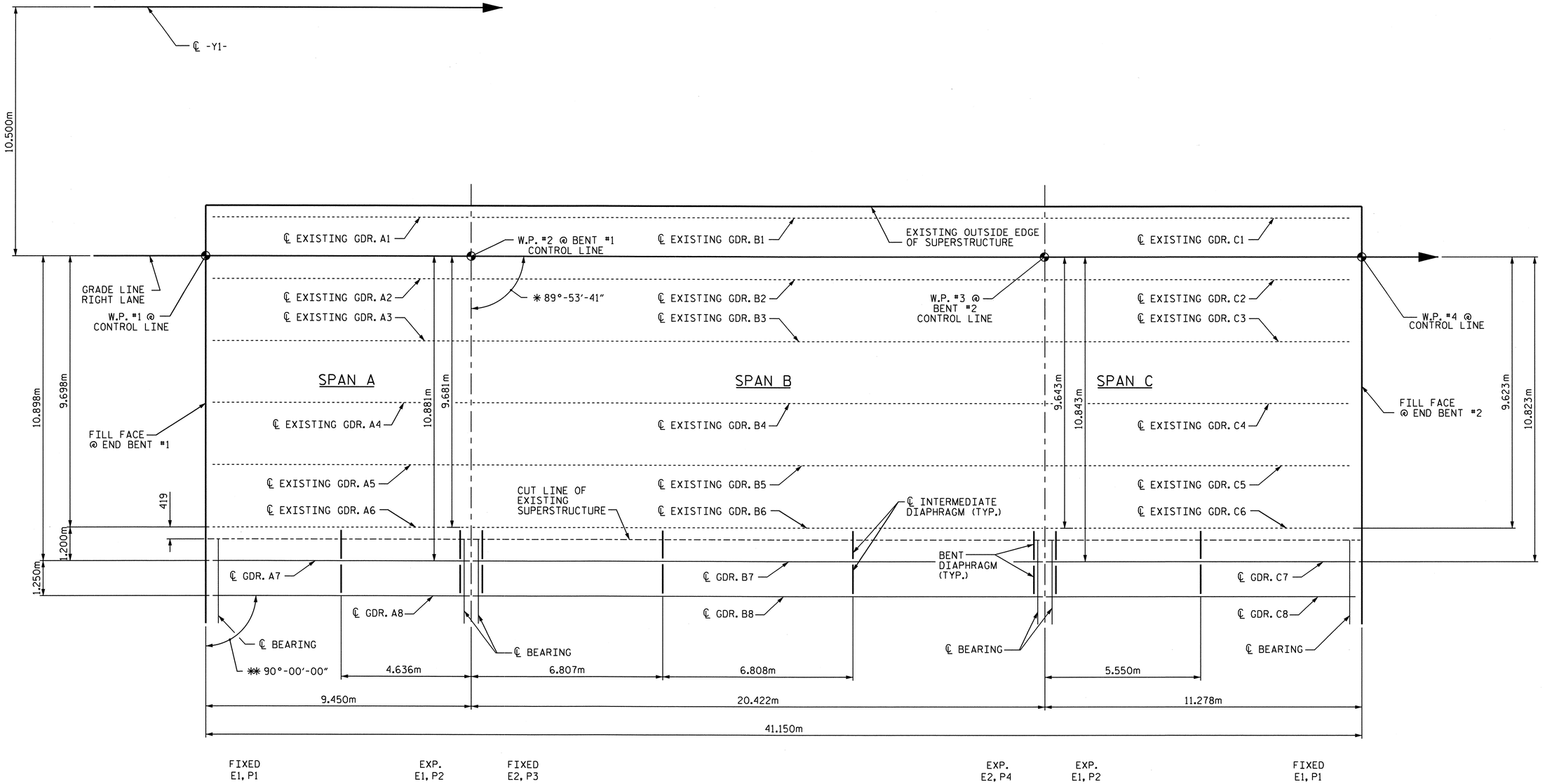

GIRDER LAYOUT PLAN

✳ TYPICAL @ INTERSECTION GRADE LINE AND EACH SUBSTRUCTURE CONTROL LINE.

✳✳ TYPICAL @ ℄ GIRDER AND EACH CONTROL LINE INTERSECTION.

PROJECT NO. U-2519DA

CUMBERLAND COUNTY

STATION: 19+34.958 -Y1-

STATE OF NORTH CAROLINA
DEPARTMENT OF TRANSPORTATION
RALEIGH

SUPERSTRUCTURE

GIRDER LAYOUT PLAN

(RIGHT LANE)

REVISIONS						SHEET NO.
NO.	BY:	DATE:	NO.	BY:	DATE:	S-137
1			3			TOTAL SHEETS
2			4			411

NORTH CAROLINA PROFESSIONAL SEAL 14045 ENGINEER TIMOTHY W. COGGINS

DRAWN BY : PEGGY PARISI DATE : 7-08
CHECKED BY : N. RUFFIN DATE : 9-08

29-MAR-2011 11:36
R:\Structures\azizi\Final Plans\STR 06\U2519DA_sd_FP_06.dgn
nruffin

STR. #6

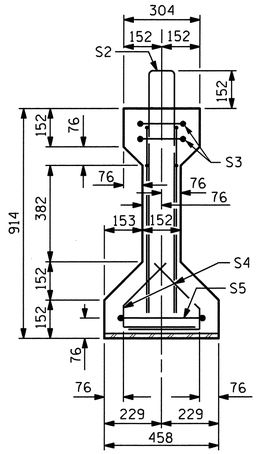

SECTION A-A

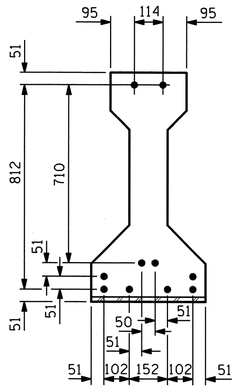

AT END OF GIRDER

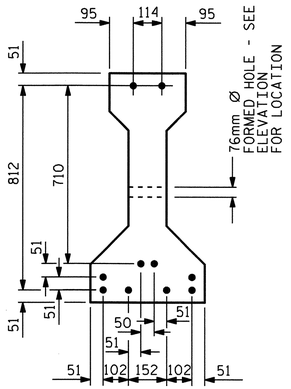

AT ℄ OF GIRDER

12.70mm Ø LOW RELAXATION STRAND LAYOUT

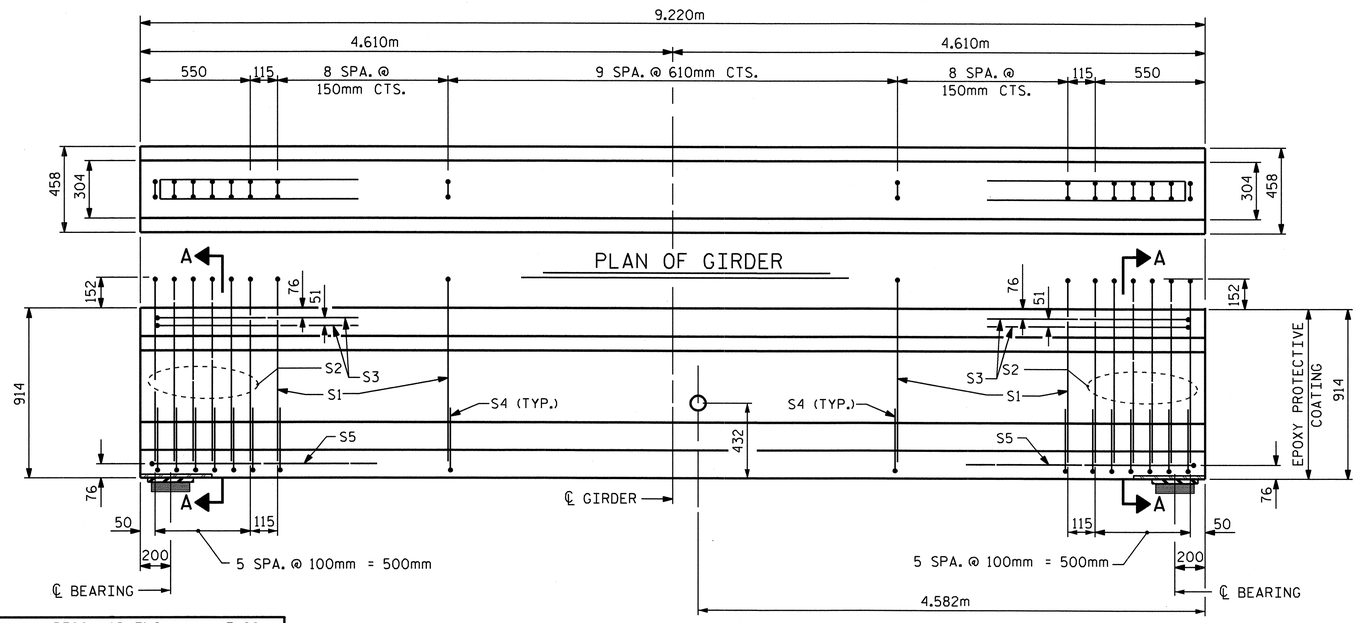

ELEVATION OF GIRDER

NOTES

ALL PRESTRESSING STRANDS SHALL BE 7-WIRE LOW-RELAXATION GRADE 270 STRANDS AND SHALL CONFORM TO AASHTO M203M EXCEPT FOR SAMPLING REQUIREMENTS WHICH SHALL BE IN ACCORDANCE WITH THE STANDARD SPECIFICATIONS.

ALL REINFORCING STEEL SHALL BE GRADE 420.

APPLY EPOXY PROTECTIVE COATING TO END OF GIRDER SURFACES, SPAN A FAR END ONLY.

EMBEDDED PLATE "B-1" SHALL BE GALVANIZED IN ACCORDANCE WITH THE SPECIFICATIONS. BEVEL EDGES OF PLATE "B-1" TO GIVE CLOSE FIT BUT NOT TIGHT FIT TO STEEL CASTING FORM.

ANCHOR STUDS SHALL CONFORM TO AASHTO M169 GRADES 1010 THROUGH 1020 OR APPROVED EQUAL, AND SHALL MEET THE TYPE "B" REQUIREMENTS OF SUBSECTION 7.3 OF THE ANSI/AASHTO/AWS D1.5 BRIDGE WELDING CODE.

ALL PRESTRESSED STRANDS SHALL BE CUT FLUSH WITH THE GIRDER ENDS.

THE TRANSFER OF LOAD FROM THE ANCHORAGES TO THE GIRDER SHALL BE DONE WHEN CONCRETE HAS REACHED A COMPRESSIVE STRENGTH OF NOT LESS THAN 27.6 MPa.

DEPENDING ON THE TYPE OF SYSTEM USED TO SUPPORT THE DECK SLAB FORMS, PRESET ANCHORS MAY BE NECESSARY IN THE PRESTRESSED CONCRETE GIRDER.

THE TOP SURFACE OF THE GIRDER SHALL BE RAKED TO A DEPTH OF 6mm EXCEPT IN THE AREA BETWEEN THE STIRRUP AND THE EDGE OF THE GIRDER.

FOR PRESTRESSED CONCRETE MEMBERS, SEE SPECIAL PROVISIONS.

TIE ROD ASSEMBLY SHALL BE AASHTO M270 GRADE 250 STRUCTURAL STEEL.

LOCATION OF THE PROPOSED 31.75mm Ø TIE RODS FOR THE INTERIOR DIAPHRAGMS ARE TO LINE UP, AS NEAR AS POSSIBLE, WITH THE EXISTING 31.75mm Ø TIE RODS. THESE DIMENSIONS SHOWN ON THE FRAMING PLAN AND THIS SHEET SHALL BE CHECKED BY THE RESIDENT ENGINEER AND SUBMITTED, ALONG WITH SPAN LENGTHS, TO THE STRUCTURE DESIGN UNIT.

NUTS ON EXISTING TIE RODS SHALL NOT BE REMOVED UNLESS TIE ROD PROJECTION BEYOND THE NUT IS LESS THAN 29mm. TURNBUCKLES SHALL BE TIGHTENED AGAINST THE EXISTING NUTS EXCEPT AS NOTED ABOVE.

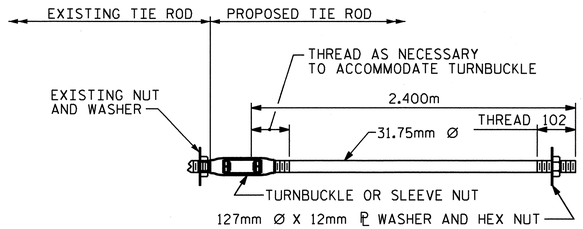

31.75mm Ø TIE ROD ASSEMBLY

(1 COMPLETE ASSEMBLY REQUIRED)

NOTE: THE CONTRACTOR SHALL CHECK TYPE OF THREADS ON EXISTING RODS BEFORE ORDERING TURNBUCKLES.

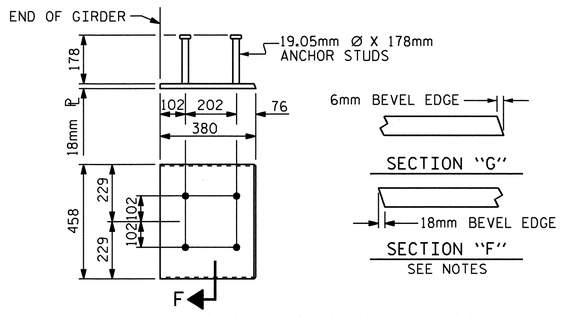

EMBEDDED PLATE "B-1" DETAILS

TWO EMBEDDED PLATES "B-1" ARE REQUIRED FOR EACH GIRDER.

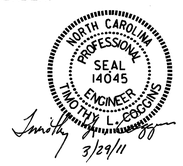

12.70mm Ø L. R. GRADE 270 STRANDS

AREA (mm^2)	ULTIMATE STRENGTH (kN PER STRAND)	APPLIED PRESTRESS (kN PER STRAND)
98.71	183.7	137.8

REINFORCING STEEL FOR ONE GDR.

BAR	NUMBER	SIZE	TYPE	LENGTH	WEIGHT
S1	26	#13	1	2080	54
S2	12	#16	1	2080	39
S3	4	#13	3	2640	10
S4	60	#13	2	720	43
S5	2	#13	3	2800	6

BAR TYPES

ALL BAR DIMENSIONS ARE OUT-TO-OUT

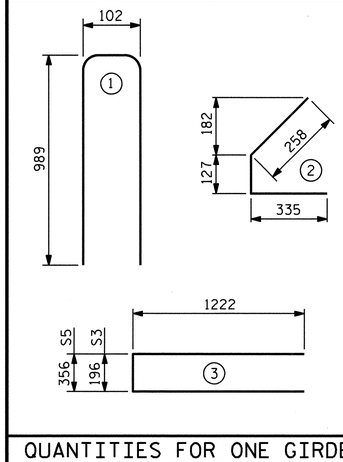

QUANTITIES FOR ONE GIRDER

	REINFORCING STEEL	34.5 MPa CONCRETE	12.70mm Ø L.R. STRANDS
	kg	m^3	No.
EXTERIOR GDR.	152	2.2	10
INTERIOR GDR.	152	2.2	10

GIRDERS REQUIRED

NUMBER	LENGTH	TOTAL LENGTH
2	9.220	18.440

PROJECT NO. U-2519DA

CUMBERLAND COUNTY

STATION: 19+34.958 -Y1-

STATE OF NORTH CAROLINA
DEPARTMENT OF TRANSPORTATION
RALEIGH

SUPERSTRUCTURE
SPAN A RIGHT SIDE
AASHTO TYPE II
PRESTRESSED CONCRETE GIRDER

(RIGHT LANE)

ASSEMBLED BY : PEGGY ADKINS	DATE : 7-08
CHECKED BY : N. RUFFIN	DATE : 9-08
DRAWN BY : JMB 11/87	REV. 7/17/98 RWW/LES
CHECKED BY : GRP 11/87	REV. 8/16/99RR RWW/LES
	REV. 5/1/06 TLA/GM

REVISIONS						SHEET NO.
NO.	BY:	DATE:	NO.	BY:	DATE:	S-138
1			3			TOTAL SHEETS
2			4			411

STR. #6

STD. NO. PCG1SM

24-MAR-2011 15:46
R:\TIPProjects-U\U2519da\Structures\azizi\Final Plans\STR 06\U2519DA_sd_G*_06.dgn
tcoggins

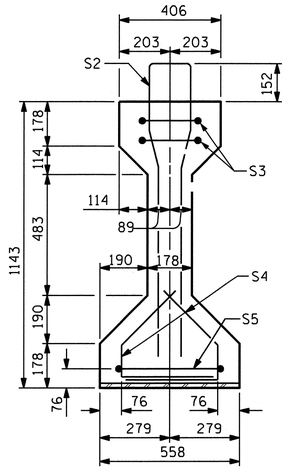

SECTION A-A

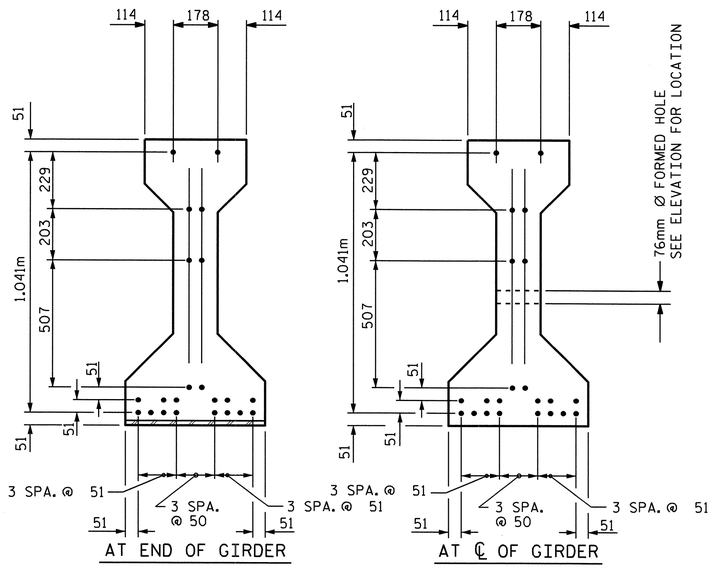

12.70mm Ø LOW RELAXATION STRAND LAYOUT

NOTES

ALL PRESTRESSING STRANDS SHALL BE 7-WIRE LOW-RELAXATION GRADE 270 STRANDS AND SHALL CONFORM TO AASHTO M203M EXCEPT FOR SAMPLING REQUIREMENTS WHICH SHALL BE IN ACCORDANCE WITH THE STANDARD SPECIFICATIONS.

ALL REINFORCING STEEL SHALL BE GRADE 420.

APPLY EPOXY PROTECTIVE COATING TO END OF GIRDER SURFACES.

EMBEDDED PLATE "B-1" SHALL BE GALVANIZED IN ACCORDANCE WITH THE SPECIFICATIONS. BEVEL EDGES OF PLATE "B-1" TO GIVE CLOSE FIT BUT NOT TIGHT FIT TO STEEL CASTING FORM.

ANCHOR STUDS SHALL CONFORM TO AASHTO M169 GRADES 1010 THROUGH 1020 OR APPROVED EQUAL, AND SHALL MEET THE TYPE "B" REQUIREMENTS OF SUBSECTION 7.3 OF THE ANSI/AASHTO/AWS D1.5 BRIDGE WELDING CODE.

ALL PRESTRESSED STRANDS SHALL BE CUT FLUSH WITH THE GIRDER ENDS.

THE TRANSFER OF LOAD FROM THE ANCHORAGES TO THE GIRDER SHALL BE DONE WHEN CONCRETE HAS REACHED A COMPRESSIVE STRENGTH OF NOT LESS THAN 27.6 MPa.

DEPENDING ON THE TYPE OF SYSTEM USED TO SUPPORT THE DECK SLAB FORMS, PRESET ANCHORS MAY BE NECESSARY IN THE PRESTRESSED CONCRETE GIRDER.

THE TOP SURFACE OF THE GIRDER SHALL BE RAKED TO A DEPTH OF 6mm EXCEPT IN THE AREA BETWEEN THE STIRRUP AND THE EDGE OF THE GIRDER.

FOR PRESTRESSED CONCRETE MEMBERS, SEE SPECIAL PROVISIONS.

TIE ROD ASSEMBLY SHALL BE AASHTO M270 GRADE 250 STRUCTURAL STEEL.

LOCATION OF THE PROPOSED 31.75mm Ø TIE RODS FOR THE INTERIOR DIAPHRAGMS ARE TO LINE UP, AS NEAR AS POSSIBLE, WITH THE EXISTING 31.75mm Ø TIE RODS. THESE DIMENSIONS SHOWN ON THE FRAMING PLAN AND THIS SHEET SHALL BE CHECKED BY THE RESIDENT ENGINEER AND SUBMITTED, ALONG WITH SPAN LENGTHS, TO THE STRUCTURE DESIGN UNIT.

NUTS ON EXISTING TIE RODS SHALL NOT BE REMOVED UNLESS TIE ROD PROJECTION BEYOND THE NUT IS LESS THAN 29mm. TURNBUCKLES SHALL BE TIGHTENED AGAINST THE EXISTING NUTS EXCEPT AS NOTED ABOVE.

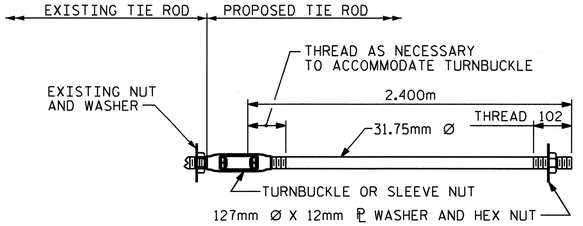

31.75mm Ø TIE ROD ASSEMBLY

(2 COMPLETE ASSEMBLIES REQUIRED)

NOTE: THE CONTRACTOR SHALL CHECK TYPE OF THREADS ON EXISTING RODS BEFORE ORDERING TURNBUCKLES.

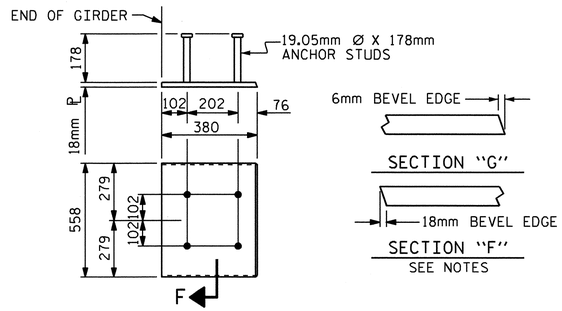

EMBEDDED PLATE "B-1" DETAILS

TWO EMBEDDED PLATES "B-1" ARE REQUIRED FOR EACH GIRDER.

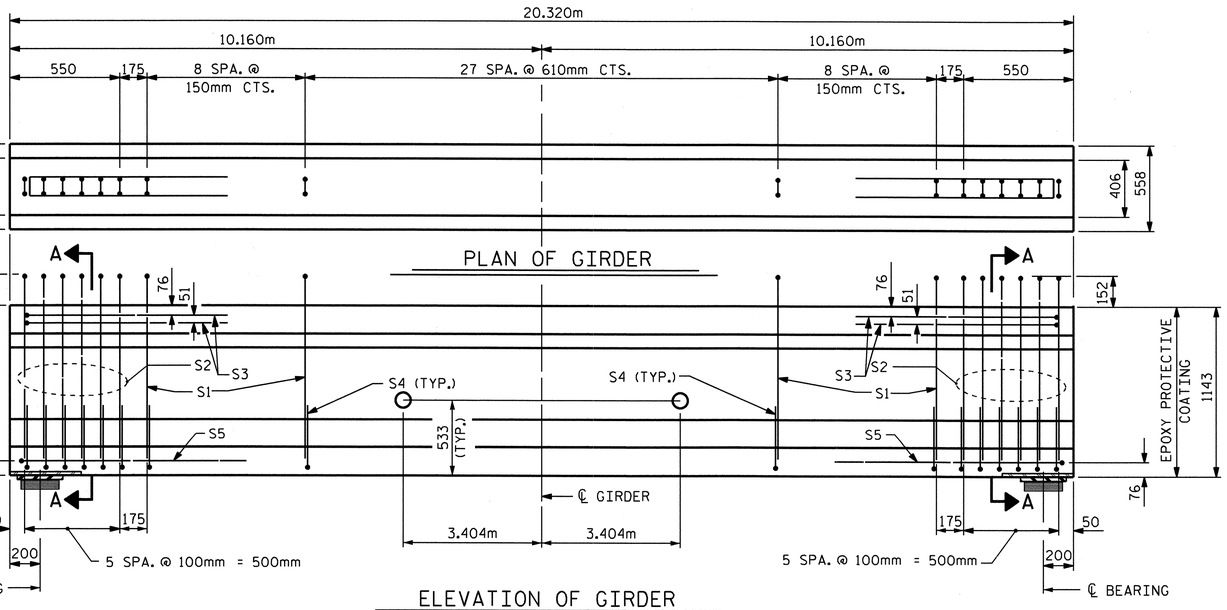

12.70mm Ø L. R. GRADE 270 STRANDS		
AREA (mm^2)	ULTIMATE STRENGTH (kN PER STRAND)	APPLIED PRESTRESS (kN PER STRAND)
98.71	183.7	137.8

REINFORCING STEEL FOR ONE GDR.

BAR	NUMBER	SIZE	TYPE	LENGTH	WEIGHT
S1	44	#13	1	2600	114
S2	12	#19	1	2600	70
S3	4	#13	3	2660	11
S4	60	#13	2	840	50
S5	2	#13	3	2900	6

BAR TYPES

ALL BAR DIMENSIONS ARE OUT-TO-OUT

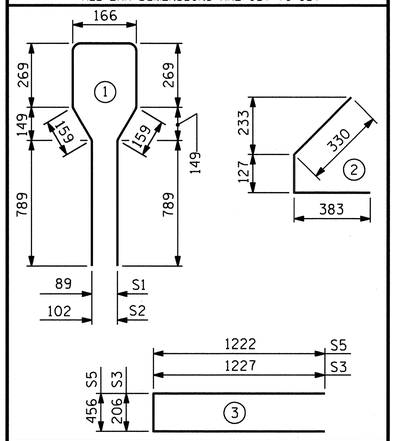

QUANTITIES FOR ONE GIRDER

	REINFORCING STEEL	34.5 MPa CONCRETE	12.70mm Ø L.R. STRANDS
	kg	m^3	No.
EXTERIOR GDR.	251	7.3	22
INTERIOR GDR.	251	7.3	22

GIRDERS REQUIRED

NUMBER	LENGTH	TOTAL LENGTH
2	20.320	40.640

PROJECT NO. U-2519DA

CUMBERLAND COUNTY

STATION: 19+34.958 -Y1-

STATE OF NORTH CAROLINA
DEPARTMENT OF TRANSPORTATION
RALEIGH
SUPERSTRUCTURE
SPAN B RIGHT SIDE
AASHTO TYPE III
PRESTRESSED CONCRETE GIRDER
(RIGHT LANE)

NORTH CAROLINA PROFESSIONAL SEAL 14045 ENGINEER TIMOTHY W. COGGINS
3/29/11

ASSEMBLED BY : PEGGY ADKINS	DATE : 7-08
CHECKED BY : N. RUFFIN	DATE : 9-08
DRAWN BY : JMB 10/87	REV. 7/17/98 RWW/LES
CHECKED BY : GRP 10/87	REV. 8/16/99RR RWW/LES
	REV. 5/1/06 TLA/GM

REVISIONS						SHEET NO.
NO.	BY:	DATE:	NO.	BY:	DATE:	S-139
1			3			TOTAL SHEETS
2			4			411

24-MAR-2011 15:47
R:\TIPProjects-U\U2519da\Structures\azizi\Final Plans\STR 06\U2519DA_sd_G*_06.dgn
tcoggins

STR. #6

STD. NO. PCG2SM

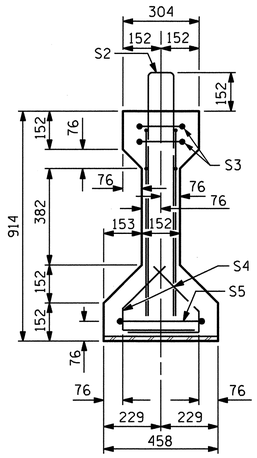

SECTION A-A

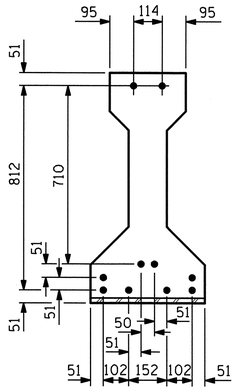

AT END OF GIRDER

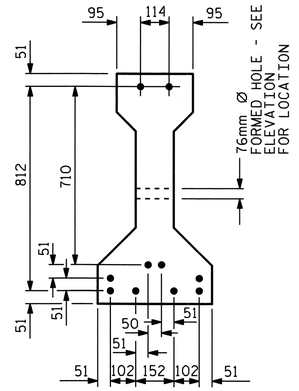

AT ℄ OF GIRDER

12.70mm Ø LOW RELAXATION STRAND LAYOUT

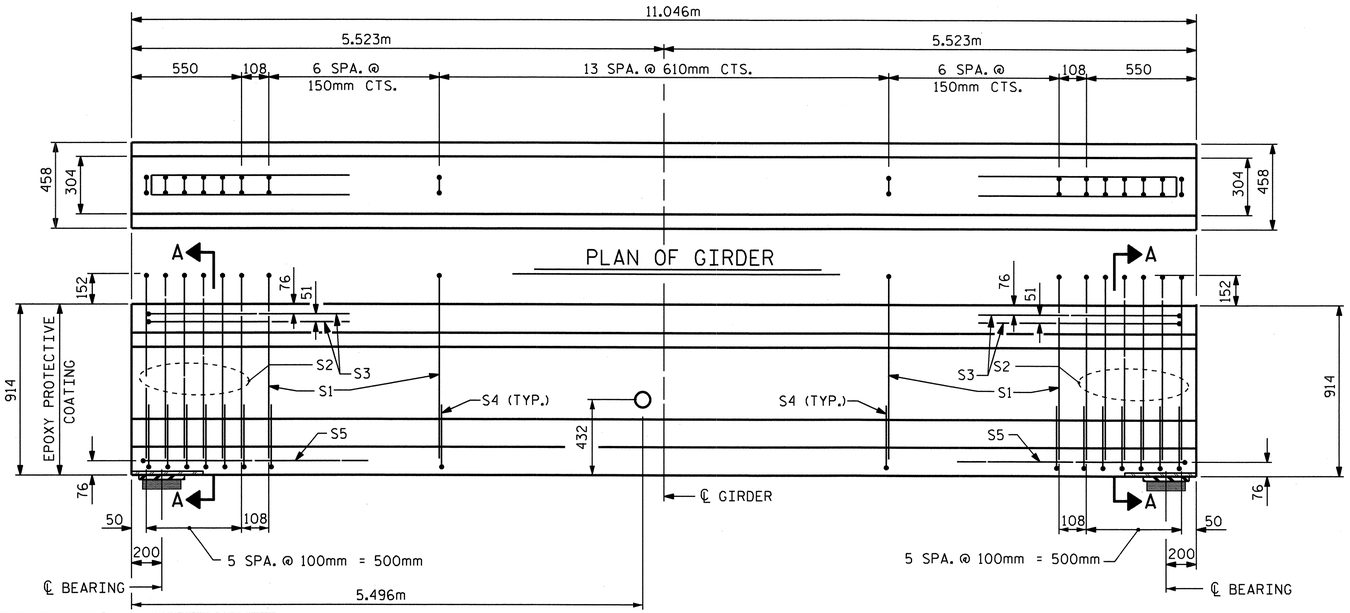

ELEVATION OF GIRDER

PLAN OF GIRDER

NOTES

ALL PRESTRESSING STRANDS SHALL BE 7-WIRE LOW-RELAXATION GRADE 270 STRANDS AND SHALL CONFORM TO AASHTO M203M EXCEPT FOR SAMPLING REQUIREMENTS WHICH SHALL BE IN ACCORDANCE WITH THE STANDARD SPECIFICATIONS.

ALL REINFORCING STEEL SHALL BE GRADE 420.

APPLY EPOXY PROTECTIVE COATING TO END OF GIRDER SURFACES, SPAN C NEAR END ONLY.

EMBEDDED PLATE "B-1" SHALL BE GALVANIZED IN ACCORDANCE WITH THE SPECIFICATIONS. BEVEL EDGES OF PLATE "B-1" TO GIVE CLOSE FIT BUT NOT TIGHT FIT TO STEEL CASTING FORM.

ANCHOR STUDS SHALL CONFORM TO AASHTO M169 GRADES 1010 THROUGH 1020 OR APPROVED EQUAL, AND SHALL MEET THE TYPE "B" REQUIREMENTS OF SUBSECTION 7.3 OF THE ANSI/AASHTO/AWS D1.5 BRIDGE WELDING CODE.

ALL PRESTRESSED STRANDS SHALL BE CUT FLUSH WITH THE GIRDER ENDS.

THE TRANSFER OF LOAD FROM THE ANCHORAGES TO THE GIRDER SHALL BE DONE WHEN CONCRETE HAS REACHED A COMPRESSIVE STRENGTH OF NOT LESS THAN 27.6 MPa.

DEPENDING ON THE TYPE OF SYSTEM USED TO SUPPORT THE DECK SLAB FORMS, PRESET ANCHORS MAY BE NECESSARY IN THE PRESTRESSED CONCRETE GIRDER.

THE TOP SURFACE OF THE GIRDER SHALL BE RAKED TO A DEPTH OF 6mm EXCEPT IN THE AREA BETWEEN THE STIRRUP AND THE EDGE OF THE GIRDER.

FOR PRESTRESSED CONCRETE MEMBERS, SEE SPECIAL PROVISIONS.

TIE ROD ASSEMBLY SHALL BE AASHTO M270 GRADE 250 STRUCTURAL STEEL.

LOCATION OF THE PROPOSED 31.75mm Ø TIE RODS FOR THE INTERIOR DIAPHRAGMS ARE TO LINE UP, AS NEAR AS POSSIBLE, WITH THE EXISTING 31.75mm Ø TIE RODS. THESE DIMENSIONS SHOWN ON THE FRAMING PLAN AND THIS SHEET SHALL BE CHECKED BY THE RESIDENT ENGINEER AND SUBMITTED, ALONG WITH SPAN LENGTHS, TO THE STRUCTURE DESIGN UNIT.

NUTS ON EXISTING TIE RODS SHALL NOT BE REMOVED UNLESS TIE ROD PROJECTION BEYOND THE NUT IS LESS THAN 29mm. TURNBUCKLES SHALL BE TIGHTENED AGAINST THE EXISTING NUTS EXCEPT AS NOTED ABOVE.

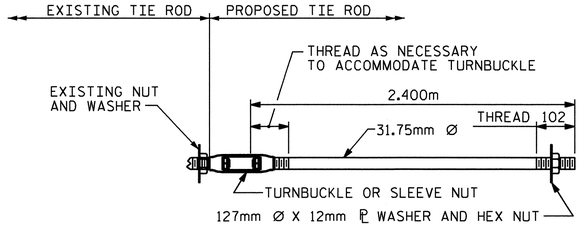

31.75mm Ø TIE ROD ASSEMBLY

(1 COMPLETE ASSEMBLY REQUIRED)

NOTE: THE CONTRACTOR SHALL CHECK TYPE OF THREADS ON EXISTING RODS BEFORE ORDERING TURNBUCKLES.

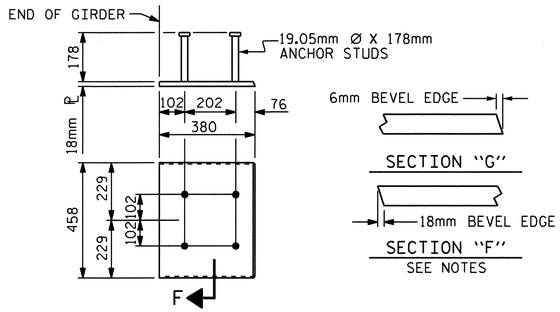

EMBEDDED PLATE "B-1" DETAILS

TWO EMBEDDED PLATES "B-1" ARE REQUIRED FOR EACH GIRDER.

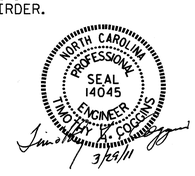

12.70mm Ø L. R. GRADE 270 STRANDS

AREA (mm^2)	ULTIMATE STRENGTH (kN PER STRAND)	APPLIED PRESTRESS (kN PER STRAND)
98.71	183.7	137.8

REINFORCING STEEL FOR ONE GDR.

BAR	NUMBER	SIZE	TYPE	LENGTH	WEIGHT
S1	26	#13	1	2080	54
S2	12	#16	1	2080	39
S3	4	#13	3	2640	10
S4	52	#13	2	720	37
S5	2	#13	3	2800	6

BAR TYPES

ALL BAR DIMENSIONS ARE OUT-TO-OUT

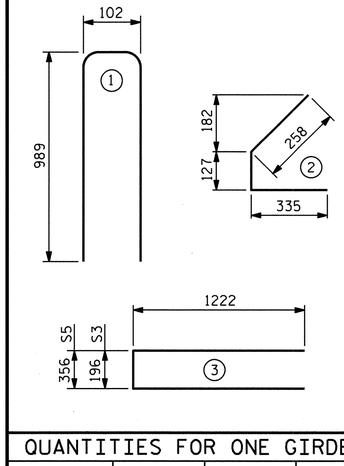

QUANTITIES FOR ONE GIRDER

	REINFORCING STEEL (kg)	34.5 MPa CONCRETE (m^3)	12.70mm Ø L.R. STRANDS (No.)
EXTERIOR GDR.	146	2.6	10
INTERIOR GDR.	146	2.6	10

GIRDERS REQUIRED

NUMBER	LENGTH	TOTAL LENGTH
2	11.046	22.092

PROJECT NO. U-2519DA

CUMBERLAND COUNTY

STATION: 19+34.958 -Y1-

STATE OF NORTH CAROLINA
DEPARTMENT OF TRANSPORTATION
RALEIGH

SUPERSTRUCTURE
SPAN C RIGHT SIDE
AASHTO TYPE II
PRESTRESSED CONCRETE GIRDER

(RIGHT LANE)

ASSEMBLED BY : PEGGY ADKINS	DATE : 7-08
CHECKED BY : N. RUFFIN	DATE : 9-08
DRAWN BY : JMB 11/87	REV. 7/17/98 RWW/LES
CHECKED BY : GRP 11/87	REV. 8/16/99RR RWW/LES
	REV. 5/1/06 TLA/GM

REVISIONS						SHEET NO.
NO.	BY:	DATE:	NO.	BY:	DATE:	S-140
1			3			TOTAL SHEETS
2			4			411

24-MAR-2011 15:47
R:\TIPProjects-U\U2519da\Structures\azizi\Final Plans\STR 06\U2519DA_sd_G*_06.dgn
tcoggins

STR. #6

STD. NO. PCG1SM

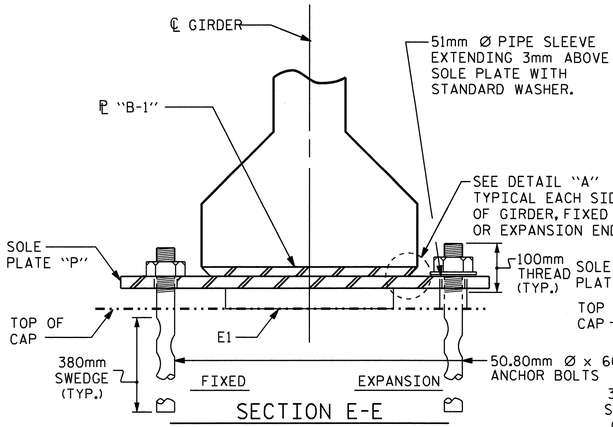

SECTION E-E

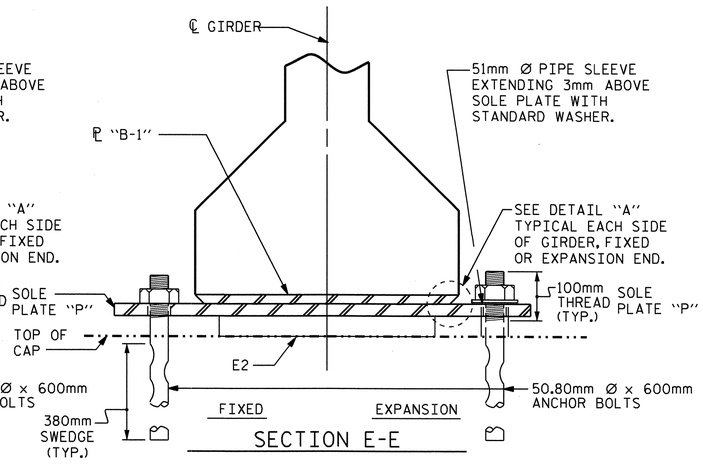

SECTION E-E

— LOAD RATINGS —	
	MAX.D.L.+L.L.
914mm PCG -TYPE II	366 kN
1143mm PCG -TYPE III	512 kN

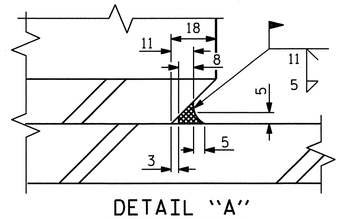

DETAIL "A"

NOTES

AT ALL FIXED POINTS OF SUPPORT, NUTS FOR ANCHOR BOLTS ARE TO BE TIGHTENED FINGER TIGHT AND THEN BACKED OFF ½ TURN. THE THREAD OF THE NUT AND BOLT SHALL THEN BE BURRED WITH A SHARP POINTED TOOL.

THE 51mm Ø PIPE SLEEVE SHALL BE CUT FROM SCHEDULE 40 PVC PLASTIC PIPE. THE PVC PLASTIC PIPE SHALL MEET THE REQUIREMENTS OF ASTM D1785.

STEEL SOLE PLATES, ANCHOR BOLTS, NUTS, AND WASHERS SHALL BE GALVANIZED IN ACCORDANCE WITH THE STANDARD SPECIFICATIONS.

PRIOR TO WELDING, GRIND THE GALVANIZED SURFACE OF THE PORTION OF THE EMBEDDED PLATE AND SOLE PLATE THAT ARE TO BE WELDED. AFTER WELDING, DAMAGED GALVANIZED SURFACES SHALL BE REPAIRED IN ACCORDANCE WITH THE STANDARD SPECIFICATIONS.

WHEN WELDING THE SOLE PLATE TO THE EMBEDDED PLATE IN THE GIRDER, USE TEMPERATURE INDICATING WAX PENS, OR OTHER SUITABLE MEANS, TO ENSURE THAT THE TEMPERATURE OF THE SOLE PLATE DOES NOT EXCEED 149°C. TEMPERATURES ABOVE THIS MAY DAMAGE THE ELASTOMER.

SOLE PLATE "P", BOLTS, NUTS, WASHERS, AND PIPE SLEEVE SHALL BE INCLUDED IN THE PAY ITEM FOR PRESTRESSED CONCRETE GIRDERS.

ANCHOR BOLTS SHALL MEET THE REQUIREMENTS OF ASTM A449. NUTS SHALL MEET THE REQUIREMENTS OF AASHTO M291M-12 OR AASHTO M292M-2H. WASHERS SHALL MEET THE REQUIREMENTS OF AASHTO M293M. SHOP DRAWINGS ARE NOT REQUIRED FOR ANCHOR BOLTS, NUTS AND WASHERS. SHOP INSPECTION IS REQUIRED.

ALL SURFACES OF BEARING PLATES SHALL BE SMOOTH AND STRAIGHT.

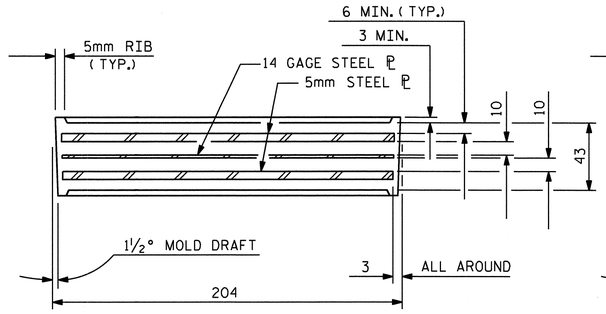

TYPICAL SECTION OF ELASTOMERIC BEARINGS

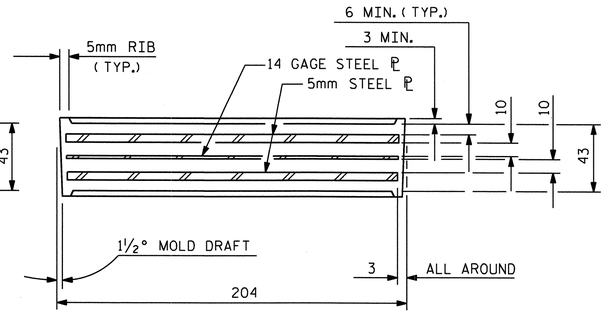

TYPICAL SECTION OF ELASTOMERIC BEARINGS

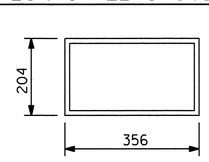

E1 (8 REQ'D)

PLAN VIEW OF ELASTOMERIC BEARING

TYPE II

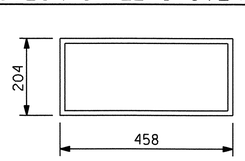

E2 (4 REQ'D)

PLAN VIEW OF ELASTOMERIC BEARING

TYPE III

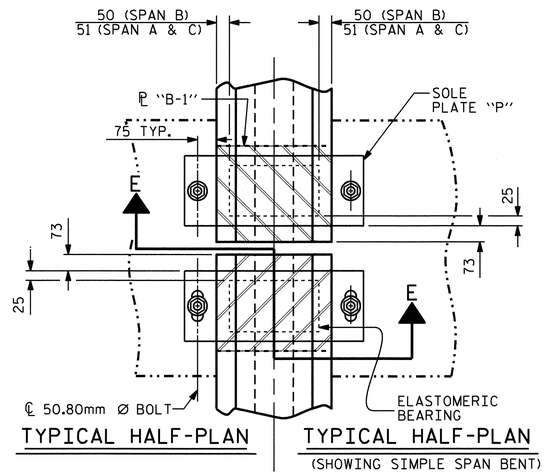

TYPICAL HALF-PLAN

TYPICAL HALF-PLAN
(SHOWING SIMPLE SPAN BENT)

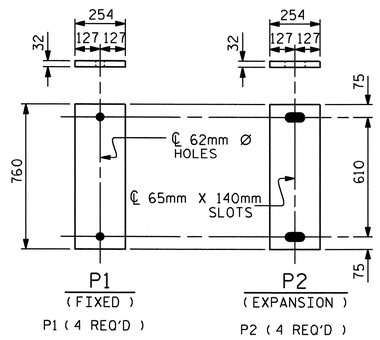

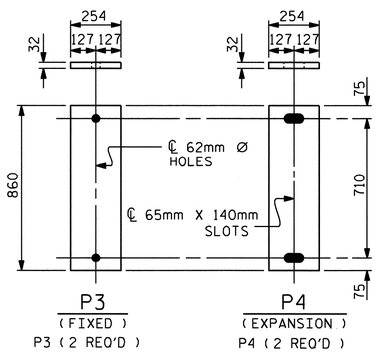

SOLE PLATE DETAILS ("P")

NORTH CAROLINA PROFESSIONAL SEAL 14045 ENGINEER TIMOTHY L. COGGINS
3/29/11

PROJECT NO. U-2519DA
CUMBERLAND COUNTY
STATION: 19+34.958 -Y1-

STATE OF NORTH CAROLINA
DEPARTMENT OF TRANSPORTATION
RALEIGH

STANDARD ELASTOMERIC BEARING DETAILS

(RIGHT LANE)

REVISIONS						SHEET NO.
NO.	BY:	DATE:	NO.	BY:	DATE:	S-141
1			3			TOTAL SHEETS
2			4			411

STR. #6

STD. NO. EB3SM

ASSEMBLED BY : PEGGY PARISI	DATE :	8-08
CHECKED BY : N. RUFFIN	DATE :	9-08
DRAWN BY : WJH 8/89	REV. 10/17/00	RWW/LES
CHECKED BY : CRK 8/89	REV. 7/10/01	RWW/LES
	REV. 5/1/06	TLA/GM

24-MAR-2011 15:47
R:\TIPProjects-U\U2519da\Structures\azizi\FinalPlans\STR 06\U2519DA_sd_BG_06.dgn
tcoggins

DEAD LOAD DEFLECTION TABLE FOR GIRDERS

12.70mm Ø LOW RELAXATION	SPAN A RIGHT SIDE GIRDER 7											SPAN A RIGHT SIDE GIRDER 8										
TENTH POINTS	0	.1	.2	.3	.4	.5	.6	.7	.8	.9	0	0	.1	.2	.3	.4	.5	.6	.7	.8	.9	0
CAMBER (GIRDER ALONE IN PLACE) ↑	0.0	0.002	0.004	0.006	0.007	0.007	0.007	0.006	0.004	0.002	0.0	0.0	0.002	0.004	0.006	0.007	0.007	0.007	0.006	0.004	0.002	0.0
✳DEFLECTION DUE TO SUPERIMPOSED D.L. ↓	0.0	0.000	0.000	0.000	0.001	0.001	0.001	0.000	0.000	0.000	0.0	0.0	0.000	0.000	0.001	0.001	0.001	0.001	0.001	0.000	0.000	0.0
FINAL CAMBER ↑	0.0	2	4	6	6	6	6	6	4	2	0.0	0.0	2	4	5	6	6	6	5	4	2	0.0

DEAD LOAD DEFLECTION TABLE FOR GIRDERS

12.70mm Ø LOW RELAXATION	SPAN B RIGHT SIDE GIRDER 7											SPAN B RIGHT SIDE GIRDER 8										
TENTH POINTS	0	.1	.2	.3	.4	.5	.6	.7	.8	.9	0	0	.1	.2	.3	.4	.5	.6	.7	.8	.9	0
CAMBER (GIRDER ALONE IN PLACE) ↑	0.0	0.007	0.014	0.019	0.022	0.023	0.022	0.019	0.014	0.007	0.0	0.0	0.007	0.014	0.019	0.022	0.023	0.022	0.019	0.014	0.007	0.0
✳DEFLECTION DUE TO SUPERIMPOSED D.L. ↓	0.0	0.004	0.008	0.011	0.012	0.013	0.012	0.011	0.008	0.004	0.0	0.0	0.005	0.009	0.013	0.015	0.016	0.015	0.013	0.009	0.005	0.0
FINAL CAMBER ↑	0.0	3	6	8	10	10	10	8	6	3	0.0	0.0	2	5	6	7	7	7	6	5	2	0.0

DEAD LOAD DEFLECTION TABLE FOR GIRDERS

12.70mm Ø LOW RELAXATION	SPAN C RIGHT SIDE GIRDER 7											SPAN C RIGHT SIDE GIRDER 8										
TENTH POINTS	0	.1	.2	.3	.4	.5	.6	.7	.8	.9	0	0	.1	.2	.3	.4	.5	.6	.7	.8	.9	0
CAMBER (GIRDER ALONE IN PLACE) ↑	0.0	0.003	0.005	0.007	0.008	0.09	0.008	0.007	0.005	0.003	0.0	0.0	0.003	0.005	0.007	0.008	0.009	0.008	0.007	0.005	0.003	0.0
✳DEFLECTION DUE TO SUPERIMPOSED D.L. ↓	0.0	0.000	0.001	0.002	0.002	0.003	0.002	0.002	0.001	0.000	0.0	0.0	0.000	0.001	0.002	0.003	0.003	0.003	0.002	0.001	0.000	0.0
FINAL CAMBER ↑	0.0	3	4	5	6	6	6	5	4	3	0.0	0.0	3	4	5	5	6	5	5	4	3	0.0

✳ INCLUDES FUTURE WEARING SURFACE
ALL VALUES ARE SHOWN IN METERS, EXCEPT "FINAL CAMBER" WHICH IS SHOWN IN MILLIMETERS.

PROJECT NO. U-2519DA
CUMBERLAND COUNTY
STATION: 19+34.958 -Y1-

NORTH CAROLINA PROFESSIONAL SEAL 14045 ENGINEER TIMOTHY L. COGGINS
3/29/11

STATE OF NORTH CAROLINA
DEPARTMENT OF TRANSPORTATION
RALEIGH

SUPERSTRUCTURE

DEAD LOAD DEFLECTIONS

(RIGHT LANE)

REVISIONS						SHEET NO.
NO.	BY:	DATE:	NO.	BY:	DATE:	S-142
1			3			TOTAL SHEETS
2			4			411

ASSEMBLED BY : PEGGY PARISI DATE : 7-08
CHECKED BY : N. RUFFIN DATE : 9-08

24-MAR-2011 15:52
R:\TIPProjects-U\U2519da\Structures\azizi\Final Plans\STR 06\U2519DA_sd_DL_06.dgn

STR. #6

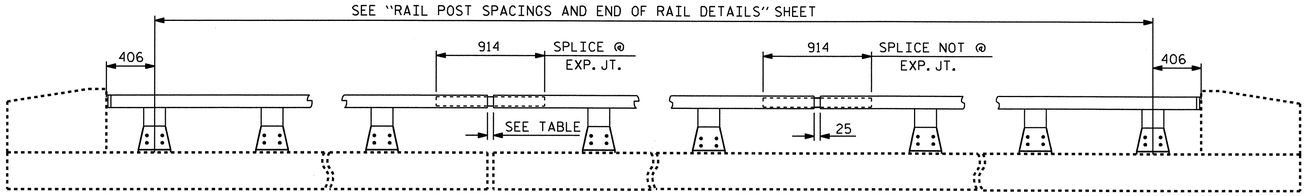

ELEVATION
(LEFT SIDE ONLY)

NOTE :
FOR ATTACHMENT OF METAL RAIL TO END POST,
SEE STANDARD No. BMR2SM.

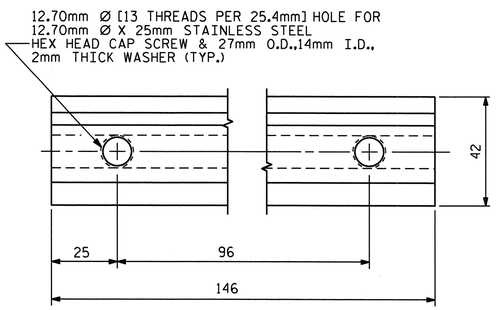

CLAMP BAR DETAIL
(2 REQUIRED PER POST)

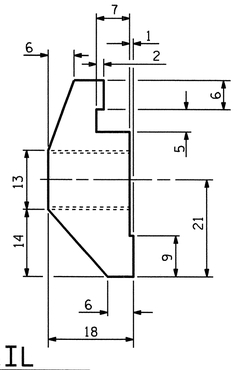

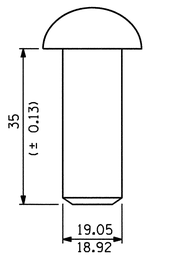

RIVET DETAIL

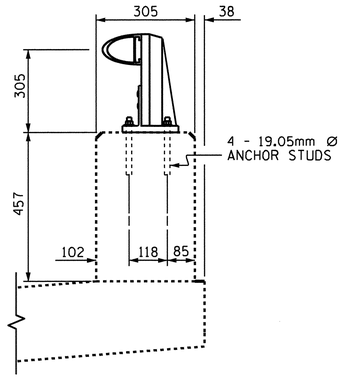

SECTION THRU PARAPET AND RAIL

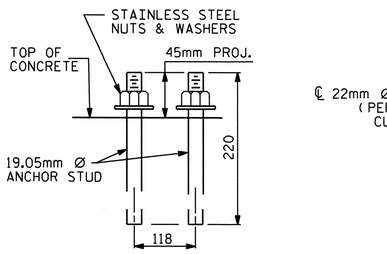

ANCHOR ASSEMBLY

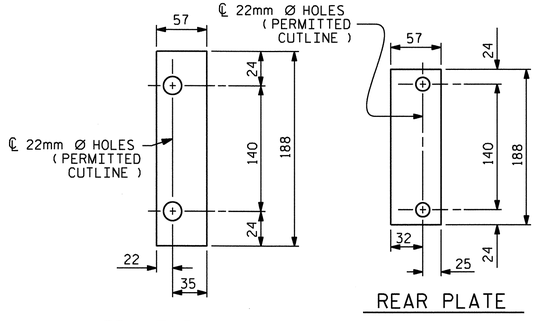

FRONT PLATE

REAR PLATE

SHIM DETAILS

NOTE :
SHIMS MAY BE CUT ALONG PERMITTED CUTLINE OR SLOTTED TO EDGE OF PLATE TO FACILITATE PLACEMENT.

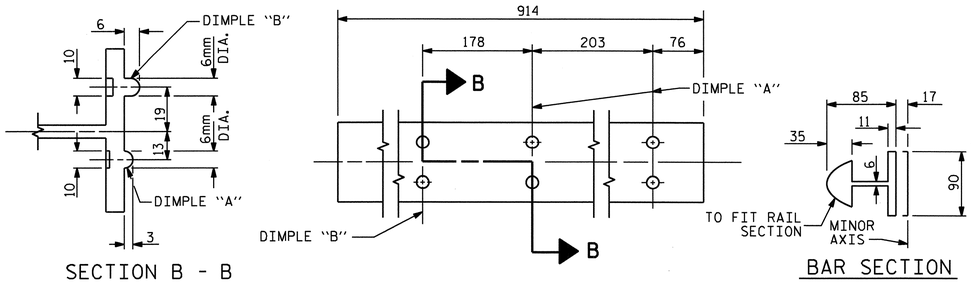

SECTION B - B

BAR SECTION

EXPANSION BAR DETAILS

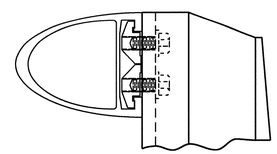

CLAMP & RAIL ASSEMBLY

NOTES

THE CONTRACTOR SHALL DETERMINE WHETHER THE EXISTING METAL RAIL IS EITHER ALUMINUM OR GALVANIZED STEEL AND SHALL APPLY THE FOLLOWING NOTES ACCORDINGLY TO MATCH EXISTING RAIL MATERIAL.

ALUMINUM RAILS

MATERIAL FOR EXPANSION BARS AND CLAMP BARS SHALL BE ASTM B221 ALLOY 6061-T6.

MATERIAL FOR RIVETS SHALL BE ASTM B316 ALLOY 6061-T6. RIVETS SHALL BE STANDARD BUTTON HEAD AND CONE POINT COLD DRIVEN AS PER DRAWING.

THE BASE OF RAIL POSTS, OR ANY OTHER ALUMINUM SURFACE IN CONTACT WITH CONCRETE SHALL BE THOROUGHLY COATED WITH AN ALUMINUM IMPREGNATED CAULKING COMPOUND OF APPROVED QUALITY.

MATERIAL FOR SHIMS TO BE ASTM B209 ALLOY 6061-T6.

GALVANIZED STEEL RAILS

MATERIALS AND GALVANIZING ARE TO CONFORM TO THE FOLLOWING SPECIFICATIONS:

EXPANSION BARS AND CLAMP BARS: AASHTO M270 GRADE 250 STRUCTURAL STEEL - GALVANIZED TO AASHTO M111.

RIVETS: RIVETS SHALL MEET THE REQUIREMENTS OF ASTM A502 FOR GRADE 1 RIVETS.

THE CUT ENDS OF GALVANIZED STEEL RAILING, AFTER GRINDING SMOOTH SHALL BE GIVEN TWO COATS OF ZINC RICH PAINT MEETING THE REQUIREMENTS OF FEDERAL SPECIFICATION MIL-P-26915 USAF TYPE 1, OR OF FEDERAL SPECIFICATIONS TT-P-641.

SHIMS: SHIMS SHALL MEET THE REQUIREMENTS OF ASTM A570M FOR GRADE 230 OR A611 FOR GRADE C AND SHALL BE GALVANIZED IN ACCORDANCE WITH AASHTO M111.

CLOSURE PLATES: CLOSURE PLATES SHALL MEET THE REQUIREMENTS OF ASTM A570M FOR GRADE 230 OR A611 FOR GRADE C AND SHALL BE GALVANIZED IN ACCORDANCE WITH AASHTO M111.

GENERAL NOTES

METAL RAIL AND POSTS SHALL BE REMOVED TO MINIMIZE ANY DAMAGE TO RAIL AND POST. ALL CONCRETE DAMAGED BY THIS WORK SHALL BE REPAIRED TO THE SATISFACTION OF THE ENGINEER.

RAIL POST SHALL BE LAYED OUT AS DETAILED TO SEE IF ANY PREVIOUS ANCHOR BOLTS CAN BE UTILIZED. ALL ANCHOR BOLTS THAT CANNOT BE UTILIZED MUST BE CUT OFF FLUSH WITH THE TOP OF THE PARAPET. RAIL POST MAY BE SHIFTED AS NECESSARY NOT TO EXCEEDED THE MAXIMUM SPACING OF 1.980m.

IN CASE OF DAMAGE TO RAILS OR POST, IT IS PERMITTED TO USE ADDITIONAL POSTS OR RAILING OBTAINED FROM THE OPPOSING SIDE OF STRUCTURE.

RAILING SHALL BE CONTINUOUS FROM END POST TO END POST OF BRIDGE. EACH JOINT IN RAIL LENGTH SHALL BE SPLICED AS DETAILED. PANEL LENGTHS OF RAIL SHALL BE ATTACHED TO A MINIMUM OF THREE POSTS.

FOR END OF RAIL TO CLEAR FACE OF CONCRETE END POST DIMENSION, SEE STANDARD NO. BMR2SM.

MATERIAL FOR ADHESIVELY ANCHORED ANCHOR BOLTS SHALL BE ASTM F593 ALLOY 304 STAINLESS STEEL WITH MINIMUM 517 MPa ULTIMATE STRENGTH. ADHESIVELY ANCHORED ANCHOR BOLTS SHALL BE EMBEDDED 175mm IN CONCRETE. NUTS SHALL BE AMERICAN STANDARD FINISHED HEXAGON THICK, CLASS 2B THREAD, AND MEET THE REQUIREMENTS OF ASTM F594 ALLOY 304 STAINLESS STEEL. WASHERS SHALL MEET THE REQUIREMENTS OF ASTM F844 EXCEPT THEY SHALL BE MADE FROM ALLOY 304 STAINLESS STEEL. ANCHOR ℄ SHALL BE AASHTO M270 GRADE 250.

CAP SCREWS SHALL BE ASTM F593 ALLOY 305 STAINLESS STEEL.

METAL RAIL POSTS SHALL BE SET NORMAL TO CURB GRADE.

SHIMS SHALL BE USED AS NECESSARY FOR POST ALIGNMENT.

ALLOY 6351-T5 MAY BE SUBSTITUTED FOR ALLOY 6061-T6 WHERE APPLICABLE.

MINOR VARIATIONS IN DETAILS OF METAL RAIL WILL BE CONSIDERED. DETAILS OF SUCH VARIATIONS, IF DESIRED, SHALL BE SUBMITTED FOR APPROVAL.

THE CONTRACTOR SHALL USE ADHESIVELY ANCHORED ANCHOR BOLTS. LEVEL TWO FIELD TESTING IS REQUIRED, AND THE YIELD LOAD OF THE 19.05mm Ø BOLT IS 44.5kN. FOR ADHESIVELY ANCHORED ANCHOR BOLTS OR DOWELS, SEE SPECIAL PROVISIONS.

METHOD OF MEASUREMENT FOR METAL RAILS: FOR LENGTH OF METAL RAILS TO BE PAID FOR, SEE STANDARD SPECIFICATIONS.

TABLE			
℄ EXP. JT. @	RAIL OPENING		
	32° C	16° C	7° C
BENT No. 1	49	51	52
BENT No. 2	44	51	55

PAY LENGTH FOR ONE BAR METAL RAIL REATTACHMENT = 39.372 METERS

PROJECT NO. U-2519DA
CUMBERLAND COUNTY
STATION: 19+34.958 -Y1-

SHEET 1 OF 2

STATE OF NORTH CAROLINA
DEPARTMENT OF TRANSPORTATION
RALEIGH

STANDARD
1 BAR METAL RAIL (LEFT SIDE OF BRIDGE)

(RIGHT LANE)

NORTH CAROLINA PROFESSIONAL SEAL 14045 ENGINEER TIMOTHY L. COGGINS
3/29/11

ASSEMBLED BY : Neil M. Ruffin DATE : 9/29/08
CHECKED BY : PEGGY PARISI DATE : 10/8/08
DRAWN BY : FCJ 1/88
CHECKED BY : CRK 3/89

REVISIONS					
NO.	BY:	DATE:	NO.	BY:	DATE:
1	REV. 10/17/00	LES/RDR	3	REV. 5/7/03R	RWW/JTE
2	REV. 5/1/06R	KMM/GM	4		

SHEET NO. S-143
TOTAL SHEETS 411

29-MAR-2011 11:36
R:\Structures\azlz1\Final Plans\STR 06\U2519DA_sd_1MR_06.dgn
nruffin

STR. #6

STD. NO. BMR1SM

RAStructures\qzizi\FinalPlans\STR 06\U2519DA_sd_IMR_06.dg
mruffin

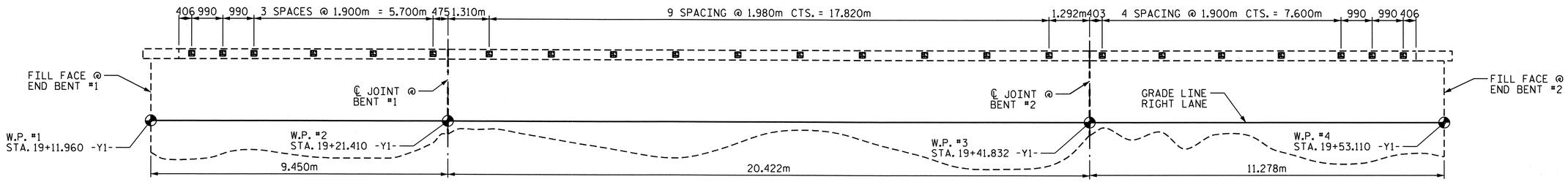

PLAN OF RAIL POST SPACING

(LEFT SIDE ONLY)

NOTES

METAL RAIL TO END POST CONNECTION

THE METAL RAIL TO END POST CONNECTION SHALL CONSIST OF THE FOLLOWING COMPONENTS :

A. 12mm PLATES SHALL CONFORM TO AASHTO M270 GRADE 250 AND SHALL BE GALVANIZED AFTER FABRICATION.

B. 19.05mm ADHESIVELY ANCHORED ANCHOR BOLT SHALL HAVE A WORKING LOAD SHEAR CAPACITY OF 21.4 kN. THE 19.05mm Ø X 165mm BOLT SHALL HAVE N. C. THREADS.

C. CAP SCREWS FOR RAIL ATTACHMENT TO ANGLE SHALL CONFORM TO THE REQUIREMENTS OF ASTM F593 ALLOY 305 STAINLESS STEEL. CAP SCREWS TO BE CENTERED IN SLOTS AT 16°C.

D. STANDARD CLAMP BARS (SEE METAL RAIL SHEET).

E. 13mm Ø PIPE SLEEVES (IF REQUIRED) TO BE GALVANIZED.

THE COST OF THE STANDARD CLAMP BARS, CAP SCREWS, AND THE 12mm PLATES USED IN THE METAL RAIL TO END POST CONNECTION SHALL BE PAID FOR IN THE UNIT PRICE BID FOR "ONE BAR METAL RAIL REATTACHMENT."

THE CONTRACTOR SHALL USE AN ADHESIVE BONDING SYSTEM TO EMBED THE ANCHOR BOLT IN THE END POST. FIELD TESTING OF THE ADHESIVE BONDING SYSTEM IS NOT REQUIRED.

THE COST OF RESPACING THE POST FOR ONE-BAR METAL RAIL, ATTACHING RAIL TO END POST AND 19.05mm ADHESIVELY ANCHORED ANCHOR BOLTS SHALL BE PAID FOR IN THE UNIT PRICE BID FOR "ONE BAR METAL RAIL REATTACHMENT."

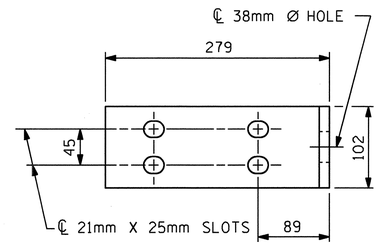

ELEVATION

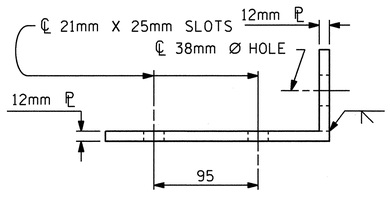

TOP VIEW

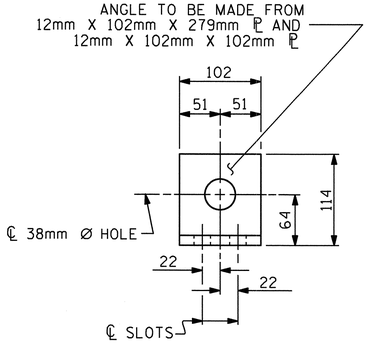

END VIEW (FIX)

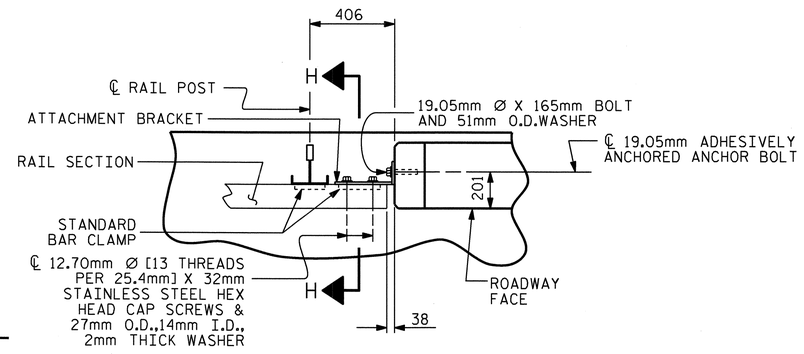

PLAN - RAIL AND END POST

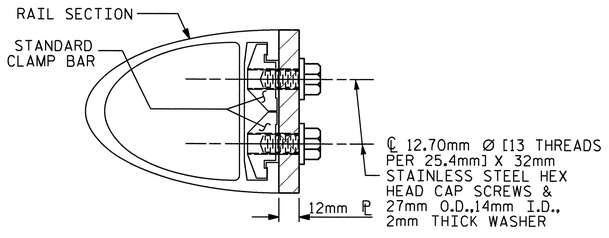

SECTION H-H (FIX)

FIXED

DETAILS FOR ATTACHING METAL RAIL TO END POST

DRAWN BY : Neil M. Ruffin DATE : 9/25/08
CHECKED BY : PEGGY PARTSI DATE : 10/8/08

NORTH CAROLINA PROFESSIONAL SEAL 14045 ENGINEER TIMOTHY A. COGGINS
3/19/11

PROJECT NO. U-2519DA
CUMBERLAND COUNTY
STATION: 19+34.958 -Y1-

SHEET 2 OF 2

STATE OF NORTH CAROLINA
DEPARTMENT OF TRANSPORTATION
RALEIGH
SUPERSTRUCTURE
RAIL POST SPACINGS
AND
END OF RAIL DETAILS
FOR ONE BAR METAL RAIL
LEFT SIDE OF BRIDGE
(RIGHT LANE)

REVISIONS						SHEET NO.
NO.	BY:	DATE:	NO.	BY:	DATE:	S-144
1			3			TOTAL SHEETS
2			4			411

STR. #6

STD. NO. BMR2SM

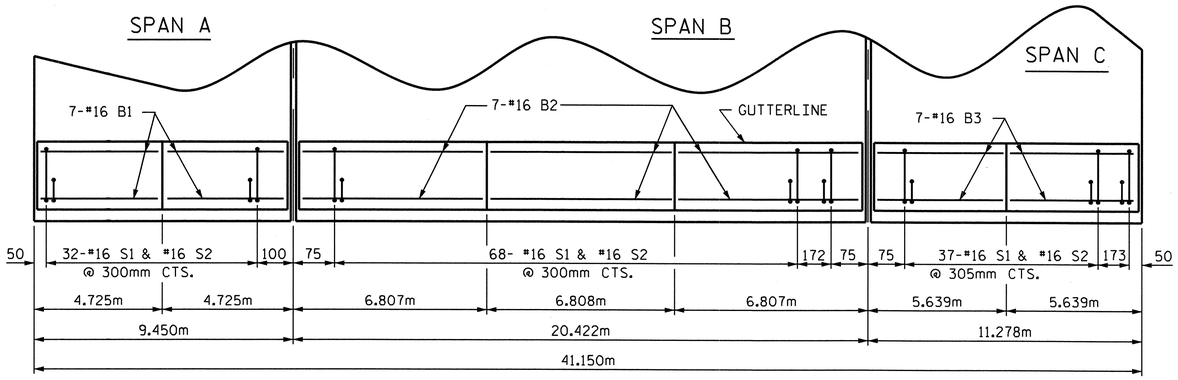

PLAN OF BARRIER RAIL
(RIGHT SIDE ONLY)

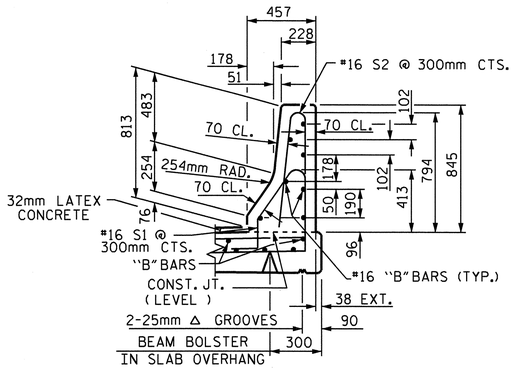

SECTION THRU RAIL

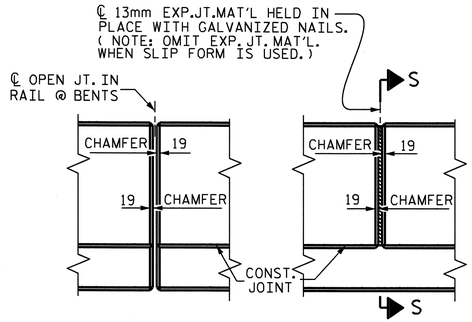

ELEVATION AT EXPANSION JOINTS

BARRIER RAIL DETAILS

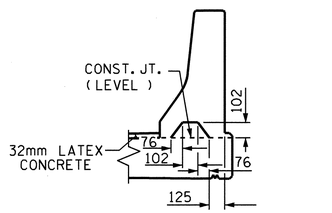

SECTION S-S
AT DAM IN OPEN JOINT
(THIS IS TO BE USED ONLY WHEN SLIP FORM IS USED)

NOTES

THE BARRIER RAIL IN EACH SPAN SHALL NOT BE CAST UNTIL ALL SLAB CONCRETE IN THAT SPAN HAS BEEN CAST AND HAS REACHED A MINIMUM COMPRESSIVE STRENGTH OF 20.7 MPa.

ALL REINFORCING STEEL IN BARRIER RAILS SHALL BE EPOXY COATED.

GROOVED CONTRACTION JOINTS, 12mm IN DEPTH, SHALL BE TOOLED IN ALL EXPOSED FACES OF THE BARRIER RAIL AND IN ACCORDANCE WITH ARTICLE 825-10(B) OF THE STANDARD SPECIFICATIONS. THE CONTRACTION JOINT SHALL BE LOCATED AT EACH THIRD POINT BETWEEN BARRIER RAIL EXPANSION JOINTS. ONLY ONE CONTRACTION JOINT IS REQUIRED AT MIDPOINT OF BARRIER RAIL SEGMENTS LESS THAN 6.1m IN LENGTH AND NO CONTRACTION JOINTS ARE REQUIRED FOR THOSE SEGMENTS LESS THAN 3.5m IN LENGTH.

BAR TYPES

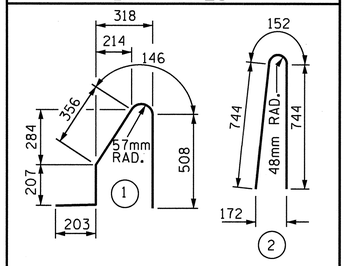

ALL BAR DIMENSIONS ARE OUT TO OUT

BILL OF MATERIAL
FOR CONCRETE BARRIER RAIL ONLY

BAR	NO.	SIZE	TYPE	LENGTH	WEIGHT
* B1	14	#16	STR	4600	100
* B2	21	#16	STR	6680	218
* B3	14	#16	STR	5520	120
* S1	139	#16	1	1420	306
* S2	139	#16	2	1640	354

*EPOXY COATED REINFORCING STEEL	1098 kg
CLASS AA CONCRETE	11.0 CU. METER
CONCRETE BARRIER RAIL	41.150 METERS

PROJECT NO. U-2519DA
CUMBERLAND COUNTY
STATION: 19+34.958 -Y1-

STATE OF NORTH CAROLINA
DEPARTMENT OF TRANSPORTATION
RALEIGH

SUPERSTRUCTURE
CONCRETE BARRIER RAIL
(RIGHT SIDE OF BRIDGE)
(RIGHT LANE)

NORTH CAROLINA PROFESSIONAL SEAL 14045 ENGINEER TIMOTHY W. COGGINS
3/29/11

REVISIONS						SHEET NO.
NO.	BY:	DATE:	NO.	BY:	DATE:	S-145
1			3			TOTAL SHEETS
2			4			411

ASSEMBLED BY : PEGGY PARISI	DATE :	7-08
CHECKED BY : N. RUFFIN	DATE :	9-08
DRAWN BY : ARB 5/87	REV. 10/17/00	RWW/LES
CHECKED BY : SJD 9/87	REV. 5/7/03R	RWW/JTE
	REV. 5/1/06	TLA/GM

24-MAR-2011 15:46
R:\TIPProjects-U\U2519da\Structures\azizi\Final Plans\STR 06\U2519DA_sd_BR_06.dgn
tcoggins

STR. #6

STD. No. CBR1SM

GUARDRAIL ANCHOR ASSEMBLY DETAILS

(ONE BAR METAL RAIL)

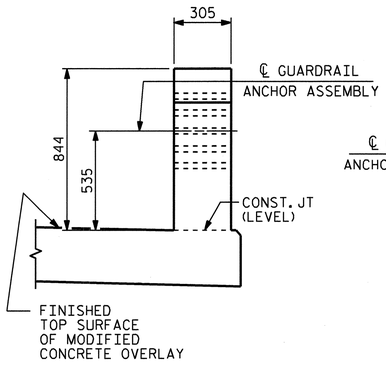

END VIEW

(ONE BAR METAL RAIL)

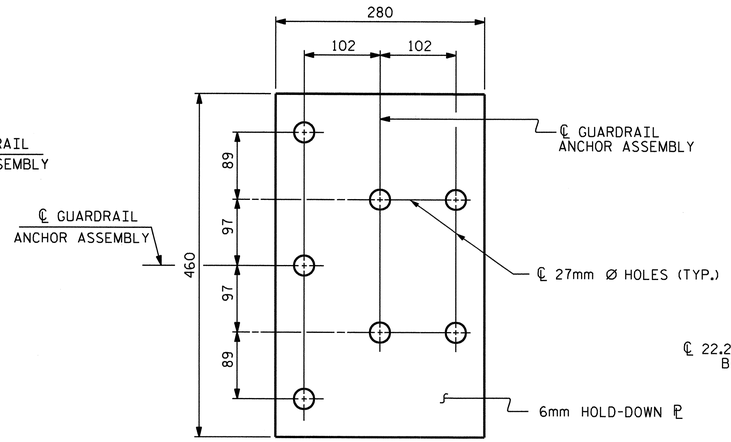

PLAN

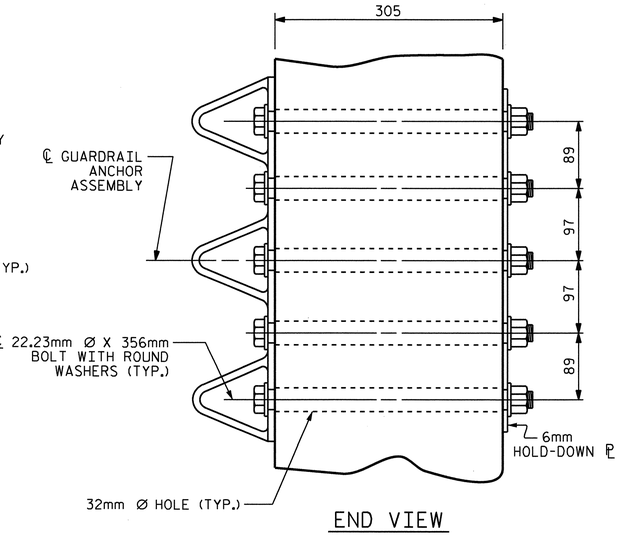

END VIEW

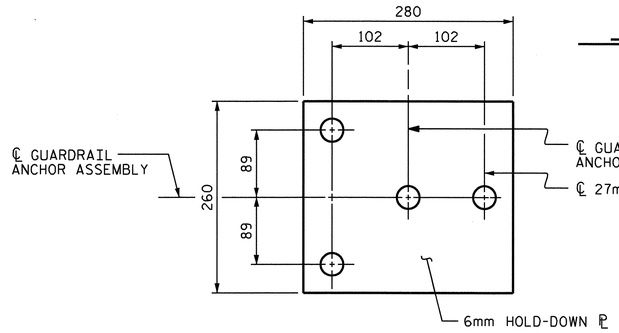

PLAN

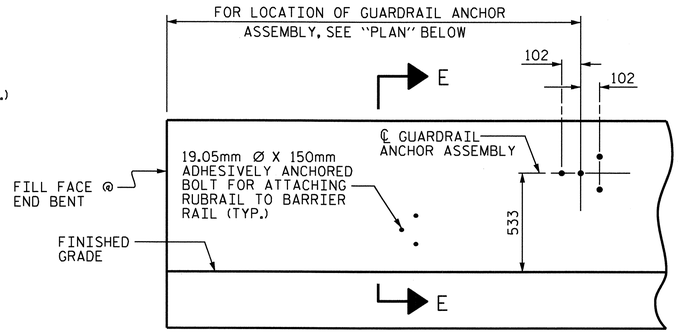

ELEVATION

FOR LOCATION OF RUBRAIL, SEE ROADWAY STD. 862.03

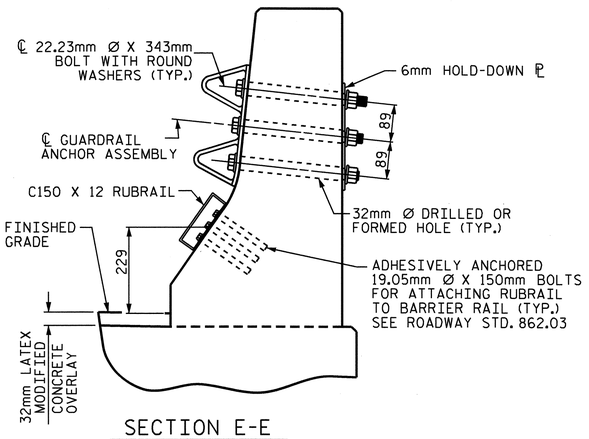

SECTION E-E

GUARDRAIL ANCHOR ASSEMBLY DETAILS

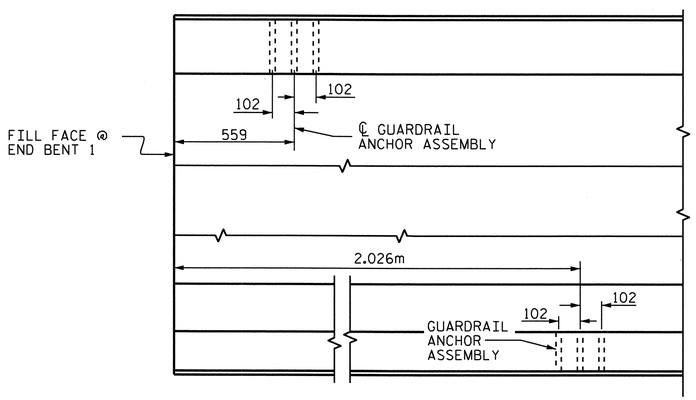

LOCATION OF ANCHORS FOR GUARDRAIL

END BENT #1 SHOWN, END BENT #2 SIMILAR.

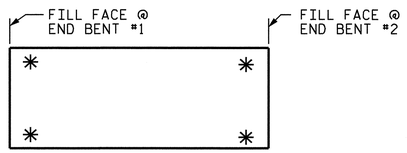

SKETCH SHOWING POINTS OF ATTACHMENT

*LOCATION OF GUARDRAIL ATTACHMENT

NOTES FOR BARRIER RAIL

THE GUARDRAIL ANCHOR ASSEMBLY SHALL CONSIST OF A 6mm HOLD DOWN PLATE AND 4 - 22.23mm Ø BOLTS WITH NUTS AND WASHERS, RUBRAIL, AND ADHESIVELY ANCHORED BOLTS.

THE HOLD-DOWN PLATE SHALL CONFORM TO AASHTO M270 GRADE 36. AFTER FABRICATION, THE HOLD-DOWN PLATE SHALL BE HOT-DIP GALVANIZED IN ACCORDANCE WITH AASHTO M111.

BOLTS SHALL CONFORM TO THE REQUIREMENTS OF ASTM A307 AND NUTS SHALL CONFORM TO THE REQUIREMENTS OF AASHTO M291. BOLTS, NUTS AND WASHERS SHALL BE GALVANIZED. (AT THE CONTRACTOR'S OPTION, STAINLESS STEEL BOLTS, NUTS AND WASHERS MAY BE USED AS AN ALTERNATE FOR THE 22.23mm Ø GALVANIZED BOLTS, NUTS AND WASHERS. THEY SHALL CONFORM TO OR EXCEED THE MECHANICAL REQUIREMENTS OF ASTM A307. THE USE OF THIS ALTERNATE SHALL BE APPROVED BY THE ENGINEER.)

THE GUARDRAIL ANCHOR ASSEMBLY IS REQUIRED AT ALL POINTS WHERE APPROACH GUARDRAIL IS TO BE ATTACHED TO THE END OF BARRIER RAIL. FOR POINTS OF ATTACHMENT, SEE SKETCH.

AFTER INSTALLATION, THE EXPOSED THREAD OF THE BOLT SHALL BE BURRED WITH A SHARP POINTED TOOL.

THE COST OF THE GUARDRAIL ANCHOR ASSEMBLY SHALL BE INCLUDED IN THE UNIT CONTRACT PRICE BID FOR CONCRETE BARRIER RAIL.

THE 32mm Ø HOLES SHALL BE FORMED OR DRILLED WITH A CORE BIT. IMPACT TOOLS WILL NOT BE PERMITTED. ANY CONCRETE DAMAGED BY THIS WORK SHALL BE REPAIRED TO THE SATISFACTION OF THE ENGINEER.

THE C150 X 12 RUBRAIL IS TO BE ADHESIVELY ANCHORED TO THE RAIL USING THREE 19.05mm Ø X 150mm BOLTS WITH WASHERS. LEVEL ONE FIELD TESTING IS REQUIRED, AND THE YIELD LOAD OF THE 19.05mm Ø BOLTS IS 53.4kN. FOR ADHESIVELY ANCHORED ANCHOR BOLTS OR DOWELS, SEE SPECIAL PROVISIONS. SEE ROADWAY STANDARD 862.03 FOR DETAILS AND LOCATION OF THE RUBRAIL.

NOTES FOR METAL RAIL

THE GUARDRAIL ANCHOR ASSEMBLY SHALL CONSIST OF A 6mm HOLD DOWN PLATE AND 7 - 22.23mm Ø BOLTS WITH NUTS AND WASHERS.

THE HOLD-DOWN PLATE SHALL CONFORM TO AASHTO M270 GRADE 250. AFTER FABRICATION, THE HOLD-DOWN PLATE SHALL BE HOT-DIP GALVANIZED IN ACCORDANCE WITH AASHTO M111.

BOLTS SHALL CONFORM TO THE REQUIREMENTS OF ASTM A307 AND NUTS SHALL CONFORM TO THE REQUIREMENTS OF AASHTO M291M. BOLTS, NUTS AND WASHERS SHALL BE GALVANIZED. AT THE CONTRACTOR'S OPTION, STAINLESS STEEL BOLTS, NUTS AND WASHERS MAY BE USED AS AN ALTERNATE FOR THE 22.23mm Ø GALVANIZED BOLTS, NUTS AND WASHERS. THEY SHALL CONFORM TO OR EXCEED THE MECHANICAL REQUIREMENTS OF ASTM A307. THE USE OF THIS ALTERNATE SHALL BE APPROVED BY THE ENGINEER.

GUARDRAIL IS TO BE ATTACHED TO THE END OF PARAPET. FOR POINTS OF ATTACHMENT, SEE SKETCH.

AFTER INSTALLATION, THE EXPOSED THREAD OF THE BOLT SHALL BE BURRED WITH A SHARP POINTED TOOL.

THE COST OF THE GUARDRAIL ANCHOR ASSEMBLIES WITH BOLTS, NUTS AND WASHERS COMPLETE IN PLACE, SHALL BE INCLUDED IN THE VARIOUS PAY ITEMS.

THE 32mm Ø HOLES SHALL BE DRILLED WITH A CORE BIT. IMPACT TOOLS WILL NOT BE PERMITTED. ANY CONCRETE DAMAGED BY THIS WORK SHALL BE REPAIRED TO THE SATISFACTION OF THE ENGINEER.

PROJECT NO. U-2519DA

CUMBERLAND COUNTY

STATION: 19+34.958 -Y1-

STATE OF NORTH CAROLINA
DEPARTMENT OF TRANSPORTATION
RALEIGH

STANDARD

GUARDRAIL ANCHORAGE FOR BARRIER RAIL

(RIGHT LANE)

REVISIONS						SHEET NO.
NO.	BY:	DATE:	NO.	BY:	DATE:	S-146
1			3			TOTAL SHEETS
2			4			411

STR. #6 STD. NO. GRA2

NORTH CAROLINA PROFESSIONAL SEAL 14045 ENGINEER TIMOTHY W. COGGINS
3/29/11

ASSEMBLED BY :	PEGGY PARISI	DATE :	7-08
CHECKED BY :	N. RUFFIN	DATE :	9-08
DRAWN BY : TLA 5/06	ADDED 5/1/06R KMM/GM		
CHECKED BY : GM 5/06			

24-MAR-2011 15:48
R:\TIPProjects-U\U2519da\Structures\aziz1\Final Plans\STR 06\U2519DA_sd_GR_06.dgn
tcoggins

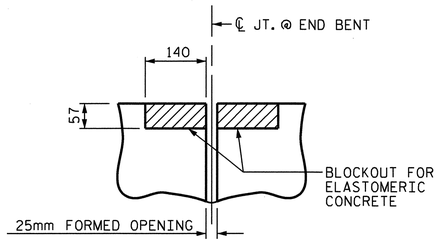

SECTION B-B

EVAZOTE JOINT SEAL
(PRE-SAWED ELASTOMERIC CONCRETE DIMENSIONS)

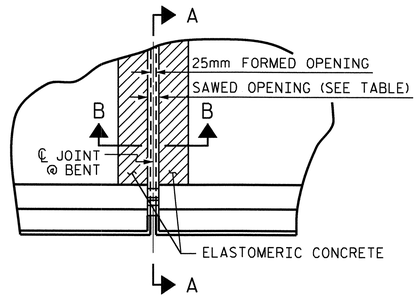

PLAN @ BENT

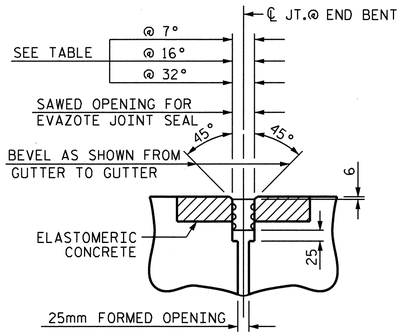

SECTION B-B

EVAZOTE JOINT SEAL

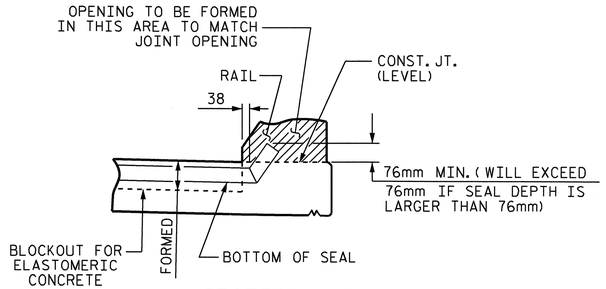

SECTION A-A

JOINT SEAL DETAILS @ BENT

EVAZOTE JOINT SEAL TO BE CUT, HEAT WELDED AND TURNED UP PARALLEL TO SLOPED FACE OF THE BARRIER RAIL OR VERTICAL FACE OF PARAPET.

BILL OF MATERIAL	
BENT NO.	ELASTOMERIC CONCRETE * (CU. m)
1	0.3
2	0.3

* BASED ON THE MINIMUM BLOCKOUT SHOWN.

NOTES

SEE SPECIAL PROVISIONS FOR EVAZOTE JOINT SEALS.

SEE SPECIAL PROVISIONS FOR ELASTOMERIC CONCRETE.

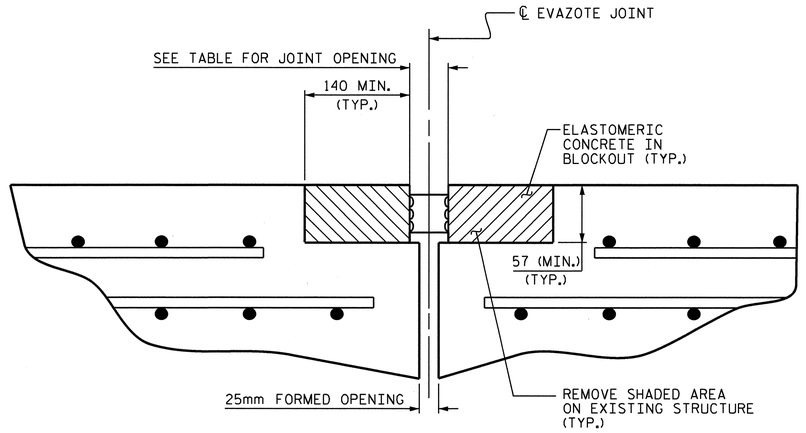

JOINT DETAILS

SECTION NORMAL TO JOINT AT BENT

MOVEMENT AND SETTING AT EVAZOTE JOINT						
BENT NO.	SKEW ANGLE	NOMINAL UNCOMPRESSED SEAL WIDTH	TOTAL MOVEMENT (ALONG ℄ RDWY)	PERPENDICULAR JOINT OPENING AT 7° C	PERPENDICULAR JOINT OPENING AT 16° C	PERPENDICULAR JOINT OPENING AT 32° C
1	90°	64	7	52	51	49
2	90°	64	22	55	51	44

TOTAL MOVEMENT IS CALCULATED ALONG THE CENTERLINE OF ROADWAY.
JOINT OPENINGS ARE MEASURED PERPENDICULAR TO THE JOINT.

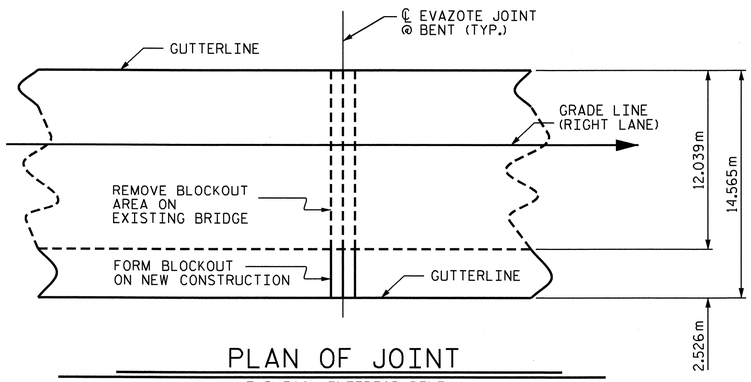

PLAN OF JOINT

TYP. EACH INTERIOR BENT

NORTH CAROLINA PROFESSIONAL SEAL 14045 ENGINEER TIMOTHY L. COGGINS
4/4/11

PROJECT NO. U-2519DA
CUMBERLAND COUNTY
STATION: 19+34.958 -Y1-

STATE OF NORTH CAROLINA
DEPARTMENT OF TRANSPORTATION
RALEIGH

STANDARD EVAZOTE JOINT DETAILS

(RIGHT LANE)

REVISIONS						SHEET NO.
NO.	BY:	DATE:	NO.	BY:	DATE:	S-147
1			3			TOTAL SHEETS
2			4			411

ASSEMBLED BY : PEGGY PARISI	DATE : 7-08	REV. 7/10/01	LES/RDR
CHECKED BY : N. RUFFIN	DATE : 9-08	REV. 5/7/03RR	RWW/JTE
DRAWN BY : EEM 1/96		REV. 5/1/06	TLA/GM
CHECKED BY : RGW 1/96			

04-APR-2011 10:21
R:\TIPProjects-U\U2519da\Structures\azlz1\Final Plans\STR 06\U2519DA_sd_JS_06.dgn
tcoggins

STR. #6

STD. NO. AEJ1SM

—SUPERSTRUCTURE BILL OF MATERIAL—

	CLASS AA CONCRETE	REINFORCING STEEL
	(CU. METER)	(kg)
SPAN "A"	6.1	819
SPAN "B"	13.4	1688
SPAN "C"	7.3	962
TOTALS**	26.8	3469

** QUANTITIES FOR BARRIER RAIL ARE NOT INCLUDED

GROOVING BRIDGE FLOORS

APPROACH SLABS	159.6	SQ.METER
BRIDGE DECK	549.3	SQ.METER
TOTAL	708.9	SQ.METER

BILL OF MATERIAL — SPAN "A"

BAR	NO.	SIZE	TYPE	LENGTH	WEIGHT
A1	93	#16	STR	2920	421
B1	14	#13	STR	4880	68
B2	11	#16	STR	9340	159
D1	21	#19	STR	900	42
K1	4	#13	STR	2920	12
K3	2	#13	STR	780	2
K5	4	#16	STR	900	6
K6	4	#16	4	1040	6
K9	1	#13	STR	640	1
K10	2	#13	STR	940	2
K11	1	#13	STR	680	1
K12	2	#13	STR	580	1
K13	1	#13	STR	440	1
K22	2	#25	7	3440	27
K23	2	#25	1	2560	20
S1	8	#13	2	1720	14
S2	8	#13	5	620	5
S3	6	#13	6	1500	9
S4	6	#16	3	1520	14
V1	8	#13	STR	1020	8

REINFORCING STEEL 819 kg

CLASS AA CONCRETE 6.1 CU. METER

BILL OF MATERIAL — SPAN "B"

BAR	NO.	SIZE	TYPE	LENGTH	WEIGHT
A1	204	#16	STR	2920	924
B3	21	#13	STR	7040	147
B4	22	#16	STR	10480	358
D1	45	#19	STR	900	91
K14	8	#16	STR	800	10
K15	8	#16	4	940	12
K22	4	#25	7	3440	55
K23	4	#25	1	2560	41
S4	12	#16	3	1520	28
S6	12	#13	6	1860	22

REINFORCING STEEL 1688 kg

CLASS AA CONCRETE 13.3 CU. METER

BILL OF MATERIAL — SPAN "C"

BAR	NO.	SIZE	TYPE	LENGTH	WEIGHT
A1	113	#16	STR	2920	512
B5	14	#13	STR	5780	80
B6	11	#16	STR	11160	191
D1	25	#19	STR	900	50
K1	4	#13	STR	2920	12
K3	2	#13	STR	780	2
K5	4	#16	STR	900	6
K6	4	#16	4	1040	6
K9	1	#13	STR	640	1
K10	2	#13	STR	940	2
K11	1	#13	STR	680	1
K12	2	#13	STR	580	1
K13	1	#13	STR	440	1
K22	2	#25	7	3440	27
K23	2	#25	1	2560	20
S1	8	#13	2	1720	14
S2	8	#13	5	620	5
S3	6	#13	6	1500	9
S4	6	#16	3	1520	14
V1	8	#13	STR	1020	8

REINFORCING STEEL 962 kg

CLASS AA CONCRETE 7.3 CU. METER

BAR TYPES

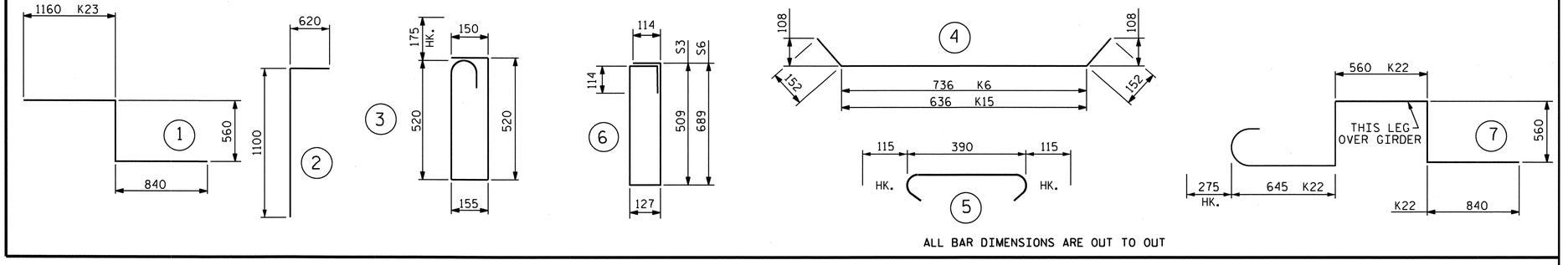

ALL BAR DIMENSIONS ARE OUT TO OUT

SUPERSTRUCTURE REINFORCING STEEL LENGTHS ARE BASED ON THE FOLLOWING MINIMUM SPLICE LENGTHS

BAR SIZE	SUPERSTRUCTURE EXCEPT APPROACH SLABS, PARAPET, AND BARRIER RAIL		APPROACH SLABS		PARAPET AND BARRIER RAIL
	EPOXY COATED	UNCOATED	EPOXY COATED	UNCOATED	
#13	610	540	610	540	840
#16	770	660	770	660	1050
#19	920	790	1190	790	1330
#22	1580	1060			
#25	2080	1390			

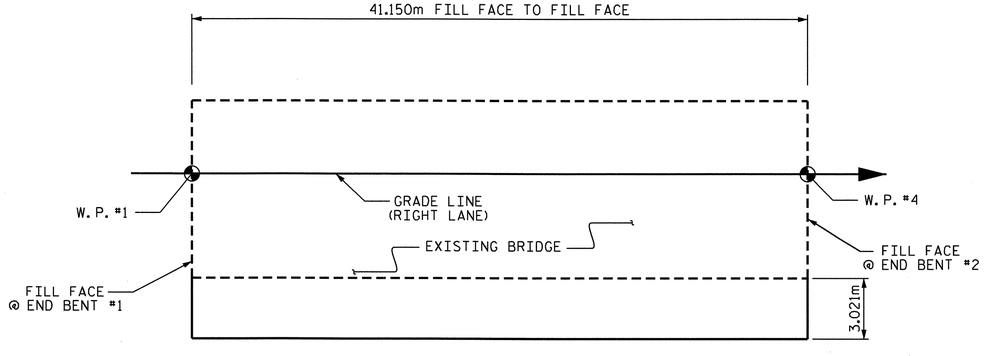

LAYOUT FOR COMPUTING AREA OF REINFORCED CONCRETE DECK SLAB (TOTAL = 124.3 SQ. METERS)

PROJECT NO. U-2519DA

CUMBERLAND COUNTY

STATION: 19+34.958 -Y1-

STATE OF NORTH CAROLINA
DEPARTMENT OF TRANSPORTATION
RALEIGH

STANDARD

SUPERSTRUCTURE BILL OF MATERIAL

(RIGHT LANE)

NORTH CAROLINA PROFESSIONAL SEAL 14045 ENGINEER TIMOTHY L. COGGINS 4/4/11

REVISIONS						SHEET NO.
NO.	BY:	DATE:	NO.	BY:	DATE:	S-148
1			3			TOTAL SHEETS
2			4			411

ASSEMBLED BY : PEGGY PARISI DATE : 8-08
CHECKED BY : N. RUFFIN DATE : 9-08

DRAWN BY : JMB 5/87
CHECKED BY : SJD 9/87

REV. 5/16/97 EEM/RGW
REV. 5/1/06 TLA/GM

04-APR-2011 15:07
R:\TIPProjects-U\U2519da\Structures\azizi\Final Plans\STR 06\U2519DA_sd_BM_06.dgn
tcoggins

STR. #6

STD. NO. BOM2SM

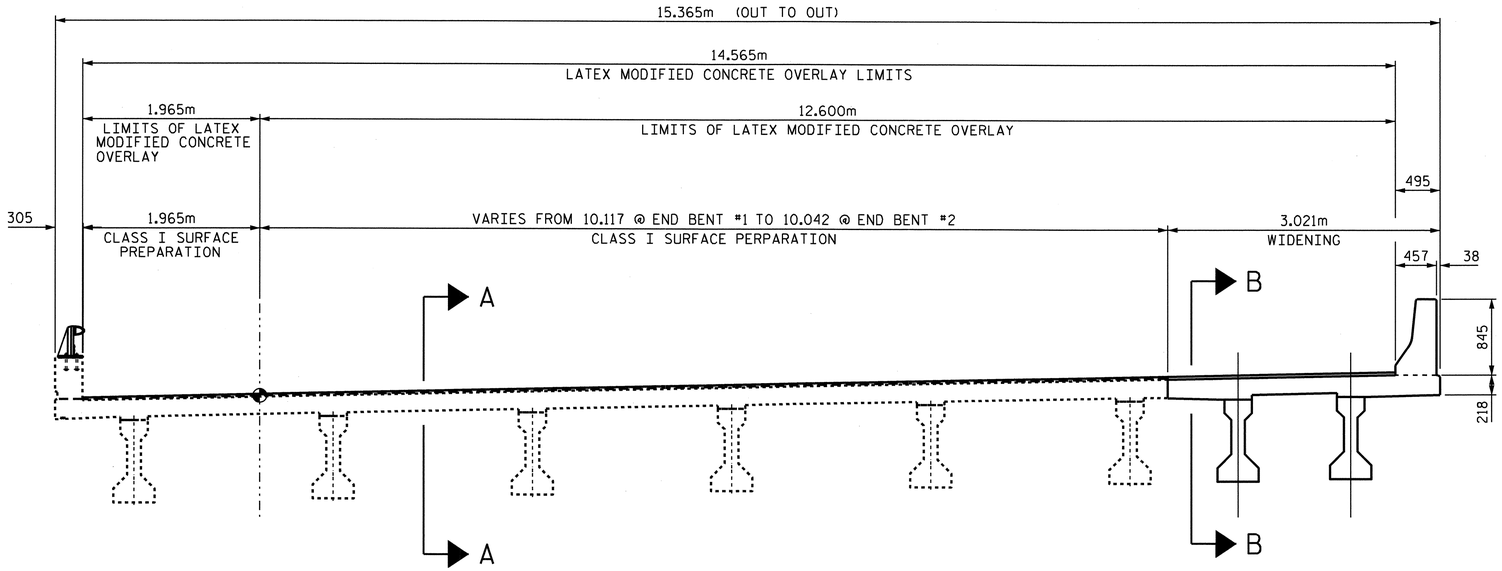

TYPICAL SECTION

NOTES:

QUANTITIES FOR CLASS II SURFACE PREPARATION ARE ESTIMATED. THE QUANTITIES TO BE PAID FOR WILL BE THE ACTUAL NUMBER OF SQUARE METERS OF CLASS II SURFACE PREPARATION COMPUTED BY THE ENGINEER FROM MEASUREMENTS OF THE AREAS THAT ARE PREPARED TO RECEIVE THE OVERLAY.

FOR CLASS I, IA, AND II SURFACE PREPARATION, SEE SPECIAL PROVISION FOR REPAIR OF BRIDGE DECKS AND APPROACH PAVEMENT WITH LATEX MODIFIED CONCRETE.

FOR LATEX MODIFIED CONCRETE AND PLACING AND FINISHING OF LATEX MODIFIED CONCRETE, SEE SPECIAL PROVISION FOR LATEX MODIFIED CONCRETE.

SPLICES FOR REINFORCING STEEL SHALL BE WELDED AS DETAILED AND ALL WELDING SHALL CONFORM TO THE LATEST EDITION OF THE AMERICAN WELDING SOCIETY REINFORCING STEEL CODE (AWS D12.1). CHEMICAL ANALYSIS OF THE EXISTING REINFORCING STEEL WILL NOT BE REQUIRED.

FOR PLACING SEQUENCE OF THE LATEX MODIFIED CONCRETE OVERLAY, SEE "CONSTRUCTION SEQUENCE" SHEET.

CLASS I SURFACE PREPARATION SHALL BE PERFORMED ON THE EXISTING DECK AND APPROACH SLABS. THE LATEX MODIFIED CONCRETE OVERLAY SHALL BE GROOVED IN ACCORDANCE WITH THE STANDARD SPECIFICATIONS.

FOR GROOVING BRIDGE FLOORS QUANTITIES, SEE "BILL OF MATERIAL" SHEET.

BILL OF MATERIAL

	CLASS I SURFACE PREPARATION	CLASS IA SURFACE PREPARATION	CLASS II SURFACE PREPARATION	LATEX MODIFIED CONCRETE OVERLAY	PLACING AND FINISHING OF LATEX MODIFIED CONCRETE OVERLAY
	SQ. METERS	SQ. METERS	SQ. METERS	CU. METERS	SQ. METERS
DECK REPAIR	495.4	0	24.8	19.2	599.3
APPROACH SLAB	0	89.2	0	5.7	176.8
TOTAL	495.4	89.2	24.8	24.9	776.1

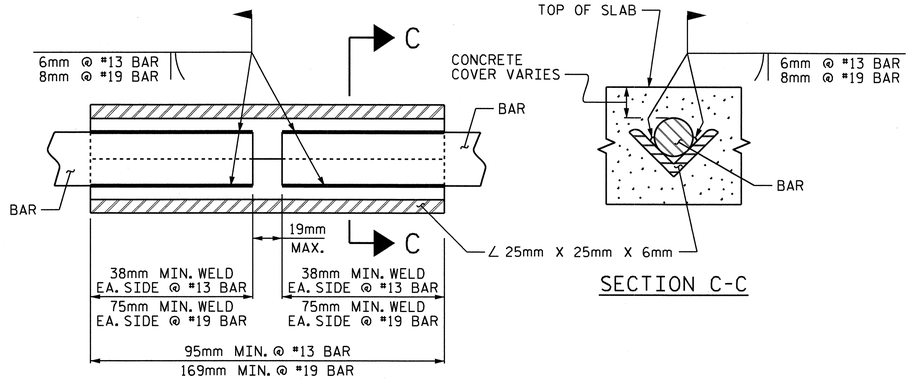

PLAN VIEW

SECTION C-C

WELD DETAILS FOR SPLICING REINFORCING STEEL

CLASS II SURFACE PREPARATION

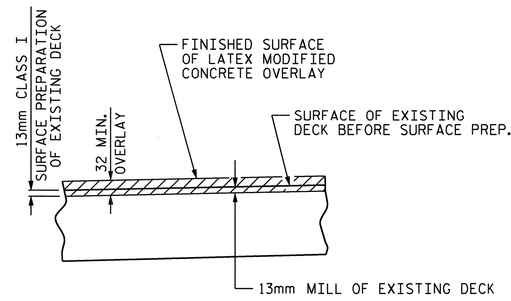

SECTION A-A

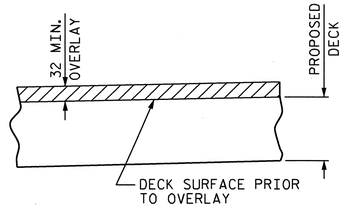

SECTION B-B

NORTH CAROLINA PROFESSIONAL SEAL 14045 ENGINEER TIMOTHY L. COGGINS
3/29/11

PROJECT NO. U-2519DA

CUMBERLAND COUNTY

STATION: 19+34.958 -Y1-

SHEET 1 OF 2

STATE OF NORTH CAROLINA
DEPARTMENT OF TRANSPORTATION
RALEIGH

SUPERSTRUCTURE
DECK WIDENING AND REHABILITATION (RIGHT LANE)

REVISIONS						SHEET NO.
NO.	BY:	DATE:	NO.	BY:	DATE:	S-149
1			3			TOTAL SHEETS
2			4			411

STR. #6

DRAWN BY : Neil M. Ruffin DATE : 9/25/08
CHECKED BY : T.L. COGGINS DATE : 10/2008

29-MAR-2011 11:36
R:\Structures\azizi\Final Plans\STR 06\U2519DA_sd_RH_06.dgn
nruffin

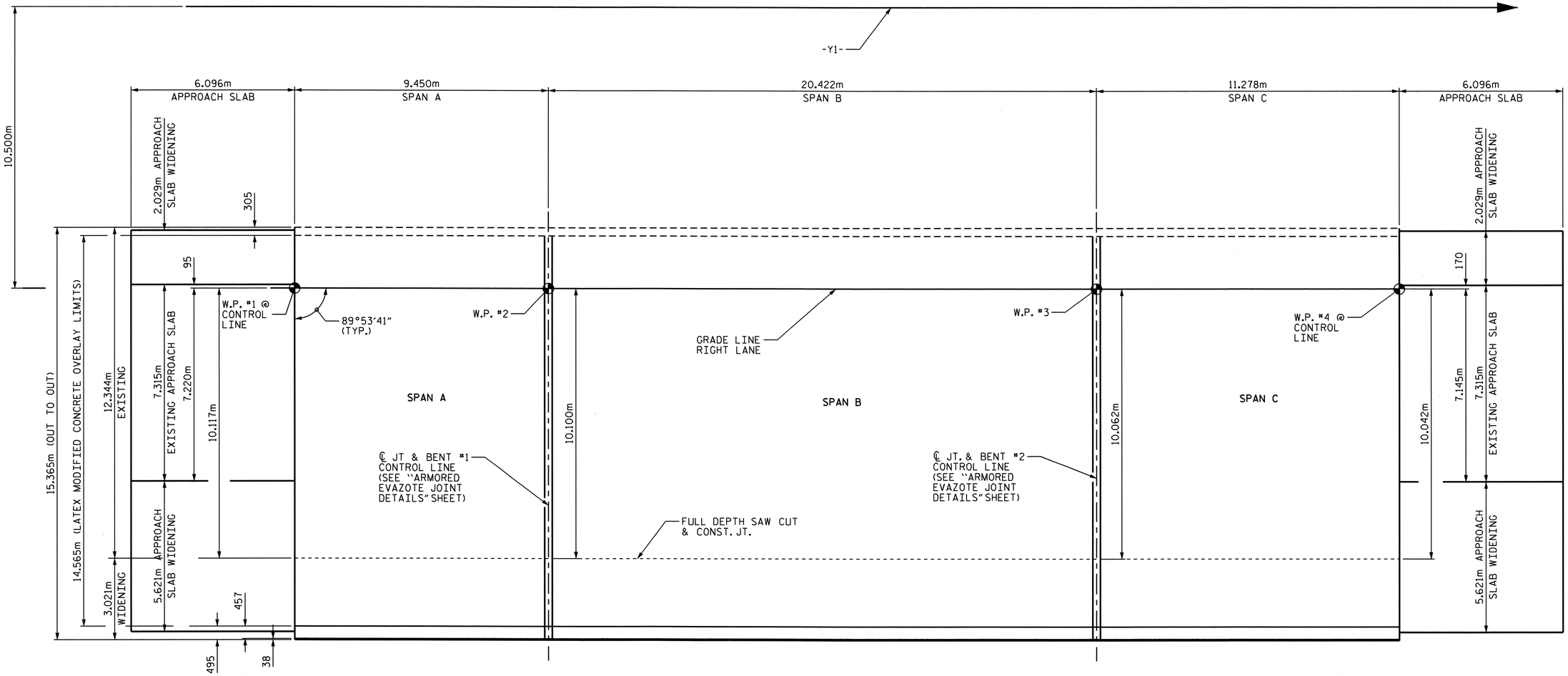

PROJECT NO. U-2519DA

CUMBERLAND COUNTY

STATION: 19+34.958 -Y1-

SHEET 1 OF 2

STATE OF NORTH CAROLINA
DEPARTMENT OF TRANSPORTATION
RALEIGH

SUPERSTRUCTURE

DECK WIDENING AND REHABILITATION (RIGHT LANE)

NORTH CAROLINA PROFESSIONAL SEAL 14045 ENGINEER TIMOTHY L. COGGINS

3/29/11

REVISIONS						SHEET NO.
NO.	BY:	DATE:	NO.	BY:	DATE:	S-150
1			3			TOTAL SHEETS
2			4			411

STR. #6

DRAWN BY : Neil M. Ruffin DATE : 9/29/08
CHECKED BY : T.L. COGGINS DATE : 10/2008

29-MAR-2011 11:50
R:\Structures\azizi\Final Plans\STR 06\U2519DA_sd_RH_06.dgn
nruffin

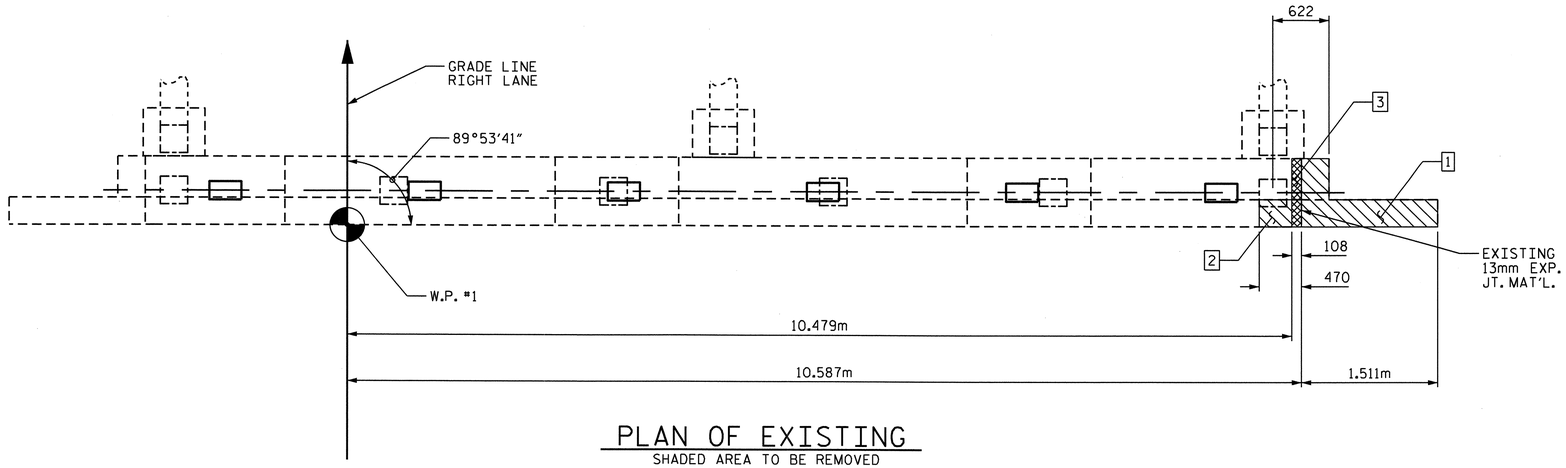

PLAN OF EXISTING
SHADED AREA TO BE REMOVED

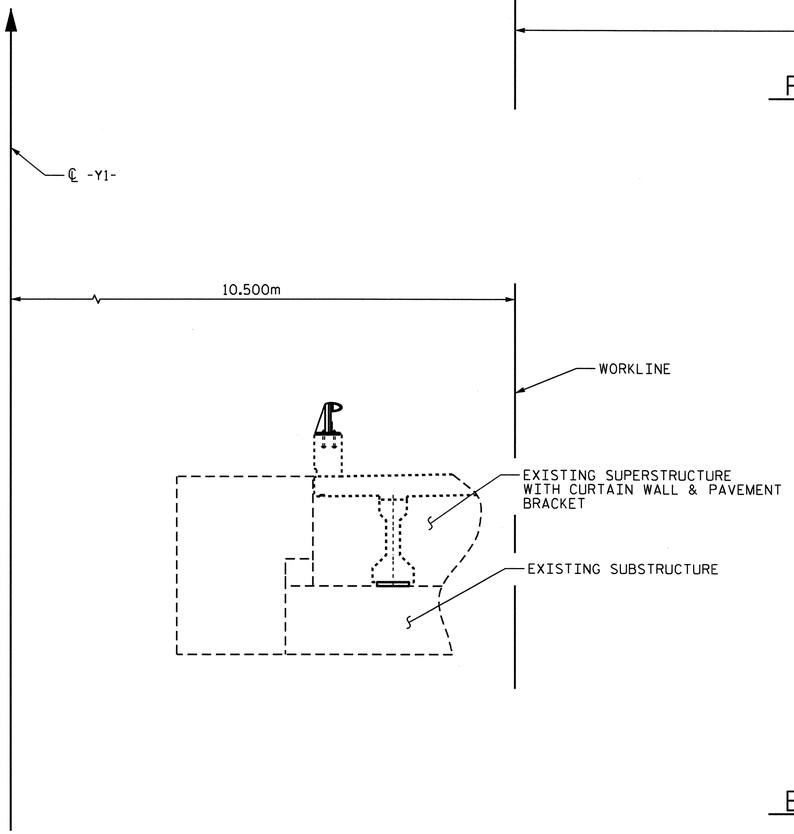

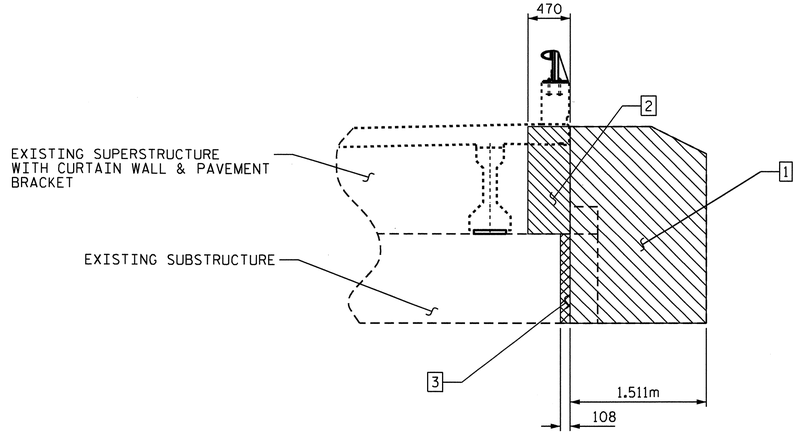

ELEVATION OF EXISTING
SHADED AREA TO BE REMOVED

EAR WALL REMOVAL SEQUENCE

1. REMOVE EXISTING EAR WALL UP TO EXP. JOINT MATERIAL AND SAW CUT CAP, NOT TO DISTURB BRACE PILE BLOCK AND REINFORCEMENT WITHIN.
2. THE 470mm EXISTING CURTAIN WALL SHALL BE REMOVED BY SAW CUT DOWN TO TOP OF CAP, NOT TO DISTURB THE EXISTING CAP.
3. THE 108mm PORTION OF EXISTING CAP SHALL BE REMOVED BY HAND TOOLS NOT TO DISTURB THE BRACE PILE BLOCK, PRESTRESSED PILES AND REINFORCEMENT WITHIN THIS AREA.

PROJECT NO. U-2519DA
CUMBERLAND COUNTY
STATION: 19+34.958 -Y1-

SHEET 1 OF 4

STATE OF NORTH CAROLINA
DEPARTMENT OF TRANSPORTATION
RALEIGH

SUBSTRUCTURE
END BENT #1
EXISTING CAP
(RIGHT LANE)

REVISIONS						SHEET NO.
NO.	BY:	DATE:	NO.	BY:	DATE:	S-151
1			3			TOTAL SHEETS
2			4			411

NORTH CAROLINA PROFESSIONAL SEAL 14045 ENGINEER TIMOTHY L. COGGINS
3/29/11

DRAWN BY : Neil M Ruffin DATE : 9/3/08
CHECKED BY : J.B. WILSON DATE : 9/18/08

29-MAR-2011 11:36
R:\Structures\azizi\Final Plans\STR 06\U2519DA_sd_E*_06.dgn
nruffin

STR #6

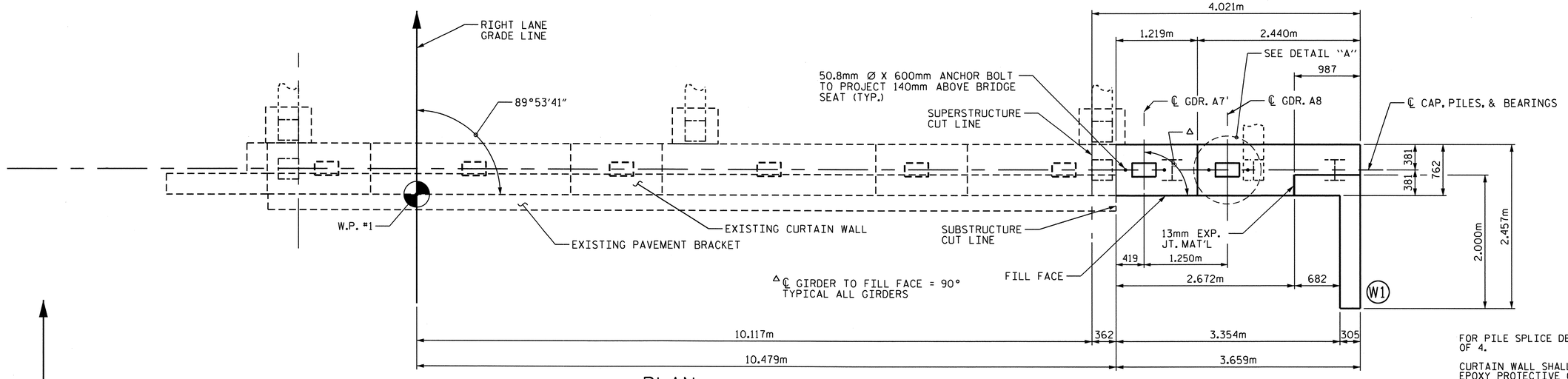

PLAN

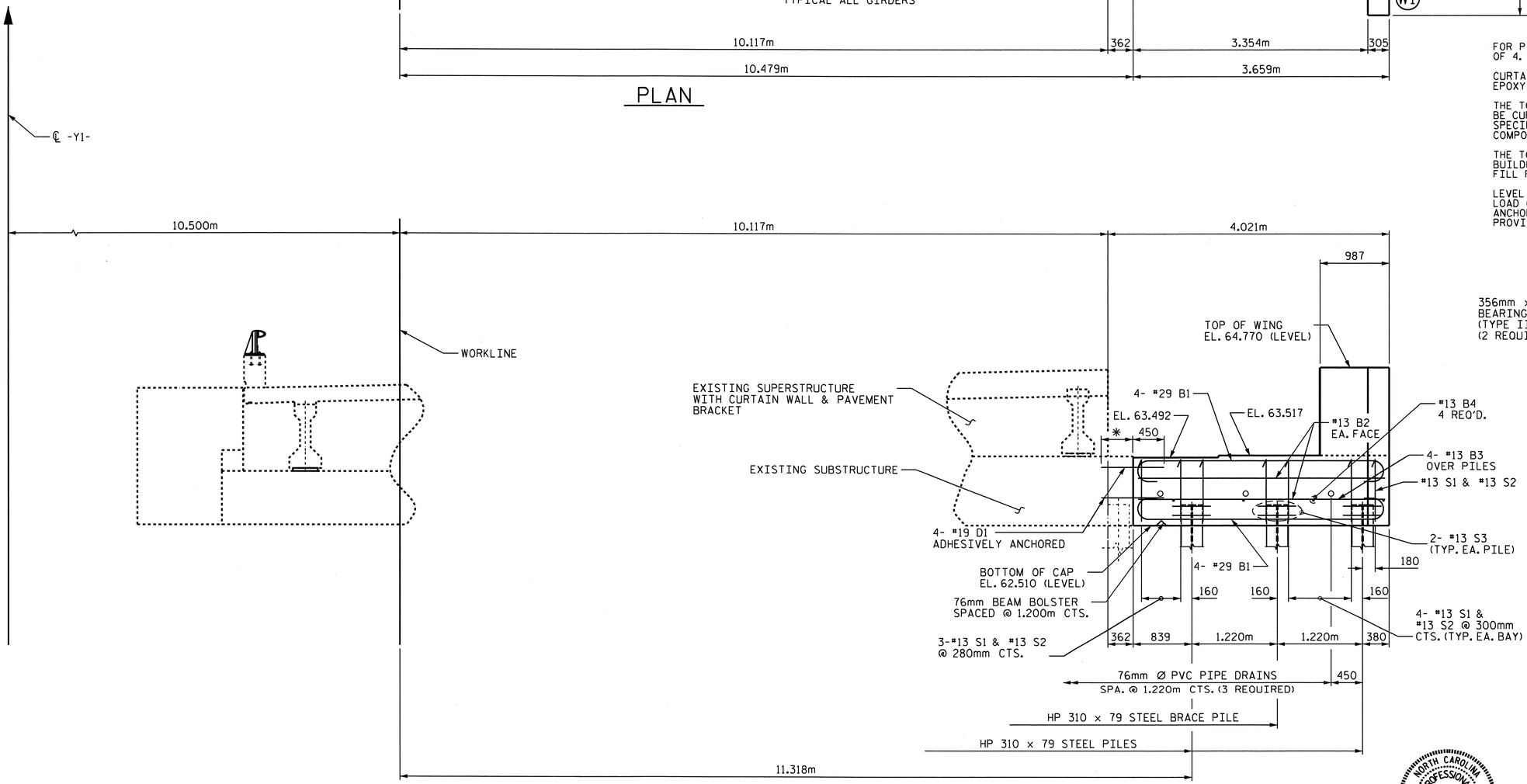

ELEVATION

* EMBEDMENT LENGTH TO BE DETERMINED BY SELECTED MANUFACTURER

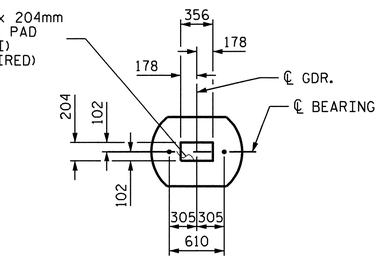

DETAIL "A"

NOTES

FOR PILE SPLICE DETAILS, SEE END BENT #1, SHEET 4 OF 4.

CURTAIN WALL SHALL BE PLACED BEFORE APPLYING THE EPOXY PROTECTIVE COATING.

THE TOP SURFACE AREAS OF THE END BENT CAPS SHALL BE CURED IN ACCORDANCE WITH THE STANDARD SPECIFICATIONS EXCEPT THE MEMBRANE CURING COMPOUND METHOD SHALL NOT BE USED.

THE TOP SURFACE OF THE CAP EXCEPT THE BRIDGE SEAT BUILDUPS SHALL BE SLOPED TRANSVERSELY FROM THE FILL FACE TO THE BACK FACE AT THE RATE OF 2 %.

LEVEL 1 FIELD TESTING IS REQUIRED, AND THE YIELD LOAD OF THE DOWELS IS 120 KN. FOR ADHESIVELY ANCHORED ANCHOR BOLTS OR DOWELS, SEE SPECIAL PROVISIONS.

PROJECT NO. U-2519DA

CUMBERLAND COUNTY

STATION: 19+34.958 -Y1-

SHEET 2 OF 4

STATE OF NORTH CAROLINA
DEPARTMENT OF TRANSPORTATION
RALEIGH

SUBSTRUCTURE
END BENT #1
& DETAILS
(RIGHT LANE)

REVISIONS						SHEET NO.
NO.	BY:	DATE:	NO.	BY:	DATE:	S-152
1			3			TOTAL SHEETS
2			4			411

NORTH CAROLINA PROFESSIONAL SEAL 14045 ENGINEER TIMOTHY V. COGGINS
4/4/11

DRAWN BY : Neil M Ruffin DATE : 9/3/08
CHECKED BY : J.B. WILSON DATE : 9/18/08

04-APR-2011 09:59
R:\TIPProjects-U\U2519da\Structures\azizi\FinalPlans\STR 06\U2519DA_sd_E*_06.dgn
tcoggins

STR #6

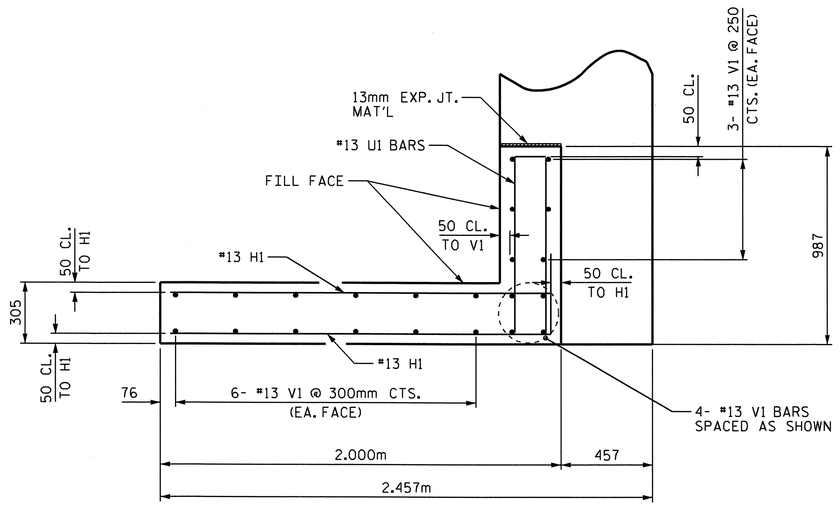

PLAN OF WING (W1)

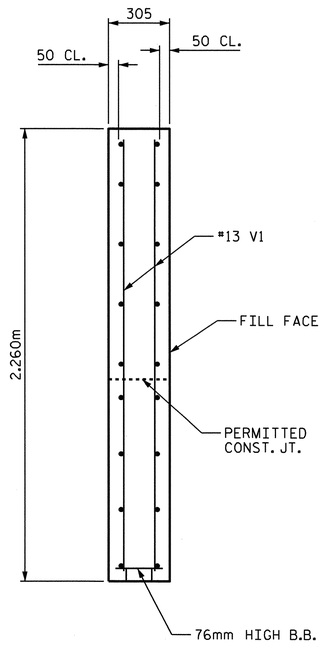

SECTION Y-Y

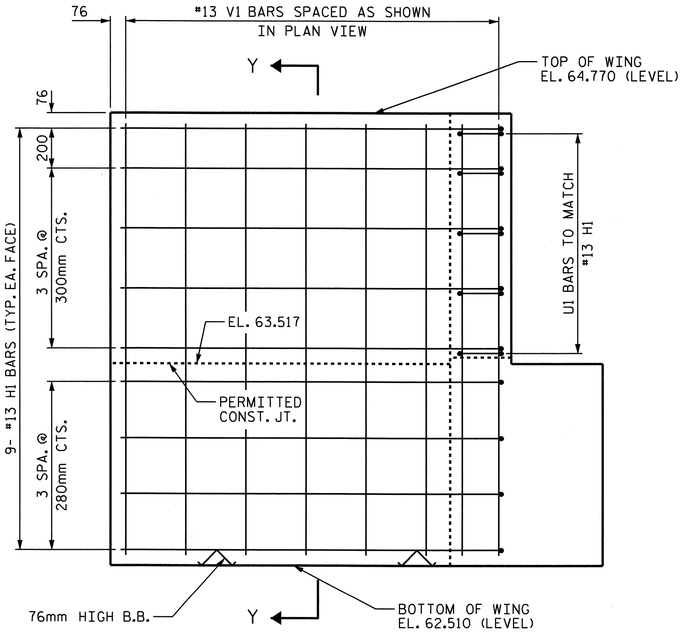

ELEVATION OF WING (W1)

RIGHT SIDE WIDENING

DRAWN BY : Neil M. Ruffin DATE : 9/3/08
CHECKED BY : J.B. WILSON DATE : 9/18/08

29-MAR-2011 11:36
R:\Structures\azizi\Final Plans\STR 06\U2519DA_sd_E*_06.dgn
nruffin

NORTH CAROLINA PROFESSIONAL SEAL 14045 ENGINEER TIMOTHY W. COGGINS
3/09/11

PROJECT NO. U-2519DA
CUMBERLAND COUNTY
STATION: 19+34.958 -Y1-

SHEET 3 OF 4

STATE OF NORTH CAROLINA
DEPARTMENT OF TRANSPORTATION
RALEIGH
SUBSTRUCTURE
END BENT #1 & DETAILS
(RIGHT LANE)

REVISIONS						SHEET NO.
NO.	BY:	DATE:	NO.	BY:	DATE:	S-153
1			3			TOTAL SHEETS
2			4			411

STR. #6

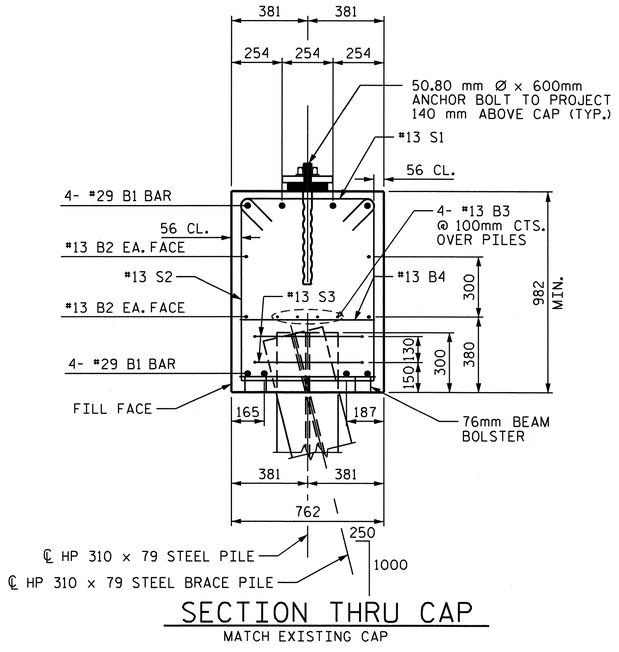

SECTION THRU CAP

MATCH EXISTING CAP

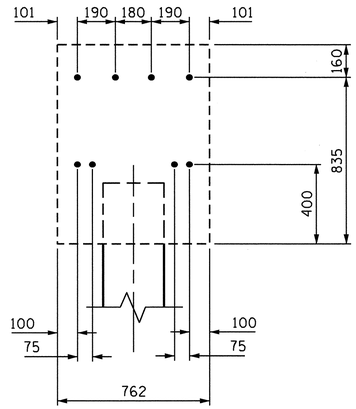

END VIEW

RIGHT END ONLY

BAR TYPES

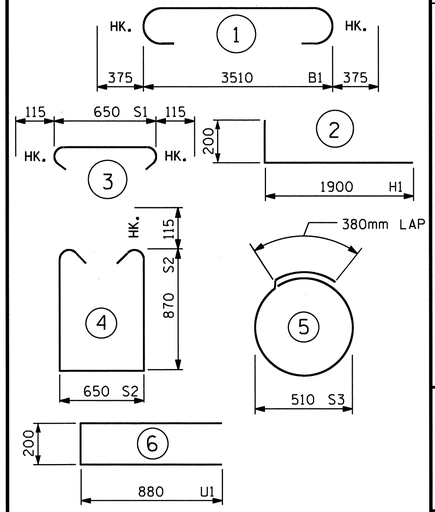

ALL BAR DIMENSIONS ARE OUT TO OUT.

BILL OF MATERIAL

END BENT #1 RIGHT SIDE WIDENING

BAR	NO	SIZE	TYPE	LENGTH	WEIGHT
B1	8	29	1	4260	172
B2	4	13	STR	3560	14
B3	4	13	STR	3560	14
B4	4	13	STR	660	3
D1	8	19	STR	900	16
H1	18	13	2	2100	38
S1	12	13	3	880	10
S2	12	13	4	2620	31
S3	6	13	5	1980	12
U1	5	13	6	1960	10
V1	22	13	STR	2160	47
REINFORCING STEEL			kg		367

CLASS "A" CONCRETE BREAKDOWN

POUR #1 CAP & LOWER WING	3.3 m3
POUR #2 UPPER WING	1.0 m3
TOTAL	4.3 m3

HP 310 x 79 STEEL PILES		
No. 3	METERS	66
PILE REDRIVES	EACH	1

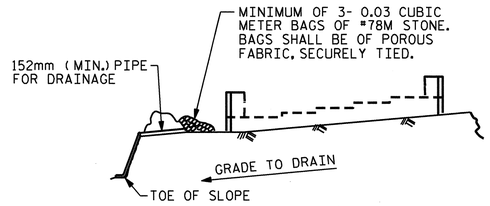

BAGGED STONE AND PIPE SHALL BE PLACED IMMEDIATELY AFTER COMPLETION OF END BENT EXCAVATION. PIPE MAY BE EITHER CONCRETE, CORRUGATED STEEL, CORRUGATED ALUMINUM ALLOY, OR CORRUGATED PLASTIC. PERFORATED PIPE WILL NOT BE ALLOWED.

BAGGED STONE SHALL REMAIN IN PLACE UNTIL THE ENGINEER DIRECTS THAT IT BE REMOVED. THE CONTRACTOR SHALL REMOVE AND DISPOSE OF SILT ACCUMULATIONS AT BAGGED STONE WHEN SO DIRECTED BY THE ENGINEER. BAGS SHALL BE REMOVED AND REPLACED WHENEVER THE ENGINEER DETERMINES THAT THEY HAVE DETERIORATED AND LOST THEIR EFFECTIVENESS.

NO SEPARATE PAYMENT WILL BE MADE FOR THIS WORK AND THE ENTIRE COST OF THIS WORK SHALL BE INCLUDED IN THE UNIT CONTRACT PRICE FOR THE SEVERAL PAY ITEMS.

TEMPORARY DRAINAGE AT END BENT

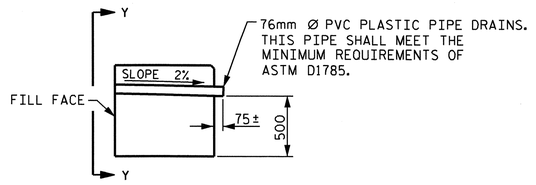

SECTION THRU CAP

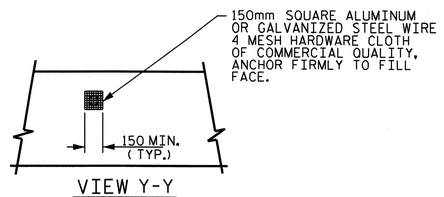

VIEW Y-Y

NOTE: NO SEPARATE PAYMENT WILL BE MADE FOR FURNISHING AND INSTALLING THE PVC PLASTIC PIPE DRAINS, HARDWARE CLOTH AND FASTENERS. THE ENTIRE COST OF THIS WORK SHALL BE INCLUDED IN THE UNIT CONTRACT PRICE BID FOR THE SEVERAL PAY ITEMS.

PIPE DRAIN DETAILS

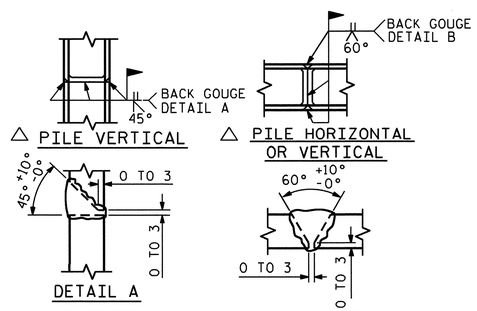

△ POSITION OF PILE DURING WELDING.

PILE SPLICE DETAILS

NORTH CAROLINA PROFESSIONAL SEAL 14045 ENGINEER TIMOTHY U. COGGINS
3/23/11

PROJECT NO. U-2519DA

CUMBERLAND COUNTY

STATION: 19+34.958 -Y1-

SHEET 4 OF 4

STATE OF NORTH CAROLINA
DEPARTMENT OF TRANSPORTATION
RALEIGH

SUBSTRUCTURE
END BENT #1 & DETAILS
(RIGHT LANE)

REVISIONS						SHEET NO.
NO.	BY:	DATE:	NO.	BY:	DATE:	S-154
1			3			TOTAL SHEETS
2			4			411

DRAWN BY : Neil M. Ruffin DATE : 8/19/08
CHECKED BY : J.B. WILSON DATE : 9/18/08

STR #6

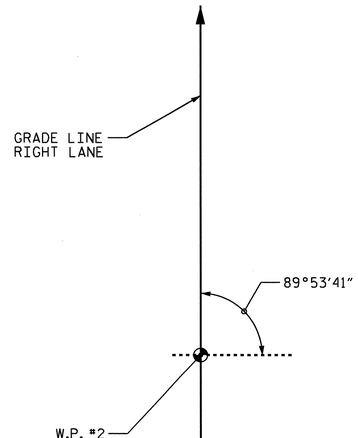

△ ANGLE BETWEEN ℄ GIRDER AND ℄ BENT CONTROL LINE = 90°0'0" (TYP. ALL GIRDERS BOTH SPANS)

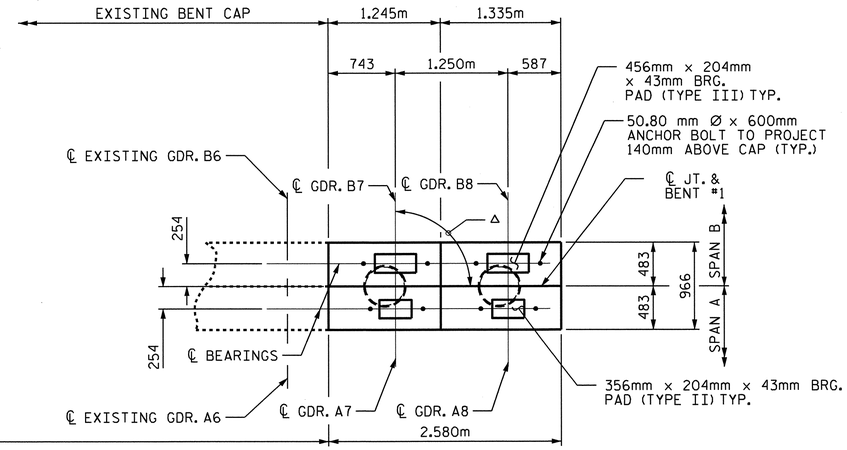

PLAN (RIGHT SIDE)

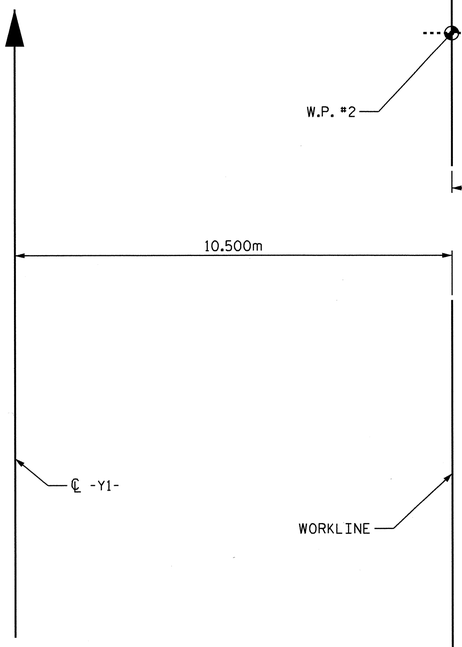

* INVERT ALTERNATE STIRRUPS

** ADHESIVE ANCHORED DOWELS INTO EXISTING CAP

*** EMBEDMENT LENGTH TO BE DETERMINED BY THE SELECTED MANUFACTURER

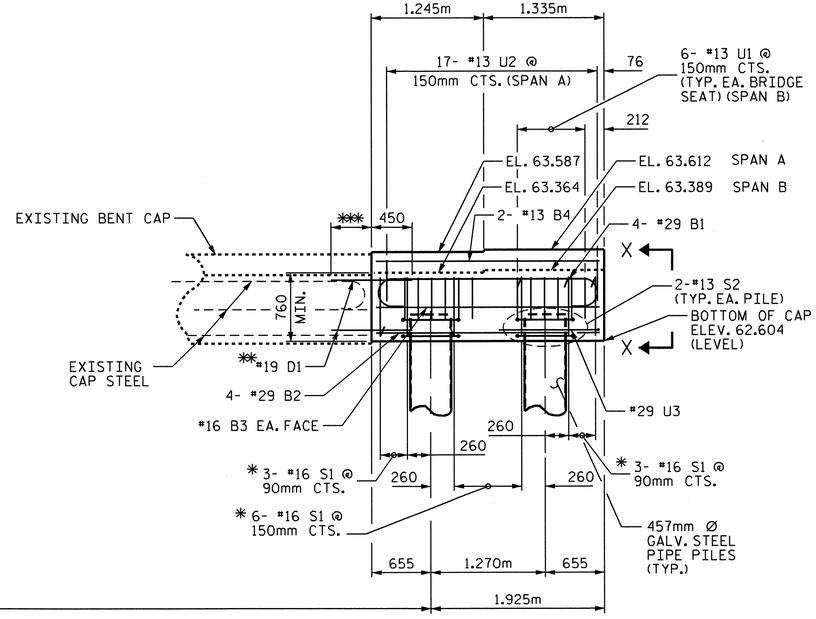

ELEVATION (RIGHT SIDE)

SEE VIEW X-X, SHEET 2 OF 2, FOR ADDITIONAL REINFORCEMENT STEEL IN END OF CAP.

NOTES

STIRRUPS IN CAP MAY BE SHIFTED AS NECESSARY TO CLEAR ANCHOR BOLTS.

THE TOP SURFACE AREAS OF THE BENT CAPS SHALL BE CURED IN ACCORDANCE WITH THE STANDARD SPECIFICATIONS EXCEPT THE MEMBRANE CURING COMPOUND METHOD SHALL NOT BE USED.

GALVANIZE THE TOP OF EACH INTERIOR BENT PILE A MINIMUM OF 11 METERS. GALVANIZE IN ACCORDANCE WITH SECTION 1076 OF THE STANDARD SPECIFICATIONS.

FOR REINFORCING STEEL IN PIPE PILES, SEE "457mm STEEL PIPE PILE" SHEET.

CONCRETE DISPLACEMENT BY THE FILLED 457mm STEEL PIPE PILE HAS BEEN DEDUCTED FROM THE QUANTITY OF CLASS "A" CONCRETE FOR THE BENT CAP.

LEVEL 1 FIELD TESTING IS REQUIRED, AND THE YIELD LOAD OF THE DOWELS IS 120 KN. FOR ADHESIVELY ANCHORED ANCHOR BOLTS OR DOWELS, SEE SPECIAL PROVISIONS.

NORTH CAROLINA PROFESSIONAL SEAL 14045 ENGINEER TIMOTHY K. COGGINS 4/4/11

PROJECT NO. U-2519DA

CUMBERLAND COUNTY

STATION: 19+34.958 -Y1-

SHEET 1 OF 2

STATE OF NORTH CAROLINA
DEPARTMENT OF TRANSPORTATION
RALEIGH

SUBSTRUCTURE
BENT #1
RIGHT SIDE
WIDENING
(RIGHT LANE)

REVISIONS						SHEET NO.
NO.	BY:	DATE:	NO.	BY:	DATE:	S-155
1			3			TOTAL SHEETS
2			4			411

DRAWN BY : Neil M. Ruffin DATE : 8/14/08
CHECKED BY : J.B. WILSON DATE : 9/19/08

04-APR-2011 10:04
R:\TIPProjects-U\U2519da\Structures\azizi\Final Plans\STR 06\u2519da_sd_b*_06.dgn
tcoggins

STR. #6

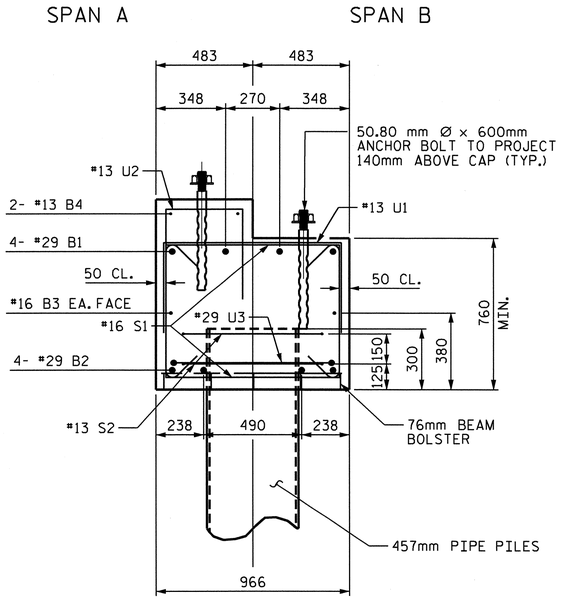

SECTION THRU CAP RIGHT SIDE

MATCH EXISTING CAP RIGHT SIDE

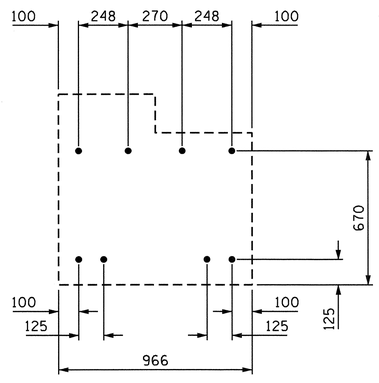

SECTION THRU EXISTING CAP

PROPOSED DOWELING OF #19 "D" BARS

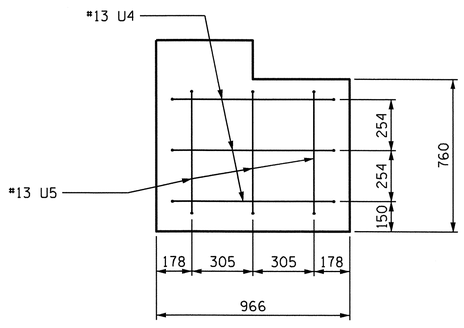

VIEW X-X

BENT NO. 1 RIGHT SIDE

BAR TYPES

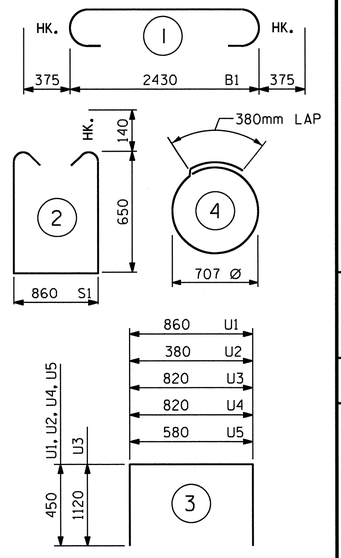

ALL BAR DIMENSIONS ARE OUT TO OUT.

BILL OF MATERIAL

BAR	NO	SIZE	TYPE	LENGTH	WEIGHT
B1	4	29	1	3180	64
B2	4	29	STR	2480	50
B3	2	16	STR	2480	8
B4	2	13	STR	2480	5
D1	8	19	STR	900	16
S1	12	16	2	2440	45
S2	4	13	4	2620	10
U1	12	13	3	1760	21
U2	17	13	3	1280	22
U3	1	29	3	3060	15
U4	3	13	3	1720	5
U5	3	13	3	1480	4

REINFORCING STEEL kg 265

CLASS "A" CONCRETE BREAKDOWN

POUR #1	(CAP)	2.1 m3
TOTAL		2.1 m3

PP 457 x 12.70 GALVANIZED STEEL PILES
No. 2 METERS 46

PILE REDRIVES EACH 1

DRAWN BY : Neil M. Ruffin DATE : 8/14/08
CHECKED BY : J.B. WILSON DATE : 9/19/08

PROJECT NO. U-2519DA
CUMBERLAND COUNTY
STATION: 19+34.958 -Y1-

SHEET 2 OF 2

STATE OF NORTH CAROLINA
DEPARTMENT OF TRANSPORTATION
RALEIGH

SUBSTRUCTURE
BENT #1
RIGHT SIDE WIDENING
(RIGHT LANE)

NORTH CAROLINA PROFESSIONAL SEAL 14045 ENGINEER TIMOTHY W. COGGINS
3/29/11

REVISIONS						SHEET NO.
NO.	BY:	DATE:	NO.	BY:	DATE:	S-156
1			3			TOTAL SHEETS
2			4			411

STR. #6

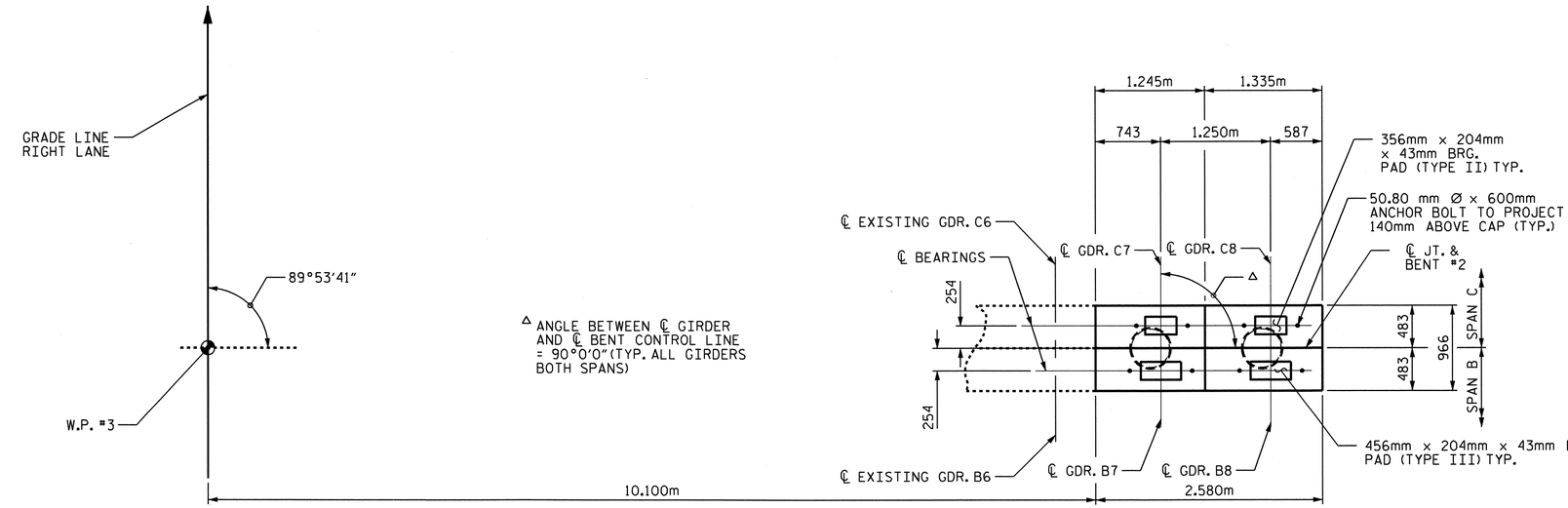

PLAN (RIGHT SIDE)

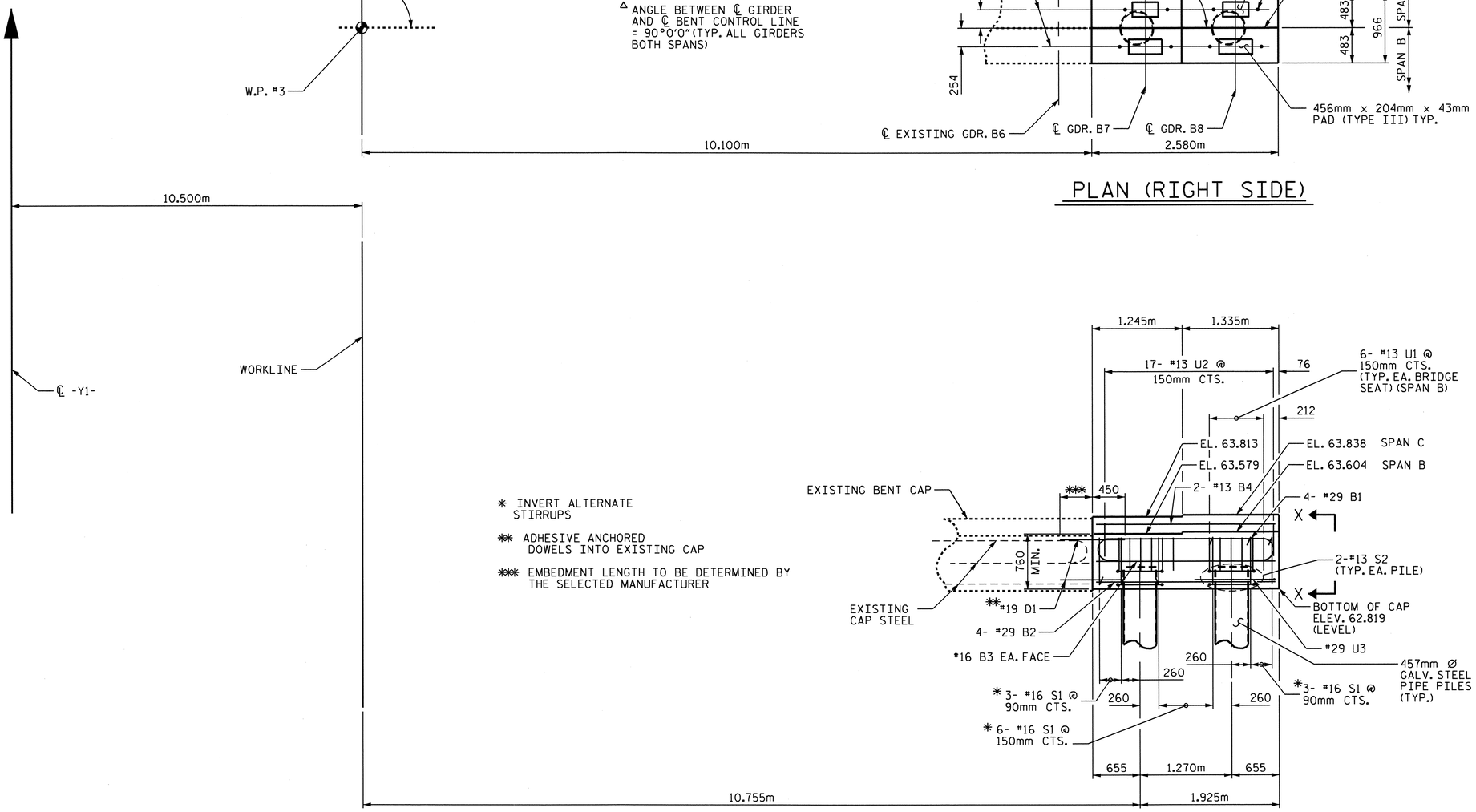

ELEVATION (RIGHT SIDE)

SEE VIEW X-X, SHEET 2 OF 2, FOR ADDITIONAL REINFORCEMENT STEEL IN END OF CAP.

NOTES

STIRRUPS IN CAP MAY BE SHIFTED AS NECESSARY TO CLEAR ANCHOR BOLTS.

THE TOP SURFACE AREAS OF THE BENT CAPS SHALL BE CURED IN ACCORDANCE WITH THE STANDARD SPECIFICATIONS EXCEPT THE MEMBRANE CURING COMPOUND METHOD SHALL NOT BE USED.

GALVANIZE THE TOP OF EACH INTERIOR BENT PILE A MINIMUM OF 11 METERS. GALVANIZE IN ACCORDANCE WITH SECTION 1076 OF THE STANDARD SPECIFICATIONS.

FOR REINFORCING STEEL IN PIPE PILES, SEE "457mm STEEL PIPE PILE" SHEET.

CONCRETE DISPLACEMENT BY THE FILLED 457mm STEEL PIPE PILE HAS BEEN DEDUCTED FROM THE QUANTITY OF CLASS "A" CONCRETE FOR THE BENT CAP.

LEVEL 1 FIELD TESTING IS REQUIRED, AND THE YIELD LOAD OF THE DOWELS IS 120 KN. FOR ADHESIVELY ANCHORED ANCHOR BOLTS OR DOWELS, SEE SPECIAL PROVISIONS.

NORTH CAROLINA PROFESSIONAL SEAL 14045 ENGINEER TIMOTHY L. COGGINS
4/14/11

PROJECT NO. U-2519DA
CUMBERLAND COUNTY
STATION: 19+34.958 -Y1-

SHEET 1 OF 2

STATE OF NORTH CAROLINA
DEPARTMENT OF TRANSPORTATION
RALEIGH

SUBSTRUCTURE
BENT #2
RIGHT SIDE
WIDENING
(RIGHT LANE)

REVISIONS						SHEET NO.
NO.	BY:	DATE:	NO.	BY:	DATE:	S-157
1			3			TOTAL SHEETS
2			4			411

DRAWN BY : Neil M. Ruffin DATE : 8/14/08
CHECKED BY : J.B. WILSON DATE : 9/19/08

04-APR-2011 10:04
R:\TIPProjects-U\U2519da\Structures\azizi\Final Plans\STR 06\u2519da_sd_b*_06.dgn
tcoggins

STR. #6

SPAN C SPAN B

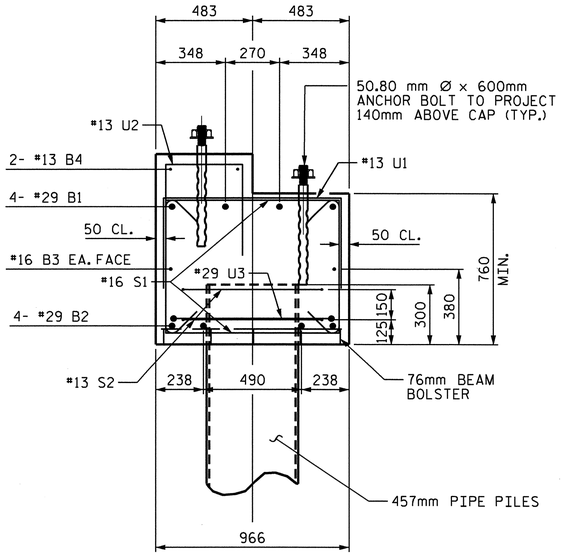

SECTION THRU CAP RIGHT SIDE

MATCH EXISTING CAP RIGHT SIDE

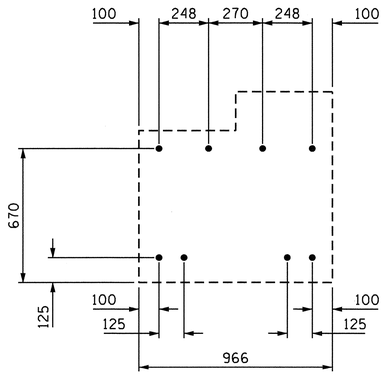

SECTION THRU EXISTING CAP

PROPOSED DOWELING OF #19 "D" BARS

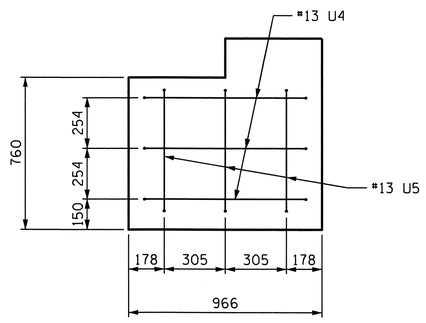

VIEW X-X

BENT NO. 2 RIGHT SIDE

BAR TYPES

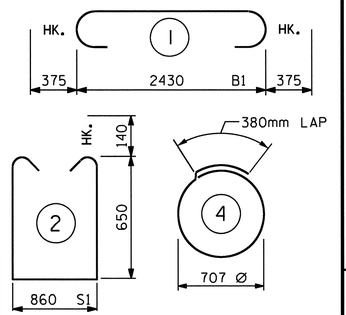

ALL BAR DIMENSIONS ARE OUT TO OUT.

BILL OF MATERIAL

BAR	NO	SIZE	TYPE	LENGTH	WEIGHT
B1	4	29	1	3180	64
B2	4	29	STR	2480	50
B3	2	16	STR	2480	8
B4	2	13	STR	2480	5
D1	8	19	STR	900	16
S1	12	16	2	2420	45
S2	4	13	4	2620	10
U1	12	13	3	1760	21
U2	17	13	3	1280	22
U3	1	29	3	3060	15
U4	3	13	3	1720	5
U5	3	13	3	1480	4

REINFORCING STEEL kg 265

CLASS "A" CONCRETE BREAKDOWN

POUR #1 (CAP) 2.1 m3
TOTAL 2.1 m3

PP 457 x 12.70 GALVANIZED STEEL PILES
No. 2 METERS 46

PILE REDRIVES EACH 1

DRAWN BY : Neil M Ruffin DATE : 8/14/08
CHECKED BY : J.B. WILSON DATE : 9/19/08

NORTH CAROLINA PROFESSIONAL SEAL 14045 ENGINEER TIMOTHY A. COGGINS
Timothy A. Coggins 3/29/11

PROJECT NO. U-2519DA
CUMBERLAND COUNTY
STATION: 19+34.958 -Y1-

SHEET 2 OF 2

STATE OF NORTH CAROLINA
DEPARTMENT OF TRANSPORTATION
RALEIGH
SUBSTRUCTURE
BENT #2
RIGHT SIDE WIDENING
(RIGHT LANE)

REVISIONS						SHEET NO.
NO.	BY:	DATE:	NO.	BY:	DATE:	S-158
1			3			TOTAL SHEETS
2			4			411

STR. #6

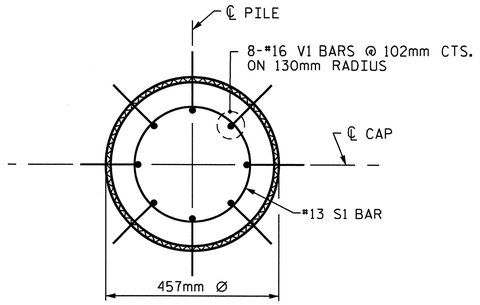

PLAN

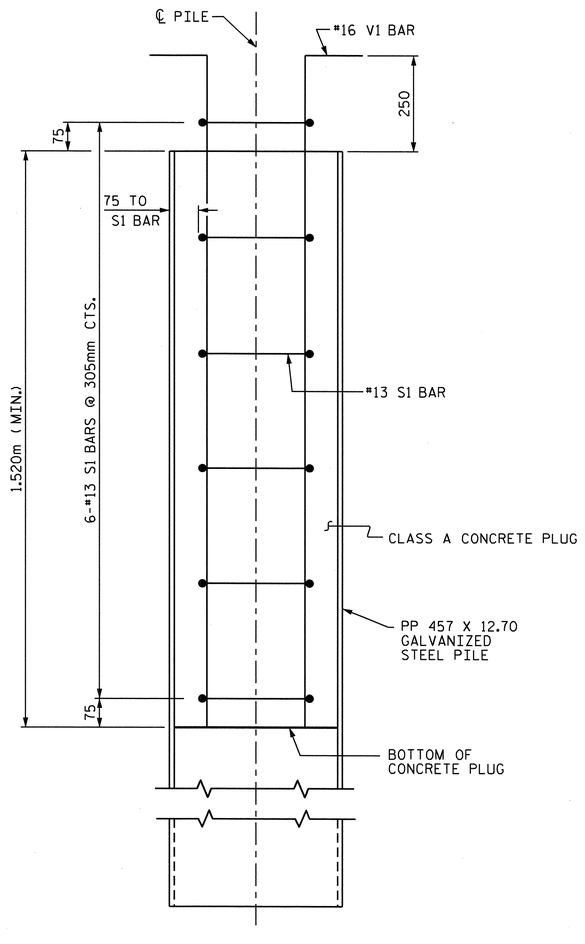

ELEVATION

PP 457 X 12.70 GALVANIZED STEEL PILE

(OPEN END)

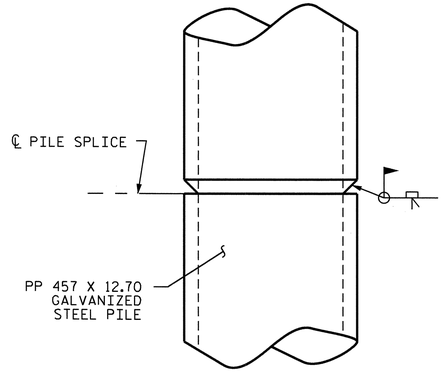

PIPE PILE SPLICE DETAIL

NOTES

PIPE PILES SHALL BE IN ACCORDANCE WITH SECTION 1084 OF THE STANDARD SPECIFICATIONS.

GALVANIZE STEEL PIPE PILES IN ACCORDANCE WITH SECTION 1076 OF THE STANDARD SPECIFICATIONS.

REMOVE AND REPLACE OR REPAIR TO THE SATISFACTION OF THE ENGINEER PILES THAT ARE DAMAGED, DEFORMED OR COLLAPSED DURING INSTALLATION OR DRIVING.

PILE SPLICES SHALL BE IN ACCORDANCE WITH THE STANDARD SPECIFICATIONS AND AWS D1.1.

FOR OPEN END PIPE PILES, REMOVE ENOUGH SOIL AND WATER FROM INSIDE THE PILES TO CONSTRUCT THE CONCRETE PLUG WITHOUT FOULING THE CONCRETE.

FORM THE CONCRETE PLUG SUCH THAT THE REINFORCING STEEL OR CONCRETE DOES NOT MOVE AND THE CLEARANCE FROM THE REINFORCING STEEL TO THE INSIDE OF THE PILE IS MAINTAINED AFTER CONCRETE PLACEMENT. DO NOT PLACE CONCRETE IN THE BENT CAP UNTIL THE CONCRETE PLUG HAS ATTAINED A MINIMUM COMPRESSIVE STRENGTH OF 10.3 MPa.

THE REINFORCING STEEL, CLASS A CONCRETE, AND GALVANIZING ARE CONSIDERED INCIDENTAL TO THE CONTRACT UNIT PRICE BID PER METER FOR PP 457 X 12.70 GALVANIZED STEEL PILES.

BILL OF MATERIAL FOR ONE PP 457 X 12.70 GALVANIZED STEEL PILE

BAR	NO.	SIZE	TYPE	LENGTH	WEIGHT
S1	6	#13	1	1340	8
V1	8	#16	2	2020	25
REINFORCING STEEL =					33 kg

CLASS A CONCRETE

1.520m MINIMUM PLUG 0.2 CU. METER

BAR TYPES

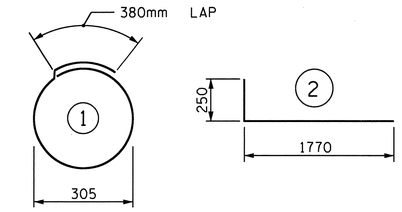

ALL BAR DIMENSIONS ARE OUT TO OUT.

PROJECT NO. U-2519DA

CUMBERLAND COUNTY

STATION: 19+34.958 -Y1-

STATE OF NORTH CAROLINA
DEPARTMENT OF TRANSPORTATION
RALEIGH

STANDARD

457mm STEEL PIPE PILE

(RIGHT LANE)

REVISIONS						SHEET NO.
NO.	BY:	DATE:	NO.	BY:	DATE:	S-159
1			3			TOTAL SHEETS
2			4			411

NORTH CAROLINA PROFESSIONAL SEAL 14045 ENGINEER TIMOTHY J. COGGINS

3/29/11

ASSEMBLED BY : Neil M Ruffin	DATE : 8/13/08	
CHECKED BY : J.B. WILSON	DATE : 9/2008	
DRAWN BY : RWW 1/01	REV. 5/7/03	RWW/JTE
CHECKED BY : LES 1/01	REV. 10/1/05	LBG/TLA
	REV. 5/1/06R	MAA/KMM

24-MAR-2011 15:49
R:\TIPProjects-U\U2519da\Structures\azlzl\FinalPlans\STR 06\U2519DA_sd_PP_06.dgn
tcoggins

STR. #6 STD. NO. SPP3SM

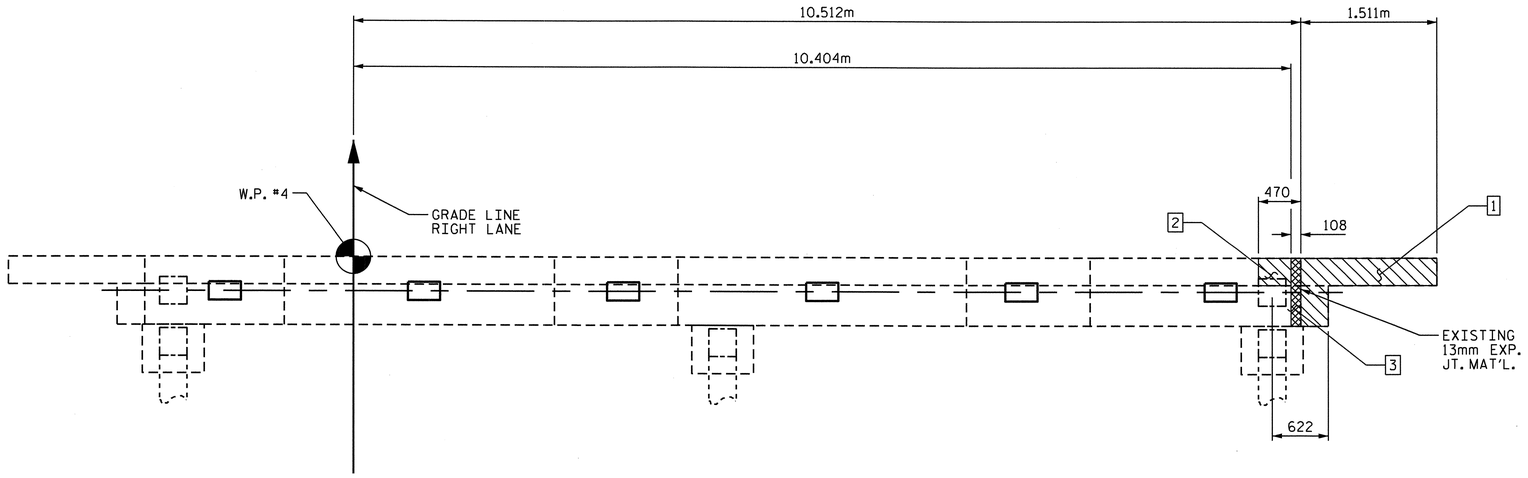

PLAN OF EXISTING
SHADED AREA TO BE REMOVED

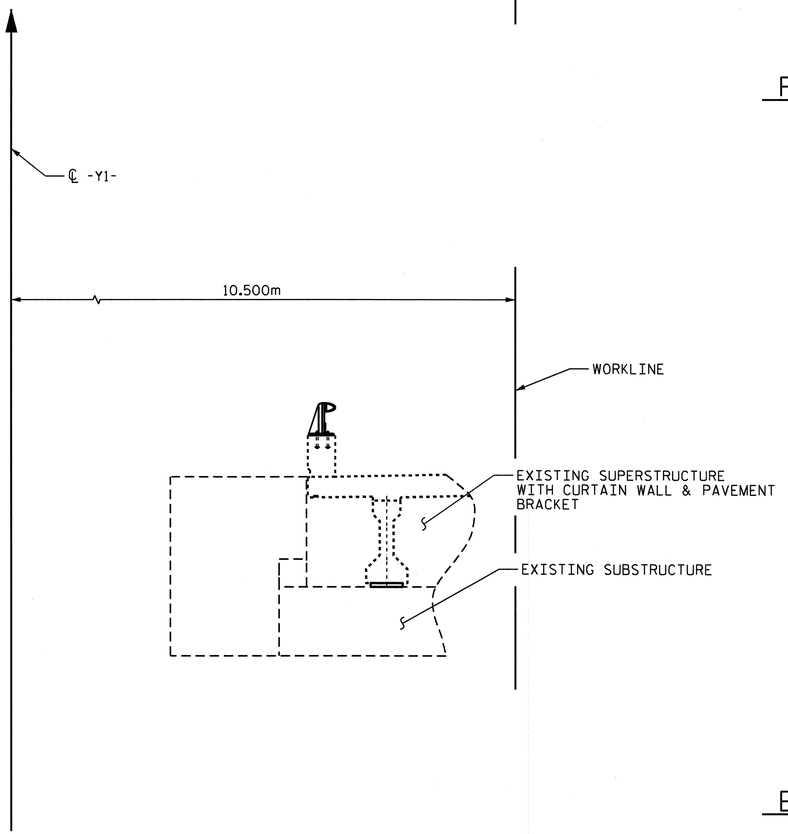

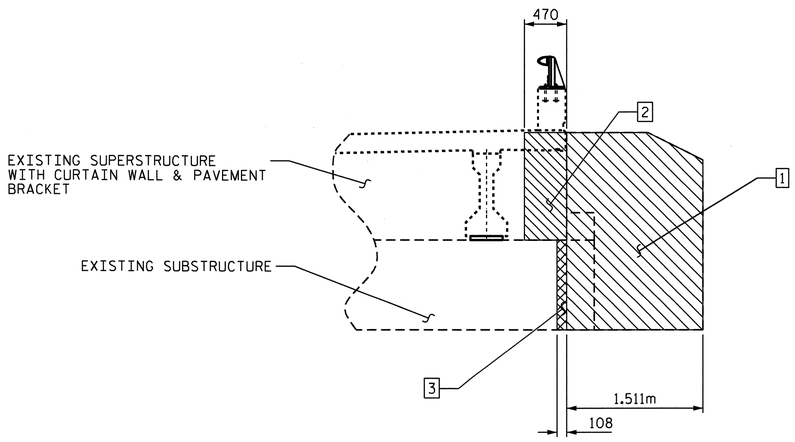

ELEVATION OF EXISTING
SHADED AREA TO BE REMOVED

EAR WALL REMOVAL SEQUENCE

1. REMOVE EXISTING EAR WALL UP TO EXP. JOINT MATERIAL AND SAW CUT CAP, NOT TO DISTURB BRACE PILE BLOCK AND REINFORCEMENT WITHIN.
2. THE 470mm EXISTING CURTAIN WALL SHALL BE REMOVED BY SAW CUT DOWN TO TOP OF CAP, NOT TO DISTURB THE EXISTING CAP.
3. THE 108mm PORTION OF EXISTING CAP SHALL BE REMOVED BY HAND TOOLS NOT TO DISTURB THE BRACE PILE BLOCK, PRESTRESSED PILES AND REINFORCEMENT WITHIN THIS AREA.

PROJECT NO. U-2519DA
CUMBERLAND COUNTY
STATION: 19+34.958 -Y1-

SHEET 1 OF 4

STATE OF NORTH CAROLINA
DEPARTMENT OF TRANSPORTATION
RALEIGH

SUBSTRUCTURE
END BENT #2
EXISTING CAP
(RIGHT LANE)

REVISIONS						SHEET NO.
NO.	BY:	DATE:	NO.	BY:	DATE:	S-160
1			3			TOTAL SHEETS
2			4			411

NORTH CAROLINA PROFESSIONAL SEAL 14045 ENGINEER TIMOTHY W. COCONIS
3/29/11

DRAWN BY : Neil M Ruffin DATE : 8/19/08
CHECKED BY : J.B. WILSON DATE : 9/18/08

29-MAR-2011 11:35
R:\Structures\azizi\Final Plans\STR 06\U2519DA_sd_E*_06.dgn
nruffin

STR #6

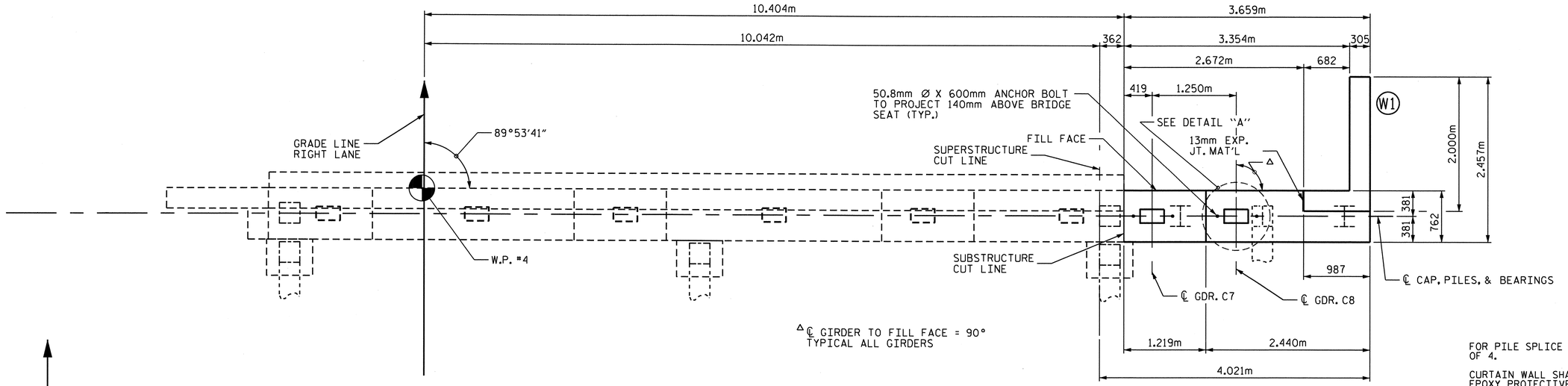

PLAN

NOTES

FOR PILE SPLICE DETAILS, SEE END BENT #1, SHEET 4 OF 4.

CURTAIN WALL SHALL BE PLACED BEFORE APPLYING THE EPOXY PROTECTIVE COATING.

THE TOP SURFACE AREAS OF THE END BENT CAPS SHALL BE CURED IN ACCORDANCE WITH THE STANDARD SPECIFICATIONS EXCEPT THE MEMBRANE CURING COMPOUND METHOD SHALL NOT BE USED.

THE TOP SURFACE OF THE CAP EXCEPT THE BRIDGE SEAT BUILDUPS SHALL BE SLOPED TRANSVERSELY FROM THE FILL FACE TO THE BACK FACE AT THE RATE OF 2 %.

LEVEL 1 FIELD TESTING IS REQUIRED, AND THE YIELD LOAD OF THE DOWELS IS 120 KN. FOR ADHESIVELY ANCHORED ANCHOR BOLTS OR DOWELS, SEE SPECIAL PROVISIONS.

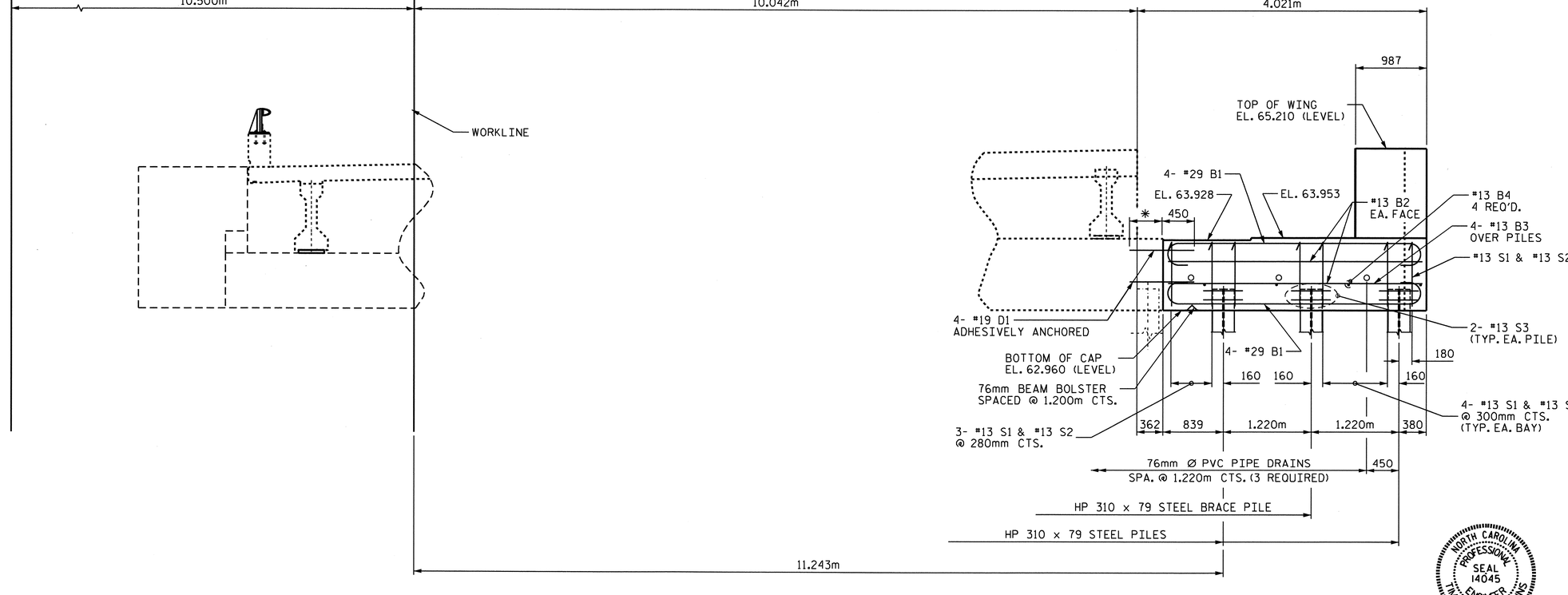

ELEVATION

* EMBEDMENT LENGTH TO BE DETERMINED BY SELECTED MANUFACTURER

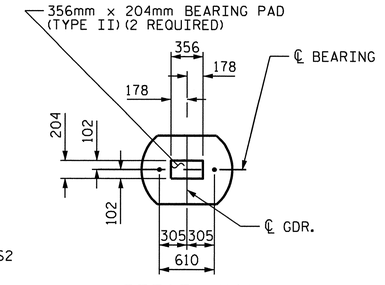

DETAIL "A"

PROJECT NO. U-2519DA

CUMBERLAND COUNTY

STATION: 19+34.958 -Y1-

SHEET 2 OF 4

STATE OF NORTH CAROLINA
DEPARTMENT OF TRANSPORTATION
RALEIGH

SUBSTRUCTURE
END BENT #2
& DETAILS
(RIGHT LANE)

REVISIONS						SHEET NO.
NO.	BY:	DATE:	NO.	BY:	DATE:	S-161
1			3			TOTAL SHEETS
2			4			411

DRAWN BY : Neil M. Ruffin DATE : 8/19/08
CHECKED BY : J.B. WILSON DATE : 9/18/08

04-APR-2011 10:00
R:\TIPProjects-U\U2519da\Structures\azizi\Final Plans\STR 06\U2519DA_sd_E*_06.dgn
tcoggins

STR #6

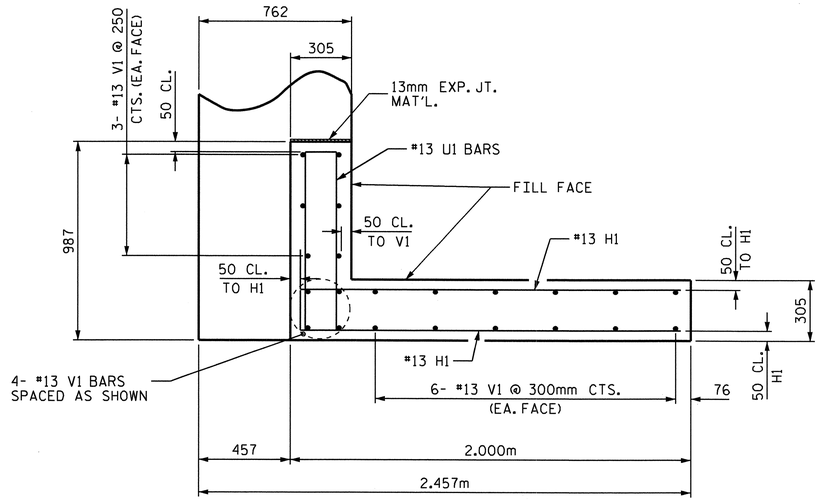

PLAN OF WING (W1)

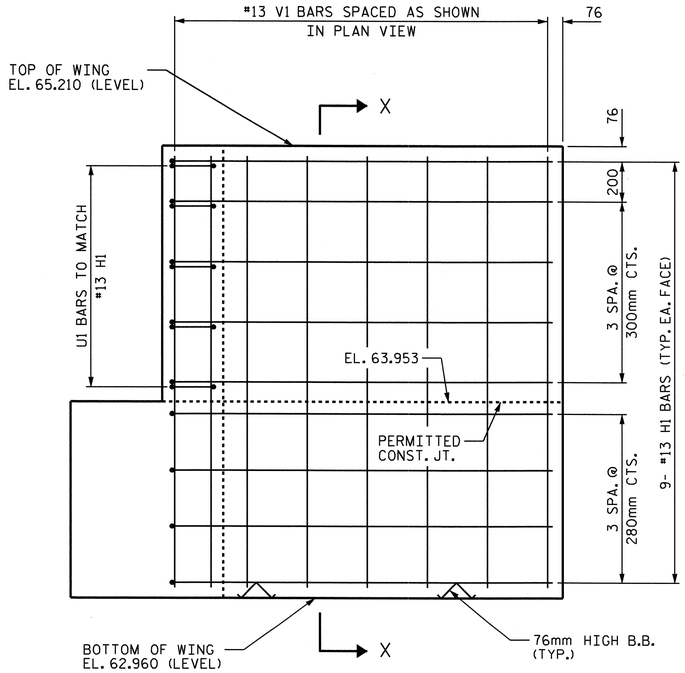

ELEVATION OF WING (W1)

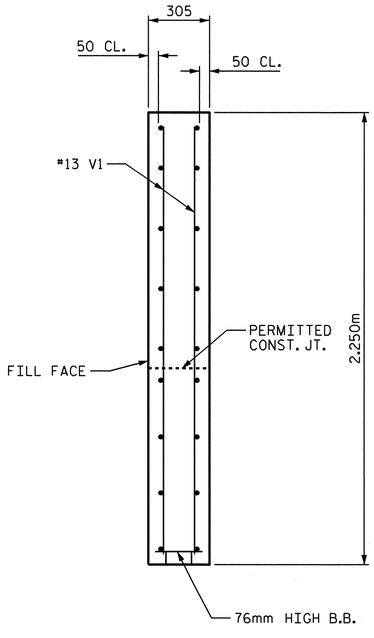

SECTION X-X

RIGHT SIDE WIDENING

PROJECT NO. U-2519DA
CUMBERLAND COUNTY
STATION: 19+34.958 -Y1-

SHEET 3 OF 4

STATE OF NORTH CAROLINA
DEPARTMENT OF TRANSPORTATION
RALEIGH

SUBSTRUCTURE
END BENT #2
& DETAILS
(RIGHT LANE)

REVISIONS						SHEET NO.
NO.	BY:	DATE:	NO.	BY:	DATE:	S-162
1			3			TOTAL SHEETS
2			4			411

NORTH CAROLINA PROFESSIONAL SEAL 14045 ENGINEER TIMOTHY L. COGGINS
3/29/11

DRAWN BY : Neil M. Ruffin DATE : 8/19/08
CHECKED BY : J.B. WILSON DATE : 9/18/08

29-MAR-2011 11:35
R:\Structures\azizi\Final Plans\STR 06\U2519DA_sd_E*_06.dgn
nruffin

STR #6

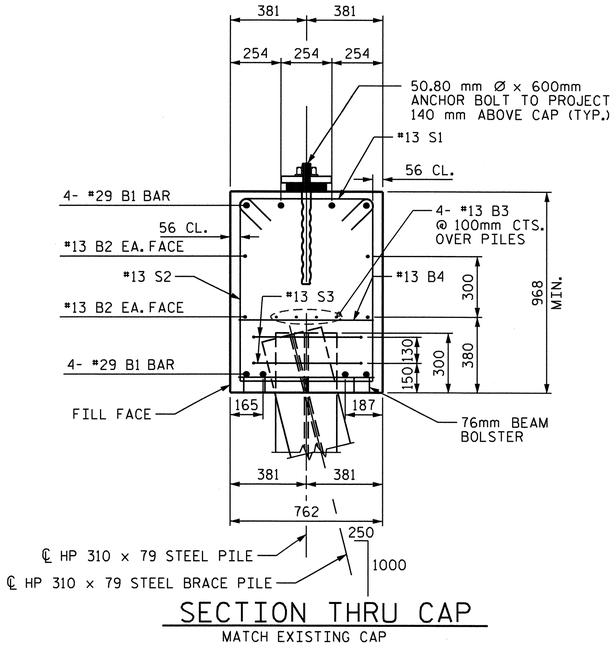

SECTION THRU CAP

MATCH EXISTING CAP

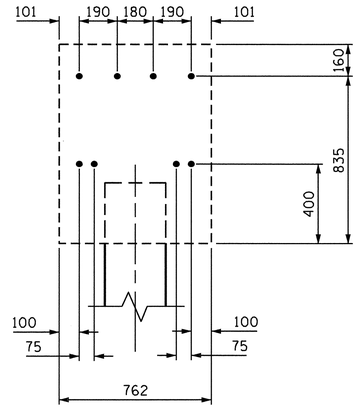

END VIEW

RIGHT END ONLY

BAR TYPES

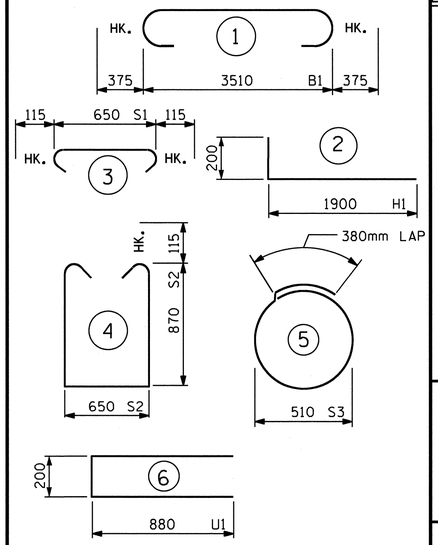

ALL BAR DIMENSIONS ARE OUT TO OUT.

BILL OF MATERIAL

END BENT #2 RIGHT SIDE WIDENING

BAR	NO	SIZE	TYPE	LENGTH	WEIGHT
B1	8	29	1	4260	172
B2	4	13	STR	3560	14
B3	4	13	STR	3560	14
B4	4	13	STR	660	3
D1	8	19	STR	900	16
H1	18	13	2	2100	38
S1	12	13	3	880	10
S2	12	13	4	2620	31
S3	6	13	5	1980	12
U1	5	13	6	1960	10
V1	22	13	STR	2140	47
REINFORCING STEEL kg					367

CLASS "A" CONCRETE BREAKDOWN

POUR #1 CAP & LOWER WING	3.3 m³
POUR #2 UPPER WING	1.0 m³
TOTAL	4.3 m³

HP 310 x 79 STEEL PILES		
No. 3	METERS	63
PILE REDRIVES	EACH	1

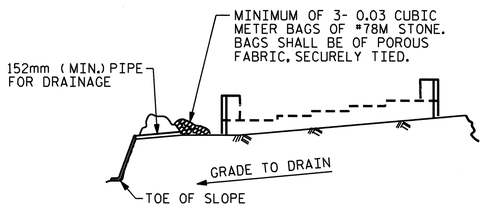

BAGGED STONE AND PIPE SHALL BE PLACED IMMEDIATELY AFTER COMPLETION OF END BENT EXCAVATION. PIPE MAY BE EITHER CONCRETE, CORRUGATED STEEL, CORRUGATED ALUMINUM ALLOY, OR CORRUGATED PLASTIC. PERFORATED PIPE WILL NOT BE ALLOWED.

BAGGED STONE SHALL REMAIN IN PLACE UNTIL THE ENGINEER DIRECTS THAT IT BE REMOVED. THE CONTRACTOR SHALL REMOVE AND DISPOSE OF SILT ACCUMULATIONS AT BAGGED STONE WHEN SO DIRECTED BY THE ENGINEER. BAGS SHALL BE REMOVED AND REPLACED WHENEVER THE ENGINEER DETERMINES THAT THEY HAVE DETERIORATED AND LOST THEIR EFFECTIVENESS.

NO SEPARATE PAYMENT WILL BE MADE FOR THIS WORK AND THE ENTIRE COST OF THIS WORK SHALL BE INCLUDED IN THE UNIT CONTRACT PRICE FOR THE SEVERAL PAY ITEMS.

TEMPORARY DRAINAGE AT END BENT

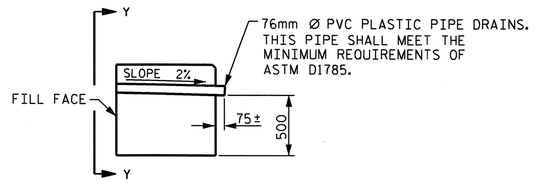

SECTION THRU CAP

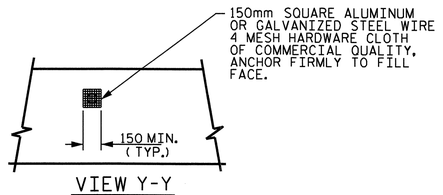

VIEW Y-Y

NOTE: NO SEPARATE PAYMENT WILL BE MADE FOR FURNISHING AND INSTALLING THE PVC PLASTIC PIPE DRAINS, HARDWARE CLOTH AND FASTENERS. THE ENTIRE COST OF THIS WORK SHALL BE INCLUDED IN THE UNIT CONTRACT PRICE BID FOR THE SEVERAL PAY ITEMS.

PIPE DRAIN DETAILS

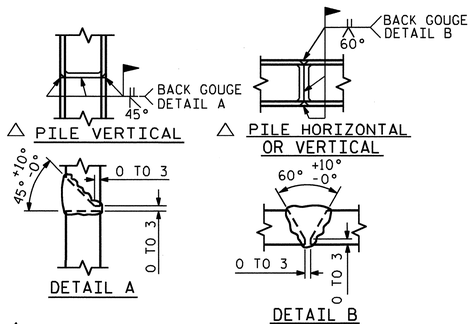

△ POSITION OF PILE DURING WELDING.

PILE SPLICE DETAILS

NORTH CAROLINA PROFESSIONAL SEAL 14045 ENGINEER TIMOTHY L. COGGINS
3/29/11

PROJECT NO. U-2519DA

CUMBERLAND COUNTY

STATION: 19+34.958 -Y1-

SHEET 4 OF 4

STATE OF NORTH CAROLINA
DEPARTMENT OF TRANSPORTATION
RALEIGH

SUBSTRUCTURE
END BENT #2
& DETAILS
(RIGHT LANE)

REVISIONS						SHEET NO.
NO.	BY:	DATE:	NO.	BY:	DATE:	S-163
1			3			TOTAL SHEETS
2			4			411

DRAWN BY : Neil M Ruffin DATE : 8/19/08
CHECKED BY : J.B. WILSON DATE : 9/18/08

STR #6

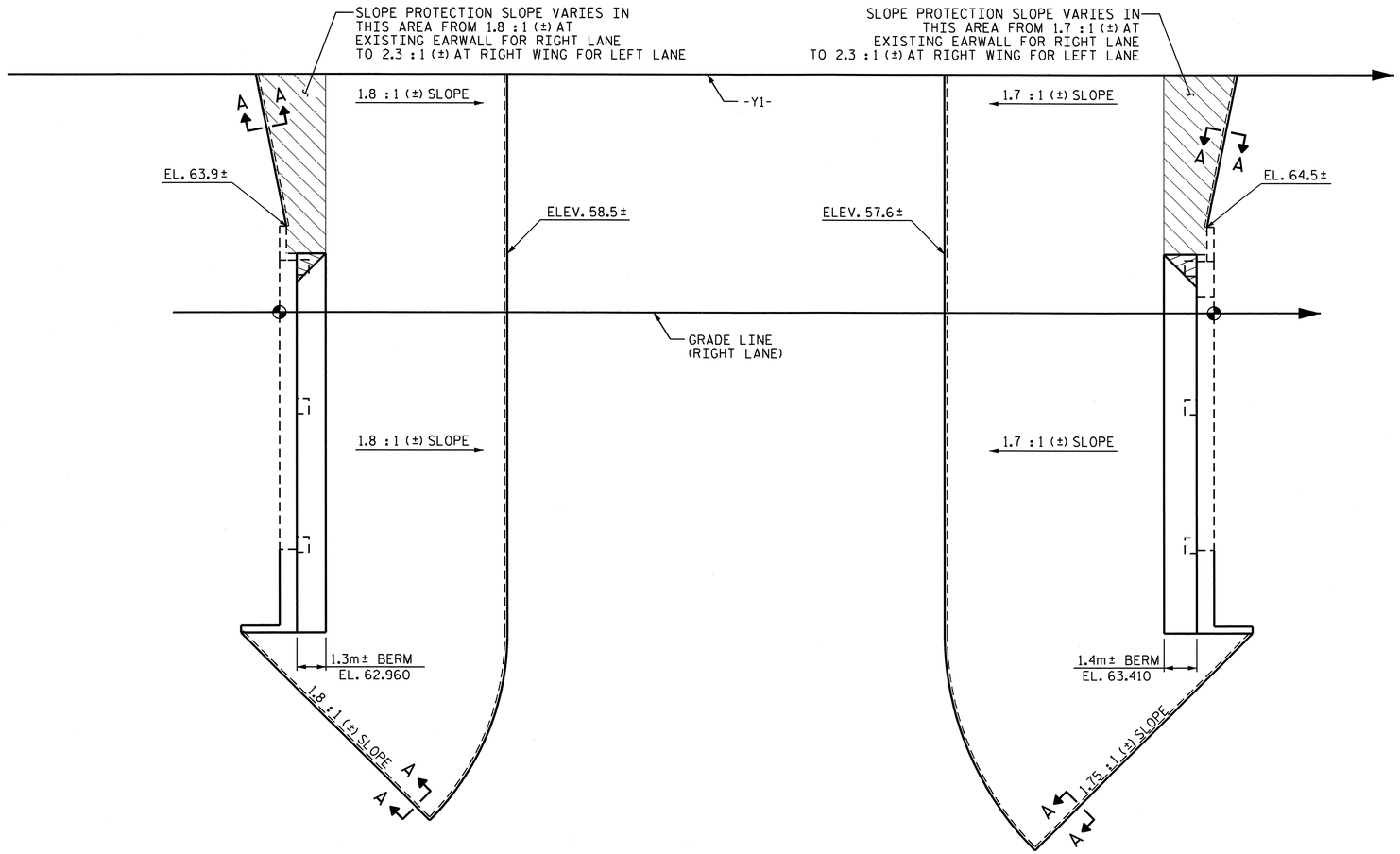

PLAN

BRIDGE @ STA. 19+34.958 -Y1- (RIGHT LANE)	100mm SLOPE PROTECTION	* WELDED WIRE FABRIC 1520mm WIDE
	SQUARE METERS	APPROX. METERS
END BENT 1	354	258
END BENT 2	432	315

* QUANTITY SHOWN IS BASED ON 1520mm POURS.

GENERAL NOTES

SLOPE PROTECTION SHALL BE PLACED UNDER THE ENDS OF THE BRIDGE AS SHOWN IN THE DETAILS. STRAIGHT EDGING WILL NOT BE REQUIRED UNLESS, IN THE OPINION OF THE ENGINEER, VISUAL INSPECTION INDICATES A NEED FOR IT. MEASUREMENT AND PAYMENT SHALL BE AS PRESCRIBED IN SECTION 462 OF THE STANDARD SPECIFICATIONS.

ALTERNATE "A"

ALTERNATE "A" SHALL CONSIST OF 100mm POURED-IN-PLACE CONCRETE PAVING AS SHOWN IN THE DETAILS ON THIS SHEET. CONCRETE SHALL BE CLASS "B". THE CONCRETE SURFACE SHALL BE FLOATED WITH A WOODEN FLOAT AND FINISHED. WELDED WIRE FABRIC REINFORCING SHALL BE 152 X 152 - MW9.1 X MW9.1. 1520mm WIDE. SLOPE PROTECTION SHALL BE POURED IN 1520mm STRIPS AS SHOWN IN THE "POURING DETAIL" WITH 600mm LONG #13 BARS PLACED ALONG THE SLOPE BETWEEN STRIPS AT 450mm MAXIMUM SPACING. SLOPE PROTECTION MAY BE POURED IN ALTERNATE 1220mm AND 1520mm STRIPS AS SHOWN IN THE "OPTIONAL POURING DETAIL" WITH ADJACENT RUNS OF WELDED WIRE FABRIC LAPPING AT LEAST 152mm. THE COST OF THE WELDED WIRE FABRIC AND #13 BARS, IF USED, SHALL BE INCLUDED IN THE CONTRACT UNIT PRICE BID PER SQUARE METER FOR SLOPE PROTECTION.

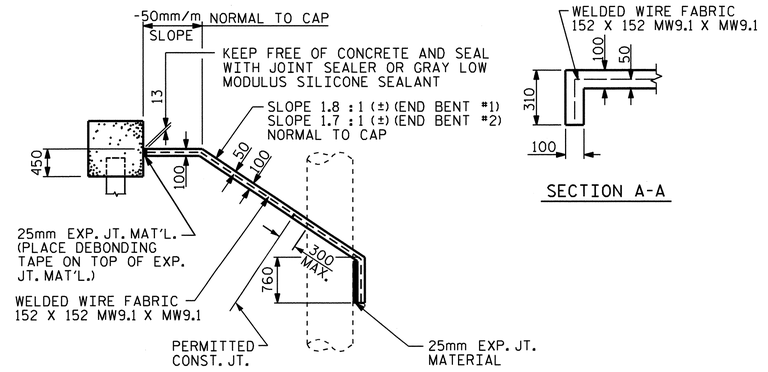

SECTION ALONG ℄ ROADWAY WITH SHOULDER PIER

DETAILS FOR ALTERNATE "A"

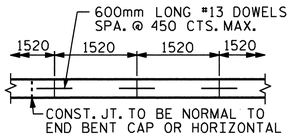

STRIP WIDTHS MAY VARY IN CURVED PORTION.

POURING DETAIL

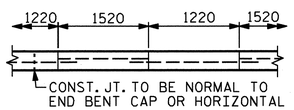

POUR A 1220mm STRIP FIRST. STRIP WIDTHS MAY VARY IN CURVED PORTION.

OPTIONAL POURING DETAIL

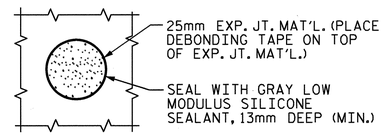

PLAN WHERE CONCRETE SLOPE PROTECTION MUST BE PLACED AROUND A BENT COLUMN

PROJECT NO. U-2519DA

CUMBERLAND COUNTY

STATION: 19+34.958 -Y1-

NORTH CAROLINA PROFESSIONAL SEAL 14045 ENGINEER TIMOTHY L. COGGINS
4/4/11

STATE OF NORTH CAROLINA
DEPARTMENT OF TRANSPORTATION
RALEIGH

STANDARD SLOPE PROTECTION DETAILS

(RIGHT LANE)

REVISIONS						SHEET NO.
NO.	BY:	DATE:	NO.	BY:	DATE:	S-164
1			3			TOTAL SHEETS
2			4			411

ASSEMBLED BY : T.L. AVERETTE DATE : 03/17/11
CHECKED BY : T.L. COGGINS DATE : 03/22/11

DRAWN BY : ELR 5/92
CHECKED BY : GRP 6/92

REV. 7/10/01 LES/RDR
REV. 5/7/03 RWW/JTE
REV. 5/1/06 TLA/GM

04-APR-2011 10:05
R:\TIPProjects-U\U2519da\Structures\azizi\FinalPlans\STR 06\U2519DA_sd_SP_06.dgn
tcoggins

STR. #6

STD. NO. SP1SM

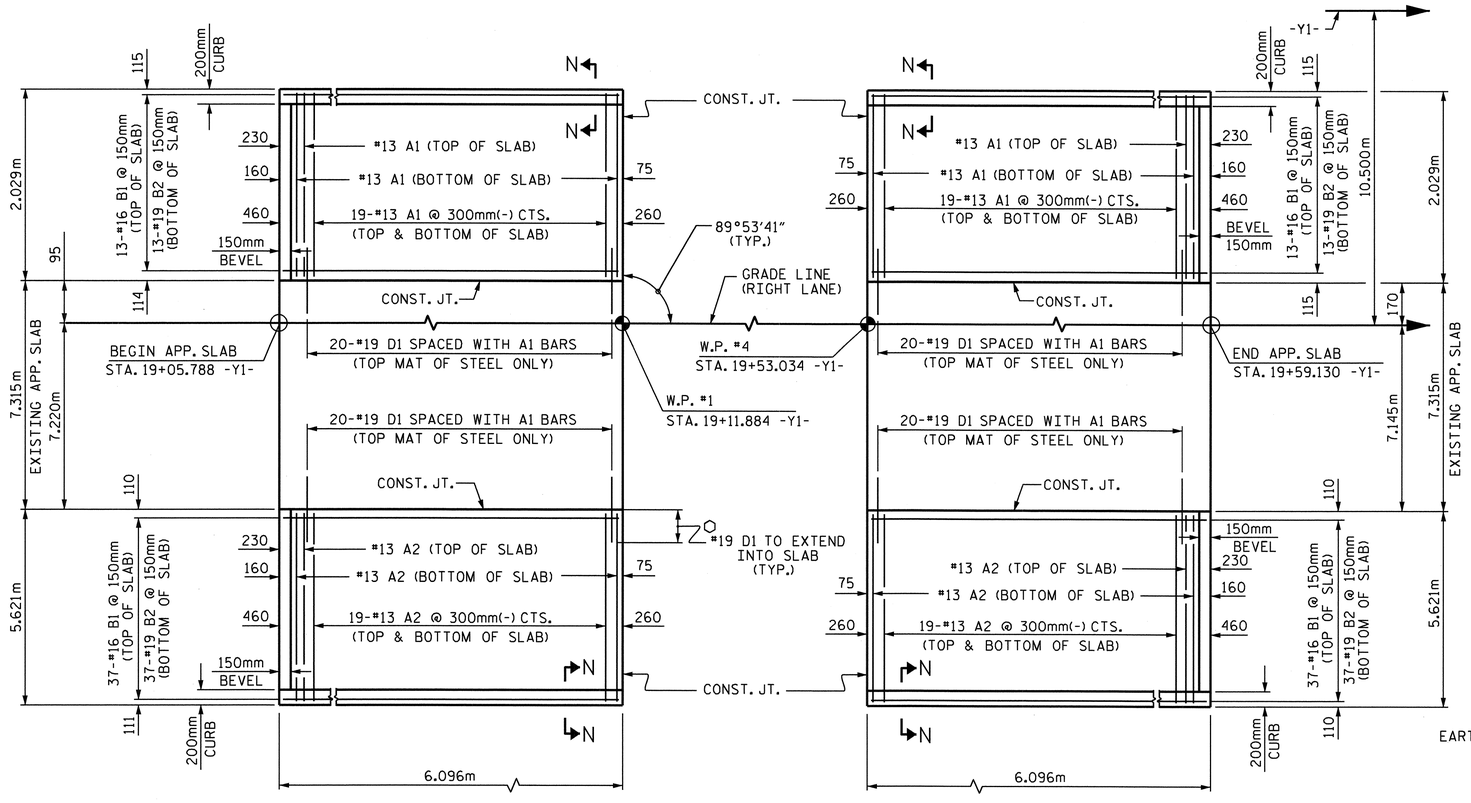

⬡ EMBEDMENT LENGTH TO BE DETERMINED BY THE SELECTED MANUFACTURER

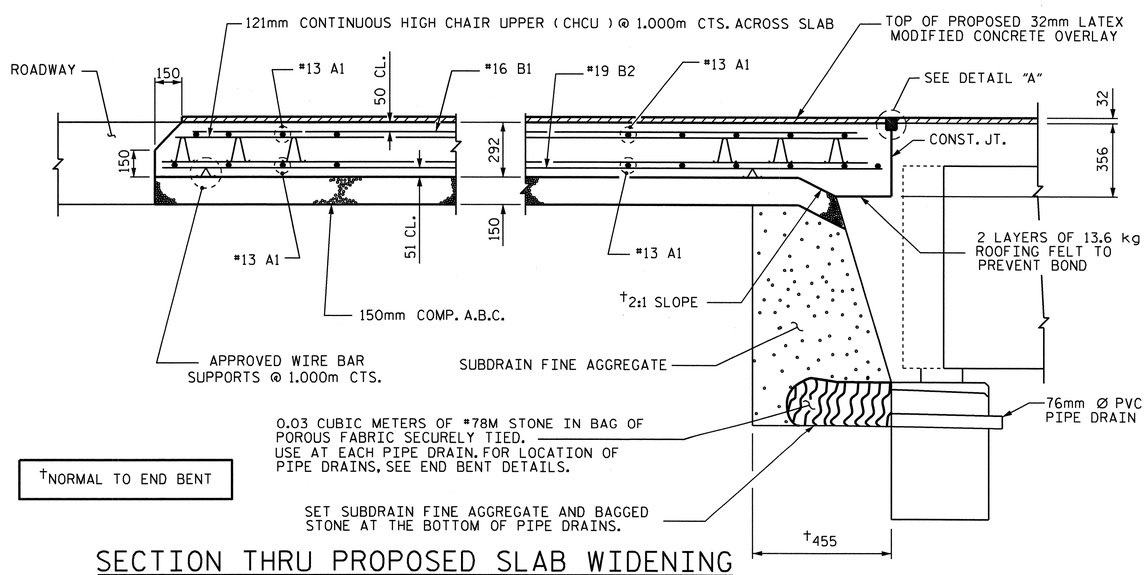

†NORMAL TO END BENT

SECTION THRU PROPOSED SLAB WIDENING

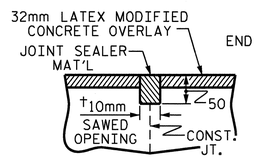

DETAIL "A"

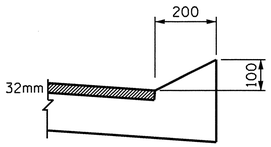

SECTION N-N

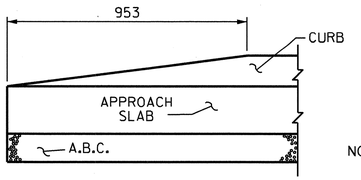

END OF CURB WITHOUT SHOULDER BERM GUTTER

CURB DETAILS

NOTES

APPROACH SLAB SHALL NOT BE CONSTRUCTED PRIOR TO COMPLETION OF THE BRIDGE DECK.

AREA BETWEEN THE WINGWALL AND APPROACH SLAB SHALL BE GRADED TO DRAIN THE WATER AWAY FROM THE FILL FACE OF THE BRIDGE AND SHALL BE PAVED. SEE ROADWAY PLANS.

THE 150mm COMP. A.B.C. SHALL BE FLUSH WITH THE ROADWAY END OF THE APPROACH SLAB AND SHALL EXTEND 300mm OUTSIDE OF EACH EDGE OF THE APPROACH SLAB.

THE CONTRACTOR MAY USE 100mm TYPE B-25.0B ASPHALT CONCRETE COURSE IN LIEU OF 150mm COMP. A.B.C. IF THIS OPTION IS USED, THE BASE COURSE SHALL BE FLUSH WITH THE ROADWAY END OF THE APPROACH SLAB, AND THE WIDTH SHALL BE THE SAME AS THAT OF THE APPROACH SLAB.

THE CONTRACTOR MAY USE 125mm CLASS "A" CONCRETE BASE IN LIEU OF 150mm COMP. A.B.C. IF THIS OPTION IS USED, THE CONCRETE BASE SHALL BE FLUSH WITH THE ROADWAY END OF THE APPROACH SLAB, AND THE WIDTH SHALL BE THE SAME AS THAT OF THE APPROACH SLAB. THE CONCRETE SHALL BE FINISHED TO A SMOOTH SURFACE AND A LAYER OF 13.6 kg ROOFING FELT SHALL BE PLACED BETWEEN THE CONCRETE BASE AND THE APPROACH SLAB TO PREVENT BOND. THE APPROACH SLAB SHALL NOT BE CAST UNTIL THE CONCRETE BASE HAS REACHED AN AGE OF THREE CURING DAYS.

SUBDRAIN FINE AGGREGATE IS TO BE CONTINUOUS ALONG FILL FACE OF BACKWALL AND END BENT FROM OUTSIDE EDGE TO OUTSIDE EDGE OF APPROACH SLAB.

CLASS 1A SURFACE PREPARATION SHALL BE A UNIFORM DEPTH OF 13mm FOR THE EXISTING APPROACH SLAB. THE LATEX MODIFIED CONCRETE OVERLAY SHALL BE PLACED OVER THE EXISTING PREPARED AND PROPOSED WIDENING OF THE APPROACH SLAB AT A UNIFORM DEPTH OF 32mm. SEE "DECK WIDENING AND REHABILITATION" SHEET FOR LIMITS AND QUANTITIES.
DOWELS SHALL BE PLACED IN THE SAME HORIZONTAL PLANE AS THE TOP SLAB REINFORCING STEEL.

BILL OF MATERIAL

APPROACH SLABS AT EB #1

BAR	NO.	SIZE	TYPE	LENGTH	WEIGHT
A1	41	#13	STR	1920	78
A2	41	#13	STR	5520	225
B1	50	#16	STR	5800	450
B2	50	#19	STR	5980	668
D1	40	#19	STR	900	80
REINFORCING STEEL				kg.	1501
CLASS AA CONCRETE				C.M.	13.8

APPROACH SLABS AT EB #2

BAR	NO.	SIZE	TYPE	LENGTH	WEIGHT
A1	41	#13	STR	1920	78
A2	41	#13	STR	5520	225
B1	50	#16	STR	5800	450
B2	50	#19	STR	5980	668
D1	40	#19	STR	900	80
REINFORCING STEEL				kg.	1501
CLASS AA CONCRETE				C.M.	13.8

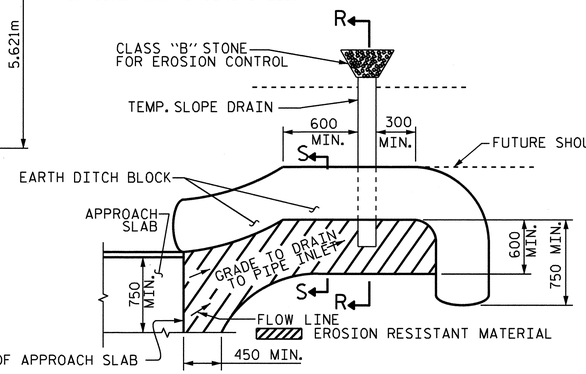

NOTE: IMMEDIATELY AFTER THE CONSTRUCTION OF THE APPROACH SLAB, THE CONTRACTOR SHALL PROVIDE TEMPORARY BERM AND SLOPE DRAIN. CONTRACTOR SHALL GRADE TO PIPE INLET

TEMPORARY DRAINAGE DETAIL

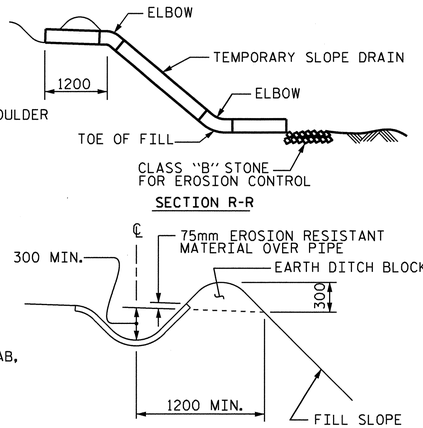

SECTION S-S

PLAN VIEW

TEMPORARY BERM AND SLOPE DRAIN DETAILS

(TO BE USED WHEN SHOULDER BERM GUTTER IS REQUIRED)

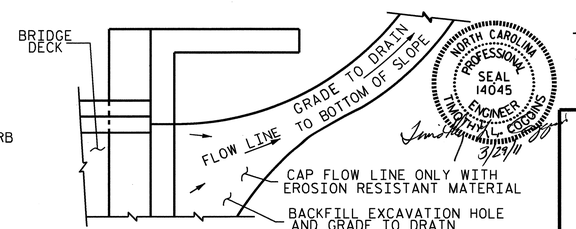

NOTE: IF THE APPROACH SLAB IS NOT CONSTRUCTED IMMEDIATELY AFTER THE BACKFILLING OF THE END BENT EXCAVATION, GRADE TO DRAIN TO THE BOTTOM OF THE SLOPE AND PROVIDE EROSION RESISTANT MATERIAL, SUCH AS FIBERGLASS ROVING OR AS DIRECTED BY THE ENGINEER TO PREVENT SOIL EROSION AND TO PROTECT THE AREA ADJACENT TO THE STRUCTURE. THE CONTRACTOR WILL BE REQUIRED TO REMOVE THESE MATERIALS PRIOR TO CONSTRUCTION OF THE APPROACH SLAB.

PROJECT NO. U-2519DA

CUMBERLAND COUNTY

STATION: 19+34.958 -Y1-

STATE OF NORTH CAROLINA
DEPARTMENT OF TRANSPORTATION
RALEIGH

BRIDGE APPROACH SLAB FOR FLEXIBLE PAVEMENT (RIGHT LANE)

REVISIONS						SHEET NO.
NO.	BY:	DATE:	NO.	BY:	DATE:	S-165
1			3			TOTAL SHEETS
2			4			411

ASSEMBLED BY : M. GUDLAUGSSON	DATE : 08/2008	
CHECKED BY : M. PISO	DATE : 09/2008	
DRAWN BY : FCJ 6/87	REV. 7/10/01	RWW/LES
CHECKED BY : EGA 6/87	REV. 5/7/03R	RWW/JTE
	REV. 5/1/06R	KMM/GM

29-MAR-2011 11:50
R:\Structures\azizi\Final Plans\STR 06\U2519DA_sd_AS_06.dgn
mruffin

STR #6 STD. NO. BAS4SM

F.A. PROJECT NO. NHF-0100 (21)

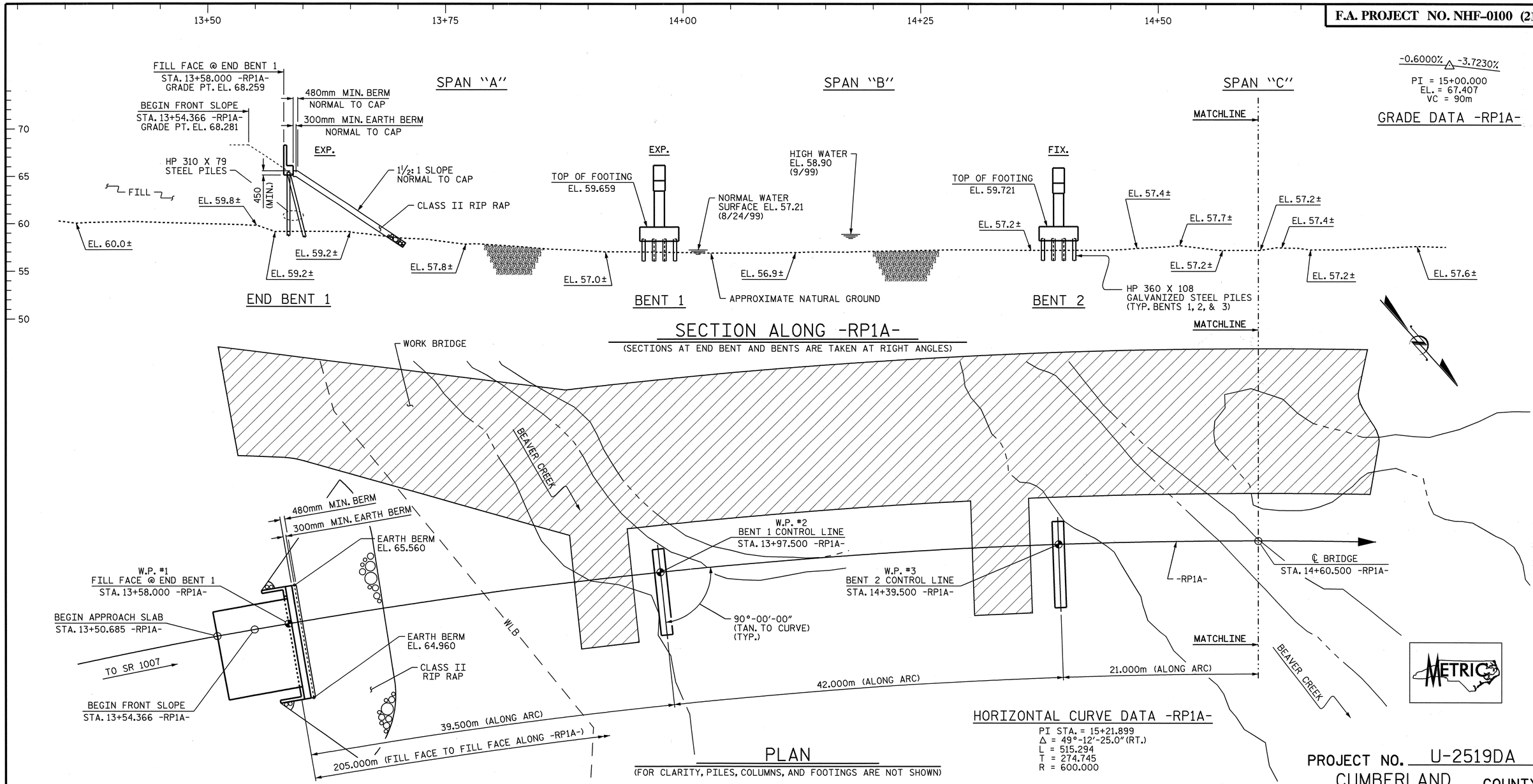

SECTION ALONG -RP1A-

(SECTIONS AT END BENT AND BENTS ARE TAKEN AT RIGHT ANGLES)

PLAN

(FOR CLARITY, PILES, COLUMNS, AND FOOTINGS ARE NOT SHOWN)

HORIZONTAL CURVE DATA -RP1A-

PI STA. = 15+21.899
Δ = 49°-12'-25.0" (RT.)
L = 515.294
T = 274.745
R = 600.000

HYDRAULIC DATA

DESIGN DISCHARGE_____= 52.7 CMS.
FREQUENCY OF DESIGN FLOOD_____= 50 YRS.
DESIGN HIGH WATER ELEVATION_____= 59.26
DRAINAGE AREA_____= 15.0 SQ. Km.
BASIC DISCHARGE(Q100)_____= 58.9 CMS.
BASIC HIGH WATER ELEVATION_____= 59.53

OVERTOPPING FLOOD DATA

OVERTOPPING DISCHARGE_____= ✳
FREQUENCY OF OVERTOPPING FLOOD_____= >500+ YRS.
OVERTOPPING FLOOD ELEVATION_____= 63.03

✳ OVERTOPPING FLOOD IS GREATER THAN 500+ YEAR EVENT. OVERTOPPING LOCATION AT STA. 16+34.207 -RP1A-.

NOTES:

ALL DIMENSIONS ARE IN MILLIMETERS UNLESS OTHERWISE NOTED.

ALL ELEVATIONS ARE IN METERS.

ASSUMED LIVE LOAD = MS 22.5 OR ALTERNATE LOADING.

FOR OTHER DESIGN DATA AND GENERAL NOTES, SEE SHEET SNSM.

FOR EROSION CONTROL MEASURES, SEE EROSION CONTROL PLANS.

THIS BRIDGE HAS BEEN DESIGNED BY THE STRENGTH DESIGN METHOD AS SPECIFIED IN AASHTO STANDARD SPECIFICATIONS.

ALL STRUCTURAL STEEL SHALL BE AASHTO M270 GRADE 345W AND PAINTED IN ACCORDANCE WITH SYSTEM 4 OF ARTICLE 442-7 OF THE STANDARD SPECIFICATIONS UNLESS OTHERWISE NOTED ON THE PLANS.

REMOVABLE FORMS MAY BE USED IN LIEU OF METAL STAY-IN-PLACE FORMS IN ACCORDANCE WITH ARTICLE 420-3 OF THE STANDARD SPECIFICATIONS.

FOR PLACING LOAD ON STRUCTURE MEMBERS, SEE SPECIAL PROVISIONS.

FOR MAINTENANCE AND PROTECTION OF TRAFFIC BENEATH PROPOSED STRUCTURE, SEE SPECIAL PROVISIONS.

THIS STRUCTURE HAS BEEN DESIGNED IN ACCORDANCE WITH HEC 18, "EVALUATING SCOUR AT BRIDGES", NOVEMBER, 1995.

THIS BRIDGE HAS BEEN DESIGNED IN ACCORDANCE WITH THE REQUIREMENTS OF THE AASHTO STANDARD SPECIFICATIONS FOR SEISMIC DESIGN OF HIGHWAY BRIDGES FOR SEISMIC PERFORMANCE CATEGORY A.

NEEDLE BEAMS WILL NOT BE ALLOWED UNLESS OTHERWISE CALLED FOR ON THE PLANS OR APPROVED BY THE ENGINEER.

FOR SUBMITTAL OF WORKING DRAWINGS, SEE SPECIAL PROVISIONS.

FOR MASS CONCRETE, SEE SPECIAL PROVISIONS.

CONTINUED ON SHEET 2 OF 6.

NORTH CAROLINA PROFESSIONAL SEAL 9804 ENGINEER ROBERT M. HASSLAM
4-30-08

NORTH CAROLINA PROFESSIONAL SEAL 21638 ENGINEER LAURA E. SUTTON
5/30/08

METRIC

PROJECT NO. U-2519DA
CUMBERLAND COUNTY
STATION: 14+60.500-RP1A-

SHEET 1 OF 6 BRIDGE NO. 370

STATE OF NORTH CAROLINA
DEPARTMENT OF TRANSPORTATION
RALEIGH

GENERAL DRAWING

FOR BRIDGE OVER BEAVER CREEK ON RAMP 1A BETWEEN FAYETTEVILLE OUTER LOOP COLLECTOR AND SR 1007

REVISIONS						SHEET NO.
NO.	BY:	DATE:	NO.	BY:	DATE:	S-166
1			3			TOTAL SHEETS
2			4			411

DRAWN BY : P.C. BREWER DATE : 6/09/08
CHECKED BY : L.E. SUTTON DATE : 7/14/08

30-SEP-2008 08:21
r:\structures\glrolaml\str07\pbrewer\Microstation\u2519da_sd_gd_07.dgn
lsutton

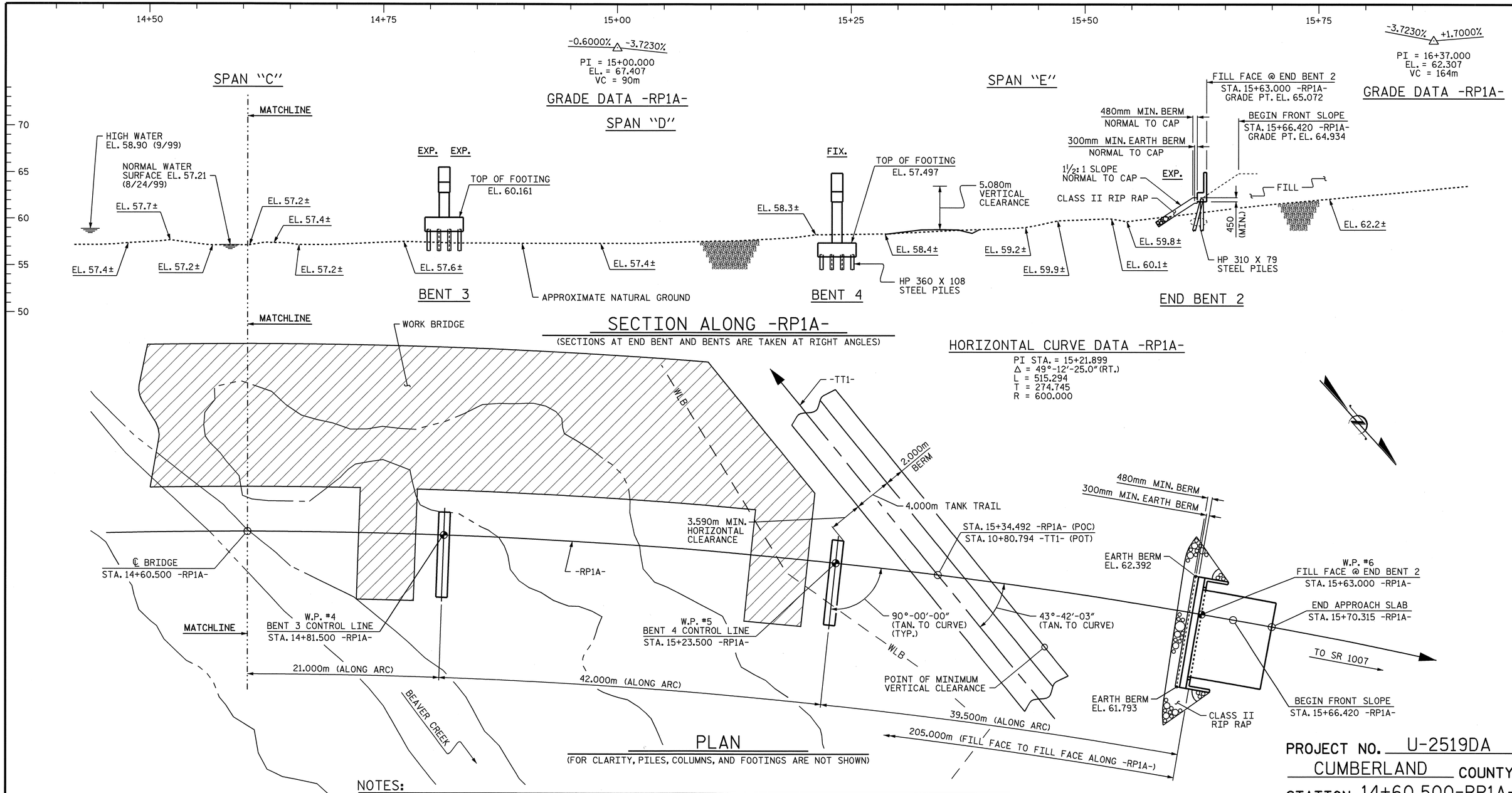

SECTION ALONG -RP1A-

(SECTIONS AT END BENT AND BENTS ARE TAKEN AT RIGHT ANGLES)

HORIZONTAL CURVE DATA -RP1A-

PI STA. = 15+21.899
Δ = 49°-12'-25.0"(RT.)
L = 515.294
T = 274.745
R = 600.000

PLAN

(FOR CLARITY, PILES, COLUMNS, AND FOOTINGS ARE NOT SHOWN)

NOTES:

THE CONTRACTOR WILL BE REQUIRED TO CONSTRUCT, MAINTAIN, AND AFTERWARDS REMOVE A TEMPORARY ACCESS AT STA. 14+60.500 -RP1A- FOR USE DURING CONSTRUCTION OF THE PROPOSED STRUCTURE. FOR CONSTRUCTION, MAINTENANCE, AND REMOVAL OF TEMPORARY ACCESS, SEE SPECIAL PROVISIONS.

THE CONTRACTOR SHALL PROVIDE INDEPENDENT ASSURANCE SAMPLES OF REINFORCING STEEL AS FOLLOWS: FOR PROJECTS REQUIRING UP TO 360,000 kg OF REINFORCING STEEL, ONE 760mm SAMPLE OF EACH SIZE BAR USED, AND FOR PROJECTS REQUIRING OVER 360,000 kg OF REINFORCING STEEL, TWO 760mm SAMPLES OF EACH SIZE BAR USED. THE BARS FROM WHICH THE SAMPLES ARE TAKEN MUST THEN BE SPLICED WITH REPLACEMENT BARS OF THE SIZE AND LENGTH OF THE SAMPLE PLUS A MINIMUM LAP SPLICE OF THIRTY BAR DIAMETERS.

FOR GALVANIZED PILES, A MINIMUM OF 5 METERS OF THE TOP OF EACH PILE SHALL BE GALVANIZED IN ACCORDANCE WITH SECTION 1076 OF THE STANDARD SPECIFICATIONS.

FOR CURING CONCRETE, SEE SPECIAL PROVISIONS.

FOR FALSEWORK AND FORMWORK, SEE SPECIAL PROVISIONS.

FOR METRIC STRUCTURAL STEEL, SEE SPECIAL PROVISIONS.

FOR SHIPPING STEEL STRUCTURAL MEMBERS, SEE SPECIAL PROVISIONS.

FOR CRANE SAFETY, SEE SPECIAL PROVISIONS.

FOR GROUT FOR STRUCTURES, SEE SPECIAL PROVISIONS.

FOR HIGH STRENGTH BOLTS, SEE SPECIAL PROVISIONS.

CONTINUED ON SHEET 3 OF 6.

NORTH CAROLINA PROFESSIONAL SEAL 21638 ENGINEER LAURA E. SUTTON 7/30/08

PROJECT NO. U-2519DA
CUMBERLAND COUNTY
STATION: 14+60.500-RP1A-

SHEET 2 OF 6

STATE OF NORTH CAROLINA
DEPARTMENT OF TRANSPORTATION
RALEIGH

GENERAL DRAWING

FOR BRIDGE OVER BEAVER CREEK ON RAMP 1A BETWEEN FAYETTEVILLE OUTER LOOP COLLECTOR AND SR 1007

REVISIONS						SHEET NO.
NO.	BY:	DATE:	NO.	BY:	DATE:	S-167
1			3			TOTAL SHEETS
2			4			411

DRAWN BY : P.C. BREWER DATE : 6/09/08
CHECKED BY : L.E. SUTTON DATE : 7/14/08

27-AUG-2008 15:44
r:\structures\gIroIaml\str07\pbrewer\microstation\u2519da_sd_gd_07.dgn
lsutton

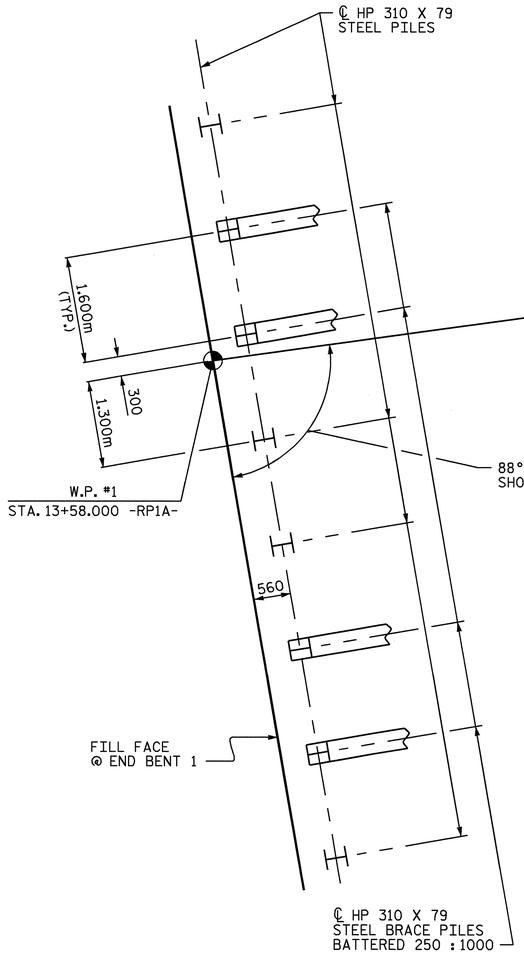

END BENT 1

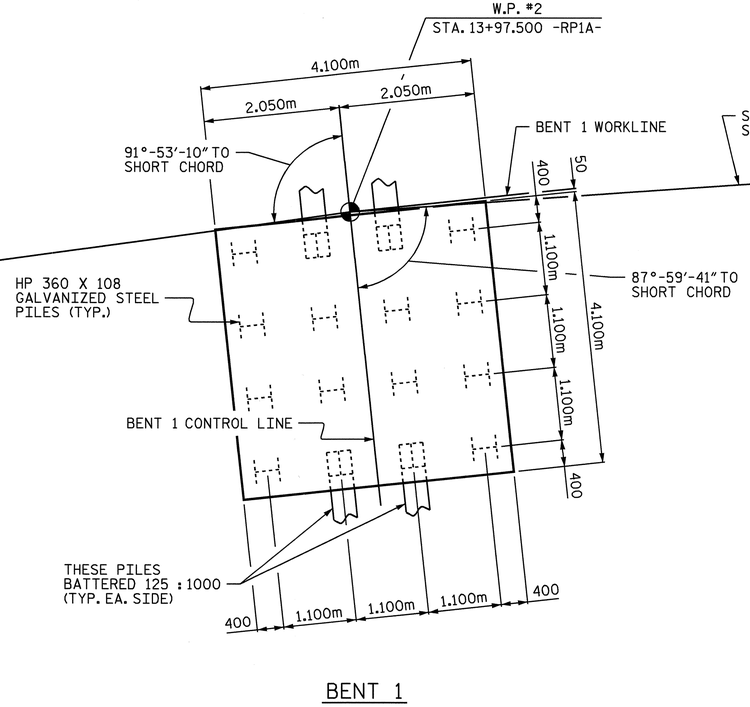

BENT 1

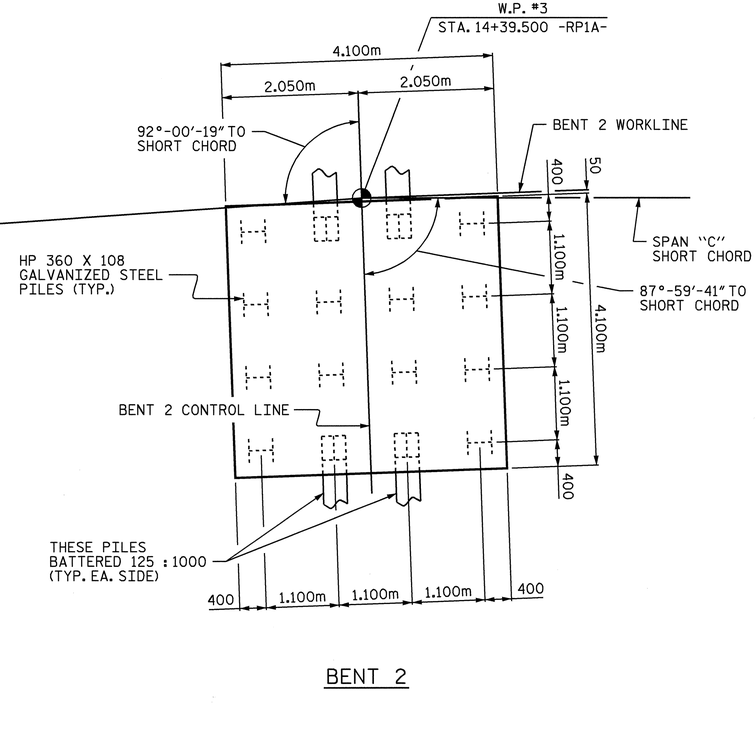

BENT 2

PARTIAL FOUNDATION LAYOUT

DIMENSIONS LOCATING PILES ARE SHOWN TO THE PILE CENTERLINE AT THE BOTTOM OF THE CAP OR FOOTING.
ALL END BENT PILES ARE HP 310 X 79 STEEL PILES.
ALL PILES AT BENT 1 AND BENT 2 ARE HP 360 X 108 GALVANIZED STEEL PILES.

NOTES:

DRIVE PILES AT END BENT 1 AND END BENT 2 TO A REQUIRED BEARING CAPACITY OF 1060 kN PER PILE. THE REQUIRED BEARING CAPACITY IS EQUAL TO THE ALLOWABLE BEARING CAPACITY WITH A MINIMUM FACTOR OF SAFETY OF TWO.

DRIVE PILES AT BENT 1, BENT 2, AND BENT 3 TO A REQUIRED BEARING CAPACITY OF 1800 kN PER PILE. THE REQUIRED BEARING CAPACITY IS EQUAL TO THE ALLOWABLE BEARING CAPACITY WITH A MINIMUM FACTOR OF SAFETY OF TWO PLUS ANY ADDITIONAL CAPACITY TO ACCOUNT FOR DOWN DRAG OR NEGATIVE SKIN FRICTION AND SCOUR.

DRIVE PILES AT BENT 4 TO A REQUIPED BEARING CAPACITY OF 1840 kN PER PILE. THE REQUIRED BEARING CAPACITY IS EQUAL TO THE ALLOWABLE BEARING CAPACITY WITH A MINIMUM FACTOR OF SAFETY OF TWO PLUS ANY ADDITIONAL CAPACITY TO ACCOUNT FOR DOWN DRAG OR NEGATIVE SKIN FRICTION AND SCOUR.

THE ALLOWABLE BEARING CAPACITY FOR PILES AT END BENT 1 AND END BENT 2 IS 530 kN PER PILE.

THE ALLOWABLE BEARING CAPACITY FOR PILES AT BENT 1 THROUGH BENT 4 IS 890 kN PER PILE.

THE SCOUR CRITICAL ELEVATION FOR BENT 1 THROUGH BENT 4 IS ELEVATION 54. SCOUR CRITICAL ELEVATIONS ARE USED TO MONITOR POSSIBLE SCOUR PROBLEMS DURING THE LIFE OF THE STRUCTURE.

TESTING PILES WITH THE PILE DRIVING ANALYER (PDA) DURING DRIVING, RESTRIKING, OR REDRIVING MAY BE REQUIRED. THE ENGINEER WILL DETERMINE THE NEED FOR PDA TESTING. SEE PILE DRIVING ANALYZER SPECIAL PROVISION.

PILE RESTRIKES FOR LRFD MAY BE REQUIRED. SEE PILE RESTRIKE FOR LRFD SPECIAL PROVISION.

FOR PILES, SEE SPECIAL PROVISIONS.

NORTH CAROLINA PROFESSIONAL SEAL 21638 ENGINEER LAURA E. SUTTON
9/30/08

PROJECT NO. U-2519DA
CUMBERLAND COUNTY
STATION: 14+60.500-RP1A-

SHEET 3 OF 6

STATE OF NORTH CAROLINA
DEPARTMENT OF TRANSPORTATION
RALEIGH

GENERAL DRAWING

FOR BRIDGE OVER BEAVER CREEK ON RAMP 1A BETWEEN FAYETTEVILLE OUTER LOOP COLLECTOR AND SR 1007

REVISIONS						SHEET NO.
NO.	BY:	DATE:	NO.	BY:	DATE:	S-168
1			3			TOTAL SHEETS
2			4			411

DRAWN BY : P.C. BREWER DATE : 6/09/08
CHECKED BY : L.E. SUTTON DATE : 7/14/08

25-AUG-2008 14:27
r:\structures\glrolaml\str07\pbrewer\Microstation\u2519da_sd_gd_07.dgn
LSUTTON

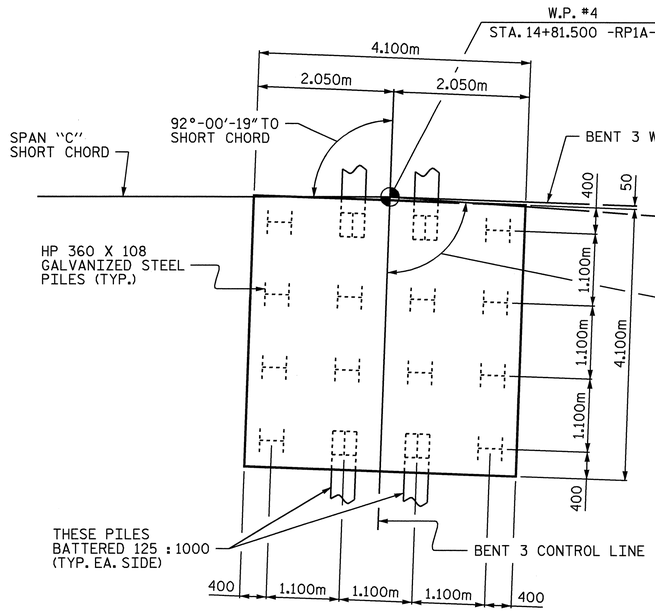

BENT 3

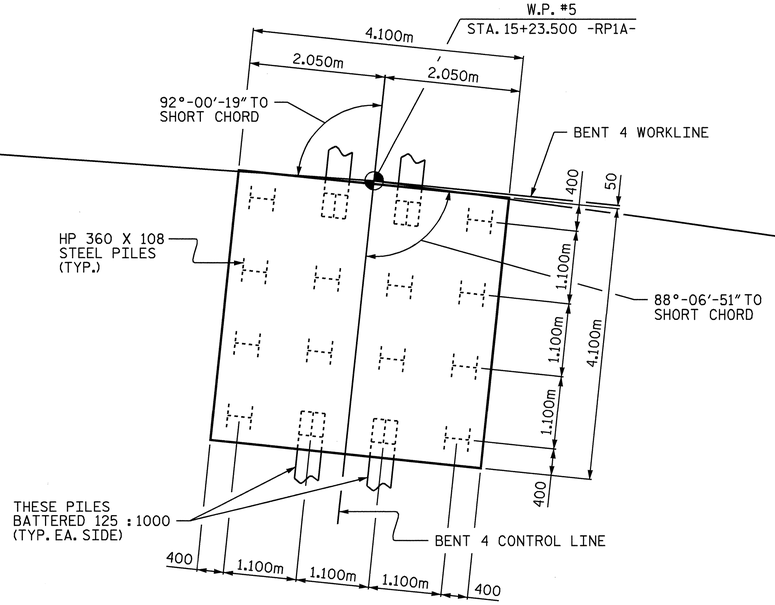

BENT 4

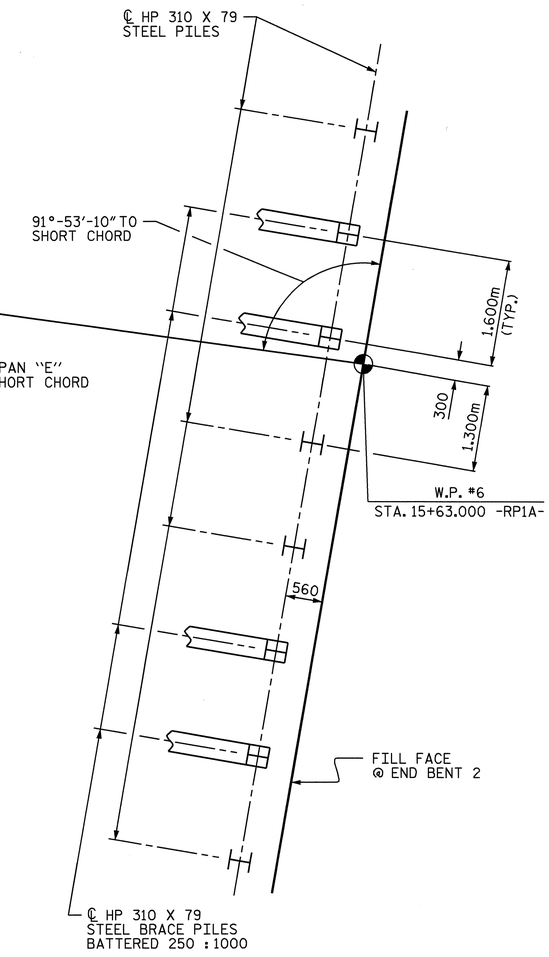

END BENT 2

PARTIAL FOUNDATION LAYOUT

DIMENSIONS LOCATING PILES ARE SHOWN TO THE PILE CENTERLINE AT THE BOTTOM OF THE CAP OR FOOTING.
ALL END BENT PILES ARE HP 310 X 79 STEEL PILES.
ALL PILES AT BENT 3 ARE HP 360 X 108 GALVANIZED STEEL PILES.
ALL PILES AT BENT 4 ARE HP 360 X 108 STEEL PILES.

PROJECT NO. U-2519DA
CUMBERLAND COUNTY
STATION: 14+60.500-RP1A-

SHEET 4 OF 6

STATE OF NORTH CAROLINA
DEPARTMENT OF TRANSPORTATION
RALEIGH

GENERAL DRAWING

FOR BRIDGE OVER BEAVER CREEK ON RAMP 1A BETWEEN FAYETTEVILLE OUTER LOOP COLLECTOR AND SR 1007

REVISIONS						SHEET NO.
NO.	BY:	DATE:	NO.	BY:	DATE:	S-169
1			3			TOTAL SHEETS
2			4			411

NORTH CAROLINA PROFESSIONAL SEAL 21638 ENGINEER LAURA E. SUTTON
9/30/08

DRAWN BY : P.C. BREWER DATE : 6/09/08
CHECKED BY : L.E. SUTTON DATE : 7/14/08

30-SEP-2008 07:27
p:\structures\glrolaml\str07\pbrewer\microstation\u2519da_sd_gd_07.dgn
pbrewer

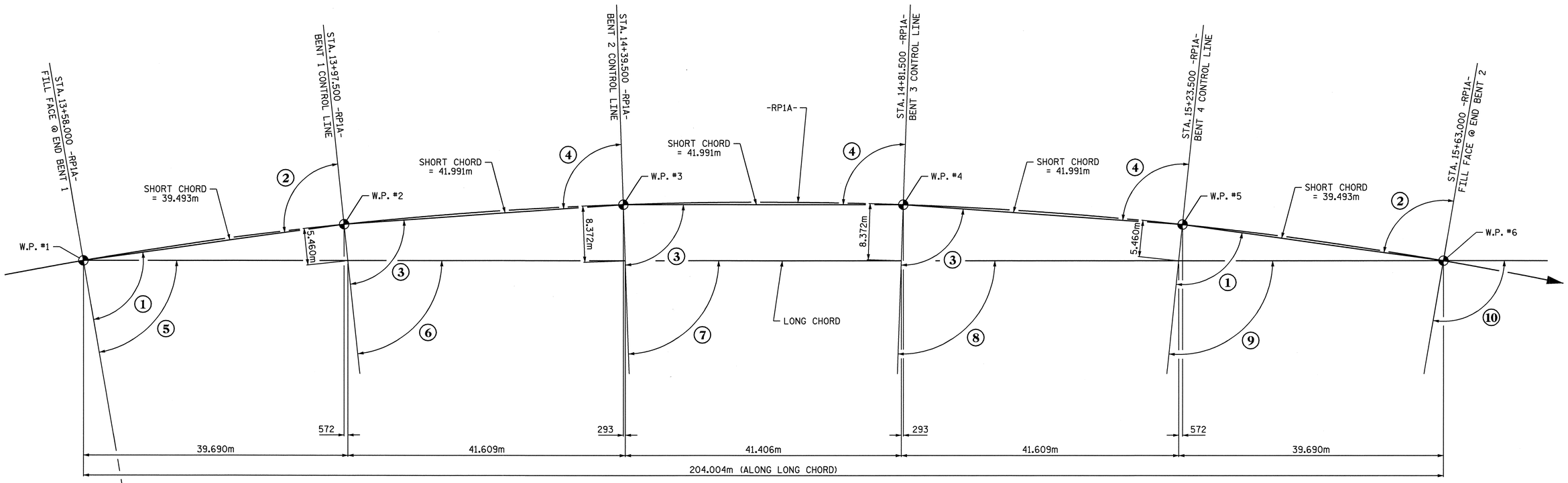

LONG CHORD LAYOUT

ALL BENTS ARE RADIAL

ANGLES

(1)	88°-06′-51″	(6)	83°-59′-02″
(2)	91°-53′-10″	(7)	87°-59′-41″
(3)	87°-59′-41″	(8)	92°-00′-19″
(4)	92°-00′-19″	(9)	96°-00′-58″
(5)	80°-12′-43″	(10)	99°-47′-17″

HORIZONTAL CURVE DATA -RP1A-

PI STA. = 15+21.899
Δ = 49°-12′-25.0″(RT.)
L = 515.294
T = 274.745
R = 600.000

PROJECT NO. U-2519DA
CUMBERLAND COUNTY
STATION: 14+60.500-RP1A-

SHEET 5 OF 6

STATE OF NORTH CAROLINA
DEPARTMENT OF TRANSPORTATION
RALEIGH

GENERAL DRAWING

FOR BRIDGE OVER BEAVER CREEK ON RAMP 1A BETWEEN FAYETTEVILLE OUTER LOOP COLLECTOR AND SR 1007

NORTH CAROLINA PROFESSIONAL SEAL 21638 ENGINEER LAURA E. SUTTON
7/30/08

REVISIONS						SHEET NO.
NO.	BY:	DATE:	NO.	BY:	DATE:	S-170
1			3			TOTAL SHEETS
2			4			411

DRAWN BY : P.C. BREWER DATE : 6/09/08
CHECKED BY : L.E. SUTTON DATE : 7/14/08

30-JUL-2008 14:14
R:\Structures\glrolam1\str07\pbrewer\Microstation\U2519DA_sd_GD_07.dgn
LSUTTON

TOTAL BILL OF MATERIAL

	CONSTRUCTION, MAINTENANCE, & REMOVAL OF TEMPORARY ACCESS	FOUNDATION EXCAVATION FOR BENT	PDA TESTING	PDA ASSISTANCE	REINFORCED CONCRETE DECK SLAB	GROOVING BRIDGE FLOORS	CLASS A CONCRETE	BRIDGE APPROACH SLABS	REINFORCING STEEL	STRUCTURAL STEEL	HP 310 X 79 STEEL PILES		HP 360 X 108 STEEL PILES		HP 360 X 108 GALVANIZED STEEL PILES		PILE REDRIVES	CONCRETE BARRIER RAIL	RIP RAP CLASS II (600mm THICK)	FILTER FABRIC FOR DRAINAGE	POT BEARINGS	EVAZOTE JOINT SEALS
	LUMP SUM	LUMP SUM	EACH	EACH	SQ. METERS	SQ. METERS	CU. METERS	LUMP SUM	kg	APPROX. kg	NO.	METERS	NO.	METERS	NO.	METERS	EACH	METERS	METRIC TON	SQ. METERS	LUMP SUM	LUMP SUM
SUPERSTRUCTURE					2,034.3	1,754.5				500,400								407.262			LUMP SUM	LUMP SUM
END BENT 1							22.0		1,962		8	136							542	553		
BENT 1		—					56.3		6,969						16	256						
BENT 2		—					55.6		6,899						16	304						
BENT 3		—					53.9		6,725						16	272						
BENT 4		LUMP SUM					57.6		7,107				16	224								
END BENT 2							21.9		1,959		8	152							168	171		
TOTAL	LUMP SUM	LUMP SUM	1	1	2,034.3	1,754.5	267.3	LUMP SUM	31,621	500,400	16	288	16	224	48	832	40	407.262	710	724	LUMP SUM	LUMP SUM

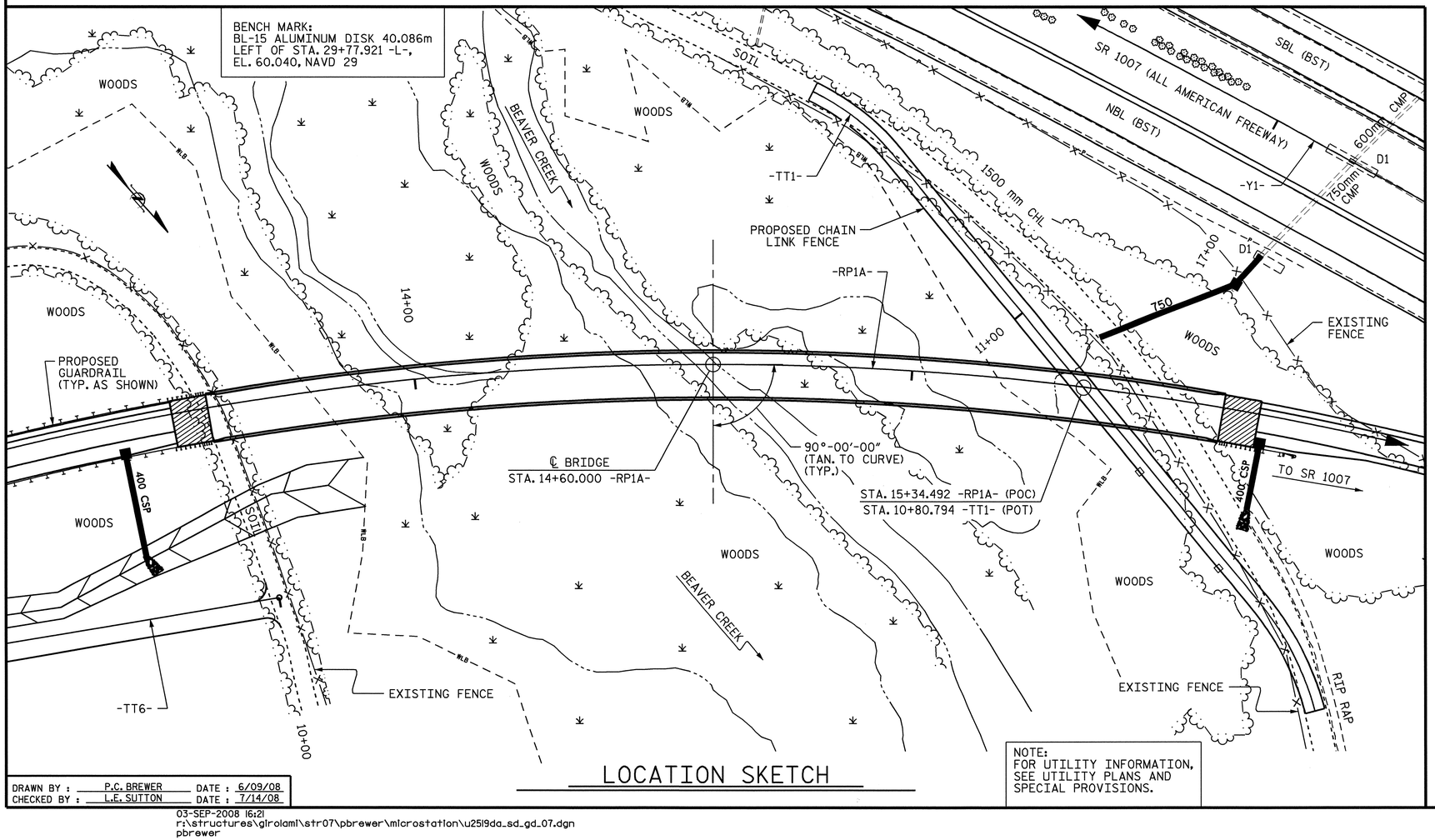

LOCATION SKETCH

DRAWN BY : P.C. BREWER DATE : 6/09/08
CHECKED BY : L.E. SUTTON DATE : 7/14/08

03-SEP-2008 16:21
r:\structures\glrolaml\str07\pbrewer\microstation\u2519da_sd_gd_07.dgn
pbrewer

PROJECT NO. U-2519DA
CUMBERLAND COUNTY
STATION: 14+60.500-RP1A-

SHEET 6 OF 6

STATE OF NORTH CAROLINA
DEPARTMENT OF TRANSPORTATION
RALEIGH

GENERAL DRAWING

FOR BRIDGE OVER BEAVER CREEK ON RAMP 1A BETWEEN FAYETTEVILLE OUTER LOOP COLLECTOR AND SR 1007

NORTH CAROLINA PROFESSIONAL SEAL 21638 ENGINEER LAURA E. SUTTON
9/30/08

REVISIONS						SHEET NO.
NO.	BY:	DATE:	NO.	BY:	DATE:	S-171
1			3			TOTAL SHEETS
2			4			411

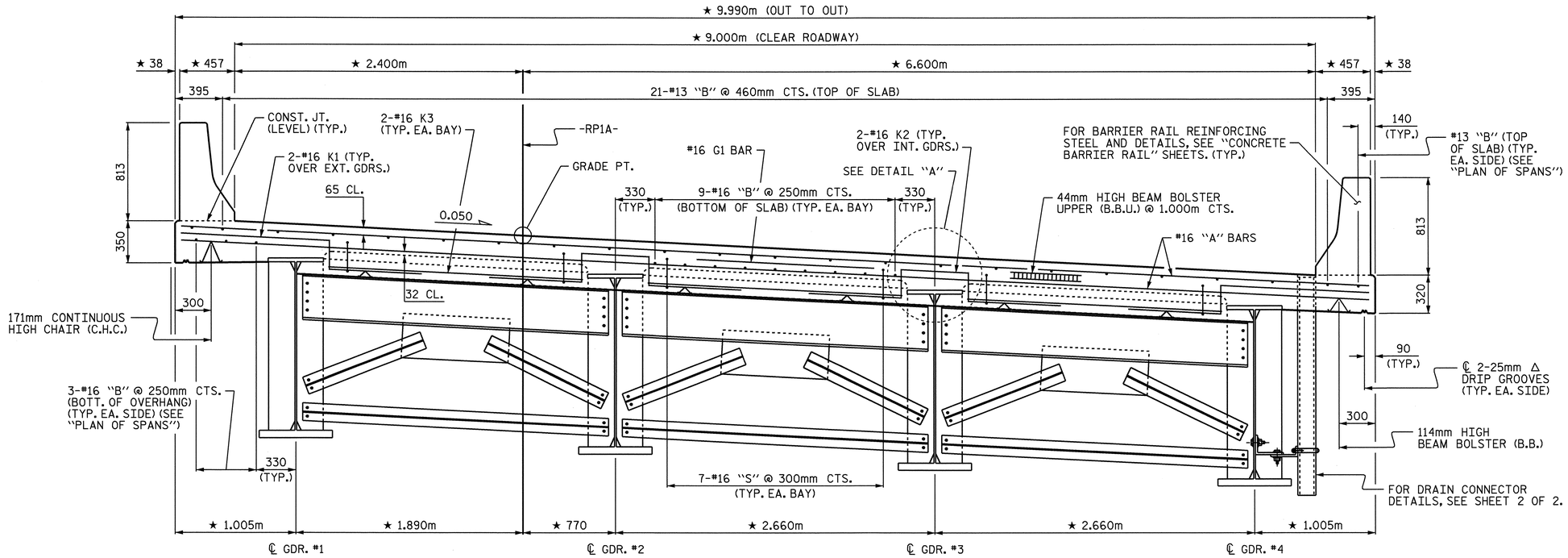

TYPICAL SECTION

SHOWING END BENT AND BENT 3 DIAPHRAGMS

★ RADIAL DIMENSIONS

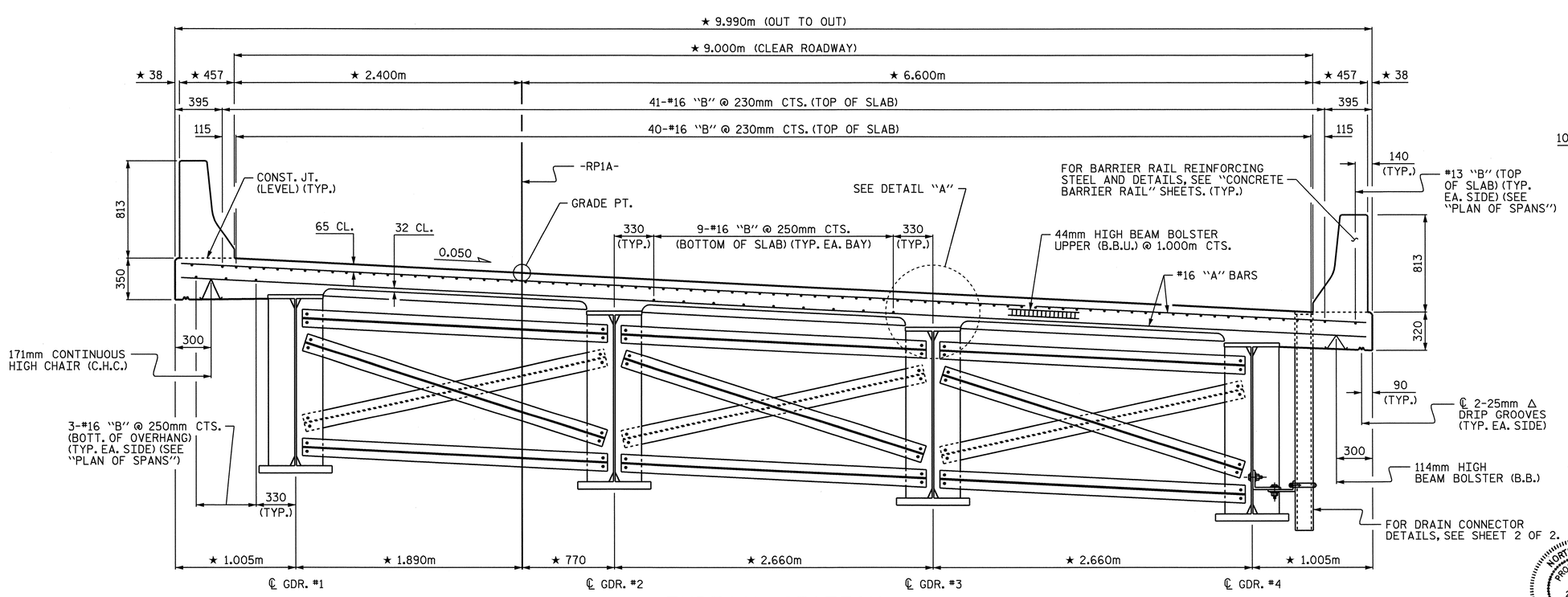

TYPICAL SECTION

SHOWING BENT 1, 2, & 4 AND INTERMEDIATE DIAPHRAGMS

NOTES:

PROVIDE 32mm HIGH BEAM BOLSTERS UPPER AT 1.2m CTS. ATOP THE METAL STAY-IN-PLACE FORMS TO SUPPORT THE BOTTOM MAT OF "A" BARS. WHEN USING REMOVABLE FORMS, PROVIDE CONTINUOUS HIGH CHAIRS FOR METAL DECK (C.H.C.M.) @ 1.2m CTS. WITH A HEIGHT TO SUPPORT THE BOTTOM MAT OF "A" BARS A CLEAR DISTANCE OF 65mm ABOVE THE TOP OF THE REMOVABLE FORM.

LONGITUDINAL STEEL MAY BE SHIFTED SLIGHTLY, AS NECESSARY, TO AVOID INTERFERENCE WITH THE DECK DRAINS.

PREVIOUSLY CAST CONCRETE IN EACH CONTINUOUS UNIT SHALL HAVE ATTAINED A MINIMUM COMPRESSIVE STRENGTH OF 20.7 MPa BEFORE ADDITIONAL CONCRETE IS CAST IN THE UNIT.

BARRIER RAIL IN EACH CONTINUOUS UNIT SHALL NOT BE CAST UNTIL ALL SLAB CONCRETE IN THE UNIT HAS BEEN CAST AND HAS REACHED A MINIMUM COMPRESSIVE STRENGTH OF 20.7 MPa.

STRUCTURAL STEEL ERECTION IN EACH CONTINUOUS UNIT SHALL BE COMPLETE BEFORE FALSEWORK OR FORMS ARE PLACED ON THE UNIT.

#16 "G" BAR MAY BE SHIFTED SLIGHTLY, AS NECESSARY, TO CLEAR REINFORCING STEEL AND STIRRUPS.

ALL REINFORCING STEEL IN BARRIER RAILS SHALL BE EPOXY COATED.

METAL STAY-IN-PLACE FORMS SHALL NOT BE WELDED TO BEAM OR GIRDER FLANGES IN THE ZONES REQUIRING CHARPY V-NOTCH TEST. SEE "STRUCTURAL STEEL DETAILS" SHEETS.

THE CONTRACTOR MAY, WHEN NECESSARY, PROPOSE A SCHEME FOR AVOIDING INTERFERENCE BETWEEN METAL STAY-IN-PLACE FORM SUPPORTS OR FORMS AND BEAM/GIRDER STIFFENERS OR CONNECTOR PLATES. THE PROPOSAL SHALL BE INDICATED, AS APPROPRIATE, ON EITHER THE STEEL WORKING DRAWINGS OR THE METAL STAY-IN-PLACE FORM WORKING DRAWINGS.

THE CONTRACTOR SHALL ADJUST THE GIRDER BUILDUPS AS NECESSARY TO INCORPORATE A MAXIMUM PERMISSIBLE VARIATION IN POT BEARING DEPTH OF 13mm, SEE SPECIAL PROVISION FOR POT BEARINGS.

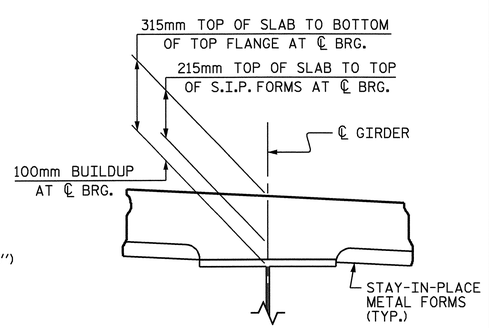

DETAIL "A"

(TYP. EACH GIRDER)

PROJECT NO. U-2519DA

CUMBERLAND COUNTY

STATION: 14+60.500-RP1A-

SHEET 1 OF 2

STATE OF NORTH CAROLINA
DEPARTMENT OF TRANSPORTATION
RALEIGH

SUPERSTRUCTURE

TYPICAL SECTIONS

REVISIONS						SHEET NO.
NO.	BY:	DATE:	NO.	BY:	DATE:	S-172
1			3			TOTAL SHEETS
2			4			411

NORTH CAROLINA PROFESSIONAL SEAL 21838 ENGINEER LAURA E. SUTTON 9/30/08

DRAWN BY : P.C. BREWER DATE : 1/3/08
CHECKED BY : A.S. CALLAWAY DATE : 1/24/08

30-SEP-2008 08:20
r:\structures\glroiaml\str07\pbrewer\Microstation\u2519da_sd_ts_07.dgn
lsutton

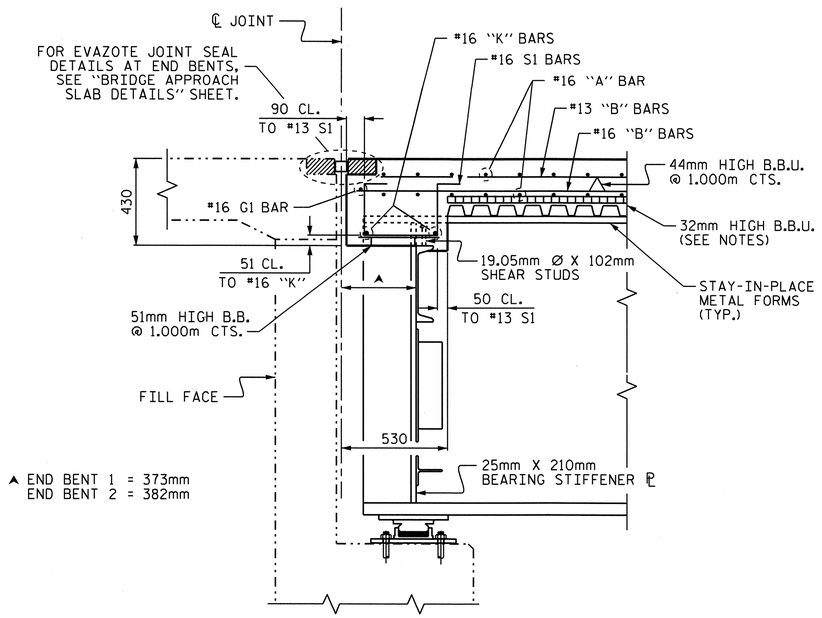

SECTION A-A

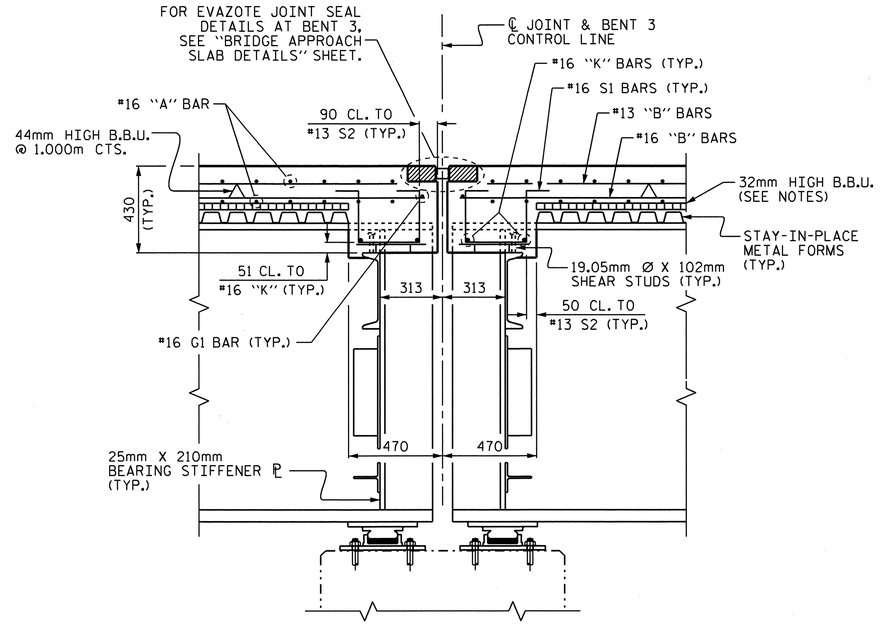

SECTION B-B

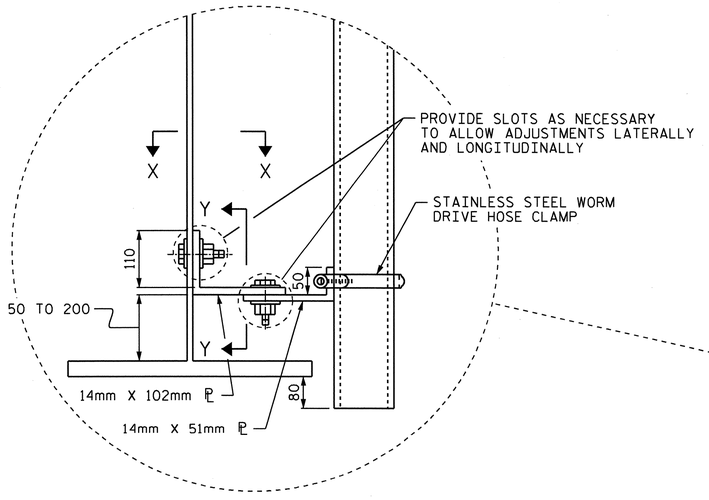

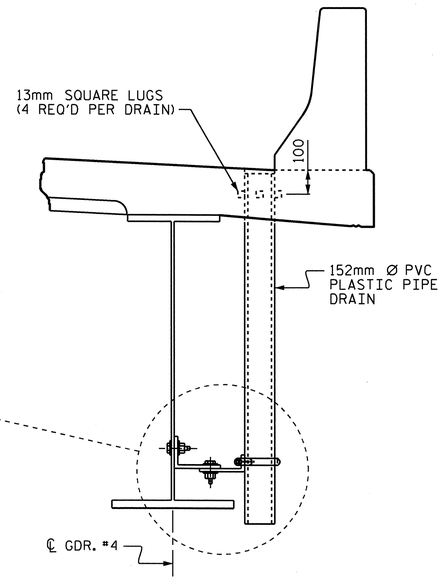

DRAIN CONNECTOR DETAILS

(48 REQ'D)

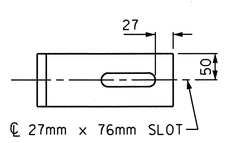

SECTION X-X

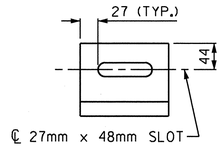

SECTION Y-Y

COUPLING IN DRAIN PIPE WILL BE PERMITTED AS APPROVED BY THE ENGINEER.

4-13mm SQUARE LUGS TO BE GLUED TO THE PVC PLASTIC PIPE AT EQUAL SPACES AROUND THE PIPE DRAIN APPROXIMATELY 100mm FROM THE TOP OF THE PIPE.

BOLT SIZE TO BE SAME AS DIAPHRAGMS AND CROSSFRAME CONNECTIONS. STAINLESS STEEL WORM DRIVE HOSE CLAMP SHALL BE COMMERCIAL QUALITY.

TOP OF FLOOR DRAINS TO BE SET 10mm BELOW SURFACE OF SLAB.

THE 152mm DIA. PVC PIPE AND FITTINGS SHALL BE SCHEDULE 40 AND CONFORM TO ASTM D1785.

PVC DECK DRAINS SHALL BE PAINTED WITH TWO COATS OF BROWN PRIMER MEETING THE REQUIREMENTS OF ARTICLE 1080-12 OF THE STANDARD SPECIFICATIONS. EACH COAT SHALL BE 0.050mm THICK. DECK DRAINS SHALL BE ROUGHENED PRIOR TO PAINTING. NO SEPARATE PAYMENT SHALL BE MADE FOR PAINTING PVC DECK DRAINS AS THIS IS CONSIDERED INCIDENTAL TO THE PAY ITEM FOR REINFORCED CONCRETE DECK SLAB.

NOTE:
FOR LOCATION OF SECTIONS, SEE "PLAN OF SPANS" SHEETS.

NORTH CAROLINA PROFESSIONAL SEAL 16301 ENGINEER TING-HSIUNG FANG
3/18/11

PROJECT NO. U-2519DA
CUMBERLAND COUNTY
STATION: 14+60.500-RP1A-

SHEET 2 OF 2

STATE OF NORTH CAROLINA
DEPARTMENT OF TRANSPORTATION
RALEIGH

SUPERSTRUCTURE

TYPICAL SECTIONS

REVISIONS						SHEET NO.
NO.	BY:	DATE:	NO.	BY:	DATE:	S-173
1			3			TOTAL SHEETS
2			4			411

DRAWN BY : P.C. BREWER DATE : 1/3/08
CHECKED BY : A.S. CALLAWAY DATE : 1/24/08

18-MAR-2011 12:38
k:\TIPProjects-U\U2519da\Structures\girolami\str07\pbrewer\Microstation\u2519da_sd_ts_07.dgn
tfang

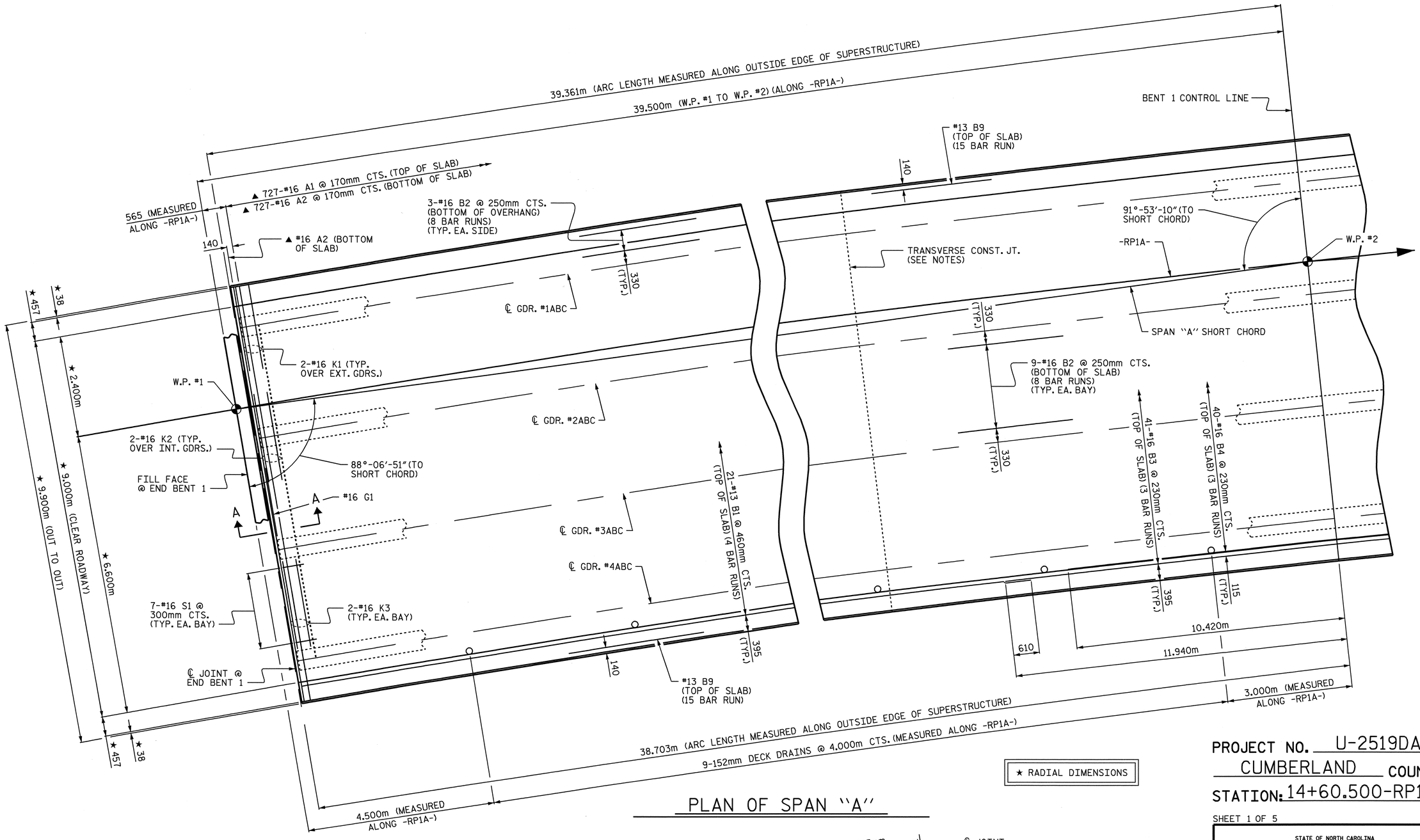

★ RADIAL DIMENSIONS

PLAN OF SPAN "A"

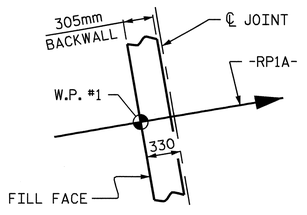

END BENT DETAIL

NOTES:

FOR BARRIER RAIL REINFORCING STEEL AND DETAILS, SEE "CONCRETE BARRIER RAIL" SHEETS.

FOR TRANSVERSE CONSTRUCTION JOINT DETAIL AND LOCATION. SEE "POURING SEQUENCE" SHEET.

▲ #16 "A" BARS ARE TO BE PLACED RADIALLY ALONG THE OUTSIDE LEFT EDGE OF SUPERSTRUCTURE.

PROJECT NO. U-2519DA

CUMBERLAND COUNTY

STATION: 14+60.500-RP1A-

SHEET 1 OF 5

STATE OF NORTH CAROLINA
DEPARTMENT OF TRANSPORTATION
RALEIGH

SUPERSTRUCTURE

PLAN OF SPANS

SPAN "A"

REVISIONS						SHEET NO.
NO.	BY:	DATE:	NO.	BY:	DATE:	S-174
1			3			TOTAL SHEETS
2			4			411

NORTH CAROLINA PROFESSIONAL SEAL 21638 ENGINEER LAURA E. SUTTON
9/30/08

DRAWN BY : P.C. BREWER DATE : 1/3/08
CHECKED BY : A.S. CALLAWAY DATE : 1/24/08

25-AUG-2008 14:23
r:\structures\girolami\str07\pbrewer\Microstation\u2519da_sd_ps_07.dgn
LSUTTON

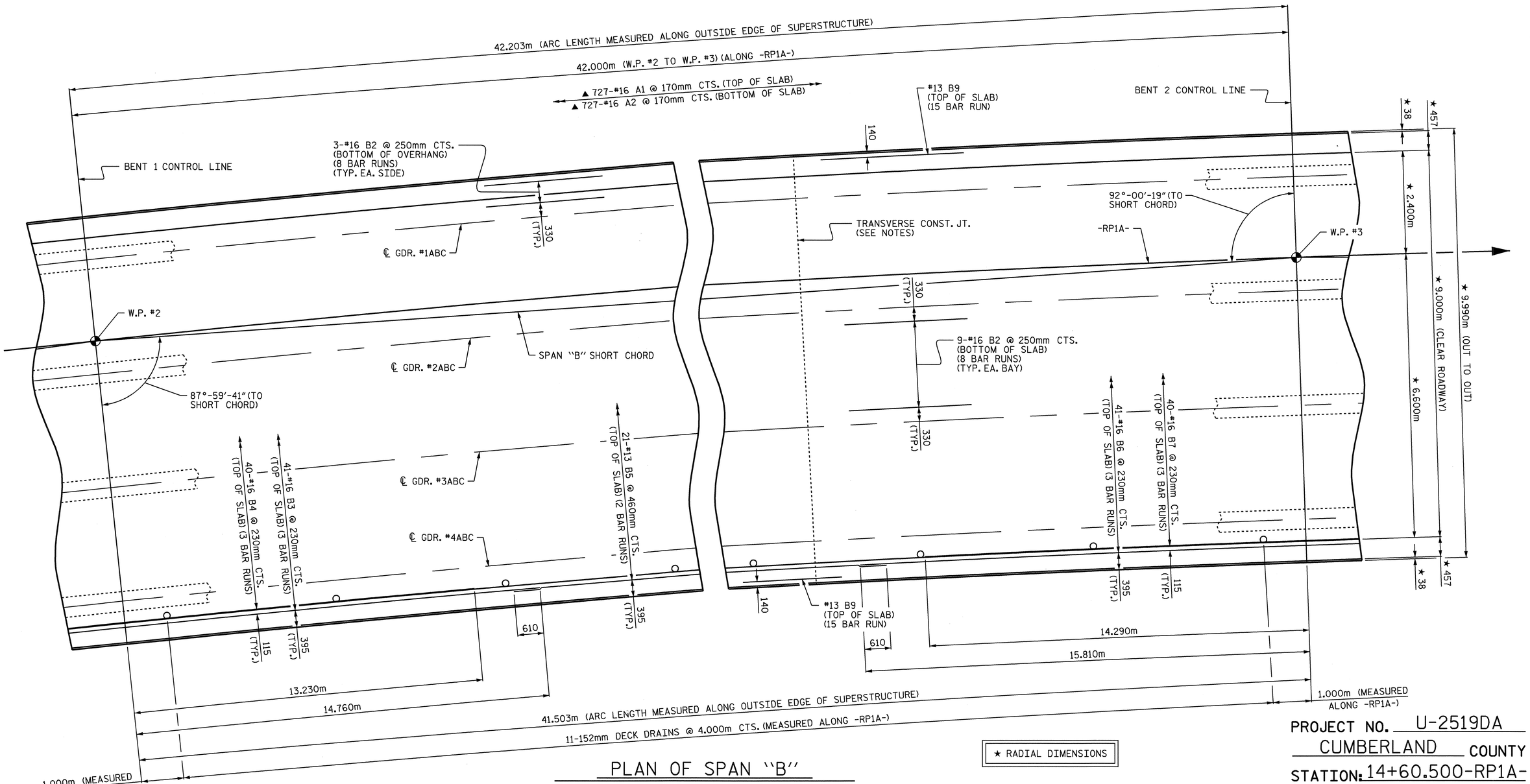

★ RADIAL DIMENSIONS

PLAN OF SPAN "B"

NOTES:

FOR BARRIER RAIL REINFORCING STEEL AND DETAILS, SEE "CONCRETE BARRIER RAIL" SHEETS.

FOR TRANSVERSE CONSTRUCTION JOINT DETAIL AND LOCATION. SEE "POURING SEQUENCE" SHEET.

▲ #16 "A" BARS ARE TO BE PLACED RADIALLY ALONG THE OUTSIDE LEFT EDGE OF SUPERSTRUCTURE.

PROJECT NO. U-2519DA

CUMBERLAND COUNTY

STATION: 14+60.500-RP1A-

SHEET 2 OF 5

STATE OF NORTH CAROLINA
DEPARTMENT OF TRANSPORTATION
RALEIGH

SUPERSTRUCTURE

PLAN OF SPANS

SPAN "B"

REVISIONS						SHEET NO.
NO.	BY:	DATE:	NO.	BY:	DATE:	S-175
1			3			TOTAL SHEETS
2			4			411

NORTH CAROLINA PROFESSIONAL SEAL 21638 ENGINEER LAURA E. SUTTON
7/30/08

DRAWN BY : P.C. BREWER DATE : 1/3/08
CHECKED BY : A.S. CALLAWAY DATE : 1/24/08

25-AUG-2008 14:23
r:\structures\girolami\str07\pbrewer\Microstation\u2519da_sd_ps_07.dgn
LSUTTON

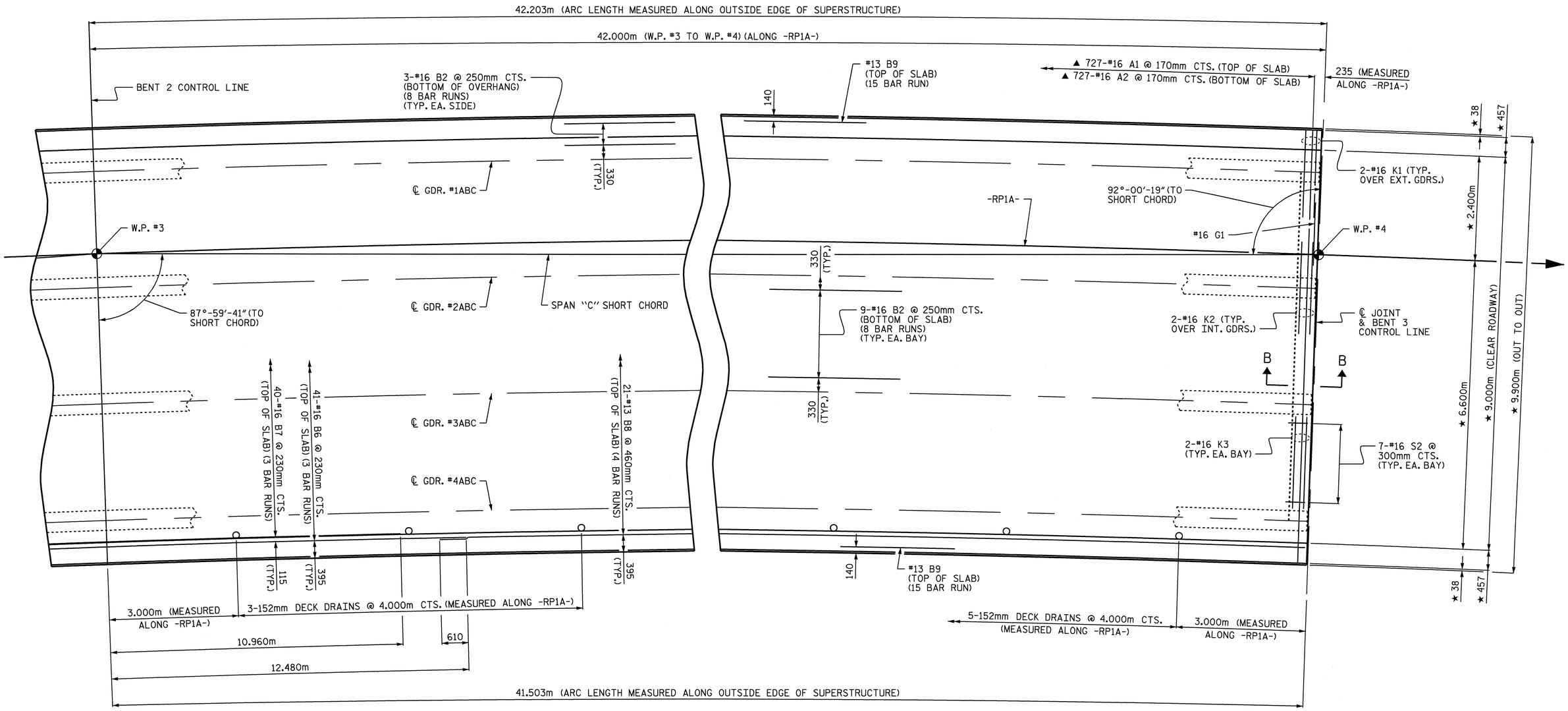

PLAN OF SPAN "C"

★ RADIAL DIMENSIONS

NOTES:

FOR BARRIER RAIL REINFORCING STEEL AND DETAILS, SEE "CONCRETE BARRIER RAIL" SHEETS.

FOR TRANSVERSE CONSTRUCTION JOINT DETAIL AND LOCATION. SEE "POURING SEQUENCE" SHEET.

▲ #16 "A" BARS ARE TO BE PLACED RADIALLY ALONG THE OUTSIDE LEFT EDGE OF SUPERSTRUCTURE.

PROJECT NO. U-2519DA

CUMBERLAND COUNTY

STATION: 14+60.500-RP1A-

SHEET 3 OF 5

STATE OF NORTH CAROLINA
DEPARTMENT OF TRANSPORTATION
RALEIGH

SUPERSTRUCTURE

PLAN OF SPANS

SPAN "C"

REVISIONS						SHEET NO.
NO.	BY:	DATE:	NO.	BY:	DATE:	S-176
1			3			TOTAL SHEETS
2			4			211

NORTH CAROLINA PROFESSIONAL SEAL 21638 ENGINEER LAURA E. SUTTON 8/20/08

DRAWN BY : P.C. BREWER DATE : 1/3/08
CHECKED BY : A.S. CALLAWAY DATE : 1/24/08

25-AUG-2008 14:23
r:\structures\glrolaml\str07\pbrewer\Microstation\u2519da_sd_ps_07.dgn
LSUTTON

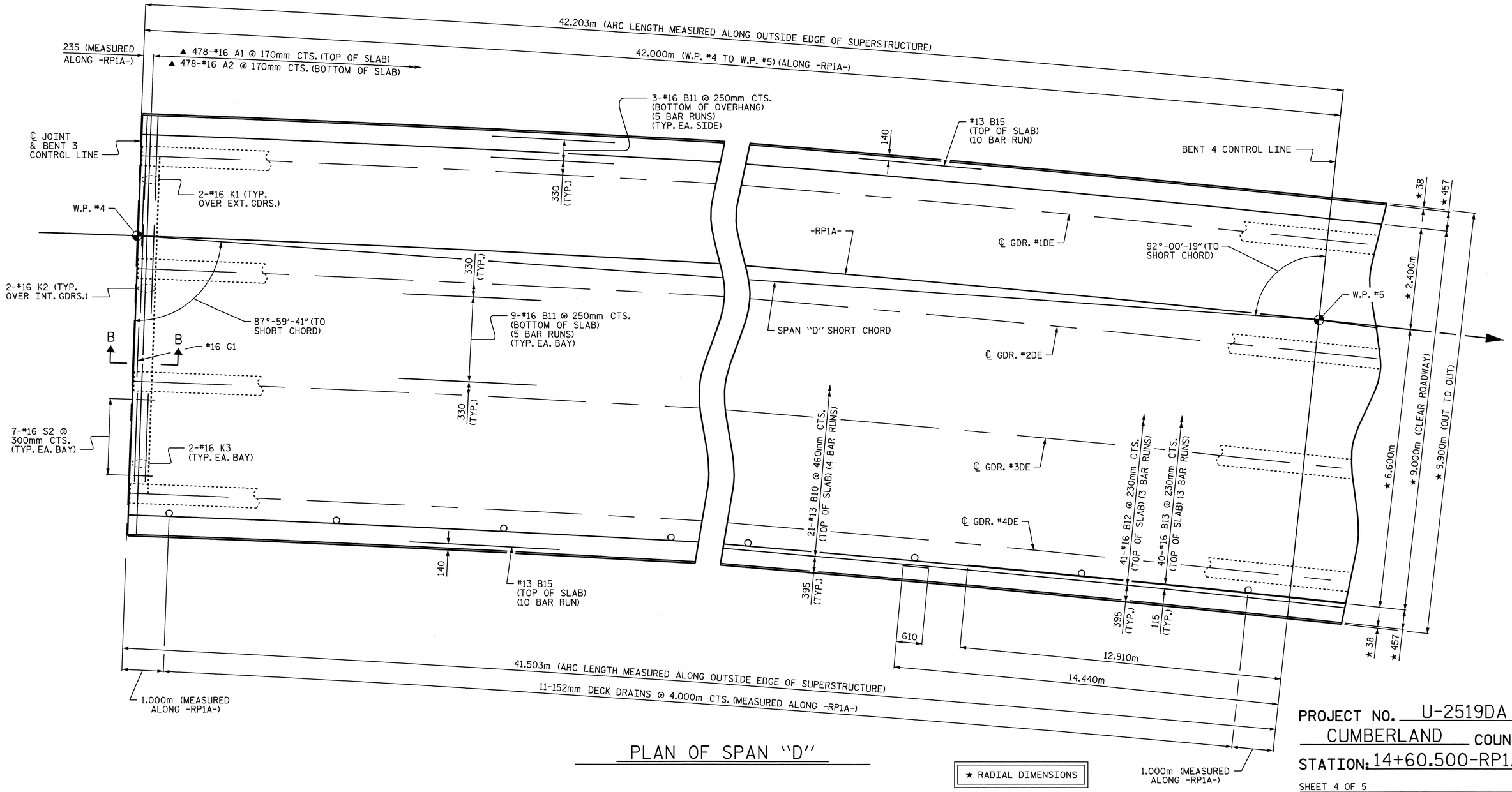

PLAN OF SPAN "D"

★ RADIAL DIMENSIONS

NOTES:

FOR BARRIER RAIL REINFORCING STEEL AND DETAILS, SEE "CONCRETE BARRIER RAIL" SHEETS.

FOR TRANSVERSE CONSTRUCTION JOINT DETAIL AND LOCATION. SEE "POURING SEQUENCE" SHEET.

▲ #16 "A" BARS ARE TO BE PLACED RADIALLY ALONG THE OUTSIDE LEFT EDGE OF SUPERSTRUCTURE.

NORTH CAROLINA PROFESSIONAL SEAL 21638 ENGINEER LAURA E. SUTTON 9/30/08

PROJECT NO. U-2519DA
CUMBERLAND COUNTY
STATION: 14+60.500-RP1A-

SHEET 4 OF 5

STATE OF NORTH CAROLINA
DEPARTMENT OF TRANSPORTATION
RALEIGH

SUPERSTRUCTURE
PLAN OF SPANS
SPAN "D"

REVISIONS						SHEET NO.
NO.	BY:	DATE:	NO.	BY:	DATE:	S-177
1			3			TOTAL SHEETS
2			4			411

DRAWN BY : P.C. BREWER DATE : 1/3/08
CHECKED BY : A.S. CALLAWAY DATE : 1/24/08

25-AUG-2008 14:22
r:\structures\girolaml\str07\pbrewer\Microstation\u2519da_sd_ps_07.dgn
LSUTTON

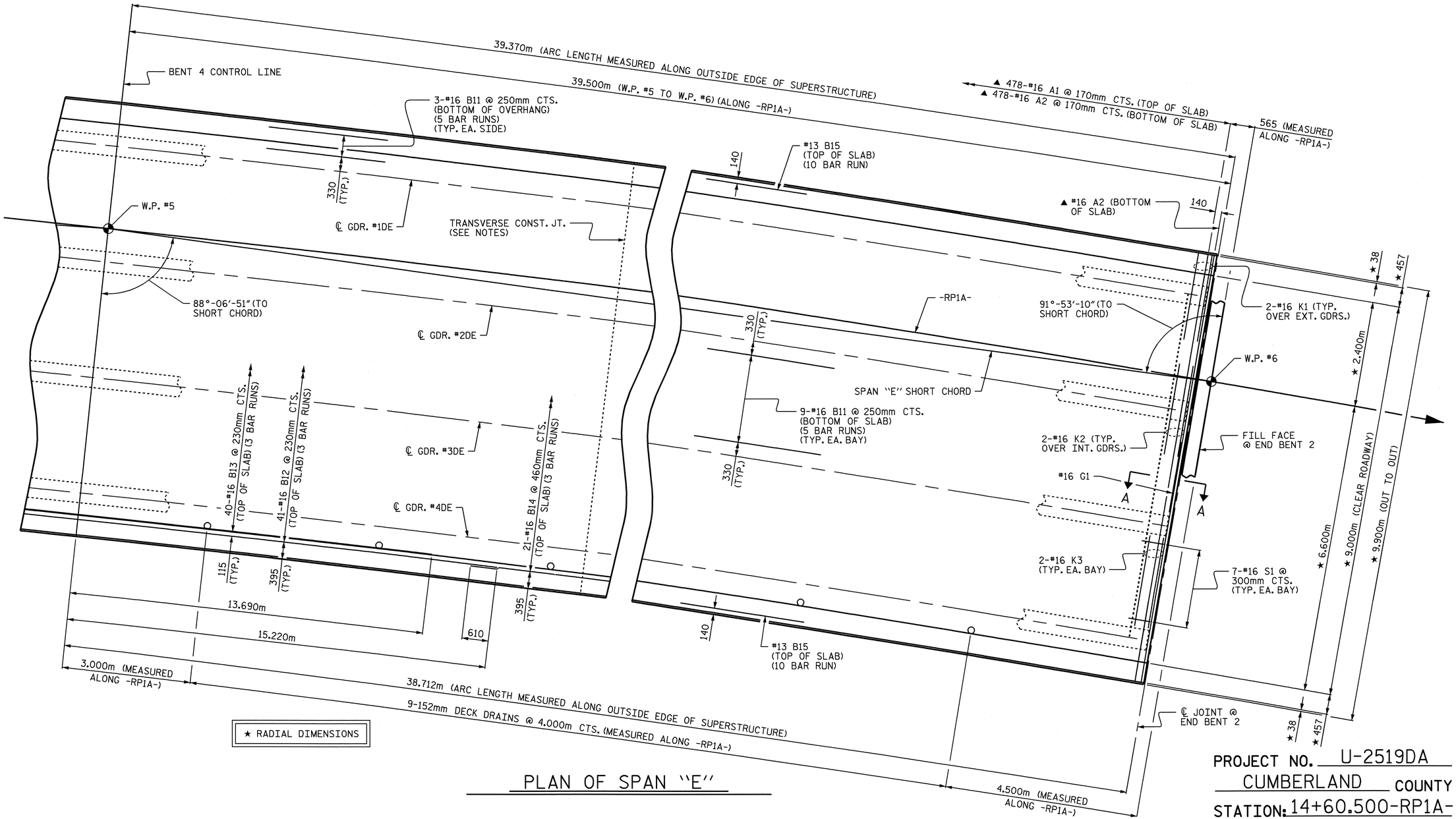

PLAN OF SPAN "E"

NOTES:

FOR BARRIER RAIL REINFORCING STEEL AND DETAILS, SEE "CONCRETE BARRIER RAIL" SHEETS.

FOR TRANSVERSE CONSTRUCTION JOINT DETAIL AND LOCATION. SEE "POURING SEQUENCE" SHEET.

▲ #16 "A" BARS ARE TO BE PLACED RADIALLY ALONG THE OUTSIDE LEFT EDGE OF SUPERSTRUCTURE.

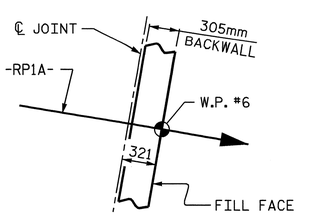

END BENT DETAIL

PROJECT NO. U-2519DA
CUMBERLAND COUNTY
STATION: 14+60.500-RP1A-

SHEET 5 OF 5

STATE OF NORTH CAROLINA
DEPARTMENT OF TRANSPORTATION
RALEIGH

SUPERSTRUCTURE

PLAN OF SPANS

—— SPAN "E" ——

REVISIONS						SHEET NO.
NO.	BY:	DATE:	NO.	BY:	DATE:	S-178
1			3			TOTAL SHEETS
2			4			411

NORTH CAROLINA PROFESSIONAL SEAL 21638 ENGINEER LAURA E. SUTTON
11/20/08

DRAWN BY : P.C. BREWER DATE : 1/3/08
CHECKED BY : A.S. CALLAWAY DATE : 1/24/08

30-SEP-2008 08:20
r:\structures\gfrolaml\str07\pbrewer\Microstation\u2519da_sd_ps_07.dgn
lsutton

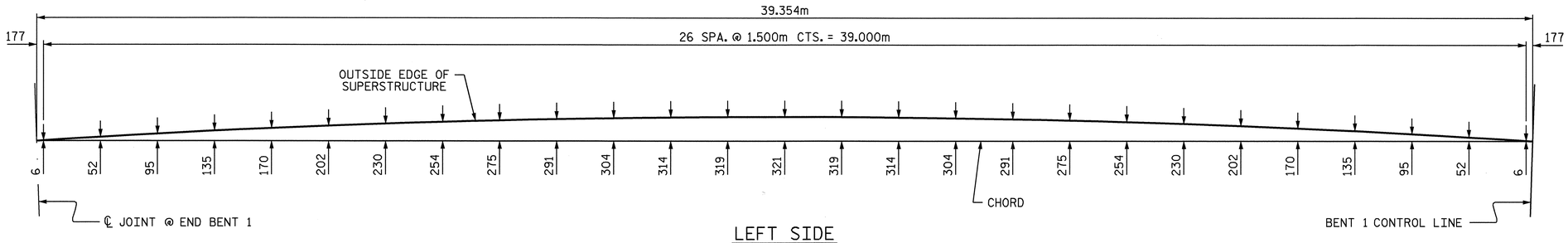

LEFT SIDE

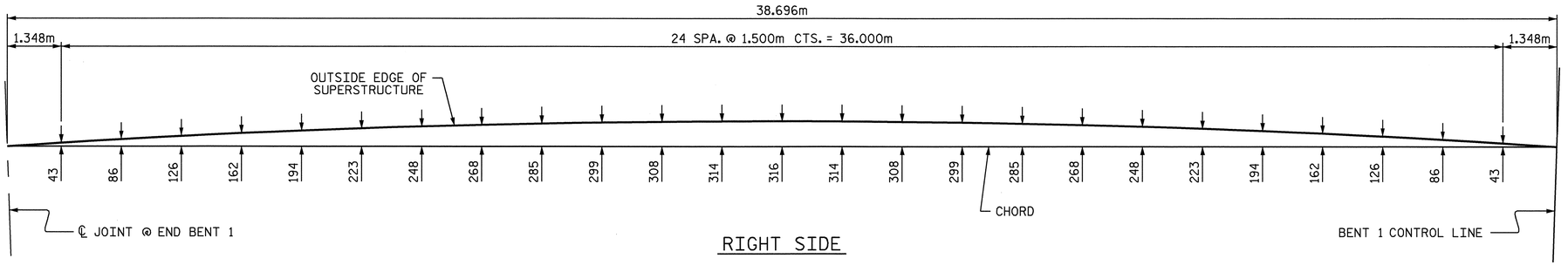

RIGHT SIDE

SPAN "A" ARC OFFSETS

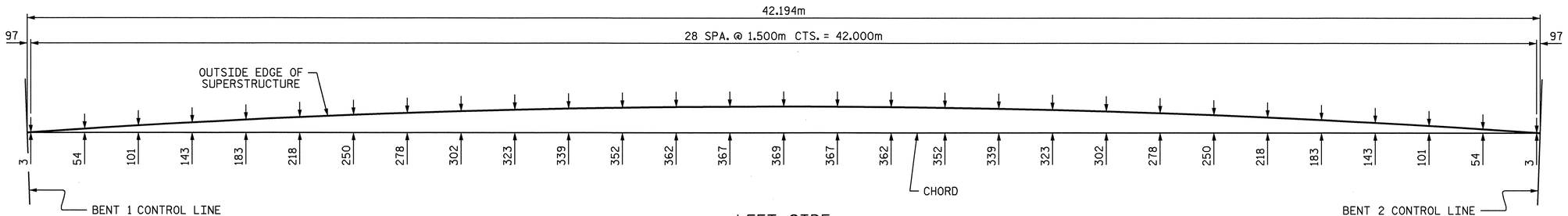

LEFT SIDE

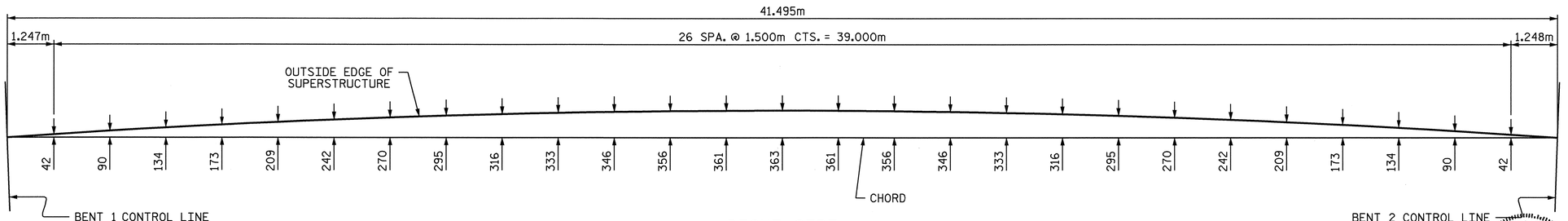

RIGHT SIDE

SPAN "B" ARC OFFSETS

(SPAN "B" SHOWN, SPANS "C" AND "D" SIMILAR)

NORTH CAROLINA PROFESSIONAL SEAL 21638 ENGINEER LAURA E. SUTTON 7/30/08

DRAWN BY : P.C. BREWER DATE : 1/3/08
CHECKED BY : A.S. CALLAWAY DATE : 1/24/08

25-AUG-2008 16:28
r:\structures\glrolaml\str07\pbrewer\Microstation\u2519da_sd_ps_07.dgn
LSUTTON

PROJECT NO. U-2519DA
CUMBERLAND COUNTY
STATION: 14+60.500-RP1A-

SHEET 1 OF 2

STATE OF NORTH CAROLINA
DEPARTMENT OF TRANSPORTATION
RALEIGH

SUPERSTRUCTURE
ARC OFFSETS

REVISIONS						SHEET NO.
NO.	BY:	DATE:	NO.	BY:	DATE:	S-179
1			3			TOTAL SHEETS
2			4			411

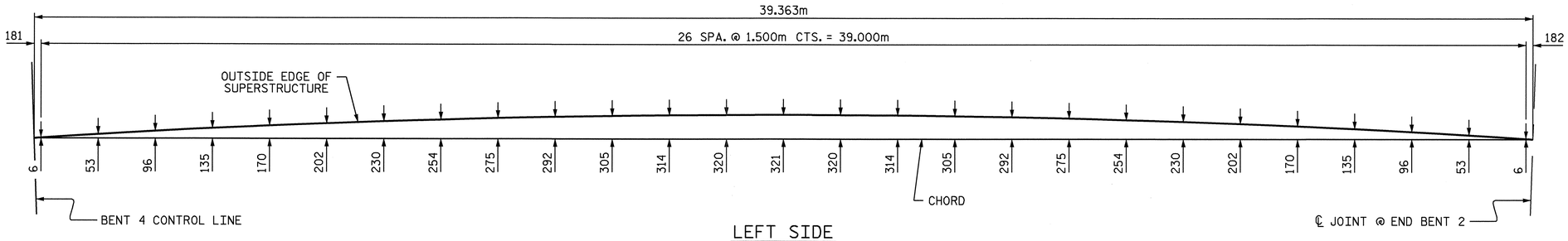

LEFT SIDE

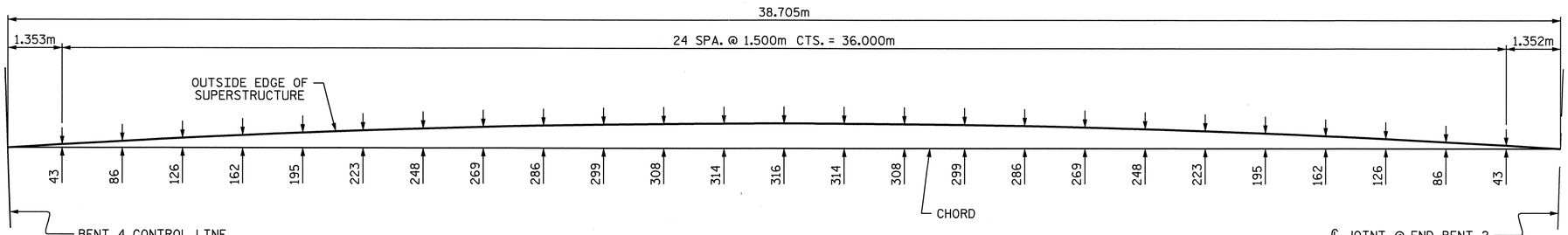

RIGHT SIDE

SPAN "E" ARC OFFSETS

PROJECT NO. U-2519DA

CUMBERLAND COUNTY

STATION: 14+60.500-RP1A-

SHEET 2 OF 2

STATE OF NORTH CAROLINA
DEPARTMENT OF TRANSPORTATION
RALEIGH

SUPERSTRUCTURE
ARC OFFSETS

NORTH CAROLINA PROFESSIONAL SEAL 21638 ENGINEER LAURA E. SUTTON
1/30/08

REVISIONS						SHEET NO.
NO.	BY:	DATE:	NO.	BY:	DATE:	S-180
1			3			TOTAL SHEETS
2			4			411

DRAWN BY : P.C. BREWER DATE : 1/3/08
CHECKED BY : A.S. CALLAWAY DATE : 1/24/08

25-AUG-2008 16:29
r:\structures\glrolaml\str07\pbrewer\Microstation\u2519da_sd_ps_07.dgn
LSUTTON

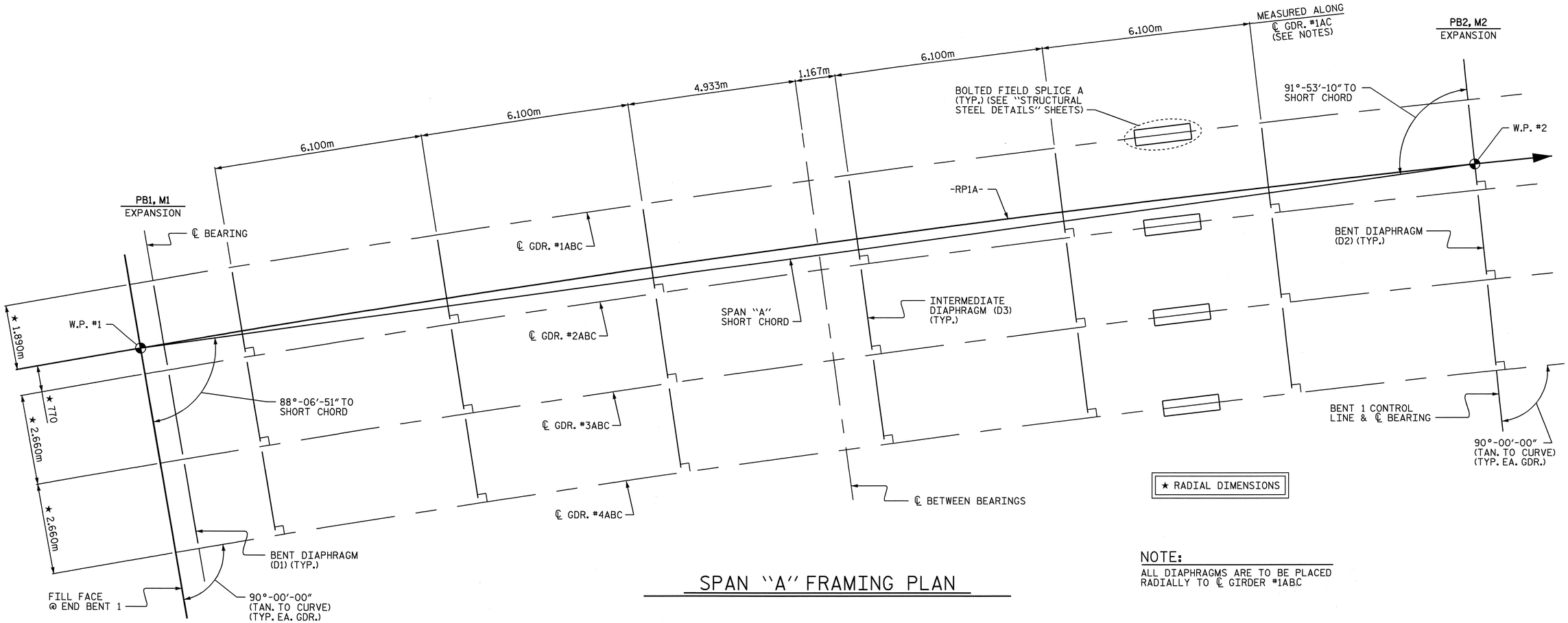

★ RADIAL DIMENSIONS

SPAN "A" FRAMING PLAN

NOTE:
ALL DIAPHRAGMS ARE TO BE PLACED RADIALLY TO ℄ GIRDER #1ABC

PROJECT NO. U-2519DA
CUMBERLAND COUNTY
STATION: 14+60.500-RP1A-

SHEET 1 OF 5

STATE OF NORTH CAROLINA
DEPARTMENT OF TRANSPORTATION
RALEIGH

SUPERSTRUCTURE
FRAMING PLAN
SPAN "A"

REVISIONS						SHEET NO.
NO.	BY:	DATE:	NO.	BY:	DATE:	S-181
1			3			TOTAL SHEETS
2			4			41

NORTH CAROLINA PROFESSIONAL SEAL 21638 ENGINEER LAURA E. SUTTON
7/30/08

DRAWN BY : P.C. BREWER DATE : 1/3/08
CHECKED BY : A.S. CALLAWAY DATE : 1/24/08

25-AUG-2008 14:24
r:\structures\girolaml\str07\pbrewer\Microstation\u2519da_sd_fp_07.dgn
LSUTTON

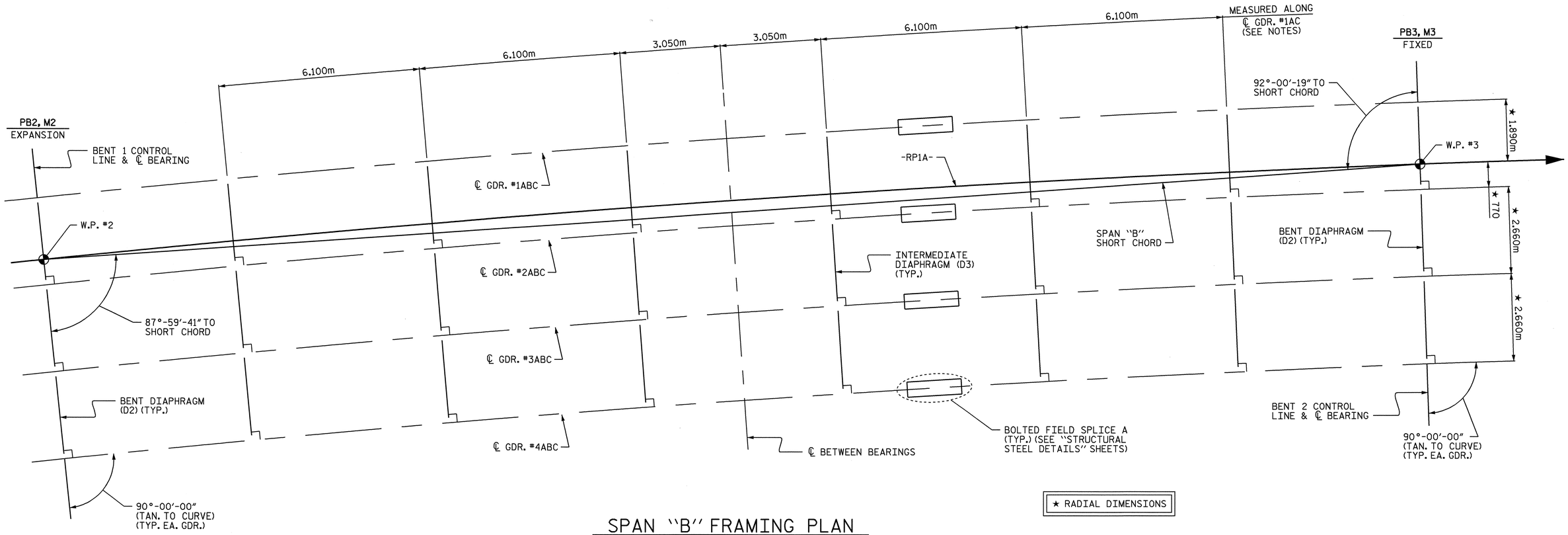

★ RADIAL DIMENSIONS

SPAN "B" FRAMING PLAN

NOTE:

ALL DIAPHRAGMS ARE TO BE PLACED RADIALLY TO ℄ GIRDER #1AC.

PROJECT NO. U-2519DA

CUMBERLAND COUNTY

STATION: 14+60.500-RP1A-

SHEET 2 OF 5

STATE OF NORTH CAROLINA
DEPARTMENT OF TRANSPORTATION
RALEIGH

SUPERSTRUCTURE

FRAMING PLAN

SPAN "B"

NORTH CAROLINA PROFESSIONAL SEAL 21638 ENGINEER LAURA E SUTTON
7/24/08

REVISIONS						SHEET NO.
NO.	BY:	DATE:	NO.	BY:	DATE:	5-182
1			3			TOTAL SHEETS
2			4			411

DRAWN BY : P.C. BREWER DATE : 1/3/08
CHECKED BY : A.S. CALLAWAY DATE : 1/24/08

25-AUG-2008 14:24
r:\structures\girolami\str07\pbrewer\Microstation\u2519da_sd_fp_07.dgn
LSUTTON

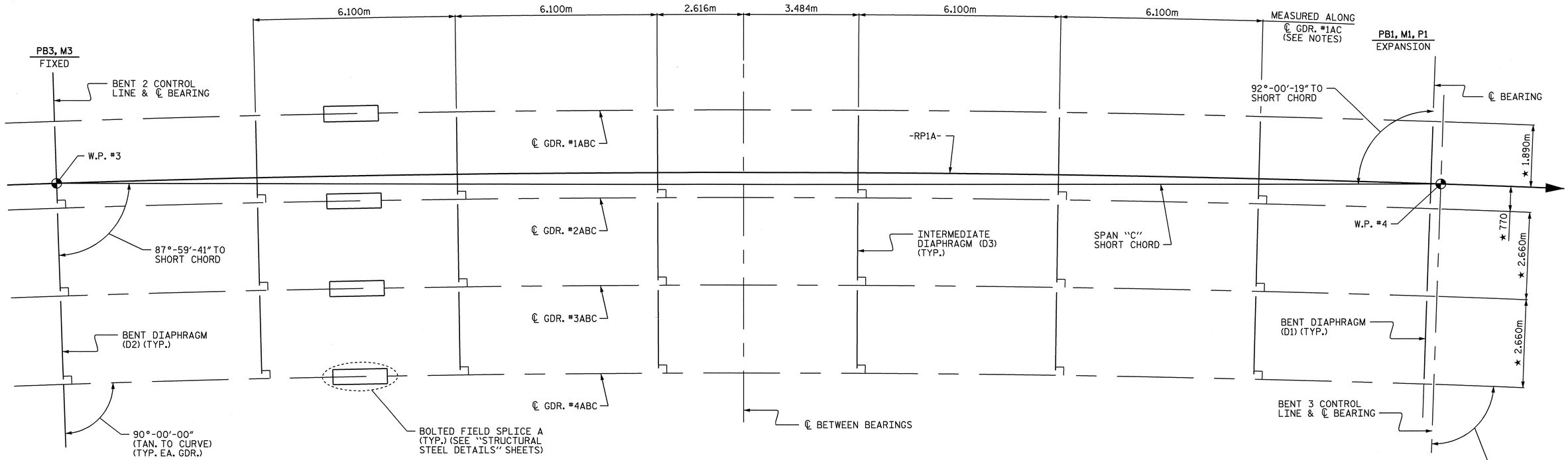

★ RADIAL DIMENSIONS

SPAN "C" FRAMING PLAN

NOTE:

ALL DIAPHRAGMS ARE TO BE PLACED RADIALLY TO ℄ GIRDER #1AC.

PROJECT NO. U-2519DA

CUMBERLAND COUNTY

STATION: 14+60.500-RP1A-

SHEET 3 OF 5

STATE OF NORTH CAROLINA
DEPARTMENT OF TRANSPORTATION
RALEIGH

SUPERSTRUCTURE

FRAMING PLAN

SPAN "C"

NORTH CAROLINA PROFESSIONAL SEAL 21638 ENGINEER LAURA E. SUTTON
7/30/08

REVISIONS						SHEET NO.
NO.	BY:	DATE:	NO.	BY:	DATE:	S-183
1			3			TOTAL SHEETS
2			4			411

DRAWN BY : P.C. BREWER DATE : 1/3/08
CHECKED BY : A.S. CALLAWAY DATE : 1/24/08

25-AUG-2008 14:24
r:\structures\girolaml\str07\pbrewer\Microstation\u2519da_sd_fp_07.dgn
LSUTTON

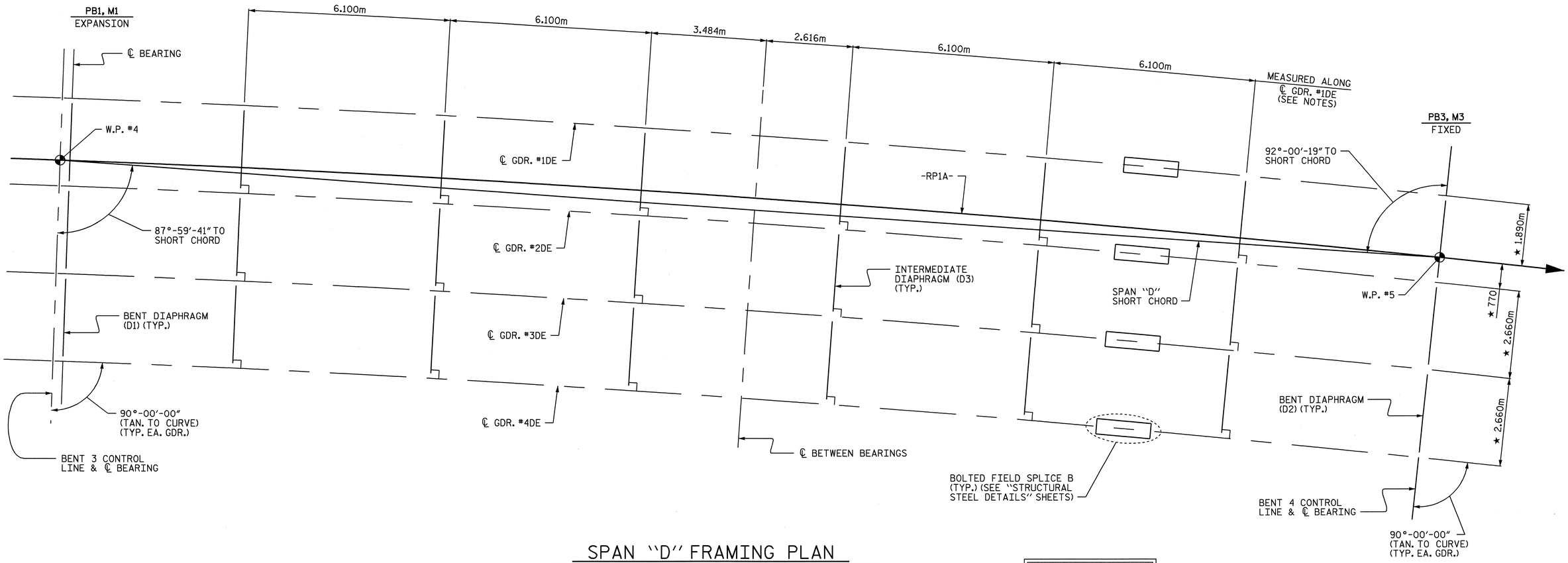

SPAN "D" FRAMING PLAN

★ RADIAL DIMENSIONS

NOTE:
ALL DIAPHRAGMS ARE TO BE PLACED RADIALLY TO ℄ GIRDER #1DE.

PROJECT NO. U-2519DA
CUMBERLAND COUNTY
STATION: 14+60.500-RP1A-

SHEET 4 OF 5

STATE OF NORTH CAROLINA
DEPARTMENT OF TRANSPORTATION
RALEIGH

SUPERSTRUCTURE
FRAMING PLAN
SPAN "D"

NORTH CAROLINA PROFESSIONAL SEAL 21638 ENGINEER LAURA E. SUTTON
9/20/08

REVISIONS						SHEET NO.
NO.	BY:	DATE:	NO.	BY:	DATE:	S-184
1			3			TOTAL SHEETS
2			4			411

DRAWN BY : P.C. BREWER DATE : 1/3/08
CHECKED BY : A.S. CALLAWAY DATE : 1/24/08

25-AUG-2008 14:24
r:\structures\glrolaml\str07\pbrewer\Microstation\u2519da_sd_fp_07.dgn
LSUTTON

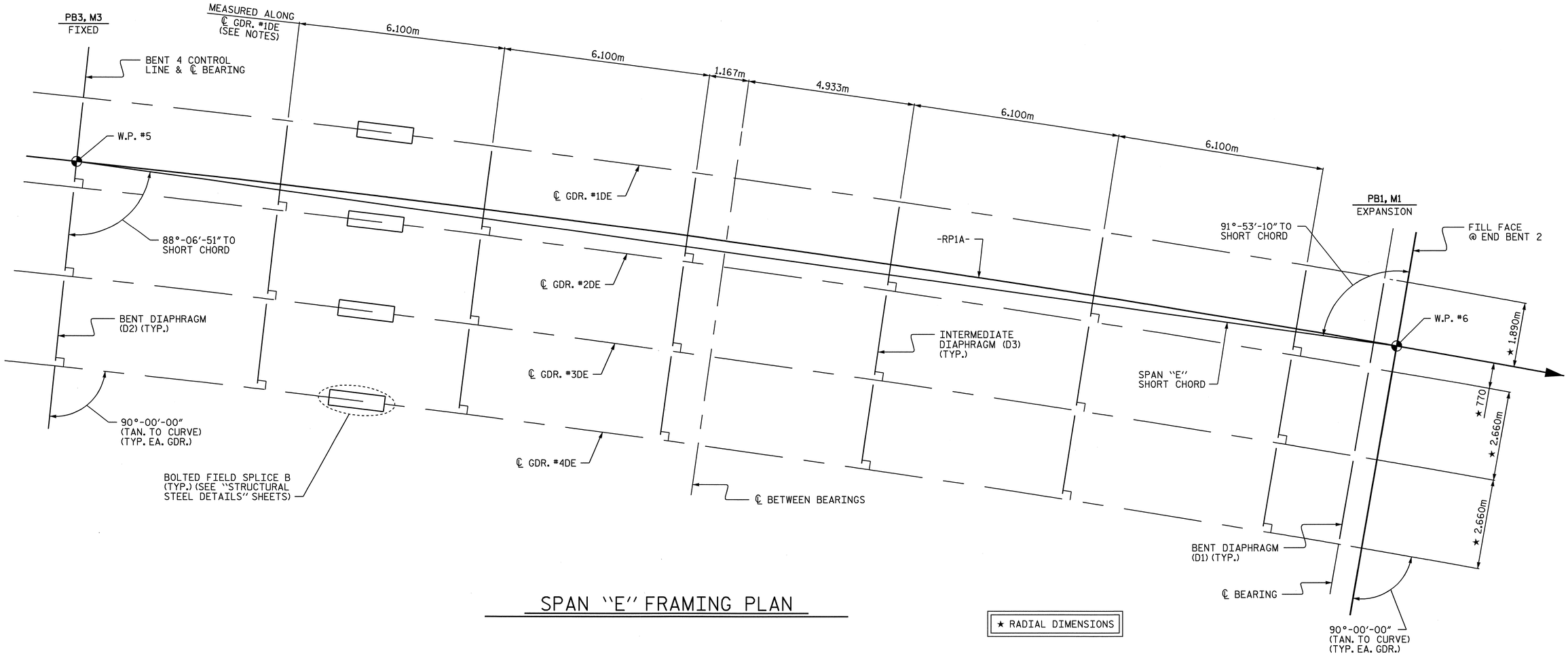

SPAN "E" FRAMING PLAN

★ RADIAL DIMENSIONS

NOTE:

ALL DIAPHRAGMS ARE TO BE PLACED RADIALLY TO ℄ GIRDER #1DE.

PROJECT NO. U-2519DA

CUMBERLAND COUNTY

STATION: 14+60.500-RP1A-

SHEET 5 OF 5

STATE OF NORTH CAROLINA
DEPARTMENT OF TRANSPORTATION
RALEIGH

SUPERSTRUCTURE

FRAMING PLAN

SPAN "E"

NORTH CAROLINA PROFESSIONAL SEAL 21638 ENGINEER LAURA E. SUTTON
9/24/08

REVISIONS						SHEET NO.
NO.	BY:	DATE:	NO.	BY:	DATE:	S-185
1			3			TOTAL SHEETS
2			4			411

DRAWN BY : P.C. BREWER DATE : 1/3/08
CHECKED BY : A.S. CALLAWAY DATE : 1/24/08

25-AUG-2008 14:24
r:\structures\grolaml\str07\pbrewer\Microstation\u2519da_sd_fp_07.dgn
LSUTTON

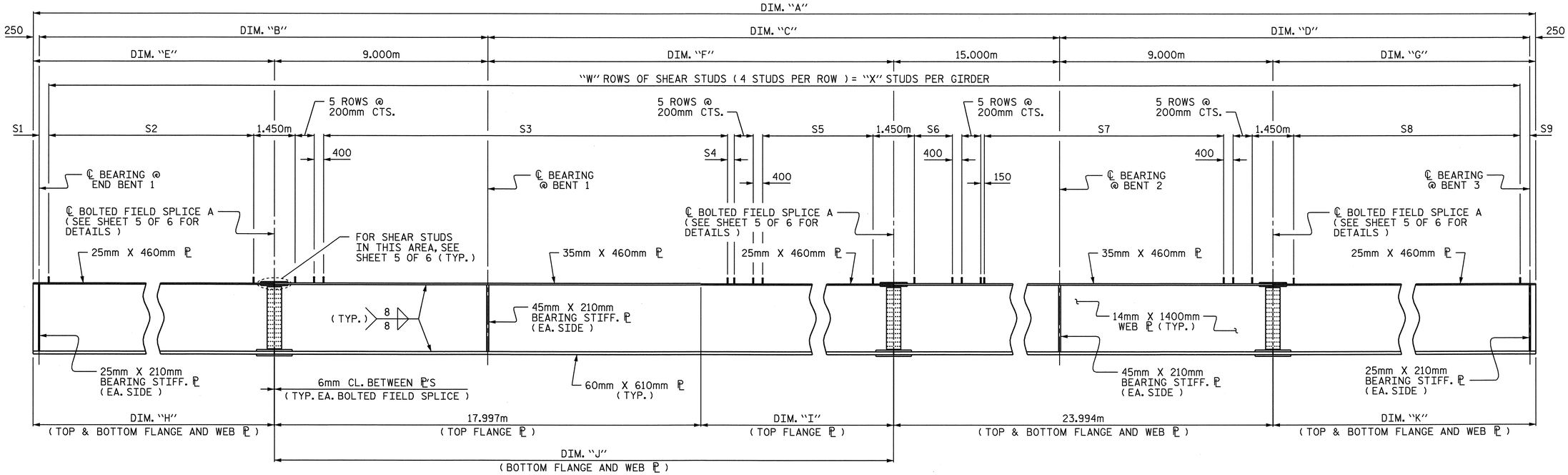

GIRDER ELEVATION

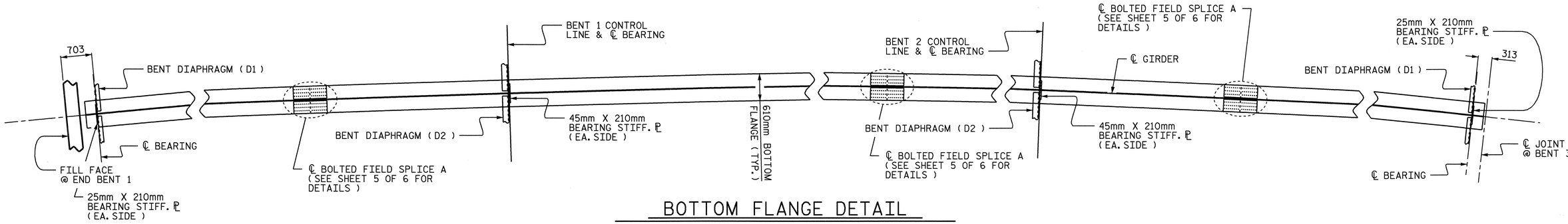

BOTTOM FLANGE DETAIL

SHEAR STUD SPACING FOR SPAN "ABC" GIRDERS

	S1	S2	S3	S4	S5	S6	S7	S8	S9	"W"	"X"
GDR. #1ABC	409	73 ROWS @ 400mm CTS.	44 ROWS @ 400mm CTS.	282	38 ROWS @ 400mm CTS.	5 ROWS @ 400mm CTS.	47 ROWS @ 400mm CTS.	81 ROWS @ 400mm CTS.	107	308	1232
GDR. #2ABC	234	73 ROWS @ 400mm CTS.	45 ROWS @ 400mm CTS.	96	37 ROWS @ 400mm CTS.	5 ROWS @ 400mm CTS.	47 ROWS @ 400mm CTS.	80 ROWS @ 400mm CTS.	321	307	1228
GDR. #3ABC	59	73 ROWS @ 400mm CTS.	44 ROWS @ 400mm CTS.	310	37 ROWS @ 400mm CTS.	5 ROWS @ 400mm CTS.	47 ROWS @ 400mm CTS.	80 ROWS @ 400mm CTS.	135	306	1224
GDR. #4ABC	284	72 ROWS @ 400mm CTS.	43 ROWS @ 400mm CTS.	124	38 ROWS @ 400mm CTS.	6 ROWS @ 400mm CTS.	46 ROWS @ 400mm CTS.	79 ROWS @ 400mm CTS.	349	304	1216

GIRDER DIMENSIONS

	RADIUS	DIM. "A"	DIM. "B"	DIM. "C"	DIM. "D"	DIM. "E"	DIM. "F"	DIM. "G"	DIM. "H"	DIM. "I"	DIM. "J"	DIM. "K"
GDR. #1ABC	601.890m	123.398m	38.934m	42.132m	41.832m	30.184m	27.132m	33.082m	30.181m	18.129m	36.126m	33.079m
GDR. #2ABC	599.230m	122.851m	38.759m	41.946m	41.646m	30.009m	26.946m	32.896m	30.006m	17.943m	35.940m	32.893m
GDR. #3ABC	596.570m	122.304m	38.584m	41.760m	41.460m	29.834m	26.760m	32.710m	29.831m	17.757m	35.754m	32.707m
GDR. #4ABC	593.910m	121.757m	38.409m	41.574m	41.274m	29.659m	26.574m	32.524m	29.656m	17.571m	35.568m	32.521m

NORTH CAROLINA PROFESSIONAL SEAL 21638 ENGINEER LAURA E. SUTTON 10/30/08

DRAWN BY : P.C. BREWER DATE : 1/3/08
CHECKED BY : A.S. CALLAWAY DATE : 1/24/08

30-OCT-2008 07:59
r:\structures\girolami\str07\pbrewer\microstation\u2519da_sd_ss_07.dgn
LSUTTON

PROJECT NO. U-2519DA
CUMBERLAND COUNTY
STATION: 14+60.500-RP1A-

SHEET 1 OF 6

STATE OF NORTH CAROLINA
DEPARTMENT OF TRANSPORTATION
RALEIGH

SUPERSTRUCTURE

STRUCTURAL STEEL DETAILS

(SPAN "ABC")

REVISIONS						SHEET NO.
NO.	BY:	DATE:	NO.	BY:	DATE:	S-186
1			3			TOTAL SHEETS
2			4			411

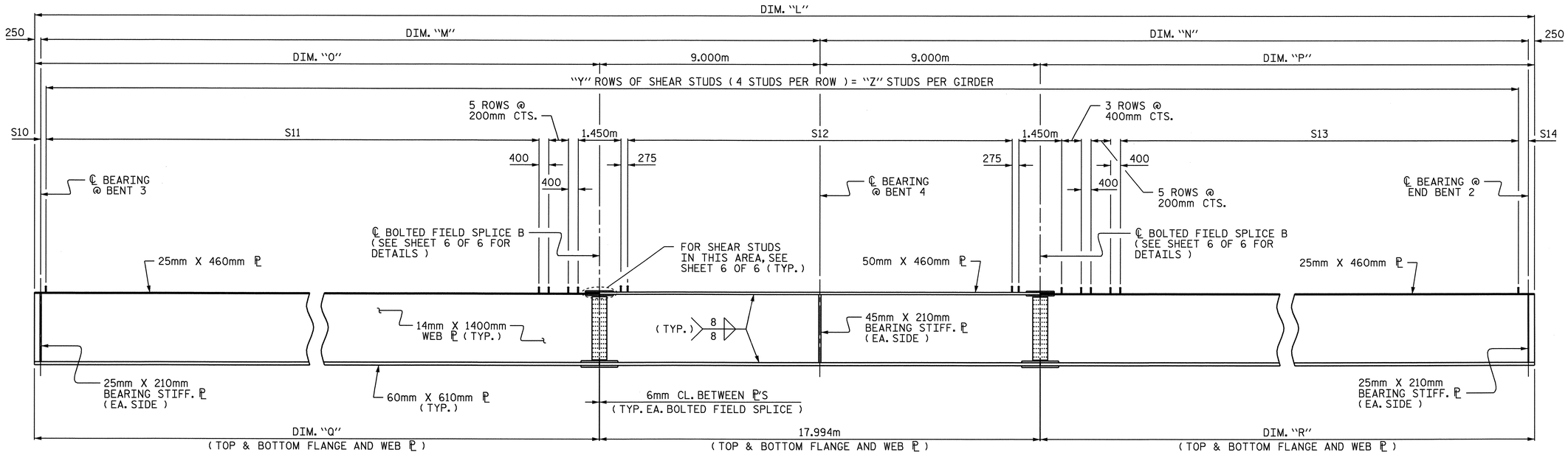

GIRDER ELEVATION

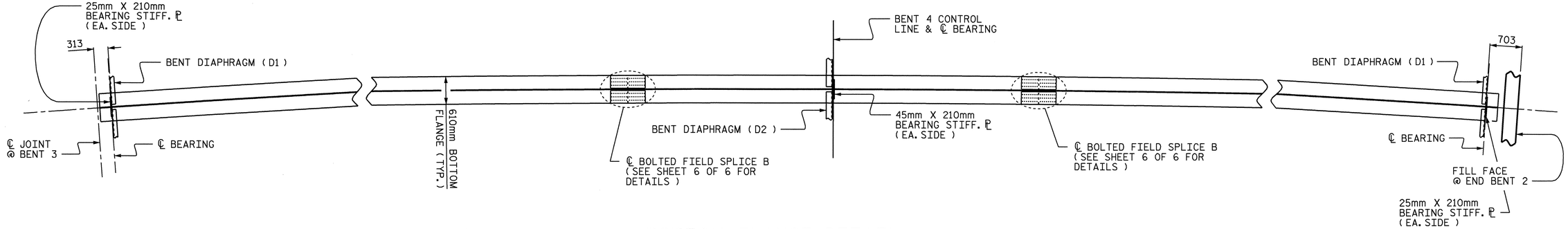

BOTTOM FLANGE DETAIL

GIRDER DIMENSIONS

	RADIUS	DIM. "L"	DIM. "M"	DIM. "N"	DIM. "O"	DIM. "P"	DIM. "Q"	DIM. "R"
GDR. #1DE	601.890m	81.266m	41.832m	38.934m	33.082m	30.184m	33.079m	30.181m
GDR. #2DE	599.230m	80.905m	41.646m	38.759m	32.896m	30.009m	32.893m	30.006m
GDR. #3DE	596.570m	80.544m	41.460m	38.584m	32.710m	29.834m	32.707m	29.831m
GDR. #4DE	593.910m	80.183m	41.274m	38.409m	32.524m	29.659m	32.521m	29.656m

SHEAR STUD SPACING FOR SPAN "DE" GIRDERS

	S10	S11	S12	S13	S14	"Y"	"Z"
GDR. #1DE	107	77 ROWS @ 400mm CTS.	41 ROWS @ 400mm CTS.	67 ROWS @ 400mm CTS.	409	201	804
GDR. #2DE	321	76 ROWS @ 400mm CTS.	41 ROWS @ 400mm CTS.	67 ROWS @ 400mm CTS.	234	200	800
GDR. #3DE	135	76 ROWS @ 400mm CTS.	41 ROWS @ 400mm CTS.	67 ROWS @ 400mm CTS.	59	200	800
GDR. #4DE	349	75 ROWS @ 400mm CTS.	41 ROWS @ 400mm CTS.	66 ROWS @ 400mm CTS.	284	198	792

DRAWN BY : P.C. BREWER DATE : 1/3/08
CHECKED BY : A.S. CALLAWAY DATE : 1/24/08

30-OCT-2008 07:59
r:\structures\glrolaml\str07\pbrewer\microstation\u2519da_sd_ss_07.dgn
LSUTTON

PROJECT NO. U-2519DA
CUMBERLAND COUNTY
STATION: 14+60.500-RP1A-

SHEET 2 OF 6

STATE OF NORTH CAROLINA
DEPARTMENT OF TRANSPORTATION
RALEIGH

SUPERSTRUCTURE

STRUCTURAL STEEL DETAILS

(SPAN "DE")

REVISIONS						SHEET NO.
NO.	BY:	DATE:	NO.	BY:	DATE:	S-187
1			3			TOTAL SHEETS
2			4			411

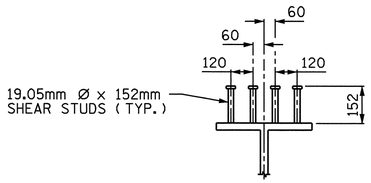

SHEAR STUD DETAILS

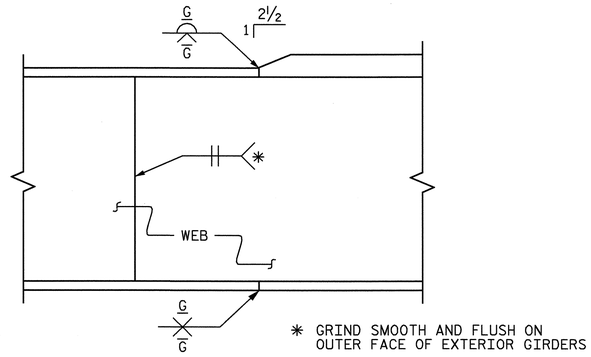

ELEVATION

TYPICAL FLANGE AND WEB BUTT JOINT

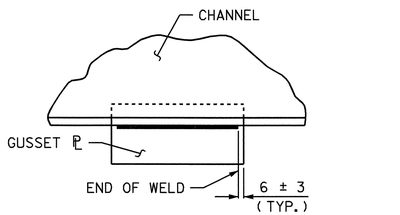

TYPICAL GUSSET PLATE CONNECTION

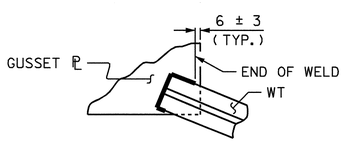

TYPICAL "TEE" TO
GUSSET PLATE CONNECTION

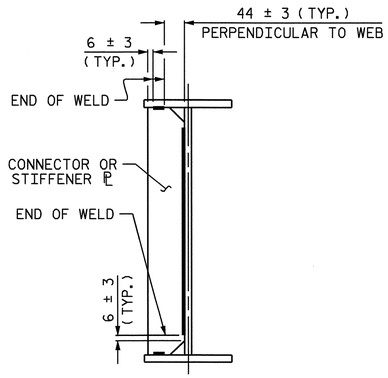

TYPICAL STIFFENER OR
CONNECTOR PLATE CONNECTIONS

WELD TERMINATION DETAILS

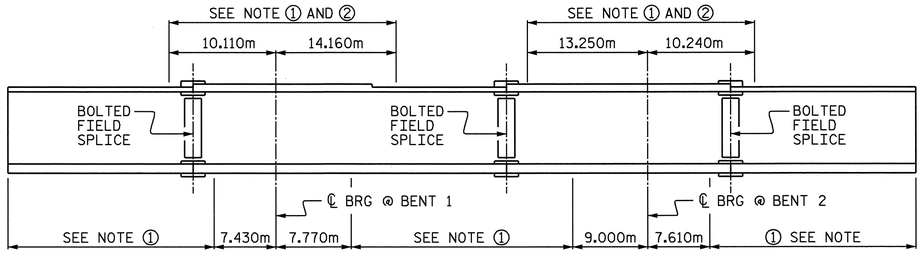

NOTE ① CHARPY V-NOTCH TESTS ARE REQUIRED FOR ALL TOP OR BOTTOM FLANGE PLATES WHICH FALL WITHIN THESE LIMITS, ALL WEB PLATES, AND ALL SPLICE PLATES. IF A PERMITTED SHOP FLANGE SPLICE IS NOT USED, CHARPY V-NOTCH TESTS WILL BE REQUIRED FOR THE ENTIRE FLANGE PLATE. FOR CHARPY V-NOTCH TESTS, SEE ARTICLE 1072-9 OF THE STANDARD SPECIFICATIONS.

NOTE ② NO WELDING OF FORMS OR FALSEWORK TO THE TOP FLANGE WILL BE PERMITTED IN THIS REGION.

CHARPY V-NOTCH TESTS FOR SPAN "ABC" CONTINUOUS PLATE GIRDERS

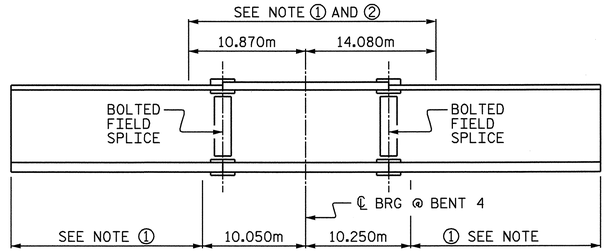

NOTE ① CHARPY V-NOTCH TESTS ARE REQUIRED FOR ALL TOP OR BOTTOM FLANGE PLATES WHICH FALL WITHIN THESE LIMITS, ALL WEB PLATES, AND ALL SPLICE PLATES. IF A PERMITTED SHOP FLANGE SPLICE IS NOT USED, CHARPY V-NOTCH TESTS WILL BE REQUIRED FOR THE ENTIRE FLANGE PLATE. FOR CHARPY V-NOTCH TESTS, SEE ARTICLE 1072-9 OF THE STANDARD SPECIFICATIONS.

NOTE ② NO WELDING OF FORMS OR FALSEWORK TO THE TOP FLANGE WILL BE PERMITTED IN THIS REGION.

CHARPY V-NOTCH TESTS FOR SPAN "DE" CONTINUOUS PLATE GIRDERS

PROJECT NO. U-2519DA

CUMBERLAND COUNTY

STATION: 14+60.500-RP1A-

SHEET 3 OF 6

STATE OF NORTH CAROLINA
DEPARTMENT OF TRANSPORTATION
RALEIGH

SUPERSTRUCTURE

STRUCTURAL STEEL DETAILS

REVISIONS						SHEET NO.
NO.	BY:	DATE:	NO.	BY:	DATE:	S-188
1			3			TOTAL SHEETS
2			4			411

NORTH CAROLINA PROFESSIONAL SEAL 21638 ENGINEER LAURA E. SUTTON 4/30/08

DRAWN BY : P.C. BREWER DATE : 1/3/08
CHECKED BY : A.S. CALLAWAY DATE : 1/24/08

30-SEP-2008 07:26
p:\structures\glrolaml\str07\pbrewer\microstation\u2519da_sd_ss_07.dgn
pbrewer

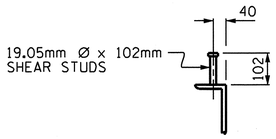

SHEAR STUD DETAILS

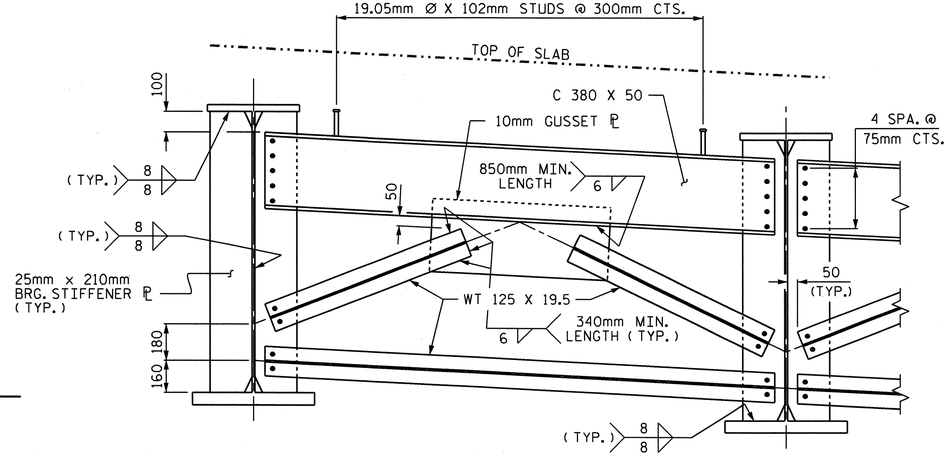

BENT DIAPHRAGM (D1)

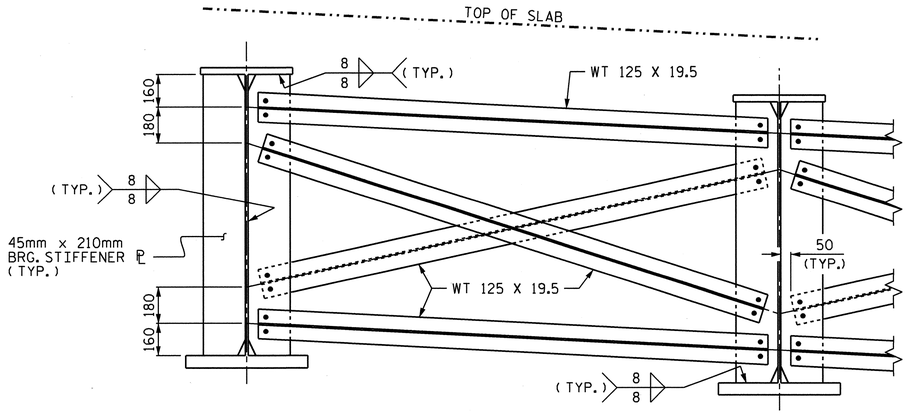

BENT DIAPHRAGM (D2)

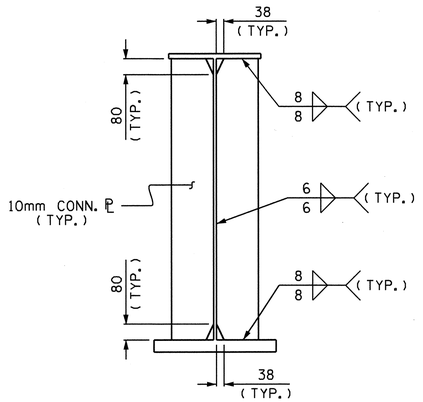

CONNECTOR PLATE

(AT INTERMEDIATE DIAPHRAGMS)

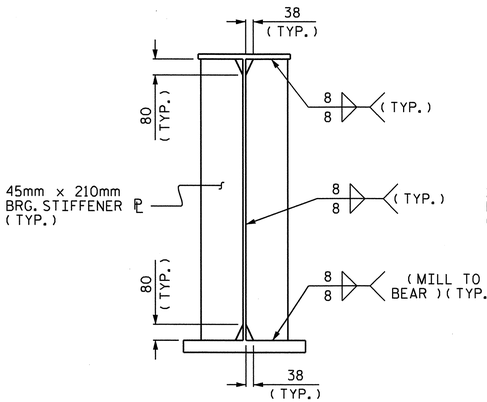

BEARING STIFFENER

(AT BENTS 1, 2, AND 4)

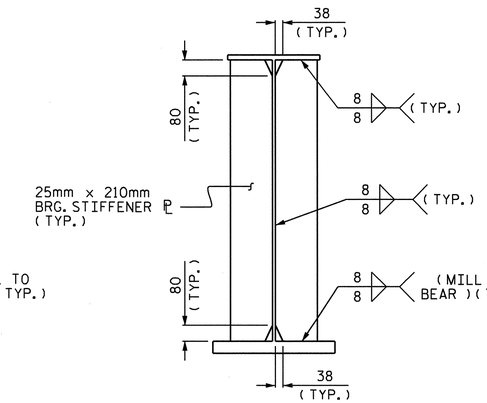

BEARING STIFFENER

(AT END BENTS AND BENT 3)

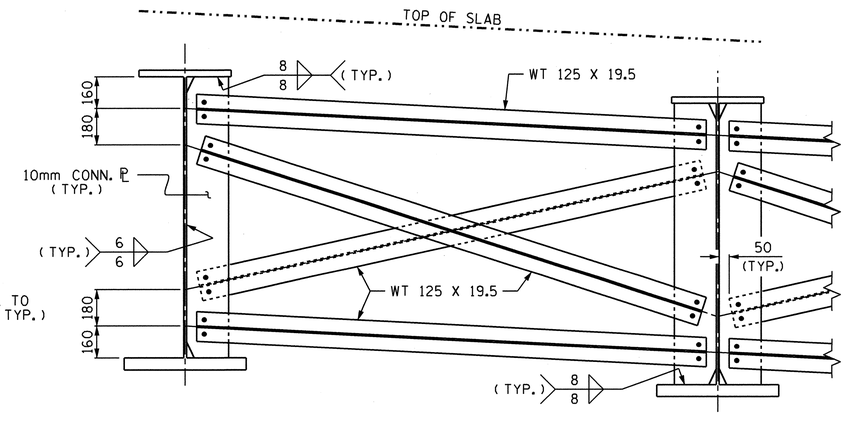

INTERMEDIATE DIAPHRAGM (D3)

NOTES:

ALL STRUCTURAL STEEL SHALL BE AASHTO M270 GRADE 345W AND PAINTED IN ACCORDANCE WITH SYSTEM 4 OF ARTICLE 442-7 OF THE STANDARD SPECIFICATIONS UNLESS OTHERWISE NOTED ON THE PLANS.

ALL DIMENSIONS SHOWN ARE HORIZONTAL OR VERTICAL, UNLESS OTHERWISE NOTED.

ALL FIELD CONNECTIONS TO BE 22.23mm DIA. HIGH STRENGTH BOLTS UNLESS OTHERWISE NOTED. SEE SPECIAL PROVISIONS FOR HIGH STRENGTH BOLTS.

BEARING STIFFENERS ARE TO BE PLACED NORMAL TO THE WEB OF THE GIRDER AND SHALL BE PLUMB.

BEARING STIFFENER MAY REQUIRE COPING IF WIDER THAN BOTTOM FLANGE TO AVOID INTERFERENCE WITH THE ANCHOR BOLT.

HEAT CURVING IS ALLOWED. CAMBER DISSIPATION DUE TO HEAT CURVING IS ZERO FOR ALL GIRDERS.

FOR SHIPPING OF STEEL STRUCTURE MEMBERS, SEE SPECIAL PROVISIONS.

SHOP SPLICES ARE PERMITTED TO LIMIT THE MAXIMUM REQUIRED FLANGE PIECE LENGTHS TO 18 METERS AND WEB PIECE LENGTHS TO 14 METERS. PERMITTED FLANGE AND WEB SHOP SPLICES SHALL NOT BE LOCATED WITHIN 4.5 METERS OF MAXIMUM DEAD LOAD DEFLECTION (NOR WITHIN 4.5 METERS OF INTERMEDIATE BEARINGS OF CONTINUOUS UNITS). KEEP 600mm MINIMUM BETWEEN WEB AND FLANGE SHOP SPLICES. KEEP 150mm MINIMUM BETWEEN CONNECTOR PLATE OR TRANSVERSE STIFFENER WELDS AND WEB OR FLANGE SHOP SPLICES.

STUDS ON GIRDERS MAY BE SHIFTED UP TO 25mm IF NECESSARY TO CLEAR FLANGE SPLICE WELD.

END OF GIRDERS SHALL BE PLUMB.

TENSION ON THE AASHTO M164 BOLTS SHALL BE CALIBRATED USING DIRECT TENSION INDICATOR WASHERS. FOR DIRECT TENSION INDICATORS, SEE SPECIAL PROVISIONS.

NORTH CAROLINA PROFESSIONAL SEAL 16301 ENGINEER TUNG FONG
3/15/11

PROJECT NO. U-2519DA
CUMBERLAND COUNTY
STATION: 14+60.500-RP1A-

SHEET 4 OF 6

STATE OF NORTH CAROLINA
DEPARTMENT OF TRANSPORTATION
RALEIGH

SUPERSTRUCTURE
STRUCTURAL STEEL DETAILS

REVISIONS						SHEET NO.
NO.	BY:	DATE:	NO.	BY:	DATE:	S-189
1			3			TOTAL SHEETS
2			4			411

DRAWN BY : P.C. BREWER DATE : 1/3/08
CHECKED BY : A.S. CALLAWAY DATE : 1/24/08

15-MAR-2011 16:00
K:\TIPProjects-U\U2519da\Structures\giralami\str07\pbrewer\Microstation\u2519da_sd_ss_07.dgn
tfang

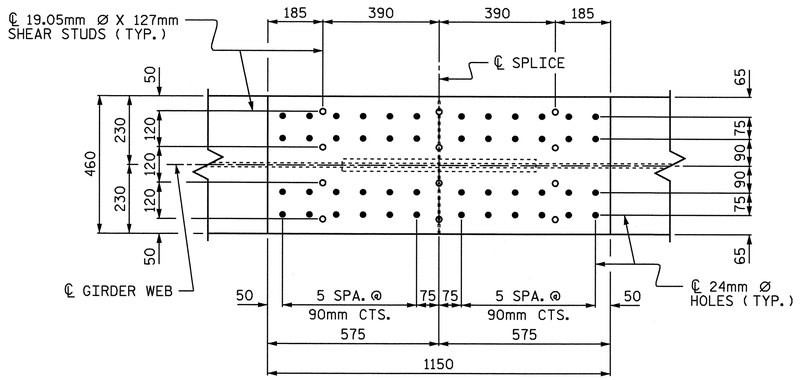

PLAN (TOP OF TOP FLANGE)

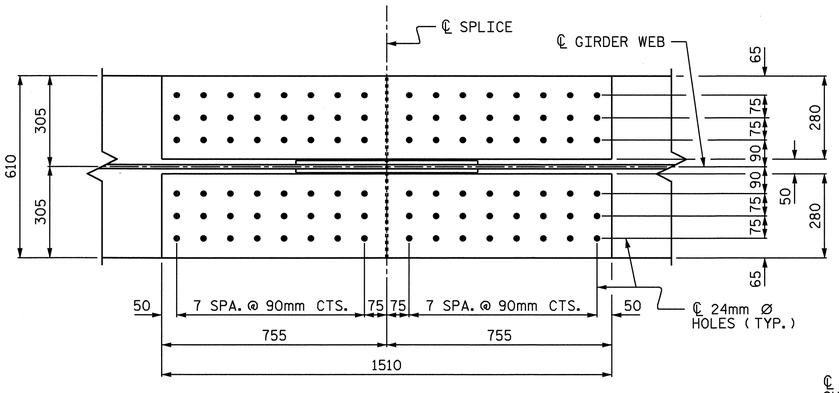

PLAN (TOP OF BOTTOM FLANGE)

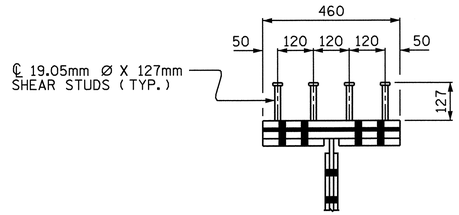

SHEAR STUD DETAIL FOR TOP FLANGE SPLICE PLATE

SHEAR STUDS ARE TO BE SHOP WELDED ON TOP OF PLATE BEFORE FIELD ASSEMBLY.

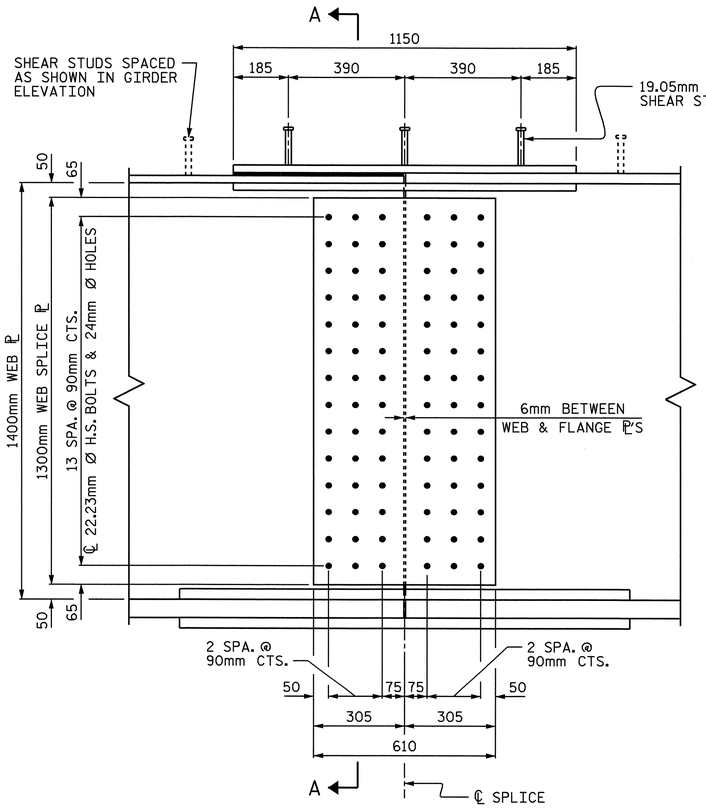

ELEVATION

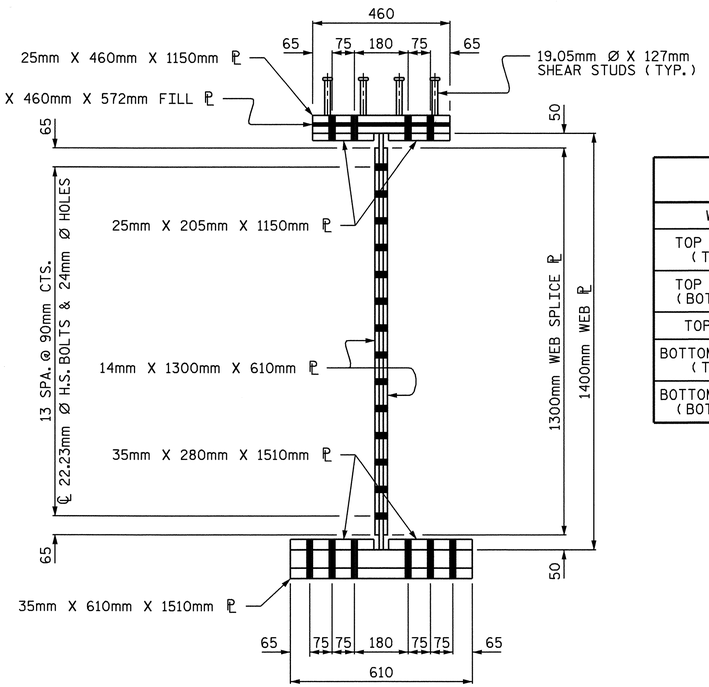

SECTION A-A

DESCRIPTION	SIZE	NO. REQ'D FOR ONE FIELD SPLICE	TOTAL REQ'D
WEB SPLICE ℄	14mm X 1300mm X 610mm	2	24
TOP FLANGE SPLICE ℄ (TOP OF FLANGE)	25mm X 460mm X 1150mm	1	12
TOP FLANGE SPLICE ℄ (BOTTOM OF FLANGE)	25mm X 205mm X 1150mm	2	24
TOP FLANGE FILL ℄	10mm X 460mm X 572mm	1	12
BOTTOM FLANGE SPLICE ℄ (TOP OF FLANGE)	35mm X 280mm X 1510mm	2	24
BOTTOM FLANGE SPLICE ℄ (BOTTOM OF FLANGE)	35mm X 610mm X 1510mm	1	12

BOLTED FIELD SPLICE A DETAILS

PROJECT NO. U-2519DA

CUMBERLAND COUNTY

STATION: 14+60.500-RP1A-

SHEET 5 OF 6

STATE OF NORTH CAROLINA
DEPARTMENT OF TRANSPORTATION
RALEIGH

SUPERSTRUCTURE

STRUCTURAL STEEL DETAILS

NORTH CAROLINA PROFESSIONAL SEAL 21638 ENGINEER LAURA E. SUTTON
9/30/08

REVISIONS						SHEET NO.
NO.	BY:	DATE:	NO.	BY:	DATE:	S-190
1			3			TOTAL SHEETS
2			4			411

DRAWN BY : P.C. BREWER DATE : 1/3/08
CHECKED BY : A.S. CALLAWAY DATE : 1/24/08

30-SEP-2008 08:19
r:\structures\glrolaml\str07\pbrewer\Microstation\u2519da_sd_ss_07.dgn
lsutton

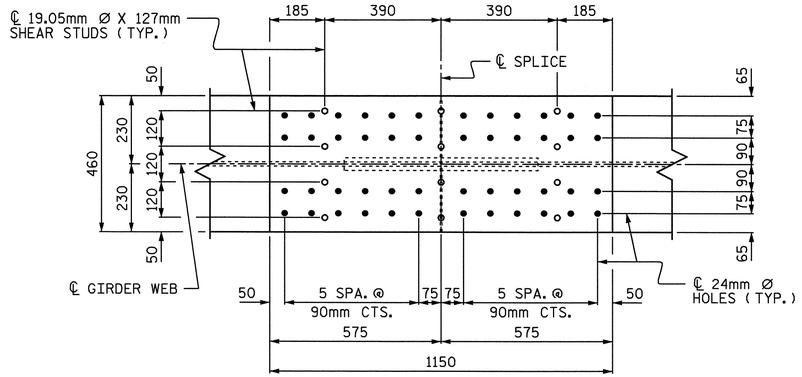

PLAN (TOP OF TOP FLANGE)

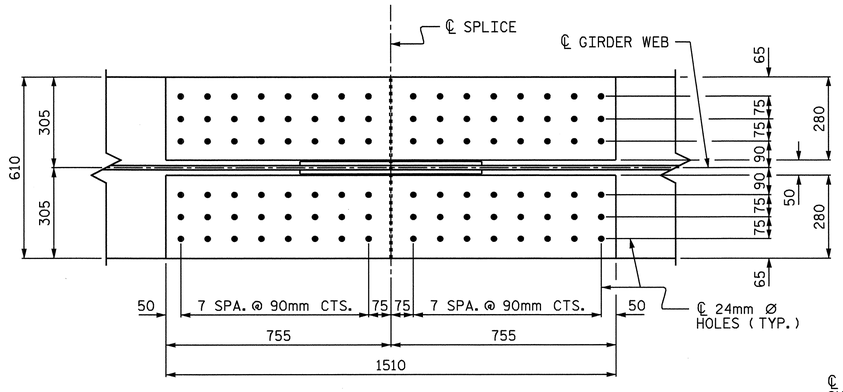

PLAN (TOP OF BOTTOM FLANGE)

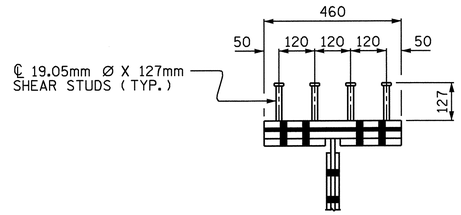

SHEAR STUD DETAIL FOR TOP FLANGE SPLICE PLATE

SHEAR STUDS ARE TO BE SHOP WELDED ON TOP OF PLATE BEFORE FIELD ASSEMBLY.

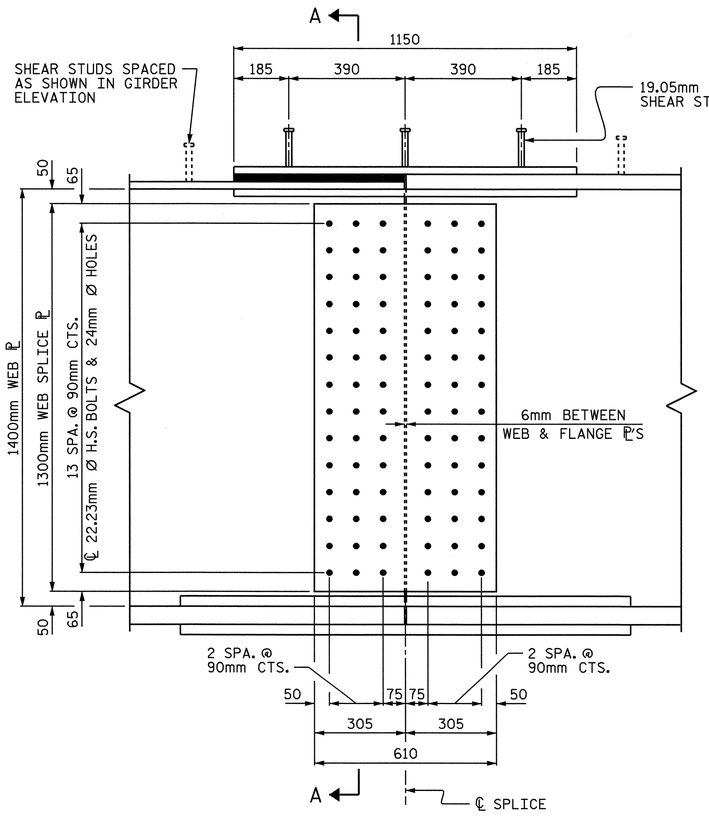

ELEVATION

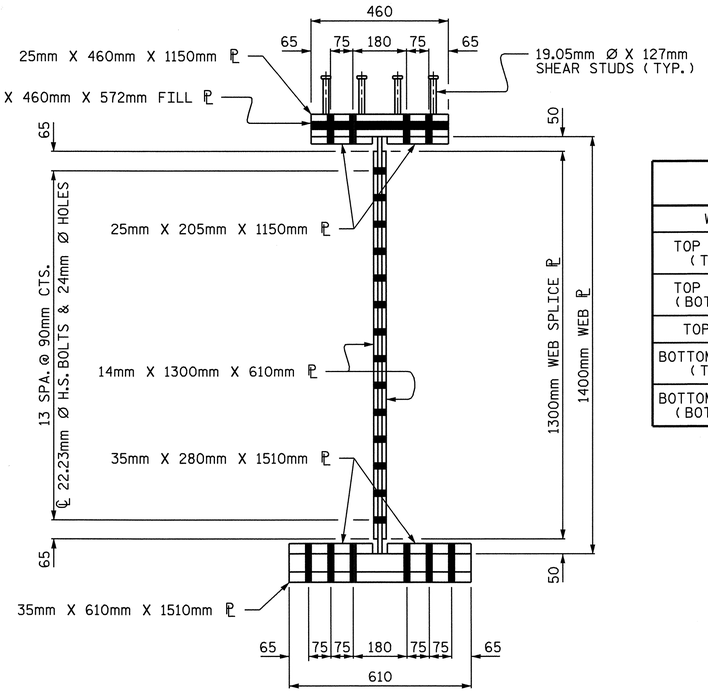

SECTION A-A

DESCRIPTION	SIZE	NO. REQ'D FOR ONE FIELD SPLICE	TOTAL REQ'D
WEB SPLICE ℄	14mm X 1300mm X 610mm	2	16
TOP FLANGE SPLICE ℄ (TOP OF FLANGE)	25mm X 460mm X 1150mm	1	8
TOP FLANGE SPLICE ℄ (BOTTOM OF FLANGE)	25mm X 205mm X 1150mm	2	16
TOP FLANGE FILL ℄	25mm X 460mm X 572mm	1	8
BOTTOM FLANGE SPLICE ℄ (TOP OF FLANGE)	35mm X 280mm X 1510mm	2	16
BOTTOM FLANGE SPLICE ℄ (BOTTOM OF FLANGE)	35mm X 610mm X 1510mm	1	8

BOLTED FIELD SPLICE B DETAILS

PROJECT NO. U-2519DA

CUMBERLAND COUNTY

STATION: 14+60.500-RP1A-

SHEET 6 OF 6

STATE OF NORTH CAROLINA
DEPARTMENT OF TRANSPORTATION
RALEIGH

SUPERSTRUCTURE

STRUCTURAL STEEL DETAILS

NORTH CAROLINA PROFESSIONAL SEAL 21638 ENGINEER LAURA E. SUTTON 9/30/08

REVISIONS						SHEET NO.
NO.	BY:	DATE:	NO.	BY:	DATE:	S-191
1			3			TOTAL SHEETS
2			4			411

DRAWN BY : P.C. BREWER DATE : 1/3/08
CHECKED BY : A.S. CALLAWAY DATE : 1/24/08

30-SEP-2008 08:19
ri\structures\girolaml\str07\pbrewer\Microstation\u2519da_sd_ss_07.dgn
lsutton

DEAD LOAD DEFLECTION TABLE FOR GIRDERS

	SPAN "A"																				
	GIRDER #1ABC																				
TWENTIETH POINTS	BRG.	0.05	0.10	0.15	0.20	0.25	0.30	0.35	0.40	0.45	0.50	0.55	0.60	0.65	0.70	0.75	0.80	0.85	0.90	0.95	BRG.
DEFLECTION DUE TO WEIGHT OF GIRDER	0	0.004	0.008	0.011	0.014	0.016	0.018	0.020	0.021	0.021	0.021	0.020	0.018	0.016	0.014	0.011	0.009	0.006	0.004	0.002	0
DEFLECTION DUE TO WEIGHT OF SLAB *	0	0.010	0.020	0.029	0.037	0.044	0.050	0.053	0.055	0.055	0.054	0.051	0.048	0.043	0.036	0.030	0.023	0.016	0.010	0.005	0
DEFLECTION DUE TO WEIGHT OF BARRIER RAIL	0	0.001	0.002	0.003	0.004	0.005	0.005	0.005	0.005	0.006	0.006	0.006	0.005	0.005	0.004	0.003	0.002	0.002	0.001	0.000	0
TOTAL DEAD LOAD DEFLECTION	0	0.015	0.030	0.043	0.055	0.065	0.073	0.078	0.081	0.082	0.081	0.077	0.071	0.064	0.054	0.044	0.034	0.024	0.015	0.007	0
VERTICAL CURVE ORDINATE	0	0.000	0.000	0.000	0.000	0.000	0.000	0.000	0.000	0.000	0.000	0.000	0.000	0.000	0.000	0.000	0.000	0.000	0.000	0.000	0
ORDINATE DUE TO SUPERELEVATION	0	0.000	0.000	0.000	0.000	0.000	0.000	0.000	0.000	0.000	0.000	0.000	0.000	0.000	0.000	0.000	0.000	0.000	0.000	0.000	0
CAMBER DISSIPATION DUE TO HEAT CURVING ▲	0	0.000	0.000	0.000	0.000	0.000	0.000	0.000	0.000	0.000	0.000	0.000	0.000	0.000	0.000	0.000	0.000	0.000	0.000	0.000	0
REQUIRED CAMBER	0	15	30	43	55	65	73	78	81	82	81	77	71	64	54	44	34	24	15	7	0
	GIRDER #2ABC																				
TWENTIETH POINTS	BRG.	0.05	0.10	0.15	0.20	0.25	0.30	0.35	0.40	0.45	0.50	0.55	0.60	0.65	0.70	0.75	0.80	0.85	0.90	0.95	BRG.
DEFLECTION DUE TO WEIGHT OF GIRDER	0	0.004	0.007	0.010	0.013	0.015	0.017	0.019	0.019	0.020	0.019	0.018	0.017	0.015	0.013	0.010	0.008	0.005	0.003	0.002	0
DEFLECTION DUE TO WEIGHT OF SLAB *	0	0.009	0.019	0.027	0.034	0.041	0.045	0.049	0.051	0.051	0.051	0.048	0.044	0.040	0.034	0.028	0.021	0.015	0.009	0.004	0
DEFLECTION DUE TO WEIGHT OF BARRIER RAIL	0	0.001	0.002	0.003	0.004	0.004	0.005	0.005	0.005	0.005	0.005	0.005	0.005	0.004	0.003	0.003	0.002	0.002	0.001	0.000	0
TOTAL DEAD LOAD DEFLECTION	0	0.014	0.028	0.040	0.051	0.060	0.067	0.073	0.075	0.076	0.075	0.071	0.066	0.059	0.050	0.041	0.031	0.022	0.013	0.006	0
VERTICAL CURVE ORDINATE	0	0.000	0.000	0.000	0.000	0.000	0.000	0.000	0.000	0.000	0.000	0.000	0.000	0.000	0.000	0.000	0.000	0.000	0.000	0.000	0
ORDINATE DUE TO SUPERELEVATION	0	0.000	0.000	0.000	0.000	0.000	0.000	0.000	0.000	0.000	0.000	0.000	0.000	0.000	0.000	0.000	0.000	0.000	0.000	0.000	0
CAMBER DISSIPATION DUE TO HEAT CURVING ▲	0	0.000	0.000	0.000	0.000	0.000	0.000	0.000	0.000	0.000	0.000	0.000	0.000	0.000	0.000	0.000	0.000	0.000	0.000	0.000	0
REQUIRED CAMBER	0	14	28	40	51	60	67	73	75	76	75	71	66	59	50	41	31	22	13	6	0
	GIRDER #3ABC																				
TWENTIETH POINTS	BRG.	0.05	0.10	0.15	0.20	0.25	0.30	0.35	0.40	0.45	0.50	0.55	0.60	0.65	0.70	0.75	0.80	0.85	0.90	0.95	BRG.
DEFLECTION DUE TO WEIGHT OF GIRDER	0	0.003	0.007	0.010	0.012	0.014	0.016	0.017	0.018	0.018	0.018	0.017	0.016	0.014	0.012	0.010	0.007	0.005	0.003	0.002	0
DEFLECTION DUE TO WEIGHT OF SLAB *	0	0.009	0.017	0.025	0.032	0.038	0.042	0.045	0.047	0.047	0.046	0.044	0.041	0.036	0.031	0.025	0.020	0.013	0.008	0.004	0
DEFLECTION DUE TO WEIGHT OF BARRIER RAIL	0	0.001	0.002	0.002	0.003	0.004	0.004	0.005	0.005	0.005	0.005	0.005	0.004	0.004	0.003	0.003	0.002	0.002	0.001	0.000	0
TOTAL DEAD LOAD DEFLECTION	0	0.013	0.026	0.037	0.047	0.055	0.062	0.067	0.070	0.070	0.069	0.066	0.061	0.054	0.046	0.038	0.029	0.020	0.012	0.006	0
VERTICAL CURVE ORDINATE	0	0.000	0.000	0.000	0.000	0.000	0.000	0.000	0.000	0.000	0.000	0.000	0.000	0.000	0.000	0.000	0.000	0.000	0.000	0.000	0
ORDINATE DUE TO SUPERELEVATION	0	0.000	0.000	0.000	0.000	0.000	0.000	0.000	0.000	0.000	0.000	0.000	0.000	0.000	0.000	0.000	0.000	0.000	0.000	0.000	0
CAMBER DISSIPATION DUE TO HEAT CURVING ▲	0	0.000	0.000	0.000	0.000	0.000	0.000	0.000	0.000	0.000	0.000	0.000	0.000	0.000	0.000	0.000	0.000	0.000	0.000	0.000	0
REQUIRED CAMBER	0	13	26	37	47	56	62	67	70	70	69	66	61	54	46	38	29	20	12	6	0
	GIRDER #4ABC																				
TWENTIETH POINTS	BRG.	0.05	0.10	0.15	0.20	0.25	0.30	0.35	0.40	0.45	0.50	0.55	0.60	0.65	0.70	0.75	0.80	0.85	0.90	0.95	BRG.
DEFLECTION DUE TO WEIGHT OF GIRDER	0	0.003	0.006	0.009	0.011	0.013	0.015	0.016	0.017	0.017	0.016	0.016	0.015	0.013	0.011	0.009	0.007	0.005	0.003	0.001	0
DEFLECTION DUE TO WEIGHT OF SLAB *	0	0.008	0.016	0.023	0.029	0.034	0.038	0.041	0.042	0.043	0.042	0.040	0.037	0.033	0.028	0.023	0.017	0.012	0.007	0.004	0
DEFLECTION DUE TO WEIGHT OF BARRIER RAIL	0	0.001	0.002	0.002	0.003	0.004	0.004	0.005	0.005	0.005	0.005	0.004	0.004	0.004	0.003	0.002	0.002	0.001	0.001	0.000	0
TOTAL DEAD LOAD DEFLECTION	0	0.012	0.024	0.034	0.043	0.051	0.057	0.062	0.064	0.065	0.063	0.060	0.056	0.050	0.042	0.034	0.026	0.018	0.011	0.005	0
VERTICAL CURVE ORDINATE	0	0.000	0.000	0.000	0.000	0.000	0.000	0.000	0.000	0.000	0.000	0.000	0.000	0.000	0.000	0.000	0.000	0.000	0.000	0.000	0
ORDINATE DUE TO SUPERELEVATION	0	0.000	0.000	0.000	0.000	0.000	0.000	0.000	0.000	0.000	0.000	0.000	0.000	0.000	0.000	0.000	0.000	0.000	0.000	0.000	0
CAMBER DISSIPATION DUE TO HEAT CURVING ▲	0	0.000	0.000	0.000	0.000	0.000	0.000	0.000	0.000	0.000	0.000	0.000	0.000	0.000	0.000	0.000	0.000	0.000	0.000	0.000	0
REQUIRED CAMBER	0	12	24	34	43	51	57	62	64	65	63	60	56	50	42	34	26	18	11	5	0

* INCLUDES SLAB, BUILDUPS & STAY-IN-PLACE FORMS.
ALL VALUES ARE SHOWN IN METERS, EXCEPT "FINAL CAMBER" WHICH IS SHOWN IN MILLIMETERS.

▲ HEAT CURVING IS ALLOWED. CAMBER DISSIPATION DUE TO HEAT CURVING IS ZERO FOR ALL GIRDERS.

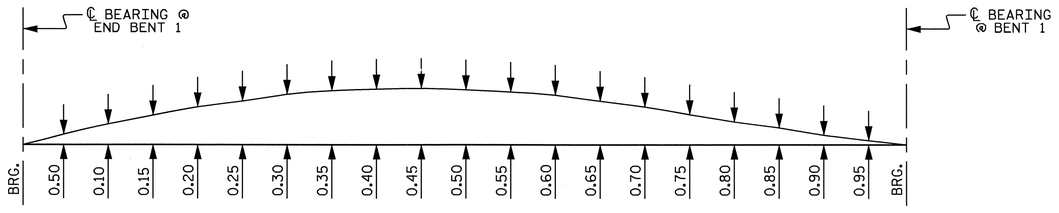

SCHEMATIC CAMBER ORDINATES

SLOPE FOR THE ZERO CAMBER BASE LINE VARIES

PROJECT NO. U-2519DA

CUMBERLAND COUNTY

STATION: 14+60.500-RP1A-

SHEET 1 OF 5

STATE OF NORTH CAROLINA
DEPARTMENT OF TRANSPORTATION
RALEIGH

SUPERSTRUCTURE

DEAD LOAD DEFLECTIONS

SPAN "A"

NORTH CAROLINA PROFESSIONAL SEAL 21638 ENGINEER LAURA E. SUTTON
9/30/08

REVISIONS						SHEET NO.
NO.	BY:	DATE:	NO.	BY:	DATE:	S-192
1			3			TOTAL SHEETS
2			4			411

DRAWN BY : P.C. BREWER DATE : 1/3/08
CHECKED BY : A.S. CALLAWAY DATE : 1/24/08

30-SEP-2008 08:18
r:\structures\glrolaml\str07\pbrewer\Microstation\u2519da_sd_dl_07.dgn
lsutton

DEAD LOAD DEFLECTION TABLE FOR GIRDERS

	SPAN "B"																				
	GIRDER #1ABC																				
TWENTIETH POINTS	BRG.	0.05	0.10	0.15	0.20	0.25	0.30	0.35	0.40	0.45	0.50	0.55	0.60	0.65	0.70	0.75	0.80	0.85	0.90	0.95	BRG.
DEFLECTION DUE TO WEIGHT OF GIRDER	0	-0.001	-0.001	-0.001	-0.001	0.000	0.001	0.002	0.002	0.003	0.003	0.002	0.002	0.001	0.001	0.000	-0.001	-0.002	-0.002	-0.001	0
DEFLECTION DUE TO WEIGHT OF SLAB *	0	-0.002	-0.003	-0.002	-0.001	0.001	0.002	0.004	0.005	0.005	0.005	0.005	0.004	0.002	0.000	-0.002	-0.003	-0.004	-0.004	-0.003	0
DEFLECTION DUE TO WEIGHT OF BARRIER RAIL	0	0.000	0.000	0.000	0.001	0.001	0.002	0.002	0.002	0.002	0.002	0.002	0.002	0.002	0.001	0.001	0.000	0.000	0.000	0.000	0
TOTAL DEAD LOAD DEFLECTION	0	-0.003	-0.004	-0.003	-0.001	0.002	0.005	0.008	0.009	0.010	0.010	0.009	0.008	0.005	0.002	-0.001	-0.004	-0.006	-0.006	-0.004	0
VERTICAL CURVE ORDINATE	0	0.000	0.000	0.000	0.000	0.000	0.000	0.000	0.000	0.000	0.000	0.000	0.000	0.000	0.000	0.000	0.000	0.000	0.000	0.000	0
ORDINATE DUE TO SUPERELEVATION	0	0.000	0.000	0.000	0.000	0.000	0.000	0.000	0.000	0.000	0.000	0.000	0.000	0.000	0.000	0.000	0.000	0.000	0.000	0.000	0
CAMBER DISSIPATION DUE TO HEAT CURVING ▲	0	0.000	0.000	0.000	0.000	0.000	0.000	0.000	0.000	0.000	0.000	0.000	0.000	0.000	0.000	0.000	0.000	0.000	0.000	0.000	0
REQUIRED CAMBER	0	-3	-4	-3	-1	2	5	8	9	10	10	9	8	5	2	-1	-4	-6	-6	-4	0
	GIRDER #2ABC																				
TWENTIETH POINTS	BRG.	0.05	0.10	0.15	0.20	0.25	0.30	0.35	0.40	0.45	0.50	0.55	0.60	0.65	0.70	0.75	0.80	0.85	0.90	0.95	BRG.
DEFLECTION DUE TO WEIGHT OF GIRDER	0	-0.001	-0.001	-0.001	0.000	0.001	0.002	0.002	0.003	0.003	0.003	0.003	0.003	0.002	0.001	0.000	-0.001	-0.001	-0.001	-0.001	0
DEFLECTION DUE TO WEIGHT OF SLAB *	0	-0.001	-0.002	-0.001	0.000	0.002	0.003	0.005	0.006	0.007	0.007	0.006	0.005	0.003	0.002	0.000	-0.002	-0.004	-0.004	-0.002	0
DEFLECTION DUE TO WEIGHT OF BARRIER RAIL	0	0.000	0.000	0.000	0.001	0.001	0.002	0.002	0.002	0.002	0.002	0.002	0.002	0.002	0.001	0.001	0.001	0.000	0.000	0.000	0
TOTAL DEAD LOAD DEFLECTION	0	-0.002	-0.003	-0.002	0.001	0.004	0.007	0.009	0.011	0.012	0.012	0.011	0.010	0.007	0.004	0.001	-0.002	-0.005	-0.005	-0.003	0
VERTICAL CURVE ORDINATE	0	0.000	0.000	0.000	0.000	0.000	0.000	0.000	0.000	0.000	0.000	0.000	0.000	0.000	0.000	0.000	0.000	0.000	0.000	0.000	0
ORDINATE DUE TO SUPERELEVATION	0	0.000	0.000	0.000	0.000	0.000	0.000	0.000	0.000	0.000	0.000	0.000	0.000	0.000	0.000	0.000	0.000	0.000	0.000	0.000	0
CAMBER DISSIPATION DUE TO HEAT CURVING ▲	0	0.000	0.000	0.000	0.000	0.000	0.000	0.000	0.000	0.000	0.000	0.000	0.000	0.000	0.000	0.000	0.000	0.000	0.000	0.000	0
REQUIRED CAMBER	0	-2	-3	-2	1	4	7	9	11	12	12	11	10	7	4	1	-2	-5	-5	-3	0
	GIRDER #3ABC																				
TWENTIETH POINTS	BRG.	0.05	0.10	0.15	0.20	0.25	0.30	0.35	0.40	0.45	0.50	0.55	0.60	0.65	0.70	0.75	0.80	0.85	0.90	0.95	BRG.
DEFLECTION DUE TO WEIGHT OF GIRDER	0	-0.001	0.000	0.000	0.000	0.001	0.002	0.003	0.003	0.004	0.004	0.003	0.003	0.002	0.002	0.001	0.000	-0.001	-0.001	-0.001	0
DEFLECTION DUE TO WEIGHT OF SLAB *	0	-0.001	-0.002	-0.001	0.001	0.003	0.005	0.006	0.008	0.008	0.008	0.008	0.007	0.005	0.003	0.001	-0.001	-0.002	-0.003	-0.002	0
DEFLECTION DUE TO WEIGHT OF BARRIER RAIL	0	0.000	0.000	0.000	0.001	0.001	0.001	0.002	0.002	0.002	0.002	0.002	0.002	0.002	0.001	0.001	0.001	0.000	0.000	0.000	0
TOTAL DEAD LOAD DEFLECTION	0	-0.002	-0.002	-0.001	0.002	0.005	0.008	0.011	0.013	0.014	0.014	0.013	0.012	0.009	0.006	0.003	0.000	-0.003	-0.004	-0.003	0
VERTICAL CURVE ORDINATE	0	0.000	0.000	0.000	0.000	0.000	0.000	0.000	0.000	0.000	0.000	0.000	0.000	0.000	0.000	0.000	0.000	0.000	0.000	0.000	0
ORDINATE DUE TO SUPERELEVATION	0	0.000	0.000	0.000	0.000	0.000	0.000	0.000	0.000	0.000	0.000	0.000	0.000	0.000	0.000	0.000	0.000	0.000	0.000	0.000	0
CAMBER DISSIPATION DUE TO HEAT CURVING ▲	0	0.000	0.000	0.000	0.000	0.000	0.000	0.000	0.000	0.000	0.000	0.000	0.000	0.000	0.000	0.000	0.000	0.000	0.000	0.000	0
REQUIRED CAMBER	0	-2	-2	-1	2	5	8	11	13	14	14	13	12	9	6	3	0	-3	-4	-3	0
	GIRDER #4ABC																				
TWENTIETH POINTS	BRG.	0.05	0.10	0.15	0.20	0.25	0.30	0.35	0.40	0.45	0.50	0.55	0.60	0.65	0.70	0.75	0.80	0.85	0.90	0.95	BRG.
DEFLECTION DUE TO WEIGHT OF GIRDER	0	0.000	0.000	0.000	0.001	0.002	0.003	0.003	0.004	0.004	0.004	0.004	0.003	0.003	0.002	0.001	0.000	0.000	-0.001	-0.001	0
DEFLECTION DUE TO WEIGHT OF SLAB *	0	-0.001	-0.001	0.000	0.001	0.004	0.005	0.008	0.009	0.010	0.010	0.009	0.008	0.006	0.004	0.002	0.000	-0.002	-0.002	-0.001	0
DEFLECTION DUE TO WEIGHT OF BARRIER RAIL	0	0.000	0.000	0.000	0.001	0.001	0.002	0.002	0.002	0.002	0.002	0.002	0.002	0.002	0.001	0.001	0.001	0.000	0.000	0.000	0
TOTAL DEAD LOAD DEFLECTION	0	-0.001	-0.001	0.000	0.003	0.007	0.010	0.013	0.015	0.016	0.016	0.015	0.013	0.011	0.007	0.004	0.001	-0.002	-0.003	-0.002	0
VERTICAL CURVE ORDINATE	0	0.000	0.000	0.000	0.000	0.000	0.000	0.000	0.000	0.000	0.000	0.000	0.000	0.000	0.000	0.000	0.000	0.000	0.000	0.000	0
ORDINATE DUE TO SUPERELEVATION	0	0.000	0.000	0.000	0.000	0.000	0.000	0.000	0.000	0.000	0.000	0.000	0.000	0.000	0.000	0.000	0.000	0.000	0.000	0.000	0
CAMBER DISSIPATION DUE TO HEAT CURVING ▲	0	0.000	0.000	0.000	0.000	0.000	0.000	0.000	0.000	0.000	0.000	0.000	0.000	0.000	0.000	0.000	0.000	0.000	0.000	0.000	0
REQUIRED CAMBER	0	-1	-1	0	3	7	10	13	15	16	16	15	13	11	7	4	1	-2	-3	-2	0

* INCLUDES SLAB, BUILDUPS & STAY-IN-PLACE FORMS.
ALL VALUES ARE SHOWN IN METERS, EXCEPT "FINAL CAMBER" WHICH IS SHOWN IN MILLIMETERS.
▲ HEAT CURVING IS ALLOWED. CAMBER DISSIPATION DUE TO HEAT CURVING IS ZERO FOR ALL GIRDERS.

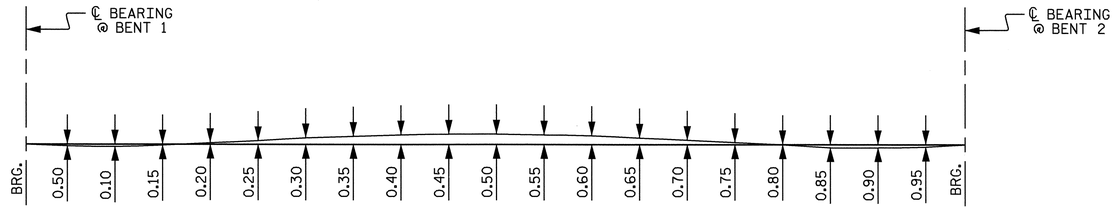

SCHEMATIC CAMBER ORDINATES

SLOPE FOR THE ZERO CAMBER BASE LINE VARIES

PROJECT NO. U-2519DA
CUMBERLAND COUNTY
STATION: 14+60.500-RP1A-

SHEET 2 OF 5

STATE OF NORTH CAROLINA
DEPARTMENT OF TRANSPORTATION
RALEIGH

SUPERSTRUCTURE
DEAD LOAD DEFLECTIONS
SPAN "B"

NORTH CAROLINA PROFESSIONAL SEAL 21638 ENGINEER LAURA E. SUTTON
9/30/08

REVISIONS						SHEET NO.
NO.	BY:	DATE:	NO.	BY:	DATE:	S-193
1			3			TOTAL SHEETS
2			4			411

DRAWN BY : P.C. BREWER DATE : 1/3/08
CHECKED BY : A.S. CALLAWAY DATE : 1/24/08

30-SEP-2008 08:18
r:\structures\glrolaml\str07\pbrewer\Microstation\u2519da_sd_dl_07.dgn
lsutton

DEAD LOAD DEFLECTION TABLE FOR GIRDERS

	SPAN "C"																				
	GIRDER #1ABC																				
TWENTIETH POINTS	BRG.	0.05	0.10	0.15	0.20	0.25	0.30	0.35	0.40	0.45	0.50	0.55	0.60	0.65	0.70	0.75	0.80	0.85	0.90	0.95	BRG.
DEFLECTION DUE TO WEIGHT OF GIRDER	0	0.002	0.005	0.008	0.012	0.016	0.019	0.022	0.025	0.027	0.028	0.028	0.028	0.027	0.025	0.022	0.019	0.015	0.010	0.005	0
DEFLECTION DUE TO WEIGHT OF SLAB ✳	0	0.006	0.014	0.022	0.032	0.041	0.051	0.060	0.066	0.071	0.074	0.076	0.076	0.072	0.067	0.060	0.051	0.040	0.027	0.014	0
DEFLECTION DUE TO WEIGHT OF BARRIER RAIL	0	0.001	0.001	0.003	0.003	0.005	0.005	0.006	0.007	0.007	0.008	0.008	0.008	0.008	0.007	0.006	0.005	0.004	0.003	0.002	0
TOTAL DEAD LOAD DEFLECTION	0	0.009	0.020	0.033	0.047	0.062	0.075	0.088	0.098	0.105	0.110	0.112	0.112	0.107	0.099	0.088	0.075	0.059	0.040	0.021	0
VERTICAL CURVE ORDINATE	0	0.006	0.012	0.018	0.024	0.030	0.036	0.042	0.047	0.052	0.055	0.056	0.056	0.054	0.051	0.046	0.040	0.032	0.023	0.012	0
ORDINATE DUE TO SUPERELEVATION	0	0.000	0.000	0.000	0.000	0.000	0.000	0.000	0.000	0.000	0.000	0.000	0.000	0.000	0.000	0.000	0.000	0.000	0.000	0.000	0
CAMBER DISSIPATION DUE TO HEAT CURVING ▲	0	0.000	0.000	0.000	0.000	0.000	0.000	0.000	0.000	0.000	0.000	0.000	0.000	0.000	0.000	0.000	0.000	0.000	0.000	0.000	0
REQUIRED CAMBER	0	15	32	51	71	92	111	130	145	157	165	168	168	161	150	134	115	91	63	33	0
	GIRDER #2ABC																				
TWENTIETH POINTS	BRG.	0.05	0.10	0.15	0.20	0.25	0.30	0.35	0.40	0.45	0.50	0.55	0.60	0.65	0.70	0.75	0.80	0.85	0.90	0.95	BRG.
DEFLECTION DUE TO WEIGHT OF GIRDER	0	0.002	0.005	0.008	0.011	0.014	0.018	0.021	0.023	0.025	0.026	0.026	0.026	0.025	0.023	0.021	0.018	0.014	0.010	0.005	0
DEFLECTION DUE TO WEIGHT OF SLAB ✳	0	0.006	0.013	0.020	0.029	0.039	0.046	0.054	0.060	0.065	0.069	0.071	0.070	0.067	0.062	0.055	0.046	0.036	0.025	0.013	0
DEFLECTION DUE TO WEIGHT OF BARRIER RAIL	0	0.001	0.001	0.002	0.003	0.004	0.005	0.006	0.007	0.007	0.007	0.007	0.007	0.007	0.007	0.006	0.005	0.004	0.002	0.001	0
TOTAL DEAD LOAD DEFLECTION	0	0.009	0.019	0.030	0.043	0.057	0.069	0.081	0.090	0.097	0.102	0.104	0.103	0.099	0.092	0.082	0.069	0.054	0.037	0.019	0
VERTICAL CURVE ORDINATE	0	0.006	0.012	0.018	0.024	0.030	0.036	0.042	0.047	0.052	0.055	0.056	0.056	0.054	0.051	0.046	0.040	0.032	0.023	0.012	0
ORDINATE DUE TO SUPERELEVATION	0	0.000	0.000	0.000	0.000	0.000	0.000	0.000	0.000	0.000	0.000	0.000	0.000	0.000	0.000	0.000	0.000	0.000	0.000	0.000	0
CAMBER DISSIPATION DUE TO HEAT CURVING ▲	0	0.000	0.000	0.000	0.000	0.000	0.000	0.000	0.000	0.000	0.000	0.000	0.000	0.000	0.000	0.000	0.000	0.000	0.000	0.000	0
REQUIRED CAMBER	0	15	31	48	67	87	105	123	137	149	157	160	159	153	143	128	109	86	60	31	0
	GIRDER #3ABC																				
TWENTIETH POINTS	BRG.	0.05	0.10	0.15	0.20	0.25	0.30	0.35	0.40	0.45	0.50	0.55	0.60	0.65	0.70	0.75	0.80	0.85	0.90	0.95	BRG.
DEFLECTION DUE TO WEIGHT OF GIRDER	0	0.002	0.004	0.007	0.010	0.013	0.016	0.019	0.021	0.023	0.024	0.024	0.024	0.023	0.022	0.019	0.016	0.013	0.009	0.005	0
DEFLECTION DUE TO WEIGHT OF SLAB ✳	0	0.005	0.012	0.018	0.027	0.035	0.042	0.050	0.056	0.060	0.063	0.064	0.064	0.061	0.056	0.051	0.043	0.033	0.023	0.012	0
DEFLECTION DUE TO WEIGHT OF BARRIER RAIL	0	0.001	0.001	0.002	0.003	0.004	0.005	0.005	0.006	0.006	0.007	0.007	0.007	0.007	0.006	0.005	0.005	0.004	0.002	0.001	0
TOTAL DEAD LOAD DEFLECTION	0	0.008	0.017	0.027	0.040	0.052	0.063	0.074	0.083	0.089	0.094	0.095	0.095	0.091	0.084	0.075	0.064	0.050	0.034	0.018	0
VERTICAL CURVE ORDINATE	0	0.006	0.012	0.018	0.024	0.030	0.036	0.042	0.047	0.052	0.055	0.056	0.056	0.054	0.051	0.046	0.040	0.032	0.023	0.012	0
ORDINATE DUE TO SUPERELEVATION	0	0.000	0.000	0.000	0.000	0.000	0.000	0.000	0.000	0.000	0.000	0.000	0.000	0.000	0.000	0.000	0.000	0.000	0.000	0.000	0
CAMBER DISSIPATION DUE TO HEAT CURVING ▲	0	0.000	0.000	0.000	0.000	0.000	0.000	0.000	0.000	0.000	0.000	0.000	0.000	0.000	0.000	0.000	0.000	0.000	0.000	0.000	0
REQUIRED CAMBER	0	14	29	45	64	82	99	116	130	141	149	151	151	145	135	121	104	82	57	30	0
	GIRDER #4ABC																				
TWENTIETH POINTS	BRG.	0.05	0.10	0.15	0.20	0.25	0.30	0.35	0.40	0.45	0.50	0.55	0.60	0.65	0.70	0.75	0.80	0.85	0.90	0.95	BRG.
DEFLECTION DUE TO WEIGHT OF GIRDER	0	0.002	0.004	0.006	0.009	0.012	0.015	0.017	0.019	0.021	0.022	0.023	0.022	0.022	0.020	0.018	0.015	0.012	0.008	0.004	0
DEFLECTION DUE TO WEIGHT OF SLAB ✳	0	0.004	0.010	0.017	0.024	0.031	0.038	0.045	0.050	0.054	0.057	0.058	0.058	0.055	0.051	0.046	0.039	0.030	0.021	0.011	0
DEFLECTION DUE TO WEIGHT OF BARRIER RAIL	0	0.001	0.001	0.002	0.003	0.004	0.004	0.005	0.006	0.006	0.006	0.006	0.006	0.006	0.006	0.005	0.004	0.003	0.002	0.001	0
TOTAL DEAD LOAD DEFLECTION	0	0.007	0.015	0.025	0.036	0.047	0.057	0.067	0.075	0.081	0.085	0.087	0.086	0.083	0.077	0.069	0.058	0.045	0.031	0.016	0
VERTICAL CURVE ORDINATE	0	0.006	0.012	0.018	0.024	0.030	0.036	0.042	0.047	0.052	0.055	0.056	0.056	0.054	0.051	0.046	0.040	0.032	0.023	0.012	0
ORDINATE DUE TO SUPERELEVATION	0	0.000	0.000	0.000	0.000	0.000	0.000	0.000	0.000	0.000	0.000	0.000	0.000	0.000	0.000	0.000	0.000	0.000	0.000	0.000	0
CAMBER DISSIPATION DUE TO HEAT CURVING ▲	0	0.000	0.000	0.000	0.000	0.000	0.000	0.000	0.000	0.000	0.000	0.000	0.000	0.000	0.000	0.000	0.000	0.000	0.000	0.000	0
REQUIRED CAMBER	0	13	27	43	60	77	93	109	122	133	140	143	142	137	128	115	98	77	54	28	0

✳ INCLUDES SLAB, BUILDUPS & STAY-IN-PLACE FORMS.
ALL VALUES ARE SHOWN IN METERS, EXCEPT "FINAL CAMBER" WHICH IS SHOWN IN MILLIMETERS.
▲ HEAT CURVING IS ALLOWED. CAMBER DISSIPATION DUE TO HEAT CURVING IS ZERO FOR ALL GIRDERS.

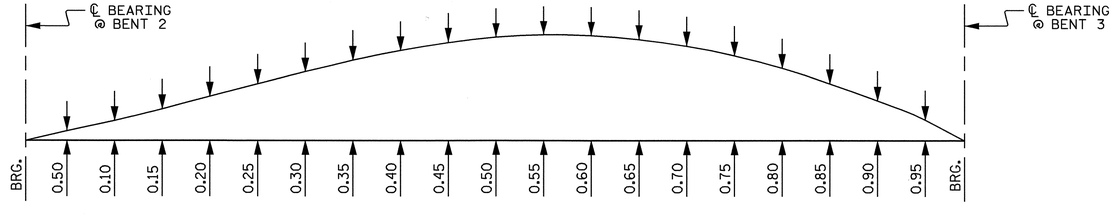

SCHEMATIC CAMBER ORDINATES

SLOPE FOR THE ZERO CAMBER BASE LINE VARIES

DRAWN BY : P.C. BREWER DATE : 1/3/08
CHECKED BY : A.S. CALLAWAY DATE : 1/24/08

30-SEP-2008 08:18
r:\structures\glrolaml\str07\pbrewer\Microstation\u2519da_sd_dl_07.dgn
lsutton

PROJECT NO. U-2519DA
CUMBERLAND COUNTY
STATION: 14+60.500-RP1A-

SHEET 3 OF 5

STATE OF NORTH CAROLINA
DEPARTMENT OF TRANSPORTATION
RALEIGH

SUPERSTRUCTURE

DEAD LOAD DEFLECTIONS

SPAN "C"

NORTH CAROLINA PROFESSIONAL SEAL 21638 ENGINEER LAURA E. SUTTON
9/30/08

REVISIONS						SHEET NO.
NO.	BY:	DATE:	NO.	BY:	DATE:	S-194
1			3			TOTAL SHEETS
2			4			411

DEAD LOAD DEFLECTION TABLE FOR GIRDERS

	SPAN "D"																				
	GIRDER #1DE																				
TWENTIETH POINTS	BRG.	0.05	0.10	0.15	0.20	0.25	0.30	0.35	0.40	0.45	0.50	0.55	0.60	0.65	0.70	0.75	0.80	0.85	0.90	0.95	BRG.
DEFLECTION DUE TO WEIGHT OF GIRDER	0	0.005	0.009	0.013	0.016	0.019	0.021	0.022	0.023	0.023	0.022	0.021	0.019	0.017	0.014	0.011	0.008	0.005	0.003	0.001	0
DEFLECTION DUE TO WEIGHT OF SLAB *	0	0.012	0.023	0.033	0.042	0.049	0.055	0.059	0.060	0.060	0.059	0.055	0.050	0.043	0.036	0.028	0.021	0.014	0.008	0.004	0
DEFLECTION DUE TO WEIGHT OF BARRIER RAIL	0	0.001	0.002	0.003	0.005	0.006	0.006	0.007	0.007	0.007	0.007	0.006	0.006	0.005	0.004	0.004	0.002	0.002	0.001	0.000	0
TOTAL DEAD LOAD DEFLECTION	0	0.018	0.034	0.049	0.063	0.074	0.082	0.088	0.090	0.090	0.088	0.082	0.075	0.065	0.054	0.043	0.031	0.021	0.012	0.005	0
VERTICAL CURVE ORDINATE	0	0.014	0.027	0.039	0.048	0.057	0.063	0.069	0.072	0.075	0.075	0.075	0.072	0.069	0.063	0.057	0.048	0.039	0.027	0.014	0
ORDINATE DUE TO SUPERELEVATION	0	0.000	0.000	0.000	0.000	0.000	0.000	0.000	0.000	0.000	0.000	0.000	0.000	0.000	0.000	0.000	0.000	0.000	0.000	0.000	0
CAMBER DISSIPATION DUE TO HEAT CURVING ▲	0	0.000	0.000	0.000	0.000	0.000	0.000	0.000	0.000	0.000	0.000	0.000	0.000	0.000	0.000	0.000	0.000	0.000	0.000	0.000	0
REQUIRED CAMBER	0	32	61	88	111	131	145	157	162	165	163	157	147	134	117	100	79	60	39	19	0
	GIRDER #2DE																				
TWENTIETH POINTS	BRG.	0.05	0.10	0.15	0.20	0.25	0.30	0.35	0.40	0.45	0.50	0.55	0.60	0.65	0.70	0.75	0.80	0.85	0.90	0.95	BRG.
DEFLECTION DUE TO WEIGHT OF GIRDER	0	0.004	0.008	0.012	0.015	0.018	0.020	0.021	0.022	0.022	0.021	0.020	0.018	0.016	0.013	0.010	0.007	0.005	0.003	0.001	0
DEFLECTION DUE TO WEIGHT OF SLAB *	0	0.012	0.022	0.031	0.039	0.046	0.051	0.055	0.056	0.056	0.055	0.051	0.046	0.040	0.034	0.027	0.019	0.012	0.007	0.003	0
DEFLECTION DUE TO WEIGHT OF BARRIER RAIL	0	0.001	0.002	0.003	0.004	0.005	0.005	0.006	0.006	0.006	0.006	0.006	0.006	0.005	0.004	0.003	0.003	0.002	0.001	0.000	0
TOTAL DEAD LOAD DEFLECTION	0	0.017	0.032	0.046	0.058	0.069	0.076	0.082	0.084	0.084	0.082	0.077	0.070	0.061	0.051	0.040	0.029	0.019	0.011	0.004	0
VERTICAL CURVE ORDINATE	0	0.014	0.027	0.039	0.048	0.057	0.063	0.069	0.072	0.075	0.075	0.075	0.072	0.069	0.063	0.057	0.048	0.039	0.027	0.014	0
ORDINATE DUE TO SUPERELEVATION	0	0.000	0.000	0.000	0.000	0.000	0.000	0.000	0.000	0.000	0.000	0.000	0.000	0.000	0.000	0.000	0.000	0.000	0.000	0.000	0
CAMBER DISSIPATION DUE TO HEAT CURVING ▲	0	0.000	0.000	0.000	0.000	0.000	0.000	0.000	0.000	0.000	0.000	0.000	0.000	0.000	0.000	0.000	0.000	0.000	0.000	0.000	0
REQUIRED CAMBER	0	31	59	85	106	126	139	151	156	159	157	152	142	130	114	97	77	58	38	18	0
	GIRDER #3DE																				
TWENTIETH POINTS	BRG.	0.05	0.10	0.15	0.20	0.25	0.30	0.35	0.40	0.45	0.50	0.55	0.60	0.65	0.70	0.75	0.80	0.85	0.90	0.95	BRG.
DEFLECTION DUE TO WEIGHT OF GIRDER	0	0.004	0.008	0.011	0.014	0.016	0.018	0.020	0.020	0.020	0.020	0.018	0.017	0.015	0.012	0.010	0.007	0.005	0.003	0.001	0
DEFLECTION DUE TO WEIGHT OF SLAB *	0	0.010	0.020	0.029	0.036	0.043	0.048	0.050	0.053	0.053	0.050	0.047	0.043	0.037	0.031	0.024	0.018	0.011	0.006	0.003	0
DEFLECTION DUE TO WEIGHT OF BARRIER RAIL	0	0.001	0.002	0.003	0.004	0.005	0.005	0.006	0.006	0.006	0.006	0.006	0.005	0.005	0.004	0.003	0.002	0.002	0.001	0.000	0
TOTAL DEAD LOAD DEFLECTION	0	0.015	0.030	0.043	0.054	0.064	0.071	0.076	0.079	0.079	0.076	0.071	0.065	0.057	0.047	0.037	0.027	0.018	0.010	0.004	0
VERTICAL CURVE ORDINATE	0	0.014	0.027	0.039	0.048	0.057	0.063	0.069	0.072	0.075	0.075	0.075	0.072	0.069	0.063	0.057	0.048	0.039	0.027	0.014	0
ORDINATE DUE TO SUPERELEVATION	0	0.000	0.000	0.000	0.000	0.000	0.000	0.000	0.000	0.000	0.000	0.000	0.000	0.000	0.000	0.000	0.000	0.000	0.000	0.000	0
CAMBER DISSIPATION DUE TO HEAT CURVING ▲	0	0.000	0.000	0.000	0.000	0.000	0.000	0.000	0.000	0.000	0.000	0.000	0.000	0.000	0.000	0.000	0.000	0.000	0.000	0.000	0
REQUIRED CAMBER	0	29	57	82	102	121	134	145	151	154	151	146	137	126	110	94	75	57	37	18	0
	GIRDER #4DE																				
TWENTIETH POINTS	BRG.	0.05	0.10	0.15	0.20	0.25	0.30	0.35	0.40	0.45	0.50	0.55	0.60	0.65	0.70	0.75	0.80	0.85	0.90	0.95	BRG.
DEFLECTION DUE TO WEIGHT OF GIRDER	0	0.004	0.007	0.010	0.013	0.015	0.017	0.018	0.019	0.019	0.018	0.017	0.016	0.014	0.011	0.009	0.007	0.004	0.002	0.001	0
DEFLECTION DUE TO WEIGHT OF SLAB *	0	0.009	0.018	0.026	0.033	0.039	0.044	0.047	0.048	0.048	0.047	0.044	0.039	0.035	0.029	0.022	0.016	0.011	0.006	0.003	0
DEFLECTION DUE TO WEIGHT OF BARRIER RAIL	0	0.001	0.002	0.003	0.004	0.005	0.005	0.005	0.006	0.006	0.005	0.005	0.005	0.004	0.004	0.003	0.002	0.001	0.001	0.000	0
TOTAL DEAD LOAD DEFLECTION	0	0.014	0.027	0.039	0.050	0.059	0.066	0.070	0.073	0.073	0.070	0.066	0.060	0.053	0.044	0.034	0.025	0.016	0.009	0.004	0
VERTICAL CURVE ORDINATE	0	0.014	0.027	0.039	0.048	0.057	0.063	0.069	0.072	0.075	0.075	0.075	0.072	0.069	0.063	0.057	0.048	0.039	0.027	0.014	0
ORDINATE DUE TO SUPERELEVATION	0	0.000	0.000	0.000	0.000	0.000	0.000	0.000	0.000	0.000	0.000	0.000	0.000	0.000	0.000	0.000	0.000	0.000	0.000	0.000	0
CAMBER DISSIPATION DUE TO HEAT CURVING ▲	0	0.000	0.000	0.000	0.000	0.000	0.000	0.000	0.000	0.000	0.000	0.000	0.000	0.000	0.000	0.000	0.000	0.000	0.000	0.000	0
REQUIRED CAMBER	0	28	54	78	98	116	129	139	145	148	145	141	132	122	107	91	73	55	36	18	0

* INCLUDES SLAB, BUILDUPS & STAY-IN-PLACE FORMS.
ALL VALUES ARE SHOWN IN METERS, EXCEPT "FINAL CAMBER" WHICH IS SHOWN IN MILLIMETERS.
▲ HEAT CURVING IS ALLOWED. CAMBER DISSIPATION DUE TO HEAT CURVING IS ZERO FOR ALL GIRDERS.

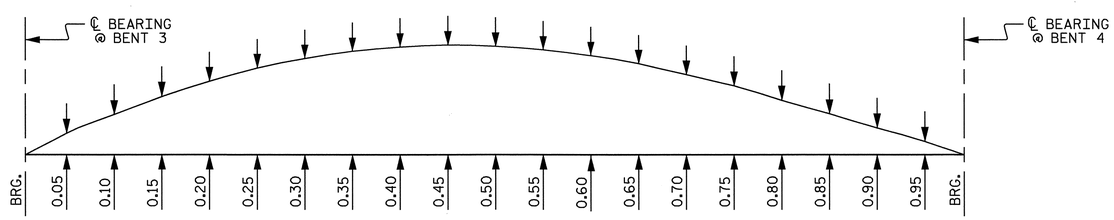

SCHEMATIC CAMBER ORDINATES

SLOPE FOR THE ZERO CAMBER BASE LINE VARIES

PROJECT NO. U-2519DA

CUMBERLAND COUNTY

STATION: 14+60.500-RP1A-

SHEET 4 OF 5

STATE OF NORTH CAROLINA
DEPARTMENT OF TRANSPORTATION
RALEIGH

SUPERSTRUCTURE

DEAD LOAD DEFLECTIONS

SPAN "D"

NORTH CAROLINA PROFESSIONAL SEAL 21638 ENGINEER LAURA E. SUTTON
9/30/08

REVISIONS						SHEET NO.
NO.	BY:	DATE:	NO.	BY:	DATE:	S-195
1			3			TOTAL SHEETS
2			4			411

DRAWN BY : P.C. BREWER DATE : 1/3/08
CHECKED BY : A.S. CALLAWAY DATE : 1/24/08

30-SEP-2008 08:17
r:\structures\gfrolami\str07\pbrewer\Microstation\u2519da_sd_dl_07.dgn
lsutton

DEAD LOAD DEFLECTION TABLE FOR GIRDERS

	SPAN "E"																				
	GIRDER #1DE																				
TWENTIETH POINTS	BRG.	0.05	0.10	0.15	0.20	0.25	0.30	0.35	0.40	0.45	0.50	0.55	0.60	0.65	0.70	0.75	0.80	0.85	0.90	0.95	BRG.
DEFLECTION DUE TO WEIGHT OF GIRDER	0	0.000	0.001	0.001	0.003	0.004	0.006	0.008	0.010	0.011	0.012	0.013	0.013	0.013	0.012	0.011	0.010	0.008	0.005	0.003	0
DEFLECTION DUE TO WEIGHT OF SLAB *	0	0.000	0.001	0.004	0.007	0.012	0.017	0.021	0.026	0.029	0.032	0.034	0.035	0.034	0.032	0.029	0.025	0.020	0.014	0.007	0
DEFLECTION DUE TO WEIGHT OF BARRIER RAIL	0	0.000	0.000	0.001	0.001	0.002	0.002	0.003	0.003	0.004	0.004	0.004	0.004	0.004	0.004	0.004	0.003	0.002	0.002	0.001	0
TOTAL DEAD LOAD DEFLECTION	0	0.000	0.002	0.006	0.011	0.018	0.025	0.032	0.039	0.044	0.048	0.051	0.052	0.051	0.048	0.044	0.038	0.030	0.021	0.011	0
VERTICAL CURVE ORDINATE	0	0.009	0.017	0.024	0.030	0.034	0.037	0.038	0.038	0.037	0.035	0.031	0.027	0.022	0.018	0.013	0.009	0.005	0.002	0.000	0
ORDINATE DUE TO SUPERELEVATION	0	0.000	0.000	0.000	0.000	0.000	0.000	0.000	0.000	0.000	0.000	0.000	0.000	0.000	0.000	0.000	0.000	0.000	0.000	0.000	0
CAMBER DISSIPATION DUE TO HEAT CURVING ▲	0	0.000	0.000	0.000	0.000	0.000	0.000	0.000	0.000	0.000	0.000	0.000	0.000	0.000	0.000	0.000	0.000	0.000	0.000	0.000	0
REQUIRED CAMBER	0	9	19	30	41	52	62	70	77	81	83	82	79	73	66	57	47	35	23	11	0
	GIRDER #2DE																				
TWENTIETH POINTS	BRG.	0.05	0.10	0.15	0.20	0.25	0.30	0.35	0.40	0.45	0.50	0.55	0.60	0.65	0.70	0.75	0.80	0.85	0.90	0.95	BRG.
DEFLECTION DUE TO WEIGHT OF GIRDER	0	0.000	0.001	0.001	0.003	0.004	0.006	0.008	0.010	0.011	0.012	0.012	0.013	0.013	0.012	0.011	0.009	0.007	0.005	0.003	0
DEFLECTION DUE TO WEIGHT OF SLAB *	0	0.000	0.001	0.004	0.007	0.012	0.016	0.020	0.024	0.027	0.030	0.032	0.032	0.032	0.030	0.028	0.024	0.019	0.013	0.006	0
DEFLECTION DUE TO WEIGHT OF BARRIER RAIL	0	0.000	0.000	0.001	0.001	0.002	0.002	0.003	0.003	0.004	0.004	0.004	0.004	0.004	0.004	0.003	0.003	0.002	0.002	0.001	0
TOTAL DEAD LOAD DEFLECTION	0	0.000	0.002	0.006	0.011	0.018	0.024	0.031	0.037	0.042	0.046	0.048	0.049	0.049	0.046	0.042	0.036	0.028	0.020	0.010	0
VERTICAL CURVE ORDINATE	0	0.009	0.017	0.024	0.030	0.034	0.037	0.038	0.038	0.037	0.035	0.031	0.027	0.022	0.018	0.013	0.009	0.005	0.002	0.000	0
ORDINATE DUE TO SUPERELEVATION	0	0.000	0.000	0.000	0.000	0.000	0.000	0.000	0.000	0.000	0.000	0.000	0.000	0.000	0.000	0.000	0.000	0.000	0.000	0.000	0
CAMBER DISSIPATION DUE TO HEAT CURVING ▲	0	0.000	0.000	0.000	0.000	0.000	0.000	0.000	0.000	0.000	0.000	0.000	0.000	0.000	0.000	0.000	0.000	0.000	0.000	0.000	0
REQUIRED CAMBER	0	9	19	30	41	52	61	69	75	79	81	79	76	71	64	55	45	33	22	10	0
	GIRDER #3DE																				
TWENTIETH POINTS	BRG.	0.05	0.10	0.15	0.20	0.25	0.30	0.35	0.40	0.45	0.50	0.55	0.60	0.65	0.70	0.75	0.80	0.85	0.90	0.95	BRG.
DEFLECTION DUE TO WEIGHT OF GIRDER	0	0.000	0.001	0.001	0.003	0.004	0.006	0.007	0.009	0.010	0.011	0.012	0.012	0.012	0.011	0.010	0.009	0.007	0.005	0.003	0
DEFLECTION DUE TO WEIGHT OF SLAB *	0	0.000	0.001	0.004	0.007	0.011	0.015	0.020	0.024	0.027	0.029	0.030	0.031	0.031	0.029	0.027	0.022	0.018	0.013	0.006	0
DEFLECTION DUE TO WEIGHT OF BARRIER RAIL	0	0.000	0.000	0.001	0.001	0.002	0.002	0.003	0.003	0.004	0.004	0.004	0.004	0.004	0.004	0.003	0.003	0.002	0.001	0.001	0
TOTAL DEAD LOAD DEFLECTION	0	0.000	0.002	0.006	0.011	0.017	0.023	0.030	0.036	0.041	0.044	0.046	0.047	0.047	0.044	0.040	0.034	0.027	0.019	0.010	0
VERTICAL CURVE ORDINATE	0	0.009	0.017	0.024	0.030	0.034	0.037	0.038	0.038	0.037	0.035	0.031	0.027	0.022	0.018	0.013	0.009	0.005	0.002	0.000	0
ORDINATE DUE TO SUPERELEVATION	0	0.000	0.000	0.000	0.000	0.000	0.000	0.000	0.000	0.000	0.000	0.000	0.000	0.000	0.000	0.000	0.000	0.000	0.000	0.000	0
CAMBER DISSIPATION DUE TO HEAT CURVING ▲	0	0.000	0.000	0.000	0.000	0.000	0.000	0.000	0.000	0.000	0.000	0.000	0.000	0.000	0.000	0.000	0.000	0.000	0.000	0.000	0
REQUIRED CAMBER	0	9	19	30	41	51	60	68	74	78	79	77	74	69	62	53	43	32	21	10	0
	GIRDER #4DE																				
TWENTIETH POINTS	BRG.	0.05	0.10	0.15	0.20	0.25	0.30	0.35	0.40	0.45	0.50	0.55	0.60	0.65	0.70	0.75	0.80	0.85	0.90	0.95	BRG.
DEFLECTION DUE TO WEIGHT OF GIRDER	0	0.000	0.001	0.001	0.003	0.004	0.006	0.007	0.009	0.010	0.011	0.011	0.012	0.012	0.011	0.010	0.008	0.007	0.005	0.002	0
DEFLECTION DUE TO WEIGHT OF SLAB *	0	0.000	0.001	0.004	0.007	0.011	0.015	0.019	0.023	0.026	0.027	0.029	0.029	0.029	0.028	0.025	0.021	0.017	0.012	0.006	0
DEFLECTION DUE TO WEIGHT OF BARRIER RAIL	0	0.000	0.000	0.001	0.001	0.002	0.002	0.003	0.003	0.003	0.004	0.004	0.004	0.003	0.003	0.003	0.003	0.002	0.001	0.001	0
TOTAL DEAD LOAD DEFLECTION	0	0.000	0.002	0.006	0.011	0.017	0.023	0.029	0.035	0.039	0.042	0.044	0.045	0.044	0.042	0.038	0.032	0.026	0.018	0.009	0
VERTICAL CURVE ORDINATE	0	0.009	0.017	0.024	0.030	0.034	0.037	0.038	0.038	0.037	0.035	0.031	0.027	0.022	0.018	0.013	0.009	0.005	0.002	0.000	0
ORDINATE DUE TO SUPERELEVATION	0	0.000	0.000	0.000	0.000	0.000	0.000	0.000	0.000	0.000	0.000	0.000	0.000	0.000	0.000	0.000	0.000	0.000	0.000	0.000	0
CAMBER DISSIPATION DUE TO HEAT CURVING ▲	0	0.000	0.000	0.000	0.000	0.000	0.000	0.000	0.000	0.000	0.000	0.000	0.000	0.000	0.000	0.000	0.000	0.000	0.000	0.000	0
REQUIRED CAMBER	0	9	19	30	41	51	60	67	73	76	77	75	72	66	60	51	41	31	20	9	0

* INCLUDES SLAB, BUILDUPS & STAY-IN-PLACE FORMS.
ALL VALUES ARE SHOWN IN METERS, EXCEPT "FINAL CAMBER" WHICH IS SHOWN IN MILLIMETERS.
▲ HEAT CURVING IS ALLOWED. CAMBER DISSIPATION DUE TO HEAT CURVING IS ZERO FOR ALL GIRDERS.

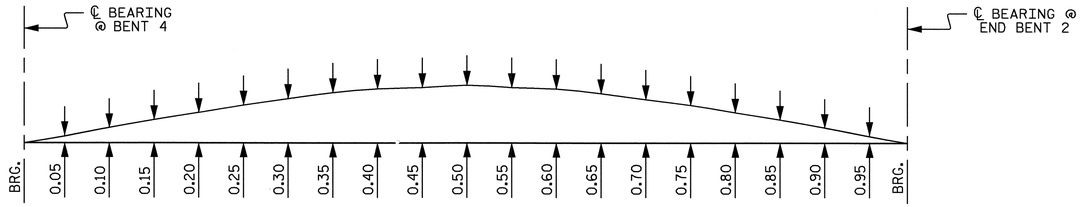

SCHEMATIC CAMBER ORDINATES

SLOPE FOR THE ZERO CAMBER BASE LINE VARIES

PROJECT NO. U-2519DA
CUMBERLAND COUNTY
STATION: 14+60.500-RP1A-

SHEET 5 OF 5

STATE OF NORTH CAROLINA
DEPARTMENT OF TRANSPORTATION
RALEIGH

SUPERSTRUCTURE

DEAD LOAD DEFLECTIONS

SPAN "E"

NORTH CAROLINA PROFESSIONAL SEAL 21638 ENGINEER LAURA E. SUTTON
9/30/08

REVISIONS						SHEET NO.
NO.	BY:	DATE:	NO.	BY:	DATE:	S-196
1			3			TOTAL SHEETS
2			4			411

DRAWN BY : P.C. BREWER DATE : 1/3/08
CHECKED BY : A.S. CALLAWAY DATE : 1/24/08

30-SEP-2008 08:17
r:\structures\glrolaml\str07\pbrewer\Microstation\u2519da_sd_dl_07.dgn
lsutton

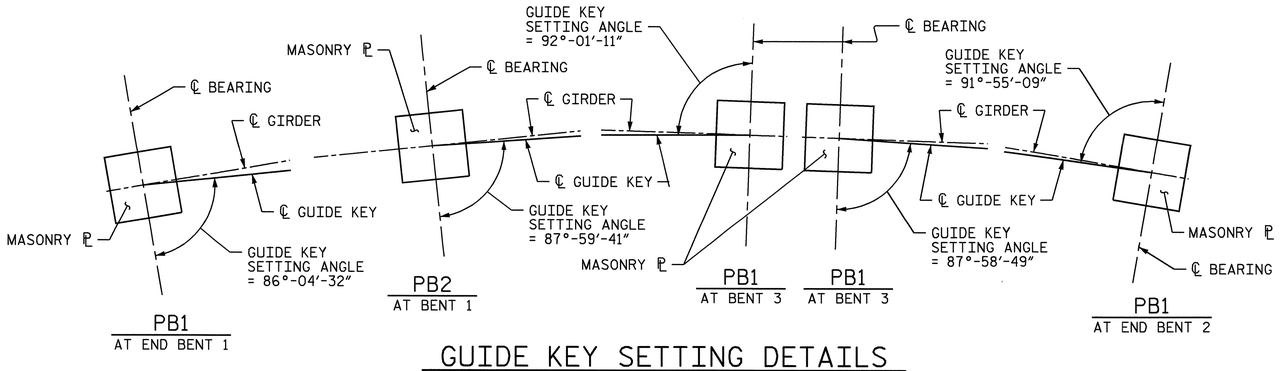

GUIDE KEY SETTING DETAILS

TABLE FOR LOADS AND MOVEMENTS						
BEARING	LOCATION	VERTICAL LOAD (kN)			LATERAL LOAD (kN)	TOTAL MOVEMENT (mm)
		DEAD	LIVE	TOTAL		
PB1 (EXP.)	END BENT 1	457	276	733	91	53
PB2 (EXP.)	BENT 1	1256	483	1739	251	28
PB1 (EXP.)	BENT 3 (NEAR)	497	278	775	99	28
PB1 (EXP.)	BENT 3 (FAR)	467	278	745	93	28
PB1 (EXP.)	END BENT 2	405	276	681	81	26

SLOPE TABLE	
LOCATION	% SLOPE
END BENT 1	0.667
BENT 1	0.667
BENT 3 (NEAR)	1.000
BENT 3 (FAR)	2.333
END BENT 2	3.667

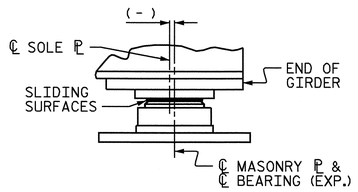

TABLE FOR PLATE SETTING DATA (EXPANSION POT BEARINGS)				
TEMPERATURE AT TIME OF SETTING	0° C	16° C	32° C	*
END BENT 1	-16	0	16	-6
BENT 1	-9	0	9	-4
BENT 3 (NEAR)	-9	0	9	-7
BENT 3 (FAR)	-9	0	9	-7
END BENT 2	-8	0	8	-4

*CORRECTION FOR END ROTATION DUE TO WEIGHT OF SLAB AND COMPOSITE DEAD LOAD.

TEMPERATURE SETTING DETAIL

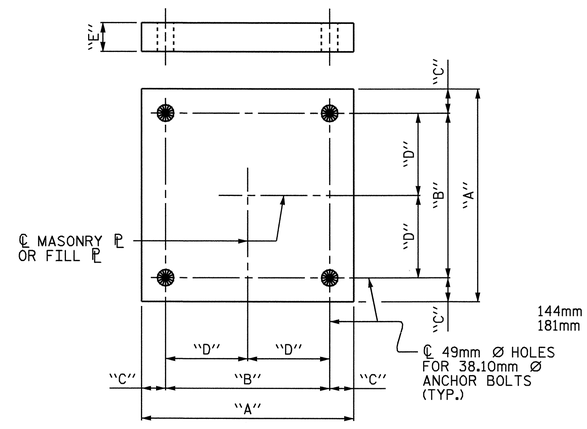

PLAN

MASONRY PLATE & FILL PLATE DETAILS

(SEE TABLE "M")

TABLE "M"						
MASONRY ℙ	NUMBER REQUIRED	"A"	"B"	"C"	"D"	"E"
M1	16	450	298	76	149	25
M2	4	524	372	76	186	28
FILL ℙ	NUMBER REQUIRED	"A"	"B"	"C"	"D"	"E"
P1	4	450	298	76	149	13

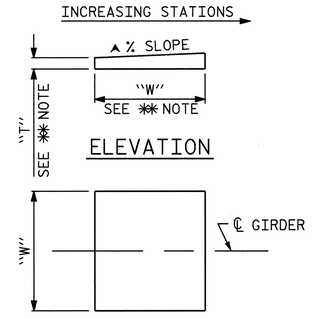

✱✱ NOTE:
DIMENSIONS "W" AND "T" ARE TO BE DETERMINED BY THE MANUFACTURER.

▲ SEE SLOPE TABLE

SOLE PLATE DETAILS

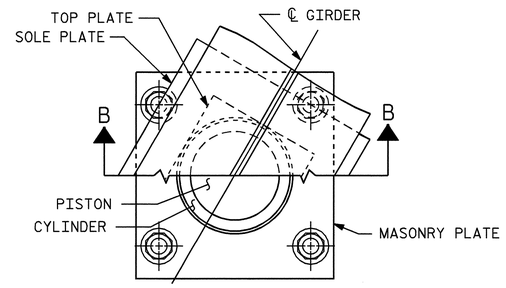

CUT-AWAY PLAN

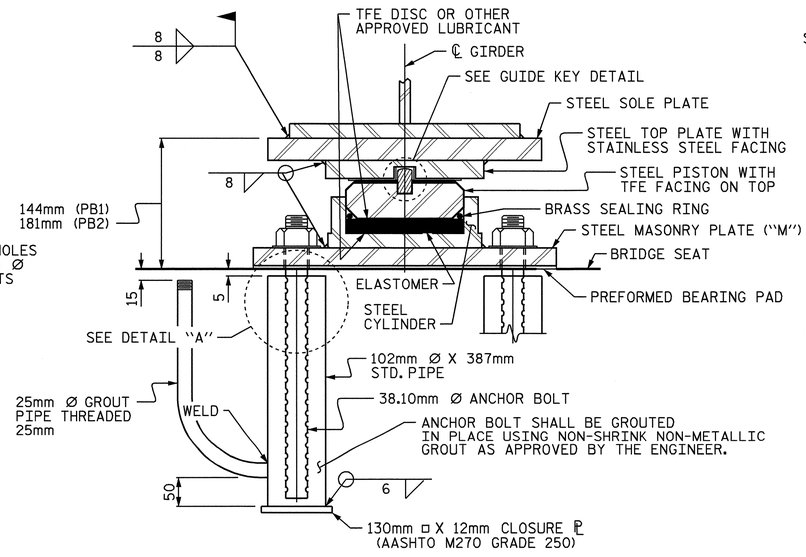

SECTION B-B

PB1, EXP. (16 REQ'D.) PB2, EXP. (4 REQ'D.)

POT BEARING DETAILS

NOTES:

FOR POT BEARINGS, SEE SPECIAL PROVISIONS.

AT ALL POINTS OF SUPPORT IN SPANS "ABC" AND SPAN "DE", NUTS FOR ANCHOR BOLTS SHALL BE TIGHTENED FINGER TIGHT AND GIVEN AN ADDITIONAL 1/4 TURN. THE THREAD OF THE NUT AND BOLT SHALL THEN BE BURRED WITH A SHARP POINTED TOOL.

WHEN WELDING THE SOLE PLATE TO THE GIRDER, USE TEMPERATURE INDICATING WAX PENS, OR OTHER SUITABLE MEANS, TO ENSURE THAT THE TEMPERATURE OF THE BEARING DOES NOT EXCEED 121°C TEMPERATURES ABOVE THIS MAY DAMAGE THE TFE OR ELASTOMER.

AFTER BEARING ASSEMBLY IS IN PLACE AND ANCHOR BOLTS HAVE BEEN FINALLY POSITIONED. THEY SHALL BE GROUTED IN PLACE AS SHOWN.

THE CLOSURE PLATE, GROUT PIPE AND STANDARD PIPE FOR THIS ASSEMBLY NEED NOT BE GALVANIZED.

SOLE PLATES SHOULD BE WELDED TO BEAM FLANGES AND ANCHOR BOLTS SHOULD BE GROUTED BEFORE FALSEWORK IS PLACED.

ALL SURFACES OF BEARING PLATES SHALL BE SMOOTH AND STRAIGHT.

FOR THERMAL SPRAYED COATINGS (METALLIZATION), SEE SPECIAL PROVISIONS.

AT THE CONTRACTOR'S OPTION, FILL PLATES (WHERE USED) MAY BE COMBINED WITH MASONRY PLATES.

THE CONTRACTOR MAY SUBSTITUTE DISC BEARINGS FOR THE POT BEARINGS SHOWN. FOR OPTIONAL DISC BEARINGS, SEE SPECIAL PROVISIONS.

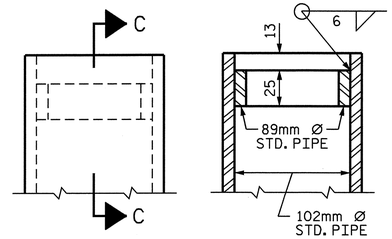

SECTION C-C

DETAIL "A"

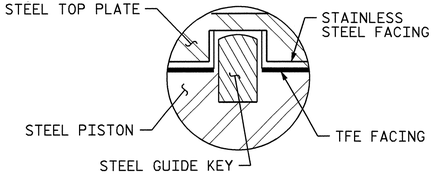

GUIDE KEY DETAIL

PROJECT NO. U-2519DA

CUMBERLAND COUNTY

STATION: 14+60.500-RP1A-

SHEET 1 OF 2

STATE OF NORTH CAROLINA
DEPARTMENT OF TRANSPORTATION
RALEIGH

STANDARD

POT BEARING DETAILS

— (EXPANSION BEARING) —

REVISIONS						SHEET NO.
NO.	BY:	DATE:	NO.	BY:	DATE:	S-197
1			3			TOTAL SHEETS
2			4			411

NORTH CAROLINA PROFESSIONAL SEAL 21638 ENGINEER LAURA E. SUTTON 9/30/08

ASSEMBLED BY : P.C. BREWER	DATE : 1/3/08	REV. 7/10/01	LES/RWW
CHECKED BY : A.S. CALLAWAY	DATE : 1/24/08	REV. 5/7/03	RWW/JTE
DRAWN BY : RWW 8/99		REV. 5/1/06	TLA/GM
CHECKED BY : LES 8/99			

30-SEP-2008 08:11
r:\structures\glrolami\str07\pbrewer\Microstation\U2519DA_sd_BG_07.dgn
lsutton

PB1SM.STD

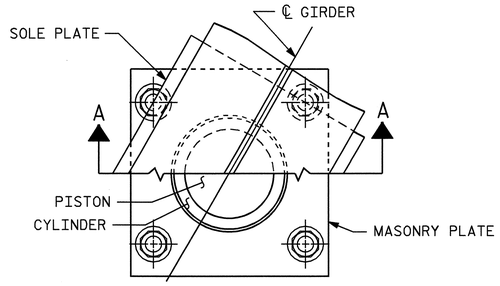

CUT-AWAY PLAN

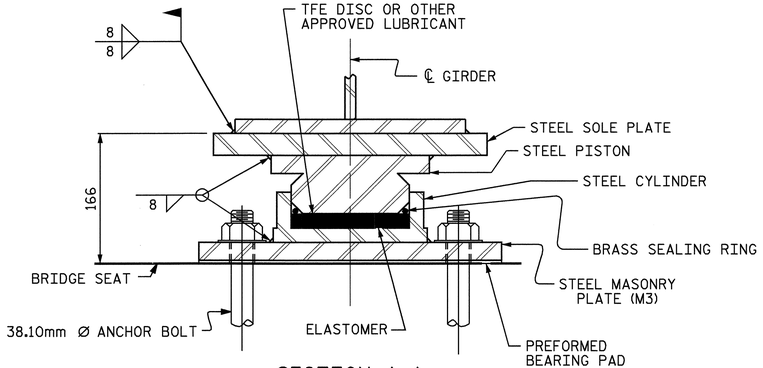

SECTION A-A

PB3, FIXED
(8 REQ'D.)

POT BEARING DETAILS

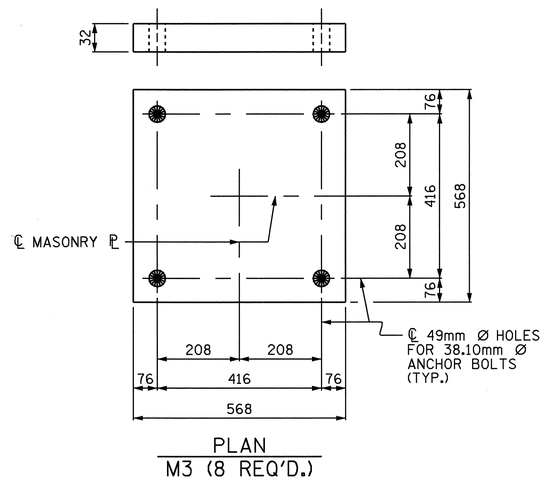

PLAN
M3 (8 REQ'D.)

MASONRY PLATE DETAILS

NOTES:

FOR POT BEARINGS, SEE SPECIAL PROVISIONS.

AT ALL POINTS OF SUPPORT IN SPANS "ABC" AND SPAN "DE", NUTS FOR ANCHOR BOLTS SHALL BE TIGHTENED FINGER TIGHT AND GIVEN AN ADDITIONAL 1/4 TURN. THE THREAD OF THE NUT AND BOLT SHALL THEN BE BURRED WITH A SHARP POINTED TOOL.

WHEN WELDING THE SOLE PLATE TO THE GIRDER, USE TEMPERATURE INDICATING WAX PENS, OR OTHER SUITABLE MEANS, TO ENSURE THAT THE TEMPERATURE OF THE BEARING DOES NOT EXCEED 121°C TEMPERATURES ABOVE THIS MAY DAMAGE THE TFE OR ELASTOMER.

SOLE PLATES SHOULD BE WELDED TO BEAM FLANGES AND ANCHOR BOLTS SHOULD BE GROUTED BEFORE FALSEWORK IS PLACED.

ALL SURFACES OF BEARING PLATES SHALL BE SMOOTH AND STRAIGHT.

FOR THERMAL SPRAYED COATINGS (METALLIZATION), SEE SPECIAL PROVISIONS.

THE CONTRACTOR MAY SUBSTITUTE DISC BEARINGS FOR THE POT BEARINGS SHOWN. FOR OPTIONAL DISC BEARINGS, SEE SPECIAL PROVISIONS.

SLOPE TABLE	
LOCATION	% SLOPE
BENT 2	1.000
BENT 4	3.000

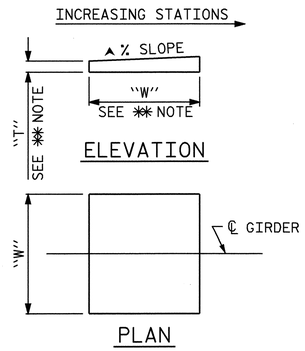

✱✱ NOTE:
DIMENSIONS "W" AND "T" ARE TO BE DETERMINED BY THE MANUFACTURER.

▲ SEE SLOPE TABLE

SOLE PLATE DETAILS

TABLE FOR LOADS AND MOVEMENTS						
BEARING	LOCATION	VERTICAL LOAD (kN)			LATERAL LOAD (kN)	TOTAL MOVEMENT (mm)
		DEAD	LIVE	TOTAL		
PB3 (FIXED)	BENT 2	1338	500	1838	268	0
PB3 (FIXED)	BENT 4	1472	499	1971	294	0

PROJECT NO. U-2519DA
CUMBERLAND COUNTY
STATION: 14+60.500-RP1A-

SHEET 2 OF 2

STATE OF NORTH CAROLINA
DEPARTMENT OF TRANSPORTATION
RALEIGH

STANDARD

POT BEARING DETAILS

(FIXED BEARING)

NORTH CAROLINA PROFESSIONAL SEAL 21638 ENGINEER LAURA E. SUTTON
9/30/08

REVISIONS						SHEET NO.
NO.	BY:	DATE:	NO.	BY:	DATE:	S-198
1			3			TOTAL SHEETS
2			4			411

ASSEMBLED BY : P.C. BREWER	DATE : 1/3/08	
CHECKED BY : A.S. CALLAWAY	DATE : 1/24/08	
DRAWN BY : RWW 8/99	REV. 7/10/01	LES/RWW
CHECKED BY : LES 8/99	REV. 5/7/03	RWW/JTE
	REV. 5/1/06	TLA/GM

25-AUG-2008 14:18
r:\structures\glrolaml\str07\pbrewer\Microstation\U2519DA_sd_BG_07.dgn
LSUTTON

PB1SM.STD

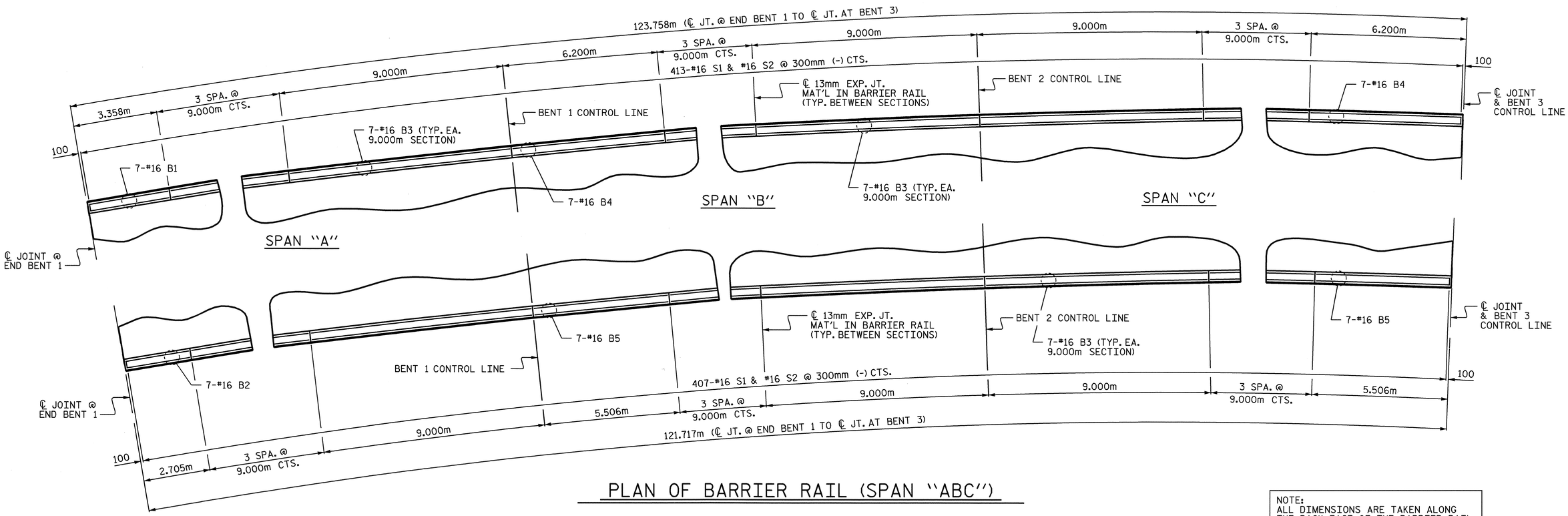

PLAN OF BARRIER RAIL (SPAN "ABC")

NOTE:
ALL DIMENSIONS ARE TAKEN ALONG THE BACK FACE OF THE BARRIER RAIL.

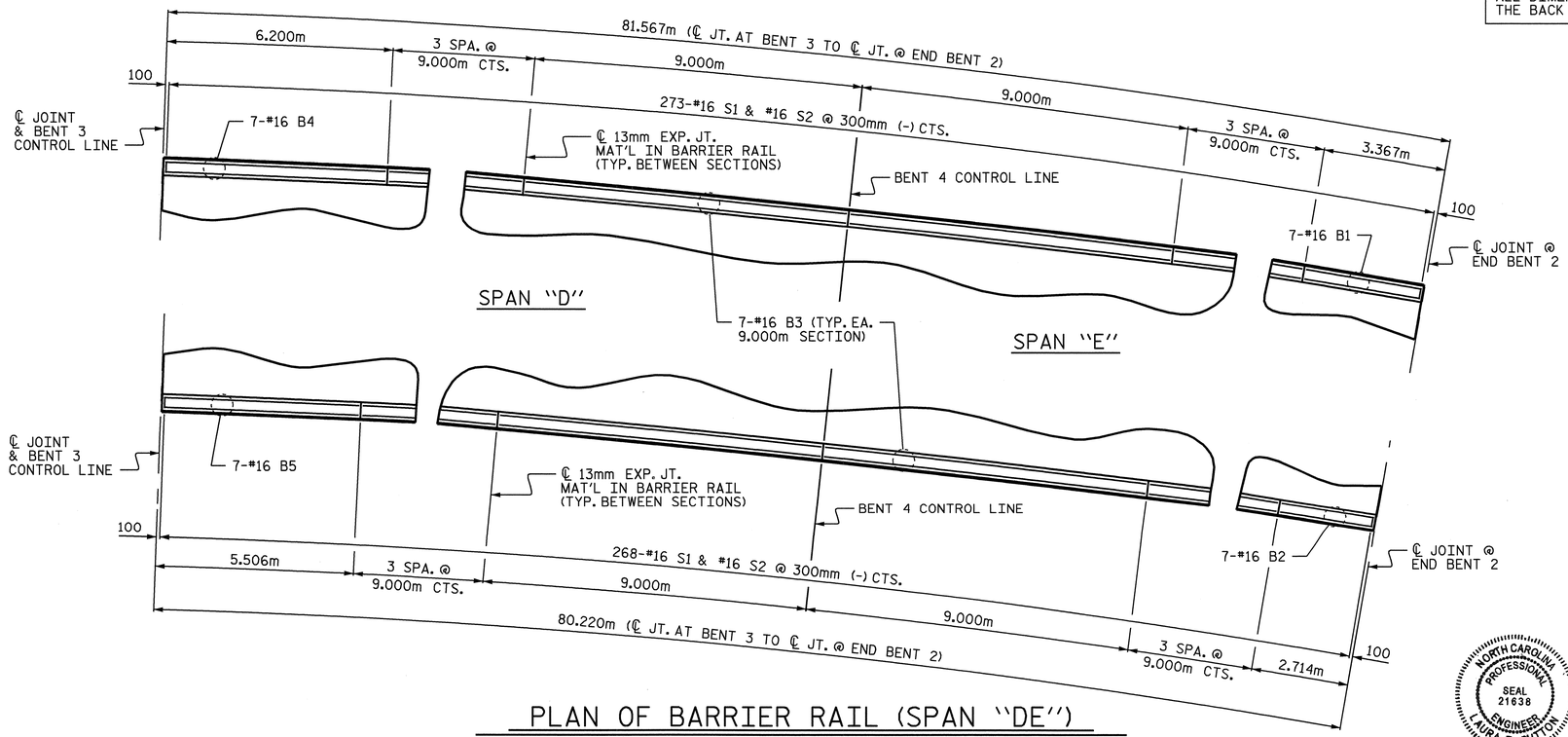

PLAN OF BARRIER RAIL (SPAN "DE")

NORTH CAROLINA PROFESSIONAL SEAL 21638 ENGINEER LAURA E. SUTTON
1/30/08

PROJECT NO. U-2519DA
CUMBERLAND COUNTY
STATION: 14+60.500-RP1A-

SHEET 1 OF 2

STATE OF NORTH CAROLINA
DEPARTMENT OF TRANSPORTATION
RALEIGH

SUPERSTRUCTURE
CONCRETE
BARRIER RAIL

REVISIONS						SHEET NO.
NO.	BY:	DATE:	NO.	BY:	DATE:	S-199
1			3			TOTAL SHEETS
2			4			411

DRAWN BY : P.C. BREWER DATE : 1/3/08
CHECKED BY : A.S. CALLAWAY DATE : 1/24/08

25-AUG-2008 14:18
r:\structures\glrolaml\str07\pbrewer\Microstation\u2519da_sd_br_07.dgn
LSUTTON

NOTES:

THE BARRIER RAIL IN EACH CONTINUOUS UNIT SHALL NOT BE CAST UNTIL ALL SLAB CONCRETE IN THAT UNIT HAS BEEN CAST AND HAS REACHED A MINIMUM COMPRESSIVE STRENGTH OF 20.7 MPa.

THE JOINT IN THE DECK SHALL BE FORMED PRIOR TO THE CASTING OF BARRIER RAIL.

ALL REINFORCING STEEL IN BARRIER RAILS SHALL BE EPOXY COATED.

VERTICAL GROOVED CONTRACTION JOINTS, 12mm IN DEPTH, SHALL BE TOOLED IN ALL EXPOSED FACES OF THE BARRIER RAIL AND IN ACCORDANCE WITH ARTICLE 825-10(B) OF THE STANDARD SPECIFICATIONS. THE CONTRACTION JOINT SHALL BE LOCATED AT EACH THIRD POINT BETWEEN BARRIER RAIL EXPANSION JOINTS. ONLY ONE CONTRACTION JOINT IS REQUIRED AT MIDPOINT OF BARRIER RAIL SEGMENTS LESS THAN 6.1m IN LENGTH AND NO CONTRACTION JOINTS ARE REQUIRED FOR THOSE SEGMENTS LESS THAN 3.5m IN LENGTH.

THE #16 S1 AND #16 S2 BARS MAY BE ADJUSTED SLIGHTLY IN ORDER TO MAINTAIN A 50mm MINIMUM CLEARANCE TO THE 13mm EXPANSION JOINT MATERIAL.

BILL OF MATERIAL

SPAN "ABC" — FOR CONCRETE BARRIER RAIL ONLY						SPAN "DE" — FOR CONCRETE BARRIER RAIL ONLY					
BAR	NO.	SIZE	TYPE	LENGTH	WEIGHT	BAR	NO.	SIZE	TYPE	LENGTH	WEIGHT
✳B1	7	#16	STR	3200	35	✳B1	7	#16	STR	3200	35
✳B2	7	#16	STR	2560	28	✳B2	7	#16	STR	2560	28
✳B3	168	#16	STR	8860	2310	✳B3	112	#16	STR	8860	1540
✳B4	14	#16	STR	6060	132	✳B4	7	#16	STR	6060	66
✳B5	14	#16	STR	5360	116	✳B5	7	#16	STR	5360	58
✳S1	820	#16	1	1400	1782	✳S1	541	#16	1	1400	1175
✳S2	820	#16	2	1580	2011	✳S2	541	#16	2	1580	1327
✳EPOXY COATED REINFORCING STEEL			kg		6,414	✳EPOXY COATED REINFORCING STEEL			kg		4,229
CLASS AA CONC.			m^3		61.6	CLASS AA CONC.			m^3		40.6
CONC. BARRIER RAIL			METERS		245.475	CONC. BARRIER RAIL			METERS		161.787

BAR TYPES

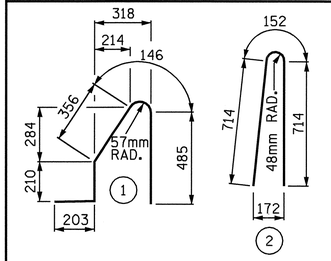

ALL BAR DIMENSIONS ARE OUT TO OUT.

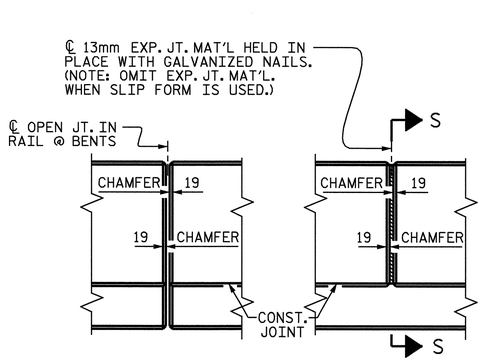

ELEVATION AT EXPANSION JOINTS

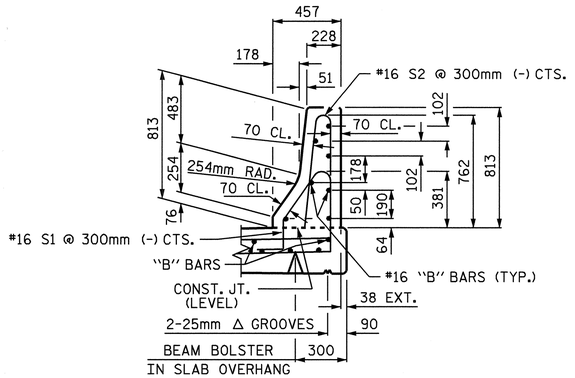

SECTION THRU RAIL

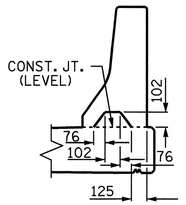

SECTION S-S
AT DAM IN OPEN JOINT
(THIS IS TO BE USED ONLY WHEN SLIP FORM IS USED)

BARRIER RAIL DETAILS

PROJECT NO. U-2519DA
CUMBERLAND COUNTY
STATION: 14+60.500-RP1A-

SHEET 2 OF 2

STATE OF NORTH CAROLINA
DEPARTMENT OF TRANSPORTATION
RALEIGH

STANDARD
CONCRETE BARRIER RAIL

REVISIONS						SHEET NO.
NO.	BY:	DATE:	NO.	BY:	DATE:	S-200
1			3			TOTAL SHEETS
2			4			411

NORTH CAROLINA PROFESSIONAL SEAL 21638 ENGINEER LAURA E. SUTTON
7/30/08

ASSEMBLED BY : P.C. BREWER	DATE : 1/3/08		
CHECKED BY : A.S. CALLAWAY	DATE : 1/24/08		
DRAWN BY : ARB 5/87	REV. 10/17/00	RWW/LES	
CHECKED BY : SJD 9/87	REV. 5/7/03R	RWW/JTE	
	REV. 5/1/06	TLA/GM	

25-AUG-2008 14:18
r:\structures\girolami\str07\pbrewer\Microstation\u2519da_sd_br_07.dgn
LSUTTON

STD. No. CBR1SM

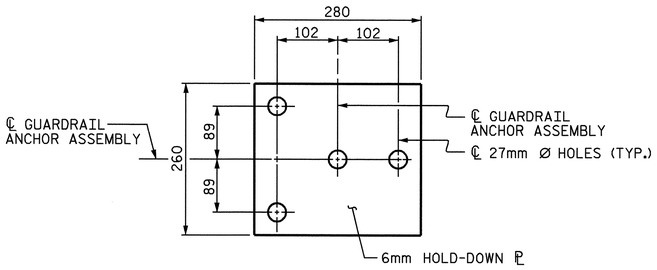

PLAN

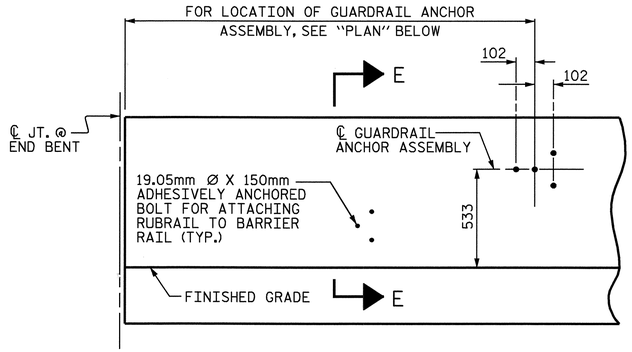

ELEVATION

FOR LOCATION OF RUBRAIL, SEE ROADWAY STD. 862.03

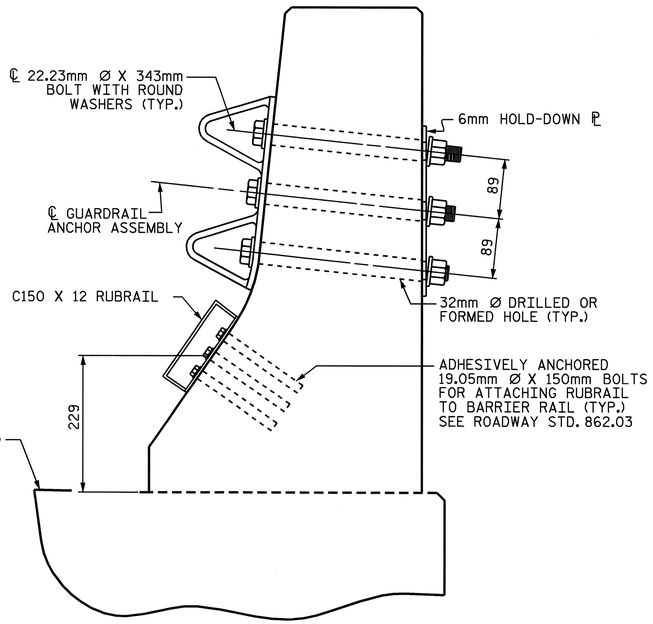

SECTION E-E

GUARDRAIL ANCHOR ASSEMBLY DETAILS

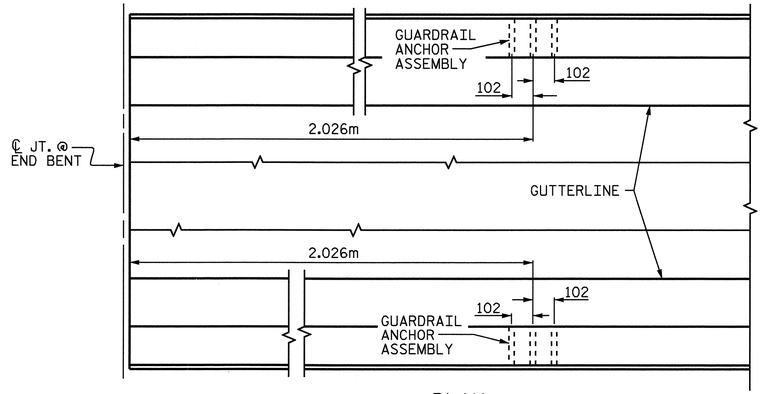

PLAN

LOCATION OF ANCHORS FOR GUARDRAIL

END BENT 1 SHOWN, END BENT 2 SIMILAR.

NOTES:

THE GUARDRAIL ANCHOR ASSEMBLY SHALL CONSIST OF A 6mm HOLD DOWN PLATE AND 4 - 22.23mm Ø BOLTS WITH NUTS AND WASHERS, RUBRAIL, AND ADHESIVELY ANCHORED BOLTS.

THE HOLD-DOWN PLATE SHALL CONFORM TO AASHTO M270 GRADE 250. AFTER FABRICATION, THE HOLD-DOWN PLATE SHALL BE HOT-DIP GALVANIZED IN ACCORDANCE WITH AASHTO M111.

BOLTS SHALL CONFORM TO THE REQUIREMENTS OF ASTM A307 AND NUTS SHALL CONFORM TO THE REQUIREMENTS OF AASHTO M291. BOLTS, NUTS AND WASHERS SHALL BE GALVANIZED. (AT THE CONTRACTOR'S OPTION, STAINLESS STEEL BOLTS, NUTS AND WASHERS MAY BE USED AS AN ALTERNATE FOR THE 22.23mm Ø GALVANIZED BOLTS, NUTS AND WASHERS. THEY SHALL CONFORM TO OR EXCEED THE MECHANICAL REQUIREMENTS OF ASTM A307. THE USE OF THIS ALTERNATE SHALL BE APPROVED BY THE ENGINEER.)

THE GUARDRAIL ANCHOR ASSEMBLY IS REQUIRED AT ALL POINTS WHERE APPROACH GUARDRAIL IS TO BE ATTACHED TO THE END OF BARRIER RAIL. FOR POINTS OF ATTACHMENT, SEE SKETCH.

AFTER INSTALLATION, THE EXPOSED THREAD OF THE BOLT SHALL BE BURRED WITH A SHARP POINTED TOOL.

THE COST OF THE GUARDRAIL ANCHOR ASSEMBLY SHALL BE INCLUDED IN THE UNIT CONTRACT PRICE BID FOR CONCRETE BARRIER RAIL.

THE 32mm Ø HOLES SHALL BE FORMED OR DRILLED WITH A CORE BIT. IMPACT TOOLS WILL NOT BE PERMITTED. ANY CONCRETE DAMAGED BY THIS WORK SHALL BE REPAIRED TO THE SATISFACTION OF THE ENGINEER.

THE C150 X 12 RUBRAIL IS TO BE ADHESIVELY ANCHORED TO THE RAIL USING THREE 19.05mm Ø X 150mm BOLTS WITH WASHERS. LEVEL ONE FIELD TESTING IS REQUIRED, AND THE YIELD LOAD OF THE 19.05mm Ø BOLTS IS 53.4kN. FOR ADHESIVELY ANCHORED ANCHOR BOLTS OR DOWELS, SEE SPECIAL PROVISIONS. SEE ROADWAY STANDARD 862.03 FOR DETAILS AND LOCATION OF THE RUBRAIL.

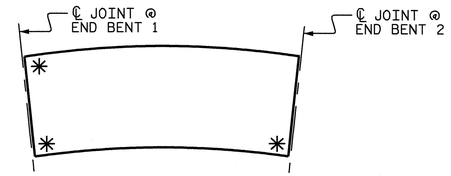

SKETCH SHOWING POINTS OF ATTACHMENTS

✳ DENOTES GUARDRAIL ANCHOR ASSEMBLY

PROJECT NO. U-2519DA

CUMBERLAND COUNTY

STATION: 14+60.500-RP1A-

STATE OF NORTH CAROLINA
DEPARTMENT OF TRANSPORTATION
RALEIGH

STANDARD

GUARDRAIL ANCHORAGE FOR BARRIER RAIL

NORTH CAROLINA PROFESSIONAL SEAL 21638 ENGINEER LAURA E. SUTTON 7/30/08

REVISIONS						SHEET NO.
NO.	BY:	DATE:	NO.	BY:	DATE:	S-201
1			3			TOTAL SHEETS
2			4			411

ASSEMBLED BY : P.C. BREWER	DATE : 1/3/08
CHECKED BY : A.S. CALLAWAY	DATE : 1/24/08
DRAWN BY : TLA 5/06	ADDED 5/1/06R KMM/GM
CHECKED BY : GM 5/06	

30-JUL-2008 14:13
R:\Structures\grlolaml\str07\pbrewer\Microstation\u2519da_sd_br_07.dgn
LSUTTON

STD. NO. GRA2SM

THIS SHEET INTENTIONALLY LEFT BLANK

PROJECT NO. U-2519DA

CUMBERLAND COUNTY

STATION: 14+60.500-RP1A-

STATE OF NORTH CAROLINA
DEPARTMENT OF TRANSPORTATION
RALEIGH

BLANK SHEET

REVISIONS						SHEET NO.
NO.	BY:	DATE:	NO.	BY:	DATE:	S-202
1			3			TOTAL SHEETS
2			4			411

ASSEMBLED BY :	DATE :	
CHECKED BY :	DATE :	
DRAWN BY : EEM 1/96	REV. 7/10/01	LES/RDR
CHECKED BY : RGW 1/96	REV. 5/7/03RR	RWW/JTE
	REV. 5/1/06	TLA/GM

18-MAR-2011 12:41
K:\TIPProjects-U\U2519da\Structures\girolami\str07\pbrewer\Microstation\u2519da_sd_aej_07.dgn
ttang

STD. NO. AEJ1SM

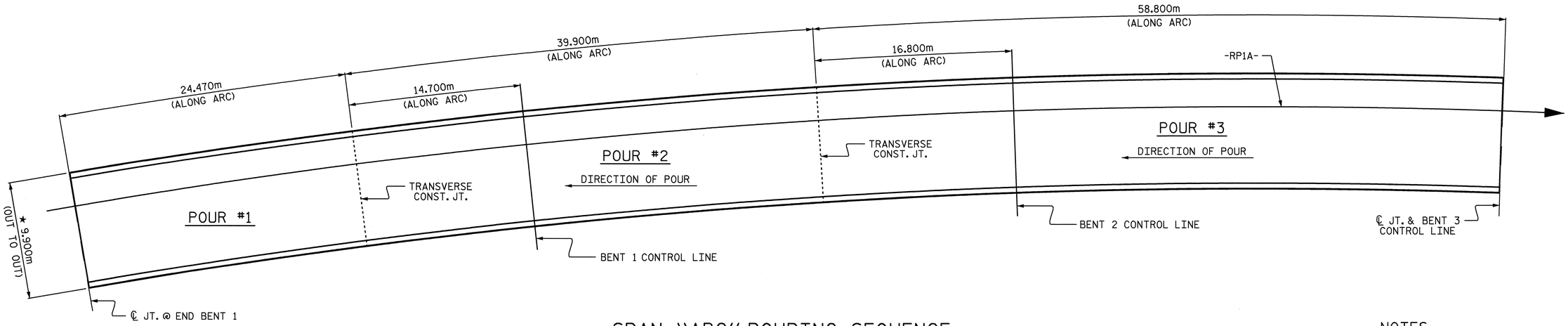

SPAN "ABC" POURING SEQUENCE

★ RADIAL DIMENSIONS

NOTES:

DIMENSION ARE TAKEN ALONG -RP1A-.

TRANSVERSE CONSTRUCTION JOINTS ARE TO BE PLACED RADIALLY ALONG -RP1A-.

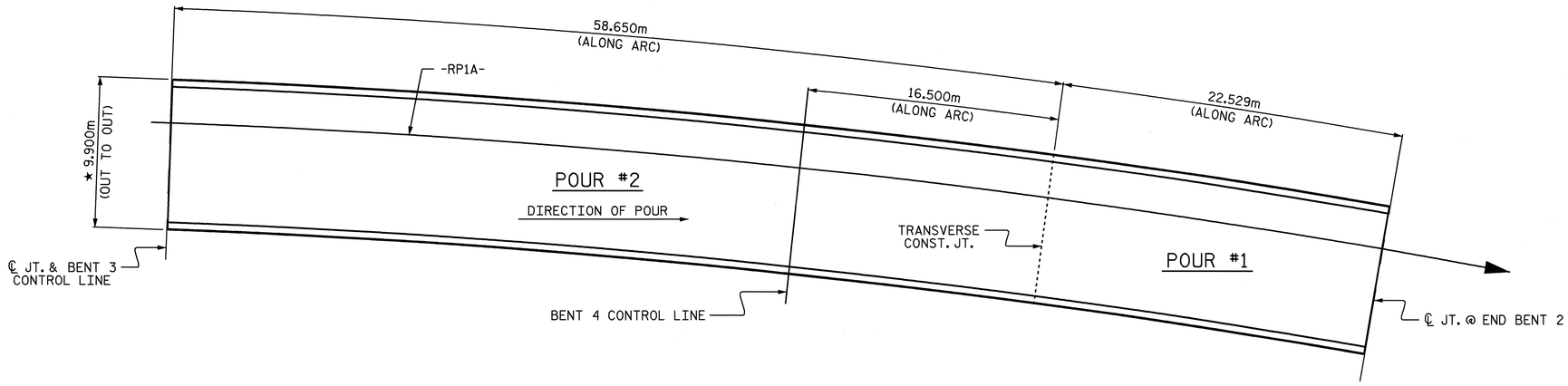

SPAN "DE" POURING SEQUENCE

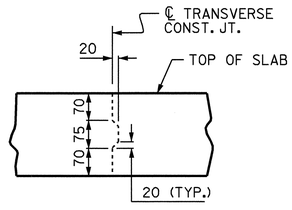

TRANSVERSE CONSTRUCTION JOINT DETAIL

NOTE: REINFORCING STEEL IN SLAB NOT SHOWN.
LONGITUDINAL REINFORCING STEEL SHALL BE CONTINUOUS THROUGH JOINT.

PROJECT NO. U-2519DA

CUMBERLAND COUNTY

STATION: 14+60.500-RP1A-

STATE OF NORTH CAROLINA
DEPARTMENT OF TRANSPORTATION
RALEIGH

SUPERSTRUCTURE

POURING SEQUENCE

NORTH CAROLINA PROFESSIONAL SEAL 21638 ENGINEER LAURA E. SUTTON
9/30/08

REVISIONS						SHEET NO.
NO.	BY:	DATE:	NO.	BY:	DATE:	S-203
1			3			TOTAL SHEETS
2			4			411

DRAWN BY : P.C. BREWER DATE : 1/3/08
CHECKED BY : A.S. CALLAWAY DATE : 1/24/08

25-AUG-2008 14:17
r:\structures\glrolaml\str07\pbrewer\Microstation\u2519da_sd_bm_07.dgn
LSUTTON

SUPERSTRUCTURE REINFORCING STEEL LENGTHS ARE BASED ON THE FOLLOWING MINIMUM SPLICE LENGTHS					
BAR SIZE	SUPERSTRUCTURE EXCEPT APPROACH SLABS, PARAPET, AND BARRIER RAIL		APPROACH SLABS		PARAPET AND BARRIER RAIL
	EPOXY COATED	UNCOATED	EPOXY COATED	UNCOATED	
#13	610	540	610	540	840
#16	770	660	770	660	1050
#19	920	790	1190	790	1330
#22	1580	1060			
#25	2080	1390			

GROOVING BRIDGE FLOORS	
APPROACH SLABS	116.3 m^2
BRIDGE DECK	1,638.2 m^2
TOTAL	1,754.5 m^2

BILL OF MATERIAL

SPAN "ABC"

BAR	NO.	SIZE	TYPE	LENGTH	WEIGHT
✳A1	727	#16	STR	9880	11148
A2	728	#16	STR	9880	11163	
✳B1	84	#13	STR	7460	623
B2	264	#16	STR	16040	6572
✳B3	123	#16	STR	9420	1798
✳B4	120	#16	STR	8400	1564
✳B5	42	#13	STR	6740	281
✳B6	123	#16	STR	9960	1901
✳B7	120	#16	STR	8940	1665
✳B8	84	#13	STR	8040	671
✳B9	30	#13	STR	8820	263
✳G1	2	#16	STR	9880	31
✳K1	8	#16	1	2260	28
✳K2	8	#16	2	2640	33
✳K3	12	#16	STR	2100	39
✳S1	21	#16	3	1220	40
✳S2	21	#16	3	1160	38
REINFORCING STEEL			kg		17,735
✳EPOXY COATED REINFORCING STEEL			kg		20,123

SPAN "DE"

BAR	NO.	SIZE	TYPE	LENGTH	WEIGHT
✳A1	478	#16	STR	9880	7330
A2	479	#16	STR	9880	7345	
✳B10	84	#13	STR	7540	630
B11	165	#16	STR	16820	4307
✳B12	123	#16	STR	10400	1985
✳B13	120	#16	STR	9380	1747
✳B14	63	#13	STR	8640	541
✳B15	20	#13	STR	8700	173
✳G1	2	#16	STR	9880	31
✳K1	8	#16	1	2260	28
✳K2	8	#16	2	2640	33
✳K3	12	#16	STR	2100	39
✳S1	21	#16	3	1220	40
✳S2	21	#16	3	1160	38
REINFORCING STEEL			kg		11,652
✳EPOXY COATED REINFORCING STEEL			kg		12,615

BAR TYPES

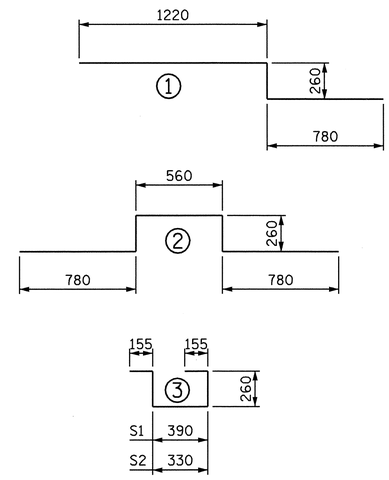

ALL BAR DIMENSIONS ARE OUT TO OUT.

SUPERSTRUCTURE BILL OF MATERIAL

	CLASS AA CONCRETE (m3)				REINFORCING STEEL (kg)	EPOXY COATED REINFORCING STEEL (kg)
	POUR #1	POUR #2	POUR #3	TOTAL		
SPAN "ABC"	66.0	106.6	157.7	330.3	17,735	20,123
SPAN "DE"	157.3	60.9	——	218.2	11,652	12,615
■ TOTALS				548.5	29,387	32,738

■ BARRIER RAIL QUANTITIES ARE NOT INCLUDED.

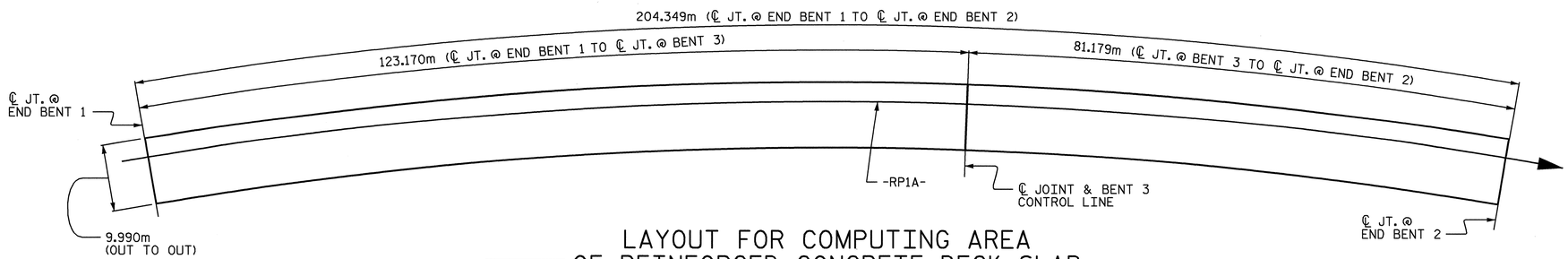

LAYOUT FOR COMPUTING AREA OF REINFORCED CONCRETE DECK SLAB (SQ. METER = 2,034.3)

PROJECT NO. U-2519DA

CUMBERLAND COUNTY

STATION: 14+60.500-RP1A-

STATE OF NORTH CAROLINA
DEPARTMENT OF TRANSPORTATION
RALEIGH

SUPERSTRUCTURE

BILL OF MATERIAL

NORTH CAROLINA PROFESSIONAL SEAL 21638 ENGINEER LAURA E. SUTTON 9/30/08

REVISIONS						SHEET NO.
NO.	BY:	DATE:	NO.	BY:	DATE:	S-204
1			3			TOTAL SHEETS
2			4			411

DRAWN BY : P.C. BREWER DATE : 1/3/08
CHECKED BY : A.S. CALLAWAY DATE : 1/24/08

25-AUG-2008 14:17
r:\structures\glrolaml\str07\pbrewer\Microstation\u2519da_sd_bm_07.dgn
LSUTTON

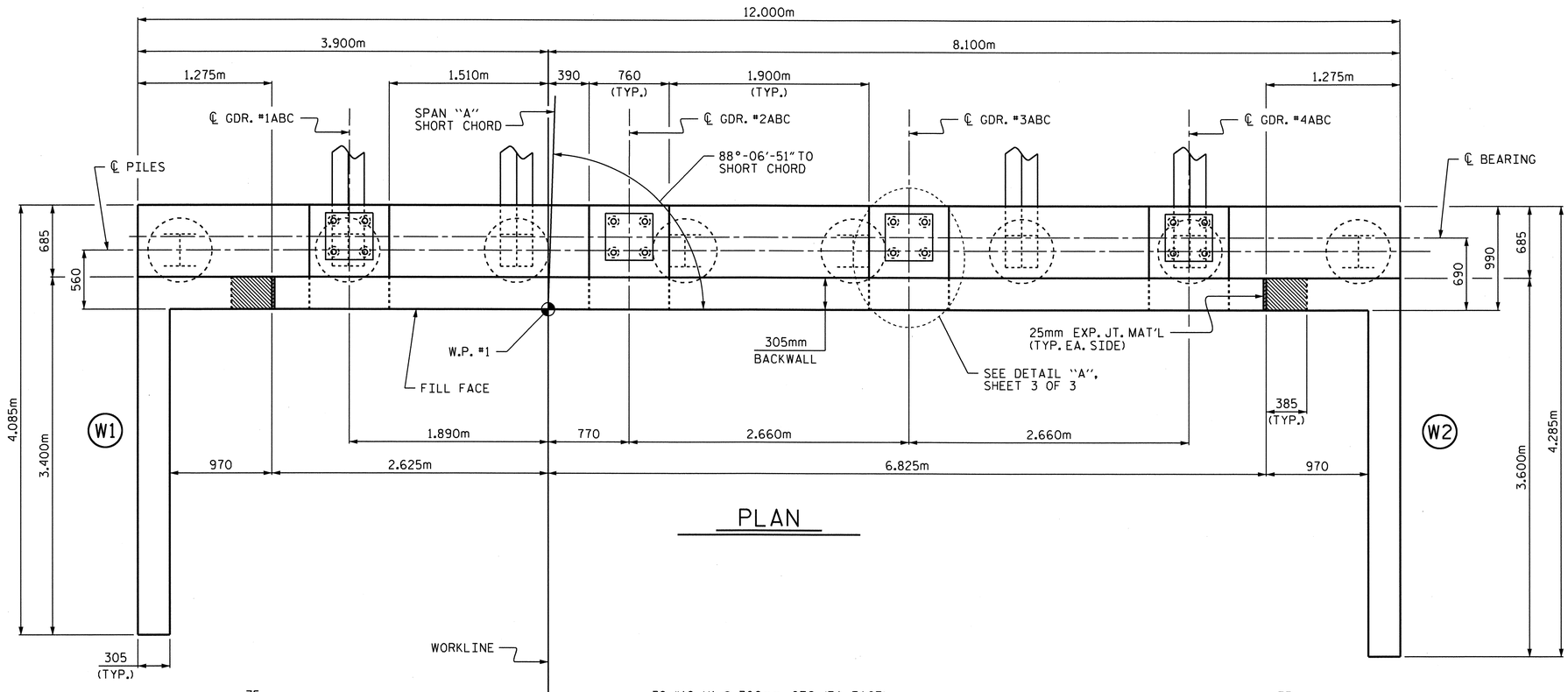

NOTES:

STIRRUPS IN CAP MAY BE SHIFTED AS NECESSARY TO CLEAR ANCHOR BOLTS.

FOR PIPE INSERT DETAILS, SEE "POT BEARING DETAILS" SHEET 1 OF 2.

BACKWALL SHALL BE PLACED BEFORE APPLYING THE EPOXY PROTECTIVE COATING.

THE TOP SURFACE AREAS OF THE END BENT CAPS SHALL BE CURED IN ACCORDANCE WITH THE STANDARD SPECIFICATIONS EXCEPT THE MEMBRANE CURING COMPOUND METHOD SHALL NOT BE USED.

THE TOP SURFACE OF THE CAP EXCEPT THE BRIDGE SEAT BUILDUPS SHALL BE SLOPED TRANSVERSELY FROM THE FILL FACE TO THE BACK FACE AT THE RATE OF 2 %.

THE CONCRETE IN THE SHADED AREA OF THE WING SHALL BE POURED AFTER THE JOINT BETWEEN THE DECK AND THE APPROACH SLAB HAS BEEN FORMED AND THE BARRIER RAIL HAS BEEN CAST IF SLIP FORMING IS USED.

THE CONTRACTOR SHALL PROVIDE FOR INSTALLATION OF THE 102mm DIAMETER DRAIN PIPE THROUGH THE WING WALL AS REQUIRED FOR REINFORCED BRIDGE APPROACH FILLS, SEE THE ROADWAY PLANS. REINFORCING STEEL IN THE WING WALL MAY BE SHIFTED AS NECESSARY TO CLEAR THE DRAIN PIPE.

THE #16 V1 BARS SHALL BE PLACED 50mm CLEAR FROM THE TOP OF THE BACKWALL.

▲ FOR LOCATION OF ELEVATIONS BETWEEN BUILDUPS, SEE SECTION A-A ON SHEET 3 OF 3.

★ THIS ELEVATION TAKEN ON THE FILL FACE OF THE BACKWALL.

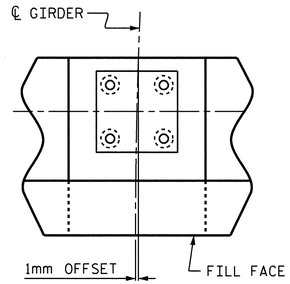

OFFSET DETAIL
(TYP. EA. GIRDER)

TOP OF PILE ELEVATIONS	
①	EL. 65.998
②	EL. 65.918
③	EL. 65.838
④	EL. 65.758
⑤	EL. 65.678
⑥	EL. 65.598
⑦	EL. 65.518
⑧	EL. 65.438

PROJECT NO. U-2519DA
CUMBERLAND COUNTY
STATION: 14+60.500-RP1A-

SHEET 1 OF 3

STATE OF NORTH CAROLINA
DEPARTMENT OF TRANSPORTATION
RALEIGH

SUBSTRUCTURE
END BENT 1

NORTH CAROLINA PROFESSIONAL SEAL 16301 ENGINEER TING HSIANG FANG
3/22/11

REVISIONS						SHEET NO.
NO.	BY:	DATE:	NO.	BY:	DATE:	S-205
1			3			TOTAL SHEETS
2			4			411

DRAWN BY : P.C. BREWER DATE : 12/12/07
CHECKED BY : A.S. CALLAWAY DATE : 2/27/08

22-MAR-2011 12:43
K:\TIPProjects-U\U2519da\Structures\girolami\str07\pbrewer\Microstation\u2519da_sd_eb_07.dgn
tfang

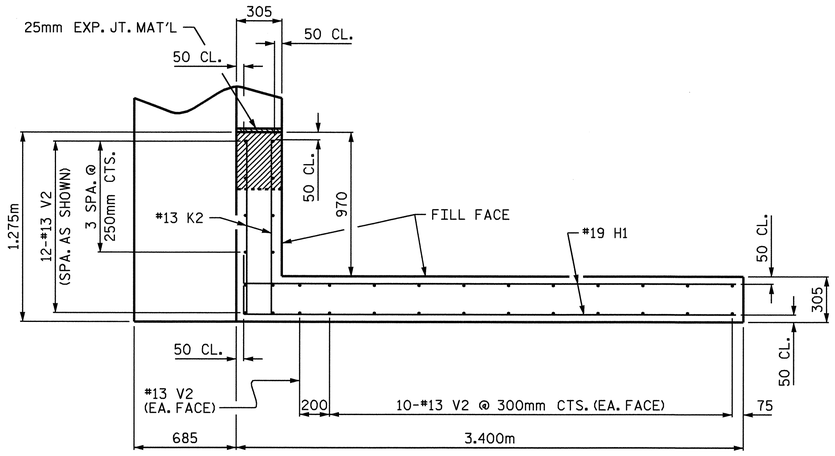

PLAN OF WING (W1)

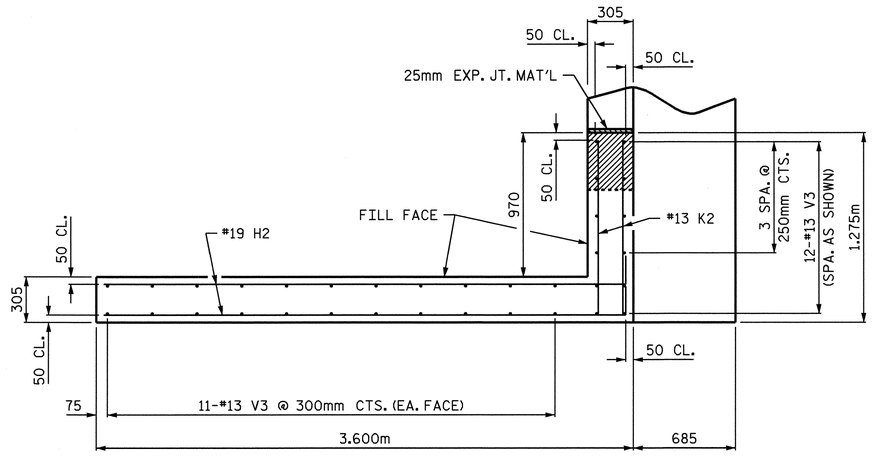

PLAN OF WING (W2)

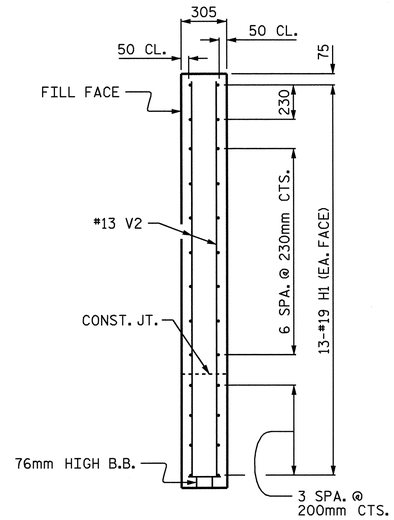

SECTION X-X

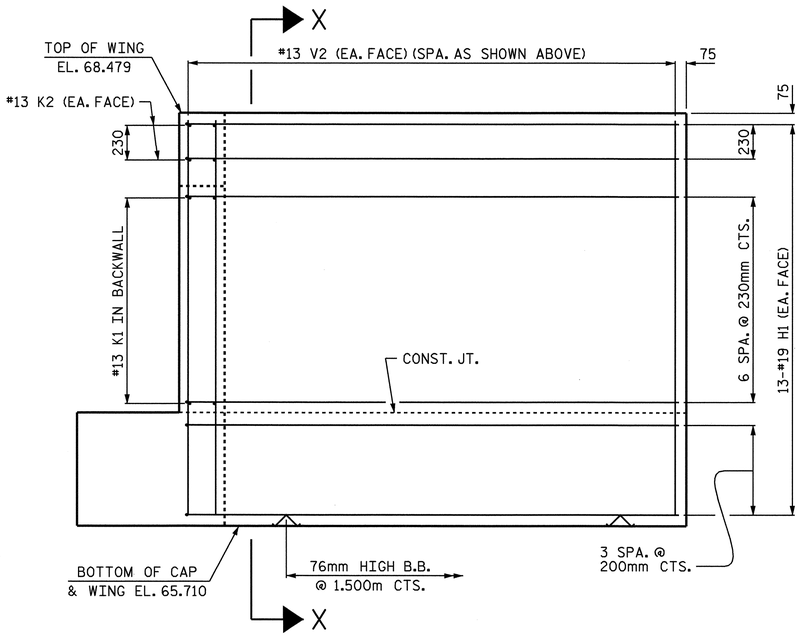

ELEVATION OF WING (W1)

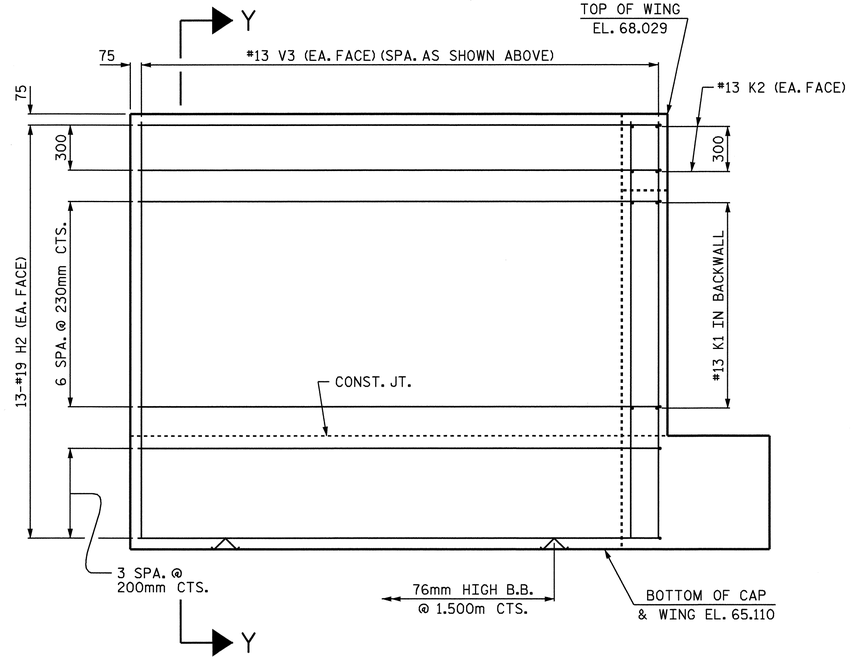

ELEVATION OF WING (W2)

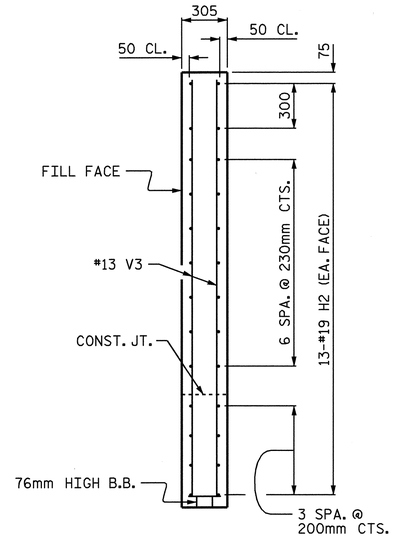

SECTION Y-Y

PROJECT NO. U-2519DA

CUMBERLAND COUNTY

STATION: 14+60.500-RP1A-

SHEET 2 OF 3

STATE OF NORTH CAROLINA
DEPARTMENT OF TRANSPORTATION
RALEIGH

SUBSTRUCTURE

END BENT 1

NORTH CAROLINA PROFESSIONAL SEAL 21638 ENGINEER LAURA E. SUTTON 7/30/08

REVISIONS						SHEET NO.
NO.	BY:	DATE:	NO.	BY:	DATE:	S-206
1			3			TOTAL SHEETS
2			4			411

DRAWN BY : P.C. BREWER DATE : 12/12/07
CHECKED BY : A.S. CALLAWAY DATE : 2/27/08

30-JUL-2008 14:07
R:\Structures\glrolam1\str07\pbrewer\Microstation\u2519da_sd_eb_07.dgn
LSUTTON

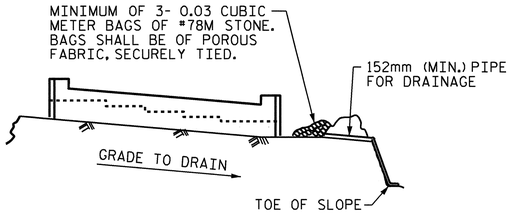

BAGGED STONE AND PIPE SHALL BE PLACED IMMEDIATELY AFTER COMPLETION OF END BENT EXCAVATION. PIPE MAY BE EITHER CONCRETE, CORRUGATED STEEL, CORRUGATED ALUMINUM ALLOY, OR CORRUGATED PLASTIC. PERFORATED PIPE WILL NOT BE ALLOWED.

BAGGED STONE SHALL REMAIN IN PLACE UNTIL THE ENGINEER DIRECTS THAT IT BE REMOVED. THE CONTRACTOR SHALL REMOVE AND DISPOSE OF SILT ACCUMULATIONS AT BAGGED STONE WHEN SO DIRECTED BY THE ENGINEER. BAGS SHALL BE REMOVED AND REPLACED WHENEVER THE ENGINEER DETERMINES THAT THEY HAVE DETERIORATED AND LOST THEIR EFFECTIVENESS.

NO SEPARATE PAYMENT WILL BE MADE FOR THIS WORK AND THE ENTIRE COST OF THIS WORK SHALL BE INCLUDED IN THE UNIT CONTRACT PRICE BID FOR THE SEVERAL PAY ITEMS.

TEMPORARY DRAINAGE AT END BENT

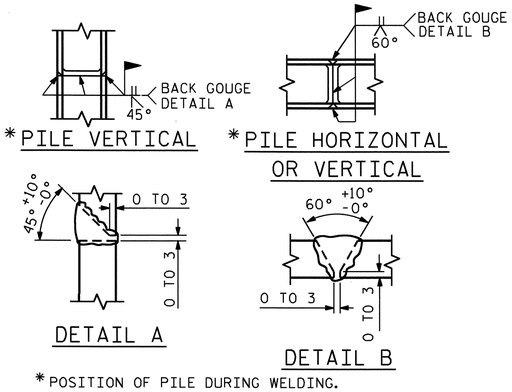

*POSITION OF PILE DURING WELDING.

PILE SPLICE DETAILS

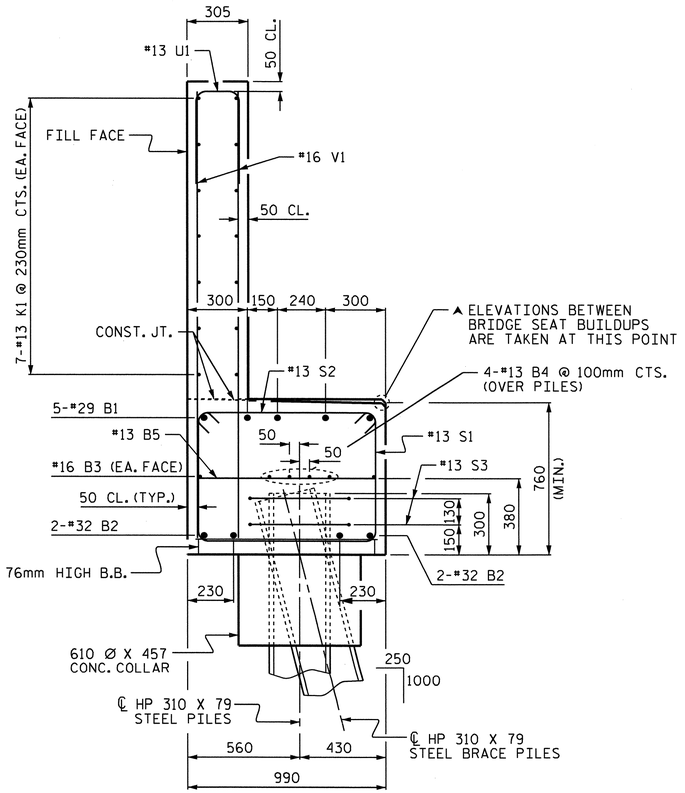

SECTION A-A

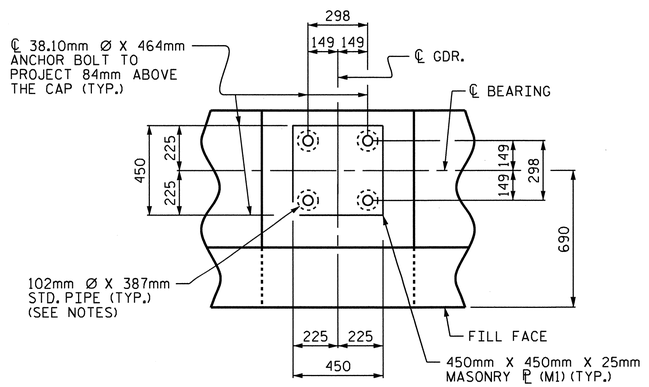

DETAIL "A"

(TYP. EA. GIRDER)

BAR TYPES

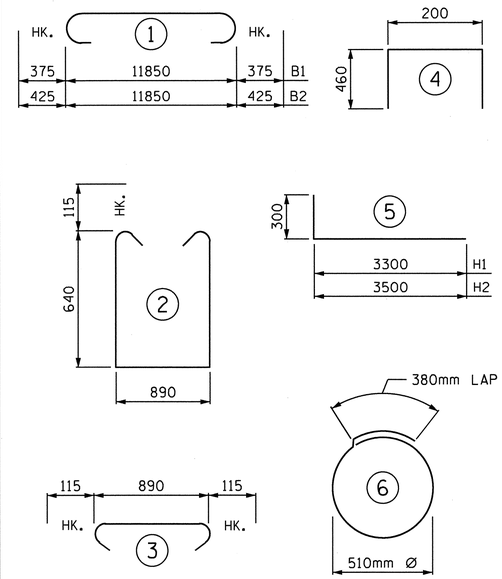

ALL BAR DIMENSIONS ARE OUT TO OUT.

BILL OF MATERIAL

END BENT 1

BAR	NO.	SIZE	TYPE	LENGTH	WEIGHT
B1	5	#29	1	12600	319
B2	4	#32	1	12700	325
B3	2	#16	STR	11900	37
B4	8	#13	STR	6320	50
B5	10	#13	STR	880	9
H1	26	#19	5	3600	209
H2	26	#19	5	3800	221
K1	28	#13	STR	6320	176
K2	8	#13	STR	1160	9
S1	39	#13	2	2400	93
S2	39	#13	3	1120	43
S3	16	#13	6	1980	31
U1	32	#13	4	1120	36
V1	64	#16	STR	2220	221
V2	34	#13	STR	2640	89
V3	34	#13	STR	2780	94

REINFORCING STEEL kg 1,962

CLASS A CONCRETE BREAKDOWN

POUR #1 CAP & LOWER WINGS & COLLARS 11.9 m3

POUR #2 BACKWALL & UPPER WINGS 10.1 m3

TOTAL 22.0 m3

HP 310 x 79 STEEL PILES NO. 8 METERS 136

PROJECT NO. U-2519DA

CUMBERLAND COUNTY

STATION: 14+60.500-RP1A-

SHEET 3 OF 3

STATE OF NORTH CAROLINA
DEPARTMENT OF TRANSPORTATION
RALEIGH

SUBSTRUCTURE

END BENT 1

REVISIONS						SHEET NO.
NO.	BY:	DATE:	NO.	BY:	DATE:	S-207
1			3			TOTAL SHEETS
2			4			411

DRAWN BY : P.C. BREWER DATE : 12/12/07
CHECKED BY : A.S. CALLAWAY DATE : 2/27/08

15-MAR-2011 16:36
K:\TIPProjects-U\U2519da\Structures\girolami\str07\pbrewer\Microstation\u2519da_sd_eb_07.dgn
tfang

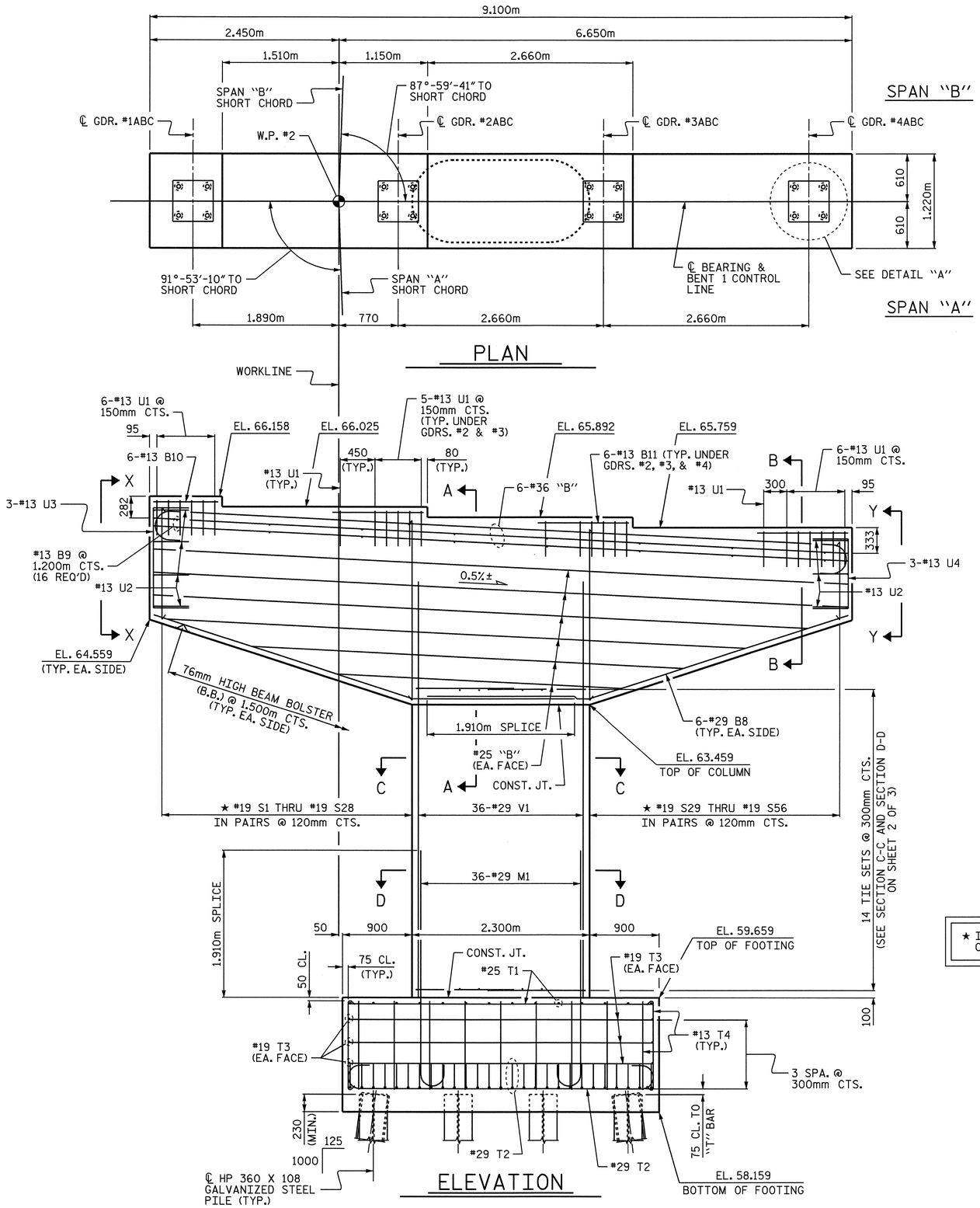

NOTES:

STIRRUPS AND U1 BARS IN CAP MAY BE SHIFTED AS NECESSARY TO CLEAR ANCHOR BOLTS.

DETAILED DRAWINGS FOR FALSEWORK AND FORMS FOR THIS HAMMERHEAD BENT CAP SHALL BE SUBMITTED. SEE SHEET SNSM.

FOR PIPE INSERT DETAILS, SEE "POT BEARING DETAILS" SHEET 1 OF 2.

FOR PILE SPLICE DETAILS, SEE "END BENT" SHEETS.

A MINIMUM OF 5 METERS OF THE TOP OF EACH PILE SHALL BE GALVANIZED IN ACCORDANCE WITH SECTION 1076 OF THE STANDARD SPECIFICATIONS.

BOTTOM OF FOOTING ELEVATIONS HAVE BEEN SET APPROXIMATELY 1m ABOVE NATURAL GROUND TO ACCOMMODATE ALL FALSEWORK AND FORMWORK REQUIRED FOR FOOTING CONSTRUCTION. FOUNDATION EXCAVATION IS NOT ALLOWED.

FOR MASS CONCRETE, SEE SPECIAL PROVISIONS.

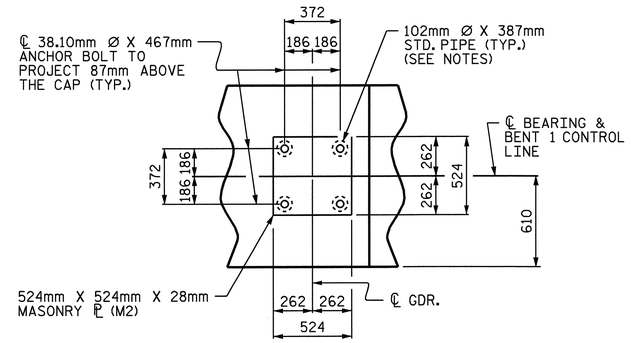

DETAIL "A"
(TYP. EA. GIRDER)

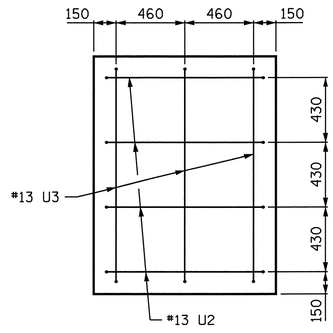

VIEW X-X

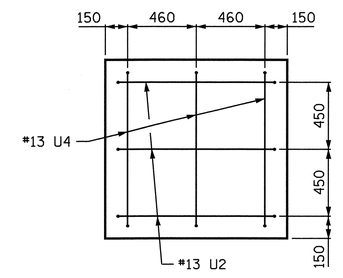

VIEW Y-Y

★ INVERT ALTERNATE PAIRS OF STIRRUPS AS SHOWN.

PROJECT NO. U-2519DA

CUMBERLAND COUNTY

STATION: 14+60.500-RP1A-

SHEET 1 OF 3

STATE OF NORTH CAROLINA
DEPARTMENT OF TRANSPORTATION
RALEIGH

SUBSTRUCTURE

BENT 1

REVISIONS						SHEET NO.
NO.	BY:	DATE:	NO.	BY:	DATE:	S-208
1			3			TOTAL SHEETS
2			4			411

NORTH CAROLINA PROFESSIONAL SEAL 21638 ENGINEER LAURA E. SUTTON
9/30/08

DRAWN BY : P.C. BREWER DATE : 1/28/08
CHECKED BY : A.S. CALLAWAY DATE : 2/11/08

30-SEP-2008 08:11
r:\structures\glrolaml\str07\pbrewer\Microstation\u2519da_sd_bt_07.dgn
lsutton

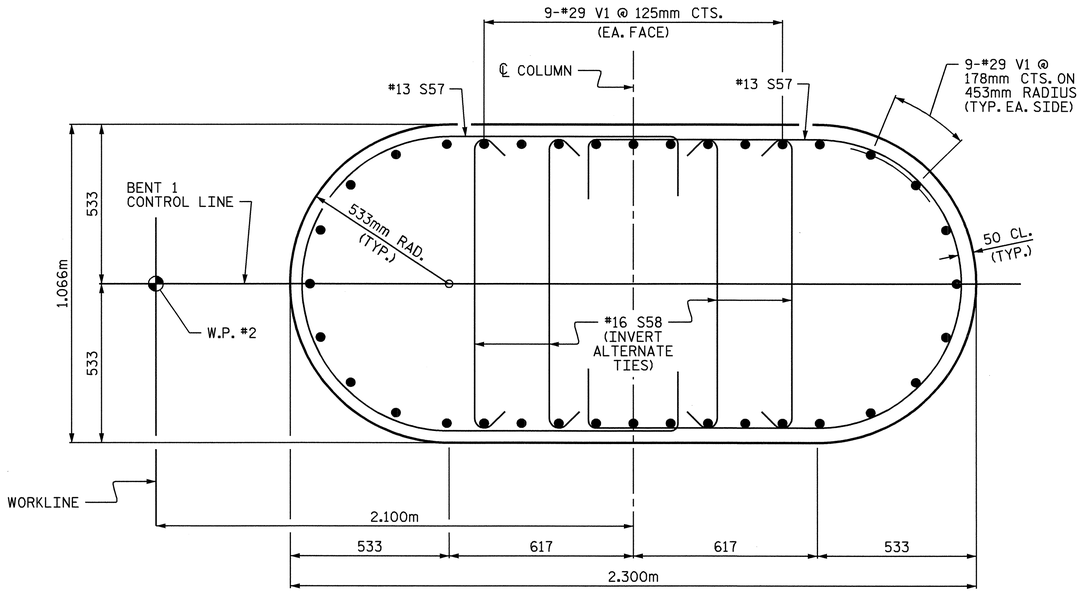

SECTION C-C

(SHOWING ONE TIE SET)

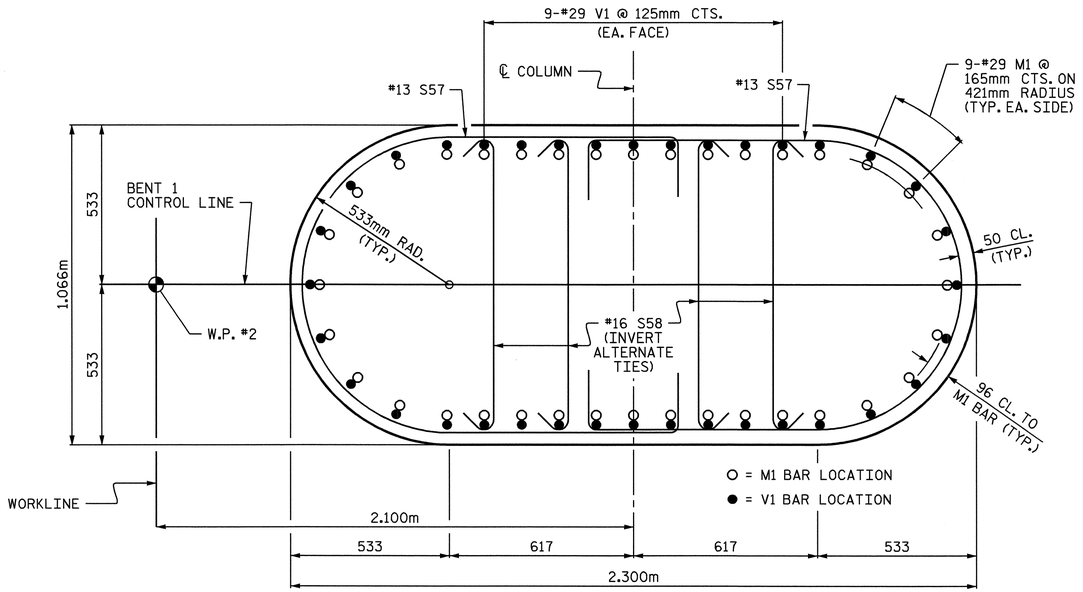

SECTION D-D

(SHOWING ONE TIE SET)

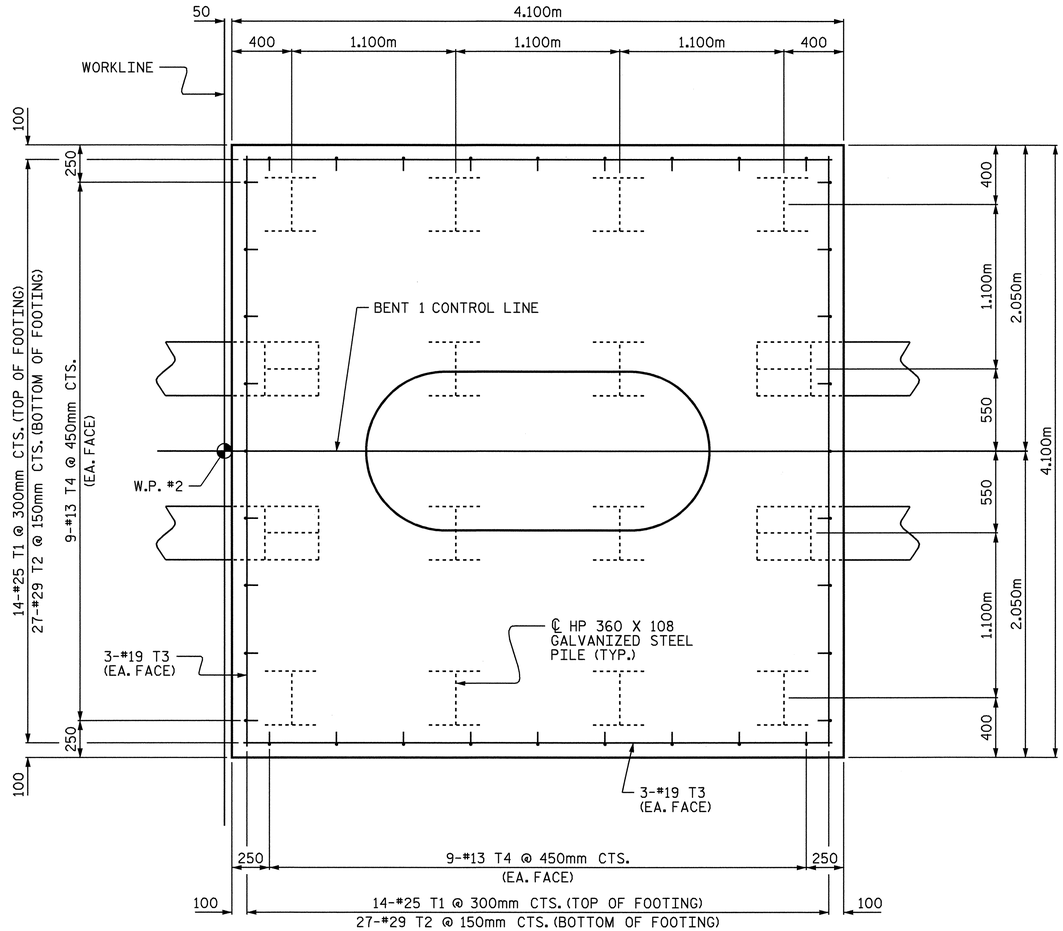

PLAN OF FOOTING

(SEE SECTION D-D FOR PLACEMENT OF "M" BARS IN FOOTING)

PROJECT NO. U-2519DA

CUMBERLAND COUNTY

STATION: 14+60.500-RP1A-

SHEET 2 OF 3

STATE OF NORTH CAROLINA
DEPARTMENT OF TRANSPORTATION
RALEIGH

SUBSTRUCTURE

BENT 1

NORTH CAROLINA PROFESSIONAL SEAL 21638 ENGINEER LAURA E. SUTTON
9/24/08

REVISIONS						SHEET NO.
NO.	BY:	DATE:	NO.	BY:	DATE:	S-209
1			3			TOTAL SHEETS
2			4			411

DRAWN BY : P.C. BREWER DATE : 1/28/08
CHECKED BY : A.S. CALLAWAY DATE : 2/11/08

30-SEP-2008 10:20
r:\structures\glrolaml\str07\pbrewer\microstation\u2519da_sd_bt_07.dgn
lsutton

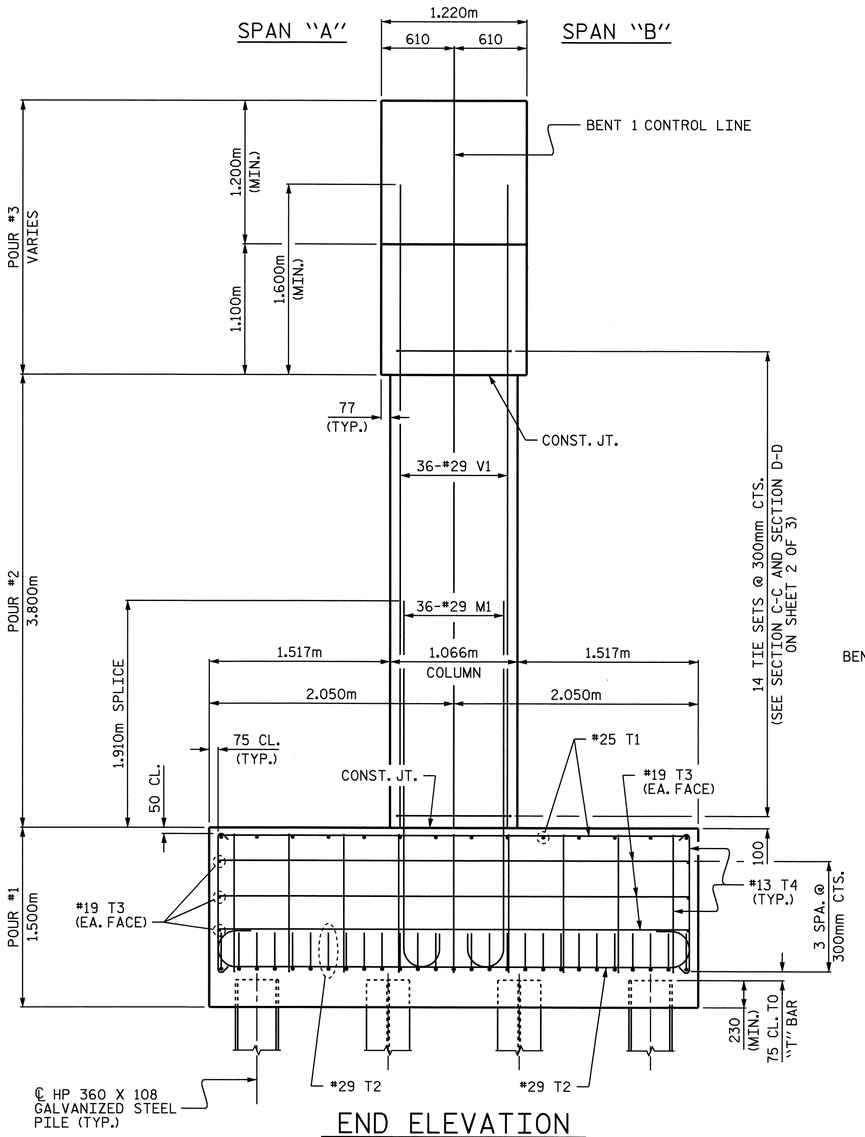

END ELEVATION

BAR TYPES

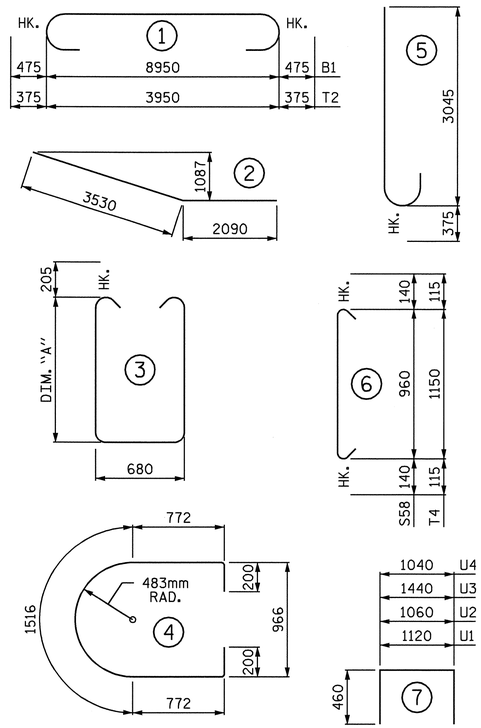

ALL BAR DIMENSIONS ARE OUT TO OUT.

BILL OF MATERIAL

BENT 1

BAR	NO.	SIZE	TYPE	DIM. "A"	LENGTH	WEIGHT	BAR	NO.	SIZE	TYPE	DIM. "A"	LENGTH	WEIGHT
B1	6	#36	1	—	9900	470	S36	2	#19	3	1905	4900	22
B2	12	#36	STR	—	9000	854	S37	2	#19	3	1865	4820	22
B3	4	#25	STR	—	9000	143	S38	2	#19	3	1815	4720	21
B4	2	#25	STR	—	8480	67	S39	2	#19	3	1775	4640	21
B5	2	#25	STR	—	7500	60	S40	2	#19	3	1725	4540	20
B6	2	#25	STR	—	5600	44	S41	2	#19	3	1685	4460	20
B7	2	#25	STR	—	3680	29	S42	2	#19	3	1635	4360	19
B8	12	#29	2	—	5620	341	S43	2	#19	3	1595	4280	19
B9	16	#13	STR	—	1120	18	S44	2	#19	3	1545	4180	19
B10	6	#13	STR	—	840	5	S45	2	#19	3	1505	4100	18
B11	18	#13	STR	—	1180	21	S46	2	#19	3	1455	4000	18
							S47	2	#19	3	1415	3920	18
M1	36	#29	5	—	3420	623	S48	2	#19	3	1365	3820	17
							S49	2	#19	3	1325	3740	17
S1	2	#19	3	1445	3980	18	S50	2	#19	3	1275	3640	16
S2	2	#19	3	1485	4060	18	S51	2	#19	3	1235	3560	16
S3	2	#19	3	1515	4120	18	S52	2	#19	3	1185	3460	15
S4	2	#19	3	1545	4180	19	S53	2	#19	3	1145	3380	15
S5	2	#19	3	1575	4240	19	S54	2	#19	3	1095	3280	15
S6	2	#19	3	1615	4320	19	S55	2	#19	3	1055	3200	14
S7	2	#19	3	1645	4380	20	S56	2	#19	3	1005	3100	14
S8	2	#19	3	1675	4440	20	S57	28	#13	4	—	3460	96
S9	2	#19	3	1715	4520	20	S58	56	#16	6	—	1240	108
S10	2	#19	3	1745	4580	20							
S11	2	#19	3	1775	4640	21	T1	28	#25	STR	—	3940	438
S12	2	#19	3	1805	4700	21	T2	54	#29	1	—	4700	1284
S13	2	#19	3	1845	4780	21	T3	12	#19	STR	—	3940	106
S14	2	#19	3	1875	4840	22	T4	36	#13	6	—	1380	49
S15	2	#19	3	1905	4900	22							
S16	2	#19	3	1935	4960	22	U1	25	#13	7	—	2040	51
S17	2	#19	3	1975	5040	23	U2	7	#13	7	—	1980	14
S18	2	#19	3	2005	5100	23	U3	3	#13	7	—	2360	7
S19	2	#19	3	2035	5160	23	U4	3	#13	7	—	1960	6
S20	2	#19	3	2075	5240	23							
S21	2	#19	3	2105	5300	24	V1	36	#29	STR	—	5400	984
S22	2	#19	3	2135	5360	24							
S23	2	#19	3	2165	5420	24							
S24	2	#19	3	2205	5500	25							
S25	2	#19	3	2235	5560	25							
S26	2	#19	3	2265	5620	25							
S27	2	#19	3	2305	5700	25							
S28	2	#19	3	2335	5760	26							
S29	2	#19	3	2215	5520	25							
S30	2	#19	3	2175	5440	24							
S31	2	#19	3	2125	5340	24							
S32	2	#19	3	2085	5260	24							
S33	2	#19	3	2035	5160	23							
S34	2	#19	3	1995	5080	23							
S35	2	#19	3	1945	4980	22							

REINFORCING STEEL	kg	6,969
CLASS A CONCRETE BREAKDOWN		
POUR #1 - FOOTING	m³	25.2
POUR #2 - COLUMN	m³	8.4
POUR #3 - CAP	m³	22.7
TOTAL	m³	56.3
HP 360 x 108 GALVANIZED STEEL PILES		
NO. 16	METERS	256

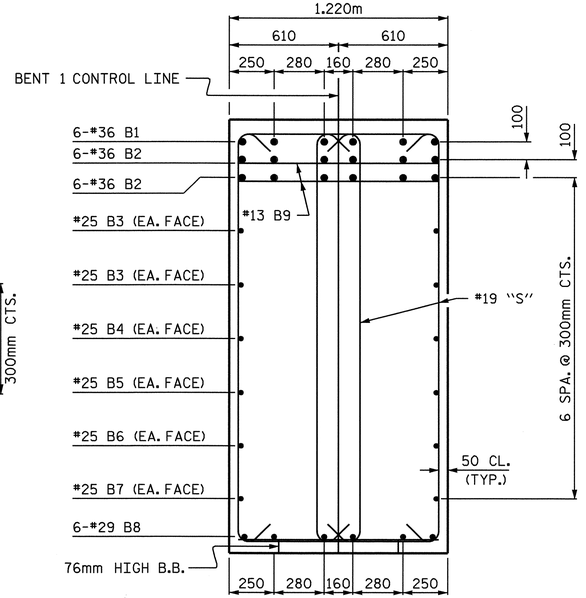

SECTION A-A

(FOR CLARITY, COLUMN REINFORCING STEEL NOT SHOWN.)

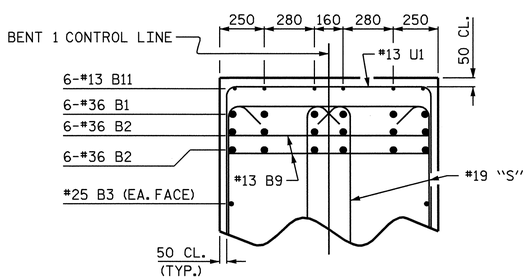

SECTION B-B

PROJECT NO. U-2519DA

CUMBERLAND COUNTY

STATION: 14+60.500-RP1A-

SHEET 3 OF 3

STATE OF NORTH CAROLINA
DEPARTMENT OF TRANSPORTATION
RALEIGH

SUBSTRUCTURE

BENT 1

NORTH CAROLINA PROFESSIONAL SEAL 21638 ENGINEER LAURA E. SUTTON
9/30/08

REVISIONS						SHEET NO.
NO.	BY:	DATE:	NO.	BY:	DATE:	S-210
1			3			TOTAL SHEETS
2			4			411

DRAWN BY : P.C. BREWER DATE : 1/28/08
CHECKED BY : A.S. CALLAWAY DATE : 2/11/08

30-SEP-2008 08:10
r:\structures\glrolaml\str07\pbrewer\Microstation\u2519da_sd_bt_07.dgn
lsutton

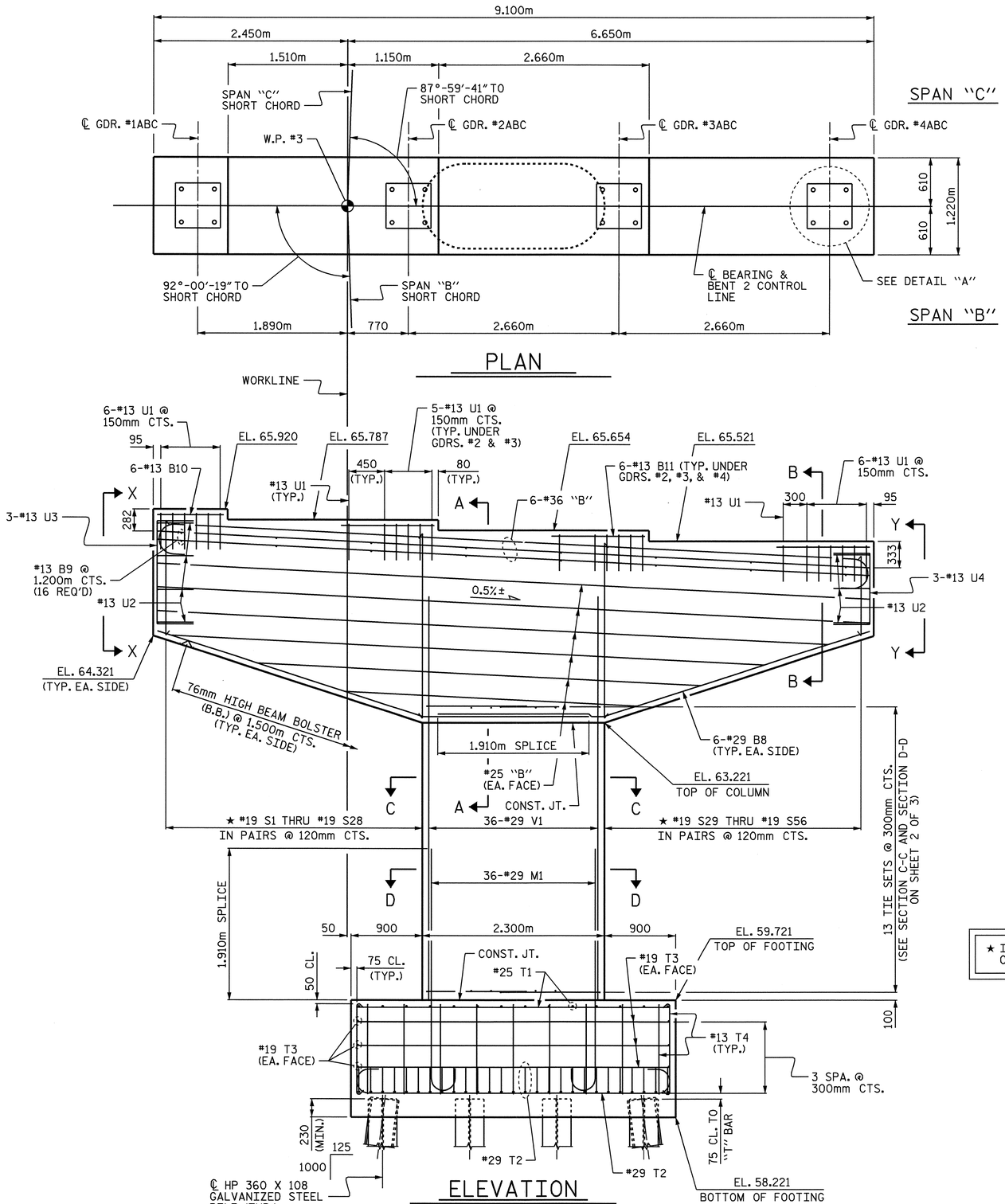

NOTES:

STIRRUPS AND U1 BARS IN CAP MAY BE SHIFTED AS NECESSARY TO CLEAR ANCHOR BOLTS.

DETAILED DRAWINGS FOR FALSEWORK AND FORMS FOR THIS HAMMERHEAD BENT CAP SHALL BE SUBMITTED. SEE SHEET SNSM.

FOR PILE SPLICE DETAILS, SEE "END BENT" SHEETS.

A MINIMUM OF 5 METERS OF THE TOP OF EACH PILE SHALL BE GALVANIZED IN ACCORDANCE WITH SECTION 1076 OF THE STANDARD SPECIFICATIONS.

BOTTOM OF FOOTING ELEVATIONS HAVE BEEN SET APPROXIMATELY 1m ABOVE NATURAL GROUND TO ACCOMMODATE ALL FALSEWORK AND FORMWORK REQUIRED FOR FOOTING CONSTRUCTION. FOUNDATION EXCAVATION IS NOT ALLOWED.

FOR MASS CONCRETE, SEE SPECIAL PROVISIONS.

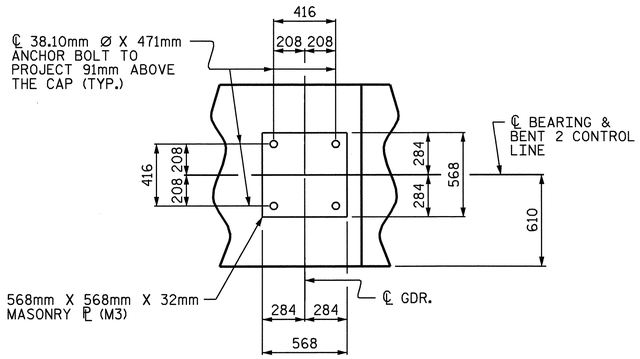

DETAIL "A"

(TYP. EA. GIRDER)

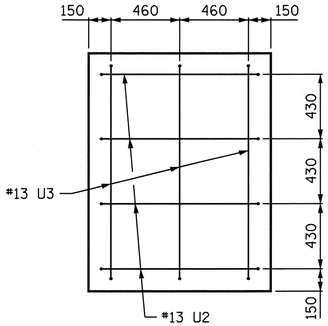

VIEW X-X

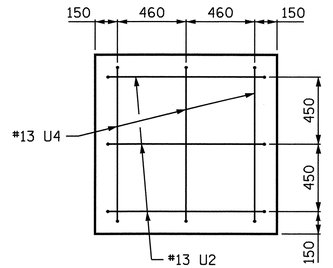

VIEW Y-Y

★ INVERT ALTERNATE PAIRS OF STIRRUPS AS SHOWN.

PROJECT NO. U-2519DA

CUMBERLAND COUNTY

STATION: 14+60.500-RP1A-

SHEET 1 OF 3

STATE OF NORTH CAROLINA
DEPARTMENT OF TRANSPORTATION
RALEIGH

SUBSTRUCTURE

BENT 2

NORTH CAROLINA PROFESSIONAL SEAL 21638 ENGINEER LAURA E. SUTTON
9/30/08

REVISIONS						SHEET NO.
NO.	BY:	DATE:	NO.	BY:	DATE:	S-211
1			3			TOTAL SHEETS
2			4			411

DRAWN BY : P.C. BREWER DATE : 1/28/08
CHECKED BY : A.S. CALLAWAY DATE : 2/11/08

03-SEP-2008 07:48
r:\structures\glrolami\str07\pbrewer\microstation\u2519da_sd_bt_07.dgn
LSUTTON

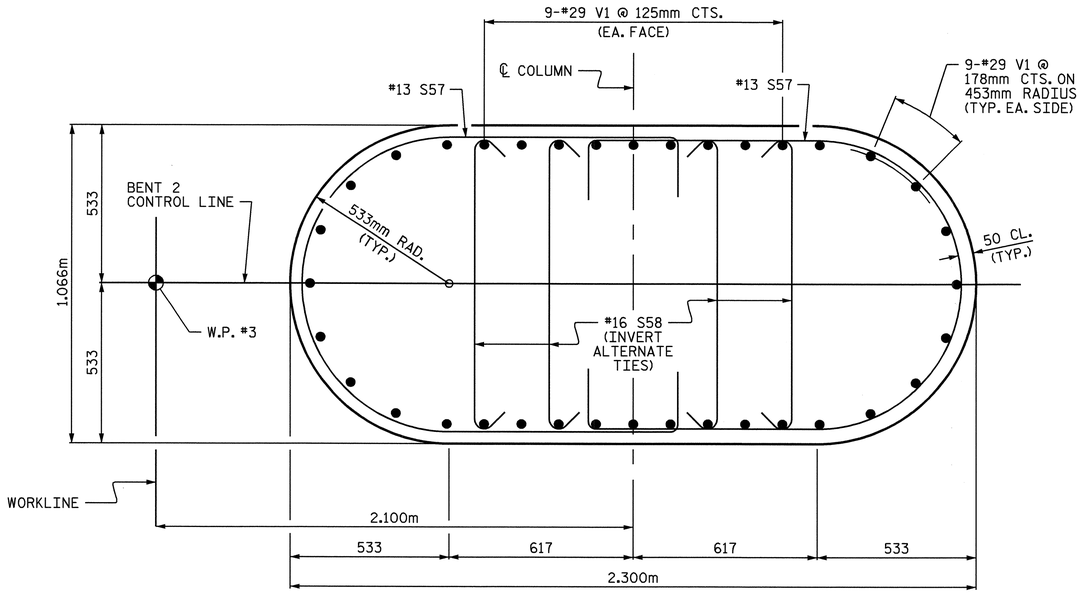

SECTION C-C

(SHOWING ONE TIE SET)

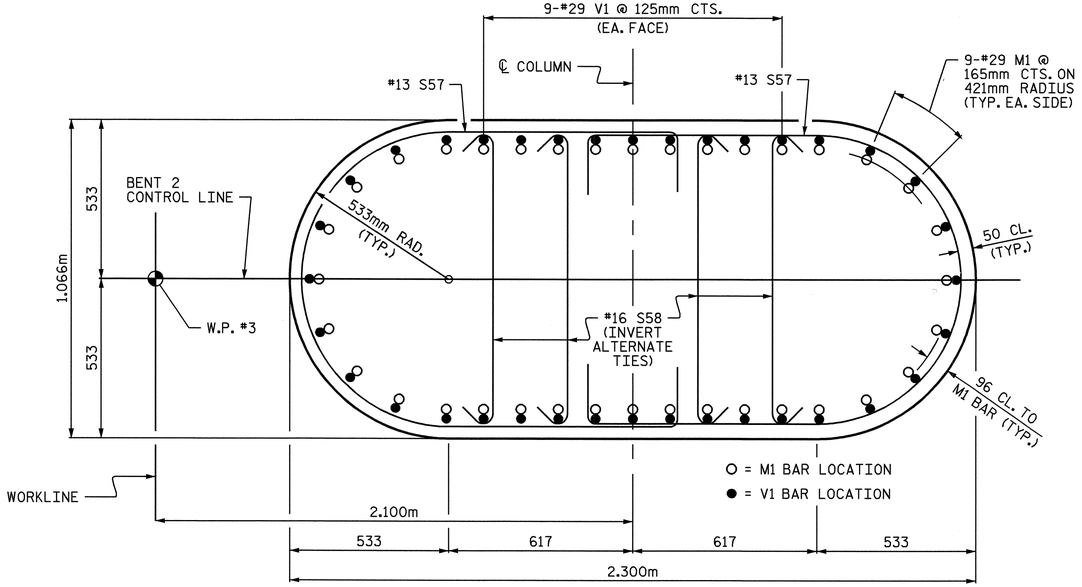

SECTION D-D

(SHOWING ONE TIE SET)

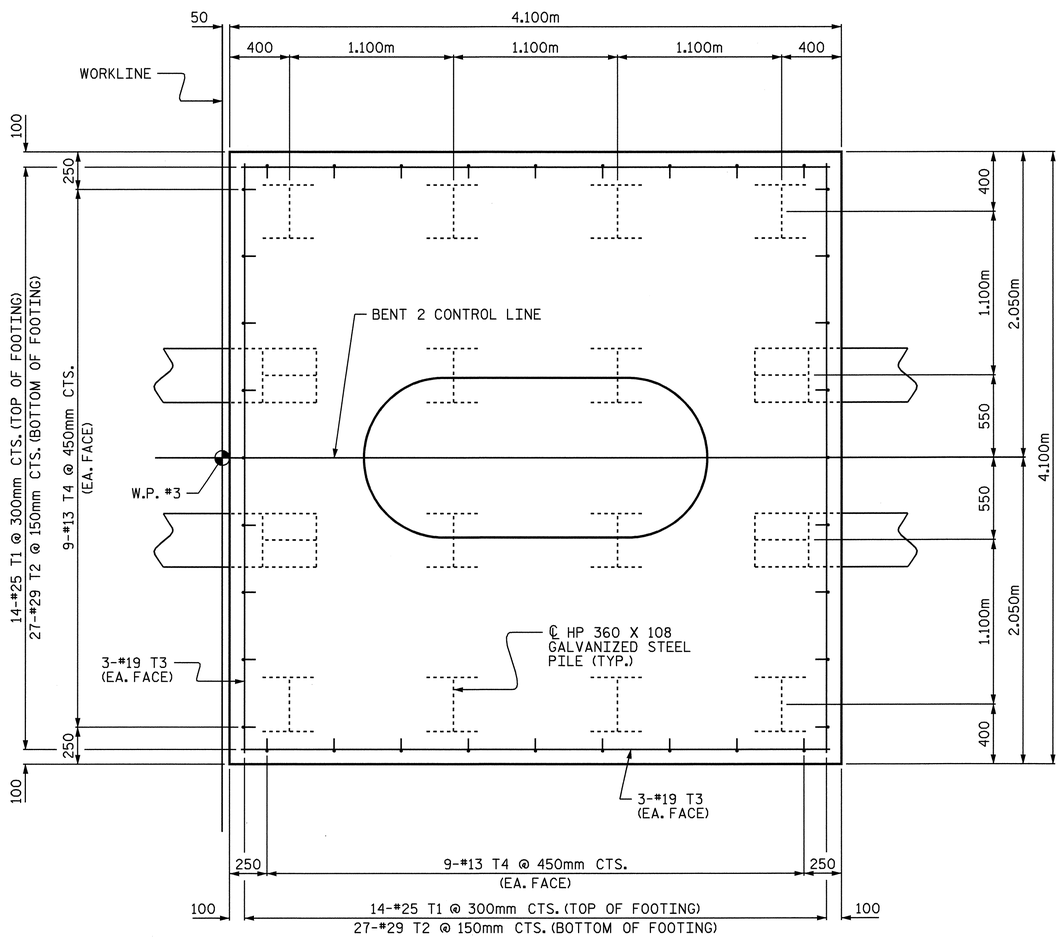

PLAN OF FOOTING

(SEE SECTION D-D FOR PLACEMENT OF "M" BARS IN FOOTING)

PROJECT NO. U-2519DA

CUMBERLAND COUNTY

STATION: 14+60.500-RP1A-

SHEET 2 OF 3

STATE OF NORTH CAROLINA
DEPARTMENT OF TRANSPORTATION
RALEIGH

SUBSTRUCTURE

BENT 2

NORTH CAROLINA PROFESSIONAL SEAL 21638 ENGINEER LAURA E. SUTTON
9/30/08

REVISIONS						SHEET NO.
NO.	BY:	DATE:	NO.	BY:	DATE:	S-2R
1			3			TOTAL SHEETS
2			4			411

DRAWN BY : P.C. BREWER DATE : 1/28/08
CHECKED BY : A.S. CALLAWAY DATE : 2/11/08

25-AUG-2008 14:15
r:\structures\glrolaml\str07\pbrewer\Microstation\u2519da_sd_bt_07.dgn
LSUTTON

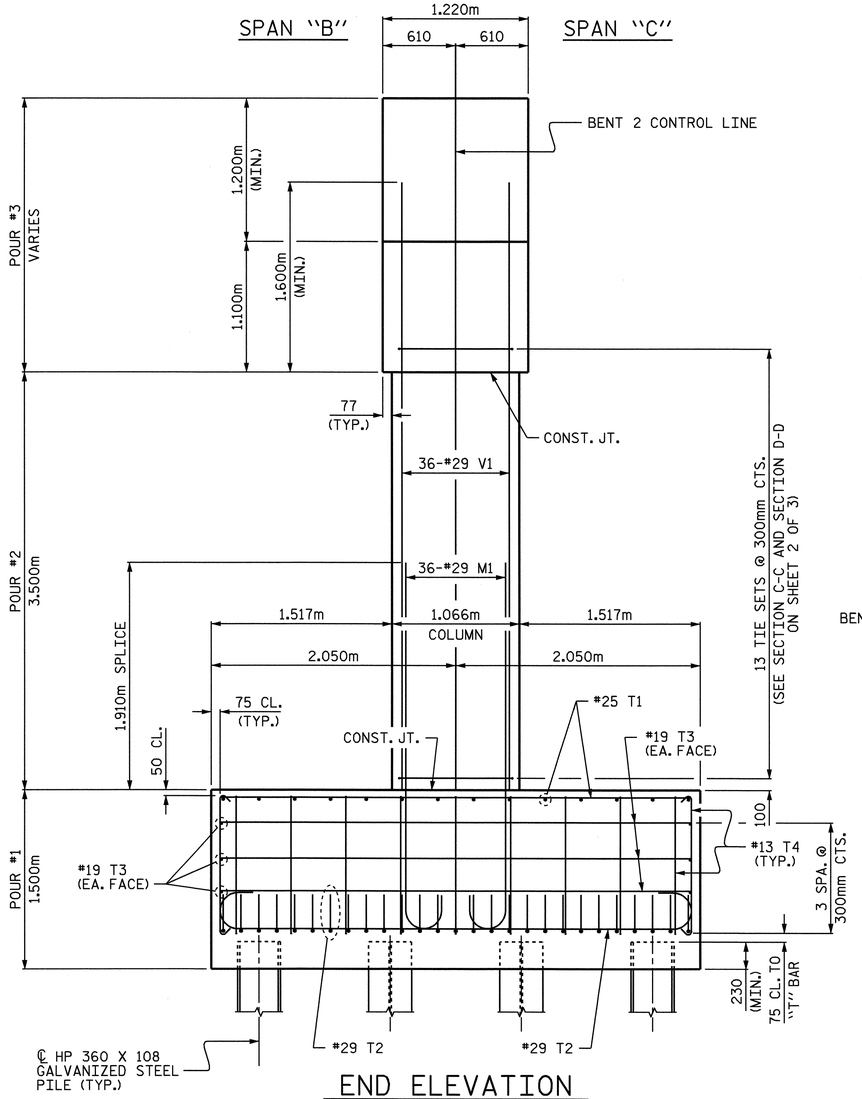

END ELEVATION

BAR TYPES

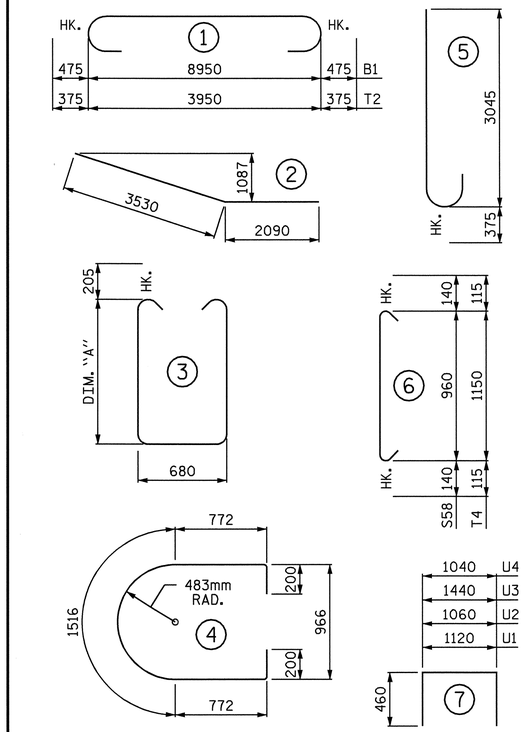

ALL BAR DIMENSIONS ARE OUT TO OUT.

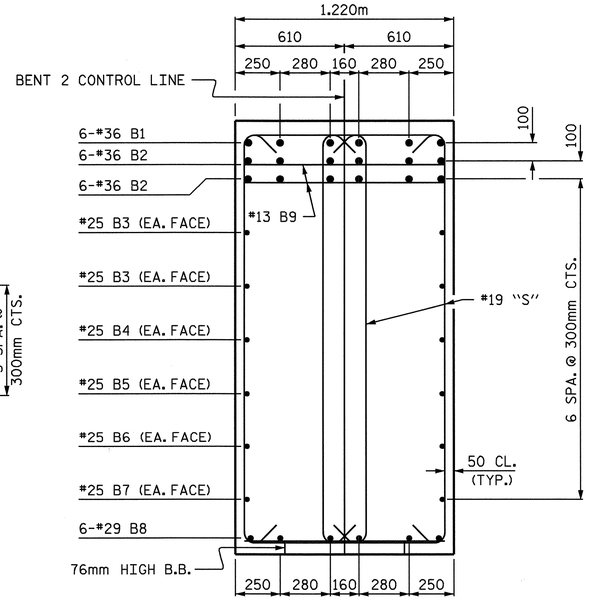

SECTION A-A

(FOR CLARITY, COLUMN REINFORCING STEEL NOT SHOWN.)

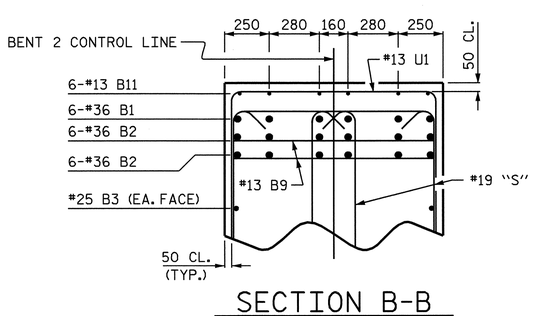

SECTION B-B

BILL OF MATERIAL

BENT 2

BAR	NO.	SIZE	TYPE	DIM. "A"	LENGTH	WEIGHT
B1	6	#36	1	—	9900	470
B2	12	#36	STR	—	9000	854
B3	4	#25	STR	—	9000	143
B4	2	#25	STR	—	8480	67
B5	2	#25	STR	—	7500	60
B6	2	#25	STR	—	5600	44
B7	2	#25	STR	—	3680	29
B8	12	#29	2	—	5620	341
B9	16	#13	STR	—	1120	18
B10	6	#13	STR	—	840	5
B11	18	#13	STR	—	1180	21
M1	36	#29	5	—	3420	623
S1	2	#19	3	1445	3980	18
S2	2	#19	3	1485	4060	18
S3	2	#19	3	1515	4120	18
S4	2	#19	3	1545	4180	19
S5	2	#19	3	1575	4240	19
S6	2	#19	3	1615	4320	19
S7	2	#19	3	1645	4380	20
S8	2	#19	3	1675	4440	20
S9	2	#19	3	1715	4520	20
S10	2	#19	3	1745	4580	20
S11	2	#19	3	1775	4640	21
S12	2	#19	3	1805	4700	21
S13	2	#19	3	1845	4780	21
S14	2	#19	3	1875	4840	22
S15	2	#19	3	1905	4900	22
S16	2	#19	3	1935	4960	22
S17	2	#19	3	1975	5040	23
S18	2	#19	3	2005	5100	23
S19	2	#19	3	2035	5160	23
S20	2	#19	3	2075	5240	23
S21	2	#19	3	2105	5300	24
S22	2	#19	3	2135	5360	24
S23	2	#19	3	2165	5420	24
S24	2	#19	3	2205	5500	25
S25	2	#19	3	2235	5560	25
S26	2	#19	3	2265	5620	25
S27	2	#19	3	2305	5700	25
S28	2	#19	3	2335	5760	26
S29	2	#19	3	2215	5520	25
S30	2	#19	3	2175	5440	24
S31	2	#19	3	2125	5340	24
S32	2	#19	3	2085	5260	24
S33	2	#19	3	2035	5160	23
S34	2	#19	3	1995	5080	23
S35	2	#19	3	1945	4980	22
S36	2	#19	3	1905	4900	22
S37	2	#19	3	1865	4820	22
S38	2	#19	3	1815	4720	21
S39	2	#19	3	1775	4640	21
S40	2	#19	3	1725	4540	20
S41	2	#19	3	1685	4460	20
S42	2	#19	3	1635	4360	19
S43	2	#19	3	1595	4280	19
S44	2	#19	3	1545	4180	19
S45	2	#19	3	1505	4100	18
S46	2	#19	3	1455	4000	18
S47	2	#19	3	1415	3920	18
S48	2	#19	3	1365	3820	17
S49	2	#19	3	1325	3740	17
S50	2	#19	3	1275	3640	16
S51	2	#19	3	1235	3560	16
S52	2	#19	3	1185	3460	15
S53	2	#19	3	1145	3380	15
S54	2	#19	3	1095	3280	15
S55	2	#19	3	1055	3200	14
S56	2	#19	3	1005	3100	14
S57	26	#13	4	—	3460	89
S58	52	#16	6	—	1240	100
T1	28	#25	STR	—	3940	438
T2	54	#29	1	—	4700	1284
T3	12	#19	STR	—	3940	106
T4	36	#13	6	—	1380	49
U1	25	#13	7	—	2040	51
U2	7	#13	7	—	1980	14
U3	3	#13	7	—	2360	7
U4	3	#13	7	—	1960	6
V1	36	#29	STR	—	5100	929

REINFORCING STEEL	kg	6,899
CLASS A CONCRETE BREAKDOWN		
POUR #1 - FOOTING	m³	25.2
POUR #2 - COLUMN	m³	7.7
POUR #3 - CAP	m³	22.7
TOTAL	m³	55.6
HP 360 x 108 GALVANIZED STEEL PILES		
NO. 16	METERS	304

PROJECT NO. U-2519DA

CUMBERLAND COUNTY

STATION: 14+60.500-RP1A-

SHEET 3 OF 3

STATE OF NORTH CAROLINA
DEPARTMENT OF TRANSPORTATION
RALEIGH

SUBSTRUCTURE

BENT 2

NORTH CAROLINA PROFESSIONAL SEAL 21638 ENGINEER LAURA E. SUTTON
11/30/08

REVISIONS						SHEET NO.
NO.	BY:	DATE:	NO.	BY:	DATE:	S-213
1			3			TOTAL SHEETS
2			4			411

DRAWN BY : P.C. BREWER DATE : 1/28/08
CHECKED BY : A.S. CALLAWAY DATE : 2/11/08

30-SEP-2008 08:10
r:\structures\gIroIaml\str07\pbrewer\Microstation\u2519da_sd_bt_07.dgn
isutton

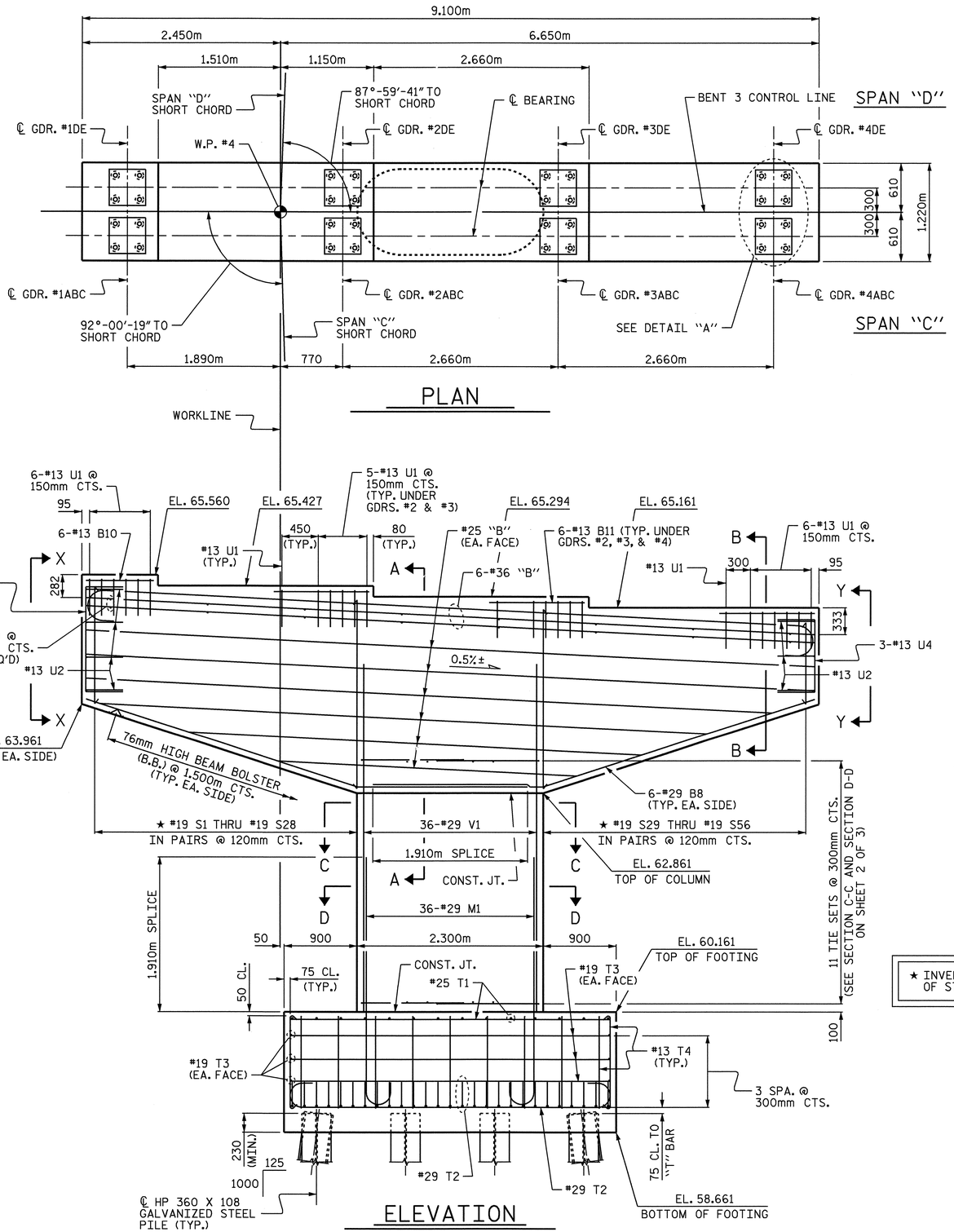

NOTES:

STIRRUPS AND U1 BARS IN CAP MAY BE SHIFTED AS NECESSARY TO CLEAR ANCHOR BOLTS.

THE TOP SURFACE AREAS OF THE CAP SHALL BE CURED IN ACCORDANCE WITH THE STANDARD SPECIFICATIONS EXCEPT THE MEMBRANE CURING COMPOUND METHOD SHALL NOT BE USED.

DETAILED DRAWINGS FOR FALSEWORK AND FORMS FOR THIS HAMMERHEAD BENT CAP SHALL BE SUBMITTED. SEE SHEET SNSM.

FOR PIPE INSERT DETAILS, SEE "POT BEARING DETAILS" SHEET 1 OF 2.

FOR PILE SPLICE DETAILS, SEE "END BENT" SHEETS.

A MINIMUM OF 5 METERS OF THE TOP OF EACH PILE SHALL BE GALVANIZED IN ACCORDANCE WITH SECTION 1076 OF THE STANDARD SPECIFICATIONS.

BOTTOM OF FOOTING ELEVATIONS HAVE BEEN SET APPROXIMATELY 1m ABOVE NATURAL GROUND TO ACCOMMODATE ALL FALSEWORK AND FORMWORK REQUIRED FOR FOOTING CONSTRUCTION. FOUNDATION EXCAVATION IS NOT ALLOWED.

FOR MASS CONCRETE, SEE SPECIAL PROVISIONS.

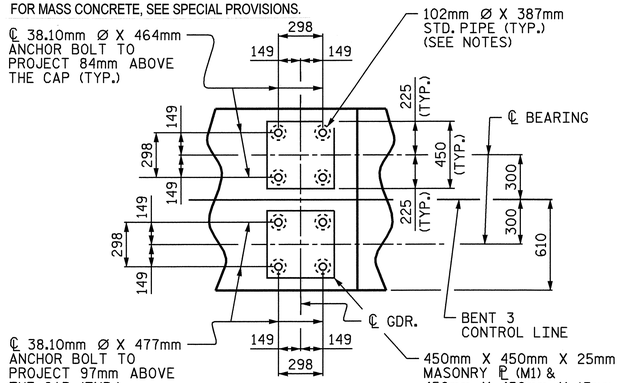

DETAIL "A"
(TYP. EA. GIRDER)

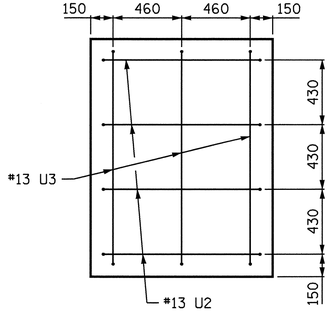

VIEW X-X

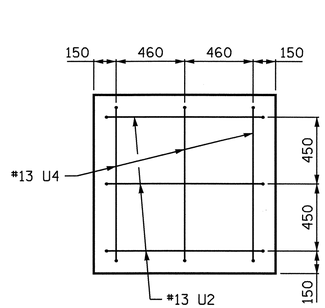

VIEW Y-Y

★ INVERT ALTERNATE PAIRS OF STIRRUPS AS SHOWN.

PROJECT NO. U-2519DA
CUMBERLAND COUNTY
STATION: 14+60.500-RP1A-

SHEET 1 OF 3

STATE OF NORTH CAROLINA
DEPARTMENT OF TRANSPORTATION
RALEIGH

SUBSTRUCTURE

BENT 3

NORTH CAROLINA PROFESSIONAL SEAL 21638 ENGINEER LAURA E. SUTTON 1/30/08

REVISIONS						SHEET NO.
NO.	BY:	DATE:	NO.	BY:	DATE:	S-214
1			3			TOTAL SHEETS
2			4			411

DRAWN BY : P.C. BREWER DATE : 1/28/08
CHECKED BY : A.S. CALLAWAY DATE : 2/11/08

03-SEP-2008 08:55
r:\structures\glrolaml\str07\pbrewer\microstation\u2519da_sd_bt_07.dgn
LSUTTON

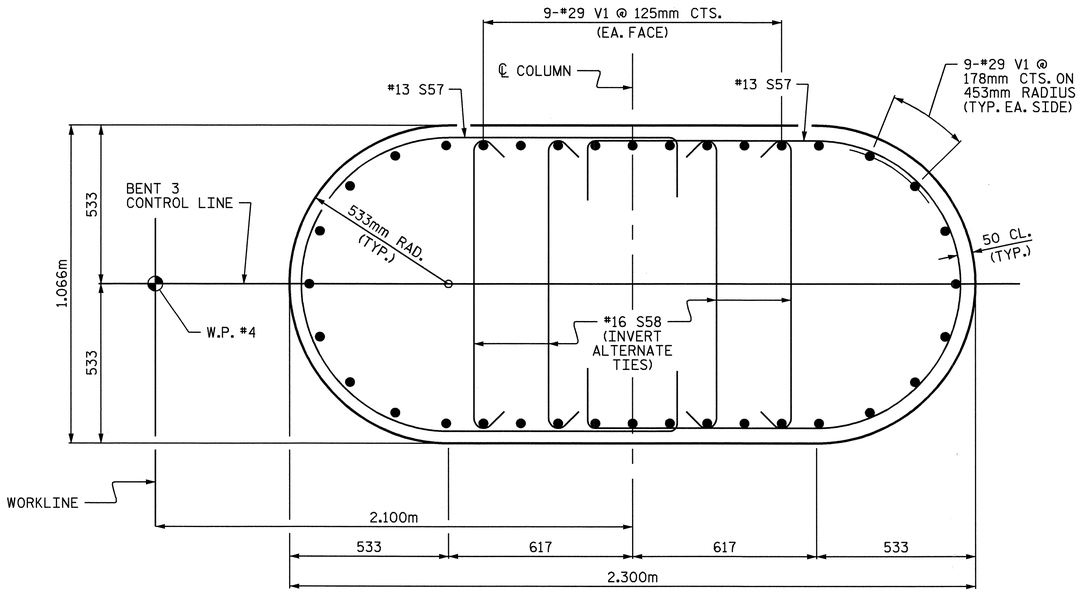

SECTION C-C

(SHOWING ONE TIE SET)

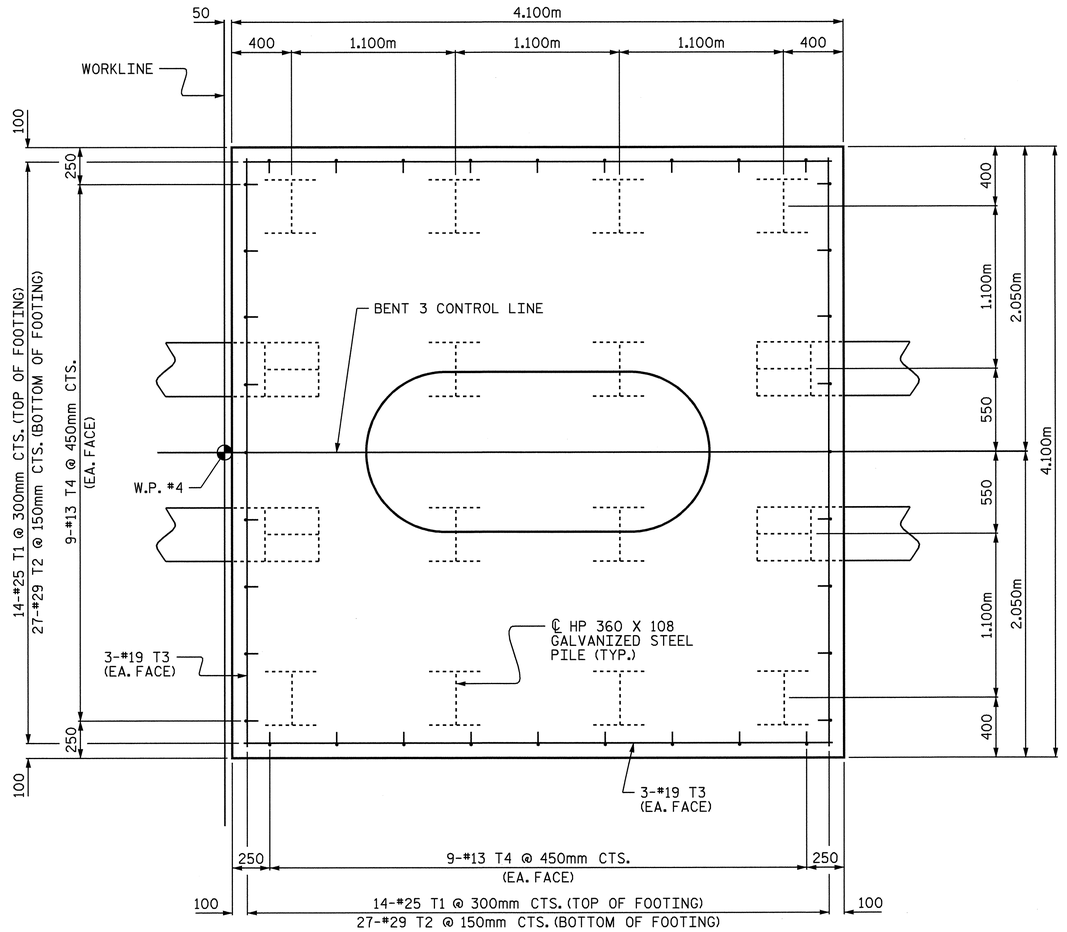

PLAN OF FOOTING

(SEE SECTION D-D FOR PLACEMENT OF "M" BARS IN FOOTING)

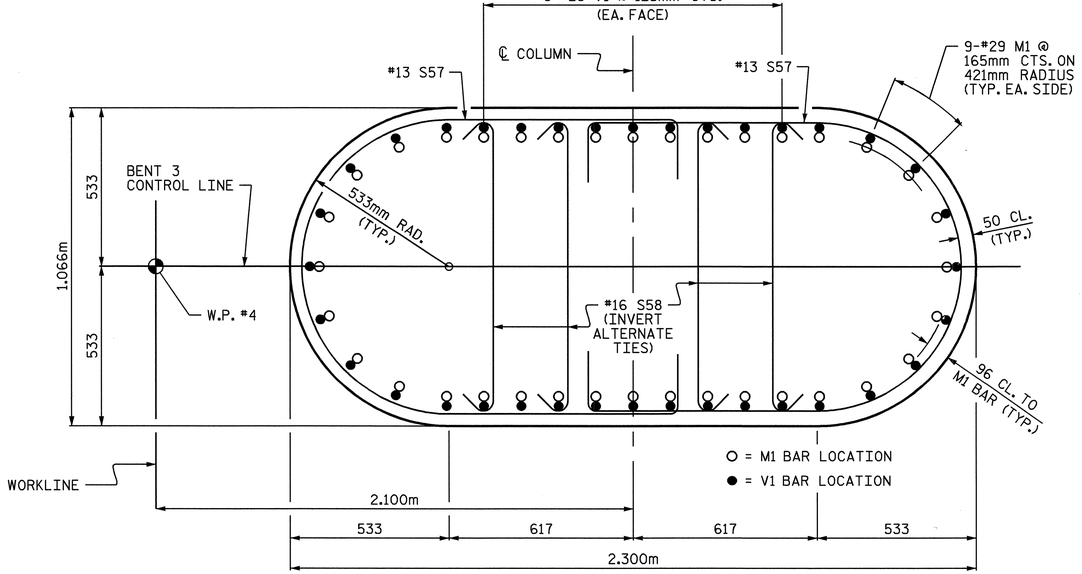

SECTION D-D

(SHOWING ONE TIE SET)

PROJECT NO. U-2519DA

CUMBERLAND COUNTY

STATION: 14+60.500-RP1A-

SHEET 2 OF 3

STATE OF NORTH CAROLINA
DEPARTMENT OF TRANSPORTATION
RALEIGH

SUBSTRUCTURE

BENT 3

NORTH CAROLINA PROFESSIONAL SEAL 21638 ENGINEER LAURA E. SUTTON
7/30/08

REVISIONS						SHEET NO.
NO.	BY:	DATE:	NO.	BY:	DATE:	S-215
1			3			TOTAL SHEETS
2			4			411

DRAWN BY : P.C. BREWER DATE : 1/28/08
CHECKED BY : A.S. CALLAWAY DATE : 2/11/08

25-AUG-2008 14:14
r:\structures\grolaml\str07\pbrewer\Microstation\u2519da_sd_bt_07.dgn
LSUTTON

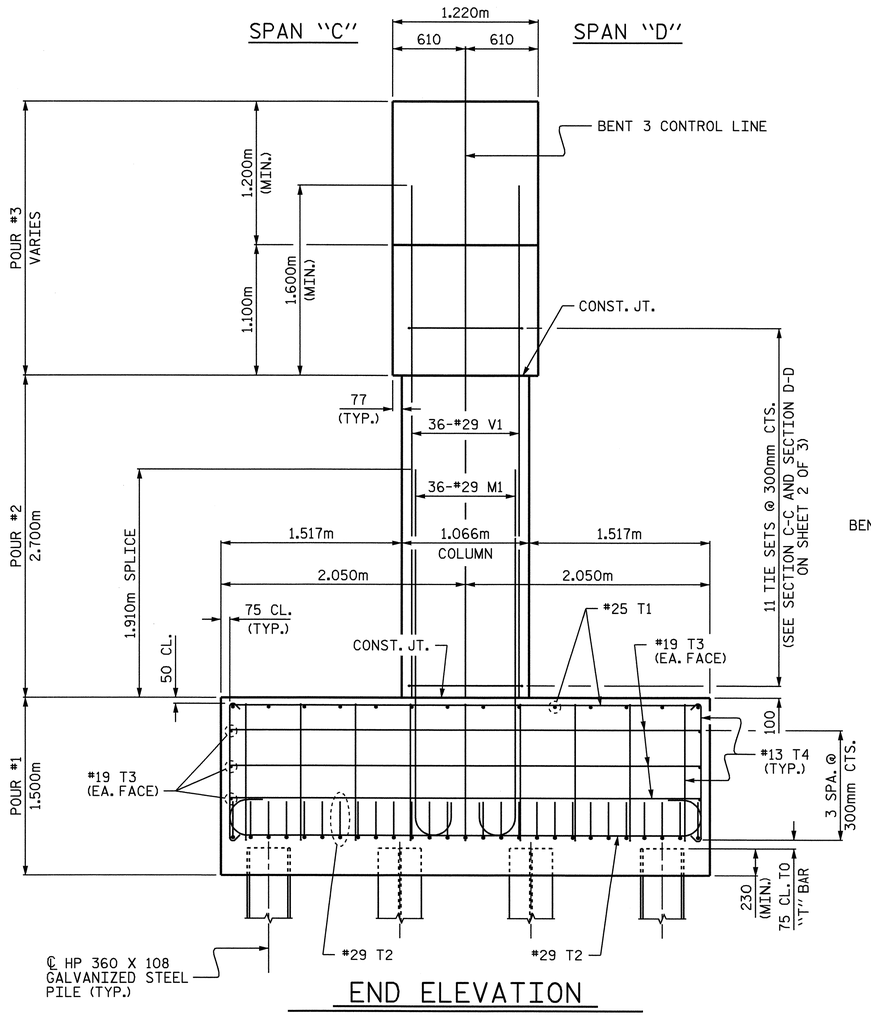

END ELEVATION

BAR TYPES

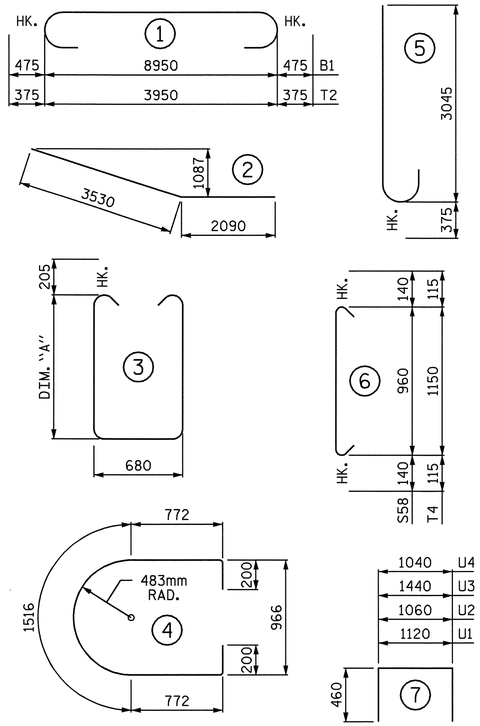

ALL BAR DIMENSIONS ARE OUT TO OUT.

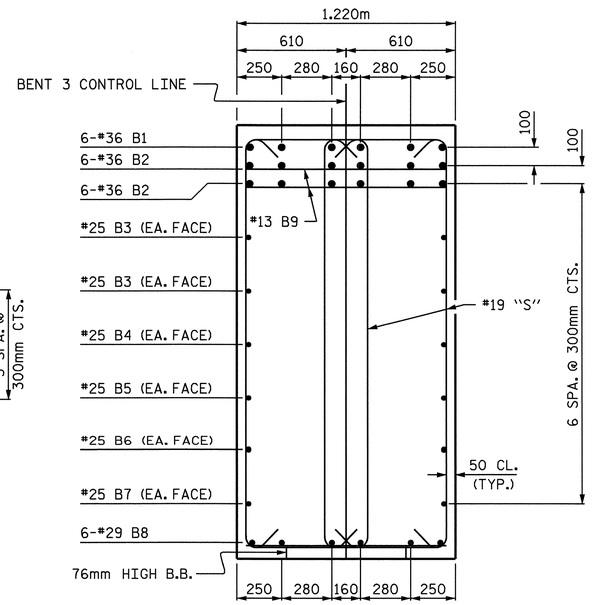

SECTION A-A

(FOR CLARITY, COLUMN REINFORCING STEEL NOT SHOWN.)

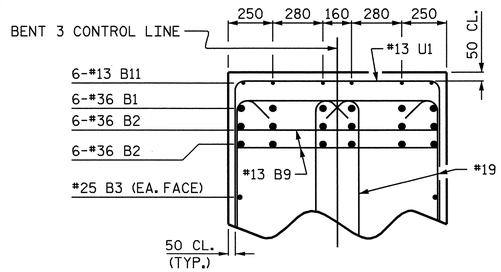

SECTION B-B

BILL OF MATERIAL

BENT 3

BAR	NO.	SIZE	TYPE	DIM. "A"	LENGTH	WEIGHT	BAR	NO.	SIZE	TYPE	DIM. "A"	LENGTH	WEIGHT
B1	6	#36	1	—	9900	470	S36	2	#19	3	1905	4900	22
B2	12	#36	STR	—	9000	854	S37	2	#19	3	1865	4820	22
B3	4	#25	STR	—	9000	143	S38	2	#19	3	1815	4720	21
B4	2	#25	STR	—	8480	67	S39	2	#19	3	1775	4640	21
B5	2	#25	STR	—	7500	60	S40	2	#19	3	1725	4540	20
B6	2	#25	STR	—	5600	44	S41	2	#19	3	1685	4460	20
B7	2	#25	STR	—	3680	29	S42	2	#19	3	1635	4360	19
B8	12	#29	2	—	5620	341	S43	2	#19	3	1595	4280	19
B9	16	#13	STR	—	1120	18	S44	2	#19	3	1545	4180	19
B10	6	#13	STR	—	840	5	S45	2	#19	3	1505	4100	18
B11	18	#13	STR	—	1180	21	S46	2	#19	3	1455	4000	18
							S47	2	#19	3	1415	3920	18
M1	36	#29	5	—	3420	623	S48	2	#19	3	1365	3820	17
							S49	2	#19	3	1325	3740	17
S1	2	#19	3	1445	3980	18	S50	2	#19	3	1275	3640	16
S2	2	#19	3	1485	4060	18	S51	2	#19	3	1235	3560	16
S3	2	#19	3	1515	4120	18	S52	2	#19	3	1185	3460	15
S4	2	#19	3	1545	4180	19	S53	2	#19	3	1145	3380	15
S5	2	#19	3	1575	4240	19	S54	2	#19	3	1095	3280	15
S6	2	#19	3	1615	4320	19	S55	2	#19	3	1055	3200	14
S7	2	#19	3	1645	4380	20	S56	2	#19	3	1005	3100	14
S8	2	#19	3	1675	4440	20	S57	22	#13	4	—	3460	76
S9	2	#19	3	1715	4520	20	S58	44	#16	6	—	1240	85
S10	2	#19	3	1745	4580	20							
S11	2	#19	3	1775	4640	21	T1	28	#25	STR	—	3940	438
S12	2	#19	3	1805	4700	21	T2	54	#29	1	—	4700	1284
S13	2	#19	3	1845	4780	21	T3	12	#19	STR	—	3940	106
S14	2	#19	3	1875	4840	22	T4	36	#13	6	—	1380	49
S15	2	#19	3	1905	4900	22							
S16	2	#19	3	1935	4960	22	U1	25	#13	7	—	2040	51
S17	2	#19	3	1975	5040	23	U2	7	#13	7	—	1980	14
S18	2	#19	3	2005	5100	23	U3	3	#13	7	—	2360	7
S19	2	#19	3	2035	5160	23	U4	3	#13	7	—	1960	6
S20	2	#19	3	2075	5240	23							
S21	2	#19	3	2105	5300	24	V1	36	#29	STR	—	4300	783
S22	2	#19	3	2135	5360	24							
S23	2	#19	3	2165	5420	24							
S24	2	#19	3	2205	5500	25							
S25	2	#19	3	2235	5560	25							
S26	2	#19	3	2265	5620	25							
S27	2	#19	3	2305	5700	25							
S28	2	#19	3	2335	5760	26							
S29	2	#19	3	2215	5520	25							
S30	2	#19	3	2175	5440	24							
S31	2	#19	3	2125	5340	24							
S32	2	#19	3	2085	5260	24							
S33	2	#19	3	2035	5160	23							
S34	2	#19	3	1995	5080	23							
S35	2	#19	3	1945	4980	22							

REINFORCING STEEL	kg	6,725
CLASS A CONCRETE BREAKDOWN		
POUR #1 - FOOTING	m³	25.2
POUR #2 - COLUMN	m³	6.0
POUR #3 - CAP	m³	22.7
TOTAL	m³	53.9
HP 360 x 108 GALVANIZED STEEL PILES		
NO. 16	METERS	272

PROJECT NO. U-2519DA

CUMBERLAND COUNTY

STATION: 14+60.500-RP1A-

SHEET 3 OF 3

STATE OF NORTH CAROLINA
DEPARTMENT OF TRANSPORTATION
RALEIGH

SUBSTRUCTURE

BENT 3

NORTH CAROLINA PROFESSIONAL SEAL 21638 ENGINEER LAURA E. SUTTON
9/30/08

REVISIONS						SHEET NO.
NO.	BY:	DATE:	NO.	BY:	DATE:	S-216
1			3			TOTAL SHEETS
2			4			All

DRAWN BY : P.C. BREWER DATE : 1/28/08
CHECKED BY : A.S. CALLAWAY DATE : 2/11/08

30-SEP-2008 08:10
r:\structures\glrolami\str07\pbrewer\Microstation\u2519da_sd_bt_07.dgn
lsutton

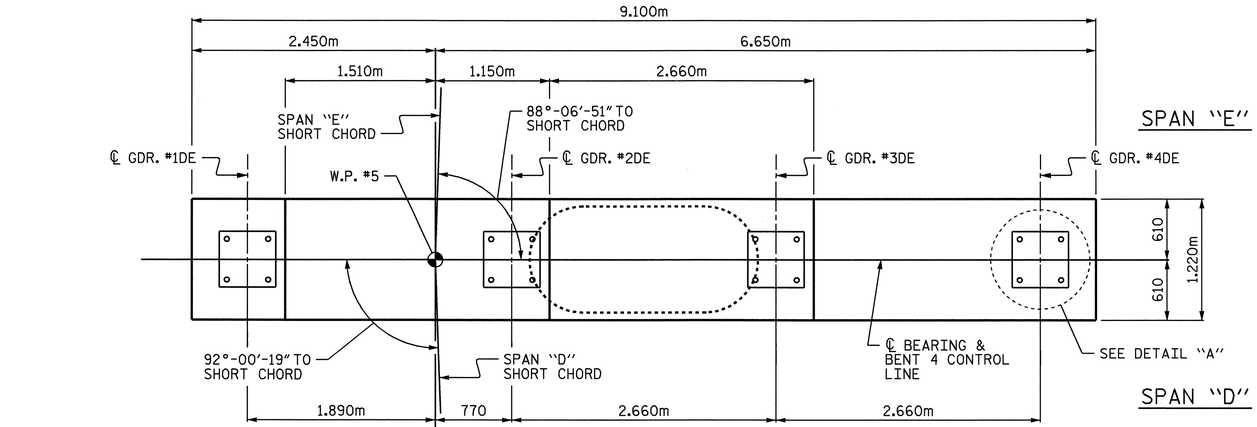

PLAN

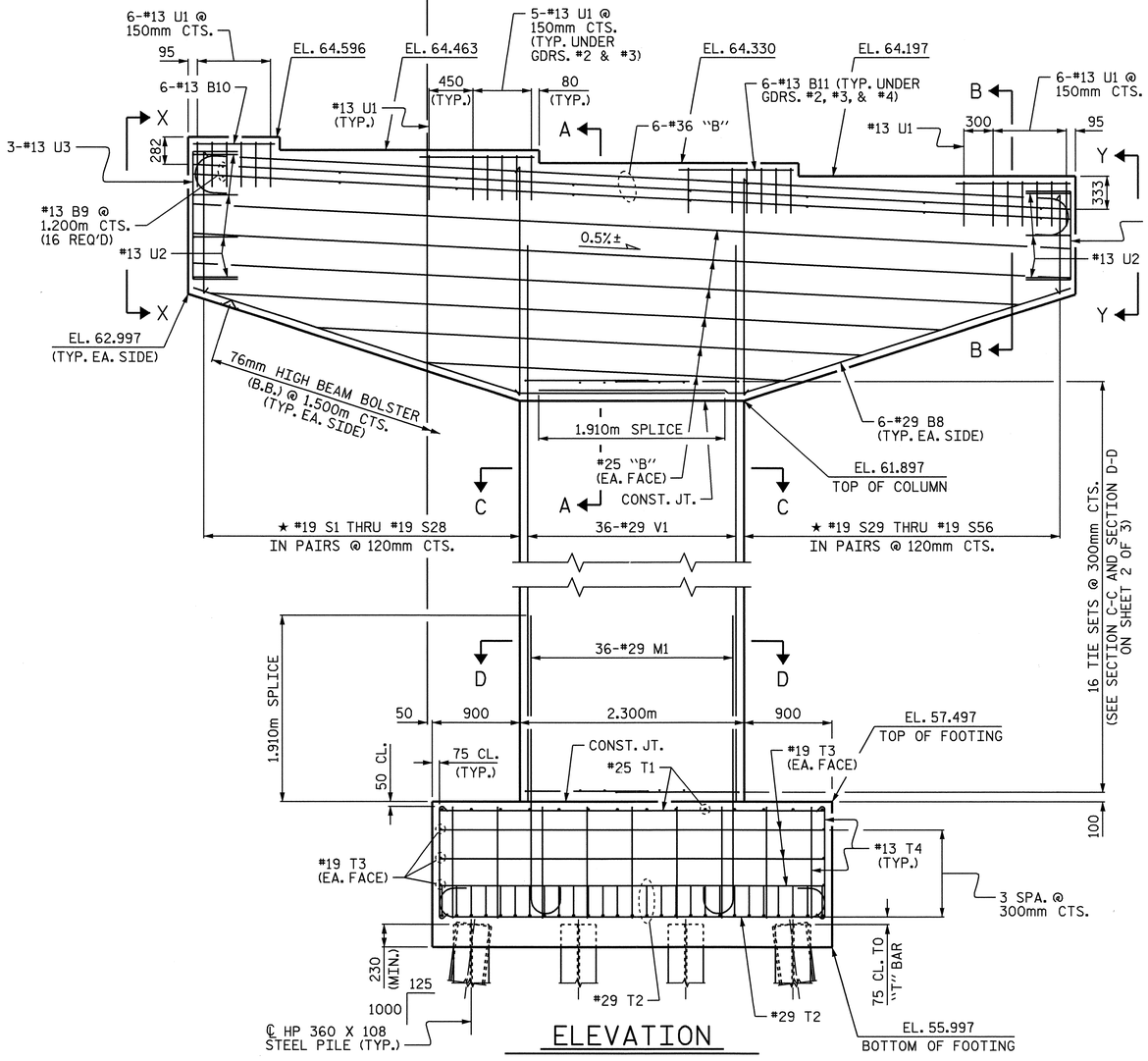

NOTES:

STIRRUPS AND U1 BARS IN CAP MAY BE SHIFTED AS NECESSARY TO CLEAR ANCHOR BOLTS.

DETAILED DRAWINGS FOR FALSEWORK AND FORMS FOR THIS HAMMERHEAD BENT CAP SHALL BE SUBMITTED. SEE SHEET SNSM.

FOR PILE SPLICE DETAILS, SEE "END BENT" SHEETS.

FOR MASS CONCRETE, SEE SPECIAL PROVISIONS.

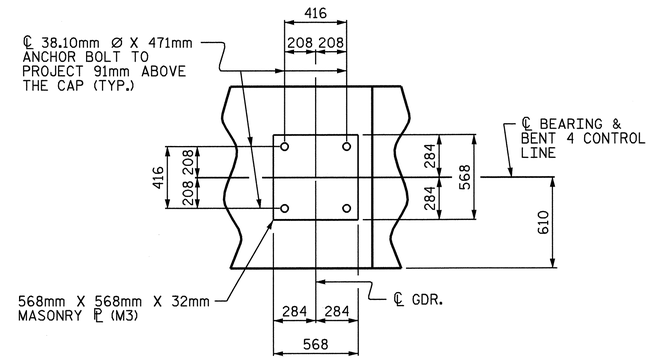

DETAIL "A"

(TYP. EA. GIRDER)

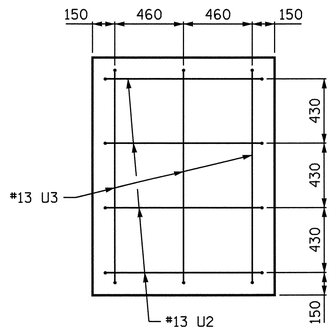

VIEW X-X

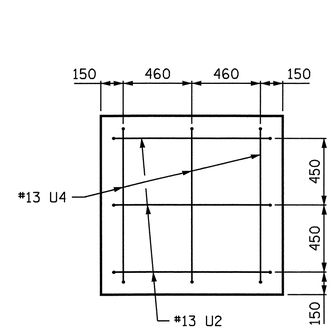

VIEW Y-Y

★ INVERT ALTERNATE PAIRS OF STIRRUPS AS SHOWN.

PROJECT NO. U-2519DA

CUMBERLAND COUNTY

STATION: 14+60.500-RP1A-

SHEET 1 OF 3

STATE OF NORTH CAROLINA
DEPARTMENT OF TRANSPORTATION
RALEIGH

SUBSTRUCTURE

BENT 4

REVISIONS						SHEET NO.
NO.	BY:	DATE:	NO.	BY:	DATE:	S-217
1			3			TOTAL SHEETS
2			4			411

NORTH CAROLINA PROFESSIONAL SEAL 21638 ENGINEER LAURA E. SUTTON 9/30/08

DRAWN BY : P.C. BREWER DATE : 1/28/08
CHECKED BY : A.S. CALLAWAY DATE : 2/11/08

30-SEP-2008 07:26
p:\structures\girolami\str07\pbrewer\microstation\u2519da_sd_bt_07.dgn
pbrewer

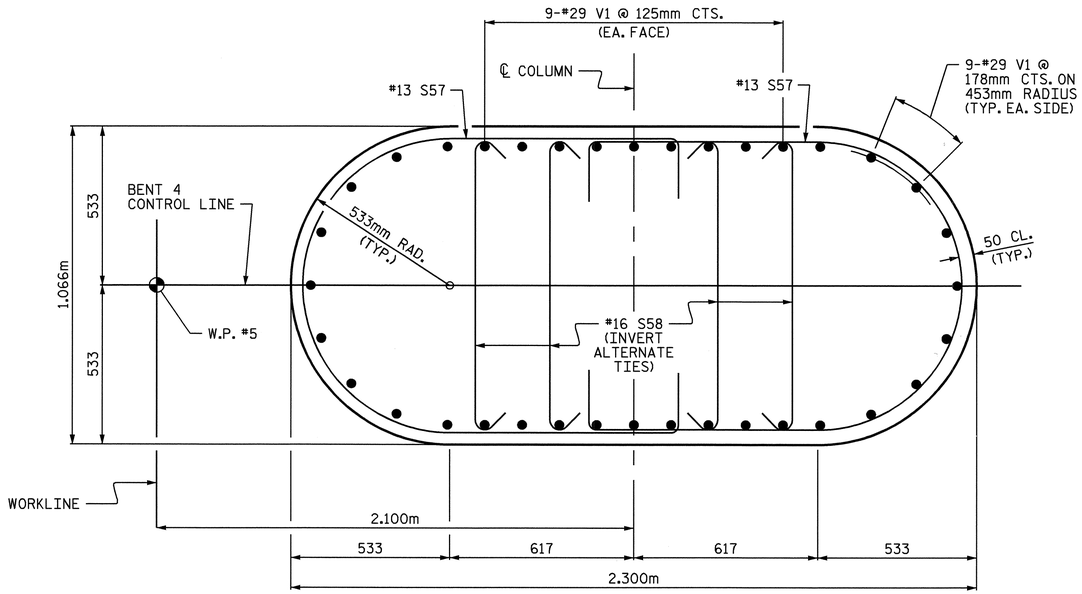

SECTION C-C

(SHOWING ONE TIE SET)

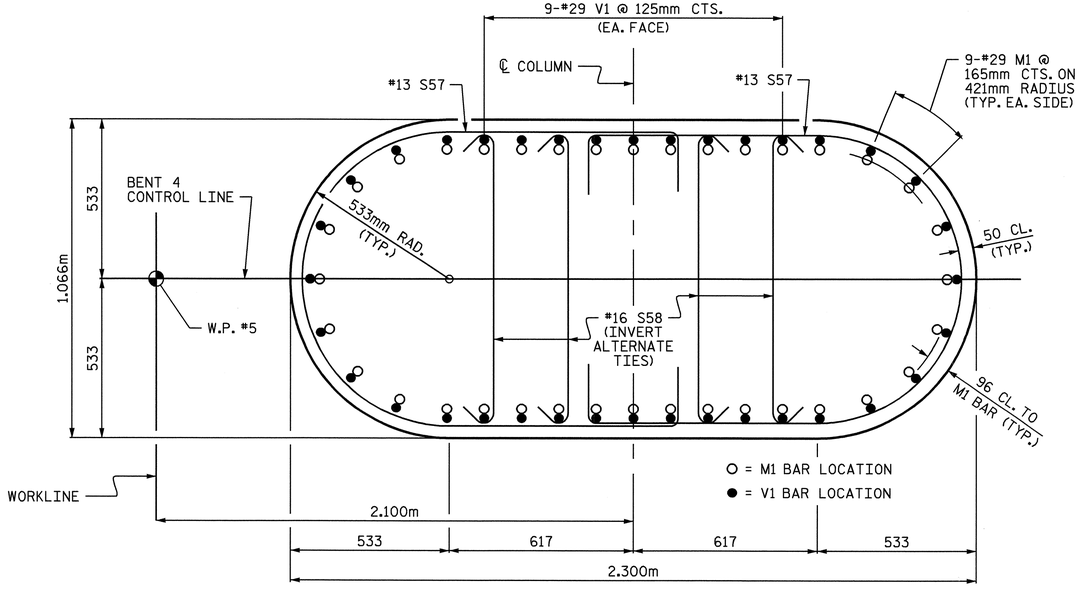

SECTION D-D

(SHOWING ONE TIE SET)

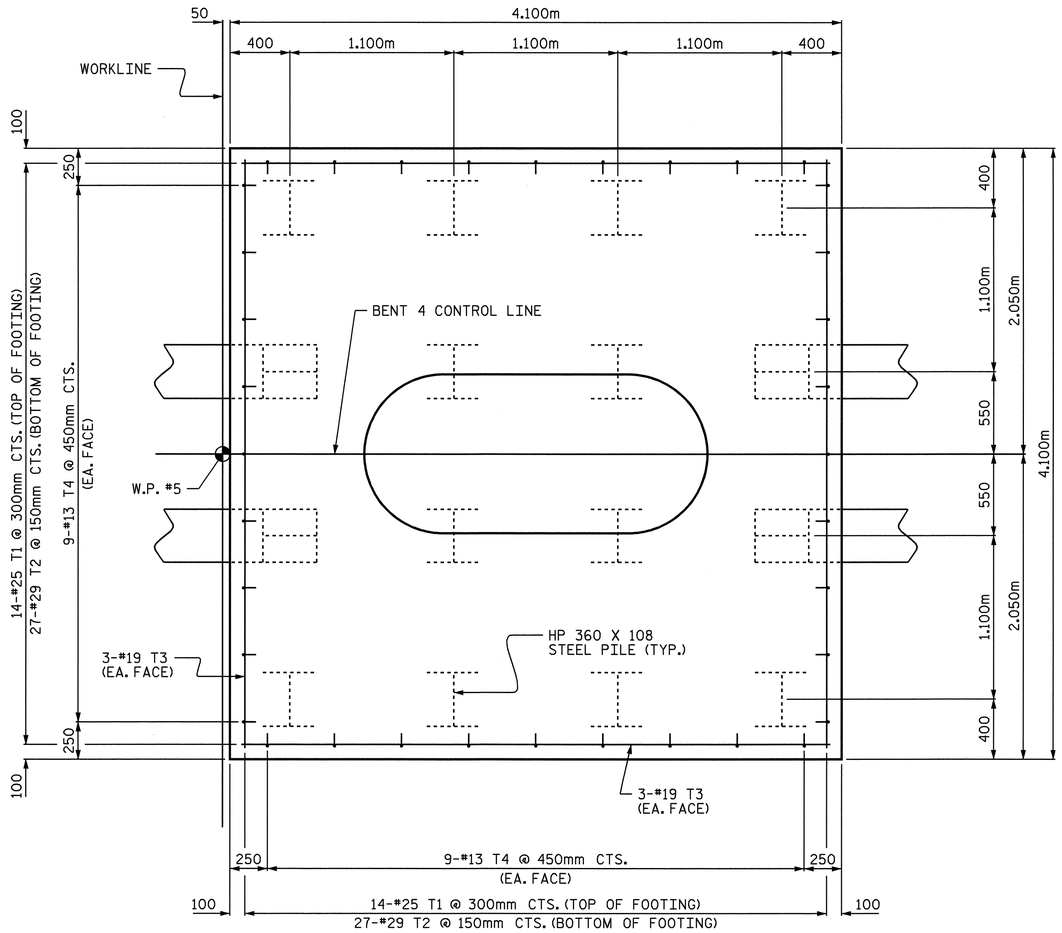

PLAN OF FOOTING

(SEE SECTION D-D FOR PLACEMENT OF "M" BARS IN FOOTING)

PROJECT NO. U-2519DA

CUMBERLAND COUNTY

STATION: 14+60.500-RP1A-

SHEET 2 OF 3

STATE OF NORTH CAROLINA
DEPARTMENT OF TRANSPORTATION
RALEIGH

SUBSTRUCTURE

BENT 4

NORTH CAROLINA PROFESSIONAL SEAL 21638 ENGINEER LAURA E SUTTON
9/30/08

REVISIONS						SHEET NO.
NO.	BY:	DATE:	NO.	BY:	DATE:	S-218
1			3			TOTAL SHEETS
2			4			411

DRAWN BY : P.C. BREWER DATE : 1/28/08
CHECKED BY : A.S. CALLAWAY DATE : 2/11/08

25-AUG-2008 14:13
r:\structures\glrolaml\str07\pbrewer\Microstation\u2519da_sd_bt_07.dgn
LSUTTON

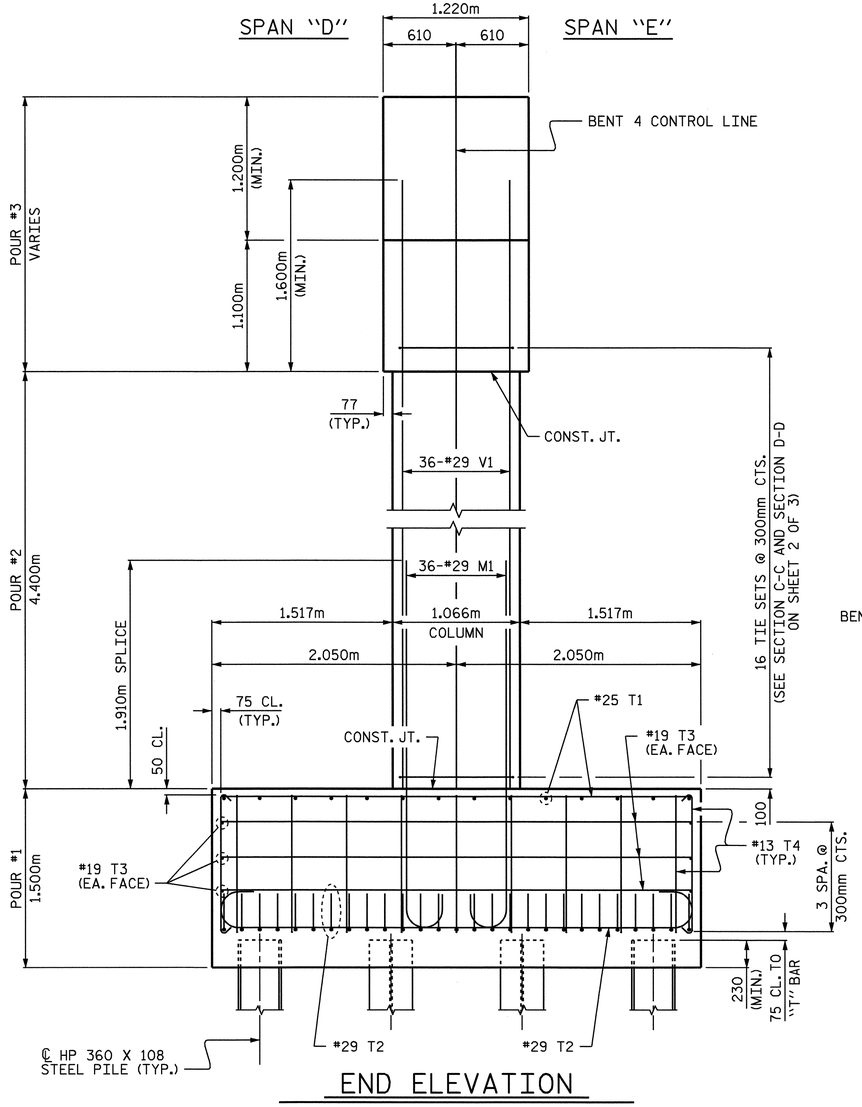

END ELEVATION

BAR TYPES

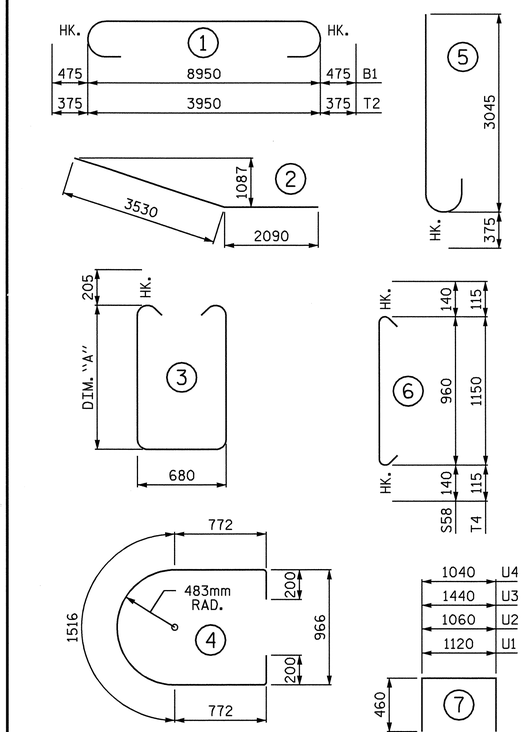

ALL BAR DIMENSIONS ARE OUT TO OUT.

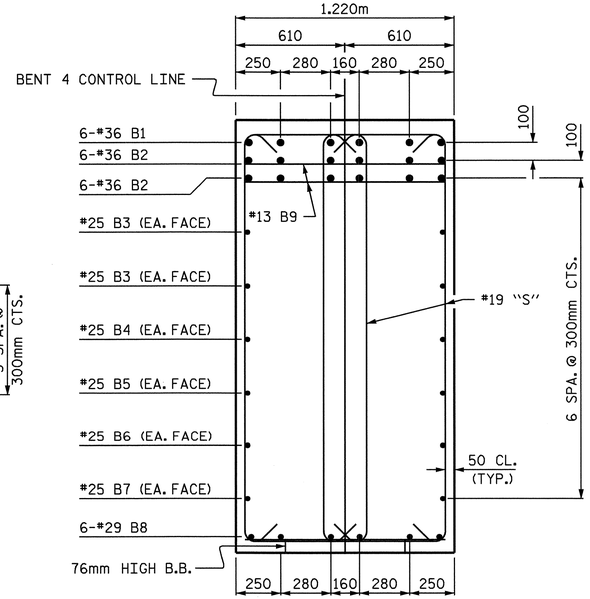

SECTION A-A

(FOR CLARITY, COLUMN REINFORCING STEEL NOT SHOWN.)

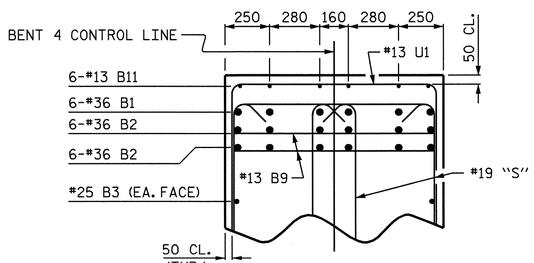

SECTION B-B

BILL OF MATERIAL

BENT 4

BAR	NO.	SIZE	TYPE	DIM. "A"	LENGTH	WEIGHT
B1	6	#36	1	—	9900	470
B2	12	#36	STR	—	9000	854
B3	4	#25	STR	—	9000	143
B4	2	#25	STR	—	8480	67
B5	2	#25	STR	—	7500	60
B6	2	#25	STR	—	5600	44
B7	2	#25	STR	—	3680	29
B8	12	#29	2	—	5620	341
B9	16	#13	STR	—	1120	18
B10	6	#13	STR	—	840	5
B11	18	#13	STR	—	1180	21
M1	36	#29	5	—	3420	623
S1	2	#19	3	1445	3980	18
S2	2	#19	3	1485	4060	18
S3	2	#19	3	1515	4120	18
S4	2	#19	3	1545	4180	19
S5	2	#19	3	1575	4240	19
S6	2	#19	3	1615	4320	19
S7	2	#19	3	1645	4380	20
S8	2	#19	3	1675	4440	20
S9	2	#19	3	1715	4520	20
S10	2	#19	3	1745	4580	20
S11	2	#19	3	1775	4640	21
S12	2	#19	3	1805	4700	21
S13	2	#19	3	1845	4780	21
S14	2	#19	3	1875	4840	22
S15	2	#19	3	1905	4900	22
S16	2	#19	3	1935	4960	22
S17	2	#19	3	1975	5040	23
S18	2	#19	3	2005	5100	23
S19	2	#19	3	2035	5160	23
S20	2	#19	3	2075	5240	23
S21	2	#19	3	2105	5300	24
S22	2	#19	3	2135	5360	24
S23	2	#19	3	2165	5420	24
S24	2	#19	3	2205	5500	25
S25	2	#19	3	2235	5560	25
S26	2	#19	3	2265	5620	25
S27	2	#19	3	2305	5700	25
S28	2	#19	3	2335	5760	26
S29	2	#19	3	2215	5520	25
S30	2	#19	3	2175	5440	24
S31	2	#19	3	2125	5340	24
S32	2	#19	3	2085	5260	24
S33	2	#19	3	2035	5160	23
S34	2	#19	3	1995	5080	23
S35	2	#19	3	1945	4980	22
S36	2	#19	3	1905	4900	22
S37	2	#19	3	1865	4820	22
S38	2	#19	3	1815	4720	21
S39	2	#19	3	1775	4640	21
S40	2	#19	3	1725	4540	20
S41	2	#19	3	1685	4460	20
S42	2	#19	3	1635	4360	19
S43	2	#19	3	1595	4280	19
S44	2	#19	3	1545	4180	19
S45	2	#19	3	1505	4100	18
S46	2	#19	3	1455	4000	18
S47	2	#19	3	1415	3920	18
S48	2	#19	3	1365	3820	17
S49	2	#19	3	1325	3740	17
S50	2	#19	3	1275	3640	16
S51	2	#19	3	1235	3560	16
S52	2	#19	3	1185	3460	15
S53	2	#19	3	1145	3380	15
S54	2	#19	3	1095	3280	15
S55	2	#19	3	1055	3200	14
S56	2	#19	3	1005	3100	14
S57	32	#13	4	—	3460	110
S58	64	#16	6	—	1240	123
T1	28	#25	STR	—	3940	438
T2	54	#29	1	—	4700	1284
T3	12	#19	STR	—	3940	106
T4	36	#13	6	—	1380	49
U1	25	#13	7	—	2040	51
U2	7	#13	7	—	1980	14
U3	3	#13	7	—	2360	7
U4	3	#13	7	—	1960	6
V1	36	#29	STR	—	6000	1093

REINFORCING STEEL	kg	7,107
CLASS A CONCRETE BREAKDOWN		
POUR #1 - FOOTING	m³	25.2
POUR #2 - COLUMN	m³	9.7
POUR #3 - CAP	m³	22.7
TOTAL	m³	57.6
HP 360 x 108 STEEL PILES NO. 16	METERS	224
FOUNDATION EXCAVATION		LUMP SUM

PROJECT NO. U-2519DA

CUMBERLAND COUNTY

STATION: 14+60.500-RP1A-

SHEET 3 OF 3

STATE OF NORTH CAROLINA
DEPARTMENT OF TRANSPORTATION
RALEIGH

SUBSTRUCTURE

BENT 4

NORTH CAROLINA PROFESSIONAL SEAL 21638 ENGINEER LAURA E. SUTTON
9/30/08

REVISIONS						SHEET NO.
NO.	BY:	DATE:	NO.	BY:	DATE:	S-219
1			3			TOTAL SHEETS
2			4			411

DRAWN BY : P.C. BREWER DATE : 1/28/08
CHECKED BY : A.S. CALLAWAY DATE : 2/11/08

30-SEP-2008 07:26
p:\structures\glrolaml\str07\pbrewer\microstation\u2519da_sd_bt_07.dgn
pbrewer

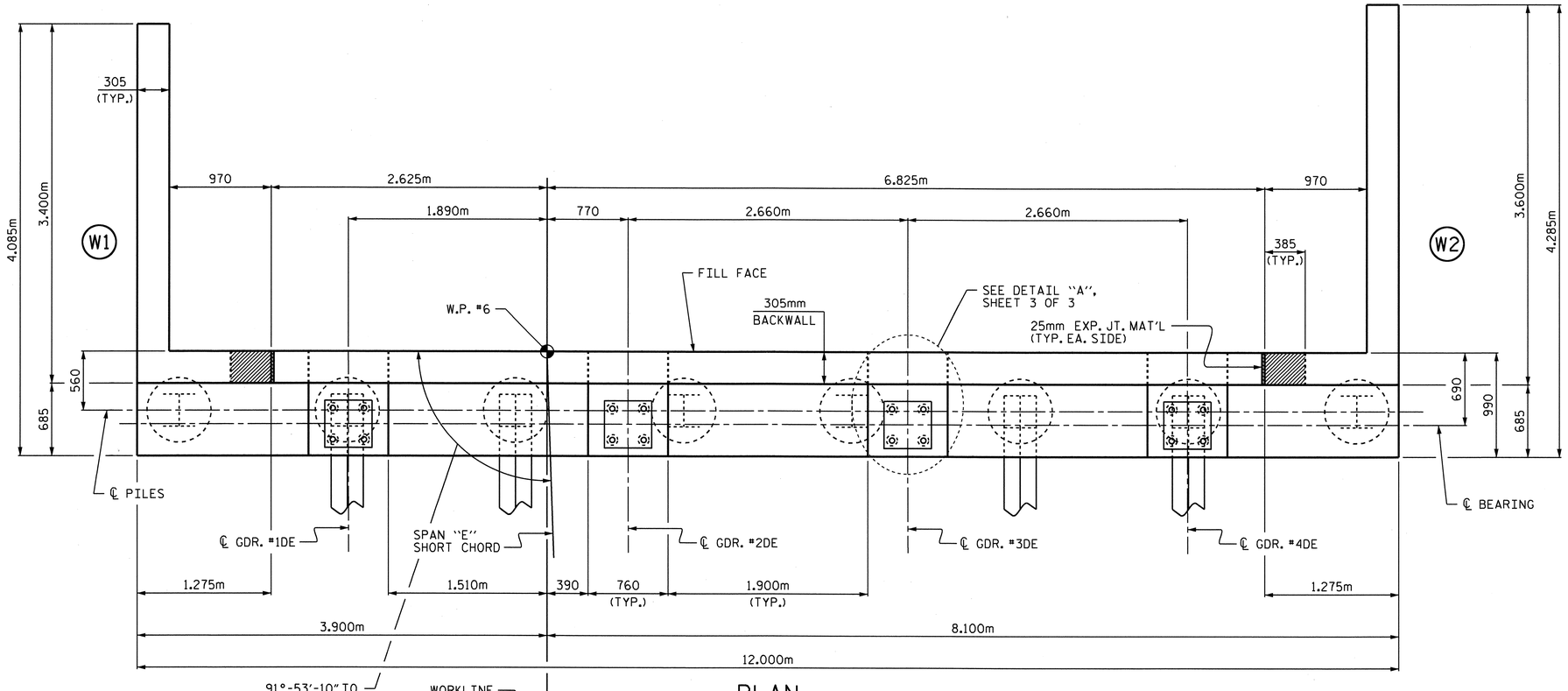

PLAN

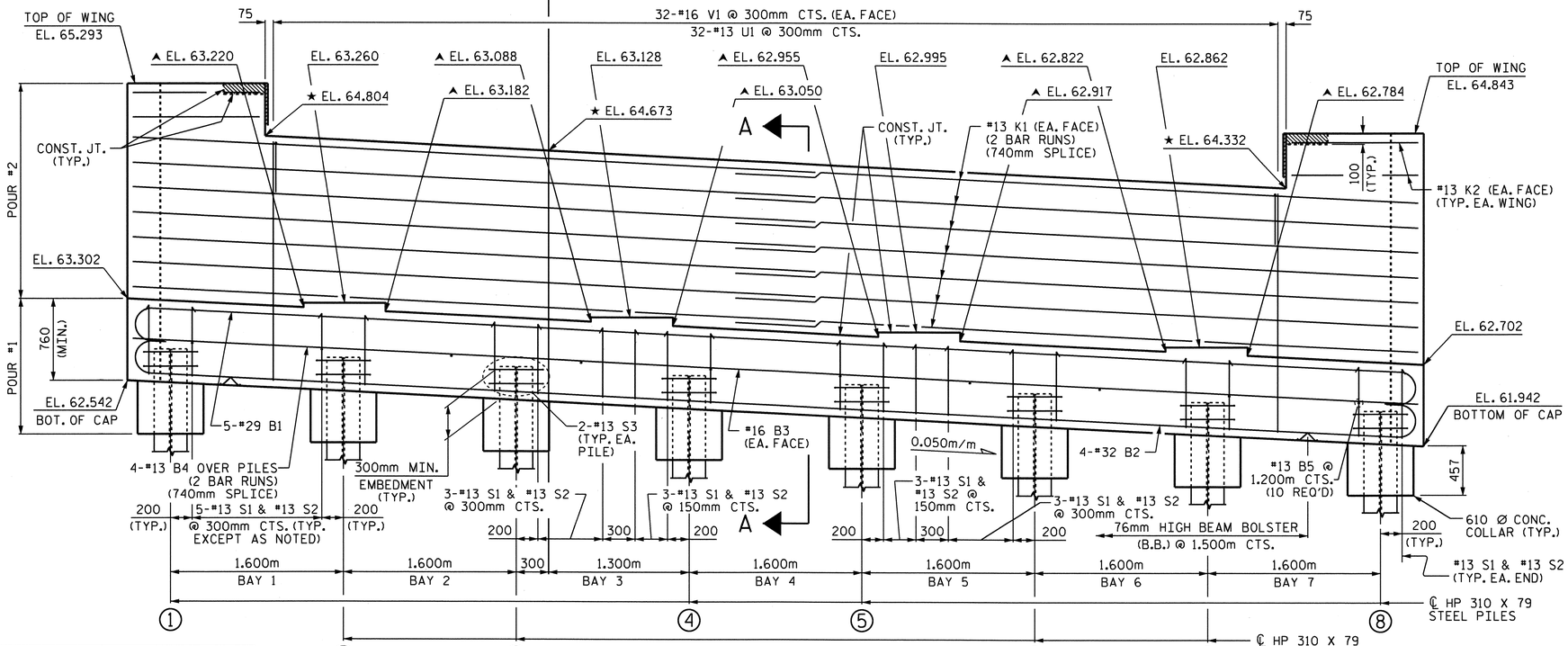

ELEVATION

NOTES:

STIRRUPS IN CAP MAY BE SHIFTED AS NECESSARY TO CLEAR ANCHOR BOLTS.

FOR PIPE INSERT DETAILS, SEE "POT BEARING DETAILS" SHEET 1 OF 2.

BACKWALL SHALL BE PLACED BEFORE APPLYING THE EPOXY PROTECTIVE COATING.

THE TOP SURFACE AREAS OF THE END BENT CAPS SHALL BE CURED IN ACCORDANCE WITH THE STANDARD SPECIFICATIONS EXCEPT THE MEMBRANE CURING COMPOUND METHOD SHALL NOT BE USED.

THE TOP SURFACE OF THE CAP EXCEPT THE BRIDGE SEAT BUILDUPS SHALL BE SLOPED TRANSVERSELY FROM THE FILL FACE TO THE BACK FACE AT THE RATE OF 2 %.

THE CONCRETE IN THE SHADED AREA OF THE WING SHALL BE POURED AFTER THE JOINT BETWEEN THE DECK AND THE APPROACH SLAB HAS BEEN FORMED AND THE BARRIER RAIL HAS BEEN CAST IF SLIP FORMING IS USED.

THE CONTRACTOR SHALL PROVIDE FOR INSTALLATION OF THE 102mm DIAMETER DRAIN PIPE THROUGH THE WING WALL AS REQUIRED FOR REINFORCED BRIDGE APPROACH FILLS, SEE THE ROADWAY PLANS. REINFORCING STEEL IN THE WING WALL MAY BE SHIFTED AS NECESSARY TO CLEAR THE DRAIN PIPE.

THE #16 V1 BARS SHALL BE PLACED 50mm CLEAR FROM THE TOP OF THE BACKWALL.

▲ FOR LOCATION OF ELEVATIONS BETWEEN BUILDUPS, SEE SECTION A-A ON SHEET 3 OF 3.

★ THIS ELEVATION TAKEN ON THE FILL FACE OF THE BACKWALL.

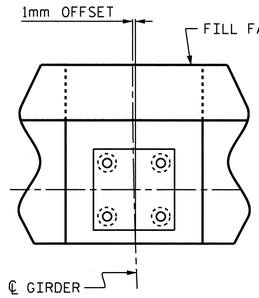

OFFSET DETAIL

(TYP. EA. GIRDER)

TOP OF PILE ELEVATIONS	
①	EL. 62.830
②	EL. 62.750
③	EL. 62.670
④	EL. 62.590
⑤	EL. 62.510
⑥	EL. 62.430
⑦	EL. 62.350
⑧	EL. 62.270

PROJECT NO. U-2519DA

CUMBERLAND COUNTY

STATION: 14+60.500-RP1A-

SHEET 1 OF 3

STATE OF NORTH CAROLINA
DEPARTMENT OF TRANSPORTATION
RALEIGH

SUBSTRUCTURE

END BENT 2

NORTH CAROLINA PROFESSIONAL SEAL 16301 ENGINEER JING HSING CHANG
3/22/11

REVISIONS						SHEET NO.
NO.	BY:	DATE:	NO.	BY:	DATE:	S-220
1			3			TOTAL SHEETS
2			4			411

DRAWN BY : P.C. BREWER DATE : 12/13/07
CHECKED BY : A.S. CALLAWAY DATE : 2/27/08

22-MAR-2011 12:43
K:\TIPProjects-U\U2519da\Structures\girolaml\str07\pbrewer\Microstation\u2519da_sd_eb_07.dgn
tfang

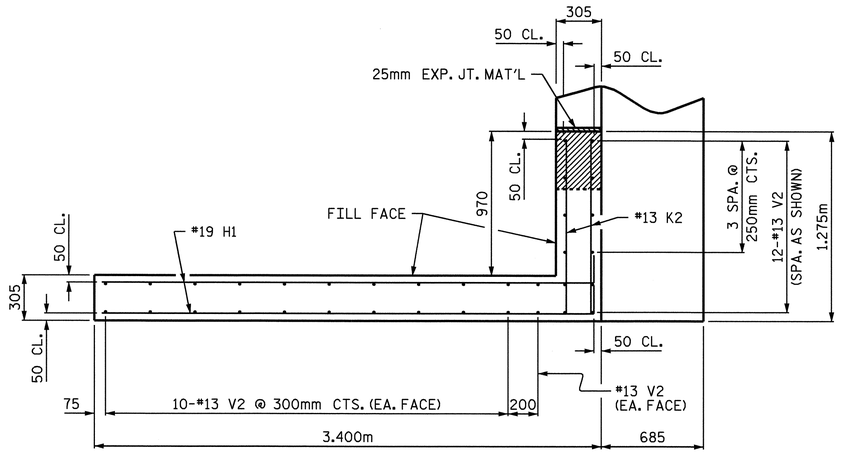

PLAN OF WING (W1)

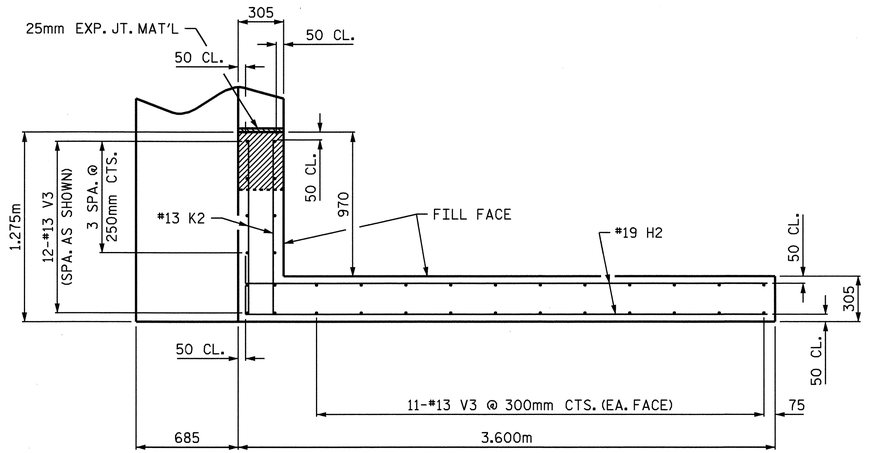

PLAN OF WING (W2)

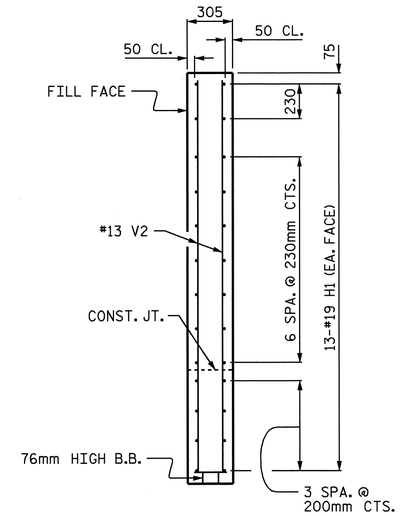

SECTION X-X

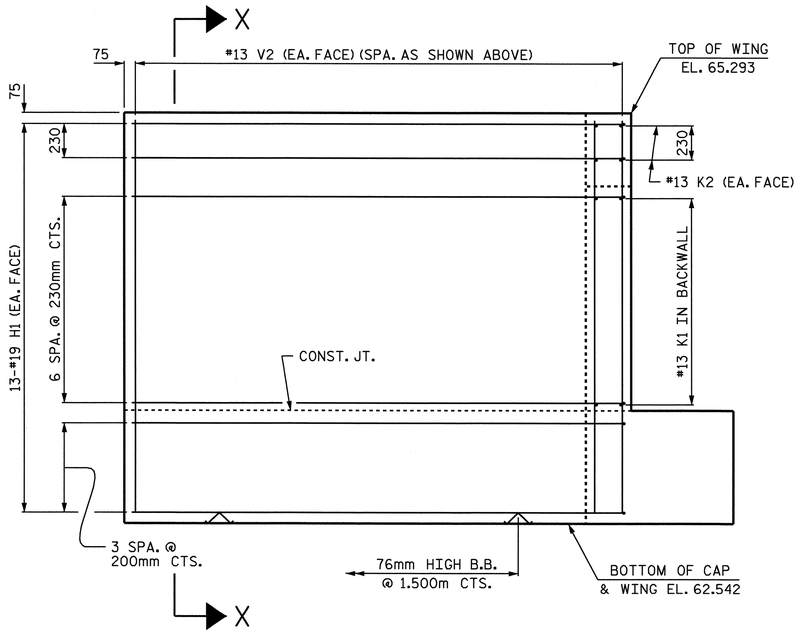

ELEVATION OF WING (W1)

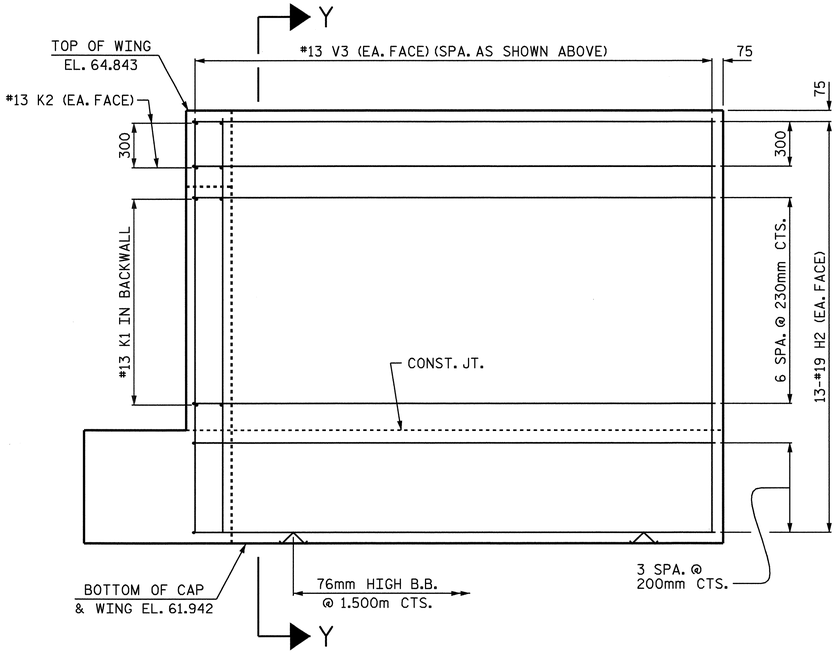

ELEVATION OF WING (W2)

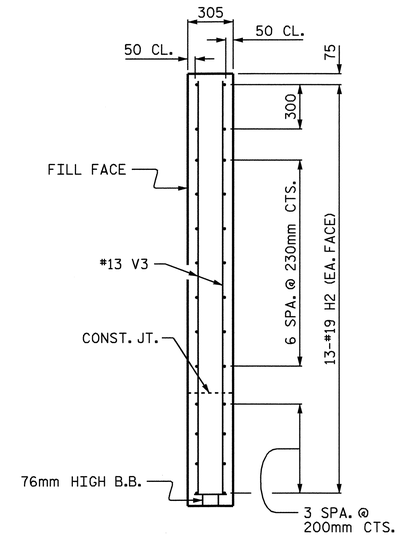

SECTION Y-Y

PROJECT NO. U-2519DA

CUMBERLAND COUNTY

STATION: 14+60.500-RP1A-

SHEET 2 OF 3

STATE OF NORTH CAROLINA
DEPARTMENT OF TRANSPORTATION
RALEIGH

SUBSTRUCTURE

END BENT 2

NORTH CAROLINA PROFESSIONAL SEAL 21638 ENGINEER LAURA E. SUTTON
9/30/08

REVISIONS						SHEET NO.
NO.	BY:	DATE:	NO.	BY:	DATE:	S-221
1			3			TOTAL SHEETS
2			4			411

DRAWN BY : P.C. BREWER DATE : 12/13/07
CHECKED BY : A.S. CALLAWAY DATE : 2/27/08

30-JUL-2008 14:06
R:\Structures\glrolam1\str07\pbrewer\Microstation\u2519da_sd_eb_07.dgn
LSUTTON

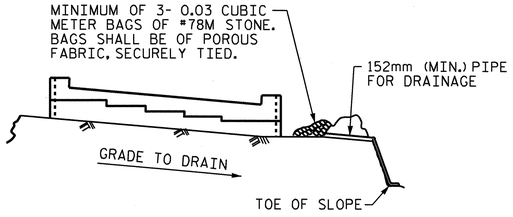

BAGGED STONE AND PIPE SHALL BE PLACED IMMEDIATELY AFTER COMPLETION OF END BENT EXCAVATION. PIPE MAY BE EITHER CONCRETE, CORRUGATED STEEL, CORRUGATED ALUMINUM ALLOY, OR CORRUGATED PLASTIC. PERFORATED PIPE WILL NOT BE ALLOWED.

BAGGED STONE SHALL REMAIN IN PLACE UNTIL THE ENGINEER DIRECTS THAT IT BE REMOVED. THE CONTRACTOR SHALL REMOVE AND DISPOSE OF SILT ACCUMULATIONS AT BAGGED STONE WHEN SO DIRECTED BY THE ENGINEER. BAGS SHALL BE REMOVED AND REPLACED WHENEVER THE ENGINEER DETERMINES THAT THEY HAVE DETERIORATED AND LOST THEIR EFFECTIVENESS.

NO SEPARATE PAYMENT WILL BE MADE FOR THIS WORK AND THE ENTIRE COST OF THIS WORK SHALL BE INCLUDED IN THE UNIT CONTRACT PRICE BID FOR THE SEVERAL PAY ITEMS.

TEMPORARY DRAINAGE AT END BENT

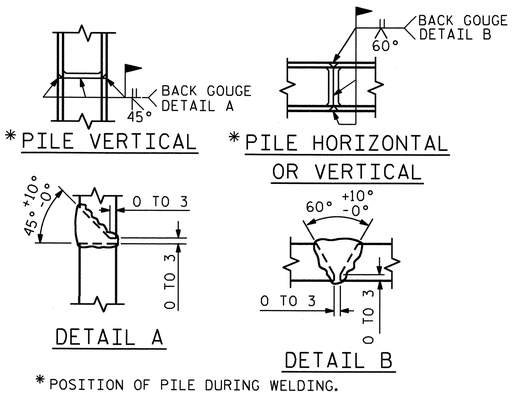

*POSITION OF PILE DURING WELDING.

PILE SPLICE DETAILS

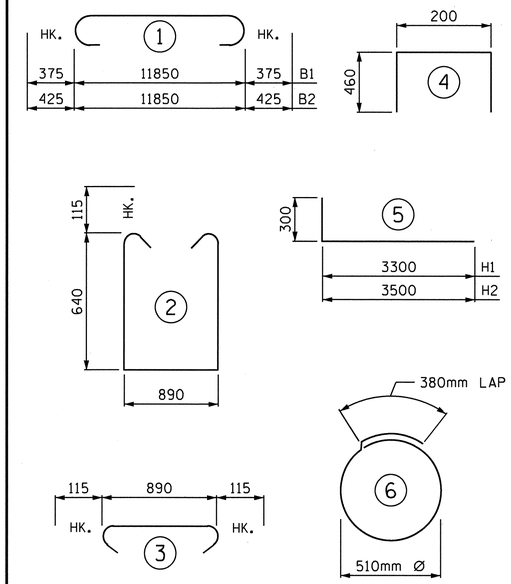

BILL OF MATERIAL

END BENT 2

BAR	NO.	SIZE	TYPE	LENGTH	WEIGHT
B1	5	#29	1	12600	319
B2	4	#32	1	12700	325
B3	2	#16	STR	11900	37
B4	8	#13	STR	6320	50
B5	10	#13	STR	880	9
H1	26	#19	5	3600	209
H2	26	#19	5	3800	221
K1	28	#13	STR	6320	176
K2	8	#13	STR	1160	9
S1	39	#13	2	2400	93
S2	39	#13	3	1120	43
S3	16	#13	6	1980	31
U1	32	#13	4	1120	36
V1	64	#16	STR	2200	219
V2	34	#13	STR	2620	89
V3	34	#13	STR	2760	93

REINFORCING STEEL kg 1,959

CLASS A CONCRETE BREAKDOWN

POUR #1 CAP & LOWER WINGS & COLLARS 11.9 m3

POUR #2 BACKWALL & UPPER WINGS 10.0 m3

TOTAL 21.9 m3

HP 310 x 79 STEEL PILES NO. 8 METERS 152

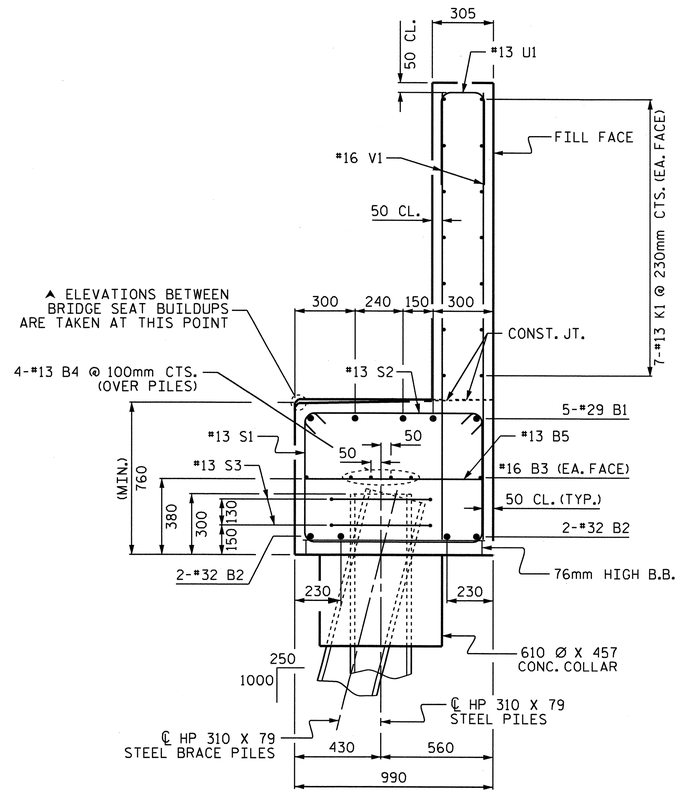

SECTION A-A

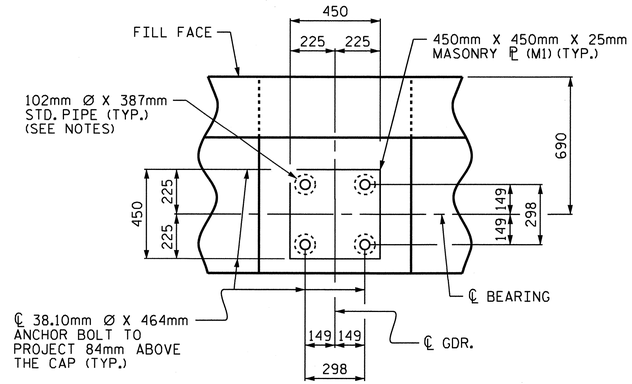

DETAIL "A"

(TYP. EA. GIRDER)

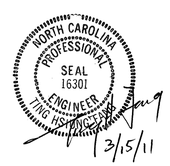

PROJECT NO. U-2519DA

CUMBERLAND COUNTY

STATION: 14+60.500-RP1A-

SHEET 3 OF 3

STATE OF NORTH CAROLINA
DEPARTMENT OF TRANSPORTATION
RALEIGH

SUBSTRUCTURE

END BENT 2

REVISIONS						SHEET NO.
NO.	BY:	DATE:	NO.	BY:	DATE:	S-222
1			3			TOTAL SHEETS
2			4			411

DRAWN BY : P.C. BREWER DATE : 12/13/07
CHECKED BY : A.S. CALLAWAY DATE : 2/27/08

15-MAR-2011 16:41
K:\TIPProjects-U\U2519da\Structures\girolami\str07\pbrewer\Microstation\u2519da_sd_eb_07.dgn
tfang

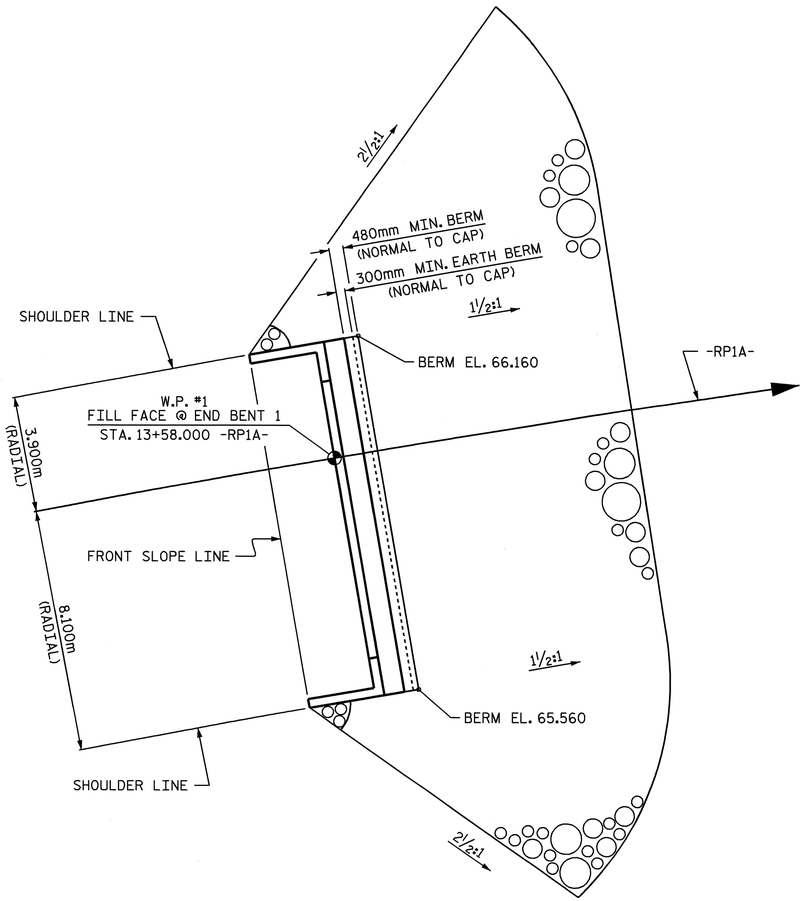

PLAN AT END BENT 1

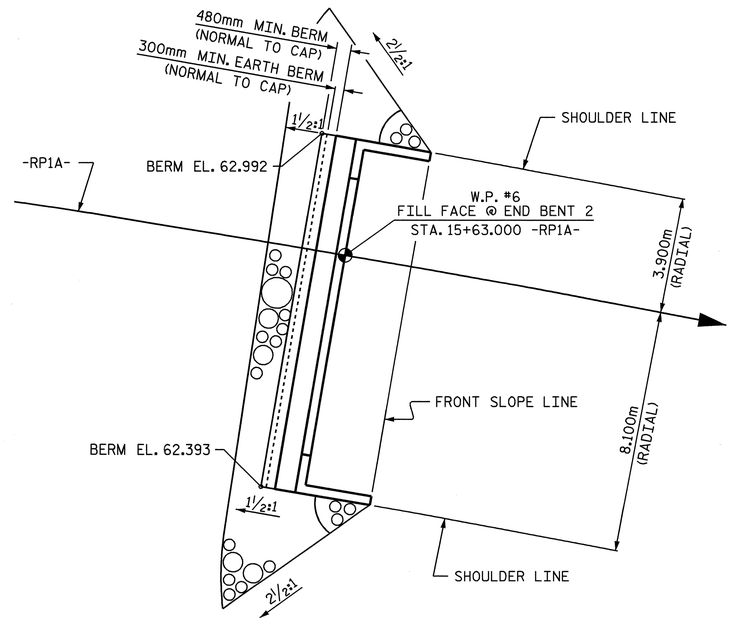

PLAN AT END BENT 2

ESTIMATED QUANTITIES		
BRIDGE @ STA. 14+60.500 -RP1A-	RIP RAP CLASS II	FILTER FABRIC FOR DRAINAGE
	METRIC TON	SQUARE METERS
END BENT 1	542	553
END BENT 2	168	171

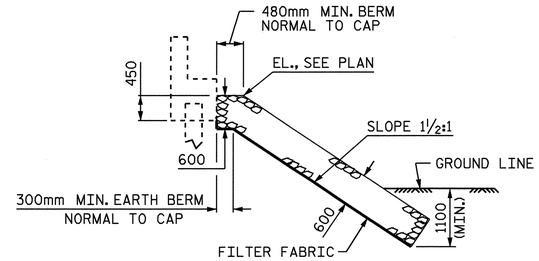

℄ SECTION
BERM RIP RAPPED

PROJECT NO. U-2519DA
CUMBERLAND COUNTY
STATION: 14+60.500-RP1A-

STATE OF NORTH CAROLINA
DEPARTMENT OF TRANSPORTATION
RALEIGH

RIP RAP DETAILS

NORTH CAROLINA PROFESSIONAL SEAL 21638 ENGINEER LAURA E. SUTTON
9/Sep/08

REVISIONS						SHEET NO.
NO.	BY:	DATE:	NO.	BY:	DATE:	S-223
1			3			TOTAL SHEETS
2			4			411

DRAWN BY : P.C. BREWER DATE : 7/08/08
CHECKED BY : A.S. CALLAWAY DATE : 7/08/08

30-JUL-2008 14:06
R:\Structures\glrolaml\str07\pbrewer\Microstation\U2519DA_sd_RR_07.dgn
LSUTTON

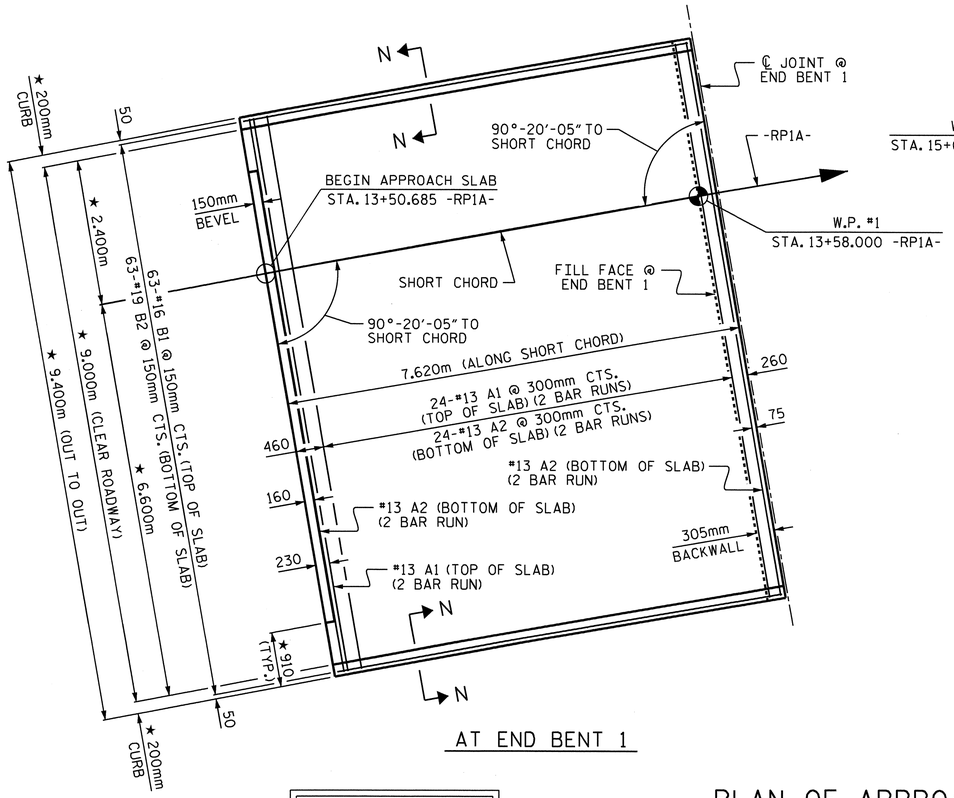

AT END BENT 1

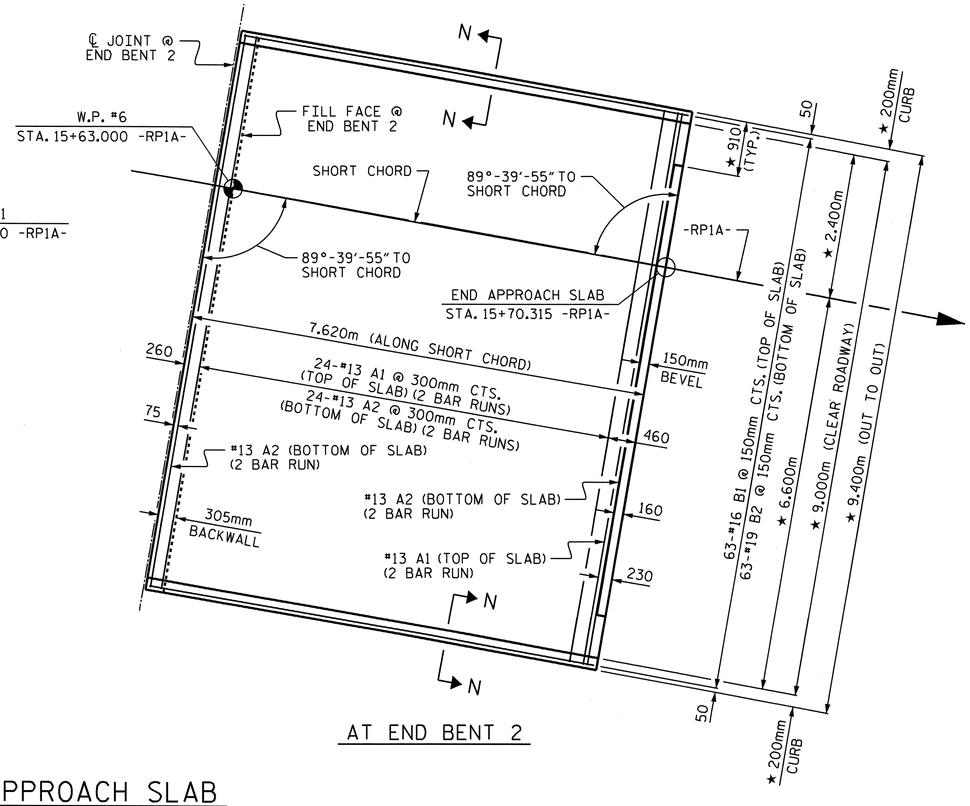

AT END BENT 2

★ RADIAL DIMENSIONS

PLAN OF APPROACH SLAB

(FOR ARC OFFSETS, SEE SHEET 2 OF 2)

BILL OF MATERIAL

APPROACH SLAB AT END BENT 1

BAR	NO.	SIZE	TYPE	LENGTH	WEIGHT
✱ A1	50	#13	STR	4960	247
A2	52	#13	STR	4920	254
✱ B1	63	#16	STR	7240	708
B2	63	#19	STR	7520	1059
REINFORCING STEEL				kg	1,313
✱ EPOXY COATED REINFORCING STEEL				kg	955
CLASS AA CONCRETE				m3	22.3

APPROACH SLAB AT END BENT 2

BAR	NO.	SIZE	TYPE	LENGTH	WEIGHT
✱ A1	50	#13	STR	4960	247
A2	52	#13	STR	4920	254
✱ B1	63	#16	STR	7240	708
B2	63	#19	STR	7520	1059
REINFORCING STEEL				kg	1,313
✱ EPOXY COATED REINFORCING STEEL				kg	955
CLASS AA CONCRETE				m3	22.3

NOTES:

APPROACH SLAB SHALL NOT BE CONSTRUCTED PRIOR TO COMPLETION OF THE BRIDGE DECK.

FOR REINFORCED BRIDGE APPROACH FILL INCLUDING FABRIC, IMPERMEABLE GEOMEMBRANE, 102mm Ø DRAINAGE PIPE, #78M STONE, AND SELECT MATERIAL, SEE ROADWAY PLANS.

AREA BETWEEN THE WINGWALL AND APPROACH SLAB SHALL BE GRADED TO DRAIN THE WATER AWAY FROM THE FILL FACE OF THE BRIDGE AND SHALL BE PAVED. SEE ROADWAY PLANS.

THE 150mm COMP. A.B.C. SHALL BE FLUSH WITH THE ROADWAY END OF THE APPROACH SLAB AND SHALL EXTEND 300mm OUTSIDE OF EACH EDGE OF THE APPROACH SLAB.

THE CONTRACTOR MAY USE 100mm TYPE B-25.0B ASPHALT CONCRETE COURSE IN LIEU OF 150mm COMP. A.B.C. IF THIS OPTION IS USED, THE BASE COURSE SHALL BE FLUSH WITH THE ROADWAY END OF THE APPROACH SLAB AND THE WIDTH SHALL BE THE SAME AS THAT OF THE APPROACH SLAB.

THE CONTRACTOR MAY USE 125mm CLASS "A" CONCRETE BASE IN LIEU OF 150mm COMP. A.B.C. IF THIS OPTION IS USED, THE CONCRETE BASE SHALL BE FLUSH WITH THE ROADWAY END OF THE APPROACH SLAB AND THE WIDTH SHALL BE THE SAME AS THAT OF THE APPROACH SLAB. THE CONCRETE SHALL BE FINISHED TO A SMOOTH SURFACE AND A LAYER OF 13.6 kg ROOFING FELT SHALL BE PLACED BETWEEN THE CONCRETE BASE AND THE APPROACH SLAB TO PREVENT BOND. THE APPROACH SLAB SHALL NOT BE CAST UNTIL THE CONCRETE BASE HAS REACHED AN AGE OF THREE CURING DAYS.

THE JOINT SHALL BE FORMED PRIOR TO THE CASTING OF THE BARRIER RAIL.

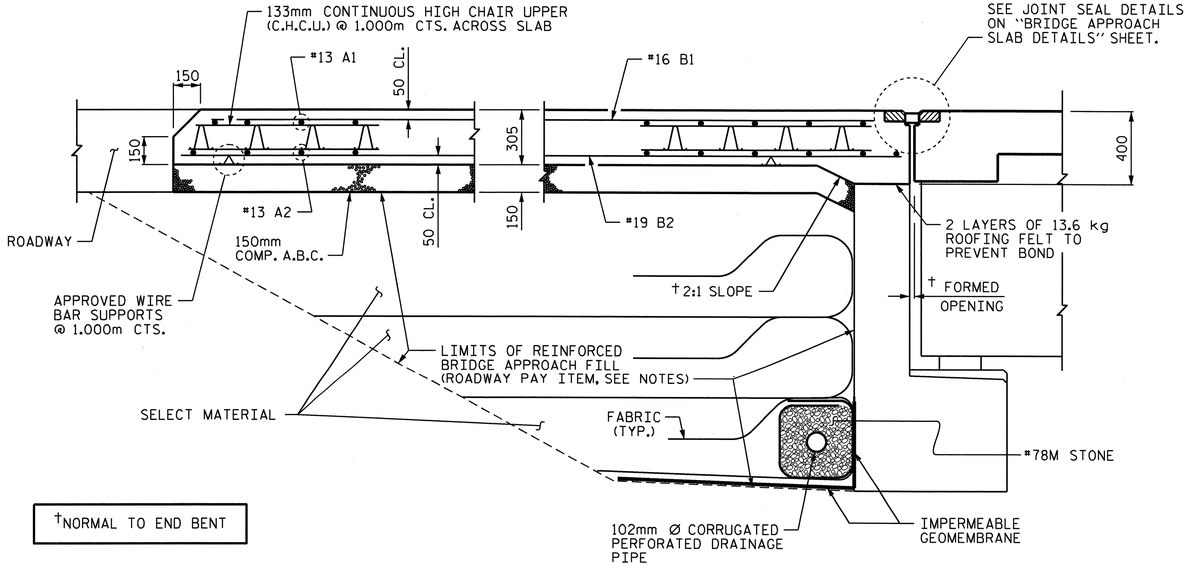

†NORMAL TO END BENT

SECTION THRU SLAB

WITH EVAZOTE JOINT SEAL

FOR EVAZOTE JOINT SEALS, SEE SPECIAL PROVISIONS.

THE NOMINAL UNCOMPRESSED SEAL WIDTH OF THE EVAZOTE JOINT SEALS SHALL BE 89mm AT END BENT 1 AND BENT 3, AND 71mm AT END BENT 2.

FOR ELASTOMERIC CONCRETE, SEE SPECIAL PROVISIONS.

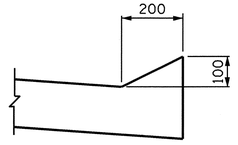

SECTION N-N

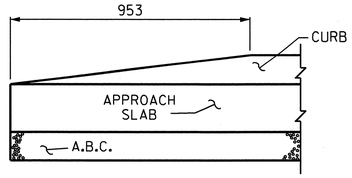

END OF CURB WITHOUT SHOULDER BERM GUTTER

CURB DETAILS

NORTH CAROLINA PROFESSIONAL SEAL 16301 ENGINEER TING HSIUNG FANG

3/24/11

PROJECT NO. U-2519DA

CUMBERLAND COUNTY

STATION: 14+60.500-RP1A-

SHEET 1 OF 2

STATE OF NORTH CAROLINA
DEPARTMENT OF TRANSPORTATION
RALEIGH

STANDARD

BRIDGE APPROACH SLAB FOR FLEXIBLE PAVEMENT

REVISIONS						SHEET NO.
NO.	BY:	DATE:	NO.	BY:	DATE:	S-224
1			3			TOTAL SHEETS
2			4			411

ASSEMBLED BY : P.C. BREWER	DATE : 5/29/08	
CHECKED BY : A.S. CALLAWAY	DATE : 6/03/09	
DRAWN BY : FCJ 6/87	REV. 7/10/01	RWW/LES
CHECKED BY : EGA 6/87	REV. 5/7/03R	RWW/JTE
	REV. 5/1/06R	KMM/GM

24-MAR-2011 13:33
K:\TIPProjects-U\U2519da\Structures\glrolami\str07\pbrewer\Microstation\u2519da_sd_as_07.dgn
ttfang

STD. NO. BAS4SM

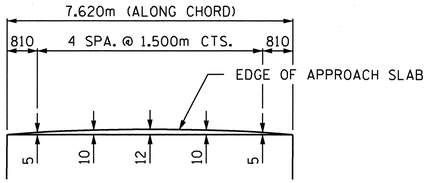

LEFT SIDE

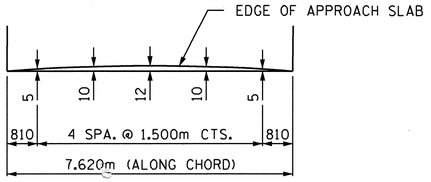

RIGHT SIDE

ARC OFFSETS

(END BENT 1 SHOWN, END BENT 2 SIMILAR)

SAWED OPENING FOR EVAZOTE JOINT SEAL			
	AT 7° C	AT 16° C	AT 32° C
END BENT 1	77mm	68mm	53mm
BENT 3	77mm	68mm	52mm
END BENT 2	58mm	53mm	43mm

ELASTOMERIC CONCRETE	
	* ELASTOMERIC CONCRETE (CU. m)
END BENT 1	0.2
BENT 3	0.2
END BENT 2	0.2

* BASED ON THE MINIMUM BLOCKOUT SHOWN.

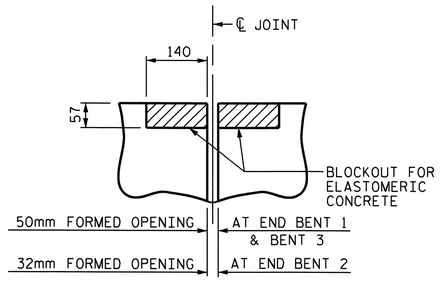

SECTION C-C

EVAZOTE JOINT SEAL (PRE-SAWED ELASTOMERIC CONCRETE DIMENSIONS)

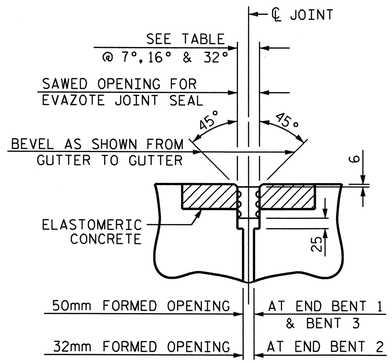

SECTION C-C

ARMORED EVAZOTE JOINT SEAL

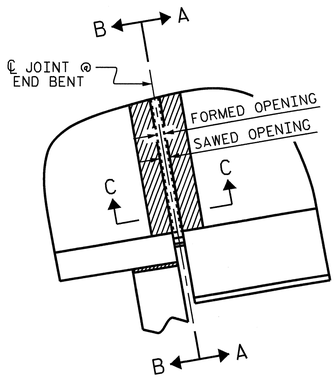

PLAN

END BENT 1 SHOWN, END BENT 2 SIMILAR

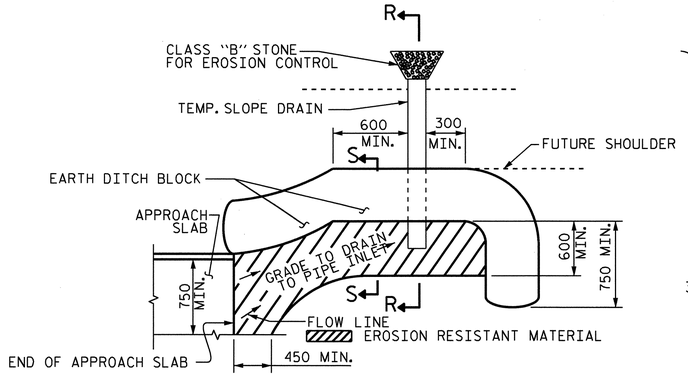

NOTE: IMMEDIATELY AFTER THE CONSTRUCTION OF THE APPROACH SLAB, THE CONTRACTOR SHALL PROVIDE TEMPORARY BERM AND SLOPE DRAIN. CONTRACTOR SHALL GRADE TO PIPE INLET AND PROVIDE EROSION RESISTANT MATERIAL AS SHOWN. THE EROSION RESISTANT MATERIAL SHALL BE EITHER 1) ASPHALT PLANT MIX, TYPE 1 OR TYPE 2, MIN. 50mm DEPTH, 2) EROSION CONTROL MAT, OR 3) CONCRETE, AS DIRECTED BY THE ENGINEER. THE SLOPE DRAIN SHALL CONSIST OF A NON-PERFORATED TEMPORARY DRAINAGE PIPE, 305mm IN DIAMETER.

PLAN VIEW

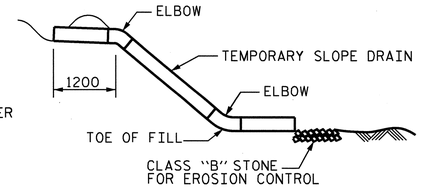

SECTION R-R

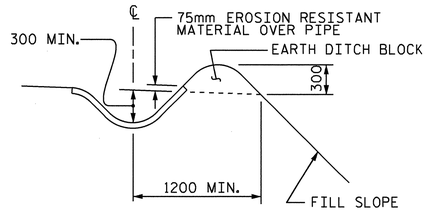

SECTION S-S

TEMPORARY BERM AND SLOPE DRAIN DETAILS

(TO BE USED WHEN SHOULDER BERM GUTTER IS REQUIRED)

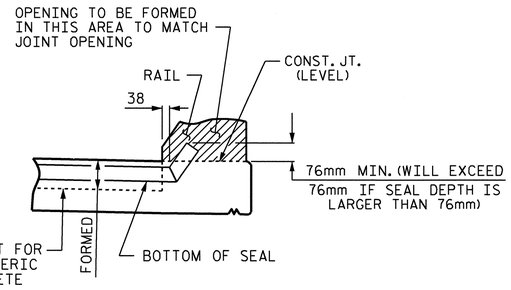

SECTION A-A

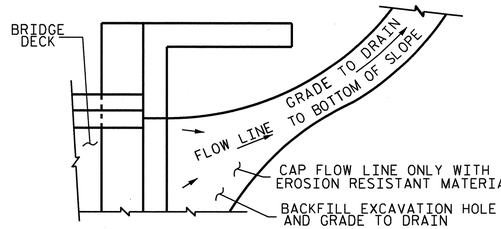

NOTE: IF THE APPROACH SLAB IS NOT CONSTRUCTED IMMEDIATELY AFTER THE BACKFILLING OF THE END BENT EXCAVATION, GRADE TO DRAIN TO THE BOTTOM OF THE SLOPE AND PROVIDE EROSION RESISTANT MATERIAL, SUCH AS FIBERGLASS ROVING OR AS DIRECTED BY THE ENGINEER TO PREVENT SOIL EROSION AND TO PROTECT THE AREA ADJACENT TO THE STRUCTURE. THE CONTRACTOR WILL BE REQUIRED TO REMOVE THESE MATERIALS PRIOR TO CONSTRUCTION OF THE APPROACH SLAB.

TEMPORARY DRAINAGE DETAIL

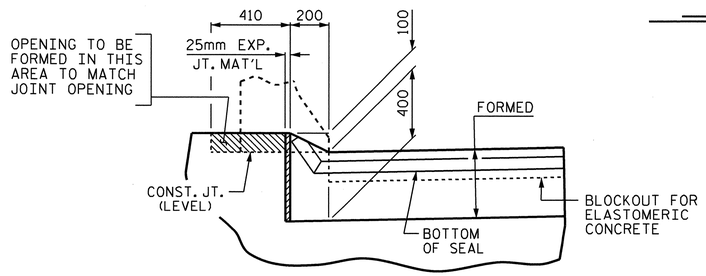

SECTION B-B

JOINT SEAL DETAILS

EVAZOTE JOINT SEAL TO BE CUT, HEAT WELDED AND TURNED UP PARALLEL TO SLOPED FACE OF THE BARRIER RAIL.

NORTH CAROLINA PROFESSIONAL SEAL 16301 ENGINEER T. TING FANG
3/18/11

PROJECT NO. U-2519DA
CUMBERLAND COUNTY
STATION: 14+60.500-RP1A-

SHEET 2 OF 2

STATE OF NORTH CAROLINA
DEPARTMENT OF TRANSPORTATION
RALEIGH

STANDARD

BRIDGE APPROACH SLAB DETAILS

REVISIONS						SHEET NO.
NO.	BY:	DATE:	NO.	BY:	DATE:	S-225
1			3			TOTAL SHEETS
2			4			411

STD. NO. BAS10SM

ASSEMBLED BY : P.C. BREWER	DATE : 5/29/08	
CHECKED BY : A.S. CALLAWAY	DATE : 6/03/09	
DRAWN BY : FCJ 11/88	REV. 10/17/00 RWW/LES	
CHECKED BY : ARB 11/88	REV. 5/7/03 RWW/JTE	
	REV. 5/1/06R MAA/KMM	

18-MAR-2011 13:46
K:\TIPProjects-U\U2519da\Structures\girolami\str07\pbrewer\Microstation\u2519da_sd_as_07.dgn
ttfang