TIP PROJECT: X-0002CB

CONTRACT: C202618

STRUCTURES

STATE OF NORTH CAROLINA
DIVISION OF HIGHWAYS

CUMBERLAND COUNTY

STATE	STATE PROJECT REFERENCE NO.		
N.C.	X-0002CB		
WBS PROJ. NO.	F.A. PROJ. NO.	DESCRIPTION	
35196.1.2	NHF-DPR-0100(002)	P.E.	
35196.2.4		ROW & UTIL	
35196.3.20	NHF-0100(20)	CONST.	

METRIC

LOCATION: NC 24 EXTENSION (FAYETTEVILLE OUTER LOOP) FROM EAST OF SR1600 (MCARTHUR RD.) TO WEST OF US 401 (RAMSEY ST.)

TYPE OF WORK: GRADING, DRAINAGE, PAVING, STRUCTURES, RETAINING WALLS AND SIGNING

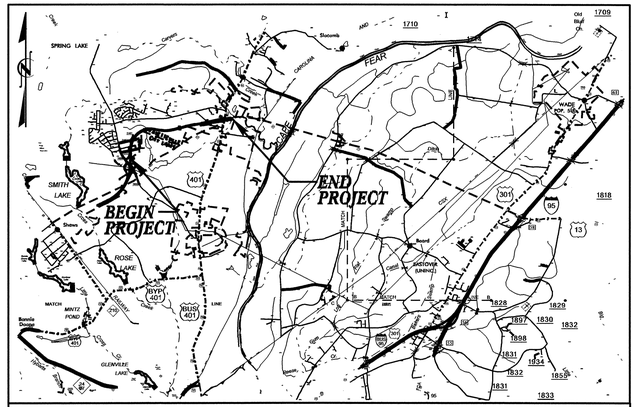

VICINITY MAP

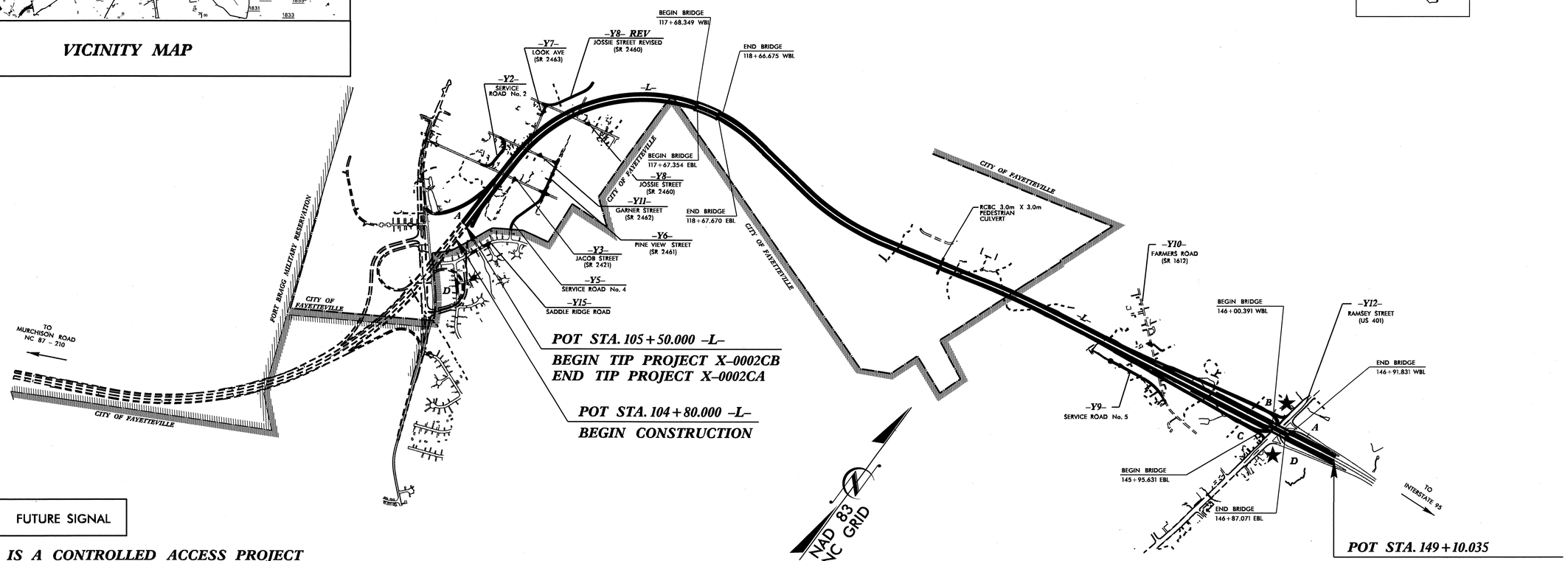

★ FUTURE SIGNAL

THIS IS A CONTROLLED ACCESS PROJECT WITH ACCESS LIMITED TO INTERCHANGES

DESIGN DATA
(INTERSTATE)

ADT 2008	=	34,700
ADT 2030	=	59,600
DHV	=	9 %
D	=	55 %
T	=	10 % *
V	=	110 km/h

* TTST 4% + DUAL 6%

PROJECT LENGTH

LENGTH ROADWAY TIP PROJECT X-0002CB	=	4.170 km
LENGTH STRUCTURE TIP PROJECT X-0002CB	=	0.190 km
TOTAL LENGTH TIP PROJECT X-0002CB	=	4.360 km

2006 METRIC STANDARDS SPECIFICATION

LETTING DATE:
FEBRUARY 15, 2011

Prepared In the Office of:
DEPARTMENT OF TRANSPORTATION
DIVISION OF HIGHWAYS
1000 Birch Ridge Drive Raleigh, N.C. 27610

B.S. COX, P.E.
PROJECT ENGINEER

T.J. BEACH, P.E. / K.W. ALFORD, P.E.
PROJECT DESIGN ENGINEER

DIVISION OF HIGHWAYS
STATE OF NORTH CAROLINA

P.E.
STATE HIGHWAY ENGINEER – DESIGN

DEPARTMENT OF TRANSPORTATION
FEDERAL HIGHWAY ADMINISTRATION

APPROVED FOR
DIVISION ADMINISTRATOR DATE

29-OCT-2010 11:54
F:\Structures\MISC\x-0002cb_tsh.dgn
kalford

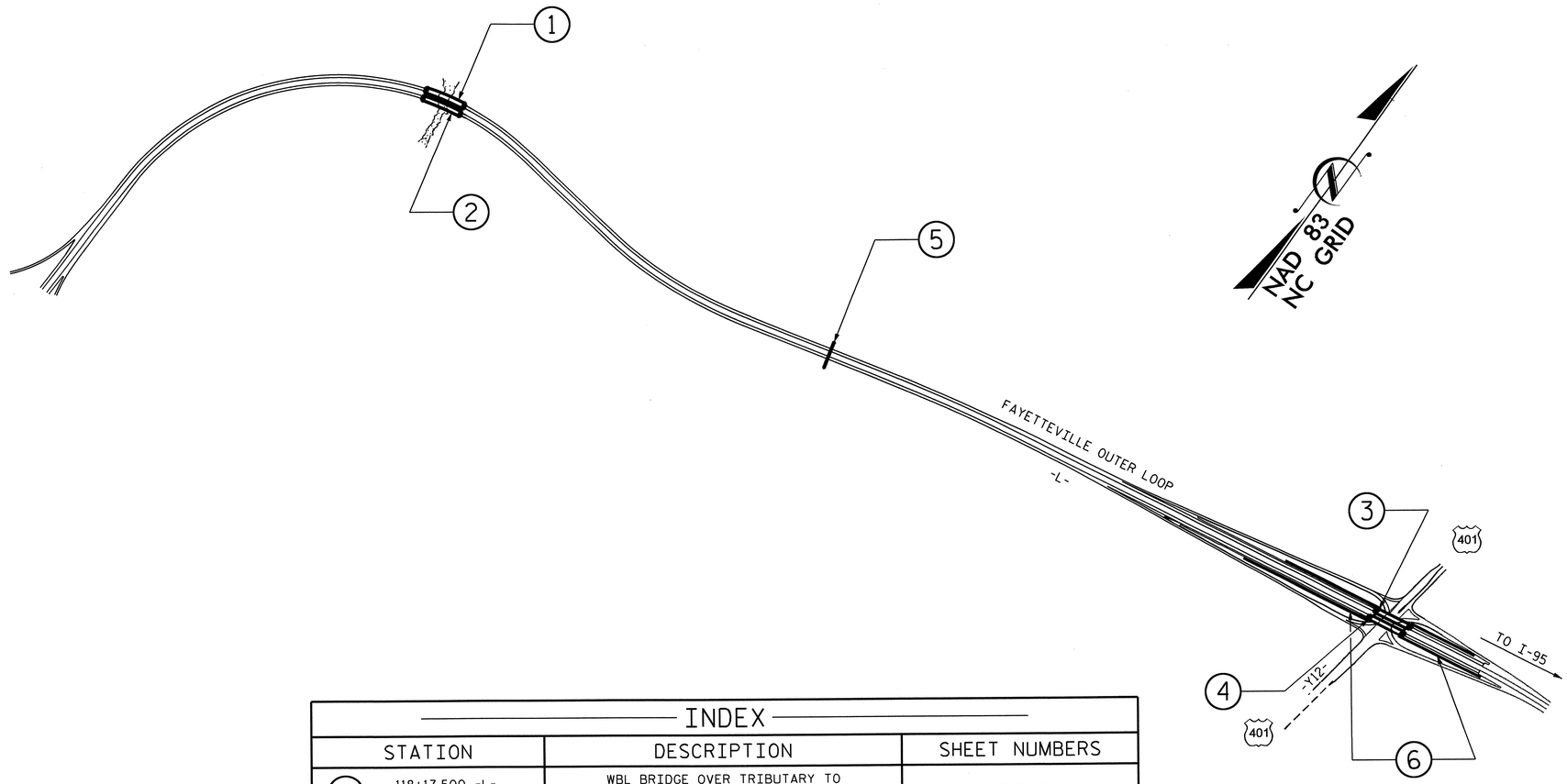

INDEX

STATION	DESCRIPTION	SHEET NUMBERS
1 118+17.500 -L-	WBL BRIDGE OVER TRIBUTARY TO CARVERS CREEK ON FAYETTEVILLE OUTER LOOP BETWEEN SR 1600 AND US 401	S-1 THRU S-38
2 118+17.500 -L-	EBL BRIDGE OVER TRIBUTARY TO CARVERS CREEK ON FAYETTEVILLE OUTER LOOP BETWEEN SR 1600 AND US 401	S-39 THRU S-76
3 146+39.081 -L- =15+64.600 -Y12-	WBL BRIDGE OVER US 401 (RAMSEY ST.) ON FAYETTEVILLE OUTER LOOP BETWEEN SR 1600 & I-95	S-77 THRU S-105
4 146+39.081 -L- =15+64.600 -Y12-	EBL BRIDGE OVER US 401 (RAMSEY ST.) ON FAYETTEVILLE OUTER LOOP BETWEEN SR 1600 & I-95	S-106 THRU S-134
5 130+30.000 -L-	SINGLE 3.000m X 3.000m PEDESTRIAN CONCRETE BOX CULVERT	C-1 THRU C-4
6 -L-	MSE RETAINING WALLS	W-1 THRU W-20

METRIC

PROJECT NO. X-0002CB
CUMBERLAND COUNTY
STATION:

STATE OF NORTH CAROLINA
DEPARTMENT OF TRANSPORTATION
RALEIGH

INDEX

REVISIONS						SHEET NO.
NO.	BY:	DATE:	NO.	BY:	DATE:	TOTAL SHEETS
1			3			
2			4			

DRAWN BY : D. G. ELY DATE : 9-2010
CHECKED BY : K. W. ALFORD DATE : 9-2010

23-SEP-2010 11:40
R:\Structures\MISC\x-0002cb_INDEX.dgn
dely

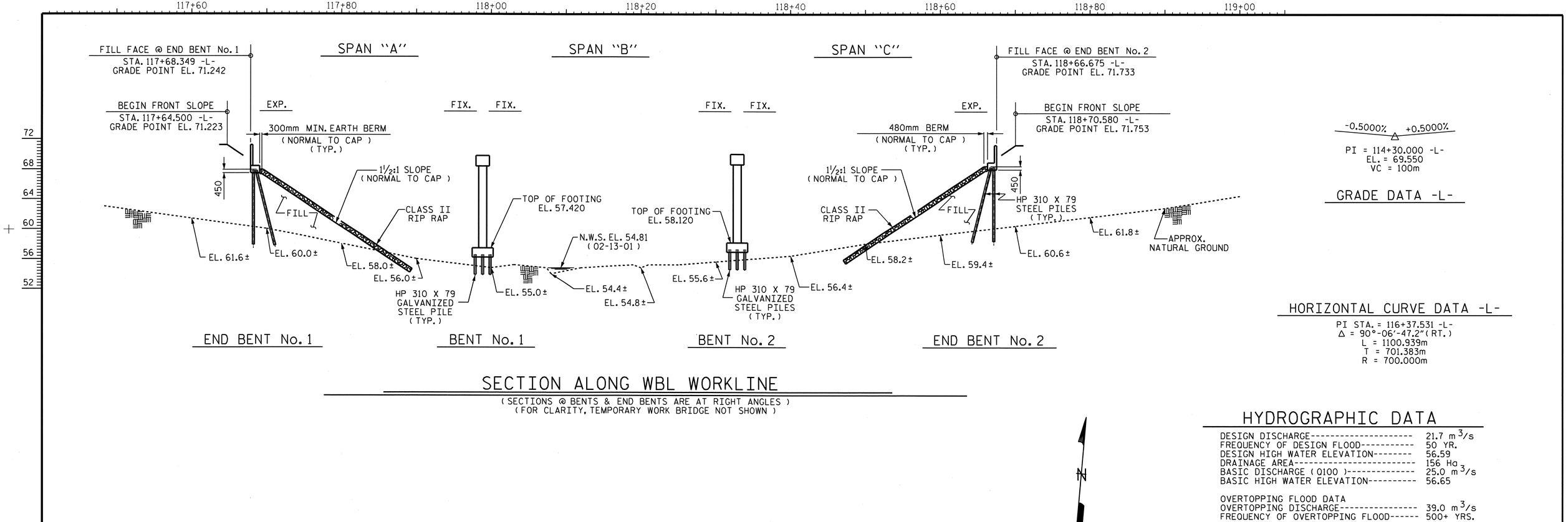

SECTION ALONG WBL WORKLINE

(SECTIONS @ BENTS & END BENTS ARE AT RIGHT ANGLES)
(FOR CLARITY, TEMPORARY WORK BRIDGE NOT SHOWN)

-0.5000% △ +0.5000%

PI = 114+30.000 -L-
EL. = 69.550
VC = 100m

GRADE DATA -L-

HORIZONTAL CURVE DATA -L-

PI STA. = 116+37.531 -L-
Δ = 90°-06'-47.2"(RT.)
L = 1100.939m
T = 701.383m
R = 700.000m

HYDROGRAPHIC DATA

DESIGN DISCHARGE----------	21.7 m^3/s
FREQUENCY OF DESIGN FLOOD----------	50 YR.
DESIGN HIGH WATER ELEVATION--------	56.59
DRAINAGE AREA----------	156 Ha
BASIC DISCHARGE (Q100)----------	25.0 m^3/s
BASIC HIGH WATER ELEVATION----------	56.65
OVERTOPPING FLOOD DATA	
OVERTOPPING DISCHARGE----------	39.0 m^3/s
FREQUENCY OF OVERTOPPING FLOOD------	500+ YRS.
OVERTOPPING FLOOD EVEVATION--------	70.30
OVERTOPPING ROADWAY STA. 114+30.00 -L-	

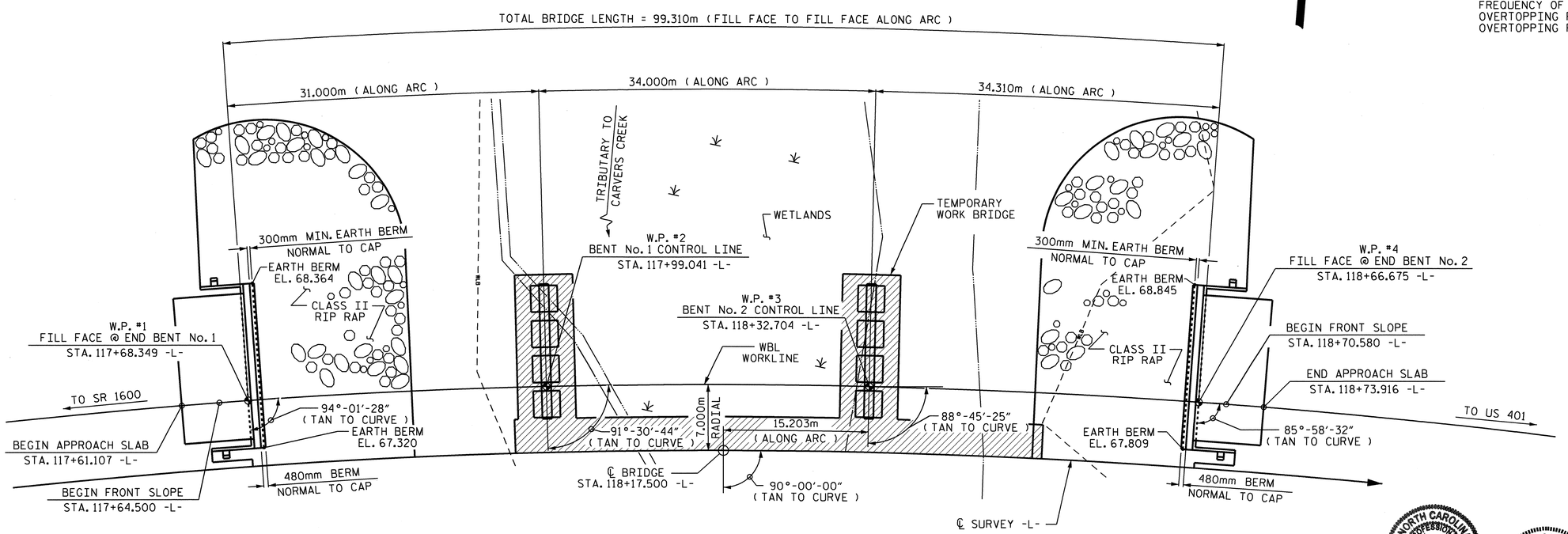

PLAN

(PILES NOT SHOWN IN PLAN VIEW FOR CLARITY)

PROJECT NO. X-0002CB
CUMBERLAND COUNTY
STATION: 118+17.500 -L-

SHEET 1 OF 3 Br. No. 385

STATE OF NORTH CAROLINA
DEPARTMENT OF TRANSPORTATION
RALEIGH

GENERAL DRAWING

FOR WBL BRIDGE ON
FAYETTEVILLE OUTER LOOP
OVER WETLANDS
BETWEEN SR 1600 AND US 401

REVISIONS								SHEET NO.
NO.	BY:	DATE:	NO.	BY:	DATE:			S-1
1			3					TOTAL SHEETS
2			4					134

METRIC

NORTH CAROLINA PROFESSIONAL SEAL 029441 ENGINEER KRISTY W. ALFORD

NORTH CAROLINA PROFESSIONAL SEAL 11268 ENGINEER BETSY S. COX 11-03-10

DRAWN BY : N. PIERCE DATE : 04-08
CHECKED BY : T. BANKOVICH DATE : 06-08

01-NOV-2010 09:50
F:\Structures\StrIWBL\GeneralDrawings\x0002c_str2_gd.dgn
kalford

STR. #1

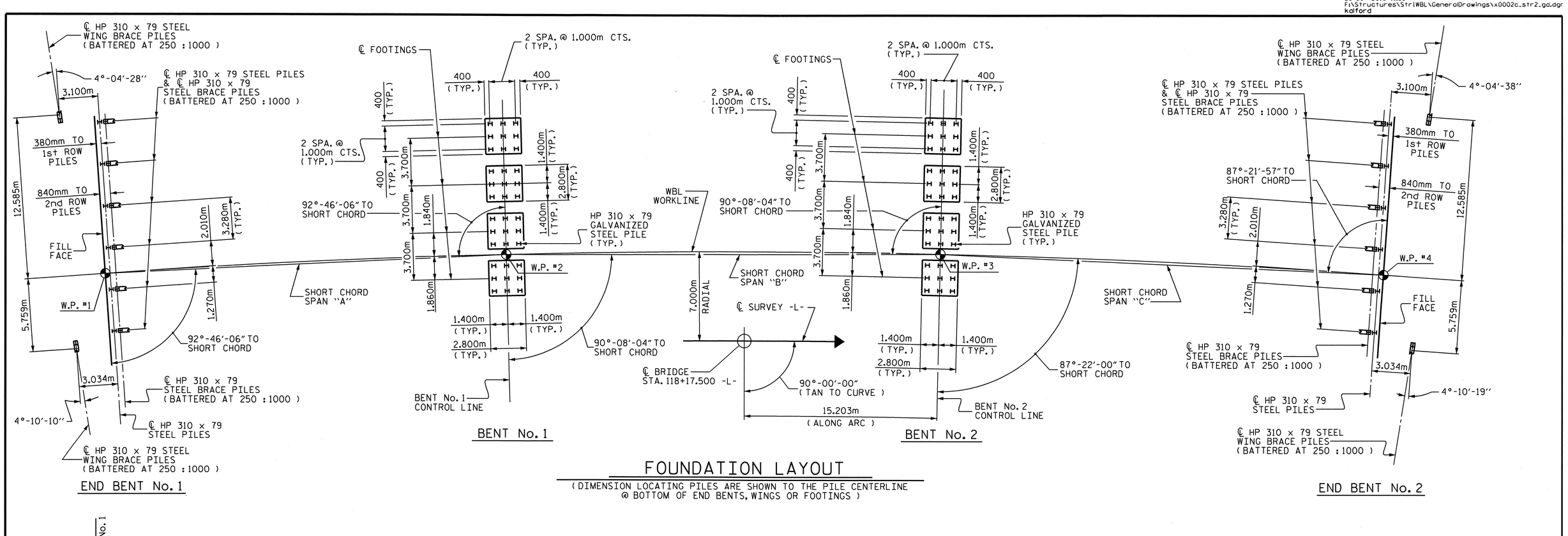

FOUNDATION LAYOUT

(DIMENSION LOCATING PILES ARE SHOWN TO THE PILE CENTERLINE @ BOTTOM OF END BENTS, WINGS OR FOOTINGS)

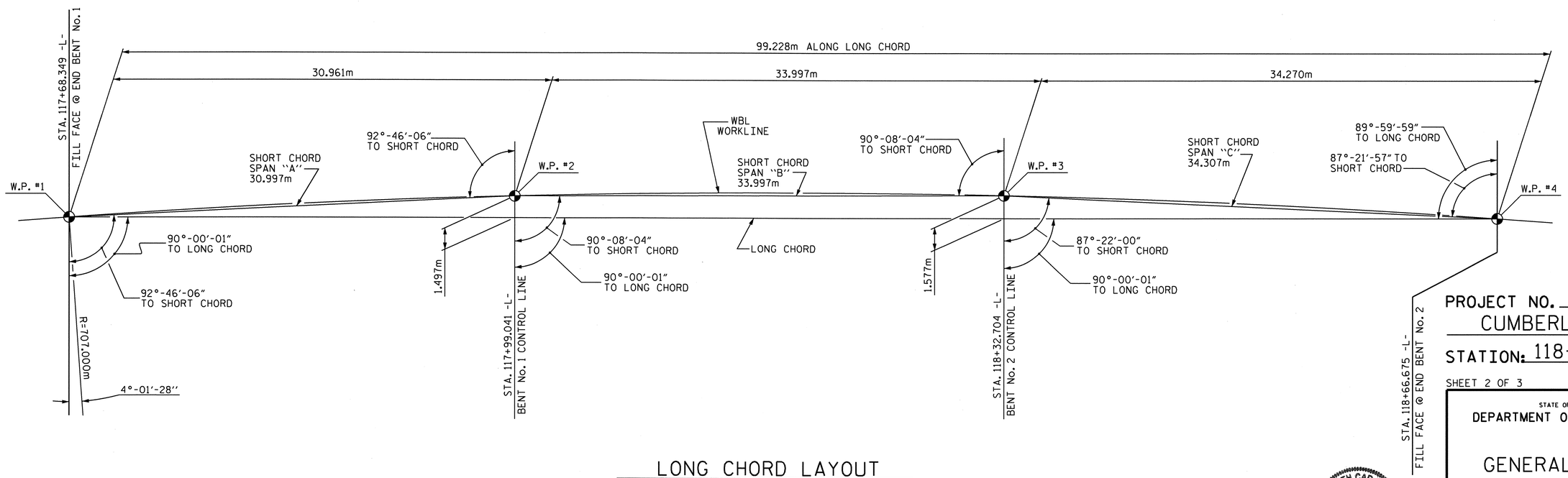

LONG CHORD LAYOUT

PROJECT NO. X-0002CB
CUMBERLAND COUNTY
STATION: 118+17.500 -L-

SHEET 2 OF 3

STATE OF NORTH CAROLINA
DEPARTMENT OF TRANSPORTATION
RALEIGH

GENERAL DRAWING
FOR WBL BRIDGE ON
FAYETTEVILLE OUTER LOOP
OVER WETLANDS
BETWEEN SR 1600 AND US 401

NORTH CAROLINA PROFESSIONAL SEAL 029441 ENGINEER KRISTY W. ALFORD

REVISIONS						SHEET NO.
NO.	BY:	DATE:	NO.	BY:	DATE:	S-2
1			3			TOTAL SHEETS
2			4			134

DRAWN BY : N. PIERCE/ JMB DATE : 04-08
CHECKED BY : T. BANKOVICH DATE : 06-08

STR. #1

BM #105 RAILROAD SPIKE IN BASE OF 450mm PINE TREE BETWEEN BL-17 AND BL-18, STA. 121+23.543 -L-, 35.881m LT, EL. 74.413 NAVD 29

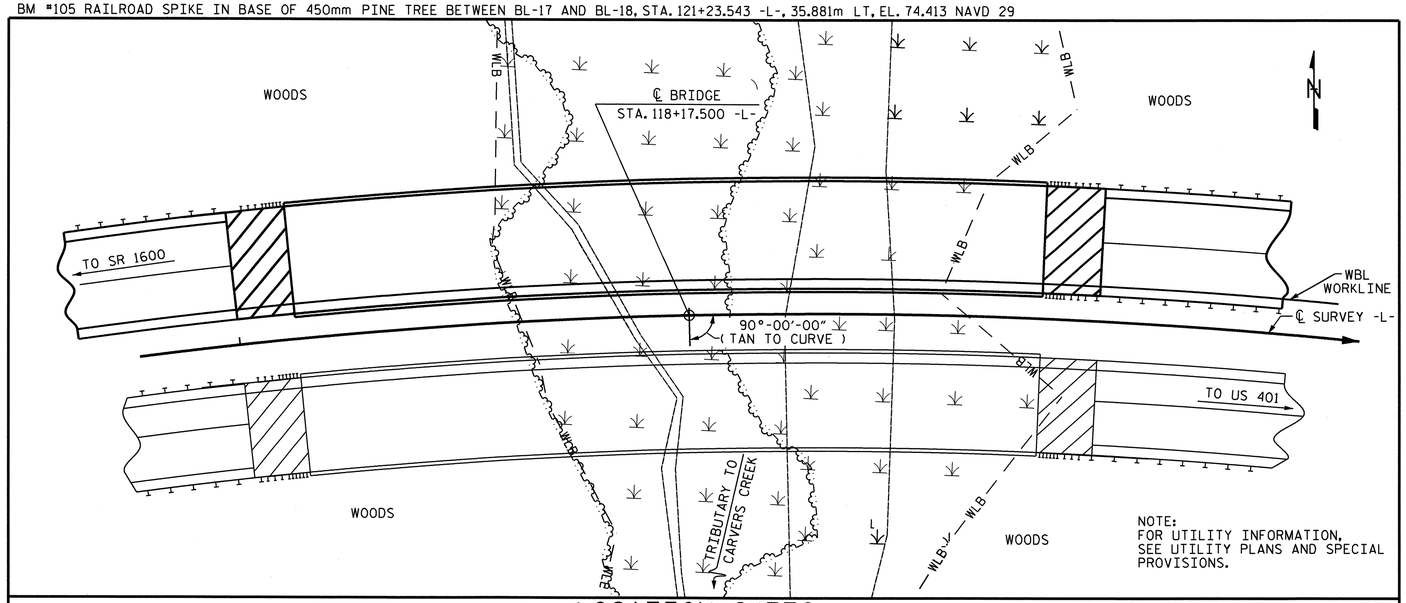

LOCATION SKETCH

NOTES:

ASSUMED LIVE LOAD = MS 22.5 OR ALTERNATE LOADING.

THIS BRIDGE HAS BEEN DESIGNED BY THE STRENGTH DESIGN METHOD AS SPECIFIED IN AASHTO STANDARD SPECIFICATIONS.

THIS STRUCTURE HAS BEEN DESIGNED IN ACCORDANCE WITH HEC 18 "EVALUATING SCOUR AT BRIDGES," MAY 2001.

THIS BRIDGE HAS BEEN DESIGNED IN ACCORDANCE WITH THE REQUIREMENTS OF AASHTO STANDARD SPECIFICATIONS FOR SEISMIC DESIGN OF HIGHWAY BRIDGES FOR SEISMIC PERFORMANCE CATEGORY A.

ALL DIMENSIONS ARE IN MILLIMETERS UNLESS OTHERWISE NOTED.

ALL ELEVATIONS ARE IN METERS.

FOR METRIC STRUCTURAL STEEL, SEE SPECIAL PROVISIONS.

FOR OTHER DESIGN DATA AND GENERAL NOTES, SEE SHEET SNSM.

FOR EROSION CONTROL MEASURES, SEE EROSION CONTROL PLANS.

BOTTOM OF FOOTING ELEVATIONS AT BENTS No. 1 AND 2 ARE BASED ON AN APPROXIMATE GROUND LINE ELEVATION. APPROXIMATELY 1 METER OF CLEARANCE HAS BEEN PROVIDED TO ACCOMODATE ALL FALSEWORK AND FORMWORK REQUIRED FOR FOOTING CONSTRUCTION. FOUNDATION EXCAVATION IS NOT ALLOWED.

DRIVE PILES AT ALL BENTS TO A REQUIRED BEARING CAPACITY OF 1070 kN PER PILE. THE REQUIRED BEARING CAPACITY IS EQUAL TO THE ALLOWABLE BEARING CAPACITY WITH A MINIMUM FACTOR OF SAFETY OF TWO.

THE ALLOWABLE BEARING CAPACITY FOR ALL PILES IS 535 kN PER PILE.

THE SCOUR CRITICAL ELEVATION FOR BENT 1 IS 52.5 METERS. THE SCOUR CRITICAL ELEVATION FOR BENT 2 IS 53.5 METERS. SCOUR CRITICAL ELEVATIONS ARE USED TO MONITOR POSSIBLE SCOUR PROBLEMS DURING THE LIFE OF THE STRUCTURE.

THE CONTRACTOR MAY CHOOSE TO CONSTRUCT BENT No. 1 AND BENT No. 2 PRIOR TO PLACING FILL. PLACE FILL IN ACCORDANCE WITH ARTICLE 410-8 OF THE STANDARD SPECIFICATIONS.

GEOGRID REINFORCED SLOPES SHALL BE CONSTRUCTED AT BOTH END BENTS. FOR REINFORCED SLOPE DETAILS AND PAY ITEMS, SEE ROADWAY PLANS.

REMOVABLE FORMS MAY BE USED IN LIEU OF METAL STAY-IN-PLACE FORMS IN ACCORDANCE WITH ARTICLE 420-3 OF THE STANDARD SPECIFICATIONS.

FOR INTERIOR BENTS, ONLY PARTIAL GALVANIZING OF THE PILES IS REQUIRED. SEE INTERIOR BENT SHEETS FOR DETAILS.

FOR HIGH STRENGTH BOLTS, SEE SPECIAL PROVISIONS.

FOR DIRECT TENSION INDICATORS, SEE SPECIAL PROVISIONS.

TESTING PILES WITH THE PILE DRIVING ANALYZER (PDA) DURING DRIVING, RESTRIKING, OR REDRIVING MAY BE REQUIRED. THE ENGINEER WILL DETERMINE THE NEED FOR PDA TESTING. SEE PILE DRIVING ANALYZER SPECIAL PROVISION.

OBSERVE A ONE MONTH WAITING PERIOD AFTER CONSTRUCTING THE EMBANKMENT, END BENT, AND REINFORCED BRIDGE APPROACH FILL BEFORE BEGINNING APPROACH SLAB CONSTRUCTION AT END BENTS 1 AND 2.

FOR PLACING LOAD ON STRUCTURE MEMBERS, SEE SPECIAL PROVISIONS.

FOR PILES, SEE SPECIAL PROVISIONS.

FOR CURING CONCRETE, SEE SPECIAL PROVISIONS.

FOR ADHESIVELY ANCHORED ANCHOR BOLTS OR DOWELS, SEE SPECIAL PROVISIONS.

FOR GROUT FOR STRUCTURES, SEE SPECIAL PROVISIONS.

FOR TEMPORARY WORK BRIDGE, SEE SPECIAL PROVISION FOR CONSTRUCTION, MAINTENANCE, AND REMOVAL OF TEMPORARY ACCESS AT STA. 118+17.500-L-.

THE LUMP SUM PAY ITEM FOR CONSTRUCTION, MAINTENANCE, AND REMOVAL OF TEMPORARY ACCESS ALSO INCLUDES THE PORTION OF THE TEMPORARY WORK BRIDGE DETAILED ON THE GENERAL DRAWING FOR EBL BRIDGE AT STA. 118+17.500-L-.

FOR SUBMITTAL OF WORKING DRAWINGS, SEE SPECIAL PROVISIONS.

FOR FALSEWORK AND FORMWORK, SEE SPECIAL PROVISIONS.

FOR CRANE SAFETY, SEE SPECIAL PROVISIONS.

FOR PRESTRESSED CONCRETE MEMBERS, SEE SPECIAL PROVISIONS.

TOTAL BILL OF MATERIAL

	CONSTRUCTION, MAINTENANCE, AND REMOVAL OF TEMPORARY ACCESS	PDA TESTING	PDA ASSISTANCE	REINFORCED CONCRETE DECK SLAB	GROOVING BRIDGE FLOORS	CLASS A CONCRETE	BRIDGE APPROACH SLABS	REINFORCING STEEL	SPIRAL COLUMN REINFORCING STEEL	MODIFIED 1829MM PRESTRESSED CONCRETE GIRDERS		HP 310 X 79 STEEL PILES		HP 310 X 79 GALVANIZED STEEL PILES		PILE REDRIVES	CONCRETE BARRIER RAIL	RIP RAP CLASS II (600mm THICK)	FILTER FABRIC FOR DRAINAGE	ELASTOMERIC BEARINGS	EVAZOTE JOINT SEALS
	LUMP SUM	EACH	EACH	SQ. M.	SQ. M.	CU. M.	LUMP SUM	Kg.	Kg.	No.	METERS	No.	METERS	No.	METERS	EACH	METERS	METRIC TONS	SQ. M.	LUMP SUM	LUMP SUM
SUPERSTRUCTURE				1,518.4	1,522.9					18	587.4						197.323			LUMP SUM	LUMP SUM
END BENT No. 1						48.2		3,997				14	294			8		1,345	1,372		
BENT No. 1						100.9		8,118	1,715					36	504	15					
BENT No. 2						99.0		7,899	1,631					36	468	15					
END BENT No. 2						48.4		4,151				14	308			8		1,345	1,372		
TOTAL	LUMP SUM	1	1	1,518.4	1,522.9	296.5	LUMP SUM	24,165	3,346	18	587.4	28	602	72	972	46	197.323	2,690	2,744	LUMP SUM	LUMP SUM

PROJECT NO. X-0002CB
CUMBERLAND COUNTY
STATION: 118+17.500 -L-

SHEET 3 OF 3

STATE OF NORTH CAROLINA
DEPARTMENT OF TRANSPORTATION
RALEIGH

GENERAL DRAWING
FOR WBL BRIDGE ON
FAYETTEVILLE OUTER LOOP
OVER WETLANDS
BETWEEN SR 1600 AND US 401

REVISIONS						SHEET NO.
NO.	BY:	DATE:	NO.	BY:	DATE:	S-3
1			3			TOTAL SHEETS
2			4			134

DRAWN BY : N. PIERCE DATE : 07-10
CHECKED BY : T. BANKOVICH DATE : 07-10

29-OCT-2010 11:55
F:\Structures\StrIWBL\GeneralDrawings\x0002c_str2_gd.dgn
kalford

STR. #1

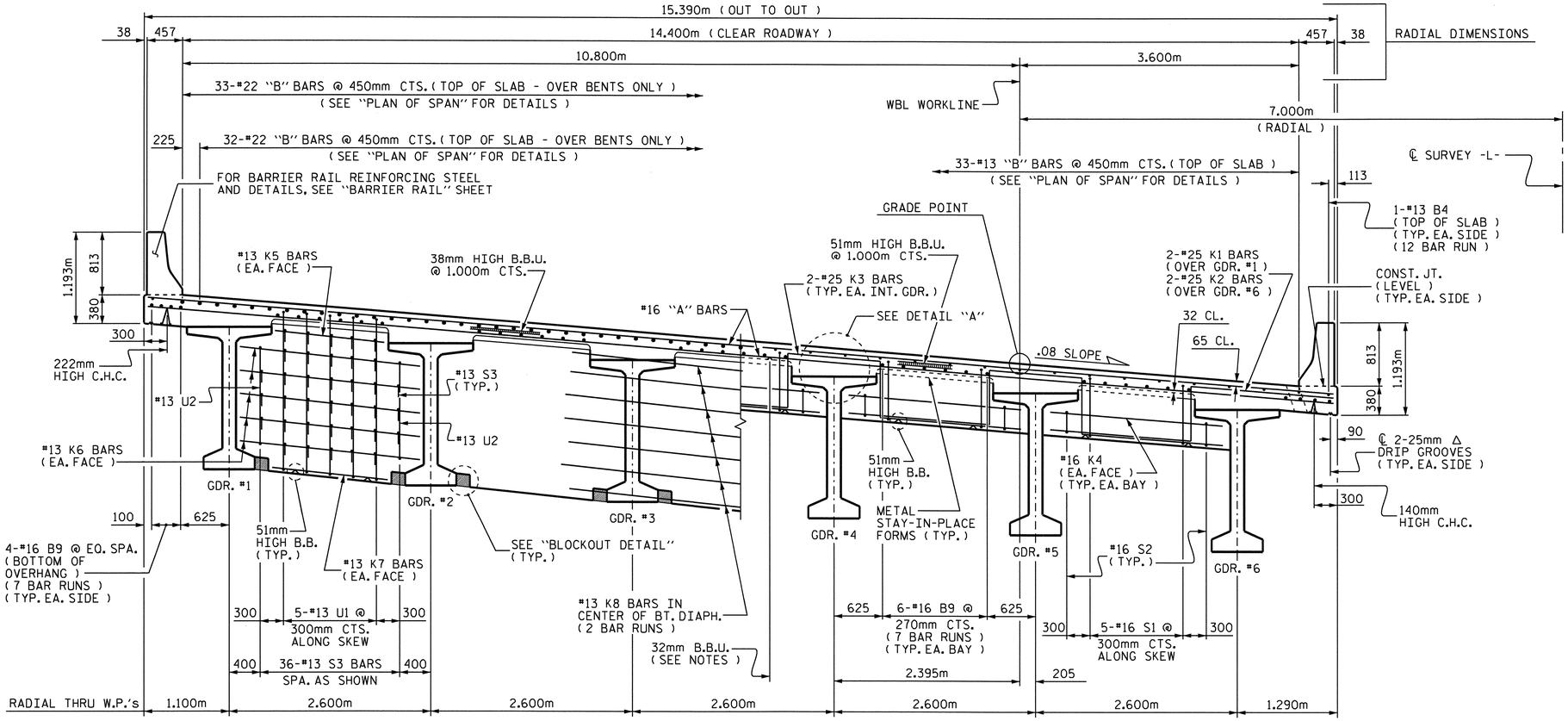

HALF TYPICAL SECTION

SHOWING BENT DIAPHRAGMS

HALF TYPICAL SECTION

SHOWING END BENT DIAPHRAGMS

NOTES :

PROVIDE 32mm HIGH BEAM BOLSTERS UPPER AT 1.2m CTS. ATOP THE METAL STAY-IN-PLACE FORMS TO SUPPORT THE BOTTOM MAT OF "A" BARS. WHEN USING REMOVABLE FORMS, PROVIDE CONTINUOUS HIGH CHAIRS FOR METAL DECK (C.H.C.M.) @ 1.2m CTS. WITH A HEIGHT TO SUPPORT THE BOTTOM MAT OF "A" BARS A CLEAR DISTANCE OF 65mm ABOVE THE TOP OF THE REMOVABLE FORM.

LONGITUDINAL STEEL MAY BE SHIFTED SLIGHTLY AS NECESSARY TO AVOID INTERFERENCE WITH STIRRUPS IN PRESTRESSED CONCRETE GIRDERS.

BARRIER RAIL IN A CONTINUOUS UNIT SHALL NOT BE CAST UNTIL ALL SLAB CONCRETE IN THE UNIT HAS BEEN CAST AND HAS REACHED A MINIMUM COMPRESSIVE STRENGTH OF 20.7 MPa.

DECK DRAINS ARE REQUIRED ALONG RIGHT GUTTERLINE. SEE "DRAIN DETAILS", SHEET 2 OF 2.

PREVIOUSLY CAST CONCRETE IN A CONTINUOUS UNIT SHALL HAVE ATTAINED A MINIMUM COMPRESSIVE STRENGTH OF 20.7 MPa BEFORE ADDITIONAL CONCRETE IS CAST IN THE UNIT.

FOR INTERMEDIATE DIAPHRAGM DETAILS AND NOTES, SEE "INTERMEDIATE STEEL DIAPHRAGMS FOR 1829mm MODIFIED BULB TEE PRESTRESSED CONCRETE GIRDERS" SHEET.

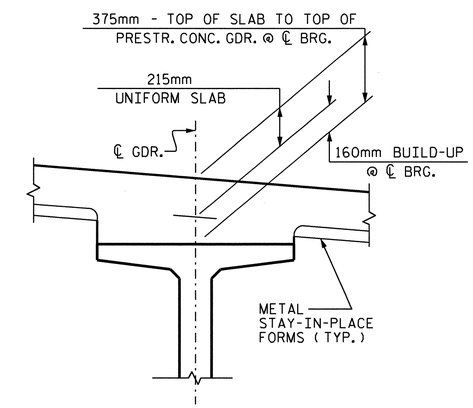

DETAIL "A"

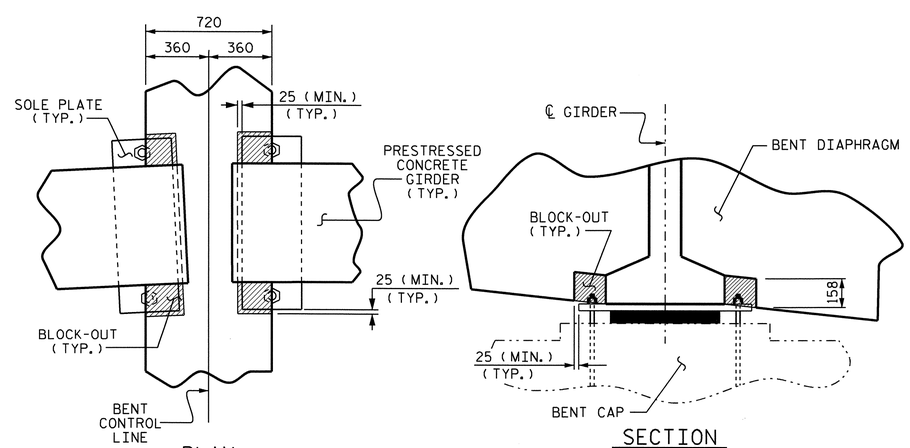

BLOCKOUT DETAIL

PROJECT NO. X-0002 CB

CUMBERLAND COUNTY

STATION: 118+17.500 -L-

SHEET 1 OF 2

STATE OF NORTH CAROLINA
DEPARTMENT OF TRANSPORTATION
RALEIGH

SUPERSTRUCTURE

TYPICAL SECTIONS

(WBL)

NORTH CAROLINA PROFESSIONAL SEAL 029641 ENGINEER KRISTY W. ALFORD 4/19/10

REVISIONS						SHEET NO.
NO.	BY:	DATE:	NO.	BY:	DATE:	S-4
1			3			TOTAL SHEETS
2			4			134

DRAWN BY : MIKE BRITT DATE : 6-2-10
CHECKED BY : D.G. ELY DATE : 7-1-10

STR.#1

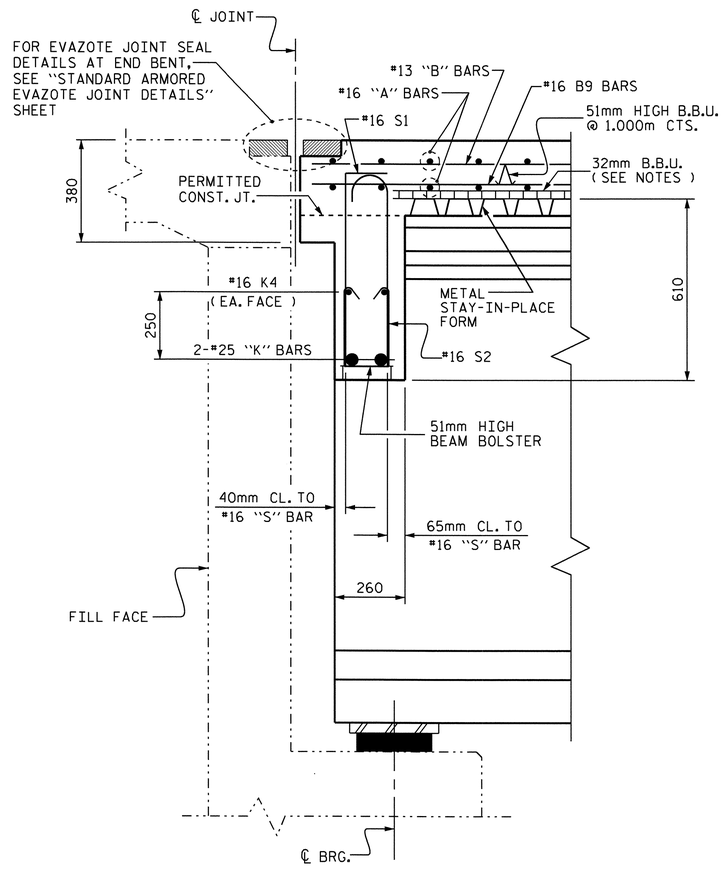

SECTION THRU END BENT DIAPHRAGM

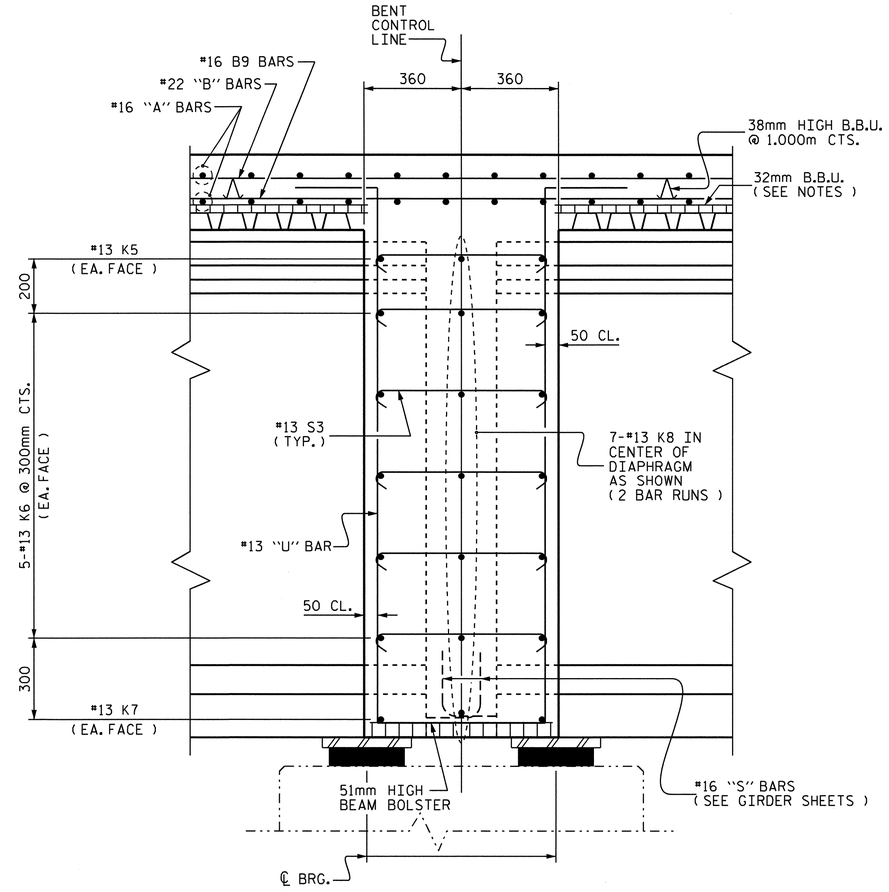

SECTION THRU BENT DIAPHRAGM

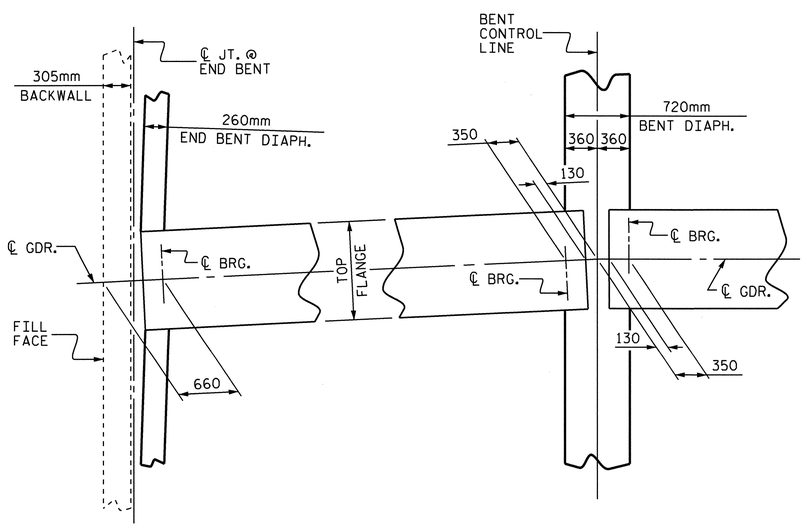

PLAN OF DIAPHRAGMS

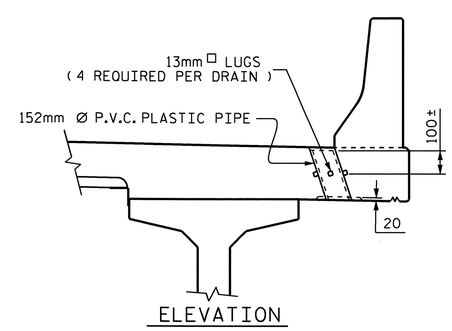

ELEVATION

TOP OF FLOOR DRAINS TO SET 10mm BELOW SURFACE OF SLAB.

4 - 13mm □ LUGS TO BE GLUED TO THE P.V.C. PLASTIC PIPE AT EQUAL SPACES AROUND THE PIPE DRAIN.

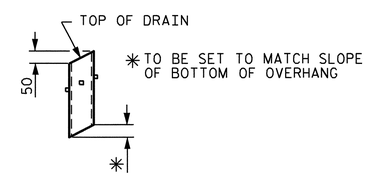

PIPE DETAIL

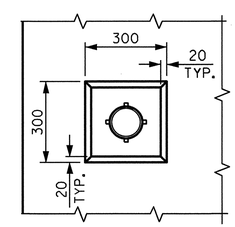

PLAN OF RECESS

DRAIN DETAILS

SEE "PLAN OF SPAN" SHEET FOR DRAIN LOCATIONS
(21 DRAINS REQUIRED)

PROJECT NO. X-0002 CB
CUMBERLAND COUNTY
STATION: 118+17.500 -L-

SHEET 2 OF 2

STATE OF NORTH CAROLINA
DEPARTMENT OF TRANSPORTATION
RALEIGH

SUPERSTRUCTURE

TYPICAL SECTIONS

(WBL)

NORTH CAROLINA PROFESSIONAL SEAL 029447 ENGINEER KRISTY W. ALFORD

REVISIONS							SHEET NO.
NO.	BY:	DATE:	NO.	BY:	DATE:		S-5
1			3				TOTAL SHEETS
2			4				134

DRAWN BY : MIKE BRITT DATE : 6-2-10
CHECKED BY : D.G. ELY DATE : 7-1-10

STR.#1

NOTES :

FOR BARRIER RAIL REINFORCING STEEL, SEE "CONCRETE BARRIER RAIL" SHEETS.

#16 "A" BARS ARE TO BE PLACED NORMAL TO LONG CHORD.

FOR LOCATION OF INTERMEDIATE STEEL DIAPHRAGMS, SEE "FRAMING PLAN" SHEETS.

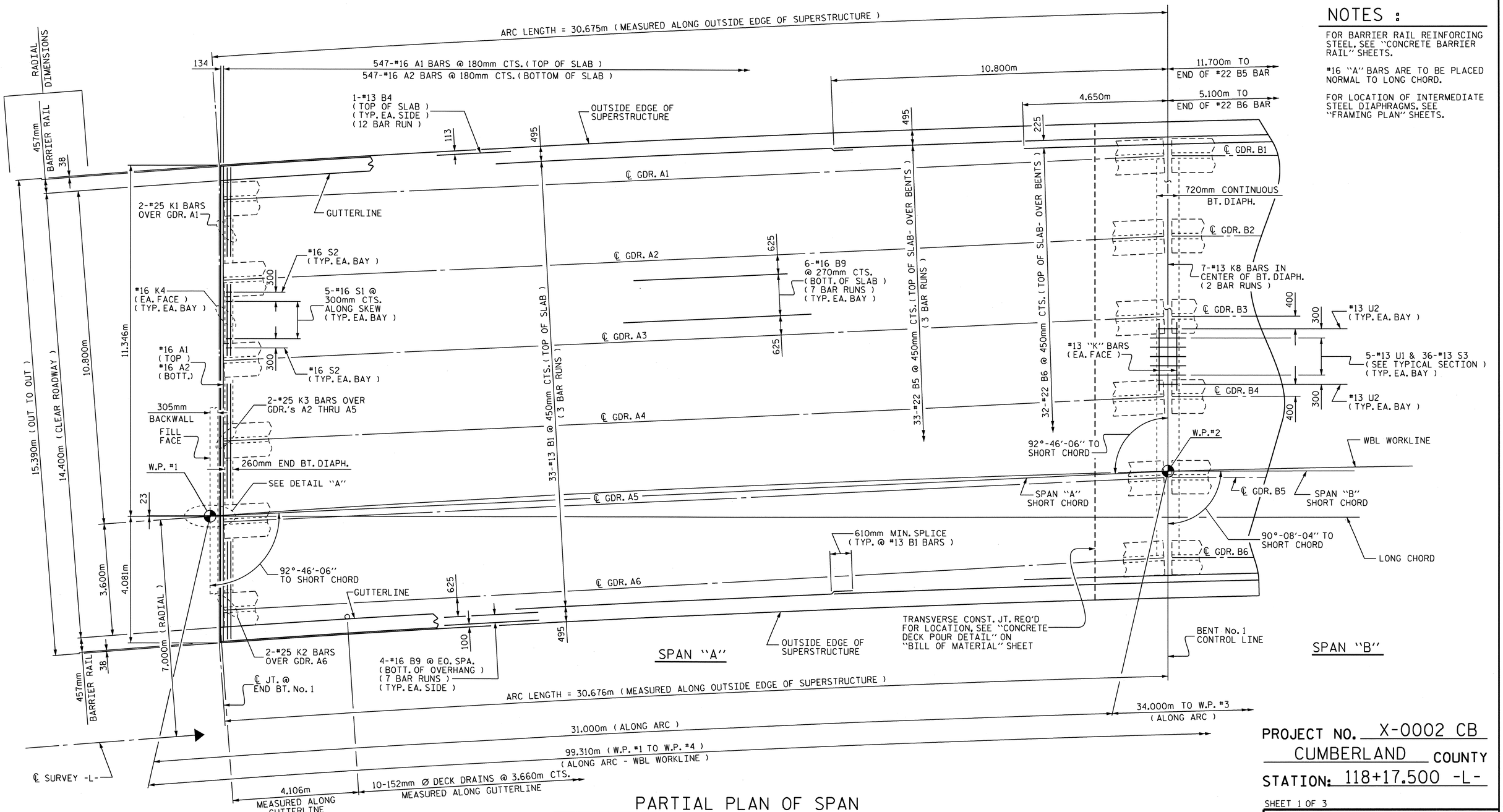

PARTIAL PLAN OF SPAN

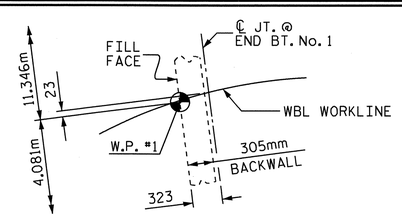

DETAIL "A"

PROJECT NO. X-0002 CB

CUMBERLAND COUNTY

STATION: 118+17.500 -L-

SHEET 1 OF 3

STATE OF NORTH CAROLINA
DEPARTMENT OF TRANSPORTATION
RALEIGH

SUPERSTRUCTURE

PLAN OF SPANS

(WBL)

REVISIONS						SHEET NO.
NO.	BY:	DATE:	NO.	BY:	DATE:	S-6
1			3			TOTAL SHEETS
2			4			134

DRAWN BY : MIKE BRITT DATE : 6-2-10
CHECKED BY : D.G. ELY DATE : 7-1-10

29-OCT-2010 11:56
F:\Structures\StrIWBL\SuperstructureDrawings\X0002C_str2_PS.dgn
kalford

STR.#1

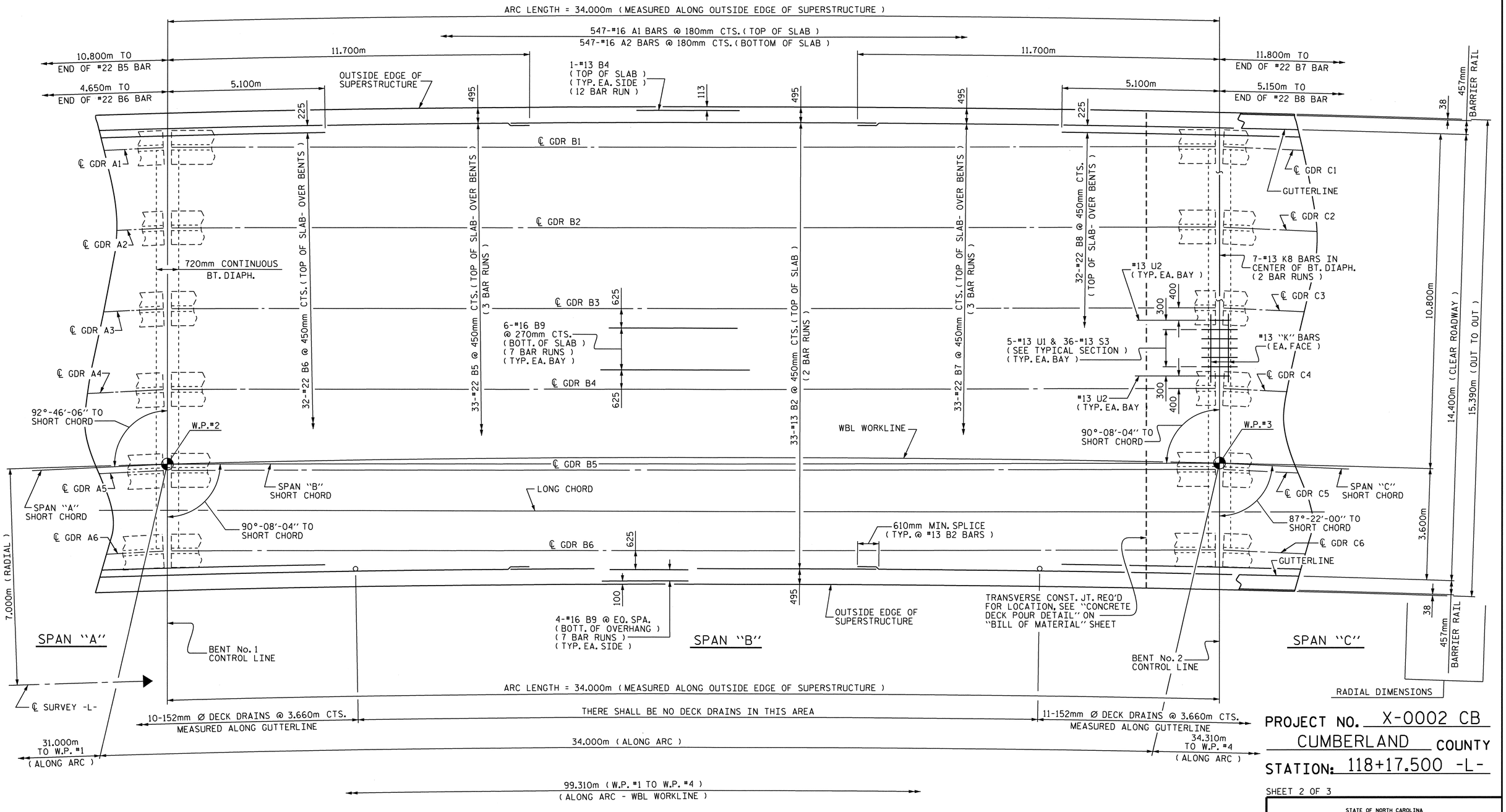

PROJECT NO. X-0002 CB

CUMBERLAND COUNTY

STATION: 118+17.500 -L-

SHEET 2 OF 3

PARTIAL PLAN OF SPAN

NOTES :

FOR BARRIER RAIL REINFORCING STEEL, SEE "CONCRETE BARRIER RAIL" SHEETS.

#16 "A" BARS ARE TO BE PLACED NORMAL TO LONG CHORD.

FOR LOCATION OF INTERMEDIATE STEEL DIAPHRAGMS, SEE "FRAMING PLAN" SHEETS.

NORTH CAROLINA PROFESSIONAL SEAL 029441 ENGINEER KRISTY W. ALFORD

STATE OF NORTH CAROLINA
DEPARTMENT OF TRANSPORTATION
RALEIGH

SUPERSTRUCTURE

PLAN OF SPANS

(WBL)

REVISIONS						SHEET NO.
NO.	BY:	DATE:	NO.	BY:	DATE:	S-7
1			3			TOTAL SHEETS
2			4			134

DRAWN BY : MIKE BRITT DATE : 6-2-10
CHECKED BY : D.G. ELY DATE : 7-1-10

14-SEP-2010 08:41
F:\Structures\StrIWBL\SuperstructureDrawings\X0002C_str2_PS.dgn
kalford

STR.#1

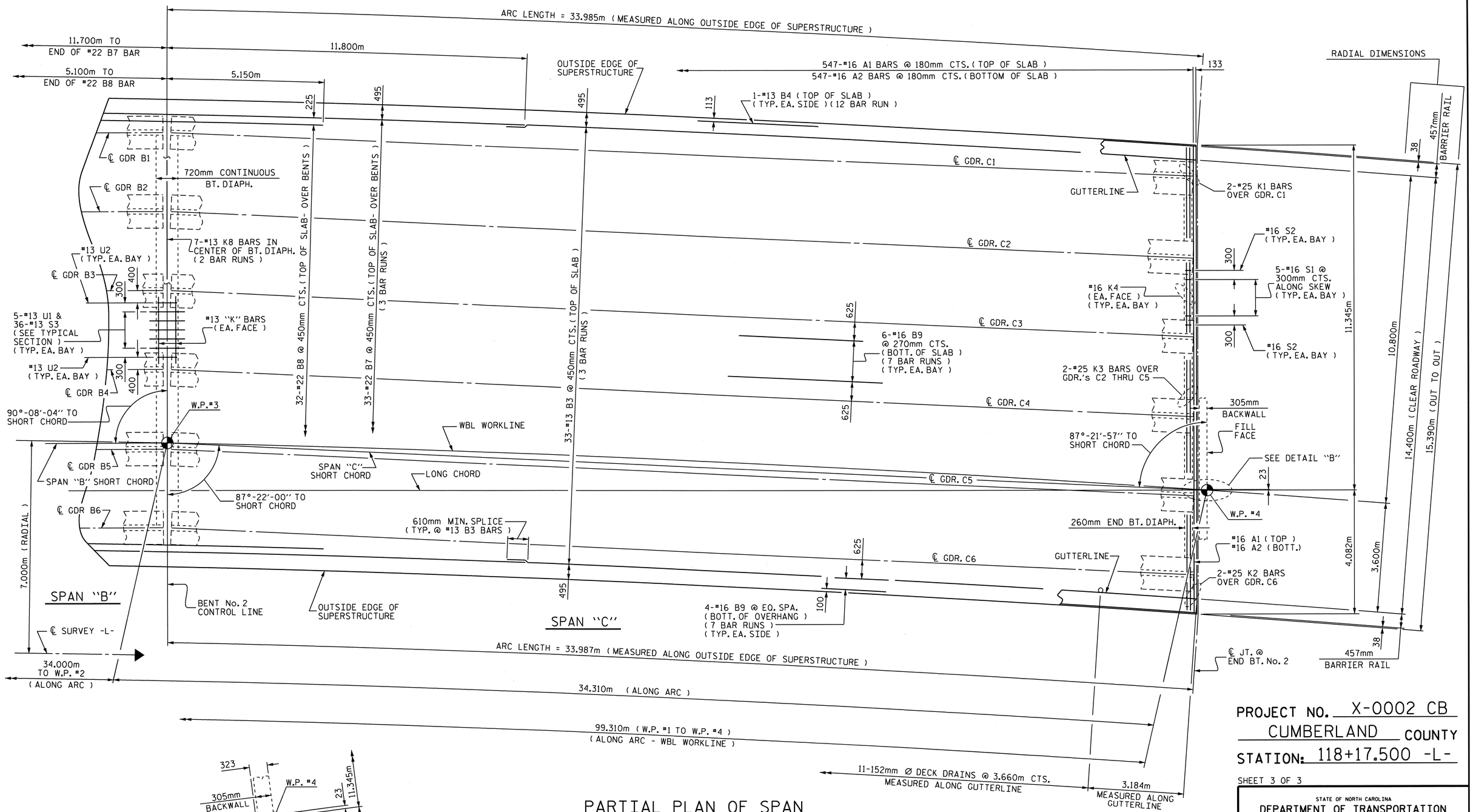

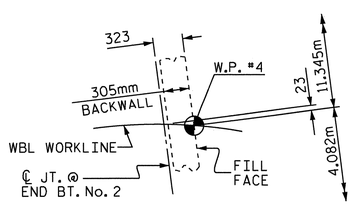

DETAIL "B"

PARTIAL PLAN OF SPAN

NOTES :

FOR BARRIER RAIL REINFORCING STEEL, SEE "CONCRETE BARRIER RAIL" SHEETS.

#16 "A" BARS ARE TO BE PLACED NORMAL TO LONG CHORD.

FOR LOCATION OF INTERMEDIATE STEEL DIAPHRAGMS, SEE "FRAMING PLAN" SHEETS.

PROJECT NO. X-0002 CB
CUMBERLAND COUNTY
STATION: 118+17.500 -L-

SHEET 3 OF 3

STATE OF NORTH CAROLINA
DEPARTMENT OF TRANSPORTATION
RALEIGH

SUPERSTRUCTURE
PLAN OF SPANS
(WBL)

NORTH CAROLINA PROFESSIONAL SEAL 029441 ENGINEER KRISTY W. ALFORD

REVISIONS								SHEET NO.
NO.	BY:	DATE:	NO.	BY:	DATE:			S-8
1			3					TOTAL SHEETS
2			4					134

DRAWN BY : MIKE BRITT DATE : 6-2-10
CHECKED BY : D.G. ELY DATE : 7-1-10

29-OCT-2010 11:56
F:\Structures\StrIWBL\SuperstructureDrawings\X0002C_str2_PS.dgn
kalford

STR.#1

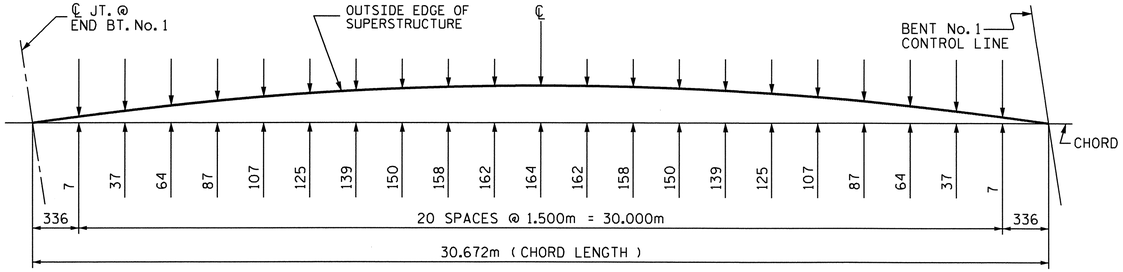

SPAN "A" ARC OFFSETS - LEFT SIDE

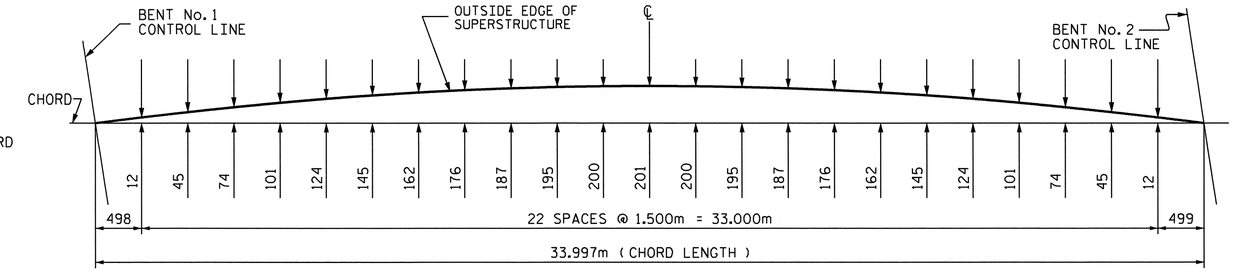

SPAN "B" ARC OFFSETS - LEFT SIDE

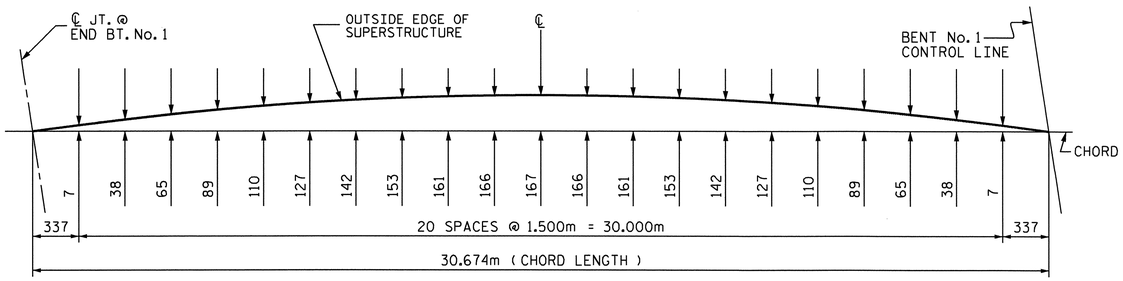

SPAN "A" ARC OFFSETS - RIGHT SIDE

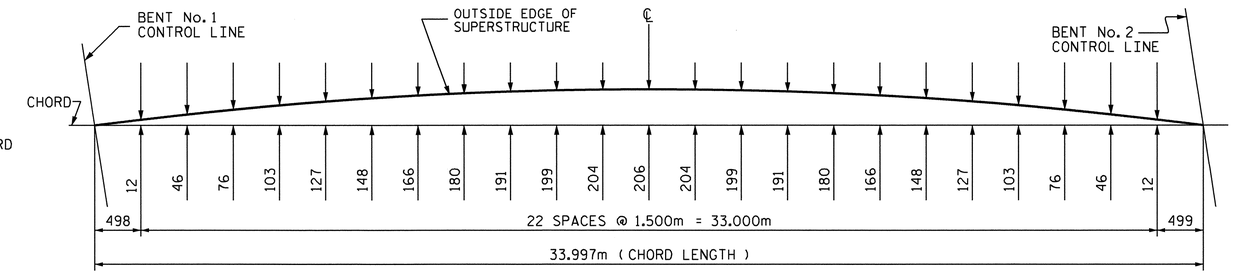

SPAN "B" ARC OFFSETS - RIGHT SIDE

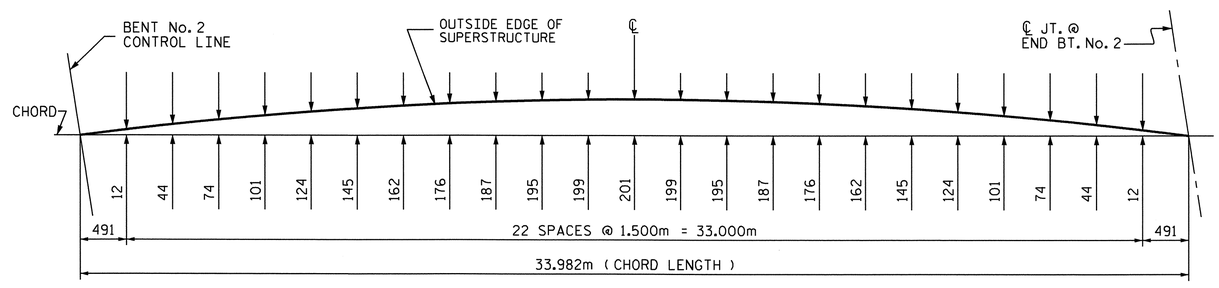

SPAN "C" ARC OFFSETS - LEFT SIDE

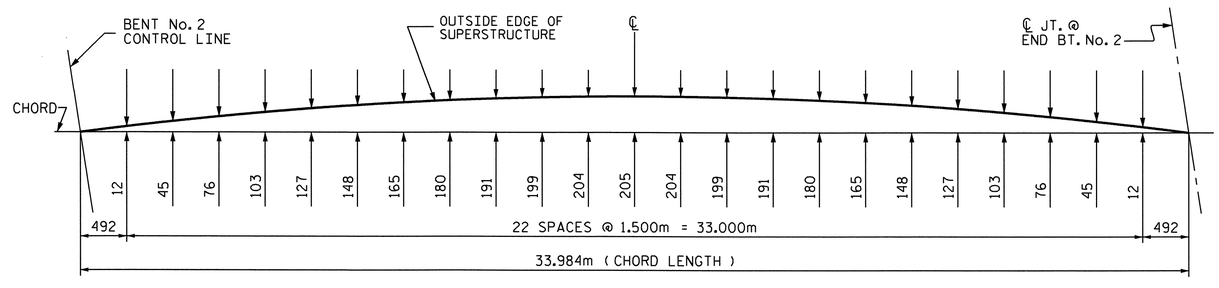

SPAN "C" ARC OFFSETS - RIGHT SIDE

PROJECT NO. X-0002 CB
CUMBERLAND COUNTY
STATION: 118+17.500 -L-

STATE OF NORTH CAROLINA
DEPARTMENT OF TRANSPORTATION
RALEIGH

SUPERSTRUCTURE
ARC OFFSETS
(WBL)

REVISIONS						SHEET NO.
NO.	BY:	DATE:	NO.	BY:	DATE:	S-9
1			3			TOTAL SHEETS
2			4			134

DRAWN BY : MIKE BRITT DATE : 6-2-10
CHECKED BY : D.G. ELY DATE : 7-1-10

14-SEP-2010 09:30
F:\Structures\StrIWBL\SuperstructureDrawings\X0002C_str2_ARC.dgn
kalford

STR.#1

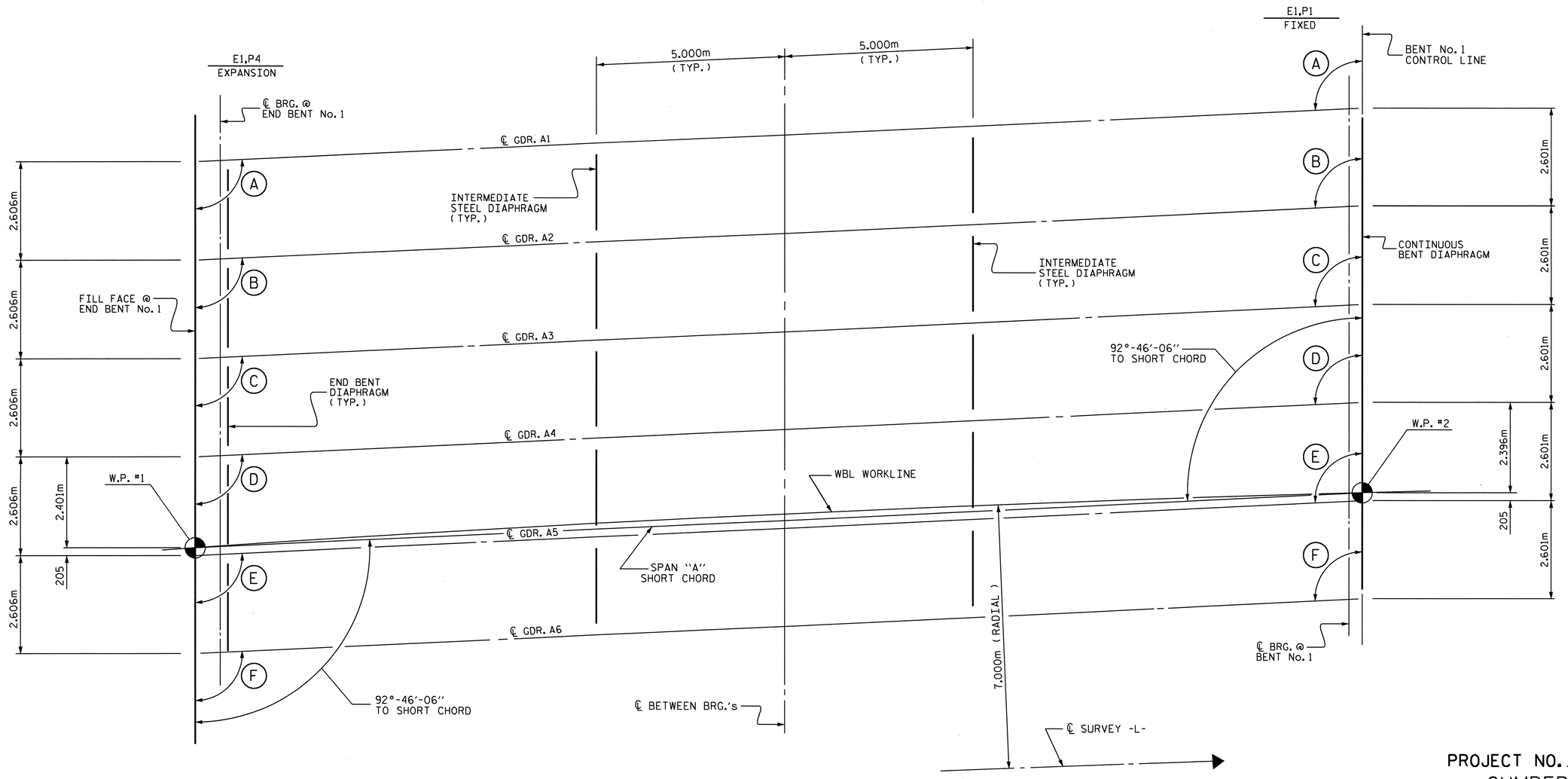

SPAN "A" FRAMING PLAN

SPAN "A" ANGLES			
ANGLE A	92°-43'-44"	ANGLE D	92°-45'-32"
ANGLE B	92°-44'-20"	ANGLE E	92°-46'-09"
ANGLE C	92°-44'-56"	ANGLE F	92°-46'-46"

PROJECT NO. X-0002 CB
CUMBERLAND COUNTY
STATION: 118+17.500 -L-

SHEET 1 OF 3

STATE OF NORTH CAROLINA
DEPARTMENT OF TRANSPORTATION
RALEIGH

SUPERSTRUCTURE

FRAMING PLAN

(WBL)

NORTH CAROLINA PROFESSIONAL SEAL 029441 ENGINEER KRISTY W. ALFORD

REVISIONS						SHEET NO.
NO.	BY:	DATE:	NO.	BY:	DATE:	S-10
1			3			TOTAL SHEETS
2			4			134

DRAWN BY : MIKE BRITT DATE : 6-2-10
CHECKED BY : D.G. ELY DATE : 7-1-10

22-SEP-2010 14:47
F:\Structures\StrlWBL\SuperstructureDrawings\X0002C_str2_FP.dgn
kalford

STR. #1

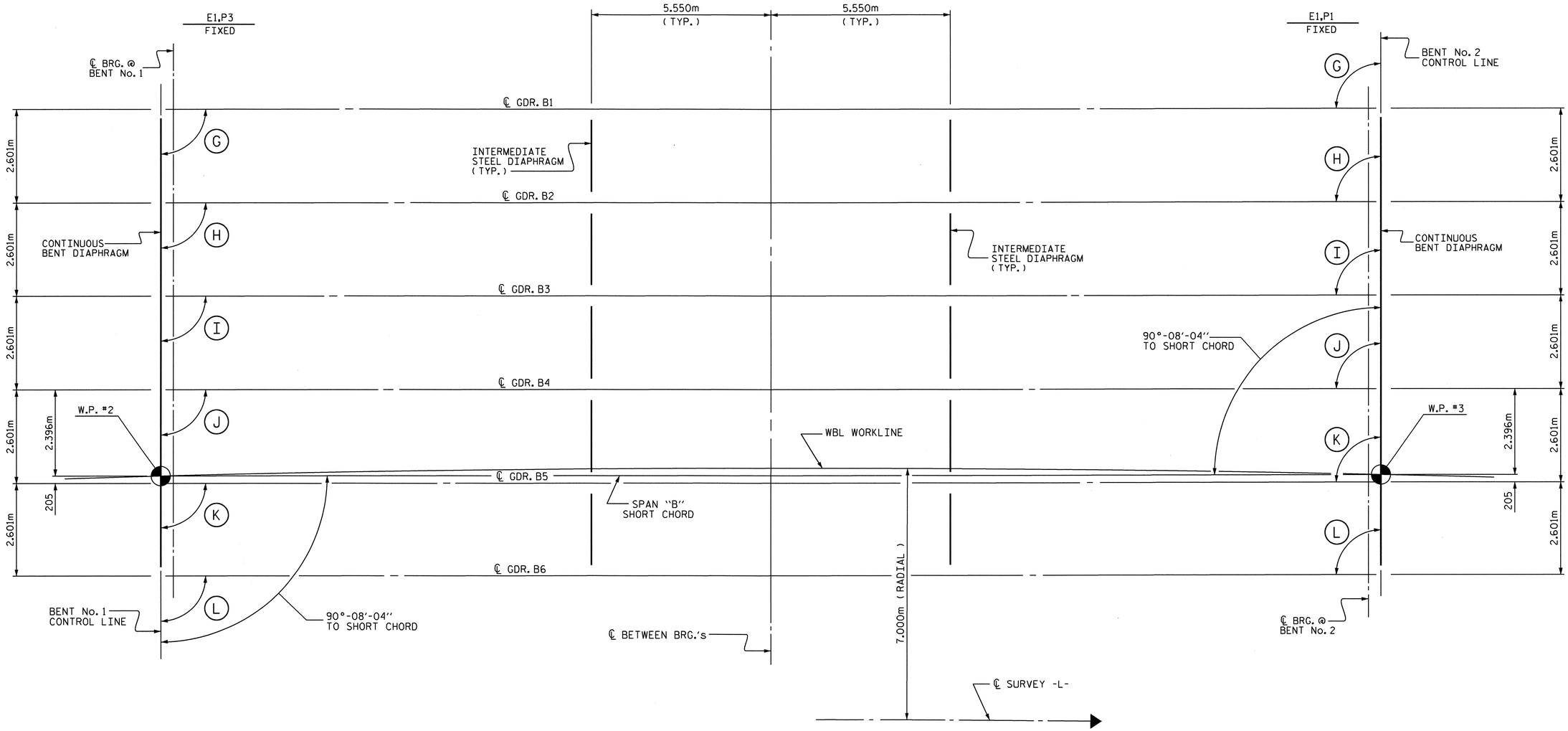

SPAN "B" FRAMING PLAN

SPAN "B" ANGLES			
ANGLE G	90°-07'-58"	ANGLE J	90°-08'-03"
ANGLE H	90°-07'-59"	ANGLE K	90°-08'-05"
ANGLE I	90°-08'-01"	ANGLE L	90°-08'-06"

PROJECT NO. X-0002 CB
CUMBERLAND COUNTY
STATION: 118+17.500 -L-

SHEET 2 OF 3

STATE OF NORTH CAROLINA
DEPARTMENT OF TRANSPORTATION
RALEIGH

SUPERSTRUCTURE

FRAMING PLAN

(WBL)

NORTH CAROLINA PROFESSIONAL SEAL 029441 ENGINEER KRISTY W. ALFORD

REVISIONS						SHEET NO.
NO.	BY:	DATE:	NO.	BY:	DATE:	S-11
1			3			TOTAL SHEETS
2			4			134

DRAWN BY : MIKE BRITT DATE : 6-2-10
CHECKED BY : D.G. ELY DATE : 7-1-10

22-SEP-2010 14:48
F:\Structures\StrlWBL\SuperstructureDrawings\X0002C_str2_FP.dgn
kalford

STR. #1

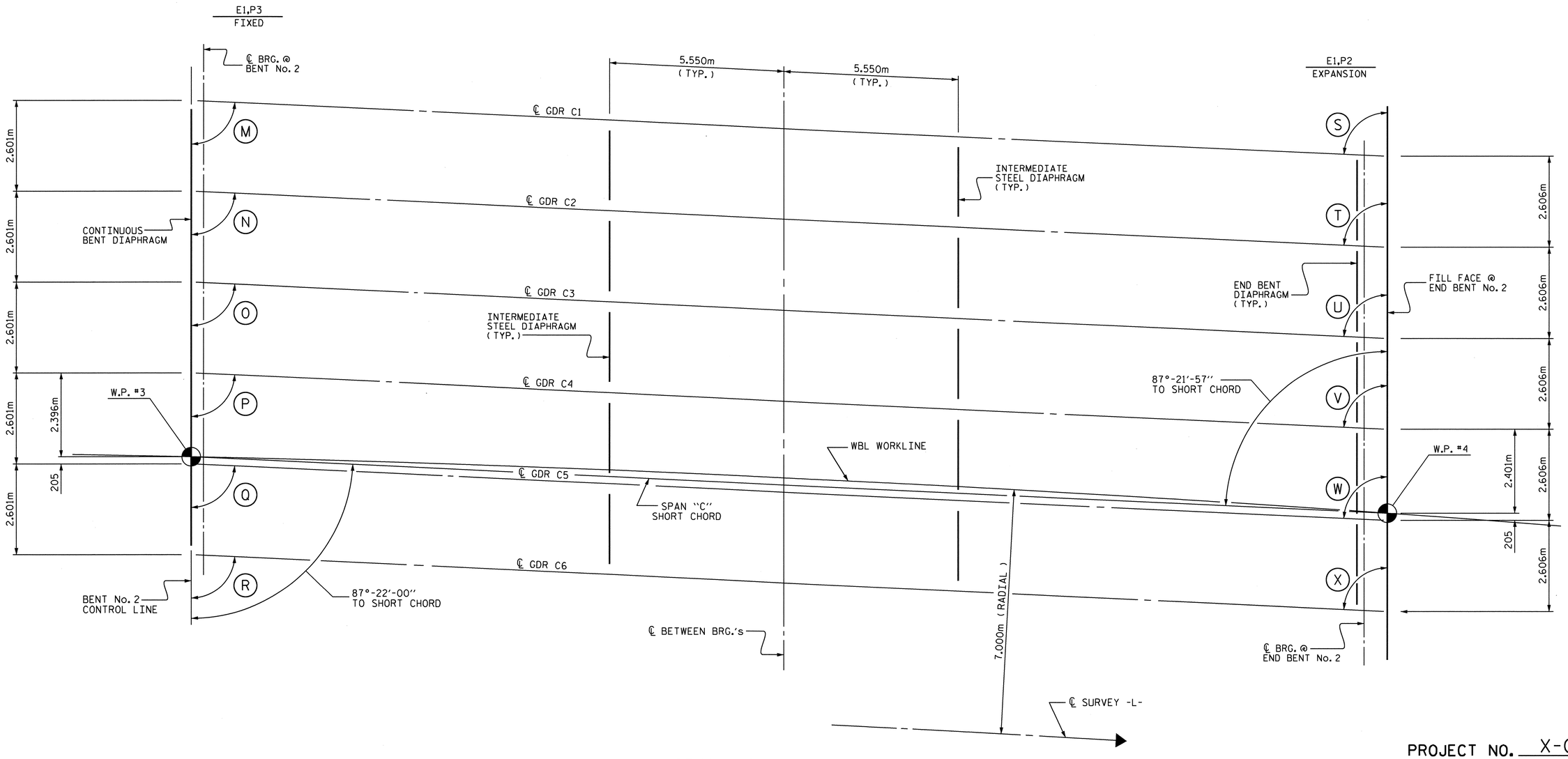

SPAN "C" FRAMING PLAN

SPAN "C" ANGLES			
ANGLE M	87°-24'-15"	ANGLE S	87°-24'-12"
ANGLE N	87°-23'-41"	ANGLE T	87°-23'-38"
ANGLE O	87°-23'-06"	ANGLE U	87°-23'-04"
ANGLE P	87°-22'-32"	ANGLE V	87°-22'-29"
ANGLE Q	87°-21'-57"	ANGLE W	87°-21'-54"
ANGLE R	87°-21'-22"	ANGLE X	87°-21'-19"

PROJECT NO. X-0002 CB
CUMBERLAND COUNTY
STATION: 118+17.500 -L-

SHEET 3 OF 3

STATE OF NORTH CAROLINA
DEPARTMENT OF TRANSPORTATION
RALEIGH

SUPERSTRUCTURE
FRAMING PLAN
(WBL)

NORTH CAROLINA PROFESSIONAL SEAL 029441 ENGINEER KRISTY W. ALFORD 9/22/10

REVISIONS							SHEET NO.
NO.	BY:	DATE:	NO.	BY:	DATE:		S-12
1			3				TOTAL SHEETS
2			4				134

DRAWN BY : MIKE BRITT DATE : 6-2-10
CHECKED BY : D.G. ELY DATE : 7-1-10

22-SEP-2010 14:48
F:\Structures\StrWBL\SuperstructureDrawings\X0002C_str2_FP.dgn
kalford

STR. #1

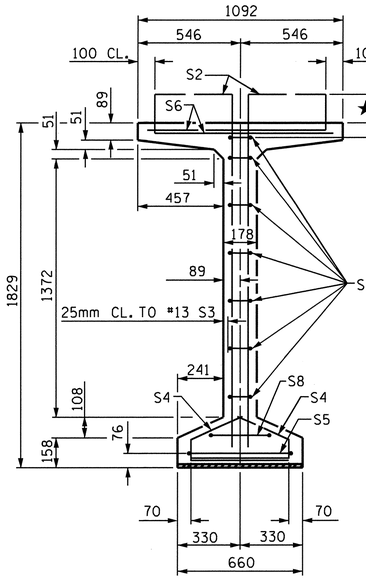

SECTION A-A

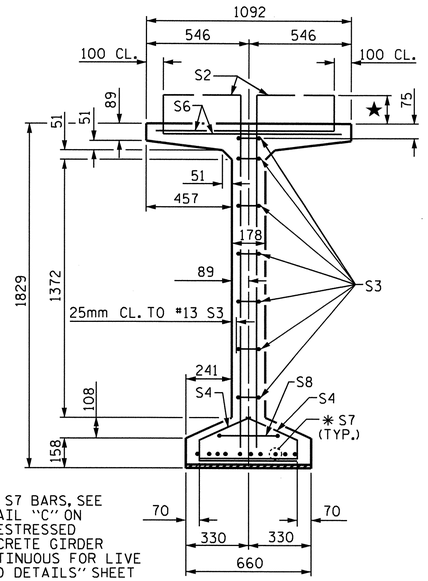

✱ FOR S7 BARS, SEE DETAIL "C" ON "PRESTRESSED CONCRETE GIRDER CONTINUOUS FOR LIVE LOAD DETAILS" SHEET

SECTION B-B

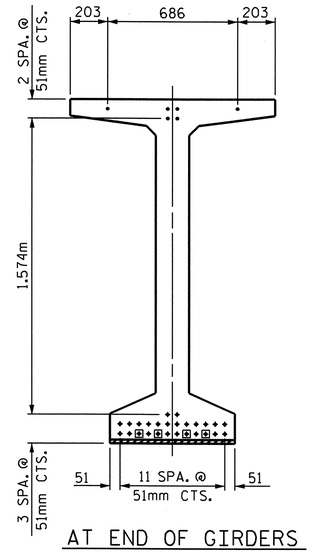

AT END OF GIRDERS

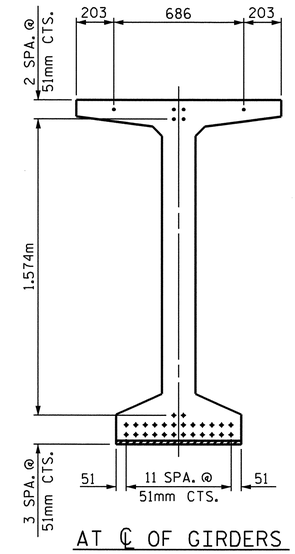

AT ℄ OF GIRDERS

★ NOTE :
S1 BARS SHALL EXTEND 220mm ABOVE TOP OF GIRDER.
S2 BARS SHALL EXTEND 250mm ABOVE TOP OF GIRDER.
S6 BARS SHALL EXTEND 150mm ABOVE TOP OF GIRDER.

DEBONDING LEGEND

- • FULLY BONDED STRANDS
- ▣ STRANDS DEBONDED FOR 1.220m FROM END OF GIRDER

15.24mm Ø LOW RELAXATION STRAND LAYOUT

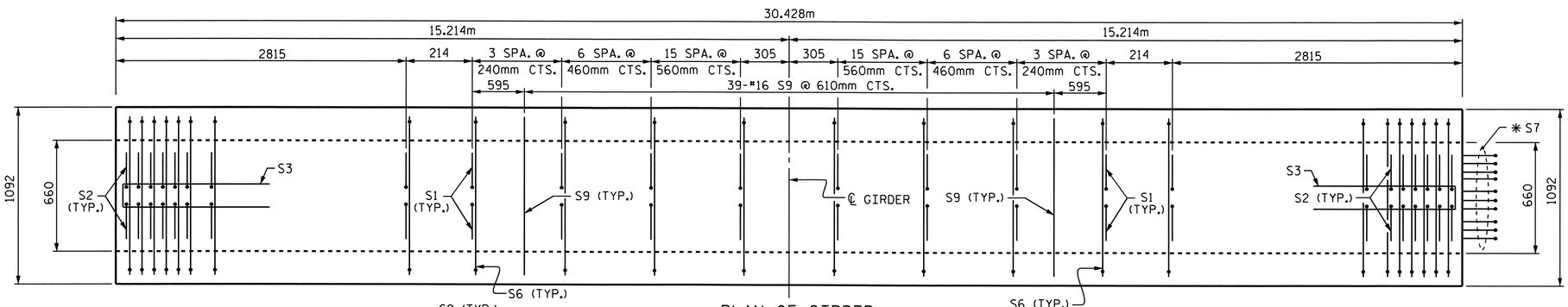

PLAN OF GIRDER

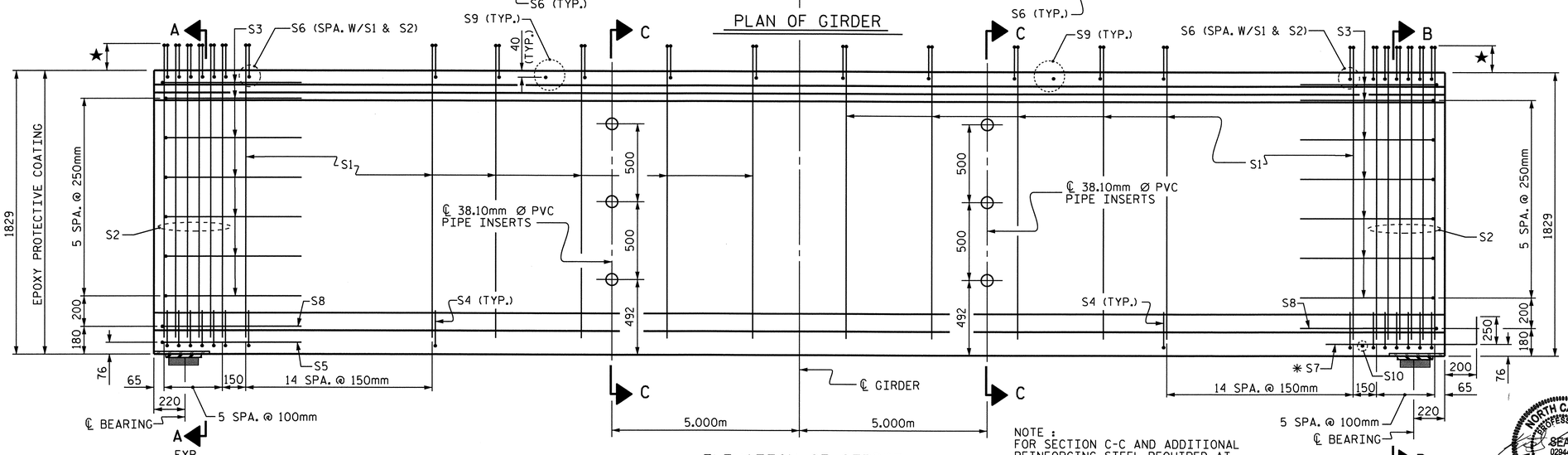

ELEVATION OF GIRDER

NOTE :
FOR SECTION C-C AND ADDITIONAL REINFORCING STEEL REQUIRED AT SECTION C-C, SEE "PRESTRESSED CONCRETE GIRDER CONTINUOUS FOR LIVE LOAD" SHEET.

15.24mm Ø L.R. GRADE 270 STRANDS

AREA (mm2)	ULTIMATE STRENGTH (KN PER STRAND)	APPLIED PRESTRESS (KN PER STRAND)
140.00	260.7	195.5

REINFORCING STEEL FOR ONE GIRDER

BAR	NUMBER	SIZE	TYPE	LENGTH	WEIGHT
S1	160	#13	1	2180	347
S2	24	#16	1	2200	82
S3	14	#13	2	2560	36
S4	84	#13	3	920	77
S5	1	#16	2	3000	5
S6	184	#16	4	1320	377
✱ S7	10	#16	STR	1120	17
S8	2	#16	2	2740	9
S9	39	#16	STR	980	59
S10	1	#10	STR	560	1
S11	8	#16	2	3540	44
S12	16	#13	STR	2440	39

✱ NOTE: S7 BARS SHALL BE BENT BEFORE SHIPMENT. HEAT BENDING SHALL NOT BE ALLOWED.

BAR TYPES

ALL BAR DIMENSIONS ARE OUT-TO-OUT

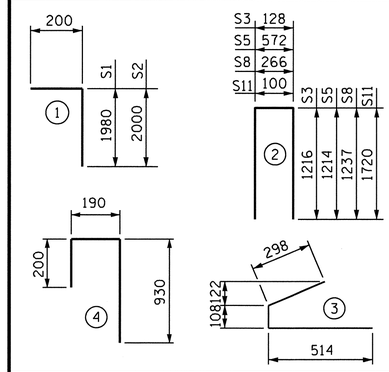

QUANTITIES FOR ONE GIRDER

SPAN "A" (WBL)	REINFORCING STEEL	60.00 MPa CONCRETE	15.24mm Ø L.R. STRANDS
	kg	m3	No.
GIRDERS A1 THRU A6	1,093	16.3	32

GIRDERS REQUIRED

NUMBER	LENGTH	TOTAL LENGTH
6	30.428m	182.568m

PROJECT NO. X-0002 CB
CUMBERLAND COUNTY
STATION: 118+17.500 -L-

STATE OF NORTH CAROLINA
DEPARTMENT OF TRANSPORTATION
RALEIGH

1829mm PRESTRESSED CONCRETE MODIFIED BULB TEE CONTINUOUS FOR LIVE LOAD (WITH 15.24mm Ø PARTIALLY DEBONDED STRANDS)

SPAN "A" (WBL)

NORTH CAROLINA PROFESSIONAL SEAL 029441 ENGINEER KRISTY W. ALFORD

REVISIONS						SHEET NO.
NO.	BY:	DATE:	NO.	BY:	DATE:	S-13
1			3			TOTAL SHEETS
2			4			134

ASSEMBLED BY : MIKE BRITT	DATE : 6-2-10
CHECKED BY : D.G. ELY	DATE : 7-1-10
DRAWN BY : RWW 9/19/02	ADDED 9/19/02
CHECKED BY : GM 9/19/02	REV. 5/1/06 TLA/GM

22-SEP-2010 14:48
F:\Structures\StrIWBL\SuperstructureDrawings\X0002C_str2_PCG.dgn
kalford

STD. NO. PCGD10SM

STR. #1

★NOTE :
S1 BARS SHALL EXTEND 200mm ABOVE TOP OF GIRDER.
S2 BARS SHALL EXTEND 250mm ABOVE TOP OF GIRDER.
S6 BARS SHALL EXTEND 150mm ABOVE TOP OF GIRDER.

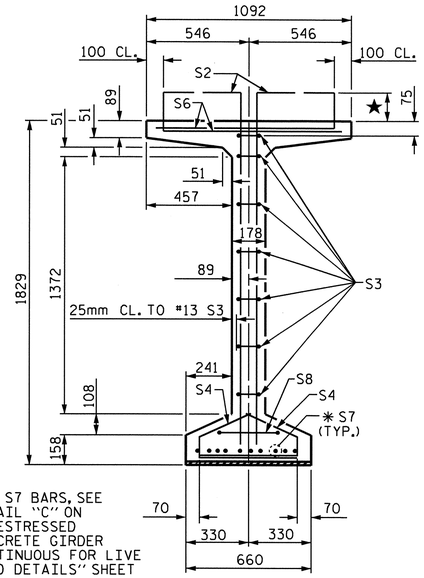

✱FOR S7 BARS, SEE DETAIL "C" ON "PRESTRESSED CONCRETE GIRDER CONTINUOUS FOR LIVE LOAD DETAILS" SHEET

SECTION B-B

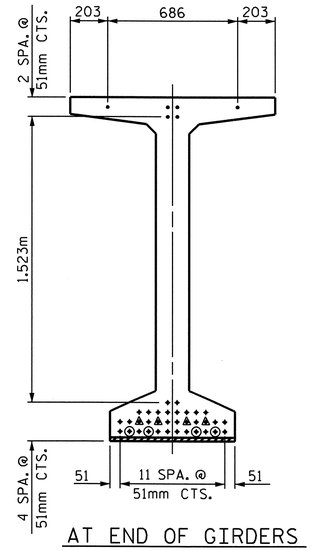

AT END OF GIRDERS

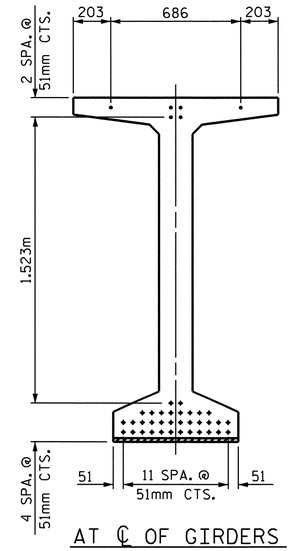

AT ℄ OF GIRDERS

15.24mm Ø LOW RELAXATION STRAND LAYOUT

DEBONDING LEGEND

- • FULLY BONDED STRANDS
- ◬ STRANDS DEBONDED FOR 1.830m FROM END OF GIRDER
- ⦿ STRANDS DEBONDED FOR 2.440m FROM END OF GIRDER

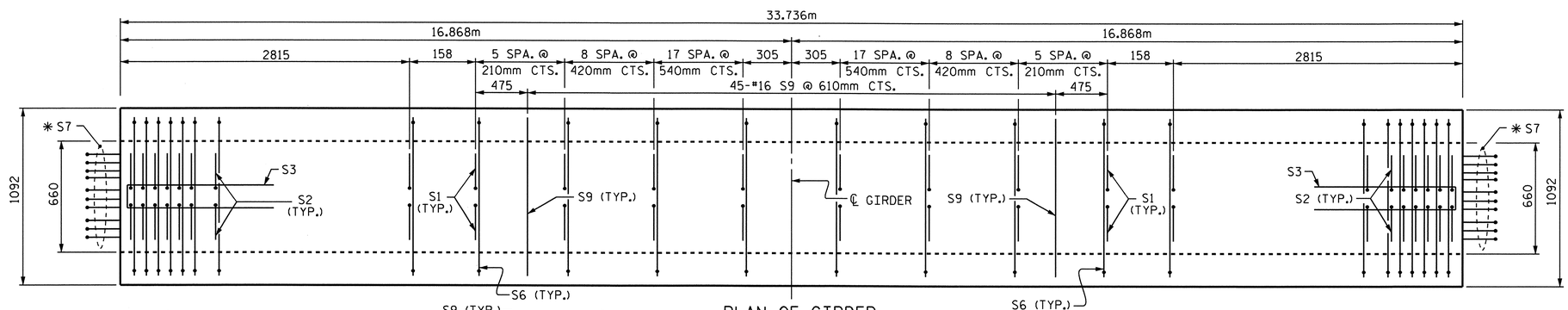

PLAN OF GIRDER

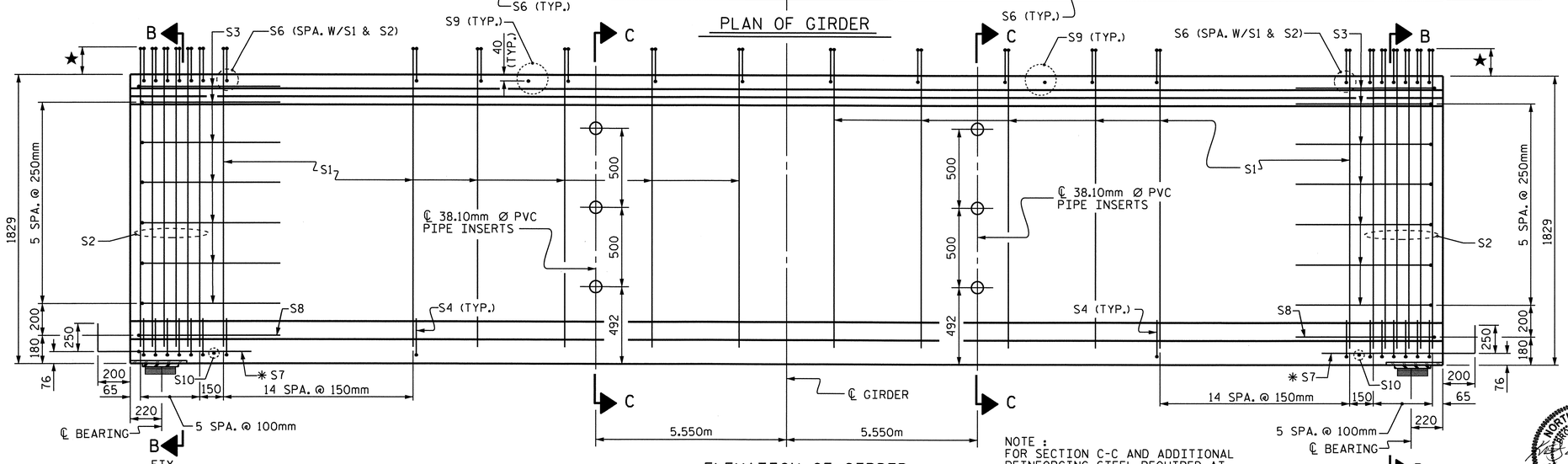

ELEVATION OF GIRDER

NOTE :
FOR SECTION C-C AND ADDITIONAL REINFORCING STEEL REQUIRED AT SECTION C-C, SEE "PRESTRESSED CONCRETE GIRDER CONTINUOUS FOR LIVE LOAD" SHEET.

15.24mm Ø L.R. GRADE 270 STRANDS

AREA (mm^2)	ULTIMATE STRENGTH (kN PER STRAND)	APPLIED PRESTRESS (kN PER STRAND)
140.00	260.7	195.5

REINFORCING STEEL FOR ONE GIRDER

BAR	NUMBER	SIZE	TYPE	LENGTH	WEIGHT
S1	184	#13	1	2160	395
S2	24	#16	1	2200	82
S3	14	#13	2	2560	36
S4	84	#13	3	920	77
S6	208	#16	4	1320	426
✱S7	20	#16	STR	1120	35
S8	2	#16	2	2740	9
S9	45	#16	STR	980	68
S10	2	#10	STR	560	1
S11	8	#16	2	3540	44
S12	16	#13	STR	2440	39

✱NOTE: S7 BARS SHALL BE BENT BEFORE SHIPMENT. HEAT BENDING SHALL NOT BE ALLOWED.

BAR TYPES

ALL BAR DIMENSIONS ARE OUT-TO-OUT

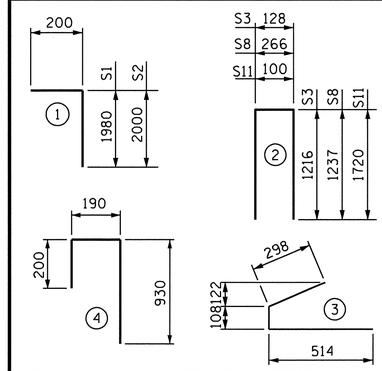

QUANTITIES FOR ONE GIRDER

SPAN "B" (WBL)	REINFORCING STEEL	60.00 MPa CONCRETE	15.24mm Ø L.R. STRANDS
	kg	m^3	No.
GIRDERS B1 THRU B6	1,212	18.1	40

GIRDERS REQUIRED

NUMBER	LENGTH	TOTAL LENGTH
6	33.736m	202.416m

PROJECT NO. X-0002 CB
CUMBERLAND COUNTY
STATION: 118+17.500 -L-

STATE OF NORTH CAROLINA
DEPARTMENT OF TRANSPORTATION
RALEIGH

1829mm PRESTRESSED CONCRETE MODIFIED BULB TEE CONTINUOUS FOR LIVE LOAD (WITH 15.24mm Ø PARTIALLY DEBONDED STRANDS)

SPAN "B" (WBL)

NORTH CAROLINA PROFESSIONAL SEAL 029441 ENGINEER KRISTY W. ALFORD

REVISIONS						SHEET NO.
NO.	BY:	DATE:	NO.	BY:	DATE:	S-14
1			3			TOTAL SHEETS
2			4			134

ASSEMBLED BY : MIKE BRITT	DATE : 6-2-10
CHECKED BY : D.G. ELY	DATE : 7-1-10
DRAWN BY : RWW 9/19/02	ADDED 9/19/02
CHECKED BY : GM 9/19/02	REV. 5/1/06 TLA/GM

22-SEP-2010 14:48
f:\Structures\StrlWBL\SuperstructureDrawings\X0002C_str2_PCG.dgn
kalford

STD. NO. PCGD10SM

STR. #1

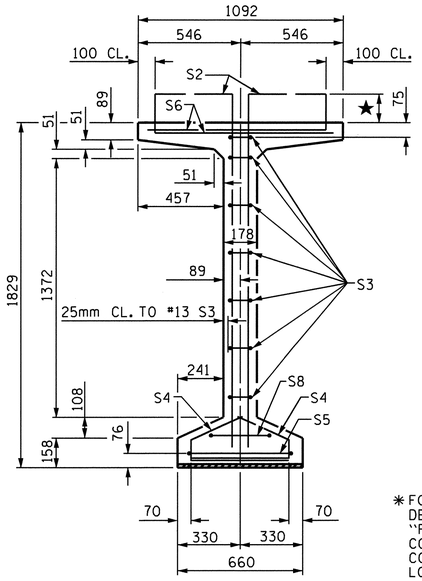

SECTION A-A

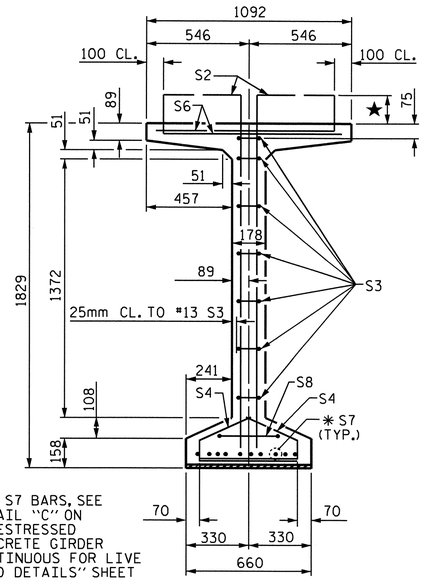

✱ FOR S7 BARS, SEE DETAIL "C" ON "PRESTRESSED CONCRETE GIRDER CONTINUOUS FOR LIVE LOAD DETAILS" SHEET

SECTION B-B

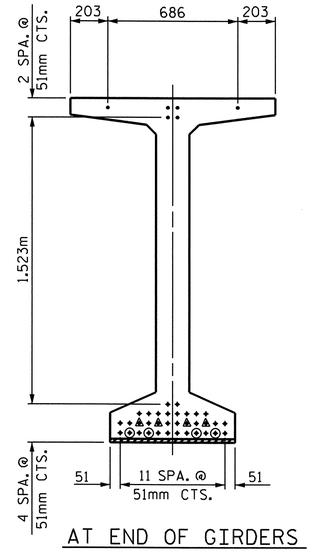

AT END OF GIRDERS

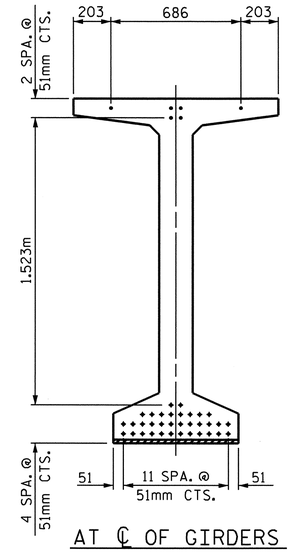

AT ℄ OF GIRDERS

15.24mm Ø LOW RELAXATION STRAND LAYOUT

★ NOTE :
S1 BARS SHALL EXTEND 200mm ABOVE TOP OF GIRDER.
S2 BARS SHALL EXTEND 250mm ABOVE TOP OF GIRDER.
S6 BARS SHALL EXTEND 150mm ABOVE TOP OF GIRDER.

DEBONDING LEGEND

- • FULLY BONDED STRANDS
- △ STRANDS DEBONDED FOR 1.830m FROM END OF GIRDER
- ⦿ STRANDS DEBONDED FOR 2.440m FROM END OF GIRDER

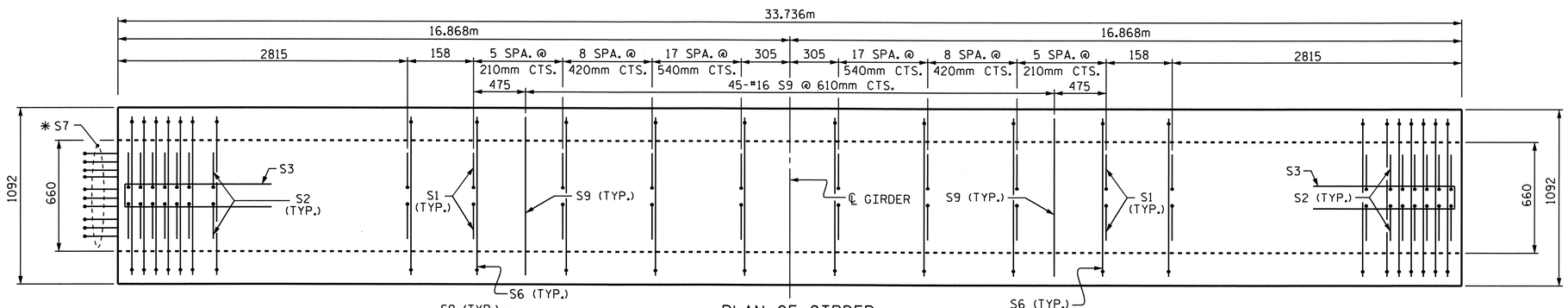

PLAN OF GIRDER

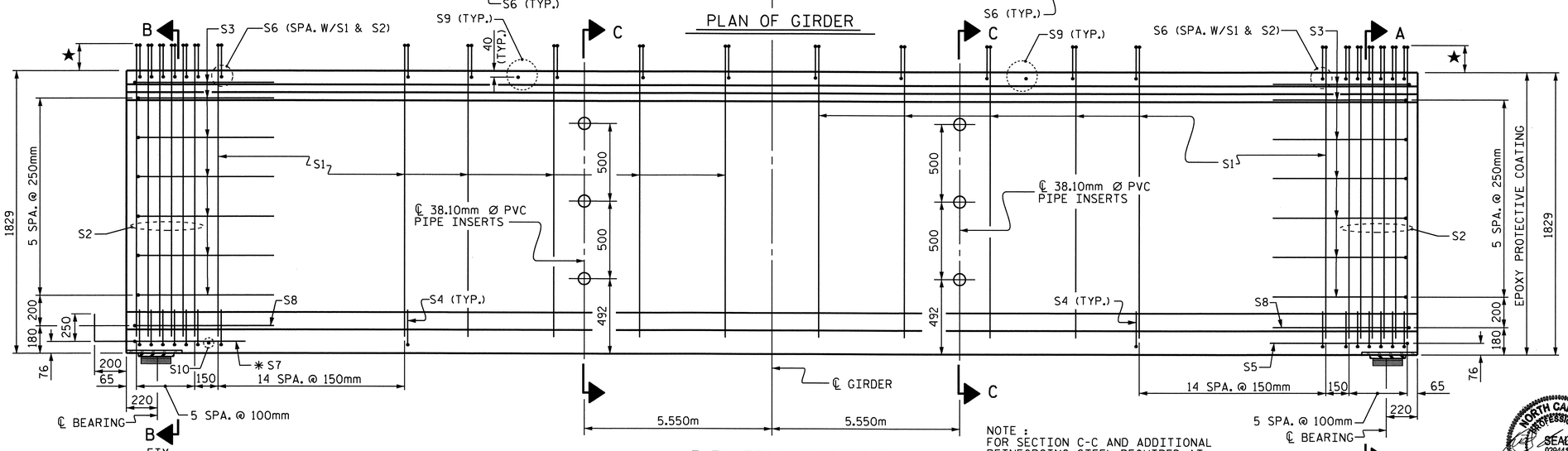

ELEVATION OF GIRDER

NOTE :
FOR SECTION C-C AND ADDITIONAL REINFORCING STEEL REQUIRED AT SECTION C-C, SEE "PRESTRESSED CONCRETE GIRDER CONTINUOUS FOR LIVE LOAD" SHEET.

15.24mm Ø L.R. GRADE 270 STRANDS

AREA (mm^2)	ULTIMATE STRENGTH (KN PER STRAND)	APPLIED PRESTRESS (KN PER STRAND)
140.00	260.7	195.5

REINFORCING STEEL FOR ONE GIRDER

BAR	NUMBER	SIZE	TYPE	LENGTH	WEIGHT
S1	184	#13	1	2160	395
S2	24	#16	1	2200	82
S3	14	#13	2	2560	36
S4	84	#13	3	920	77
S5	1	#16	2	3000	5
S6	208	#16	4	1320	426
✱ S7	10	#16	STR	1120	17
S8	2	#16	2	2740	9
S9	45	#16	STR	980	68
S10	1	#10	STR	560	1
S11	8	#16	2	3540	44
S12	16	#13	STR	2440	39

✱ NOTE: S7 BARS SHALL BE BENT BEFORE SHIPMENT. HEAT BENDING SHALL NOT BE ALLOWED.

BAR TYPES

ALL BAR DIMENSIONS ARE OUT-TO-OUT

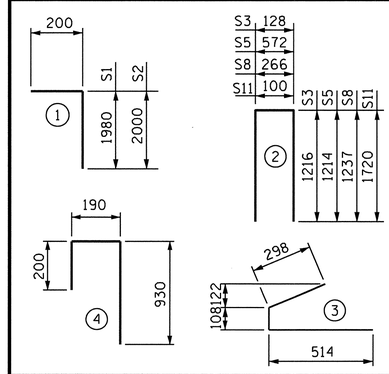

QUANTITIES FOR ONE GIRDER

SPAN "C" (WBL)	REINFORCING STEEL	60.00 MPa CONCRETE	15.24mm Ø L.R. STRANDS
	kg	m^3	No.
GIRDERS C1 THRU C6	1,199	18.1	40

GIRDERS REQUIRED

NUMBER	LENGTH	TOTAL LENGTH
6	33.736m	202.416m

PROJECT NO. X-0002 CB
CUMBERLAND COUNTY
STATION: 118+17.500 -L-

STATE OF NORTH CAROLINA
DEPARTMENT OF TRANSPORTATION
RALEIGH

1829mm PRESTRESSED CONCRETE MODIFIED BULB TEE CONTINUOUS FOR LIVE LOAD (WITH 15.24mm Ø PARTIALLY DEBONDED STRANDS)

SPAN "C" (WBL)

NORTH CAROLINA PROFESSIONAL SEAL 029441 ENGINEER KRISTY W. ALFORD

REVISIONS							SHEET NO.
NO.	BY:	DATE:	NO.	BY:	DATE:		S-15
1			3				TOTAL SHEETS
2			4				134

ASSEMBLED BY : MIKE BRITT	DATE : 6-2-10
CHECKED BY : D.G. ELY	DATE : 7-1-10
DRAWN BY : RWW 9/19/02	ADDED 9/19/02
CHECKED BY : GM 9/19/02	REV. 5/1/06 TLA/GM

22-SEP-2010 14:49
F:\Structures\StrlWBL\SuperstructureDrawings\X0002C_str2_PCG.dgn
kalford

STD. NO. PCGD10SM

STR. #1

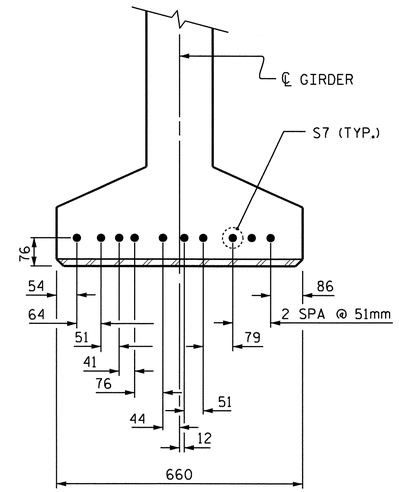

DETAIL "C"

NOTES

ALL PRESTRESSING STRANDS SHALL BE 7-WIRE LOW-RELAXATION GRADE 270 STRANDS AND SHALL CONFORM TO AASHTO M203M EXCEPT FOR SAMPLING REQUIREMENTS WHICH SHALL BE IN ACCORDANCE WITH THE STANDARD SPECIFICATIONS.

ALL REINFORCING STEEL SHALL BE GRADE 420.

APPLY EPOXY PROTECTIVE COATING TO END OF GIRDER SURFACES INDICATED IN ELEVATION VIEW.

EMBEDDED PLATE "B-1" SHALL BE GALVANIZED IN ACCORDANCE WITH THE SPECIFICATIONS. BEVEL EDGES OF PLATE "B-1" TO GIVE CLOSE FIT BUT NOT TIGHT FIT TO STEEL CASTING FORM.

ANCHOR STUDS SHALL CONFORM TO AASHTO M169 GRADES 1010 THROUGH 1020 OR APPROVED EQUAL, AND SHALL MEET THE TYPE "B" REQUIREMENTS OF SUBSECTION 7.3 OF THE ANSI/AASHTO/AWS D1.5 BRIDGE WELDING CODE.

AT ENDS OF GIRDERS TO BE EMBEDDED IN CONCRETE DIAPHRAGMS OR END WALLS, PRESTRESSING STRANDS MAY EXTEND A MAXIMUM OF 50mm BEYOND THE GIRDER ENDS. OTHERWISE, PRESTRESSING STRANDS SHALL BE CUT FLUSH WITH THE GIRDER ENDS.

THE TRANSFER OF LOAD FROM THE ANCHORAGES TO THE GIRDER SHALL BE DONE WHEN CONCRETE HAS REACHED A COMPRESSIVE STRENGTH OF NOT LESS THAN 46 MPa.

DEPENDING ON THE TYPE OF SYSTEM USED TO SUPPORT THE DECK SLAB FORMS, PRESET ANCHORS MAY BE NECESSARY IN THE PRESTRESSED CONCRETE GIRDER.

THE TOP SURFACE OF THE GIRDER, EXCLUDING THE OUTSIDE 100mm, SHALL BE RAKED TO A DEPTH OF 6mm.

A 51mm x 51mm CHAMFER IS ALLOWED AT THE INTERSECTION OF THE WEB AND THE BOTTOM FLANGE OF THE 1829mm MODIFIED BULB TEES ONLY.

THE CONTRACTOR HAS THE OPTION TO PROVIDE, AT NO ADDITIONAL COST TO THE DEPARTMENT, 2 ADDITIONAL STRANDS AT THE TOP OF THE GIRDER TO FACILITATE TYING OF THE REINFORCING STEEL. THESE STRANDS SHALL BE PULLED TO A LOAD OF 20 Kn.

FOR PRESTRESSED CONCRETE MEMBERS, SEE SPECIAL PROVISIONS.

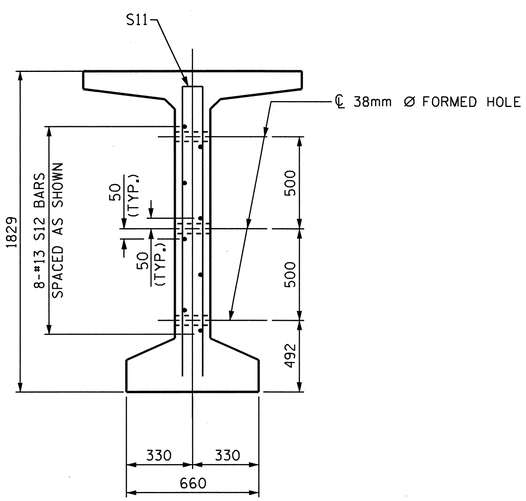

SECTION C-C

(S1, S6 AND S9 BARS NOT SHOWN)

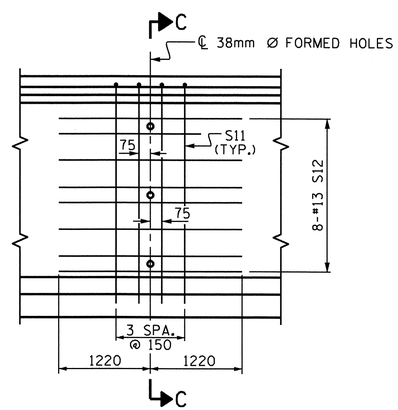

PARTIAL ELEVATION

SHOWING INTERMEDIATE STEEL DIAPHRAGM REINFORCING STEEL FOR ALL GIRDERS

NOTE :
FOR LOCATION OF SECTION C-C AND REINFORCING STEEL QUANTITIES, SEE "1829mm PRESTRESSED CONCRETE MODIFIED BULB TEE" SHEETS.

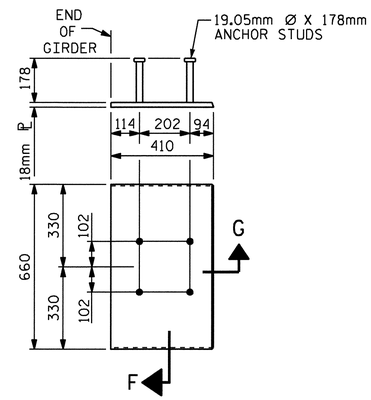

EMBEDDED PLATE "B-1" DETAILS FOR AASHTO TYPE IV GIRDER 1829mm MODIFIED BULB TEES

(2 REQ'D PER GIRDER)

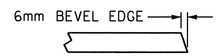

SECTION "G"

SECTION "F"

(SEE NOTES)

PROJECT NO. X-0002 CB
CUMBERLAND COUNTY
STATION: 118+17.500 -L-

STATE OF NORTH CAROLINA
DEPARTMENT OF TRANSPORTATION
RALEIGH

STANDARD
PRESTRESSED CONCRETE GIRDER
CONTINUOUS FOR LIVE LOAD
DETAILS
(WBL)

NORTH CAROLINA PROFESSIONAL ENGINEER SEAL 029441 9/27/10 KRISTY W. ALFORD

REVISIONS						SHEET NO.
NO.	BY:	DATE:	NO.	BY:	DATE:	S-16
1			3			TOTAL SHEETS
2			4			134

ASSEMBLED BY : MIKE BRITT	DATE : 6-2-10
CHECKED BY : D.G. ELY	DATE : 7-1-10
DRAWN BY : ELR 11/91	REV. 10/17/00 RWW/LES
CHECKED BY : GRP 11/91	REV. 7/10/01RR LES/RDR
	REV. 5/1/06 TLA/GM

22-SEP-2010 14:49
F:\Structures\StrlWBL\SuperstructureDrawings\X0002C_str2_PCG.dgn
kalford

STD. NO. PCG11SM

STR. #1

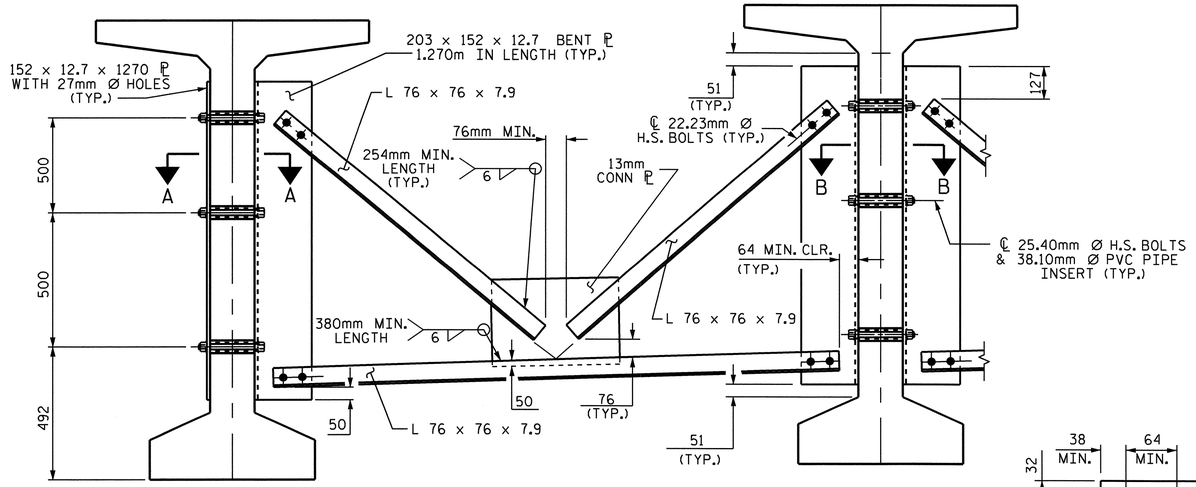

PART SECTION AT INTERMEDIATE DIAPHRAGM

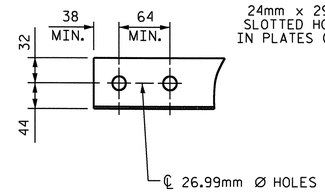

ANGLE END

(L 76 X 76 X 7.9)

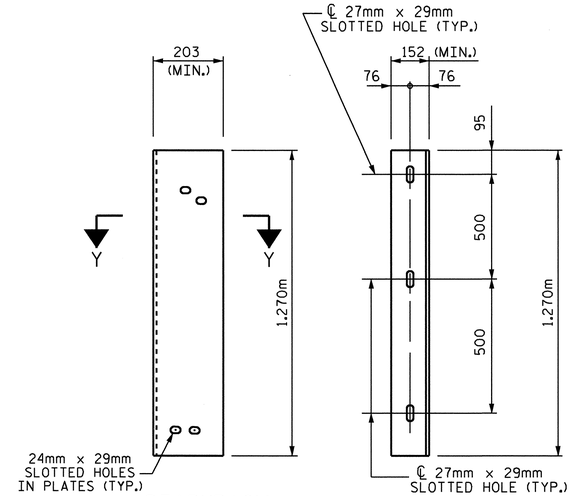

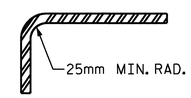

SECTION Y-Y

CONNECTOR PLATE DETAILS

STRUCTURAL STEEL NOTES

ALL INTERMEDIATE DIAPHRAGM STEEL, CONNECTOR PLATES AND PLATE WASHERS SHALL BE AASHTO M270 GRADE 345 OR APPROVED EQUAL.

TENSION ON THE AASHTO M164 BOLTS THROUGH THE CHANNEL MEMBER SHALL BE CALIBRATED USING DIRECT TENSION INDICATOR WASHERS IN ACCORDANCE WITH THE STANDARD SPECIFICATIONS. FOR DIRECT TENSION INDICATORS, SEE SPECIAL PROVISION.

TENSION ON THE AASHTO M164 BOLTS THROUGH THE GIRDER WEB SHALL BE SNUG TIGHTENED FOLLOWED BY AN ADDITIONAL ¼ TURN.

THE PLATES, BENT PLATES, ANGLES, AND PLATE WASHERS SHALL BE GALVANIZED OR METALLIZED IN ACCORDANCE WITH THE STANDARD SPECIFICATIONS. FOR THERMAL SPRAYED COATINGS (METALLIZATION), SEE SPECIAL PROVISIONS.

FOR METALLIZATION, APPLY AN 8 MIL THICK 99.99 PERCENT ZINC (W-Zn-1) THERMAL SPRAYED COATING WITH A 0.5 MIL THICK SEAL COAT TO ALL STEEL DIAPHRAGM SURFACES IN ACCORDANCE WITH THE THERMAL SPRAYED COATINGS SPECIAL PROVISIONS AND SECTION 442 OF THE STANDARD SPECIFICATIONS.

GALVANIZE THE HIGH STRENGTH BOLTS, NUTS, WASHERS AND DIRECT TENSION INDICATORS IN ACCORDANCE WITH THE STANDARD SPECIFICATIONS. FOR HIGH STRENGTH BOLTS, SEE SPECIAL PROVISIONS.

USE A MINIMUM 11.1mm THICK PLATE WASHER WITH STANDARD HOLES UNDER EACH BOLT HEAD AND NUT. THE PLATE WASHERS SHALL HAVE SUFFICIENT SIZE TO COVER THE HOLES AFTER INSTALLATION. HARDENED WASHERS AND DIRECT TENSION INDICATORS ARE TO BE USED IN CONJUNCTION WITH THE PLATE WASHERS IN THE L 76X76X7.9 ANGLE MEMBER CONNECTION.

FOR BOLTS THROUGH THE GIRDER WEB, PROVIDE SUFFICIENT LENGTH OF ALL BOLTS TO ACCOMMODATE WASHERS, DIRECT TENSION INDICATORS, THE THICKNESS OF CONNECTING MEMBER PLUS AT LEAST 6mm PROJECTION BEYOND THE NUT.

INTERMEDIATE DIAPHRAGM ASSEMBLY SHALL COMPLY WITH SECTION 1072 OF THE STANDARD SPECIFICATIONS.

CONTRACTOR SHALL SUBMIT TWO SETS OF WORKING DRAWINGS FOR THE INTERMEDIATE DIAPHRAGM ASSEMBLY FOR REVIEW, COMMENTS AND ACCEPTANCE. AFTER REVIEW, COMMENTS, AND ACCEPTANCE, SUBMIT SEVEN SETS FOR DISTRIBUTION.

IN THE EXTERIOR BAYS, TEMPORARY STRUTS SHALL BE PLACED BETWEEN PRESTRESSED GIRDERS ADJACENT TO THE STEEL DIAPHRAGMS. STRUTS SHALL REMAIN IN PLACE 3 DAYS AFTER CONCRETE IS PLACED. ALL AASHTO M164 H.S. BOLTS SHALL BE FULLY TIGHTENED AFTER THE STRUTS HAVE BEEN REMOVED.

THE COST OF THE STEEL DIAPHRAGMS AND ASSEMBLIES SHALL BE INCLUDED IN THE UNIT PRICE BID FOR PRESTRESSED CONCRETE GIRDERS.

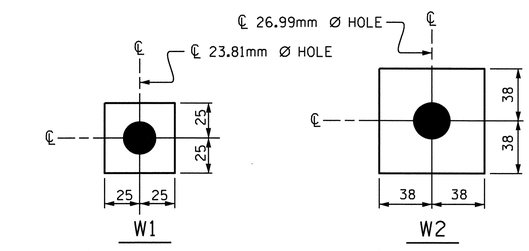

USE WITH 22.23mm Ø HVY. HEX NUTS & DIRECT TENSION INDICATOR WASHERS AT DIAPHRAGM ANGLE TO CONNECTOR PLATE CONNECTIONS

USE WITH 25.40mm Ø HVY. HEX NUTS AT CONNECTOR PLATE TO GIRDER CONNECTIONS

WASHER DETAILS

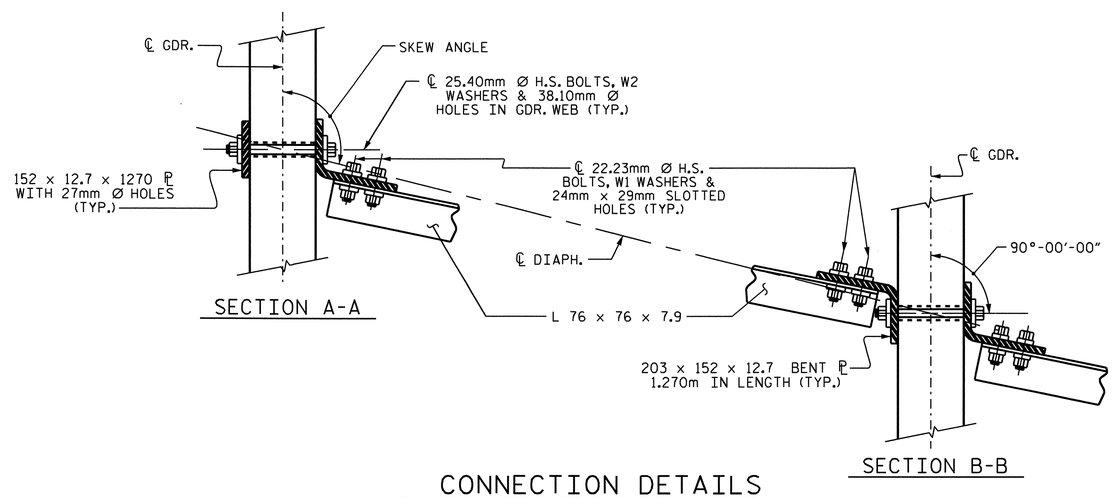

SECTION A-A

SECTION B-B

CONNECTION DETAILS

PROJECT NO. X-0002 CB

CUMBERLAND COUNTY

STATION: 118+17.500 -L-

STATE OF NORTH CAROLINA
DEPARTMENT OF TRANSPORTATION
RALEIGH

STANDARD
INTERMEDIATE
STEEL DIAPHRAGMS
FOR 1829mm
MODIFIED BULB TEE
PRESTRESSED CONCRETE
GIRDERS --(WBL)--

NORTH CAROLINA PROFESSIONAL SEAL 029441 ENGINEER KRISTY W. ALFORD

REVISIONS						SHEET NO.
NO.	BY:	DATE:	NO.	BY:	DATE:	S-17
1			3			TOTAL SHEETS
2			4			134

ASSEMBLED BY : MIKE BRITT	DATE : 6-3-10
CHECKED BY : D.G.ELY	DATE : 7-1-10
DRAWN BY : RWW 11/09	ADDED 11/23/09
CHECKED BY : GM 11/09	

22-SEP-2010 14:49
F:\Structures\Str1WBL\SuperstructureDrawings\x0002C_str2_DIAPH.dgn
kalford

STD. NO. PCG13SM STR.#1

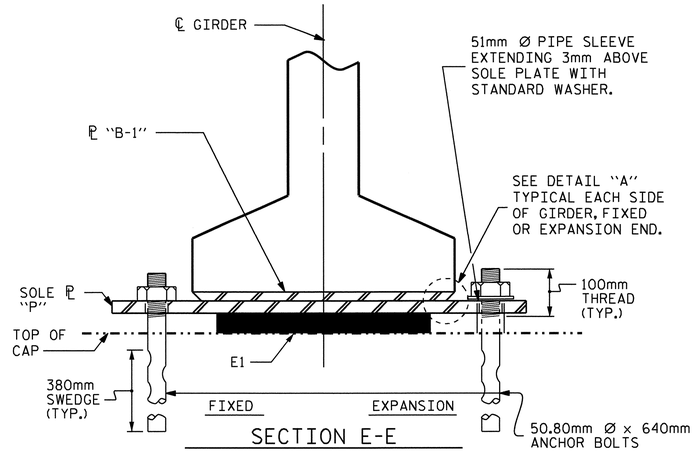

SECTION E-E

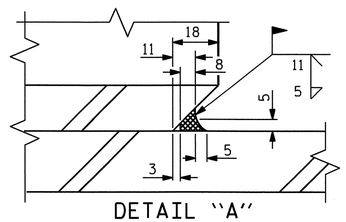

DETAIL "A"

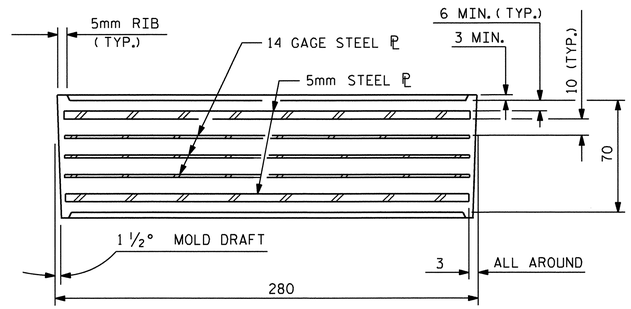

TYPICAL SECTION OF ELASTOMERIC BEARINGS

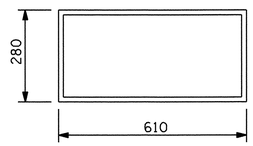

E1 (36 REQ'D)

PLAN VIEW OF ELASTOMERIC BEARING

TYPE VII

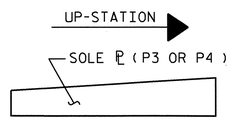

SOLE ℙ PLACEMENT DETAIL

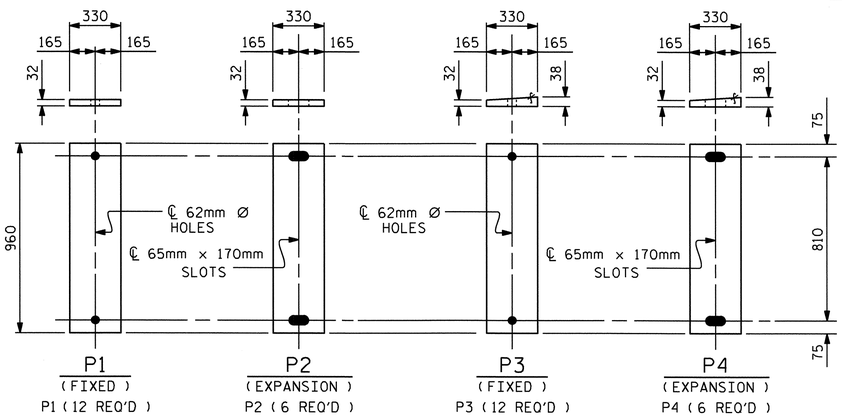

SOLE PLATE DETAILS ("P")

NOTES

AT ALL FIXED POINTS OF SUPPORT, NUTS FOR ANCHOR BOLTS ARE TO BE TIGHTENED FINGER TIGHT AND THEN BACKED OFF 1/2 TURN. THE THREAD OF THE NUT AND BOLT SHALL THEN BE BURRED WITH A SHARP POINTED TOOL.

THE 51mm Ø PIPE SLEEVE SHALL BE CUT FROM SCHEDULE 40 PVC PLASTIC PIPE. THE PVC PLASTIC PIPE SHALL MEET THE REQUIREMENTS OF ASTM D1785.

STEEL SOLE PLATES, ANCHOR BOLTS, NUTS, AND WASHERS SHALL BE GALVANIZED IN ACCORDANCE WITH THE STANDARD SPECIFICATIONS.

PRIOR TO WELDING, GRIND THE GALVANIZED SURFACE OF THE PORTION OF THE EMBEDDED PLATE AND SOLE PLATE THAT ARE TO BE WELDED. AFTER WELDING, DAMAGED GALVANIZED SURFACES SHALL BE REPAIRED IN ACCORDANCE WITH THE STANDARD SPECIFICATIONS.

WHEN WELDING THE SOLE PLATE TO THE EMBEDDED PLATE IN THE GIRDER, USE TEMPERATURE INDICATING WAX PENS, OR OTHER SUITABLE MEANS, TO ENSURE THAT THE TEMPERATURE OF THE SOLE PLATE DOES NOT EXCEED 149°C. TEMPERATURES ABOVE THIS MAY DAMAGE THE ELASTOMER.

SOLE PLATE "P", BOLTS, NUTS, WASHERS, AND PIPE SLEEVE SHALL BE INCLUDED IN THE PAY ITEM FOR PRESTRESSED CONCRETE GIRDERS.

ANCHOR BOLTS SHALL MEET THE REQUIREMENTS OF ASTM A449. NUTS SHALL MEET THE REQUIREMENTS OF AASHTO M291M-12 OR AASHTO M292M-2H. WASHERS SHALL MEET THE REQUIREMENTS OF AASHTO M293M. SHOP DRAWINGS ARE NOT REQUIRED FOR ANCHOR BOLTS, NUTS AND WASHERS. SHOP INSPECTION IS REQUIRED.

ALL SURFACES OF BEARING PLATES SHALL BE SMOOTH AND STRAIGHT.

ELASTOMER IN ALL BEARINGS SHALL BE 60 DUROMETER HARDNESS.

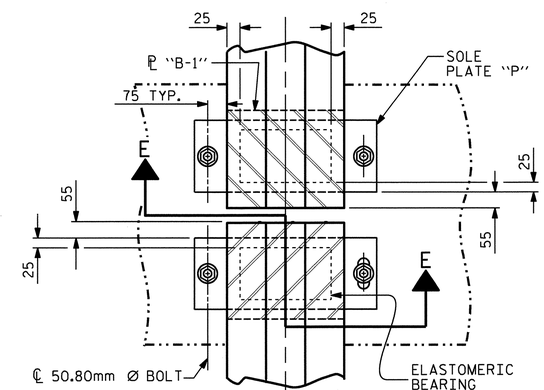

TYPICAL HALF-PLAN (FIXED END)

TYPICAL HALF-PLAN (EXPANSION END)

—LOAD RATINGS—	
TYPE VII	MAX. D.L.+ L.L.
	1174 kN

PROJECT NO. X-0002 CB

CUMBERLAND COUNTY

STATION: 118+17.500 -L-

STATE OF NORTH CAROLINA
DEPARTMENT OF TRANSPORTATION
RALEIGH

STANDARD ELASTOMERIC BEARING DETAILS

(WBL)

ASSEMBLED BY : MIKE BRITT	DATE : 6-2-10
CHECKED BY : D.G. ELY	DATE : 7-1-10
DRAWN BY : EEM 2/97	REV. 8/16/99 RWW/LES
CHECKED BY : VAP 2/97	REV. 10/17/00 RWW/LES
	REV. 5/1/06 TLA/GM

REVISIONS								SHEET NO.
NO.	BY:	DATE:	NO.	BY:	DATE:			S-18
1			3					TOTAL SHEETS
2			4					134

STD. NO. EB4SM

STR.#1

14-SEP-2010 09:47
F:\Structures\StrIWBL\SuperstructureDrawings\X0002C_str2_BRG.dgn
kalford

DEAD LOAD DEFLECTION TABLE FOR GIRDERS

15.24mm Ø LOW RELAXATION	GIRDER A1										
TENTH POINTS	0	.1	.2	.3	.4	.5	.6	.7	.8	.9	0
CAMBER (GIRDER ALONE IN PLACE) ↑	0.000	0.021	0.039	0.053	0.062	0.065	0.062	0.053	0.039	0.021	0.000
✳ DEFLECTION DUE TO SUPERIMPOSED D.L. ↓	0.000	0.009	0.017	0.023	0.027	0.029	0.027	0.023	0.017	0.009	0.000
FINAL CAMBER ↑	0	12	22	30	35	36	35	30	22	12	0

DEAD LOAD DEFLECTION TABLE FOR GIRDERS

15.24mm Ø LOW RELAXATION	GIRDERS A2 THRU A5										
TENTH POINTS	0	.1	.2	.3	.4	.5	.6	.7	.8	.9	0
CAMBER (GIRDER ALONE IN PLACE) ↑	0.000	0.021	0.039	0.053	0.062	0.065	0.062	0.053	0.039	0.021	0.000
✳ DEFLECTION DUE TO SUPERIMPOSED D.L. ↓	0.000	0.008	0.015	0.021	0.025	0.027	0.025	0.021	0.015	0.008	0.000
FINAL CAMBER ↑	0	13	24	32	37	38	37	32	24	13	0

DEAD LOAD DEFLECTION TABLE FOR GIRDERS

15.24mm Ø LOW RELAXATION	GIRDER A6										
TENTH POINTS	0	.1	.2	.3	.4	.5	.6	.7	.8	.9	0
CAMBER (GIRDER ALONE IN PLACE) ↑	0.000	0.021	0.039	0.053	0.062	0.065	0.062	0.053	0.039	0.021	0.000
✳ DEFLECTION DUE TO SUPERIMPOSED D.L. ↓	0.000	0.008	0.015	0.021	0.025	0.027	0.025	0.021	0.015	0.008	0.000
FINAL CAMBER ↑	0	13	24	32	37	38	37	32	24	13	0

✳ INCLUDES FUTURE WEARING SURFACE
ALL VALUES ARE SHOWN IN METERS, EXCEPT "FINAL CAMBER" WHICH IS SHOWN IN MILLIMETERS.

DEAD LOAD DEFLECTION TABLE FOR GIRDERS

15.24mm Ø LOW RELAXATION	GIRDER B1										
TENTH POINTS	0	.1	.2	.3	.4	.5	.6	.7	.8	.9	0
CAMBER (GIRDER ALONE IN PLACE) ↑	0.000	0.035	0.067	0.091	0.107	0.112	0.107	0.091	0.067	0.035	0.000
✳ DEFLECTION DUE TO SUPERIMPOSED D.L. ↓	0.000	0.013	0.026	0.036	0.042	0.044	0.042	0.036	0.026	0.013	0.000
FINAL CAMBER ↑	0	22	41	55	65	68	65	55	41	22	0

DEAD LOAD DEFLECTION TABLE FOR GIRDERS

15.24mm Ø LOW RELAXATION	GIRDERS B2 THRU B5										
TENTH POINTS	0	.1	.2	.3	.4	.5	.6	.7	.8	.9	0
CAMBER (GIRDER ALONE IN PLACE) ↑	0.000	0.035	0.067	0.091	0.107	0.112	0.107	0.091	0.067	0.035	0.000
✳ DEFLECTION DUE TO SUPERIMPOSED D.L. ↓	0.000	0.012	0.023	0.032	0.038	0.040	0.038	0.032	0.023	0.012	0.000
FINAL CAMBER ↑	0	23	44	59	69	72	69	59	44	23	0

DEAD LOAD DEFLECTION TABLE FOR GIRDERS

15.24mm Ø LOW RELAXATION	GIRDER B6										
TENTH POINTS	0	.1	.2	.3	.4	.5	.6	.7	.8	.9	0
CAMBER (GIRDER ALONE IN PLACE) ↑	0.000	0.035	0.067	0.091	0.107	0.112	0.107	0.091	0.067	0.035	0.000
✳ DEFLECTION DUE TO SUPERIMPOSED D.L. ↓	0.000	0.012	0.024	0.032	0.038	0.041	0.038	0.032	0.024	0.012	0.000
FINAL CAMBER ↑	0	23	43	59	69	71	69	59	43	23	0

✳ INCLUDES FUTURE WEARING SURFACE
ALL VALUES ARE SHOWN IN METERS, EXCEPT "FINAL CAMBER" WHICH IS SHOWN IN MILLIMETERS.

DEAD LOAD DEFLECTION TABLE FOR GIRDERS

15.24mm Ø LOW RELAXATION	GIRDER C1										
TENTH POINTS	0	.1	.2	.3	.4	.5	.6	.7	.8	.9	0
CAMBER (GIRDER ALONE IN PLACE) ↑	0.000	0.035	0.067	0.091	0.107	0.112	0.107	0.091	0.067	0.035	0.000
✳ DEFLECTION DUE TO SUPERIMPOSED D.L. ↓	0.000	0.013	0.026	0.036	0.042	0.044	0.042	0.036	0.026	0.013	0.000
FINAL CAMBER ↑	0	22	41	55	65	68	65	55	41	22	0

DEAD LOAD DEFLECTION TABLE FOR GIRDERS

15.24mm Ø LOW RELAXATION	GIRDERS C2 THRU C5										
TENTH POINTS	0	.1	.2	.3	.4	.5	.6	.7	.8	.9	0
CAMBER (GIRDER ALONE IN PLACE) ↑	0.000	0.035	0.067	0.091	0.107	0.112	0.107	0.091	0.067	0.035	0.000
✳ DEFLECTION DUE TO SUPERIMPOSED D.L. ↓	0.000	0.012	0.023	0.032	0.038	0.040	0.038	0.032	0.023	0.012	0.000
FINAL CAMBER ↑	0	23	44	59	69	72	69	59	44	23	0

DEAD LOAD DEFLECTION TABLE FOR GIRDERS

15.24mm Ø LOW RELAXATION	GIRDER C6										
TENTH POINTS	0	.1	.2	.3	.4	.5	.6	.7	.8	.9	0
CAMBER (GIRDER ALONE IN PLACE) ↑	0.000	0.035	0.067	0.091	0.107	0.112	0.107	0.091	0.067	0.035	0.000
✳ DEFLECTION DUE TO SUPERIMPOSED D.L. ↓	0.000	0.012	0.024	0.032	0.038	0.041	0.038	0.032	0.024	0.012	0.000
FINAL CAMBER ↑	0	23	43	59	69	71	69	59	43	23	0

✳ INCLUDES FUTURE WEARING SURFACE
ALL VALUES ARE SHOWN IN METERS, EXCEPT "FINAL CAMBER" WHICH IS SHOWN IN MILLIMETERS.

PROJECT NO. X-0002 CB
CUMBERLAND COUNTY
STATION: 118+17.500 -L-

NORTH CAROLINA PROFESSIONAL SEAL 026441 ENGINEER KRISTY W. ALFORD

STATE OF NORTH CAROLINA
DEPARTMENT OF TRANSPORTATION
RALEIGH

SUPERSTRUCTURE
DEAD LOAD DEFLECTIONS
(WBL)

REVISIONS								SHEET NO.
NO.	BY:	DATE:	NO.	BY:	DATE:			S-19
1			3					TOTAL SHEETS
2			4					134

DRAWN BY : MIKE BRITT DATE : 6-2-10
CHECKED BY : D.G. ELY DATE : 7-1-10

14-SEP-2010 09:49
F:\Structures\StrIWBL\SuperstructureDrawings\X0002C_str2_DL.dgn
kalford

STR. #1

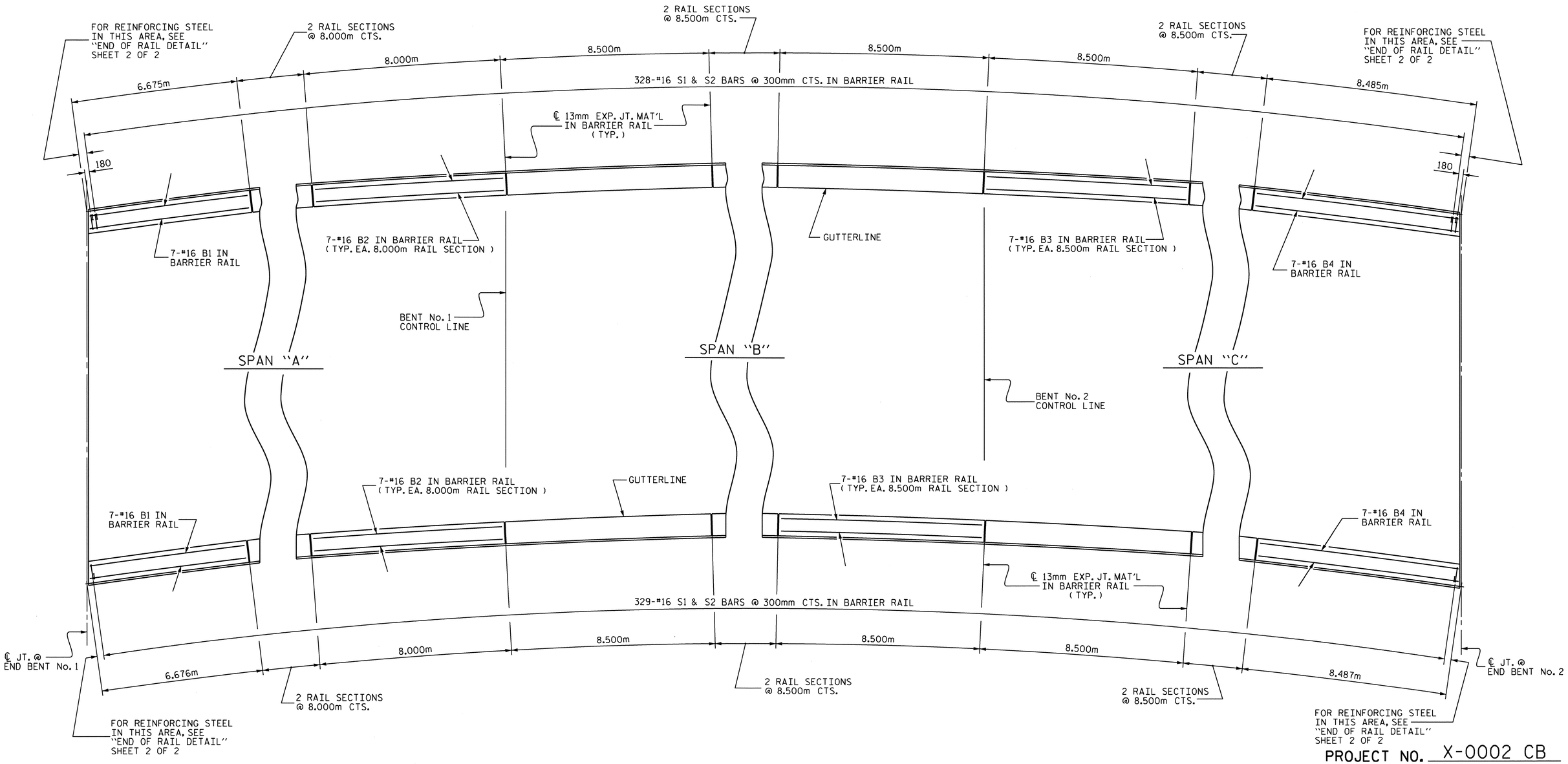

PLAN OF BARRIER RAIL

ALL DIMENSIONS ARE TAKEN ALONG THE ARC ON THE OUTSIDE EDGE OF BARRIER RAIL

PROJECT NO. X-0002 CB

CUMBERLAND COUNTY

STATION: 118+17.500 -L-

SHEET 1 OF 2

STATE OF NORTH CAROLINA
DEPARTMENT OF TRANSPORTATION
RALEIGH

SUPERSTRUCTURE

CONCRETE BARRIER RAIL

(WBL)

NORTH CAROLINA PROFESSIONAL SEAL 20044 ENGINEER KRISTY W. ALFORD

REVISIONS						SHEET NO.
NO.	BY:	DATE:	NO.	BY:	DATE:	S-20
1			3			TOTAL SHEETS
2			4			134

DRAWN BY : MIKE BRITT DATE : 6-2-10
CHECKED BY : D.G. ELY DATE : 7-1-10

14-SEP-2010 09:53
F:\Structures\StrIWBL\SuperstructureDrawings\X0002C_str2_BR.dgn
kalford

STR.#1

NOTES

THE BARRIER RAIL IN CONTINUOUS UNIT SHALL NOT BE CAST UNTIL ALL SLAB CONCRETE IN THE UNIT HAS BEEN CAST AND HAS REACHED A MINIMUM COMPRESSIVE STRENGTH OF 20.7 MPa.

ALL REINFORCING STEEL IN BARRIER RAILS SHALL BE EPOXY COATED.

VERTICAL GROOVED CONTRACTION JOINTS, 12mm IN DEPTH, SHALL BE TOOLED IN ALL EXPOSED FACES OF THE BARRIER RAIL AND IN ACCORDANCE WITH ARTICLE 825-10(B) OF THE STANDARD SPECIFICATIONS. THE CONTRACTION JOINT SHALL BE LOCATED AT EACH THIRD POINT BETWEEN BARRIER RAIL EXPANSION JOINTS. ONLY ONE CONTRACTION JOINT IS REQUIRED AT MIDPOINT OF BARRIER RAIL SEGMENTS LESS THAN 6.1m IN LENGTH AND NO CONTRACTION JOINTS ARE REQUIRED FOR THOSE SEGMENTS LESS THAN 3.5m IN LENGTH.

#16 "S" BARS MAY BE SHIFTED SLIGHTLY IN ORDER TO MAINTAIN A 50mm MINIMUM CLEARANCE TO THE 13mm EXPANSION JOINT MATERIAL IN BARRIER RAIL.

BAR TYPES

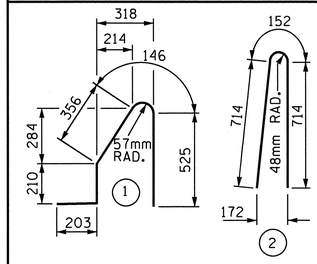

ALL BAR DIMENSIONS ARE OUT TO OUT

BILL OF MATERIAL

FOR WBL CONCRETE BARRIER RAIL ONLY

BAR	No.	SIZE	TYPE	LENGTH	WEIGHT
* S1	659	#16	1	1440	1473
* S2	659	#16	2	1580	1616
* B1	14	#16	STR	6520	142
* B2	42	#16	STR	7880	514
* B3	98	#16	STR	8380	1275
* B4	14	#16	STR	8340	181

* EPOXY COATED REINFORCING STEEL	5,201 kg
CLASS AA CONCRETE	49.5 CU. METER
CONCRETE BARRIER RAIL	197.323 METERS

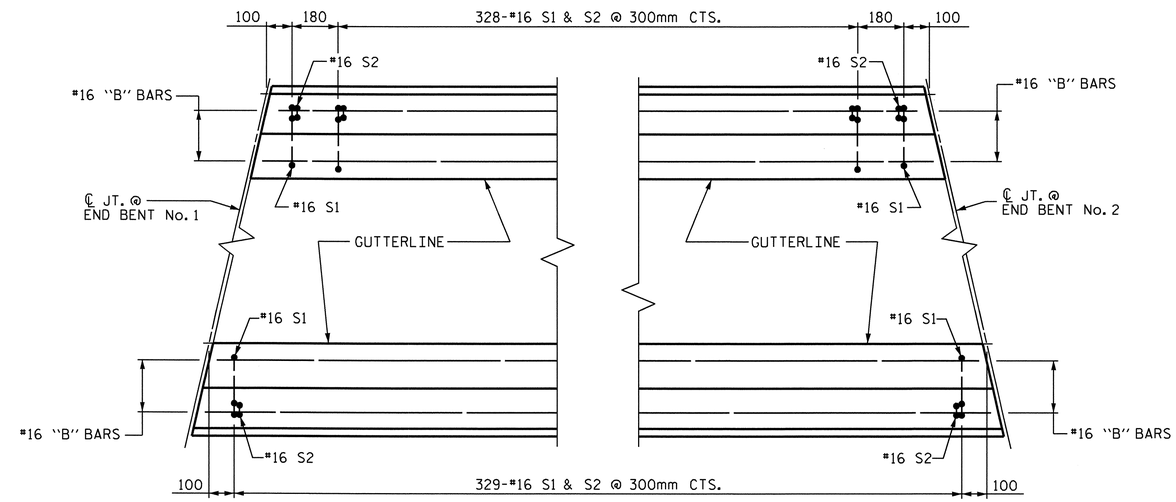

PLAN

END OF RAIL DETAIL

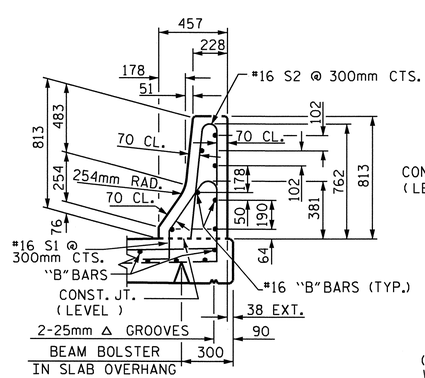

SECTION THRU RAIL

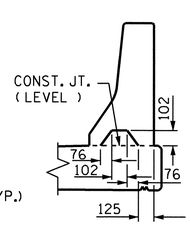

SECTION S-S

AT DAM IN OPEN JOINT
(THIS IS TO BE USED ONLY WHEN SLIP FORM IS USED)

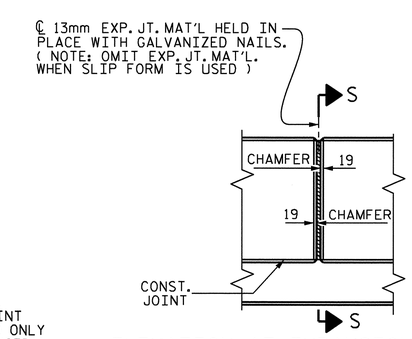

ELEVATION AT EXPANSION JOINTS

BARRIER RAIL DETAILS

PROJECT NO. X-0002 CB
CUMBERLAND COUNTY
STATION: 118+17.500 -L-

SHEET 2 OF 2

STATE OF NORTH CAROLINA
DEPARTMENT OF TRANSPORTATION
RALEIGH

STANDARD
CONCRETE BARRIER RAIL
(WBL)

NORTH CAROLINA PROFESSIONAL SEAL 023441 ENGINEER KRISTY W. ALFORD

ASSEMBLED BY : MIKE BRITT	DATE : 6-2-10		
CHECKED BY : D.G. ELY	DATE : 7-1-10		
DRAWN BY : ARB 5/87	REV. 10/17/00	RWW/LES	
CHECKED BY : SJD 9/87	REV. 5/7/03R	RWW/JTE	
	REV. 5/1/06	TLA/GM	

REVISIONS						SHEET NO.
NO.	BY:	DATE:	NO.	BY:	DATE:	S-21
1			3			TOTAL SHEETS
2			4			134

14-SEP-2010 09:54
F:\Structures\StrlWBL\SuperstructureDrawings\X0002C_str2_BR.dgn
kalford

STD. No. CBR1SM

STR.#1

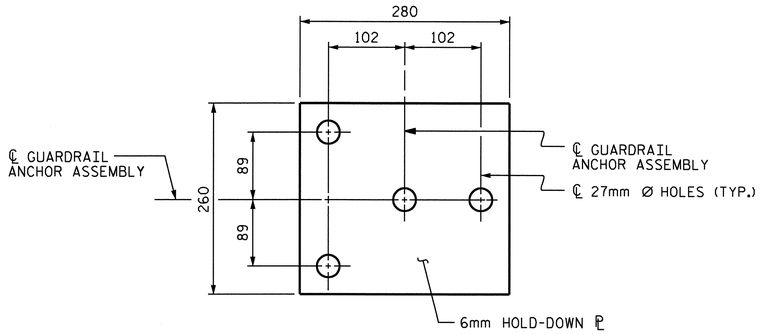

PLAN

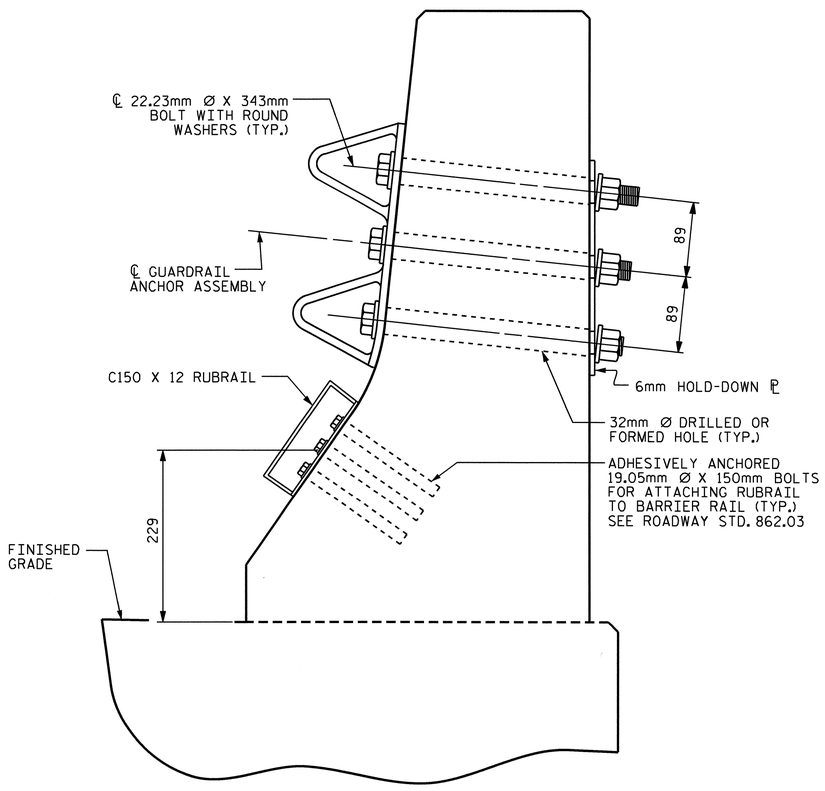

SECTION E-E

GUARDRAIL ANCHOR ASSEMBLY DETAILS

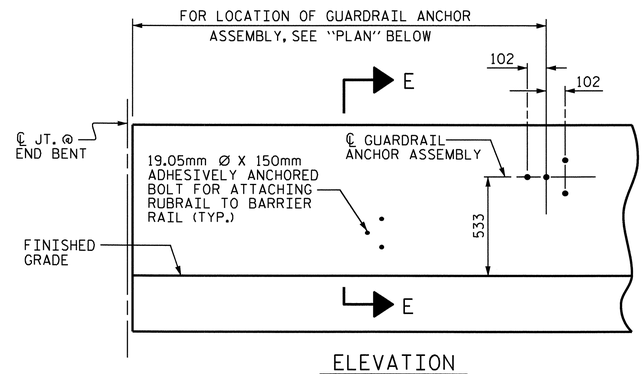

ELEVATION

FOR LOCATION OF RUBRAIL, SEE ROADWAY STD. 862.03

NOTES

THE GUARDRAIL ANCHOR ASSEMBLY SHALL CONSIST OF A 6mm HOLD DOWN PLATE AND 4 - 22.23mm Ø BOLTS WITH NUTS AND WASHERS, RUBRAIL, AND ADHESIVELY ANCHORED BOLTS.

THE HOLD-DOWN PLATE SHALL CONFORM TO AASHTO M270 GRADE 36. AFTER FABRICATION, THE HOLD-DOWN PLATE SHALL BE HOT-DIP GALVANIZED IN ACCORDANCE WITH AASHTO M111.

BOLTS SHALL CONFORM TO THE REQUIREMENTS OF ASTM A307 AND NUTS SHALL CONFORM TO THE REQUIREMENTS OF AASHTO M291. BOLTS, NUTS AND WASHERS SHALL BE GALVANIZED. (AT THE CONTRACTOR'S OPTION, STAINLESS STEEL BOLTS, NUTS AND WASHERS MAY BE USED AS AN ALTERNATE FOR THE 22.23mm Ø GALVANIZED BOLTS, NUTS AND WASHERS. THEY SHALL CONFORM TO OR EXCEED THE MECHANICAL REQUIREMENTS OF ASTM A307. THE USE OF THIS ALTERNATE SHALL BE APPROVED BY THE ENGINEER.)

THE GUARDRAIL ANCHOR ASSEMBLY IS REQUIRED AT ALL POINTS WHERE APPROACH GUARDRAIL IS TO BE ATTACHED TO THE END OF BARRIER RAIL. FOR POINTS OF ATTACHMENT, SEE SKETCH.

AFTER INSTALLATION, THE EXPOSED THREAD OF THE BOLT SHALL BE BURRED WITH A SHARP POINTED TOOL.

THE COST OF THE GUARDRAIL ANCHOR ASSEMBLY SHALL BE INCLUDED IN THE UNIT CONTRACT PRICE BID FOR CONCRETE BARRIER RAIL.

THE 32mm Ø HOLES SHALL BE FORMED OR DRILLED WITH A CORE BIT. IMPACT TOOLS WILL NOT BE PERMITTED. ANY CONCRETE DAMAGED BY THIS WORK SHALL BE REPAIRED TO THE SATISFACTION OF THE ENGINEER.

THE C150 X 12 RUBRAIL IS TO BE ADHESIVELY ANCHORED TO THE RAIL USING THREE 19.05mm Ø X 150mm BOLTS WITH WASHERS. LEVEL ONE FIELD TESTING IS REQUIRED, AND THE YIELD LOAD OF THE 19.05mm Ø BOLTS IS 53.4kN. FOR ADHESIVELY ANCHORED ANCHOR BOLTS OR DOWELS, SEE SPECIAL PROVISIONS. SEE ROADWAY STANDARD 862.03 FOR DETAILS AND LOCATION OF THE RUBRAIL.

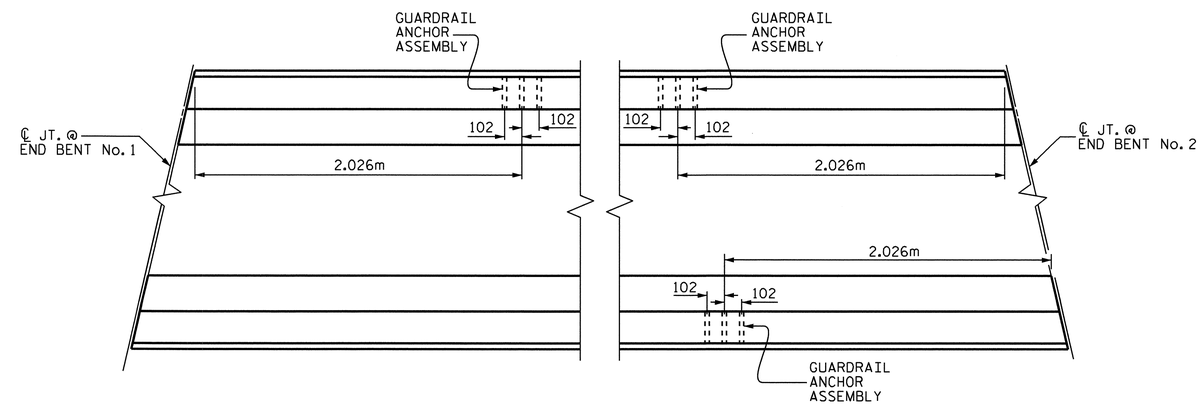

PLAN

LOCATION OF ANCHORS FOR GUARDRAIL

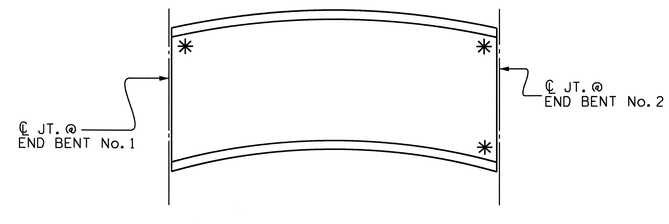

SKETCH SHOWING POINTS OF ATTACHMENTS

✳ DENOTES GUARDRAIL ANCHOR ASSEMBLY & RUBARAIL ATTACHMENT

PROJECT NO. X-0002 CB
CUMBERLAND COUNTY
STATION: 118+17.500 -L-

STATE OF NORTH CAROLINA
DEPARTMENT OF TRANSPORTATION
RALEIGH

STANDARD

GUARDRAIL ANCHORAGE FOR BARRIER RAIL

(WBL)

NORTH CAROLINA PROFESSIONAL SEAL 029441 ENGINEER KRISTY W. ALFORD

REVISIONS						SHEET NO.
NO.	BY:	DATE:	NO.	BY:	DATE:	S-22
1			3			TOTAL SHEETS
2			4			134

ASSEMBLED BY : MIKE BRITT	DATE : 6-2-10
CHECKED BY : D.G. ELY	DATE : 7-1-10
DRAWN BY : TLA 5/06	ADDED 5/1/06R KMM/GM
CHECKED BY : GM 5/06	

14-SEP-2010 09:55
F:\Structures\StrIWBL\SuperstructureDrawings\X0002C_str2_GR.dgn
kalford

STD. NO. GRA2

STR.#1

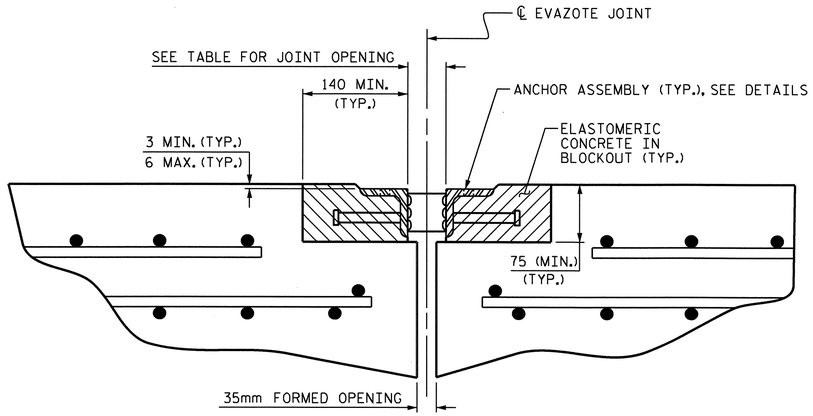

ARMORED JOINT DETAILS

SECTION NORMAL TO JOINT AT END BENTS

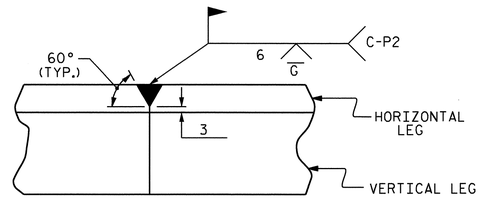

DETAIL- FIELD WELD SPLICE OF ANGLE

NOTES

ANGLES SHALL CONFORM TO AASHTO M270 GRADE 250 STEEL OR APPROVED EQUAL. ALL STUD ANCHORS SHALL CONFORM TO AASHTO M169 GRADES 1010 THRU 1020 OR APPROVED EQUAL.

STUD ANCHORS SHALL BE SHOP WELDED AND ALL HOLES SHALL BE SHOP DRILLED AS SHOWN ON THE PLANS. STUD ANCHORS SHALL BE ELECTRIC ARC END WELDED WITH COMPLETE FUSION.

UPON COMPLETION OF SHOP FABRICATION, THE ENTIRE ANCHOR ASSEMBLY SHALL BE METALLIZED. THE 12.70mm Ø STUD ANCHORS AND ANCHOR TABS NEED NOT BE METALLIZED. SEE SPECIAL PROVISION FOR THERMAL SPRAYED COATINGS (METALLIZATION).

ANCHOR ASSEMBLY SHALL BE MADE CONTINUOUS THE LENGTH OF THE JOINT FROM GUTTER TO GUTTER. FOR FIELD SPLICES AT ALL CROWN BREAK POINTS, THE ENDS OF THE STEEL ANGLES SHALL BE CUT PARALLEL TO THE BRIDGE CENTERLINE. FINISHED FIELD WELDS SHALL BE GROUND SMOOTH AND COATED WITH A MINIMUM THICKNESS OF 0.100mm OF ZINC-RICH PAINT IN ACCORDANCE WITH THE STANDARD SPECIFICATIONS.

ANCHOR ASSEMBLY SEGMENTS SHALL NOT BE LESS THAN 3.6m NOR MORE THAN 6.1m IN LENGTH. SHORTER SEGMENTS MAY BE USED AT THE EDGE OF ROADWAY OR AT POINTS OF STAGED CONSTRUCTION.

THE ANCHOR ASSEMBLY SHALL BE SECURED AND LEVELED AS SHOWN IN THE "ARMORED JOINT ANCHOR ASSEMBLY DETAILS". NO SUBMITTALS ARE REQUIRED FOR 9.53mm Ø EXPANSION ANCHORS, NUTS OR WASHERS. THE CONTRACTOR MAY SUBMIT FOR APPROVAL AN ALTERNATE METHOD OF ALIGNING AND LEVELING THE ANGLES. THE ALTERNATE METHOD SHALL NOT INCLUDE ANY WELDING TO THE OUTSIDE FACE OF THE ANGLES.

AFTER THE ELASTOMERIC CONCRETE HAS BEEN CAST ON BOTH SIDES OF THE JOINT, REMOVE ANY EXCESS CONCRETE THAT COMES THROUGH THE WEEP HOLES AND THOROUGHLY CLEAN THE ANGLES. ANY DAMAGED STEEL SHALL BE COATED WITH A MINIMUM OF 0.100mm OF ZINC-RICH PAINT IN ACCORDANCE WITH THE STANDARD SPECIFICATIONS.

SEE SPECIAL PROVISIONS FOR EVAZOTE JOINT SEALS.

SEE SPECIAL PROVISIONS FOR ELASTOMERIC CONCRETE.

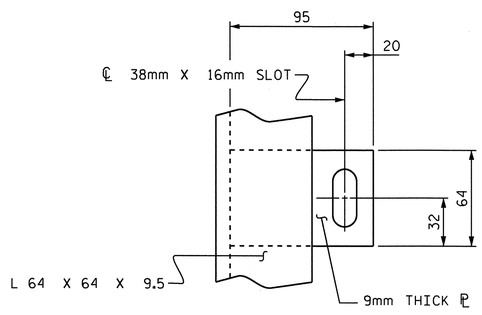

PLAN VIEW OF TAB

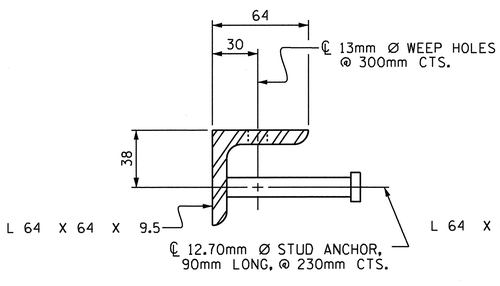

SECTION VIEW OF STUD

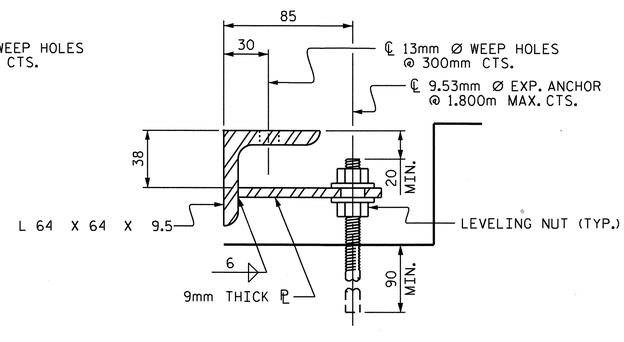

SECTION VIEW OF TAB

ARMORED JOINT ANCHOR ASSEMBLY DETAILS

MOVEMENT AND SETTING AT EVAZOTE JOINT

END BENT	SKEW ANGLE	NOMINAL UNCOMPRESSED SEAL WIDTH	TOTAL MOVEMENT (ALONG ℄ RDWY)	PERPENDICULAR JOINT OPENING AT 7° C	PERPENDICULAR JOINT OPENING AT 16° C	PERPENDICULAR JOINT OPENING AT 32° C
No. 1	93°-59'-54"	80mm	35mm	70mm	64mm	52mm
No. 2	86°-00'-06"	80mm	35mm	70mm	64mm	52mm

TOTAL MOVEMENT IS CALCULATED ALONG THE CENTERLINE OF ROADWAY.
JOINT OPENINGS ARE MEASURED PERPENDICULAR TO THE JOINT.

BILL OF MATERIAL

END BENT	ELASTOMERIC CONCRETE * (CU. m)	TOTAL LENGTH OF ANGLE (m)
No. 1	0.3	28.870
No. 2	0.3	28.870

* BASED ON THE MINIMUM BLOCKOUT SHOWN.

PROJECT NO. X-0002 CB
CUMBERLAND COUNTY
STATION: 118+17.500 -L-

STATE OF NORTH CAROLINA
DEPARTMENT OF TRANSPORTATION
RALEIGH

STANDARD ARMORED EVAZOTE JOINT DETAILS

(WBL)

NORTH CAROLINA PROFESSIONAL SEAL 020441 ENGINEER KRISTY W. ALFORD

REVISIONS						
NO.	BY:	DATE:	NO.	BY:	DATE:	
1			3			
2			4			

SHEET NO. S-23
TOTAL SHEETS 134

ASSEMBLED BY : MIKE BRITT	DATE : 6-2-10
CHECKED BY : D.G. ELY	DATE : 7-1-10
DRAWN BY : EEM 1/96	REV. 7/10/01 LES/RDR
CHECKED BY : RGW 1/96	REV. 5/7/03RR RWW/JTE
	REV. 5/1/06 TLA/GM

29-OCT-2010 12:03
F:\Structures\StrIWBL\SuperstructureDrawings\X0002C_str2_AEJ.dgn
kalford

STD. NO. AEJ1SM

STR.#1

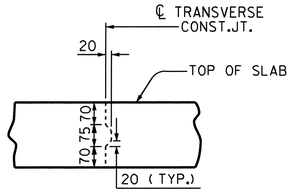

TRANSVERSE CONSTRUCTION JOINT DETAIL

NOTE: SLAB REINFORCING STEEL SHALL BE CONTINUOUS THRU JOINT

SUPERSTRUCTURE REINFORCING STEEL LENGTHS ARE BASED ON THE FOLLOWING MINIMUM SPLICE LENGTHS					
BAR SIZE	SUPERSTRUCTURE EXCEPT APPROACH SLABS, PARAPET, AND BARRIER RAIL		APPROACH SLABS		PARAPET AND BARRIER RAIL
	EPOXY COATED	UNCOATED	EPOXY COATED	UNCOATED	
#13	610	540	610	540	840
#16	770	660	770	660	1050
#19	920	790	1190	790	1330
#22	1580	1060			
#25	2080	1390			

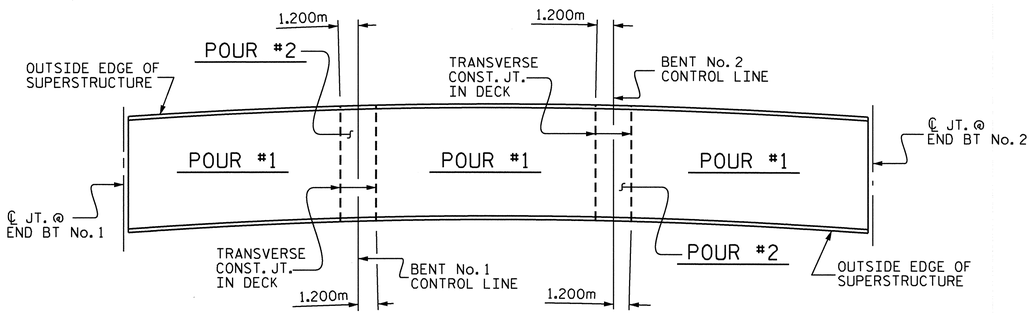

OPTIONAL CONCRETE DECK POUR DETAIL

ALL DIMENSIONS ARE TAKEN ALONG THE ARC ON THE OUTSIDE EDGE OF SUPERSTRUCTURE
(POUR #2's CANNOT BE STARTED UNTIL ALL POUR #1's REACH A MINIMUM COMPRESSIVE STRENGTH OF 20.7 MPa)

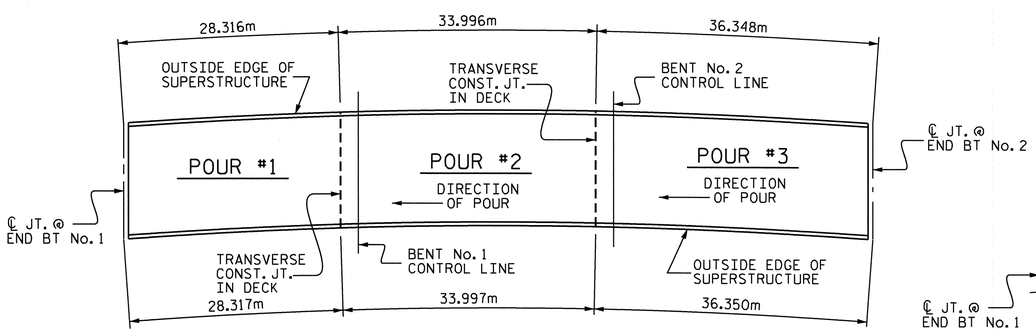

CONCRETE DECK POUR DETAIL

ALL DIMENSIONS ARE TAKEN ALONG THE ARC ON THE OUTSIDE EDGE OF SUPERSTRUCTURE

SPAN "A" THRU "C" CLASS AA CONCRETE BREAKDOWN		
POUR #1	132.5	m^3
POUR #2	172.2	m^3
POUR #3	184.8	m^3
SPAN "A" THRU "C" CLASS AA CONCRETE	489.5	m^3

REINFORCING BAR SCHEDULE

BAR	No.	SIZE	TYPE	LENGTH	WEIGHT
* A1	547	#16	STR.	15280	12972
A2	547	#16	STR.	15280	12972
* B1	99	#13	STR.	7220	710
* B2	66	#13	STR.	6220	408
* B3	99	#13	STR.	7980	785
* B4	24	#13	STR.	8780	209
* B5	99	#22	STR.	8560	2578
* B6	32	#22	STR.	9760	950
* B7	99	#22	STR.	8900	2680
* B8	32	#22	STR.	10260	999
B9	266	#16	STR.	14640	6044
* K1	4	#25	1	4100	65
* K2	4	#25	1	4280	68
* K3	16	#25	2	6120	389
K4	20	#16	STR.	2220	69
K5	20	#13	STR.	1400	28
K6	100	#13	STR.	2320	231
K7	20	#13	STR.	1480	29
K8	28	#13	STR.	6820	190
* S1	50	#16	4	1800	140
* S2	20	#16	3	1020	32
S3	360	#13	5	860	308
U1	50	#13	2	5580	277
U2	20	#13	3	3340	66

REINFORCING STEEL 20,214 kg

* EPOXY COATED REINFORCING STEEL 22,985 kg

* THESE BARS ARE EPOXY COATED

BAR TYPES

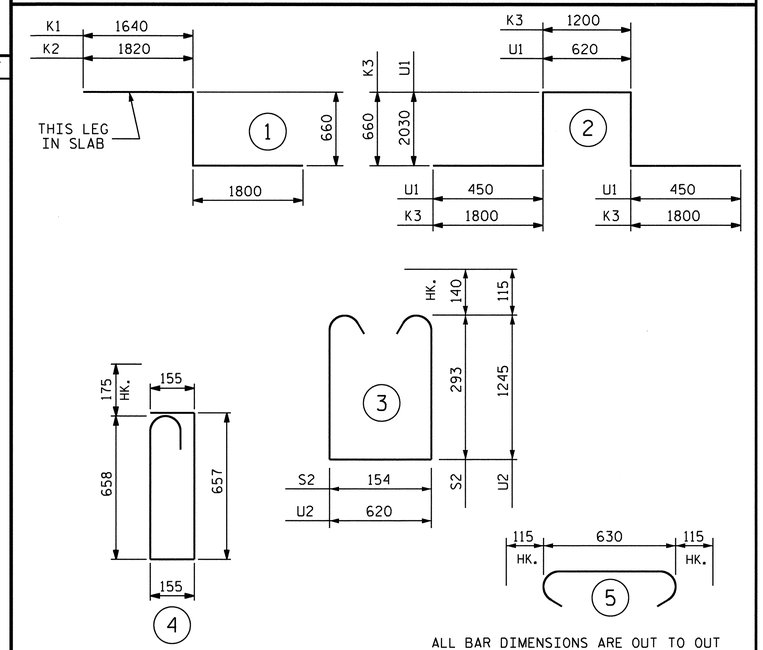

ALL BAR DIMENSIONS ARE OUT TO OUT

SUPERSTRUCTURE BILL OF MATERIAL

WBL	CLASS AA CONCRETE	REINFORCING STEEL	EPOXY COATED REINFORCING STEEL
	(CU. METER)	(kg)	(kg)
TOTALS**	489.5	20,214	22,985

** QUANTITIES FOR BARRIER RAIL ARE NOT INCLUDED

GROOVING BRIDGE FLOORS	
APPROACH SLABS	194.8 m^2
BRIDGE DECK	1,328.1 m^2
TOTAL	1,522.9 m^2

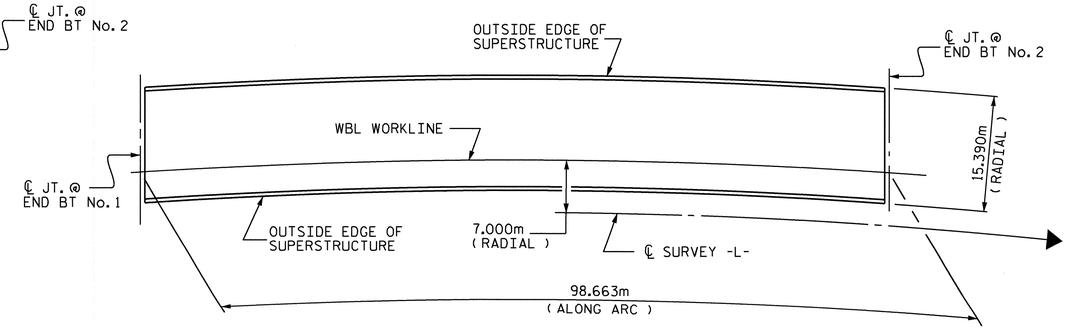

LAYOUT FOR COMPUTING AREA OF REINFORCED CONCRETE DECK SLAB

(SQ. METERS = 1,518.4)

PROJECT NO. X-0002 CB
CUMBERLAND COUNTY
STATION: 118+17.500 -L-

STATE OF NORTH CAROLINA
DEPARTMENT OF TRANSPORTATION
RALEIGH

SUPERSTRUCTURE

BILL OF MATERIAL

(WBL)

NORTH CAROLINA PROFESSIONAL SEAL 029441 ENGINEER KRISTY W. ALFORD

REVISIONS						
NO.	BY:	DATE:	NO.	BY:	DATE:	
1			3			
2			4			

SHEET NO. S-24
TOTAL SHEETS 134

DRAWN BY : MIKE BRITT DATE : 6-3-10
CHECKED BY : D.G. ELY DATE : 7-1-10

14-SEP-2010 09:57
F:\Structures\StrIWBL\SuperstructureDrawings\X0002C_str2_BM.dgn
kalford

STR.#1

NOTES:

STIRRUPS AND U2 BARS IN CAP MAY BE SHIFTED AS NECESSARY TO CLEAR ANCHOR BOLTS.

BACKWALL SHALL BE PLACED BEFORE APPLYING THE EPOXY PROTECTIVE COATING.

THE TOP SURFACE OF THE CAP EXCEPT THE BRIDGE SEAT BUILDUPS SHALL BE SLOPED TRANSVERSELY FROM THE FILL FACE TO THE BACK FACE AT THE RATE OF 2%.

THE CONCRETE IN THE SHADED AREA OF THE WING SHALL BE POURED AFTER THE BARRIER RAILS ARE CAST IF SLIP FORMING IS USED.

THE #16 V1 IN THE BACKWALL SHALL BE PLACED 50mm CLEAR FROM THE TOP OF THE BACKWALL.

THE CONTRACTOR SHALL PROVIDE FOR INSTALLATION OF THE 102mm DIAMETER DRAIN PIPE THROUGH THE WING WALL AS REQUIRED FOR REINFORCED BRIDGE APPROACH FILLS, SEE THE ROADWAY PLANS. REINFORCING STEEL IN THE WING WALL MAY BE SHIFTED AS NECESSARY TO CLEAR THE DRAIN PIPE.

▲FOR LOCATION OF ELEVATION BETWEEN BRIDGE SEATS, SEE "SECTION A-A", SHEET 3 OF 3.

★THIS ELEVATION TAKEN ON FILL FACE OF BACKWALL.

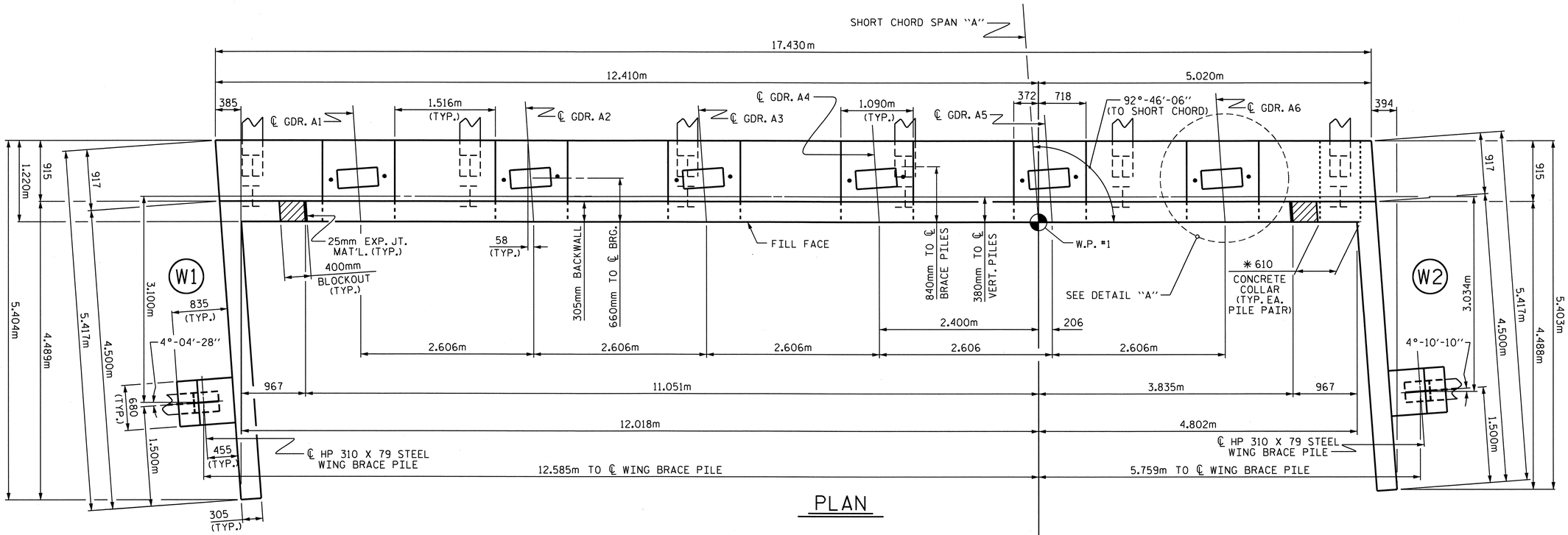

PLAN

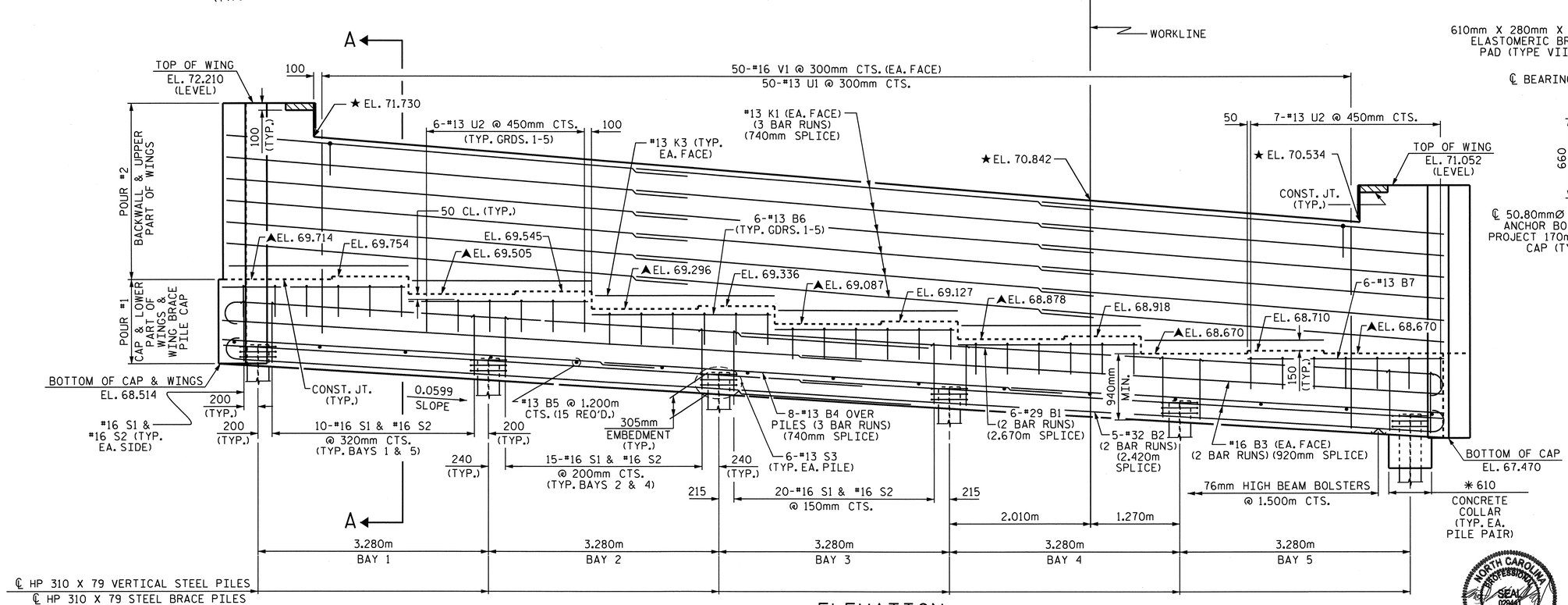

ELEVATION

(FOR CLARITY, BRACE PILE CAPS AT WINGS NOT SHOWN)

✱ ADDITIONAL CONCRETE COLLARS FOR STEEL PILES NOT SHOWN IN PLAN & ELEVATION VIEWS FOR CLARITY SEE "CONCRETE COLLAR FOR STEEL PILES DETAILS", SHEET 3 OF 3.

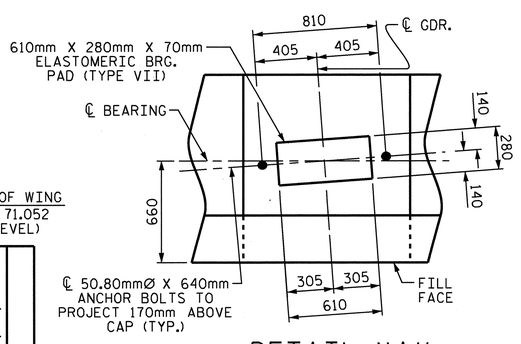

DETAIL "A"

(TYP. EA. GIRDER)

PROJECT NO. X-0002CB

CUMBERLAND COUNTY

STATION: 118+17.500 -L-

SHEET 1 OF 3

STATE OF NORTH CAROLINA
DEPARTMENT OF TRANSPORTATION
RALEIGH

SUBSTRUCTURE

END BENT No. 1

(WBL)

NORTH CAROLINA PROFESSIONAL SEAL 029441 ENGINEER KRISTY W. ALFORD

REVISIONS								SHEET NO.
NO.	BY:	DATE:	NO.	BY:	DATE:			S-25
1			3					TOTAL SHEETS
2			4					134

DRAWN BY : B. L. GREEN DATE : 4/12/08
CHECKED BY : S. B. WILLIAMS DATE : 07/10

STR. #1

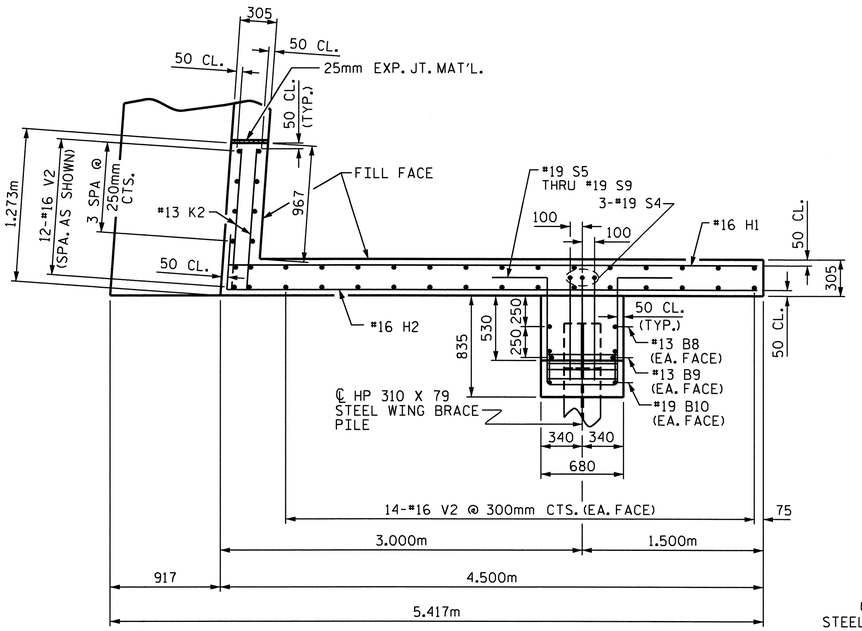

PLAN OF WING (W1)

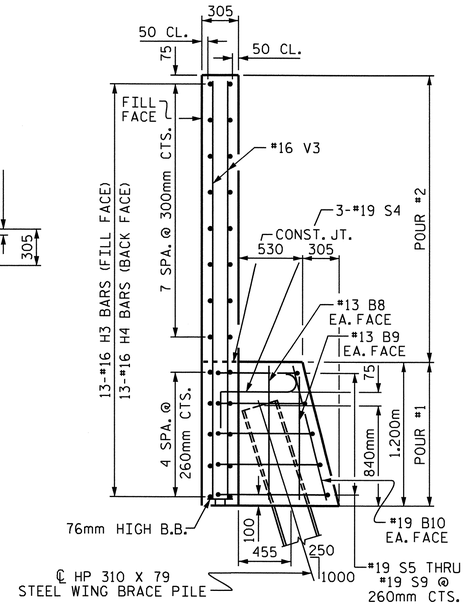

SECTION Y-Y

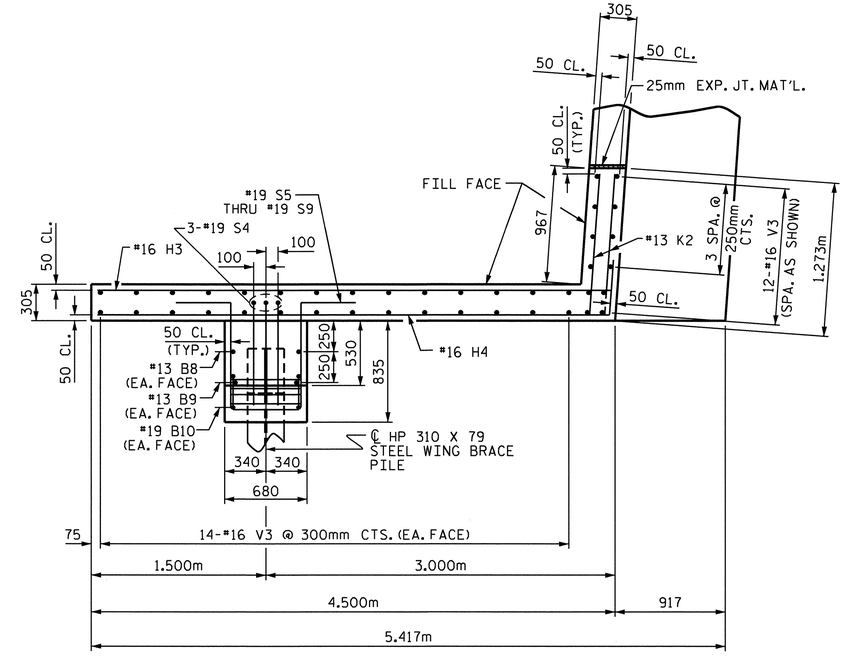

PLAN OF WING (W2)

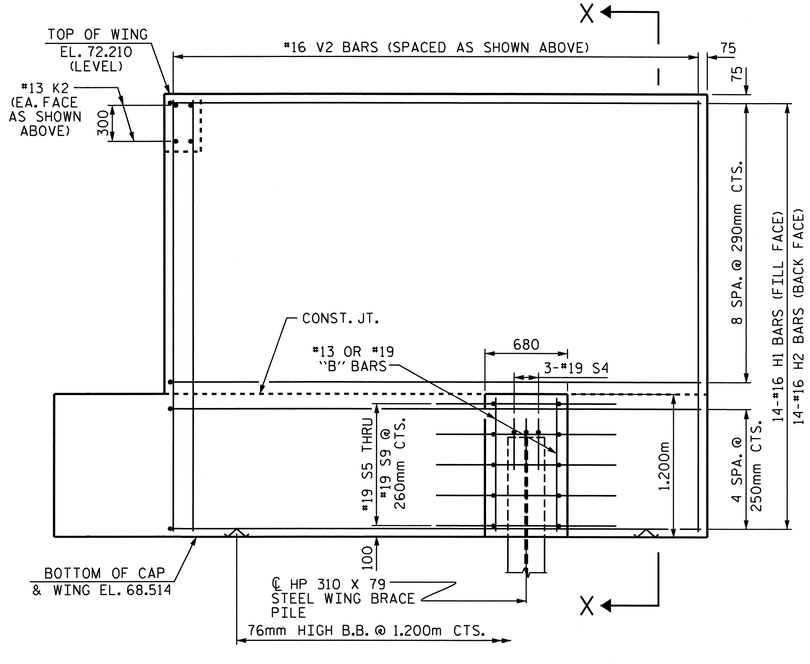

ELEVATION OF WING (W1)

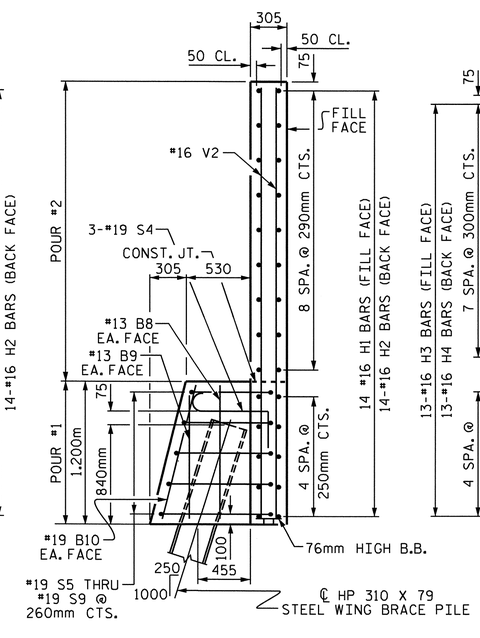

SECTION X-X

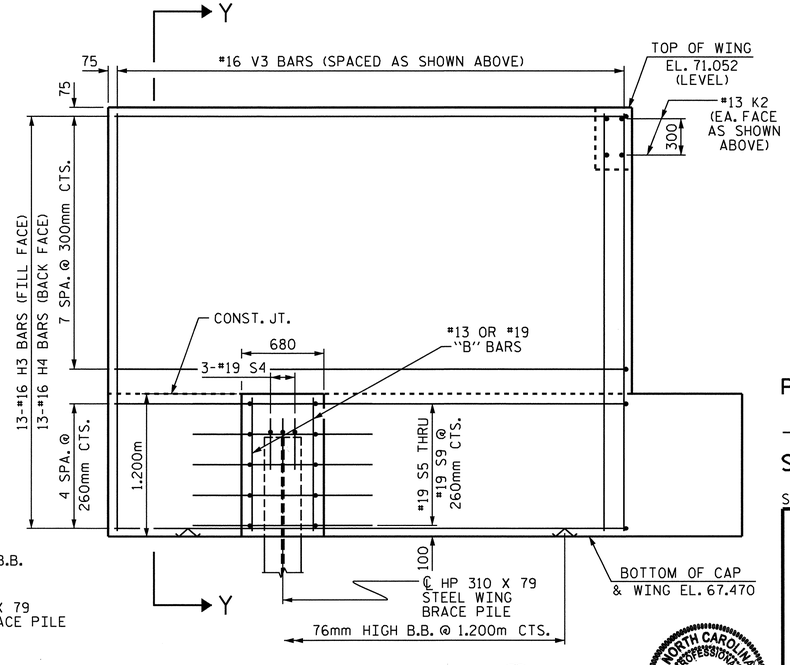

ELEVATION OF WING (W2)

PROJECT NO. X-0002CB

CUMBERLAND COUNTY

STATION: 118+17.500 -L-

SHEET 2 OF 3

STATE OF NORTH CAROLINA
DEPARTMENT OF TRANSPORTATION
RALEIGH

SUBSTRUCTURE

END BENT No. 1

(WBL)

NORTH CAROLINA PROFESSIONAL SEAL 029441 ENGINEER KRISTY W. ALFORD

REVISIONS						SHEET NO.
NO.	BY:	DATE:	NO.	BY:	DATE:	S-26
1			3			TOTAL SHEETS
2			4			134

DRAWN BY : B. L. GREEN DATE : 4/13/08
CHECKED BY : S. B. WILLIAMS DATE : 5/9/08

14-SEP-2010 09:58
F:\Structures\StrIWBL\SubstructureDrawings\x0002c_str2_EBI.dgn
kalford

STR. #1

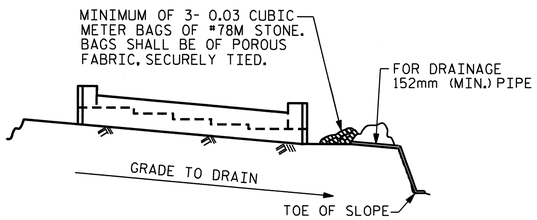

BAGGED STONE AND PIPE SHALL BE PLACED IMMEDIATELY AFTER COMPLETION OF END BENT EXCAVATION. PIPE MAY BE EITHER CONCRETE, CORRUGATED STEEL, CORRUGATED ALUMINUM ALLOY, OR CORRUGATED PLASTIC. PERFORATED PIPE WILL NOT BE ALLOWED.

BAGGED STONE SHALL REMAIN IN PLACE UNTIL THE ENGINEER DIRECTS THAT IT BE REMOVED. THE CONTRACTOR SHALL REMOVE AND DISPOSE OF SILT ACCUMULATIONS AT BAGGED STONE WHEN SO DIRECTED BY THE ENGINEER. BAGS SHALL BE REMOVED AND REPLACED WHENEVER THE ENGINEER DETERMINES THAT THEY HAVE DETERIORATED AND LOST THEIR EFFECTIVENESS.

NO SEPARATE PAYMENT WILL BE MADE FOR THIS WORK AND THE ENTIRE COST OF THIS WORK SHALL BE INCLUDED IN THE UNIT CONTRACT PRICE BID FOR THE SEVERAL PAY ITEMS.

TEMPORARY DRAINAGE AT END BENT

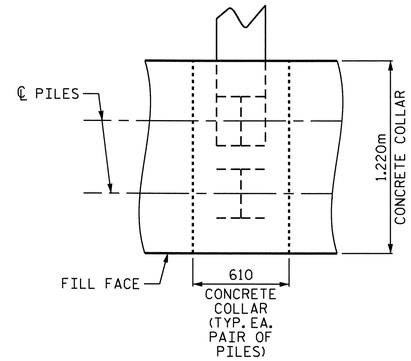

PLAN

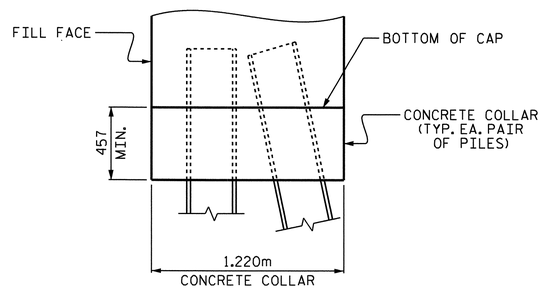

ELEVATION

CONCRETE COLLAR FOR STEEL PILES DETAILS

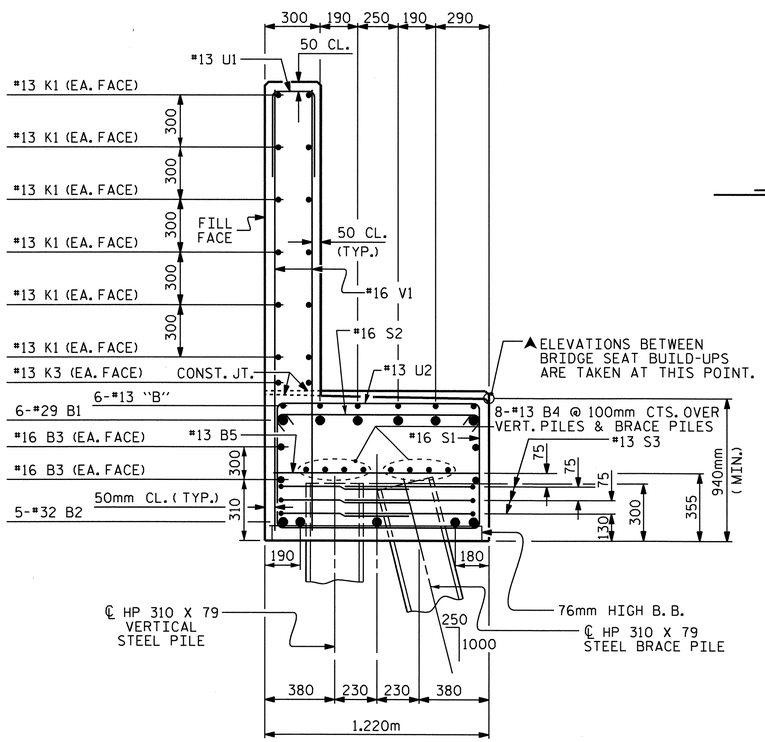

SECTION A-A

CONCRETE COLLAR NOT SHOWN FOR CLARITY, SEE "CONCRETE COLLAR FOR STEEL PILES DETAILS"

BAR TYPES

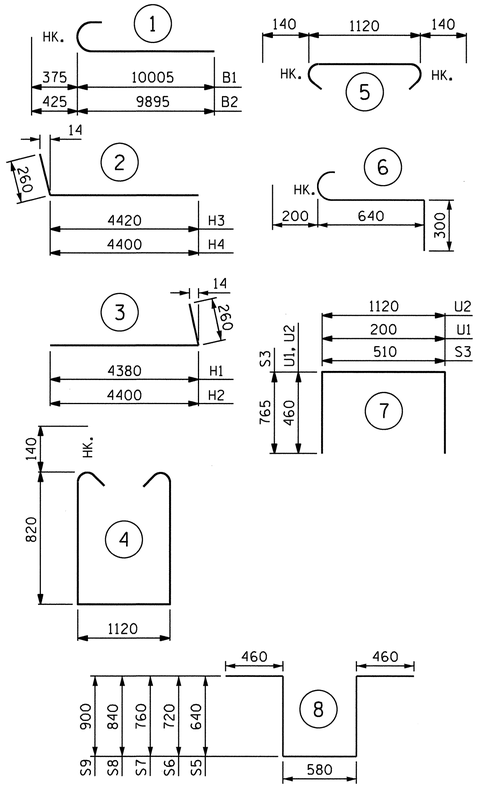

ALL BAR DIMENSIONS ARE OUT TO OUT.

BILL OF MATERIAL

END BENT No. 1

BAR	NUMBER	SIZE	TYPE	LENGTH	WEIGHT
B1	12	#29	1	10380	630
B2	10	#32	1	10300	660
B3	8	#16	STR	9120	113
B4	24	#13	STR	6280	150
B5	15	#13	STR	1120	17
B6	30	#13	STR	2500	75
B7	6	#13	STR	2680	16
B8	4	#13	STR	1100	4
B9	4	#13	STR	1040	4
B10	4	#19	STR	1140	10
H1	14	#16	3	4640	101
H2	14	#16	3	4660	101
H3	13	#16	2	4680	94
H4	13	#16	2	4660	94
K1	36	#13	STR	6280	225
K2	8	#13	STR	1160	9
K3	12	#13	STR	2560	31
S1	72	#16	4	3040	340
S2	72	#16	5	1400	156
S3	36	#13	7	2040	73
S4	6	#19	6	1140	15
S5	2	#19	8	2780	12
S6	2	#19	8	2940	13
S7	2	#19	8	3020	13
S8	2	#19	8	3180	14
S9	2	#19	8	3300	15
U1	50	#13	7	1120	56
U2	37	#13	7	2020	74
V1	100	#16	STR	2860	444
V2	40	#16	STR	3580	222
V3	40	#16	STR	3480	216

REINFORCING STEEL 3997 kg

CLASS A CONCRETE BREAKDOWN:

POUR #1 - CAP, LOWER WING, WING BRACE PILE CAPS, & CONCRETE COLLARS 31.1 m^3

POUR #2 - BACKWALL & UPPER PART OF WINGS 17.1 m^3

TOTAL 48.2 m^3

HP 310 X 79 STEEL PILES
NO. = 14 294 METERS

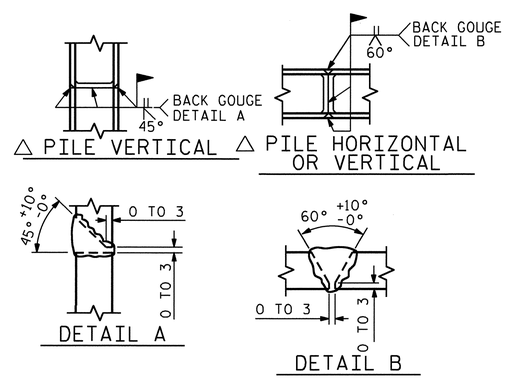

△ POSITION OF PILE DURING WELDING.

PILE SPLICE DETAILS

PROJECT NO. X-0002CB
CUMBERLAND COUNTY
STATION: 118+17.500 -L-

SHEET 3 OF 3

STATE OF NORTH CAROLINA
DEPARTMENT OF TRANSPORTATION
RALEIGH

SUBSTRUCTURE
END BENT No. 1
(WBL)

NORTH CAROLINA PROFESSIONAL SEAL 029441 ENGINEER KRISTY W. ALFORD 8/14/08

REVISIONS							SHEET NO.
NO.	BY:	DATE:	NO.	BY:	DATE:		S-27
1			3				TOTAL SHEETS
2			4				134

DRAWN BY : B. L. GREEN DATE : 4/14/08
CHECKED BY : S. B. WILLIAMS DATE : 07/10

14-SEP-2010 09:59
F:\Structures\StrIWBL\SubstructureDrawings\x0002c_str2_EB1.dgn
kalford

STR. #1

NOTES:

STIRRUPS AND "U" IN CAP MAY BE SHIFTED AS NECESSARY TO CLEAR ANCHOR BOLTS.

HOOKS ON "V" BARS MAY BE TURNED AS NECESSARY FOR PLACING REINFORCING STEEL.

FOR PILE SPLICE DETAILS, SEE END BENT No. 1.

FOR GALVANIZED PILES, A MINIMUM OF 5 METERS OF THE TOP OF EACH PILE SHALL BE GALVANIZED IN ACCORDANCE WITH SECTION 1076 OF THE STANDARD SPECIFICATIONS.

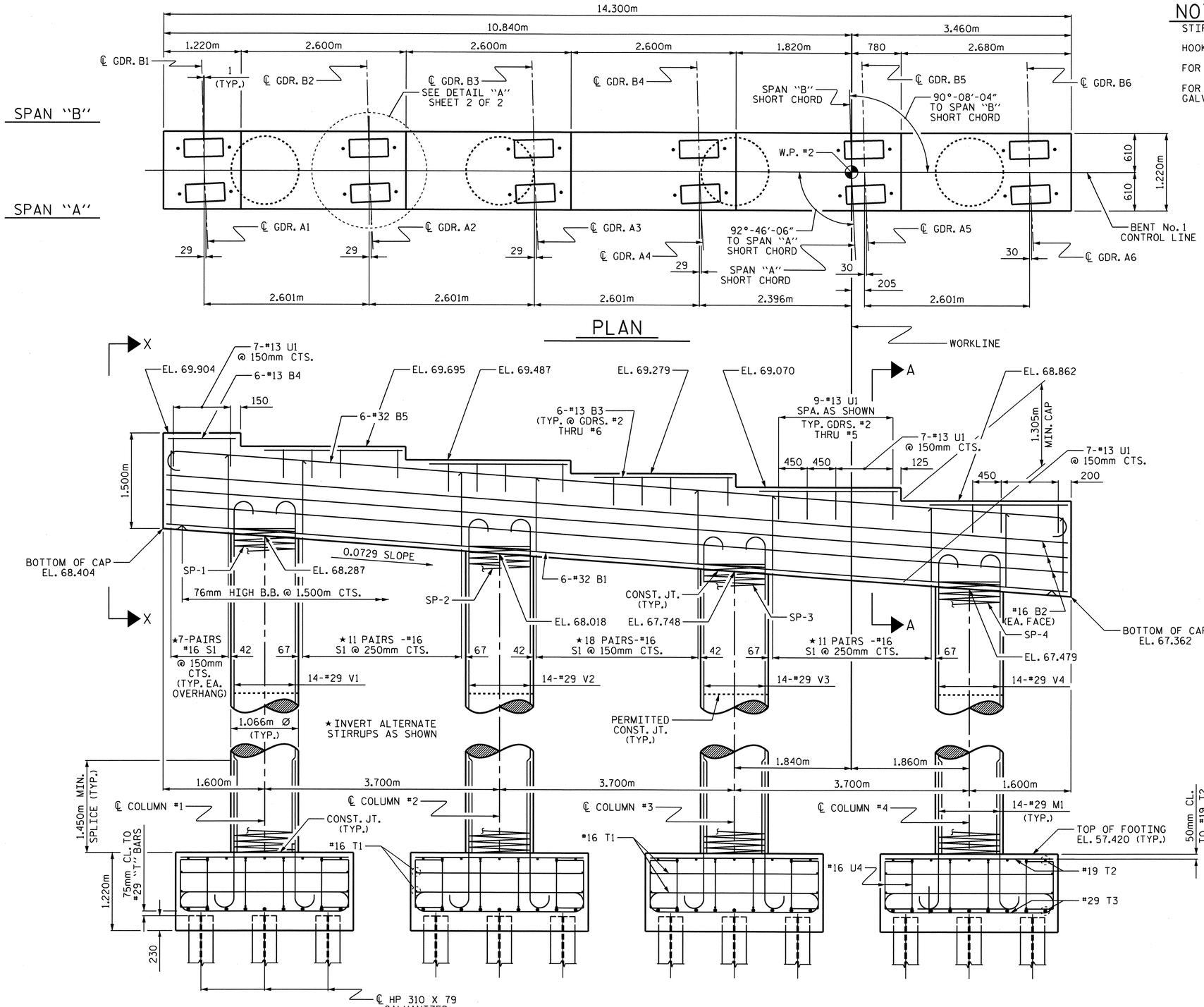

ELEVATION

DIMENSIONS & REINFORCING STEEL ARE TYPICAL FOR EACH COLUMN & FOOTING

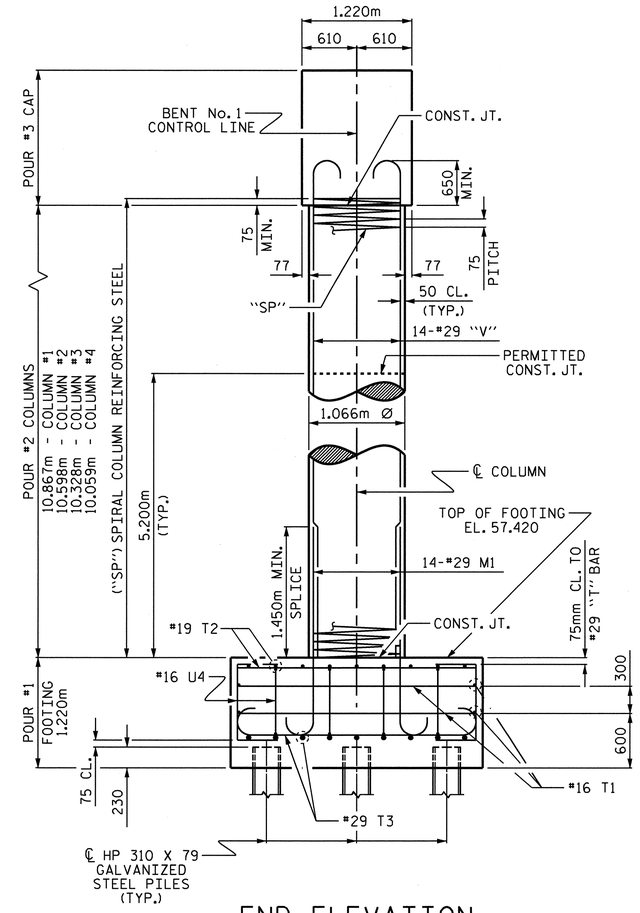

END ELEVATION

REINFORCING STEEL, DIMENSIONS AND DETAILS ARE TYPICAL FOR EACH COLUMN & FOOTING UNLESS OTHERWISE NOTED.

PROJECT NO. X-0002CB

CUMBERLAND COUNTY

STATION: 118+17.500 -L-

SHEET 1 OF 2

STATE OF NORTH CAROLINA
DEPARTMENT OF TRANSPORTATION
RALEIGH

SUBSTRUCTURE

BENT No. 1

(WBL)

NORTH CAROLINA PROFESSIONAL SEAL 029441 ENGINEER KRISTY W. ALFORD

REVISIONS						SHEET NO.
NO.	BY:	DATE:	NO.	BY:	DATE:	S-28
1			3			TOTAL SHEETS
2			4			134

DRAWN BY : T. BANKOVICH DATE : 2-2008
CHECKED BY : S.B. WILLIAMS DATE : 4-2008

29-OCT-2010 12:07
F:\Structures\StrlWBL\SubstructureDrawings\x0002c_str2_btl.dgn
kalford

STR. #1

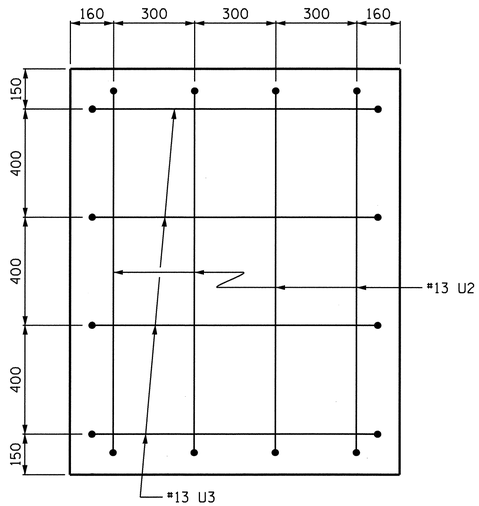

VIEW X-X

TYPICAL EACH END

BAR TYPES

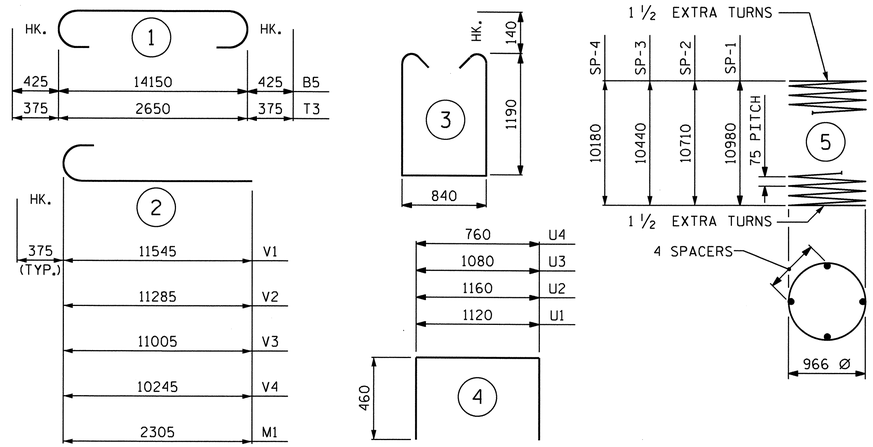

ALL BAR DIMENSIONS ARE OUT TO OUT

BILL OF MATERIAL

BENT No. 1

BAR	NO.	SIZE	TYP	LENGTH	WEIGHT
B1	6	#32	STR	14200	546
B2	6	#16	STR	14200	132
B3	30	#13	STR	2180	65
B4	6	#13	STR	1120	7
B5	6	#32	1	15000	576
M1	56	#29	2	2680	759
S1	108	#16	3	3500	587
T1	32	#16	STR	2700	134
T2	72	#19	STR	2700	434
T3	72	#29	1	3400	1239
U1	51	#13	4	2040	103
U2	8	#13	4	2280	18
U3	8	#13	4	2000	16
U4	64	#16	4	1680	167
V1	14	#29	2	11920	844
V2	14	#29	2	11660	826

BAR	NO.	SIZE	TYP	LENGTH	WEIGHT
V3	14	#29	2	11380	806
V4	14	#29	2	12120	859
REINFORCING STEEL					8118 kg.
SP-1	1	*	5	447460	445
SP-2	1	*	5	436680	434
SP-3	1	*	5	425900	423
SP-4	1	*	5	415500	413
SPIRAL COLUMN REINFORCING STEEL					1715 kg.

* THE SP-1 THRU SP-4 SPIRAL REINFORCING STEEL SHALL BE W20 OF D-20 COLD DRAWN WIRE OR #13 PLAIN OR DEFORMED BAR.

CLASS A CONCRETE BREAKDOWN	
POUR #1 (FOOTINGS)	38.3m³
POUR #2 (COLUMNS)	37.4m³
POUR #3 (CAP)	25.2m³
TOTAL CLASS A CONCRETE	100.9m³

HP 310 X 79 GALVANIZED STEEL PILES
No. = 36 — 504 METERS

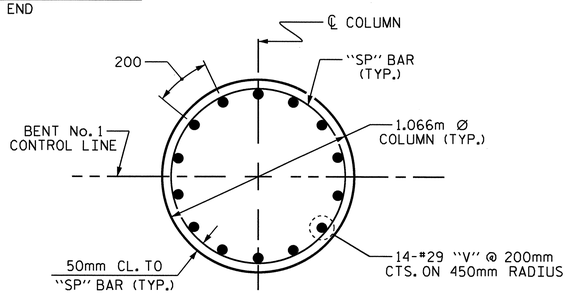

PLAN OF COLUMN

REINFORCING STEEL AND DIMENSIONS ARE TYPICAL FOR EACH COLUMN

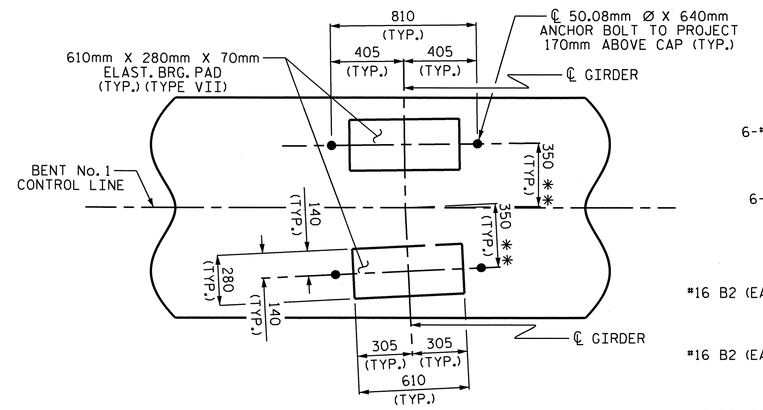

DETAIL "A"

** MEASURED ALONG ℄ GIRDER

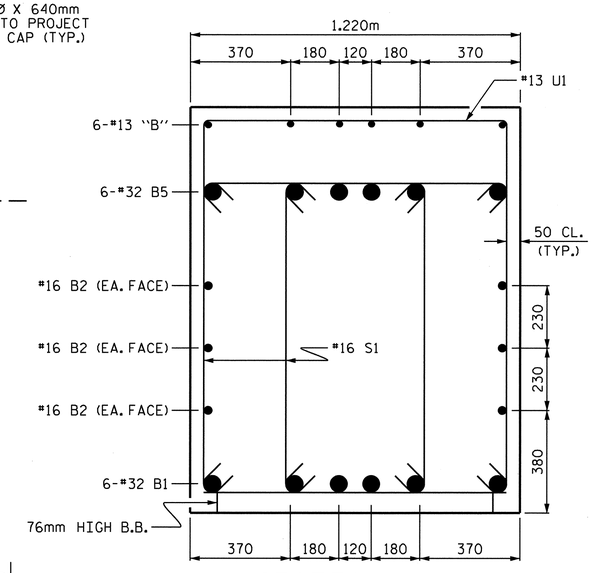

SECTION A-A

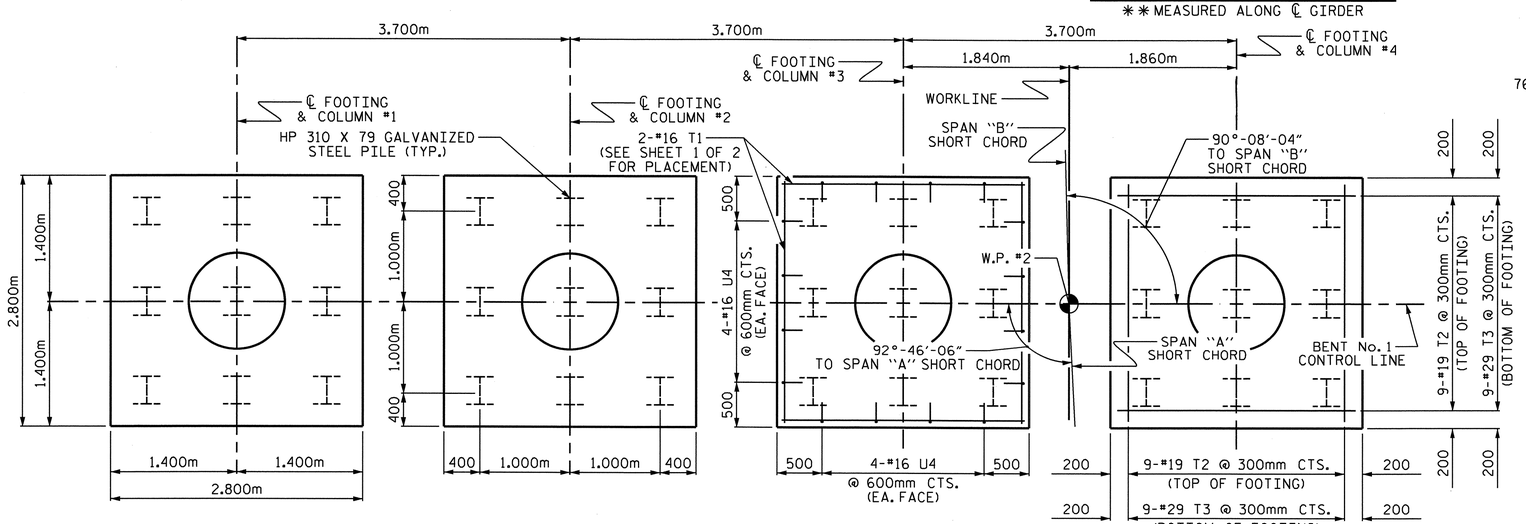

PLAN OF FOOTINGS

PILE PLACEMENT, DIMENSIONS & REINFORCING STEEL ARE TYPICAL FOR EACH FOOTING

PROJECT NO. X-0002CB
CUMBERLAND COUNTY
STATION: 118+17.50 -L-

SHEET 2 OF 2

STATE OF NORTH CAROLINA
DEPARTMENT OF TRANSPORTATION
RALEIGH

SUBSTRUCTURE

BENT No. 1

(WBL)

NORTH CAROLINA PROFESSIONAL SEAL 029441 ENGINEER KRISTY W. ALFORD

REVISIONS						SHEET NO.
NO.	BY:	DATE:	NO.	BY:	DATE:	S-29
1			3			TOTAL SHEETS
2			4			134

DRAWN BY : T. BANKOVICH DATE : 2-2008
CHECKED BY : S.B. WILLIAMS DATE : 4-2008

29-OCT-2010 12:07
F:\Structures\StrIWBL\SubstructureDrawings\x0002c_str2_bt1.dgn
kalford

STR. #1

NOTES:

STIRRUPS AND "U" IN CAP MAY BE SHIFTED AS NECESSARY TO CLEAR ANCHOR BOLTS.

HOOKS ON "V" BARS MAY BE TURNED AS NECESSARY FOR PLACING REINFORCING STEEL.

FOR PILE SPLICE DETAILS, SEE END BENT No. 1.

FOR GALVANIZED PILES, A MINIMUM OF 5 METERS OF THE TOP OF EACH PILE SHALL BE GALVANIZED IN ACCORDANCE WITH SECTION 1076 OF THE STANDARD SPECIFICATIONS.

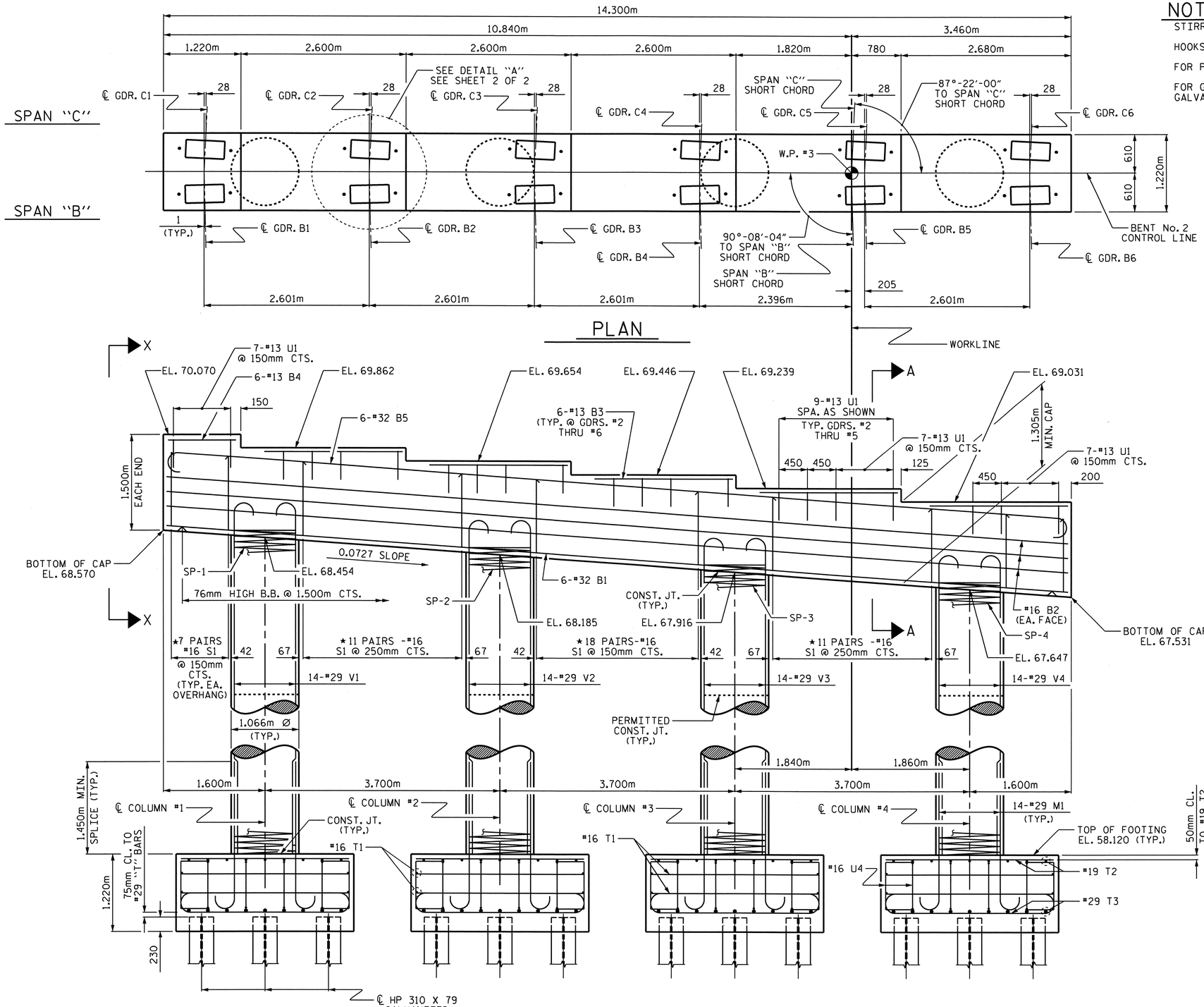

ELEVATION

DIMENSIONS & REINFORCING STEEL ARE TYPICAL FOR EACH COLUMN & FOOTING

★ INVERT ALTERNATE STIRRUPS AS SHOWN

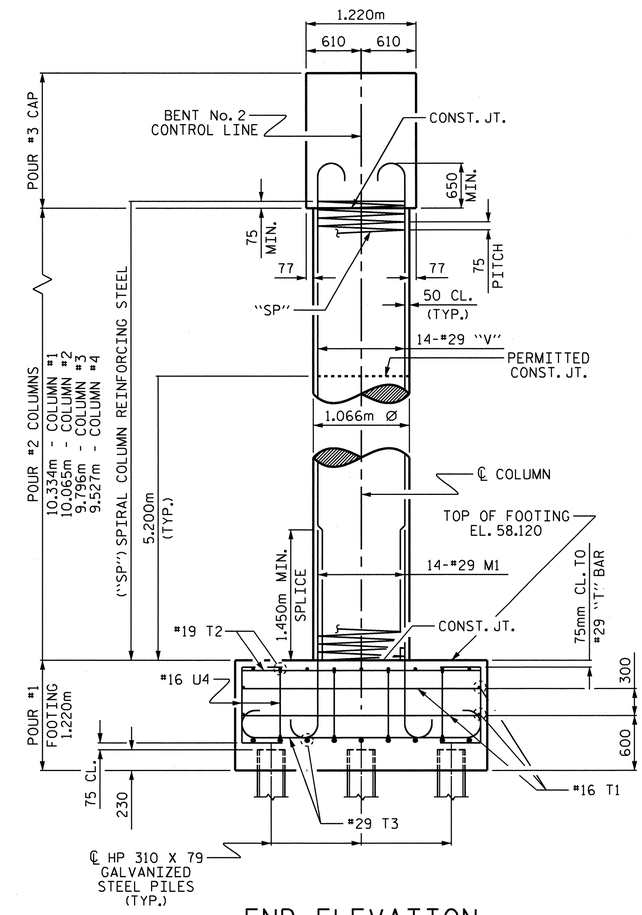

END ELEVATION

REINFORCING STEEL, DIMENSIONS AND DETAILS ARE TYPICAL FOR EACH COLUMN & FOOTING UNLESS OTHERWISE NOTED.

PROJECT NO. X-0002CB

CUMBERLAND COUNTY

STATION: 118+17.500 -L-

SHEET 1 OF 2

STATE OF NORTH CAROLINA
DEPARTMENT OF TRANSPORTATION
RALEIGH

SUBSTRUCTURE

BENT No. 2

(WBL)

NORTH CAROLINA PROFESSIONAL SEAL 029441 ENGINEER KRISTY W. ALFORD

REVISIONS								SHEET NO.
NO.	BY:	DATE:	NO.	BY:	DATE:			S-30
1			3					TOTAL SHEETS
2			4					134

DRAWN BY : T. BANKOVICH DATE : 2-2008
CHECKED BY : S.B. WILLIAMS DATE : 4-2008

29-OCT-2010 12:08
F:\Structures\StrIWBL\SubstructureDrawings\X0002C_str2_BT2.dgn
kalford

STR. #1

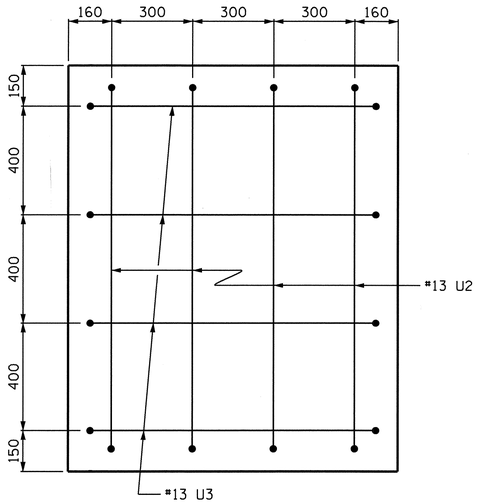

VIEW X-X

TYPICAL EACH END

BAR TYPES

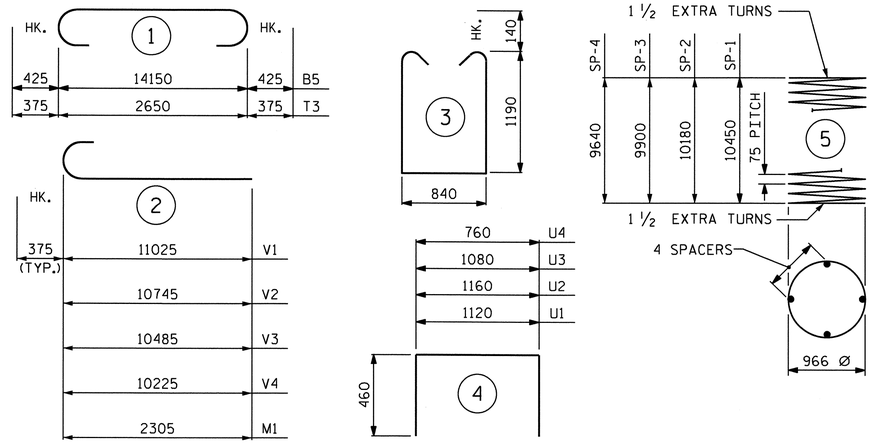

ALL BAR DIMENSIONS ARE OUT TO OUT

BILL OF MATERIAL

BENT No. 2

BAR	NO.	SIZE	TYP	LENGTH	WEIGHT
B1	6	#32	STR	14200	546
B2	6	#16	STR	14200	132
B3	30	#13	STR	2180	65
B4	6	#13	STR	1120	7
B5	6	#32	1	15000	576
M1	56	#29	2	2080	759
S1	108	#16	3	3500	587
T1	32	#16	STR	2700	134
T2	72	#19	STR	2700	434
T3	72	#29	1	3400	1239
U1	51	#13	4	2040	103
U2	8	#13	4	2280	18
U3	8	#13	4	2000	16
U4	64	#16	4	1680	167
V1	14	#29	2	11400	808
V2	14	#29	2	11120	788

BAR	NO.	SIZE	TYP	LENGTH	WEIGHT
V3	14	#29	2	10860	769
V4	14	#29	2	10600	751
REINFORCING STEEL					7899 kg.
SP-1	1	✳	5	426300	424
SP-2	1	✳	5	415500	413
SP-3	1	✳	5	404320	402
SP-4	1	✳	5	393940	392
SPIRAL COLUMN REINFORCING STEEL					1631 kg.

✳ THE SP-1 THRU SP-4 SPIRAL REINFORCING STEEL SHALL BE W20 OF D-20 COLD DRAWN WIRE OR #13 PLAIN OR DEFORMED BAR.

CLASS A CONCRETE BREAKDOWN	
POUR #1 (FOOTINGS)	$38.3m^3$
POUR #2 (COLUMNS)	$35.5m^3$
POUR #3 (CAP)	$25.2m^3$
TOTAL CLASS A CONCRETE	$99.0m^3$

HP 310 X 79 GALVANIZED STEEL PILES
No. = 36 468 METERS

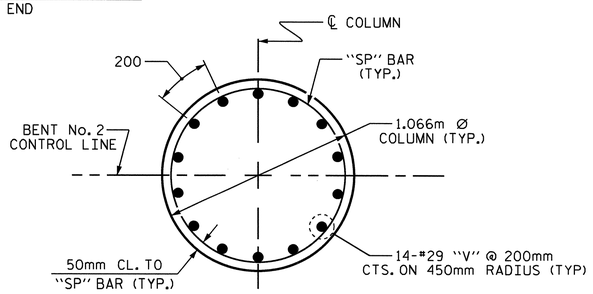

PLAN OF COLUMN

REINFORCING STEEL AND DIMENSIONS ARE TYPICAL FOR EACH COLUMN

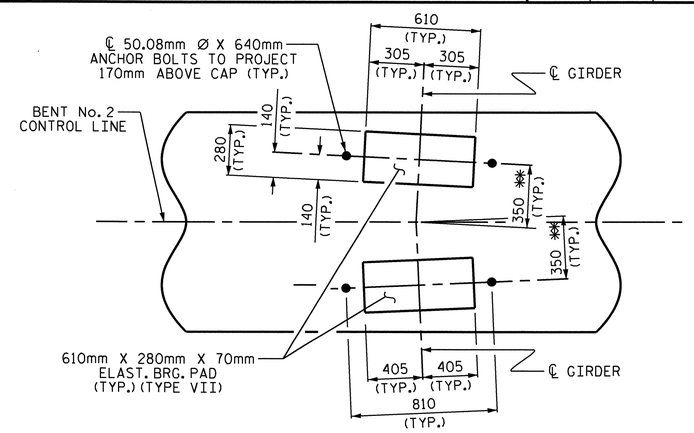

DETAIL "A"

✳✳ MEASURED ALONG ℄ GIRDER

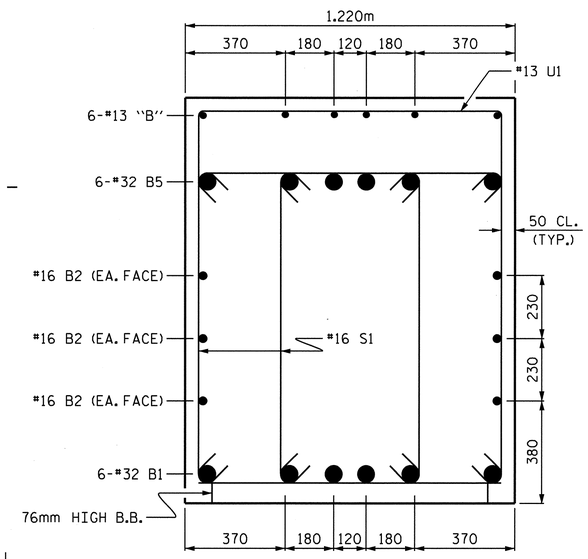

SECTION A-A

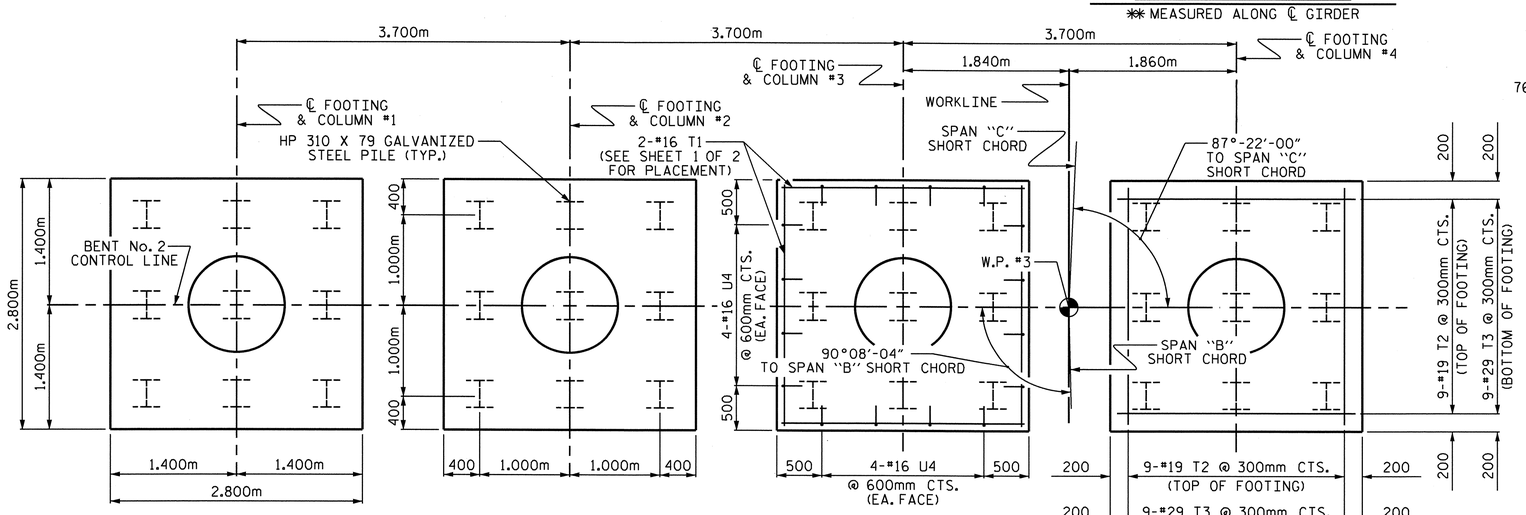

PLAN OF FOOTINGS

PILE PLACEMENT, DIMENSIONS & REINFORCING STEEL ARE TYPICAL FOR EACH FOOTING

PROJECT NO. X-0002CB
CUMBERLAND COUNTY
STATION: 118+17.50 -L-

SHEET 2 OF 2

STATE OF NORTH CAROLINA
DEPARTMENT OF TRANSPORTATION
RALEIGH

SUBSTRUCTURE

BENT No. 2

(WBL)

NORTH CAROLINA PROFESSIONAL SEAL 029441 ENGINEER KRISTY W. ALFORD

REVISIONS						SHEET NO.
NO.	BY:	DATE:	NO.	BY:	DATE:	S-31
1			3			TOTAL SHEETS
2			4			134

STR. #1

DRAWN BY : T. BANKOVICH DATE : 2-2008
CHECKED BY : S.B. WILLIAMS DATE : 4-2008

29-OCT-2010 12:08
F:\Structures\StrIWBL\SubstructureDrawings\X0002C_str2_BT2.dgn
kalford

NOTES:

STIRRUPS AND U2 BARS IN CAP MAY BE SHIFTED AS NECESSARY TO CLEAR ANCHOR BOLTS.

BACKWALL SHALL BE PLACED BEFORE APPLYING THE EPOXY PROTECTIVE COATING.

THE TOP SURFACE OF THE CAP EXCEPT THE BRIDGE SEAT BUILDUPS SHALL BE SLOPED TRANSVERSELY FROM THE FILL FACE TO THE BACK FACE AT THE RATE OF 2%.

THE CONCRETE IN THE SHADED AREA OF THE WING SHALL BE POURED AFTER THE BARRIER RAILS ARE CAST IF SLIP FORMING IS USED.

THE #16 V1 IN THE BACKWALL SHALL BE PLACED 50mm CLEAR FROM THE TOP OF THE BACKWALL.

THE CONTRACTOR SHALL PROVIDE FOR INSTALLATION OF THE 102mm DIAMETER DRAIN PIPE THROUGH THE WING WALL AS REQUIRED FOR REINFORCED BRIDGE APPROACH FILLS, SEE THE ROADWAY PLANS. REINFORCING STEEL IN THE WING WALL MAY BE SHIFTED AS NECESSARY TO CLEAR THE DRAIN PIPE.

▲FOR LOCATION OF ELEVATION BETWEEN BRIDGE SEATS, SEE "SECTION A-A", SHEET 3 OF 3.

★THIS ELEVATION TAKEN ON FILL FACE OF BACKWALL.

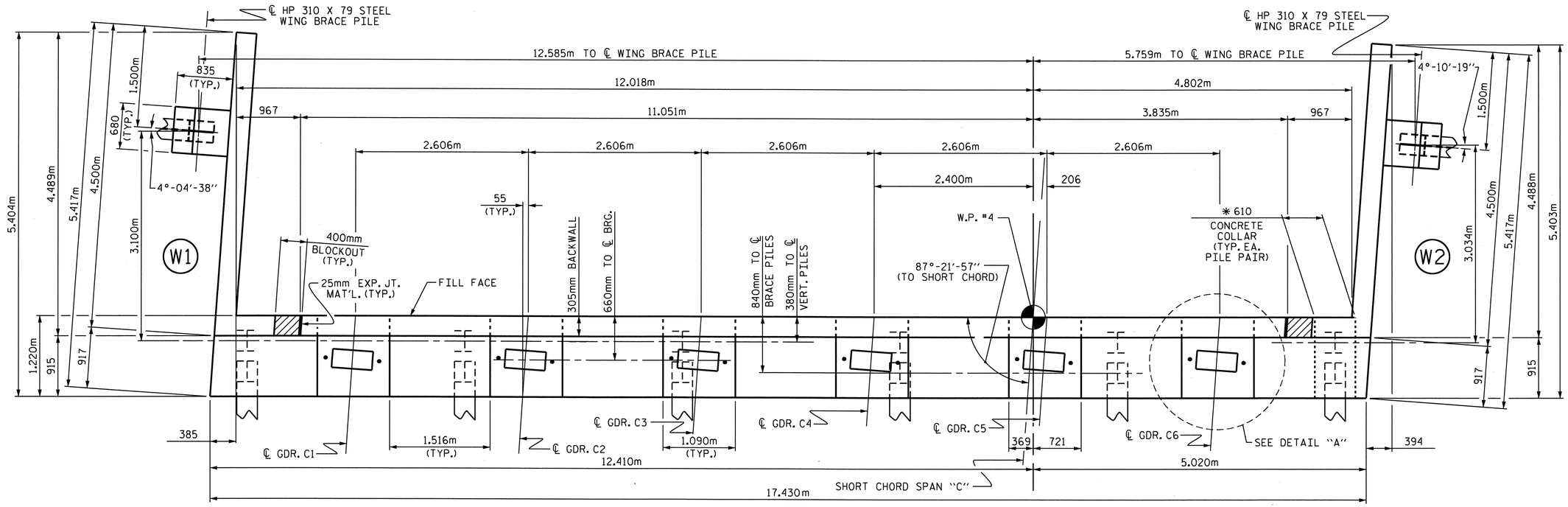

PLAN

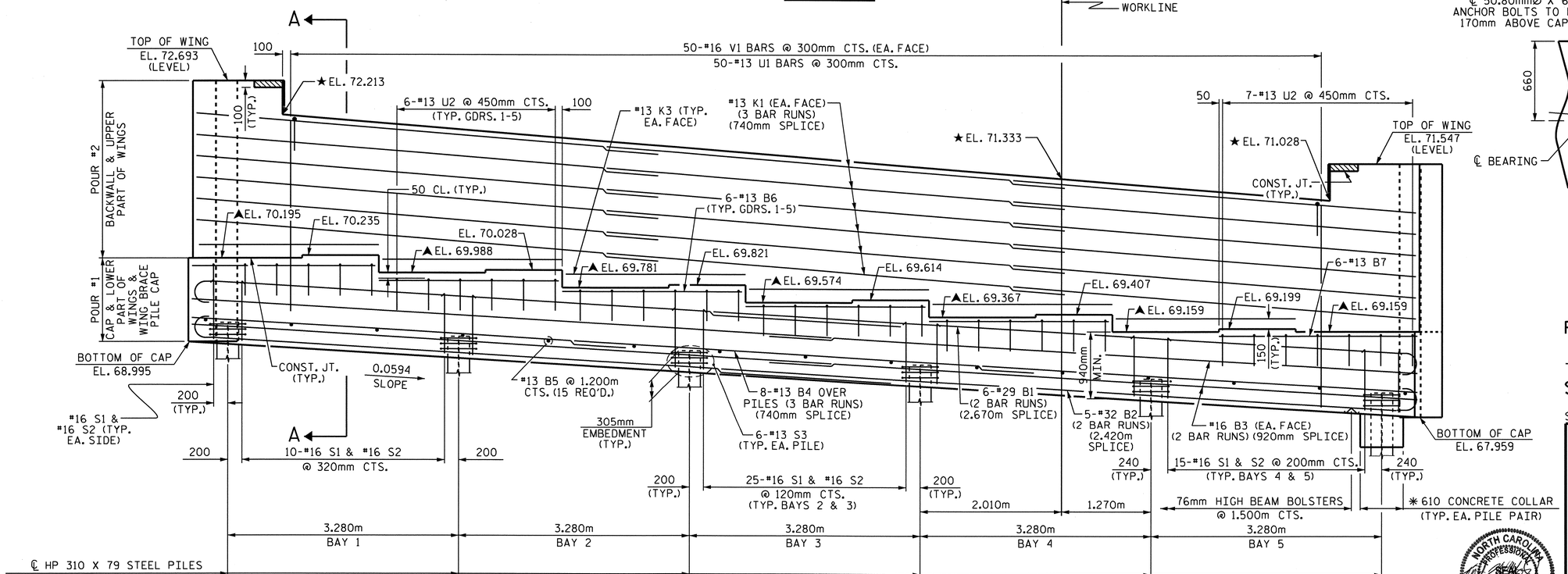

ELEVATION

(FOR CLARITY, BRACE PILE CAPS AT WINGS NOT SHOWN)
✳ ADDITIONAL CONCRETE COLLARS FOR STEEL PILES NOT SHOWN IN PLAN & ELEVATION VIEWS FOR CLARITY
SEE "CONCRETE COLLAR FOR STEEL PILES DETAILS", SHEET 3 OF 3.

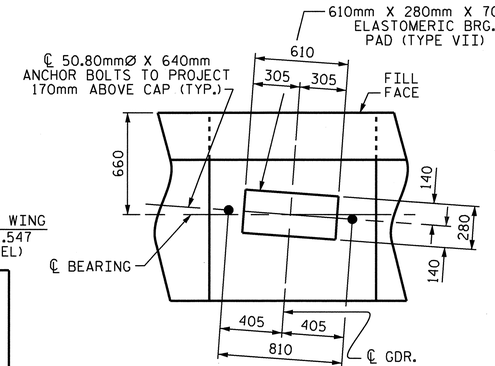

DETAIL "A"

(TYP. EA. GIRDER)

PROJECT NO. X-0002CB
CUMBERLAND COUNTY
STATION: 118+17.500 -L-

SHEET 1 OF 3

STATE OF NORTH CAROLINA
DEPARTMENT OF TRANSPORTATION
RALEIGH

SUBSTRUCTURE
END BENT No. 2
(WBL)

NORTH CAROLINA PROFESSIONAL SEAL 029441 ENGINEER KRISTY W. ALFORD

REVISIONS							SHEET NO.
NO.	BY:	DATE:	NO.	BY:	DATE:		S-32
1			3				TOTAL SHEETS
2			4				134

DRAWN BY : B. L. GREEN DATE : 4/16/08
CHECKED BY : S. B. WILLIAMS DATE : 07/10

STR. #1

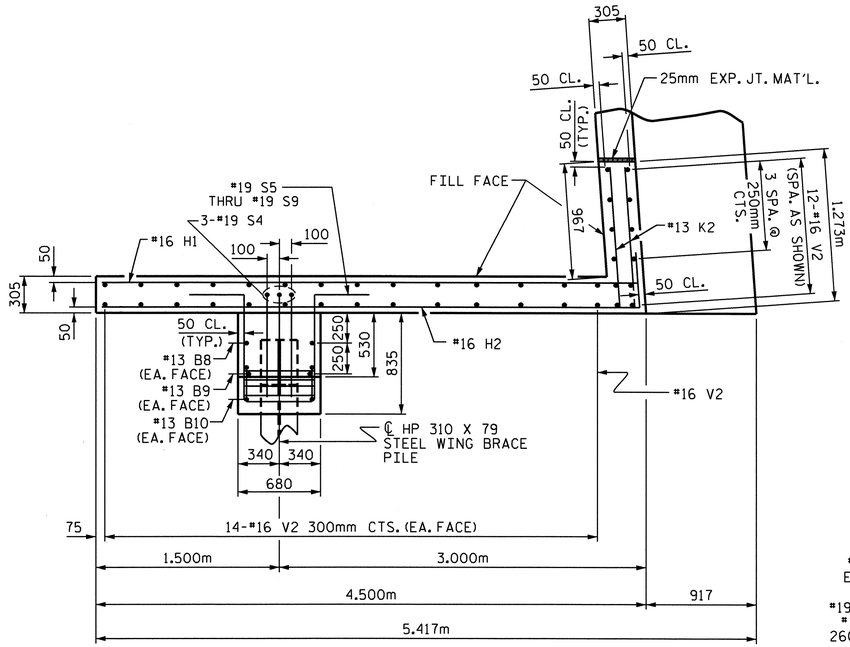

PLAN OF WING (W1)

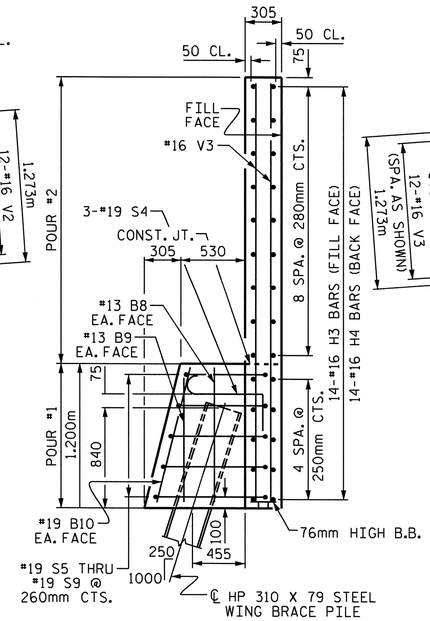

SECTION Y-Y

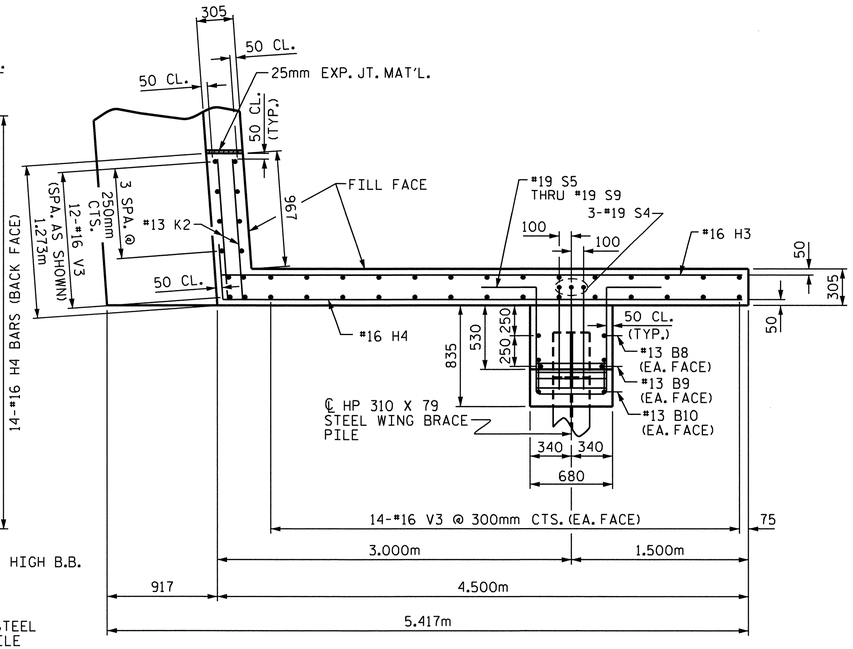

PLAN OF WING (W2)

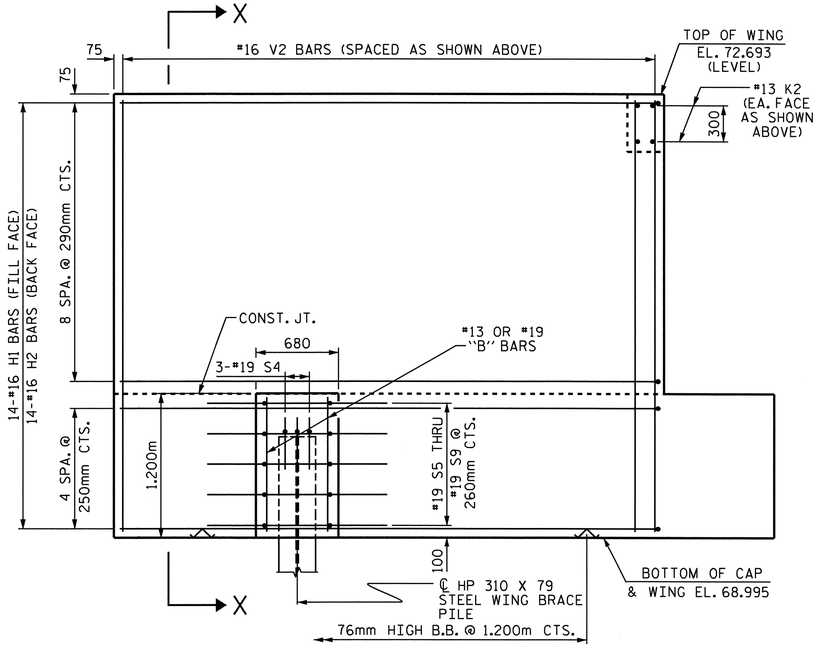

ELEVATION OF WING (W1)

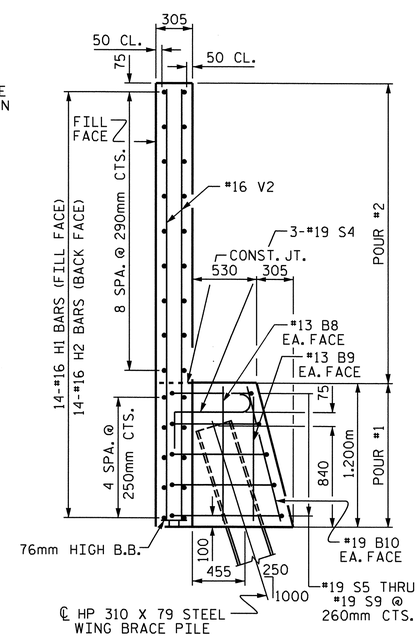

SECTION X-X

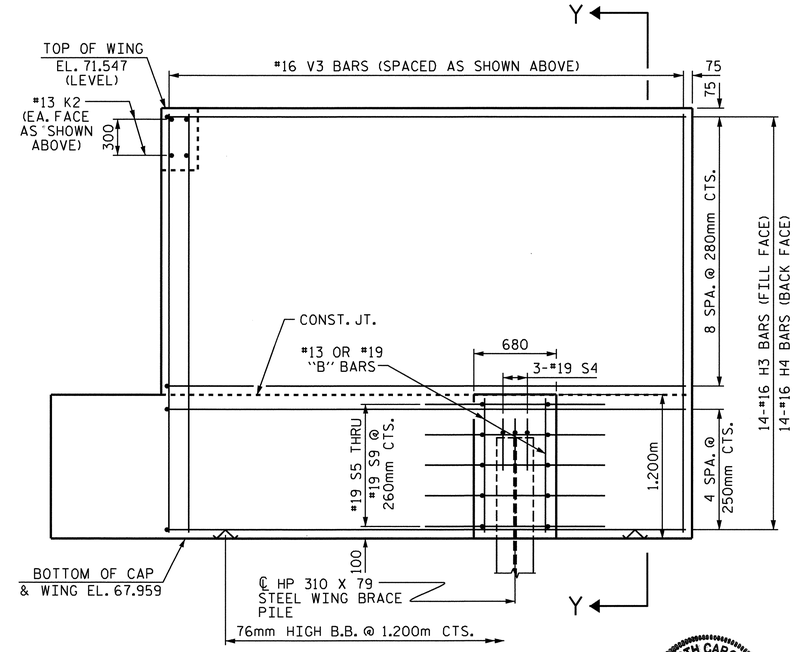

ELEVATION OF WING (W2)

PROJECT NO. X-0002CB
CUMBERLAND COUNTY
STATION: 118+17.500 -L-

SHEET 2 OF 3

STATE OF NORTH CAROLINA
DEPARTMENT OF TRANSPORTATION
RALEIGH

SUBSTRUCTURE

END BENT No. 2

(WBL)

NORTH CAROLINA PROFESSIONAL SEAL 029441 ENGINEER KRISTY W. ALFORD

REVISIONS								SHEET NO.
NO.	BY:	DATE:	NO.	BY:	DATE:			S-33
1			3					TOTAL SHEETS
2			4					134

DRAWN BY : B. L. GREEN DATE : 4/13/08
CHECKED BY : S. B. WILLIAMS DATE : 5/14/08

14-SEP-2010 10:01
F:\Structures\StrIWBL\SubstructureDrawings\X0002C_str2_EB2.dgn
kalford

STR. #1

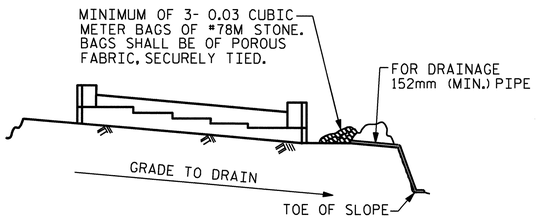

BAGGED STONE AND PIPE SHALL BE PLACED IMMEDIATELY AFTER COMPLETION OF END BENT EXCAVATION. PIPE MAY BE EITHER CONCRETE, CORRUGATED STEEL, CORRUGATED ALUMINUM ALLOY, OR CORRUGATED PLASTIC. PERFORATED PIPE WILL NOT BE ALLOWED.

BAGGED STONE SHALL REMAIN IN PLACE UNTIL THE ENGINEER DIRECTS THAT IT BE REMOVED. THE CONTRACTOR SHALL REMOVE AND DISPOSE OF SILT ACCUMULATIONS AT BAGGED STONE WHEN SO DIRECTED BY THE ENGINEER. BAGS SHALL BE REMOVED AND REPLACED WHENEVER THE ENGINEER DETERMINES THAT THEY HAVE DETERIORATED AND LOST THEIR EFFECTIVENESS.

NO SEPARATE PAYMENT WILL BE MADE FOR THIS WORK AND THE ENTIRE COST OF THIS WORK SHALL BE INCLUDED IN THE UNIT CONTRACT PRICE BID FOR THE SEVERAL PAY ITEMS.

TEMPORARY DRAINAGE AT END BENT

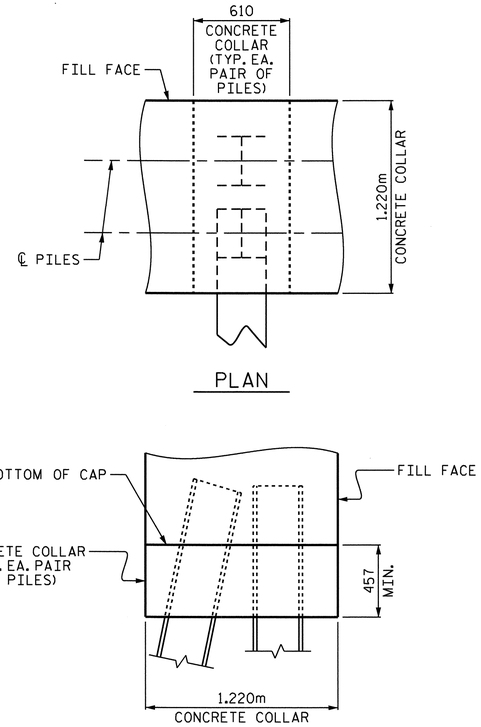

CONCRETE COLLAR FOR STEEL PILES DETAILS

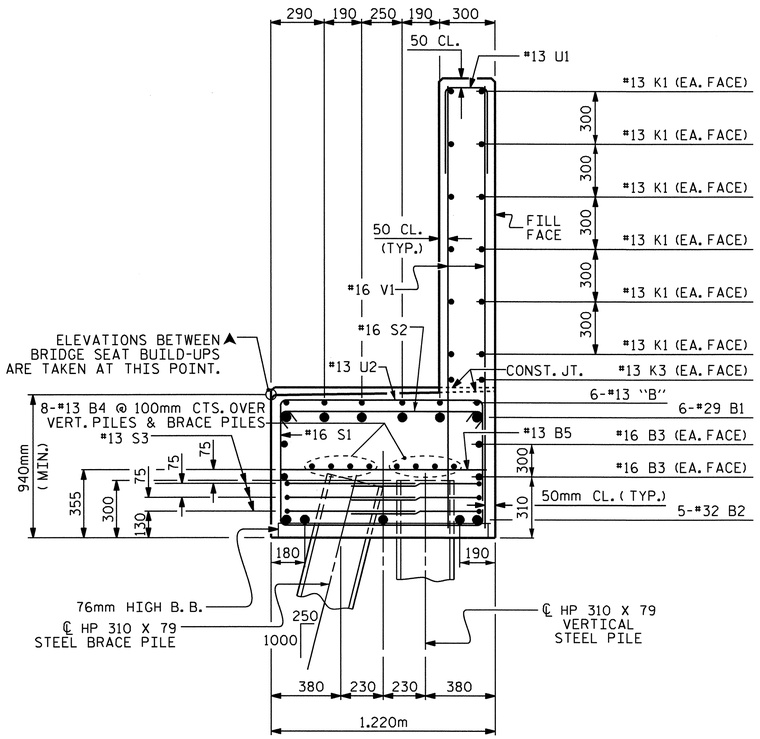

SECTION A-A

CONCRETE COLLAR NOT SHOWN FOR CLARITY, SEE "CONCRETE COLLAR FOR STEEL PILES DETAILS"

BAR TYPES

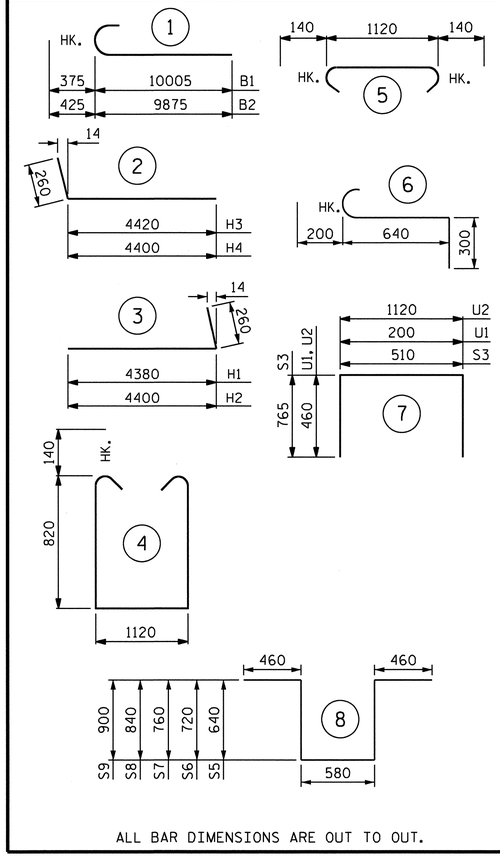

ALL BAR DIMENSIONS ARE OUT TO OUT.

BILL OF MATERIAL

END BENT No. 2

BAR	NUMBER	SIZE	TYPE	LENGTH	WEIGHT
B1	12	#29	1	10380	630
B2	10	#32	1	10300	660
B3	8	#16	STR	9120	113
B4	24	#13	STR	6280	150
B5	15	#13	STR	1120	17
B6	30	#13	STR	2500	75
B7	6	#13	STR	2680	16
B8	4	#13	STR	1100	4
B9	4	#13	STR	1040	4
B10	4	#19	STR	1140	10
H1	14	#16	3	4640	101
H2	14	#16	3	4660	101
H3	14	#16	2	4680	102
H4	14	#16	2	4660	101
K1	36	#13	STR	6280	225
K2	8	#13	STR	1160	9
K3	12	#13	STR	2560	31
S1	92	#16	4	3040	434
S2	92	#16	5	1400	200
S3	36	#13	7	2040	73
S4	6	#19	6	1140	15
S5	2	#19	8	2780	12
S6	2	#19	8	2940	13
S7	2	#19	8	3020	13
S8	2	#19	8	3180	14
S9	2	#19	8	3300	15
U1	50	#13	7	1120	56
U2	37	#13	7	2040	75
V1	100	#16	STR	2860	444
V2	40	#16	STR	3580	222
V3	40	#16	STR	3480	216

REINFORCING STEEL 4151 kg

CLASS A CONCRETE BREAKDOWN:

POUR #1 - CAP, LOWER WING, WING BRACE PILE CAPS, & CONCRETE COLLARS $31.2m^3$

POUR #2 - BACKWALL & UPPER WINGS $17.2m^3$

TOTAL $48.4m^3$

HP 310 X 79 STEEL PILES
NO. = 14 308 METERS

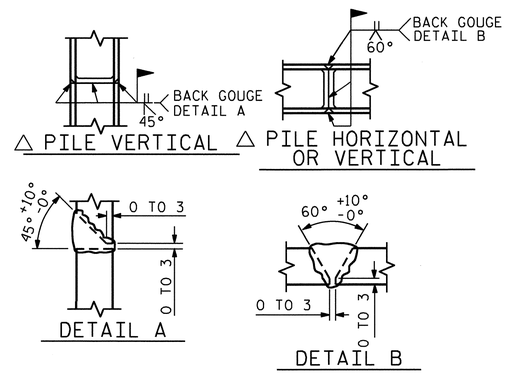

△ POSITION OF PILE DURING WELDING.

PILE SPLICE DETAILS

PROJECT NO. X-0002CB

CUMBERLAND COUNTY

STATION: 118+17.500 -L-

SHEET 3 OF 3

STATE OF NORTH CAROLINA
DEPARTMENT OF TRANSPORTATION
RALEIGH

SUBSTRUCTURE

END BENT No. 2

(WBL)

NORTH CAROLINA PROFESSIONAL SEAL 029441 ENGINEER KRISTY W. ALFORD

REVISIONS						SHEET NO.
NO.	BY:	DATE:	NO.	BY:	DATE:	S-34
1			3			TOTAL SHEETS
2			4			135

DRAWN BY : B. L. GREEN DATE : 4/14/08
CHECKED BY : S. B. WILLIAMS DATE : 07/10

14-SEP-2010 10:02
F:\Structures\StrIWBL\SubstructureDrawings\X0002C_str2_EB2.dgn
kalford

STR. #1

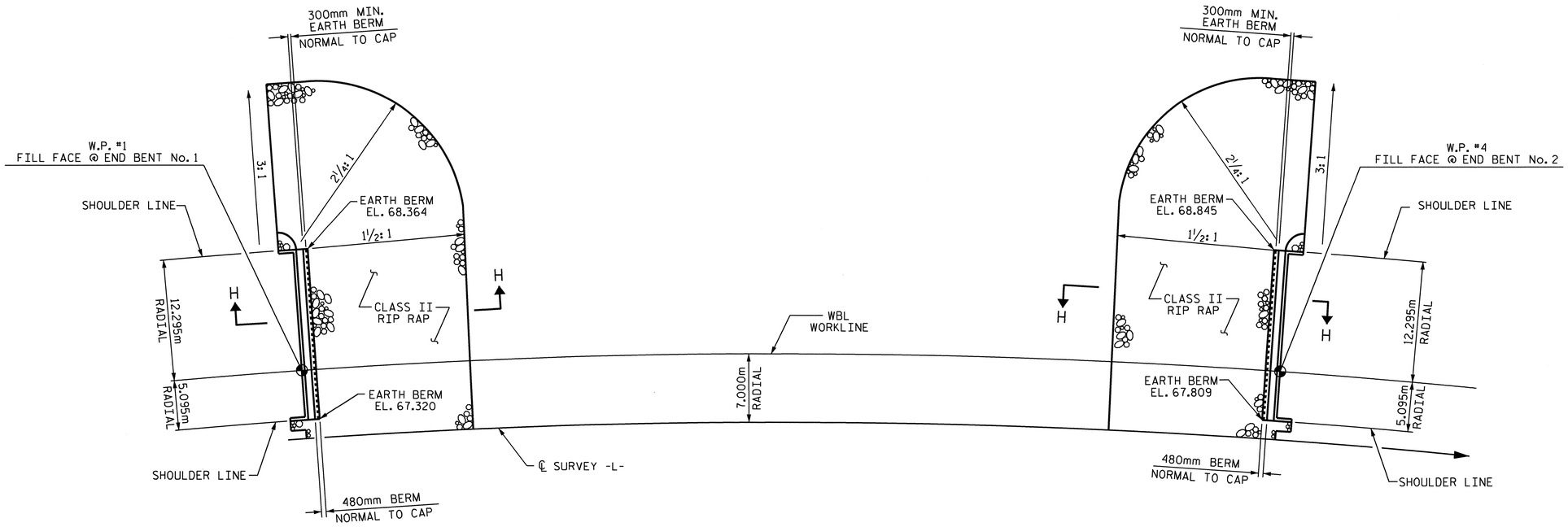

AT END BENT No. 1

AT END BENT No. 2

PLAN

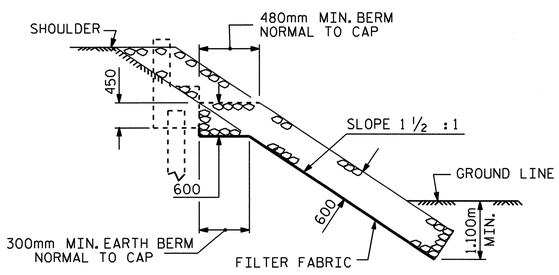

SECTION H-H

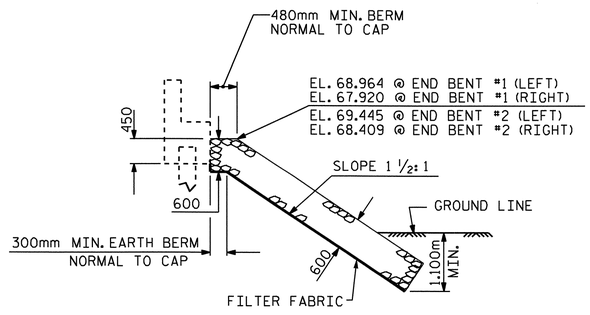

℄ SECTION

BERM RIP RAPPED

ESTIMATED QUANTITIES		
WBL BRIDGE @ STA. 118+17.500 -L-	RIP RAP CLASS II	FILTER FABRIC FOR DRAINAGE
	METRIC TON	SQUARE METERS
END BENT 1	1345	1372
END BENT 2	1345	1372

PROJECT NO. X-0002CB

CUMBERLAND COUNTY

STATION: 118+17.500 -L-

STATE OF NORTH CAROLINA
DEPARTMENT OF TRANSPORTATION
RALEIGH

RIP RAP DETAILS

(WBL)

NORTH CAROLINA PROFESSIONAL SEAL 020441 ENGINEER KRISTY W. ALFORD

ASSEMBLED BY: A. V. ROYAL	DATE: 5/9/08		
CHECKED BY: B. L. GREEN	DATE: 5/9/08		
DRAWN BY : REK 1/84	REV. 8/16/99	RWW/LES	
CHECKED BY : RDU 1/84	REV. 10/17/00	RWW/LES	
	REV. 5/1/06	TLA/GM	

REVISIONS								SHEET NO.
NO.	BY:	DATE:	NO.	BY:	DATE:			S-35
1			3					TOTAL SHEETS
2			4					134

14-SEP-2010 10:03
F:\Structures\StrIWBL\MiscDrawings\x0002c_str2_rr.dgn
kalford

STR. #1

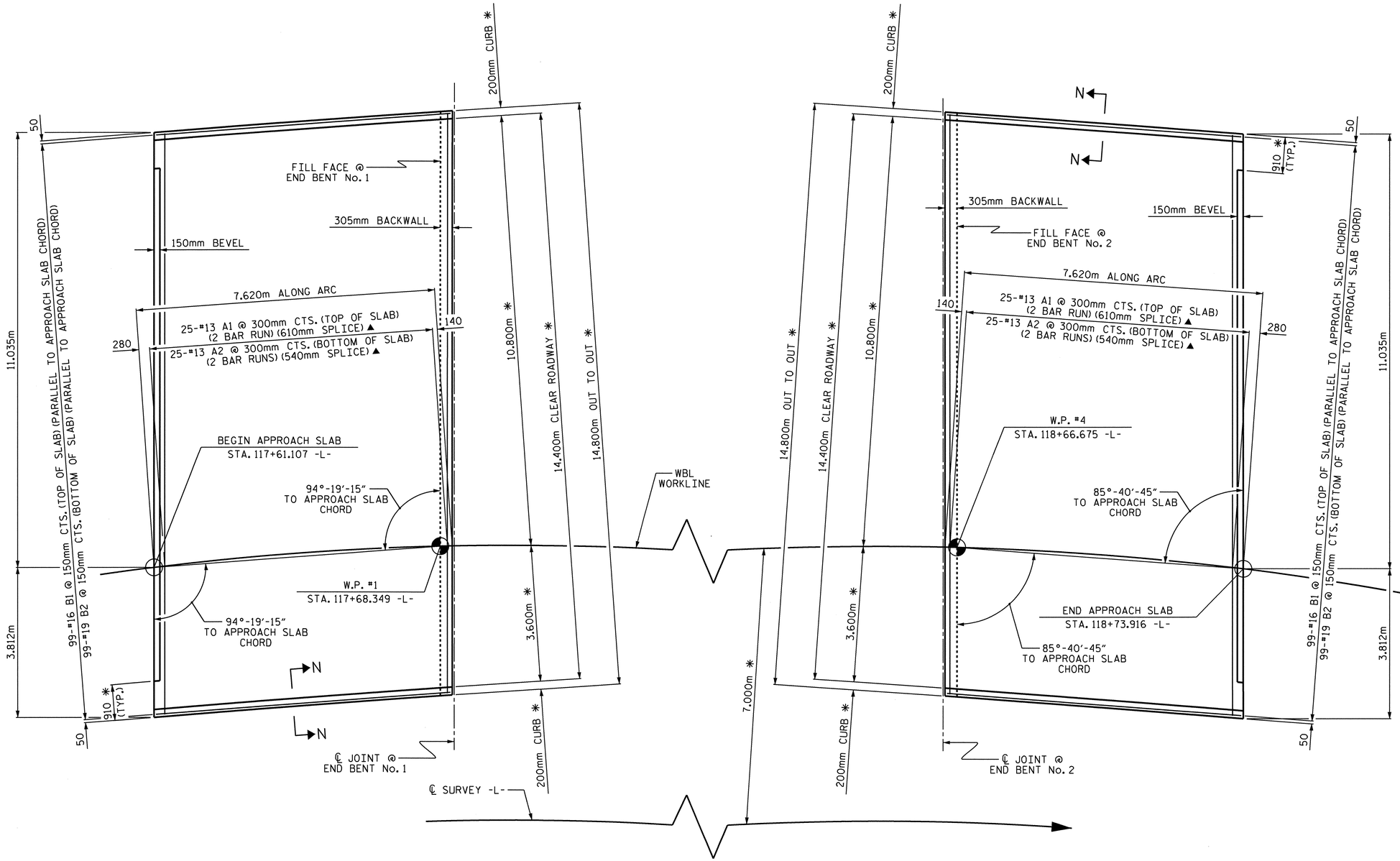

PLAN AT END BENT No. 1

PLAN AT END BENT No. 2

NOTES:

* MEASURED RADIALLY

▲ "A" BARS ARE SPACED ALONG APPROACH SLAB CHORD AND PLACED PARALLEL TO FILL FACE

FOR ARC OFFSETS, SEE SHEET 2 OF 3.

PLAN OF APPROACH SLABS

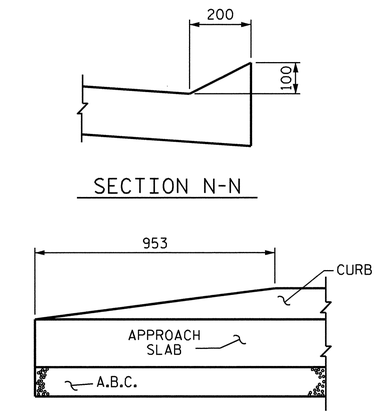

SECTION N-N

END OF CURB WITHOUT SHOULDER BERM GUTTER

CURB DETAILS

PROJECT NO. X-0002CB

CUMBERLAND COUNTY

STATION: 118+17.500 -L-

SHEET 1 OF 3

STATE OF NORTH CAROLINA
DEPARTMENT OF TRANSPORTATION
RALEIGH

BRIDGE APPROACH SLAB

(WBL)

NORTH CAROLINA PROFESSIONAL SEAL 029441 ENGINEER KRISTY W. ALFORD

REVISIONS						SHEET NO.
NO.	BY:	DATE:	NO.	BY:	DATE:	S-36
1			3			TOTAL SHEETS
2			4			134

DRAWN BY : T. BANKOVICH DATE : 12-07
CHECKED BY : M.L. BROWN DATE : 5-08

14-SEP-2010 10:04
F:\Structures\StrIWBL\MiscDrawings\x0002c_str2_as.dgn
kalford

STR. #1

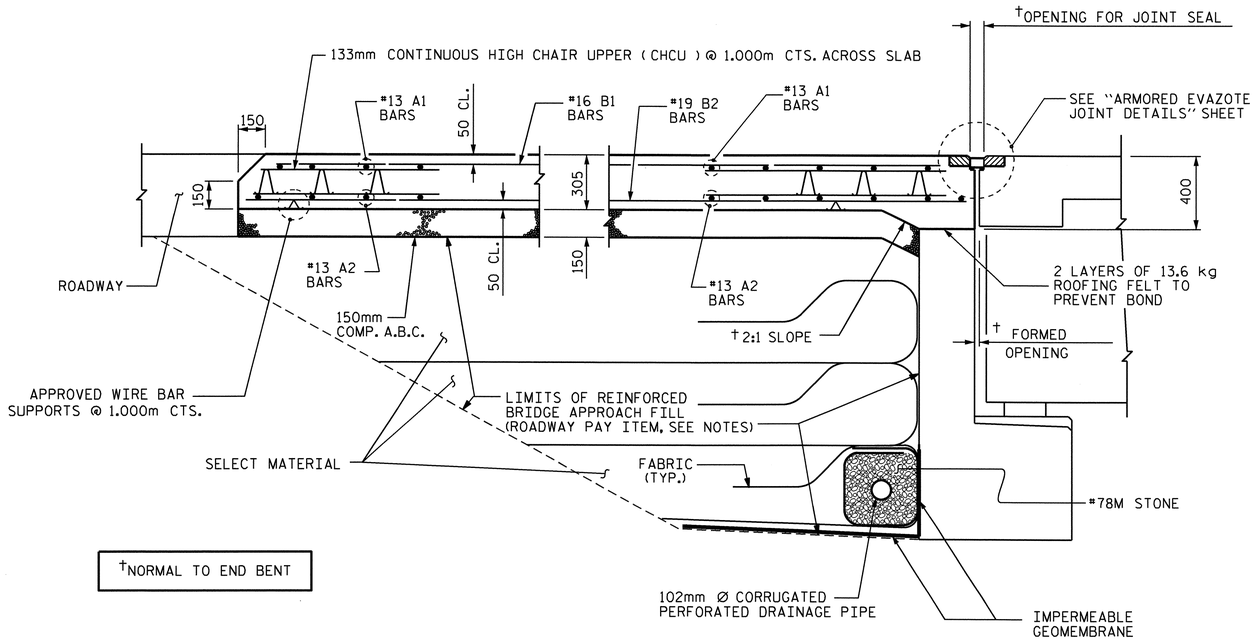

SECTION THRU SLAB

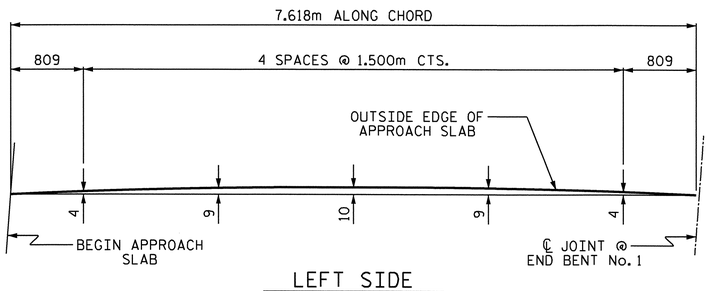

LEFT SIDE

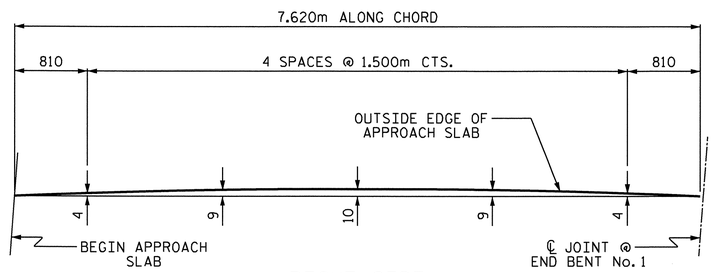

RIGHT SIDE

ARC OFFSETS

END BENT No. 1 SHOWN, END BENT No. 2 SIMILAR

NOTES

APPROACH SLAB SHALL NOT BE CONSTRUCTED PRIOR TO COMPLETION OF THE BRIDGE DECK.

FOR REINFORCED BRIDGE APPROACH FILL INCLUDING FABRIC, IMPERMEABLE GEOMEMBRANE, 102mm Ø DRAINAGE PIPE, #78M STONE, AND SELECT MATERIAL, SEE ROADWAY PLANS.

AREA BETWEEN THE WINGWALL AND APPROACH SLAB SHALL BE GRADED TO DRAIN THE WATER AWAY FROM THE FILL FACE OF THE BRIDGE AND SHALL BE PAVED. SEE ROADWAY PLANS.

THE 150mm COMP. A.B.C. SHALL BE FLUSH WITH THE ROADWAY END OF THE APPROACH SLAB AND SHALL EXTEND 300mm OUTSIDE OF EACH EDGE OF THE APPROACH SLAB.

THE CONTRACTOR MAY USE 100mm TYPE B-25.0B ASPHALT CONCRETE COURSE IN LIEU OF 150mm COMP. A.B.C. IF THIS OPTION IS USED, THE BASE COURSE SHALL BE FLUSH WITH THE ROADWAY END OF THE APPROACH SLAB, AND THE WIDTH SHALL BE THE SAME AS THAT OF THE APPROACH SLAB.

THE CONTRACTOR MAY USE 125mm CLASS "A" CONCRETE BASE IN LIEU OF 150mm COMP. A.B.C. IF THIS OPTION IS USED, THE CONCRETE BASE SHALL BE FLUSH WITH THE ROADWAY END OF THE APPROACH SLAB, AND THE WIDTH SHALL BE THE SAME AS THAT OF THE APPROACH SLAB. THE CONCRETE SHALL BE FINISHED TO A SMOOTH SURFACE AND A LAYER OF 13.6 kg ROOFING FELT SHALL BE PLACED BETWEEN THE CONCRETE BASE AND THE APPROACH SLAB TO PREVENT BOND. THE APPROACH SLAB SHALL NOT BE CAST UNTIL THE CONCRETE BASE HAS REACHED AN AGE OF THREE CURING DAYS.

FOR EVAZOTE JOINT SEALS, SEE SPECIAL PROVISIONS.

THE NOMINAL UNCOMPRESSED SEAL WIDTH OF THE EVAZOTE JOINT SEAL SHALL BE 80mm.

FOR ELASTOMERIC CONCRETE, SEE SPECIAL PROVISIONS.

BILL OF MATERIAL

APPROACH SLAB AT EB #1

BAR	NO.	SIZE	TYPE	LENGTH	WEIGHT
* A1	50	#13	STR	7680	382
A2	50	#13	STR	7640	380
* B1	99	#16	STR	7320	1125
B2	99	#19	STR	7520	1664
REINFORCING STEEL					2044 kg.
* EPOXY COATED REINFORCING STEEL					1507 kg.
CLASS AA CONCRETE					35.0m³

APPROACH SLAB AT EB #2

BAR	NO.	SIZE	TYPE	LENGTH	WEIGHT
* A1	50	#13	STR	7680	382
A2	50	#13	STR	7640	380
* B1	99	#16	STR	7320	1125
B2	99	#19	STR	7520	1664
REINFORCING STEEL					2044 kg.
* EPOXY COATED REINFORCING STEEL					1507 kg.
CLASS AA CONCRETE					35.0m³

PROJECT NO. X-0002CB
CUMBERLAND COUNTY
STATION: 118+17.500 -L-

SHEET 2 OF 3

STATE OF NORTH CAROLINA
DEPARTMENT OF TRANSPORTATION
RALEIGH

STANDARD

BRIDGE APPROACH SLAB FOR FLEXIBLE PAVEMENT

(WBL)

NORTH CAROLINA PROFESSIONAL SEAL 029441 ENGINEER KRISTY W. ALFORD

REVISIONS						
NO.	BY:	DATE:	NO.	BY:	DATE:	
1			3			
2			4			

SHEET NO. S-37
TOTAL SHEETS 134

ASSEMBLED BY : T. BANKOVICH DATE : 12-07
CHECKED BY : M.L. BROWN DATE : 5-08

DRAWN BY : FCJ 6/87
CHECKED BY : EGA 6/87

REV. 7/10/01 RWW/LES
REV. 5/7/03R RWW/JTE
REV. 5/1/06R KMM/GM

14-SEP-2010 10:04
F:\Structures\StrIWBL\MiscDrawings\x0002c_str2_as.dgn
kalford

STR. #1

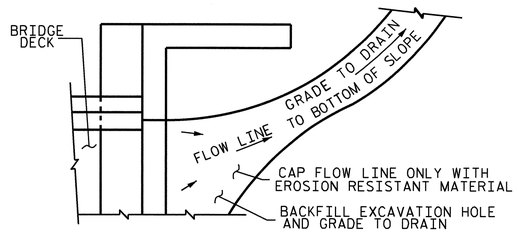

NOTE: IF THE APPROACH SLAB IS NOT CONSTRUCTED IMMEDIATELY AFTER THE BACKFILLING OF THE END BENT EXCAVATION, GRADE TO DRAIN TO THE BOTTOM OF THE SLOPE AND PROVIDE EROSION RESISTANT MATERIAL, SUCH AS FIBERGLASS ROVING OR AS DIRECTED BY THE ENGINEER TO PREVENT SOIL EROSION AND TO PROTECT THE AREA ADJACENT TO THE STRUCTURE. THE CONTRACTOR WILL BE REQUIRED TO REMOVE THESE MATERIALS PRIOR TO CONSTRUCTION OF THE APPROACH SLAB.

TEMPORARY DRAINAGE DETAIL

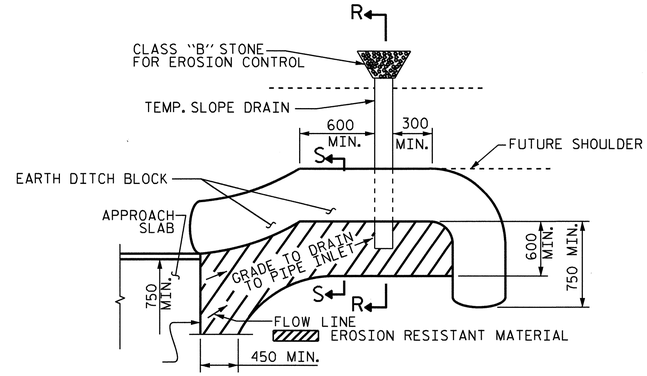

NOTE: IMMEDIATELY AFTER THE CONSTRUCTION OF THE APPROACH SLAB, THE CONTRACTOR SHALL PROVIDE TEMPORARY BERM AND SLOPE DRAIN. CONTRACTOR SHALL GRADE TO PIPE INLET AND PROVIDE EROSION RESISTANT MATERIAL AS SHOWN. THE EROSION RESISTANT MATERIAL SHALL BE EITHER 1) ASPHALT PLANT MIX, TYPE 1 OR TYPE 2, MIN. 50mm DEPTH, 2) EROSION CONTROL MAT, OR 3) CONCRETE, AS DIRECTED BY THE ENGINEER. THE SLOPE DRAIN SHALL CONSIST OF A NON-PERFORATED TEMPORARY DRAINAGE PIPE, 305mm IN DIAMETER.

PLAN VIEW

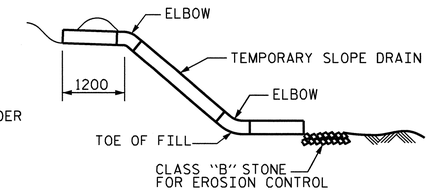

SECTION R-R

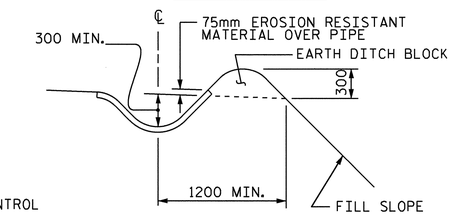

SECTION S-S

TEMPORARY BERM AND SLOPE DRAIN DETAILS

(TO BE USED WHEN SHOULDER BERM GUTTER IS REQUIRED)

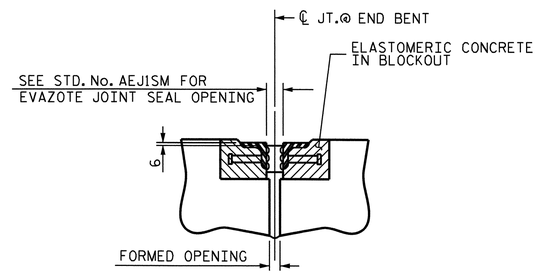

SECTION C-C

ARMORED EVAZOTE JOINT SEAL

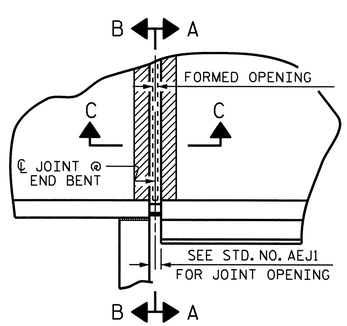

PLAN

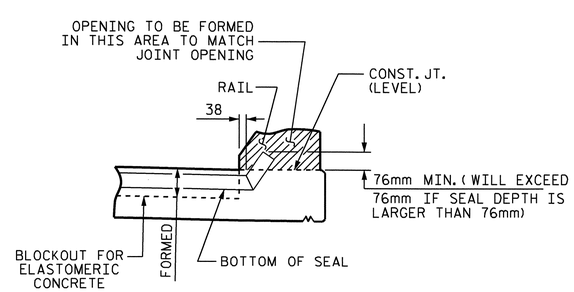

SECTION A-A

EVAZOTE JOINT SEAL TO BE CUT, HEAT WELDED AND TURNED UP PARALLEL TO SLOPED FACE OF THE BARRIER RAIL.

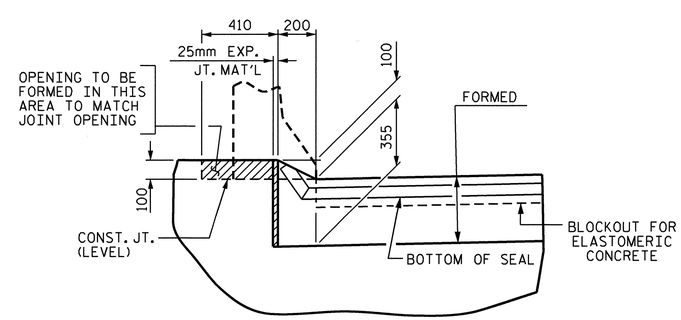

SECTION B-B

JOINT SEAL DETAILS @ END BENT

END BENT No. 1 SHOWN, END BENT No. 2 SIMILAR

PROJECT NO. X-0002CB

CUMBERLAND COUNTY

STATION: 118+17.500 -L-

SHEET 3 OF 3

STATE OF NORTH CAROLINA
DEPARTMENT OF TRANSPORTATION
RALEIGH

STANDARD
BRIDGE APPROACH
SLAB DETAILS

(WBL)

NORTH CAROLINA PROFESSIONAL SEAL 029441 ENGINEER KRISTY W. ALFORD

ASSEMBLED BY : T. BANKOVICH	DATE : 12-07
CHECKED BY : M.L. BROWN	DATE : 5-08
DRAWN BY : FCJ 11/88	REV. 10/17/00 RWW/LES
CHECKED BY : ARB 11/88	REV. 5/7/03 RWW/JTE
	REV. 5/1/06R MAA/KMM

REVISIONS

NO.	BY:	DATE:	NO.	BY:	DATE:
1			3		
2			4		

SHEET NO. S-38

TOTAL SHEETS 134

STR. #1

14-SEP-2010 10:04
F:\Structures\StrlWBL\MiscDrawings\x0002c_str2_as.dgn
kalford

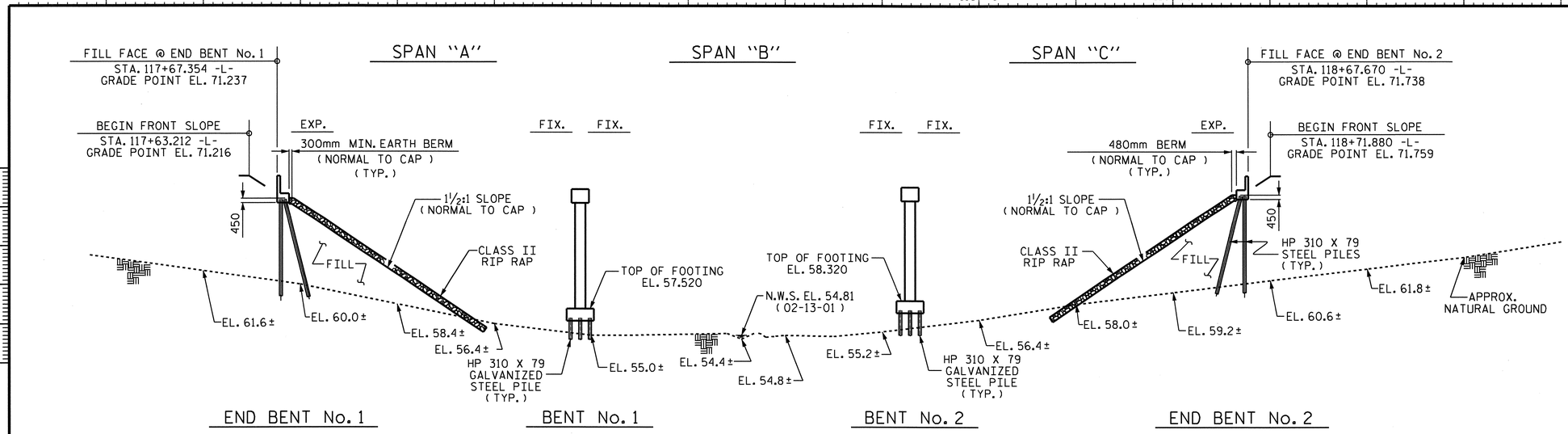

SECTION ALONG EBL WORKLINE

(SECTIONS @ BENTS & END BENTS ARE AT RIGHT ANGLES)
(FOR CLARITY, TEMPORARY WORK BRIDGE NOT SHOWN)

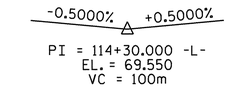

GRADE DATA -L-

HORIZONTAL CURVE DATA -L-

PI STA. = 116+37.531 -L-
Δ = 90°-06'-47.2"(RT.)
L = 1100.939m
T = 701.383m
R = 700.000m

HYDROGRAPHIC DATA

DESIGN DISCHARGE---------- 21.7 m^3/s
FREQUENCY OF DESIGN FLOOD---------- 50 YR.
DESIGN HIGH WATER ELEVATION-------- 56.59
DRAINAGE AREA---------- 156 Ha
BASIC DISCHARGE (Q100)---------- 25.0 m^3/s
BASIC HIGH WATER ELEVATION---------- 56.65

OVERTOPPING FLOOD DATA
OVERTOPPING DISCHARGE---------- 39.0 m^3/s
FREQUENCY OF OVERTOPPING FLOOD------ 500+ YRS.
OVERTOPPING FLOOD ELEVATION--------- 70.30
OVERTOPPING ROADWAY STA. 114+30.00 -L-

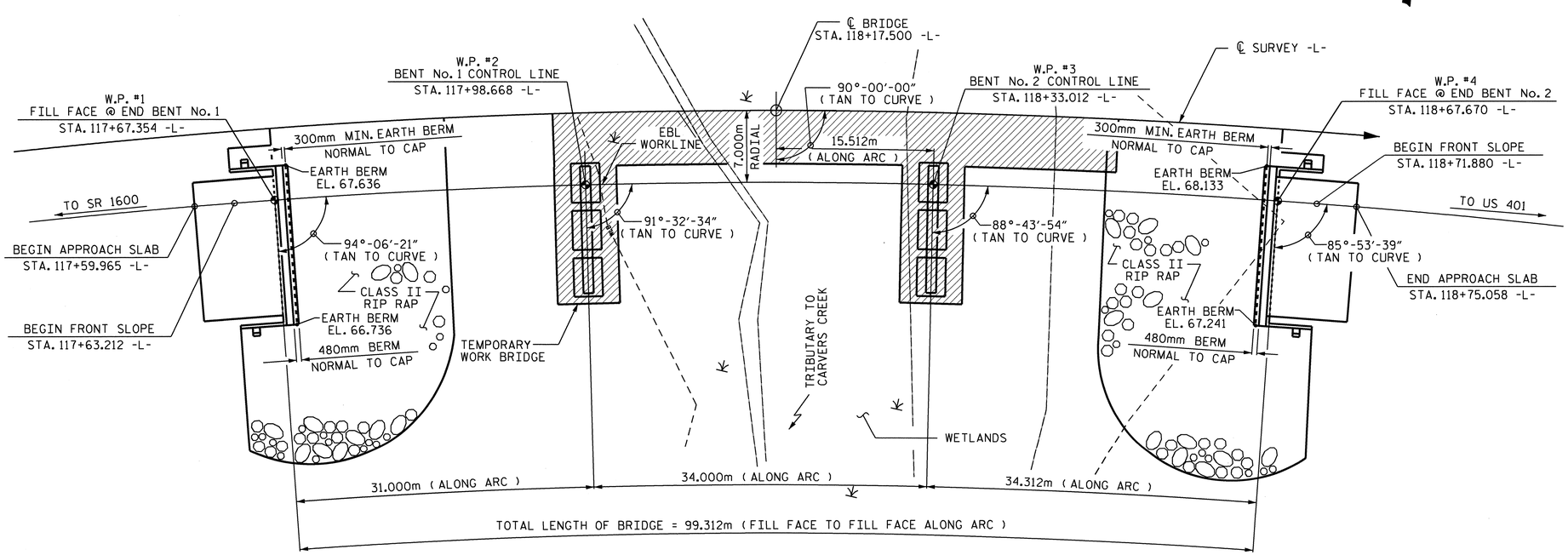

PLAN

(PILES NOT SHOWN IN PLAN VIEW FOR CLARITY)

PROJECT NO. X-0002CB
CUMBERLAND COUNTY
STATION: 118+17.500 -L-

SHEET 1 OF 3 Br. No. 384

STATE OF NORTH CAROLINA
DEPARTMENT OF TRANSPORTATION
RALEIGH

GENERAL DRAWING
FOR EBL BRIDGE ON
FAYETTEVILLE OUTER LOOP
OVER WETLANDS
BETWEEN SR 1600 AND US 401

REVISIONS						SHEET NO.
NO.	BY:	DATE:	NO.	BY:	DATE:	S-39
1			3			TOTAL SHEETS
2			4			134

NORTH CAROLINA PROFESSIONAL SEAL 029441 ENGINEER KRISTY W. ALFORD

NORTH CAROLINA PROFESSIONAL SEAL 11268 ENGINEER BETSY S. COX 11-3-10

METRIC

DRAWN BY : N. PIERCE DATE : 04-08
CHECKED BY : T. BANKOVICH DATE : 06-08

03-NOV-2010 11:58
F:\Structures\Str2EBL\GeneralDrawings\x0002c_str3_gd.dgn
kalford

STR. #2

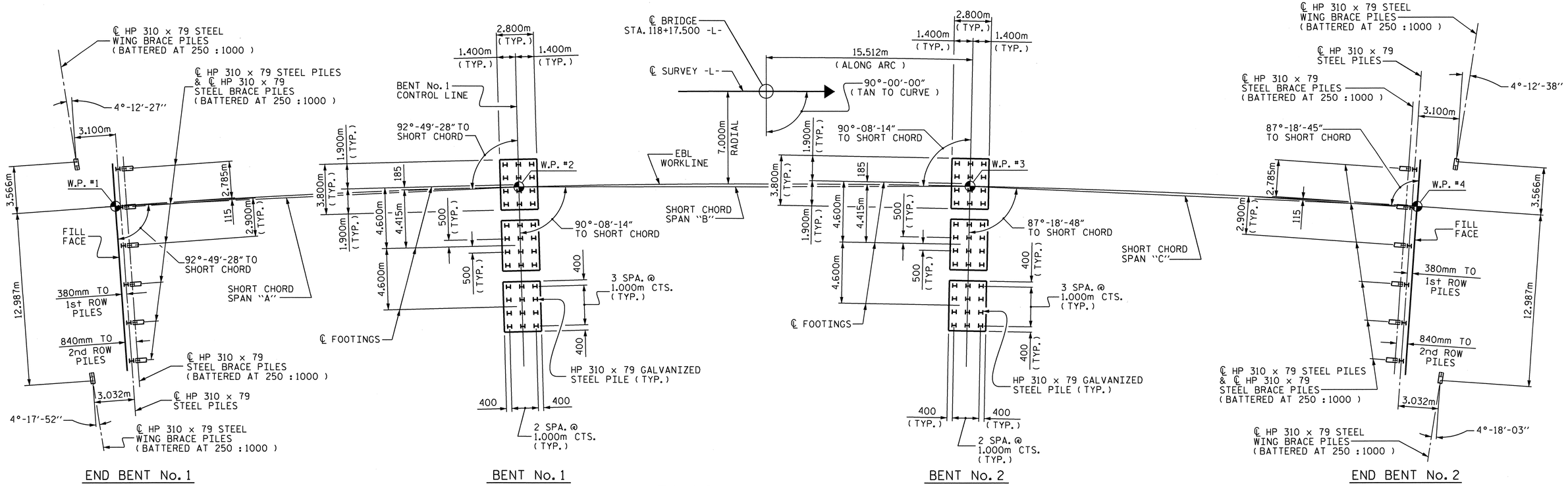

FOUNDATION LAYOUT

(DIMENSION LOCATING PILES ARE SHOWN TO THE PILE CENTERLINE @ BOTTOM OF END BENTS, WINGS OR FOOTINGS)

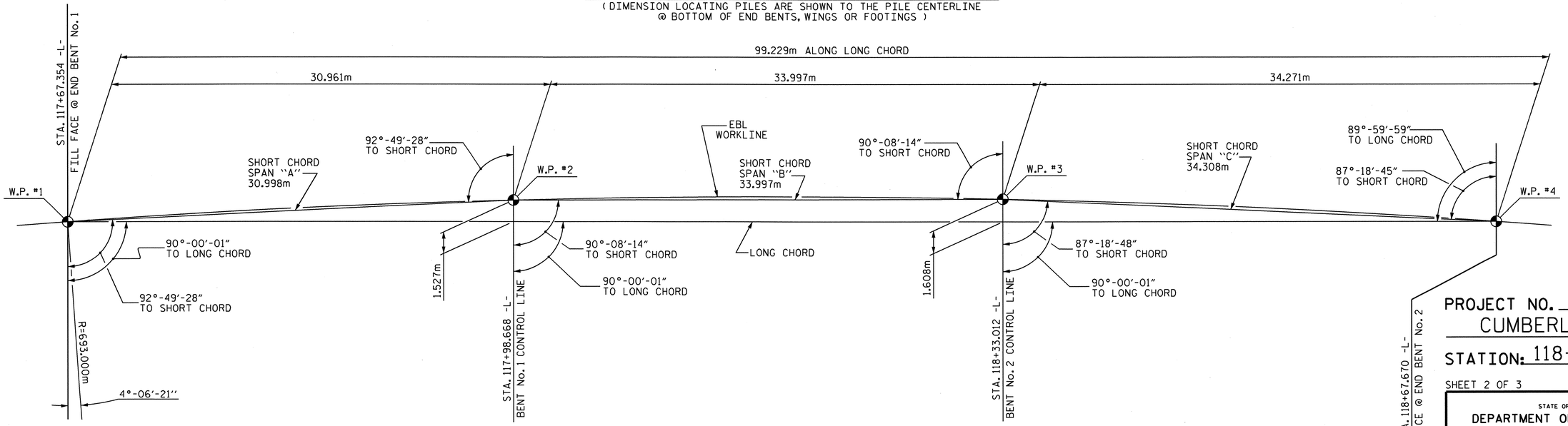

LONG CHORD LAYOUT

PROJECT NO. X-0002CB
CUMBERLAND COUNTY
STATION: 118+17.500 -L-

SHEET 2 OF 3

STATE OF NORTH CAROLINA
DEPARTMENT OF TRANSPORTATION
RALEIGH

GENERAL DRAWING
FOR EBL BRIDGE ON
FAYETTEVILLE OUTER LOOP
OVER WETLANDS
BETWEEN SR 1600 AND US 401

NORTH CAROLINA PROFESSIONAL SEAL 029441 ENGINEER KRISTY W. ALFORD

REVISIONS								SHEET NO.
NO.	BY:	DATE:	NO.	BY:	DATE:			S-40
1			3					TOTAL SHEETS
2			4					134

DRAWN BY : N. PIERCE/ JMB DATE : 04-08
CHECKED BY : T. BANKOVICH DATE : 06-08

STR. #2

BM #105 RAILROAD SPIKE IN BASE OF 450mm PINE TREE BETWEEN BL-17 AND BL-18, STA. 121+23.543 -L-, 35.881m LT, EL. 74.413 NAVD 29

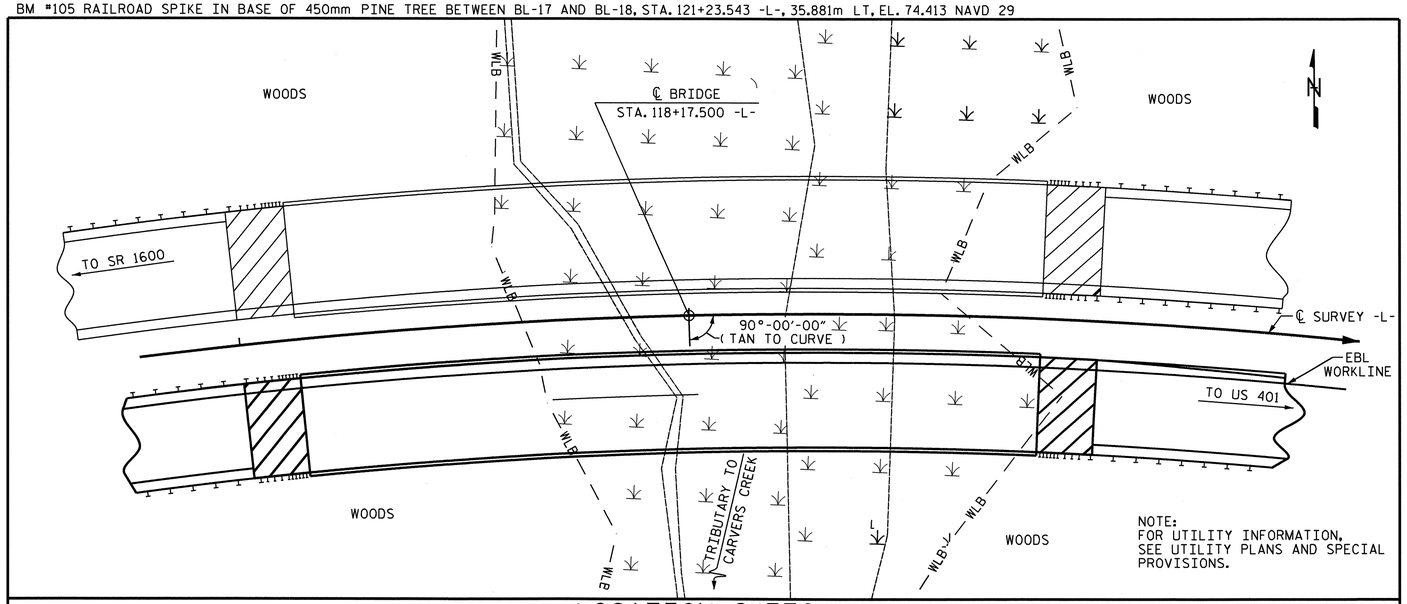

LOCATION SKETCH

NOTES:

ASSUMED LIVE LOAD = MS 22.5 OR ALTERNATE LOADING.

THIS BRIDGE HAS BEEN DESIGNED BY THE STRENGTH DESIGN METHOD AS SPECIFIED IN AASHTO STANDARD SPECIFICATIONS.

THIS STRUCTURE HAS BEEN DESIGNED IN ACCORDANCE WITH HEC 18 "EVALUATING SCOUR AT BRIDGES," MAY 2001.

THIS BRIDGE HAS BEEN DESIGNED IN ACCORDANCE WITH THE REQUIREMENTS OF AASHTO STANDARD SPECIFICATIONS FOR SEISMIC DESIGN OF HIGHWAY BRIDGES FOR SEISMIC PERFORMANCE CATEGORY A.

ALL DIMENSIONS ARE IN MILLIMETERS UNLESS OTHERWISE NOTED.

ALL ELEVATIONS ARE IN METERS.

FOR METRIC STRUCTURAL STEEL, SEE SPECIAL PROVISIONS.

FOR OTHER DESIGN DATA AND GENERAL NOTES, SEE SHEET SNSM.

FOR EROSION CONTROL MEASURES, SEE EROSION CONTROL PLANS.

BOTTOM OF FOOTING ELEVATIONS AT BENTS No. 1 AND 2 ARE BASED ON AN APPROXIMATE GROUND LINE ELEVATION. APPROXIMATELY 1 METER OF CLEARANCE HAS BEEN PROVIDED TO ACCOMODATE ALL FALSEWORK AND FORMWORK REQUIRED FOR FOOTING CONSTRUCTION. FOUNDATION EXCAVATION IS NOT ALLOWED.

DRIVE PILES AT ALL BENTS TO A REQUIRED BEARING CAPACITY OF 1070 kN PER PILE. THE REQUIRED BEARING CAPACITY IS EQUAL TO THE ALLOWABLE BEARING CAPACITY WITH A MINIMUM FACTOR OF SAFETY OF TWO.

THE ALLOWABLE BEARING CAPACITY FOR ALL PILES IS 535 kN PER PILE.

THE SCOUR CRITICAL ELEVATION FOR BENT 1 IS 52.5 METERS. THE SCOUR CRITICAL ELEVATION FOR BENT 2 IS 54.0 METERS. SCOUR CRITICAL ELEVATIONS ARE USED TO MONITOR POSSIBLE SCOUR PROBLEMS DURING THE LIFE OF THE STRUCTURE.

THE CONTRACTOR MAY CHOOSE TO CONSTRUCT BENT No. 1 AND BENT No. 2 PRIOR TO PLACING FILL. PLACE FILL IN ACCORDANCE WITH ARTICLE 410-8 OF THE STANDARD SPECIFICATIONS.

GEOGRID REINFORCED SLOPES SHALL BE CONSTRUCTED AT BOTH END BENTS. FOR REINFORCED SLOPE DETAILS AND PAY ITEMS, SEE ROADWAY PLANS.

REMOVABLE FORMS MAY BE USED IN LIEU OF METAL STAY-IN-PLACE FORMS IN ACCORDANCE WITH ARTICLE 420-3 OF THE STANDARD SPECIFICATIONS.

FOR INTERIOR BENTS, ONLY PARTIAL GALVANIZING OF THE PILES IS REQUIRED. SEE INTERIOR BENT SHEETS FOR DETAILS.

TESTING PILES WITH THE PILE DRIVING ANALYZER (PDA) DURING DRIVING, RESTRIKING, OR REDRIVING MAY BE REQUIRED. THE ENGINEER WILL DETERMINE THE NEED FOR PDA TESTING. SEE PILE DRIVING ANALYZER SPECIAL PROVISION.

OBSERVE A ONE MONTH WAITING PERIOD AFTER CONSTRUCTING THE EMBANKMENT, END BENT, AND REINFORCED BRIDGE APPROACH FILL BEFORE BEGINNING APPROACH SLAB CONSTRUCTION AT END BENTS 1 AND 2.

FOR ADHESIVELY ANCHORED ANCHOR BOLTS OR DOWELS, SEE SPECIAL PROVISIONS.

FOR GROUT FOR STRUCTURES, SEE SPECIAL PROVISIONS.

FOR TEMPORARY WORK BRIDGE, SEE SPECIAL PROVISION FOR CONSTRUCTION, MAINTENANCE, AND REMOVAL OF TEMPORARY ACCESS AT STA. 118+17.500-L-.

PAYMENT FOR THE TEMPORARY WORK BRIDGE IS INCLUDED IN THE LUMP SUM PAY ITEM FOR CONSTRUCTION, MAINTENANCE, AND REMOVAL OF TEMPORARY ACCESS IN THE TOTAL BILL OF MATERIAL FOR WBL BRIDGE AT STA. 118+17.500-L-.

FOR SUBMITTAL OF WORKING DRAWINGS, SEE SPECIAL PROVISIONS.

FOR FALSEWORK AND FORMWORK, SEE SPECIAL PROVISIONS.

FOR CRANE SAFETY, SEE SPECIAL PROVISIONS.

FOR PRESTRESSED CONCRETE MEMBERS, SEE SPECIAL PROVISIONS.

FOR HIGH STRENGTH BOLTS, SEE SPECIAL PROVISIONS.

FOR DIRECT TENSION INDICATORS, SEE SPECIAL PROVISIONS.

FOR PLACING LOAD ON STRUCTURE MEMBERS, SEE SPECIAL PROVISIONS.

FOR PILES, SEE SPECIAL PROVISIONS.

FOR CURING CONCRETE, SEE SPECIAL PROVISIONS.

PROJECT NO. X-0002CB
CUMBERLAND COUNTY
STATION: 118+17.500 -L-

SHEET 3 OF 3

TOTAL BILL OF MATERIAL

	PDA TESTING	PDA ASSISTANCE	REINFORCED CONCRETE DECK SLAB	GROOVING BRIDGE FLOORS	CLASS A CONCRETE	BRIDGE APPROACH SLABS	REINFORCING STEEL	SPIRAL COLUMN REINFORCING STEEL	MODIFIED 1829MM PRESTRESSED CONCRETE GIRDERS		HP 310 X 79 STEEL PILES		HP 310 X 79 GALVANIZED STEEL PILES		PILE REDRIVES	CONCRETE BARRIER RAIL	RIP RAP CLASS II (600mm THICK)	FILTER FABRIC FOR DRAINAGE	ELASTOMERIC BEARINGS	EVAZOTE JOINT SEALS
	EACH	EACH	SQ. M.	SQ. M.	CU. M.	LUMP SUM	Kg.	Kg.	No.	METERS	No.	METERS	No.	METERS	EACH	METERS	METRIC TONS	SQ. M.	LUMP SUM	LUMP SUM
SUPERSTRUCTURE			1,340.9	1,319.4					15	489.5						197.333			LUMP SUM	LUMP SUM
END BENT No. 1					43.8		3,413				14	308			8		1,096	1,118		
BENT No. 1					86.8		6,823	1,197					36	432	15					
BENT No. 2					85.2		6,691	1,122					36	468	15					
END BENT No. 2					44.0		3,475				14	294			8		1,096	1,118		
TOTAL	1	1	1,340.9	1,319.4	259.8	LUMP SUM	20,402	2,319	15	489.5	28	602	72	900	46	197.333	2,192	2,236	LUMP SUM	LUMP SUM

NORTH CAROLINA PROFESSIONAL SEAL 029441 ENGINEER KRISTY W. ALFORD

STATE OF NORTH CAROLINA
DEPARTMENT OF TRANSPORTATION
RALEIGH

GENERAL DRAWING
FOR EBL BRIDGE ON
FAYETTEVILLE OUTER LOOP
OVER WETLANDS
BETWEEN SR 1600 AND US 401

REVISIONS						SHEET NO.
NO.	BY:	DATE:	NO.	BY:	DATE:	S-41
1			3			TOTAL SHEETS
2			4			134

DRAWN BY : N. PIERCE DATE : 07-10
CHECKED BY : T. BANKOVICH DATE : 07-10

01-NOV-2010 09:20
F:\Structures\Str2EBL\GeneralDrawings\x0002c_str3_gd.dgn
kalford

STR. #2

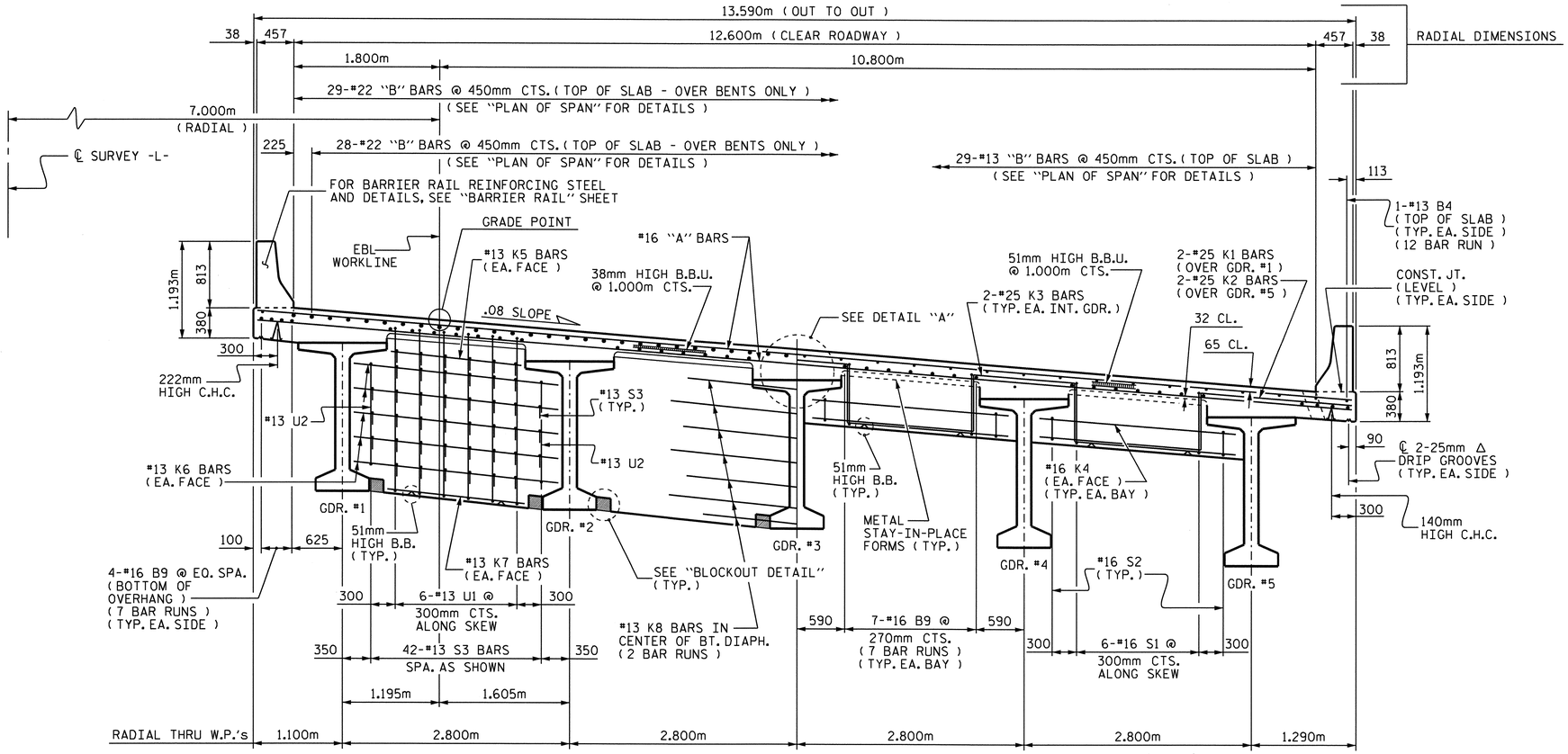

HALF TYPICAL SECTION

SHOWING BENT DIAPHRAGMS

HALF TYPICAL SECTION

SHOWING END BENT DIAPHRAGMS

NOTES :

PROVIDE 32mm HIGH BEAM BOLSTERS UPPER AT 1.2m CTS. ATOP THE METAL STAY-IN-PLACE FORMS TO SUPPORT THE BOTTOM MAT OF "A" BARS. WHEN USING REMOVABLE FORMS, PROVIDE CONTINUOUS HIGH CHAIRS FOR METAL DECK (C.H.C.M.) @ 1.2m CTS. WITH A HEIGHT TO SUPPORT THE BOTTOM MAT OF "A" BARS A CLEAR DISTANCE OF 65mm ABOVE THE TOP OF THE REMOVABLE FORM.

LONGITUDINAL STEEL MAY BE SHIFTED SLIGHTLY AS NECESSARY TO AVOID INTERFERENCE WITH STIRRUPS IN PRESTRESSED CONCRETE GIRDERS.

BARRIER RAIL IN A CONTINUOUS UNIT SHALL NOT BE CAST UNTIL ALL SLAB CONCRETE IN THE UNIT HAS BEEN CAST AND HAS REACHED A MINIMUM COMPRESSIVE STRENGTH OF 20.7 MPa.

DECK DRAINS ARE REQUIRED ALONG RIGHT GUTTERLINE.
SEE "DRAIN DETAILS", SHEET 2 OF 2.

PREVIOUSLY CAST CONCRETE IN A CONTINUOUS UNIT SHALL HAVE ATTAINED A MINIMUM COMPRESSIVE STRENGTH OF 20.7 MPa BEFORE ADDITIONAL CONCRETE IS CAST IN THE UNIT.

FOR INTERMEDIATE DIAPHRAGM DETAILS AND NOTES, SEE "INTERMEDIATE STEEL DIAPHRAGMS FOR 1829mm MODIFIED BULB TEE PRESTRESSED CONCRETE GIRDERS" SHEET.

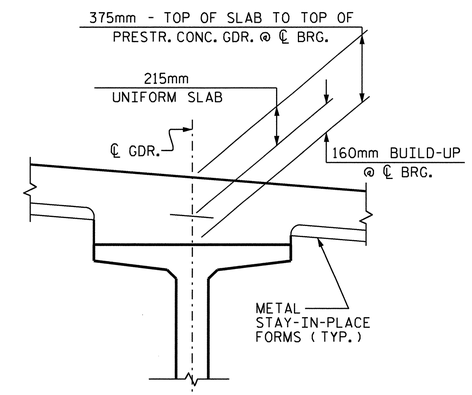

DETAIL "A"

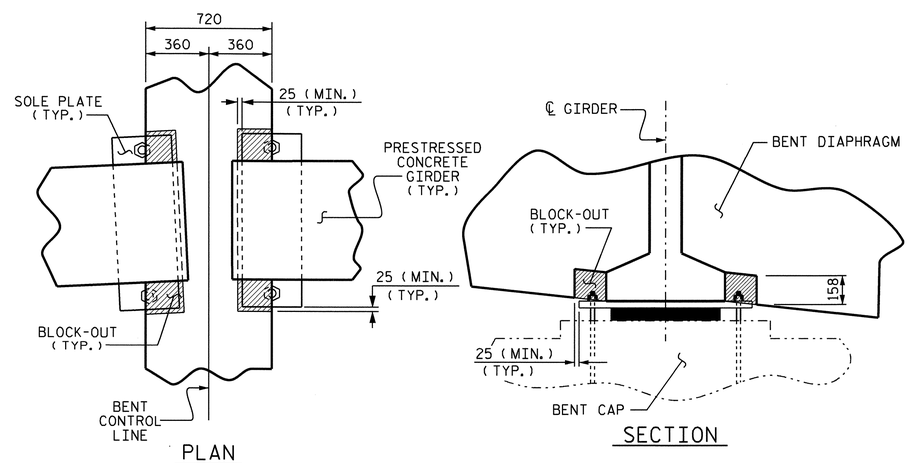

BLOCKOUT DETAIL

PROJECT NO. X-0002 CB
CUMBERLAND COUNTY
STATION: 118+17.500 -L-

SHEET 1 OF 2

STATE OF NORTH CAROLINA
DEPARTMENT OF TRANSPORTATION
RALEIGH

SUPERSTRUCTURE

TYPICAL SECTIONS

(EBL)

NORTH CAROLINA PROFESSIONAL SEAL 029441 ENGINEER KRISTY W. ALFORD

REVISIONS						SHEET NO.
NO.	BY:	DATE:	NO.	BY:	DATE:	S-42
1			3			TOTAL SHEETS
2			4			134

DRAWN BY : MIKE BRITT DATE : 6-3-10
CHECKED BY : D.G. ELY DATE : 7-1-10

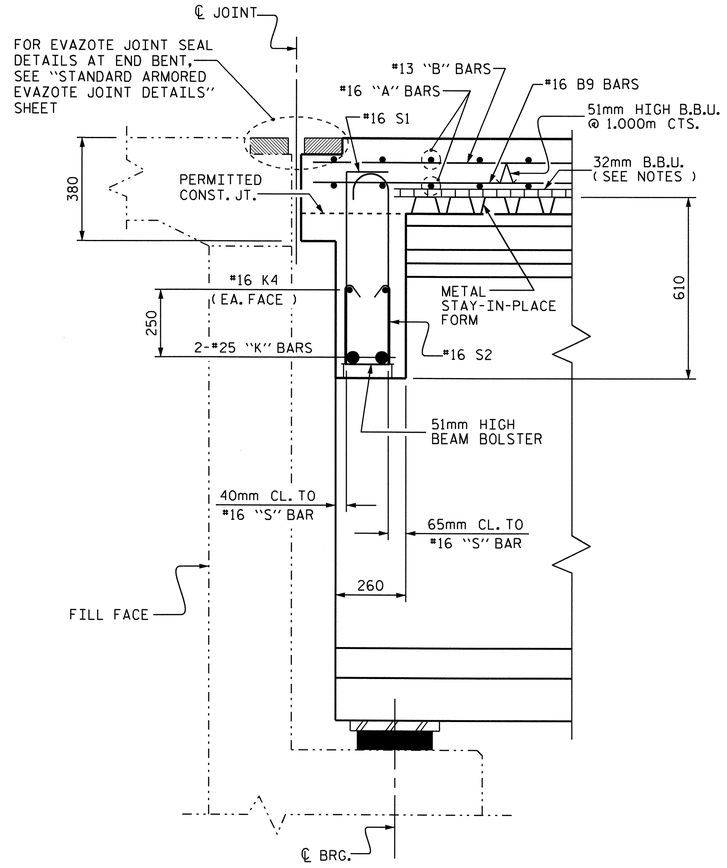

SECTION THRU END BENT DIAPHRAGM

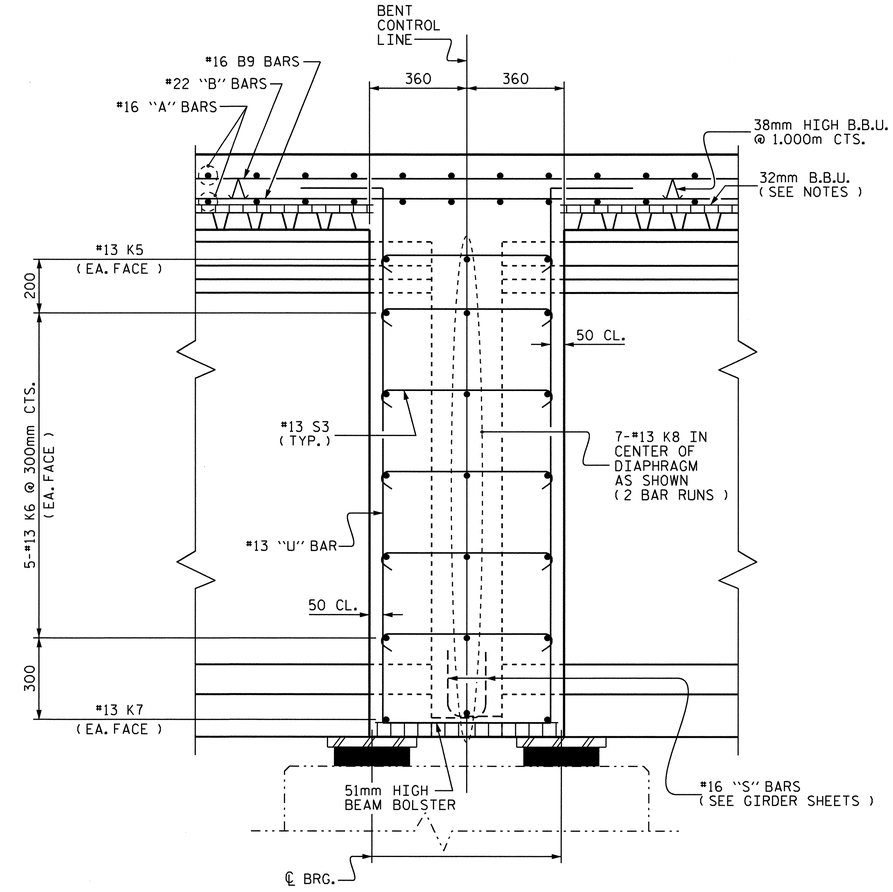

SECTION THRU BENT DIAPHRAGM

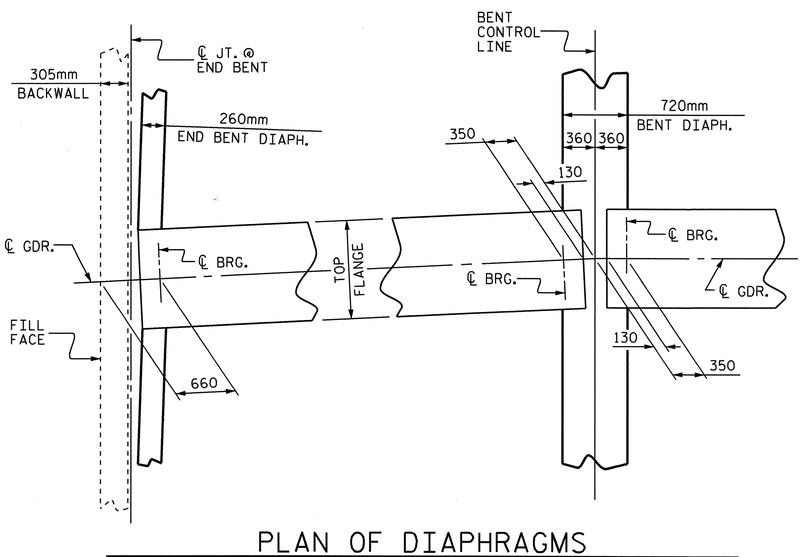

PLAN OF DIAPHRAGMS

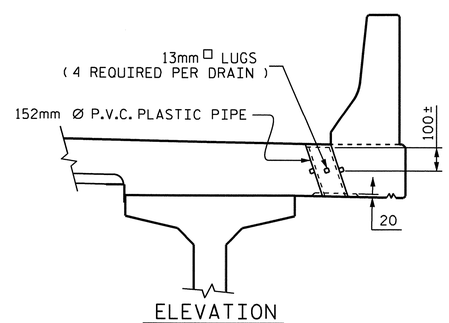

ELEVATION

TOP OF FLOOR DRAINS TO SET 10mm BELOW SURFACE OF SLAB.

4 - 13mm □ LUGS TO BE GLUED TO THE P.V.C. PLASTIC PIPE AT EQUAL SPACES AROUND THE PIPE DRAIN.

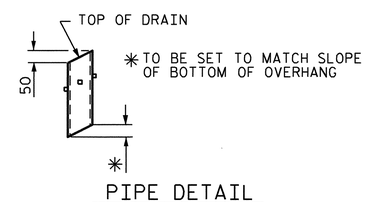

PIPE DETAIL

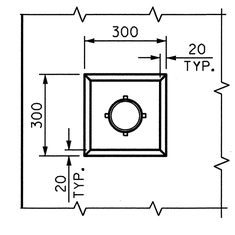

PLAN OF RECESS

DRAIN DETAILS

SEE "PLAN OF SPAN" SHEET FOR DRAIN LOCATIONS
(23 DRAINS REQUIRED)

PROJECT NO. X-0002 CB
CUMBERLAND COUNTY
STATION: 118+17.500 -L-

SHEET 2 OF 2

STATE OF NORTH CAROLINA
DEPARTMENT OF TRANSPORTATION
RALEIGH

SUPERSTRUCTURE
TYPICAL SECTIONS
(EBL)

NORTH CAROLINA PROFESSIONAL SEAL 029441 ENGINEER KRISTY W. ALFORD

REVISIONS						SHEET NO.
NO.	BY:	DATE:	NO.	BY:	DATE:	S-43
1			3			TOTAL SHEETS
2			4			134

DRAWN BY : MIKE BRITT DATE : 6-3-10
CHECKED BY : D.G. ELY DATE : 7-1-10

STR.#2

NOTES :

FOR BARRIER RAIL REINFORCING STEEL, SEE "CONCRETE BARRIER RAIL" SHEETS.

#16 "A" BARS ARE TO BE PLACED NORMAL TO LONG CHORD.

FOR LOCATION OF INTERMEDIATE STEEL DIAPHRAGMS, SEE "FRAMING PLAN" SHEETS.

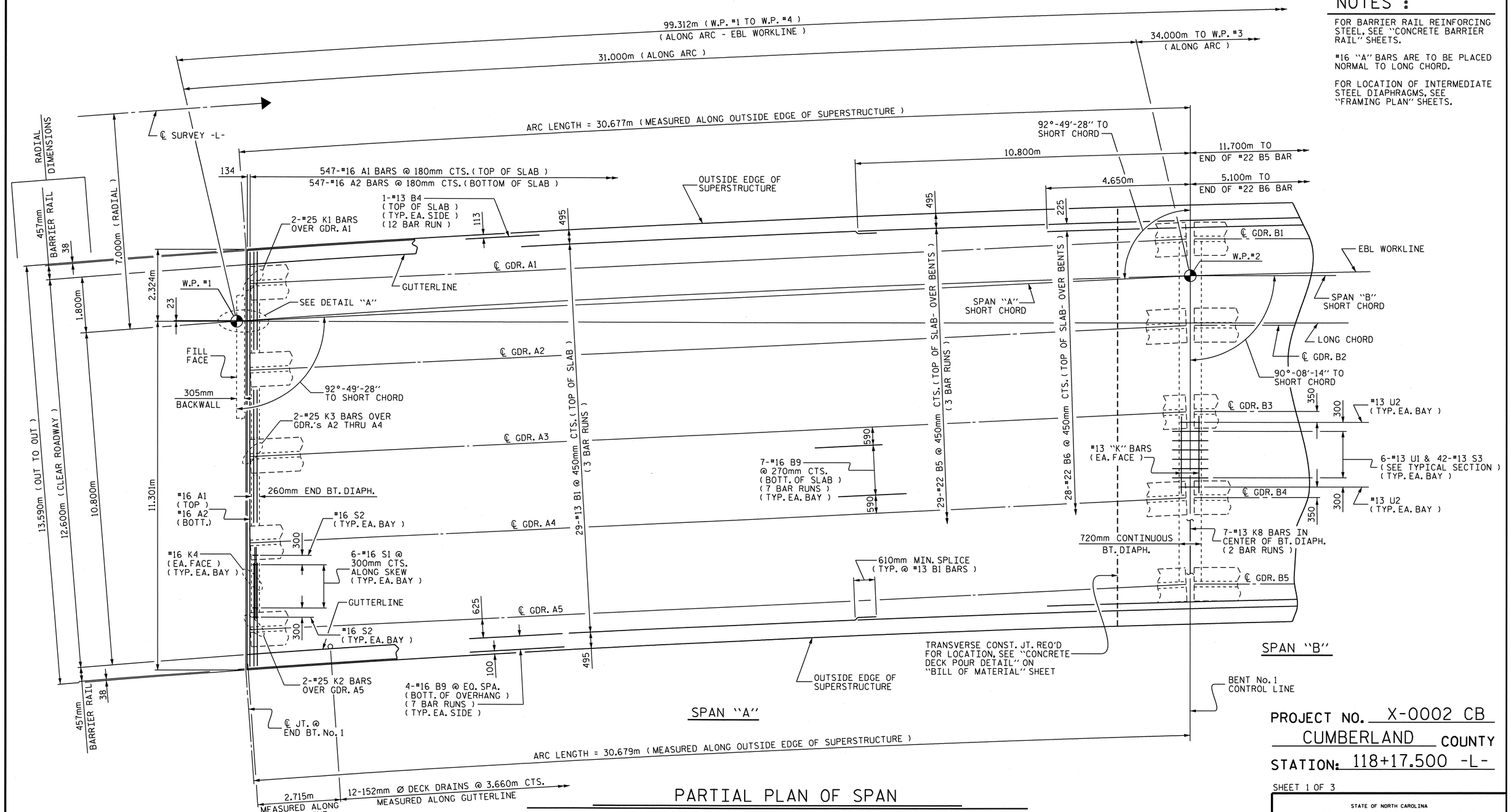

PARTIAL PLAN OF SPAN

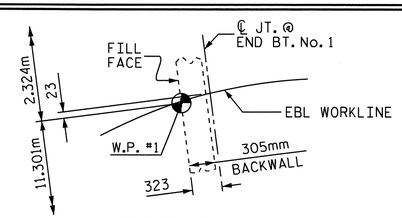

DETAIL "A"

PROJECT NO. X-0002 CB

CUMBERLAND COUNTY

STATION: 118+17.500 -L-

SHEET 1 OF 3

STATE OF NORTH CAROLINA
DEPARTMENT OF TRANSPORTATION
RALEIGH

SUPERSTRUCTURE

PLAN OF SPANS

(EBL)

REVISIONS						SHEET NO.
NO.	BY:	DATE:	NO.	BY:	DATE:	S-44
1			3			TOTAL SHEETS
2			4			134

DRAWN BY : MIKE BRITT DATE : 6-3-10
CHECKED BY : D.G. ELY DATE : 7-1-10

29-OCT-2010 12:02
F:\Structures\Str2EBL\SuperstructureDrawings\X0002C_str3_PS.dgn
kalford

STR.#2

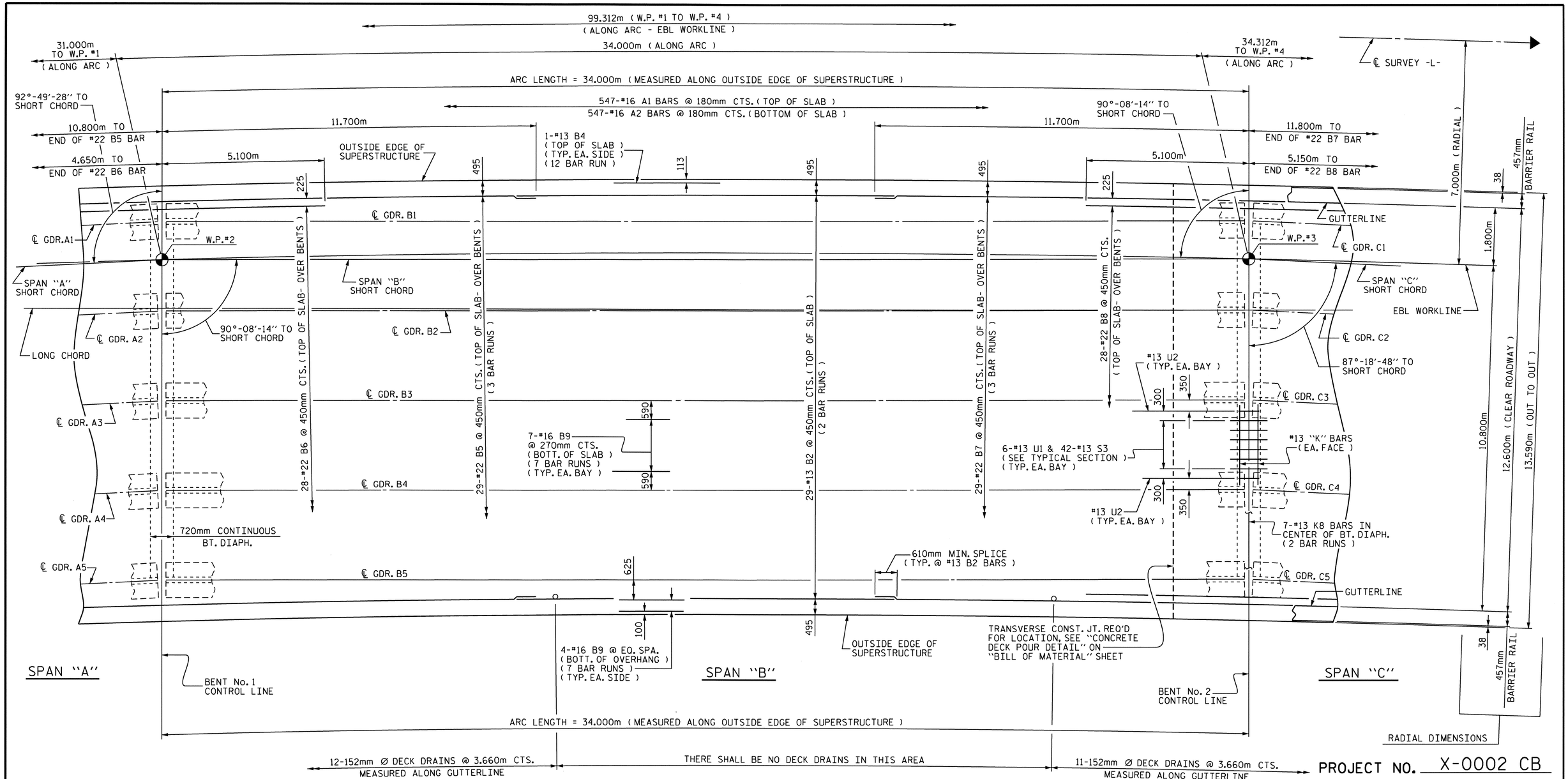

PROJECT NO. X-0002 CB
CUMBERLAND COUNTY
STATION: 118+17.500 -L-

SHEET 2 OF 3

PARTIAL PLAN OF SPAN

NOTES :

FOR BARRIER RAIL REINFORCING STEEL, SEE "CONCRETE BARRIER RAIL" SHEETS.

#16 "A" BARS ARE TO BE PLACED NORMAL TO LONG CHORD.

FOR LOCATION OF INTERMEDIATE STEEL DIAPHRAGMS, SEE "FRAMING PLAN" SHEETS.

NORTH CAROLINA PROFESSIONAL SEAL 020441 ENGINEER KRISTY W. ALFORD 8/14/10

STATE OF NORTH CAROLINA
DEPARTMENT OF TRANSPORTATION
RALEIGH

SUPERSTRUCTURE
PLAN OF SPANS
(EBL)

REVISIONS						SHEET NO.
NO.	BY:	DATE:	NO.	BY:	DATE:	S-45
1			3			TOTAL SHEETS
2			4			134

DRAWN BY : MIKE BRITT DATE : 6-3-10
CHECKED BY : D.G. ELY DATE : 7-1-10

14-SEP-2010 11:55
F:\Structures\Str2EBL\SuperstructureDrawings\X0002C_str3_PS.dgn
kalford

STR.#2

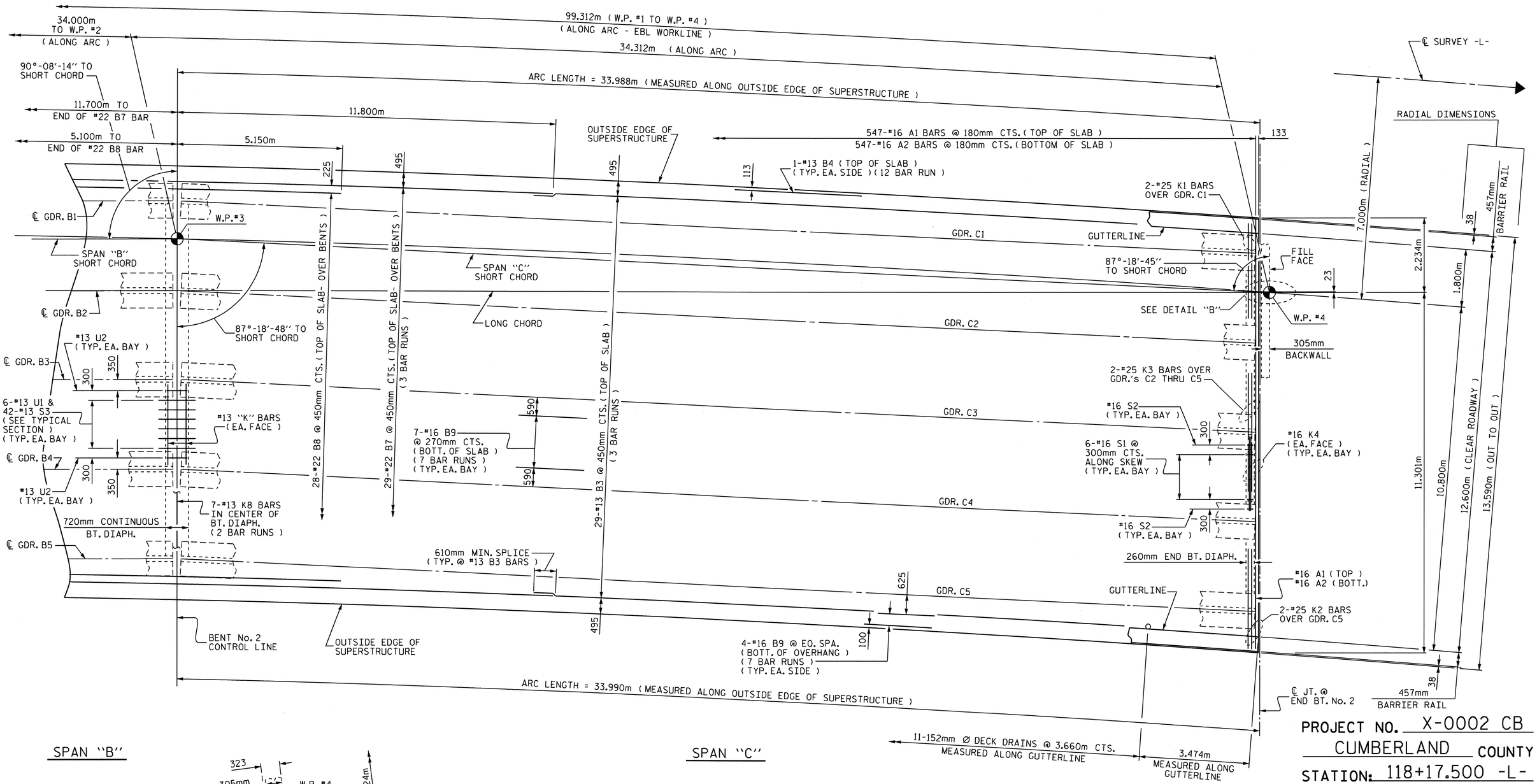

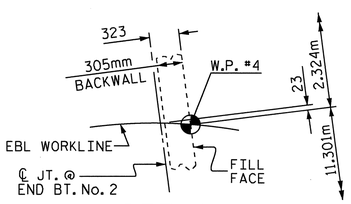

DETAIL "B"

PARTIAL PLAN OF SPAN

NOTES :

FOR BARRIER RAIL REINFORCING STEEL, SEE "CONCRETE BARRIER RAIL" SHEETS.

#16 "A" BARS ARE TO BE PLACED NORMAL TO LONG CHORD.

FOR LOCATION OF INTERMEDIATE STEEL DIAPHRAGMS, SEE "FRAMING PLAN" SHEETS.

PROJECT NO. X-0002 CB

CUMBERLAND COUNTY

STATION: 118+17.500 -L-

SHEET 3 OF 3

STATE OF NORTH CAROLINA
DEPARTMENT OF TRANSPORTATION
RALEIGH

SUPERSTRUCTURE

PLAN OF SPANS

(EBL)

NORTH CAROLINA PROFESSIONAL SEAL 029441 ENGINEER KRISTY W. ALFORD

REVISIONS							SHEET NO.
NO.	BY:	DATE:	NO.	BY:	DATE:		S-46
1			3				TOTAL SHEETS
2			4				134

DRAWN BY : MIKE BRITT DATE : 6-3-10
CHECKED BY : D.G. ELY DATE : 7-1-10

29-OCT-2010 12:03
F:\Structures\Str2EBL\SuperstructureDrawings\X0002C_str3_PS.dgn
kalford

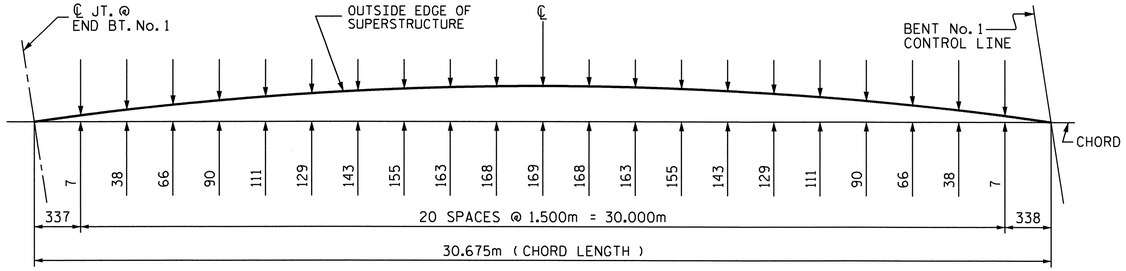

SPAN "A" ARC OFFSETS - LEFT SIDE

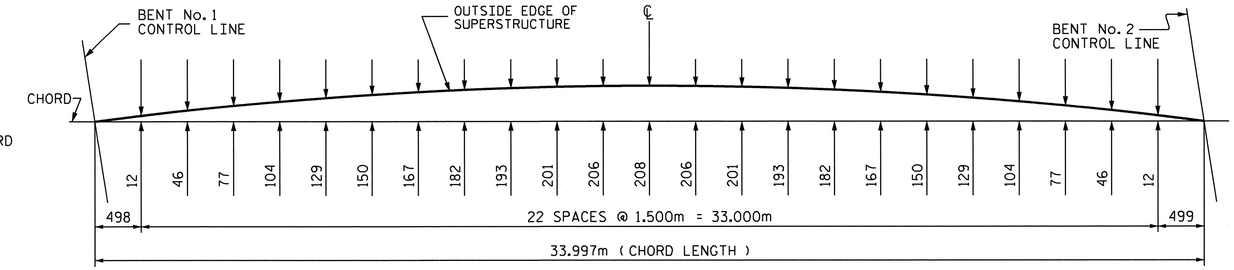

SPAN "B" ARC OFFSETS - LEFT SIDE

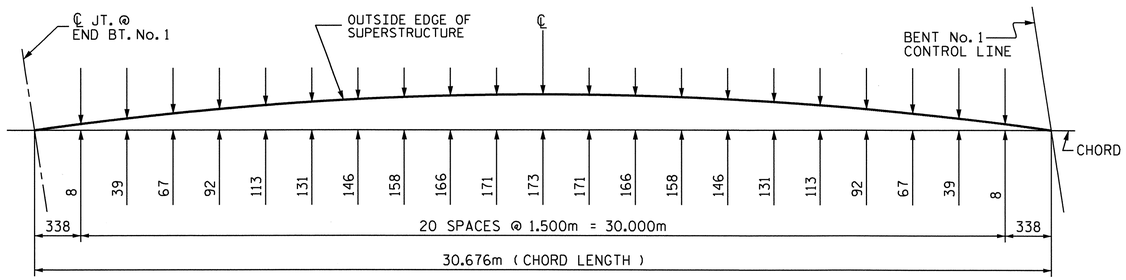

SPAN "A" ARC OFFSETS - RIGHT SIDE

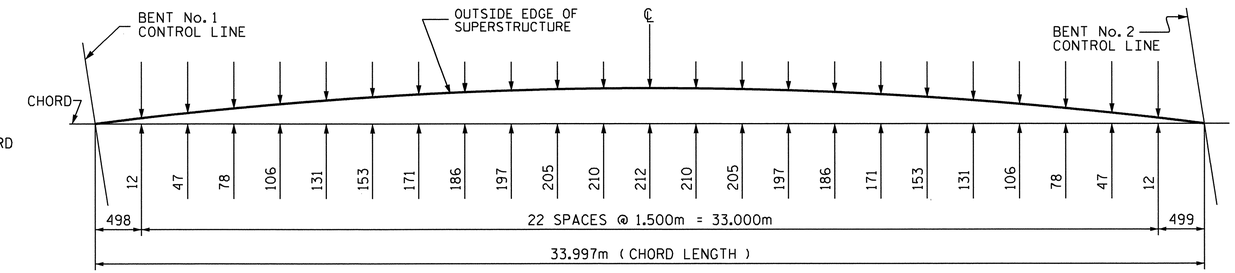

SPAN "B" ARC OFFSETS - RIGHT SIDE

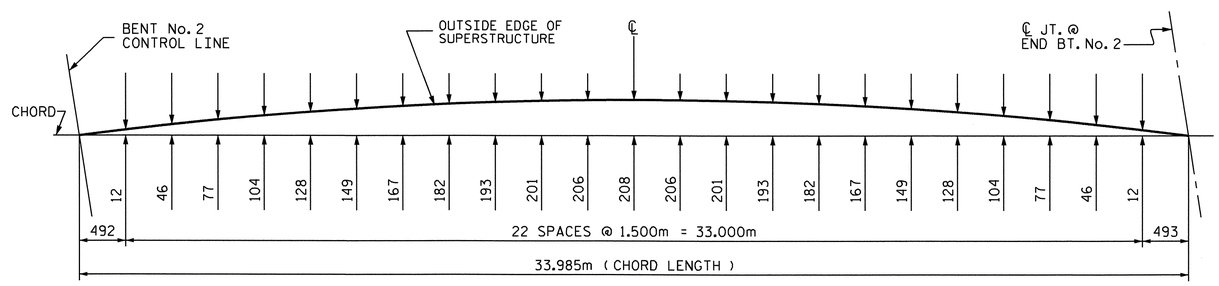

SPAN "C" ARC OFFSETS - LEFT SIDE

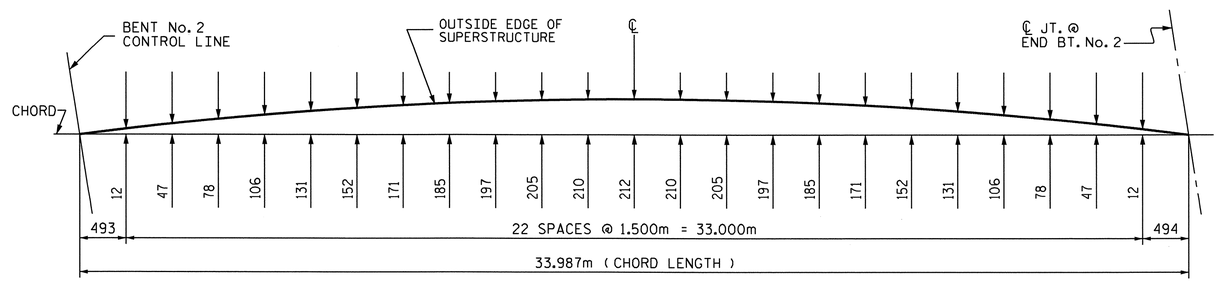

SPAN "C" ARC OFFSETS - RIGHT SIDE

PROJECT NO. X-0002 CB
CUMBERLAND COUNTY
STATION: 118+17.500 -L-

STATE OF NORTH CAROLINA
DEPARTMENT OF TRANSPORTATION
RALEIGH

SUPERSTRUCTURE
ARC OFFSETS
(EBL)

NORTH CAROLINA PROFESSIONAL SEAL 029441 ENGINEER KRISTY W. ALFORD 9/14/10

REVISIONS						SHEET NO.
NO.	BY:	DATE:	NO.	BY:	DATE:	S-47
1			3			TOTAL SHEETS
2			4			134

DRAWN BY : MIKE BRITT DATE : 6-3-10
CHECKED BY : D.G. ELY DATE : 7-1-10

14-SEP-2010 11:53
F:\Structures\Str2EBL\SuperstructureDrawings\X0002C_str3_ARC.dgn
kalford

STR.#2

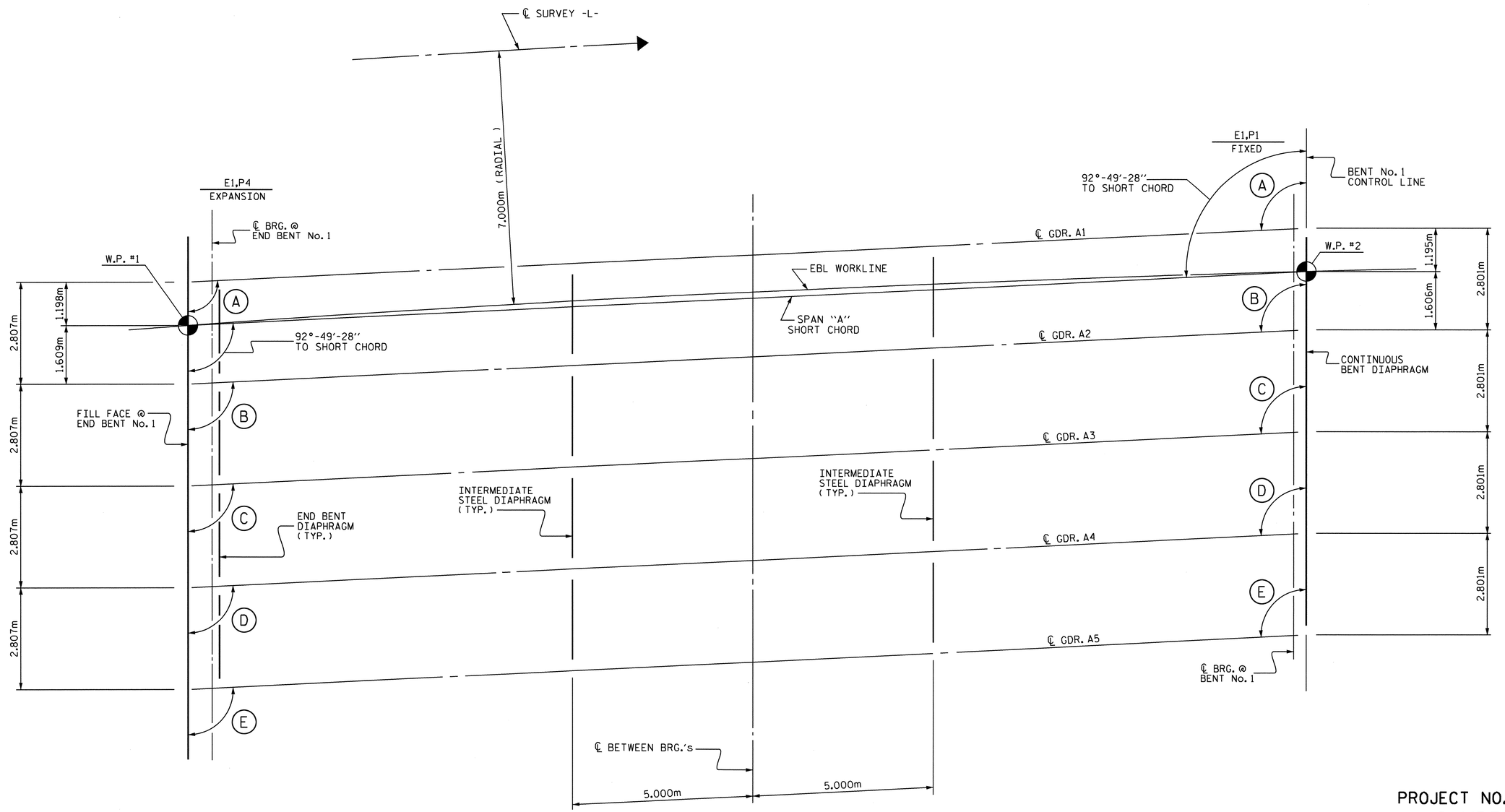

SPAN "A" FRAMING PLAN

SPAN "A" ANGLES			
ANGLE A	92°-49'-10"	ANGLE D	92°-51'-15"
ANGLE B	92°-49'-51"	ANGLE E	92°-51'-57"
ANGLE C	92°-50'-33"		

PROJECT NO. X-0002 CB
CUMBERLAND COUNTY
STATION: 118+17.500 -L-

SHEET 1 OF 3

STATE OF NORTH CAROLINA
DEPARTMENT OF TRANSPORTATION
RALEIGH

SUPERSTRUCTURE

FRAMING PLAN

(EBL)

NORTH CAROLINA PROFESSIONAL SEAL 029441 ENGINEER KRISTY W. ALFORD 9/23/10

REVISIONS						SHEET NO.
NO.	BY:	DATE:	NO.	BY:	DATE:	S-48
1			3			TOTAL SHEETS
2			4			134

DRAWN BY : MIKE BRITT DATE : 6-3-10
CHECKED BY : D.G. ELY DATE : 7-1-10

23-SEP-2010 11:23
F:\Structures\Str2EBL\SuperstructureDrawings\X0002C_str3_FP.dgn
kalford

STR. #2

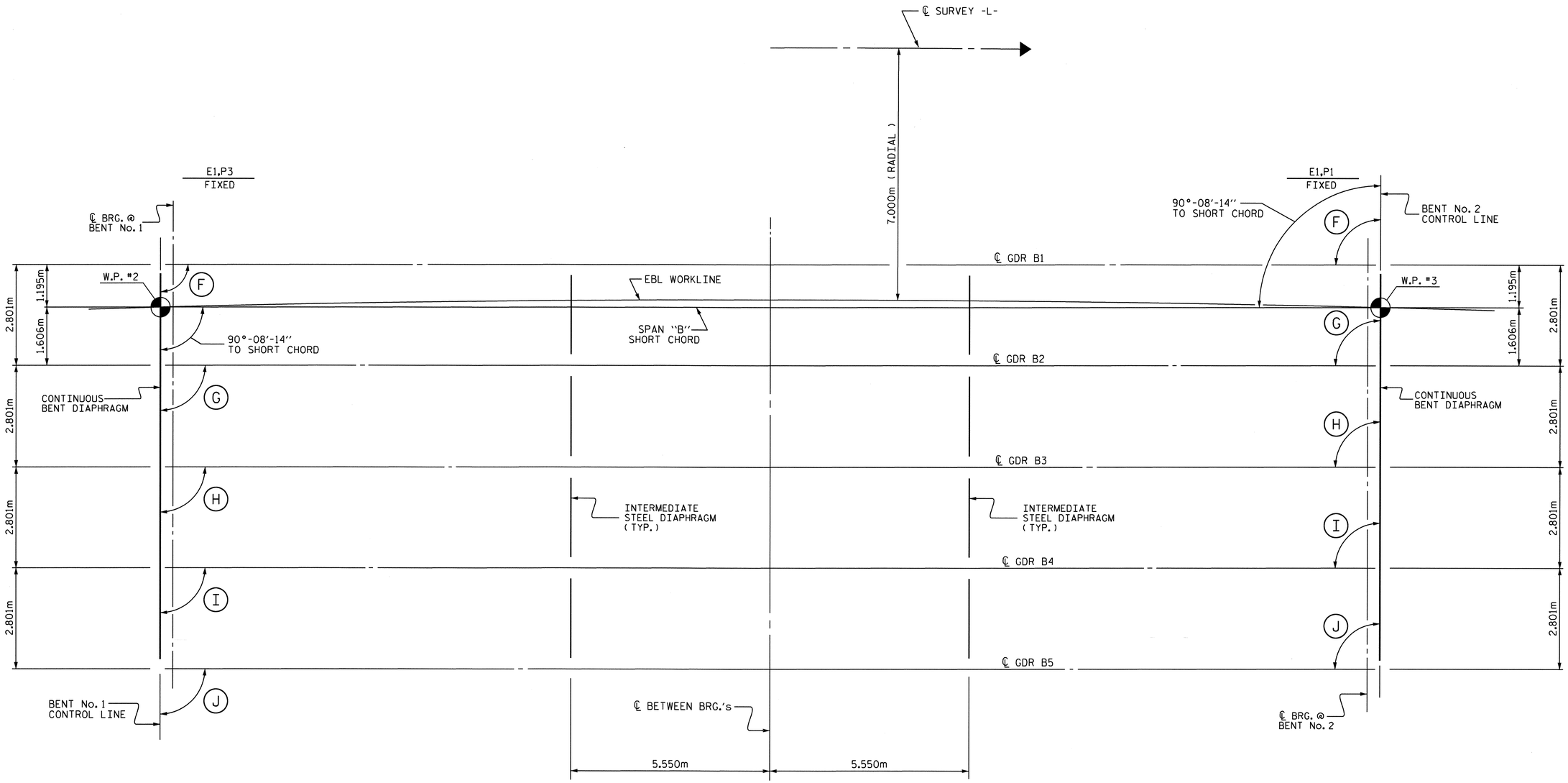

SPAN "B" FRAMING PLAN

SPAN "B" ANGLES			
ANGLE F	90°-08'-13"	ANGLE I	90°-08'-19"
ANGLE G	90°-08'-15"	ANGLE J	90°-08'-21"
ANGLE H	90°-08'-17"		

PROJECT NO. X-0002 CB
CUMBERLAND COUNTY
STATION: 118+17.500 -L-

SHEET 2 OF 3

STATE OF NORTH CAROLINA
DEPARTMENT OF TRANSPORTATION
RALEIGH

SUPERSTRUCTURE

FRAMING PLAN

(EBL)

NORTH CAROLINA PROFESSIONAL ENGINEER SEAL 029441 KRISTY W. ALFORD

REVISIONS						SHEET NO.
NO.	BY:	DATE:	NO.	BY:	DATE:	S-49
1			3			TOTAL SHEETS
2			4			134

DRAWN BY : MIKE BRITT DATE : 6-3-10
CHECKED BY : D.G. ELY DATE : 7-1-10

23-SEP-2010 11:23
F:\Structures\Str2EBL\SuperstructureDrawings\X0002C_str3_FP.dgn
kalford

STR. #2

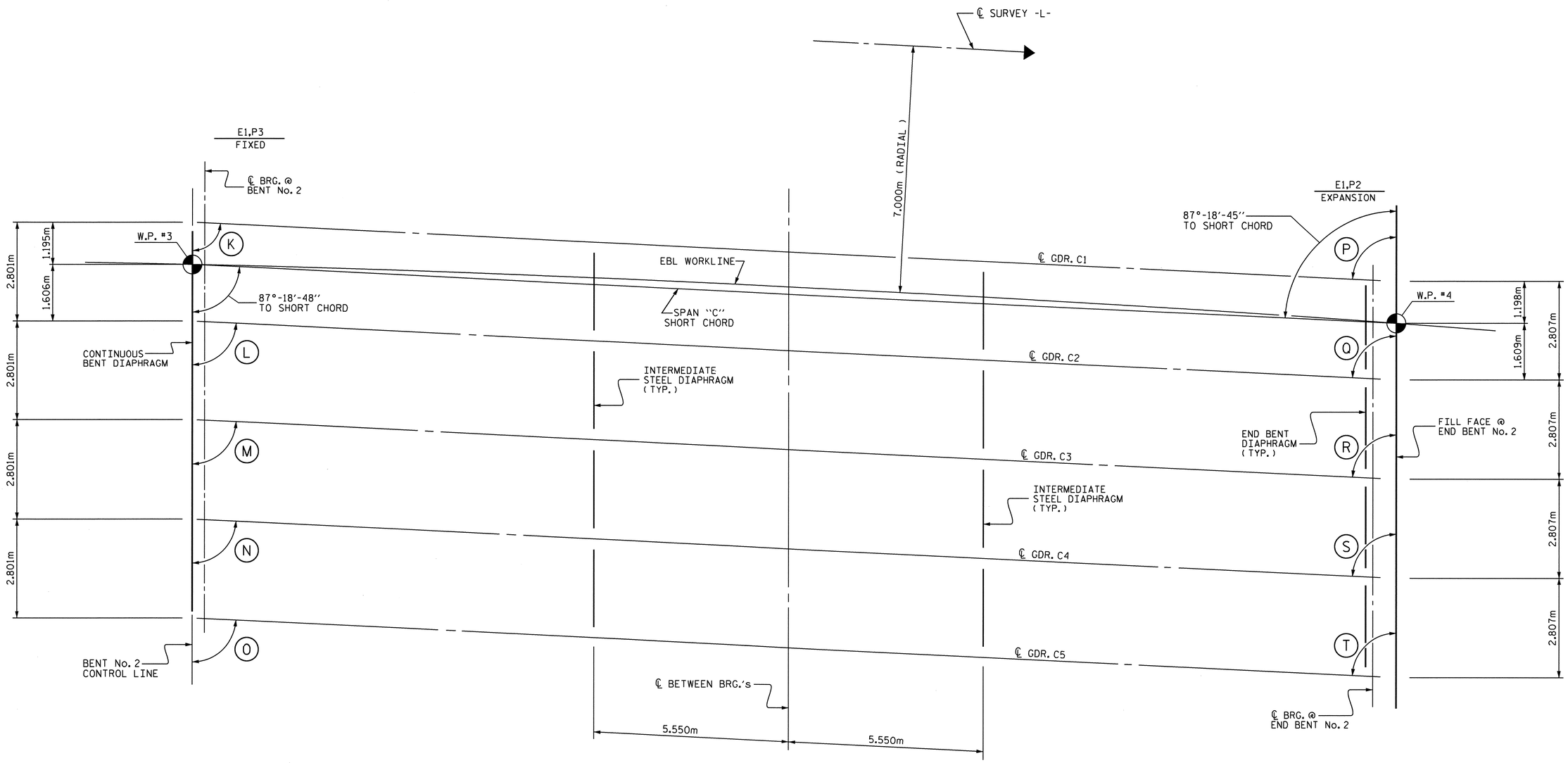

SPAN "C" FRAMING PLAN

SPAN "C" ANGLES			
ANGLE K	87°-19'-05"	ANGLE P	87°-19'-02"
ANGLE L	87°-18'-26"	ANGLE O	87°-18'-23"
ANGLE M	87°-17'-46"	ANGLE R	87°-17'-43"
ANGLE N	87°-17'-06"	ANGLE S	87°-17'-03"
ANGLE O	87°-16'-26"	ANGLE T	87°-16'-23"

PROJECT NO. X-0002 CB
CUMBERLAND COUNTY
STATION: 118+17.500 -L-

SHEET 3 OF 3

STATE OF NORTH CAROLINA
DEPARTMENT OF TRANSPORTATION
RALEIGH

SUPERSTRUCTURE
FRAMING PLAN
(EBL)

NORTH CAROLINA PROFESSIONAL ENGINEER SEAL 026441 8/23/10 KRISTY W. ALFORD

REVISIONS						SHEET NO.
NO.	BY:	DATE:	NO.	BY:	DATE:	S-50
1			3			TOTAL SHEETS
2			4			134

DRAWN BY : MIKE BRITT DATE : 6-3-10
CHECKED BY : D.G. ELY DATE : 7-1-10

23-SEP-2010 11:23
f:\Structures\Str2EBL\SuperstructureDrawings\X0002C_str3_FP.dgn
kalford

STR. #2

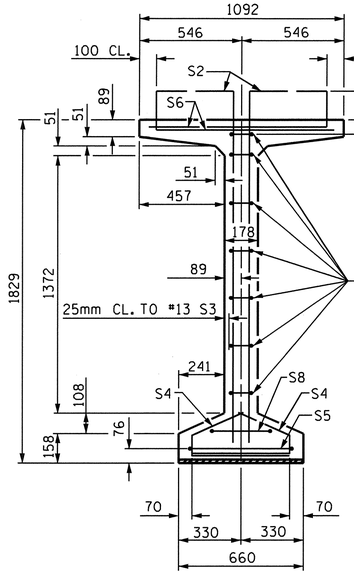

SECTION A-A

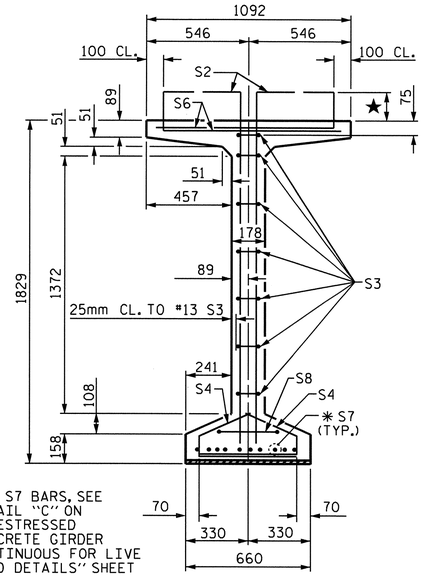

✱ FOR S7 BARS, SEE DETAIL "C" ON "PRESTRESSED CONCRETE GIRDER CONTINUOUS FOR LIVE LOAD DETAILS" SHEET

SECTION B-B

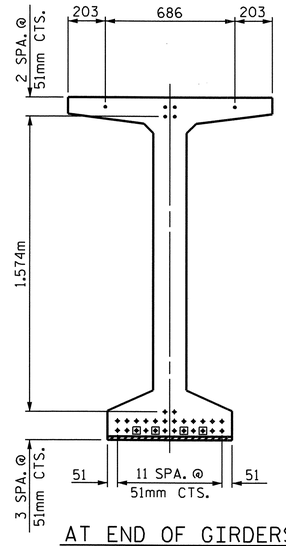

AT END OF GIRDERS

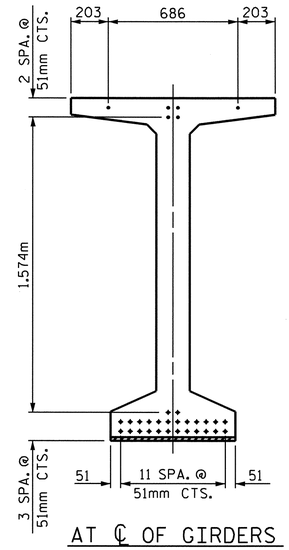

AT ℄ OF GIRDERS

15.24mm Ø LOW RELAXATION STRAND LAYOUT

★ NOTE :
S1 BARS SHALL EXTEND 220mm ABOVE TOP OF GIRDER.
S2 BARS SHALL EXTEND 250mm ABOVE TOP OF GIRDER.
S6 BARS SHALL EXTEND 150mm ABOVE TOP OF GIRDER.

DEBONDING LEGEND
- • FULLY BONDED STRANDS
- ▣ STRANDS DEBONDED FOR 1.220m FROM END OF GIRDER

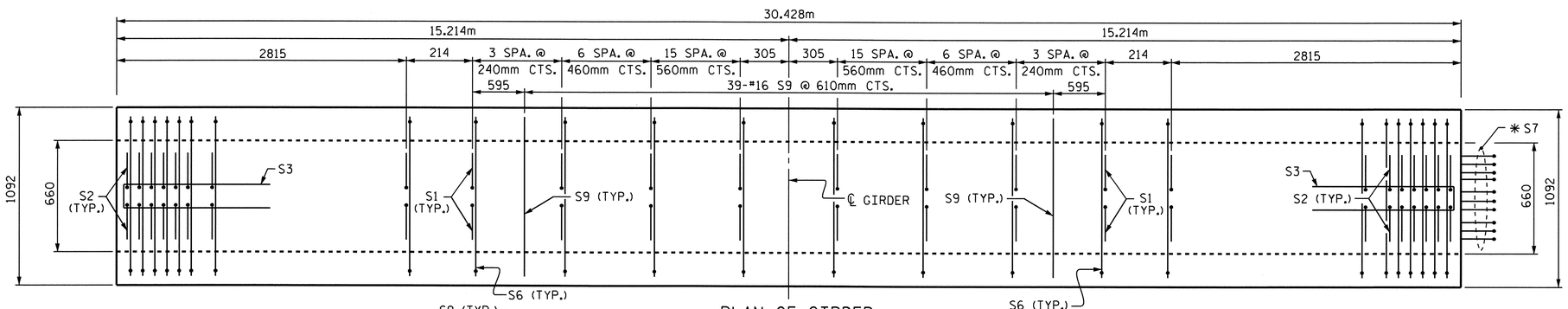

PLAN OF GIRDER

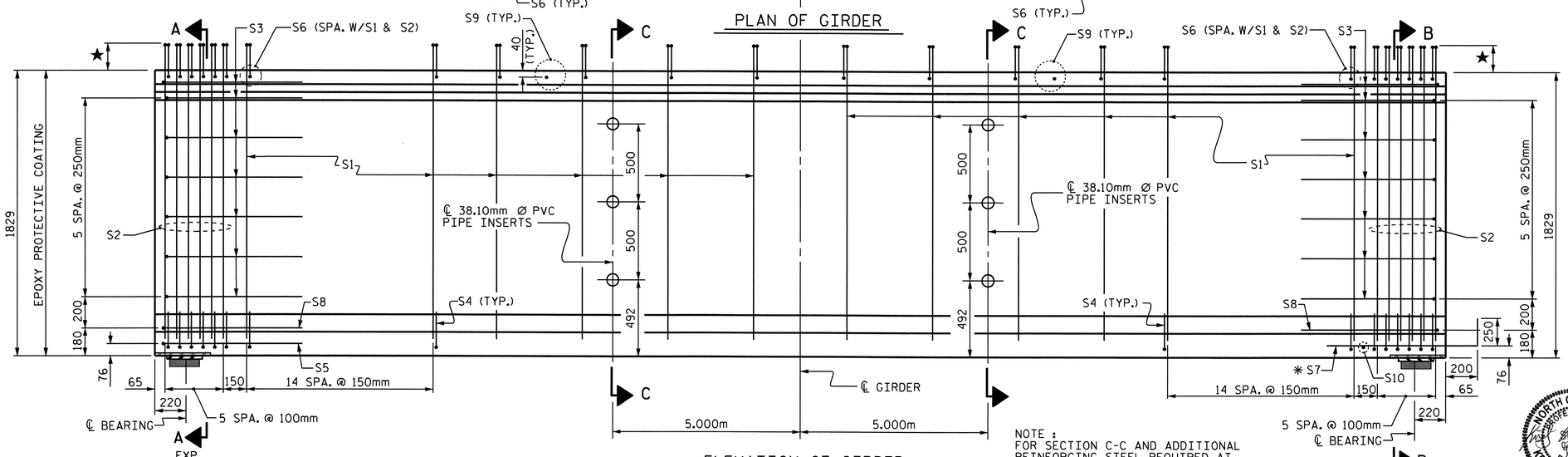

ELEVATION OF GIRDER

NOTE :
FOR SECTION C-C AND ADDITIONAL REINFORCING STEEL REQUIRED AT SECTION C-C, SEE "PRESTRESSED CONCRETE GIRDER CONTINUOUS FOR LIVE LOAD" SHEET.

15.24mm Ø L.R. GRADE 270 STRANDS

AREA (mm2)	ULTIMATE STRENGTH (KN PER STRAND)	APPLIED PRESTRESS (KN PER STRAND)
140.00	260.7	195.5

REINFORCING STEEL FOR ONE GIRDER

BAR	NUMBER	SIZE	TYPE	LENGTH	WEIGHT
S1	160	#13	1	2180	347
S2	24	#16	1	2200	82
S3	14	#13	2	2560	36
S4	84	#13	3	920	77
S5	1	#16	2	3000	5
S6	184	#16	4	1320	377
✱ S7	10	#16	STR	1120	17
S8	2	#16	2	2740	9
S9	39	#16	STR	980	59
S10	1	#10	STR	560	1
S11	8	#16	2	3540	44
S12	16	#13	STR	2440	39

✱ NOTE: S7 BARS SHALL BE BENT BEFORE SHIPMENT. HEAT BENDING SHALL NOT BE ALLOWED.

BAR TYPES

ALL BAR DIMENSIONS ARE OUT-TO-OUT

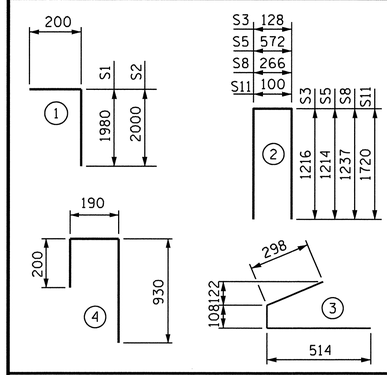

QUANTITIES FOR ONE GIRDER

SPAN "A" (EBL)	REINFORCING STEEL	60.00 MPa CONCRETE	15.24mm Ø L.R. STRANDS
	kg	m3	No.
GIRDERS A1 THRU A5	1,093	16.3	32

GIRDERS REQUIRED

NUMBER	LENGTH	TOTAL LENGTH
5	30.428m	152.140m

PROJECT NO. X-0002 CB
CUMBERLAND COUNTY
STATION: 118+17.500 -L-

STATE OF NORTH CAROLINA
DEPARTMENT OF TRANSPORTATION
RALEIGH

1829mm PRESTRESSED CONCRETE MODIFIED BULB TEE CONTINUOUS FOR LIVE LOAD (WITH 15.24mm Ø PARTIALLY DEBONDED STRANDS)

SPAN "A" (EBL)

NORTH CAROLINA PROFESSIONAL ENGINEER SEAL 025143 KRISTY W. ALFORD

REVISIONS						SHEET NO.
NO.	BY:	DATE:	NO.	BY:	DATE:	S-51
1			3			TOTAL SHEETS
2			4			134

ASSEMBLED BY : MIKE BRITT	DATE : 6-3-10
CHECKED BY : D.G. ELY	DATE : 7-1-10
DRAWN BY : RWW 9/19/02	ADDED 9/19/02
CHECKED BY : GM 9/19/02	REV. 5/1/06 TLA/GM

23-SEP-2010 11:23
F:\Structures\Str2EBL\SuperstructureDrawings\X0002C_str3_PCG.dgn
kalford

STD. NO. PCGD10SM

STR. #2

★ NOTE :
S1 BARS SHALL EXTEND 200mm ABOVE TOP OF GIRDER.
S2 BARS SHALL EXTEND 250mm ABOVE TOP OF GIRDER.
S6 BARS SHALL EXTEND 150mm ABOVE TOP OF GIRDER.

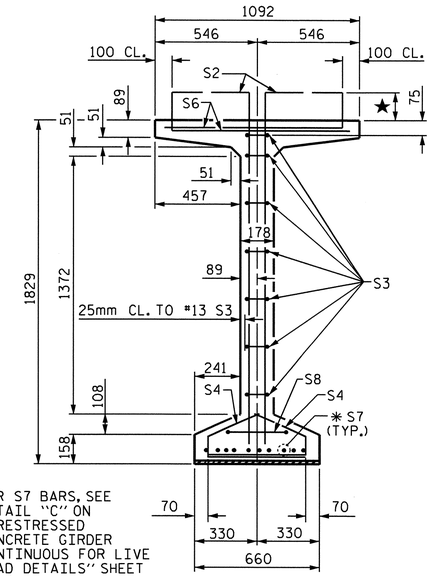

✱ FOR S7 BARS, SEE DETAIL "C" ON "PRESTRESSED CONCRETE GIRDER CONTINUOUS FOR LIVE LOAD DETAILS" SHEET

SECTION B-B

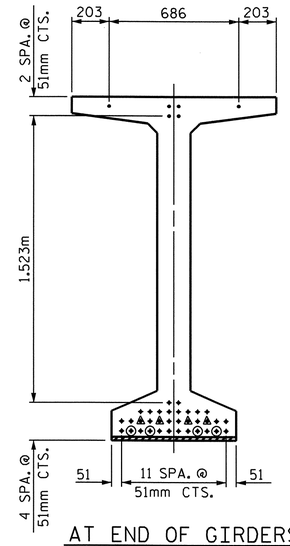

AT END OF GIRDERS

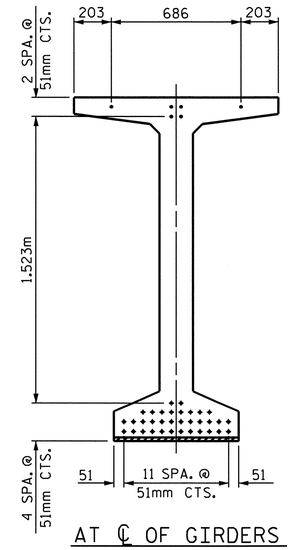

AT ℄ OF GIRDERS

15.24mm Ø LOW RELAXATION STRAND LAYOUT

DEBONDING LEGEND

- • FULLY BONDED STRANDS
- △ STRANDS DEBONDED FOR 1.830m FROM END OF GIRDER
- ⊙ STRANDS DEBONDED FOR 2.440m FROM END OF GIRDER

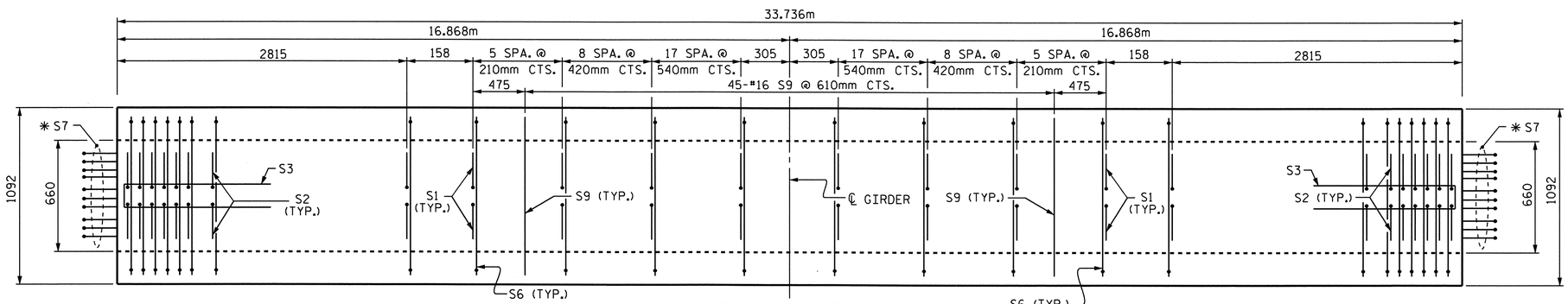

PLAN OF GIRDER

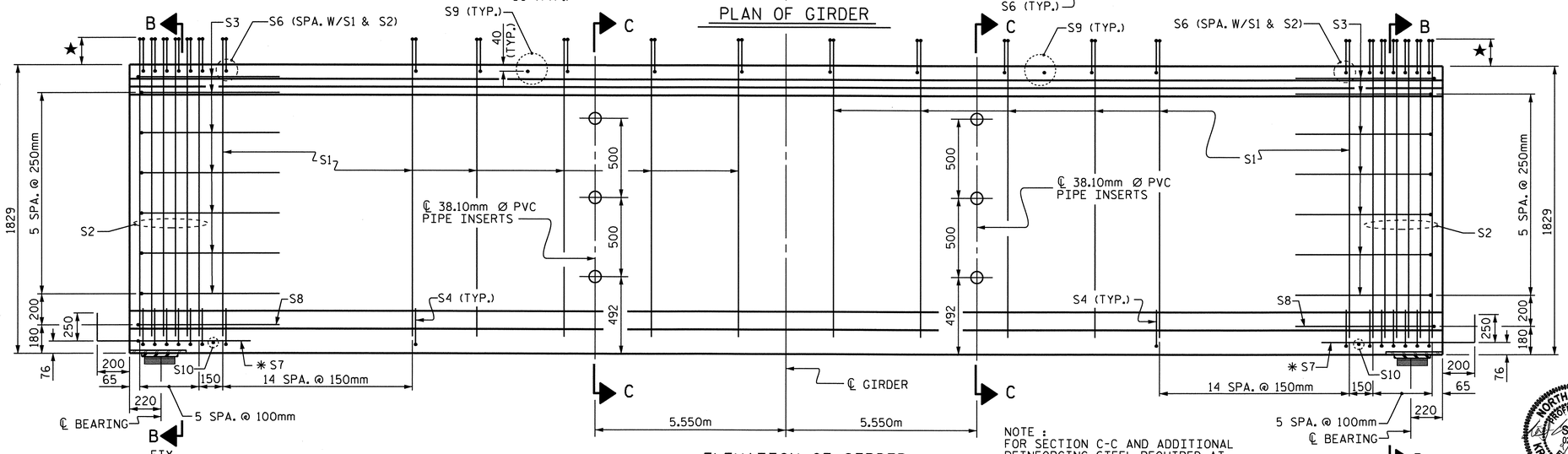

ELEVATION OF GIRDER

NOTE :
FOR SECTION C-C AND ADDITIONAL REINFORCING STEEL REQUIRED AT SECTION C-C, SEE "PRESTRESSED CONCRETE GIRDER CONTINUOUS FOR LIVE LOAD" SHEET.

15.24mm Ø L.R. GRADE 270 STRANDS

AREA (mm^2)	ULTIMATE STRENGTH (kN PER STRAND)	APPLIED PRESTRESS (kN PER STRAND)
140.00	260.7	195.5

REINFORCING STEEL FOR ONE GIRDER

BAR	NUMBER	SIZE	TYPE	LENGTH	WEIGHT
S1	184	#13	1	2160	395
S2	24	#16	1	2200	82
S3	14	#13	2	2560	36
S4	84	#13	3	920	77
S6	208	#16	4	1320	426
✱ S7	20	#16	STR	1120	35
S8	2	#16	2	2740	9
S9	45	#16	STR	980	68
S10	2	#10	STR	560	1
S11	8	#16	2	3540	44
S12	16	#13	STR	2440	39

✱ NOTE: S7 BARS SHALL BE BENT BEFORE SHIPMENT. HEAT BENDING SHALL NOT BE ALLOWED.

BAR TYPES

ALL BAR DIMENSIONS ARE OUT-TO-OUT

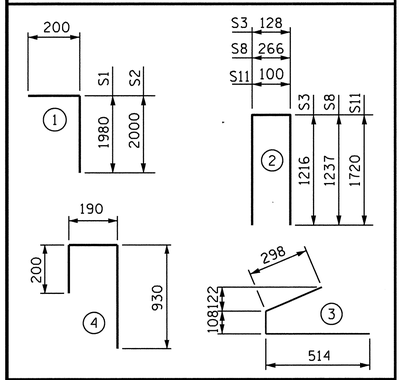

QUANTITIES FOR ONE GIRDER

SPAN "B" (EBL)	REINFORCING STEEL	60.00 MPa CONCRETE	15.24mm Ø L.R. STRANDS
	kg	m^3	No.
GIRDERS B1 THRU B5	1,212	18.1	40

GIRDERS REQUIRED

NUMBER	LENGTH	TOTAL LENGTH
5	33.736m	168.680m

PROJECT NO. X-0002 CB
CUMBERLAND COUNTY
STATION: 118+17.500 -L-

STATE OF NORTH CAROLINA
DEPARTMENT OF TRANSPORTATION
RALEIGH

1829mm PRESTRESSED CONCRETE MODIFIED BULB TEE CONTINUOUS FOR LIVE LOAD (WITH 15.24mm Ø PARTIALLY DEBONDED STRANDS)

SPAN "B" (EBL)

NORTH CAROLINA PROFESSIONAL SEAL 029441 ENGINEER KRISTY W. ALFORD 9/23/10

REVISIONS						
NO.	BY:	DATE:	NO.	BY:	DATE:	
1			3			
2			4			

SHEET NO. S-52
TOTAL SHEETS 134

ASSEMBLED BY : MIKE BRITT	DATE : 6-3-10
CHECKED BY : D.G. ELY	DATE : 7-1-10
DRAWN BY : RWW 9/19/02	ADDED 9/19/02
CHECKED BY : GM 9/19/02	REV. 5/1/06 TLA/GM

23-SEP-2010 11:24
F:\Structures\Str2EBL\SuperstructureDrawings\X0002C_str3_PCG.dgn
kalford

STD. NO. PCGD10SM

STR. #2

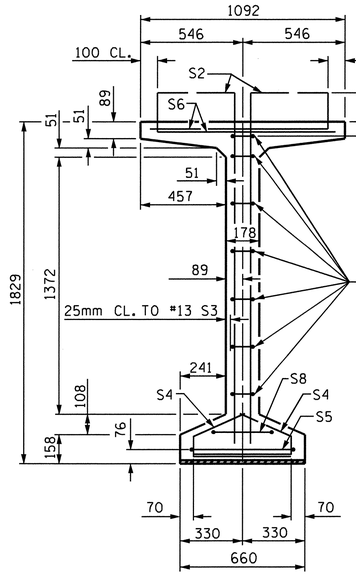

SECTION A-A

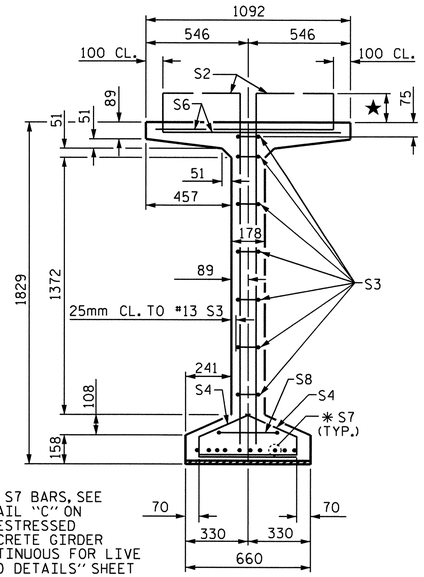

✱ FOR S7 BARS, SEE DETAIL "C" ON "PRESTRESSED CONCRETE GIRDER CONTINUOUS FOR LIVE LOAD DETAILS" SHEET

SECTION B-B

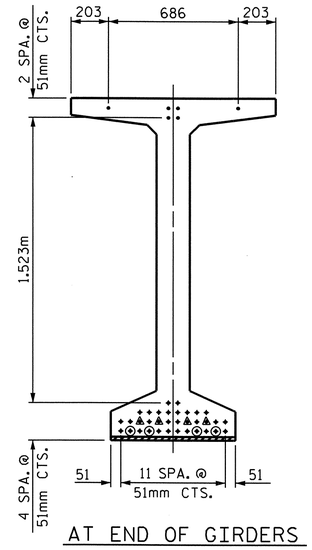

AT END OF GIRDERS

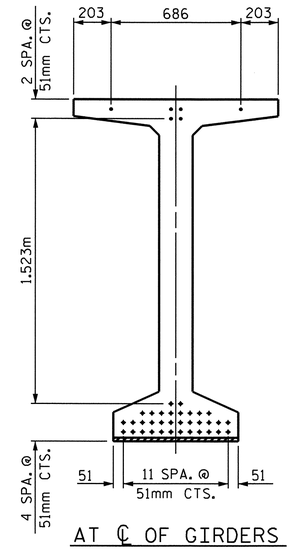

AT ℄ OF GIRDERS

15.24mm Ø LOW RELAXATION STRAND LAYOUT

★ NOTE :
S1 BARS SHALL EXTEND 200mm ABOVE TOP OF GIRDER.
S2 BARS SHALL EXTEND 250mm ABOVE TOP OF GIRDER.
S6 BARS SHALL EXTEND 150mm ABOVE TOP OF GIRDER.

DEBONDING LEGEND

- • FULLY BONDED STRANDS
- △ STRANDS DEBONDED FOR 1.830m FROM END OF GIRDER
- ⦿ STRANDS DEBONDED FOR 2.440m FROM END OF GIRDER

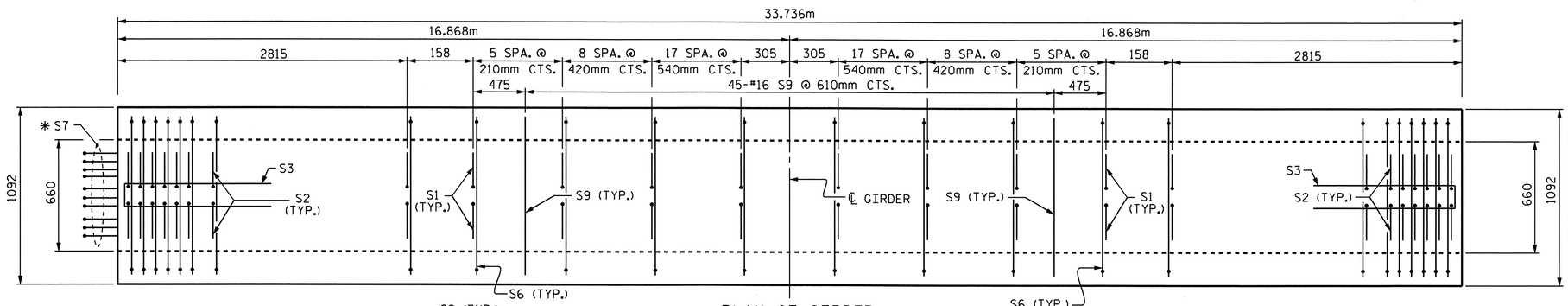

PLAN OF GIRDER

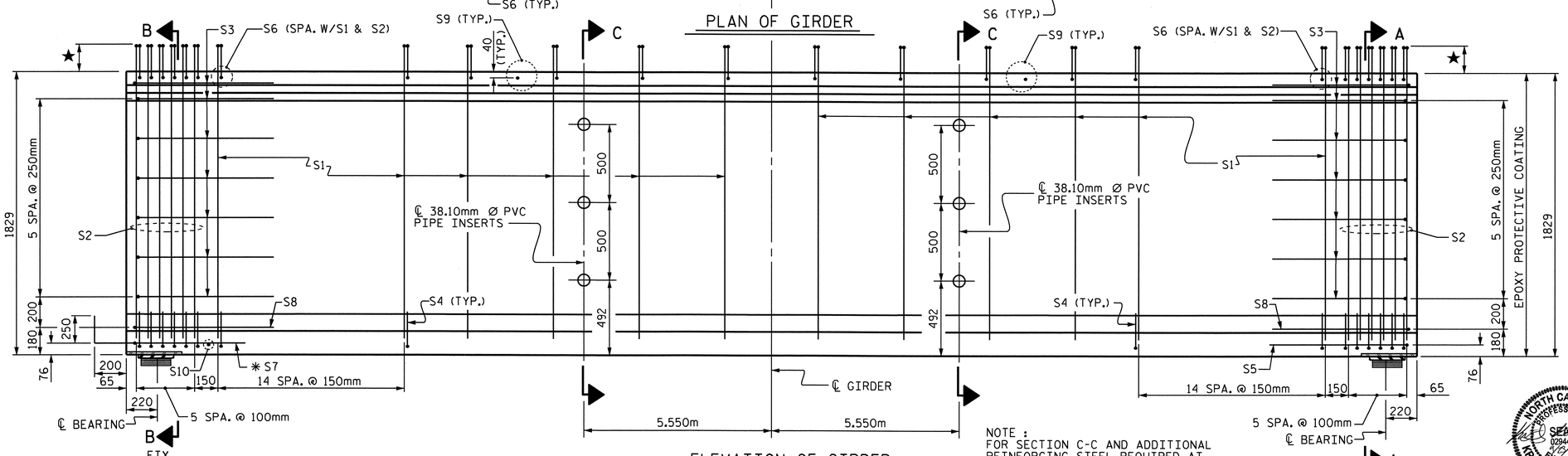

ELEVATION OF GIRDER

NOTE :
FOR SECTION C-C AND ADDITIONAL REINFORCING STEEL REQUIRED AT SECTION C-C, SEE "PRESTRESSED CONCRETE GIRDER CONTINUOUS FOR LIVE LOAD" SHEET.

15.24mm Ø L.R. GRADE 270 STRANDS

AREA (mm^2)	ULTIMATE STRENGTH (kN PER STRAND)	APPLIED PRESTRESS (kN PER STRAND)
140.00	260.7	195.5

REINFORCING STEEL FOR ONE GIRDER

BAR	NUMBER	SIZE	TYPE	LENGTH	WEIGHT
S1	184	#13	1	2160	395
S2	24	#16	1	2200	82
S3	14	#13	2	2560	36
S4	84	#13	3	920	77
S5	1	#16	2	3000	5
S6	208	#16	4	1320	426
✱ S7	10	#16	STR	1120	17
S8	2	#16	2	2740	9
S9	45	#16	STR	980	68
S10	1	#10	STR	560	1
S11	8	#16	2	3540	44
S12	16	#13	STR	2440	39

✱ NOTE: S7 BARS SHALL BE BENT BEFORE SHIPMENT. HEAT BENDING SHALL NOT BE ALLOWED.

BAR TYPES

ALL BAR DIMENSIONS ARE OUT-TO-OUT

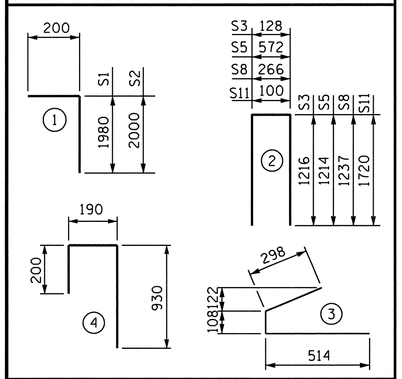

QUANTITIES FOR ONE GIRDER

SPAN "C" (EBL)	REINFORCING STEEL	60.00 MPa CONCRETE	15.24mm Ø L.R. STRANDS
	kg	m^3	No.
GIRDERS C1 THRU C5	1,199	18.1	40

GIRDERS REQUIRED

NUMBER	LENGTH	TOTAL LENGTH
5	33.736m	168.680m

PROJECT NO. X-0002 CB
CUMBERLAND COUNTY
STATION: 118+17.500 -L-

STATE OF NORTH CAROLINA
DEPARTMENT OF TRANSPORTATION
RALEIGH

1829mm PRESTRESSED CONCRETE MODIFIED BULB TEE CONTINUOUS FOR LIVE LOAD (WITH 15.24mm Ø PARTIALLY DEBONDED STRANDS)

SPAN "C" (EBL)

NORTH CAROLINA PROFESSIONAL SEAL 029441 ENGINEER KRISTY W. ALFORD

REVISIONS						
NO.	BY:	DATE:	NO.	BY:	DATE:	
1			3			
2			4			

SHEET NO. S-53
TOTAL SHEETS 134

ASSEMBLED BY : MIKE BRITT	DATE : 6-3-10
CHECKED BY : D.G. ELY	DATE : 7-1-10
DRAWN BY : RWW 9/19/02	ADDED 9/19/02
CHECKED BY : GM 9/19/02	REV. 5/1/06 TLA/GM

23-SEP-2010 11:24
F:\Structures\Str2EBL\SuperstructureDrawings\X0002C_str3_PCG.dgn
kalford

STD. NO. PCGD10SM

STR. #2

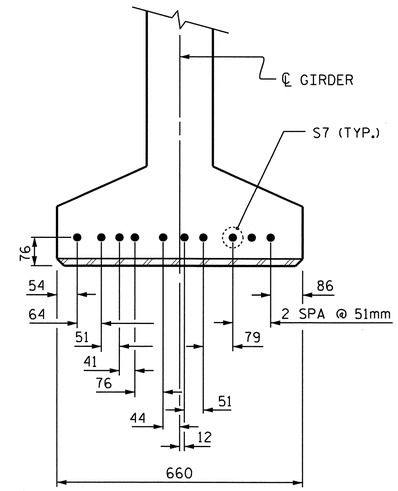

DETAIL "C"

NOTES

ALL PRESTRESSING STRANDS SHALL BE 7-WIRE LOW-RELAXATION GRADE 270 STRANDS AND SHALL CONFORM TO AASHTO M203M EXCEPT FOR SAMPLING REQUIREMENTS WHICH SHALL BE IN ACCORDANCE WITH THE STANDARD SPECIFICATIONS.

ALL REINFORCING STEEL SHALL BE GRADE 420.

APPLY EPOXY PROTECTIVE COATING TO END OF GIRDER SURFACES INDICATED IN ELEVATION VIEW.

EMBEDDED PLATE "B-1" SHALL BE GALVANIZED IN ACCORDANCE WITH THE SPECIFICATIONS. BEVEL EDGES OF PLATE "B-1" TO GIVE CLOSE FIT BUT NOT TIGHT FIT TO STEEL CASTING FORM.

ANCHOR STUDS SHALL CONFORM TO AASHTO M169 GRADES 1010 THROUGH 1020 OR APPROVED EQUAL, AND SHALL MEET THE TYPE "B" REQUIREMENTS OF SUBSECTION 7.3 OF THE ANSI/AASHTO/AWS D1.5 BRIDGE WELDING CODE.

AT ENDS OF GIRDERS TO BE EMBEDDED IN CONCRETE DIAPHRAGMS OR END WALLS, PRESTRESSING STRANDS MAY EXTEND A MAXIMUM OF 50mm BEYOND THE GIRDER ENDS. OTHERWISE, PRESTRESSING STRANDS SHALL BE CUT FLUSH WITH THE GIRDER ENDS.

THE TRANSFER OF LOAD FROM THE ANCHORAGES TO THE GIRDER SHALL BE DONE WHEN CONCRETE HAS REACHED A COMPRESSIVE STRENGTH OF NOT LESS THAN 46 MPa.

DEPENDING ON THE TYPE OF SYSTEM USED TO SUPPORT THE DECK SLAB FORMS, PRESET ANCHORS MAY BE NECESSARY IN THE PRESTRESSED CONCRETE GIRDER.

THE TOP SURFACE OF THE GIRDER, EXCLUDING THE OUTSIDE 100mm, SHALL BE RAKED TO A DEPTH OF 6mm.

A 51mm x 51mm CHAMFER IS ALLOWED AT THE INTERSECTION OF THE WEB AND THE BOTTOM FLANGE OF THE 1829mm MODIFIED BULB TEES ONLY.

THE CONTRACTOR HAS THE OPTION TO PROVIDE, AT NO ADDITIONAL COST TO THE DEPARTMENT, 2 ADDITIONAL STRANDS AT THE TOP OF THE GIRDER TO FACILITATE TYING OF THE REINFORCING STEEL. THESE STRANDS SHALL BE PULLED TO A LOAD OF 20 Kn.

FOR PRESTRESSED CONCRETE MEMBERS, SEE SPECIAL PROVISIONS.

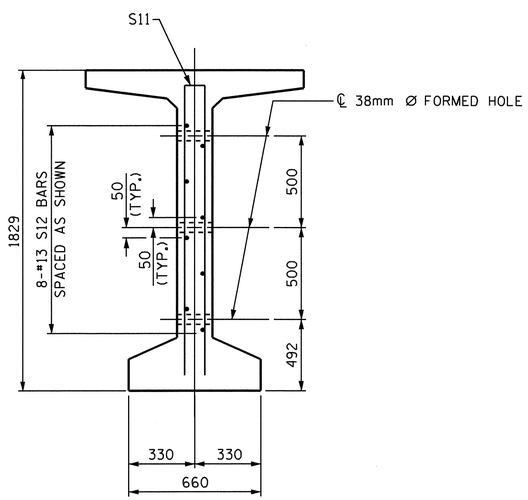

SECTION C-C

(S1, S6 AND S9 BARS NOT SHOWN)

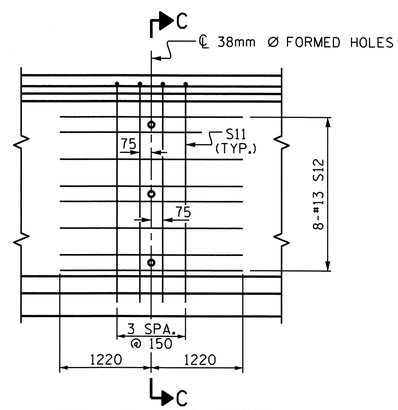

PARTIAL ELEVATION

SHOWING INTERMEDIATE STEEL DIAPHRAGM REINFORCING STEEL FOR ALL GIRDERS

NOTE :
FOR LOCATION OF SECTION C-C AND REINFORCING STEEL QUANTITIES, SEE "1829mm PRESTRESSED CONCRETE MODIFIED BULB TEE" SHEETS.

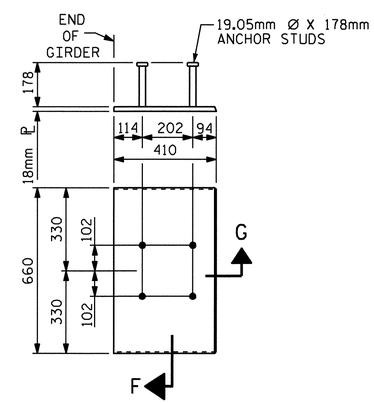

EMBEDDED PLATE "B-1" DETAILS FOR AASHTO TYPE IV GIRDER 1829mm MODIFIED BULB TEES

(2 REQ'D PER GIRDER)

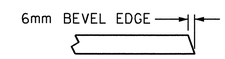

SECTION "G"

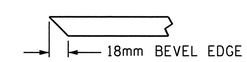

SECTION "F"

(SEE NOTES)

PROJECT NO. X-0002 CB
CUMBERLAND COUNTY
STATION: 118+17.500 -L-

STATE OF NORTH CAROLINA
DEPARTMENT OF TRANSPORTATION
RALEIGH

STANDARD
PRESTRESSED CONCRETE GIRDER
CONTINUOUS FOR LIVE LOAD
DETAILS
(EBL)

NORTH CAROLINA PROFESSIONAL SEAL 029441 ENGINEER KRISTY W. ALFORD

REVISIONS							SHEET NO.
NO.	BY:	DATE:	NO.	BY:	DATE:		S-54
1			3				TOTAL SHEETS
2			4				134

ASSEMBLED BY : MIKE BRITT		DATE : 6-3-10
CHECKED BY : D.G. ELY		DATE : 7-1-10
DRAWN BY : ELR 11/91	REV. 10/17/00 RWW/LES	
CHECKED BY : GRP 11/91	REV. 7/10/01RR LES/RDR	
	REV. 5/1/06 TLA/GM	

23-SEP-2010 11:24
F:\Structures\Str2EBL\SuperstructureDrawings\X0002C_str3_PCG.dgn
kalford

STD. NO. PCG11SM

STR. #2

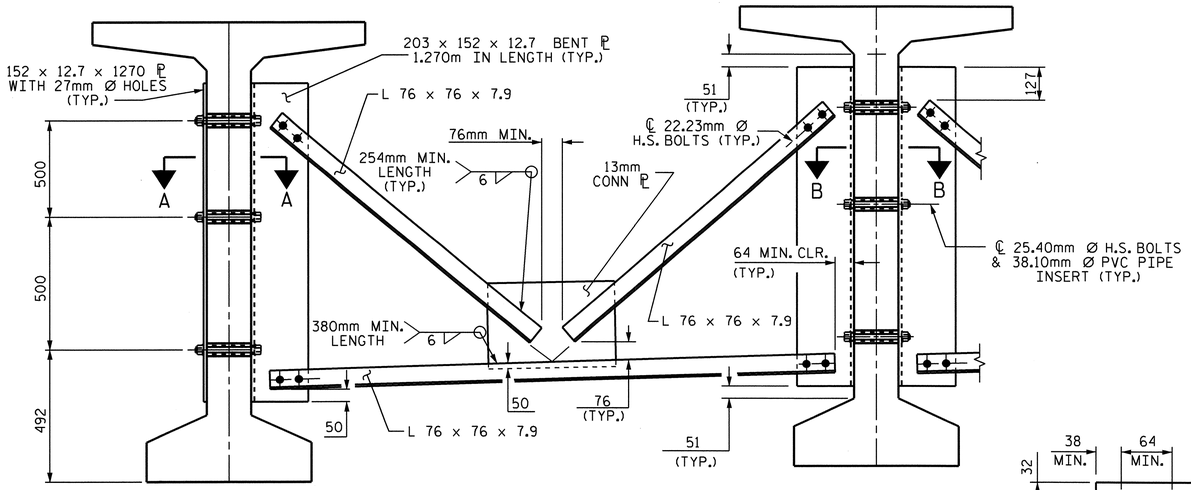

EXTERIOR GIRDER

INTERIOR GIRDER

PART SECTION AT INTERMEDIATE DIAPHRAGM

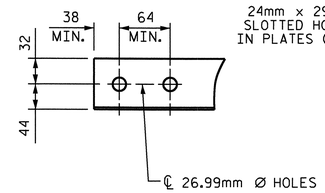

ANGLE END

(L 76 X 76 X 7.9)

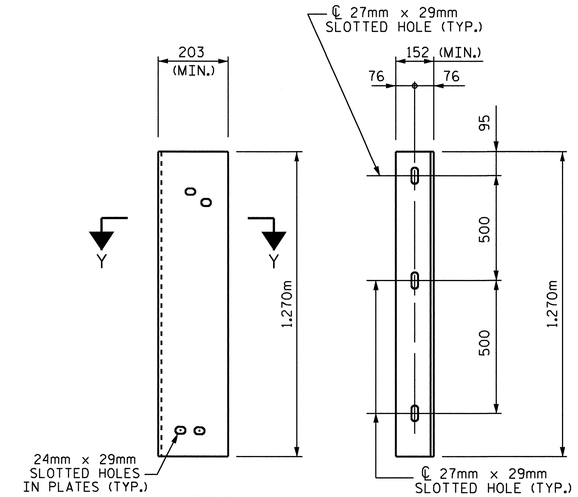

DIAPHRAGM FACE

WEB FACE

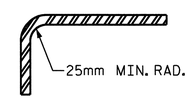

SECTION Y-Y

CONNECTOR PLATE DETAILS

STRUCTURAL STEEL NOTES

ALL INTERMEDIATE DIAPHRAGM STEEL, CONNECTOR PLATES AND PLATE WASHERS SHALL BE AASHTO M270 GRADE 345 OR APPROVED EQUAL.

TENSION ON THE AASHTO M164 BOLTS THROUGH THE CHANNEL MEMBER SHALL BE CALIBRATED USING DIRECT TENSION INDICATOR WASHERS IN ACCORDANCE WITH THE STANDARD SPECIFICATIONS. FOR DIRECT TENSION INDICATORS, SEE SPECIAL PROVISION.

TENSION ON THE AASHTO M164 BOLTS THROUGH THE GIRDER WEB SHALL BE SNUG TIGHTENED FOLLOWED BY AN ADDITIONAL 1/4 TURN.

THE PLATES, BENT PLATES, ANGLES, AND PLATE WASHERS SHALL BE GALVANIZED OR METALLIZED IN ACCORDANCE WITH THE STANDARD SPECIFICATIONS. FOR THERMAL SPRAYED COATINGS (METALLIZATION), SEE SPECIAL PROVISIONS.

FOR METALLIZATION, APPLY AN 8 MIL THICK 99.99 PERCENT ZINC (W-Zn-1) THERMAL SPRAYED COATING WITH A 0.5 MIL THICK SEAL COAT TO ALL STEEL DIAPHRAGM SURFACES IN ACCORDANCE WITH THE THERMAL SPRAYED COATINGS SPECIAL PROVISIONS AND SECTION 442 OF THE STANDARD SPECIFICATIONS.

GALVANIZE THE HIGH STRENGTH BOLTS, NUTS, WASHERS AND DIRECT TENSION INDICATORS IN ACCORDANCE WITH THE STANDARD SPECIFICATIONS. FOR HIGH STRENGTH BOLTS, SEE SPECIAL PROVISIONS.

USE A MINIMUM 11.1mm THICK PLATE WASHER WITH STANDARD HOLES UNDER EACH BOLT HEAD AND NUT. THE PLATE WASHERS SHALL HAVE SUFFICIENT SIZE TO COVER THE HOLES AFTER INSTALLATION. HARDENED WASHERS AND DIRECT TENSION INDICATORS ARE TO BE USED IN CONJUNCTION WITH THE PLATE WASHERS IN THE L 76X76X7.9 ANGLE MEMBER CONNECTION.

FOR BOLTS THROUGH THE GIRDER WEB, PROVIDE SUFFICIENT LENGTH OF ALL BOLTS TO ACCOMMODATE WASHERS, DIRECT TENSION INDICATORS, THE THICKNESS OF CONNECTING MEMBER PLUS AT LEAST 6mm PROJECTION BEYOND THE NUT.

INTERMEDIATE DIAPHRAGM ASSEMBLY SHALL COMPLY WITH SECTION 1072 OF THE STANDARD SPECIFICATIONS.

CONTRACTOR SHALL SUBMIT TWO SETS OF WORKING DRAWINGS FOR THE INTERMEDIATE DIAPHRAGM ASSEMBLY FOR REVIEW, COMMENTS AND ACCEPTANCE. AFTER REVIEW, COMMENTS, AND ACCEPTANCE, SUBMIT SEVEN SETS FOR DISTRIBUTION.

IN THE EXTERIOR BAYS, TEMPORARY STRUTS SHALL BE PLACED BETWEEN PRESTRESSED GIRDERS ADJACENT TO THE STEEL DIAPHRAGMS. STRUTS SHALL REMAIN IN PLACE 3 DAYS AFTER CONCRETE IS PLACED. ALL AASHTO M164 H.S. BOLTS SHALL BE FULLY TIGHTENED AFTER THE STRUTS HAVE BEEN REMOVED.

THE COST OF THE STEEL DIAPHRAGMS AND ASSEMBLIES SHALL BE INCLUDED IN THE UNIT PRICE BID FOR PRESTRESSED CONCRETE GIRDERS.

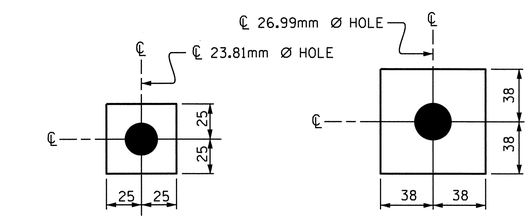

W1

ℙ 11.1 X 50 X 50

USE WITH 22.23mm Ø HVY. HEX NUTS & DIRECT TENSION INDICATOR WASHERS AT DIAPHRAGM ANGLE TO CONNECTOR PLATE CONNECTIONS

W2

ℙ 11.1 X 76 X 76

USE WITH 25.40mm Ø HVY. HEX NUTS AT CONNECTOR PLATE TO GIRDER CONNECTIONS

WASHER DETAILS

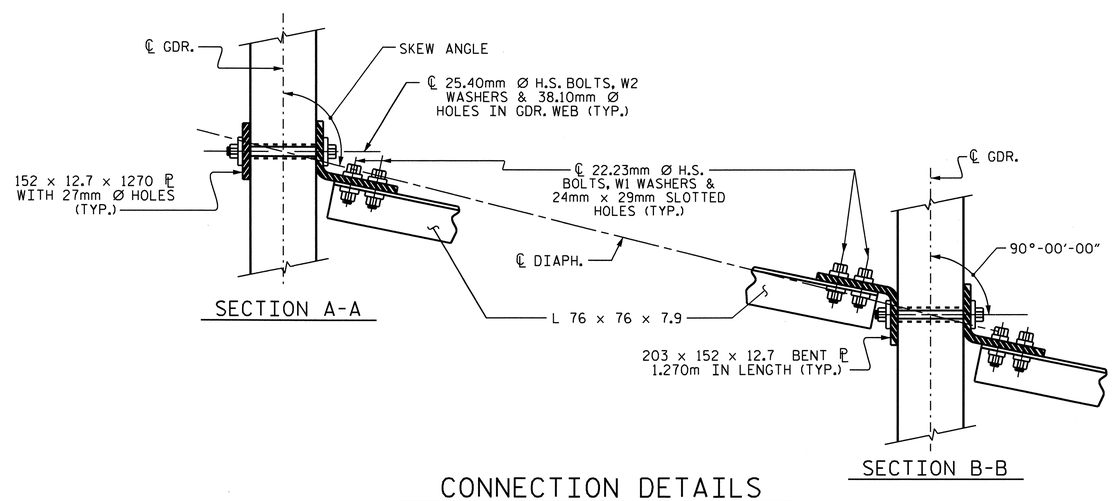

SECTION A-A

SECTION B-B

CONNECTION DETAILS

PROJECT NO. X-0002 CB

CUMBERLAND COUNTY

STATION: 118+17.500 -L-

STATE OF NORTH CAROLINA
DEPARTMENT OF TRANSPORTATION
RALEIGH

STANDARD
INTERMEDIATE
STEEL DIAPHRAGMS
FOR 1829mm
MODIFIED BULB TEE
PRESTRESSED CONCRETE
GIRDERS --(EBL)--

NORTH CAROLINA PROFESSIONAL SEAL 029441 ENGINEER KRISTY W. ALFORD

REVISIONS						SHEET NO.
NO.	BY:	DATE:	NO.	BY:	DATE:	S-55
1			3			TOTAL SHEETS
2			4			134

ASSEMBLED BY : MIKE BRITT	DATE : 6-3-10
CHECKED BY : D.G. ELY	DATE : 7-1-10
DRAWN BY : RWW 11/09	ADDED 11/23/09
CHECKED BY : GM 11/09	

23-SEP-2010 11:24
F:\Structures\Str2EBL\SuperstructureDrawings\x0002C_str3_DIAPH.dgn
kalford

STD. NO. PCG13SM STR.#2

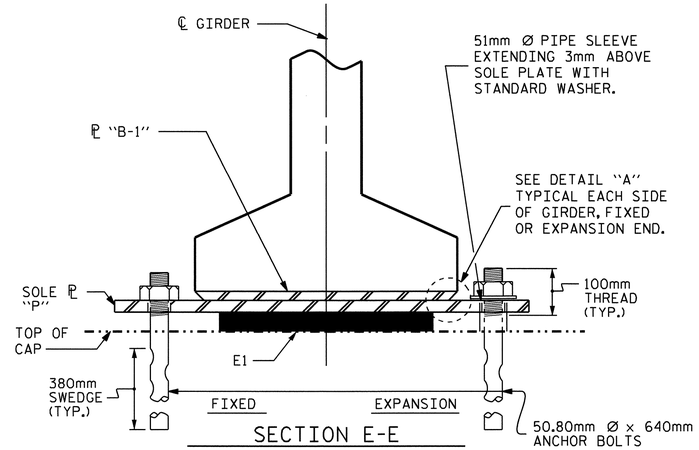

SECTION E-E

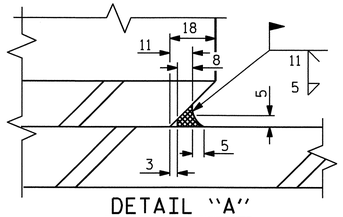

DETAIL "A"

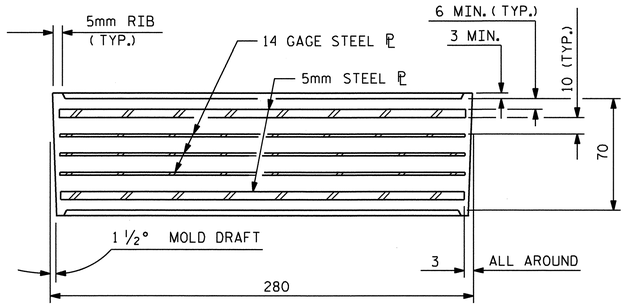

TYPICAL SECTION OF ELASTOMERIC BEARINGS

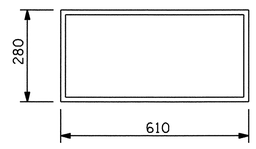

E1 (30 REQ'D)

PLAN VIEW OF ELASTOMERIC BEARING

TYPE VII

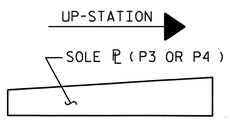

SOLE ℗ PLACEMENT DETAIL

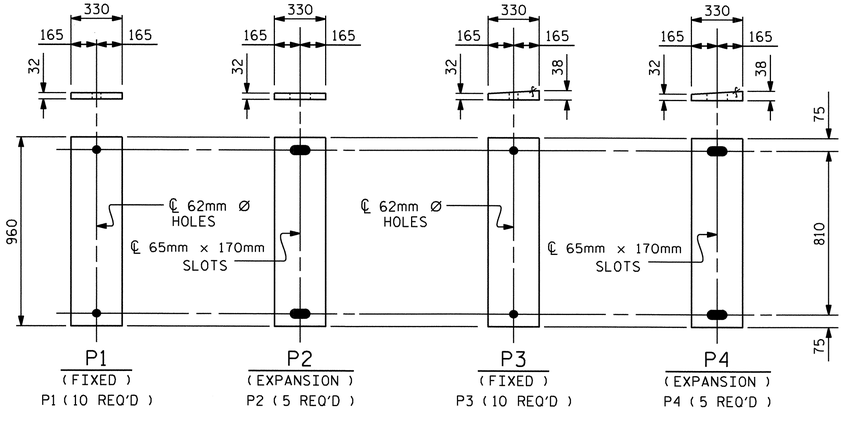

SOLE PLATE DETAILS ("P")

—LOAD RATINGS—	
TYPE VII	MAX. D.L.+ L.L.
	1174 kN

NOTES

AT ALL FIXED POINTS OF SUPPORT, NUTS FOR ANCHOR BOLTS ARE TO BE TIGHTENED FINGER TIGHT AND THEN BACKED OFF 1/2 TURN. THE THREAD OF THE NUT AND BOLT SHALL THEN BE BURRED WITH A SHARP POINTED TOOL.

THE 51mm Ø PIPE SLEEVE SHALL BE CUT FROM SCHEDULE 40 PVC PLASTIC PIPE. THE PVC PLASTIC PIPE SHALL MEET THE REQUIREMENTS OF ASTM D1785.

STEEL SOLE PLATES, ANCHOR BOLTS, NUTS, AND WASHERS SHALL BE GALVANIZED IN ACCORDANCE WITH THE STANDARD SPECIFICATIONS.

PRIOR TO WELDING, GRIND THE GALVANIZED SURFACE OF THE PORTION OF THE EMBEDDED PLATE AND SOLE PLATE THAT ARE TO BE WELDED. AFTER WELDING, DAMAGED GALVANIZED SURFACES SHALL BE REPAIRED IN ACCORDANCE WITH THE STANDARD SPECIFICATIONS.

WHEN WELDING THE SOLE PLATE TO THE EMBEDDED PLATE IN THE GIRDER, USE TEMPERATURE INDICATING WAX PENS, OR OTHER SUITABLE MEANS, TO ENSURE THAT THE TEMPERATURE OF THE SOLE PLATE DOES NOT EXCEED 149°C. TEMPERATURES ABOVE THIS MAY DAMAGE THE ELASTOMER.

SOLE PLATE "P", BOLTS, NUTS, WASHERS, AND PIPE SLEEVE SHALL BE INCLUDED IN THE PAY ITEM FOR PRESTRESSED CONCRETE GIRDERS.

ANCHOR BOLTS SHALL MEET THE REQUIREMENTS OF ASTM A449. NUTS SHALL MEET THE REQUIREMENTS OF AASHTO M291M-12 OR AASHTO M292M-2H. WASHERS SHALL MEET THE REQUIREMENTS OF AASHTO M293M. SHOP DRAWINGS ARE NOT REQUIRED FOR ANCHOR BOLTS, NUTS AND WASHERS. SHOP INSPECTION IS REQUIRED.

ALL SURFACES OF BEARING PLATES SHALL BE SMOOTH AND STRAIGHT.

ELASTOMER IN ALL BEARINGS SHALL BE 60 DUROMETER HARDNESS.

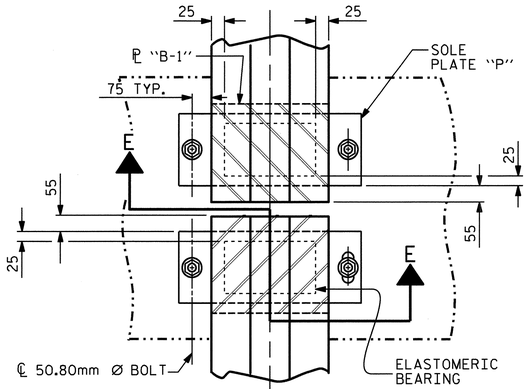

TYPICAL HALF-PLAN (FIXED END)

TYPICAL HALF-PLAN (EXPANSION END)

PROJECT NO. X-0002 CB

CUMBERLAND COUNTY

STATION: 118+17.500 -L-

STATE OF NORTH CAROLINA
DEPARTMENT OF TRANSPORTATION
RALEIGH

STANDARD ELASTOMERIC BEARING DETAILS

(EBL)

NORTH CAROLINA PROFESSIONAL SEAL 029441 ENGINEER KRISTY W. ALFORD

ASSEMBLED BY : MIKE BRITT	DATE : 6-3-10
CHECKED BY : D.G. ELY	DATE : 7-1-10

DRAWN BY : EEM 2/97	REV. 8/16/99 RWW/LES
CHECKED BY : VAP 2/97	REV. 10/17/00 RWW/LES
	REV. 5/1/06 TLA/GM

REVISIONS						SHEET NO.
NO.	BY:	DATE:	NO.	BY:	DATE:	S-56
1			3			TOTAL SHEETS
2			4			134

14-SEP-2010 11:37
F:\Structures\Str2EBL\SuperstructureDrawings\X0002C_str3_BRG.dgn
kalford

STD. NO. EB4SM

STR.#2

DEAD LOAD DEFLECTION TABLE FOR GIRDERS

15.24mm Ø LOW RELAXATION	GIRDER A1										
TENTH POINTS	0	.1	.2	.3	.4	.5	.6	.7	.8	.9	0
CAMBER (GIRDER ALONE IN PLACE) ↑	0.000	0.021	0.039	0.053	0.062	0.065	0.062	0.053	0.039	0.021	0.000
✱ DEFLECTION DUE TO SUPERIMPOSED D.L. ↓	0.000	0.009	0.017	0.024	0.028	0.030	0.028	0.024	0.017	0.009	0.000
FINAL CAMBER ↑	0	12	22	29	34	35	34	29	22	12	0

DEAD LOAD DEFLECTION TABLE FOR GIRDERS

15.24mm Ø LOW RELAXATION	GIRDERS A2 THRU A4										
TENTH POINTS	0	.1	.2	.3	.4	.5	.6	.7	.8	.9	0
CAMBER (GIRDER ALONE IN PLACE) ↑	0.000	0.021	0.039	0.053	0.062	0.065	0.062	0.053	0.039	0.021	0.000
✱ DEFLECTION DUE TO SUPERIMPOSED D.L. ↓	0.000	0.008	0.016	0.023	0.027	0.028	0.027	0.023	0.016	0.008	0.000
FINAL CAMBER ↑	0	13	23	30	35	37	35	30	23	13	0

DEAD LOAD DEFLECTION TABLE FOR GIRDERS

15.24mm Ø LOW RELAXATION	GIRDER A5										
TENTH POINTS	0	.1	.2	.3	.4	.5	.6	.7	.8	.9	0
CAMBER (GIRDER ALONE IN PLACE) ↑	0.000	0.021	0.039	0.053	0.062	0.065	0.062	0.053	0.039	0.021	0.000
✱ DEFLECTION DUE TO SUPERIMPOSED D.L. ↓	0.000	0.008	0.016	0.022	0.026	0.028	0.026	0.022	0.016	0.008	0.000
FINAL CAMBER ↑	0	13	23	31	36	37	36	31	23	13	0

✱ INCLUDES FUTURE WEARING SURFACE
ALL VALUES ARE SHOWN IN METERS, EXCEPT "FINAL CAMBER" WHICH IS SHOWN IN MILLIMETERS.

DEAD LOAD DEFLECTION TABLE FOR GIRDERS

15.24mm Ø LOW RELAXATION	GIRDER B1										
TENTH POINTS	0	.1	.2	.3	.4	.5	.6	.7	.8	.9	0
CAMBER (GIRDER ALONE IN PLACE) ↑	0.000	0.035	0.067	0.091	0.107	0.112	0.107	0.091	0.067	0.035	0.000
✱ DEFLECTION DUE TO SUPERIMPOSED D.L. ↓	0.000	0.014	0.027	0.037	0.043	0.046	0.043	0.037	0.027	0.014	0.000
FINAL CAMBER ↑	0	21	40	54	64	66	64	54	40	21	0

DEAD LOAD DEFLECTION TABLE FOR GIRDERS

15.24mm Ø LOW RELAXATION	GIRDERS B2 THRU B4										
TENTH POINTS	0	.1	.2	.3	.4	.5	.6	.7	.8	.9	0
CAMBER (GIRDER ALONE IN PLACE) ↑	0.000	0.035	0.067	0.091	0.107	0.112	0.107	0.091	0.067	0.035	0.000
✱ DEFLECTION DUE TO SUPERIMPOSED D.L. ↓	0.000	0.013	0.025	0.035	0.041	0.043	0.041	0.035	0.025	0.013	0.000
FINAL CAMBER ↑	0	22	42	56	66	69	66	56	42	22	0

DEAD LOAD DEFLECTION TABLE FOR GIRDERS

15.24mm Ø LOW RELAXATION	GIRDER B5										
TENTH POINTS	0	.1	.2	.3	.4	.5	.6	.7	.8	.9	0
CAMBER (GIRDER ALONE IN PLACE) ↑	0.000	0.035	0.067	0.091	0.107	0.112	0.107	0.091	0.067	0.035	0.000
✱ DEFLECTION DUE TO SUPERIMPOSED D.L. ↓	0.000	0.013	0.024	0.034	0.040	0.042	0.040	0.034	0.024	0.013	0.000
FINAL CAMBER ↑	0	22	43	57	67	70	67	57	43	22	0

✱ INCLUDES FUTURE WEARING SURFACE
ALL VALUES ARE SHOWN IN METERS, EXCEPT "FINAL CAMBER" WHICH IS SHOWN IN MILLIMETERS.

DEAD LOAD DEFLECTION TABLE FOR GIRDERS

15.24mm Ø LOW RELAXATION	GIRDER C1										
TENTH POINTS	0	.1	.2	.3	.4	.5	.6	.7	.8	.9	0
CAMBER (GIRDER ALONE IN PLACE) ↑	0.000	0.035	0.067	0.091	0.107	0.112	0.107	0.091	0.067	0.035	0.000
✱ DEFLECTION DUE TO SUPERIMPOSED D.L. ↓	0.000	0.014	0.027	0.037	0.043	0.046	0.043	0.037	0.027	0.014	0.000
FINAL CAMBER ↑	0	21	40	54	64	66	64	54	40	21	0

DEAD LOAD DEFLECTION TABLE FOR GIRDERS

15.24mm Ø LOW RELAXATION	GIRDERS C2 THRU C4										
TENTH POINTS	0	.1	.2	.3	.4	.5	.6	.7	.8	.9	0
CAMBER (GIRDER ALONE IN PLACE) ↑	0.000	0.035	0.067	0.091	0.107	0.112	0.107	0.091	0.067	0.035	0.000
✱ DEFLECTION DUE TO SUPERIMPOSED D.L. ↓	0.000	0.013	0.025	0.035	0.041	0.043	0.041	0.035	0.025	0.013	0.000
FINAL CAMBER ↑	0	22	42	56	66	69	66	56	42	22	0

DEAD LOAD DEFLECTION TABLE FOR GIRDERS

15.24mm Ø LOW RELAXATION	GIRDER C5										
TENTH POINTS	0	.1	.2	.3	.4	.5	.6	.7	.8	.9	0
CAMBER (GIRDER ALONE IN PLACE) ↑	0.000	0.035	0.067	0.091	0.107	0.112	0.107	0.091	0.067	0.035	0.000
✱ DEFLECTION DUE TO SUPERIMPOSED D.L. ↓	0.000	0.013	0.024	0.034	0.040	0.042	0.040	0.034	0.024	0.013	0.000
FINAL CAMBER ↑	0	22	43	57	67	70	67	57	43	22	0

✱ INCLUDES FUTURE WEARING SURFACE
ALL VALUES ARE SHOWN IN METERS, EXCEPT "FINAL CAMBER" WHICH IS SHOWN IN MILLIMETERS.

PROJECT NO. X-0002 CB
CUMBERLAND COUNTY
STATION: 118+17.500 -L-

NORTH CAROLINA PROFESSIONAL SEAL 029441 ENGINEER KRISTY W. ALFORD

STATE OF NORTH CAROLINA
DEPARTMENT OF TRANSPORTATION
RALEIGH

SUPERSTRUCTURE

DEAD LOAD DEFLECTIONS

(EBL)

REVISIONS						SHEET NO.
NO.	BY:	DATE:	NO.	BY:	DATE:	S-57
1			3			TOTAL SHEETS
2			4			134

DRAWN BY : MIKE BRITT DATE : 6-3-10
CHECKED BY : D.G. ELY DATE : 7-1-10

14-SEP-2010 11:36
F:\Structures\Str2EBL\SuperstructureDrawings\X0002C_str3_DL.dgn
kalford

STR. #2

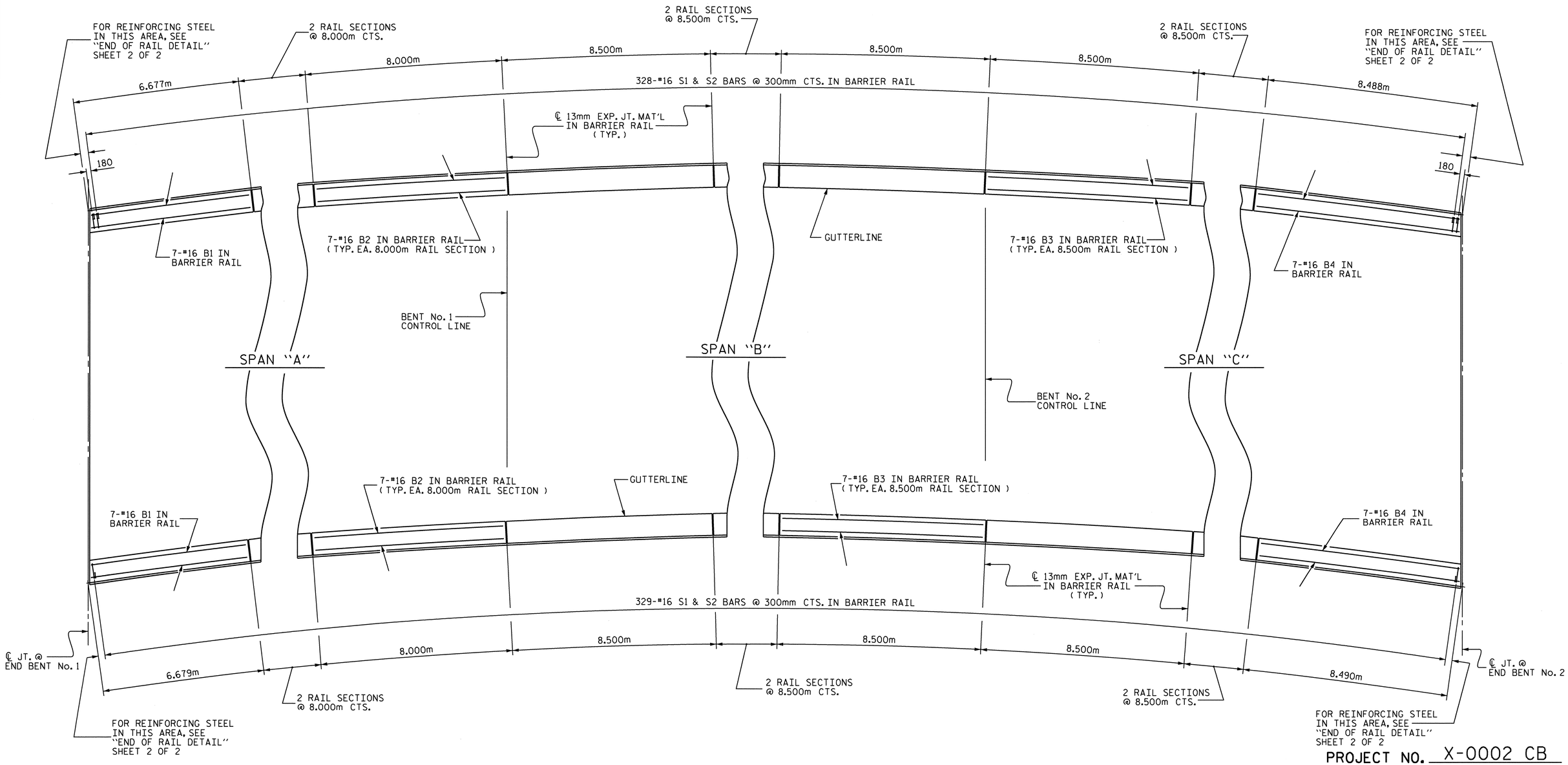

PLAN OF BARRIER RAIL

ALL DIMENSIONS ARE TAKEN ALONG THE ARC ON THE OUTSIDE EDGE OF BARRIER RAIL

PROJECT NO. X-0002 CB

CUMBERLAND COUNTY

STATION: 118+17.500 -L-

SHEET 1 OF 2

STATE OF NORTH CAROLINA
DEPARTMENT OF TRANSPORTATION
RALEIGH

SUPERSTRUCTURE

CONCRETE BARRIER RAIL

(EBL)

NORTH CAROLINA PROFESSIONAL ENGINEER SEAL 029441 KRISTY W. ALFORD

REVISIONS						SHEET NO.
NO.	BY:	DATE:	NO.	BY:	DATE:	S-58
1			3			TOTAL SHEETS
2			4			134

DRAWN BY : MIKE BRITT DATE : 6-4-10
CHECKED BY : D.G. ELY DATE : 7-1-10

14-SEP-2010 11:35
F:\Structures\Str2EBL\SuperstructureDrawings\X0002C_str3_BR.dgn
kalford

NOTES

THE BARRIER RAIL IN CONTINUOUS UNIT SHALL NOT BE CAST UNTIL ALL SLAB CONCRETE IN THE UNIT HAS BEEN CAST AND HAS REACHED A MINIMUM COMPRESSIVE STRENGTH OF 20.7 MPa.

ALL REINFORCING STEEL IN BARRIER RAILS SHALL BE EPOXY COATED.

VERTICAL GROOVED CONTRACTION JOINTS, 12mm IN DEPTH, SHALL BE TOOLED IN ALL EXPOSED FACES OF THE BARRIER RAIL AND IN ACCORDANCE WITH ARTICLE 825-10(B) OF THE STANDARD SPECIFICATIONS. THE CONTRACTION JOINT SHALL BE LOCATED AT EACH THIRD POINT BETWEEN BARRIER RAIL EXPANSION JOINTS. ONLY ONE CONTRACTION JOINT IS REQUIRED AT MIDPOINT OF BARRIER RAIL SEGMENTS LESS THAN 6.1m IN LENGTH AND NO CONTRACTION JOINTS ARE REQUIRED FOR THOSE SEGMENTS LESS THAN 3.5m IN LENGTH.

#16 "S" BARS MAY BE SHIFTED SLIGHTLY IN ORDER TO MAINTAIN A 50mm MINIMUM CLEARANCE TO THE 13mm EXPANSION JOINT MATERIAL IN BARRIER RAIL.

BAR TYPES

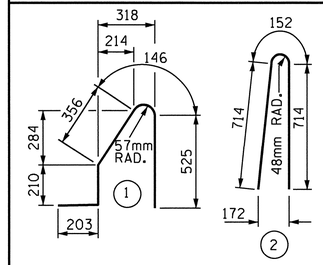

ALL BAR DIMENSIONS ARE OUT TO OUT

BILL OF MATERIAL

FOR EBL CONCRETE BARRIER RAIL ONLY

BAR	No.	SIZE	TYPE	LENGTH	WEIGHT
* S1	659	#16	1	1440	1473
* S2	659	#16	2	1580	1616
* B1	14	#16	STR	6520	142
* B2	42	#16	STR	7880	514
* B3	98	#16	STR	8380	1275
* B4	14	#16	STR	8340	181

* EPOXY COATED REINFORCING STEEL 5,201 kg

CLASS AA CONCRETE 49.6 CU. METER

CONCRETE BARRIER RAIL 197.333 METERS

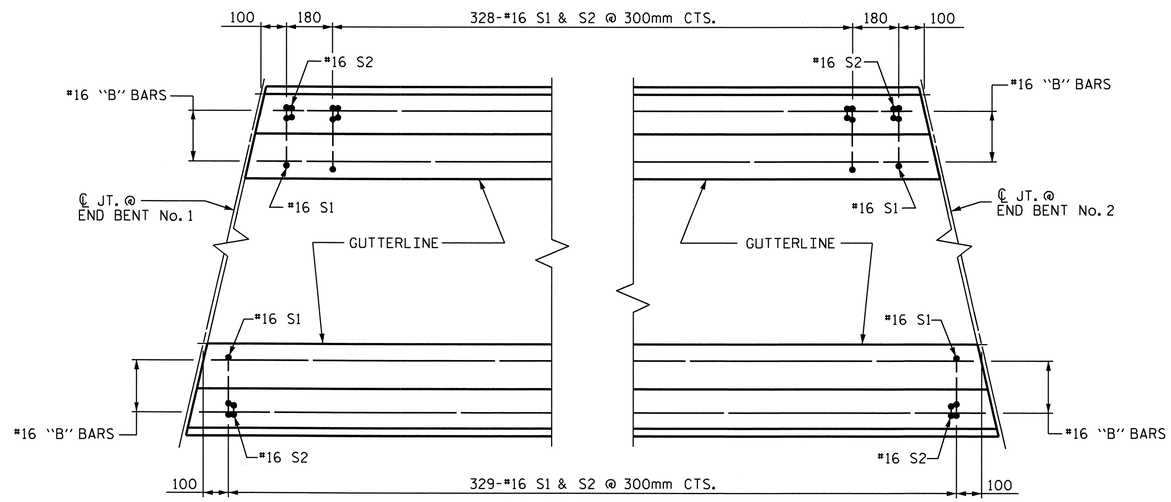

PLAN

END OF RAIL DETAIL

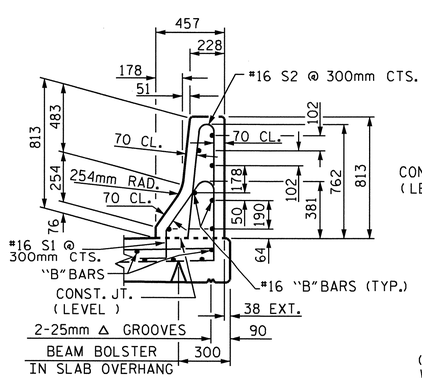

SECTION THRU RAIL

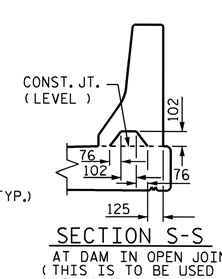

SECTION S-S

AT DAM IN OPEN JOINT
(THIS IS TO BE USED ONLY WHEN SLIP FORM IS USED)

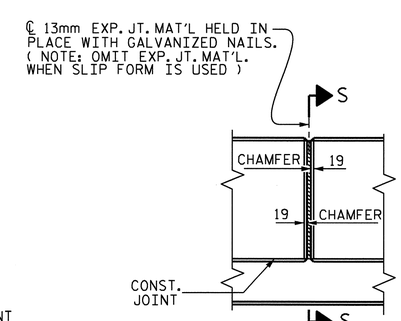

ELEVATION AT EXPANSION JOINTS

BARRIER RAIL DETAILS

PROJECT NO. X-0002 CB
CUMBERLAND COUNTY
STATION: 118+17.500 -L-

SHEET 2 OF 2

STATE OF NORTH CAROLINA
DEPARTMENT OF TRANSPORTATION
RALEIGH

STANDARD
CONCRETE BARRIER RAIL
(EBL)

NORTH CAROLINA PROFESSIONAL ENGINEER SEAL 029441 KRISTY W. ALFORD

ASSEMBLED BY : MIKE BRITT	DATE : 6-4-10		
CHECKED BY : D.G. ELY	DATE : 7-1-10		
DRAWN BY : ARB 5/87	REV. 10/17/00	RWW/LES	
CHECKED BY : SJD 9/87	REV. 5/7/03R	RWW/JTE	
	REV. 5/1/06	TLA/GM	

REVISIONS						SHEET NO.
NO.	BY:	DATE:	NO.	BY:	DATE:	S-59
1			3			TOTAL SHEETS
2			4			134

14-SEP-2010 11:34
F:\Structures\Str2EBL\SuperstructureDrawings\X0002C_str3_BR.dgn
kalford

STD. No. CBR1SM

STR.#2

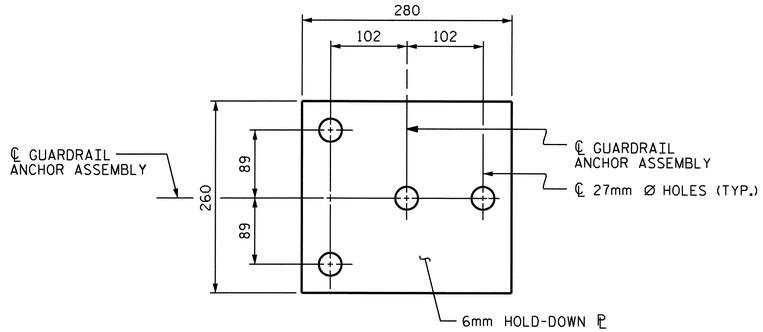

PLAN

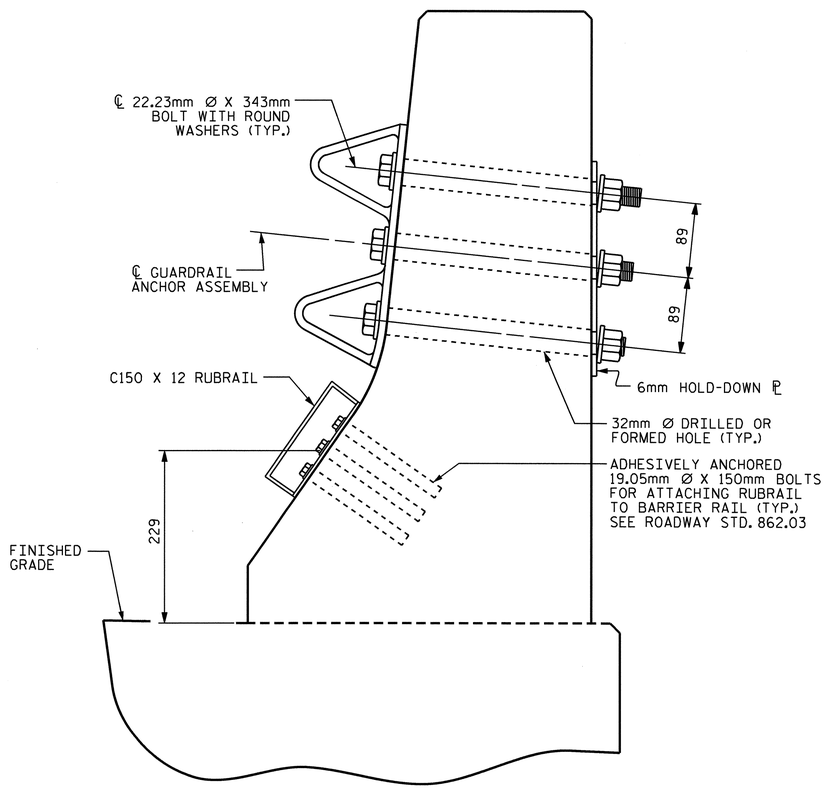

SECTION E-E

GUARDRAIL ANCHOR ASSEMBLY DETAILS

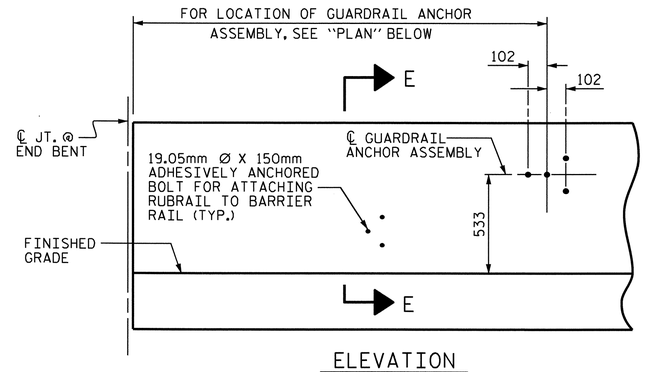

ELEVATION

FOR LOCATION OF RUBRAIL, SEE ROADWAY STD. 862.03

NOTES

THE GUARDRAIL ANCHOR ASSEMBLY SHALL CONSIST OF A 6mm HOLD DOWN PLATE AND 4 - 22.23mm Ø BOLTS WITH NUTS AND WASHERS, RUBRAIL, AND ADHESIVELY ANCHORED BOLTS.

THE HOLD-DOWN PLATE SHALL CONFORM TO AASHTO M270 GRADE 36. AFTER FABRICATION, THE HOLD-DOWN PLATE SHALL BE HOT-DIP GALVANIZED IN ACCORDANCE WITH AASHTO M111.

BOLTS SHALL CONFORM TO THE REQUIREMENTS OF ASTM A307 AND NUTS SHALL CONFORM TO THE REQUIREMENTS OF AASHTO M291. BOLTS, NUTS AND WASHERS SHALL BE GALVANIZED. (AT THE CONTRACTOR'S OPTION, STAINLESS STEEL BOLTS, NUTS AND WASHERS MAY BE USED AS AN ALTERNATE FOR THE 22.23mm Ø GALVANIZED BOLTS, NUTS AND WASHERS. THEY SHALL CONFORM TO OR EXCEED THE MECHANICAL REQUIREMENTS OF ASTM A307. THE USE OF THIS ALTERNATE SHALL BE APPROVED BY THE ENGINEER.)

THE GUARDRAIL ANCHOR ASSEMBLY IS REQUIRED AT ALL POINTS WHERE APPROACH GUARDRAIL IS TO BE ATTACHED TO THE END OF BARRIER RAIL. FOR POINTS OF ATTACHMENT, SEE SKETCH.

AFTER INSTALLATION, THE EXPOSED THREAD OF THE BOLT SHALL BE BURRED WITH A SHARP POINTED TOOL.

THE COST OF THE GUARDRAIL ANCHOR ASSEMBLY SHALL BE INCLUDED IN THE UNIT CONTRACT PRICE BID FOR CONCRETE BARRIER RAIL.

THE 32mm Ø HOLES SHALL BE FORMED OR DRILLED WITH A CORE BIT. IMPACT TOOLS WILL NOT BE PERMITTED. ANY CONCRETE DAMAGED BY THIS WORK SHALL BE REPAIRED TO THE SATISFACTION OF THE ENGINEER.

THE C150 X 12 RUBRAIL IS TO BE ADHESIVELY ANCHORED TO THE RAIL USING THREE 19.05mm Ø X 150mm BOLTS WITH WASHERS. LEVEL ONE FIELD TESTING IS REQUIRED, AND THE YIELD LOAD OF THE 19.05mm Ø BOLTS IS 53.4kN. FOR ADHESIVELY ANCHORED ANCHOR BOLTS OR DOWELS, SEE SPECIAL PROVISIONS. SEE ROADWAY STANDARD 862.03 FOR DETAILS AND LOCATION OF THE RUBRAIL.

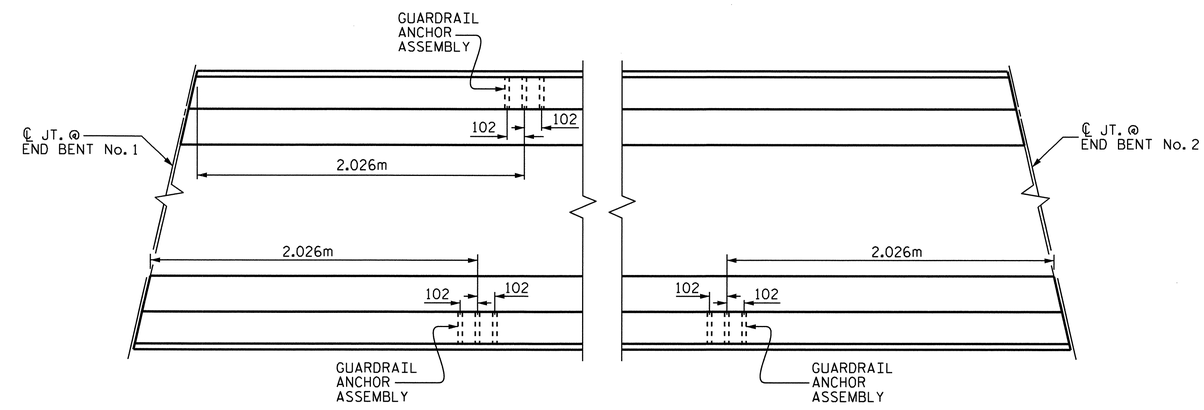

PLAN

LOCATION OF ANCHORS FOR GUARDRAIL

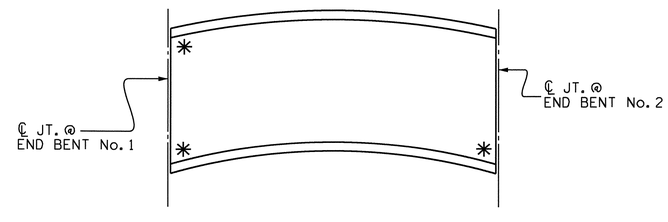

SKETCH SHOWING POINTS OF ATTACHMENTS

✳ DENOTES GUARDRAIL ANCHOR ASSEMBLY & RUBARAIL ATTACHMENT

PROJECT NO. X-0002 CB
CUMBERLAND COUNTY
STATION: 118+17.500 -L-

STATE OF NORTH CAROLINA
DEPARTMENT OF TRANSPORTATION
RALEIGH

STANDARD

GUARDRAIL ANCHORAGE FOR BARRIER RAIL

(EBL)

REVISIONS						SHEET NO.
NO.	BY:	DATE:	NO.	BY:	DATE:	S-60
1			3			TOTAL SHEETS
2			4			134

ASSEMBLED BY : MIKE BRITT	DATE : 6-4-10
CHECKED BY : D.G. ELY	DATE : 7-1-10
DRAWN BY : TLA 5/06	ADDED 5/1/06R KMM/GM
CHECKED BY : GM 5/06	

14-SEP-2010 11:33
F:\Structures\Str2EBL\SuperstructureDrawings\x0002c_str3_gr.dgn
kalford

STD. NO. GRA2

STR.#2

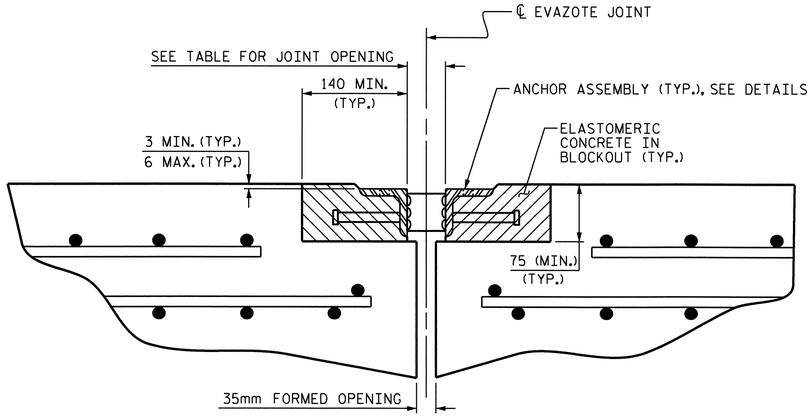

ARMORED JOINT DETAILS

SECTION NORMAL TO JOINT AT END BENTS

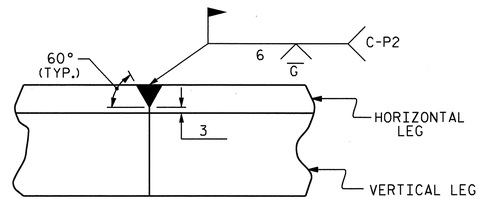

DETAIL- FIELD WELD SPLICE OF ANGLE

NOTES

ANGLES SHALL CONFORM TO AASHTO M270 GRADE 250 STEEL OR APPROVED EQUAL. ALL STUD ANCHORS SHALL CONFORM TO AASHTO M169 GRADES 1010 THRU 1020 OR APPROVED EQUAL.

STUD ANCHORS SHALL BE SHOP WELDED AND ALL HOLES SHALL BE SHOP DRILLED AS SHOWN ON THE PLANS. STUD ANCHORS SHALL BE ELECTRIC ARC END WELDED WITH COMPLETE FUSION.

UPON COMPLETION OF SHOP FABRICATION, THE ENTIRE ANCHOR ASSEMBLY SHALL BE METALLIZED. THE 12.70mm Ø STUD ANCHORS AND ANCHOR TABS NEED NOT BE METALLIZED. SEE SPECIAL PROVISION FOR THERMAL SPRAYED COATINGS (METALLIZATION).

ANCHOR ASSEMBLY SHALL BE MADE CONTINUOUS THE LENGTH OF THE JOINT FROM GUTTER TO GUTTER. FOR FIELD SPLICES AT ALL CROWN BREAK POINTS, THE ENDS OF THE STEEL ANGLES SHALL BE CUT PARALLEL TO THE BRIDGE CENTERLINE. FINISHED FIELD WELDS SHALL BE GROUND SMOOTH AND COATED WITH A MINIMUM THICKNESS OF 0.100mm OF ZINC-RICH PAINT IN ACCORDANCE WITH THE STANDARD SPECIFICATIONS.

ANCHOR ASSEMBLY SEGMENTS SHALL NOT BE LESS THAN 3.6m NOR MORE THAN 6.1m IN LENGTH. SHORTER SEGMENTS MAY BE USED AT THE EDGE OF ROADWAY OR AT POINTS OF STAGED CONSTRUCTION.

THE ANCHOR ASSEMBLY SHALL BE SECURED AND LEVELED AS SHOWN IN THE "ARMORED JOINT ANCHOR ASSEMBLY DETAILS". NO SUBMITTALS ARE REQUIRED FOR 9.53mm Ø EXPANSION ANCHORS, NUTS OR WASHERS. THE CONTRACTOR MAY SUBMIT FOR APPROVAL AN ALTERNATE METHOD OF ALIGNING AND LEVELING THE ANGLES. THE ALTERNATE METHOD SHALL NOT INCLUDE ANY WELDING TO THE OUTSIDE FACE OF THE ANGLES.

AFTER THE ELASTOMERIC CONCRETE HAS BEEN CAST ON BOTH SIDES OF THE JOINT, REMOVE ANY EXCESS CONCRETE THAT COMES THROUGH THE WEEP HOLES AND THOROUGHLY CLEAN THE ANGLES. ANY DAMAGED STEEL SHALL BE COATED WITH A MINIMUM OF 0.100mm OF ZINC-RICH PAINT IN ACCORDANCE WITH THE STANDARD SPECIFICATIONS.

SEE SPECIAL PROVISIONS FOR EVAZOTE JOINT SEALS.

SEE SPECIAL PROVISIONS FOR ELASTOMERIC CONCRETE.

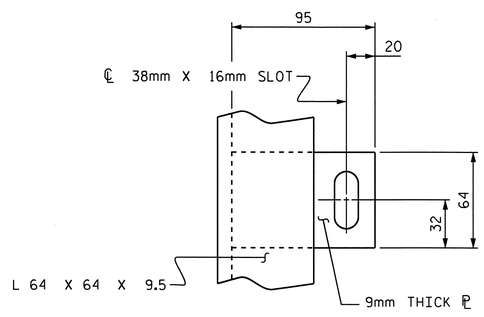

PLAN VIEW OF TAB

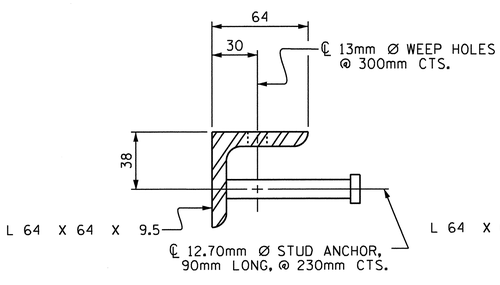

SECTION VIEW OF STUD

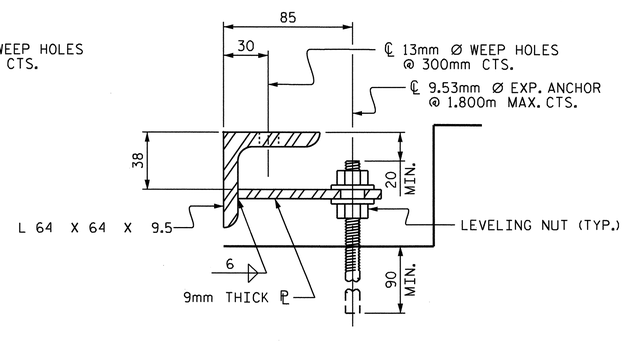

SECTION VIEW OF TAB

ARMORED JOINT ANCHOR ASSEMBLY DETAILS

MOVEMENT AND SETTING AT EVAZOTE JOINT

END BENT	SKEW ANGLE	NOMINAL UNCOMPRESSED SEAL WIDTH	TOTAL MOVEMENT (ALONG ℄ RDWY)	PERPENDICULAR JOINT OPENING AT 7° C	PERPENDICULAR JOINT OPENING AT 16° C	PERPENDICULAR JOINT OPENING AT 32° C
No. 1	94°-04'-45"	80mm	35mm	70mm	64mm	52mm
No. 2	85°-55'-15"	80mm	35mm	70mm	64mm	52mm

TOTAL MOVEMENT IS CALCULATED ALONG THE CENTERLINE OF ROADWAY.
JOINT OPENINGS ARE MEASURED PERPENDICULAR TO THE JOINT.

BILL OF MATERIAL

END BENT	ELASTOMERIC CONCRETE * (CU. m)	TOTAL LENGTH OF ANGLE (m)
No. 1	0.3	25.264
No. 2	0.3	25.264

* BASED ON THE MINIMUM BLOCKOUT SHOWN.

PROJECT NO. X-0002 CB
CUMBERLAND COUNTY
STATION: 118+17.500 -L-

STATE OF NORTH CAROLINA
DEPARTMENT OF TRANSPORTATION
RALEIGH

STANDARD
ARMORED EVAZOTE
JOINT DETAILS

(EBL)

NORTH CAROLINA PROFESSIONAL SEAL 020441 ENGINEER KRISTY W. ALFORD

REVISIONS							SHEET NO.
NO.	BY:	DATE:	NO.	BY:	DATE:		S-61
1			3				TOTAL SHEETS
2			4				134

ASSEMBLED BY : MIKE BRITT	DATE : 6-4-10
CHECKED BY : D.G. ELY	DATE : 7-1-10
DRAWN BY : EEM 1/96	REV. 7/10/01 LES/RDR
CHECKED BY : RGW 1/96	REV. 5/7/03RR RWW/JTE
	REV. 5/1/06 TLA/GM

29-OCT-2010 12:20
F:\Structures\Str2EBL\SuperstructureDrawings\X0002C_str3_AEJ.dgn
kalford

STD. NO. AEJ1SM

STR.#2

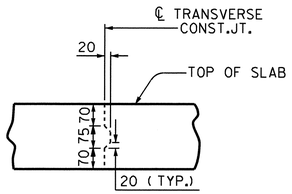

TRANSVERSE CONSTRUCTION JOINT DETAIL

NOTE: SLAB REINFORCING STEEL SHALL BE CONTINUOUS THRU JOINT

SUPERSTRUCTURE REINFORCING STEEL LENGTHS ARE BASED ON THE FOLLOWING MINIMUM SPLICE LENGTHS					
BAR SIZE	SUPERSTRUCTURE EXCEPT APPROACH SLABS, PARAPET, AND BARRIER RAIL		APPROACH SLABS		PARAPET AND BARRIER RAIL
	EPOXY COATED	UNCOATED	EPOXY COATED	UNCOATED	
#13	610	540	610	540	840
#16	770	660	770	660	1050
#19	920	790	1190	790	1330
#22	1580	1060			
#25	2080	1390			

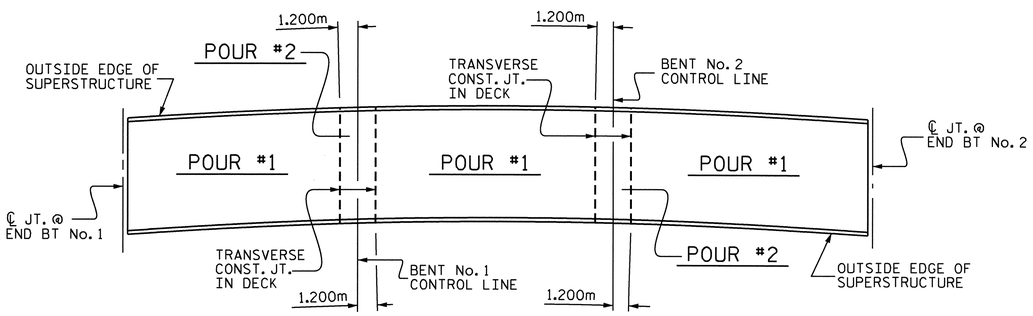

OPTIONAL CONCRETE DECK POUR DETAIL

ALL DIMENSIONS ARE TAKEN ALONG THE ARC ON THE OUTSIDE EDGE OF SUPERSTRUCTURE
(POUR #2's CANNOT BE STARTED UNTIL ALL POUR #1's REACH A MINIMUM COMPRESSIVE STRENGTH OF 20.7 MPa)

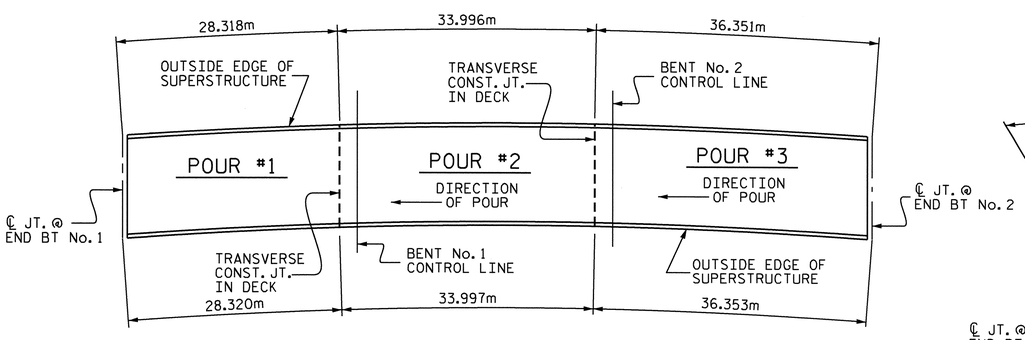

CONCRETE DECK POUR DETAIL

ALL DIMENSIONS ARE TAKEN ALONG THE ARC ON THE OUTSIDE EDGE OF SUPERSTRUCTURE

SPAN "A" THRU "C" CLASS AA CONCRETE BREAKDOWN		
POUR #1	116.3	m^3
POUR #2	151.8	m^3
POUR #3	163.0	m^3
SPAN "A" THRU "C" CLASS AA CONCRETE	431.1	m^3

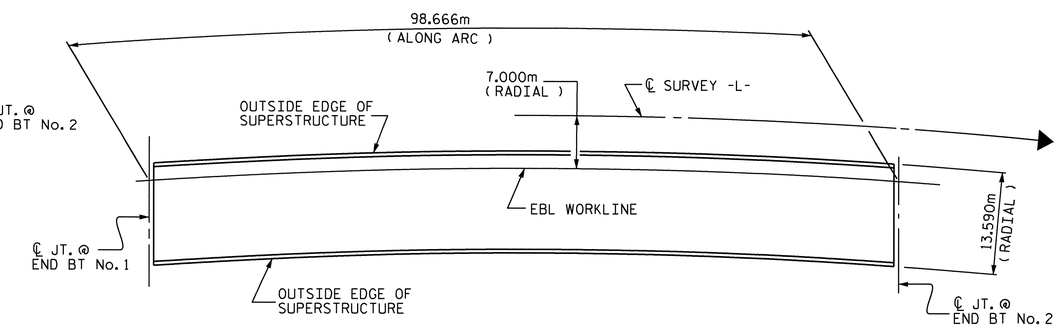

LAYOUT FOR COMPUTING AREA OF REINFORCED CONCRETE DECK SLAB

(SQ. METERS = 1,340.9)

REINFORCING BAR SCHEDULE

BAR	No.	SIZE	TYPE	LENGTH	WEIGHT
* A1	547	#16	STR.	13480	11444
A2	547	#16	STR.	13480	11444
* B1	87	#13	STR.	7220	624
* B2	58	#13	STR.	6220	359
* B3	87	#13	STR.	7980	690
* B4	24	#13	STR.	8780	209
* B5	87	#22	STR.	8560	2265
* B6	28	#22	STR.	9760	831
* B7	87	#22	STR.	8900	2355
* B8	28	#22	STR.	10260	874
B9	252	#16	STR.	14640	5726
* K1	4	#25	1	4200	67
* K2	4	#25	1	4380	70
* K3	12	#25	2	6360	303
K4	16	#16	STR.	2420	60
K5	16	#13	STR.	1600	25
K6	80	#13	STR.	2520	200
K7	16	#13	STR.	1680	27
K8	28	#13	STR.	5920	165
* S1	48	#16	4	1800	134
* S2	16	#16	3	1020	25
S3	336	#13	5	860	287
U1	48	#13	2	5580	266
U2	16	#13	3	3340	53

REINFORCING STEEL 18,253 kg

*EPOXY COATED REINFORCING STEEL 20,250 kg

* THESE BARS ARE EPOXY COATED

BAR TYPES

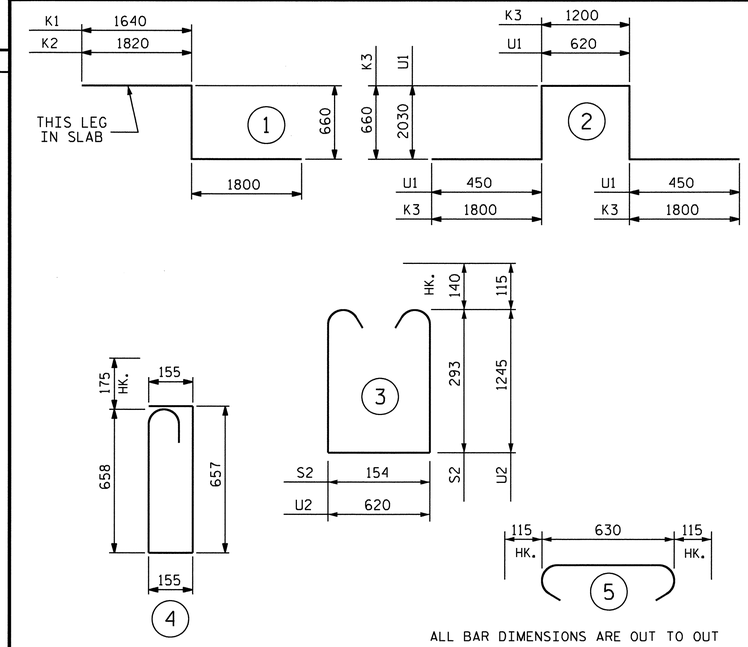

ALL BAR DIMENSIONS ARE OUT TO OUT

SUPERSTRUCTURE BILL OF MATERIAL

EBL	CLASS AA CONCRETE	REINFORCING STEEL	EPOXY COATED REINFORCING STEEL
	(CU. METER)	(kg)	(kg)
TOTALS**	431.1	18,253	20,250

** QUANTITIES FOR BARRIER RAIL ARE NOT INCLUDED

GROOVING BRIDGE FLOORS	
APPROACH SLABS	168.5 m^2
BRIDGE DECK	1,150.9 m^2
TOTAL	1,319.4 m^2

PROJECT NO. X-0002 CB
CUMBERLAND COUNTY
STATION: 118+17.500 -L-

STATE OF NORTH CAROLINA
DEPARTMENT OF TRANSPORTATION
RALEIGH

SUPERSTRUCTURE
BILL OF MATERIAL
(EBL)

NORTH CAROLINA PROFESSIONAL SEAL 029441 ENGINEER KRISTY W. ALFORD

REVISIONS						
NO.	BY:	DATE:	NO.	BY:	DATE:	SHEET NO. S-62
1			3			TOTAL SHEETS 134
2			4			

DRAWN BY : MIKE BRITT DATE : 6-7-10
CHECKED BY : D.G. ELY DATE : 7-1-10

14-SEP-2010 11:30
F:\Structures\Str2EBL\SuperstructureDrawings\X0002C_str3_BM.dgn
kalford

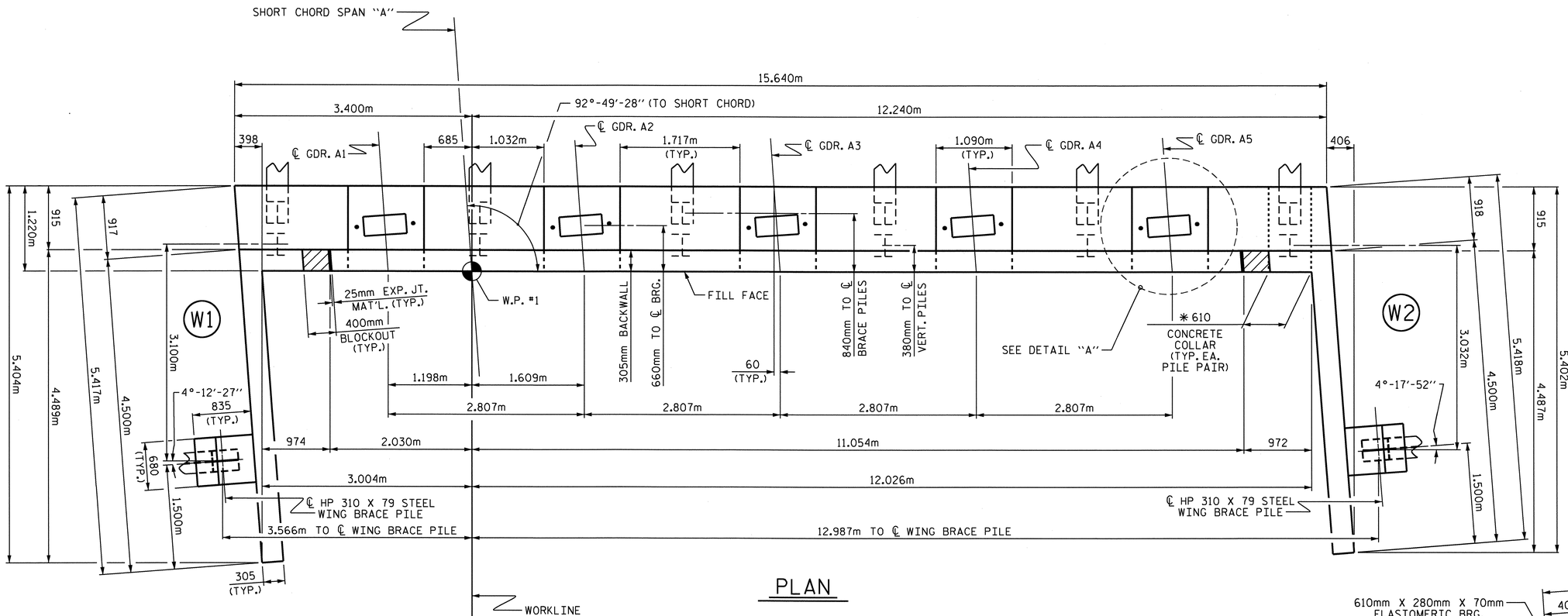

PLAN

NOTES:

STIRRUPS AND U2 BARS IN CAP MAY BE SHIFTED AS NECESSARY TO CLEAR ANCHOR BOLTS.

BACKWALL SHALL BE PLACED BEFORE APPLYING THE EPOXY PROTECTIVE COATING.

THE TOP SURFACE OF THE CAP EXCEPT THE BRIDGE SEAT BUILDUPS SHALL BE SLOPED TRANSVERSELY FROM THE FILL FACE TO THE BACK FACE AT THE RATE OF 2%.

THE CONCRETE IN THE SHADED AREA OF THE WING SHALL BE POURED AFTER THE BARRIER RAILS ARE CAST IF SLIP FORMING IS USED.

THE #16 V1 IN THE BACKWALL SHALL BE PLACED 50mm CLEAR FROM THE TOP OF THE BACKWALL.

THE CONTRACTOR SHALL PROVIDE FOR INSTALLATION OF THE 102mm DIAMETER DRAIN PIPE THROUGH THE WING WALL AS REQUIRED FOR REINFORCED BRIDGE APPROACH FILLS, SEE THE ROADWAY PLANS. REINFORCING STEEL IN THE WING WALL MAY BE SHIFTED AS NECESSARY TO CLEAR THE DRAIN PIPE.

▲FOR LOCATION OF ELEVATION BETWEEN BRIDGE SEATS, SEE "SECTION A-A", SHEET 3 OF 3.

★THIS ELEVATION TAKEN ON FILL FACE OF BACKWALL.

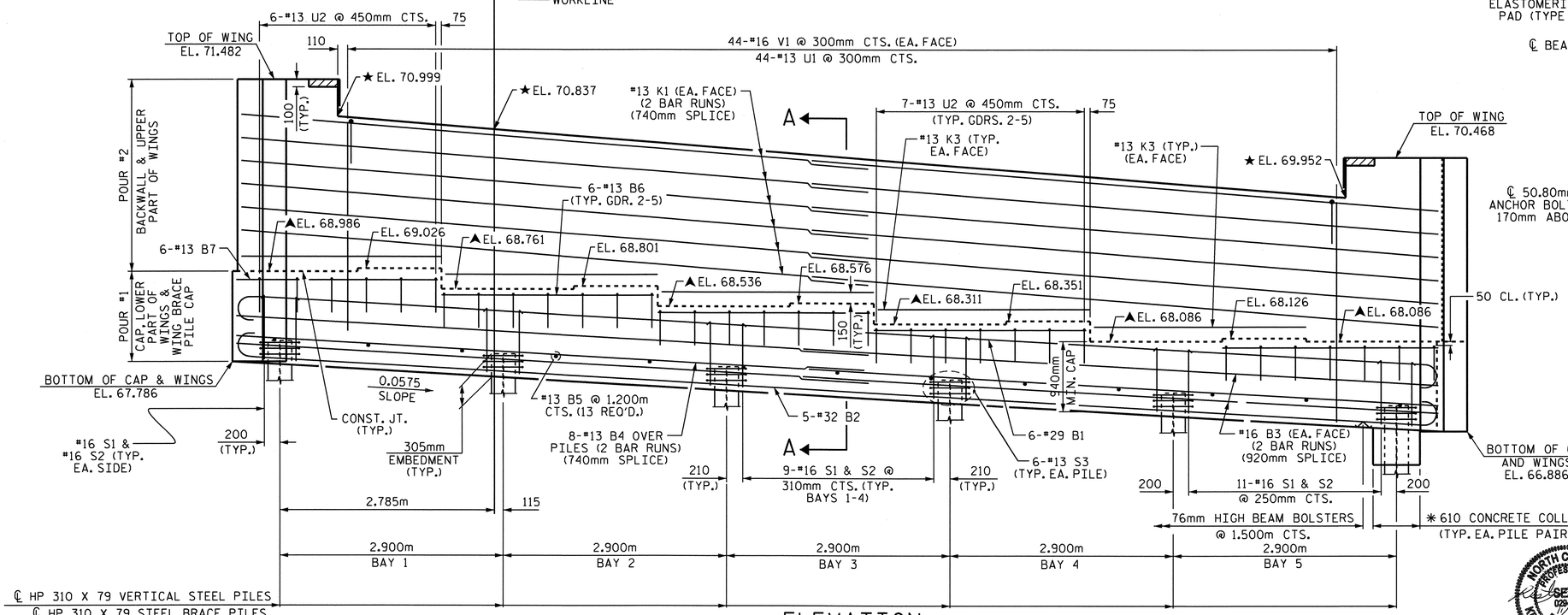

ELEVATION

(FOR CLARITY, BRACE PILE CAPS AT WINGS NOT SHOWN)

✱ADDITIONAL CONCRETE COLLARS FOR STEEL PILES NOT SHOWN IN PLAN & ELEVATION VIEWS FOR CLARITY SEE "CONCRETE COLLAR FOR STEEL PILES DETAILS", SHEET 3 OF 3.

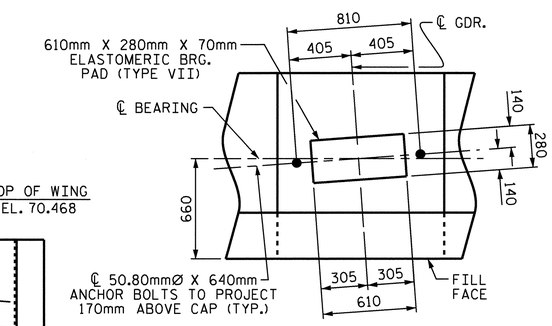

DETAIL "A"

(TYP. EA. GIRDER)

PROJECT NO. X-0002CB

CUMBERLAND COUNTY

STATION: 118+17.500 -L-

SHEET 1 OF 3

STATE OF NORTH CAROLINA
DEPARTMENT OF TRANSPORTATION
RALEIGH

SUBSTRUCTURE

END BENT No. 1

(EBL)

NORTH CAROLINA PROFESSIONAL SEAL 029441 ENGINEER KRISTY W. ALFORD

REVISIONS								SHEET NO.
NO.	BY:	DATE:	NO.	BY:	DATE:			S-63
1			3					TOTAL SHEETS
2			4					134

DRAWN BY : B. L. GREEN DATE : 4/21/08
CHECKED BY : S. B. WILLIAMS DATE : 07/10

STR. #2

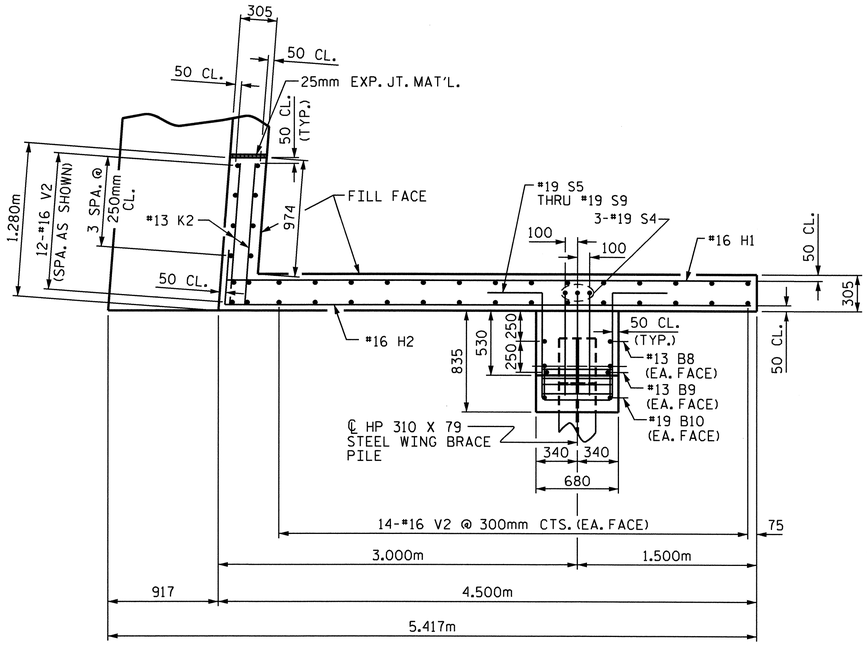

PLAN OF WING (W1)

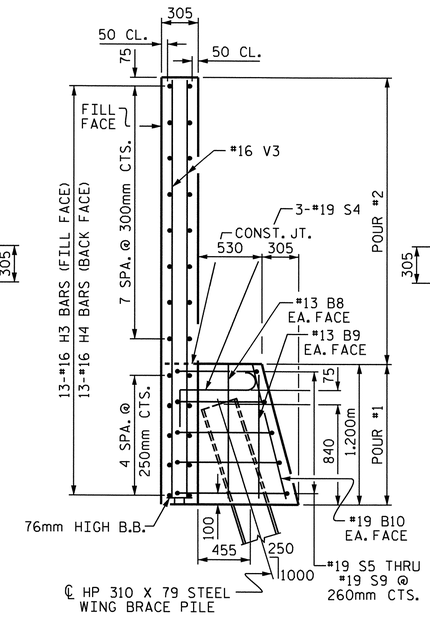

SECTION Y-Y

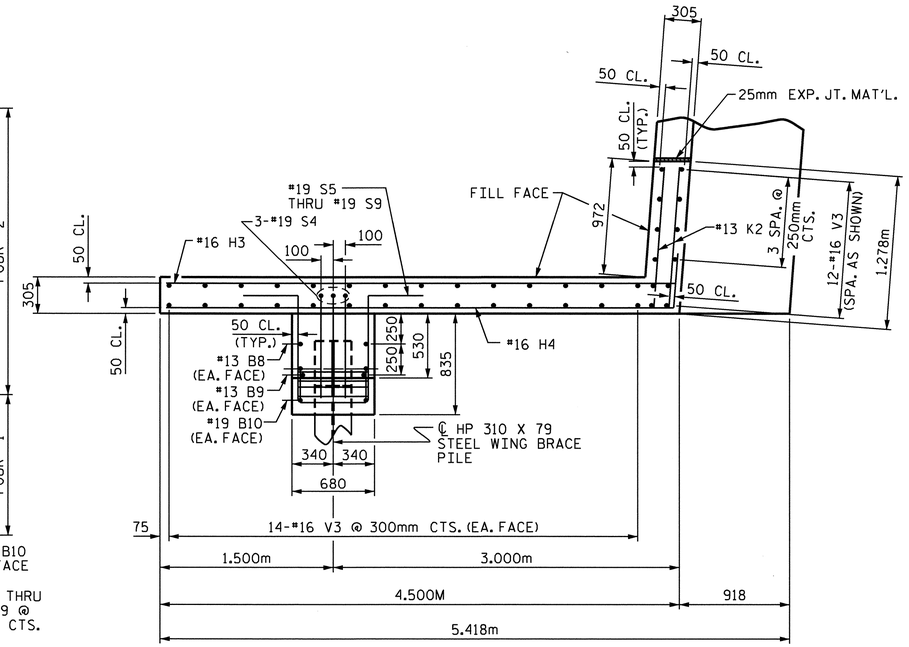

PLAN OF WING (W2)

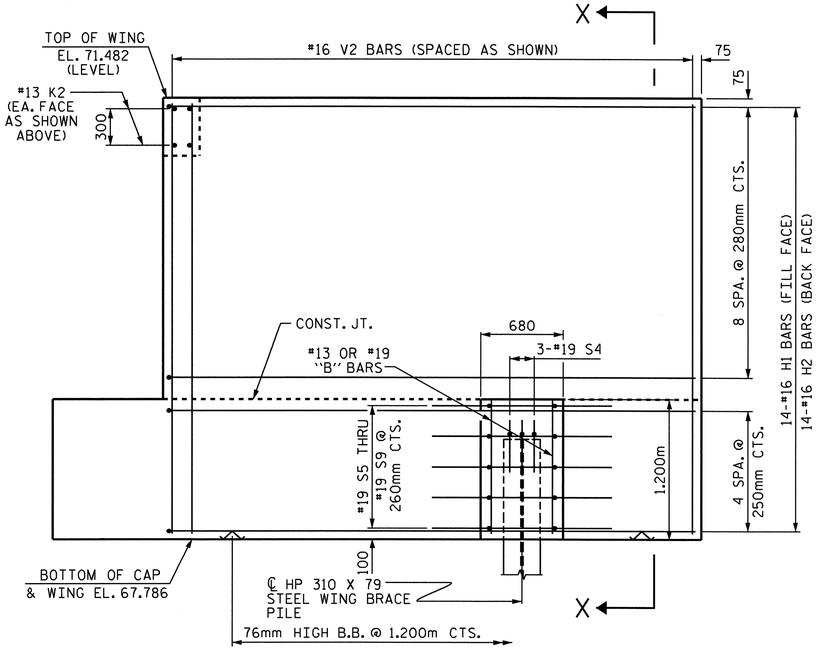

ELEVATION OF WING (W1)

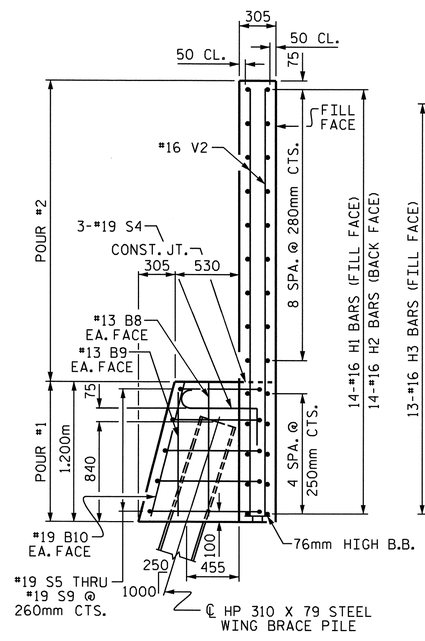

SECTION X-X

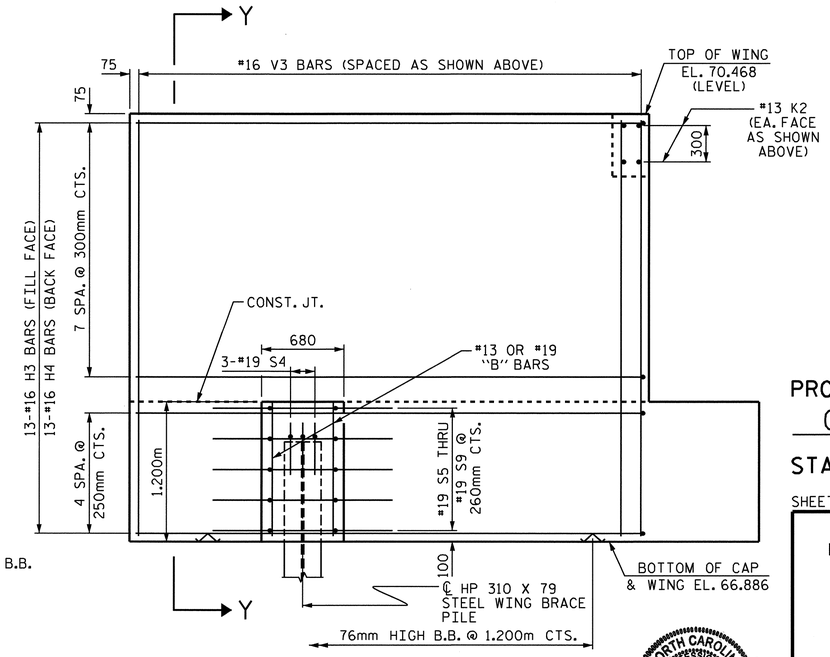

ELEVATION OF WING (W2)

PROJECT NO. X-0002CB
CUMBERLAND COUNTY
STATION: 118+17.500 -L-

SHEET 2 OF 3

STATE OF NORTH CAROLINA
DEPARTMENT OF TRANSPORTATION
RALEIGH

SUBSTRUCTURE

END BENT No. 1

(EBL)

NORTH CAROLINA PROFESSIONAL SEAL 029441 ENGINEER KRISTY W. ALFORD

REVISIONS						SHEET NO.
NO.	BY:	DATE:	NO.	BY:	DATE:	S-64
1			3			TOTAL SHEETS
2			4			134

DRAWN BY : B. L. GREEN DATE : 4/21/08
CHECKED BY : S. B. WILLIAMS DATE : 5/15/08

14-SEP-2010 11:28
F:\Structures\Str2EBL\SubstructureDrawings\x0002c_str3_EBl.dgn
kalford

STR. #2

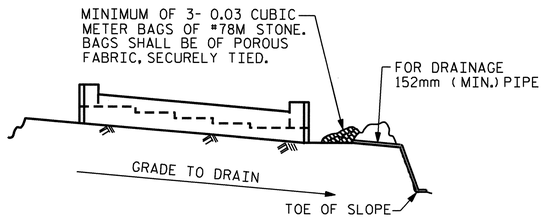

BAGGED STONE AND PIPE SHALL BE PLACED IMMEDIATELY AFTER COMPLETION OF END BENT EXCAVATION. PIPE MAY BE EITHER CONCRETE, CORRUGATED STEEL, CORRUGATED ALUMINUM ALLOY, OR CORRUGATED PLASTIC. PERFORATED PIPE WILL NOT BE ALLOWED.

BAGGED STONE SHALL REMAIN IN PLACE UNTIL THE ENGINEER DIRECTS THAT IT BE REMOVED. THE CONTRACTOR SHALL REMOVE AND DISPOSE OF SILT ACCUMULATIONS AT BAGGED STONE WHEN SO DIRECTED BY THE ENGINEER. BAGS SHALL BE REMOVED AND REPLACED WHENEVER THE ENGINEER DETERMINES THAT THEY HAVE DETERIORATED AND LOST THEIR EFFECTIVENESS.

NO SEPARATE PAYMENT WILL BE MADE FOR THIS WORK AND THE ENTIRE COST OF THIS WORK SHALL BE INCLUDED IN THE UNIT CONTRACT PRICE BID FOR THE SEVERAL PAY ITEMS.

TEMPORARY DRAINAGE AT END BENT

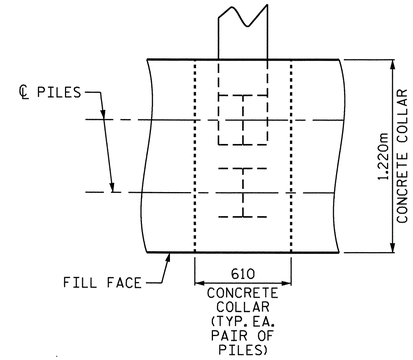

PLAN

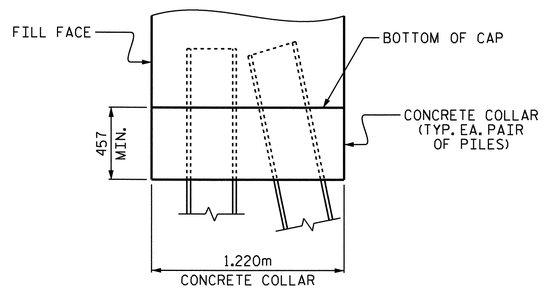

ELEVATION

CONCRETE COLLAR FOR STEEL PILES DETAILS

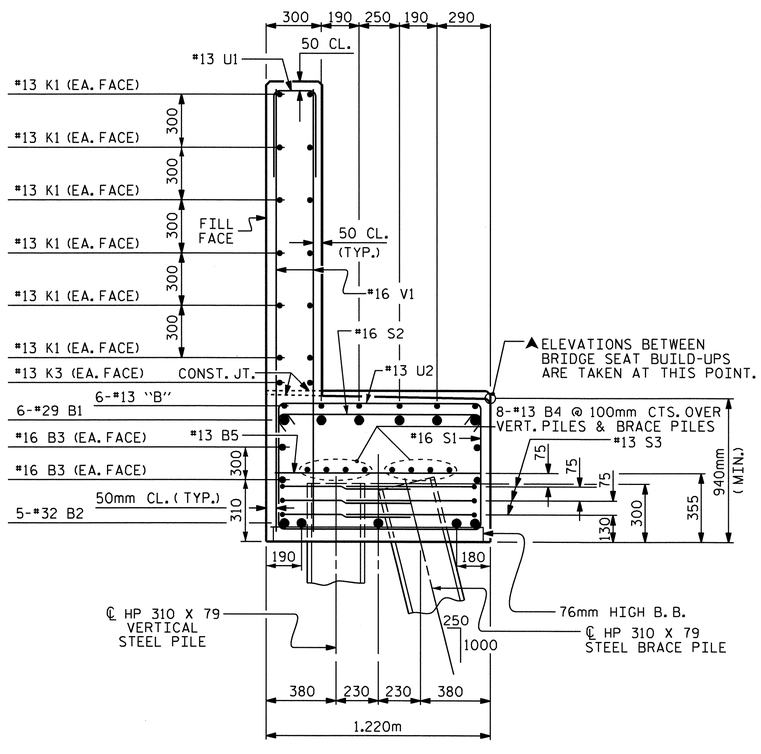

SECTION A-A

CONCRETE COLLAR NOT SHOWN FOR CLARITY, SEE "CONCRETE COLLAR FOR STEEL PILES DETAILS"

BAR TYPES

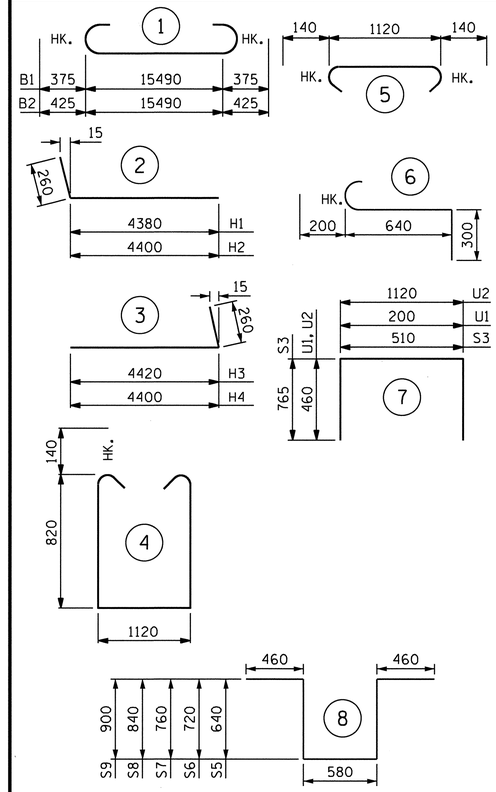

ALL BAR DIMENSIONS ARE OUT TO OUT.

BILL OF MATERIAL

END BENT No. 1

BAR	NUMBER	SIZE	TYPE	LENGTH	WEIGHT
B1	6	#29	1	16240	493
B2	5	#32	1	16340	523
B3	4	#16	STR	15540	96
B4	16	#13	STR	8140	129
B5	13	#13	STR	1120	14
B6	24	#13	STR	2760	66
B7	6	#13	STR	2560	15
B8	4	#13	STR	1100	4
B9	4	#19	STR	1040	4
B10	4	#13	STR	1140	10
H1	14	#16	2	4640	101
H2	14	#16	2	4660	101
H3	13	#16	3	4680	94
H4	13	#16	3	4660	94
K1	24	#13	STR	8140	194
K2	8	#13	STR	1160	9
K3	10	#13	STR	2760	27
S1	49	#16	4	3040	231
S2	49	#16	5	1400	106
S3	36	#13	7	2040	73
S4	6	#19	6	1140	15
S5	2	#19	8	2780	12
S6	2	#19	8	2940	13
S7	2	#19	8	3020	13
S8	2	#19	8	3180	14
S9	2	#19	8	3300	15
U1	44	#13	7	1120	49
U2	34	#13	7	2040	69
V1	88	#16	STR	2860	391
V2	40	#16	STR	3580	222
V3	40	#16	STR	3480	216
REINFORCING STEEL					3413 kg

CLASS A CONCRETE BREAKDOWN:

POUR #1 -	CAP, LOWER WING, WING BRACE PILE CAPS, & CONCRETE COLLARS	$27.9m^3$
POUR #2 -	BACKWALL & UPPER WINGS	$15.9m^3$
	TOTAL	$43.8m^3$

HP 310 X 79 STEEL PILES
NO. = 14 308 METERS

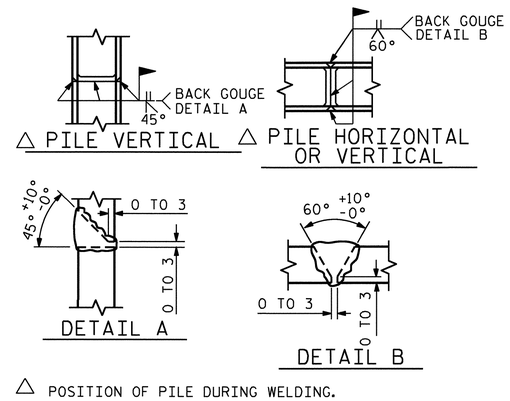

△ POSITION OF PILE DURING WELDING.

PILE SPLICE DETAILS

PROJECT NO. X-0002CB
CUMBERLAND COUNTY
STATION: 118+17.500 -L-

SHEET 3 OF 3

STATE OF NORTH CAROLINA
DEPARTMENT OF TRANSPORTATION
RALEIGH

SUBSTRUCTURE
END BENT No. 1
(EBL)

NORTH CAROLINA PROFESSIONAL SEAL 029441 ENGINEER KRISTY W. ALFORD

REVISIONS						SHEET NO.
NO.	BY:	DATE:	NO.	BY:	DATE:	S-65
1			3			TOTAL SHEETS
2			4			134

DRAWN BY : B. L. GREEN DATE : 4/22/08
CHECKED BY : S. B. WILLIAMS DATE : 07/10

14-SEP-2010 11:28
F:\Structures\Str2EBL\SubstructureDrawings\x0002c_str3_EBl.dgn
kalford

STR. #2

NOTES:

STIRRUPS AND "U" IN CAP MAY BE SHIFTED AS NECESSARY TO CLEAR ANCHOR BOLTS.

HOOKS ON "V" BARS MAY BE TURNED AS NECESSARY FOR PLACING REINFORCING STEEL.

FOR PILE SPLICE DETAILS, SEE END BENT No. 1.

FOR GALVANIZED PILES, A MINIMUM OF 5 METERS OF THE TOP OF EACH PILE SHAL BE GALVANIZED IN ACCORDANCE WITH SECTION 1076 OF THE STANDARD SPECIFICATIONS.

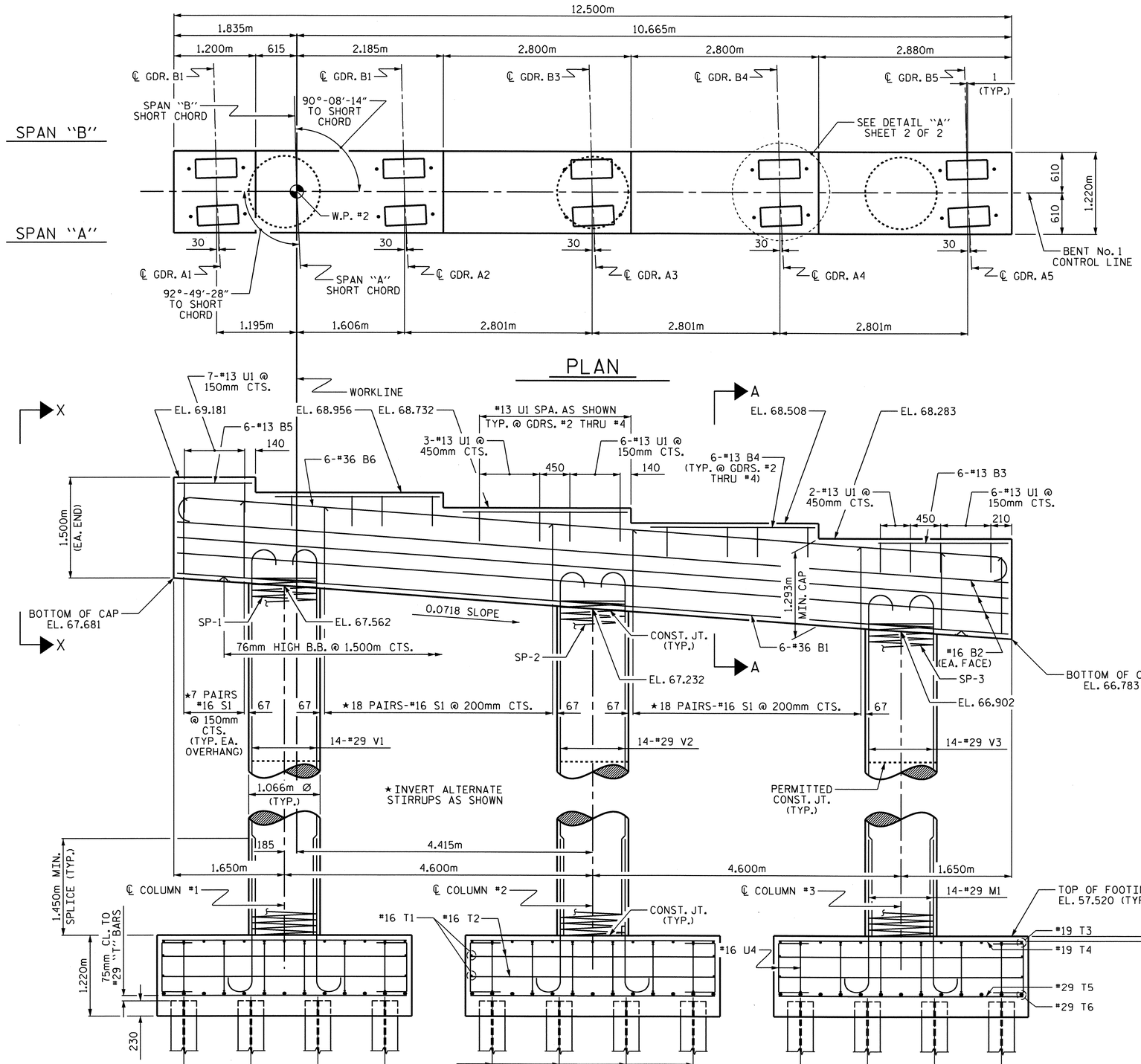

ELEVATION

DIMENSIONS & REINFORCING STEEL ARE TYPICAL FOR EACH COLUMN & FOOTING

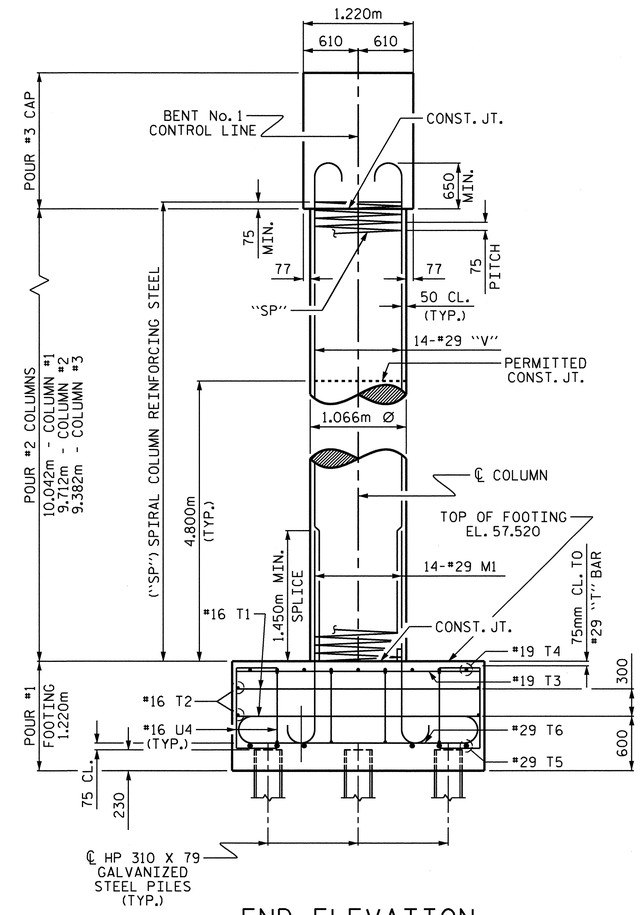

END ELEVATION

REINFORCING STEEL, DIMENSIONS AND DETAILS ARE TYPICAL FOR EACH COLUMN & FOOTING UNLESS OTHERWISE NOTED.

PROJECT NO. X-0002CB

CUMBERLAND COUNTY

STATION: 118+17.50 -L-

SHEET 1 OF 2

STATE OF NORTH CAROLINA
DEPARTMENT OF TRANSPORTATION
RALEIGH

SUBSTRUCTURE

BENT No. 1

(EBL)

NORTH CAROLINA PROFESSIONAL SEAL 029441 ENGINEER KRISTY W. ALFORD

REVISIONS								SHEET NO.
NO.	BY:	DATE:	NO.	BY:	DATE:			S-66
1			3					TOTAL SHEETS
2			4					134

DRAWN BY : T. BANKOVICH DATE : 3-2008
CHECKED BY : S.B. WILLIAMS DATE : 4-2008

03-NOV-2010 12:06
F:\Structures\Str2EBL\SubstructureDrawings\x0002c_str3_bt1.dgn
kalford

STR. #2

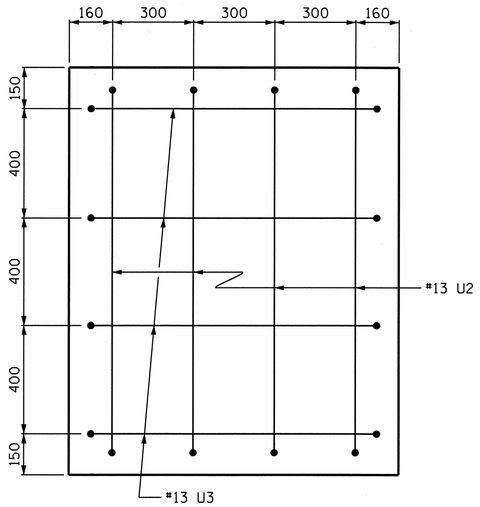

VIEW X-X

TYPICAL EACH END

BAR TYPES

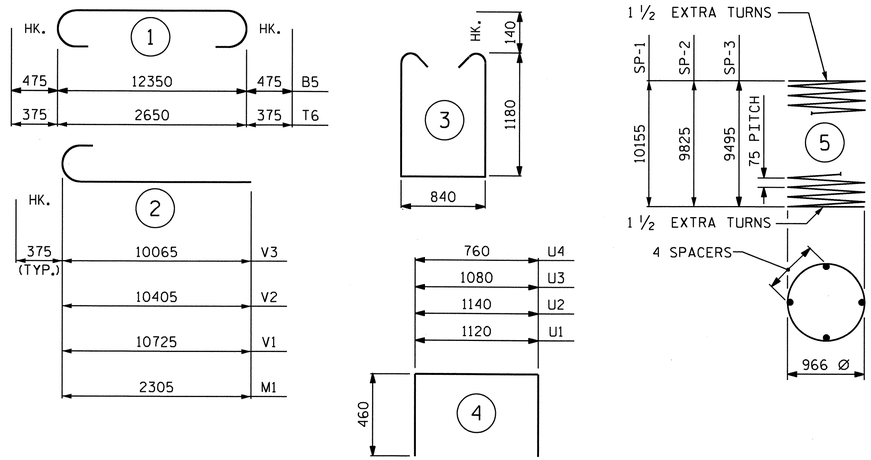

ALL BAR DIMENSIONS ARE OUT TO OUT

BILL OF MATERIAL

BENT No. 1

BAR	NO.	SIZE	TYP	LENGTH	WEIGHT
B1	6	#36	STR	12400	588
B2	6	#16	STR	12400	115
B3	6	#13	STR	1940	12
B4	18	#13	STR	2460	44
B5	6	#13	STR	1100	7
B6	6	#36	1	13300	631
M1	42	#29	2	2680	570
S1	100	#16	3	3480	540
T1	12	#16	STR	2700	50
T2	12	#16	STR	3700	69
T3	39	#19	STR	2700	235
T4	27	#19	STR	3700	223
T5	27	#29	STR	3700	505
T6	39	#29	1	3400	671
U1	42	#13	4	2040	85
U2	8	#13	4	2060	16
U3	8	#13	4	2000	16
U4	60	#16	4	1680	156

BAR	NO.	SIZE	TYP	LENGTH	WEIGHT
V1	14	#29	2	11100	786
V2	14	#29	2	10780	764
V3	14	#29	2	10440	740
REINFORCING STEEL					6823 kg.
SP-1	1	*	5	414520	412
SP-2	1	*	5	401340	399
SP-3	1	*	5	388160	386
SPIRAL COLUMN REINFORCING STEEL					1197 kg.

* THE SP-1 THRU SP-3 SPIRAL REINFORCING STEEL SHALL BE W20 OF D-20 COLD DRAWN WIRE OR #13 PLAIN OR DEFORMED BAR.

CLASS A CONCRETE BREAKDOWN	
POUR #1 (FOOTINGS)	$38.9 m^3$
POUR #2 (COLUMNS)	$26.0 m^3$
POUR #3 (CAP)	$21.9 m^3$
TOTAL CLASS A CONCRETE	$86.8 m^3$

HP 310 X 79 GALVANIZED STEEL PILES
No. = 36 432 METERS

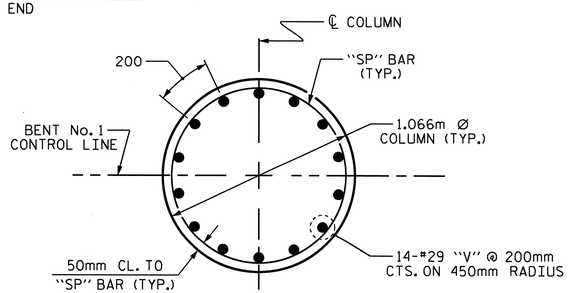

PLAN OF COLUMN

REINFORCING STEEL AND DIMENSIONS ARE TYPICAL FOR EACH COLUMN

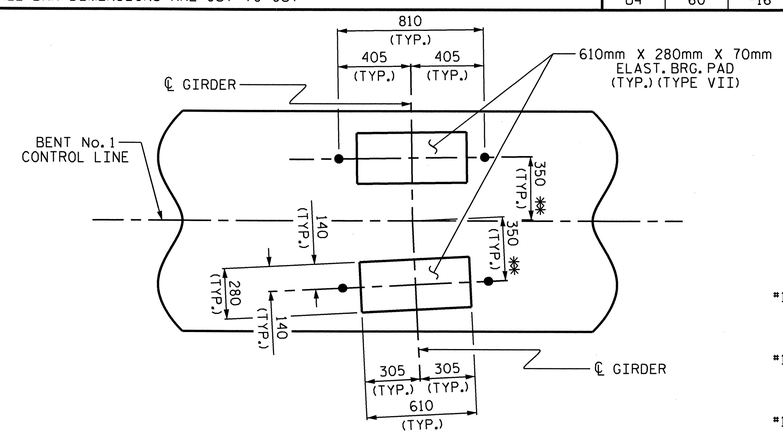

DETAIL "A"

** MEASURE ALONG ℄ GIRDER

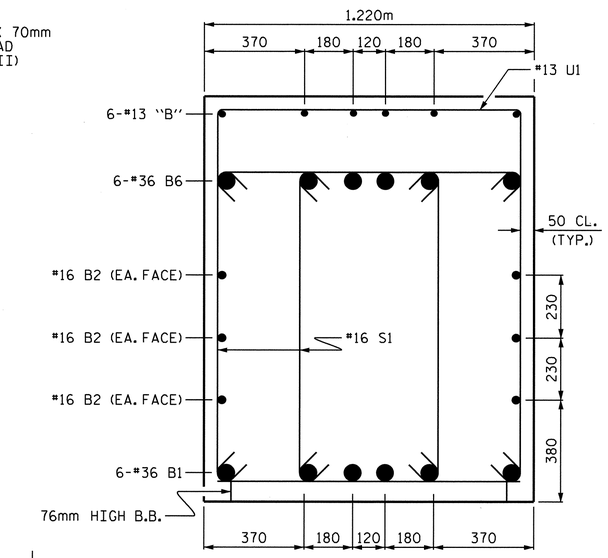

SECTION A-A

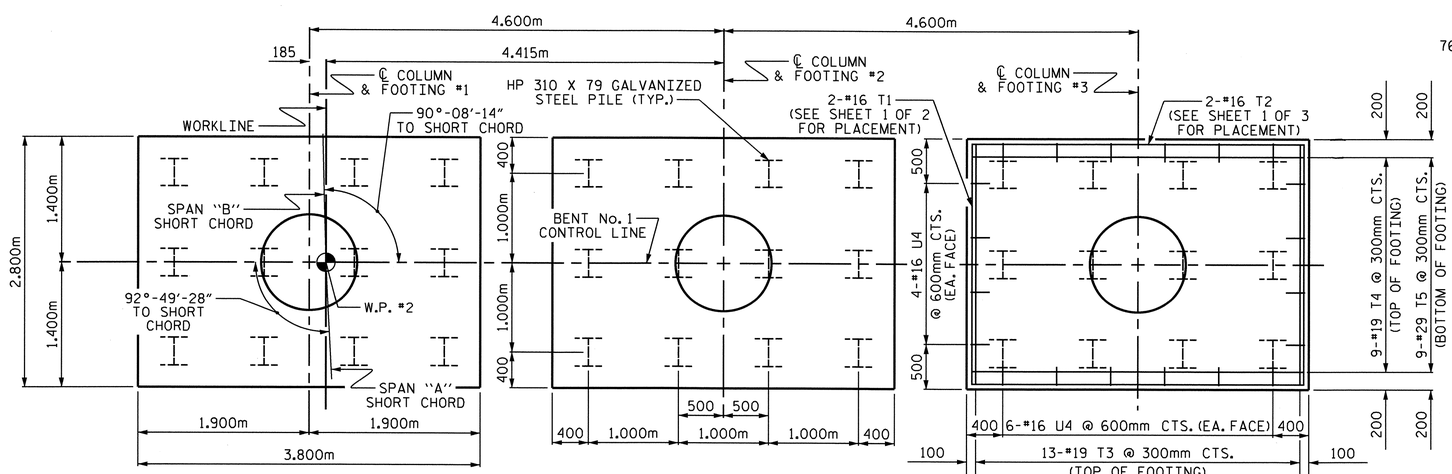

PLAN OF FOOTINGS

PILE PLACEMENT, DIMENSIONS & REINFORCING STEEL ARE TYPICAL FOR EACH FOOTING

PROJECT NO. X-0002CB
CUMBERLAND COUNTY
STATION: 118+17.50 -L-

SHEET 2 OF 2

STATE OF NORTH CAROLINA
DEPARTMENT OF TRANSPORTATION
RALEIGH

SUBSTRUCTURE

BENT No. 1

(EBL)

NORTH CAROLINA PROFESSIONAL SEAL 029441 ENGINEER KRISTY W. ALFORD

REVISIONS						
NO.	BY:	DATE:	NO.	BY:	DATE:	
1			3			
2			4			

SHEET NO. S-67
TOTAL SHEETS 134

STR. #2

DRAWN BY : T. BANKOVICH DATE : 3-2008
CHECKED BY : S.B. WILLIAMS DATE : 4-2008

29-OCT-2010 12:21
F:\Structures\Str2EBL\SubstructureDrawings\x0002c_str3_bt1.dgn
kalford

NOTES:

STIRRUPS AND "U" IN CAP MAY BE SHIFTED AS NECESSARY TO CLEAR ANCHOR BOLTS.

HOOKS ON "V" BARS MAY BE TURNED AS NECESSARY FOR PLACING REINFORCING STEEL.

FOR PILE SPLICE DETAILS, SEE END BENT No. 1.

FOR GALVANIZED PILES, A MINIMUM OF 5 METERS OF THE TOP OF EACH PILE SHALL BE GLAVANIZED IN ACCORDANCE WITH SECTION 1076 OF THE STANDARD SPECIFICATIONS.

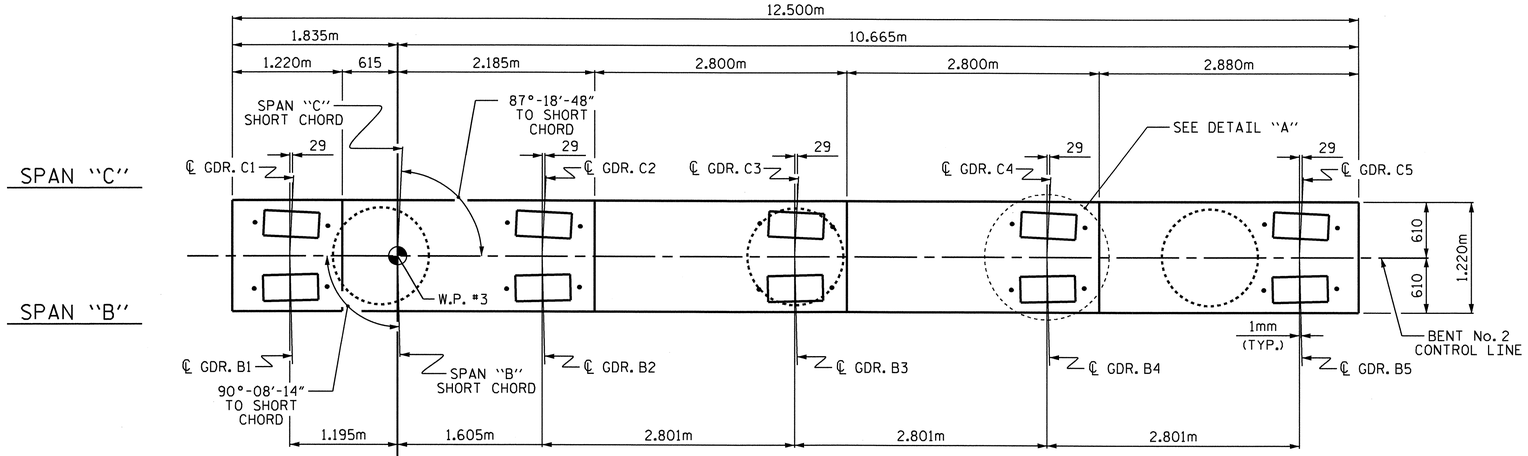

PLAN

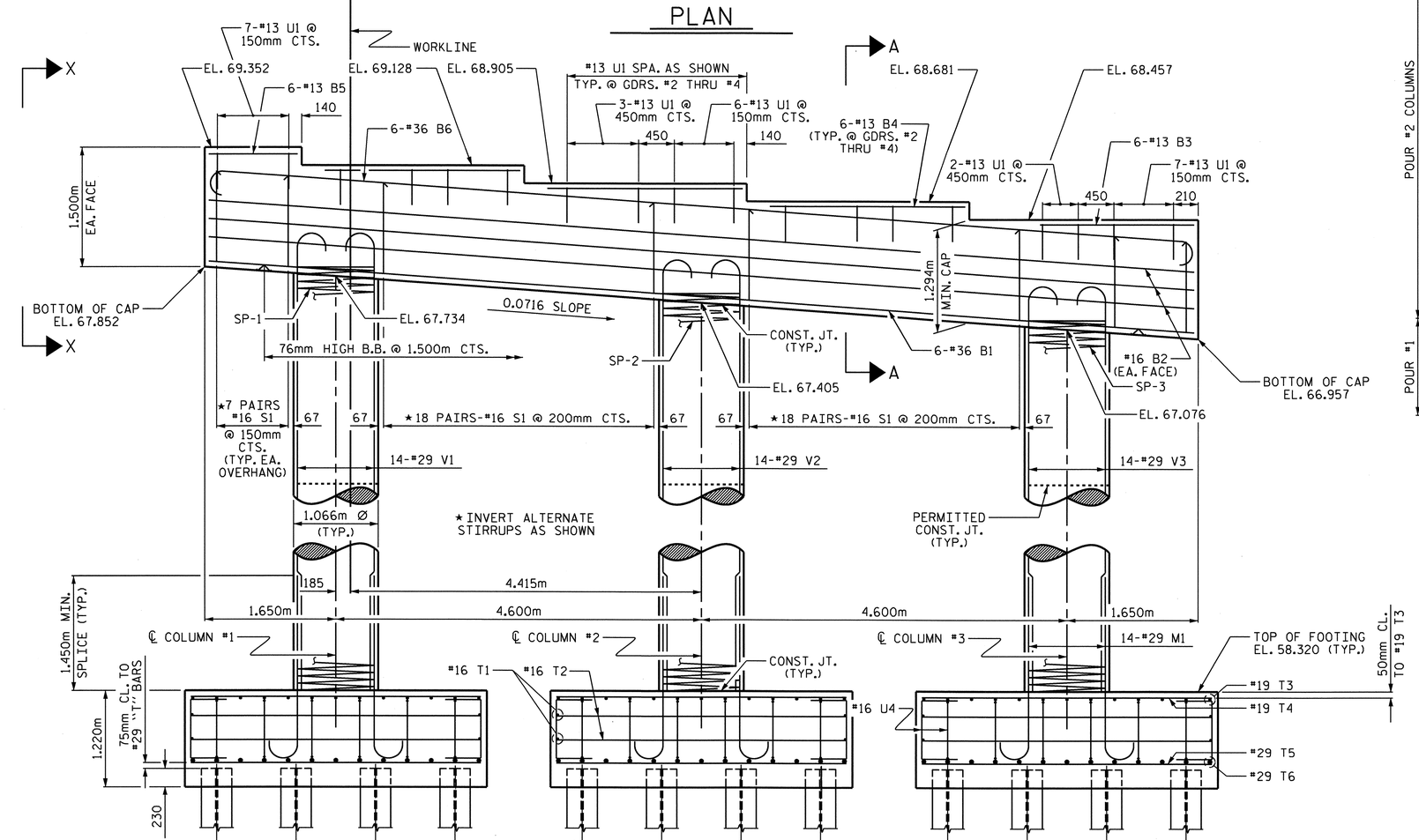

ELEVATION

DIMENSIONS & REINFORCING STEEL ARE TYPICAL FOR EACH COLUMN & FOOTING

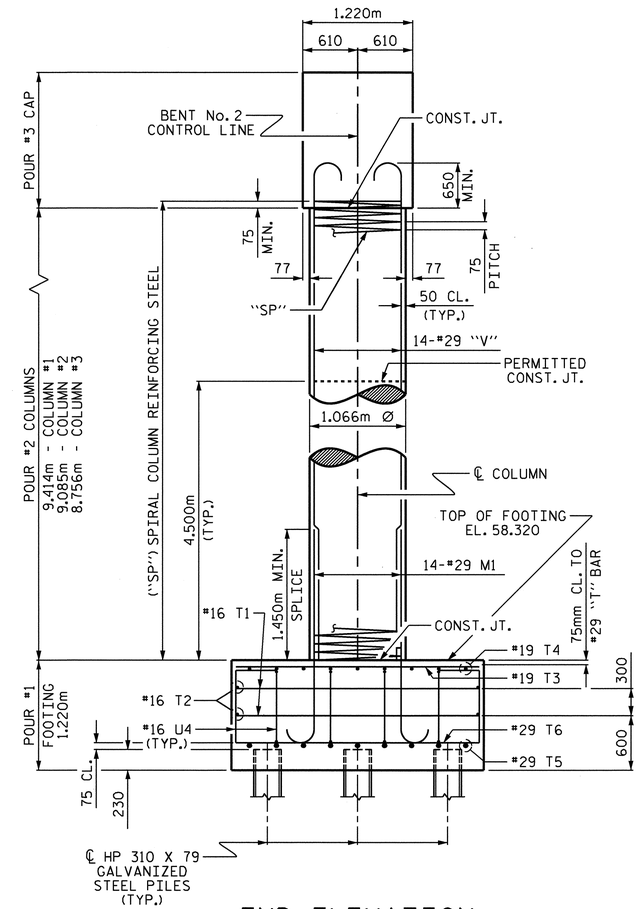

END ELEVATION

REINFORCING STEEL, DIMENSIONS AND DETAILS ARE TYPICAL FOR EACH COLUMN & FOOTING UNLESS OTHERWISE NOTED.

PROJECT NO. X-0002CB

CUMBERLAND COUNTY

STATION: 118+17.50 -L-

SHEET 1 OF 2

STATE OF NORTH CAROLINA
DEPARTMENT OF TRANSPORTATION
RALEIGH

SUBSTRUCTURE

BENT No. 2

(EBL)

NORTH CAROLINA PROFESSIONAL ENGINEER SEAL 029441 KRISTY W. ALFORD 11-3-10

REVISIONS								SHEET NO.
NO.	BY:	DATE:	NO.	BY:	DATE:			S-68
1			3					TOTAL SHEETS
2			4					134

DRAWN BY : T. BANKOVICH DATE : 3-2008
CHECKED BY : S.B. WILLIAMS DATE : 4-2008

03-NOV-2010 11:49
F:\Structures\Str2EBL\SubstructureDrawings\X0002C_str3_BT2.dgn
kalford

STR. #2

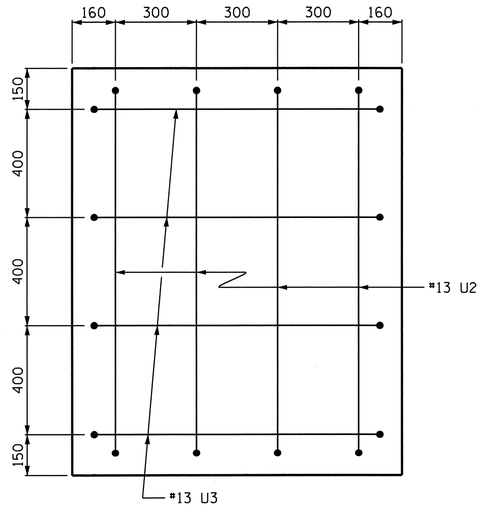

VIEW X-X

TYPICAL EACH END

BAR TYPES

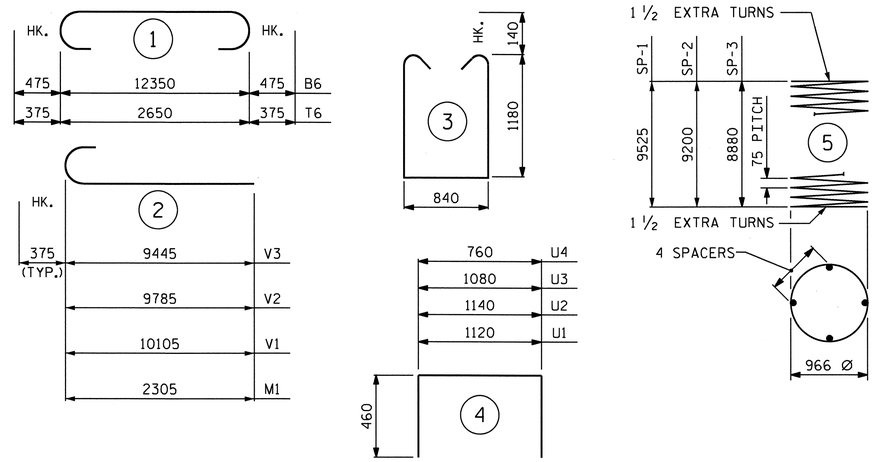

ALL BAR DIMENSIONS ARE OUT TO OUT

BILL OF MATERIAL

BENT No. 2

BAR	NO.	SIZE	TYP	LENGTH	WEIGHT
B1	6	#36	STR	12400	588
B2	6	#16	STR	12400	115
B3	6	#13	STR	1940	12
B4	18	#13	STR	2460	44
B5	6	#13	STR	1100	7
B6	6	#36	1	13300	631
M1	42	#29	2	2680	570
S1	100	#16	3	3480	540
T1	12	#16	STR	2700	50
T2	12	#16	STR	3700	69
T3	39	#19	STR	2700	235
T4	27	#19	STR	3700	223
T5	27	#29	STR	3700	505
T6	39	#29	1	3400	671
U1	42	#13	4	2040	85
U2	8	#13	4	2060	16
U3	8	#13	4	2000	16
U4	60	#16	4	1680	156

BAR	NO.	SIZE	TYP	LENGTH	WEIGHT
V1	14	#29	2	10480	742
V2	14	#29	2	10160	720
V3	14	#29	2	9820	696
REINFORCING STEEL					6691 kg.
SP-1	1	*	5	389360	387
SP-2	1	*	5	376380	374
SP-3	1	*	5	363600	361
SPIRAL COLUMN REINFORCING STEEL					1122 kg.

* THE SP-1 THRU SP-3 SPIRAL REINFORCING STEEL SHALL BE W20 OF D-20 COLD DRAWN WIRE OR #13 PLAIN OR DEFORMED BAR.

CLASS A CONCRETE BREAKDOWN	
POUR #1 (FOOTINGS)	$38.9m^3$
POUR #2 (COLUMNS)	$24.3m^3$
POUR #3 (CAP)	$22.0m^3$
TOTAL CLASS A CONCRETE	$85.2m^3$

HP 310 X 79 GALVANIZED STEEL PILES
No. = 36 468 METERS

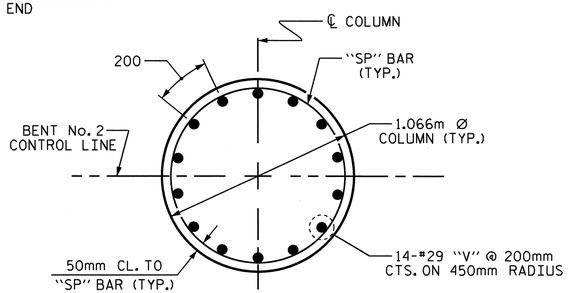

PLAN OF COLUMN

REINFORCING STEEL AND DIMENSIONS ARE TYPICAL FOR EACH COLUMN

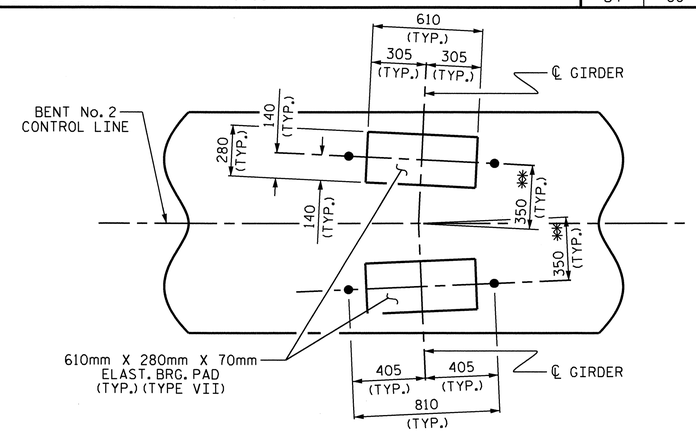

DETAIL "A"

** MEASURED ALONG ℄ GIRDER

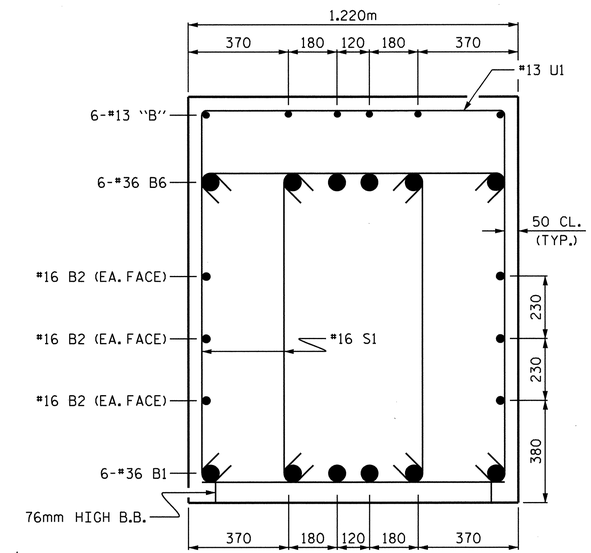

SECTION A-A

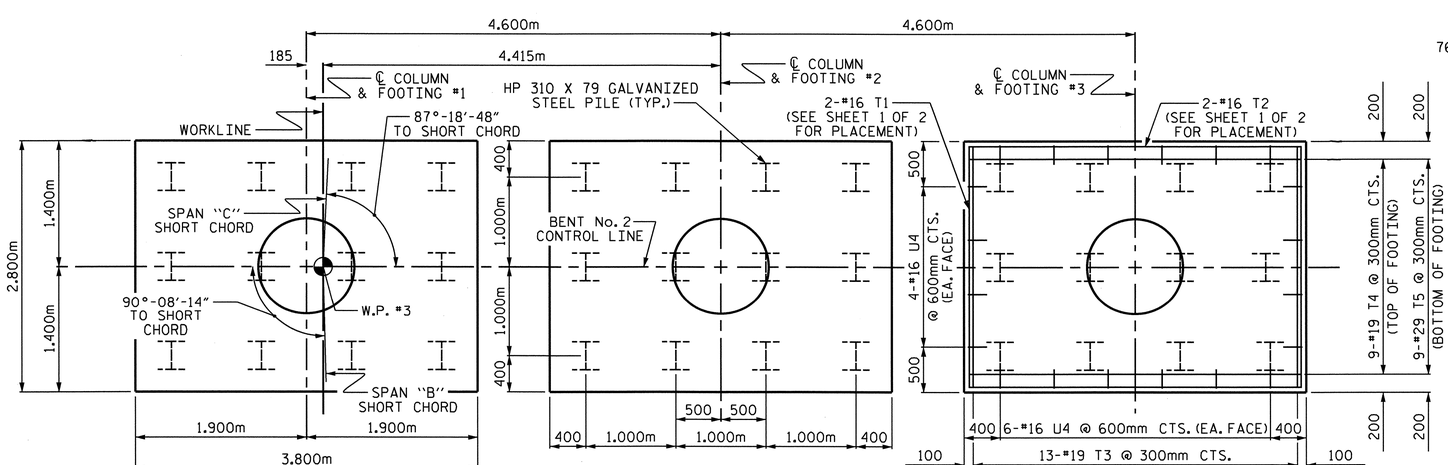

PLAN OF FOOTINGS

PILE PLACEMENT, DIMENSIONS & REINFORCING STEEL ARE TYPICAL FOR EACH FOOTING

PROJECT NO. X-0002CB
CUMBERLAND COUNTY
STATION: 118+17.50 -L-

SHEET 2 OF 2

STATE OF NORTH CAROLINA
DEPARTMENT OF TRANSPORTATION
RALEIGH

SUBSTRUCTURE

BENT No. 2

(EBL)

NORTH CAROLINA PROFESSIONAL SEAL 029441 ENGINEER KRISTY W. ALFORD

REVISIONS						SHEET NO.
NO.	BY:	DATE:	NO.	BY:	DATE:	S-69
1			3			TOTAL SHEETS
2			4			134

STR. #2

DRAWN BY : T. BANKOVICH DATE : 3-2008
CHECKED BY : S.B. WILLIAMS DATE : 4-2008

29-OCT-2010 12:21
F:\Structures\Str2EBL\SubstructureDrawings\X0002C_str3_BT2.dgn
kalford

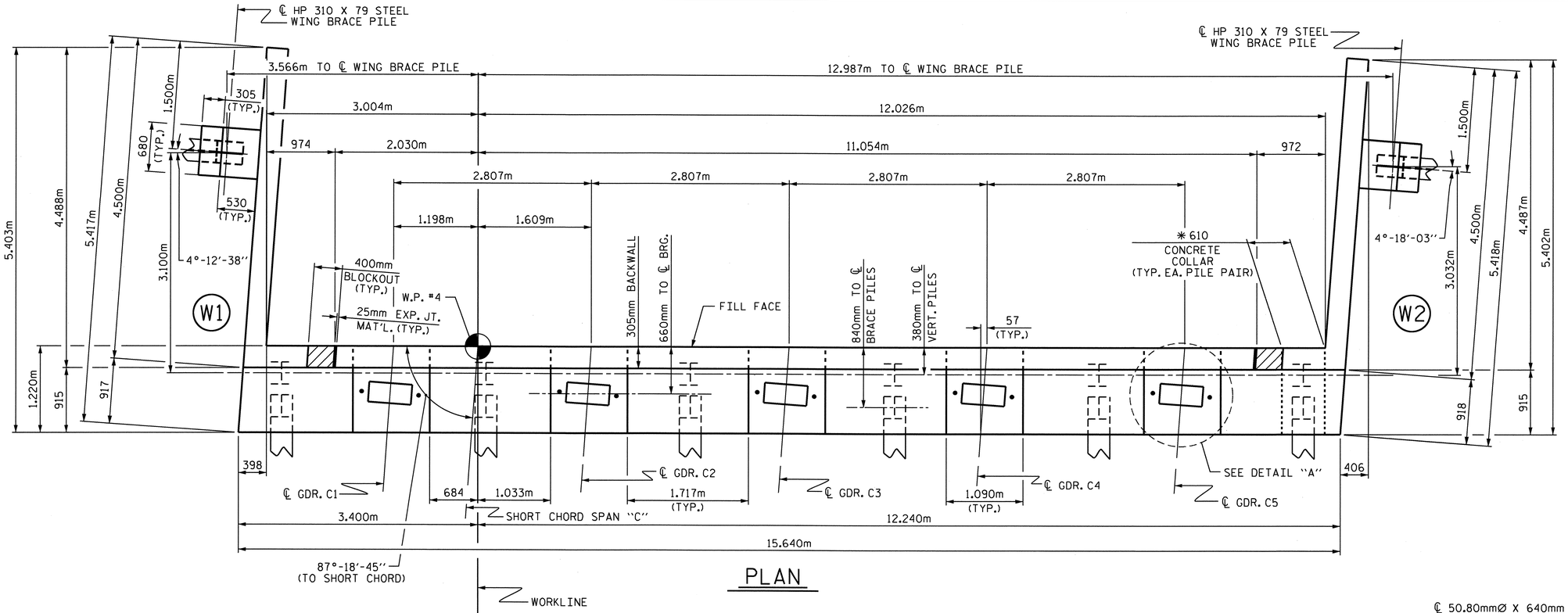

PLAN

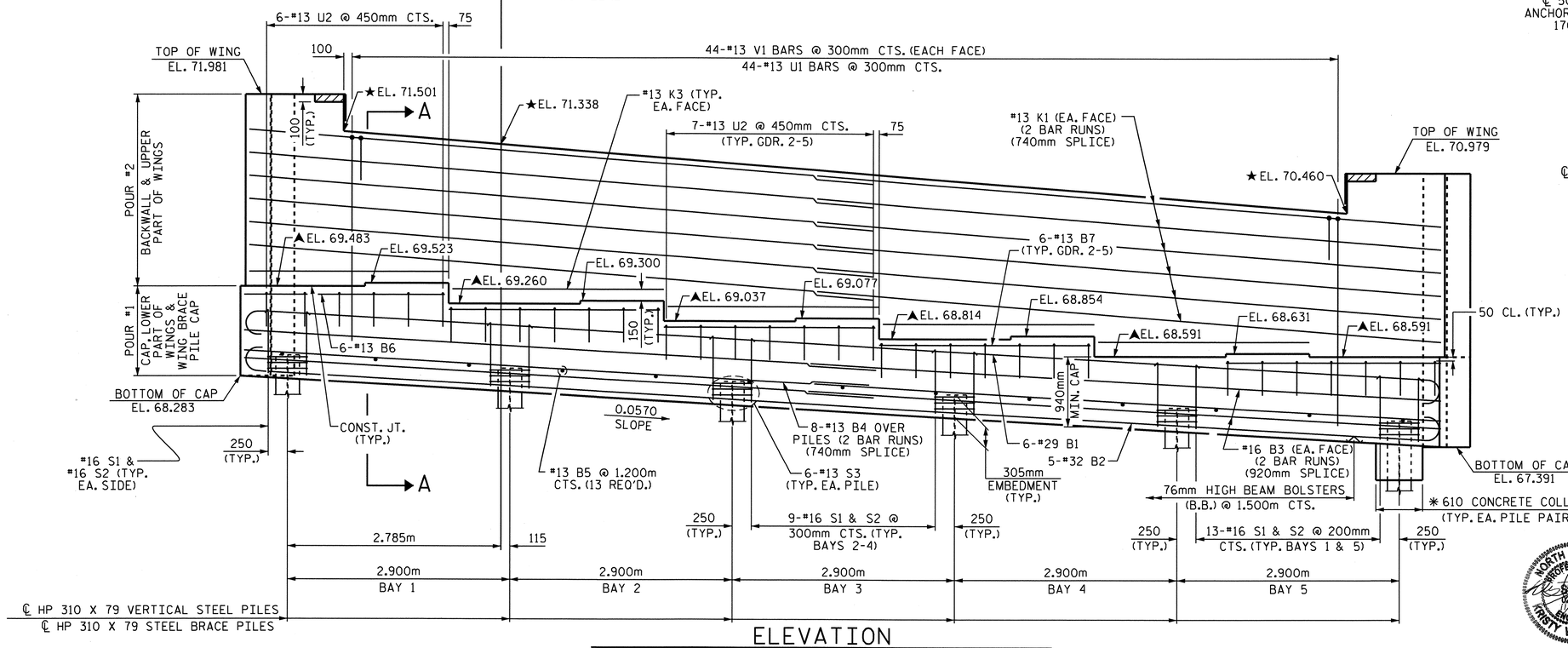

ELEVATION

(FOR CLARITY, BRACE PILE CAPS AT WINGS NOT SHOWN)

✱ ADDITIONAL CONCRETE COLLARS FOR STEEL PILES NOT SHOWN IN PLAN & ELEVATION VIEWS FOR CLARITY SEE "CONCRETE COLLAR FOR STEEL PILES DETAILS", SHEET 3 OF 3.

NOTES:

STIRRUPS AND U2 BARS IN CAP MAY BE SHIFTED AS NECESSARY TO CLEAR ANCHOR BOLTS.

BACKWALL SHALL BE PLACED BEFORE APPLYING THE EPOXY PROTECTIVE COATING.

THE TOP SURFACE OF THE CAP EXCEPT THE BRIDGE SEAT BUILDUPS SHALL BE SLOPED TRANSVERSELY FROM THE FILL FACE TO THE BACK FACE AT THE RATE OF 2%.

THE CONCRETE IN THE SHADED AREA OF THE WING SHALL BE POURED AFTER THE BARRIER RAILS ARE CAST IF SLIP FORMING IS USED.

THE #16 V1 IN THE BACKWALL SHALL BE PLACED 50mm CLEAR FROM THE TOP OF THE BACKWALL.

THE CONTRACTOR SHALL PROVIDE FOR INSTALLATION OF THE 102mm DIAMETER DRAIN PIPE THROUGH THE WING WALL AS REQUIRED FOR REINFORCED BRIDGE APPROACH FILLS, SEE THE ROADWAY PLANS. REINFORCING STEEL IN THE WING WALL MAY BE SHIFTED AS NECESSARY TO CLEAR THE DRAIN PIPE.

▲FOR LOCATION OF ELEVATION BETWEEN BRIDGE SEATS, SEE "SECTION A-A", SHEET 3 OF 3.

★THIS ELEVATION TAKEN ON FILL FACE OF BACKWALL.

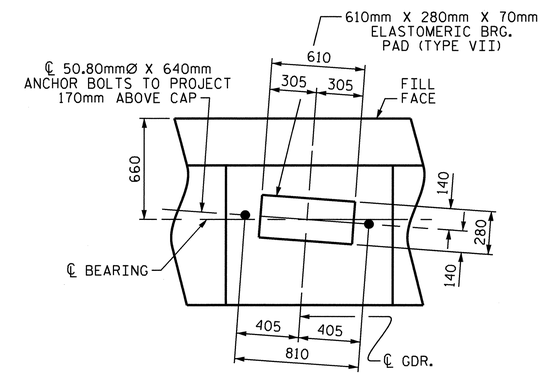

DETAIL "A"

(TYP. EA. GIRDER)

PROJECT NO. X-0002CB

CUMBERLAND COUNTY

STATION: 118+17.500 -L-

SHEET 1 OF 3

STATE OF NORTH CAROLINA
DEPARTMENT OF TRANSPORTATION
RALEIGH

SUBSTRUCTURE

END BENT No. 2

(EBL)

NORTH CAROLINA PROFESSIONAL SEAL 029441 ENGINEER KRISTY W. ALFORD

REVISIONS							SHEET NO.
NO.	BY:	DATE:	NO.	BY:	DATE:		S-70
1			3				TOTAL SHEETS
2			4				134

DRAWN BY : B. L. GREEN DATE : 4/23/08
CHECKED BY : S. B. WILLIAMS DATE : 07/10

STR. #2

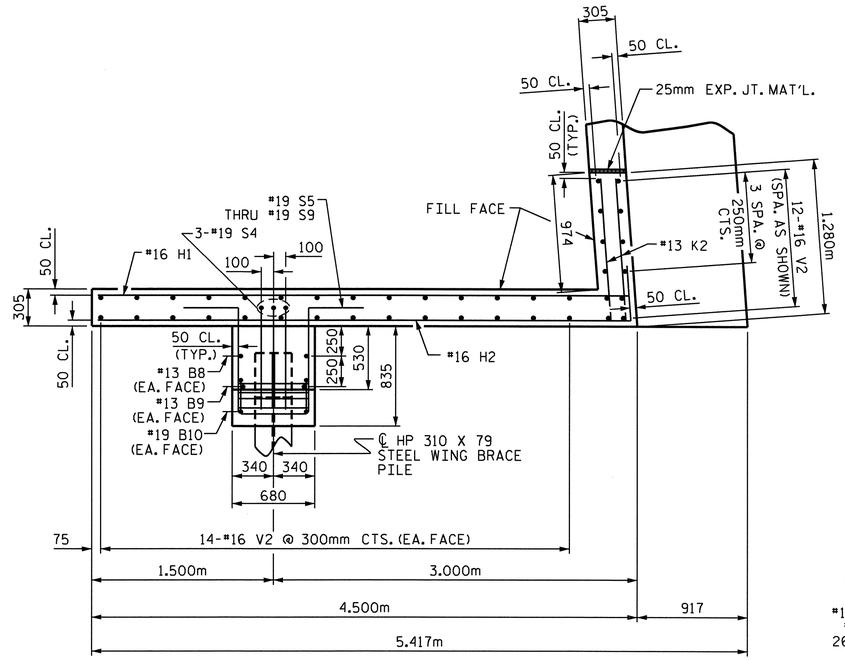

PLAN OF WING (W1)

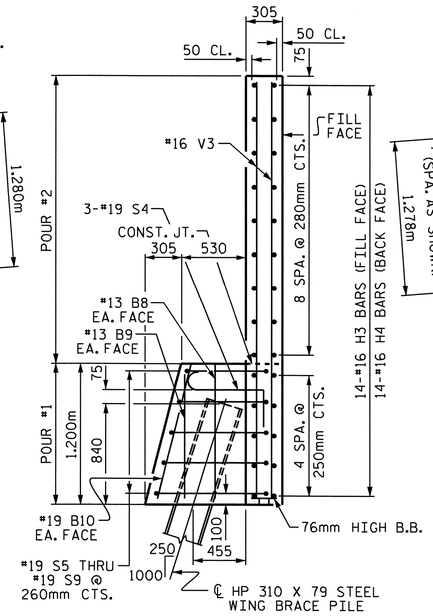

SECTION Y-Y

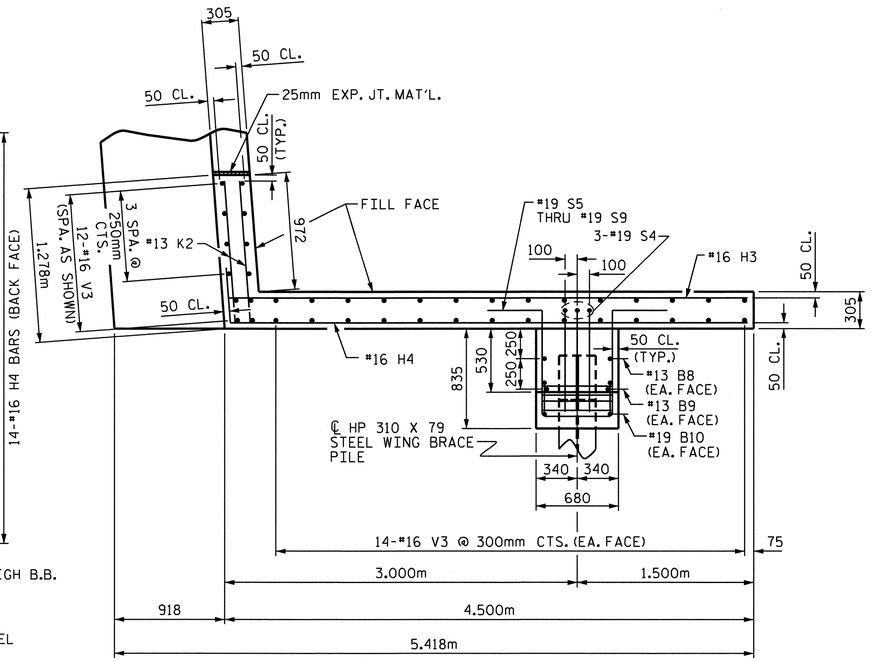

PLAN OF WING (W2)

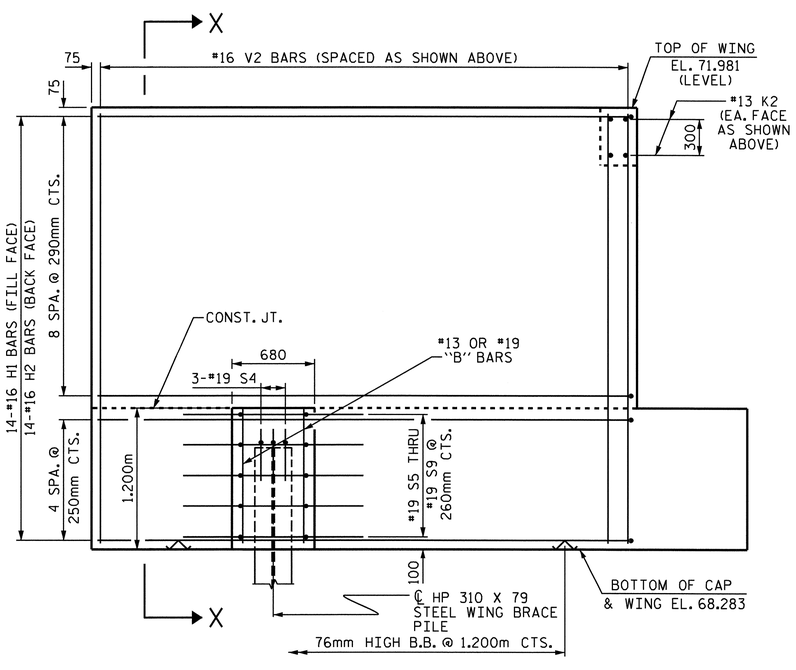

ELEVATION OF WING (W1)

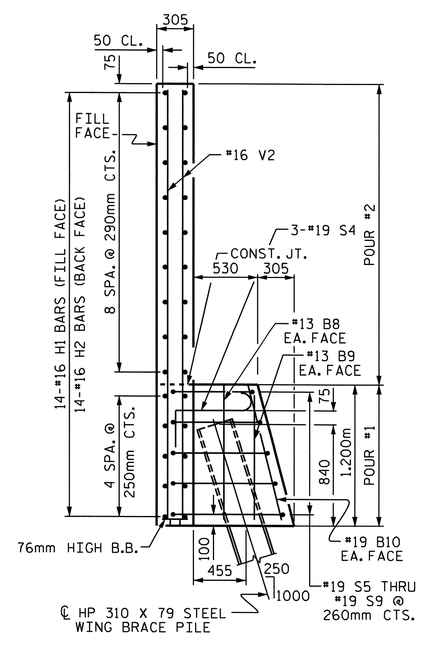

SECTION X-X

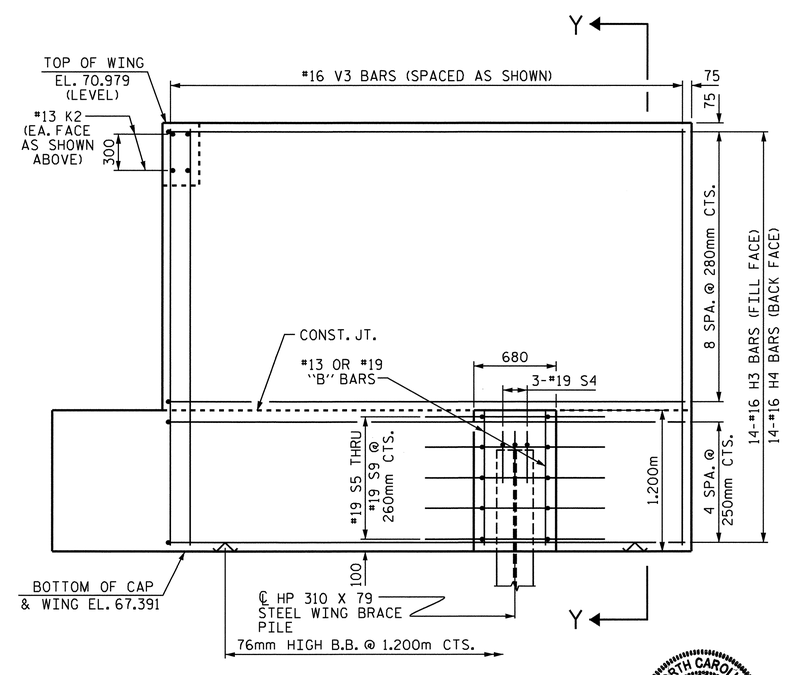

ELEVATION OF WING (W2)

PROJECT NO. X-0002CB
CUMBERLAND COUNTY
STATION: 118+17.500 -L-

SHEET 2 OF 3

STATE OF NORTH CAROLINA
DEPARTMENT OF TRANSPORTATION
RALEIGH

SUBSTRUCTURE

END BENT No. 2

(EBL)

NORTH CAROLINA PROFESSIONAL SEAL 029441 ENGINEER KRISTY W. ALFORD

REVISIONS						SHEET NO.
NO.	BY:	DATE:	NO.	BY:	DATE:	S-71
1			3			TOTAL SHEETS
2			4			134

DRAWN BY : B. L. GREEN DATE : 4/21/08
CHECKED BY : S. B. WILLIAMS DATE : 5/16/08

14-SEP-2010 11:25
F:\Structures\Str2EBL\SubstructureDrawings\X0002C_str3_EB2.dgn
kalford

STR. #2

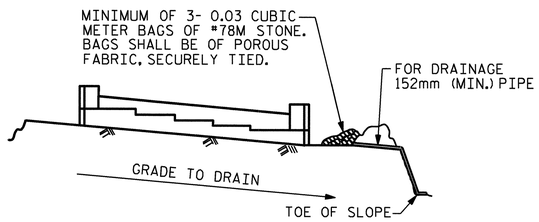

BAGGED STONE AND PIPE SHALL BE PLACED IMMEDIATELY AFTER COMPLETION OF END BENT EXCAVATION. PIPE MAY BE EITHER CONCRETE, CORRUGATED STEEL, CORRUGATED ALUMINUM ALLOY, OR CORRUGATED PLASTIC. PERFORATED PIPE WILL NOT BE ALLOWED.

BAGGED STONE SHALL REMAIN IN PLACE UNTIL THE ENGINEER DIRECTS THAT IT BE REMOVED. THE CONTRACTOR SHALL REMOVE AND DISPOSE OF SILT ACCUMULATIONS AT BAGGED STONE WHEN SO DIRECTED BY THE ENGINEER. BAGS SHALL BE REMOVED AND REPLACED WHENEVER THE ENGINEER DETERMINES THAT THEY HAVE DETERIORATED AND LOST THEIR EFFECTIVENESS.

NO SEPARATE PAYMENT WILL BE MADE FOR THIS WORK AND THE ENTIRE COST OF THIS WORK SHALL BE INCLUDED IN THE UNIT CONTRACT PRICE BID FOR THE SEVERAL PAY ITEMS.

TEMPORARY DRAINAGE AT END BENT

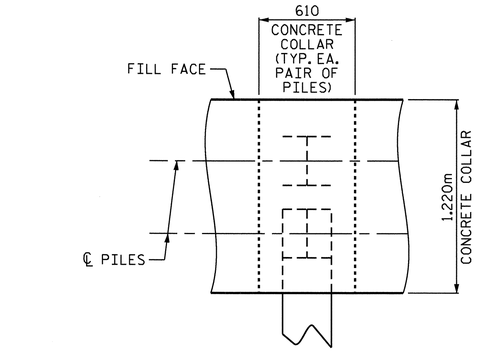

PLAN

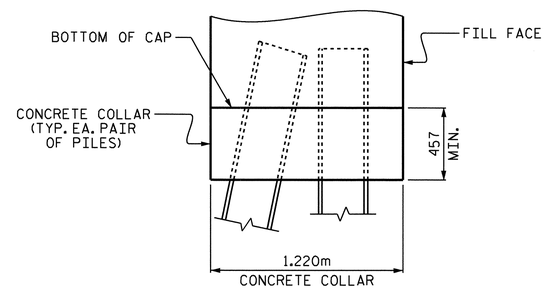

ELEVATION

CONCRETE COLLAR FOR STEEL PILES DETAILS

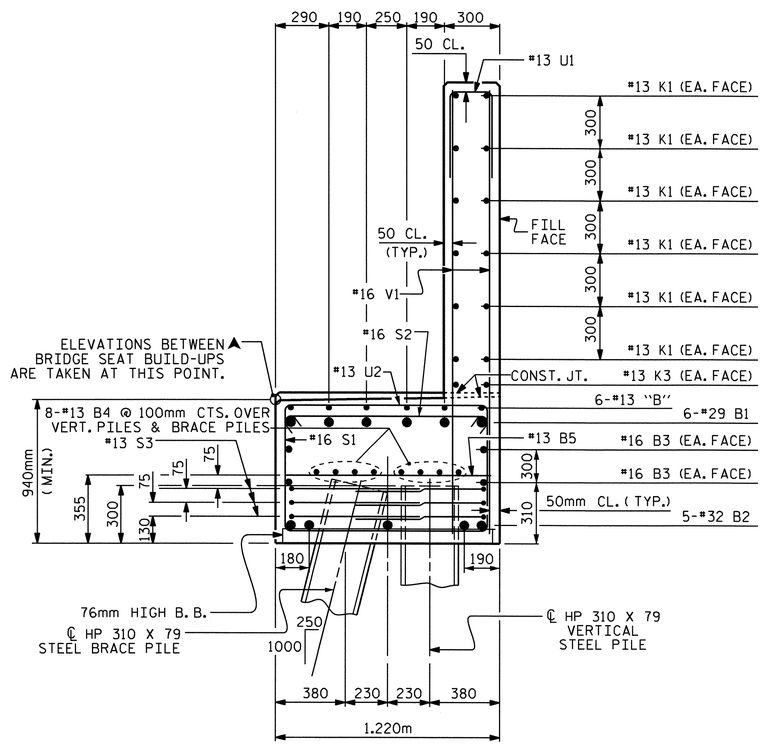

SECTION A-A

CONCRETE COLLAR NOT SHOWN FOR CLARITY, SEE "CONCRETE COLLAR FOR STEEL PILES DETAILS"

BAR TYPES

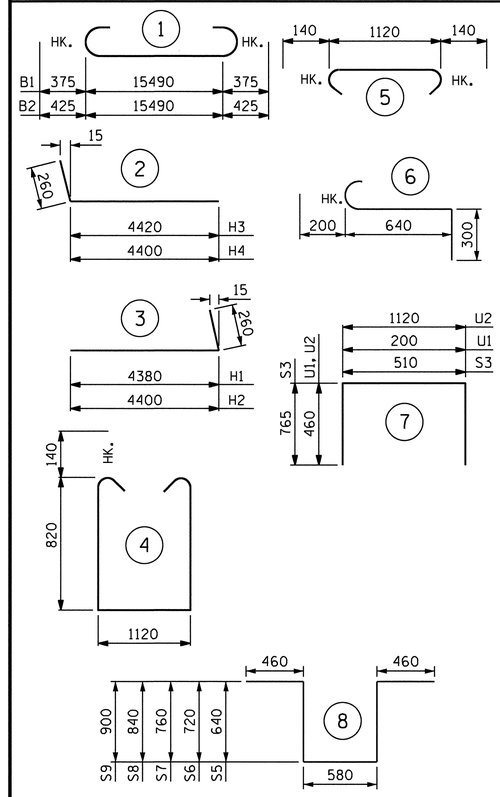

ALL BAR DIMENSIONS ARE OUT TO OUT.

BILL OF MATERIAL

END BENT No. 2

BAR	NUMBER	SIZE	TYPE	LENGTH	WEIGHT
B1	6	#29	1	16240	493
B2	5	#32	1	16340	523
B3	4	#16	STR	15540	96
B4	16	#13	STR	8140	129
B5	13	#13	STR	1120	14
B6	6	#13	STR	2580	15
B7	24	#13	STR	2760	66
B8	4	#13	STR	1100	4
B9	4	#13	STR	1040	4
B10	4	#19	STR	1140	10
H1	14	#16	3	4640	101
H2	14	#16	3	4660	101
H3	14	#16	2	4680	102
H4	14	#16	2	4660	101
K1	24	#13	STR	8140	194
K2	8	#13	STR	1160	9
K3	10	#13	STR	2760	27
S1	55	#16	4	3040	259
S2	55	#16	5	1400	120
S3	36	#13	7	2040	73
S4	6	#19	6	1140	15
S5	2	#19	8	2780	12
S6	2	#19	8	2940	13
S7	2	#19	8	3020	13
S8	2	#19	8	3180	14
S9	2	#19	8	3300	15
U1	44	#13	7	1120	49
U2	34	#13	7	2040	69
V1	88	#16	STR	2900	396
V2	40	#16	STR	3580	222
V3	40	#16	STR	3480	216

REINFORCING STEEL 3475 kg

CLASS A CONCRETE BREAKDOWN:

POUR #1 - CAP, LOWER WING, WING BRACE PILE CAPS, & CONCRETE COLLARS $27.9m^3$

POUR #2 - BACKWALL & UPPER WINGS $16.1m^3$

TOTAL $44.0m^3$

HP 310 X 79 STEEL PILES
NO. = 14 294 METERS

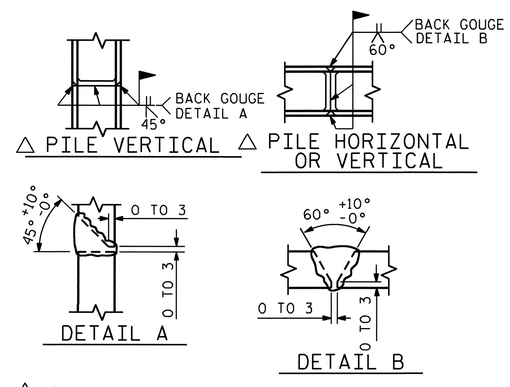

△ POSITION OF PILE DURING WELDING.

PILE SPLICE DETAILS

PROJECT NO. X-0002CB
CUMBERLAND COUNTY
STATION: 118+17.500 -L-

SHEET 3 OF 3

STATE OF NORTH CAROLINA
DEPARTMENT OF TRANSPORTATION
RALEIGH

SUBSTRUCTURE
END BENT No. 2
(EBL)

REVISIONS						SHEET NO.
NO.	BY:	DATE:	NO.	BY:	DATE:	S-72
1			3			TOTAL SHEETS
2			4			134

NORTH CAROLINA PROFESSIONAL SEAL 029441 ENGINEER KRISTY W. ALFORD

DRAWN BY : B. L. GREEN DATE : 4/22/08
CHECKED BY : S. B. WILLIAMS DATE : 07/10

14-SEP-2010 11:25
F:\Structures\Str2EBL\SubstructureDrawings\X0002C_str3_EB2.dgn
kalford

STR. #2

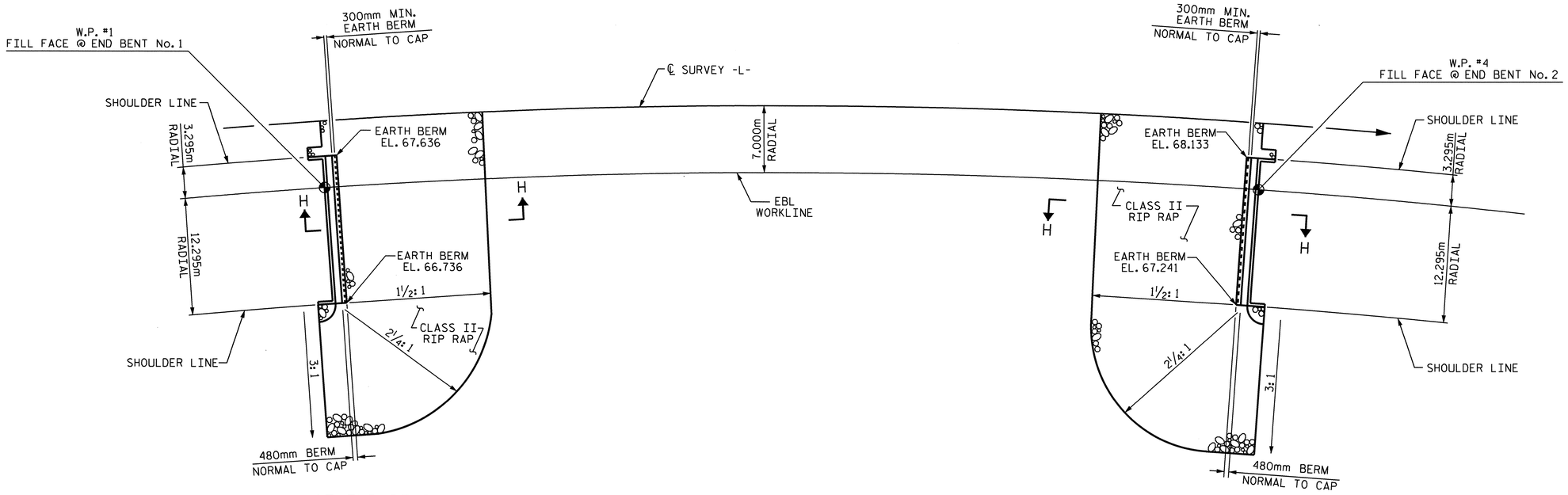

PLAN

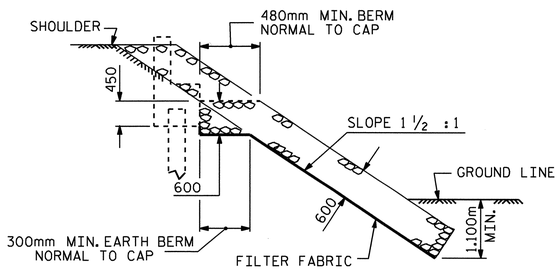

SECTION H-H

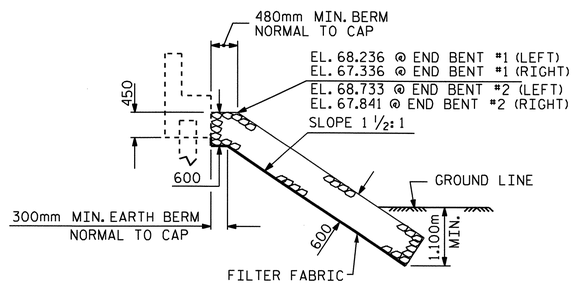

℄ SECTION

BERM RIP RAPPED

ESTIMATED QUANTITIES		
EBL BRIDGE @ STA. 118 +17.500 -L-	RIP RAP CLASS II	FILTER FABRIC FOR DRAINAGE
	METRIC TON	SQUARE METERS
END BENT 1	1096	1118
END BENT 2	1096	1118

PROJECT NO. X-0002CB

CUMBERLAND COUNTY

STATION: 118+17.500 -L-

STATE OF NORTH CAROLINA
DEPARTMENT OF TRANSPORTATION
RALEIGH

RIP RAP DETAILS

(EBL)

NORTH CAROLINA PROFESSIONAL SEAL 029441 ENGINEER KRISTY W. ALFORD

REVISIONS						SHEET NO.
NO.	BY:	DATE:	NO.	BY:	DATE:	S-73
1			3			TOTAL SHEETS
2			4			134

ASSEMBLED BY : A. V. ROYAL	DATE : 5/7/08
CHECKED BY: B. L. GREEN	DATE: 5/9/08
DRAWN BY : REK 1/84	REV. 8/16/99 RWW/LES
CHECKED BY : RDU 1/84	REV. 10/17/00 RWW/LES
	REV. 5/1/06 TLA/GM

14-SEP-2010 11:24
F:\Structures\Str2EBL\MiscDrawings\x0002c_str3_rr.dgn
kalford

STR. #2

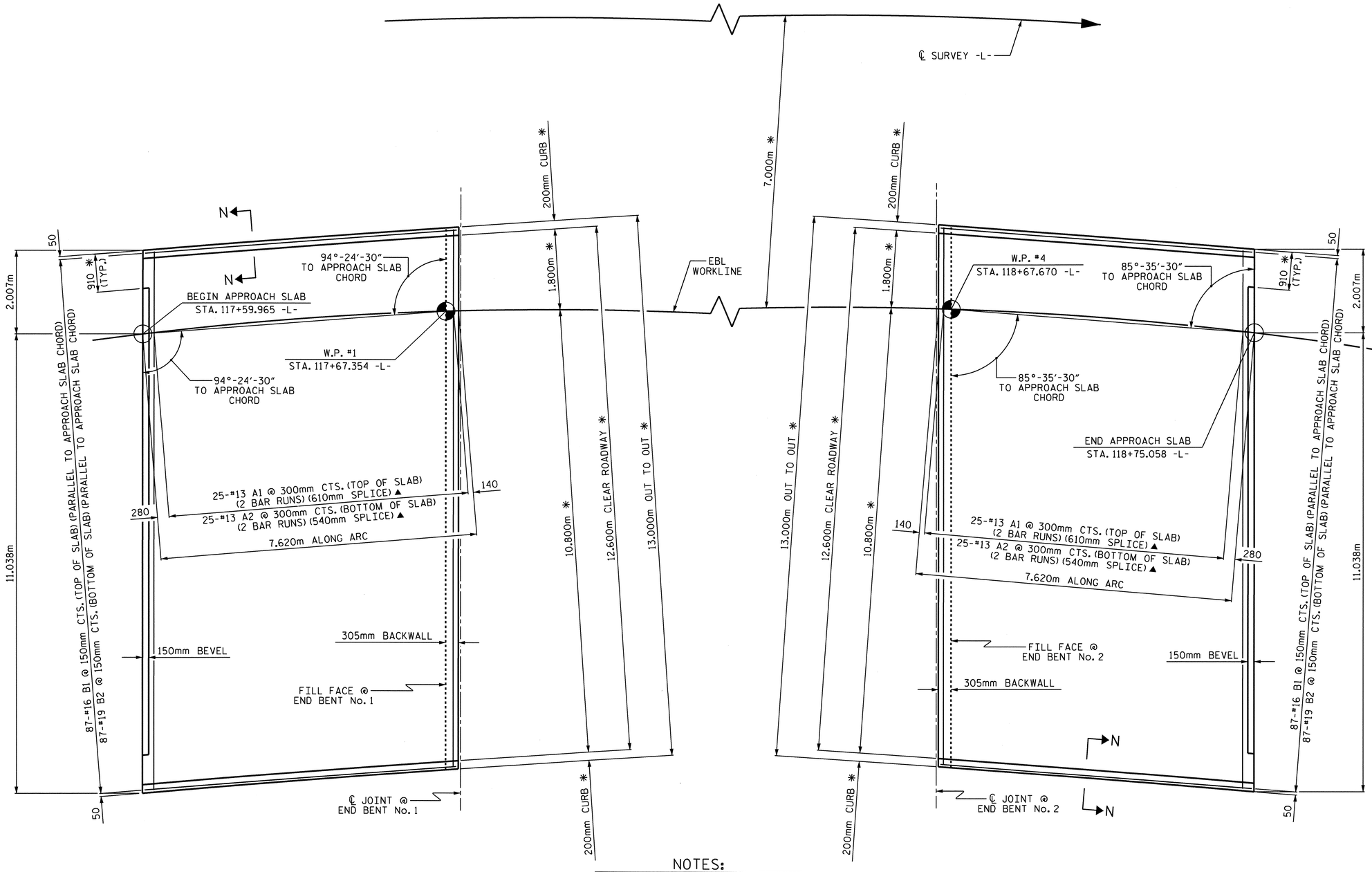

PLAN AT END BENT No. 1

PLAN AT END BENT No. 2

NOTES:

* MEASURED RADIALLY

▲ "A" BARS ARE SPACED ALONG APPROACH SLAB CHORD AND PLACED PARALLEL TO FILL FACE

FOR ARC OFFSETS, SEE SHEET 2 OF 3

PLAN OF APPROACH SLABS

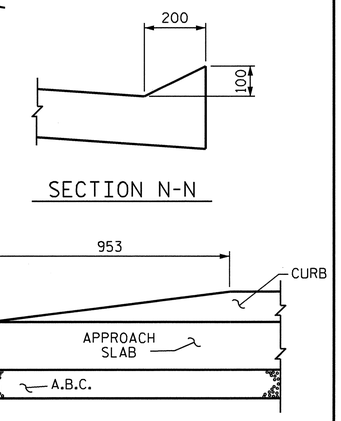

SECTION N-N

END OF CURB WITHOUT SHOULDER BERM GUTTER

CURB DETAILS

PROJECT NO. X-0002CB

CUMBERLAND COUNTY

STATION: 118+17.500 -L-

SHEET 1 OF 3

STATE OF NORTH CAROLINA
DEPARTMENT OF TRANSPORTATION
RALEIGH

BRIDGE APPROACH SLAB

(EBL)

NORTH CAROLINA PROFESSIONAL SEAL 029441 ENGINEER KRISTY W. ALFORD

REVISIONS						SHEET NO.
NO.	BY:	DATE:	NO.	BY:	DATE:	S-74
1			3			TOTAL SHEETS
2			4			134

DRAWN BY : T. BANKOVICH DATE : 12-07
CHECKED BY : M.L. BROWN DATE : 5-08

14-SEP-2010 11:24
F:\Structures\Str2EBL\MiscDrawings\X0002C_str3_AS.dgn
kalford

STR. #2

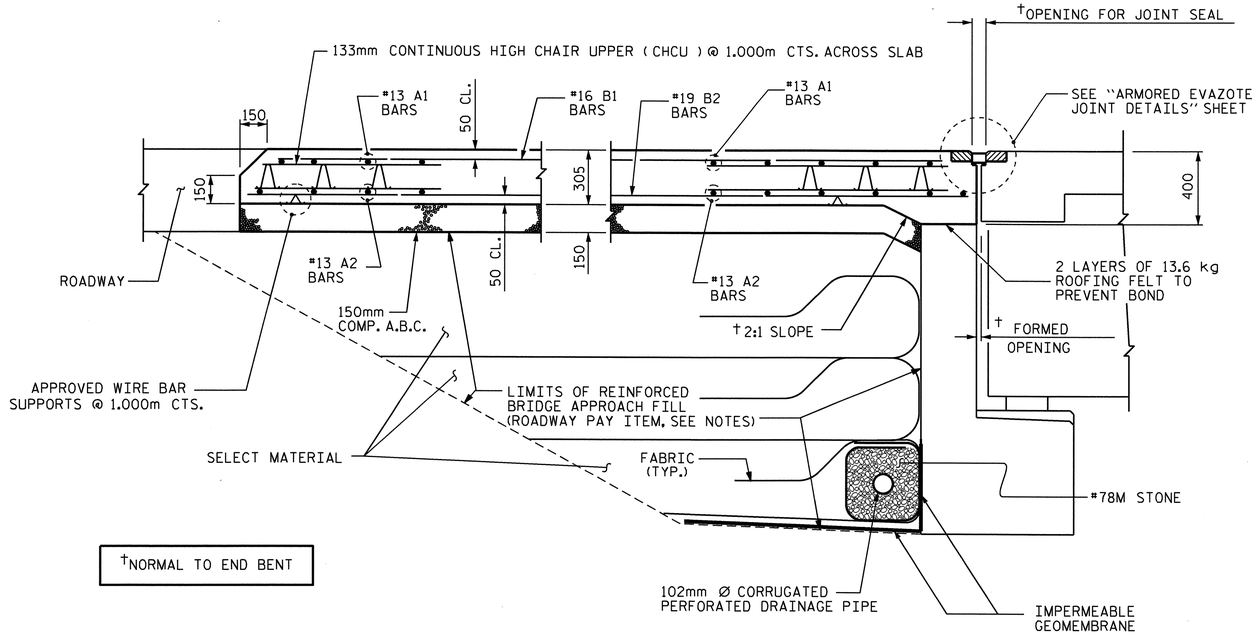

SECTION THRU SLAB

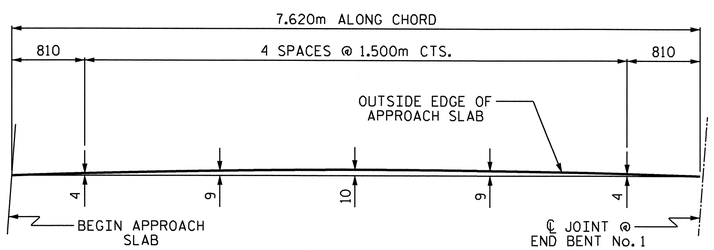

LEFT SIDE

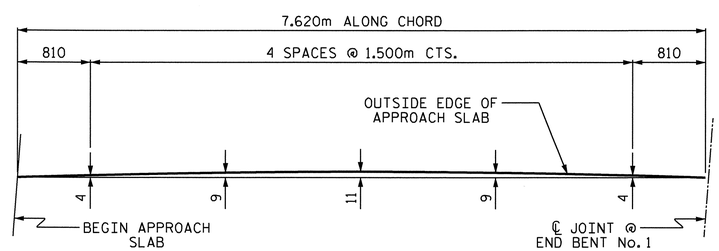

RIGHT SIDE

ARC OFFSETS

END BENT No. 1 SHOWN, END BENT No. 2 SIMILAR

NOTES

APPROACH SLAB SHALL NOT BE CONSTRUCTED PRIOR TO COMPLETION OF THE BRIDGE DECK.

FOR REINFORCED BRIDGE APPROACH FILL INCLUDING FABRIC, IMPERMEABLE GEOMEMBRANE, 102mm Ø DRAINAGE PIPE, #78M STONE, AND SELECT MATERIAL, SEE ROADWAY PLANS.

AREA BETWEEN THE WINGWALL AND APPROACH SLAB SHALL BE GRADED TO DRAIN THE WATER AWAY FROM THE FILL FACE OF THE BRIDGE AND SHALL BE PAVED. SEE ROADWAY PLANS.

THE 150mm COMP. A.B.C. SHALL BE FLUSH WITH THE ROADWAY END OF THE APPROACH SLAB AND SHALL EXTEND 300mm OUTSIDE OF EACH EDGE OF THE APPROACH SLAB.

THE CONTRACTOR MAY USE 100mm TYPE B-25.0B ASPHALT CONCRETE COURSE IN LIEU OF 150mm COMP. A.B.C. IF THIS OPTION IS USED, THE BASE COURSE SHALL BE FLUSH WITH THE ROADWAY END OF THE APPROACH SLAB, AND THE WIDTH SHALL BE THE SAME AS THAT OF THE APPROACH SLAB.

THE CONTRACTOR MAY USE 125mm CLASS "A" CONCRETE BASE IN LIEU OF 150mm COMP. A.B.C. IF THIS OPTION IS USED, THE CONCRETE BASE SHALL BE FLUSH WITH THE ROADWAY END OF THE APPROACH SLAB, AND THE WIDTH SHALL BE THE SAME AS THAT OF THE APPROACH SLAB. THE CONCRETE SHALL BE FINISHED TO A SMOOTH SURFACE AND A LAYER OF 13.6 kg ROOFING FELT SHALL BE PLACED BETWEEN THE CONCRETE BASE AND THE APPROACH SLAB TO PREVENT BOND. THE APPROACH SLAB SHALL NOT BE CAST UNTIL THE CONCRETE BASE HAS REACHED AN AGE OF THREE CURING DAYS.

FOR EVAZOTE JOINT SEALS, SEE SPECIAL PROVISIONS.

THE NOMINAL UNCOMPRESSED SEAL WIDTH OF THE EVAZOTE JOINT SEAL SHALL BE 80mm.

FOR ELASTOMERIC CONCRETE, SEE SPECIAL PROVISIONS.

BILL OF MATERIAL

APPROACH SLAB AT EB #1

BAR	NO.	SIZE	TYPE	LENGTH	WEIGHT
* A1	50	#13	STR	6780	337
A2	50	#13	STR	6740	335
* B1	87	#16	STR	7320	988
B2	87	#19	STR	7520	1462
REINFORCING STEEL					1797 kg.
* EPOXY COATED REINFORCING STEEL					1325 kg.
CLASS AA CONCRETE					30.8m³

APPROACH SLAB AT EB #2

BAR	NO.	SIZE	TYPE	LENGTH	WEIGHT
* A1	50	#13	STR	6780	337
A2	50	#13	STR	6740	335
* B1	87	#16	STR	7320	988
B2	87	#19	STR	7520	1462
REINFORCING STEEL					1797 kg.
* EPOXY COATED REINFORCING STEEL					1325 kg.
CLASS AA CONCRETE					30.8m³

PROJECT NO. X-0002CB

CUMBERLAND COUNTY

STATION: 118+17.500 -L-

SHEET 2 OF 3

STATE OF NORTH CAROLINA
DEPARTMENT OF TRANSPORTATION
RALEIGH

STANDARD

BRIDGE APPROACH SLAB FOR FLEXIBLE PAVEMENT

(EBL)

NORTH CAROLINA PROFESSIONAL SEAL 029441 ENGINEER KRISTY W. ALFORD 11/18/10

REVISIONS							
NO.	BY:	DATE:	NO.	BY:	DATE:	SHEET NO.	S-75
1			3			TOTAL SHEETS	134
2			4				

STR. #2

ASSEMBLED BY : T. BANKOVICH	DATE : 12-07
CHECKED BY : M.L. BROWN	DATE : 5-08
DRAWN BY : FCJ 6/87	REV. 7/10/01 RWW/LES
CHECKED BY : EGA 6/87	REV. 5/7/03R RWW/JTE
	REV. 5/1/06R KMM/GM

14-SEP-2010 11:23
F:\Structures\Str2EBL\MiscDrawings\X0002C_str3_AS.dgn
kalford

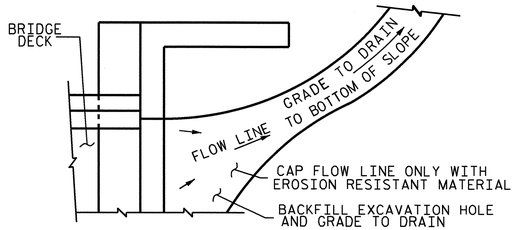

NOTE: IF THE APPROACH SLAB IS NOT CONSTRUCTED IMMEDIATELY AFTER THE BACKFILLING OF THE END BENT EXCAVATION, GRADE TO DRAIN TO THE BOTTOM OF THE SLOPE AND PROVIDE EROSION RESISTANT MATERIAL, SUCH AS FIBERGLASS ROVING OR AS DIRECTED BY THE ENGINEER TO PREVENT SOIL EROSION AND TO PROTECT THE AREA ADJACENT TO THE STRUCTURE. THE CONTRACTOR WILL BE REQUIRED TO REMOVE THESE MATERIALS PRIOR TO CONSTRUCTION OF THE APPROACH SLAB.

TEMPORARY DRAINAGE DETAIL

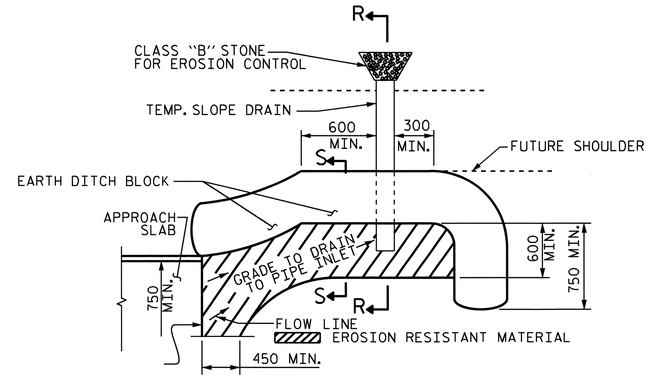

NOTE: IMMEDIATELY AFTER THE CONSTRUCTION OF THE APPROACH SLAB, THE CONTRACTOR SHALL PROVIDE TEMPORARY BERM AND SLOPE DRAIN. CONTRACTOR SHALL GRADE TO PIPE INLET AND PROVIDE EROSION RESISTANT MATERIAL AS SHOWN. THE EROSION RESISTANT MATERIAL SHALL BE EITHER 1) ASPHALT PLANT MIX, TYPE 1 OR TYPE 2, MIN. 50mm DEPTH, 2) EROSION CONTROL MAT, OR 3) CONCRETE, AS DIRECTED BY THE ENGINEER. THE SLOPE DRAIN SHALL CONSIST OF A NON-PERFORATED TEMPORARY DRAINAGE PIPE, 305mm IN DIAMETER.

PLAN VIEW

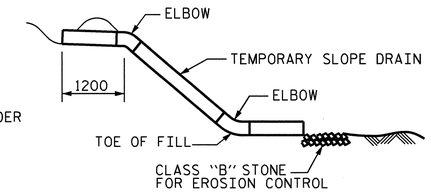

SECTION R-R

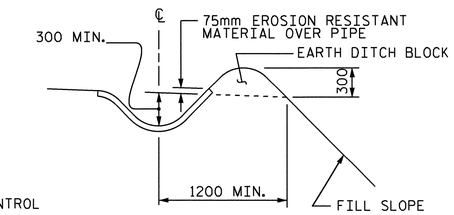

SECTION S-S

TEMPORARY BERM AND SLOPE DRAIN DETAILS

(TO BE USED WHEN SHOULDER BERM GUTTER IS REQUIRED)

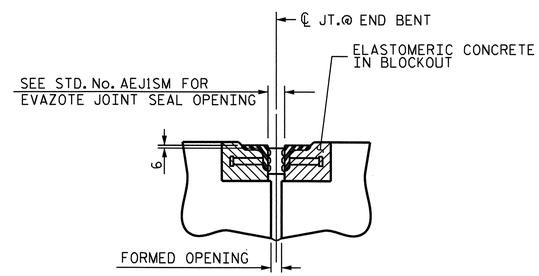

SECTION C-C

ARMORED EVAZOTE JOINT SEAL

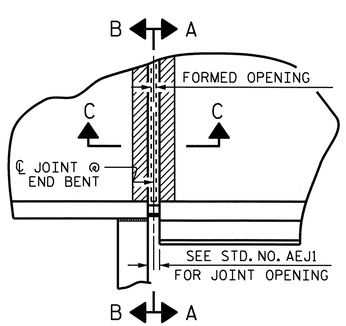

PLAN

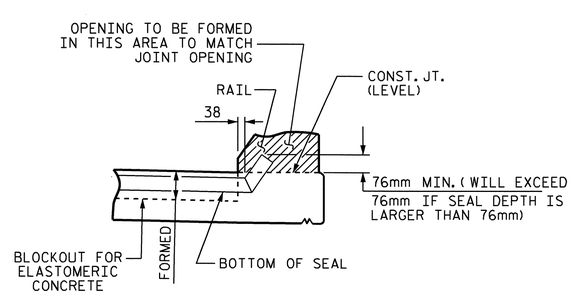

SECTION A-A

EVAZOTE JOINT SEAL TO BE CUT, HEAT WELDED AND TURNED UP PARALLEL TO SLOPED FACE OF THE BARRIER RAIL.

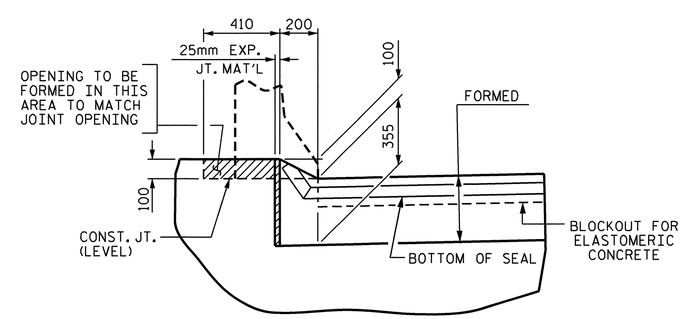

SECTION B-B

JOINT SEAL DETAILS @ END BENT

END BENT No. 1 SHOWN, END BENT No. 2 SIMILAR

PROJECT NO. X-0002CB

CUMBERLAND COUNTY

STATION: 118+17.500 -L-

SHEET 3 OF 3

STATE OF NORTH CAROLINA
DEPARTMENT OF TRANSPORTATION
RALEIGH

STANDARD
BRIDGE APPROACH
SLAB DETAILS

(EBL)

NORTH CAROLINA PROFESSIONAL SEAL 029441 ENGINEER KRISTY W. ALFORD

ASSEMBLED BY : T. BANKOVICH	DATE : 12-07
CHECKED BY : M.L. BROWN	DATE : 5-08

DRAWN BY : FCJ 11/88	REV. 10/17/00 RWW/LES
CHECKED BY : ARB 11/88	REV. 5/7/03 RWW/JTE
	REV. 5/1/06R MAA/KMM

REVISIONS						
NO.	BY:	DATE:	NO.	BY:	DATE:	
1			3			
2			4			

SHEET NO. S-76

TOTAL SHEETS 134

STR. #2

14-SEP-2010 11:23
F:\Structures\Str2EBL\MiscDrawings\X0002C_str3_AS.dgn
kalford

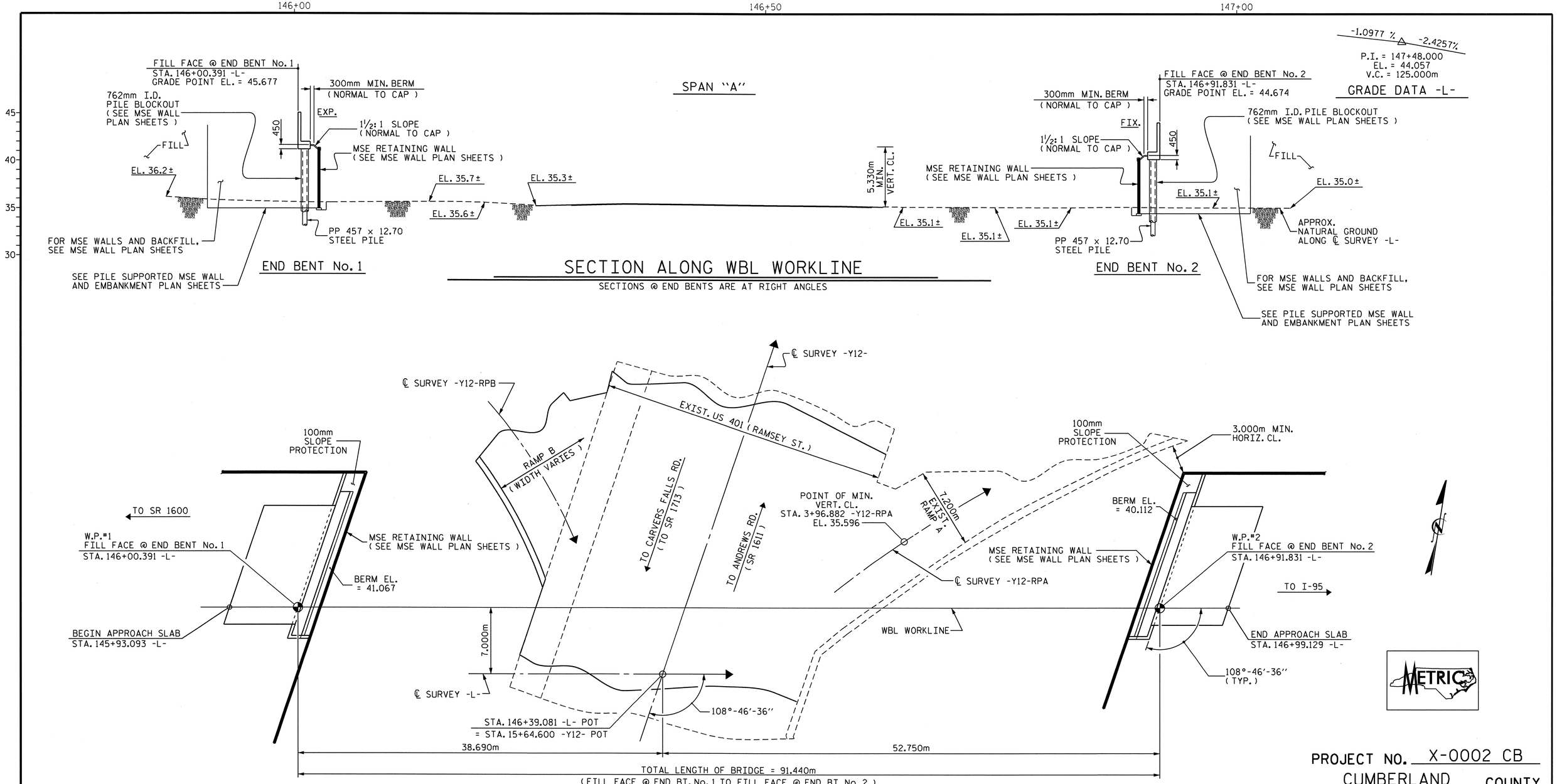

SECTION ALONG WBL WORKLINE

SECTIONS @ END BENTS ARE AT RIGHT ANGLES

PLAN

PILES ARE NOT SHOWN IN PLAN VIEW

PROJECT NO. X-0002 CB

CUMBERLAND COUNTY

STATION: 146+39.081 -L-
= 15+64.600 -Y12-

SHEET 1 OF 3 BRIDGE No. 382

STATE OF NORTH CAROLINA
DEPARTMENT OF TRANSPORTATION
RALEIGH

GENERAL DRAWING

WBL BRIDGE OVER
US 401 (RAMSEY ST.)
ON FAYETTEVILLE OUTER LOOP
BETWEEN SR 1600 & I-95

NORTH CAROLINA PROFESSIONAL SEAL 11268 ENGINEER BETSY S. COX 11-3-10

NORTH CAROLINA PROFESSIONAL SEAL 24390 ENGINEER THEO J. BEACH 11/3/10

REVISIONS						SHEET NO.
NO.	BY:	DATE:	NO.	BY:	DATE:	S-77
1			3			TOTAL SHEETS
2			4			134

DRAWN BY : MIKE BRITT DATE : 9-7-10
CHECKED BY : T.J. BEACH DATE : 9-13-10

03-NOV-2010 12:23
R:\Structures\Str3US401\Single_SpanBridge\Gen_draw\x0002c_str4_gd.dgn
tbeach

STR.#3

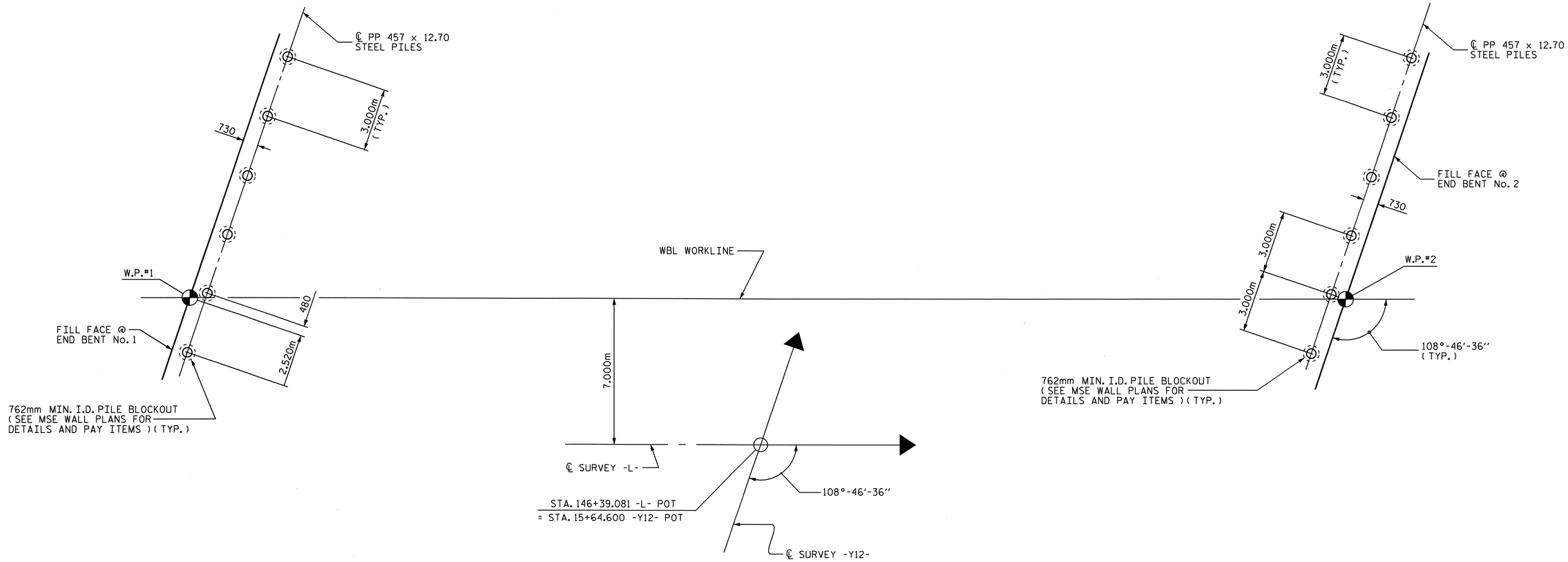

FOUNDATION LAYOUT

ALL PILES ARE VERTICAL

NOTES :

DRIVE PILES AT END BENT No. 1 AND END BENT No. 2 TO A REQUIRED BEARING CAPACITY OF 3600 KN PER PILE. THE REQUIRED BEARING CAPACITY IS EQUAL TO THE ALLOWABLE BEARING CAPACITY WITH A MINIMUM FACTOR OF SAFETY OF TWO.

THE ALLOWABLE BEARING CAPACITY FOR PILES AT END BENT No. 1 AND END BENT No. 2 IS 1800 KN PER PILE.

TESTING THE FIRST PRODUCTION PILE WITH THE PILE DRIVING ANALYZER DURING DRIVING, RESTRIKING OR REDRIVING IS REQUIRED AT END BENT No. 1 OR END BENT No. 2. FOR PILE DRIVING ANALYZER, SEE SPECIAL PROVISIONS.

IT HAS BEEN ESTIMATED THAT A HAMMER WITH AN EQUIVALENT ENERGY IN THE RANGE OF 110,000 TO 180,000 N-M PER BLOW WILL BE REQUIRED TO DRIVE PILES AT END BENT No. 1 AND END BENT No. 2. THIS ESTIMATED ENERGY RANGE DOES NOT RELEASE THE CONTRACTOR FROM ARTICLE 450-5 OF THE STANDARD SPECIFICATIONS.

PIPE PILE PLATES ARE REQUIRED FOR PIPE PILES AT END BENT No. 1 AND END BENT No. 2. USE PIPE PILE PLATES WITH A DIAMETER EQUAL TO THE PIPE PILE DIAMETER.

SEE PILE SUPPORTED MSE WALL AND EMBANKMENT PLANS FOR PIPE PILE PENETRATION DETAILS THROUGH LOAD TRANSFER PLATFORM AT END BENT No. 1 AND END BENT No. 2.

DRIVE PIPE PILES AT END BENT No. 1 AND END BENT No. 2 TO A TIP ELEVATION OF 29.0 METERS PRIOR TO CONSTRUCTION OF THE ABUTMENT WALL.

AFTER CONSTRUCTING THE ABUTMENT MSE WALL TO FINISHED GRADE ELEVATION AT END BENT No. 1 AND END BENT No. 2, DRIVE THE PREVIOUSLY INSTALLED PILES TO THE REQUIRED BEARING CAPACITY THROUGH THE 762mm BLOCKOUTS.

SEE MSE WALL PLANS AND PILE SUPPORTED MSE WALL AND EMBANKMENT PLANS FOR END BENT No. 1 AND END BENT No. 2 ABUTMENT WALLS, END BENT CONSTRUCTION DETAILS AND END BENT CAP STRAP LINE LOADS.

FOR EMBANKMENT MONITORING DETAILS, SEE ROADWAY PLANS.

(FOR ADDITIONAL NOTES, SEE SHEET 3 OF 3.)

NORTH CAROLINA PROFESSIONAL SEAL 24390 ENGINEER THEO J. BEACH
11/3/10

PROJECT NO. X-0002 CB
CUMBERLAND COUNTY
STATION: 146+39.081 -L-
= 15+64.600 -Y12-

SHEET 2 OF 3

STATE OF NORTH CAROLINA
DEPARTMENT OF TRANSPORTATION
RALEIGH

GENERAL DRAWING
WBL BRIDGE OVER
US 401 (RAMSEY ST.)
ON FAYETTEVILLE OUTER LOOP
BETWEEN SR 1600 & I-95

REVISIONS						SHEET NO.
NO.	BY:	DATE:	NO.	BY:	DATE:	S-78
1			3			TOTAL SHEETS
2			4			134

DRAWN BY : MIKE BRITT DATE : 9-9-10
CHECKED BY : T.J. BEACH DATE : 9-13-10

22-SEP-2010 14:32
Z:\Structures\Str3US401\Single_SpanBridge\Gen_draw\x0002c_str4_gd.dgn
tbeach

STR.#3

TOTAL BILL OF MATERIAL

WBL	PDA TESTING	PDA ASSISTANCE	REINFORCED CONCRETE DECK SLAB	GROOVING BRIDGE FLOORS	CLASS A CONCRETE	BRIDGE APPROACH SLABS	REINFORCING STEEL	STRUCTURAL STEEL	PP 457 X 12.70 STEEL PILES		PIPE PILE PLATES	PILE REDRIVES	CONCRETE BARRIER RAIL	100mm SLOPE PROTECTION	POT BEARINGS	EVAZOTE JOINT SEALS
	EACH	EACH	SQ. METERS	SQ. METERS	CU. METERS	LUMP SUM	kg	APPROX. kg	No.	METERS	EACH	EACH	METERS	SQ. METERS	LUMP SUM	LUMP SUM
SUPERSTRUCTURE			1,233.4	1,223.4		LUMP SUM		504,000					181.522		LUMP SUM	LUMP SUM
END BENT No. 1					46.7		5,186		6	96.000	6	6		24		
END BENT No. 2					46.7		5,170		6	96.000	6	6		24		
TOTAL	1	1	1,233.4	1,223.4	93.4	LUMP SUM	10,356	504,000	12	192.000	12	12	181.522	48	LUMP SUM	LUMP SUM

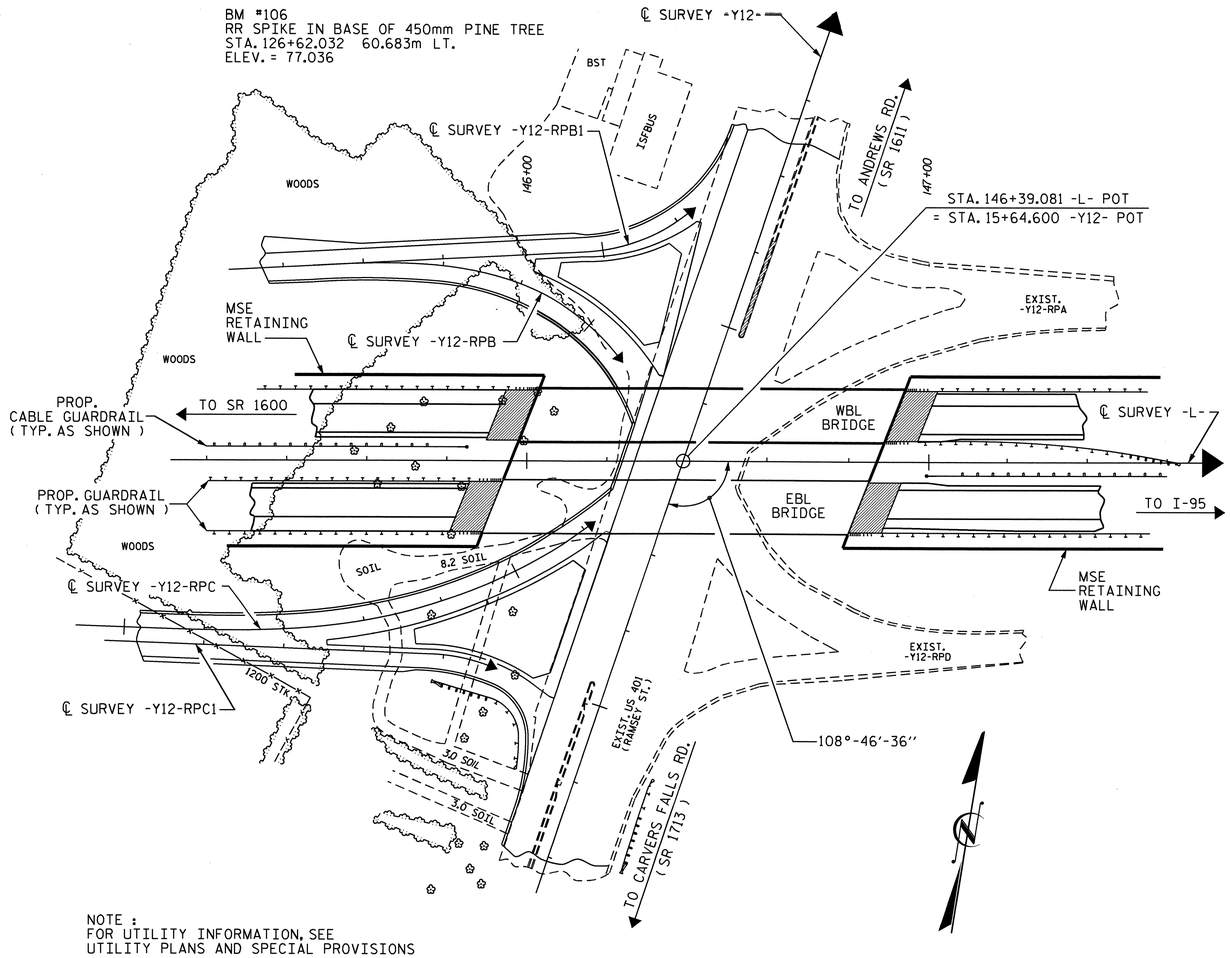

NOTE :
FOR UTILITY INFORMATION, SEE
UTILITY PLANS AND SPECIAL PROVISIONS

LOCATION SKETCH

NOTES : (CONTINUED FROM SHEET 2 OF 3)

ASSUMED LIVE LOAD = MS 22.5 OR ALTERNATE LOADING.

ALL DIMENSIONS ARE IN MILLIMETERS UNLESS OTHERWISE NOTED.

ALL ELEVATIONS ARE IN METERS.

FOR OTHER DESIGN DATA AND GENERAL NOTES, SEE SHEET SNSM.

FOR CHARPY V-NOTCH TESTS, SEE SPECIAL PROVISIONS.

STRUCTURAL STEEL SHALL BE AASHTO M270 GRADE 345W OR GRADE HPS 485W AND PAINTED IN ACCORDANCE WITH SYSTEM 4 OF ARTICLE 442-7 OF THE STANDARD SPECIFICATIONS UNLESS OTHERWISE NOTED ON THE PLANS. SEE "STRUCTURAL STEEL DETAILS" SHEETS.

FOR STRUCTURAL STEEL FOR BRIDGE, SEE SPECIAL PROVISIONS.

FOR MAINTENANCE AND PROTECTION OF TRAFFIC BENEATH PROPOSED STRUCTURE, SEE SPECIAL PROVISIONS.

FOR CRANE SAFETY, SEE SPECIAL PROVISIONS.

NEEDLE BEAMS WILL NOT BE ALLOWED UNLESS OTHERWISE CALLED FOR ON THE PLANS OR APPROVED BY THE ENGINEER.

FOR SUBMITTAL OF WORKING DRAWINGS, SEE SPECIAL PROVISIONS.

FOR METRIC STRUCTURAL STEEL, SEE SPECIAL PROVISIONS.

FOR FALSEWORK AND FORMWORK, SEE SPECIAL PROVISIONS.

THIS BRIDGE HAS BEEN DESIGNED BY THE STRENGTH DESIGN METHOD AS SPECIFIED IN AASHTO STANDARD SPECIFICATIONS.

THIS BRIDGE HAS BEEN DESIGNED IN ACCORDANCE WITH THE REQUIREMENTS OF THE AASHTO STANDARD SPECIFICATIONS FOR SEISMIC DESIGN OF HIGHWAY BRIDGES FOR SEISMIC PERFORMANCE CATEGORY A.

FOR ADHESIVELY ANCHORED ANCHOR BOLTS OR DOWELS, SEE SPECIAL PROVISIONS.

FOR GROUT FOR STRUCTURES, SEE SPECIAL PROVISIONS.

FOR SHIPPING STEEL STRUCTURAL MEMBERS, SEE SPECIAL PROVISIONS.

REMOVABLE FORMS MAY BE USED IN LIEU OF METAL STAY-IN-PLACE FORMS IN ACCORDANCE WITH ARTICLE 420-3 OF THE STANDARD SPECIFICATIONS.

FOR PLACING LOAD ON STRUCTURE MEMBERS, SEE SPECIAL PROVISIONS.

FOR CURING CONCRETE, SEE SPECIAL PROVISIONS.

FOR DIRECT TENSION INDICATORS, SEE SPECIAL PROVISIONS.

FOR PILES, SEE SPECIAL PROVISIONS.

PROJECT NO. X-0002 CB
CUMBERLAND COUNTY
STATION: 146+39.081 -L-
= 15+64.600 -Y12-
SHEET 3 OF 3

NORTH CAROLINA PROFESSIONAL SEAL 24390 ENGINEER THEO J. BEACH
1/19/2011

STATE OF NORTH CAROLINA
DEPARTMENT OF TRANSPORTATION
RALEIGH

GENERAL DRAWING
WBL BRIDGE OVER
US 401 (RAMSEY ST.)
ON FAYETTEVILLE OUTER LOOP
BETWEEN SR 1600 & I-95

REVISIONS						SHEET NO.
NO.	BY:	DATE:	NO.	BY:	DATE:	S-79
1			3			TOTAL SHEETS
2			4			134

DRAWN BY : MIKE BRITT DATE : 9-8-10
CHECKED BY : T.J. BEACH DATE : 9-13-10

19-JAN-2011 10:35
R:\Structures\Str3US401\Single_SpanBridge\Gen_draw\x0002c_str4_gd.dgn
tbeach

STR.#3

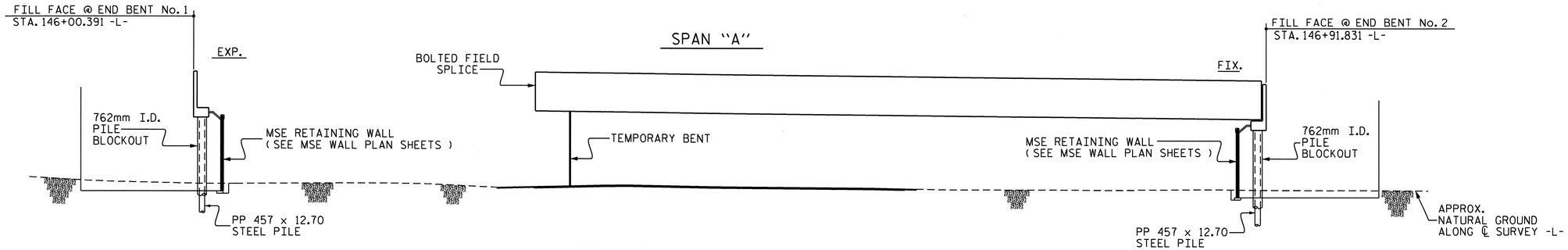

GIRDER ERECTION - ELEVATION

SECTIONS @ END BENTS ARE AT RIGHT ANGLES

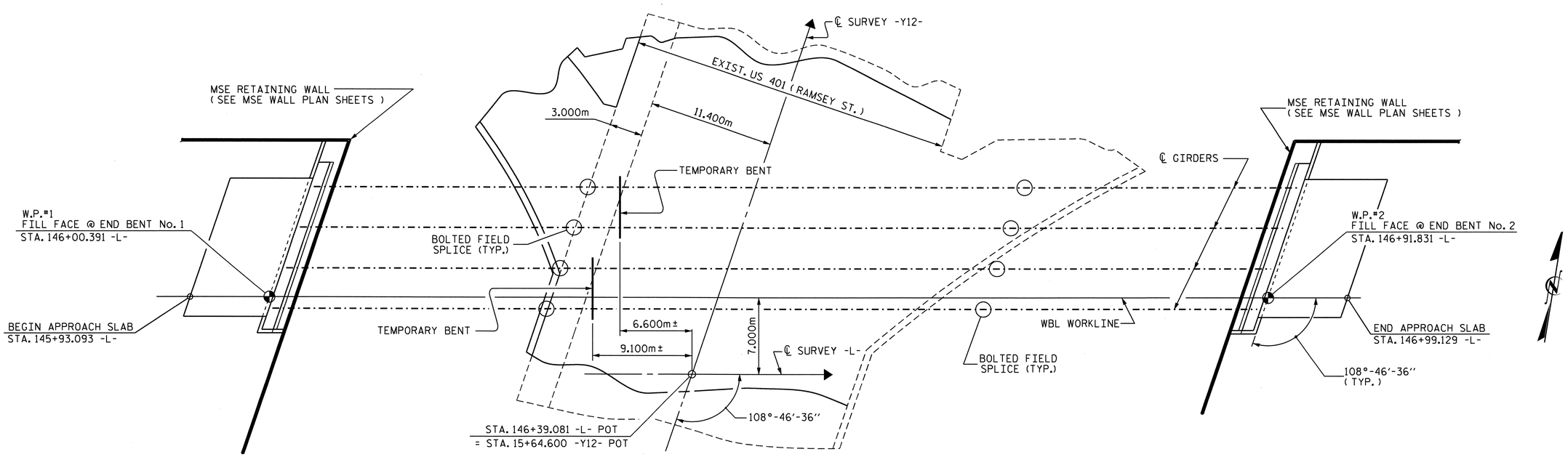

GIRDER ERECTION - PLAN

ERECTION NOTES

ERECT A MINIMUM OF TWO GIRDERS WITH ALL DIAPHRAGMS/CROSSFRAMES BETWEEN THE GIRDERS IN PLACE AND THE BOLTS TIGHTENED PRIOR TO RELEASING THE GIRDERS.

ERECT EACH SUBSEQUENT GIRDER WITH DIAPHRAGMS/CROSSFRAMES CONNECTING TO THE ADJACENT PREVIOUSLY ERECTED GIRDER AND TIGHTEN ALL BOLTS BEFORE RELEASING THE GIRDER.

THE STRUCTURAL STEEL SHALL BE SUPPORTED DURING ERECTION IN ITS CAMBERED POSITION.

PLACEMENT OF TEMPORARY BENTS SHALL BE COORDINATED WITH TRAFFIC PHASING REQUIREMENTS. SEE TRAFFIC CONTROL PLANS.

TEMPORARY BENTS SHALL REMAIN IN PLACE UNTIL ALL DIAPHRAGMS/CROSSFRAMES ARE IN PLACE AND ALL HIGH STRENGTH BOLTS ARE TIGHTENED.

TEMPORARY BENTS SHALL PROVIDE BEARING AT CONNECTOR PLATE LOCATIONS. WHEN CONNECTOR PLATES ARE USED AS TEMPORARY BEARING STIFFENERS, DIAPHRAGMS MUST BE ATTACHED.

THE CONTRACTOR'S ERECTION PLANS SHALL INCLUDE A METHOD OF TEMPORARY BENT REMOVAL THAT WILL UNIFORMLY TRANSFER THE STRUCTURAL WEIGHT TO THE DIAPHRAGMS/CROSSFRAMES AND THE GIRDERS WILL REMAIN IN THE CAMBERED POSITIONS.

PLANS FOR TEMPORARY BENT ERECTION AND REMOVAL SHALL BE SUBMITTED TO THE ENGINEER FOR REVIEW.

THE CONTRACTOR IS RESPONSIBLE FOR DESIGNING THE TEMPORARY BENTS. THE DESIGNS SHALL BE COMPLETED BY A PROFESSIONAL ENGINEER REGISTERED IN THE STATE OF NORTH CAROLINA. THE CONTRACTOR SHALL SUBMIT SIGNED AND SEALED WORKING DRAWINGS AND CALCULATIONS FOR APPROVAL BY THE ENGINEER.

DURING THE GIRDER ERECTION PROCEDURE, THE CONTRACTOR IS RESPONSIBLE FOR PROVIDING TEMPORARY LATERAL BRACING AND OTHER MEANS OF SUPPORT, AS REQUIRED, TO ENSURE STABILITY OF THE GIRDERS, AVOID UPLIFT OF THE GIRDERS AT THE TEMPORARY BENTS AND TO ENSURE PLUMBNESS OF THE GIRDERS IN THE FINAL CONDITION.

NO SEPARATE MEASUREMENT OR PAYMENT WILL BE MADE FOR PROVIDING THE TEMPORARY BENT. THE COST FOR ALL MATERIALS, EQUIPMENT, TOOLS, LABOR AND ANY INCIDENTALS NECESSARY TO PROVIDE THE TEMPORARY BENT SHALL BE CONSIDERED INCIDENTAL TO THE LUMP SUM BID PRICE FOR STRUCTURAL STEEL.

THE CONTRACTOR MAY SUBMIT AN ALTERNATE ERECTION METHOD TO THE ENGINEER FOR REVIEW AND APPROVAL.

NORTH CAROLINA PROFESSIONAL SEAL 24390 ENGINEER THEO J. BEACH
11/3/10

PROJECT NO. X-0002 CB
CUMBERLAND COUNTY
STATION: 146+39.081 -L-

STATE OF NORTH CAROLINA
DEPARTMENT OF TRANSPORTATION
RALEIGH

GIRDER ERECTION DETAILS

(WBL)

REVISIONS						SHEET NO.
NO.	BY:	DATE:	NO.	BY:	DATE:	S-80
1			3			TOTAL SHEETS
2			4			134

DRAWN BY : MIKE BRITT DATE : 9-14-10
CHECKED BY : T.J. BEACH DATE : 9-14-10

22-SEP-2010 15:14
Z:\Structures\Str3US401\Single_SpanBridge\Gen_draw\x0002c_str4_consequence.dgn
tbeach

STR.#3

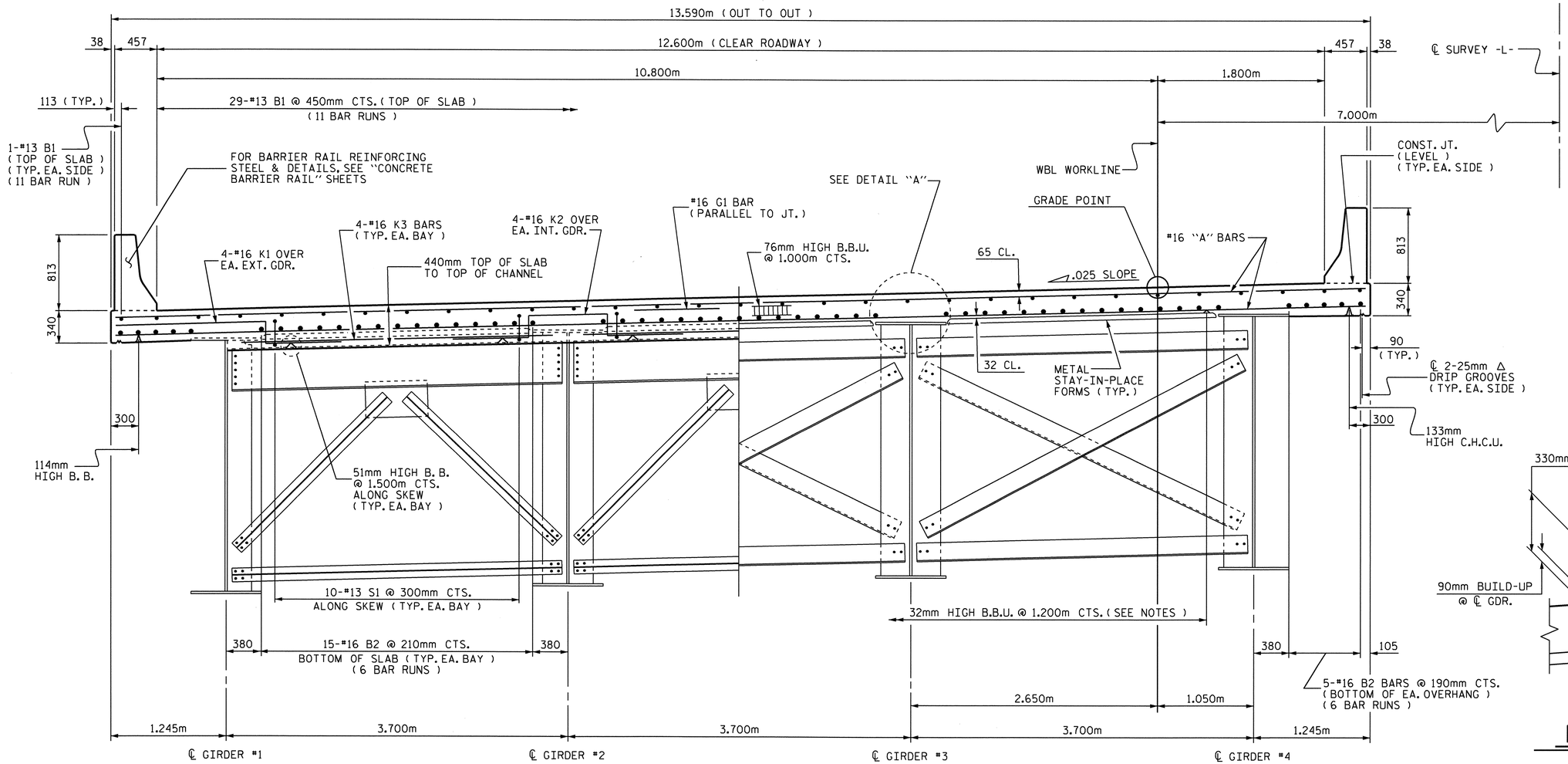

HALF TYPICAL SECTION

SHOWING END BENT DIAPHRAGMS

HALF TYPICAL SECTION

SHOWING INTERMEDIATE DIAPHRAGMS

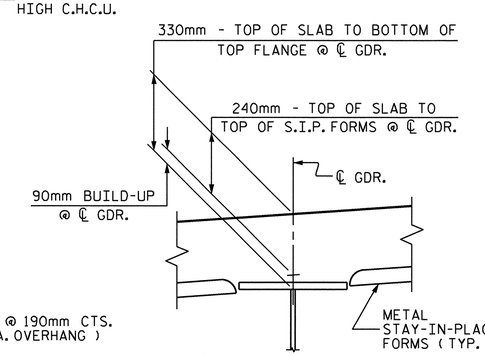

DETAIL "A"

SUPERSTRUCTURE NOTES :

PROVIDE 32mm HIGH BEAM BOLSTERS UPPER AT 1.200m CTS. ATOP THE METAL STAY-IN-PLACE FORMS TO SUPPORT THE BOTTOM MAT OF "A" BARS. WHEN USING REMOVABLE FORMS, PROVIDE CONTINUOUS HIGH CHAIRS FOR METAL DECK (C.H.C.M.) @ 1.200m CTS. WITH A HEIGHT TO SUPPORT THE BOTTOM MAT OF "A" BARS A CLEAR DISTANCE OF 65mm ABOVE THE TOP OF THE REMOVABLE FORM.

PREVIOUSLY CAST SLAB CONCRETE SHALL HAVE ATTAINED A MINIMUM COMPRESSIVE STRENGTH OF 20.7 MPa BEFORE ADDITIONAL CONCRETE IS CAST.

BARRIER RAIL SHALL NOT BE CAST UNTIL ALL SLAB CONCRETE HAS BEEN CAST AND HAS REACHED A MINIMUM COMPRESSIVE STRENGTH OF 20.7 MPa.

#16 G1 BAR AT END BENTS MAY BE SHIFTED SLIGHTLY, AS NECESSARY, TO CLEAR REINFORCING STEEL AND STIRRUPS.

ALL REINFORCING STEEL IN BARRIER RAILS SHALL BE EPOXY COATED.

DIRECTION OF CASTING DECK CONCRETE SHALL BE FROM THE FIXED BEARING END TOWARDS THE EXPANSION BEARING END OF THE SPAN.

THE CONTRACTOR MAY, WHEN NECESSARY, PROPOSE A SCHEME FOR AVOIDING INTERFERENCE BETWEEN METAL STAY-IN-PLACE FORM SUPPORTS OR FORMS AND GIRDER STIFFENER OR CONNECTOR PLATES. THE PROPOSAL SHALL BE INDICATED, AS APPROPRIATE, ON EITHER THE STEEL WORKING DRAWINGS OR THE METAL STAY-IN-PLACE FORM WORKING DRAWINGS.

THE NOMINAL UNCOMPRESSED SEAL WIDTH OF THE EVAZOTE JOINT SEAL SHALL BE 87mm AT END BENT No. 1.

THE NOMINAL UNCOMPRESSED SEAL WIDTH OF THE EVAZOTE JOINT SEAL SHALL BE 64mm AT END BENT No. 2.

FOR EVAZOTE JOINT SEALS, SEE SPECIAL PROVISIONS.

THE CONTRACTOR SHALL ADJUST THE GIRDER BUILDUPS AS NECESSARY TO INCORPORATE A MAXIMUM PERMISSIBLE VARIATION IN POT BEARING DEPTH OF 13mm, SEE SPECIAL PROVISION FOR POT BEARINGS.

152mm Ø PVC PLASTIC PIPE DRAINS ARE REQUIRED. SEE "PIPE DRAIN LOCATION DETAIL", SHEET 2 OF 2.

NORTH CAROLINA PROFESSIONAL SEAL 24390 ENGINEER THEO J. BEACH 11/3/10

PROJECT NO. X-0002 CB
CUMBERLAND COUNTY
STATION: 146+39.081 -L-

SHEET 1 OF 2

STATE OF NORTH CAROLINA
DEPARTMENT OF TRANSPORTATION
RALEIGH

SUPERSTRUCTURE
TYPICAL SECTIONS
(WBL)

REVISIONS						SHEET NO.
NO.	BY:	DATE:	NO.	BY:	DATE:	S-81
1			3			TOTAL SHEETS
2			4			134

DRAWN BY : MIKE BRITT DATE : 3-24-10
CHECKED BY : T. BANKOVICH DATE : 5-10

22-SEP-2010 14:33
Z:\Structures\Str3US401\Single_SpanBridge\Super_Draw\x0002c_str4r_ts.dgn
tbeach

STR. #3

SECTION M-M

SECTION N-N

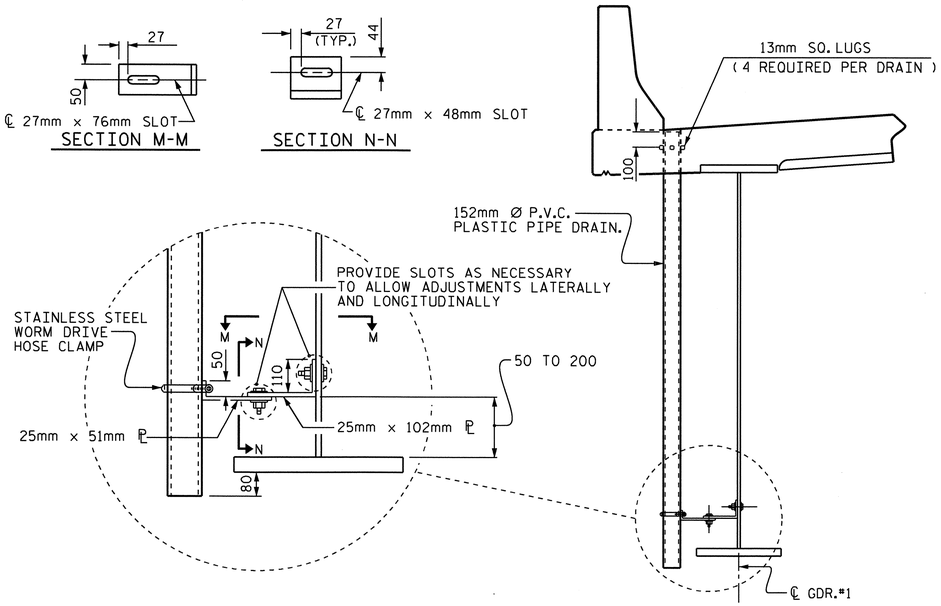

DRAIN CONNECTOR DETAIL

(3 PIPE DRAINS REQUIRED)

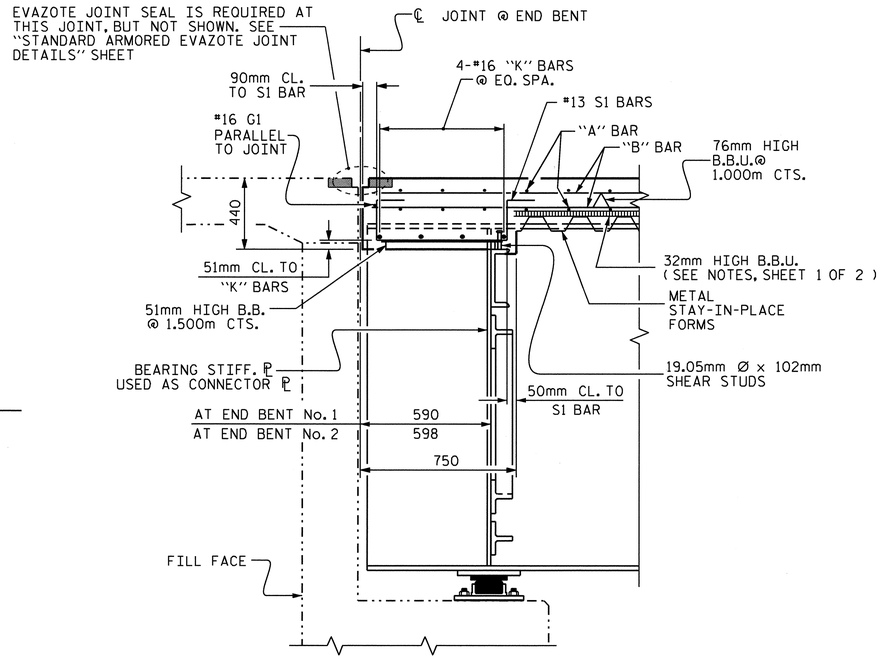

SECTION THRU END BENT

SECTION TAKEN AT RIGHT ANGLE TO FILL FACE

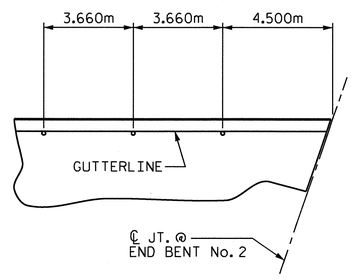

PIPE DRAIN LOCATION DETAIL

DRAIN NOTES :

COUPLING IN DRAIN PIPE WILL BE PERMITTED AS APPROVED BY THE ENGINEER.

4- 13mm SQ. LUGS TO BE GLUED TO THE PVC PLASTIC PIPE AT EQUAL SPACES AROUND THE PIPE DRAIN AT APPROXIMATELY 100mm FROM THE TOP OF THE PIPE.

BOLT SIZE TO BE THE SAME AS DIAPHRAGM AND CROSSFRAME CONNECTIONS. STAINLESS STEEL WORMDRIVE HOSE CLAMP SHALL BE COMMERCIAL QUALITY.

TOP OF FLOOR DRAINS TO BE SET 10mm BELOW SURFACE OF SLAB.

PVC DECK DRAINS SHALL BE PAINTED WITH TWO COATS OF BROWN PRIMER MEETING THE REQUIREMENTS OF ARTICLE 1080-12 OF THE STANDARD SPECIFICATIONS. EACH COAT SHALL BE 0.050mm THICK. DECK DRAINS SHALL BE ROUGHENED PRIOR TO PAINTING. NO SEPARATE PAYMENT SHALL BE MADE FOR PAINTING PVC DECK DRAINS AS THIS IS CONSIDERED INCIDENTAL TO PAY ITEM FOR REINFORCED CONCRETE DECK SLAB.

THE 152mm Ø PVC PLASTIC PIPE AND FITTINGS SHALL BE SCHEDULE 40 AND CONFORM TO ASTM D1785.

PLATES FOR PIPE DRAIN BRACKETS SHALL CONFORM TO AASHTO M270 GRADE 345W STEEL OR APPROVED EQUAL.

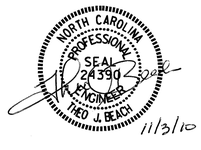

PROJECT NO. X-0002 CB

CUMBERLAND COUNTY

STATION: 146+39.081 -L-

SHEET 2 OF 2

STATE OF NORTH CAROLINA
DEPARTMENT OF TRANSPORTATION
RALEIGH

SUPERSTRUCTURE

TYPICAL SECTIONS

(WBL)

REVISIONS						SHEET NO.
NO.	BY:	DATE:	NO.	BY:	DATE:	S-82
1			3			TOTAL SHEETS
2			4			134

DRAWN BY : MIKE BRITT DATE : 3-24-10
CHECKED BY : T. BANKOVICH DATE : 5-10

03-NOV-2010 12:24
R:\Structures\Str3US401\Single_SpanBridge\Super_Draw\x0002c_str4r_ts.dgn
tbeach

STR. #3

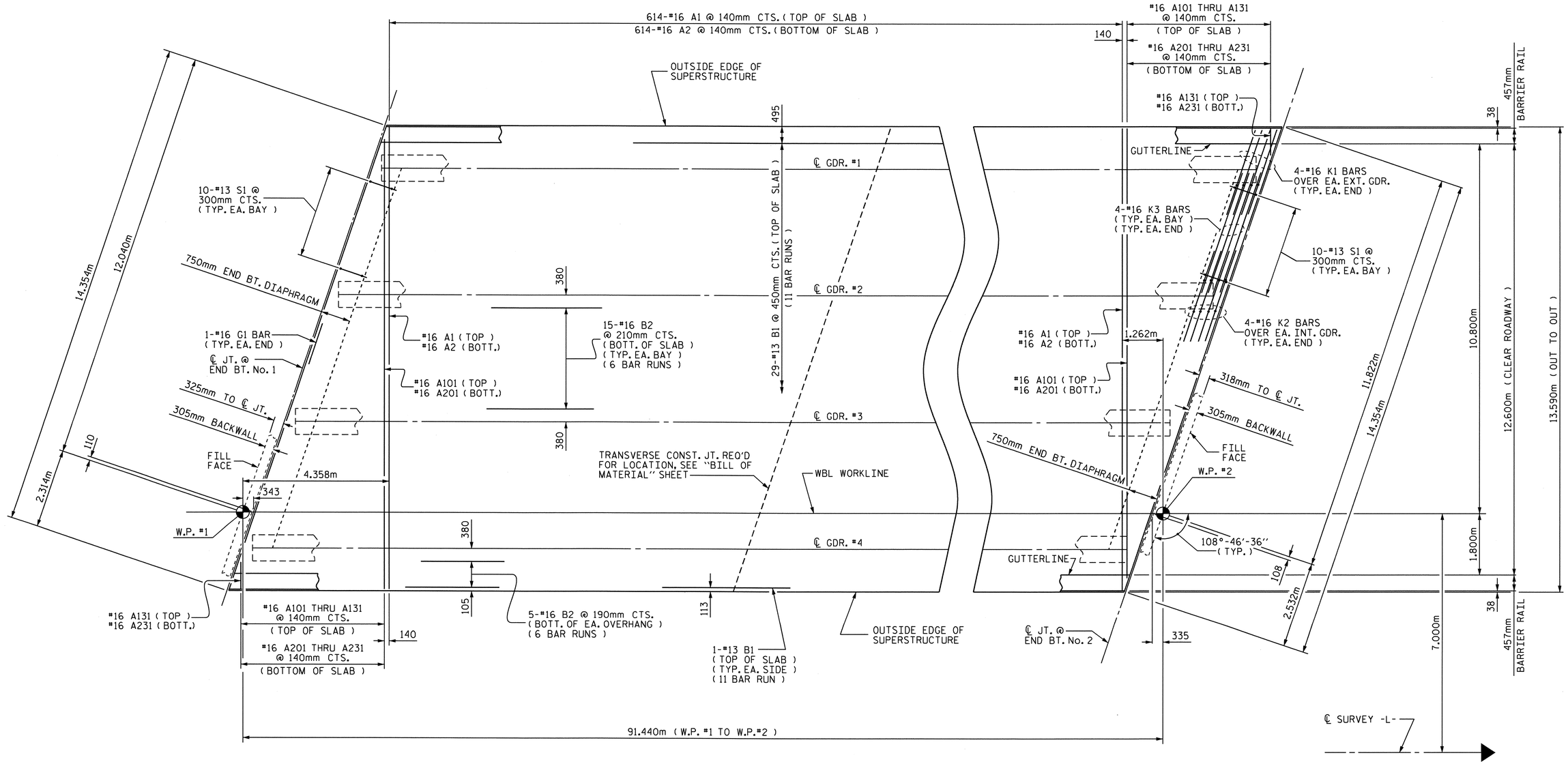

PLAN OF SPAN "A"

PROJECT NO. X-0002 CB
CUMBERLAND COUNTY
STATION: 146+39.081 -L-

NOTES :

FOR BARRIER RAIL REINFORCING STEEL, SEE "CONCRETE BARRIER RAIL" SHEET.

152mm Ø PVC PIPE DECK DRAINS ARE REQUIRED AT LEFT GUTTERLINE BUT ARE NOT SHOWN. FOR LOCATION AND DETAILS OF DECK DRAINS. SEE "TYPICAL SECTIONS", SHEET 2 OF 2.

NORTH CAROLINA PROFESSIONAL SEAL 24390 ENGINEER THEO J. BEACH
11/5/10

STATE OF NORTH CAROLINA
DEPARTMENT OF TRANSPORTATION
RALEIGH

SUPERSTRUCTURE

PLAN OF SPAN "A"

(WBL)

REVISIONS						SHEET NO.
NO.	BY:	DATE:	NO.	BY:	DATE:	S-83
1			3			TOTAL SHEETS
2			4			134

DRAWN BY : MIKE BRITT DATE : 3-24-10
CHECKED BY : T. BANKOVICH DATE : 5-10

03-NOV-2010 12:30
R:\Structures\Str3US401\Single_SpanBridge\Super_Draw\x0002c_str4r_ps.dgn
tbeach

STR.#3

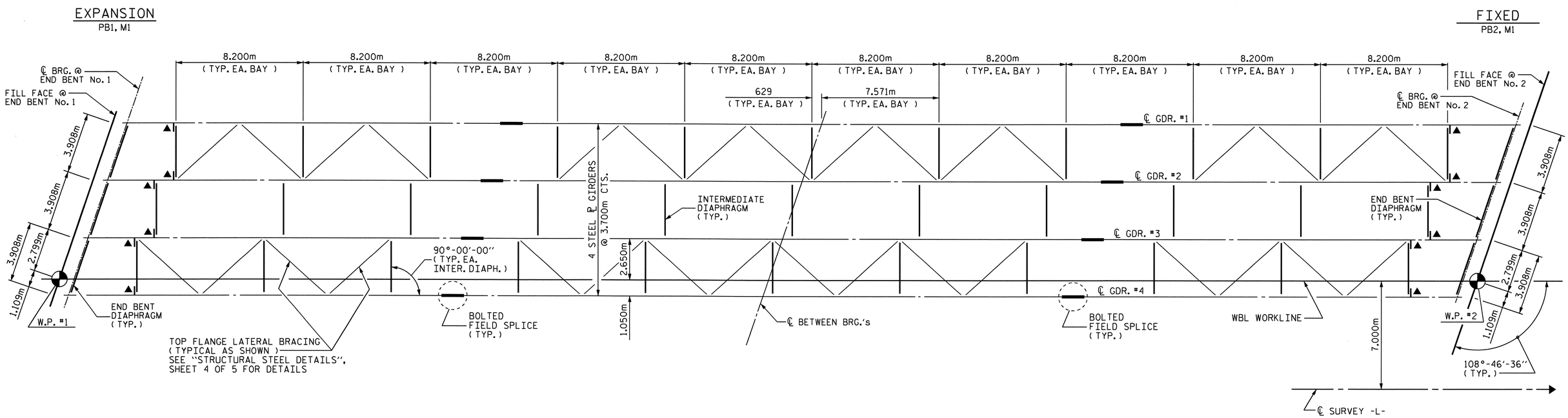

FRAMING PLAN

NOTE :
▲ INTERMEDIATE STIFFENER PLATES ARE REQUIRED AT THESE LOCATIONS AND SHALL BE UTILIZED AS A CONNECTOR PLATE.

PROJECT NO. X-0002 CB
CUMBERLAND COUNTY
STATION: 146+39.081 -L-

NORTH CAROLINA PROFESSIONAL SEAL 24390 ENGINEER THEO J. BEACH
11/3/10

STATE OF NORTH CAROLINA
DEPARTMENT OF TRANSPORTATION
RALEIGH

SUPERSTRUCTURE

FRAMING PLAN

(WBL)

REVISIONS						SHEET NO.
NO.	BY:	DATE:	NO.	BY:	DATE:	S-84
1			3			TOTAL SHEETS
2			4			134

DRAWN BY : MIKE BRITT DATE : 3-24-10
CHECKED BY : T. BANKOVICH DATE : 5-10

22-SEP-2010 14:35
Z:\Structures\Str3US401\Single_SpanBridge\Super_Draw\x0002c_str4r_fp.dgn
tbeach

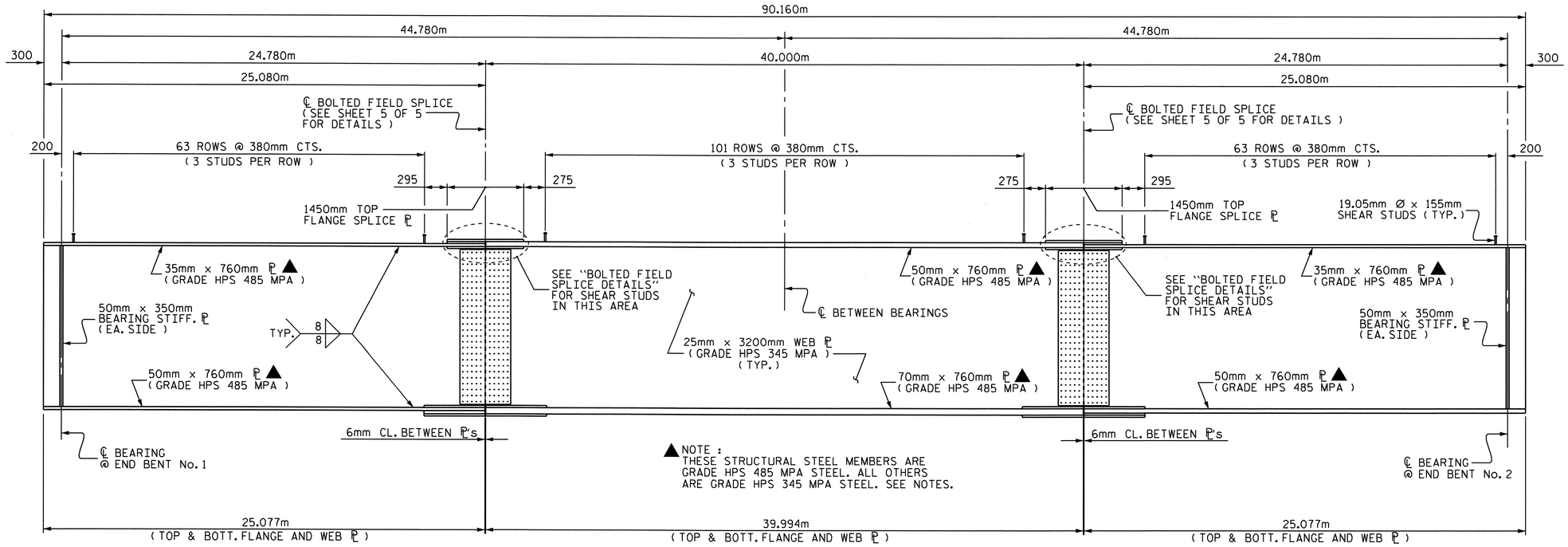

PLATE GIRDER ELEVATION

NOTE: CONNECTOR & INTERMEDIATE STIFFENER ℙ's NOT SHOWN.
FOR PLACEMENT, SEE "FRAMING PLAN" SHEET.

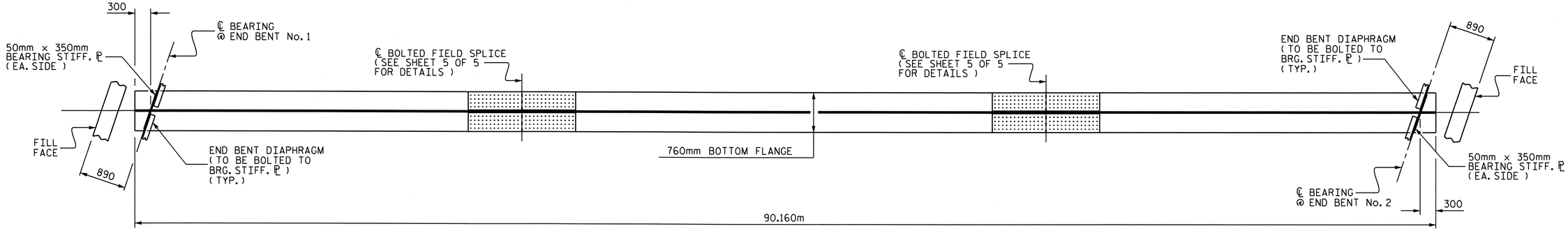

BOTTOM FLANGE DETAIL

NOTE: CONNECTOR & INTERMEDIATE STIFFENER ℙ's NOT SHOWN.
FOR PLACEMENT, SEE "FRAMING PLAN" SHEET.

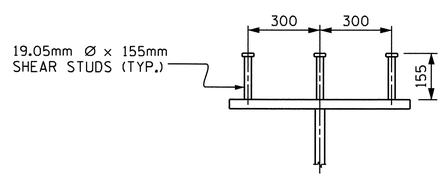

SHEAR STUD DETAIL

TYPICAL EXCEPT @ TOP FLANGE SPLICE ℙ
SEE "BOLTED FIELD SPLICE DETAILS", SHEET 5 OF 5

PROJECT NO. X-0002 CB
CUMBERLAND COUNTY
STATION: 146+39.081 -L-

SHEET 1 OF 5

NORTH CAROLINA PROFESSIONAL SEAL 24890 ENGINEER THEO J. BEACH
11/3/10

STATE OF NORTH CAROLINA
DEPARTMENT OF TRANSPORTATION
RALEIGH

SUPERSTRUCTURE
STRUCTURAL STEEL DETAILS
(WBL)

REVISIONS						SHEET NO.
NO.	BY:	DATE:	NO.	BY:	DATE:	S-85
1			3			TOTAL SHEETS
2			4			134

DRAWN BY: MIKE BRITT DATE: 4-28-10
CHECKED BY: T. BANKOVICH DATE: 5-10

22-SEP-2010 14:36
Z:\Structures\Str3US401\Single_SpanBridge\Super_Draw\x0002c_str4R_ss.dgn
tbeach

STR. #3

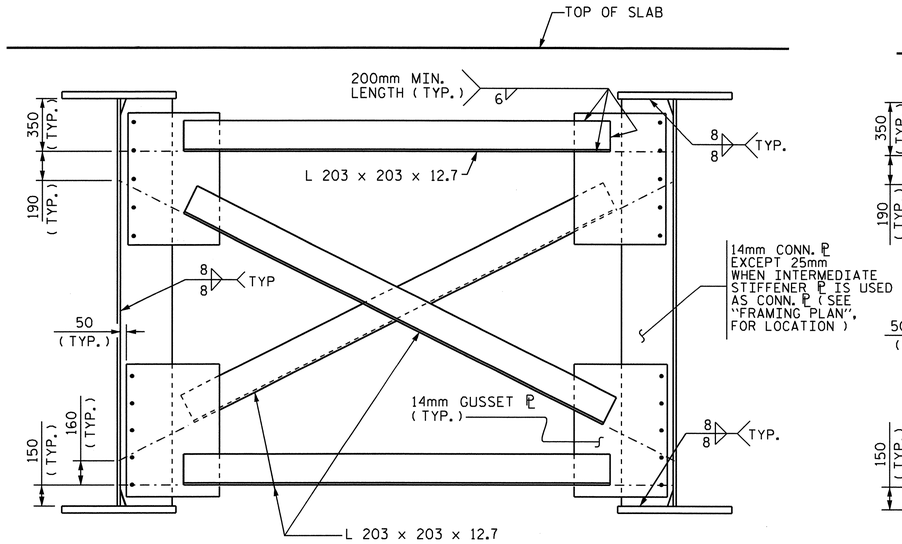

OPTIONAL INTERMEDIATE DIAPHRAGM

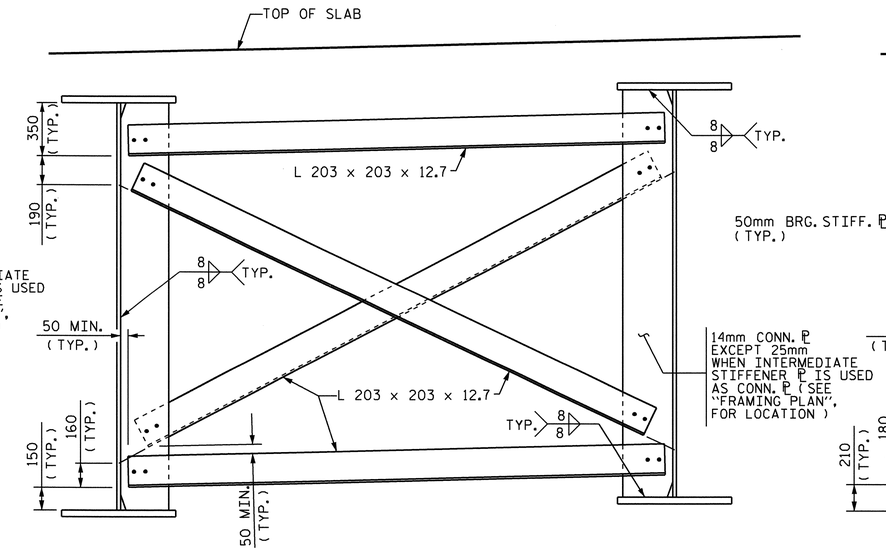

TYPICAL INTERMEDIATE DIAPHRAGM

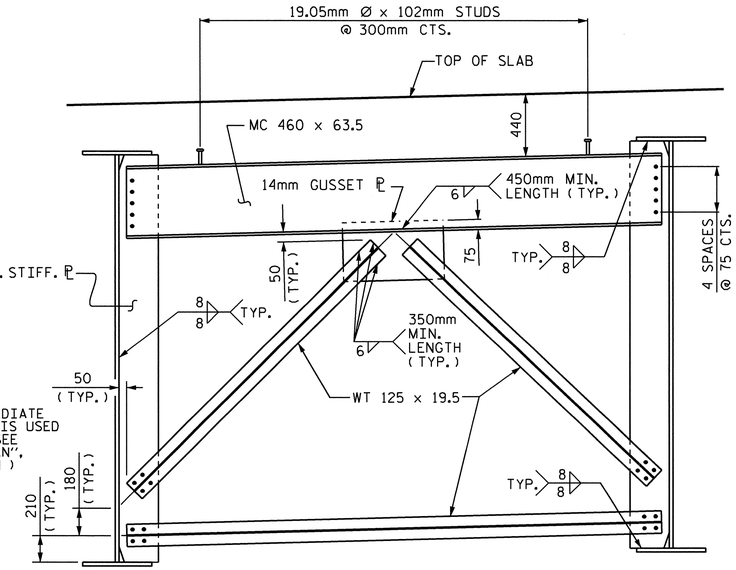

TYPICAL END BENT DIAPHRAGM

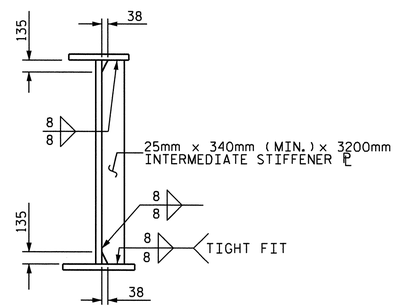

INTERMEDIATE STIFFENER

(USED AS CONNECTOR ℙ)

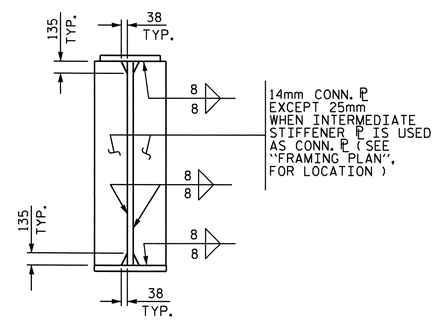

CONNECTOR PLATES

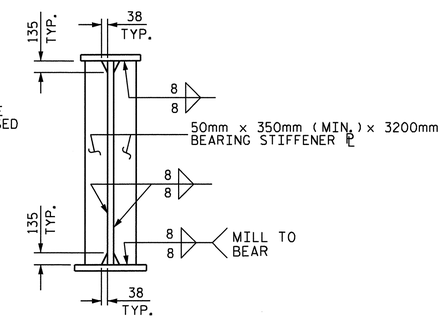

BEARING STIFFENER

(USED AS CONNECTOR ℙ)

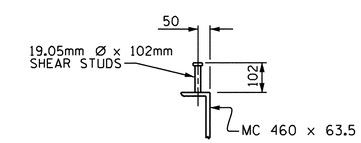

SHEAR STUD DETAIL

(TYP. EA. END BENT DIAPHRAGM)

PROJECT NO. X-0002 CB

CUMBERLAND COUNTY

STATION: 146+39.081 -L-

SHEET 2 OF 5

STATE OF NORTH CAROLINA
DEPARTMENT OF TRANSPORTATION
RALEIGH

SUPERSTRUCTURE

STRUCTURAL STEEL DETAILS

(WBL)

NORTH CAROLINA PROFESSIONAL SEAL 24390 ENGINEER THEO J. BEACH 11/3/10

REVISIONS						SHEET NO.
NO.	BY:	DATE:	NO.	BY:	DATE:	S-86
1			3			TOTAL SHEETS
2			4			134

DRAWN BY : MIKE BRITT DATE : 5-6-10
CHECKED BY : T. BANKOVICH DATE : 5-10

22-SEP-2010 14:36
Z:\Structures\Str3US401\Single_SpanBridge\Super_Draw\x0002c_str4R_ss.dgn
tbeach

STR. #3

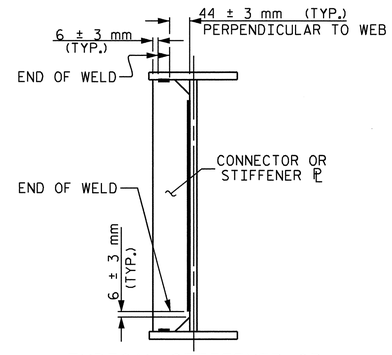

TYPICAL STIFFENER OR CONNECTOR PLATE CONNECTIONS

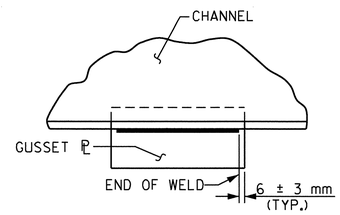

TYPICAL GUSSET PLATE CONNECTION

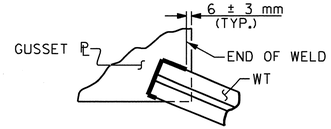

TYPICAL "TEE" TO GUSSET PLATE CONNECTION

WELD TERMINATION DETAILS

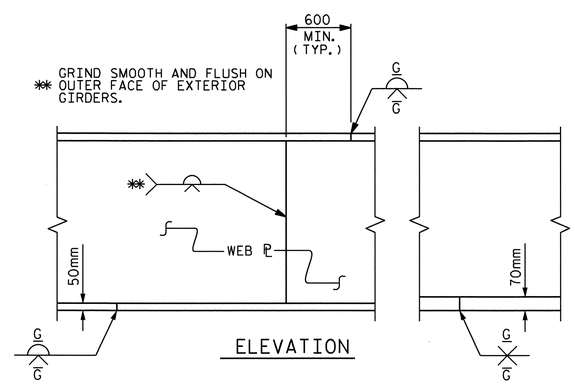

ELEVATION

PERMISSIBLE SHOP FLANGE & WEB SPLICE

NOTES :

STRUCTURAL STEEL SHALL BE AASHTO M270 GRADE 345W EXCEPT TOP AND BOTTOM FLANGE PLATES SHOWN ON SHEET 1 OF 5 SHALL BE AASHTO M270 GRADE HPS 485W AND PAINTED IN ACCORDANCE WITH SYSTEM 4 OF ARTICLE 442-7 OF THE STANDARD SPECIFICATIONS UNLESS OTHERWISE NOTED ON THE PLANS.

FOR STRUCTURAL STEEL FOR BRIDGE, SEE SPECIAL PROVISIONS.

ALL DIMENSIONS SHOWN ARE HORIZONTAL OR VERTICAL, UNLESS OTHERWISE NOTED.

ALL FIELD CONNECTIONS TO BE 22.23mm DIA. HIGH STRENGTH BOLTS UNLESS OTHERWISE NOTED. FOR HIGH STRENGTH BOLTS, SEE SPECIAL PROVISIONS.

BEARING STIFFENERS AT END BENTS ARE TO BE PLACED ALONG SKEW AND SHALL BE PLUMB.

SHOP SPLICES ARE PERMITTED TO LIMIT THE MAXIMUM REQUIRED FLANGE PIECE LENGTHS TO 18 METERS AND WEB PIECE LENGTHS TO 14 METERS. PERMITTED FLANGE AND WEB SHOP SPLICES SHALL NOT BE LOCATED WITHIN 4.5 METERS OF MAXIMUM DEAD LOAD DEFLECTION (NOR WITHIN 4.5 METERS OF INTERMEDIATE BEARINGS OF CONTINUOUS UNITS). KEEP 600mm MINIMUM BETWEEN WEB AND FLANGE SHOP SPLICES. KEEP 150mm MINIMUM BETWEEN CONNECTOR PLATE OR TRANSVERSE STIFFENER WELDS AND WEB OR FLANGE SHOP SPLICES.

STUDS ON GIRDERS MAY BE SHIFTED UP TO 25mm IF NECESSARY TO CLEAR FLANGE SPLICE WELD.

TENSION ON THE AASHTO M164 BOLTS SHALL BE CALIBRATED USING DIRECT TENSION INDICATOR WASHERS IN ACCORDANCE WITH ARTICLE 440-8 OF THE STANDARD SPECIFICATIONS.

FOR DIRECT TENSION INDICATORS, SEE SPECIAL PROVISIONS.

END OF GIRDERS SHALL BE PLUMB.

BEARING STIFFENER PLATE WIDTHS SHOWN ON THE PLANS ARE A MINIMUM WIDTH. THE BEARING STIFFENER PLATE WIDTHS MAY BE INCREASED AS NECESSARY IN ORDER TO CONNECT THE DIAPHRAGM MEMBERS.

FOR SHIPPING STEEL STRUCTURAL MEMBERS, SEE SPECIAL PROVISIONS.

A CHARPY V-NOTCH TEST IS REQUIRED FOR WEB PLATES, BOTTOM FLANGE PLATES, BOTTOM FLANGE SPLICE PLATES AND WEB SPLICE PLATES FOR ALL GIRDERS AND IN ACCORDANCE WITH ARTICLE 1072-9 OF THE STANDARD SPECIFICATIONS AND CHARPY V-NOTCH TESTS SPECIAL PROVISION.

PROJECT NO. X-0002 CB
CUMBERLAND COUNTY
STATION: 146+39.081 -L-

SHEET 3 OF 5

STATE OF NORTH CAROLINA
DEPARTMENT OF TRANSPORTATION
RALEIGH

SUPERSTRUCTURE
STRUCTURAL STEEL DETAILS
(WBL)

NORTH CAROLINA PROFESSIONAL SEAL 24390 ENGINEER THEO J. BEACH
1/19/2011

REVISIONS						SHEET NO.
NO.	BY:	DATE:	NO.	BY:	DATE:	S-87
1			3			TOTAL SHEETS
2			4			134

DRAWN BY : MIKE BRITT DATE : 5-6-10
CHECKED BY : T. BANKOVICH DATE : 5-10

19-JAN-2011 10:37
R:\Structures\Str3US401\Single_SpanBridge\Super_Draw\x0002c_str4R_ss.dgn
tbeach

STR. #3

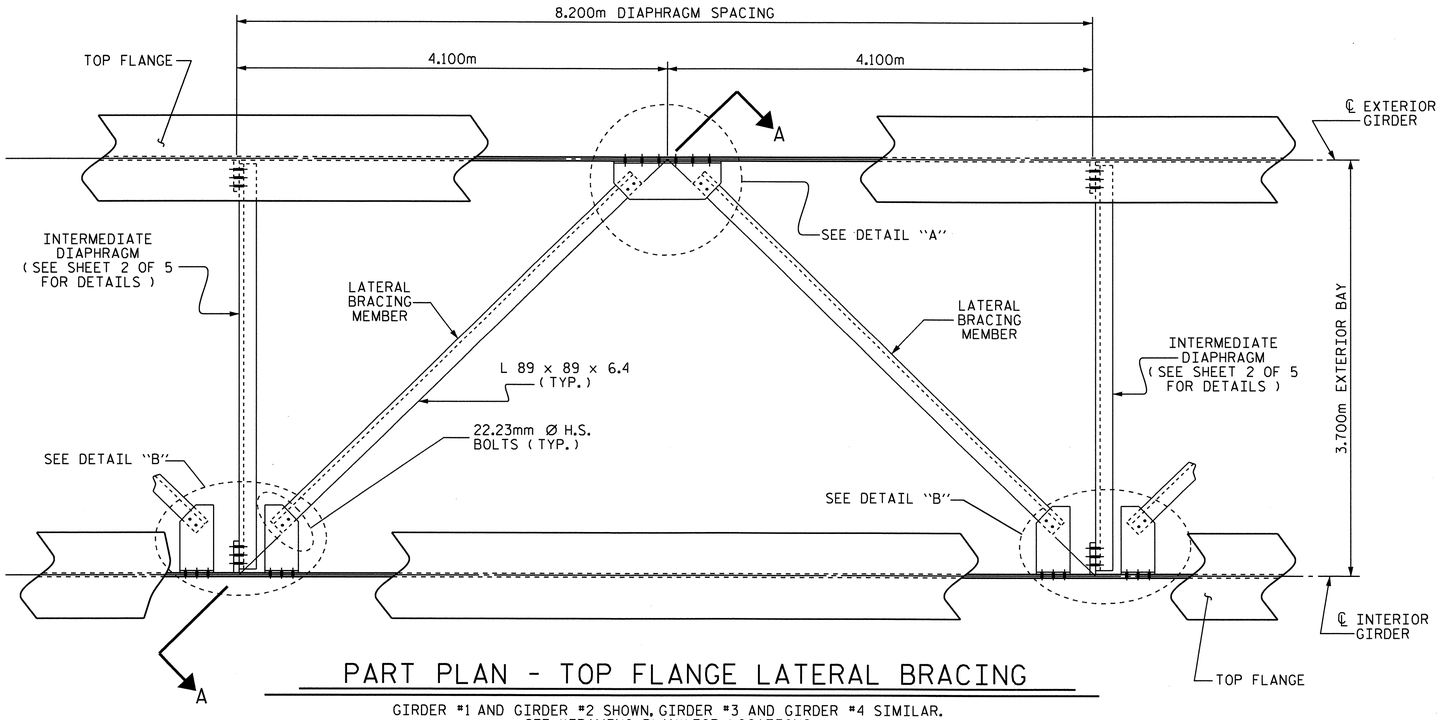

PART PLAN - TOP FLANGE LATERAL BRACING

GIRDER #1 AND GIRDER #2 SHOWN. GIRDER #3 AND GIRDER #4 SIMILAR.
SEE "FRAMING PLAN" FOR LOCATIONS

NOTES

THE TOP FLANGE LATERAL BRACING DETAILED IS PROVIDED TO ASSIST IN LIMITING GIRDER DISPLACEMENT DUE TO WIND FORCES DURING ERECTION. IT SHALL BE INSTALLED IMMEDIATELY AFTER ERECTION OF EACH PAIR OF GIRDER SECTIONS. THE DEPARTMENT ASSUMES NO LIABILITY IN THE ERECTION OR STABILIZATION OF THE GIRDERS.

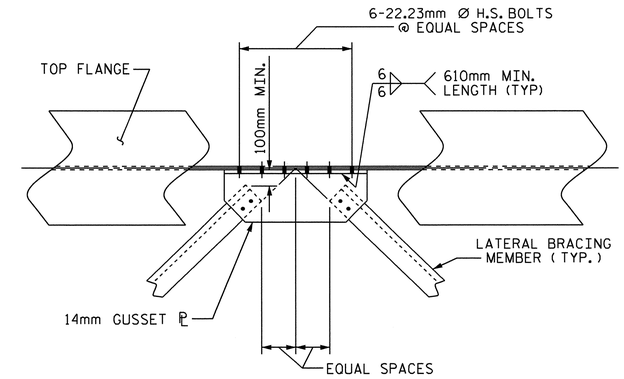

DETAIL "A"

LATERAL BRACING AT TOP FLANGE

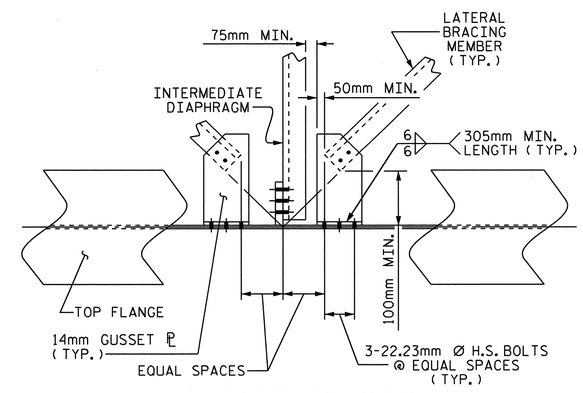

DETAIL "B"

LATERAL BRACING AT TOP FLANGE

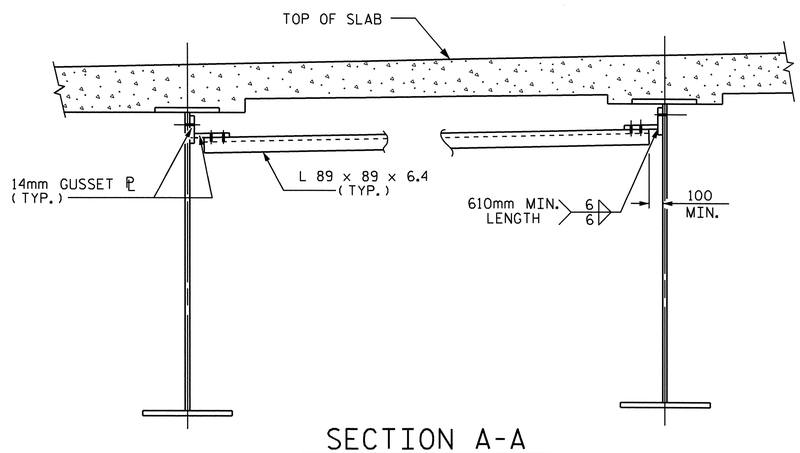

SECTION A-A

(LATERAL BRACING AT TOP FLANGE)

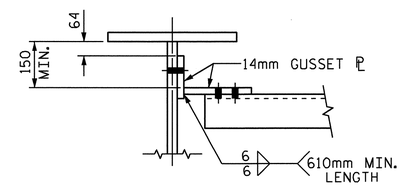

SECTION THRU CONNECTION

(LATERAL BRACING @ TOP FLANGE)

PROJECT NO. X-0002 CB
CUMBERLAND COUNTY
STATION: 146+39.081 -L-

SHEET 4 OF 5

STATE OF NORTH CAROLINA
DEPARTMENT OF TRANSPORTATION
RALEIGH

SUPERSTRUCTURE
STRUCTURAL STEEL DETAILS
(WBL)

NORTH CAROLINA PROFESSIONAL SEAL 24390 ENGINEER THEO J. BEACH
11/3/10

REVISIONS						SHEET NO.
NO.	BY:	DATE:	NO.	BY:	DATE:	S-88
1			3			TOTAL SHEETS
2			4			134

DRAWN BY : MIKE BRITT DATE : 4-29-10
CHECKED BY : T. BANKOVICH DATE : 5-10

22-SEP-2010 14:37
Z:\Structures\Str3US401\Single_SpanBridge\Super_Draw\x0002c_str4R_ss.dgn
tbeach

STR. #3

* NOTE :
SHEAR STUDS ARE TO BE SHOP WELDED ON TOP OF PLATE BEFORE FIELD ASSEMBLY.

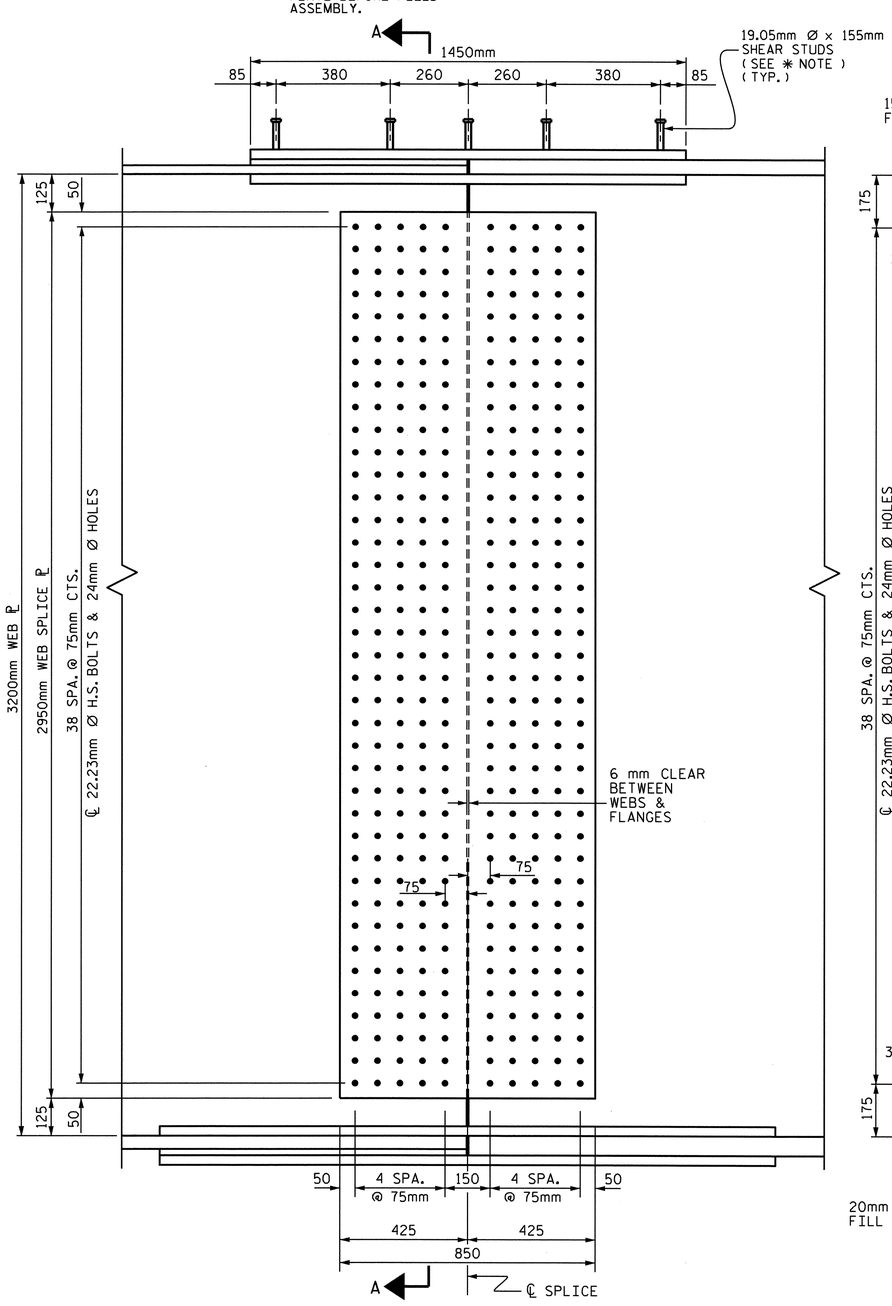

ELEVATION

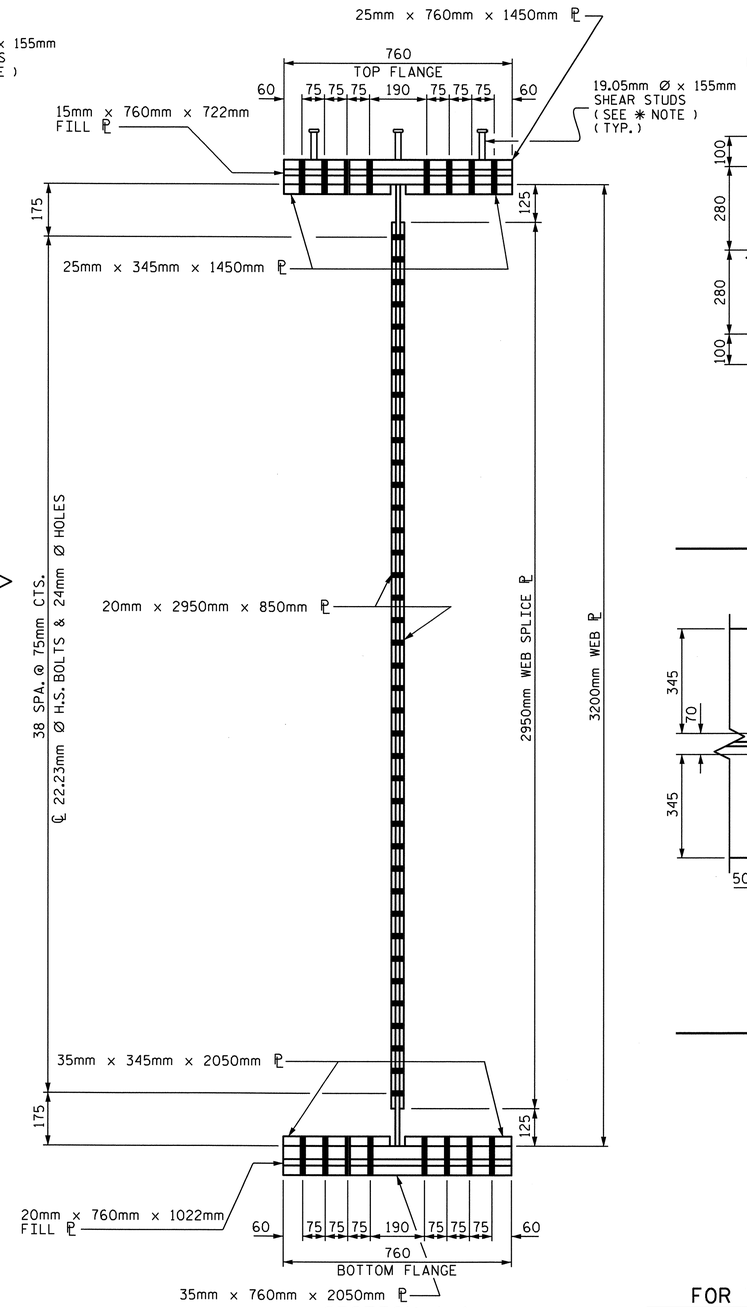

SECTION A-A

BOLTED FIELD SPLICE DETAILS

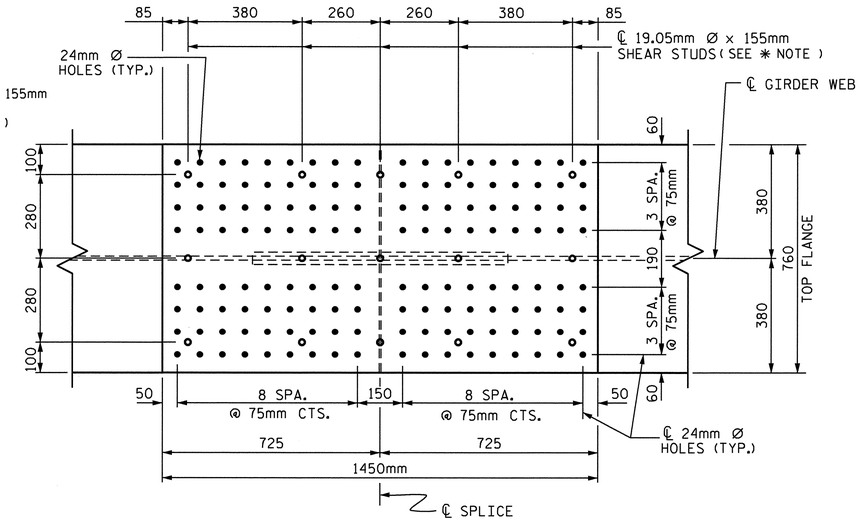

PLAN (TOP OF TOP FLANGE)

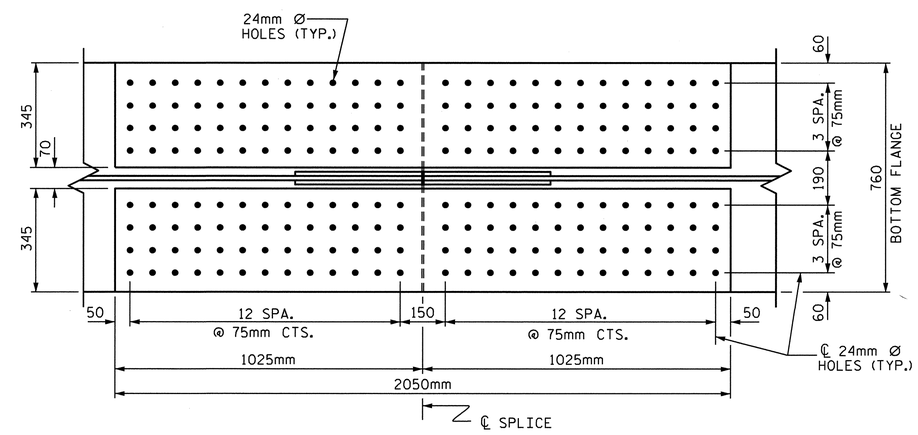

PLAN (TOP OF BOTTOM FLANGE)

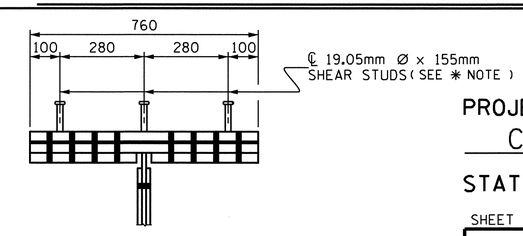

SHEAR STUD DETAIL
FOR TOP FLANGE SPLICE PLATE

PROJECT NO. X-0002 CB
CUMBERLAND COUNTY
STATION: 146+39.081 -L-

SHEET 5 OF 5

STATE OF NORTH CAROLINA
DEPARTMENT OF TRANSPORTATION
RALEIGH

SUPERSTRUCTURE
STRUCTURAL STEEL DETAILS
(WBL)

NORTH CAROLINA PROFESSIONAL SEAL 24390 ENGINEER THEO J. BEACH
11/3/10

REVISIONS						SHEET NO.
NO.	BY:	DATE:	NO.	BY:	DATE:	S-89
1			3			TOTAL SHEETS
2			4			134

DRAWN BY : MIKE BRITT DATE : 4-8-10
CHECKED BY : T. BANKOVICH DATE : 5-10

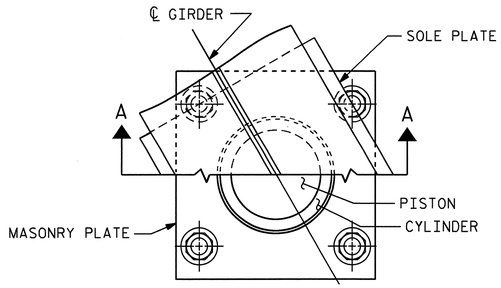

CUT-AWAY PLAN

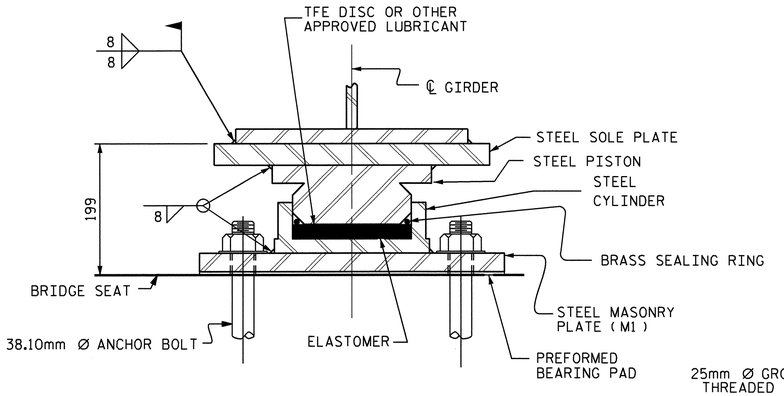

SECTION A-A

PB2, FIXED

(4 REQ'D.)

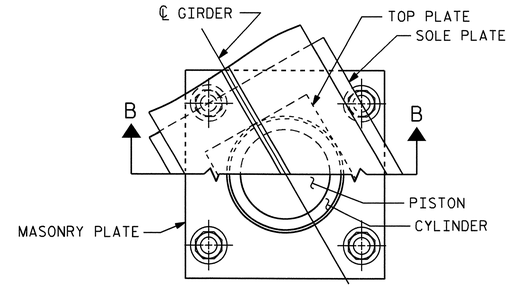

CUT-AWAY PLAN

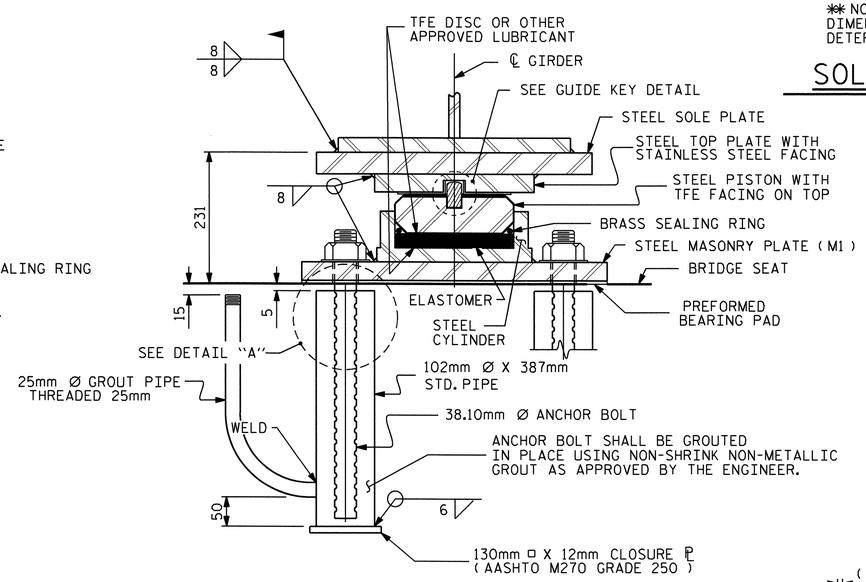

SECTION B-B

PB1, EXP.

(4 REQ'D.)

POT BEARING DETAILS

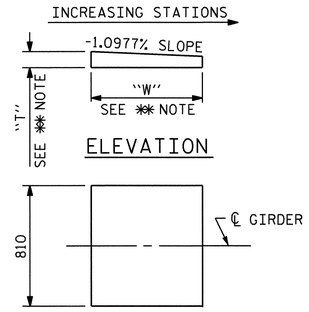

✱✱ NOTE:
DIMENSIONS "W" AND "T" ARE TO BE DETERMINED BY THE MANUFACTURER.

SOLE PLATE DETAILS

NOTES

FOR POT BEARINGS, SEE SPECIAL PROVISIONS.

AT ALL POINTS OF SUPPORT, NUTS FOR ANCHOR BOLTS SHALL BE TIGHTENED FINGER TIGHT AND GIVEN AN ADDITIONAL 1/4 TURN. THE THREAD OF THE NUT AND BOLT SHALL THEN BE BURRED WITH A SHARP POINTED TOOL.

WHEN WELDING THE SOLE PLATE TO THE GIRDER, USE TEMPERATURE INDICATING WAX PENS, OR OTHER SUITABLE MEANS, TO ENSURE THAT THE TEMPERATURE OF THE BEARING DOES NOT EXCEED 121°C TEMPERATURES ABOVE THIS MAY DAMAGE THE TFE OR ELASTOMER.

AFTER BEARING ASSEMBLY IS IN PLACE AND ANCHOR BOLTS HAVE BEEN FINALLY POSITIONED. THEY SHALL BE GROUTED IN PLACE AS SHOWN.

THE CLOSURE PLATE, GROUT PIPE AND STANDARD PIPE FOR THIS ASSEMBLY NEED NOT BE GALVANIZED.

SOLE PLATES SHOULD BE WELDED TO GIRDER FLANGES AND ANCHOR BOLTS SHOULD BE GROUTED BEFORE FALSEWORK IS PLACED.

ALL SURFACES OF BEARING PLATES SHALL BE SMOOTH AND STRAIGHT.

FOR THERMAL SPRAYED COATINGS (METALLIZATION), SEE SPECIAL PROVISIONS.

THE CONTRACTOR MAY SUBSTITUTE DISC BEARINGS FOR THE POT BEARINGS SHOWN. FOR OPTIONAL DISC BEARINGS, SEE SPECIAL PROVISIONS.

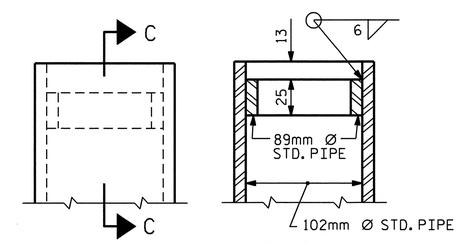

SECTION C-C

DETAIL "A"

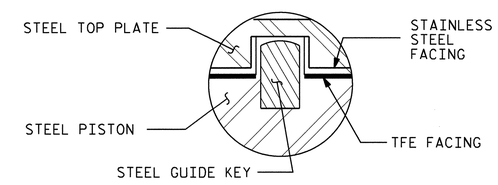

GUIDE KEY DETAIL

GUIDE KEY SETTING ANGLE = 108°-46'-36"

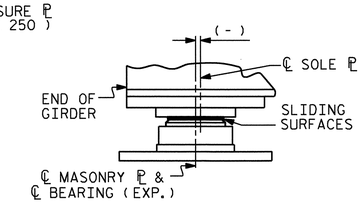

TABLE FOR PLATE SETTING DATA

(EXPANSION POT BEARINGS - PB1)

TEMPERATURE AT TIME OF SETTING	0° C	16° C	32° C	✱
PB1	-17	0	17	-54

✱CORRECTION FOR END ROTATION DUE TO WEIGHT OF SLAB AND COMPOSITE DEAD LOAD.

TEMPERATURE SETTING DETAIL

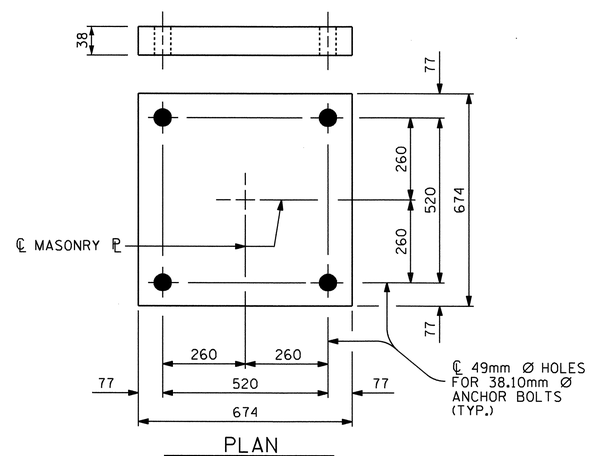

PLAN

M1 (8 REQ'D.)

MASONRY PLATE DETAILS

TABLE FOR UNFACTORED LOADS AND MOVEMENTS

BEARING	LOCATION	VERTICAL LOAD (kN)			LATERAL LOAD (kN)	TOTAL MOVEMENT (mm)
		DEAD	LIVE	TOTAL		
PB1 (EXP.)	END BENT No. 1	2036	753	2789	407	53
PB2 (FIXED)	END BENT No. 2	2036	753	2789	407	0

PROJECT NO. X-0002 CB

CUMBERLAND COUNTY

STATION: 146+39.081 -L-

NORTH CAROLINA PROFESSIONAL SEAL 24390 ENGINEER THEO J. BEACH

11/3/10

STATE OF NORTH CAROLINA
DEPARTMENT OF TRANSPORTATION
RALEIGH

STANDARD

POT BEARING DETAILS

(WBL)

ASSEMBLED BY : MIKE BRITT	DATE : 3-29-10
CHECKED BY : T. BANKOVICH	DATE : 5-10

DRAWN BY : RWW 8/99	REV. 7/10/01	LES/RWW
CHECKED BY : LES 8/99	REV. 5/7/03	RWW/JTE
	REV. 5/1/06	TLA/GM

REVISIONS							SHEET NO.
NO.	BY:	DATE:	NO.	BY:	DATE:		S-90
1			3				TOTAL SHEETS
2			4				134

22-SEP-2010 14:38
Z:\Structures\Str3US401\Single_SpanBridge\Super_Draw\x0002c_str4r_pot.dgn
tbeach

PB1SM.STD

STR. #3

DEAD LOAD DEFLECTION TABLE FOR GIRDERS

WBL	SPAN "A" GIRDERS #1 & #4 (EXTERIOR)																													
THIRTIETH POINTS	0	1	2	3	4	5	6	7	8	9	10	11	12	13	14	15	16	17	18	19	20	21	22	23	24	25	26	27	28	29	0
DEFLECTION DUE TO WEIGHT OF GIRDER	0.000	0.022	0.044	0.065	0.085	0.104	0.122	0.138	0.152	0.164	0.175	0.183	0.190	0.195	0.198	0.199	0.198	0.195	0.190	0.183	0.174	0.164	0.151	0.137	0.122	0.104	0.085	0.065	0.044	0.022	0.000
DEFLECTION DUE TO WEIGHT OF SLAB *	0.000	0.039	0.077	0.114	0.149	0.182	0.212	0.240	0.264	0.286	0.304	0.319	0.331	0.339	0.344	0.346	0.344	0.339	0.330	0.319	0.304	0.285	0.264	0.240	0.211	0.181	0.148	0.114	0.077	0.039	0.000
DEFLECTION DUE TO WEIGHT OF BARRIER RAIL	0.000	0.004	0.007	0.011	0.014	0.018	0.020	0.023	0.025	0.028	0.029	0.031	0.032	0.033	0.033	0.033	0.033	0.033	0.032	0.031	0.029	0.027	0.025	0.023	0.020	0.017	0.014	0.011	0.007	0.004	0.000
TOTAL DEAD LOAD DEFLECTION	0.000	0.065	0.128	0.190	0.248	0.304	0.354	0.401	0.441	0.478	0.508	0.533	0.553	0.567	0.575	0.578	0.575	0.567	0.552	0.533	0.507	0.476	0.440	0.400	0.353	0.302	0.247	0.190	0.128	0.065	0.000
REQUIRED CAMBER	0	65	128	190	248	304	354	401	441	478	508	533	553	567	575	578	575	567	552	533	507	476	440	400	353	302	247	190	128	65	0

* INCLUDES SLAB, BUILDUPS & STAY-IN-PLACE FORMS.
ALL VALUES ARE SHOWN IN METERS, EXCEPT "FINAL CAMBER" WHICH IS SHOWN IN MILLIMETERS.

DEAD LOAD DEFLECTION TABLE FOR GIRDERS

WBL	SPAN "A" GIRDERS #2 & #3 (INTERIOR)																													
THIRTIETH POINTS	0	1	2	3	4	5	6	7	8	9	10	11	12	13	14	15	16	17	18	19	20	21	22	23	24	25	26	27	28	29	0
DEFLECTION DUE TO WEIGHT OF GIRDER	0.000	0.022	0.044	0.065	0.085	0.104	0.122	0.138	0.152	0.164	0.174	0.183	0.190	0.195	0.198	0.199	0.198	0.195	0.190	0.183	0.174	0.164	0.152	0.137	0.122	0.104	0.085	0.065	0.044	0.022	0.000
DEFLECTION DUE TO WEIGHT OF SLAB *	0.000	0.039	0.077	0.114	0.149	0.183	0.213	0.240	0.265	0.286	0.305	0.320	0.332	0.340	0.346	0.347	0.345	0.340	0.332	0.320	0.305	0.286	0.264	0.241	0.212	0.182	0.149	0.114	0.077	0.039	0.000
DEFLECTION DUE TO WEIGHT OF BARRIER RAIL	0.000	0.004	0.007	0.011	0.014	0.017	0.020	0.023	0.025	0.028	0.029	0.031	0.032	0.033	0.033	0.033	0.033	0.033	0.032	0.031	0.029	0.027	0.025	0.023	0.020	0.017	0.014	0.011	0.007	0.004	0.000
TOTAL DEAD LOAD DEFLECTION	0.000	0.065	0.128	0.190	0.248	0.304	0.355	0.401	0.442	0.478	0.508	0.534	0.554	0.568	0.577	0.579	0.576	0.568	0.554	0.534	0.508	0.477	0.441	0.401	0.354	0.303	0.248	0.190	0.128	0.065	0.000
REQUIRED CAMBER	0	65	128	190	248	304	355	401	442	478	508	534	554	568	577	579	576	568	554	534	508	477	441	401	354	303	248	190	128	65	0

* INCLUDES SLAB, BUILDUPS & STAY-IN-PLACE FORMS.
ALL VALUES ARE SHOWN IN METERS, EXCEPT "FINAL CAMBER" WHICH IS SHOWN IN MILLIMETERS.

PROJECT NO. X-0002 CB
CUMBERLAND COUNTY
STATION: 146+39.081 -L-

NORTH CAROLINA PROFESSIONAL SEAL 24390 ENGINEER THEO J. BEACH
11/3/10

STATE OF NORTH CAROLINA
DEPARTMENT OF TRANSPORTATION
RALEIGH

SUPERSTRUCTURE
DEAD LOAD DEFLECTIONS
(WBL)

REVISIONS							
NO.	BY:	DATE:	NO.	BY:	DATE:	SHEET NO. S-91
1			3			TOTAL SHEETS 134
2			4			

DRAWN BY : MIKE BRITT DATE : 6-1-10
CHECKED BY : T. BANKOVICH DATE : 6-10

22-SEP-2010 15:18
Z:\Structures\Str3US401\Single_SpanBridge\Super_Draw\x0002c_str4r_dl.dgn
tbeach

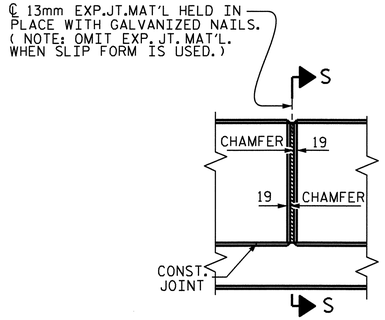

ELEVATION AT EXPANSION JOINTS

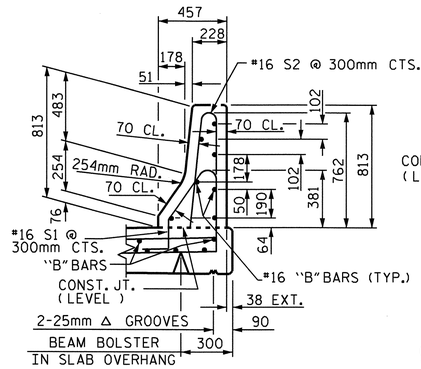

SECTION THRU RAIL

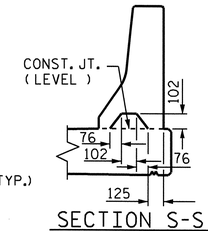

SECTION S-S

AT DAM IN OPEN JOINT (THIS IS TO BE USED ONLY WHEN SLIP FORM IS USED)

BARRIER RAIL DETAILS

NOTES

THE BARRIER RAIL SHALL NOT BE CAST UNTIL ALL SLAB CONCRETE HAS BEEN CAST AND HAS REACHED A MINIMUM COMPRESSIVE STRENGTH OF 20.7 MPa.

ALL REINFORCING STEEL IN BARRIER RAILS SHALL BE EPOXY COATED.

VERTICAL GROOVED CONTRACTION JOINTS, 12mm IN DEPTH, SHALL BE TOOLED IN ALL EXPOSED FACES OF THE BARRIER RAIL AND IN ACCORDANCE WITH ARTICLE 825-10(B) OF THE STANDARD SPECIFICATIONS. THE CONTRACTION JOINT SHALL BE LOCATED AT EACH THIRD POINT BETWEEN BARRIER RAIL EXPANSION JOINTS. ONLY ONE CONTRACTION JOINT IS REQUIRED AT MIDPOINT OF BARRIER RAIL SEGMENTS LESS THAN 6.1m IN LENGTH AND NO CONTRACTION JOINTS ARE REQUIRED FOR THOSE SEGMENTS LESS THAN 3.5m IN LENGTH.

THE #16 S1 & S2 BARS MAY BE SHIFTED SLIGHTLY IN ORDER TO MAINTAIN A 50mm MINIMUM CLEARANCE TO THE 13mm EXPANSION JOINT MATERIAL IN RAIL.

BAR TYPES

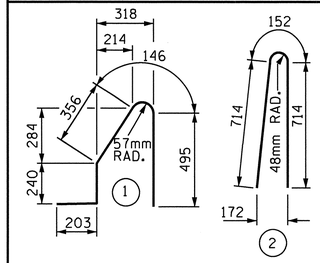

ALL BAR DIMENSIONS ARE OUT TO OUT

BILL OF MATERIAL

FOR CONCRETE BARRIER RAIL ONLY

BAR	No.	SIZE	TYPE	LENGTH	WEIGHT
* B1	56	#16	STR	2700	235
* B2	140	#16	STR	8080	1756
* S1	604	#16	1	1440	1350
* S2	604	#16	2	1580	1481

* EPOXY COATED REINFORCING STEEL 4,822 kg

CLASS AA CONCRETE 45.6 CU. METER

CONCRETE BARRIER RAIL 181.522 METERS

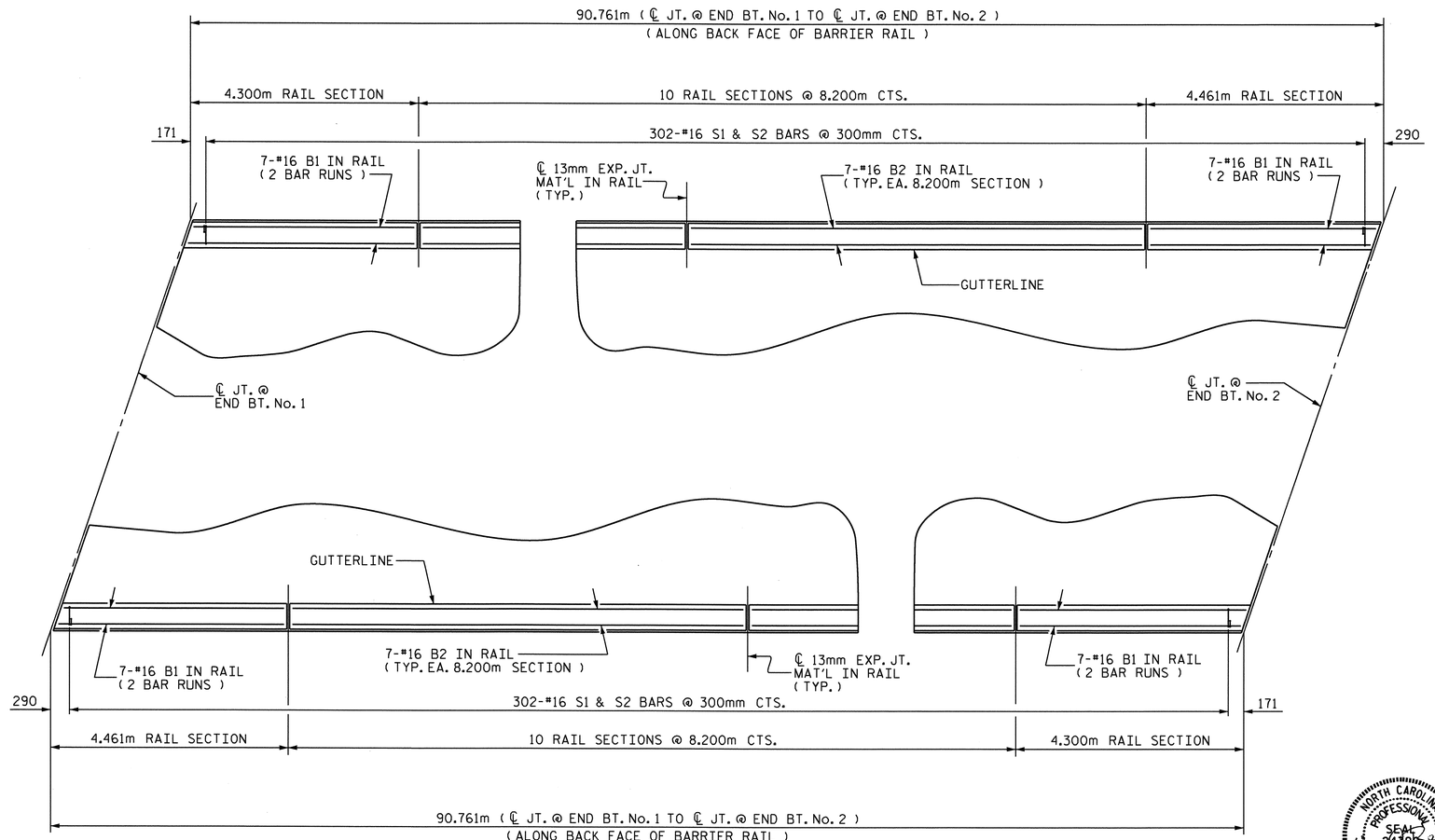

PLAN OF BARRIER RAIL

NORTH CAROLINA PROFESSIONAL SEAL 24390 ENGINEER THEO J. BEACH 11/3/10

PROJECT NO. X-0002 CB
CUMBERLAND COUNTY
STATION: 146+39.081 -L-

STATE OF NORTH CAROLINA
DEPARTMENT OF TRANSPORTATION
RALEIGH

STANDARD
CONCRETE BARRIER RAIL
(WBL)

REVISIONS						SHEET NO.
NO.	BY:	DATE:	NO.	BY:	DATE:	S-92
1			3			TOTAL SHEETS
2			4			134

ASSEMBLED BY : MIKE BRITT		DATE : 3-30-10
CHECKED BY : T. BANKOVICH		DATE : 5-10
DRAWN BY : ARB 5/87	REV. 10/17/00	RWW/LES
CHECKED BY : SJD 9/87	REV. 5/7/03R	RWW/JTE
	REV. 5/1/06	TLA/GM

22-SEP-2010 14:40
Z:\Structures\Str3US401\Single_SpanBridge\Super_Draw\x0002c_str4r_br.dgn
tbeach

STD. No. CBR1SM

STR.#3

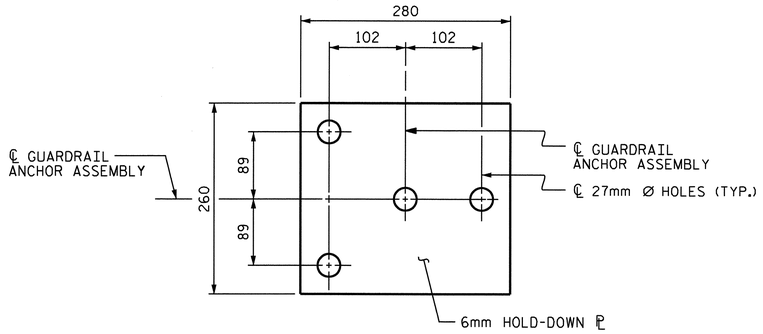

PLAN

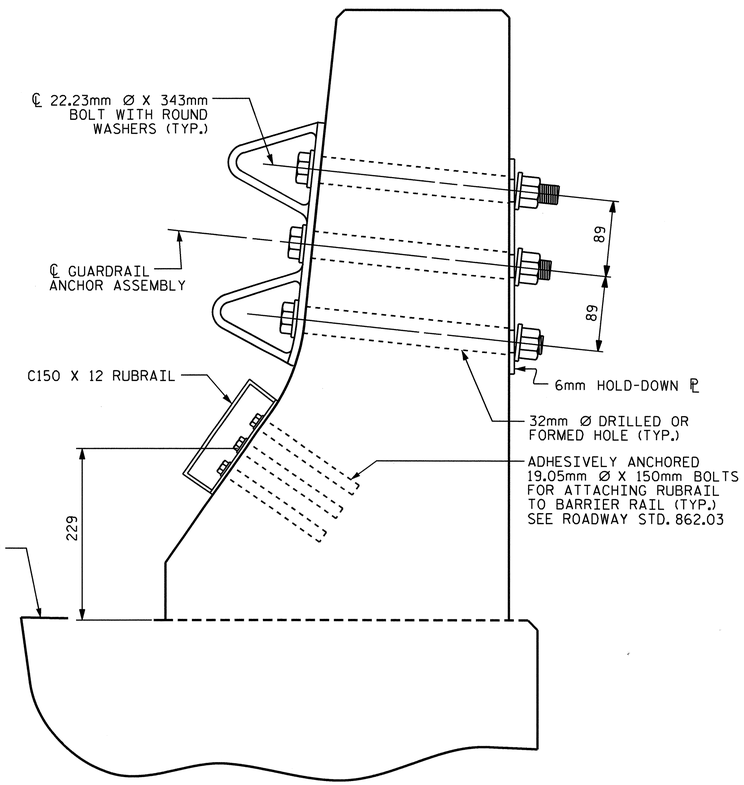

SECTION E-E

GUARDRAIL ANCHOR ASSEMBLY DETAILS

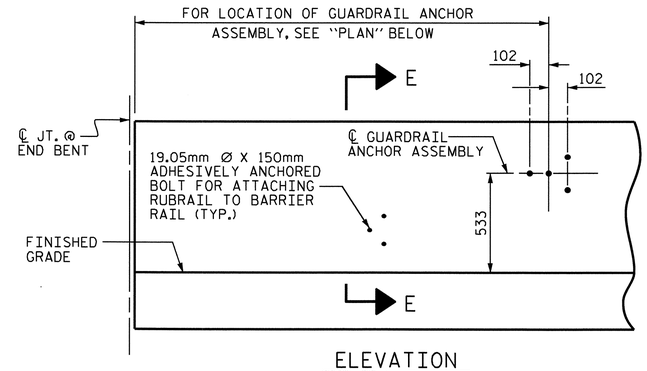

ELEVATION

FOR LOCATION OF RUBRAIL, SEE ROADWAY STD. 862.03

NOTES

THE GUARDRAIL ANCHOR ASSEMBLY SHALL CONSIST OF A 6mm HOLD DOWN PLATE AND 4 - 22.23mm Ø BOLTS WITH NUTS AND WASHERS, RUBRAIL, AND ADHESIVELY ANCHORED BOLTS.

THE HOLD-DOWN PLATE SHALL CONFORM TO AASHTO M270 GRADE 36. AFTER FABRICATION, THE HOLD-DOWN PLATE SHALL BE HOT-DIP GALVANIZED IN ACCORDANCE WITH AASHTO M111.

BOLTS SHALL CONFORM TO THE REQUIREMENTS OF ASTM A307 AND NUTS SHALL CONFORM TO THE REQUIREMENTS OF AASHTO M291. BOLTS, NUTS AND WASHERS SHALL BE GALVANIZED. (AT THE CONTRACTOR'S OPTION, STAINLESS STEEL BOLTS, NUTS AND WASHERS MAY BE USED AS AN ALTERNATE FOR THE 22.23mm Ø GALVANIZED BOLTS, NUTS AND WASHERS. THEY SHALL CONFORM TO OR EXCEED THE MECHANICAL REQUIREMENTS OF ASTM A307. THE USE OF THIS ALTERNATE SHALL BE APPROVED BY THE ENGINEER.)

THE GUARDRAIL ANCHOR ASSEMBLY IS REQUIRED AT ALL POINTS WHERE APPROACH GUARDRAIL IS TO BE ATTACHED TO THE END OF BARRIER RAIL. FOR POINTS OF ATTACHMENT, SEE SKETCH.

AFTER INSTALLATION, THE EXPOSED THREAD OF THE BOLT SHALL BE BURRED WITH A SHARP POINTED TOOL.

THE COST OF THE GUARDRAIL ANCHOR ASSEMBLY SHALL BE INCLUDED IN THE UNIT CONTRACT PRICE BID FOR CONCRETE BARRIER RAIL.

THE 32mm Ø HOLES SHALL BE FORMED OR DRILLED WITH A CORE BIT. IMPACT TOOLS WILL NOT BE PERMITTED. ANY CONCRETE DAMAGED BY THIS WORK SHALL BE REPAIRED TO THE SATISFACTION OF THE ENGINEER.

THE C150 X 12 RUBRAIL IS TO BE ADHESIVELY ANCHORED TO THE RAIL USING THREE 19.05mm Ø X 150mm BOLTS WITH WASHERS. LEVEL ONE FIELD TESTING IS REQUIRED, AND THE YIELD LOAD OF THE 19.05mm Ø BOLTS IS 53.4kN. FOR ADHESIVELY ANCHORED ANCHOR BOLTS OR DOWELS, SEE SPECIAL PROVISIONS. SEE ROADWAY STANDARD 862.03 FOR DETAILS AND LOCATION OF THE RUBRAIL.

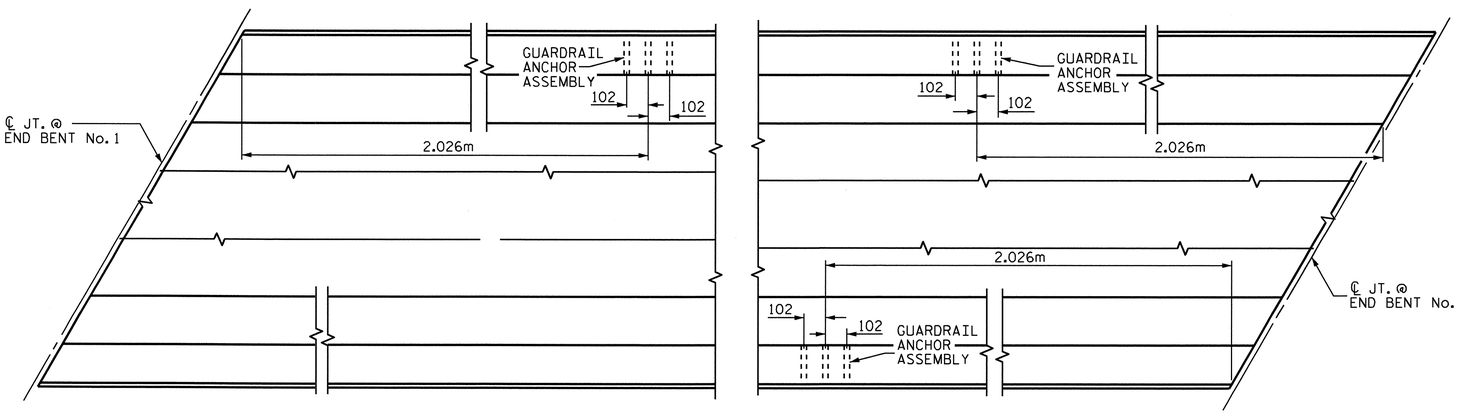

PLAN

LOCATION OF ANCHORS FOR GUARDRAIL

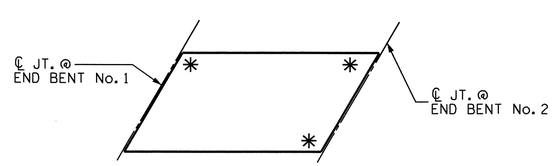

SKETCH SHOWING POINTS OF ATTACHMENTS

* DENOTES GUARDRAIL ANCHORS REQUIRED

PROJECT NO. X-0002 CB
CUMBERLAND COUNTY
STATION: 146+39.081 -L-

STATE OF NORTH CAROLINA
DEPARTMENT OF TRANSPORTATION
RALEIGH

STANDARD

GUARDRAIL ANCHORAGE FOR BARRIER RAIL

(WBL)

REVISIONS						SHEET NO.
NO.	BY:	DATE:	NO.	BY:	DATE:	S-93
1			3			TOTAL SHEETS
2			4			134

ASSEMBLED BY : MIKE BRITT	DATE : 3-30-10
CHECKED BY : T. BANKOVICH	DATE : 5-10
DRAWN BY : TLA 5/06	ADDED 5/1/06R KMM/GM
CHECKED BY : GM 5/06	

22-SEP-2010 14:40
Z:\Structures\Str3US401\Single_SpanBridge\Super_Draw\x0002c_str4r_gra.dgn
tbeach

STD. NO. GRA2

STR. #3

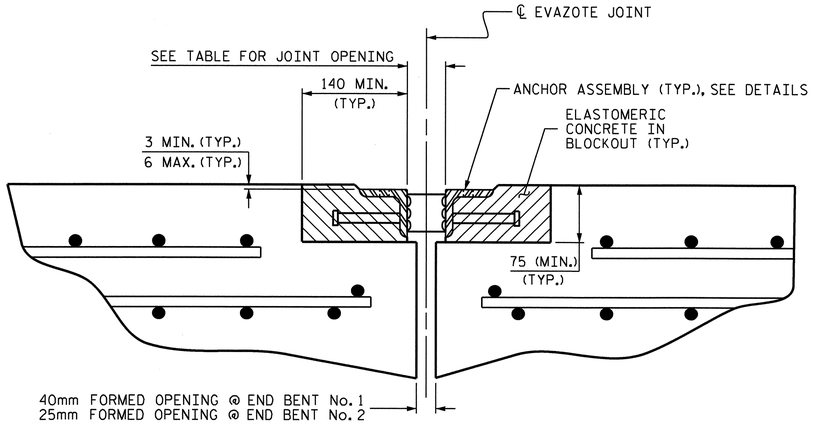

ARMORED JOINT DETAILS

SECTION NORMAL TO JOINT AT END BENT

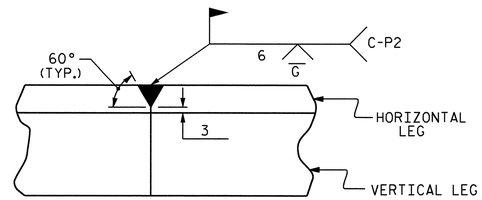

DETAIL- FIELD WELD SPLICE OF ANGLE

NOTES

ANGLES SHALL CONFORM TO AASHTO M270 GRADE 250 STEEL OR APPROVED EQUAL. ALL STUD ANCHORS SHALL CONFORM TO AASHTO M169 GRADES 1010 THRU 1020 OR APPROVED EQUAL.

STUD ANCHORS SHALL BE SHOP WELDED AND ALL HOLES SHALL BE SHOP DRILLED AS SHOWN ON THE PLANS. STUD ANCHORS SHALL BE ELECTRIC ARC END WELDED WITH COMPLETE FUSION.

UPON COMPLETION OF SHOP FABRICATION, THE ENTIRE ANCHOR ASSEMBLY SHALL BE METALLIZED. THE 12.70mm Ø STUD ANCHORS AND ANCHOR TABS NEED NOT BE METALLIZED. SEE SPECIAL PROVISION FOR THERMAL SPRAYED COATINGS (METALLIZATION).

ANCHOR ASSEMBLY SHALL BE MADE CONTINUOUS THE LENGTH OF THE JOINT FROM GUTTER TO GUTTER. FOR FIELD SPLICES AT ALL CROWN BREAK POINTS, THE ENDS OF THE STEEL ANGLES SHALL BE CUT PARALLEL TO THE BRIDGE CENTERLINE. FINISHED FIELD WELDS SHALL BE GROUND SMOOTH AND COATED WITH A MINIMUM THICKNESS OF 0.100mm OF ZINC-RICH PAINT IN ACCORDANCE WITH THE STANDARD SPECIFICATIONS.

ANCHOR ASSEMBLY SEGMENTS SHALL NOT BE LESS 3.6m NOR MORE THAN 6.1m IN LENGTH. SHORTER SEGMENTS MAY BE USED AT THE EDGE OF ROADWAY OR AT POINTS OF STAGED CONSTRUCTION.

THE ANCHOR ASSEMBLY SHALL BE SECURED AND LEVELED AS SHOWN IN THE "ARMORED JOINT ANCHOR ASSEMBLY DETAILS". NO SUBMITTALS ARE REQUIRED FOR 9.53mm Ø EXPANSION ANCHORS, NUTS OR WASHERS. THE CONTRACTOR MAY SUBMIT FOR APPROVAL AN ALTERNATE METHOD OF ALIGNING AND LEVELING THE ANGLES. THE ALTERNATE METHOD SHALL NOT INCLUDE ANY WELDING TO THE OUTSIDE FACE OF THE ANGLES.

AFTER THE ELASTOMERIC CONCRETE HAS BEEN CAST ON BOTH SIDES OF THE JOINT, REMOVE ANY EXCESS CONCRETE THAT COMES THROUGH THE WEEP HOLES AND THOROUGHLY CLEAN THE ANGLES. ANY DAMAGED STEEL SHALL BE COATED WITH A MINIMUM OF 0.100mm OF ZINC-RICH PAINT IN ACCORDANCE WITH THE STANDARD SPECIFICATIONS.

SEE SPECIAL PROVISIONS FOR EVAZOTE JOINT SEALS.

SEE SPECIAL PROVISIONS FOR ELASTOMERIC CONCRETE.

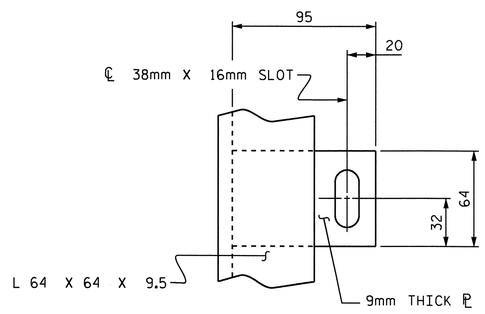

PLAN VIEW OF TAB

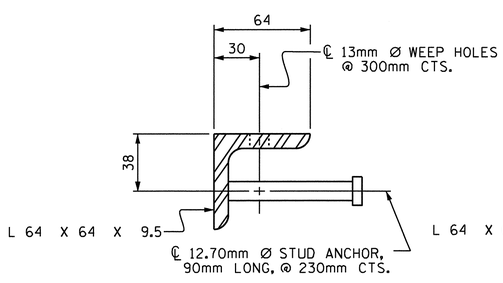

SECTION VIEW OF STUD

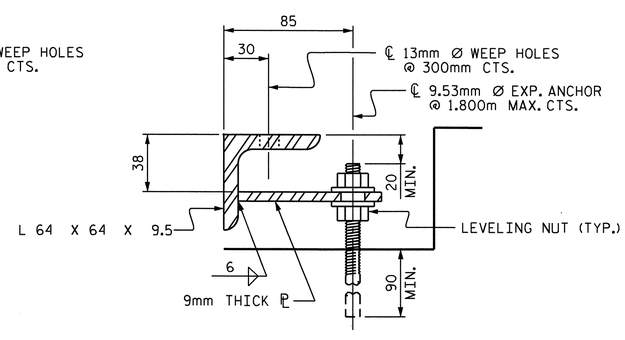

SECTION VIEW OF TAB

ARMORED JOINT ANCHOR ASSEMBLY DETAILS

MOVEMENT AND SETTING AT EVAZOTE JOINT

LOCATION	SKEW ANGLE	NOMINAL UNCOMPRESSED SEAL WIDTH	TOTAL MOVEMENT (ALONG ℄ RDWY)	PERPENDICULAR JOINT OPENING AT 7° C	PERPENDICULAR JOINT OPENING AT 16° C	PERPENDICULAR JOINT OPENING AT 32° C
END BENT No. 1 (EXP.)	108°-46'-36"	87mm	54mm	73mm	64mm	48mm
END BENT No. 2 (FIX.)	108°-46'-36"	64mm	0	--	48mm	--

TOTAL MOVEMENT IS CALCULATED ALONG THE CENTERLINE OF ROADWAY.
JOINT OPENINGS ARE MEASURED PERPENDICULAR TO THE JOINT.

BILL OF MATERIAL

LOCATION	ELASTOMERIC CONCRETE * (CU. m)	TOTAL LENGTH OF ANGLE (m)
END BENT No. 1	0.3	26.6
END BENT No. 2	0.3	26.6

* BASED ON THE MINIMUM BLOCKOUT SHOWN.

PROJECT NO. X-0002 CB
CUMBERLAND COUNTY
STATION: 146+39.081 -L-

NORTH CAROLINA PROFESSIONAL SEAL 24390 ENGINEER THEO J. BEACH
11/3/10

STATE OF NORTH CAROLINA
DEPARTMENT OF TRANSPORTATION
RALEIGH

STANDARD
ARMORED EVAZOTE
JOINT DETAILS

(WBL)

REVISIONS						
NO.	BY:	DATE:	NO.	BY:	DATE:	
1			3			
2			4			

SHEET NO. S-94
TOTAL SHEETS 134

ASSEMBLED BY : MIKE BRITT	DATE : 3-30-10	
CHECKED BY : T. BANKOVICH	DATE : 5-10	
DRAWN BY : EEM 1/96	REV. 7/10/01 LES/RDR	
CHECKED BY : RGW 1/96	REV. 5/7/03 RRR RWW/JTE	
	REV. 5/1/06 TLA/GM	

22-SEP-2010 14:41
Z:\Structures\Str3US401\Single_SpanBridge\Super_Draw\x0002c_str4r_aej.dgn
tbeach

STD. NO. AEJ1SM

STR. #3

SUPERSTRUCTURE REINFORCING STEEL LENGTHS ARE BASED ON THE FOLLOWING MINIMUM SPLICE LENGTHS

BAR SIZE	SUPERSTRUCTURE EXCEPT APPROACH SLABS, PARAPET, AND BARRIER RAIL		APPROACH SLABS		PARAPET AND BARRIER RAIL
	EPOXY COATED	UNCOATED	EPOXY COATED	UNCOATED	
#13	610	540	610	540	840
#16	770	660	770	660	1050
#19	920	790	1190	790	1330
#22	1580	1060			
#25	2080	1390			

REINFORCING BAR SCHEDULE

SPAN "A"

BAR	No.	SIZE	TYPE	LENGTH	WEIGHT
✳ A1	614	#16	STR.	13480	12845
A2	614	#16	STR.	13480	12845
✳ A101	2	#16	STR.	13140	41
✳ A102	2	#16	STR.	12720	39
✳ A103	2	#16	STR.	12300	38
✳ A104	2	#16	STR.	11900	37
✳ A105	2	#16	STR.	11480	36
✳ A106	2	#16	STR.	11080	34
✳ A107	2	#16	STR.	10660	33
✳ A108	2	#16	STR.	10240	32
✳ A109	2	#16	STR.	9840	31
✳ A110	2	#16	STR.	9420	29
✳ A111	2	#16	STR.	9020	28
✳ A112	2	#16	STR.	8600	27
✳ A113	2	#16	STR.	8200	25
✳ A114	2	#16	STR.	7780	24
✳ A115	2	#16	STR.	7360	23
✳ A116	2	#16	STR.	6960	22
✳ A117	2	#16	STR.	6540	20
✳ A118	2	#16	STR.	6120	19
✳ A119	2	#16	STR.	5720	18
✳ A120	2	#16	STR.	5300	16
✳ A121	2	#16	STR.	4900	15
✳ A122	2	#16	STR.	4480	14
✳ A123	2	#16	STR.	4080	13
✳ A124	2	#16	STR.	3660	11
✳ A125	2	#16	STR.	3240	10
✳ A126	2	#16	STR.	2840	9
✳ A127	2	#16	STR.	2420	8
✳ A128	2	#16	STR.	2020	6
✳ A129	2	#16	STR.	1600	5
✳ A130	2	#16	STR.	1180	4
✳ A131	2	#16	STR.	780	2
A201	2	#16	STR.	13140	41
A202	2	#16	STR.	12720	39
A203	2	#16	STR.	12300	38
A204	2	#16	STR.	11900	37
A205	2	#16	STR.	11480	36
A206	2	#16	STR.	11080	34
A207	2	#16	STR.	10660	33
A208	2	#16	STR.	10240	32
A209	2	#16	STR.	9840	31
A210	2	#16	STR.	9420	29
A211	2	#16	STR.	9020	28
A212	2	#16	STR.	8600	27
A213	2	#16	STR.	8200	25
A214	2	#16	STR.	7780	24
A215	2	#16	STR.	7360	23
A216	2	#16	STR.	6960	22
A217	2	#16	STR.	6540	20
A218	2	#16	STR.	6120	19
A219	2	#16	STR.	5720	18
A220	2	#16	STR.	5300	16
A221	2	#16	STR.	4900	15
A222	2	#16	STR.	4480	14
A223	2	#16	STR.	4080	13
A224	2	#16	STR.	3660	11
A225	2	#16	STR.	3240	10
A226	2	#16	STR.	2840	9
A227	2	#16	STR.	2420	8
A228	2	#16	STR.	2020	6
A229	2	#16	STR.	1600	5
A230	2	#16	STR.	1180	4
A231	2	#16	STR.	780	2
✳ B1	341	#13	STR.	8800	2983
B2	330	#16	STR.	15660	8020
✳ G1	2	#16	STR.	14240	44
✳ K1	16	#16	1	2780	69
✳ K2	16	#16	2	3020	75
✳ K3	24	#16	STR.	3000	112
✳ S1	60	#13	3	1440	86

REINFORCING STEEL 21,534 kg

✳ EPOXY COATED REINFORCING STEEL 16,883 kg

BAR TYPES

ALL BAR DIMENSIONS ARE OUT TO OUT

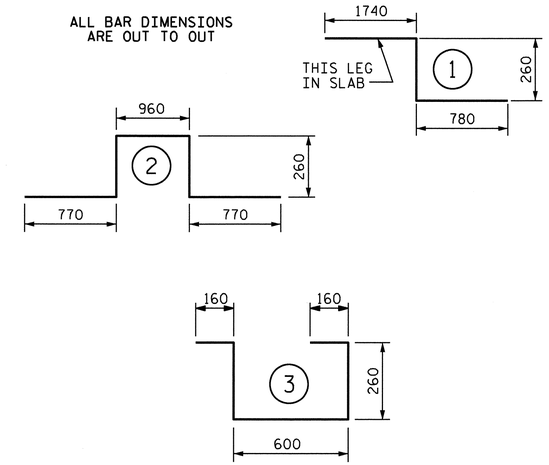

SUPERSTRUCTURE BILL OF MATERIAL

WBL	CLASS AA CONCRETE	REINFORCING STEEL	EPOXY COATED REINFORCING STEEL
	(m3)	(kg)	(kg)
SPAN "A"- POUR #1	183.9		
SPAN "A"- POUR #2	164.1		
TOTALS ✳✳	348.0	21,534	16,883

✳✳ QUANTITIES FOR BARRIER RAIL ARE NOT INCLUDED.

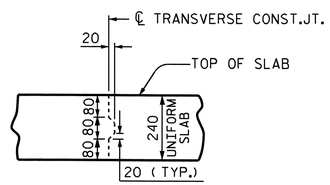

TRANSVERSE CONSTRUCTION JOINT DETAIL

NOTE: LONGITUDINAL REINFORCING STEEL SHALL BE CONTINUOUS THRU JOINT

GROOVING BRIDGE FLOORS		
APPROACH SLABS	168.4	SQ.METER
BRIDGE DECK	1,055.0	SQ.METER
TOTAL	1,223.4	SQ.METER

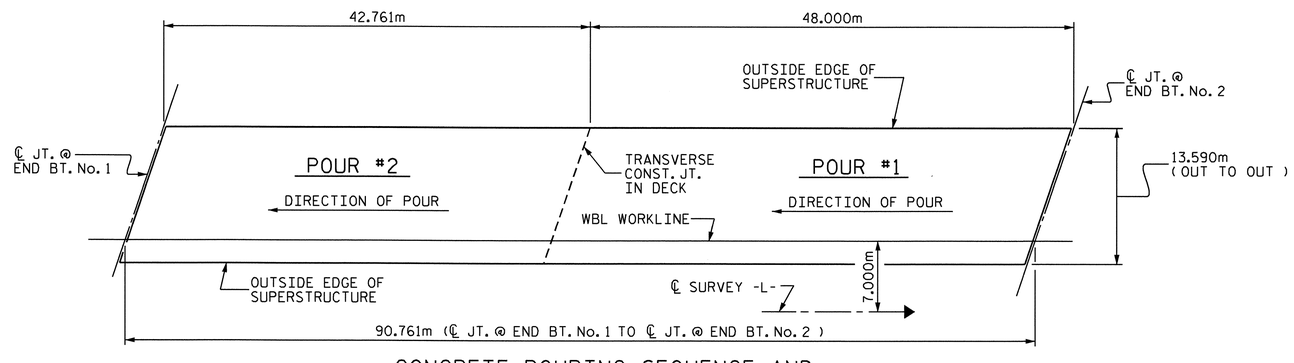

CONCRETE POURING SEQUENCE AND LAYOUT FOR COMPUTING AREA OF REINFORCED CONCRETE DECK SLAB

(SQ. METER = 1,233.4)

NORTH CAROLINA PROFESSIONAL SEAL 24390 ENGINEER THEO J. BEACH

11/3/10

PROJECT NO. X-0002 CB

CUMBERLAND COUNTY

STATION: 146+39.081 -L-

STATE OF NORTH CAROLINA
DEPARTMENT OF TRANSPORTATION
RALEIGH

SUPERSTRUCTURE

BILL OF MATERIAL

(WBL)

REVISIONS						SHEET NO.
NO.	BY:	DATE:	NO.	BY:	DATE:	S-95
1			3			TOTAL SHEETS
2			4			134

DRAWN BY : MIKE BRITT DATE : 3-31-10
CHECKED BY : T. BANKOVICH DATE : 5-10

22-SEP-2010 14:42
Z:\Structures\Str3US401\Single_SpanBridge\Super_Draw\X0002C_str4R_BM.dgn
tbeach

STR.#3

NOTES:

▲ FOR LOCATION OF ELEVATIONS BETWEEN BUILDUPS, SEE SECTION A-A ON SHEET 3 OF 3.

★ THIS ELEVATION TAKEN ON FILL FACE OF BACKWALL.

STIRRUPS AND U2 BARS IN CAP MAY BE SHIFTED AS NECESSARY TO CLEAR ANCHOR BOLTS.

BACKWALL SHALL BE PLACED BEFORE APPLYING THE EPOXY PROTECTIVE COATING.

THE CONCRETE IN THE SHADED AREA OF THE WING SHALL BE POURED AFTER THE BARRIER RAIL IS CAST IF SLIP FORMING IS USED.

THE TOP SURFACE OF THE CAP EXCEPT THE BRIDGE SEAT BUILDUPS SHALL BE SLOPED TRANSVERSELY FROM THE FILL FACE TO THE BACK FACE AT THE RATE OF 2 %.

TIE BACKS ARE REQUIRED ON END BENT No. 1. SEE "TIEBACK DETAIL" SHEET 3 OF 3. FOR SOIL REINFORCEMENT DETAIL/ BACKWALL CONNECTION, SEE MSE WALL PLANS.

FOR THE 102mm Ø STD. PIPE DETAILS, SEE "POT BEARING DETAILS" SHEET.

THE #16 V1 BARS IN THE BACKWALL SHALL BE PLACED 50mm CLEAR FROM THE TOP OF BACKWALL.

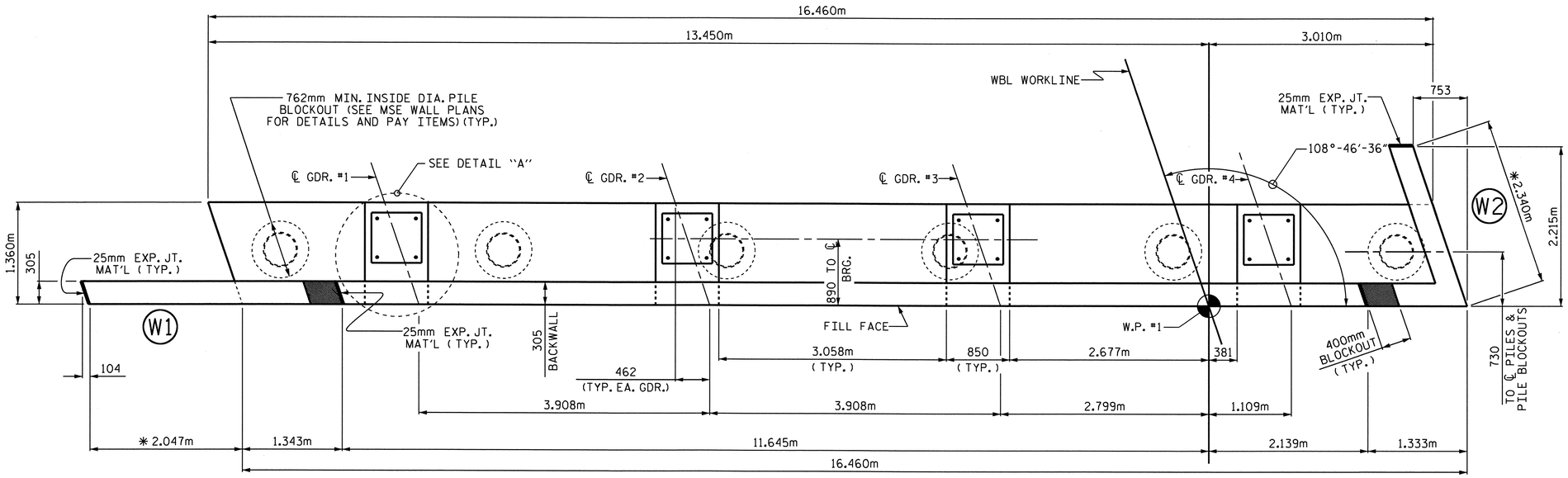

✳ WING LENGTHS BASED ON A ASSUMED MSE WALL PRECAST PANEL THICKNESS OF 140mm AND COPING NOT EXTENDING DOWN BACK OF THE PANELS. WING LENGTHS SHALL BE ADJUSTED AS REQUIRED. SEE MSE WALL PLAN SHEETS.

PLAN

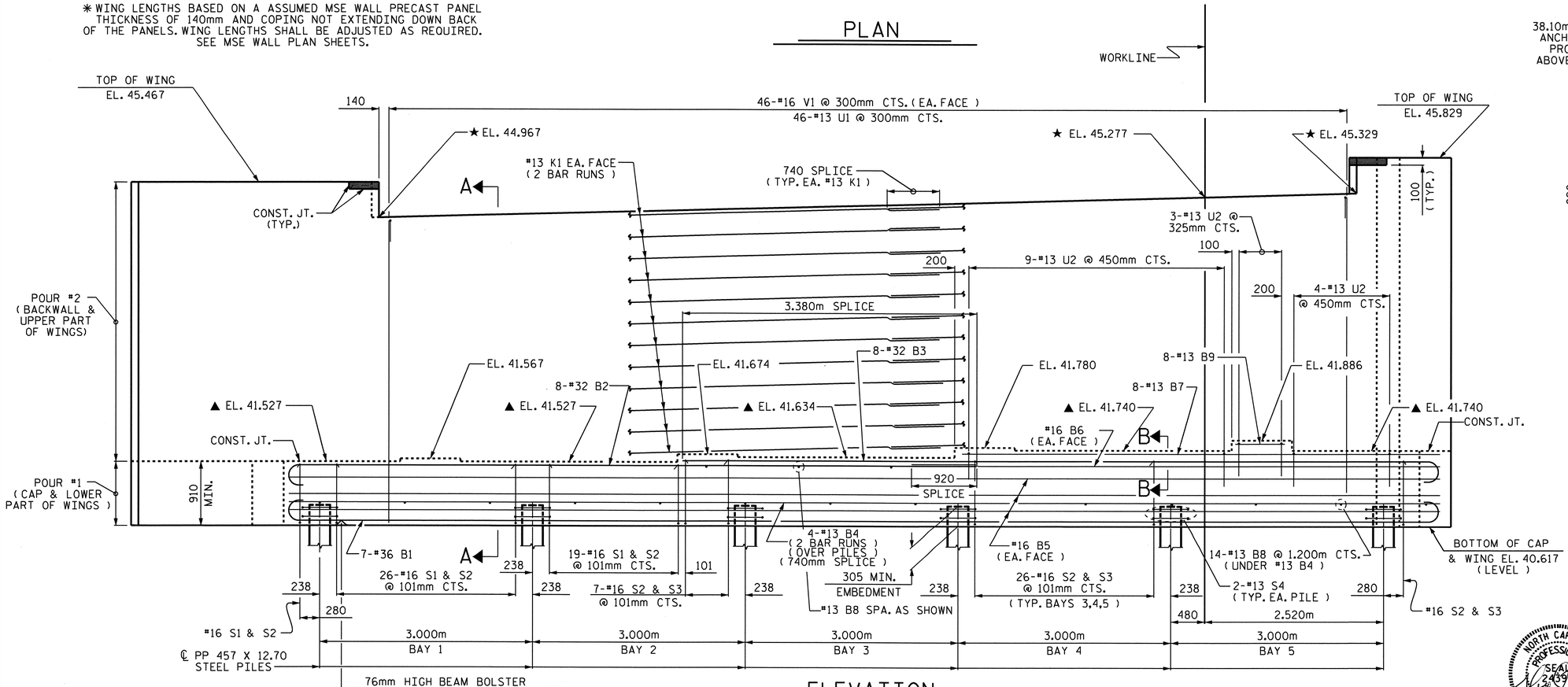

ELEVATION

(PILE BLOCKOUTS NOT SHOWN FOR CLARITY)

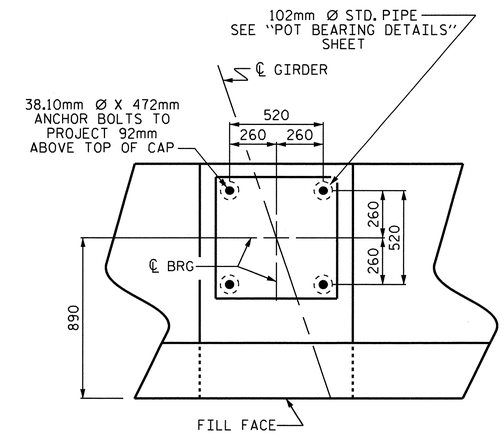

DETAIL "A"

PROJECT NO. X-0002CB

CUMBERLAND COUNTY

STATION: 146+39.081-L-

SHEET 1 OF 3

STATE OF NORTH CAROLINA
DEPARTMENT OF TRANSPORTATION
RALEIGH

SUBSTRUCTURE

END BENT No. 1

(WBL)

REVISIONS						SHEET NO.
NO.	BY:	DATE:	NO.	BY:	DATE:	S-96
1			3			TOTAL SHEETS
2			4			134

STR. #3

NORTH CAROLINA PROFESSIONAL SEAL 24390 ENGINEER THEO J. BEACH 11/3/10

DRAWN BY : N. PIERCE DATE : 09-10
CHECKED BY : T. BANKOVICH DATE : 08-10

03-NOV-2010 12:31
R:\Structures\Str3US401\Single_SpanBridge\Sub_Draw\X-0002CB_SD_E*_1.dgn
tbeach

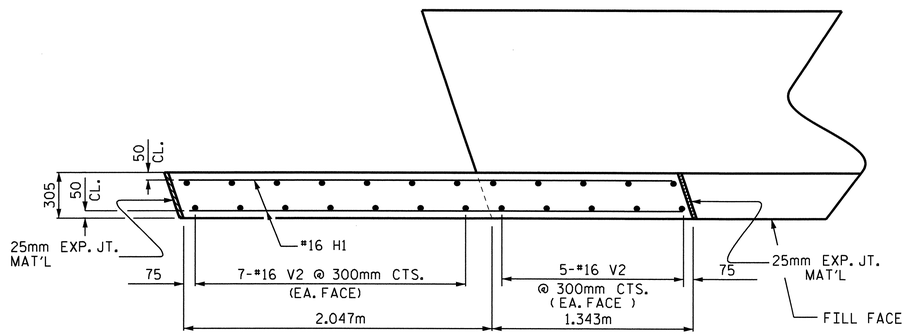

PLAN OF WING (W1)

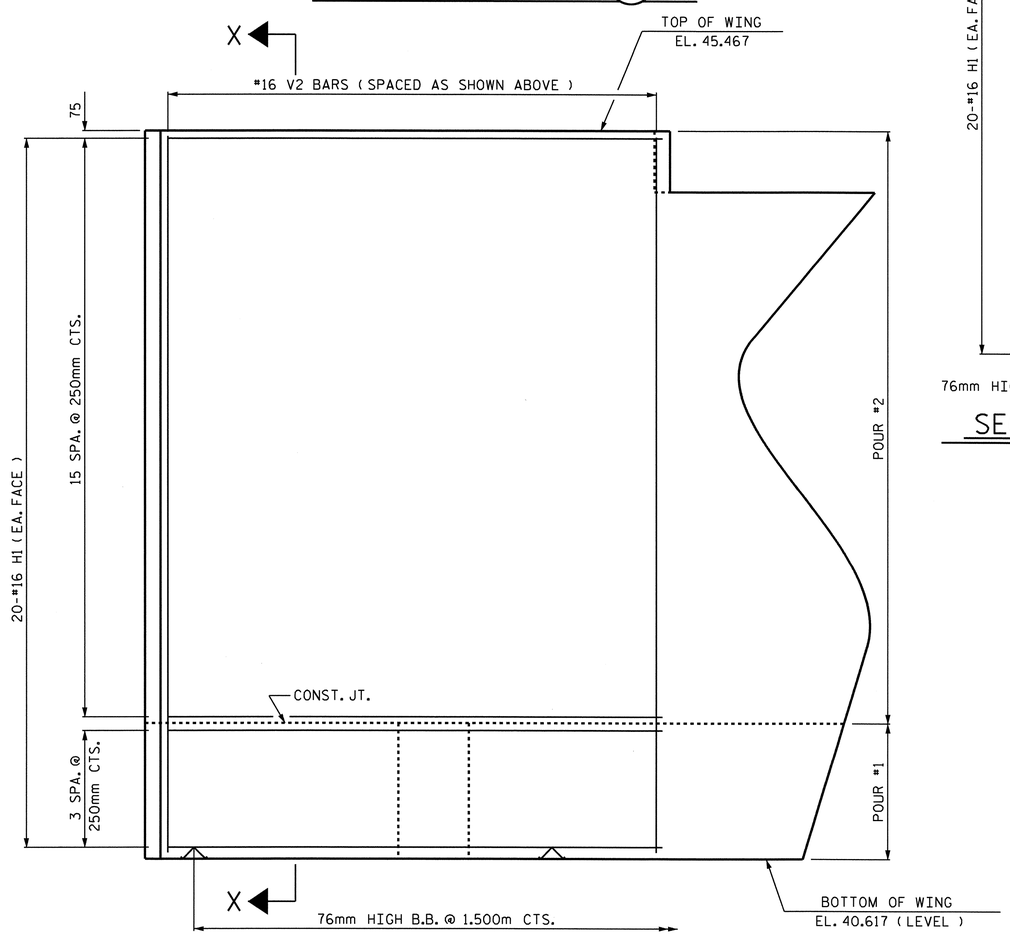

ELEVATION OF WING (W1)

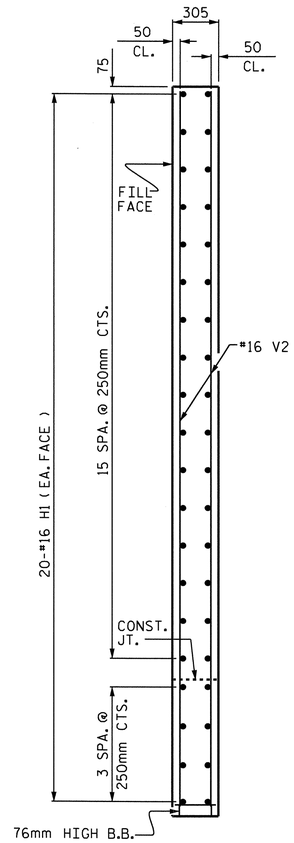

SECTION X-X

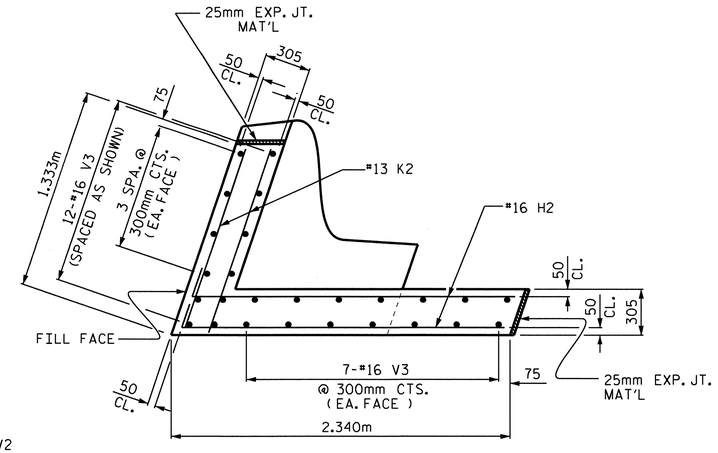

PLAN OF WING (W2)

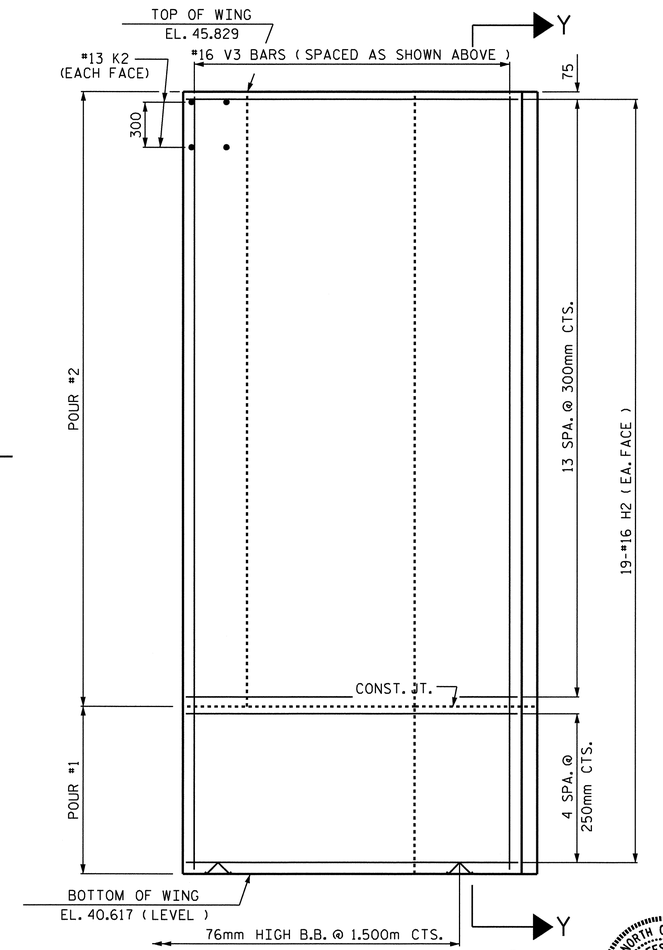

ELEVATION OF WING (W2)

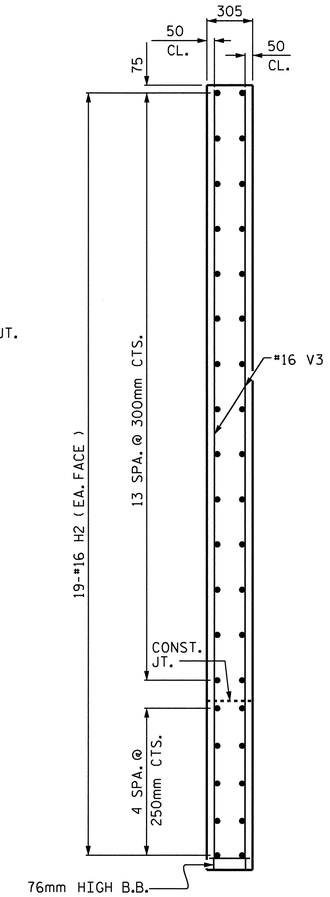

SECTION Y-Y

PROJECT NO. X-0002CB
CUMBERLAND COUNTY
STATION: 146+39.081 -L-

SHEET 2 OF 3

STATE OF NORTH CAROLINA
DEPARTMENT OF TRANSPORTATION
RALEIGH

SUBSTRUCTURE
END BENT No. 1
(WBL)

NORTH CAROLINA PROFESSIONAL SEAL 24390 ENGINEER THEO J. BEACH
11/5/10

REVISIONS						SHEET NO.
NO.	BY:	DATE:	NO.	BY:	DATE:	S-97
1			3			TOTAL SHEETS
2			4			134

DRAWN BY : N. PIERCE DATE : 09-10
CHECKED BY : T. BANKOVICH DATE : 08-10

STR. #3

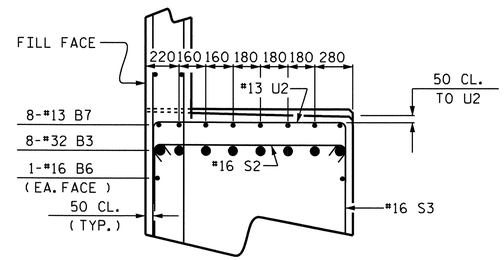

PARTIAL SECTION B-B

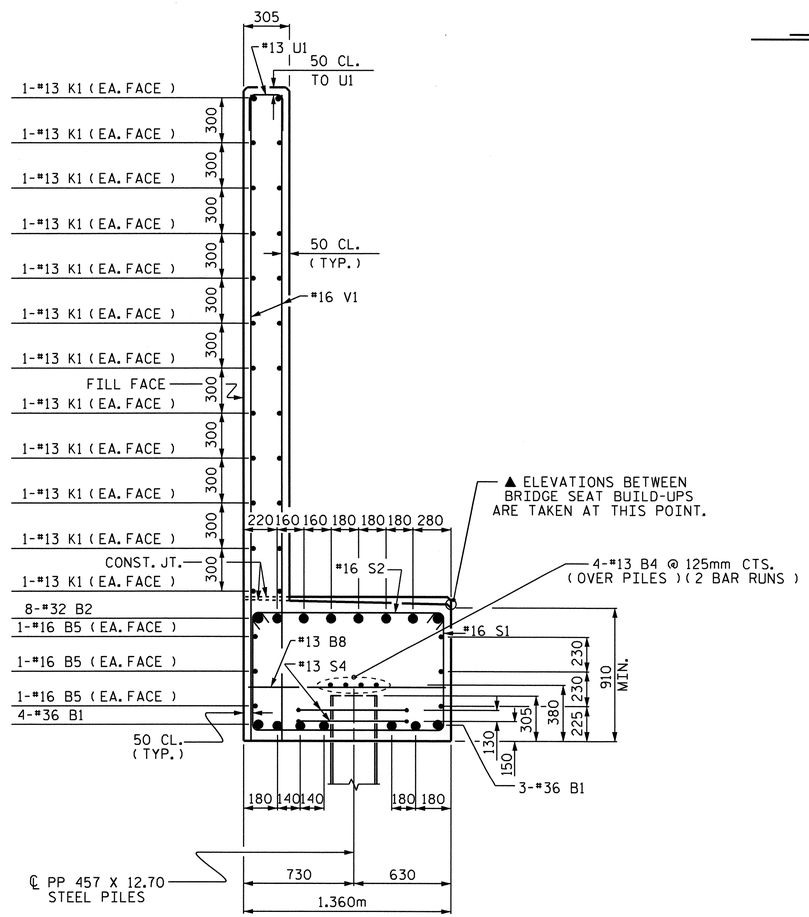

SECTION A-A

(PILE BLOCKOUT NOT SHOWN FOR CLARITY)

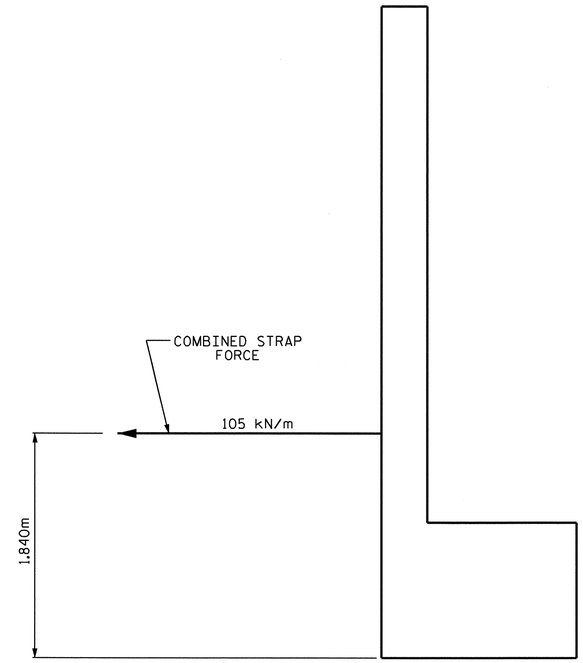

TIEBACK DETAIL

FOR SOIL RINFORCEMENT DETAIL & BACKWALL CONNECTION,
SEE MSE WALL PLANS.

BAR TYPES

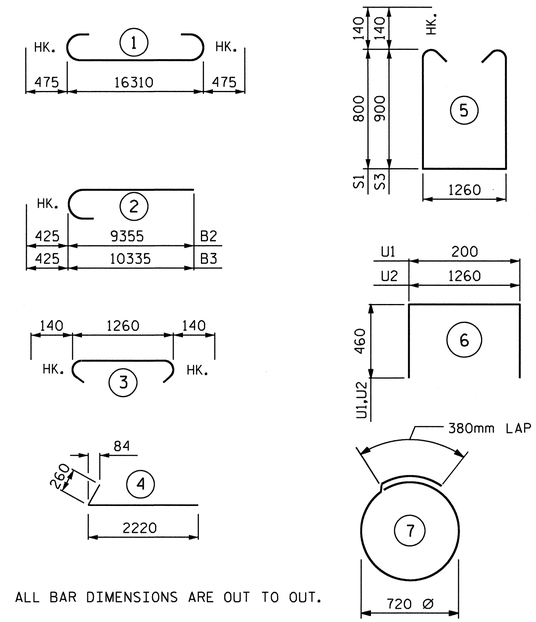

ALL BAR DIMENSIONS ARE OUT TO OUT.

BILL OF MATERIAL

END BENT No. 1

BAR	No.	SIZE	TYPE	LENGTH	WEIGHT
B1	7	#36	1	17260	955
B2	8	#32	2	9780	501
B3	8	#32	2	10760	551
B4	8	#13	STR	8560	68
B5	6	#16	STR	16360	152
B6	2	#16	STR	7920	25
B7	8	#13	STR	6440	51
B8	17	#13	STR	1260	21
B9	8	#13	STR	740	6
H1	40	#16	STR	3280	204
H2	38	#16	4	2480	146
K1	48	#13	STR	8600	410
K2	4	#13	STR	1220	5
S1	46	#16	5	3140	224
S2	132	#16	3	1540	315
S3	86	#16	5	3340	446
S4	12	#13	7	2660	32
U1	46	#13	6	1120	51
U2	16	#13	6	2180	35
V1	92	#16	STR	4240	605
V2	24	#16	STR	4740	177
V3	26	#16	STR	5100	206

REINFORCING STEEL 5186 Kg.

CLASS A CONCRETE BREAKDOWN

POUR #1
(CAP & LOWER PART OF WINGS)
= 23.8 m^3

POUR #2
(BACKWALL & UPPER PART OF WINGS)
= 22.9 m^3

TOTAL CLASS A CONCRETE = 46.7 m^3

PP 457 X 12.70 STEEL PILES
No. 6 LIN. METERS = 96

PIPE PILE PLATES = 6 EA.

THE CONCRETE DISPLACED BY THE PLUGGED
PP 457 X 12.70 STEEL PILES HAS BEEN
DEDUCTED FROM THE POUR #1 CONCRETE QUANTITY

PROJECT NO. X-0002CB
CUMBERLAND COUNTY
STATION: 146+39.081 -L-

SHEET 3 OF 3

STATE OF NORTH CAROLINA
DEPARTMENT OF TRANSPORTATION
RALEIGH

SUBSTRUCTURE
END BENT No. 1
(WBL)

NORTH CAROLINA PROFESSIONAL SEAL 24390 ENGINEER THEO J. BEACH
11/3/10

REVISIONS						SHEET NO.
NO.	BY:	DATE:	NO.	BY:	DATE:	S-98
1			3			TOTAL SHEETS
2			4			134

DRAWN BY : N. PIERCE DATE : 08-10
CHECKED BY : T. BANKOVICH DATE : 08-10

STR. #3

R:\Structures\Str3US401\Single_SpanBridge\Sub_Draw\X-000
tbeach

NOTES:

▲ FOR LOCATION OF ELEVATIONS BETWEEN BUILDUPS, SEE SECTION A-A ON SHEET 3 OF 3.

★ THIS ELEVATION TAKEN ON FILL FACE OF BACKWALL.

STIRRUPS AND U2 BARS IN CAP MAY BE SHIFTED AS NECESSARY TO CLEAR ANCHOR BOLTS.

BACKWALL SHALL BE PLACED BEFORE APPLYING THE EPOXY PROTECTIVE COATING.

THE CONCRETE IN THE SHADED AREA OF THE WING SHALL BE POURED AFTER THE BARRIER RAIL IS CAST IF SLIP FORMING IS USED.

THE TOP SURFACE OF THE CAP EXCEPT THE BRIDGE SEAT BUILDUPS SHALL BE SLOPED TRANSVERSELY FROM THE FILL FACE TO THE BACK FACE AT THE RATE OF 2 %.

TIE BACKS ARE REQUIRED ON END BENT No. 1, SEE "TIEBACK DETAIL" SHEET 3 OF 3. FOR SOIL REINFORCEMENT DETAIL/ BACKWALL CONNECTION, SEE MSE WALL PLANS.

THE #16 V1 BARS IN THE BACKWALL SHALL BE PLACED 50mm CLEAR FROM THE TOP OF BACKWALL.

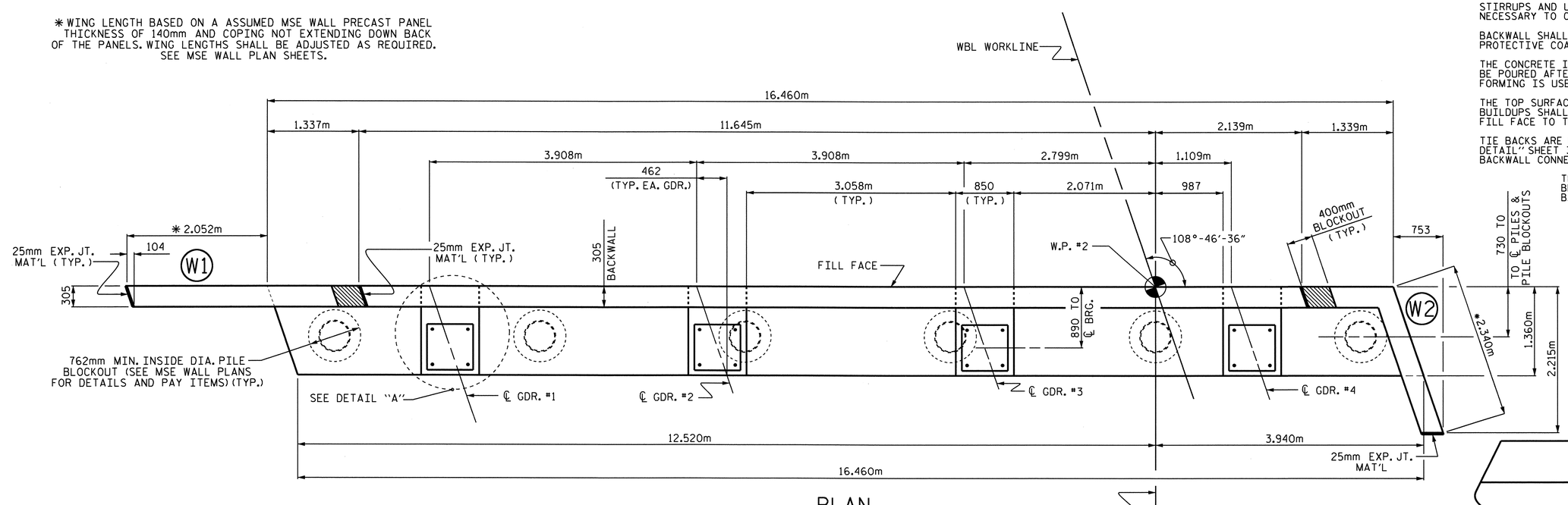

PLAN

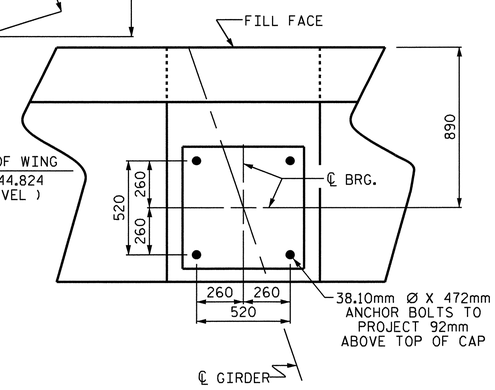

DETAIL "A"

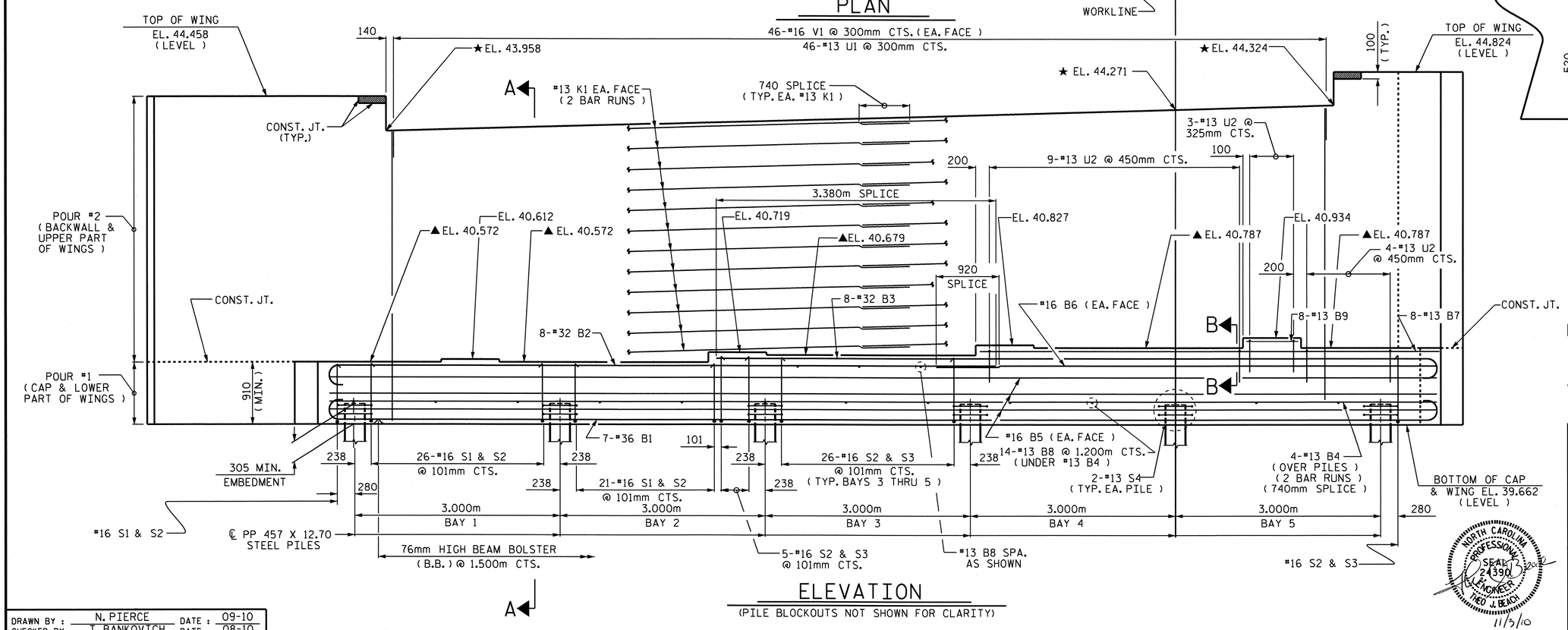

ELEVATION

(PILE BLOCKOUTS NOT SHOWN FOR CLARITY)

PROJECT NO. X-0002CB
CUMBERLAND COUNTY
STATION: 146+39.081 -L-

SHEET 1 OF 3

STATE OF NORTH CAROLINA
DEPARTMENT OF TRANSPORTATION
RALEIGH

SUBSTRUCTURE
END BENT No. 2
(WBL)

NORTH CAROLINA PROFESSIONAL SEAL 24390 ENGINEER THEO J. BEACH 11/3/10

REVISIONS								SHEET NO.
NO.	BY:	DATE:	NO.	BY:	DATE:			S-99
1			3					TOTAL SHEETS
2			4					134

DRAWN BY : N. PIERCE DATE : 09-10
CHECKED BY : T. BANKOVICH DATE : 08-10

STR. #3

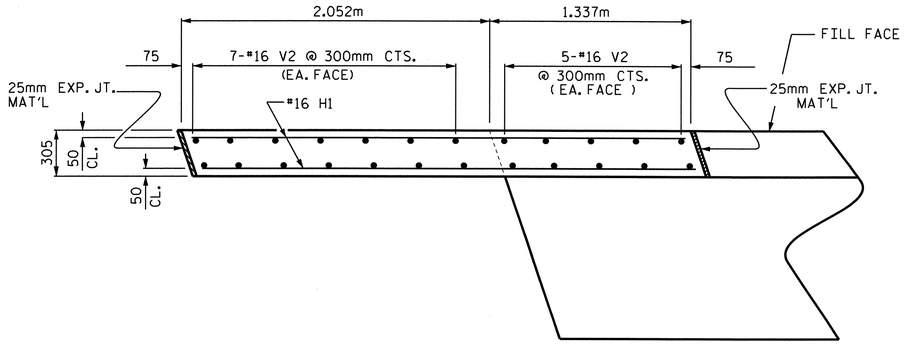

PLAN OF WING (W1)

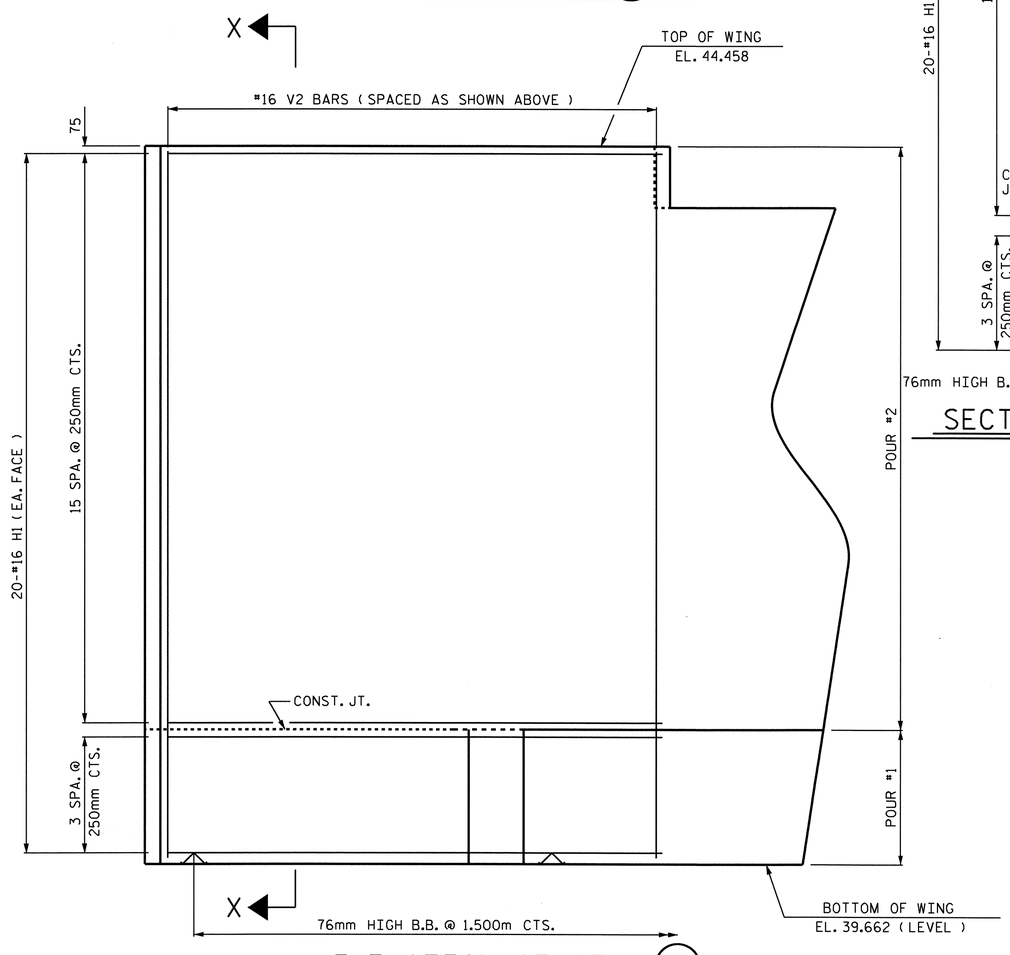

ELEVATION OF WING (W1)

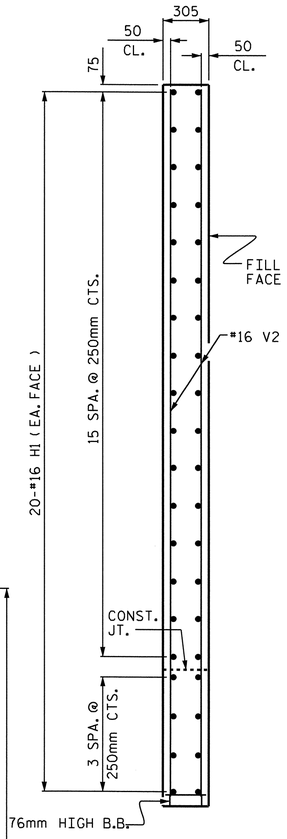

SECTION X-X

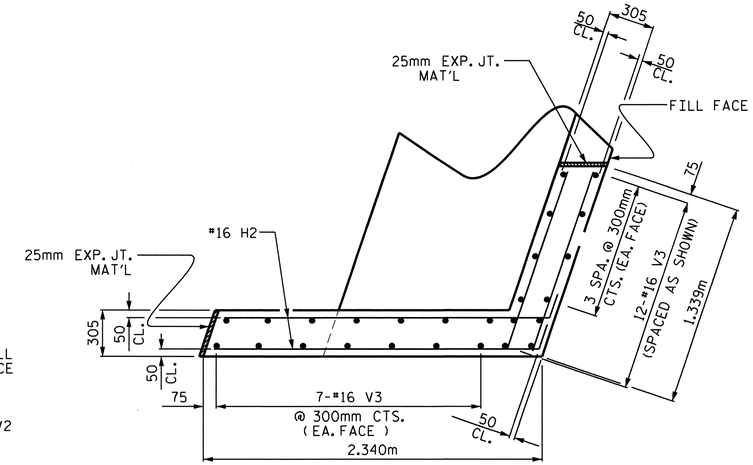

PLAN OF WING (W2)

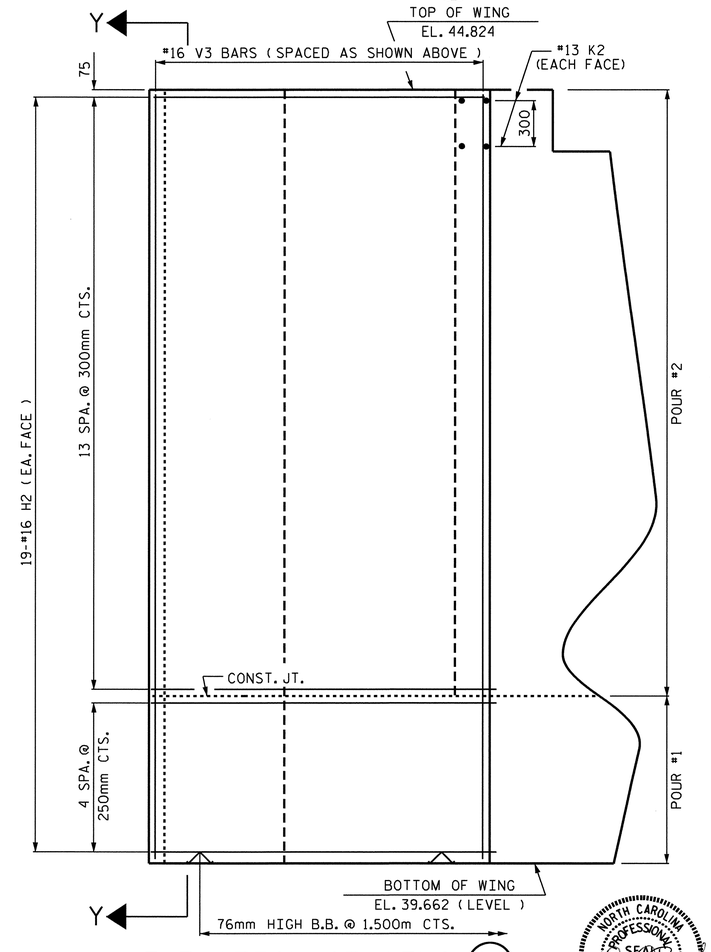

ELEVATION OF WING (W2)

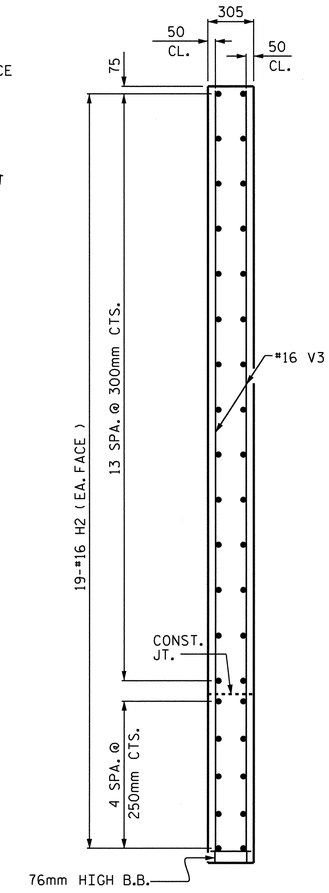

SECTION Y-Y

PROJECT NO. X-0002CB
CUMBERLAND COUNTY
STATION: 146+39.081 -L-

SHEET 2 OF 3

STATE OF NORTH CAROLINA
DEPARTMENT OF TRANSPORTATION
RALEIGH

SUBSTRUCTURE
END BENT No. 2
(WBL)

NORTH CAROLINA PROFESSIONAL SEAL 23901 ENGINEER THEO J. BEACH 11/3/10

REVISIONS							
NO.	BY:	DATE:	NO.	BY:	DATE:		
1			3				
2			4				

SHEET NO. S-100
TOTAL SHEETS 134

DRAWN BY : N. PIERCE DATE : 09-10
CHECKED BY : T. BANKOVICH DATE : 08-10

STR. #3

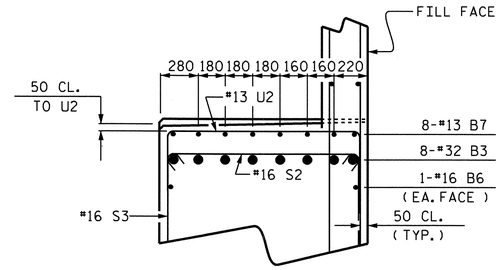

PARTIAL SECTION B-B

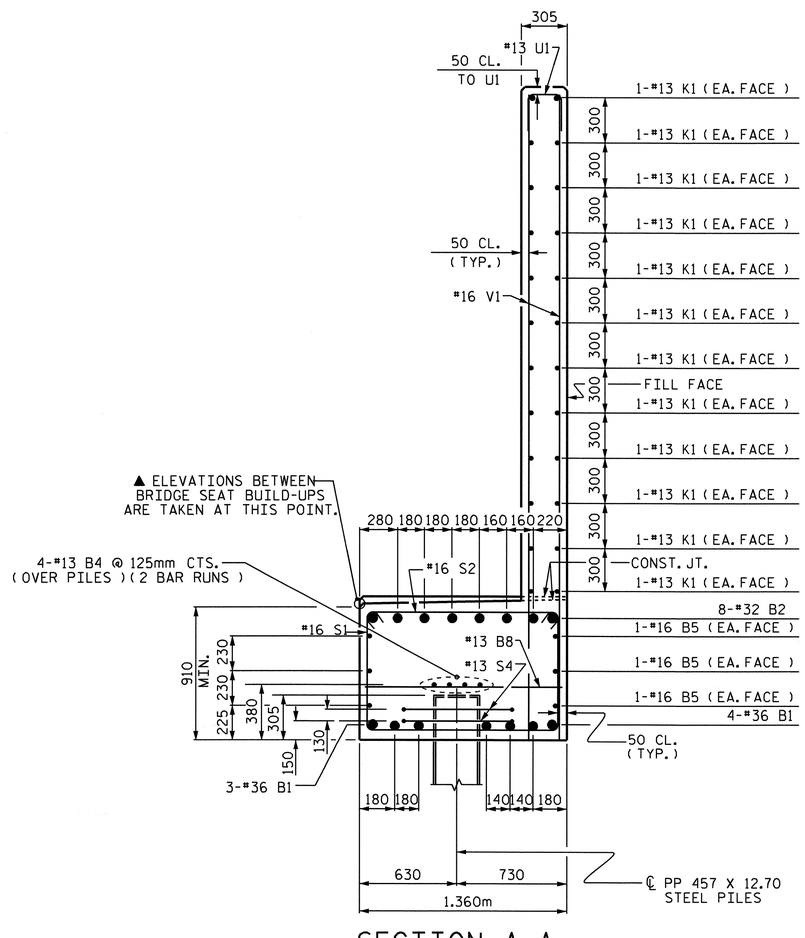

SECTION A-A

(PILE BLOCKOUT NOT SHOWN FOR CLARITY)

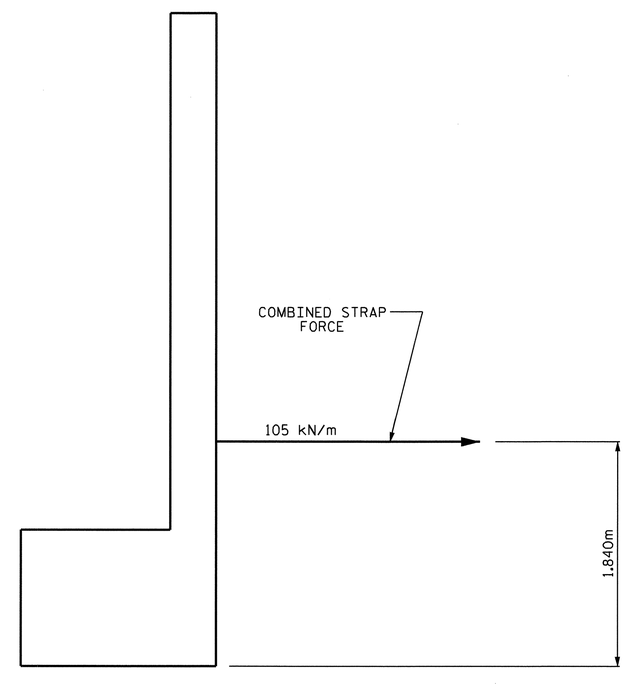

TIEBACK DETAIL

FOR SOIL RINFORCEMENT DETAIL & BACKWALL CONNECTION,
SEE MSE WALL PLANS.

BAR TYPES

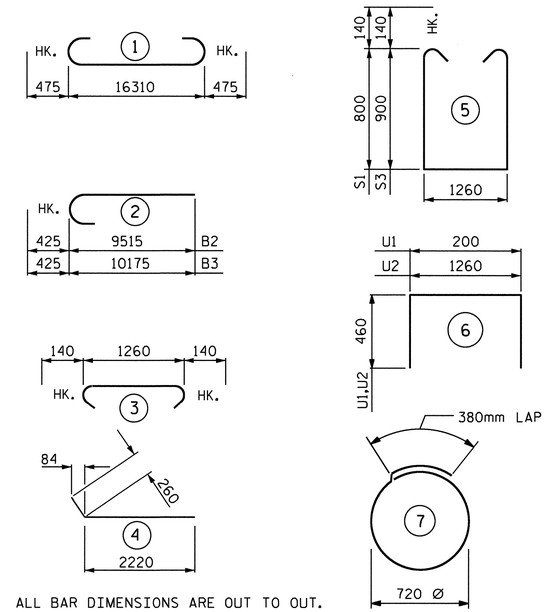

ALL BAR DIMENSIONS ARE OUT TO OUT.

BILL OF MATERIAL

END BENT No. 2

BAR	No.	SIZE	TYPE	LENGTH	WEIGHT
B1	7	#36	1	17260	955
B2	8	#32	2	9940	509
B3	8	#32	2	10600	543
B4	8	#13	STR	8560	68
B5	6	#16	STR	16360	152
B6	2	#16	STR	7740	24
B7	8	#13	STR	6300	50
B8	17	#13	STR	1260	21
B9	8	#13	STR	740	6
H1	40	#16	STR	3280	204
H2	38	#16	4	2480	146
K1	48	#13	STR	8600	410
K2	4	#13	STR	1220	5
S1	48	#16	5	3140	234
S2	132	#16	3	1540	315
S3	84	#16	5	3340	435
S4	12	#13	7	2660	32
U1	46	#13	6	1120	51
U2	16	#13	6	2180	35
V1	92	#16	STR	4180	597
V2	24	#16	STR	4680	174
V3	26	#16	STR	5060	204

REINFORCING STEEL 5170 Kg.

CLASS A CONCRETE BREAKDOWN

POUR #1
(CAP & LOWER PART OF WINGS)
= 23.8 m^3

POUR #2
(BACKWALL & UPPER PART OF WINGS)
= 22.9 m^3

TOTAL CLASS A CONCRETE = 46.7 m^3

PP 457 X 12.70 STEEL PILES
No. 6 LIN. METERS = 96

PIPE PILE PLATES = 6 EA.

THE CONCRETE DISPLACED BY THE PLUGGED
PP 457 X 12.70 STEEL PILES HAS BEEN
DEDUCTED FROM THE POUR #1 CONCRETE QUANTITY

PROJECT NO. X-0002CB
CUMBERLAND COUNTY
STATION: 146+39.081 -L-

SHEET 3 OF 3

STATE OF NORTH CAROLINA
DEPARTMENT OF TRANSPORTATION
RALEIGH

SUBSTRUCTURE

END BENT No. 2

(WBL)

REVISIONS							
NO.	BY:	DATE:	NO.	BY:	DATE:		
1			3				
2			4				

SHEET NO. S-101
TOTAL SHEETS 134

NORTH CAROLINA PROFESSIONAL SEAL 24396 ENGINEER THEO J. BEACH
11/3/10

DRAWN BY : N. PIERCE DATE : 09-10
CHECKED BY : T. BANKOVICH DATE : 08-10

STR. #3

NOTES

PIPE PILES SHALL BE IN ACCORDANCE WITH SECTION 1084 OF THE STANDARD SPECIFICATIONS.

PIPE PILE PLATES, IF REQUIRED, SHALL BE IN ACCORDANCE WITH SECTION 450 OF THE STANDARD SPECIFICATIONS.

REMOVE AND REPLACE OR REPAIR TO THE SATISFACTION OF THE ENGINEER PILES THAT ARE DAMAGED, DEFORMED OR COLLAPSED DURING INSTALLATION OR DRIVING.

PILE SPLICES SHALL BE IN ACCORDANCE WITH THE STANDARD SPECIFICATIONS AND AWS D1.1.

FOR CLOSED END PIPE PILES, REMOVE ALL SOIL AND WATER FROM INSIDE THE PILES JUST PRIOR TO PLACING CONCRETE FOR THE CONCRETE PLUG.

FORM THE CONCRETE PLUG SUCH THAT THE CONCRETE DOES NOT MOVE. DO NOT PLACE CONCRETE IN THE END BENT CAP UNTIL THE CONCRETE PLUG HAS ATTAINED A MINIMUM COMPRESSIVE STRENGTH OF 10.3 MPa.

CLASS A CONCRETE IS CONSIDERED INCIDENTAL TO THE CONTRACT UNIT PRICE BID PER METER FOR PP 457 X 12.70 STEEL PILES.

THE CONTRACTOR MAY PROPOSE AN ALTERNATE METHOD FOR PLUGGING THE STEEL PIPE PILE, SUBJECT TO APPROVAL BY THE ENGINEER.

CLASS A CONCRETE FOR ONE PP 457 X 12.70 STEEL PILE	
305mm MIN. PLUG	0.05 m³

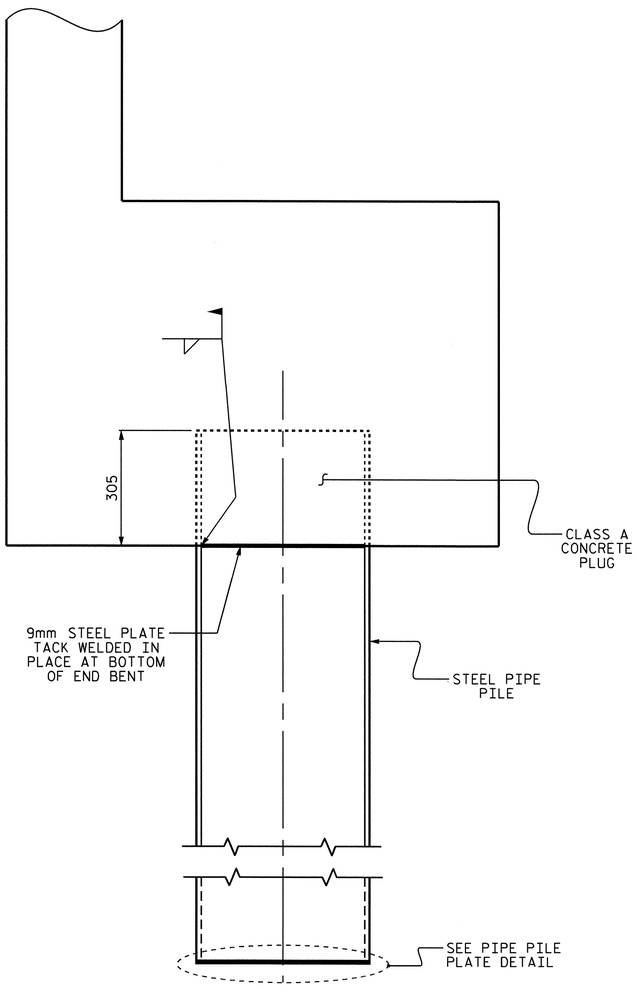

ELEVATION

PP 457 X 12.70 STEEL PILE

(CLOSED END)

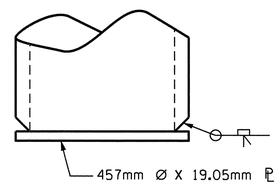

PIPE PILE PLATE DETAIL

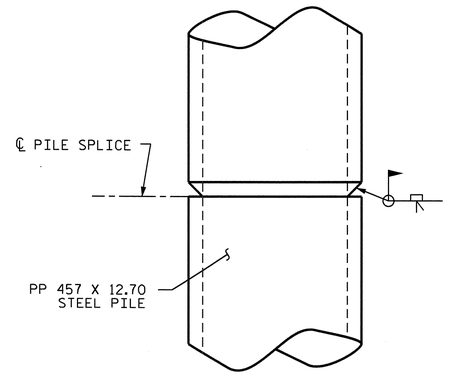

PIPE PILE SPLICE DETAIL

PROJECT NO. X-0002CB

CUMBERLAND COUNTY

STATION: 146+39.081 -L-

STATE OF NORTH CAROLINA
DEPARTMENT OF TRANSPORTATION
RALEIGH

STANDARD

457mm STEEL PIPE PILE

(WBL)

NORTH CAROLINA PROFESSIONAL SEAL 24391 ENGINEER THEO J. BEACH
11/3/10

ASSEMBLED BY : N. PIERCE	DATE : 08-10
CHECKED BY : T. BANKOVICH	DATE : 08-10

DRAWN BY : RWW 1/01	REV. 5/7/03 RWW/JTE
CHECKED BY : LES 1/01	REV. 10/1/05 LBG/TLA
	REV. 5/1/06R MAA/KMM

REVISIONS							SHEET NO.
NO.	BY:	DATE:	NO.	BY:	DATE:		S-102
1			3				TOTAL SHEETS
2			4				134

22-SEP-2010 14:43
Z:\Structures\Str3US401\Single_SpanBridge\Sub_Draw\X-0002CB_SD_E*_1.dgn
tbeach

STR. #3

GENERAL NOTES:

SLOPE PROTECTION SHALL BE PLACED UNDER THE ENDS OF THE BRIDGE AS SHOWN IN THE DETAILS. MEASUREMENT AND PAYMENT SHALL BE PRESCRIBED IN SECTION 462 OF THE STANDARD SPECIFICATIONS.

SLOPE PROTECTION:

SLOPE PROTECTION SHALL CONSIST OF 100mm POURED-IN-PLACE CONCRETE PAVING AS SHOWN IN THE DETAILS ON THIS SHEET. CONCRETE SHALL BE CLASS "B". THE CONCRETE SURFACE SHALL BE FLOATED WITH A WOODEN FLOAT AND FINISHED. WELDED WIRE FABRIC REINFORCING SHALL BE 152 X 152 - W9.1 X W9.1, 1520mm WIDE. SLOPE PROTECTION SHALL BE POURED IN 1520mm STRIPS AS SHOWN IN THE "POURING DETAIL" WITH 600mm LONG #13 BARS PLACED ALONG THE SLOPE BETWEEN STRIPS AT 450mm MAXIMUM SPACING. SLOPE PROTECTION MAY BE POURED IN ALTERNATE 1220mm AND 1520mm STRIPS AS SHOWN IN THE "OPTIONAL POURING DETAIL" WITH ADJACENT RUNS OF WELDED WIRE FABRIC LAPPING AT LEAST 152mm. THE COST OF THE WELDED WIRE FABRIC AND #13 BARS, IF USED, SHALL BE INCLUDED IN THE CONTRACT UNIT PRICE BID PER SQUARE METER FOR SLOPE PROTECTION.

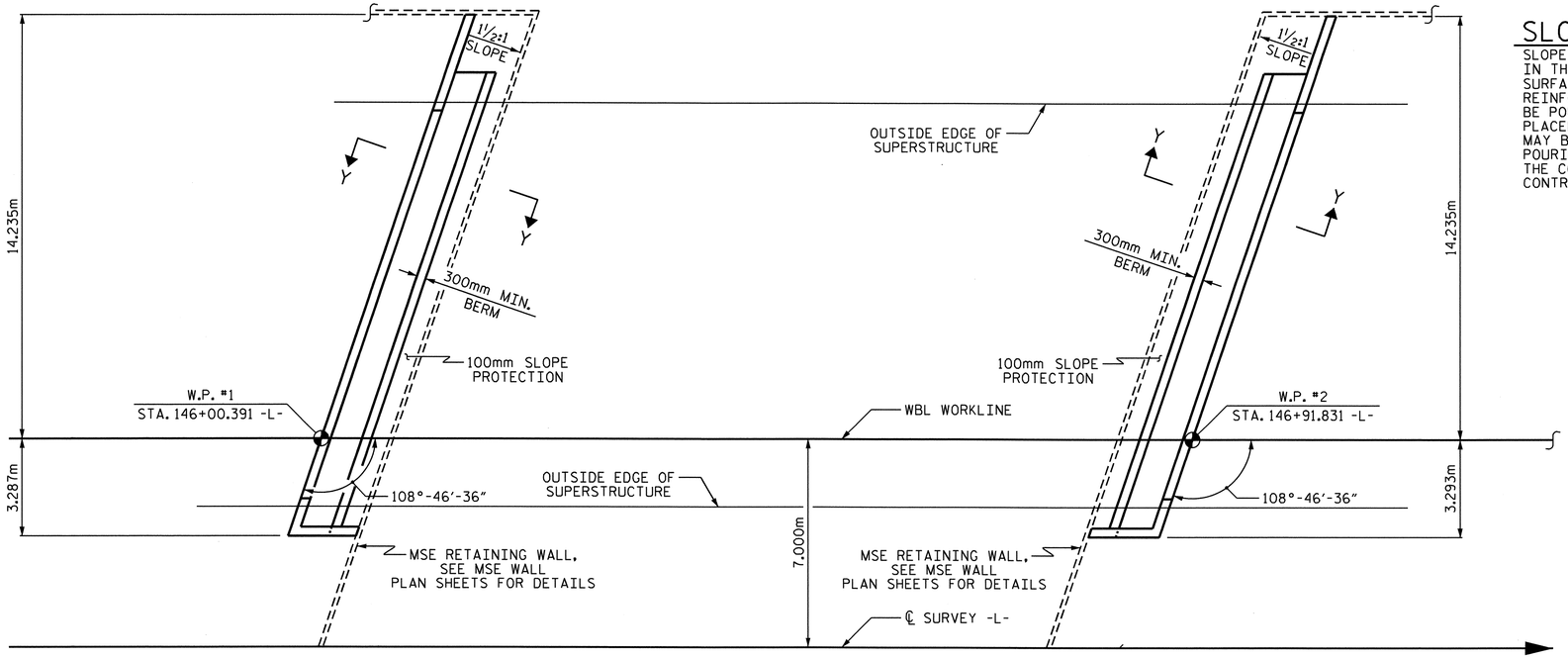

PLAN AT END BENT No. 1

PLAN AT END BENT No. 2

BRIDGE @ STA. 146+39.081 -L-	100mm SLOPE PROTECTION	* WELDED WIRE FABRIC 1520mm WIDE
	SQUARE METERS	APPROX. METERS
END BENT No. 1	24	16
END BENT No. 2	24	16

* QUANTITY SHOWN IS BASED ON 1520mm POURS.

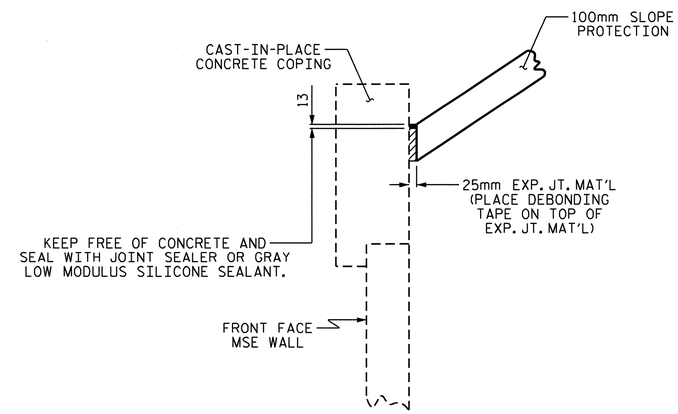

DETAIL "A"

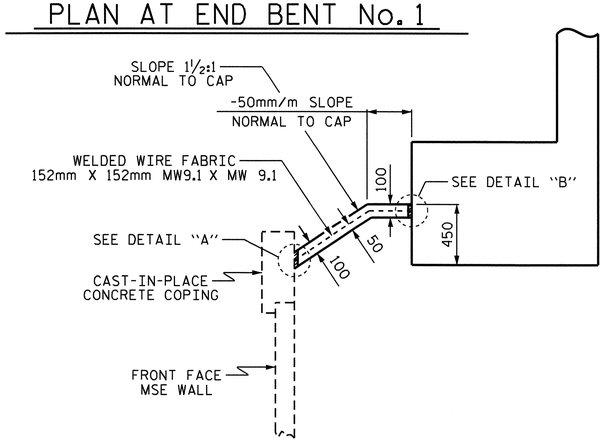

SECTION Y-Y

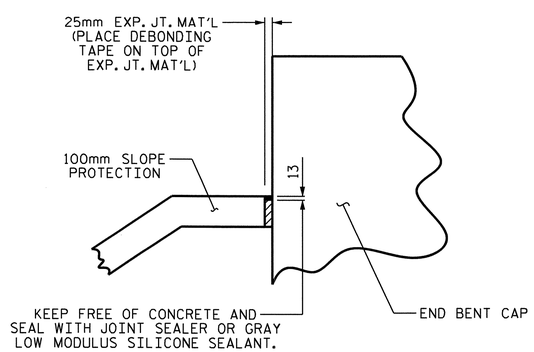

DETAIL "B"

PROJECT NO. X-0002CB

CUMBERLAND COUNTY

STATION: 146+39.081 -L-

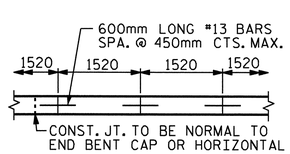

POURING DETAIL

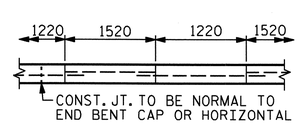

POUR A 1220mm STRIP FIRST

OPTIONAL POURING DETAIL

STATE OF NORTH CAROLINA
DEPARTMENT OF TRANSPORTATION
RALEIGH

STANDARD
SLOPE PROTECTION DETAILS

(WBL)

NORTH CAROLINA PROFESSIONAL SEAL 20390 ENGINEER THEO J. BEACH
11/3/10

REVISIONS								SHEET NO.
NO.	BY:	DATE:		NO.	BY:	DATE:		S-103
1				3				TOTAL SHEETS
2				4				134

DRAWN BY : T. BANKOVICH DATE : 4-2010
CHECKED BY : S.B. WILLIAMS DATE : 5-2010

22-SEP-2010 14:45
Z:\Structures\Str3US401\Single_SpanBridge\Misc_draw\X-0002C_str4_SP.dgn
tbeach

STD. NO. SP1SM

STR. #3

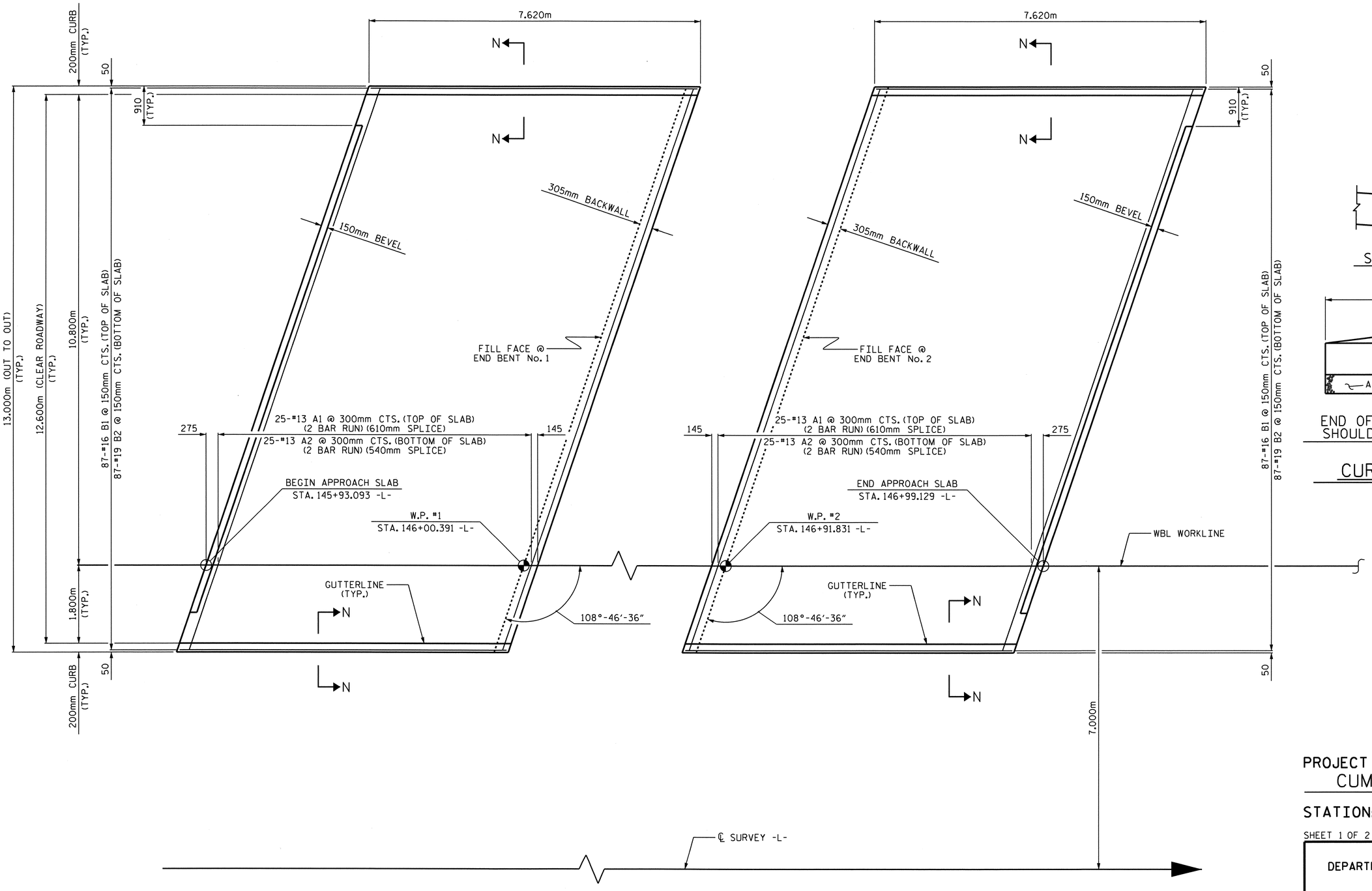

PLAN AT END BENT No. 1

PLAN AT END BENT No. 2

PLAN OF APPROACH SLABS

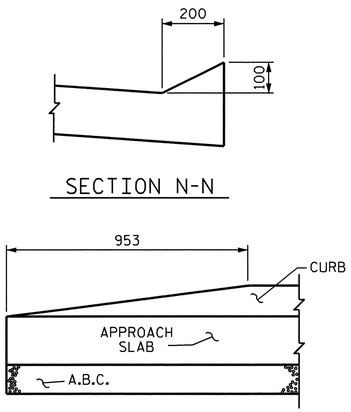

SECTION N-N

END OF CURB WITHOUT SHOULDER BERM GUTTER

CURB DETAILS

PROJECT NO. X-0002CB
CUMBERLAND COUNTY
STATION: 146+39.081 -L-

SHEET 1 OF 2

STATE OF NORTH CAROLINA
DEPARTMENT OF TRANSPORTATION
RALEIGH

BRIDGE APPROACH SLAB

(WBL)

NORTH CAROLINA PROFESSIONAL SEAL 20390 ENGINEER THEO J. BEACH
11/3/10

REVISIONS						SHEET NO.
NO.	BY:	DATE:	NO.	BY:	DATE:	S-104
1			3			TOTAL SHEETS
2			4			134

DRAWN BY : T. BANKOVICH DATE : 4-2010
CHECKED BY : S.B. WILLIAMS DATE : 5-2010

22-SEP-2010 15:19
Z:\Structures\Str3US401\Single_SpanBridge\Misc_draw\X0002C_str4_AS.dgn
tbeach

STR. #3

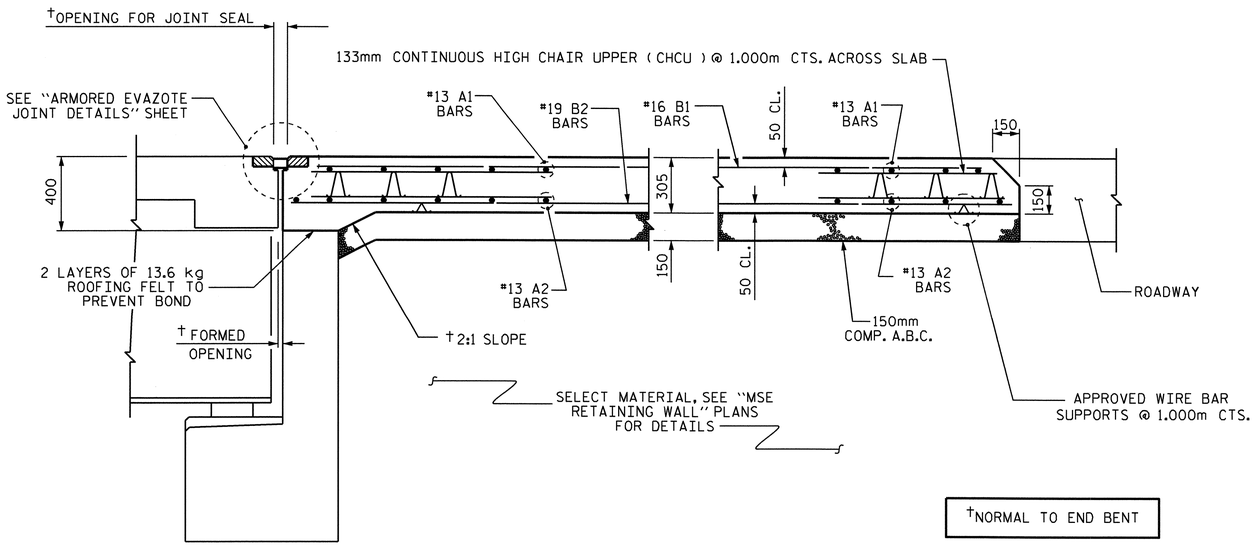

†NORMAL TO END BENT

SECTION THRU SLAB

(END BENT No. 2 SHOWN, END BENT No. 1 SIMILAR)

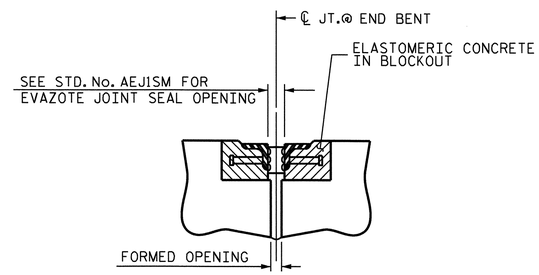

SECTION C-C

ARMORED EVAZOTE JOINT SEAL

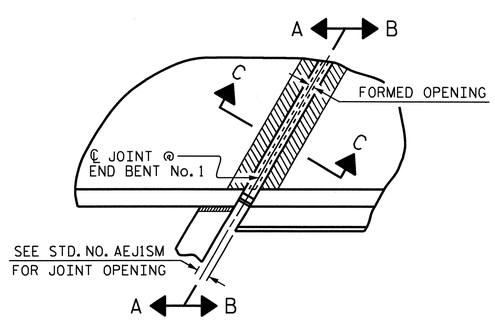

PLAN

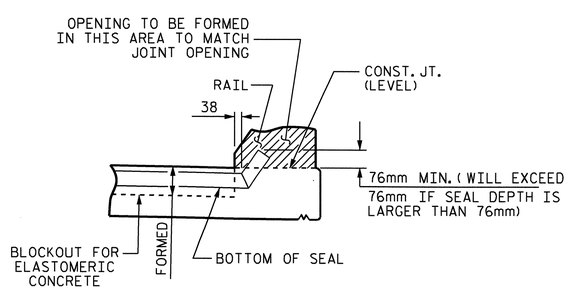

SECTION A-A

EVAZOTE JOINT SEAL TO BE CUT, HEAT WELDED AND TURNED UP PARALLEL TO SLOPED FACE OF THE BARRIER RAIL.

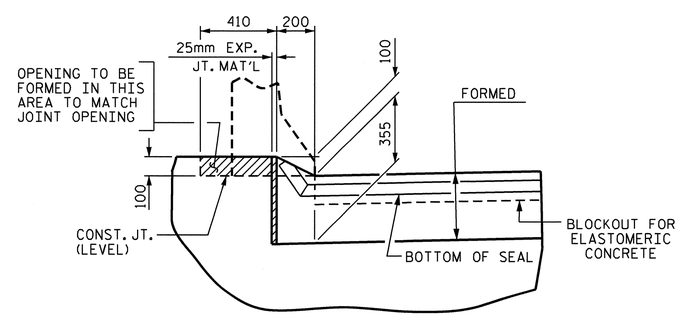

SECTION B-B

JOINT SEAL DETAILS @ END BENT

END BENT No. 1 SHOWN, END BENT No. 2 SIMILAR

NOTES

APPROACH SLAB SHALL NOT BE CONSTRUCTED PRIOR TO COMPLETION OF THE BRIDGE DECK.

AREA BETWEEN THE MSE WALLS AND APPROACH SLAB SHALL BE GRADED TO DRAIN THE WATER AWAY FROM THE FILL FACE OF THE BRIDGE AND SHALL BE PAVED. SEE ROADWAY PLANS.

THE 150mm COMP. A.B.C. SHALL BE FLUSH WITH THE ROADWAY END OF THE APPROACH SLAB AND SHALL EXTEND 300mm OUTSIDE OF EACH EDGE OF THE APPROACH SLAB.

THE CONTRACTOR MAY USE 100mm TYPE B-25.0B ASPHALT CONCRETE COURSE IN LIEU OF 150mm COMP. A.B.C. IF THIS OPTION IS USED, THE BASE COURSE SHALL BE FLUSH WITH THE ROADWAY END OF THE APPROACH SLAB, AND THE WIDTH SHALL BE THE SAME AS THAT OF THE APPROACH SLAB.

THE CONTRACTOR MAY USE 125mm CLASS "A" CONCRETE BASE IN LIEU OF 150mm COMP. A.B.C. IF THIS OPTION IS USED, THE CONCRETE BASE SHALL BE FLUSH WITH THE ROADWAY END OF THE APPROACH SLAB, AND THE WIDTH SHALL BE THE SAME AS THAT OF THE APPROACH SLAB. THE CONCRETE SHALL BE FINISHED TO A SMOOTH SURFACE AND A LAYER OF 13.6 kg ROOFING FELT SHALL BE PLACED BETWEEN THE CONCRETE BASE AND THE APPROACH SLAB TO PREVENT BOND. THE APPROACH SLAB SHALL NOT BE CAST UNTIL THE CONCRETE BASE HAS REACHED AN AGE OF THREE CURING DAYS.

FOR EVAZOTE JOINT SEALS, SEE SPECIAL PROVISIONS.

THE NOMINAL UNCOMPRESSED SEAL WIDTH OF THE EVAZOTE JOINT SEAL SHALL BE 87mm AT END BENT No. 1 AND 64mm AT END BENT No. 2.

FOR ELASTOMERIC CONCRETE, SEE SPECIAL PROVISIONS.

BILL OF MATERIAL

APPROACH SLAB AT EB #1

BAR	NO.	SIZE	TYPE	LENGTH	WEIGHT
* A1	50	#13	STR	7120	354
A2	50	#13	STR	7100	353
* B1	87	#16	STR	7220	975
B2	87	#19	STR	7520	1462
REINFORCING STEEL					1815 kg.
* EPOXY COATED REINFORCING STEEL					1329 kg.
CLASS AA CONCRETE					30.6 C.M.

APPROACH SLAB AT EB #2

BAR	NO.	SIZE	TYPE	LENGTH	WEIGHT
* A1	50	#13	STR	7120	354
A2	50	#13	STR	7100	353
* B1	87	#16	STR	7220	975
B2	87	#19	STR	7520	1462
REINFORCING STEEL					1815 kg.
* EPOXY COATED REINFORCING STEEL					1329 kg.
CLASS AA CONCRETE					30.6 C.M.

PROJECT NO. X-0002CB

CUMBERLAND COUNTY

STATION: 146+39.081 -L-

SHEET 2 OF 2

STATE OF NORTH CAROLINA
DEPARTMENT OF TRANSPORTATION
RALEIGH

STANDARD

BRIDGE APPROACH SLAB FOR FLEXIBLE PAVEMENT

(WBL)

NORTH CAROLINA PROFESSIONAL SEAL 24390 ENGINEER THEO J. BEACH 11/3/10

REVISIONS								SHEET NO.
NO.	BY:	DATE:	NO.	BY:	DATE:			S-105
1			3					TOTAL SHEETS
2			4					134

ASSEMBLED BY : T. BANKOVICH	DATE : 4-2010	
CHECKED BY : S.B. WILLIAMS	DATE : 5-2010	
DRAWN BY : FCJ 6/87	REV. 7/10/01	RWW/LES
CHECKED BY : EGA 6/87	REV. 5/7/03R	RWW/JTE
	REV. 5/1/06R	KMM/GM

22-SEP-2010 14:45
Z:\Structures\Str3US401\Single_SpanBridge\Misc_draw\X0002C_str4_AS.dgn
tbeach

STR. #3

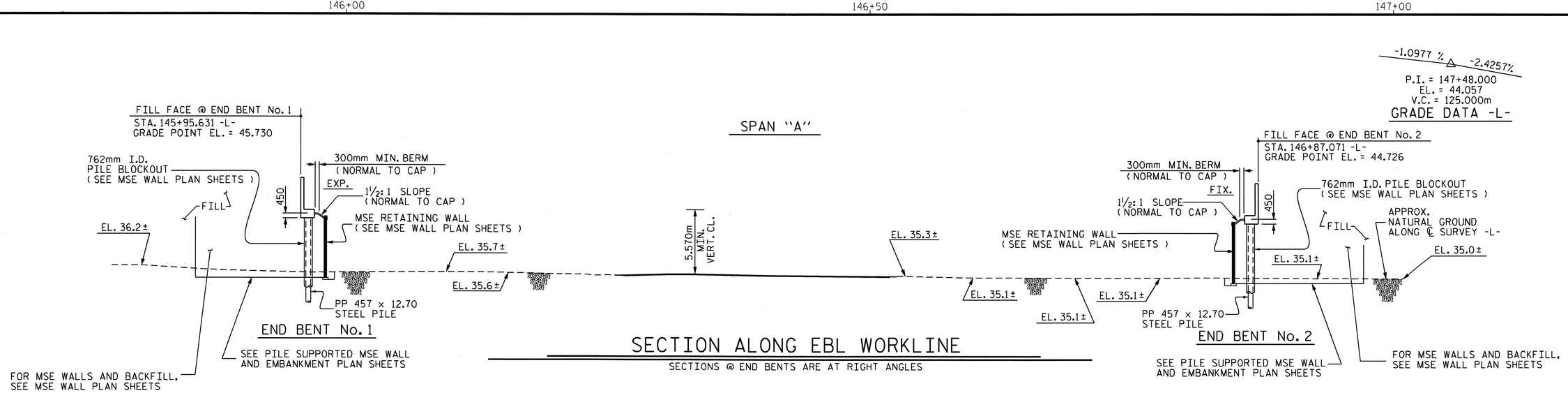

SECTION ALONG EBL WORKLINE

SECTIONS @ END BENTS ARE AT RIGHT ANGLES

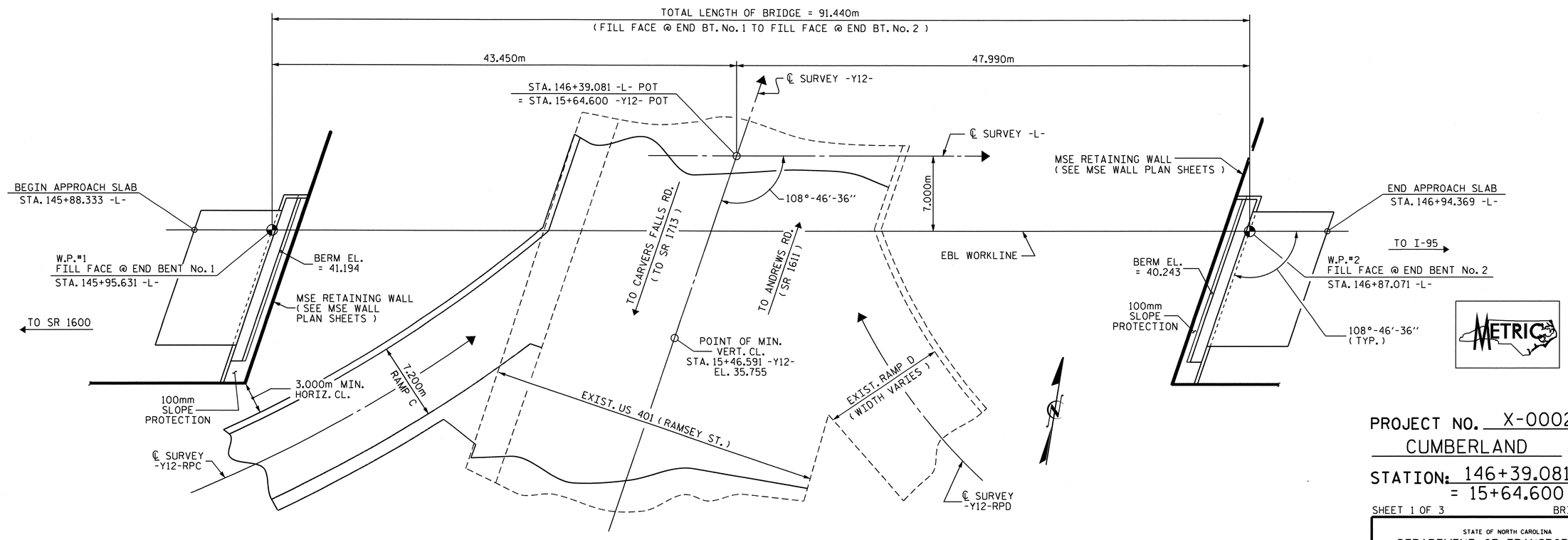

PLAN

PILES ARE NOT SHOWN IN PLAN VIEW

PROJECT NO. X-0002 CB

CUMBERLAND COUNTY

STATION: 146+39.081 -L-
= 15+64.600 -Y12-

SHEET 1 OF 3 BRIDGE No. 381

STATE OF NORTH CAROLINA
DEPARTMENT OF TRANSPORTATION
RALEIGH

GENERAL DRAWING

EBL BRIDGE OVER
US 401 (RAMSEY ST.)
ON FAYETTEVILLE OUTER LOOP
BETWEEN SR 1600 & I-95

NORTH CAROLINA PROFESSIONAL SEAL 11268 ENGINEER BETSY S. COX — 11-3-10

NORTH CAROLINA PROFESSIONAL SEAL 21390 ENGINEER THEO J. BEACH — 11/3/10

REVISIONS								SHEET NO.
NO.	BY:	DATE:	NO.	BY:	DATE:			S-106
1			3					TOTAL SHEETS
2			4					134

DRAWN BY : MIKE BRITT DATE : 9-13-10
CHECKED BY : T.J. BEACH DATE : 9-13-10

03-NOV-2010 12:33
R:\Structures\Str4US401\Single_SpanBridge\Gen_draw\x0002c_str5_GD.dgn
tbeach

STR.#4

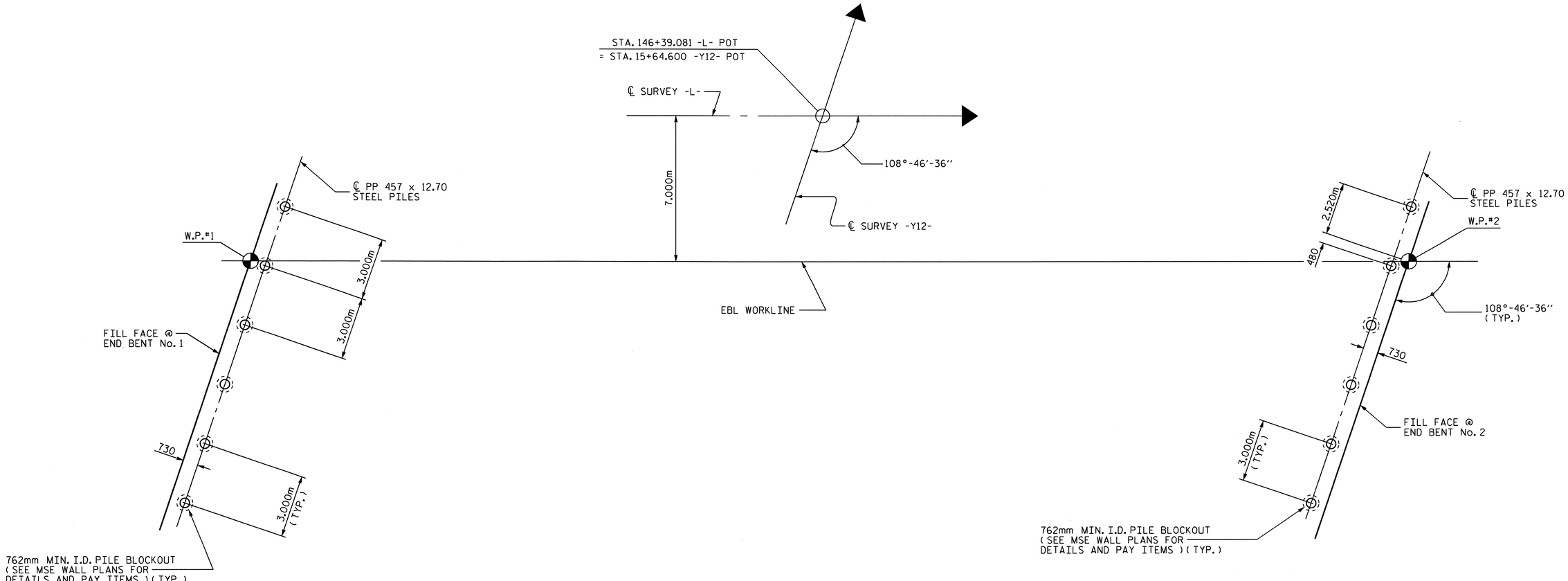

FOUNDATION LAYOUT

ALL PILES ARE VERTICAL

NOTES :

DRIVE PILES AT END BENT No. 1 AND END BENT No. 2 TO A REQUIRED BEARING CAPACITY OF 3600 KN PER PILE. THE REQUIRED BEARING CAPACITY IS EQUAL TO THE ALLOWABLE BEARING CAPACITY WITH A MINIMUM FACTOR OF SAFETY OF TWO.

THE ALLOWABLE BEARING CAPACITY FOR PILES AT END BENT No. 1 AND END BENT No. 2 IS 1800 KN PER PILE.

TESTING THE FIRST PRODUCTION PILE WITH THE PILE DRIVING ANALYZER DURING DRIVING, RESTRIKING OR REDRIVING IS REQUIRED AT END BENT No. 1 OR END BENT No. 2. FOR PILE DRIVING ANALYZER, SEE SPECIAL PROVISIONS.

IT HAS BEEN ESTIMATED THAT A HAMMER WITH AN EQUIVALENT ENERGY IN THE RANGE OF 110,000 TO 180,000 N-M PER BLOW WILL BE REQUIRED TO DRIVE PILES AT END BENT No. 1 AND END BENT No. 2. THIS ESTIMATED ENERGY RANGE DOES NOT RELEASE THE CONTRACTOR FROM ARTICLE 450-5 OF THE STANDARD SPECIFICATIONS.

PIPE PILE PLATES ARE REQUIRED FOR PIPE PILES AT END BENT No. 1 AND END BENT No. 2. USE PIPE PILE PLATES WITH A DIAMETER EQUAL TO THE PIPE PILE DIAMETER.

SEE PILE SUPPORTED MSE WALL AND EMBANKMENT PLANS FOR PIPE PILE PENETRATION DETAILS THROUGH LOAD TRANSFER PLATFORM AT END BENT No. 1 AND END BENT No. 2.

DRIVE PIPE PILES AT END BENT No. 1 AND END BENT No. 2 TO A TIP ELEVATION OF 29.0 METERS PRIOR TO CONSTRUCTION OF THE ABUTMENT WALL.

AFTER CONSTRUCTING THE ABUTMENT MSE WALL TO FINISHED GRADE ELEVATION AT END BENT No. 1 AND END BENT No. 2, DRIVE THE PREVIOUSLY INSTALLED PILES TO THE REQUIRED BEARING CAPACITY THROUGH THE 762mm BLOCKOUTS.

SEE MSE WALL PLANS AND PILE SUPPORTED MSE WALL AND EMBANKMENT PLANS FOR END BENT No. 1 AND END BENT No. 2 ABUTMENT WALLS, END BENT CONSTRUCTION DETAILS AND END BENT CAP STRAP LINE LOADS.

FOR EMBANKMENT MONITORING DETAILS, SEE ROADWAY PLANS.

(FOR ADDITIONAL NOTES, SEE SHEET 3 OF 3.)

NORTH CAROLINA PROFESSIONAL SEAL 24390 ENGINEER THEO J. BEACH
11/3/10

PROJECT NO. X-0002 CB
CUMBERLAND COUNTY
STATION: 146+39.081 -L-
= 15+64.600 -Y12-

SHEET 2 OF 3

STATE OF NORTH CAROLINA
DEPARTMENT OF TRANSPORTATION
RALEIGH

GENERAL DRAWING
EBL BRIDGE OVER
US 401 (RAMSEY ST.)
ON FAYETTEVILLE OUTER LOOP
BETWEEN SR 1600 & I-95

REVISIONS						SHEET NO.
NO.	BY:	DATE:	NO.	BY:	DATE:	S-107
1			3			TOTAL SHEETS
2			4			134

DRAWN BY : MIKE BRITT DATE : 9-14-10
CHECKED BY : T.J. BEACH DATE : 9-15-10

22-SEP-2010 15:34
Z:\Structures\Str4US401\Single_SpanBridge\Gen_draw\x0002c_str5_GD.dgn
tbeach

STR.#4

TOTAL BILL OF MATERIAL

EBL	PDA TESTING	PDA ASSISTANCE	REINFORCED CONCRETE DECK SLAB	GROOVING BRIDGE FLOORS	CLASS A CONCRETE	BRIDGE APPROACH SLABS	REINFORCING STEEL	STRUCTURAL STEEL	PP 457 X 12.70 STEEL PILES		PIPE PILE PLATES	PILE REDRIVES	CONCRETE BARRIER RAIL	100mm SLOPE PROTECTION	POT BEARINGS	EVAZOTE JOINT SEALS
	EACH	EACH	SQ. METERS	SQ. METERS	CU. METERS	LUMP SUM	kg	APPROX. kg	No.	METERS	EACH	EACH	METERS	SQ. METERS	LUMP SUM	LUMP SUM
SUPERSTRUCTURE			1,233.4	1,223.4		LUMP SUM		504,000					181.522		LUMP SUM	LUMP SUM
END BENT No. 1					46.7		5,171		6	96.000	6	6		24		
END BENT No. 2					46.7		5,169		6	96.000	6	6		24		
TOTAL	1	1	1,233.4	1,223.4	93.4	LUMP SUM	10,340	504,000	12	192.000	12	12	181.522	48	LUMP SUM	LUMP SUM

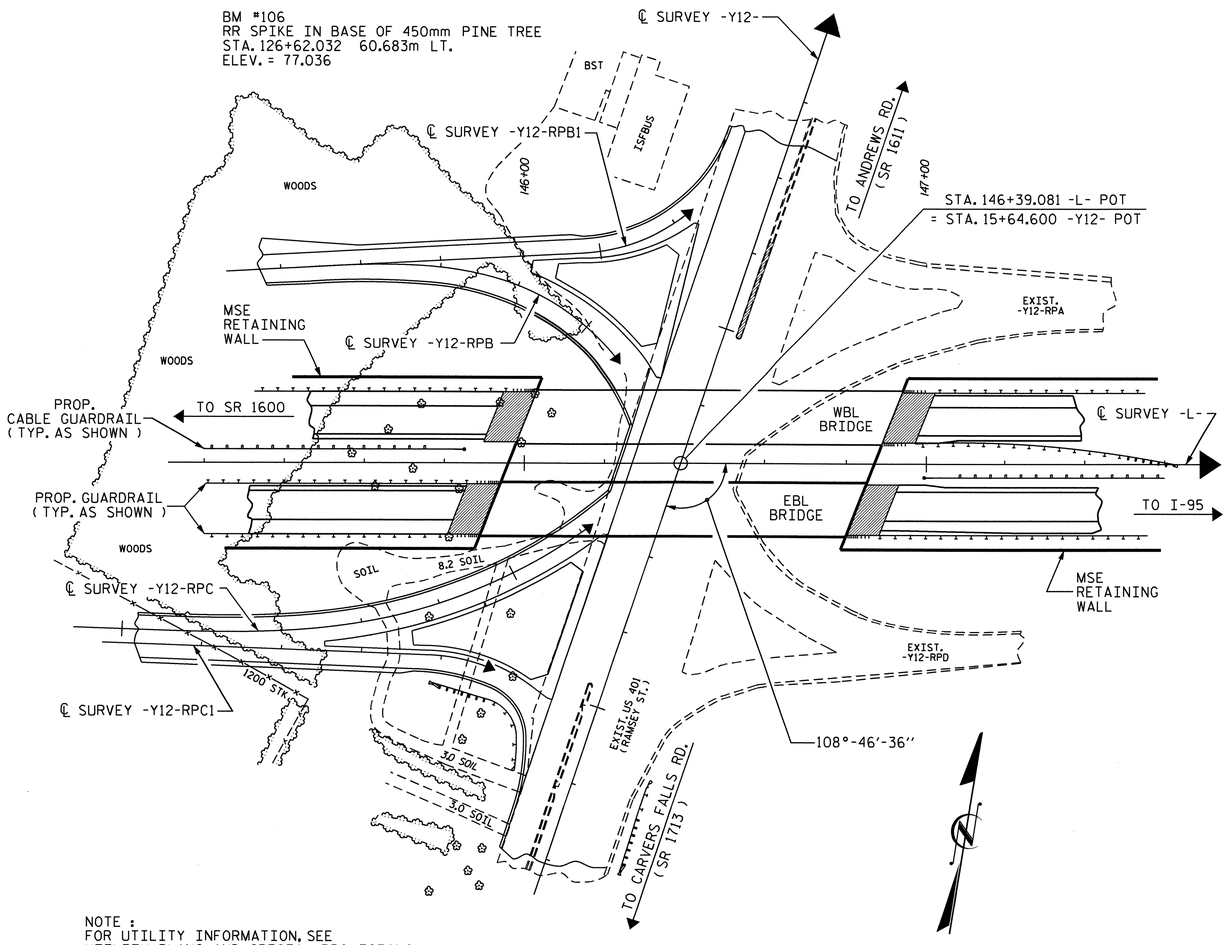

NOTE :
FOR UTILITY INFORMATION, SEE
UTILITY PLANS AND SPECIAL PROVISIONS

LOCATION SKETCH

NOTES : (CONTINUED FROM SHEET 2 OF 3)

ASSUMED LIVE LOAD = MS 22.5 OR ALTERNATE LOADING.

ALL DIMENSIONS ARE IN MILLIMETERS UNLESS OTHERWISE NOTED.

ALL ELEVATIONS ARE IN METERS.

FOR OTHER DESIGN DATA AND GENERAL NOTES, SEE SHEET SNSM.

FOR CHARPY V-NOTCH TESTS, SEE SPECIAL PROVISIONS.

STRUCTURAL STEEL SHALL BE AASHTO M270 GRADE 345W OR GRADE HPS 485W AND PAINTED IN ACCORDANCE WITH SYSTEM 4 OF ARTICLE 442-7 OF THE STANDARD SPECIFICATIONS UNLESS OTHERWISE NOTED ON THE PLANS. SEE "STRUCTURAL STEEL DETAILS" SHEETS.

FOR STRUCTURAL STEEL FOR BRIDGE, SEE SPECIAL PROVISIONS.

FOR MAINTENANCE AND PROTECTION OF TRAFFIC BENEATH PROPOSED STRUCTURE, SEE SPECIAL PROVISIONS.

FOR CRANE SAFETY, SEE SPECIAL PROVISIONS.

NEEDLE BEAMS WILL NOT BE ALLOWED UNLESS OTHERWISE CALLED FOR ON THE PLANS OR APPROVED BY THE ENGINEER.

FOR SUBMITTAL OF WORKING DRAWINGS, SEE SPECIAL PROVISIONS.

FOR METRIC STRUCTURAL STEEL, SEE SPECIAL PROVISIONS.

FOR FALSEWORK AND FORMWORK, SEE SPECIAL PROVISIONS.

THIS BRIDGE HAS BEEN DESIGNED BY THE STRENGTH DESIGN METHOD AS SPECIFIED IN AASHTO STANDARD SPECIFICATIONS.

THIS BRIDGE HAS BEEN DESIGNED IN ACCORDANCE WITH THE REQUIREMENTS OF THE AASHTO STANDARD SPECIFICATIONS FOR SEISMIC DESIGN OF HIGHWAY BRIDGES FOR SEISMIC PERFORMANCE CATEGORY A.

FOR ADHESIVELY ANCHORED ANCHOR BOLTS OR DOWELS, SEE SPECIAL PROVISIONS.

FOR GROUT FOR STRUCTURES, SEE SPECIAL PROVISIONS.

FOR SHIPPING STEEL STRUCTURAL MEMBERS, SEE SPECIAL PROVISIONS.

REMOVABLE FORMS MAY BE USED IN LIEU OF METAL STAY-IN-PLACE FORMS IN ACCORDANCE WITH ARTICLE 420-3 OF THE STANDARD SPECIFICATIONS.

FOR PLACING LOAD ON STRUCTURE MEMBERS, SEE SPECIAL PROVISIONS.

FOR CURING CONCRETE, SEE SPECIAL PROVISIONS.

FOR DIRECT TENSION INDICATORS, SEE SPECIAL PROVISIONS.

FOR PILES, SEE SPECIAL PROVISIONS.

PROJECT NO. X-0002 CB
CUMBERLAND COUNTY
STATION: 146+39.081 -L-
= 15+64.600 -Y12-
SHEET 3 OF 3

NORTH CAROLINA PROFESSIONAL SEAL 24390 ENGINEER THEO J. BEACH
1/19/2011

STATE OF NORTH CAROLINA
DEPARTMENT OF TRANSPORTATION
RALEIGH

GENERAL DRAWING
EBL BRIDGE OVER
US 401 (RAMSEY ST.)
ON FAYETTEVILLE OUTER LOOP
BETWEEN SR 1600 & I-95

REVISIONS						SHEET NO.
NO.	BY:	DATE:	NO.	BY:	DATE:	S-108
1			3			TOTAL SHEETS
2			4			134

DRAWN BY : MIKE BRITT DATE : 9-14-10
CHECKED BY : T.J. BEACH DATE : 9-15-10

19-JAN-2011 10:38
R:\Structures\Str4US401\Single_SpanBridge\Gen_draw\x0002c_str5_GD.dgn
tbeach

STR.#4

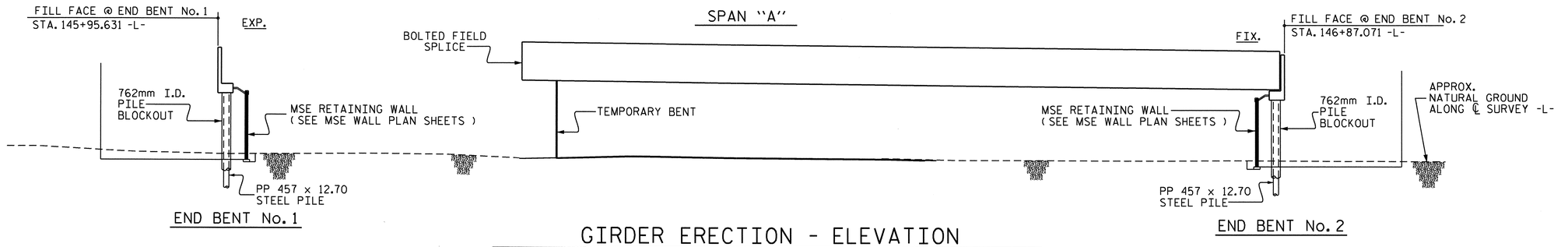

GIRDER ERECTION - ELEVATION

SECTIONS @ END BENTS ARE AT RIGHT ANGLES

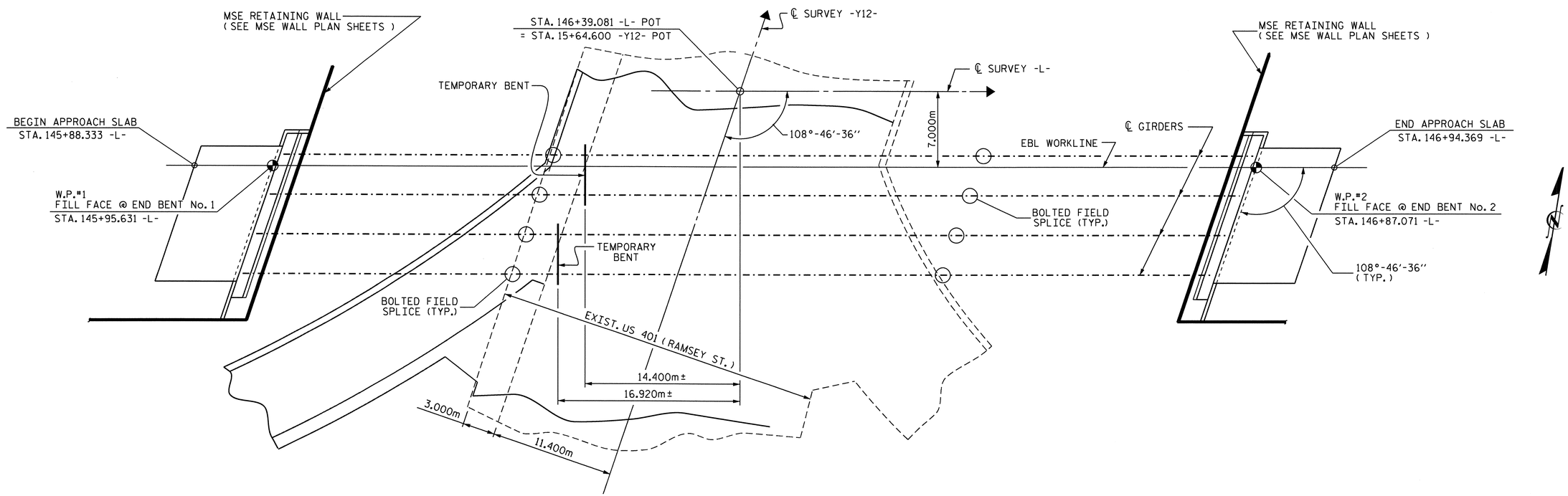

GIRDER ERECTION - PLAN

ERECTION NOTES

ERECT A MINIMUM OF TWO GIRDERS WITH ALL DIAPHRAGMS/CROSSFRAMES BETWEEN THE GIRDERS IN PLACE AND THE BOLTS TIGHTENED PRIOR TO RELEASING THE GIRDERS.

ERECT EACH SUBSEQUENT GIRDER WITH DIAPHRAGMS/CROSSFRAMES CONNECTING TO THE ADJACENT PREVIOUSLY ERECTED GIRDER AND TIGHTEN ALL BOLTS BEFORE RELEASING THE GIRDER.

THE STRUCTURAL STEEL SHALL BE SUPPORTED DURING ERECTION IN ITS CAMBERED POSITION.

PLACEMENT OF TEMPORARY BENTS SHALL BE COORDINATED WITH TRAFFIC PHASING REQUIREMENTS. SEE TRAFFIC CONTROL PLANS.

TEMPORARY BENTS SHALL REMAIN IN PLACE UNTIL ALL DIAPHRAGMS/CROSSFRAMES ARE IN PLACE AND ALL HIGH STRENGTH BOLTS ARE TIGHTENED.

TEMPORARY BENTS SHALL PROVIDE BEARING AT CONNECTOR PLATE LOCATIONS. WHEN CONNECTOR PLATES ARE USED AS TEMPORARY BEARING STIFFENERS, DIAPHRAGMS MUST BE ATTACHED.

THE CONTRACTOR'S ERECTION PLANS SHALL INCLUDE A METHOD OF TEMPORARY BENT REMOVAL THAT WILL UNIFORMLY TRANSFER THE STRUCTURAL WEIGHT TO THE DIAPHRAGMS/CROSSFRAMES AND THE GIRDERS WILL REMAIN IN THE CAMBERED POSITIONS.

PLANS FOR TEMPORARY BENT ERECTION AND REMOVAL SHALL BE SUBMITTED TO THE ENGINEER FOR REVIEW.

THE CONTRACTOR IS RESPONSIBLE FOR DESIGNING THE TEMPORARY BENTS. THE DESIGNS SHALL BE COMPLETED BY A PROFESSIONAL ENGINEER REGISTERED IN THE STATE OF NORTH CAROLINA. THE CONTRACTOR SHALL SUBMIT SIGNED AND SEALED WORKING DRAWINGS AND CALCULATIONS FOR APPROVAL BY THE ENGINEER.

DURING THE GIRDER ERECTION PROCEDURE, THE CONTRACTOR IS RESPONSIBLE FOR PROVIDING TEMPORARY LATERAL BRACING AND OTHER MEANS OF SUPPORT, AS REQUIRED, TO ENSURE STABILITY OF THE GIRDERS, AVOID UPLIFT OF THE GIRDERS AT THE TEMPORARY BENTS AND TO ENSURE PLUMBNESS OF THE GIRDERS IN THE FINAL CONDITION.

NO SEPARATE MEASUREMENT OR PAYMENT WILL BE MADE FOR PROVIDING THE TEMPORARY BENT. THE COST FOR ALL MATERIALS, EQUIPMENT, TOOLS, LABOR AND ANY INCIDENTALS NECESSARY TO PROVIDE THE TEMPORARY BENT SHALL BE CONSIDERED INCIDENTAL TO THE LUMP SUM BID PRICE FOR STRUCTURAL STEEL.

THE CONTRACTOR MAY SUBMIT AN ALTERNATE ERECTION METHOD TO THE ENGINEER FOR REVIEW AND APPROVAL.

NORTH CAROLINA PROFESSIONAL SEAL 24390 ENGINEER THEO J. BEACH 11/3/10

PROJECT NO. X-0002 C
CUMBERLAND COUNTY
STATION: 146+39.081 -L-

STATE OF NORTH CAROLINA
DEPARTMENT OF TRANSPORTATION
RALEIGH

GIRDER ERECTION DETAILS
(EBL)

REVISIONS						SHEET NO.
NO.	BY:	DATE:	NO.	BY:	DATE:	S-109
1			3			TOTAL SHEETS
2			4			134

DRAWN BY : MIKE BRITT DATE : 9-14-10
CHECKED BY : T.J. BEACH DATE : 9-14-10

22-SEP-2010 15:34
Z:\Structures\Str4US401\Single_SpanBridge\Gen_draw\x0002c_str5_consquence.dgn
tbeach

STR.#4

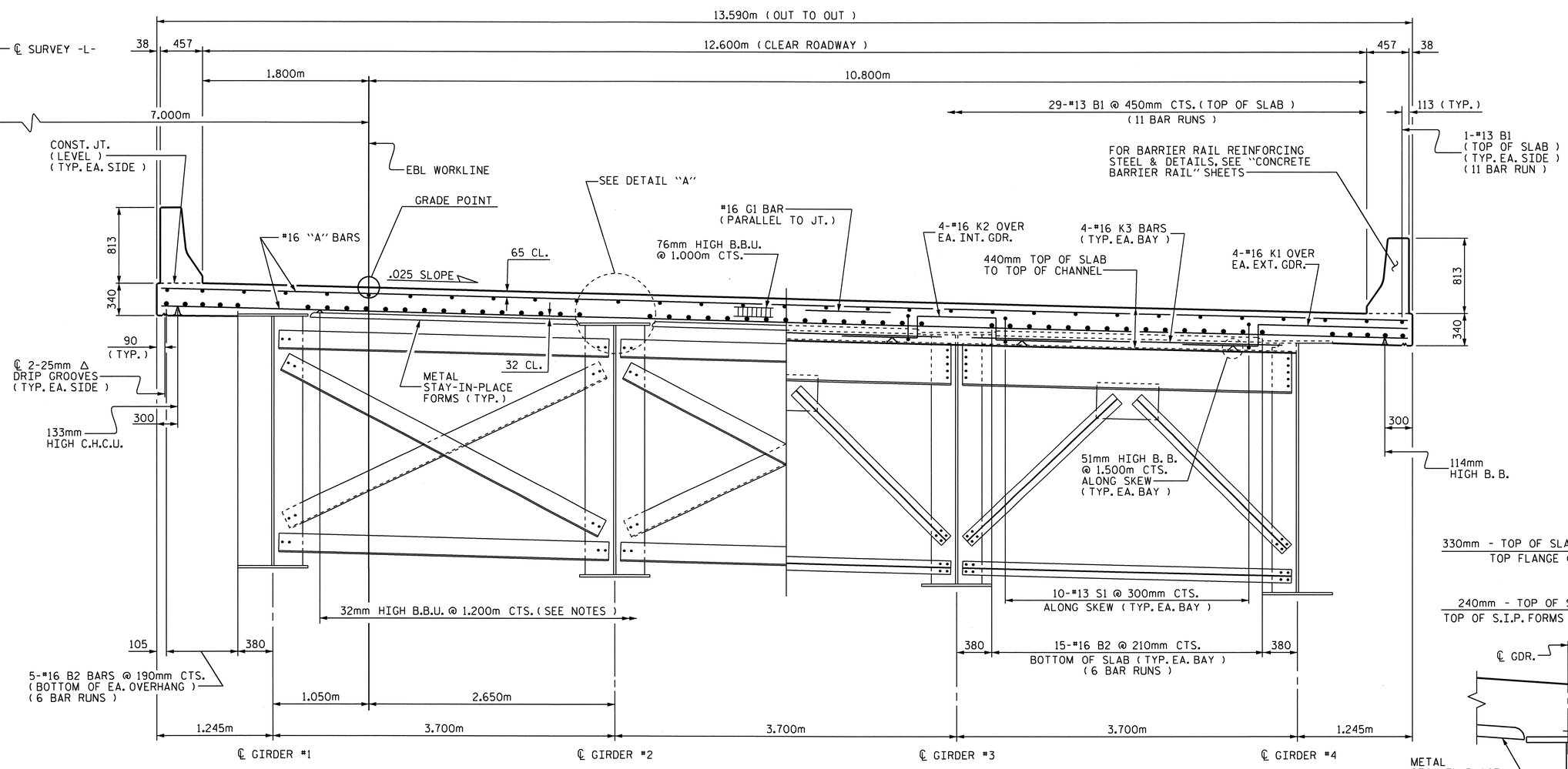

HALF TYPICAL SECTION

SHOWING INTERMEDIATE DIAPHRAGMS

HALF TYPICAL SECTION

SHOWING END BENT DIAPHRAGMS

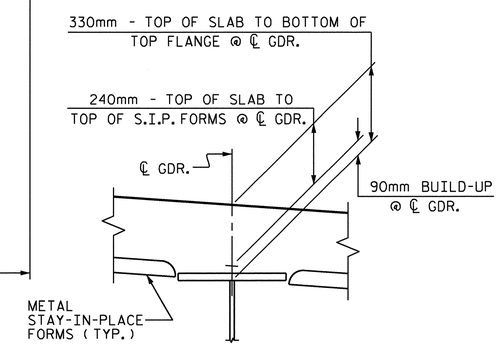

DETAIL "A"

SUPERSTRUCTURE NOTES :

PROVIDE 32mm HIGH BEAM BOLSTERS UPPER AT 1.200m CTS. ATOP THE METAL STAY-IN-PLACE FORMS TO SUPPORT THE BOTTOM MAT OF "A" BARS. WHEN USING REMOVABLE FORMS, PROVIDE CONTINUOUS HIGH CHAIRS FOR METAL DECK (C.H.C.M.) @ 1.200m CTS. WITH A HEIGHT TO SUPPORT THE BOTTOM MAT OF "A" BARS A CLEAR DISTANCE OF 65mm ABOVE THE TOP OF THE REMOVABLE FORM.

PREVIOUSLY CAST SLAB CONCRETE SHALL HAVE ATTAINED A MINIMUM COMPRESSIVE STRENGTH OF 20.7 MPa BEFORE ADDITIONAL CONCRETE IS CAST.

BARRIER RAIL SHALL NOT BE CAST UNTIL ALL SLAB CONCRETE HAS BEEN CAST AND HAS REACHED A MINIMUM COMPRESSIVE STRENGTH OF 20.7 MPa.

#16 G1 BAR AT END BENTS MAY BE SHIFTED SLIGHTLY, AS NECESSARY, TO CLEAR REINFORCING STEEL AND STIRRUPS.

ALL REINFORCING STEEL IN BARRIER RAILS SHALL BE EPOXY COATED.

DIRECTION OF CASTING DECK CONCRETE SHALL BE FROM THE FIXED BEARING END TOWARDS THE EXPANSION BEARING END OF THE SPAN.

THE CONTRACTOR MAY, WHEN NECESSARY, PROPOSE A SCHEME FOR AVOIDING INTERFERENCE BETWEEN METAL STAY-IN-PLACE FORM SUPPORTS OR FORMS AND GIRDER STIFFENER OR CONNECTOR PLATES. THE PROPOSAL SHALL BE INDICATED, AS APPROPRIATE, ON EITHER THE STEEL WORKING DRAWINGS OR THE METAL STAY-IN-PLACE FORM WORKING DRAWINGS.

THE NOMINAL UNCOMPRESSED SEAL WIDTH OF THE EVAZOTE JOINT SEAL SHALL BE 87mm AT END BENT No. 1.

THE NOMINAL UNCOMPRESSED SEAL WIDTH OF THE EVAZOTE JOINT SEAL SHALL BE 64mm AT END BENT No. 2.

FOR EVAZOTE JOINT SEALS, SEE SPECIAL PROVISIONS.

THE CONTRACTOR SHALL ADJUST THE GIRDER BUILDUPS AS NECESSARY TO INCORPORATE A MAXIMUM PERMISSIBLE VARIATION IN POT BEARING DEPTH OF 13mm, SEE SPECIAL PROVISION FOR POT BEARINGS.

152mm Ø PVC PLASTIC PIPE DRAINS ARE REQUIRED. SEE "PIPE DRAIN LOCATION DETAIL", SHEET 2 OF 2.

NORTH CAROLINA PROFESSIONAL SEAL 24990 ENGINEER THEO J. BEACH
11/3/10

PROJECT NO. X-0002 CB
CUMBERLAND COUNTY
STATION: 146+39.081 -L-

SHEET 1 OF 2

STATE OF NORTH CAROLINA
DEPARTMENT OF TRANSPORTATION
RALEIGH

SUPERSTRUCTURE
TYPICAL SECTIONS
(EBL)

REVISIONS						SHEET NO.
NO.	BY:	DATE:	NO.	BY:	DATE:	S-110
1			3			TOTAL SHEETS
2			4			134

DRAWN BY : MIKE BRITT DATE : 5-18-10
CHECKED BY : T. BANKOVICH DATE : 5-10

22-SEP-2010 15:37
Z:\Structures\Str4US401\Single_SpanBridge\Super_Draw\x0002c_str5r_ts.dgn
tbeach

STR. #4

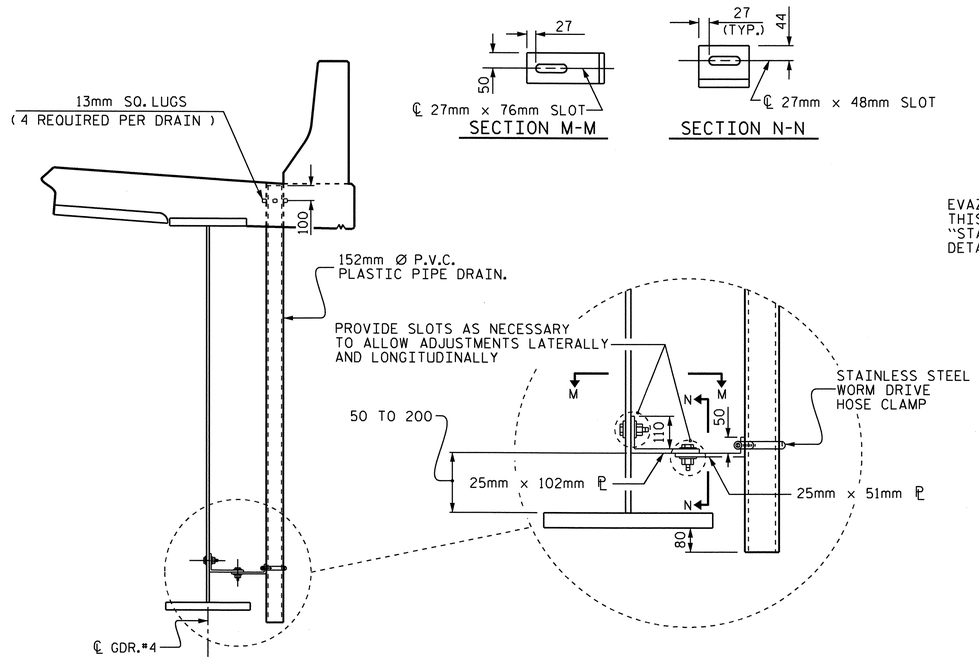

DRAIN CONNECTOR DETAIL

(3 PIPE DRAINS REQUIRED)

SECTION M-M

SECTION N-N

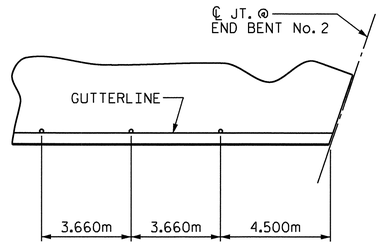

PIPE DRAIN LOCATION DETAIL

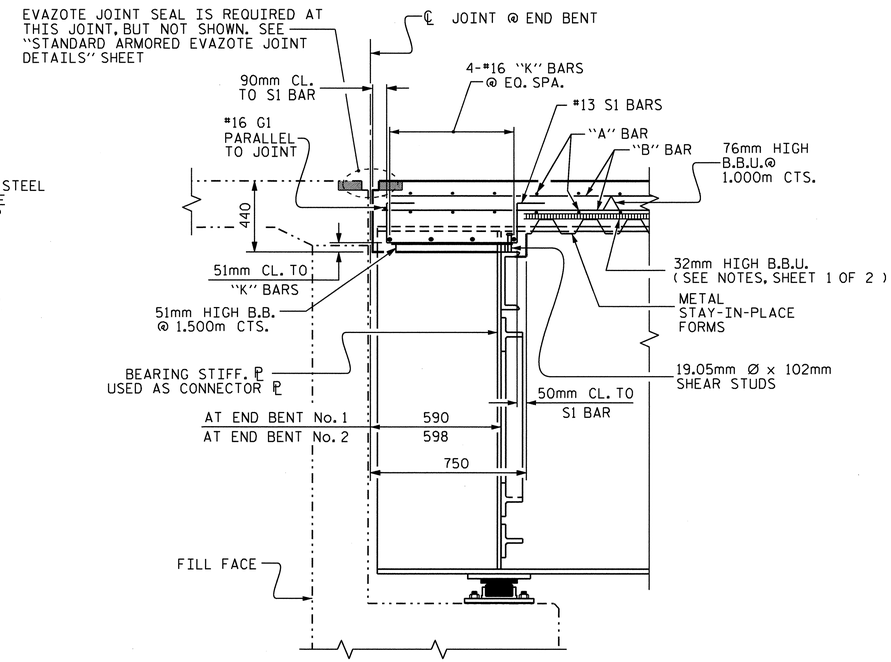

SECTION THRU END BENT

SECTION TAKEN AT RIGHT ANGLE TO FILL FACE

DRAIN NOTES :

COUPLING IN DRAIN PIPE WILL BE PERMITTED AS APPROVED BY THE ENGINEER.

4- 13mm SO. LUGS TO BE GLUED TO THE PVC PLASTIC PIPE AT EQUAL SPACES AROUND THE PIPE DRAIN AT APPROXIMATELY 100mm FROM THE TOP OF THE PIPE.

BOLT SIZE TO BE THE SAME AS DIAPHRAGM AND CROSSFRAME CONNECTIONS. STAINLESS STEEL WORMDRIVE HOSE CLAMP SHALL BE COMMERCIAL QUALITY.

TOP OF FLOOR DRAINS TO BE SET 10mm BELOW SURFACE OF SLAB.

PVC DECK DRAINS SHALL BE PAINTED WITH TWO COATS OF BROWN PRIMER MEETING THE REQUIREMENTS OF ARTICLE 1080-12 OF THE STANDARD SPECIFICATIONS. EACH COAT SHALL BE 0.050mm THICK. DECK DRAINS SHALL BE ROUGHENED PRIOR TO PAINTING. NO SEPARATE PAYMENT SHALL BE MADE FOR PAINTING PVC DECK DRAINS AS THIS IS CONSIDERED INCIDENTAL TO PAY ITEM FOR REINFORCED CONCRETE DECK SLAB.

THE 152mm Ø PVC PLASTIC PIPE AND FITTINGS SHALL BE SCHEDULE 40 AND CONFORM TO ASTM D1785.

PLATES FOR PIPE DRAIN BRACKETS SHALL CONFORM TO AASHTO M270 GRADE 345W STEEL OR APPROVED EQUAL.

NORTH CAROLINA PROFESSIONAL SEAL 24590 ENGINEER FRED J. BEACH
11/3/10

PROJECT NO. X-0002 CB
CUMBERLAND COUNTY
STATION: 146+39.081 -L-

SHEET 2 OF 2

STATE OF NORTH CAROLINA
DEPARTMENT OF TRANSPORTATION
RALEIGH

SUPERSTRUCTURE

TYPICAL SECTIONS

(EBL)

REVISIONS						SHEET NO.
NO.	BY:	DATE:	NO.	BY:	DATE:	S-111
1			3			TOTAL SHEETS
2			4			134

DRAWN BY : MIKE BRITT DATE : 5-18-10
CHECKED BY : T. BANKOVICH DATE : 5-10

03-NOV-2010 12:33
R:\Structures\Str4US401\Single_SpanBridge\Super_Draw\x0002c_str5r_ts.dgn
tbeach

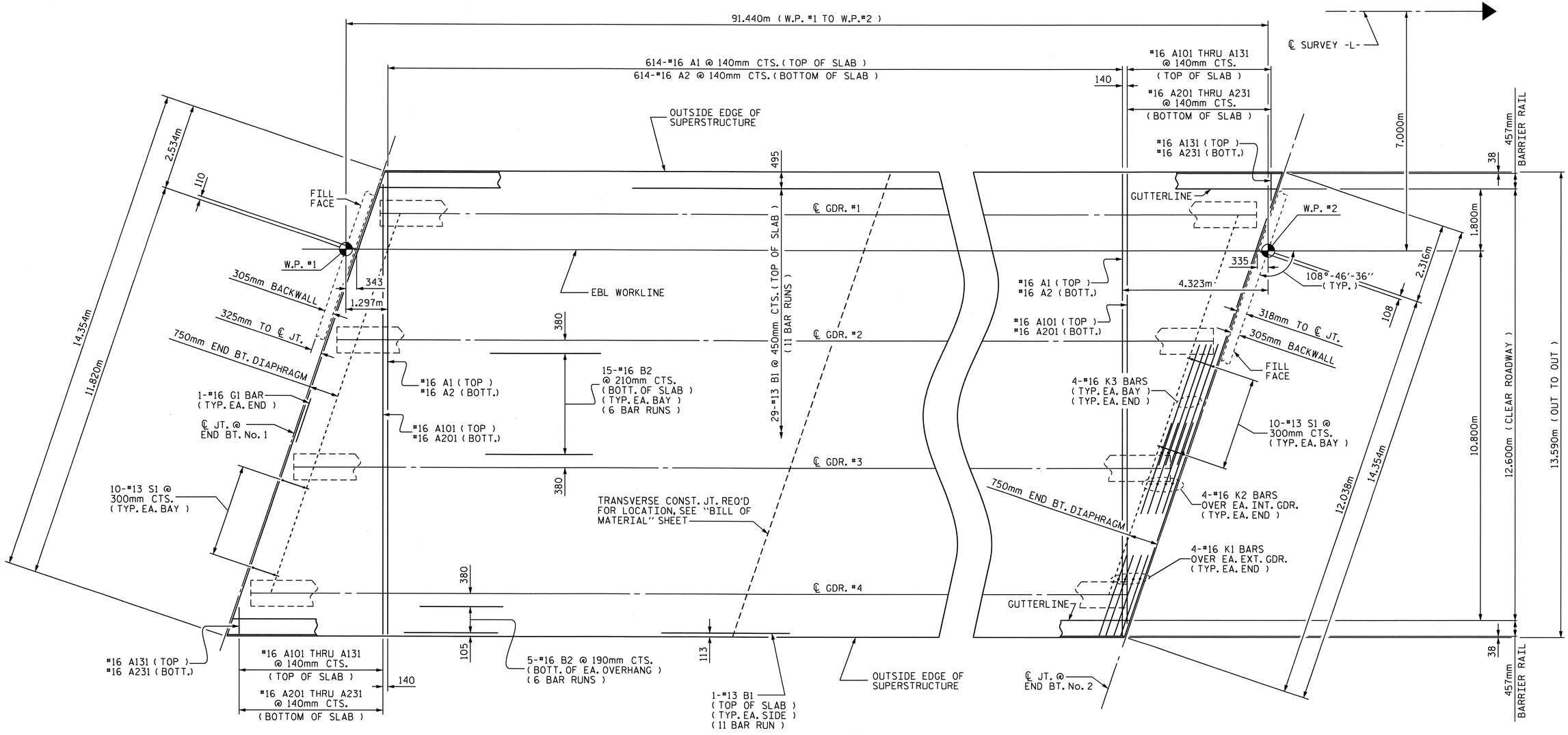

PLAN OF SPAN "A"

PROJECT NO. X-0002 CB
CUMBERLAND COUNTY
STATION: 146+39.081 -L-

NOTES :

FOR BARRIER RAIL REINFORCING STEEL, SEE "CONCRETE BARRIER RAIL" SHEET.

152mm Ø PVC PIPE DECK DRAINS ARE REQUIRED AT RIGHT GUTTERLINE BUT ARE NOT SHOWN. FOR LOCATION AND DETAILS OF DECK DRAINS. SEE "TYPICAL SECTIONS", SHEET 2 OF 2.

NORTH CAROLINA PROFESSIONAL SEAL 24390 ENGINEER THEO J. BEACH
11/3/10

STATE OF NORTH CAROLINA
DEPARTMENT OF TRANSPORTATION
RALEIGH

SUPERSTRUCTURE

PLAN OF SPAN "A"

(EBL)

REVISIONS						SHEET NO.
NO.	BY:	DATE:	NO.	BY:	DATE:	S-112
1			3			TOTAL SHEETS
2			4			134

DRAWN BY : MIKE BRITT DATE : 5-19-10
CHECKED BY : T. BANKOVICH DATE : 5-10

03-NOV-2010 12:34
R:\Structures\Str4US401\Single_SpanBridge\Super_Draw\x0002c_str5r_ps.dgn
tbeach

STR.#4

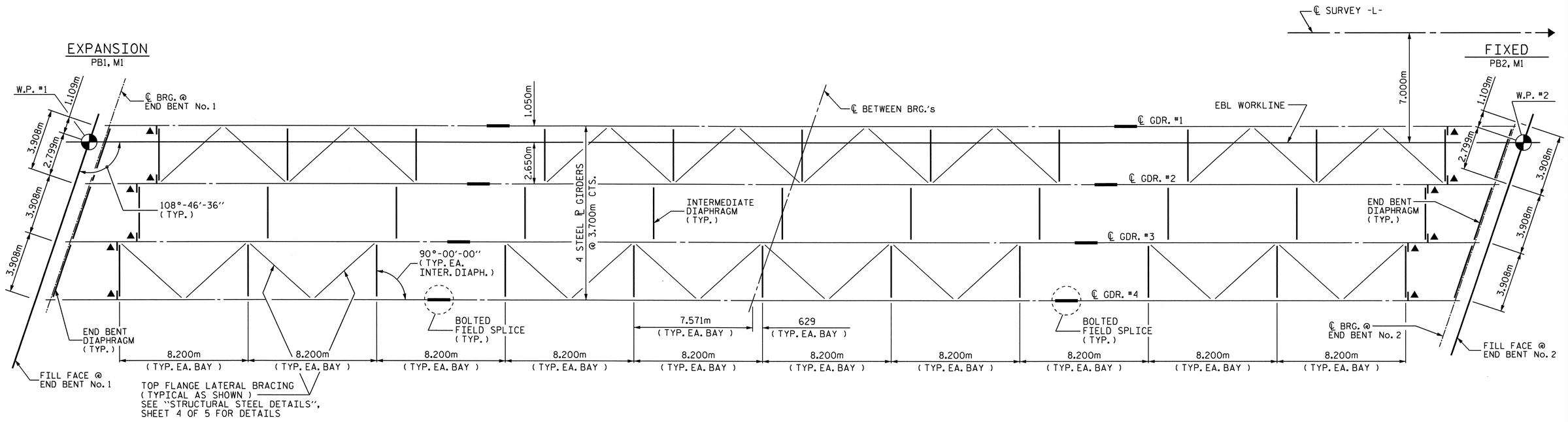

FRAMING PLAN

NOTE :
▲ INTERMEDIATE STIFFENER PLATES ARE REQUIRED AT THESE LOCATIONS AND SHALL BE UTILIZED AS A CONNECTOR PLATE.

PROJECT NO. X-0002 CB
CUMBERLAND COUNTY
STATION: 146+39.081 -L-

NORTH CAROLINA PROFESSIONAL SEAL 24390 ENGINEER THEO J. BEACH
11/3/10

STATE OF NORTH CAROLINA
DEPARTMENT OF TRANSPORTATION
RALEIGH

SUPERSTRUCTURE

FRAMING PLAN

(EBL)

REVISIONS						SHEET NO.
NO.	BY:	DATE:	NO.	BY:	DATE:	S-113
1			3			TOTAL SHEETS
2			4			134

DRAWN BY : MIKE BRITT DATE : 3-24-10
CHECKED BY : T. BANKOVICH DATE : 5-10

22-SEP-2010 15:39
Z:\Structures\Str4US401\Single_SpanBridge\Super_Draw\x0002c_str5r_fp.dgn
tbeach

STR.#4

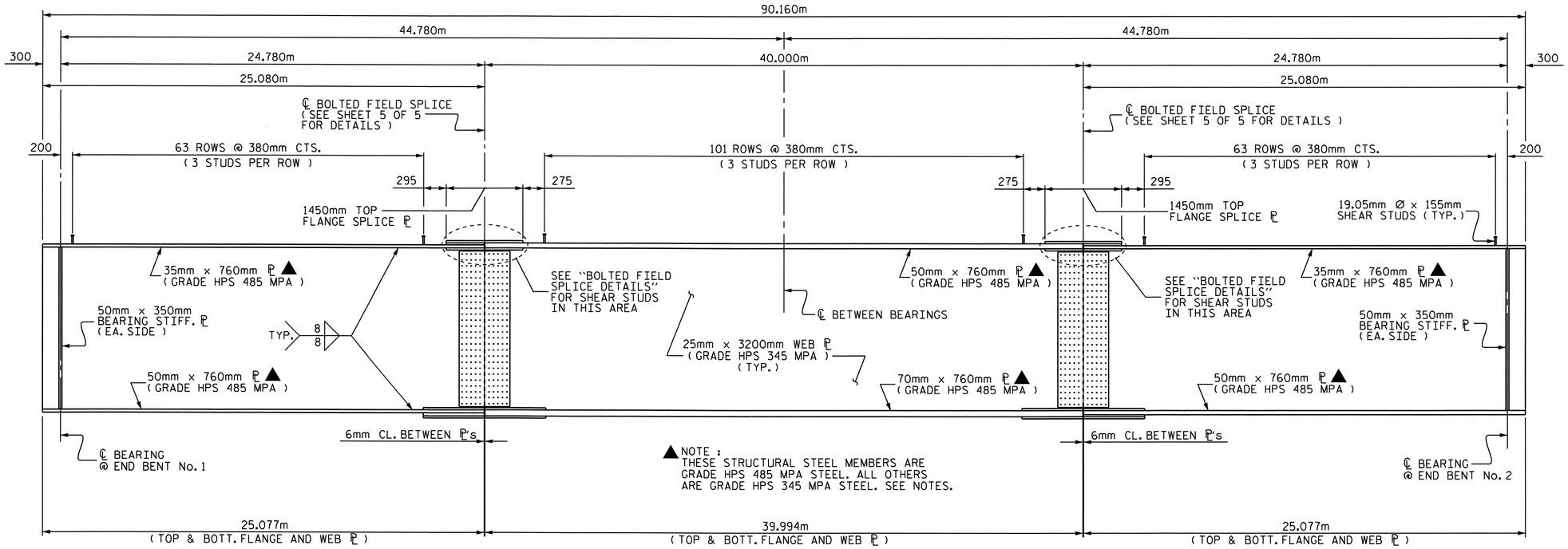

PLATE GIRDER ELEVATION

NOTE : CONNECTOR & INTERMEDIATE STIFFENER ℙ's NOT SHOWN.
FOR PLACEMENT, SEE "FRAMING PLAN" SHEET.

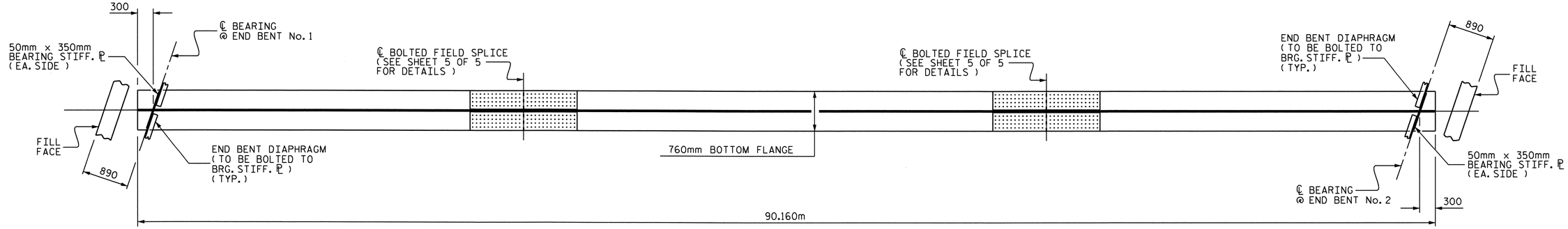

BOTTOM FLANGE DETAIL

NOTE : CONNECTOR & INTERMEDIATE STIFFENER ℙ's NOT SHOWN.
FOR PLACEMENT, SEE "FRAMING PLAN" SHEET.

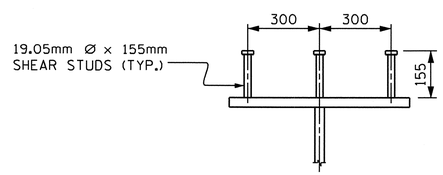

SHEAR STUD DETAIL

TYPICAL EXCEPT @ TOP FLANGE SPLICE ℙ
SEE "BOLTED FIELD SPLICE DETAILS",
SHEET 5 OF 5

PROJECT NO. X-0002 CB
CUMBERLAND COUNTY
STATION: 146+39.081 -L-

SHEET 1 OF 5

STATE OF NORTH CAROLINA
DEPARTMENT OF TRANSPORTATION
RALEIGH

SUPERSTRUCTURE
STRUCTURAL STEEL
DETAILS
(EBL)

NORTH CAROLINA PROFESSIONAL SEAL 24390 ENGINEER THEO J. BEACH
11/3/10

REVISIONS						SHEET NO.
NO.	BY:	DATE:	NO.	BY:	DATE:	S-114
1			3			TOTAL SHEETS
2			4			134

DRAWN BY : MIKE BRITT DATE : 5-19-10
CHECKED BY : T. BANKOVICH DATE : 5-10

22-SEP-2010 15:40
Z:\Structures\Str4US401\Single_SpanBridge\Super_Draw\x0002c_str5R_ss.dgn
tbeach

STR. #4

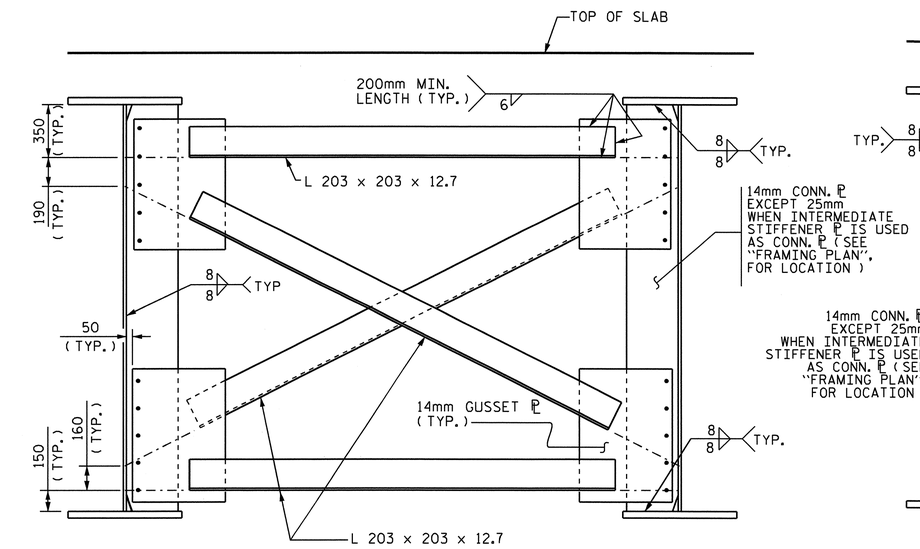

OPTIONAL INTERMEDIATE DIAPHRAGM

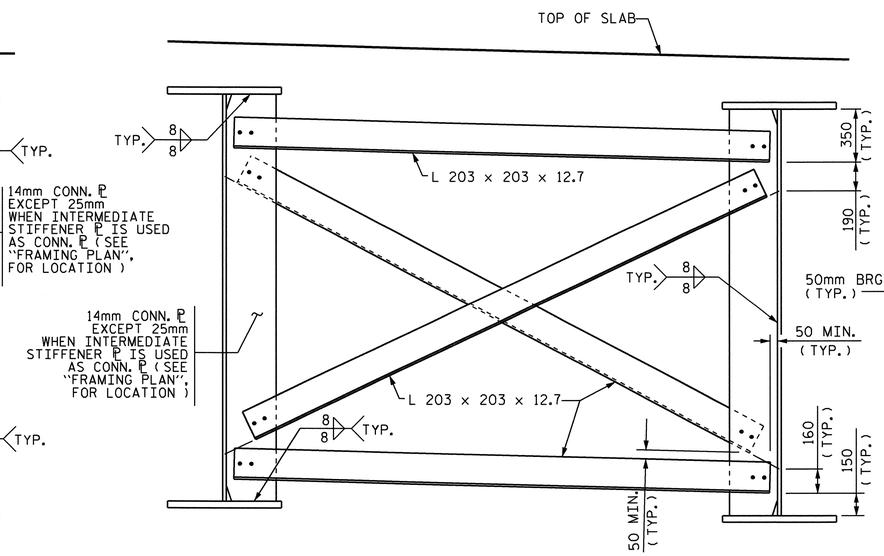

TYPICAL INTERMEDIATE DIAPHRAGM

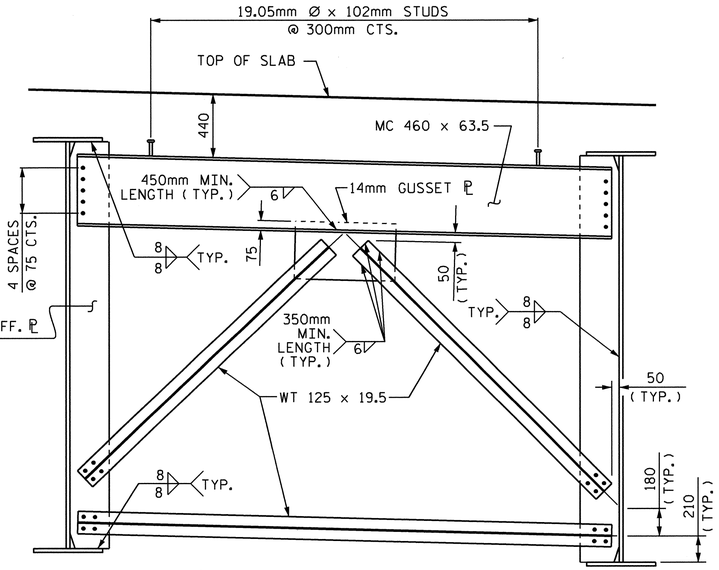

TYPICAL END BENT DIAPHRAGM

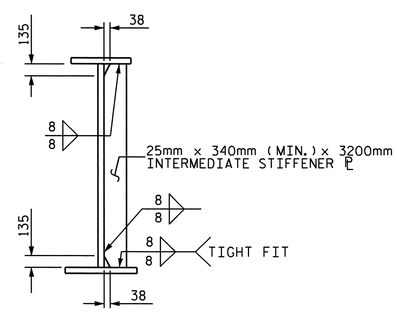

INTERMEDIATE STIFFENER

(USED AS CONNECTOR ℙ)

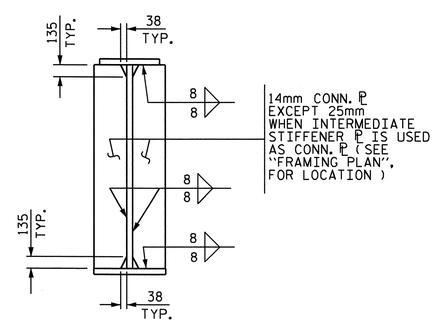

CONNECTOR PLATES

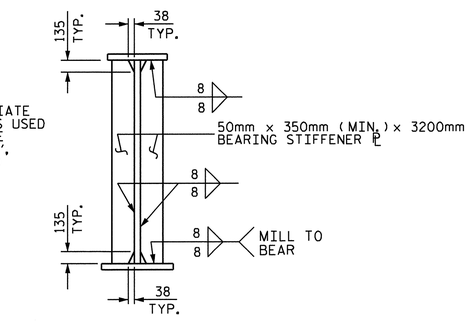

BEARING STIFFENER

(USED AS CONNECTOR ℙ)

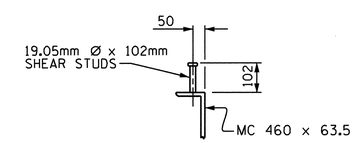

SHEAR STUD DETAIL

(TYP. EA. END BENT DIAPHRAGM)

PROJECT NO. X-0002 CB

CUMBERLAND COUNTY

STATION: 146+39.081 -L-

SHEET 2 OF 5

STATE OF NORTH CAROLINA
DEPARTMENT OF TRANSPORTATION
RALEIGH

SUPERSTRUCTURE

STRUCTURAL STEEL DETAILS

(EBL)

NORTH CAROLINA PROFESSIONAL SEAL 24890 ENGINEER THEO J. BEACH
11/3/10

REVISIONS						SHEET NO.
NO.	BY:	DATE:	NO.	BY:	DATE:	S-115
1			3			TOTAL SHEETS
2			4			134

DRAWN BY : MIKE BRITT DATE : 5-19-10
CHECKED BY : T. BANKOVICH DATE : 5-10

22-SEP-2010 15:40
Z:\Structures\Str4US401\Single_SpanBridge\Super_Draw\x0002c_str5R_ss.dgn
tbeach

STR. #4

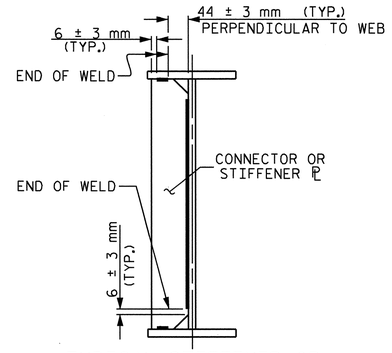

TYPICAL STIFFENER OR CONNECTOR PLATE CONNECTIONS

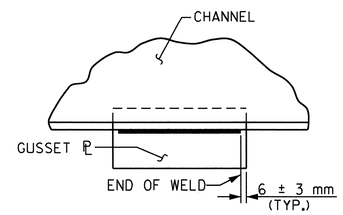

TYPICAL GUSSET PLATE CONNECTION

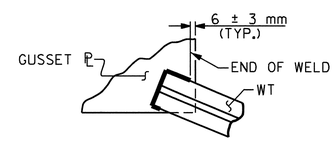

TYPICAL "TEE" TO GUSSET PLATE CONNECTION

WELD TERMINATION DETAILS

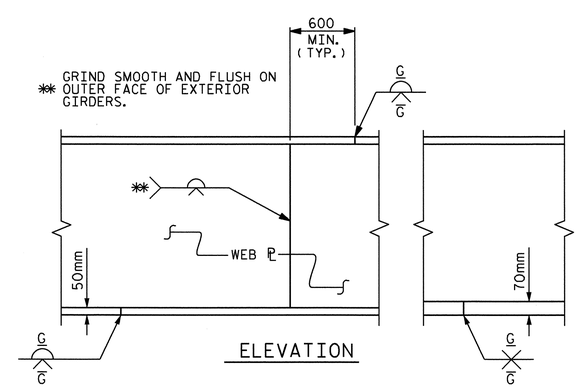

ELEVATION

PERMISSIBLE SHOP FLANGE & WEB SPLICE

NOTES :

STRUCTURAL STEEL SHALL BE AASHTO M270 GRADE 345W EXCEPT TOP AND BOTTOM FLANGE PLATES SHOWN ON SHEET 1 OF 5 SHALL BE AASHTO M270 GRADE HPS 485W AND PAINTED IN ACCORDANCE WITH SYSTEM 4 OF ARTICLE 442-7 OF THE STANDARD SPECIFICATIONS UNLESS OTHERWISE NOTED ON THE PLANS.

FOR STRUCTURAL STEEL FOR BRIDGE, SEE SPECIAL PROVISIONS.

ALL DIMENSIONS SHOWN ARE HORIZONTAL OR VERTICAL, UNLESS OTHERWISE NOTED.

ALL FIELD CONNECTIONS TO BE 22.23mm DIA. HIGH STRENGTH BOLTS UNLESS OTHERWISE NOTED. FOR HIGH STRENGTH BOLTS, SEE SPECIAL PROVISIONS.

BEARING STIFFENERS AT END BENTS ARE TO BE PLACED ALONG SKEW AND SHALL BE PLUMB.

SHOP SPLICES ARE PERMITTED TO LIMIT THE MAXIMUM REQUIRED FLANGE PIECE LENGTHS TO 18 METERS AND WEB PIECE LENGTHS TO 14 METERS. PERMITTED FLANGE AND WEB SHOP SPLICES SHALL NOT BE LOCATED WITHIN 4.5 METERS OF MAXIMUM DEAD LOAD DEFLECTION (NOR WITHIN 4.5 METERS OF INTERMEDIATE BEARINGS OF CONTINUOUS UNITS). KEEP 600mm MINIMUM BETWEEN WEB AND FLANGE SHOP SPLICES. KEEP 150mm MINIMUM BETWEEN CONNECTOR PLATE OR TRANSVERSE STIFFENER WELDS AND WEB OR FLANGE SHOP SPLICES.

STUDS ON GIRDERS MAY BE SHIFTED UP TO 25mm IF NECESSARY TO CLEAR FLANGE SPLICE WELD.

TENSION ON THE AASHTO M164 BOLTS SHALL BE CALIBRATED USING DIRECT TENSION INDICATOR WASHERS IN ACCORDANCE WITH ARTICLE 440-8 OF THE STANDARD SPECIFICATIONS.

FOR DIRECT TENSION INDICATORS, SEE SPECIAL PROVISIONS.

END OF GIRDERS SHALL BE PLUMB.

BEARING STIFFENER PLATE WIDTHS SHOWN ON THE PLANS ARE A MINIMUM WIDTH. THE BEARING STIFFENER PLATE WIDTHS MAY BE INCREASED AS NECESSARY IN ORDER TO CONNECT THE DIAPHRAGM MEMBERS.

FOR SHIPPING STEEL STRUCTURAL MEMBERS, SEE SPECIAL PROVISIONS.

A CHARPY V-NOTCH TEST IS REQUIRED FOR WEB PLATES, BOTTOM FLANGE PLATES, BOTTOM FLANGE SPLICE PLATES AND WEB SPLICE PLATES FOR ALL GIRDERS AND IN ACCORDANCE WITH ARTICLE 1072-9 OF THE STANDARD SPECIFICATIONS AND CHARPY V-NOTCH TESTS SPECIAL PROVISION.

PROJECT NO. X-0002 CB
CUMBERLAND COUNTY
STATION: 146+39.081 -L-

SHEET 3 OF 5

STATE OF NORTH CAROLINA
DEPARTMENT OF TRANSPORTATION
RALEIGH

SUPERSTRUCTURE
STRUCTURAL STEEL DETAILS
(EBL)

NORTH CAROLINA PROFESSIONAL SEAL 024390 ENGINEER THEO J. BEACH
1/19/2011

REVISIONS						SHEET NO.
NO.	BY:	DATE:	NO.	BY:	DATE:	S-116
1			3			TOTAL SHEETS
2			4			134

DRAWN BY : MIKE BRITT DATE : 5-19-10
CHECKED BY : T. BANKOVICH DATE : 5-10

19-JAN-2011 10:39
R:\Structures\Str4US401\Single_SpanBridge\Super_Draw\x0002c_str5R_ss.dgn
tbeach

STR. #4

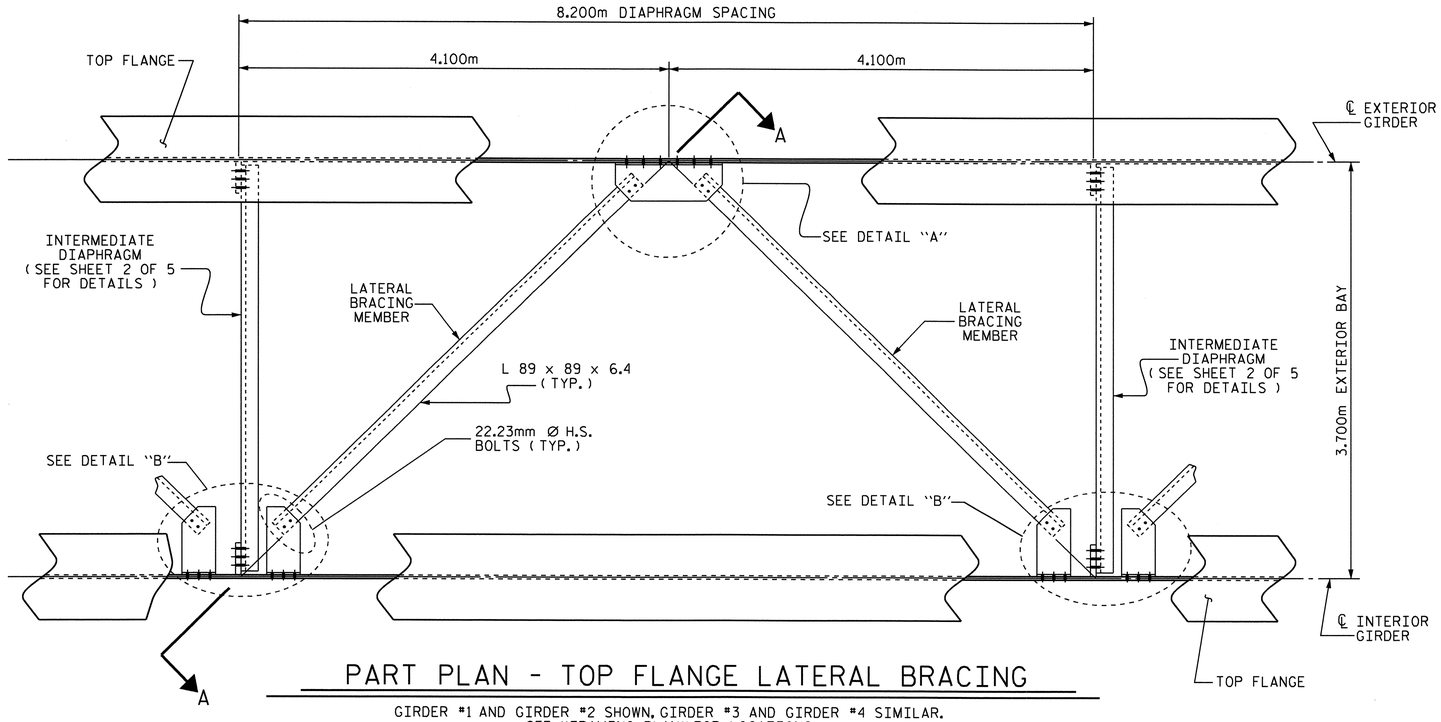

PART PLAN - TOP FLANGE LATERAL BRACING

GIRDER #1 AND GIRDER #2 SHOWN, GIRDER #3 AND GIRDER #4 SIMILAR.
SEE "FRAMING PLAN" FOR LOCATIONS

NOTES

THE TOP FLANGE LATERAL BRACING DETAILED IS PROVIDED TO ASSIST IN LIMITING GIRDER DISPLACEMENT DUE TO WIND FORCES DURING ERECTION. IT SHALL BE INSTALLED IMMEDIATELY AFTER ERECTION OF EACH PAIR OF GIRDER SECTIONS. THE DEPARTMENT ASSUMES NO LIABILITY IN THE ERECTION OR STABILIZATION OF THE GIRDERS.

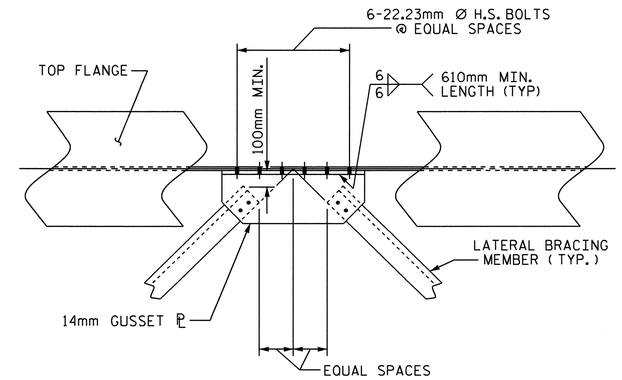

DETAIL "A"

LATERAL BRACING AT TOP FLANGE

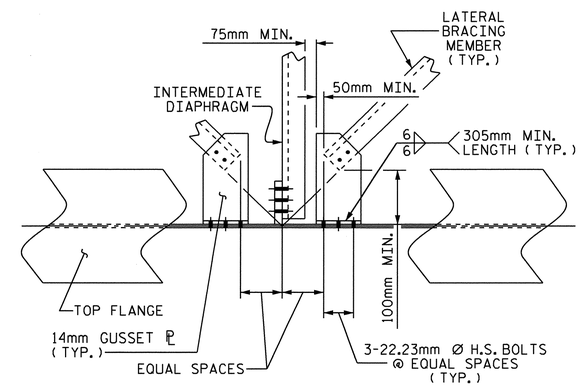

DETAIL "B"

LATERAL BRACING AT TOP FLANGE

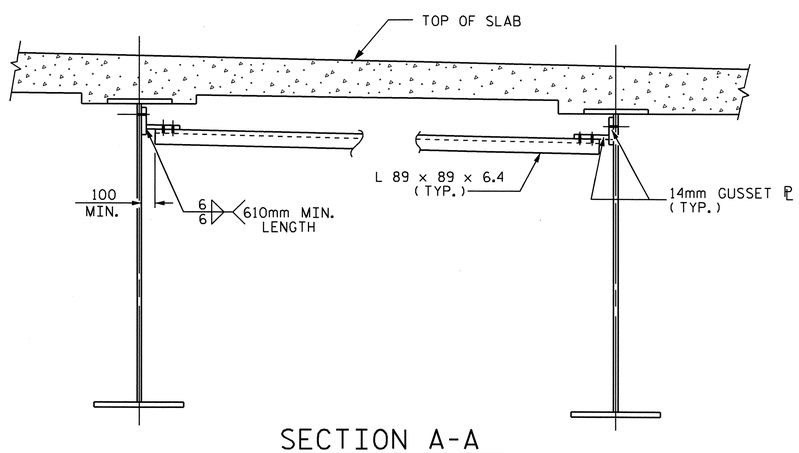

SECTION A-A

(LATERAL BRACING AT TOP FLANGE)

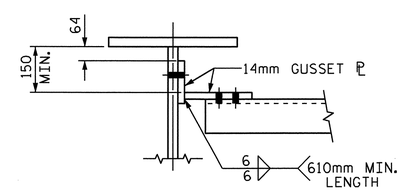

SECTION THRU CONNECTION

(LATERAL BRACING @ TOP FLANGE)

PROJECT NO. X-0002 CB
CUMBERLAND COUNTY
STATION: 146+39.081 -L-

SHEET 4 OF 5

STATE OF NORTH CAROLINA
DEPARTMENT OF TRANSPORTATION
RALEIGH

SUPERSTRUCTURE
STRUCTURAL STEEL DETAILS
(EBL)

NORTH CAROLINA PROFESSIONAL SEAL 24390 ENGINEER THEO J. BEACH
11/3/10

REVISIONS						SHEET NO.
NO.	BY:	DATE:	NO.	BY:	DATE:	S-117
1			3			TOTAL SHEETS
2			4			134

DRAWN BY : MIKE BRITT DATE : 5-19-10
CHECKED BY : T. BANKOVICH DATE : 5-10

22-SEP-2010 15:40
Z:\Structures\Str4US401\Single_SpanBridge\Super_Draw\x0002c_str5R_ss.dgn
tbeach

STR. #4

* NOTE :
SHEAR STUDS ARE TO BE SHOP WELDED ON TOP OF PLATE BEFORE FIELD ASSEMBLY.

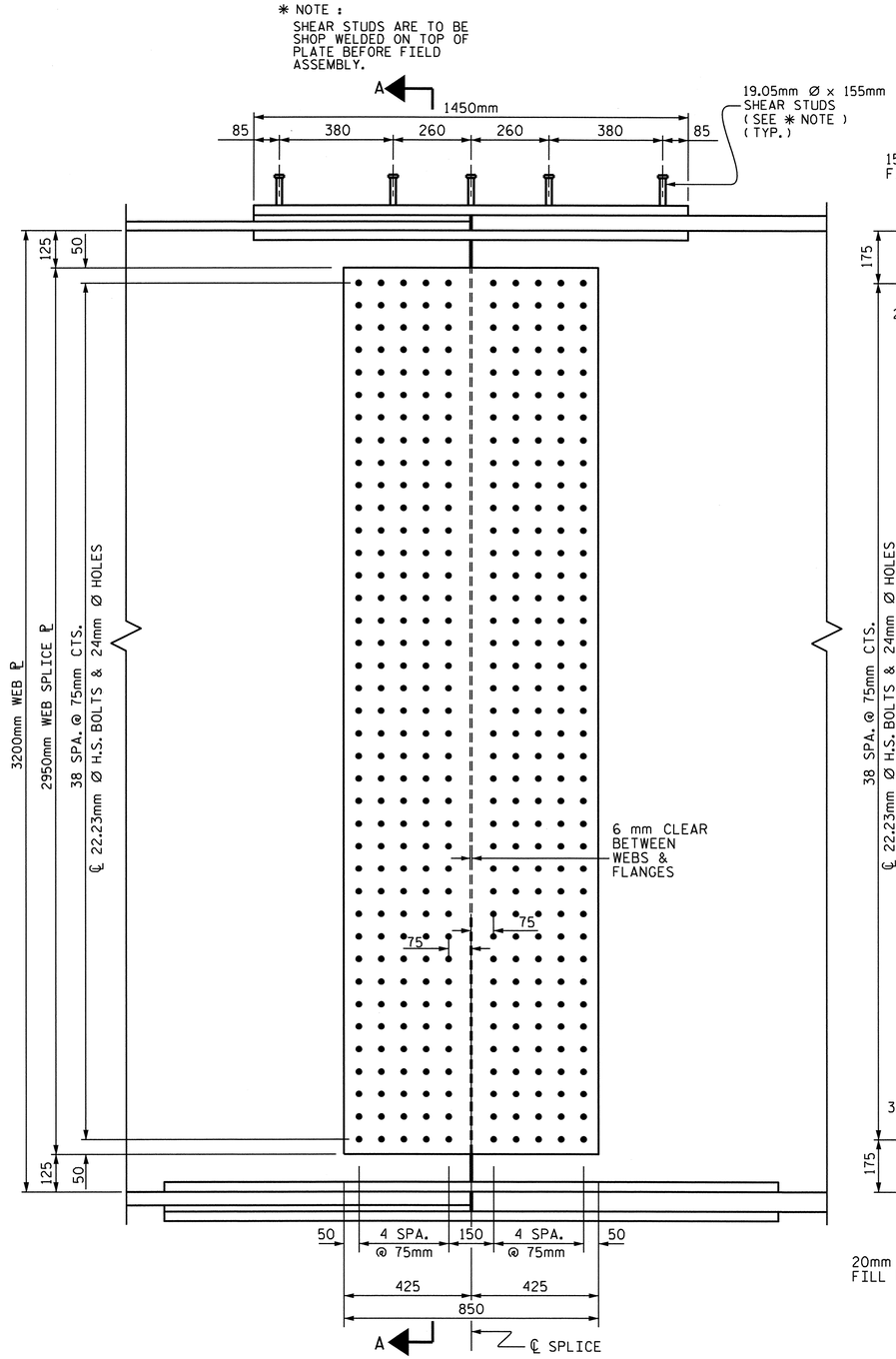

ELEVATION

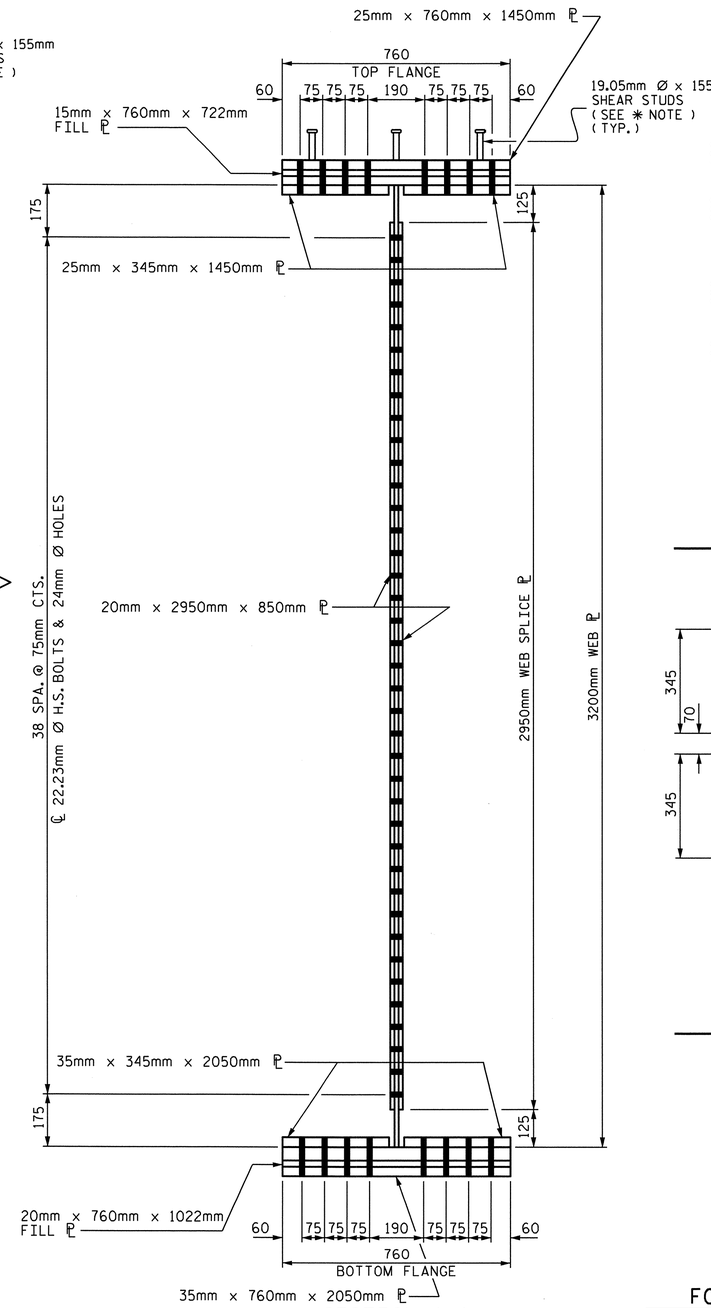

SECTION A-A

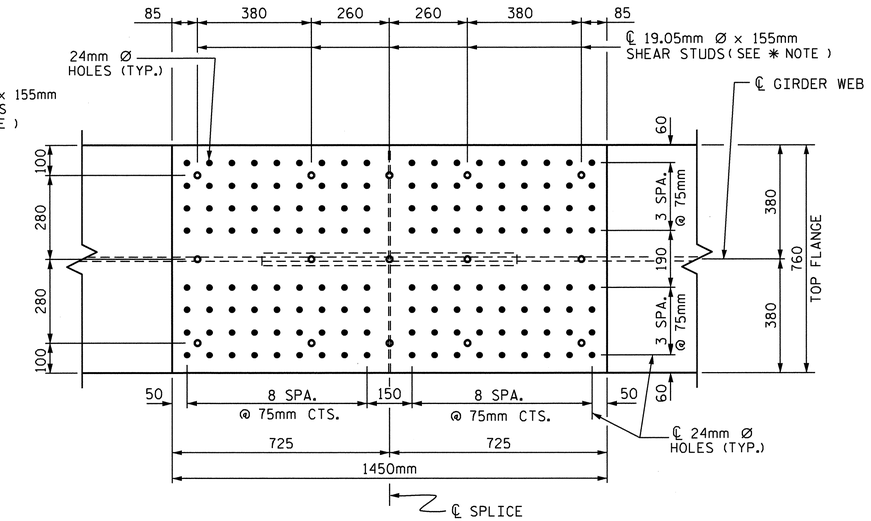

PLAN (TOP OF TOP FLANGE)

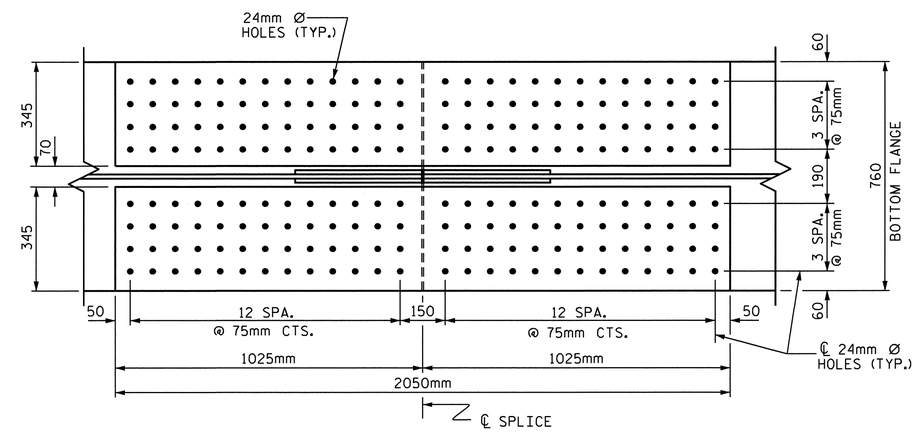

PLAN (TOP OF BOTTOM FLANGE)

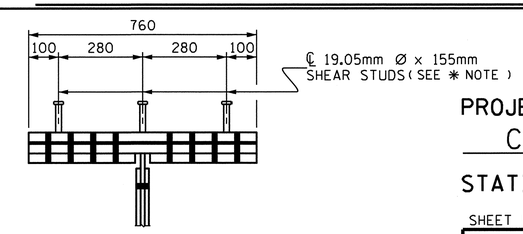

SHEAR STUD DETAIL FOR TOP FLANGE SPLICE PLATE

BOLTED FIELD SPLICE DETAILS

PROJECT NO. X-0002 CB
CUMBERLAND COUNTY
STATION: 146+39.081 -L-

SHEET 5 OF 5

STATE OF NORTH CAROLINA
DEPARTMENT OF TRANSPORTATION
RALEIGH

SUPERSTRUCTURE
STRUCTURAL STEEL DETAILS
(EBL)

NORTH CAROLINA PROFESSIONAL SEAL 24690 ENGINEER THEO J. BEACH 11/3/10

REVISIONS						SHEET NO.
NO.	BY:	DATE:	NO.	BY:	DATE:	S-118
1			3			TOTAL SHEETS
2			4			134

DRAWN BY : MIKE BRITT DATE : 5-19-10
CHECKED BY : T. BANKOVICH DATE : 5-10

STR. #4

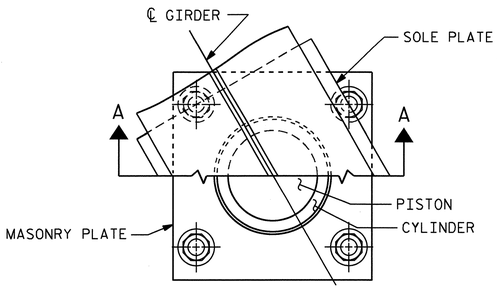

CUT-AWAY PLAN

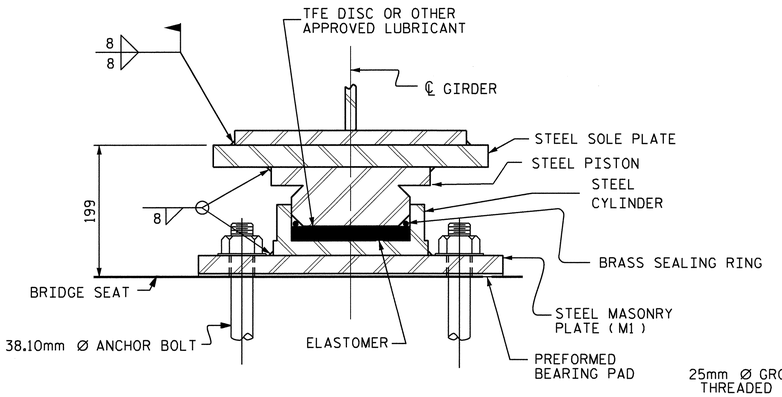

SECTION A-A

PB2, FIXED

(4 REQ'D.)

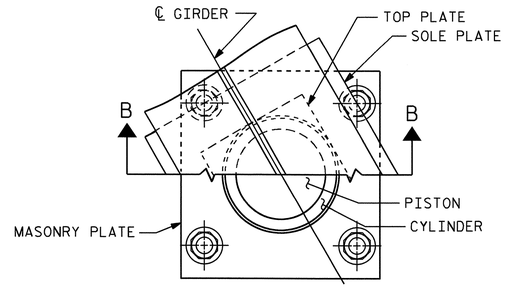

CUT-AWAY PLAN

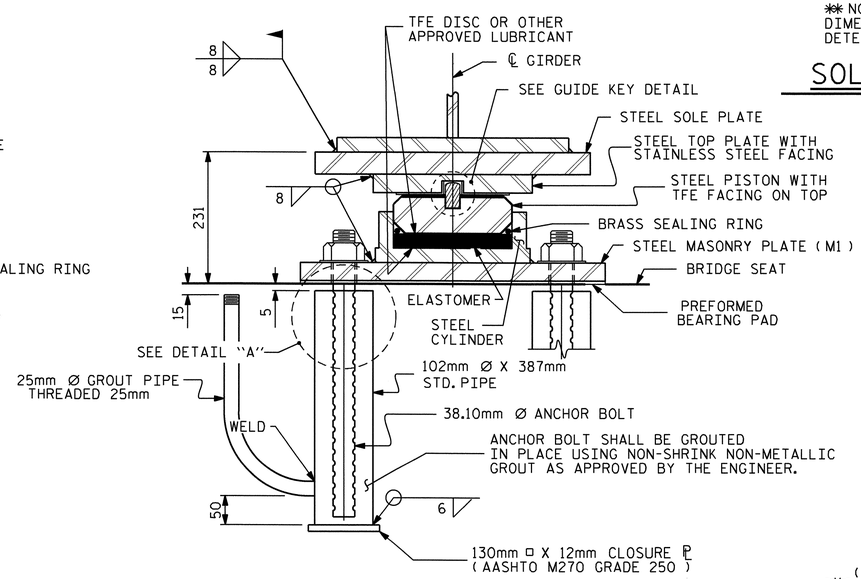

SECTION B-B

PB1, EXP.

(4 REQ'D.)

POT BEARING DETAILS

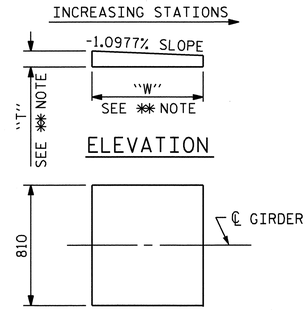

✱✱ NOTE:
DIMENSIONS "W" AND "T" ARE TO BE DETERMINED BY THE MANUFACTURER.

SOLE PLATE DETAILS

NOTES

FOR POT BEARINGS, SEE SPECIAL PROVISIONS.

AT ALL POINTS OF SUPPORT, NUTS FOR ANCHOR BOLTS SHALL BE TIGHTENED FINGER TIGHT AND GIVEN AN ADDITIONAL 1/4 TURN. THE THREAD OF THE NUT AND BOLT SHALL THEN BE BURRED WITH A SHARP POINTED TOOL.

WHEN WELDING THE SOLE PLATE TO THE GIRDER, USE TEMPERATURE INDICATING WAX PENS, OR OTHER SUITABLE MEANS, TO ENSURE THAT THE TEMPERATURE OF THE BEARING DOES NOT EXCEED 121°C TEMPERATURES ABOVE THIS MAY DAMAGE THE TFE OR ELASTOMER.

AFTER BEARING ASSEMBLY IS IN PLACE AND ANCHOR BOLTS HAVE BEEN FINALLY POSITIONED. THEY SHALL BE GROUTED IN PLACE AS SHOWN.

THE CLOSURE PLATE, GROUT PIPE AND STANDARD PIPE FOR THIS ASSEMBLY NEED NOT BE GALVANIZED.

SOLE PLATES SHOULD BE WELDED TO GIRDER FLANGES AND ANCHOR BOLTS SHOULD BE GROUTED BEFORE FALSEWORK IS PLACED.

ALL SURFACES OF BEARING PLATES SHALL BE SMOOTH AND STRAIGHT.

FOR THERMAL SPRAYED COATINGS (METALLIZATION), SEE SPECIAL PROVISIONS.

THE CONTRACTOR MAY SUBSTITUTE DISC BEARINGS FOR THE POT BEARINGS SHOWN. FOR OPTIONAL DISC BEARINGS, SEE SPECIAL PROVISIONS.

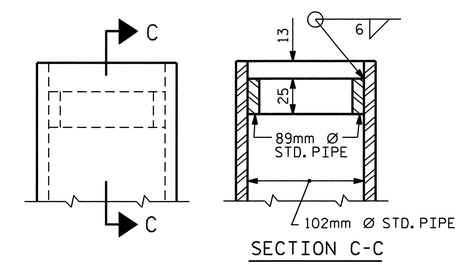

SECTION C-C

DETAIL "A"

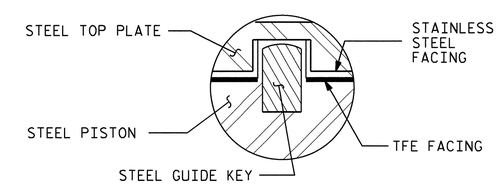

GUIDE KEY DETAIL

GUIDE KEY SETTING ANGLE = 108°-46'-36"

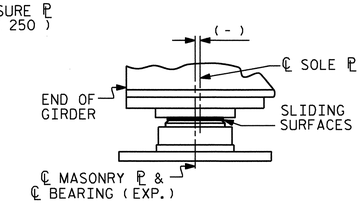

TABLE FOR PLATE SETTING DATA (EXPANSION POT BEARINGS - PB1)				
TEMPERATURE AT TIME OF SETTING	0° C	16° C	32° C	✱
PB1	-17	0	17	-54

✱CORRECTION FOR END ROTATION DUE TO WEIGHT OF SLAB AND COMPOSITE DEAD LOAD.

TEMPERATURE SETTING DETAIL

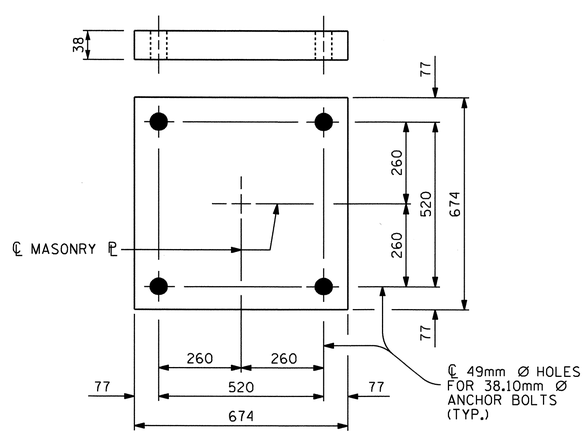

PLAN

M1 (8 REQ'D.)

MASONRY PLATE DETAILS

TABLE FOR UNFACTORED LOADS AND MOVEMENTS						
BEARING	LOCATION	VERTICAL LOAD (kN)			LATERAL LOAD (kN)	TOTAL MOVEMENT (mm)
		DEAD	LIVE	TOTAL		
PB1 (EXP.)	END BENT No. 1	2036	753	2789	407	53
PB2 (FIXED)	END BENT No. 2	2036	753	2789	407	0

PROJECT NO. X-0002 CB

CUMBERLAND COUNTY

STATION: 146+39.081 -L-

NORTH CAROLINA PROFESSIONAL SEAL 24390 ENGINEER THEO J. BEACH 11/3/10

STATE OF NORTH CAROLINA
DEPARTMENT OF TRANSPORTATION
RALEIGH

STANDARD

POT BEARING DETAILS

(EBL)

REVISIONS						SHEET NO.
NO.	BY:	DATE:	NO.	BY:	DATE:	S-119
1			3			TOTAL SHEETS
2			4			134

ASSEMBLED BY : MIKE BRITT	DATE : 5-19-10
CHECKED BY : T. BANKOVICH	DATE : 6-10
DRAWN BY : RWW 8/99	REV. 7/10/01 LES/RWW
CHECKED BY : LES 8/99	REV. 5/7/03 RWW/JTE
	REV. 5/1/06 TLA/GM

22-SEP-2010 15:42
Z:\Structures\Str4US401\Single_SpanBridge\Super_Draw\x0002c_str5r_pot.dgn
tbeach

PB1SM.STD

STR. #4

DEAD LOAD DEFLECTION TABLE FOR GIRDERS

EBL	SPAN "A" GIRDERS #1 & #4 (EXTERIOR GIRDERS)																													
THIRTIETH POINTS	0	1	2	3	4	5	6	7	8	9	10	11	12	13	14	15	16	17	18	19	20	21	22	23	24	25	26	27	28	29	0
DEFLECTION DUE TO WEIGHT OF GIRDER	0.000	0.022	0.044	0.065	0.085	0.104	0.122	0.138	0.152	0.164	0.175	0.183	0.190	0.195	0.198	0.199	0.198	0.195	0.190	0.183	0.174	0.164	0.151	0.137	0.122	0.104	0.085	0.065	0.044	0.022	0.000
DEFLECTION DUE TO WEIGHT OF SLAB *	0.000	0.039	0.077	0.114	0.149	0.182	0.212	0.240	0.264	0.286	0.304	0.319	0.331	0.339	0.344	0.346	0.344	0.339	0.330	0.319	0.304	0.285	0.264	0.240	0.211	0.181	0.148	0.114	0.077	0.039	0.000
DEFLECTION DUE TO WEIGHT OF BARRIER RAIL	0.000	0.004	0.007	0.011	0.014	0.018	0.020	0.023	0.025	0.028	0.029	0.031	0.032	0.033	0.033	0.033	0.033	0.033	0.032	0.031	0.029	0.027	0.025	0.023	0.020	0.017	0.014	0.011	0.007	0.004	0.000
TOTAL DEAD LOAD DEFLECTION	0.000	0.065	0.128	0.190	0.248	0.304	0.354	0.401	0.441	0.478	0.508	0.533	0.553	0.567	0.575	0.578	0.575	0.567	0.552	0.533	0.507	0.476	0.440	0.400	0.353	0.302	0.247	0.190	0.128	0.065	0.000
REQUIRED CAMBER	0	65	128	190	248	304	354	401	441	478	508	533	553	567	575	578	575	567	552	533	507	476	440	400	353	302	247	190	128	65	0

* INCLUDES SLAB, BUILDUPS & STAY-IN-PLACE FORMS.
ALL VALUES ARE SHOWN IN METERS, EXCEPT "FINAL CAMBER" WHICH IS SHOWN IN MILLIMETERS.

DEAD LOAD DEFLECTION TABLE FOR GIRDERS

EBL	SPAN "A" GIRDERS #2 & #3 (INTERIOR GIRDERS)																													
THIRTIETH POINTS	0	1	2	3	4	5	6	7	8	9	10	11	12	13	14	15	16	17	18	19	20	21	22	23	24	25	26	27	28	29	0
DEFLECTION DUE TO WEIGHT OF GIRDER	0.000	0.022	0.044	0.065	0.085	0.104	0.122	0.138	0.152	0.164	0.174	0.183	0.190	0.195	0.198	0.199	0.198	0.195	0.190	0.183	0.174	0.164	0.152	0.137	0.122	0.104	0.085	0.065	0.044	0.022	0.000
DEFLECTION DUE TO WEIGHT OF SLAB *	0.000	0.039	0.077	0.114	0.149	0.183	0.213	0.240	0.265	0.286	0.305	0.320	0.332	0.340	0.346	0.347	0.345	0.340	0.332	0.320	0.305	0.286	0.264	0.241	0.212	0.182	0.149	0.114	0.077	0.039	0.000
DEFLECTION DUE TO WEIGHT OF BARRIER RAIL	0.000	0.004	0.007	0.011	0.014	0.017	0.020	0.023	0.025	0.028	0.029	0.031	0.032	0.033	0.033	0.033	0.033	0.033	0.032	0.031	0.029	0.027	0.025	0.023	0.020	0.017	0.014	0.011	0.007	0.004	0.000
TOTAL DEAD LOAD DEFLECTION	0.000	0.065	0.128	0.190	0.248	0.304	0.355	0.401	0.442	0.478	0.508	0.534	0.554	0.568	0.577	0.579	0.576	0.568	0.554	0.534	0.508	0.477	0.441	0.401	0.354	0.303	0.248	0.190	0.128	0.065	0.000
REQUIRED CAMBER	0	65	128	190	248	304	355	401	442	478	508	534	554	568	577	579	576	568	554	534	508	477	441	401	354	303	248	190	128	65	0

* INCLUDES SLAB, BUILDUPS & STAY-IN-PLACE FORMS.
ALL VALUES ARE SHOWN IN METERS, EXCEPT "FINAL CAMBER" WHICH IS SHOWN IN MILLIMETERS.

PROJECT NO. X-0002 CB
CUMBERLAND COUNTY
STATION: 146+39.081 -L-

NORTH CAROLINA PROFESSIONAL SEAL 24390 ENGINEER THEO J. BEACH
11/3/10

STATE OF NORTH CAROLINA
DEPARTMENT OF TRANSPORTATION
RALEIGH

SUPERSTRUCTURE
DEAD LOAD DEFLECTIONS
(EBL)

REVISIONS						SHEET NO.
NO.	BY:	DATE:	NO.	BY:	DATE:	S-120
1			3			TOTAL SHEETS
2			4			134

DRAWN BY : MIKE BRITT DATE : 6-1-10
CHECKED BY : T. BANKOVICH DATE : 6-10

22-SEP-2010 15:42
Z:\Structures\Str4US401\Single_SpanBridge\Super_Draw\x0002c_str5r_dl.dgn
tbeach

STR. #4

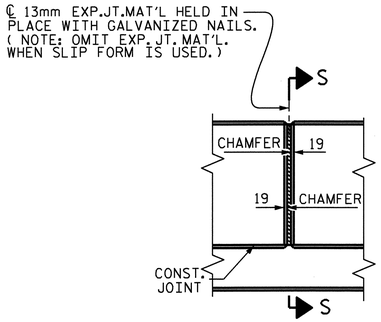

ELEVATION AT EXPANSION JOINTS

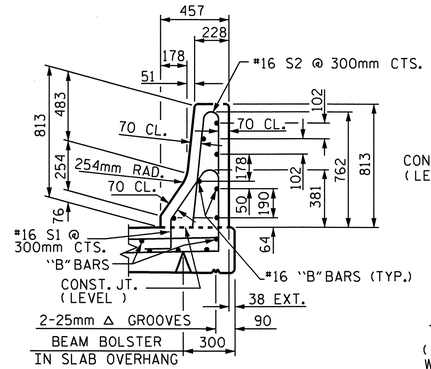

SECTION THRU RAIL

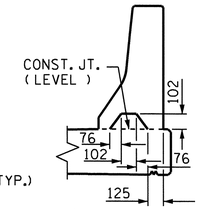

SECTION S-S

AT DAM IN OPEN JOINT
(THIS IS TO BE USED ONLY WHEN SLIP FORM IS USED)

BARRIER RAIL DETAILS

NOTES

THE BARRIER RAIL SHALL NOT BE CAST UNTIL ALL SLAB CONCRETE HAS BEEN CAST AND HAS REACHED A MINIMUM COMPRESSIVE STRENGTH OF 20.7 MPa.

ALL REINFORCING STEEL IN BARRIER RAILS SHALL BE EPOXY COATED.

VERTICAL GROOVED CONTRACTION JOINTS, 12mm IN DEPTH, SHALL BE TOOLED IN ALL EXPOSED FACES OF THE BARRIER RAIL AND IN ACCORDANCE WITH ARTICLE 825-10(B) OF THE STANDARD SPECIFICATIONS. THE CONTRACTION JOINT SHALL BE LOCATED AT EACH THIRD POINT BETWEEN BARRIER RAIL EXPANSION JOINTS. ONLY ONE CONTRACTION JOINT IS REQUIRED AT MIDPOINT OF BARRIER RAIL SEGMENTS LESS THAN 6.1m IN LENGTH AND NO CONTRACTION JOINTS ARE REQUIRED FOR THOSE SEGMENTS LESS THAN 3.5m IN LENGTH.

THE #16 S1 & S2 BARS MAY BE SHIFTED SLIGHTLY IN ORDER TO MAINTAIN A 50mm MINIMUM CLEARANCE TO THE 13mm EXPANSION JOINT MATERIAL IN RAIL.

BAR TYPES

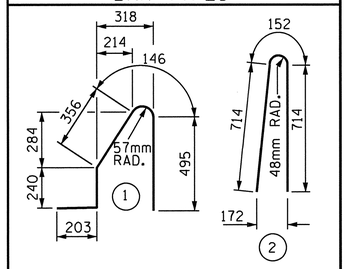

ALL BAR DIMENSIONS ARE OUT TO OUT

BILL OF MATERIAL

FOR CONCRETE BARRIER RAIL ONLY

BAR	No.	SIZE	TYPE	LENGTH	WEIGHT
* B1	56	#16	STR	2700	235
* B2	140	#16	STR	8080	1756
* S1	604	#16	1	1440	1350
* S2	604	#16	2	1580	1481

* EPOXY COATED REINFORCING STEEL 4,822 kg

CLASS AA CONCRETE 45.6 CU. METER

CONCRETE BARRIER RAIL 181.522 METERS

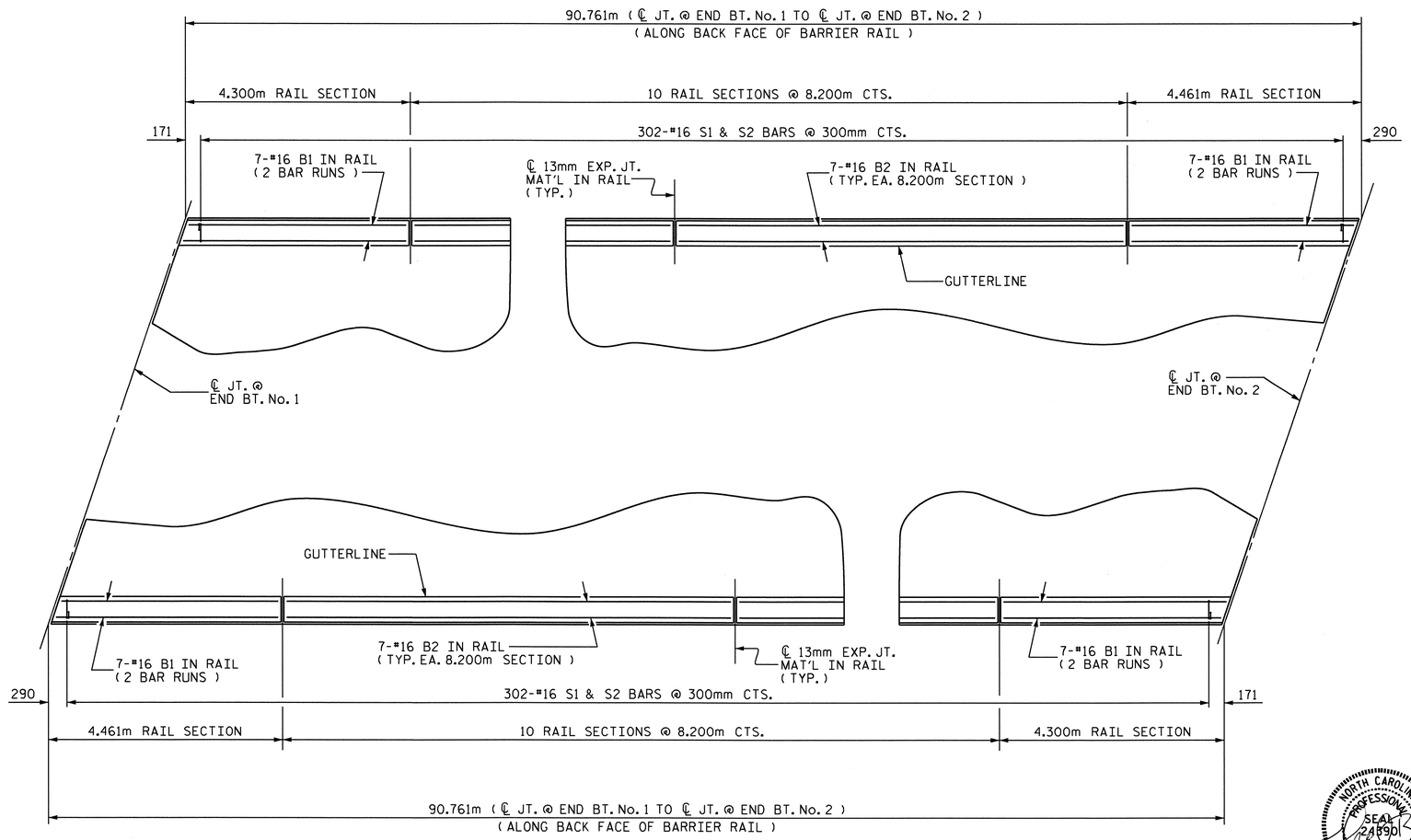

PLAN OF BARRIER RAIL

NORTH CAROLINA PROFESSIONAL SEAL 24890 ENGINEER THEO. J. BEACH
11/3/10

PROJECT NO. X-0002 CB
CUMBERLAND COUNTY
STATION: 146+39.081 -L-

STATE OF NORTH CAROLINA
DEPARTMENT OF TRANSPORTATION
RALEIGH

STANDARD
CONCRETE BARRIER RAIL
(EBL)

REVISIONS						SHEET NO.
NO.	BY:	DATE:	NO.	BY:	DATE:	S-121
1			3			TOTAL SHEETS
2			4			134

ASSEMBLED BY : MIKE BRITT		DATE : 5-19-10	
CHECKED BY : T. BANKOVICH		DATE : 6-10	
DRAWN BY : ARB 5/87	REV. 10/17/00	RWW/LES	
CHECKED BY : SJD 9/87	REV. 5/7/03R	RWW/JTE	
	REV. 5/1/06	TLA/GM	

22-SEP-2010 15:44
Z:\Structures\Str4US401\Single_SpanBridge\Super_Draw\x0002c_str5r_br.dgn
tbeach

STD. No. CBR1SM

STR.#4

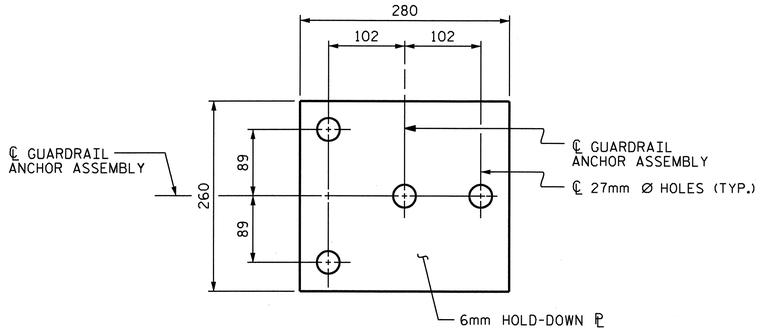

PLAN

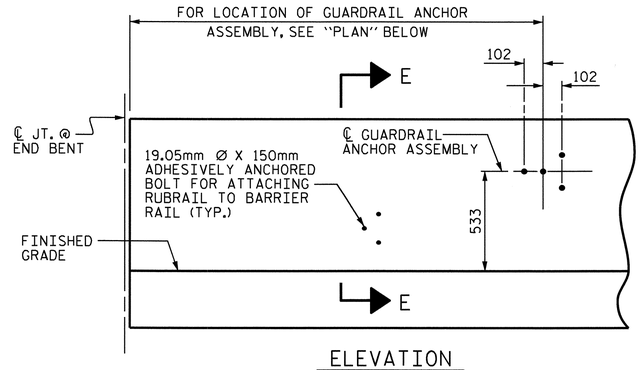

ELEVATION

FOR LOCATION OF RUBRAIL, SEE ROADWAY STD. 862.03

NOTES

THE GUARDRAIL ANCHOR ASSEMBLY SHALL CONSIST OF A 6mm HOLD DOWN PLATE AND 4 - 22.23mm Ø BOLTS WITH NUTS AND WASHERS, RUBRAIL, AND ADHESIVELY ANCHORED BOLTS.

THE HOLD-DOWN PLATE SHALL CONFORM TO AASHTO M270 GRADE 36. AFTER FABRICATION, THE HOLD-DOWN PLATE SHALL BE HOT-DIP GALVANIZED IN ACCORDANCE WITH AASHTO M111.

BOLTS SHALL CONFORM TO THE REQUIREMENTS OF ASTM A307 AND NUTS SHALL CONFORM TO THE REQUIREMENTS OF AASHTO M291. BOLTS, NUTS AND WASHERS SHALL BE GALVANIZED. (AT THE CONTRACTOR'S OPTION, STAINLESS STEEL BOLTS, NUTS AND WASHERS MAY BE USED AS AN ALTERNATE FOR THE 22.23mm Ø GALVANIZED BOLTS, NUTS AND WASHERS. THEY SHALL CONFORM TO OR EXCEED THE MECHANICAL REQUIREMENTS OF ASTM A307. THE USE OF THIS ALTERNATE SHALL BE APPROVED BY THE ENGINEER.)

THE GUARDRAIL ANCHOR ASSEMBLY IS REQUIRED AT ALL POINTS WHERE APPROACH GUARDRAIL IS TO BE ATTACHED TO THE END OF BARRIER RAIL. FOR POINTS OF ATTACHMENT, SEE SKETCH.

AFTER INSTALLATION, THE EXPOSED THREAD OF THE BOLT SHALL BE BURRED WITH A SHARP POINTED TOOL.

THE COST OF THE GUARDRAIL ANCHOR ASSEMBLY SHALL BE INCLUDED IN THE UNIT CONTRACT PRICE BID FOR CONCRETE BARRIER RAIL.

THE 32mm Ø HOLES SHALL BE FORMED OR DRILLED WITH A CORE BIT. IMPACT TOOLS WILL NOT BE PERMITTED. ANY CONCRETE DAMAGED BY THIS WORK SHALL BE REPAIRED TO THE SATISFACTION OF THE ENGINEER.

THE C150 X 12 RUBRAIL IS TO BE ADHESIVELY ANCHORED TO THE RAIL USING THREE 19.05mm Ø X 150mm BOLTS WITH WASHERS. LEVEL ONE FIELD TESTING IS REQUIRED, AND THE YIELD LOAD OF THE 19.05mm Ø BOLTS IS 53.4kN. FOR ADHESIVELY ANCHORED ANCHOR BOLTS OR DOWELS, SEE SPECIAL PROVISIONS. SEE ROADWAY STANDARD 862.03 FOR DETAILS AND LOCATION OF THE RUBRAIL.

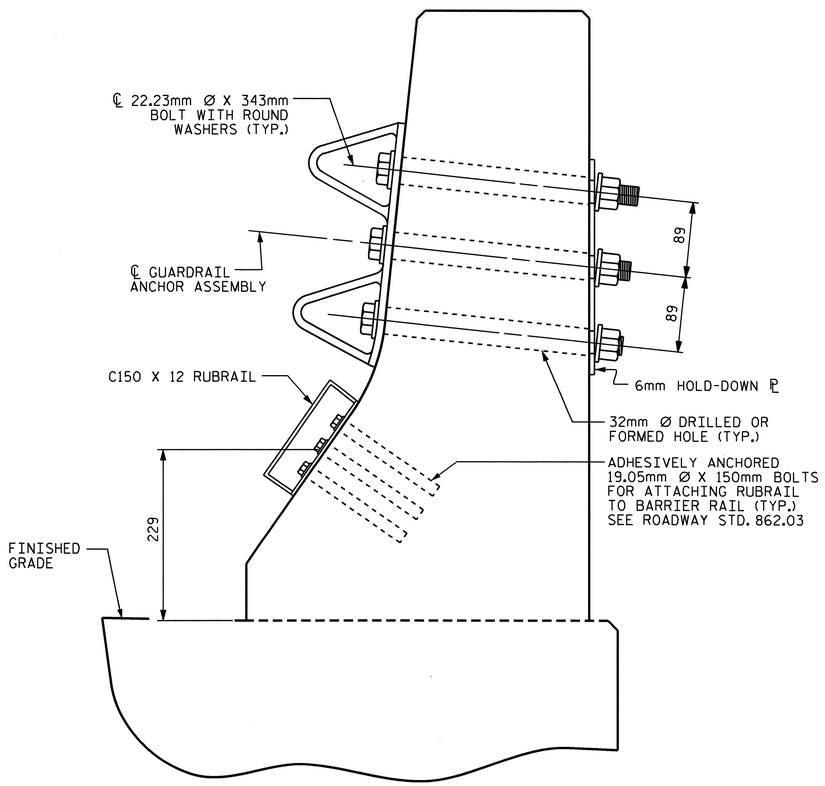

SECTION E-E

GUARDRAIL ANCHOR ASSEMBLY DETAILS

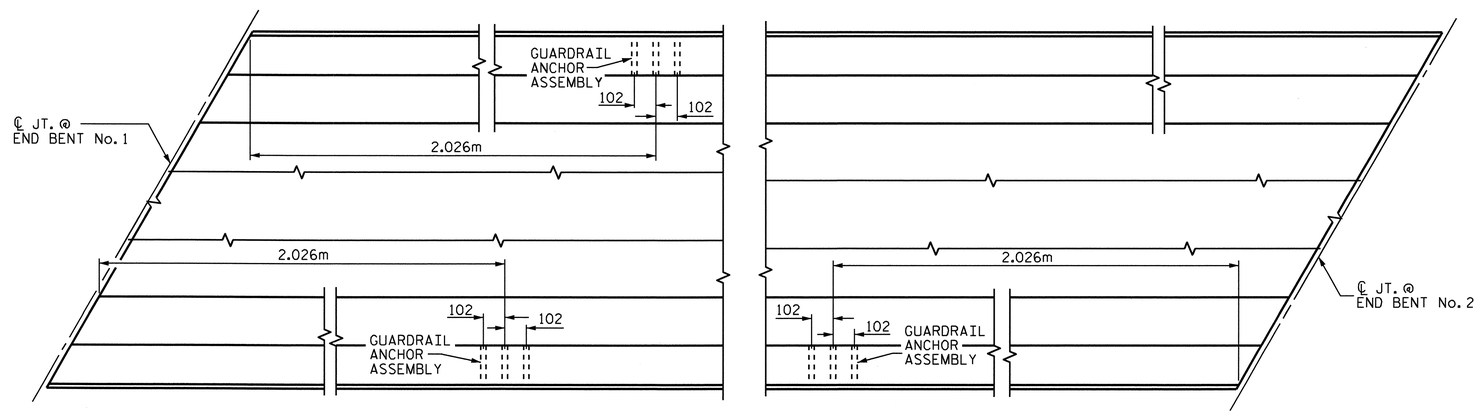

PLAN

LOCATION OF ANCHORS FOR GUARDRAIL

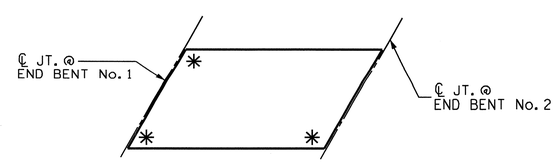

SKETCH SHOWING POINTS OF ATTACHMENTS

✳ DENOTES GUARDRAIL ANCHORS REQUIRED

PROJECT NO. X-0002 CB
CUMBERLAND COUNTY
STATION: 146+39.081 -L-

STATE OF NORTH CAROLINA
DEPARTMENT OF TRANSPORTATION
RALEIGH

STANDARD
GUARDRAIL ANCHORAGE FOR BARRIER RAIL
(EBL)

NORTH CAROLINA PROFESSIONAL SEAL 24390 ENGINEER THEO J. BEACH
11/3/10

REVISIONS						SHEET NO.
NO.	BY:	DATE:	NO.	BY:	DATE:	S-122
1			3			TOTAL SHEETS
2			4			134

ASSEMBLED BY : MIKE BRITT DATE : 5-19-10
CHECKED BY : T. BANKOVICH DATE : 6-10
DRAWN BY : TLA 5/06
CHECKED BY : GM 5/06
ADDED 5/1/06R KMM/GM

22-SEP-2010 15:45
Z:\Structures\Str4US401\Single_SpanBridge\Super_Draw\x0002c_str5r_gra.dgn
tbeach

STD. NO. GRA2

STR. #4

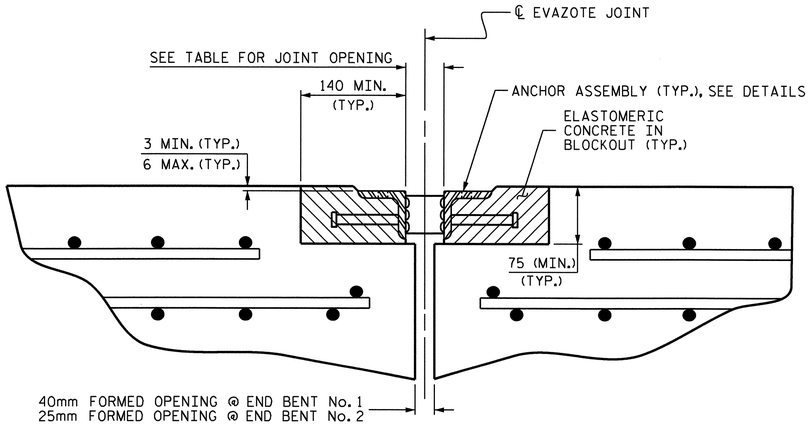

ARMORED JOINT DETAILS

SECTION NORMAL TO JOINT AT END BENT

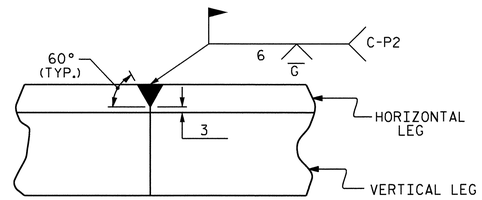

DETAIL- FIELD WELD SPLICE OF ANGLE

NOTES

ANGLES SHALL CONFORM TO AASHTO M270 GRADE 250 STEEL OR APPROVED EQUAL. ALL STUD ANCHORS SHALL CONFORM TO AASHTO M169 GRADES 1010 THRU 1020 OR APPROVED EQUAL.

STUD ANCHORS SHALL BE SHOP WELDED AND ALL HOLES SHALL BE SHOP DRILLED AS SHOWN ON THE PLANS. STUD ANCHORS SHALL BE ELECTRIC ARC END WELDED WITH COMPLETE FUSION.

UPON COMPLETION OF SHOP FABRICATION, THE ENTIRE ANCHOR ASSEMBLY SHALL BE METALLIZED. THE 12.70mm Ø STUD ANCHORS AND ANCHOR TABS NEED NOT BE METALLIZED. SEE SPECIAL PROVISION FOR THERMAL SPRAYED COATINGS (METALLIZATION).

ANCHOR ASSEMBLY SHALL BE MADE CONTINUOUS THE LENGTH OF THE JOINT FROM GUTTER TO GUTTER. FOR FIELD SPLICES AT ALL CROWN BREAK POINTS, THE ENDS OF THE STEEL ANGLES SHALL BE CUT PARALLEL TO THE BRIDGE CENTERLINE. FINISHED FIELD WELDS SHALL BE GROUND SMOOTH AND COATED WITH A MINIMUM THICKNESS OF 0.100mm OF ZINC-RICH PAINT IN ACCORDANCE WITH THE STANDARD SPECIFICATIONS.

ANCHOR ASSEMBLY SEGMENTS SHALL NOT BE LESS 3.6m NOR MORE THAN 6.1m IN LENGTH. SHORTER SEGMENTS MAY BE USED AT THE EDGE OF ROADWAY OR AT POINTS OF STAGED CONSTRUCTION.

THE ANCHOR ASSEMBLY SHALL BE SECURED AND LEVELED AS SHOWN IN THE "ARMORED JOINT ANCHOR ASSEMBLY DETAILS". NO SUBMITTALS ARE REQUIRED FOR 9.53mm Ø EXPANSION ANCHORS, NUTS OR WASHERS. THE CONTRACTOR MAY SUBMIT FOR APPROVAL AN ALTERNATE METHOD OF ALIGNING AND LEVELING THE ANGLES. THE ALTERNATE METHOD SHALL NOT INCLUDE ANY WELDING TO THE OUTSIDE FACE OF THE ANGLES.

AFTER THE ELASTOMERIC CONCRETE HAS BEEN CAST ON BOTH SIDES OF THE JOINT, REMOVE ANY EXCESS CONCRETE THAT COMES THROUGH THE WEEP HOLES AND THOROUGHLY CLEAN THE ANGLES. ANY DAMAGED STEEL SHALL BE COATED WITH A MINIMUM OF 0.100mm OF ZINC-RICH PAINT IN ACCORDANCE WITH THE STANDARD SPECIFICATIONS.

SEE SPECIAL PROVISIONS FOR EVAZOTE JOINT SEALS.

SEE SPECIAL PROVISIONS FOR ELASTOMERIC CONCRETE.

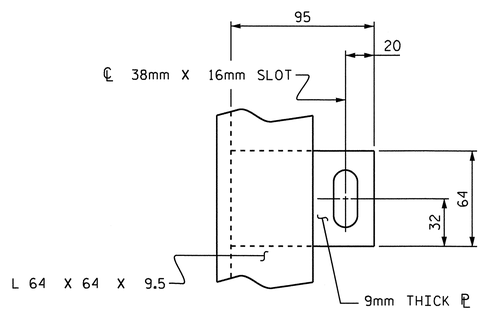

PLAN VIEW OF TAB

MOVEMENT AND SETTING AT EVAZOTE JOINT						
LOCATION	SKEW ANGLE	NOMINAL UNCOMPRESSED SEAL WIDTH	TOTAL MOVEMENT (ALONG ℄ RDWY)	PERPENDICULAR JOINT OPENING AT 7° C	PERPENDICULAR JOINT OPENING AT 16° C	PERPENDICULAR JOINT OPENING AT 32° C
END BENT No. 1 (EXP.)	108°-46'-36"	87mm	54mm	73mm	64mm	48mm
END BENT No. 2 (FIX.)	108°-46'-36"	64mm	0	--	48mm	--

TOTAL MOVEMENT IS CALCULATED ALONG THE CENTERLINE OF ROADWAY.
JOINT OPENINGS ARE MEASURED PERPENDICULAR TO THE JOINT.

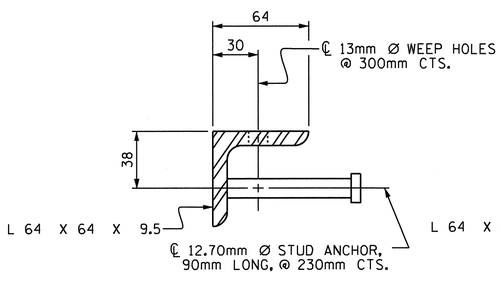

SECTION VIEW OF STUD

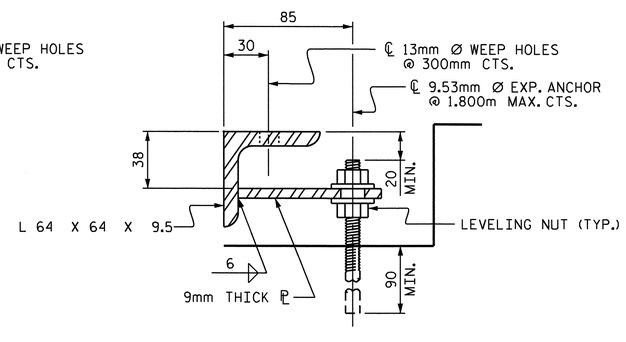

SECTION VIEW OF TAB

ARMORED JOINT ANCHOR ASSEMBLY DETAILS

BILL OF MATERIAL		
LOCATION	ELASTOMERIC CONCRETE * (CU. m)	TOTAL LENGTH OF ANGLE (m)
END BENT No. 1	0.3	26.6
END BENT No. 2	0.3	26.6

* BASED ON THE MINIMUM BLOCKOUT SHOWN.

PROJECT NO. X-0002 CB
CUMBERLAND COUNTY
STATION: 146+39.081 -L-

STATE OF NORTH CAROLINA
DEPARTMENT OF TRANSPORTATION
RALEIGH

STANDARD
ARMORED EVAZOTE
JOINT DETAILS

(EBL)

REVISIONS						SHEET NO.
NO.	BY:	DATE:	NO.	BY:	DATE:	S-123
1			3			TOTAL SHEETS
2			4			134

ASSEMBLED BY : MIKE BRITT		DATE : 5-19-10
CHECKED BY : T. BANKOVICH		DATE : 6-10
DRAWN BY : EEM 1/96	REV. 7/10/01	LES/RDR
CHECKED BY : RGW 1/96	REV. 5/7/03	RWW/JTE
	REV. 5/1/06	TLA/GM

22-SEP-2010 15:45
Z:\Structures\Str4US401\Single_SpanBridge\Super_Draw\x0002c_str5r_aej.dgn
tbeach

STD. NO. AEJ1SM

STR. #4

SUPERSTRUCTURE REINFORCING STEEL LENGTHS ARE BASED ON THE FOLLOWING MINIMUM SPLICE LENGTHS					
BAR SIZE	SUPERSTRUCTURE EXCEPT APPROACH SLABS, PARAPET, AND BARRIER RAIL		APPROACH SLABS		PARAPET AND BARRIER RAIL
	EPOXY COATED	UNCOATED	EPOXY COATED	UNCOATED	
#13	610	540	610	540	840
#16	770	660	770	660	1050
#19	920	790	1190	790	1330
#22	1580	1060			
#25	2080	1390			

REINFORCING BAR SCHEDULE

SPAN "A"

BAR	No.	SIZE	TYPE	LENGTH	WEIGHT
* A1	614	#16	STR.	13480	12845
A2	614	#16	STR.	13480	12845
* A101	2	#16	STR.	13140	41
* A102	2	#16	STR.	12720	39
* A103	2	#16	STR.	12300	38
* A104	2	#16	STR.	11900	37
* A105	2	#16	STR.	11480	36
* A106	2	#16	STR.	11080	34
* A107	2	#16	STR.	10660	33
* A108	2	#16	STR.	10240	32
* A109	2	#16	STR.	9840	31
* A110	2	#16	STR.	9420	29
* A111	2	#16	STR.	9020	28
* A112	2	#16	STR.	8600	27
* A113	2	#16	STR.	8200	25
* A114	2	#16	STR.	7780	24
* A115	2	#16	STR.	7360	23
* A116	2	#16	STR.	6960	22
* A117	2	#16	STR.	6540	20
* A118	2	#16	STR.	6120	19
* A119	2	#16	STR.	5720	18
* A120	2	#16	STR.	5300	16
* A121	2	#16	STR.	4900	15
* A122	2	#16	STR.	4480	14
* A123	2	#16	STR.	4080	13
* A124	2	#16	STR.	3660	11
* A125	2	#16	STR.	3240	10
* A126	2	#16	STR.	2840	9
* A127	2	#16	STR.	2420	8
* A128	2	#16	STR.	2020	6
* A129	2	#16	STR.	1600	5
* A130	2	#16	STR.	1180	4
* A131	2	#16	STR.	780	2
A201	2	#16	STR.	13140	41
A202	2	#16	STR.	12720	39
A203	2	#16	STR.	12300	38
A204	2	#16	STR.	11900	37
A205	2	#16	STR.	11480	36
A206	2	#16	STR.	11080	34
A207	2	#16	STR.	10660	33
A208	2	#16	STR.	10240	32
A209	2	#16	STR.	9840	31
A210	2	#16	STR.	9420	29
A211	2	#16	STR.	9020	28
A212	2	#16	STR.	8600	27
A213	2	#16	STR.	8200	25
A214	2	#16	STR.	7780	24
A215	2	#16	STR.	7360	23
A216	2	#16	STR.	6960	22
A217	2	#16	STR.	6540	20
A218	2	#16	STR.	6120	19
A219	2	#16	STR.	5720	18
A220	2	#16	STR.	5300	16
A221	2	#16	STR.	4900	15
A222	2	#16	STR.	4480	14
A223	2	#16	STR.	4080	13
A224	2	#16	STR.	3660	11
A225	2	#16	STR.	3240	10
A226	2	#16	STR.	2840	9
A227	2	#16	STR.	2420	8
A228	2	#16	STR.	2020	6
A229	2	#16	STR.	1600	5
A230	2	#16	STR.	1180	4
A231	2	#16	STR.	780	2
* B1	341	#13	STR.	8800	2983
B2	330	#16	STR.	15660	8020
* G1	2	#16	STR.	14240	44
* K1	16	#16	1	2780	69
* K2	16	#16	2	3020	75
* K3	24	#16	STR.	3000	112
* S1	60	#13	3	1440	86

REINFORCING STEEL 21,534 kg

* EPOXY COATED REINFORCING STEEL 16,883 kg

BAR TYPES

ALL BAR DIMENSIONS ARE OUT TO OUT

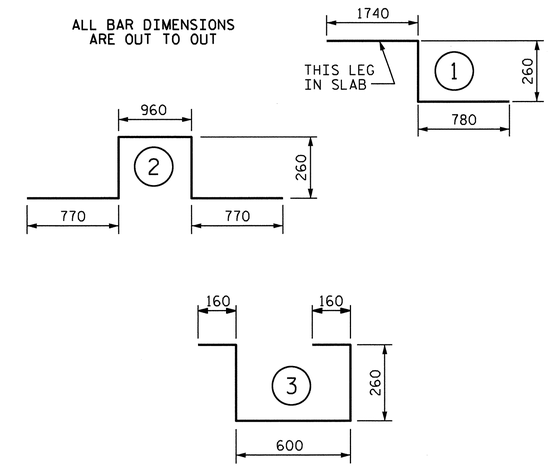

SUPERSTRUCTURE BILL OF MATERIAL

EBL	CLASS AA CONCRETE	REINFORCING STEEL	EPOXY COATED REINFORCING STEEL
	(m3)	(kg)	(kg)
SPAN "A"- POUR #1	183.9		
SPAN "A"- POUR #2	164.1		
TOTALS **	348.0	21,534	16,883

** QUANTITIES FOR BARRIER RAIL ARE NOT INCLUDED.

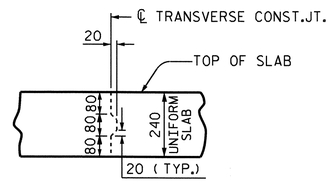

TRANSVERSE CONSTRUCTION JOINT DETAIL

NOTE: LONGITUDINAL REINFORCING STEEL SHALL BE CONTINUOUS THRU JOINT

GROOVING BRIDGE FLOORS		
APPROACH SLABS	168.4	SQ.METER
BRIDGE DECK	1,055.0	SQ.METER
TOTAL	1,223.4	SQ.METER

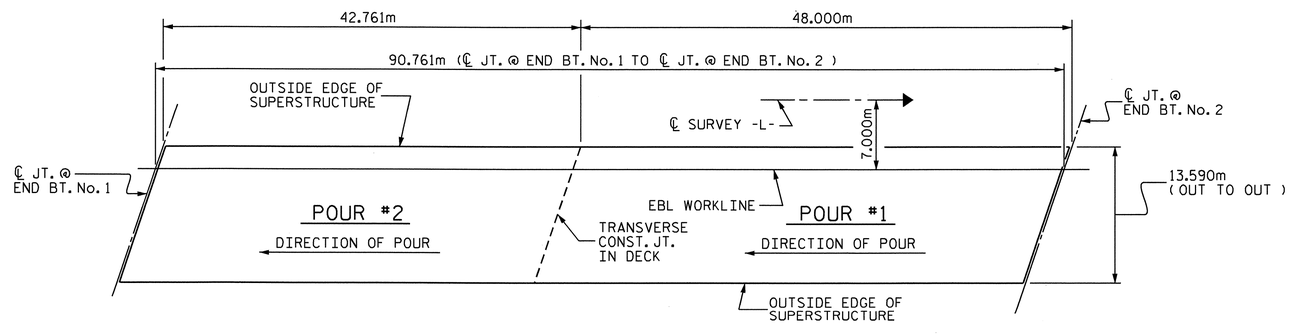

CONCRETE POURING SEQUENCE AND LAYOUT FOR COMPUTING AREA OF REINFORCED CONCRETE DECK SLAB

(SQ. METER = 1,233.4)

PROJECT NO. X-0002 CB

CUMBERLAND COUNTY

STATION: 146+39.081 -L-

NORTH CAROLINA PROFESSIONAL SEAL 24390 ENGINEER THEO J. BEACH 11/3/10

STATE OF NORTH CAROLINA
DEPARTMENT OF TRANSPORTATION
RALEIGH

SUPERSTRUCTURE

BILL OF MATERIAL

(EBL)

REVISIONS						SHEET NO.
NO.	BY:	DATE:	NO.	BY:	DATE:	S-124
1			3			TOTAL SHEETS
2			4			134

DRAWN BY : MIKE BRITT DATE : 5-19-10
CHECKED BY : T. BANKOVICH DATE : 6-10

22-SEP-2010 15:46
Z:\Structures\Str4US401\Single_SpanBridge\Super_Draw\X0002C_str5R_BM.dgn
tbeach

NOTES:

▲ FOR LOCATION OF ELEVATIONS BETWEEN BUILDUPS, SEE SECTION A-A ON SHEET 3 OF 3.

★ THIS ELEVATION TAKEN ON FILL FACE OF BACKWALL.

STIRRUPS AND U2 BARS IN CAP MAY BE SHIFTED AS NECESSARY TO CLEAR ANCHOR BOLTS.

BACKWALL SHALL BE PLACED BEFORE APPLYING THE EPOXY PROTECTIVE COATING.

THE CONCRETE IN THE SHADED AREA OF THE WING SHALL BE POURED AFTER THE BARRIER RAIL IS CAST IF SLIP FORMING IS USED.

THE TOP SURFACE OF THE CAP EXCEPT THE BRIDGE SEAT BUILDUPS SHALL BE SLOPED TRANSVERSELY FROM THE FILL FACE TO THE BACK FACE AT THE RATE OF 2 %.

TIE BACKS ARE REQUIRED ON END BENT No. 1. SEE "TIEBACK DETAIL" SHEET 3 OF 3. FOR SOIL REINFORCEMENT DETAIL/ BACKWALL CONNECTION, SEE MSE WALL PLANS.

FOR THE 102mm Ø STD. PIPE DETAILS, SEE "POT BEARING DETAILS" SHEET.

THE #16 V1 BARS IN THE BACKWALL SHALL BE PLACED 50mm CLEAR FROM THE TOP OF BACKWALL.

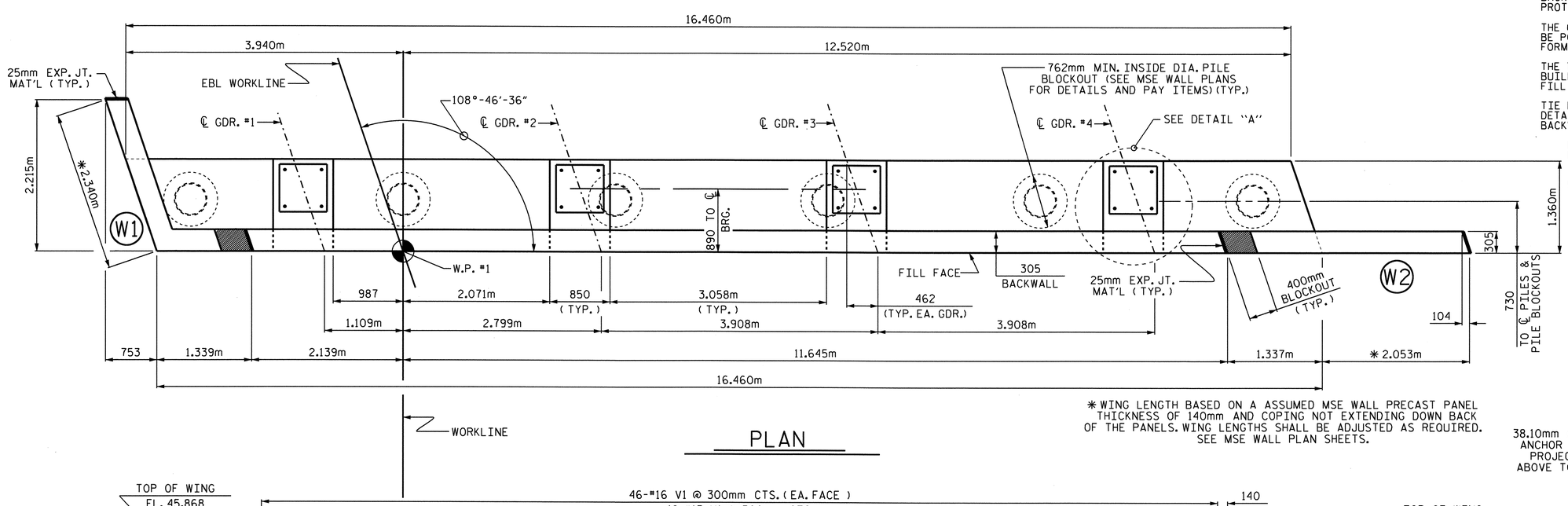

✱ WING LENGTH BASED ON A ASSUMED MSE WALL PRECAST PANEL THICKNESS OF 140mm AND COPING NOT EXTENDING DOWN BACK OF THE PANELS. WING LENGTHS SHALL BE ADJUSTED AS REQUIRED. SEE MSE WALL PLAN SHEETS.

PLAN

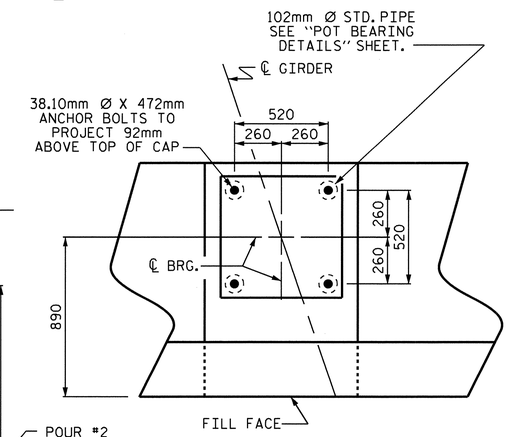

DETAIL "A"

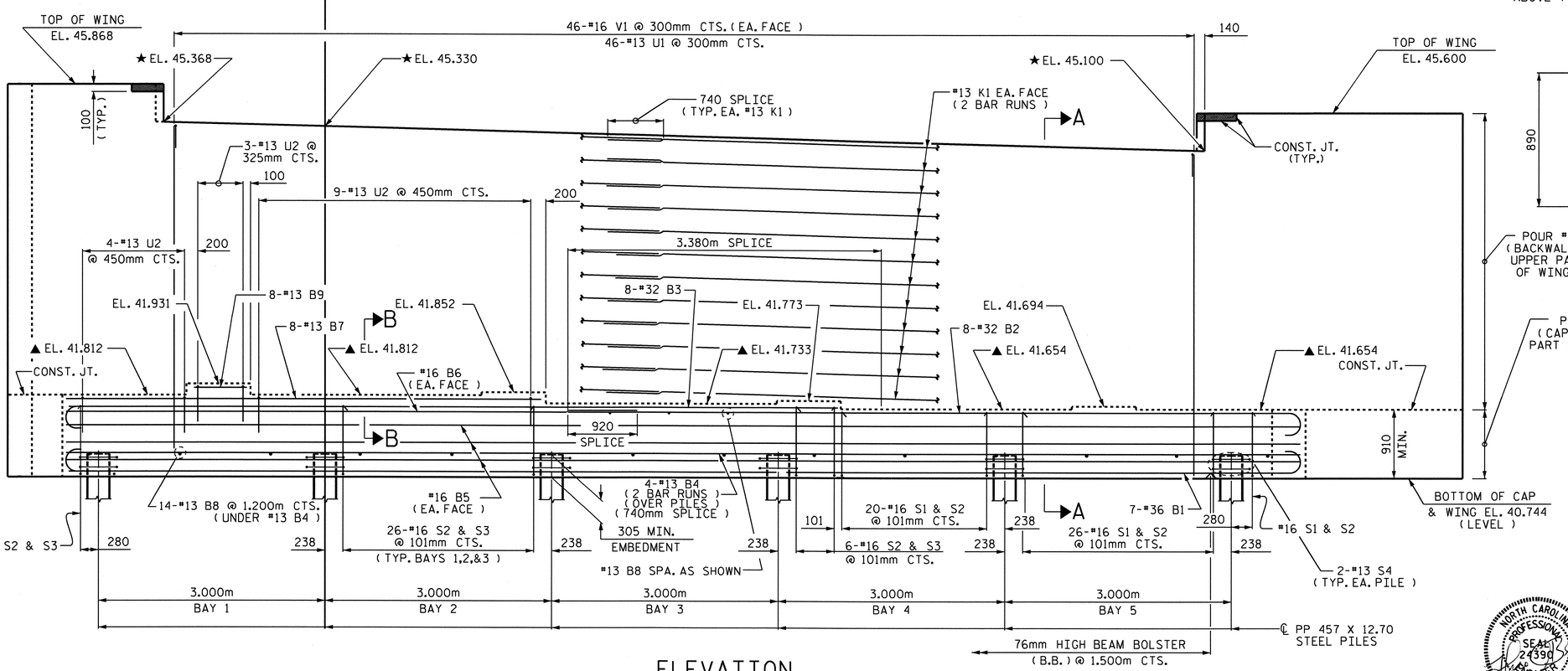

ELEVATION

(PILE BLOCKOUTS NOT SHOWN FOR CLARITY)

PROJECT NO. X-0002CB

CUMBERLAND COUNTY

STATION: 146+39.081-L-

SHEET 1 OF 3

STATE OF NORTH CAROLINA
DEPARTMENT OF TRANSPORTATION
RALEIGH

SUBSTRUCTURE

END BENT No. 1

(EBL)

NORTH CAROLINA PROFESSIONAL SEAL 24390 ENGINEER THEO W. BEACH 11/3/10

REVISIONS							SHEET NO.
NO.	BY:	DATE:	NO.	BY:	DATE:		S-125
1			3				TOTAL SHEETS
2			4				134

STR. #4

DRAWN BY : N. PIERCE DATE : 09-10
CHECKED BY : T. BANKOVICH DATE : 04-10

03-NOV-2010 12:34
R:\Structures\Str4US401\Single_SpanBridge\Sub_Draw\X-0002CB_SD_E*_1.dgn
tbeach

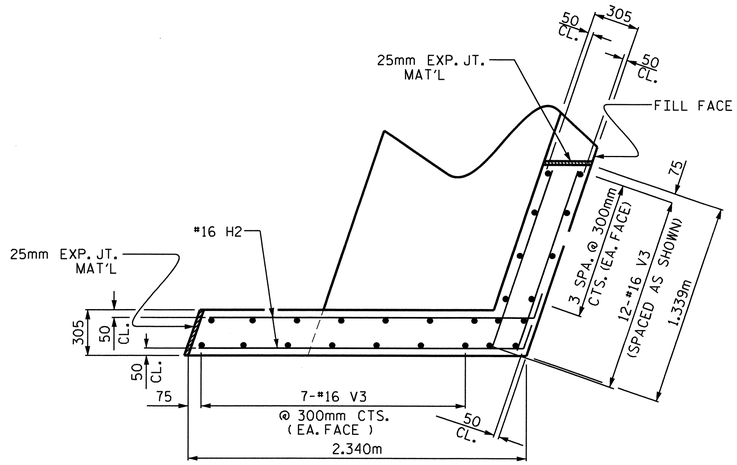

PLAN OF WING (W1)

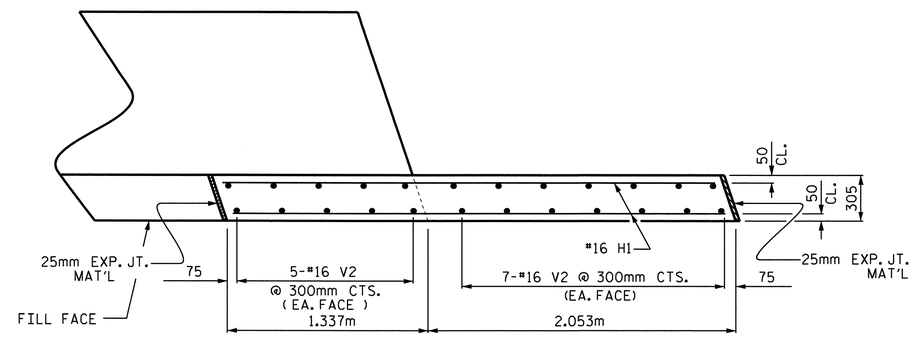

PLAN OF WING (W2)

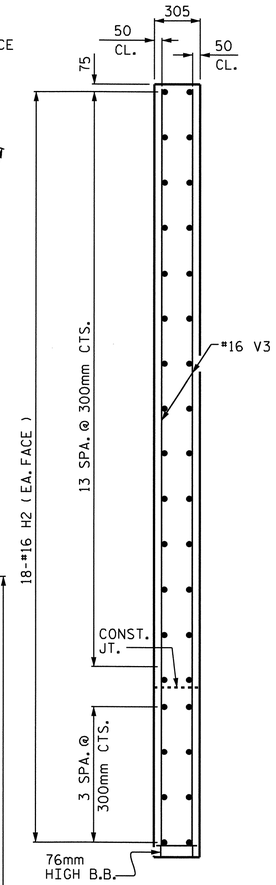

SECTION X-X

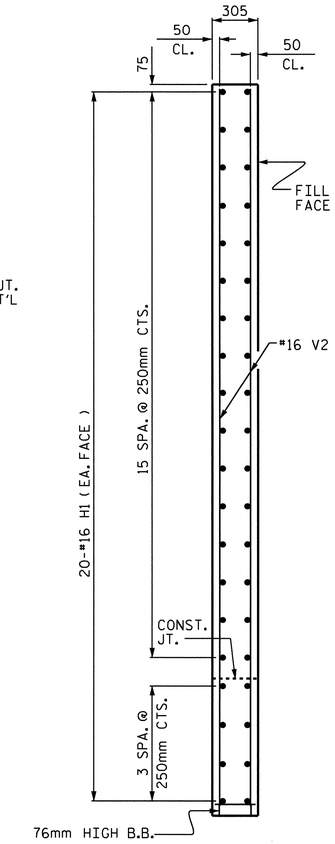

SECTION Y-Y

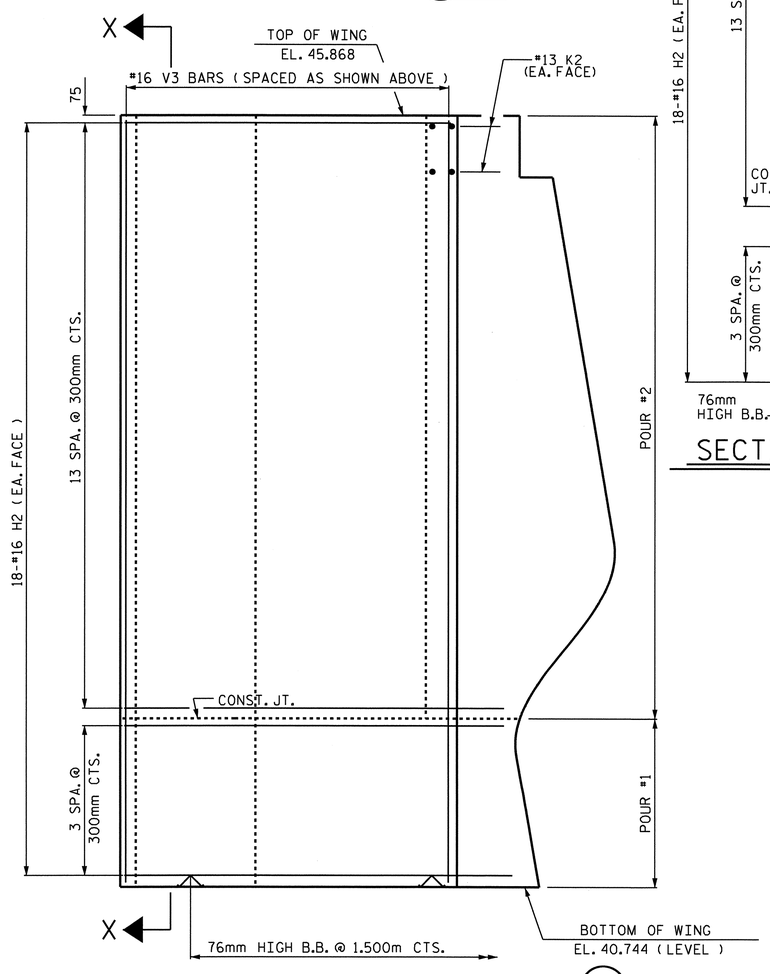

ELEVATION OF WING (W1)

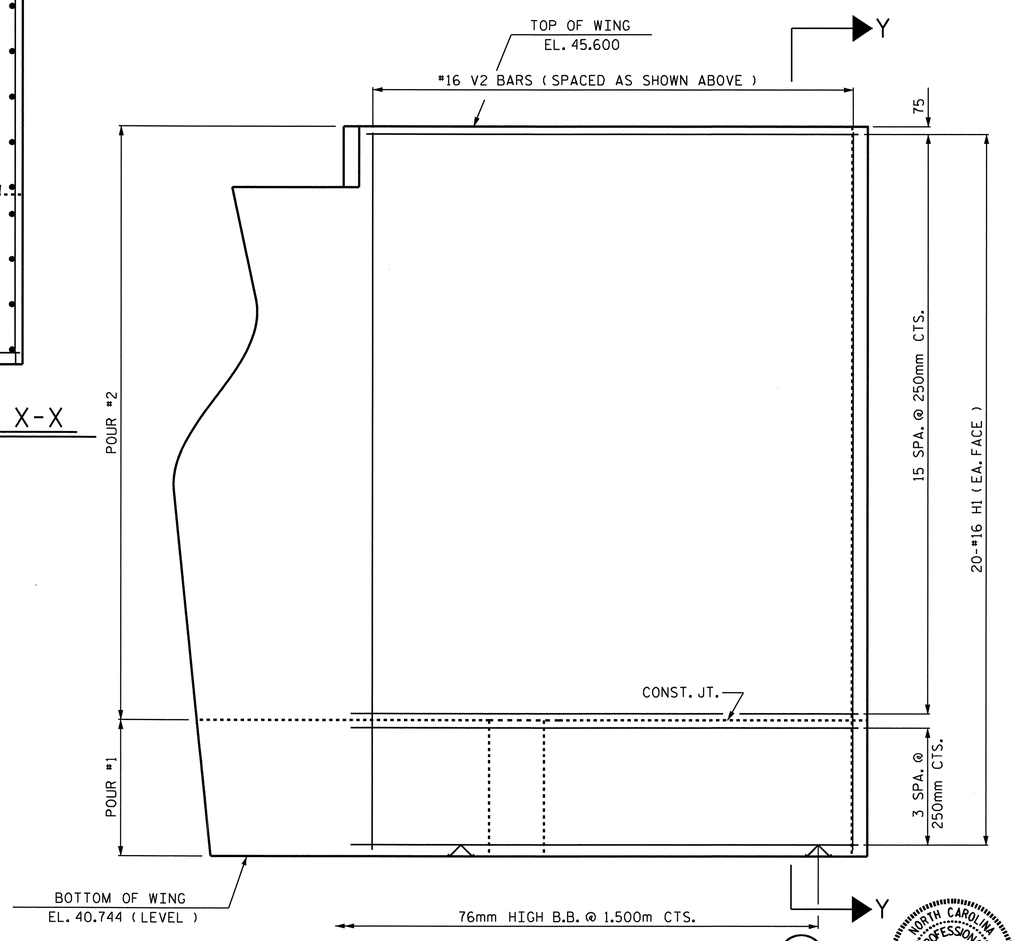

ELEVATION OF WING (W2)

NORTH CAROLINA PROFESSIONAL SEAL 24390 ENGINEER THEO J. BEACH
11/5/10

PROJECT NO. X-0002CB
CUMBERLAND COUNTY
STATION: 146+39.081 -L-

SHEET 2 OF 3

STATE OF NORTH CAROLINA
DEPARTMENT OF TRANSPORTATION
RALEIGH

SUBSTRUCTURE
END BENT No. 1
(EBL)

REVISIONS							SHEET NO.
NO.	BY:	DATE:	NO.	BY:	DATE:		S-126
1			3				TOTAL SHEETS
2			4				134

DRAWN BY : N. PIERCE DATE : 09-10
CHECKED BY : T. BANKOVICH DATE : 04-10

STR. #4

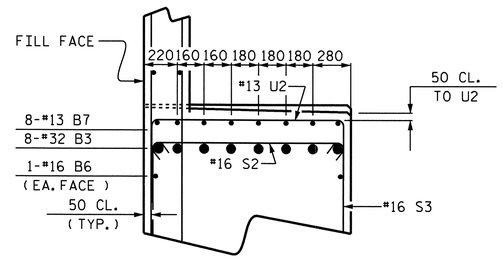

PARTIAL SECTION B-B

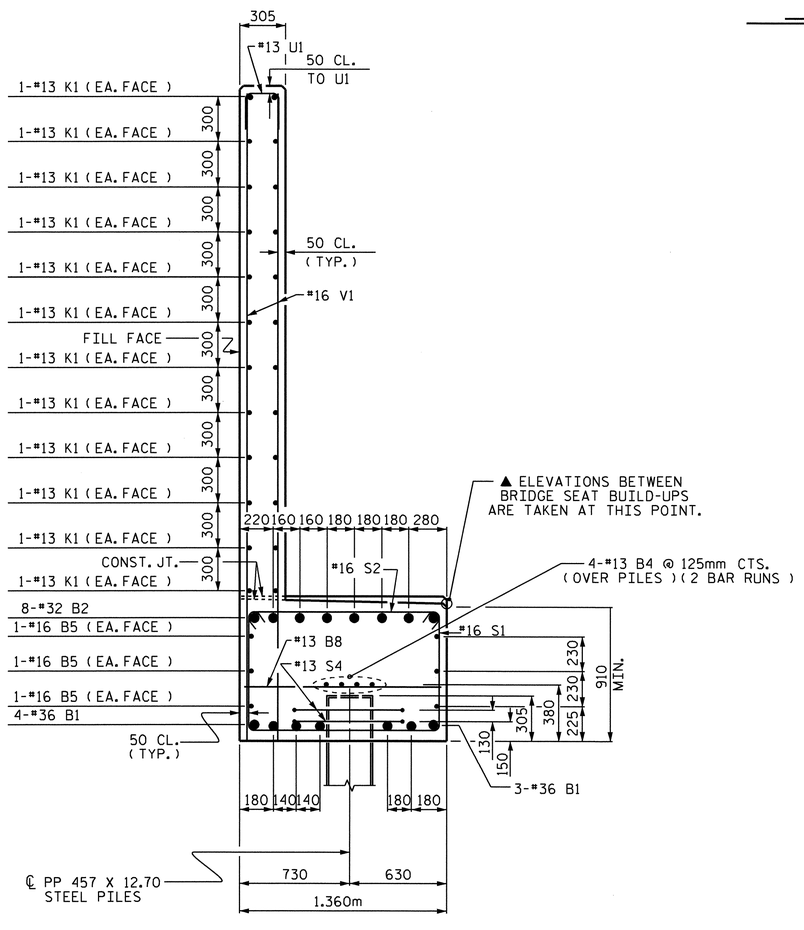

SECTION A-A

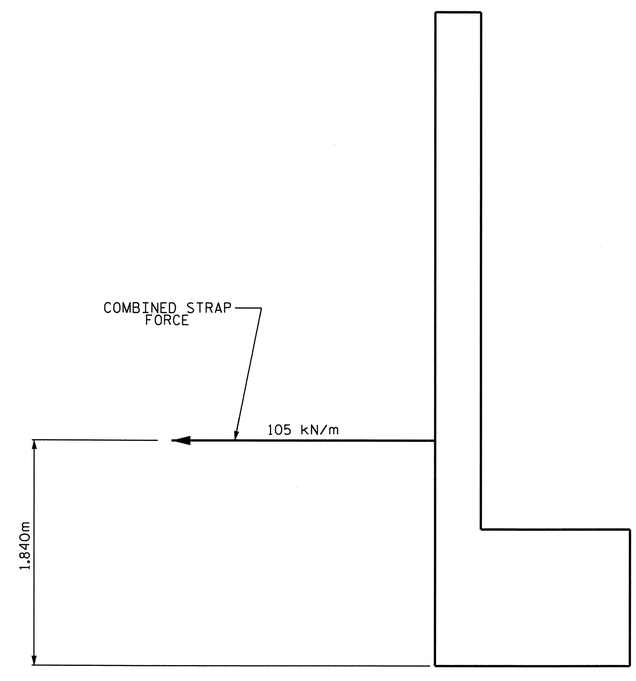

TIEBACK DETAIL

FOR SOIL RINFORCEMENT DETAIL & BACKWALL CONNECTION,
SEE MSE WALL PLANS.

BAR TYPES

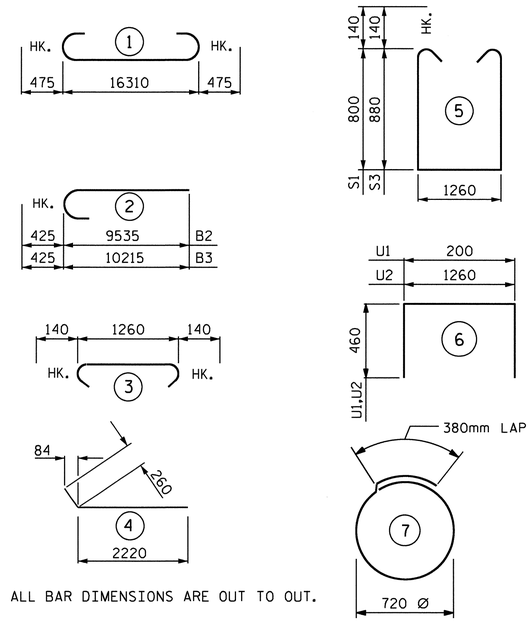

ALL BAR DIMENSIONS ARE OUT TO OUT.

BILL OF MATERIAL

END BENT No. 1

BAR	No.	SIZE	TYPE	LENGTH	WEIGHT
B1	7	#36	1	17260	955
B2	8	#32	2	9960	510
B3	8	#32	2	10640	545
B4	8	#13	STR	8560	68
B5	6	#16	STR	16360	152
B6	2	#16	STR	7760	24
B7	8	#13	STR	6300	50
B8	17	#13	STR	1260	21
B9	8	#13	STR	740	6
H1	40	#16	STR	3280	204
H2	36	#16	4	2480	139
K1	48	#13	STR	8600	410
K2	4	#13	STR	1220	5
S1	47	#16	5	3140	229
S2	132	#16	3	1540	315
S3	85	#16	5	3300	435
S4	12	#13	7	2660	32
U1	46	#13	6	1120	51
U2	16	#13	6	2180	35
V1	92	#16	STR	4240	605
V2	24	#16	STR	4740	177
V3	26	#16	STR	5020	203

REINFORCING STEEL 5171 Kg.

CLASS A CONCRETE BREAKDOWN

POUR #1
(CAP & LOWER PART OF WINGS)
= 23.8 m^3

POUR #2
(BACKWALL & UPPER PART OF WINGS)
= 22.9 m^3

TOTAL CLASS A CONCRETE = 46.7 m^3

PP 457 X 12.70 STEEL PILES
No. 6 LIN. METERS = 96

PIPE PILE PLATES = 6 EA.

THE CONCRETE DISPLACED BY THE PLUGGED
PP 457 X 12.70 STEEL PILES HAS BEEN
DEDUCTED FROM THE POUR #1 CONCRETE QUANTITY

PROJECT NO. X-0002CB
CUMBERLAND COUNTY
STATION: 146+39.081 -L-

SHEET 3 OF 3

STATE OF NORTH CAROLINA
DEPARTMENT OF TRANSPORTATION
RALEIGH

SUBSTRUCTURE

END BENT No. 1

(EBL)

NORTH CAROLINA PROFESSIONAL SEAL 24390 ENGINEER THEO J. BEACH
11/3/10

REVISIONS						SHEET NO.
NO.	BY:	DATE:	NO.	BY:	DATE:	S-127
1			3			TOTAL SHEETS
2			4			134

DRAWN BY : N. PIERCE DATE : 09-10
CHECKED BY : T. BANKOVICH DATE : 08-10

STR. #4

NOTES:

▲ FOR LOCATION OF ELEVATIONS BETWEEN BUILDUPS, SEE SECTION A-A ON SHEET 3 OF 3.

★ THIS ELEVATION TAKEN ON FILL FACE OF BACKWALL.

STIRRUPS AND U2 BARS IN CAP MAY BE SHIFTED AS NECESSARY TO CLEAR ANCHOR BOLTS.

BACKWALL SHALL BE PLACED BEFORE APPLYING THE EPOXY PROTECTIVE COATING.

THE CONCRETE IN THE SHADED AREA OF THE WING SHALL BE POURED AFTER THE BARRIER RAIL IS CAST IF SLIP FORMING IS USED.

THE TOP SURFACE OF THE CAP EXCEPT THE BRIDGE SEAT BUILDUPS SHALL BE SLOPED TRANSVERSELY FROM THE FILL FACE TO THE BACK FACE AT THE RATE OF 2 %.

TIE BACKS ARE REQUIRED ON END BENT No. 1. SEE "TIEBACK DETAIL" SHEET 3 OF 3. FOR SOIL REINFORCEMENT DETAIL/BACKWALL CONNECTION, SEE MSE WALL PLANS.

THE #16 V1 BARS IN THE BACKWALL SHALL BE PLACED 50mm CLEAR FROM THE TOP OF BACKWALL.

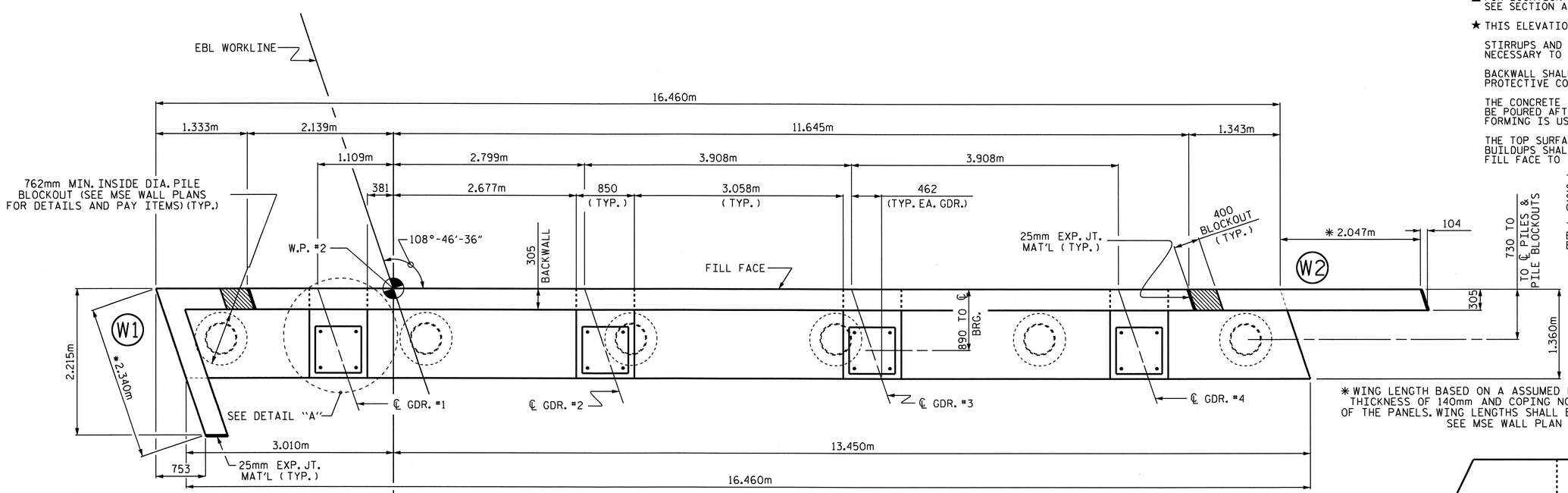

✱ WING LENGTH BASED ON A ASSUMED MSE WALL PRECAST PANEL THICKNESS OF 140mm AND COPING NOT EXTENDING DOWN BACK OF THE PANELS. WING LENGTHS SHALL BE ADJUSTED AS REQUIRED. SEE MSE WALL PLAN SHEETS.

PLAN

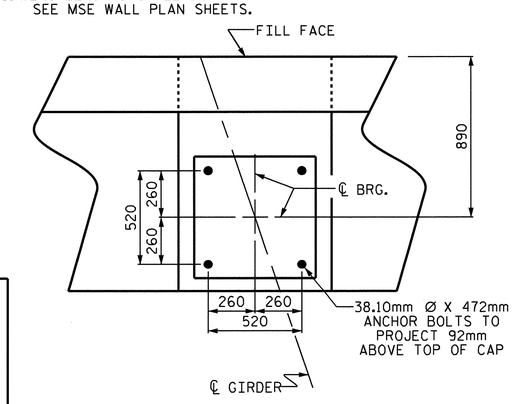

DETAIL "A"

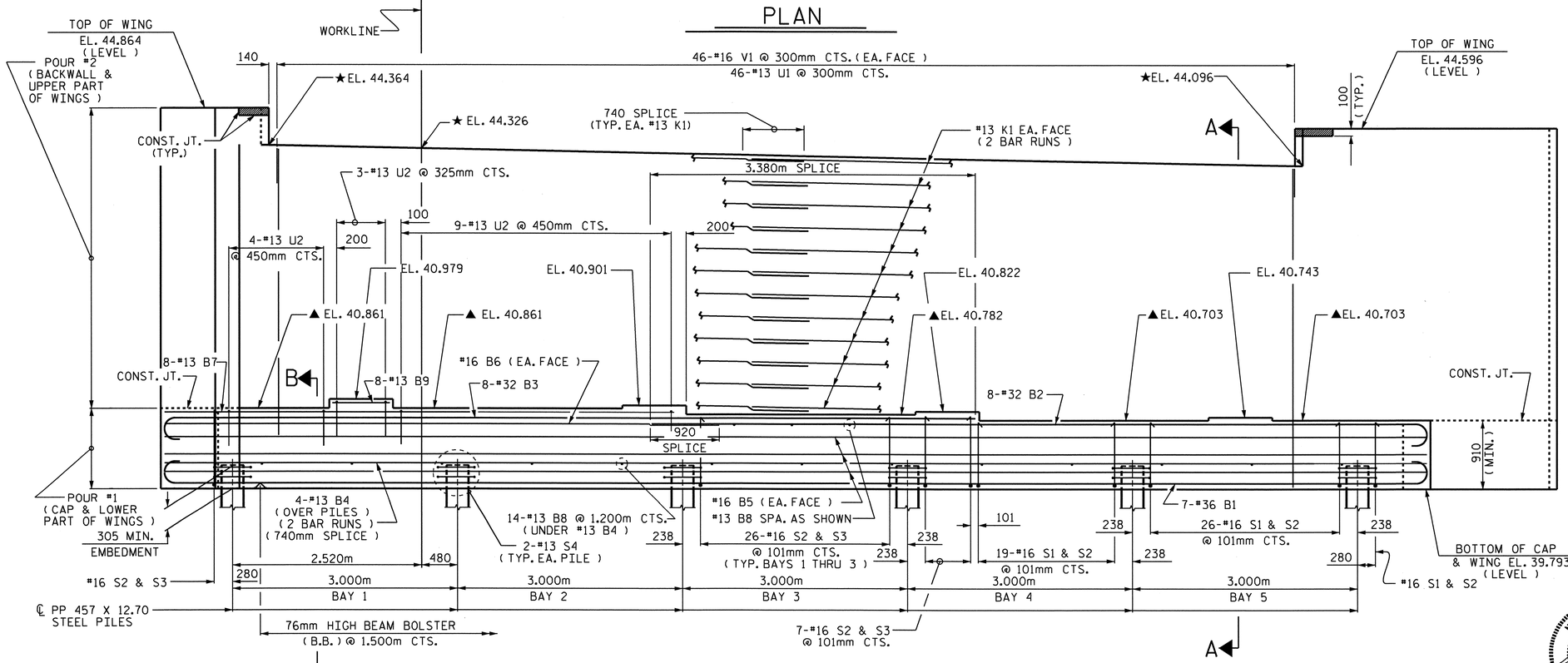

ELEVATION

(PILE BLOCKOUTS NOT SHOWN FOR CLARITY)

DRAWN BY :	N. PIERCE	DATE :	09-10
CHECKED BY :	T. BANKOVICH	DATE :	08-10

PROJECT NO. X-0002CB
CUMBERLAND COUNTY
STATION: 146+39.081 -L-

SHEET 1 OF 3

STATE OF NORTH CAROLINA
DEPARTMENT OF TRANSPORTATION
RALEIGH

SUBSTRUCTURE
END BENT No. 2
(EBL)

NORTH CAROLINA PROFESSIONAL SEAL 24390 ENGINEER THEO J. BEACH
11/3/10

REVISIONS						SHEET NO.
NO.	BY:	DATE:	NO.	BY:	DATE:	S-128
1			3			TOTAL SHEETS
2			4			134

STR. #4

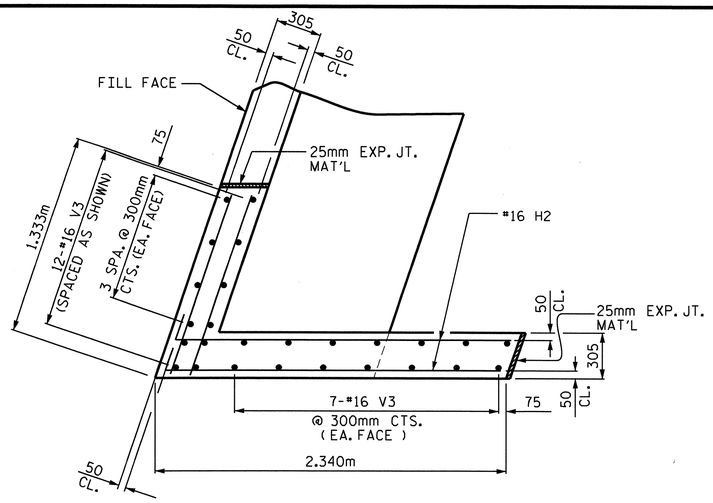

PLAN OF WING (W1)

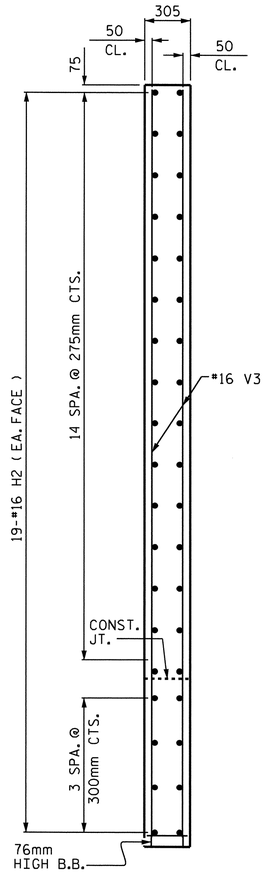

SECTION X-X

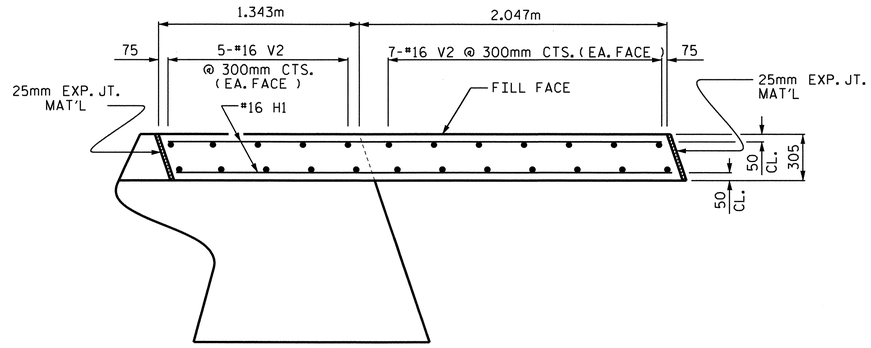

PLAN OF WING (W2)

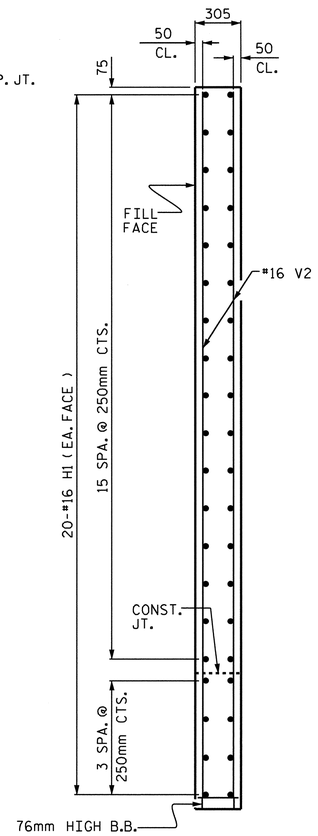

SECTION Y-Y

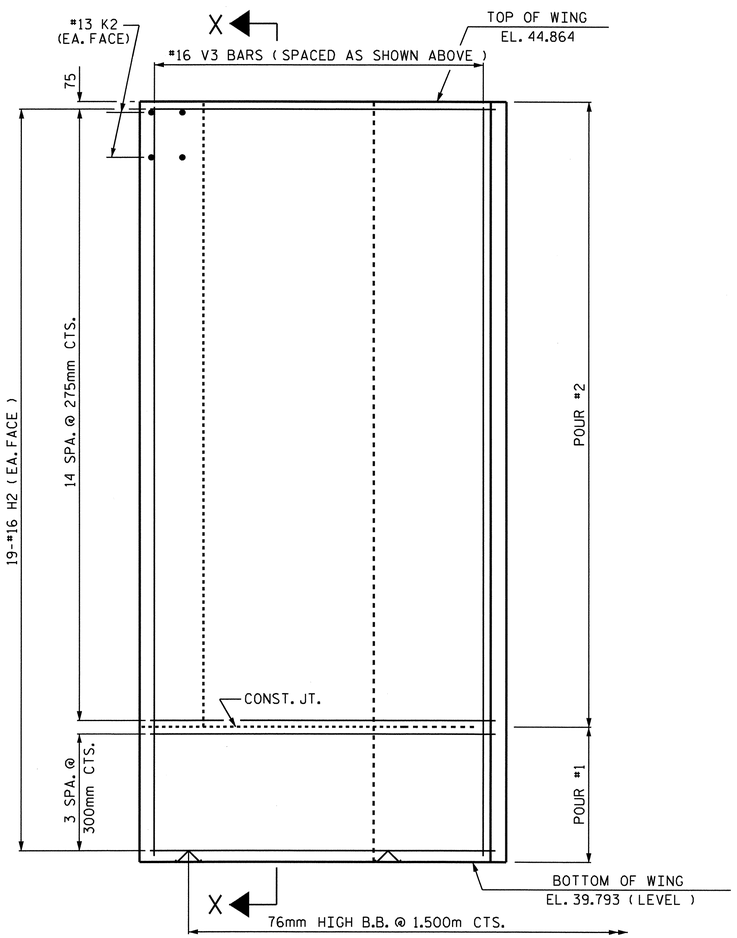

ELEVATION OF WING (W1)

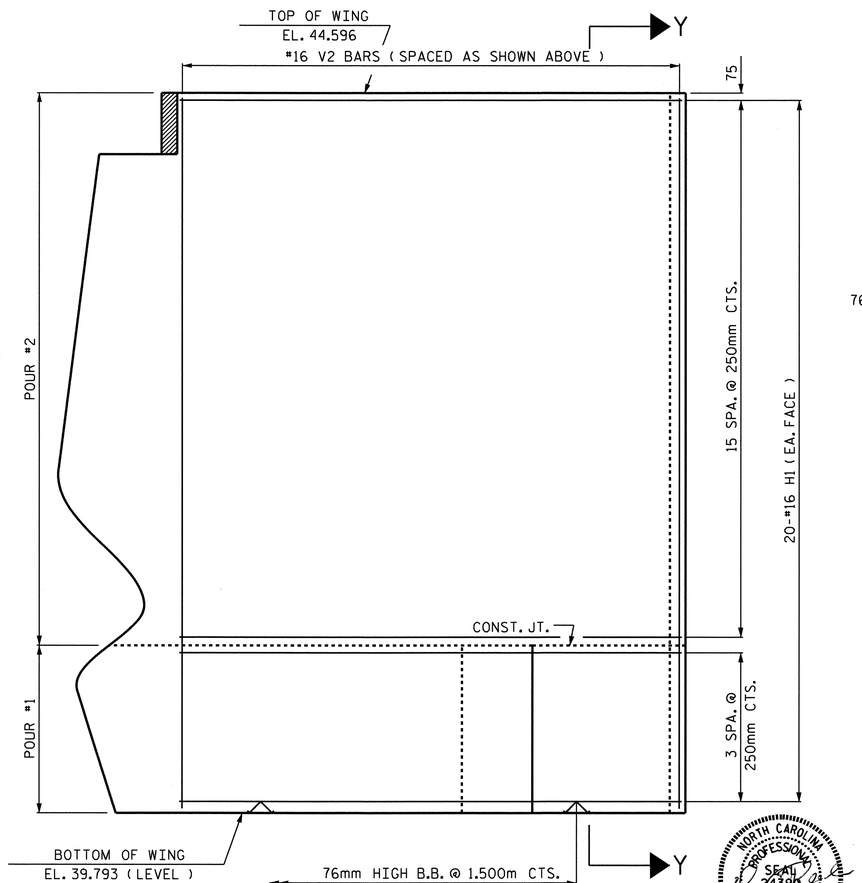

ELEVATION OF WING (W2)

NORTH CAROLINA PROFESSIONAL SEAL 24390 ENGINEER THEO J. BEACH
11/3/10

PROJECT NO. X-0002CB
CUMBERLAND COUNTY
STATION: 146+39.081 -L-

SHEET 2 OF 3

STATE OF NORTH CAROLINA
DEPARTMENT OF TRANSPORTATION
RALEIGH

SUBSTRUCTURE
END BENT No. 2
(EBL)

REVISIONS						SHEET NO.
NO.	BY:	DATE:	NO.	BY:	DATE:	S-129
1			3			TOTAL SHEETS
2			4			134

DRAWN BY : N. PIERCE DATE : 09-10
CHECKED BY : T. BANKOVICH DATE : 08-10

STR. #4

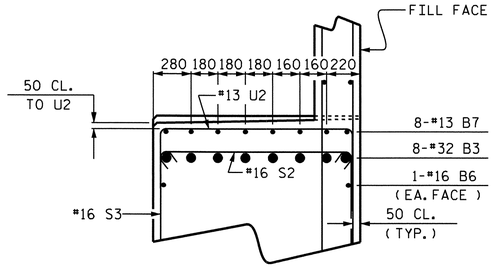

PARTIAL SECTION B-B

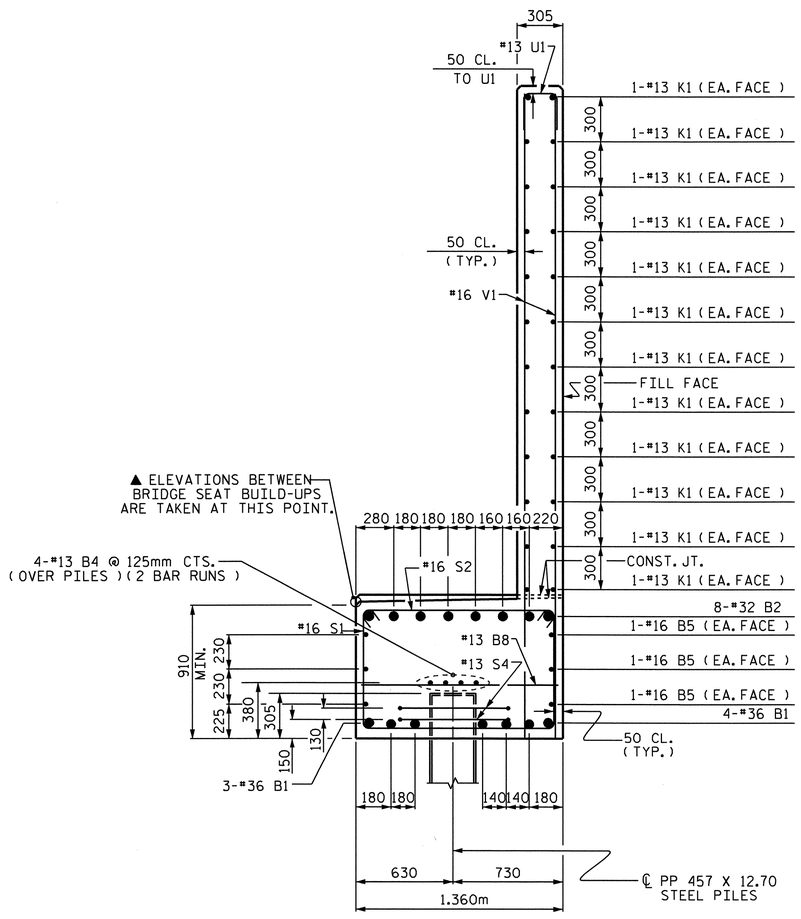

SECTION A-A

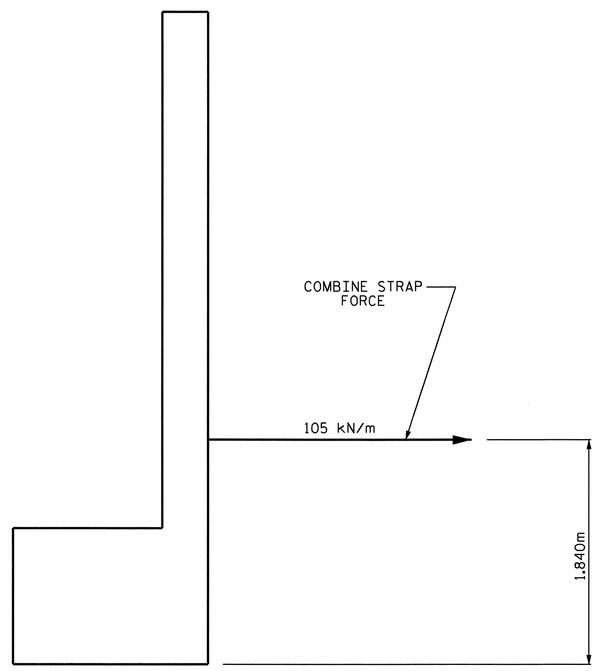

TIEBACK DETAIL

FOR SOIL RINFORCEMENT DETAIL & BACKWALL CONNECTION, SEE MSE WALL PLANS.

BAR TYPES

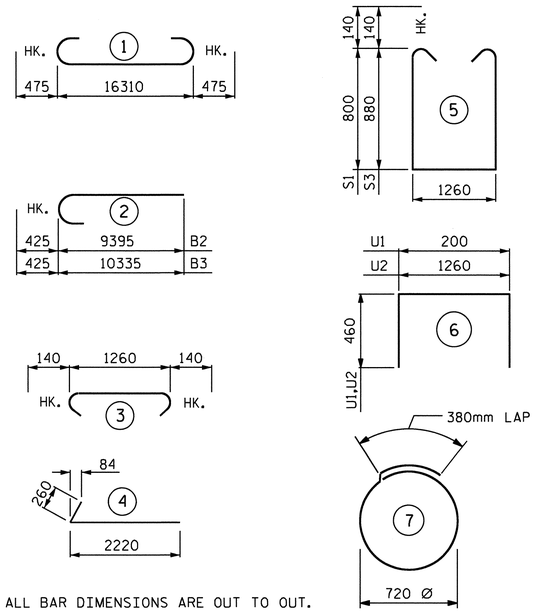

ALL BAR DIMENSIONS ARE OUT TO OUT.

BILL OF MATERIAL

END BENT No. 2

BAR	No.	SIZE	TYPE	LENGTH	WEIGHT
B1	7	#36	1	17260	955
B2	8	#32	2	9820	503
B3	8	#32	2	10760	551
B4	8	#13	STR	8560	68
B5	6	#16	STR	16360	152
B6	2	#16	STR	7900	25
B7	8	#13	STR	6440	51
B8	17	#13	STR	1260	21
B9	8	#13	STR	740	6
H1	40	#16	STR	3280	204
H2	38	#16	4	2480	146
K1	48	#13	STR	8600	410
K2	4	#13	STR	1220	5
S1	46	#16	5	3140	224
S2	132	#16	3	1540	315
S3	86	#16	5	3300	444
S4	12	#13	7	2660	32
U1	46	#13	6	1120	51
U2	16	#13	6	2180	35
V1	92	#16	STR	4180	597
V2	24	#16	STR	4680	174
V3	26	#16	STR	4960	200

REINFORCING STEEL 5169 Kg.

CLASS A CONCRETE BREAKDOWN

POUR #1
(CAP & LOWER PART OF WINGS)
= 23.8 m^3

POUR #2
(BACKWALL & UPPER PART OF WINGS)
= 22.9 m^3

TOTAL CLASS A CONCRETE = 46.7 m^3

PP 457 X 12.70 STEEL PILES
No. 6 LIN. METERS = 96

PIPE PILE PLATES = 6 EA.

THE CONCRETE DISPLACED BY THE PLUGGED PP 457 X 12.70 STEEL PILES HAS BEEN DEDUCTED FROM THE POUR #1 CONCRETE QUANTITY

PROJECT NO. X-0002CB
CUMBERLAND COUNTY
STATION: 146+39.081 -L-

SHEET 3 OF 3

STATE OF NORTH CAROLINA
DEPARTMENT OF TRANSPORTATION
RALEIGH

SUBSTRUCTURE

END BENT No. 2
(EBL)

NORTH CAROLINA PROFESSIONAL SEAL 24390 ENGINEER THEO J. BEACH
11/3/10

REVISIONS						SHEET NO.
NO.	BY:	DATE:	NO.	BY:	DATE:	S-130
1			3			TOTAL SHEETS
2			4			134

DRAWN BY : N. PIERCE DATE : 09-10
CHECKED BY : T. BANKOVICH DATE : 08-10

STR. #4

NOTES

PIPE PILES SHALL BE IN ACCORDANCE WITH SECTION 1084 OF THE STANDARD SPECIFICATIONS.

PIPE PILE PLATES, IF REQUIRED, SHALL BE IN ACCORDANCE WITH SECTION 450 OF THE STANDARD SPECIFICATIONS.

REMOVE AND REPLACE OR REPAIR TO THE SATISFACTION OF THE ENGINEER PILES THAT ARE DAMAGED, DEFORMED OR COLLAPSED DURING INSTALLATION OR DRIVING.

PILE SPLICES SHALL BE IN ACCORDANCE WITH THE STANDARD SPECIFICATIONS AND AWS D1.1.

FOR CLOSED END PIPE PILES, REMOVE ALL SOIL AND WATER FROM INSIDE THE PILES JUST PRIOR TO PLACING CONCRETE FOR THE CONCRETE PLUG.

FORM THE CONCRETE PLUG SUCH THAT THE CONCRETE DOES NOT MOVE. DO NOT PLACE CONCRETE IN THE END BENT CAP UNTIL THE CONCRETE PLUG HAS ATTAINED A MINIMUM COMPRESSIVE STRENGTH OF 10.3 MPa.

CLASS A CONCRETE IS CONSIDERED INCIDENTAL TO THE CONTRACT UNIT PRICE BID PER METER FOR PP 457 X 12.70 STEEL PILES.

THE CONTRACTOR MAY PROPOSE AN ALTERNATE METHOD FOR PLUGGING THE STEEL PIPE PILE, SUBJECT TO APPROVAL BY THE ENGINEER.

CLASS A CONCRETE FOR ONE PP 457 X 12.70 STEEL PILE	
305mm MIN. PLUG	0.05 m3

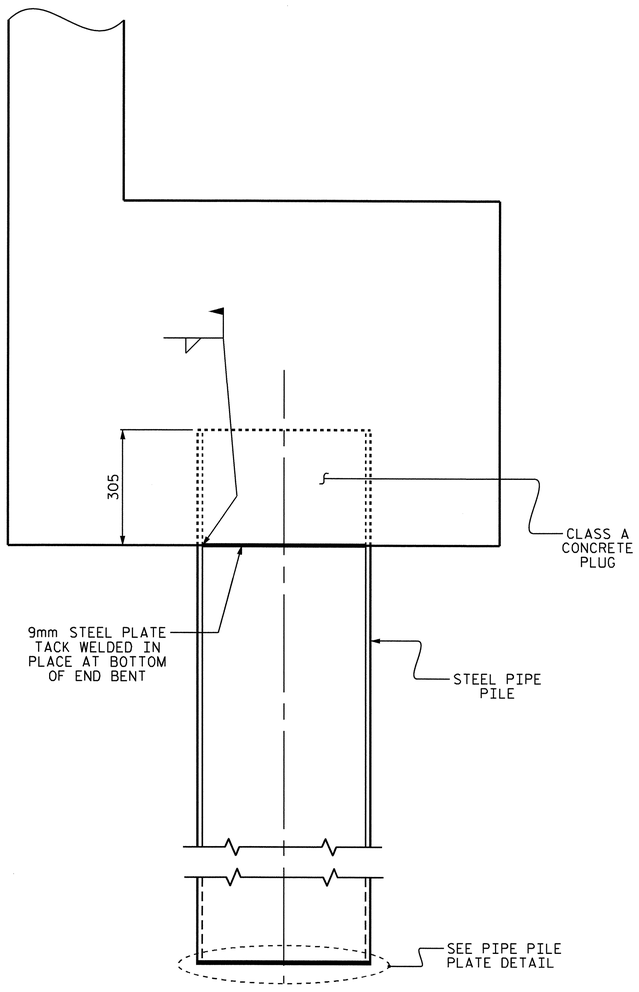

ELEVATION

PP 457 X 12.70 STEEL PILE

(CLOSED END)

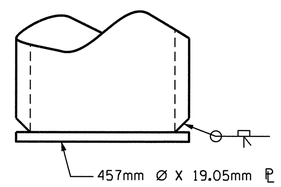

PIPE PILE PLATE DETAIL

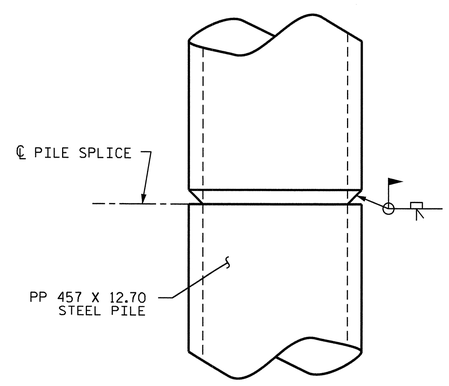

PIPE PILE SPLICE DETAIL

PROJECT NO. X-0002CB

CUMBERLAND COUNTY

STATION: 146+39.081 -L-

STATE OF NORTH CAROLINA
DEPARTMENT OF TRANSPORTATION
RALEIGH

STANDARD

457mm STEEL PIPE PILE

(EBL)

NORTH CAROLINA PROFESSIONAL SEAL 24390 ENGINEER THEO J. BEACH 11/3/10

REVISIONS							SHEET NO.
NO.	BY:	DATE:	NO.	BY:	DATE:		S-131
1			3				TOTAL SHEETS
2			4				134

ASSEMBLED BY : N. PIERCE		DATE : 08-10	
CHECKED BY : T. BANKOVICH		DATE : 08-10	
DRAWN BY : RWW 1/01	REV. 5/7/03	RWW/JTE	
CHECKED BY : LES 1/01	REV. 10/1/05	LBG/TLA	
	REV. 5/1/06R	MAA/KMM	

23-SEP-2010 07:47
Z:\Structures\Str4US401\Single_SpanBridge\Sub_Draw\X-0002CB_SD_E*_1.dgn
tbeach

STR. #4

GENERAL NOTES:

SLOPE PROTECTION SHALL BE PLACED UNDER THE ENDS OF THE BRIDGE AS SHOWN IN THE DETAILS. MEASUREMENT AND PAYMENT SHALL BE PRESCRIBED IN SECTION 462 OF THE STANDARD SPECIFICATIONS.

SLOPE PROTECTION:

SLOPE PROTECTION SHALL CONSIST OF 100mm POURED-IN-PLACE CONCRETE PAVING AS SHOWN IN THE DETAILS ON THIS SHEET. CONCRETE SHALL BE CLASS "B". THE CONCRETE SURFACE SHALL BE FLOATED WITH A WOODEN FLOAT AND FINISHED. WELDED WIRE FABRIC REINFORCING SHALL BE 152 X 152 - W9.1 X W9.1, 1520mm WIDE. SLOPE PROTECTION SHALL BE POURED IN 1520mm STRIPS AS SHOWN IN THE "POURING DETAIL" WITH 600mm LONG #13 BARS PLACED ALONG THE SLOPE BETWEEN STRIPS AT 450mm MAXIMUM SPACING. SLOPE PROTECTION MAY BE POURED IN ALTERNATE 1220mm AND 1520mm STRIPS AS SHOWN IN THE "OPTIONAL POURING DETAIL" WITH ADJACENT RUNS OF WELDED WIRE FABRIC LAPPING AT LEAST 152mm. THE COST OF THE WELDED WIRE FABRIC AND #13 BARS, IF USED, SHALL BE INCLUDED IN THE CONTRACT UNIT PRICE BID PER SQUARE METER FOR SLOPE PROTECTION.

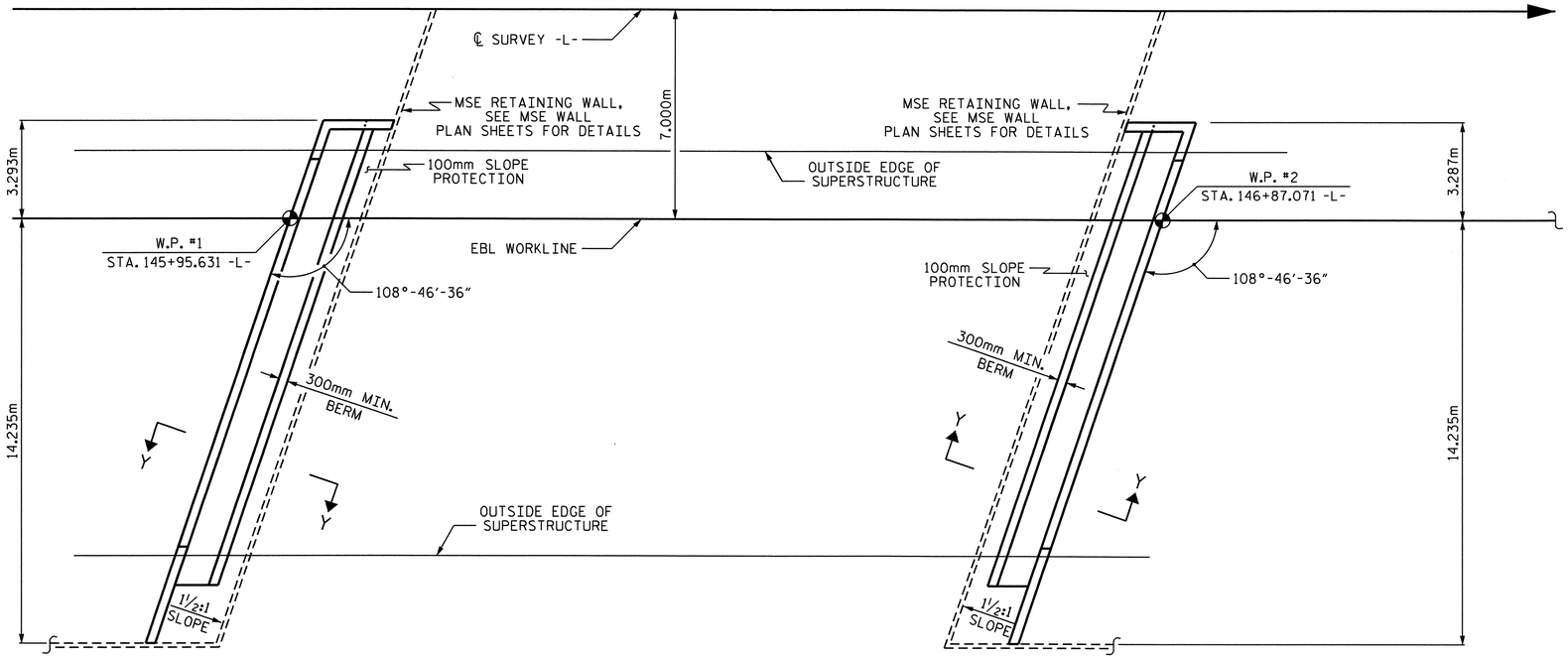

PLAN AT END BENT No. 1

PLAN AT END BENT No. 2

BRIDGE @ STA. 146+39.081 -L-	100mm SLOPE PROTECTION	* WELDED WIRE FABRIC 1520mm WIDE
	SQUARE METERS	APPROX. METERS
END BENT No. 1	24	16
END BENT No. 2	24	16

* QUANTITY SHOWN IS BASED ON 1520mm POURS.

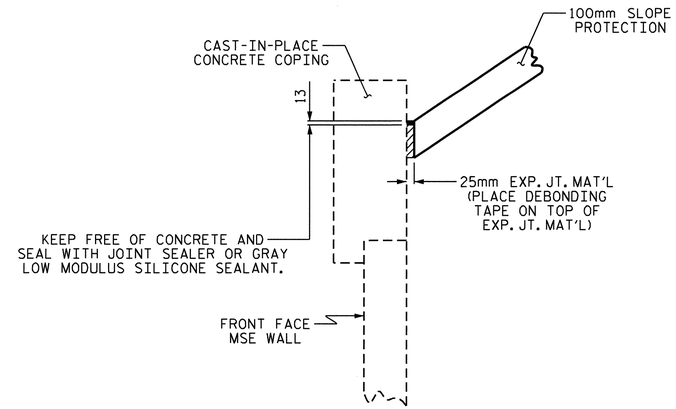

DETAIL "A"

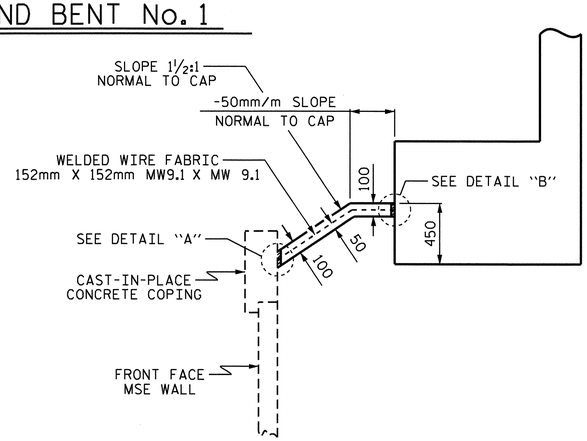

SECTION Y-Y

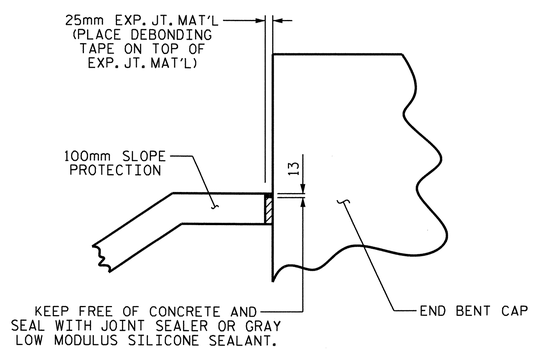

DETAIL "B"

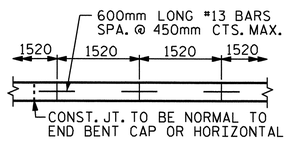

POURING DETAIL

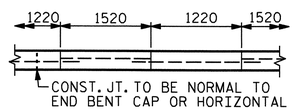

POUR A 1220mm STRIP FIRST

OPTIONAL POURING DETAIL

PROJECT NO. X-0002CB

CUMBERLAND COUNTY

STATION: 146+39.081 -L-

STATE OF NORTH CAROLINA
DEPARTMENT OF TRANSPORTATION
RALEIGH

STANDARD
SLOPE PROTECTION DETAILS

(EBL)

NORTH CAROLINA PROFESSIONAL SEAL 24390 ENGINEER THEO J. BEACH
11/3/10

REVISIONS						SHEET NO.
NO.	BY:	DATE:	NO.	BY:	DATE:	S-132
1			3			TOTAL SHEETS
2			4			134

DRAWN BY : T. BANKOVICH DATE : 4-2010
CHECKED BY : S.B. WILLIAMS DATE : 5-2010

23-SEP-2010 07:49
Z:\Structures\Str4US401\Single_SpanBridge\Misc_draw\X-0002C_str5_SP.dgn
tbeach

STD. NO. SP1SM

STR. #4

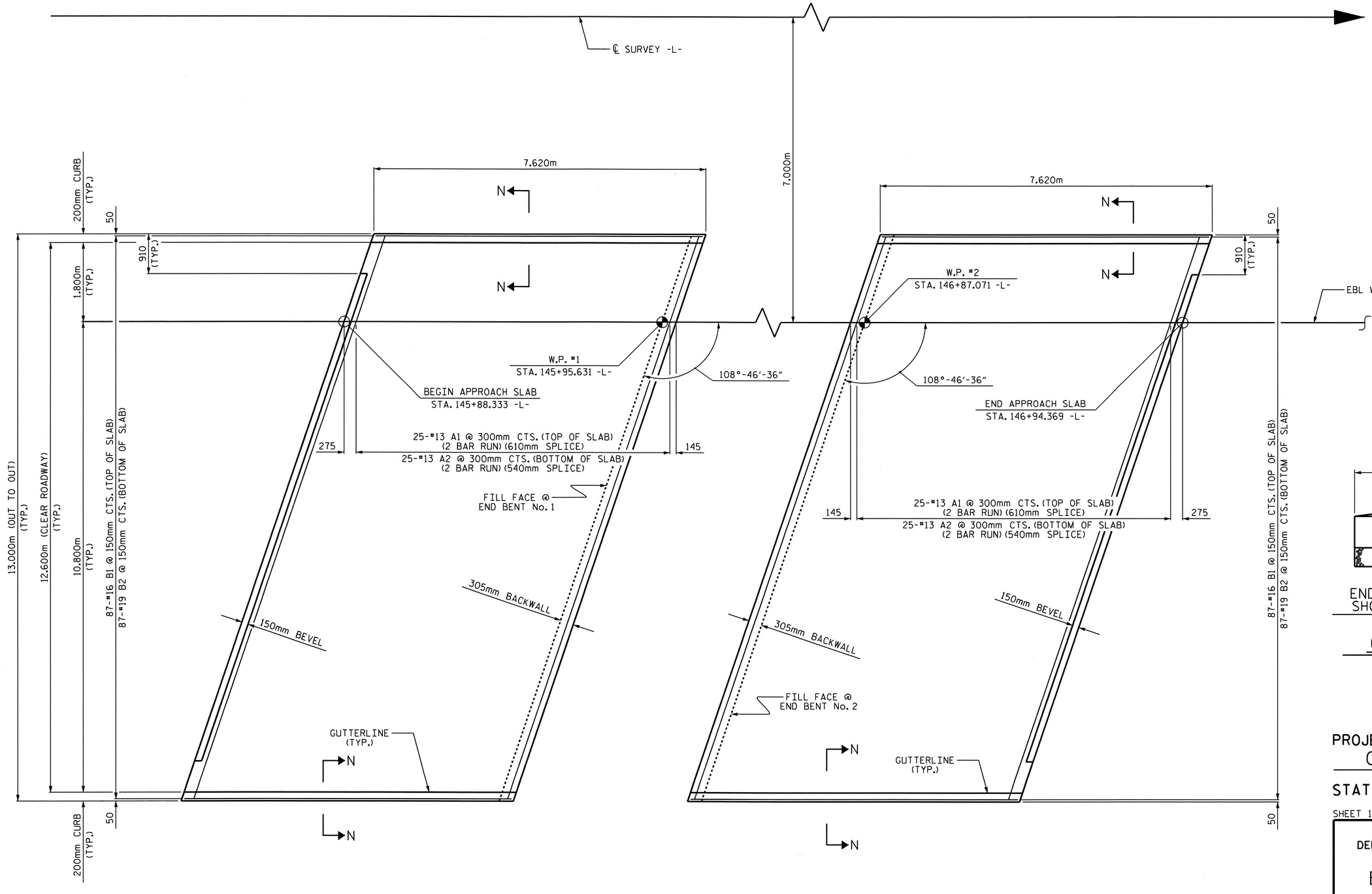

PLAN AT END BENT No. 1

PLAN AT END BENT No. 2

PLAN OF APPROACH SLABS

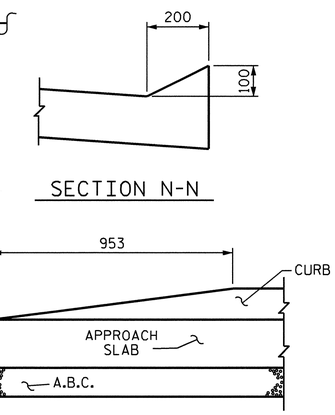

SECTION N-N

END OF CURB WITHOUT SHOULDER BERM GUTTER

CURB DETAILS

PROJECT NO. X-0002CB

CUMBERLAND COUNTY

STATION: 146+39.081 -L-

SHEET 1 OF 2

STATE OF NORTH CAROLINA
DEPARTMENT OF TRANSPORTATION
RALEIGH

BRIDGE APPROACH SLAB

(EBL)

NORTH CAROLINA PROFESSIONAL SEAL 24890 ENGINEER THEO J. BEACH 11/5/10

REVISIONS						SHEET NO.
NO.	BY:	DATE:	NO.	BY:	DATE:	S-133
1			3			TOTAL SHEETS
2			4			134

DRAWN BY : T. BANKOVICH DATE : 4-2010
CHECKED BY : S.B. WILLIAMS DATE : 5-2010

23-SEP-2010 07:49
Z:\Structures\Str4US401\Single_SpanBridge\Misc_draw\X0002C_str5_AS.dgn
tbeach

STR. #4

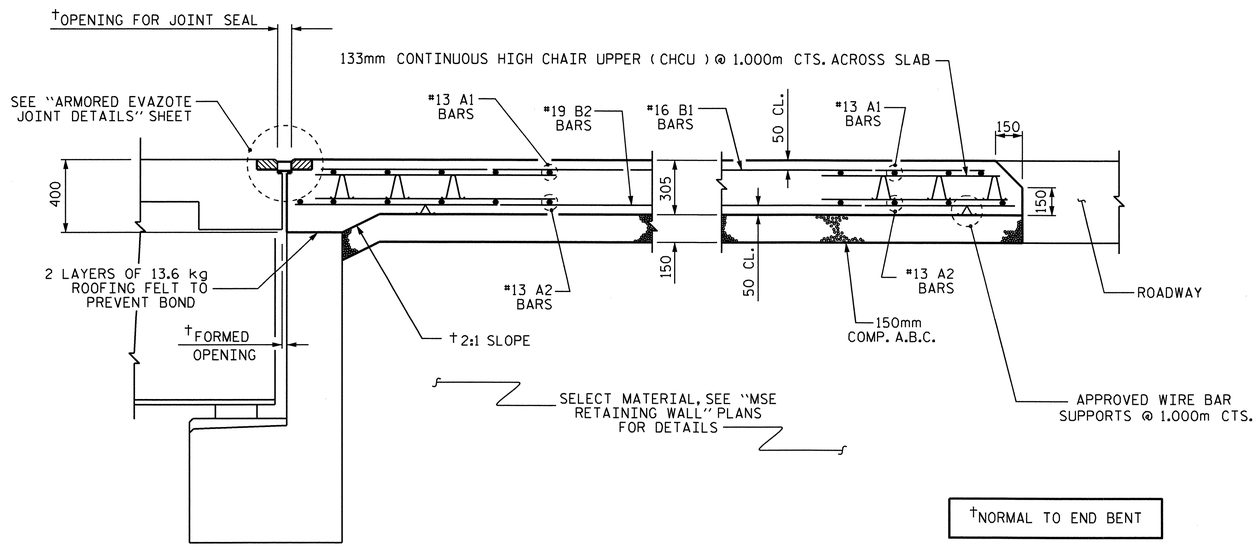

†NORMAL TO END BENT

SECTION THRU SLAB

(END BENT No. 2 SHOWN, END BENT No. 1 SIMILAR)

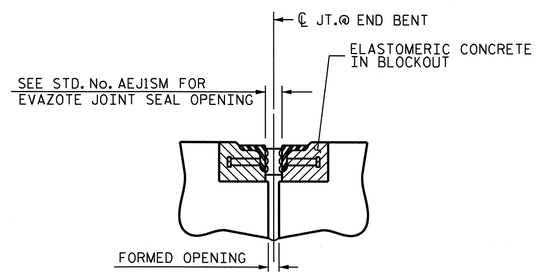

SECTION C-C

ARMORED EVAZOTE JOINT SEAL

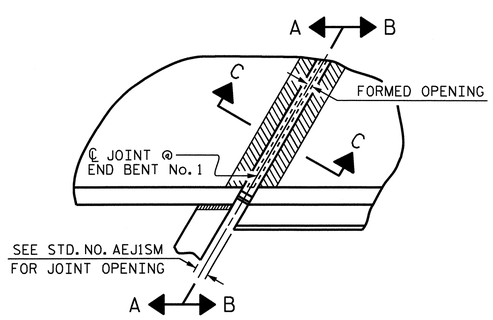

PLAN

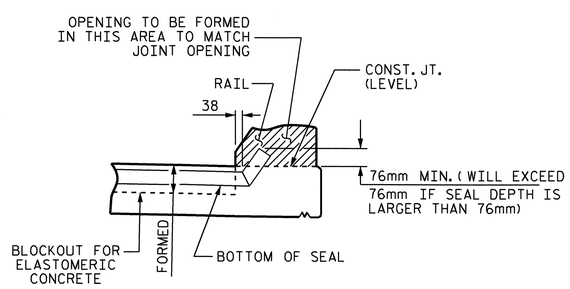

SECTION A-A

EVAZOTE JOINT SEAL TO BE CUT, HEAT WELDED AND TURNED UP PARALLEL TO SLOPED FACE OF THE BARRIER RAIL.

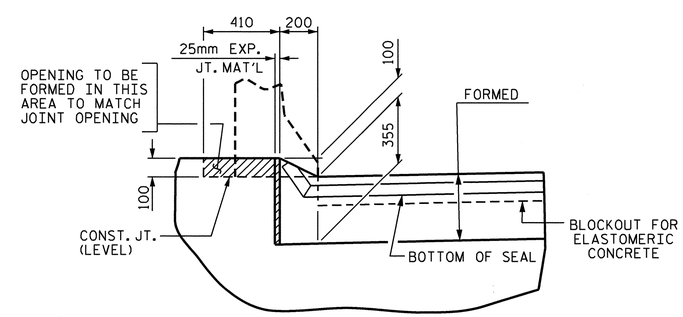

SECTION B-B

JOINT SEAL DETAILS @ END BENT

END BENT No. 1 SHOWN, END BENT No. 2 SIMILAR

NOTES

APPROACH SLAB SHALL NOT BE CONSTRUCTED PRIOR TO COMPLETION OF THE BRIDGE DECK.

AREA BETWEEN THE MSE WALLS AND APPROACH SLAB SHALL BE GRADED TO DRAIN THE WATER AWAY FROM THE FILL FACE OF THE BRIDGE AND SHALL BE PAVED. SEE ROADWAY PLANS.

THE 150mm COMP. A.B.C. SHALL BE FLUSH WITH THE ROADWAY END OF THE APPROACH SLAB AND SHALL EXTEND 300mm OUTSIDE OF EACH EDGE OF THE APPROACH SLAB.

THE CONTRACTOR MAY USE 100mm TYPE B-25.0B ASPHALT CONCRETE COURSE IN LIEU OF 150mm COMP. A.B.C. IF THIS OPTION IS USED, THE BASE COURSE SHALL BE FLUSH WITH THE ROADWAY END OF THE APPROACH SLAB, AND THE WIDTH SHALL BE THE SAME AS THAT OF THE APPROACH SLAB.

THE CONTRACTOR MAY USE 125mm CLASS "A" CONCRETE BASE IN LIEU OF 150mm COMP. A.B.C. IF THIS OPTION IS USED, THE CONCRETE BASE SHALL BE FLUSH WITH THE ROADWAY END OF THE APPROACH SLAB, AND THE WIDTH SHALL BE THE SAME AS THAT OF THE APPROACH SLAB. THE CONCRETE SHALL BE FINISHED TO A SMOOTH SURFACE AND A LAYER OF 13.6 kg ROOFING FELT SHALL BE PLACED BETWEEN THE CONCRETE BASE AND THE APPROACH SLAB TO PREVENT BOND. THE APPROACH SLAB SHALL NOT BE CAST UNTIL THE CONCRETE BASE HAS REACHED AN AGE OF THREE CURING DAYS.

FOR EVAZOTE JOINT SEALS, SEE SPECIAL PROVISIONS.

THE NOMINAL UNCOMPRESSED SEAL WIDTH OF THE EVAZOTE JOINT SEAL SHALL BE 87mm AT END BENT No. 1 AND 64mm AT END BENT No. 2.

FOR ELASTOMERIC CONCRETE, SEE SPECIAL PROVISIONS.

BILL OF MATERIAL

APPROACH SLAB AT EB #1

BAR	NO.	SIZE	TYPE	LENGTH	WEIGHT
* A1	50	#13	STR	7120	354
A2	50	#13	STR	7100	353
* B1	87	#16	STR	7220	975
B2	87	#19	STR	7520	1462
REINFORCING STEEL					1815 kg.
* EPOXY COATED REINFORCING STEEL					1329 kg.
CLASS AA CONCRETE					30.6 C.M.

APPROACH SLAB AT EB #2

BAR	NO.	SIZE	TYPE	LENGTH	WEIGHT
* A1	50	#13	STR	7120	354
A2	50	#13	STR	7100	353
* B1	87	#16	STR	7220	975
B2	87	#19	STR	7520	1462
REINFORCING STEEL					1815 kg.
* EPOXY COATED REINFORCING STEEL					1329 kg.
CLASS AA CONCRETE					30.6 C.M.

PROJECT NO. X-0002CB
CUMBERLAND COUNTY
STATION: 146+39.081 -L-

SHEET 2 OF 2

STATE OF NORTH CAROLINA
DEPARTMENT OF TRANSPORTATION
RALEIGH

STANDARD

BRIDGE APPROACH SLAB FOR FLEXIBLE PAVEMENT

(EBL)

NORTH CAROLINA PROFESSIONAL SEAL 24390 ENGINEER THEO J. BEACH
11/3/10

REVISIONS						SHEET NO.
NO.	BY:	DATE:	NO.	BY:	DATE:	S-134
1			3			TOTAL SHEETS
2			4			134

ASSEMBLED BY : T. BANKOVICH		DATE : 4-2010	
CHECKED BY : S.B. WILLIAMS		DATE : 5-2010	
DRAWN BY : FCJ 6/87	REV. 7/10/01	RWW/LES	
CHECKED BY : EGA 6/87	REV. 5/7/03	RWW/JTE	
	REV. 5/1/06	KMM/GM	

23-SEP-2010 07:49
Z:\Structures\Str4US401\Single_SpanBridge\Misc_draw\X0002C_str5_AS.dgn
tbeach

STR. #4

BM. #106: R.R. SPIKE IN BASE OF 450mm PINE TREE, STA.126+62.032 -L-, 60.683m LT., ELEV. 77.036 NAD 83

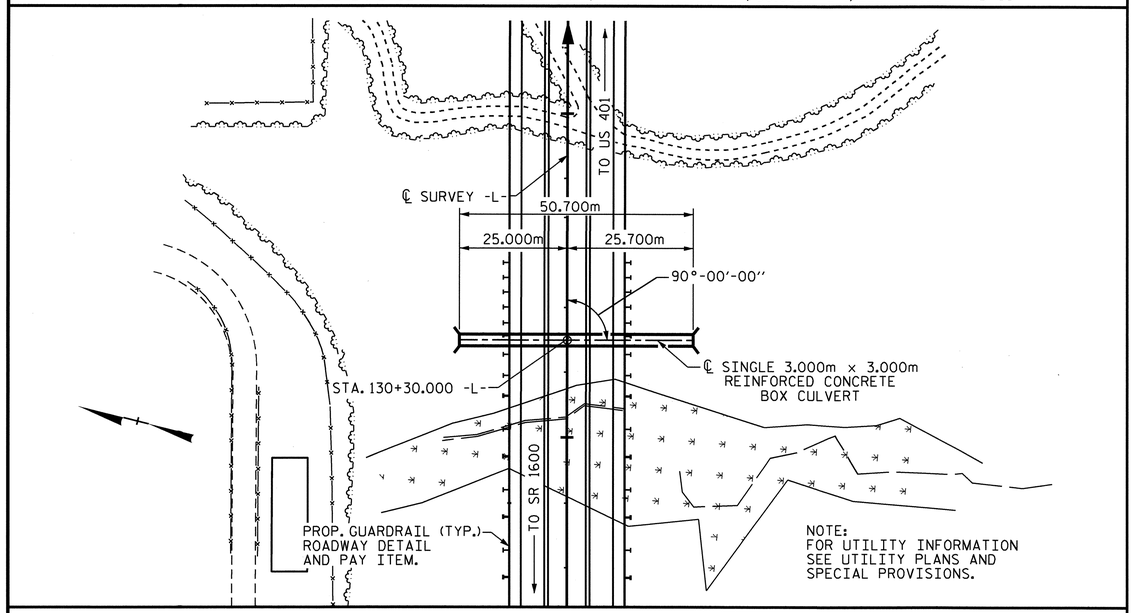

LOCATION SKETCH

BARREL REINFORCING STEEL

BAR	NO.	SIZE	TYPE	LENGTH	WEIGHT
A100	317	19	STR	3280	2324
A200	299	22	STR	3280	2983
A1	598	16	1	1360	1262
A2	598	16	1	1340	1244
B1	598	13	STR	3300	1962
B2	598	19	STR	2800	3742
C1	276	13	STR	8920	2447
G1	4	13	STR	3300	13
REINFORCING STEEL					15977 Kg.

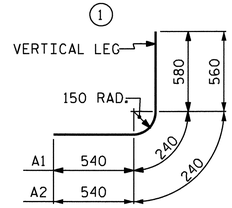

BAR TYPE

DIMENSIONS ARE OUT TO OUT

NOTES

ASSUMED LIVE LOAD ---------- MS22.5 OR ALTERNATE LOADING.

DESIGN FILL---------- 2.040m

FOR OTHER DESIGN DATA AND NOTES SEE STANDARD NOTE SHEET.

76mm Ø WEEP HOLES INDICATED TO BE IN ACCORDANCE WITH THE SPECIFICATIONS.

CONCRETE IN CULVERT TO BE POURED IN THE FOLLOWING ORDER:

1. WING FOOTINGS AND FLOOR SLAB INCLUDING 100mm OF ALL VERTICAL WALLS.
2. THE REMAINING PORTIONS OF WALLS AND WINGS FULL HEIGHT FOLLOWED BY ROOF SLAB AND HEADWALLS.

THE RESIDENT ENGINEER SHALL CHECK THE LENGTH OF CULVERT BEFORE STAKING IT OUT TO MAKE CERTAIN THAT IT WILL PROPERLY TAKE CARE OF THE FILL.

DIMENSIONS FOR WING LAYOUT AS WELL AS ADDITIONAL REINFORCING STEEL EMBEDDED IN BARREL ARE SHOWN ON WING SHEET.

TRANSVERSE CONSTRUCTION JOINTS SHALL BE USED IN THE BARREL, SPACED TO LIMIT THE POURS TO A MAXIMUM OF 21.000m. LOCATION OF JOINTS SHALL BE SUBJECT TO APPROVAL OF THE ENGINEER.

AT THE CONTRACTOR'S OPTION, HE MAY SPLICE THE VERTICAL REINFORCING STEEL IN THE INTERIOR FACE OF EXTERIOR WALL ABOVE LOWER WALL CONSTRUCTION JOINT. THE SPLICE LENGTH SHALL BE AS PROVIDED IN THE SPLICE LENGTH CHART SHOWN ON THE PLANS. EXTRA WEIGHT OF STEEL DUE TO THE SPLICES SHALL BE PAID FOR BY THE CONTRACTOR.

A 900mm STRIP OF FILTER FABRIC SHALL BE ATTACHED TO THE FILL FACE OF THE WING COVERING THE ENTIRE LENGTH OF THE EXPANSION JOINT.

NO PRECAST REINFORCED CONCRETE BOX CULVERT OPTION WILL BE ALLOWED.

FOR FALSEWORK AND FORMWORK, SEE SPECIAL PROVISIONS.

FOR CRANE SAFETY, SEE SPECIAL PROVISIONS.

FOR ELECTRICAL CONDUIT SYSTEM, SEE ELECTRICAL CONDUIT SYSTEM SHEET AND SPECIAL PROVISION.

FOR SUBMITTAL OF WORKING DRAWINGS, SEE SPECIAL PROVISIONS.

SPLICE LENGTH CHART		
BAR	SIZE	LENGTH
B1	13	540
C1	13	590

TOTAL STRUCTURE QUANTITIES

CLASS A CONCRETE		
BARREL @ 2.79 m^3/m	141.5	m^3
WINGS ETC.	35.9	m^3
TOTAL	177.4	m^3
REINFORCING STEEL		
BARREL	15977	kg
WINGS ETC.	1574	kg
TOTAL	17551	kg
CULVERT EXCAVATION		LUMP SUM
FOUNDATION COND. MAT'L		118 METRIC TONS
ELECTRICAL CONDUIT SYSTEM		LUMP SUM

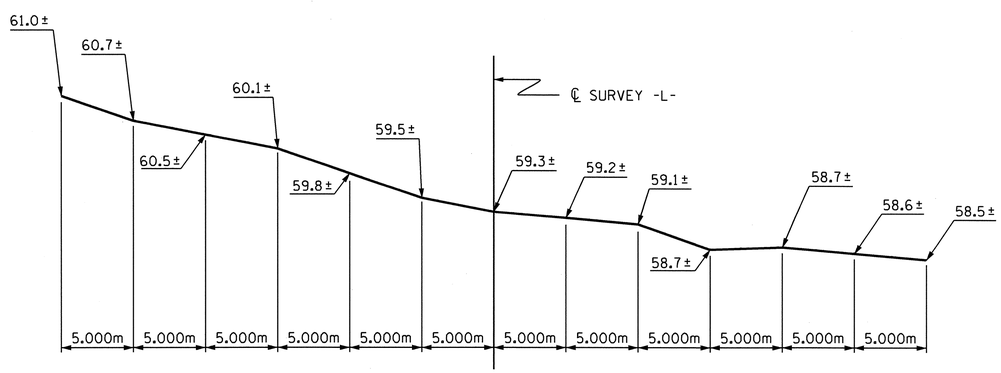

PROFILE ALONG ℄ CULVERT

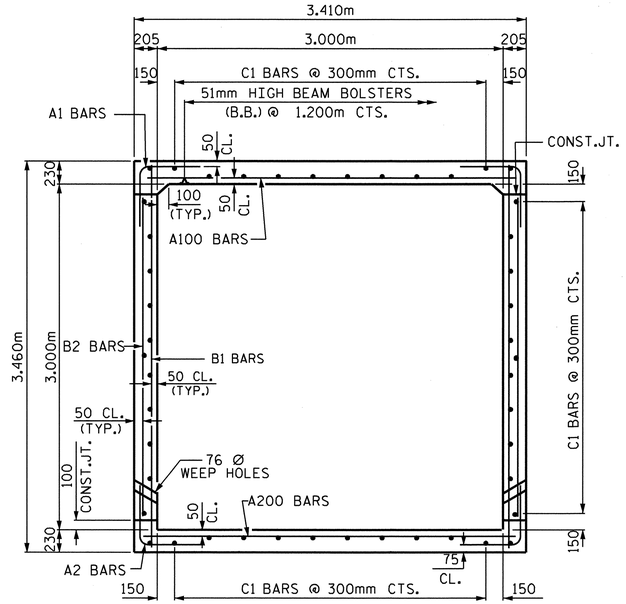

RIGHT ANGLE SECTION OF BARREL

THERE ARE 46 "C" BARS IN SECTION OF BARREL

PROJECT NO. X-0002CB

CUMBERLAND COUNTY

STATION: 130+30.000 -L-

SHEET 1 OF 3

STATE OF NORTH CAROLINA
DEPARTMENT OF TRANSPORTATION
RALEIGH

BARREL STANDARD SINGLE 3.000m X 3.000m PEDESTRIAN CONCRETE BOX CULVERT 90° SKEW

NORTH CAROLINA PROFESSIONAL SEAL 11268 ENGINEER BETSY S. COX 11-3-10

REVISIONS						SHEET NO.
NO.	BY:	DATE:	NO.	BY:	DATE:	C-1
1			3			TOTAL SHEETS
2			4			4

ASSEMBLED BY : A. V. ROYAL DATE : 07-08
CHECKED BY : B. L. GREEN, BSC DATE : 07-08

DRAWN BY : EEM 6/97
CHECKED BY : ARB 7/97

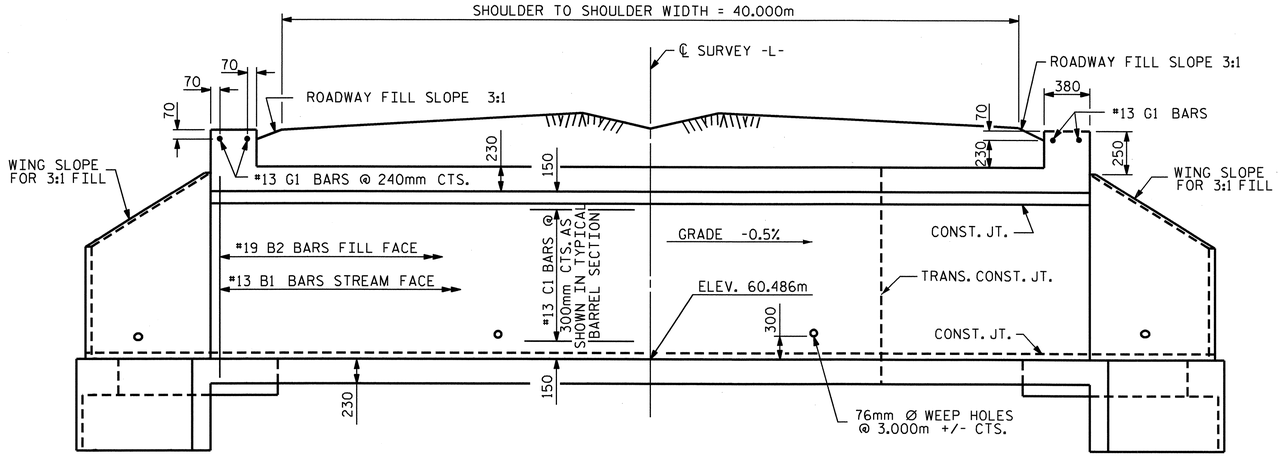

CULVERT SECTION NORMAL TO ROADWAY

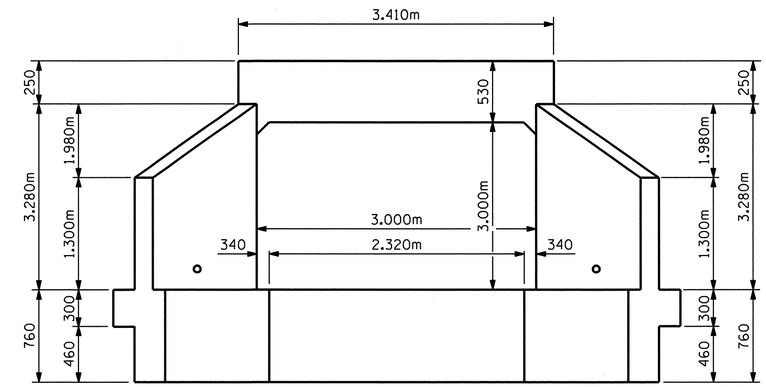

END ELEVATION NORMAL TO SKEW

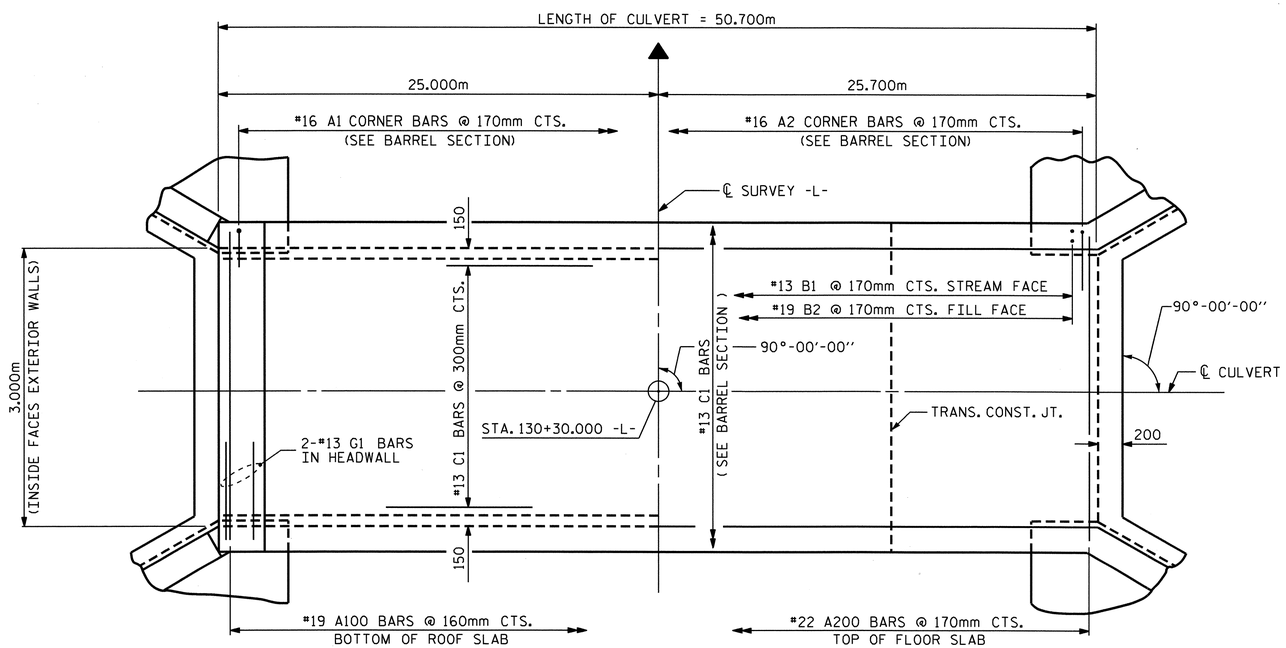

PART PLAN - ROOF SLAB

PART PLAN - FLOOR SLAB

C1 BARS ARE 6 BAR RUNS

PROJECT NO. X-0002CB
CUMBERLAND COUNTY
STATION: 130+30.000 -L-

SHEET 2 OF 3

STATE OF NORTH CAROLINA
DEPARTMENT OF TRANSPORTATION
RALEIGH

BARREL STANDARD
SINGLE 3.000m X 3.000m
PEDESTRIAN CONCRETE
BOX CULVERT
90° SKEW

NORTH CAROLINA PROFESSIONAL SEAL 11268 ENGINEER BETSY S. COX
11-3-10

REVISIONS								SHEET NO.
NO.	BY:	DATE:	NO.	BY:	DATE:			C-2
1			3					TOTAL SHEETS
2			4					4

ASSEMBLED BY :	A. V. ROYAL	DATE :	07-08
CHECKED BY :	B.L. GREEN, BSC	DATE :	07-08
DRAWN BY :	EEM	6/97	
CHECKED BY :	ARB	7/97	

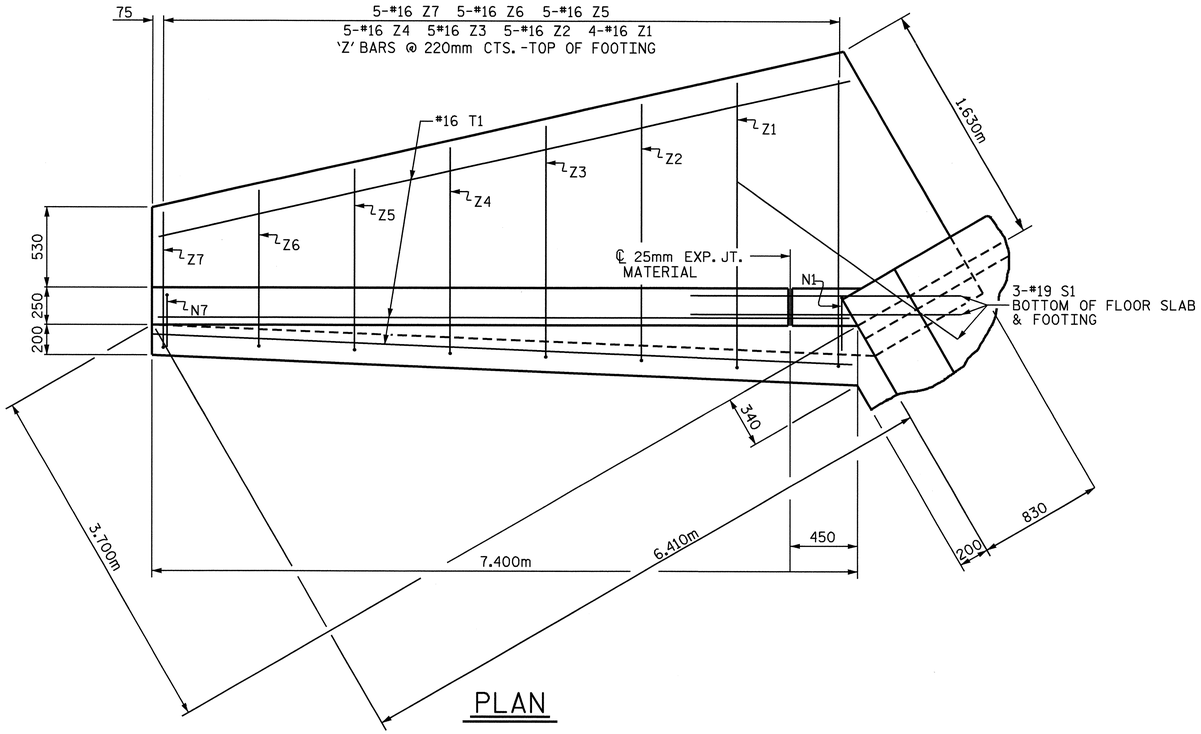

PLAN

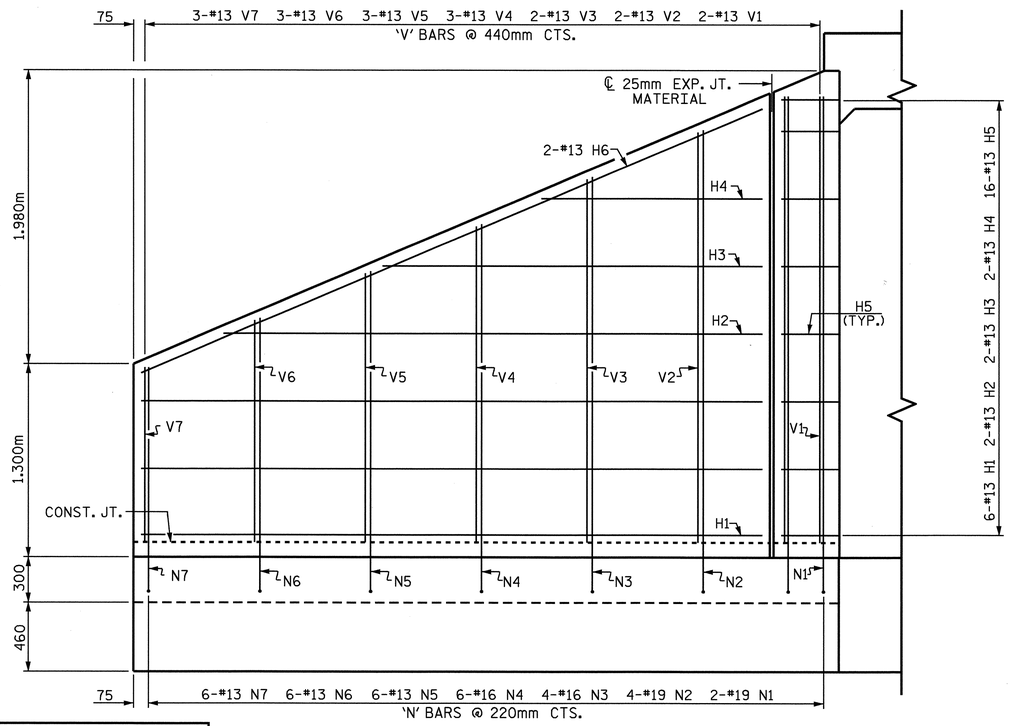

ELEVATION

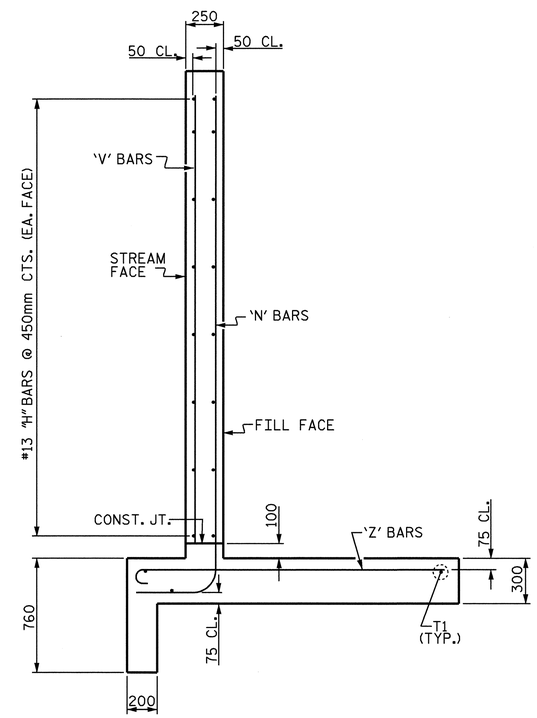

TYPICAL WING SECTION

BAR TYPES

ALL BAR DIMENSIONS ARE OUT TO OUT.

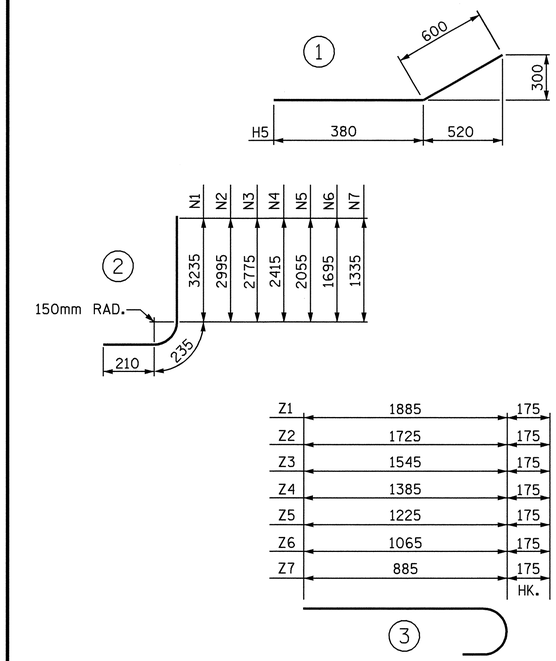

BILL OF MATERIAL

BAR	NO.	SIZE	TYPE	LENGTH	WEIGHT
H1	24	13	STR	6840	163
H2	8	13	STR	6080	48
H3	8	13	STR	4400	35
H4	8	13	STR	2720	22
H5	64	13	1	980	62
H6	8	13	STR	7100	56
N1	8	19	2	3680	66
N2	16	19	2	3440	123
N3	16	16	2	3220	80
N4	24	16	2	2860	107
N5	24	13	2	2500	60
N6	24	13	2	2140	51
N7	24	13	2	1780	42
S1	12	19	STR	1800	48
T1	12	16	STR	7400	138
V1	8	13	STR	3020	24
V2	8	13	STR	2800	22
V3	8	13	STR	2580	21
V4	12	13	STR	2240	27
V5	12	13	STR	1880	22
V6	12	13	STR	1520	18
V7	12	13	STR	1160	14
Z1	16	16	3	2060	51
Z2	20	16	3	1900	59
Z3	20	16	3	1720	53
Z4	20	16	3	1560	48
Z5	20	16	3	1400	43
Z6	20	16	3	1240	38
Z7	20	16	3	1060	33

REINFORCING STEEL
FOR 4 WINGS 1574 kg

CLASS A CONCRETE

4	WINGS	34.4	m^3
2	HEADWALLS	0.8	m^3
2	END CURTAIN WALLS	0.7	m^3
	TOTAL	35.9	m^3

PROJECT NO. X-0002CB
CUMBERLAND COUNTY
STATION: 130+30.000 -L-

SHEET 3 OF 3

STATE OF NORTH CAROLINA
DEPARTMENT OF TRANSPORTATION
RALEIGH

STANDARD WING
FOR
CONCRETE BOX CULVERT
H = 3.000m SLOPE = 3:1
90° SKEW

NORTH CAROLINA PROFESSIONAL SEAL 11268 ENGINEER BETSY S. COX
8-14-08

REVISIONS						SHEET NO.
NO.	BY:	DATE:	NO.	BY:	DATE:	C-3
1			3			TOTAL SHEETS
2			4			4

ASSEMBLED BY : A. V. ROYAL DATE : 07-08	
CHECKED BY : B. L. GREEN, BSC DATE : 07-08	
DRAWN BY : FPP 06/97	
CHECKED BY : VAP 06/97	

STR #5

PROJECT REFERENCE NO.	SHEET NO.
X-0002C	ECS-1

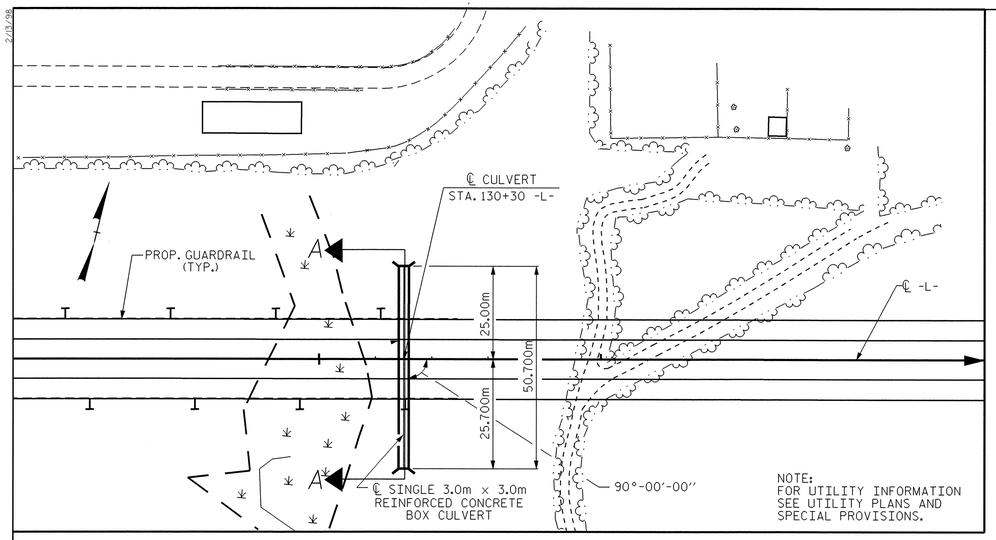

LOCATION SKETCH

ESTIMATED MATERIALS		
QTY	UNIT	DESCRIPTION
6	EA	CAST OUTLET BOX W/ BLANK COVER & GASKET
54	M	TS¾ RIGID GALVANIZED CONDUIT (RGC)
16	M	25mm RIGID GALVANIZED CONDUIT (RGC)
2	EA	25mm RGC END CAPS
1	LOT	ZINC RICH PAINT
76	M	POLYETHYLENE PULL LINE

EQUIVALENTS		
TRADE SIZE	METRIC	ENGLISH
TS 1	25mm	1"
TS¾	19mm	¾"

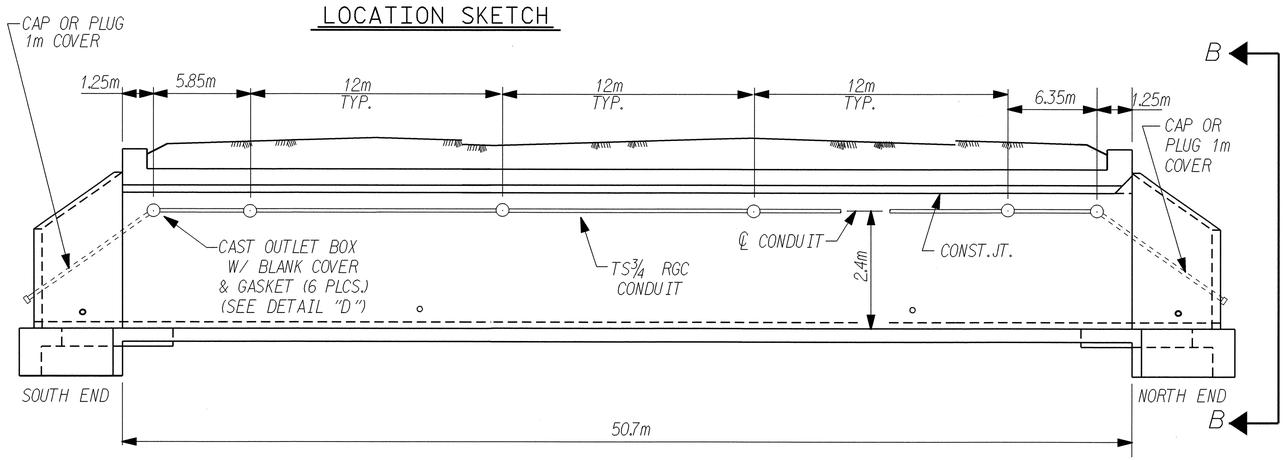

VIEW A-A

SEE DETAIL "A" FOR CONDUIT TERMINATION

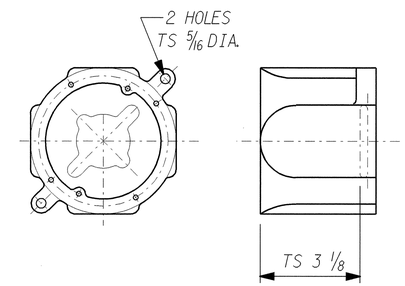

DETAIL "D"

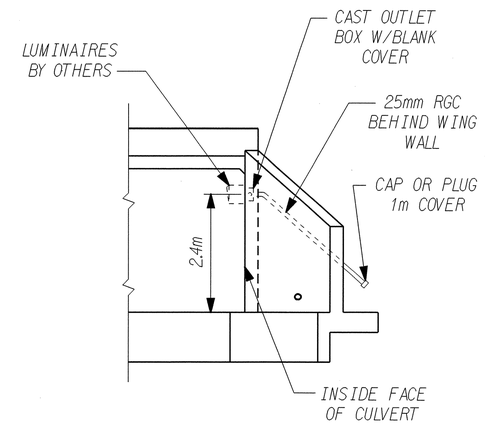

VIEW B-B

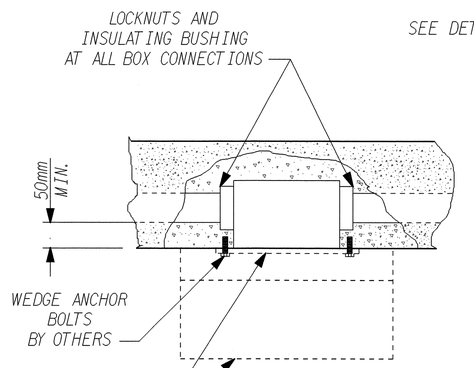

DETAIL "B"

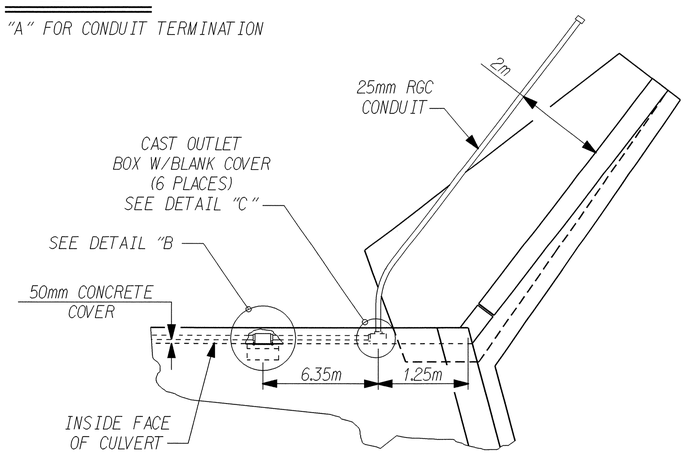

DETAIL "A"

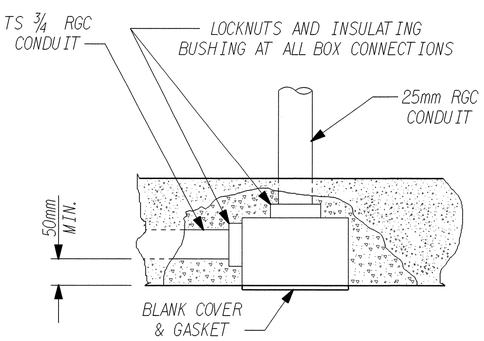

DETAIL "C"

PROJECT NO. X-0002CB

Cumberland COUNTY

STATION: 130+30.000 -L-

STATE OF NORTH CAROLINA
DEPARTMENT OF TRANSPORTATION
RALEIGH
DESIGN SERVICES LIGHTING & ELECTRICAL

ELECTRICAL CONDUIT SYSTEM

NORTH CAROLINA PROFESSIONAL SEAL 022582 ENGINEER PAK KI-BUN CHIN 7/8/08

SEE PROJECT SPECIAL PROVISIONS TITLED "ELECTRICAL CONDUIT SYSTEM" FOR MATERIALS CONSTRUCTION METHODS AND PAYMENT.

REVISIONS							SHEET NO.
NO.	BY:	DATE:	NO.	BY:	DATE:		C-4
1			3				TOTAL SHEETS
2			4				4

DRAWN BY : A.BROWN DATE : 05/30/08
CHECKED BY : DATE : 7-8-08

r:\lightingelectrical\plans\ecs\$$$$$$$$$$$$ design for c:\x-0002c_ite_ecs1.dgn 05-JUL-2008 08:01

GEOTECHNICAL ENGINEER

NORTH CAROLINA PROFESSIONAL SEAL 32171 ENGINEER JINYOUNG PARK

SIGNATURE DATE

ENGINEER

SIGNATURE DATE

NOTES

1. FOR MECHANICALLY STABILIZED EARTH (MSE) RETAINING WALLS, SEE MECHANICALLY STABILIZED EARTH RETAINING WALLS AT STA. 142+30 TO 149+20 -L- PROVISION.

2. FOR STEEL BEAM GUARDRAIL, SEE ROADWAY PLANS AND SECTION 862 OF THE STANDARD SPECIFICATIONS.

3. FOR SINGLE FACED PRECAST CONCRETE BARRIER, SEE ROADWAY PLANS AND SECTION 857 OF THE STANDARD SPECIFICATIONS.

4. USE COARSE AGGREGATE IN THE REINFORCED ZONE FOR RETAINING WALL NO. 1A, 1B, 1C, 2A, 2B AND 2C.

5. USE AN MSE WALL SYSTEM WITH PRECAST CONCRETE PANELS FOR RETAINING WALL NO. 1A, 1B, 1C, 2A, 2B AND 2C.

6. BEFORE BEGINNING MSE WALL DESIGN FOR RETAINING WALL NO. 1A, 1B, 1C, 2A, 2B AND 2C, SURVEY WALL LOCATION AND SUBMIT A REVISED WALL PROFILE VIEW (WALL ENVELOPE) FOR REVIEW. DO NOT START WALL DESIGN OR CONSTRUCTION UNTIL THE REVISED WALL ENVELOPE IS ACCEPTED.

7. DESIGN RETAINING WALL NO. 1A, 1B, 1C, 2A, 2B AND 2C FOR WALL HEIGHTS EQUAL TO THE DESIGN HEIGHT (DIFFERENCE BETWEEN GRADE ELEVATION AND BOTTOM OF WALL ELEAVATION) PLUS EMBEDMENT (DIFFERENCE BETWEEN BOTTOM OF WALL ELEVATION AND TOP OF LEVELING PAD ELEVATION).

8. DESIGN RETAINING WALL NO. 1A, 1B, 1C, 2A, 2B AND 2C FOR THE FOLLOWING:
   1) MINIMUM DESIGN LIFE = 100 YEARS
   2) MINIMUM WALL WIDTH (B) OVER HEIGHT (H) RATIO, B/H, SHALL BE 0.85.
      B IS THE REINFORCING STRIP LENGTH AND H IS THE DESIGN HEIGHT PLUS EMBEDMENT.
   3) WALL BACKFILL MATERIAL PARAMETERS:

MATERIAL STANDARD SIZE NO. (IN ACCORDANCE WITH SECTIONS 1005 AND 1014 OF THE STANDARD SPECIFICATIONS)	UNIT WEIGHT(γ) (KN/M^3)	FRICTION ANGLE(ϕ) (DEGREES)	COHESION (C) (kPa)
COARSE AGGREGATE (#57, 67 OR 78M)	17.2	38	0

   4) IN-SITU ASSUMED MATERIAL PARAMETERS FOR WALL NO. 1A, 1B, 1C, 2A, 2B, AND 2C EXCLUDING FOUNDATION MATERIAL PROPERTIES IN PILE SUPPORTED MSE WALL AREAS:

MATERIAL TYPE	UNIT WEIGHT(γ) (KN/M^3)	FRICTION ANGLE(ϕ) (DEGREES)	COHESION (C) (kPa)
RETAINED AND RANDOM BACKFILL	18.8	30	0
FOUNDATION	18.8	30	0

9. DESIGN RETAINING WALL NO. 1A, 1B, 1C, 2A, 2B AND 2C FOR A LIVE LOAD (TRAFFIC) SURCHARGE.

10. DESIGN REINFORCEMENT CONNECTED TO END BENT CAPS FOR THE LINE LOADINGS SHOWN AND CAST THE REINFORCEMENT CONNECTION HARDWARE INTO THE CAP BACKWALL FOR END BENT NO. 1 AND END BENT NO. 2 AT WALL NO. 1B AND 2B. MAINTAIN MINIMUM CLEARANCE OF 0.076M BETWEEN THE HARDWARE AND REINFORCING STEEL IN THE CAP. A MINIMUM OF 4 LAYERS OF REINFORCING IS REQUIRED.

11. THE COST OF CONNECTION HARDWARE, REINFORCEMENT, AND COARSE AGGREGATE BEHIND END BENT CAPS SHALL BE INCIDENTAL TO THE COST OF THE MSE RETAINING WALLS.

12. EXISTING OR FUTURE OBSTRUCTIONS SUCH AS FOUNDATIONS, GUARDRAIL, FENCE OR HANDRAIL POSTS, PAVEMENTS, PIPES, INLETS OR UTILITIES MAY INTERFERE WITH REINFORCEMENT FOR RETAINING WALL NO. 1A, 1C, 2A AND 2C.

13. FOUNDATIONS FOR END BENT NO. 1 AND END BENT NO. 2 WILL INTERFERE WITH REINFORCEMENT FOR RETAINING WALL NO. 1B AND WALL NO. 2B. SEE "FOUNDATION LAYOUT" SHEET FOR FOUNDATION LOCATIONS.

14. THE COST OF THE 0.762 M DIAMETER STEEL PILE SLEEVE SHALL BE INCIDENTAL TO THE COST OF THE STEEL PILES. FILL ANNULUS BETWEEN PIPE PILE AND PILE SLEEVE WITH FLOWABLE FILL. FLOWABLE FILL SHALL MEET REQUIREMENTS OF NON-EXCAVATABLE MATERIAL IN SECTION 340-2 OF THE STANDARD SPECIFICATION. FLOWABLE FILL WILL BE INCIDENTAL TO THE COST OF THE STEEL PILES.

15. DO NOT PLACE LEVELING PAD CONCRETE, AGGREGATE OR REINFORCEMENT FOR RETAINING WALL NO. 1A, 1B, 1C, 2A, 2B AND 2C UNTIL OBTAINING APPROVAL OF THE EXCAVATION DIMENSIONS AND FOUNDATION MATERIAL.

16. CONSTRUCT MSE WALL FACING FULL HEIGHT SLIP JOINTS AT 145+59 -L- RT, 145+79 -L- LT, 147+60.6 -L- RT, AND 147+60.6 -L- LT

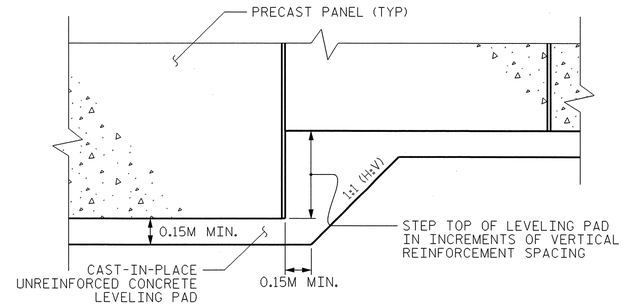

PRECAST CONCRETE PANELS

LEVELING PAD STEP DETAILS

SUMMARY OF ESTIMATED WALL AREAS FOR MSE WALLS AT STA. 142+30 TO 149+20 -L-	
WALL NO.	ESTIMATED EXPOSED AREA (SQUARE METER)
1A	860
1B	280
1C	1490
2A	920
2B	265
2C	1370

PROJECT NO.: X-0002CB

CUMBERLAND ***COUNTY***

STATION: 142+30 - 149+20 -L-

SHEET 1 OF 7

GEOTECHNICAL ENGINEERING UNIT

☒ ***EASTERN REGIONAL OFFICE***

☐ ***WESTERN REGIONAL OFFICE***

STATE OF NORTH CAROLINA
DEPARTMENT OF TRANSPORTATION
RALEIGH

MSE WALL

REVISIONS						SHEET NO.
NO.	BY	DATE	NO.	BY	DATE	W-1
1	–	–	3	–	–	TOTAL SHEETS
2	–	–	4	–	–	20

PREPARED BY: J. PARK	DATE: 09/2010
REVIEWED BY: K. J. KIM	DATE: 09/2010

GEOTECHNICAL ENGINEER	ENGINEER
NORTH CAROLINA PROFESSIONAL SEAL 32171 ENGINEER JIN YOUNG PARK FEB-11-2010	
SIGNATURE DATE	SIGNATURE DATE

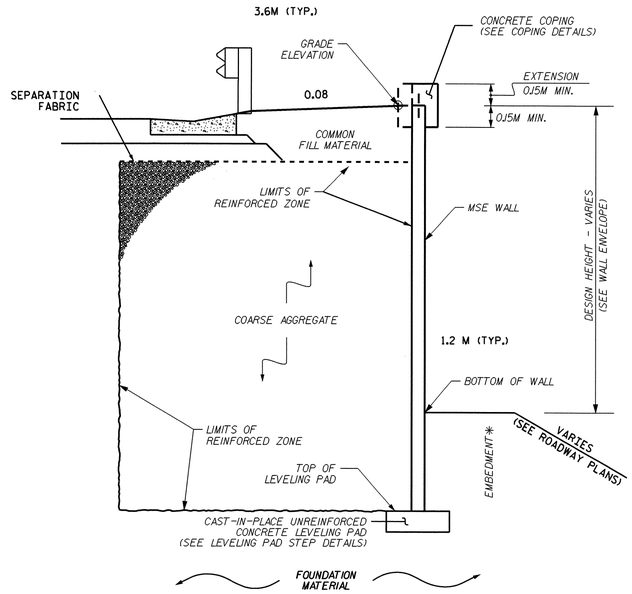

TYPICAL SECTION FOR MSE WALL-
1A (143+30± TO 145+80±), 1C (142+30± TO 145+60±),
2A (147+60± TO 148+80±) AND 2C (147+60± TO 149+20±)

* SEE MSE RETAINING WALLS PROVISION FOR MINIMUM EMBEDMENT.

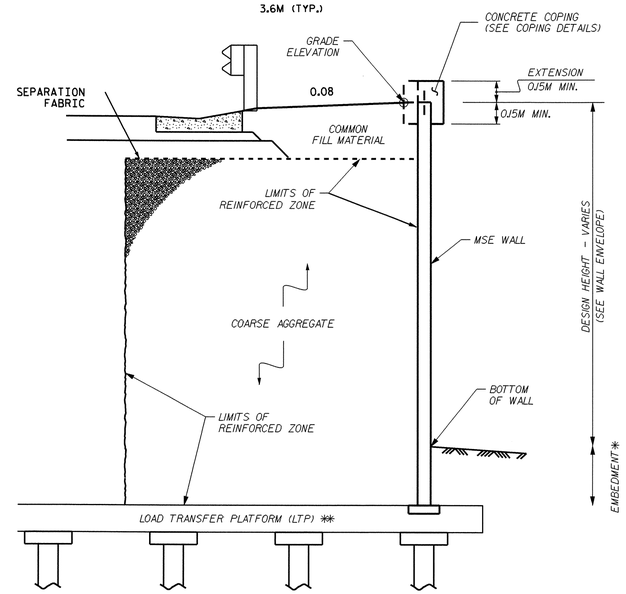

TYPICAL SECTION FOR MSE WALL-
1A (145+80± TO 146+07.800) 1C (145+60± TO 145+93.249)
2A (146+94.215 TO 147+60±) AND 2C (146+79.655 TO 147+60±)

* SEE MSE RETAINING WALLS PROVISION FOR MINIMUM EMBEDMENT.
** SEE PILE SUPPORTED MSE WALL AND EMBANKMENT PLANS FOR LTP

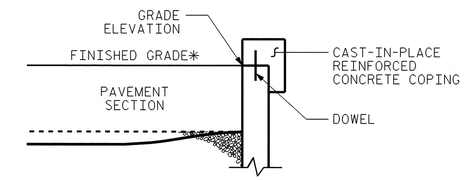

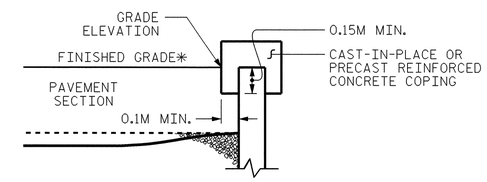

COPING DETAILS

AT THE CONTRACTOR'S OPTION, CONNECT COPING TO PANELS WITH DOWELS OR EXTEND COPING DOWN BACK OF PANELS.
*SEE ROADWAY PLANS FOR FINISHED GRADE DETAILS.

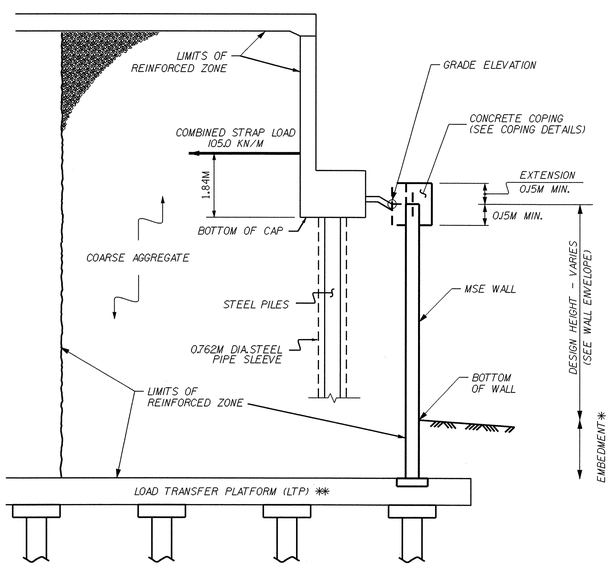

TYPICAL SECTION FOR MSE WALL-
1B (145+93.249 TO 145+99.080 AND 146+01.766 TO 146+07.800)
AND 2B (146+79.655 TO 146+85.696 AND 146+88.382 TO 146+94.215)

* SEE MSE RETAINING WALLS PROVISION FOR MINIMUM EMBEDMENT.
** SEE PILE SUPPORTED MSE WALL AND EMBANKMENT PLANS FOR LTP

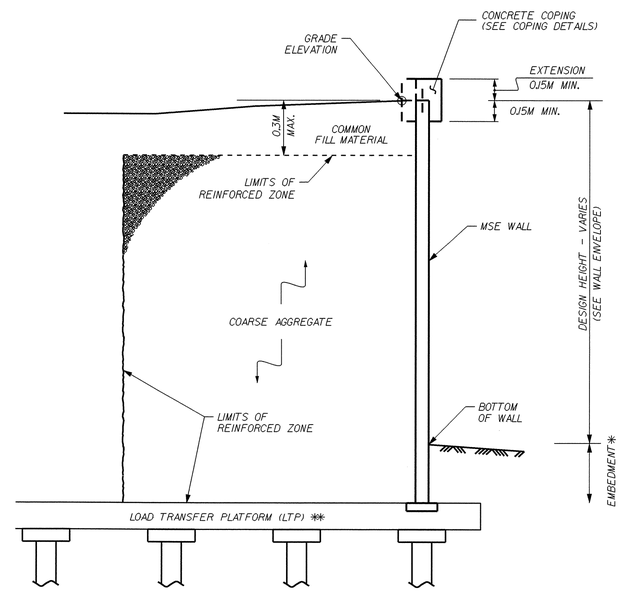

TYPICAL SECTION FOR MSE WALL-
1B (145+99.080 TO 146+01.766)
AND 2B (146+85.696 TO 146+88.382))

* SEE MSE RETAINING WALLS PROVISION FOR MINIMUM EMBEDMENT.
** SEE PILE SUPPORTED MSE WALL AND EMBANKMENT PLANS FOR LTP

PREPARED BY:	J. PARK	DATE: 09/2010	
REVIEWED BY:	K. J. KIM	DATE: 09/2010	

PROJECT NO.: X-0002CB
CUMBERLAND **COUNTY**
STATION: 142+30 - 149+20 -L-
SHEET 2 OF 7

GEOTECHNICAL ENGINEERING UNIT
☒ *EASTERN REGIONAL OFFICE*
☐ *WESTERN REGIONAL OFFICE*

STATE OF NORTH CAROLINA
DEPARTMENT OF TRANSPORTATION
RALEIGH

MSE WALL

REVISIONS						SHEET NO.
NO.	BY	DATE	NO.	BY	DATE	W-2
1			3			TOTAL SHEETS
2			4			20

GEOTECHNICAL ENGINEER	ENGINEER
NORTH CAROLINA PROFESSIONAL SEAL 032171 ENGINEER JINYOUNG PARK 12-11-2010	
SIGNATURE DATE	SIGNATURE DATE

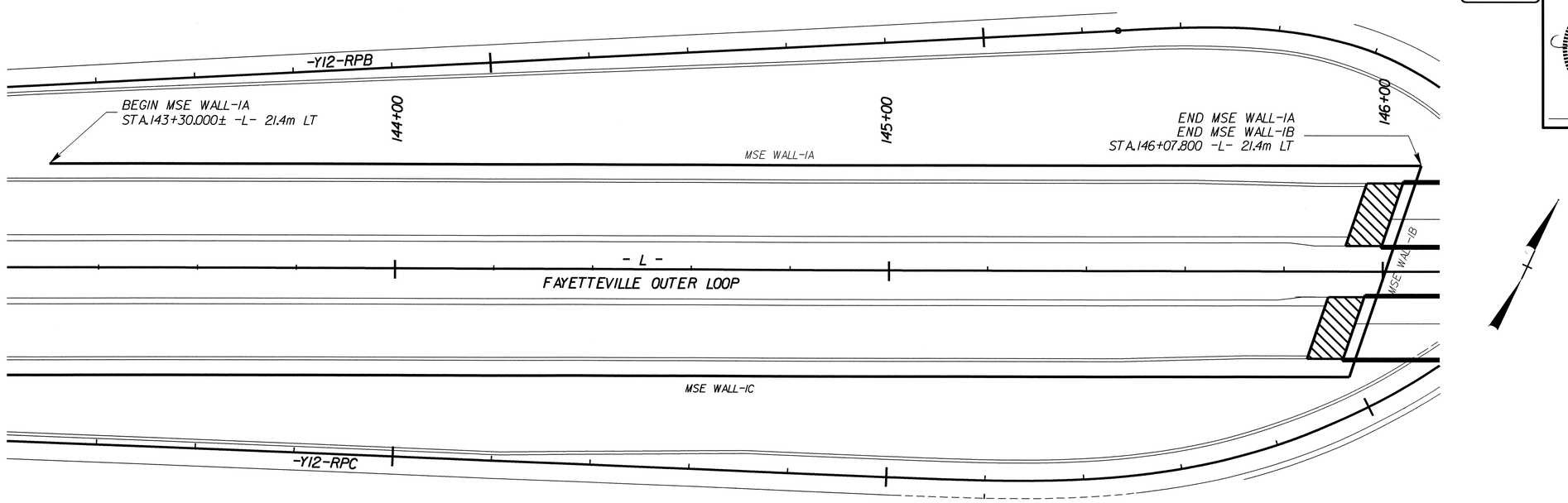

PLAN VIEW MSE WALL NO. 1A

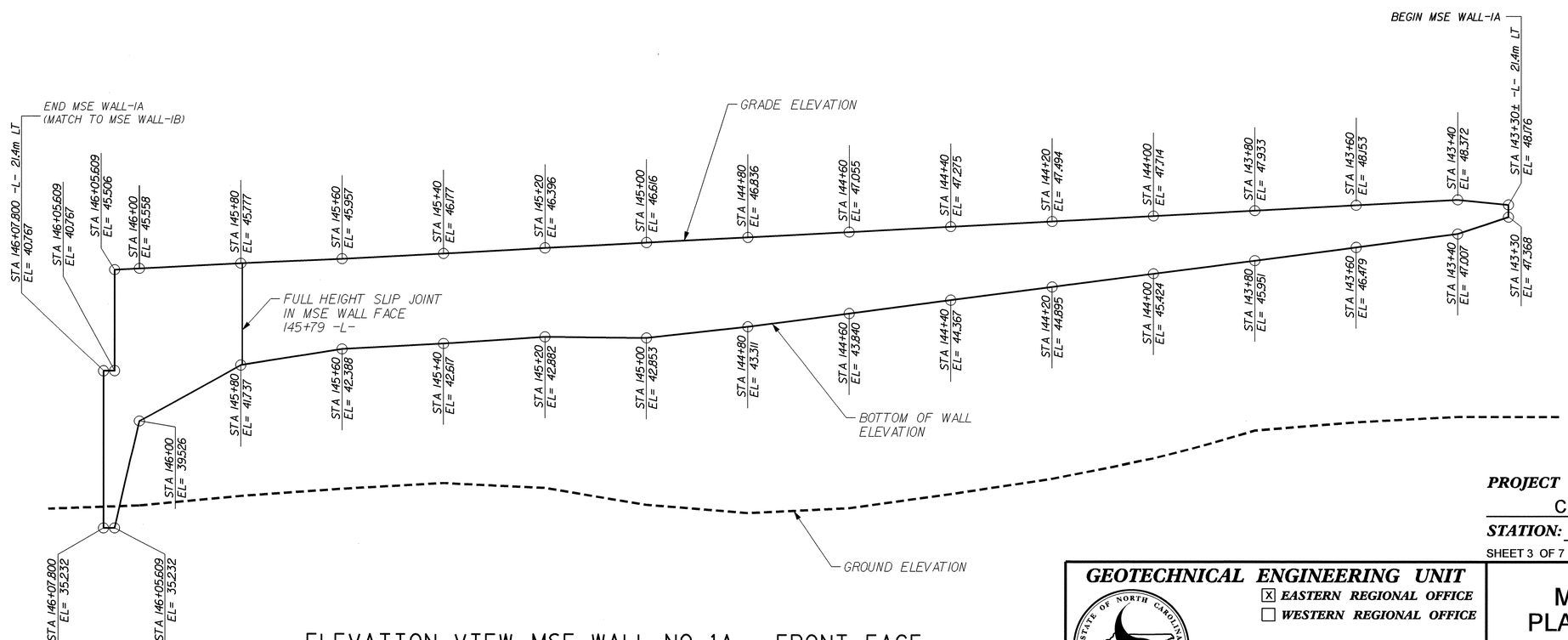

ELEVATION VIEW MSE WALL NO. 1A - FRONT FACE

PREPARED BY: J. PARK	DATE: 09/2010
REVIEWED BY: K. J. KIM	DATE: 09/2010

PROJECT NO.: X-0002CB

CUMBERLAND **COUNTY**

STATION: 143+30 - 146+07.800 -L-

SHEET 3 OF 7

GEOTECHNICAL ENGINEERING UNIT

☒ EASTERN REGIONAL OFFICE

☐ WESTERN REGIONAL OFFICE

STATE OF NORTH CAROLINA
DEPARTMENT OF TRANSPORTATION
RALEIGH

MSE WALL NO. 1A PLAN AND ELEVATION

REVISIONS								SHEET NO.
NO.	BY	DATE	NO.	BY	DATE			W-3
1			3					TOTAL SHEETS
2			4					20

GEOTECHNICAL ENGINEER	ENGINEER
NORTH CAROLINA PROFESSIONAL SEAL 32171 10-11-2010 ENGINEER LINYOUNG PARK	
SIGNATURE DATE	SIGNATURE DATE

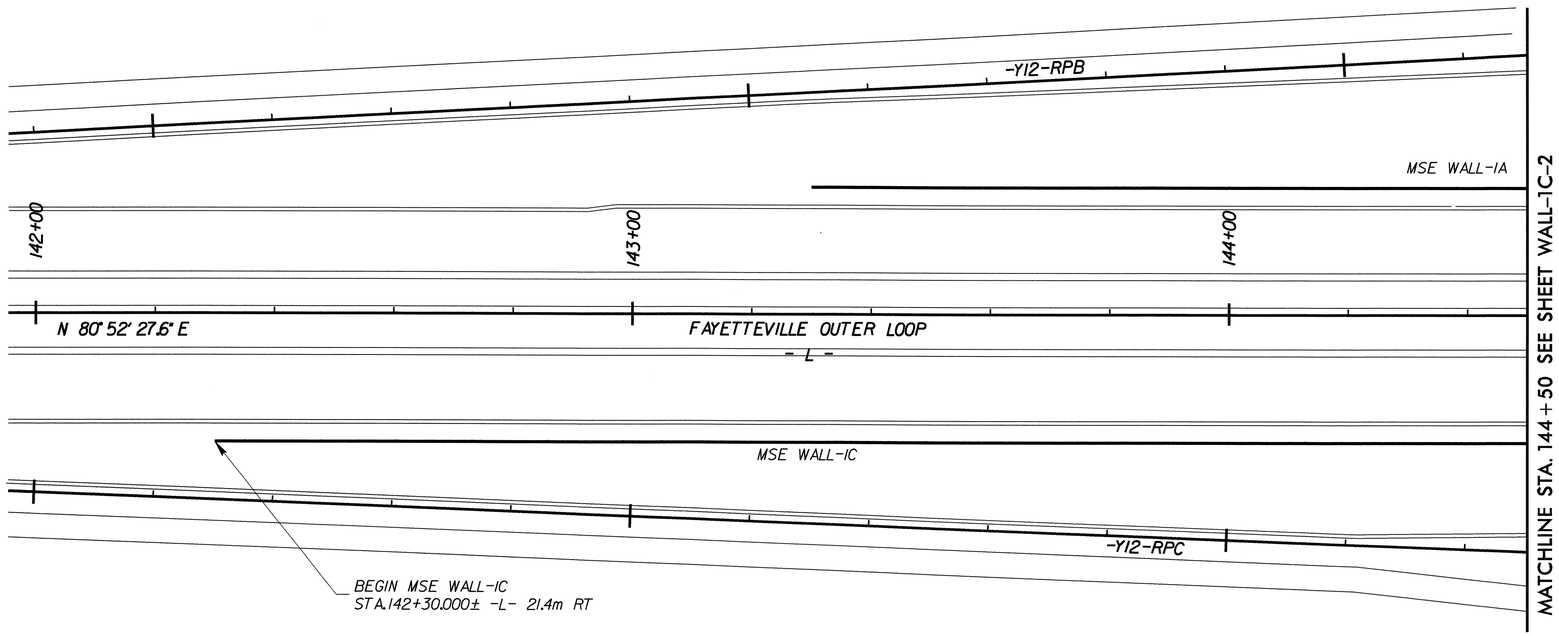

PLAN VIEW MSE WALL NO. 1C-1

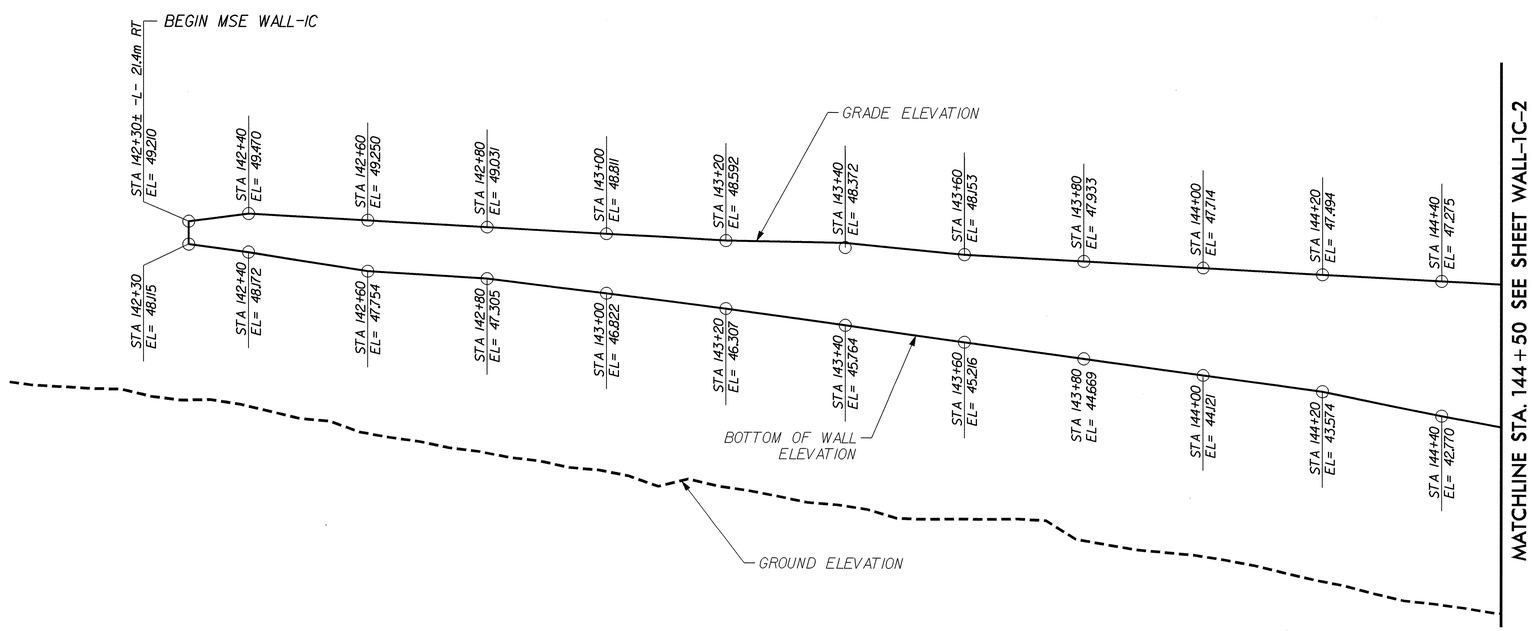

ELEVATION VIEW MSE WALL NO. 1C-1 - FRONT FACE

PROJECT NO.: X-0002CB

CUMBERLAND ***COUNTY***

STATION: 142+30 - 144+50 -L-

SHEET 4 OF 7

GEOTECHNICAL ENGINEERING UNIT

☒ ***EASTERN REGIONAL OFFICE***

☐ ***WESTERN REGIONAL OFFICE***

STATE OF NORTH CAROLINA
DEPARTMENT OF TRANSPORTATION
RALEIGH

MSE WALL NO. 1C-1 PLAN AND ELEVATION

PREPARED BY: J. PARK	DATE: 09/2010
REVIEWED BY: K. J. KIM	DATE: 09/2010

REVISIONS

NO.	BY	DATE	NO.	BY	DATE
1			3		
2			4		

SHEET NO. W-4

TOTAL SHEETS 20

GEOTECHNICAL ENGINEER	ENGINEER
NORTH CAROLINA PROFESSIONAL SEAL 32171 ENGINEER LINTOUNG PARK 12-11-2009	
SIGNATURE DATE	SIGNATURE DATE

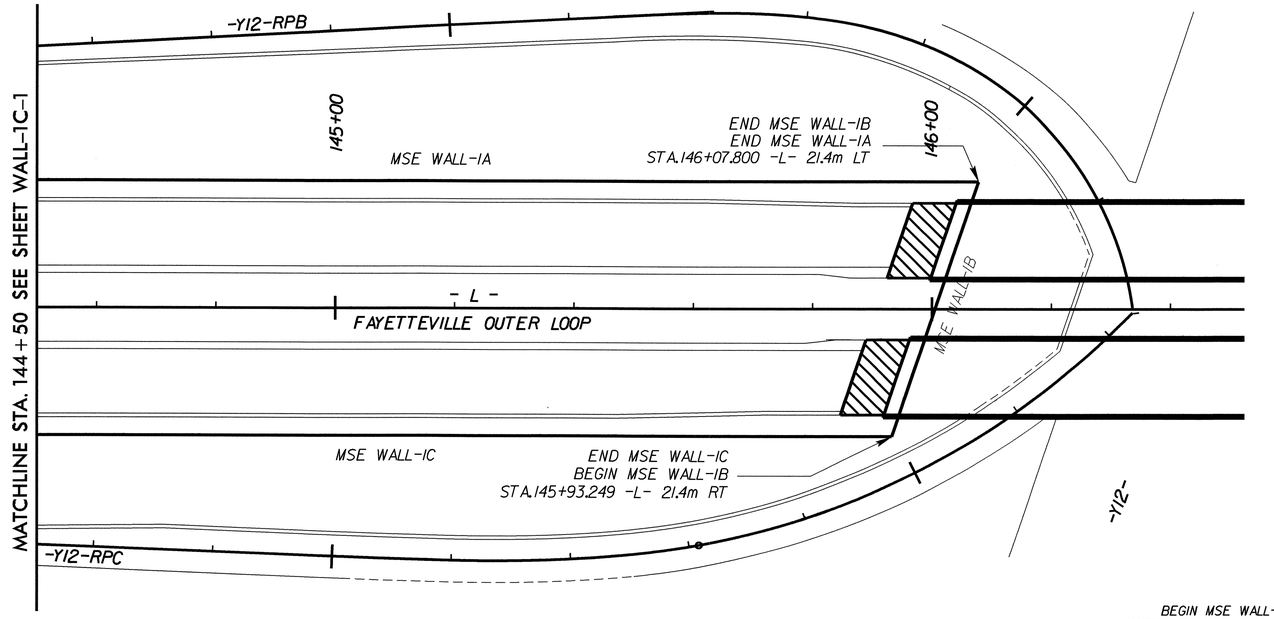

PLAN VIEW MSE WALL NO. 1B AND 1C-2

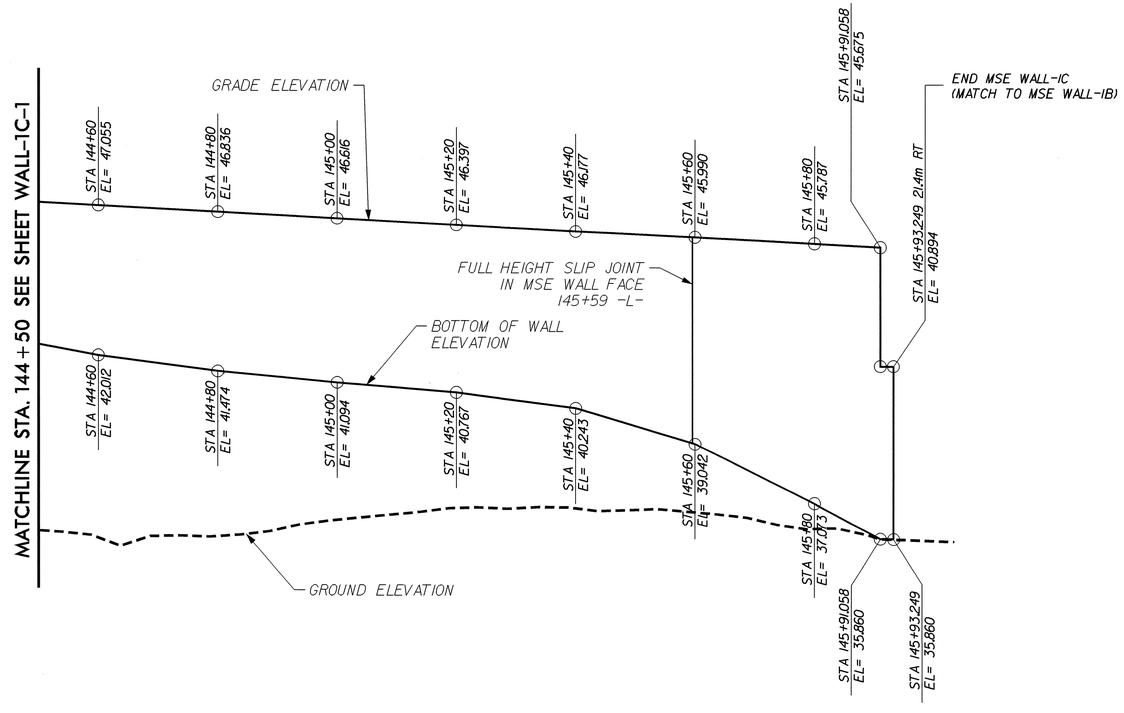

ELEVATION VIEW MSE WALL NO. 1C-2 - FRONT FACE

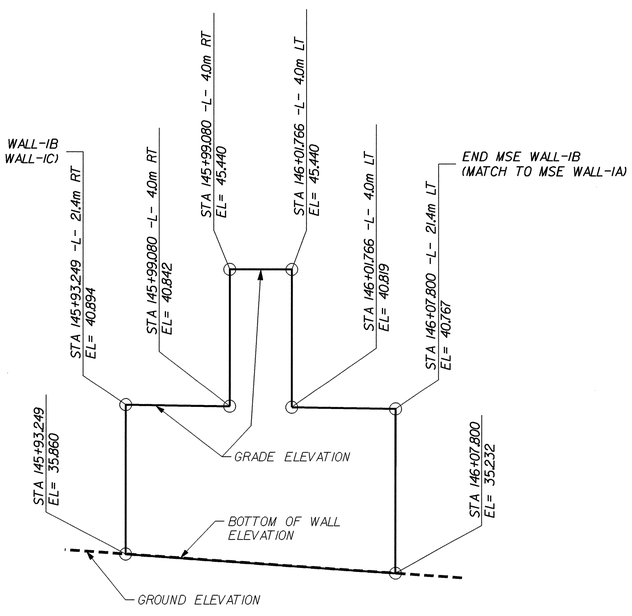

ELEVATION VIEW MSE WALL NO. 1B - FRONT FACE

PROJECT NO.: X-0002CB

CUMBERLAND **COUNTY**

STATION: 144+50 - 146+07.000 -L-

SHEET 5 OF 7

PREPARED BY: J. PARK	DATE: 09/2010
REVIEWED BY: K. J. KIM	DATE: 09/2010

GEOTECHNICAL ENGINEERING UNIT

☒ *EASTERN REGIONAL OFFICE*

☐ *WESTERN REGIONAL OFFICE*

STATE OF NORTH CAROLINA
DEPARTMENT OF TRANSPORTATION
RALEIGH

MSE WALL NO. 1C-2 & 1B PLAN AND ELEVATION

REVISIONS						SHEET NO.
NO.	BY	DATE	NO.	BY	DATE	W-5
1			3			TOTAL SHEETS
2			4			20

GEOTECHNICAL ENGINEER

NORTH CAROLINA PROFESSIONAL SEAL 32171 ENGINEER JIN YOUNG PARK 12-11-2010

SIGNATURE DATE

ENGINEER

SIGNATURE DATE

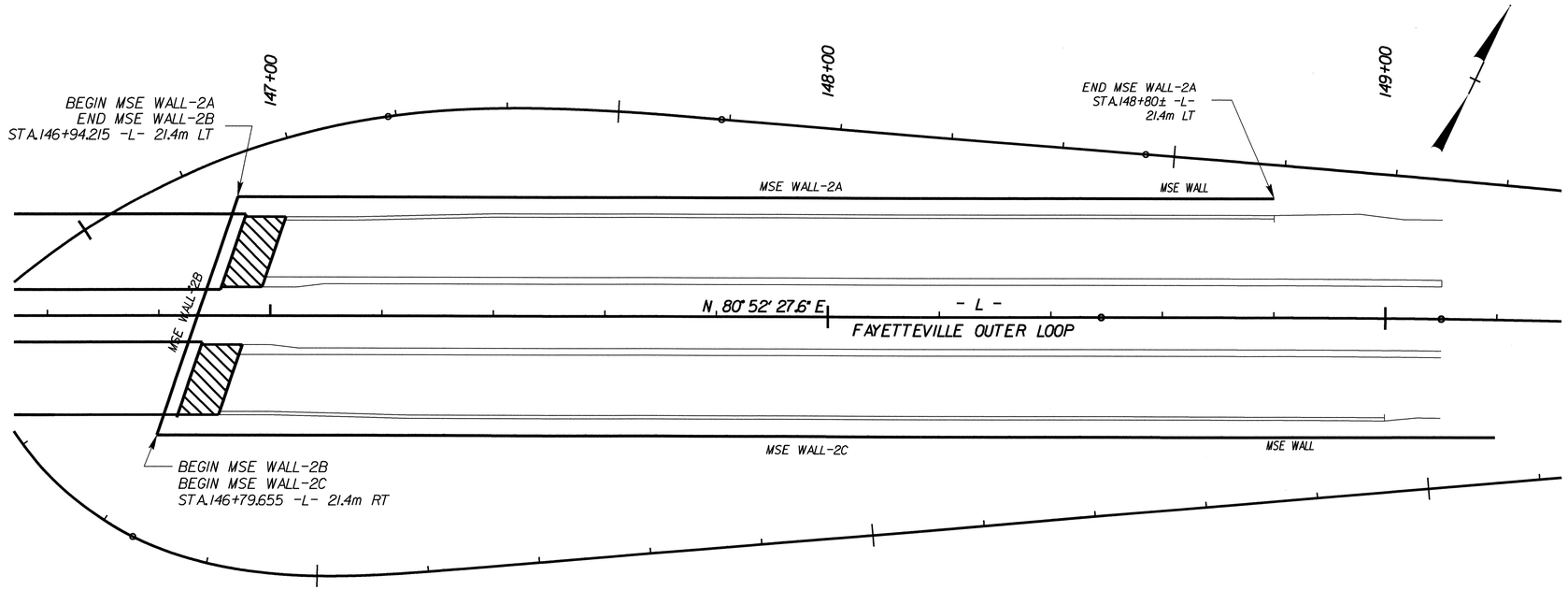

PLAN VIEW MSE WALL NO. 2A AND 2B

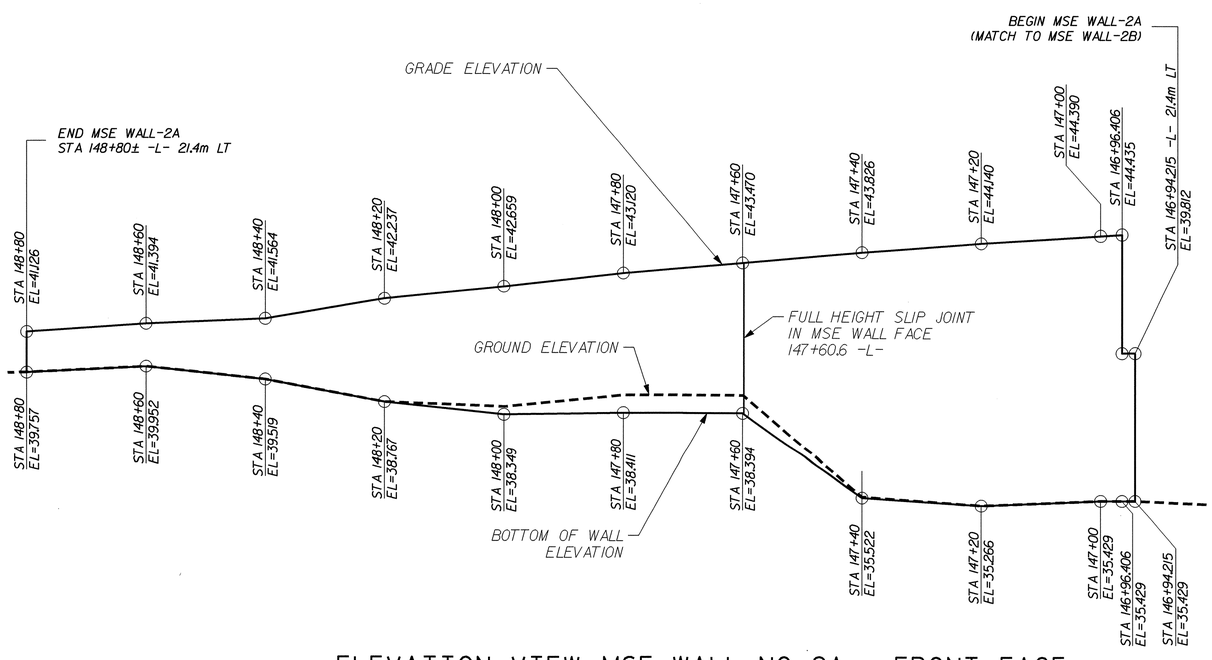

ELEVATION VIEW MSE WALL NO. 2A - FRONT FACE

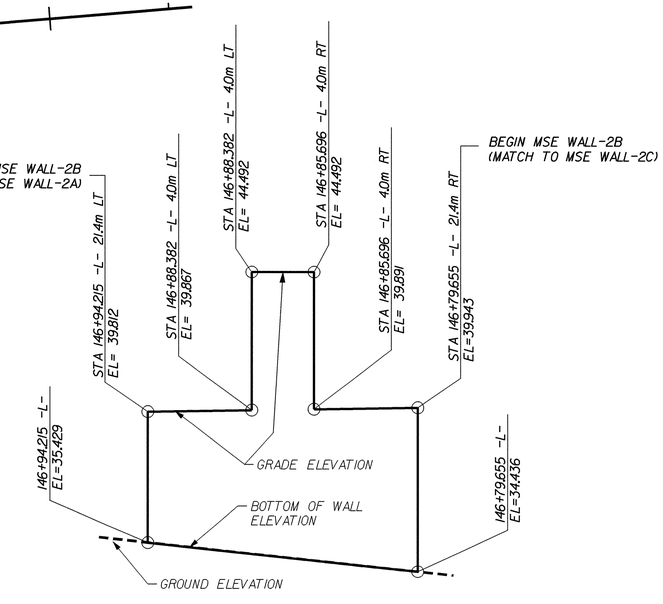

ELEVATION VIEW MSE WALL NO. 2B - FRONT FACE

PROJECT NO.: X-0002CB

CUMBERLAND **COUNTY**

STATION: 146+79.655 - 148+80 -L-

SHEET 6 OF 7

PREPARED BY: J. PARK	DATE: 09/2010
REVIEWED BY: K. J. KIM	DATE: 09/2010

GEOTECHNICAL ENGINEERING UNIT

☒ *EASTERN REGIONAL OFFICE*

☐ *WESTERN REGIONAL OFFICE*

STATE OF NORTH CAROLINA
DEPARTMENT OF TRANSPORTATION
RALEIGH

MSE WALL NO. 2A AND 2B PLAN AND ELEVATION

REVISIONS						SHEET NO.
NO.	BY	DATE	NO.	BY	DATE	W-6
1			3			TOTAL SHEETS
2			4			20

GEOTECHNICAL ENGINEER	ENGINEER
SIGNATURE DATE	SIGNATURE DATE

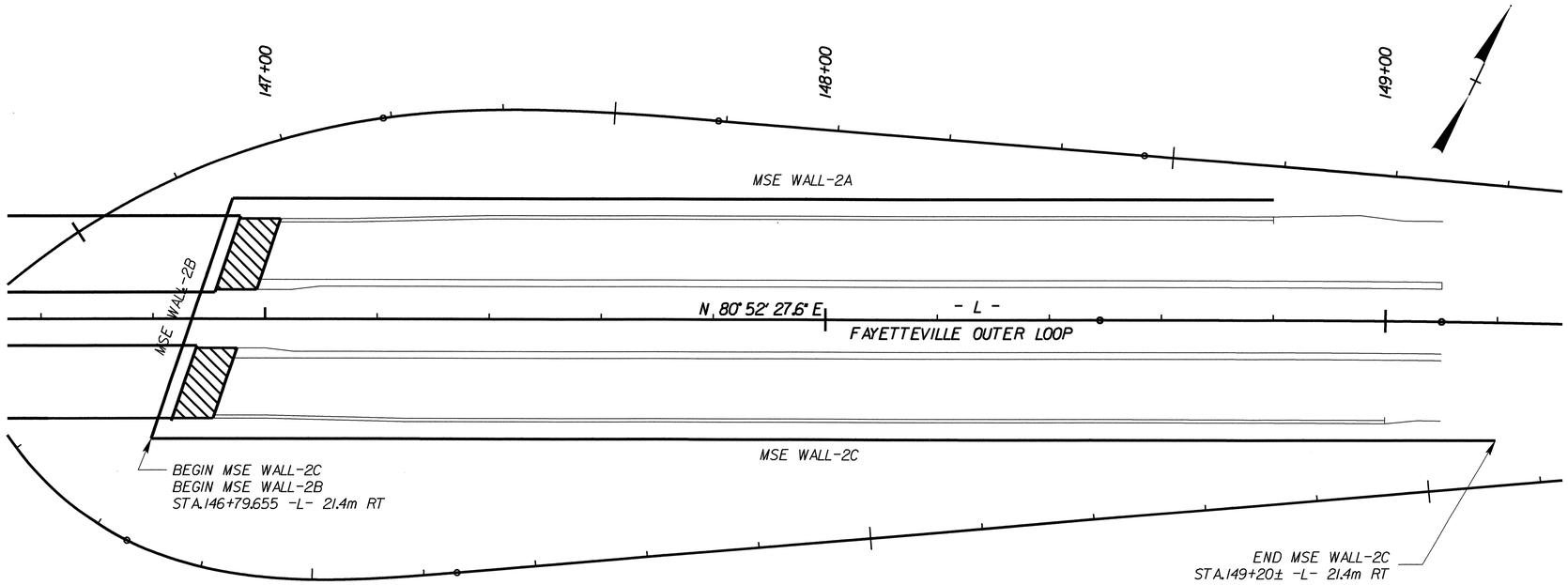

PLAN VIEW MSE WALL NO. 2C

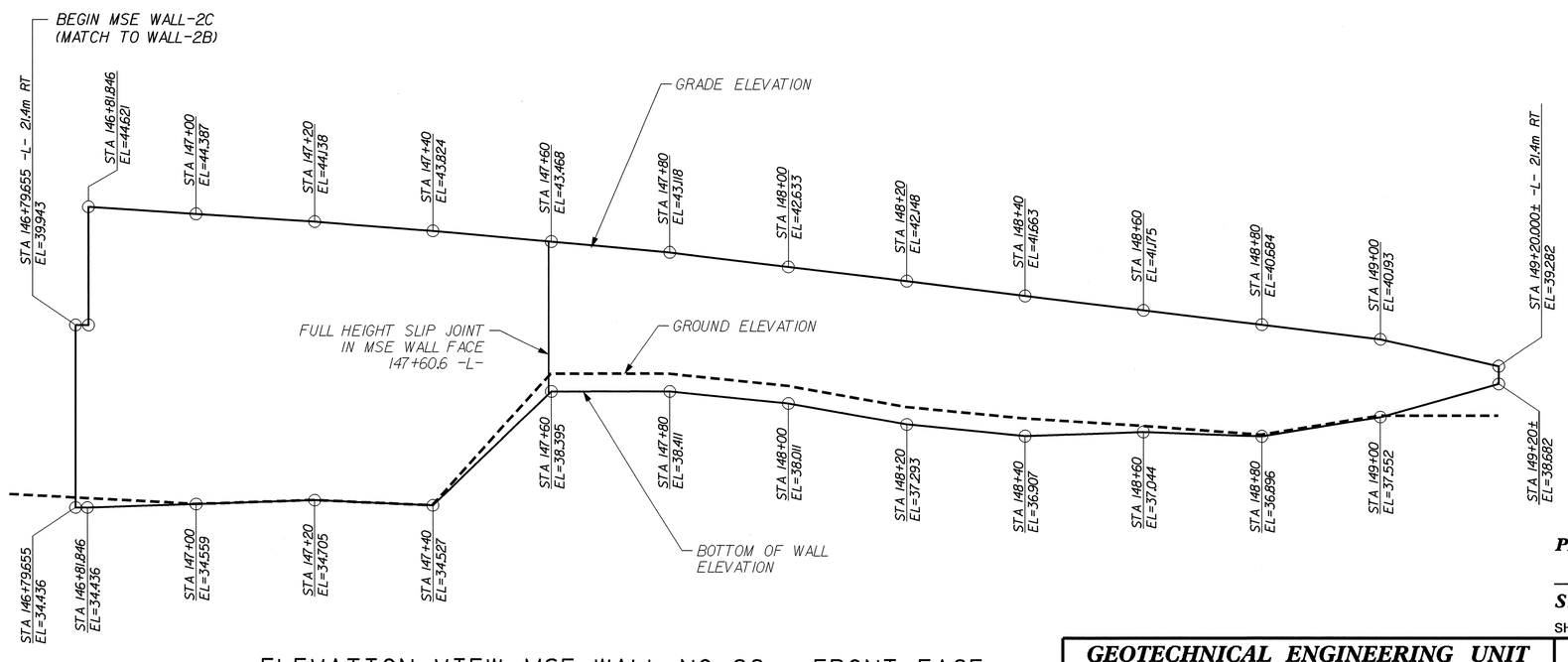

ELEVATION VIEW MSE WALL NO. 2C - FRONT FACE

PROJECT NO.: X-0002CB

CUMBERLAND **COUNTY**

STATION: 146+79.655 - 149+20 -L-

SHEET 7 OF 7

GEOTECHNICAL ENGINEERING UNIT

[X] EASTERN REGIONAL OFFICE

[ ] WESTERN REGIONAL OFFICE

STATE OF NORTH CAROLINA
DEPARTMENT OF TRANSPORTATION
RALEIGH

MSE WALL NO.2C PLAN AND ELEVATION

REVISIONS						SHEET NO.
NO.	BY	DATE	NO.	BY	DATE	W-7
1			3			TOTAL SHEETS
2			4			20

PREPARED BY: J. PARK	DATE: 09/2010
REVIEWED BY: K. J. KIM	DATE: 09/2010

GEOTECHNICAL ENGINEER

NORTH CAROLINA PROFESSIONAL SEAL 032672 ENGINEER MICHAEL D. VALIQUETTE

SIGNATURE DATE

ENGINEER

SIGNATURE DATE

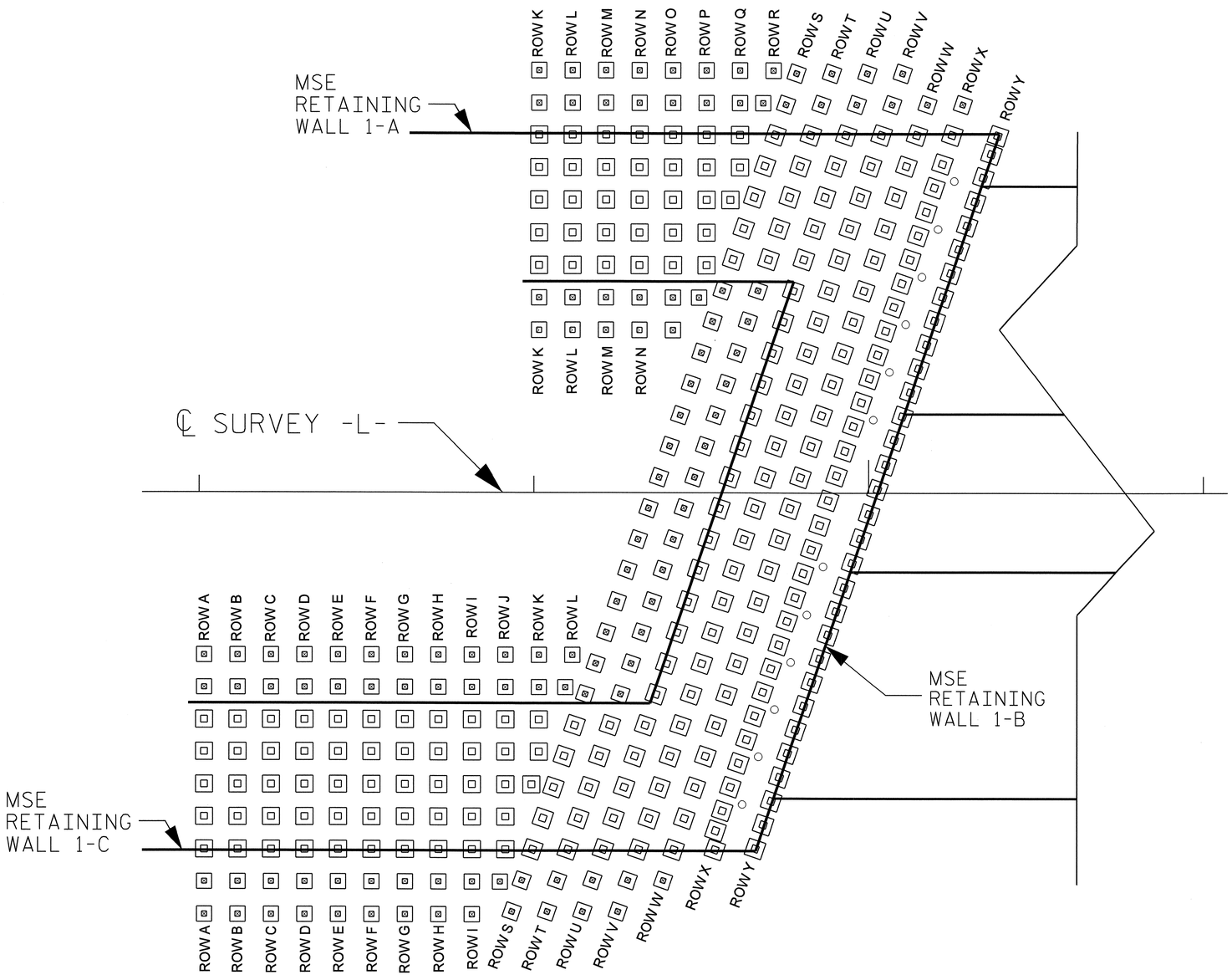

PILE PLAN VIEW

SEE PILE LAYOUT TABLES FOR PILE LOCATIONS AND SIZES
(PILES ARE NUMBERED FROM RIGHT TO LEFT)
PILE SUPPORTED MSE WALL AND EMBANKMENT NO.1

NOT TO SCALE

PILE LAYOUT NOTES

PILE SUPPORTED MSE WALL AND EMBANKMENT NO.1

1. TOP OF PILE CAP ELEVATIONS FOR ALL CONCRETE PILES WILL BE ADJUSTED BASED UPON THE APPROVED MSE WALL WORKING DRAWINGS BY THE ENGINEER WITHIN 20 WORKING DAYS OF APPROVAL OF MSE WALL WORKING DRAWINGS.
2. TOP OF PILE CAP ELEVATIONS FOR ALL PILES WITHIN PILE SUPPORTED MSE WALL AND EMBANKMENT NO.1 SHALL BE BASED ON THE TOP OF LEVELING PAD ELEVATIONS FROM THE ACCEPTED MSE WALL NO.1-B WORKING DRAWINGS.
3. THE TOP OF PILE CAP ELEVATIONS SHALL BE 800 MM BELOW THE MSE WALL NO.1-B TOP OF LEVELING PAD AT 145+93.249 AND 146+07.800 -L-. TOP OF PILE CAP ELEVATIONS SHALL BE LINEARLY INTERPOLATED FROM LEFT TO RIGHT BETWEEN THESE TWO ELEVATIONS NEGLECTING LEVELING PAD STEPS.
4. THE TOP OF PILE CAP ELEVATIONS SHALL BE LEVEL PARALLEL TO -L- FROM BEGINNING OF LTP TO END OF LTP.

PROJECT NO.: X-0002CB

CUMBERLAND **COUNTY**

STATION: 145+59.086 TO 146+09.196 -L-

SHEET 1 OF 13

GEOTECHNICAL ENGINEERING UNIT

☒ EASTERN REGIONAL OFFICE

☐ WESTERN REGIONAL OFFICE

STATE OF NORTH CAROLINA
DEPARTMENT OF TRANSPORTATION
RALEIGH

PILE SUPPORTED MSE WALL AND EMBANKMENT

REVISIONS						SHEET NO.
NO.	BY	DATE	NO.	BY	DATE	W-8
1			3			TOTAL SHEETS
2			4			20

PREPARED BY: M.D. VALIQUETTE	DATE: 09/2010
REVIEWED BY: K. J. KIM	DATE: 09/2010

GEOTECHNICAL ENGINEER	ENGINEER
NORTH CAROLINA PROFESSIONAL SEAL 032672 ENGINEER MICHAEL D. VALIQUETTE	
SIGNATURE DATE	SIGNATURE DATE

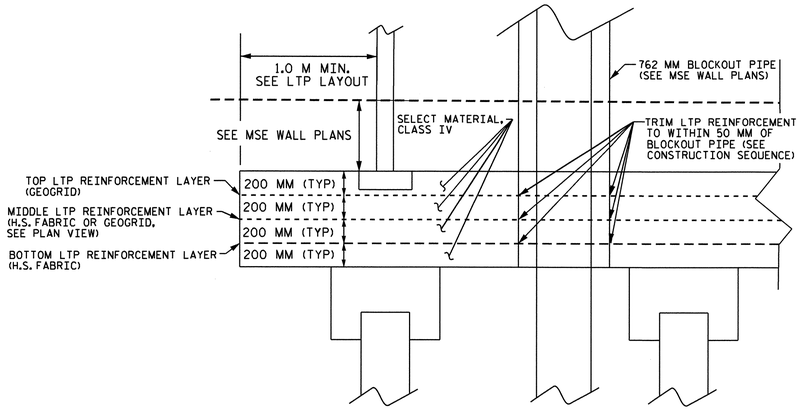

LOAD TRANSFER PLATFORM (LTP) DETAIL A

NTS

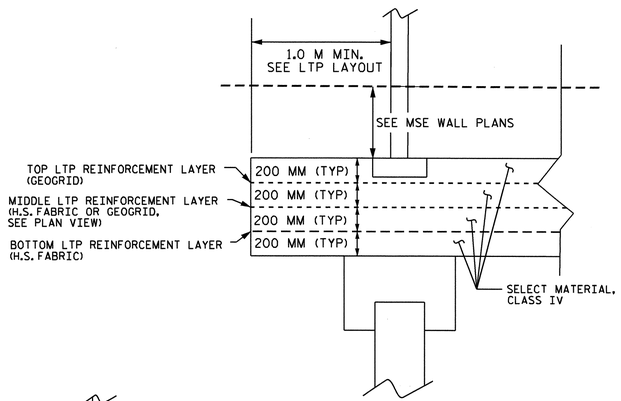

LOAD TRANSFER PLATFORM (LTP) DETAIL B

NTS

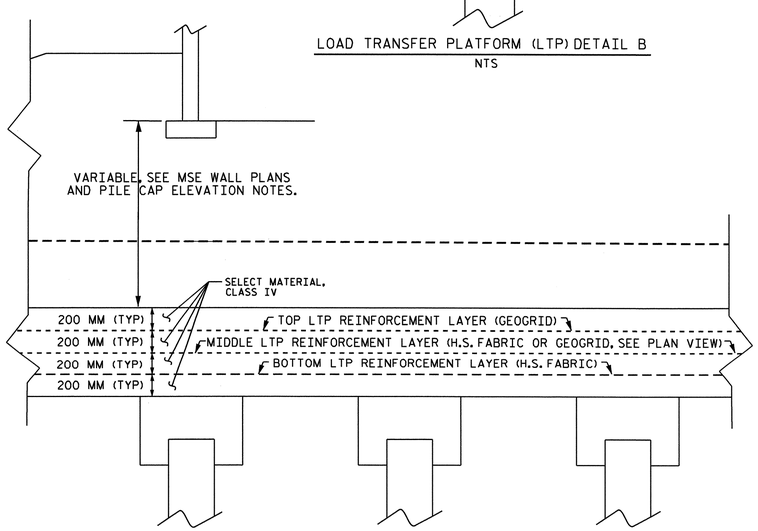

LOAD TRANSFER PLATFORM (LTP) DETAIL C

NTS

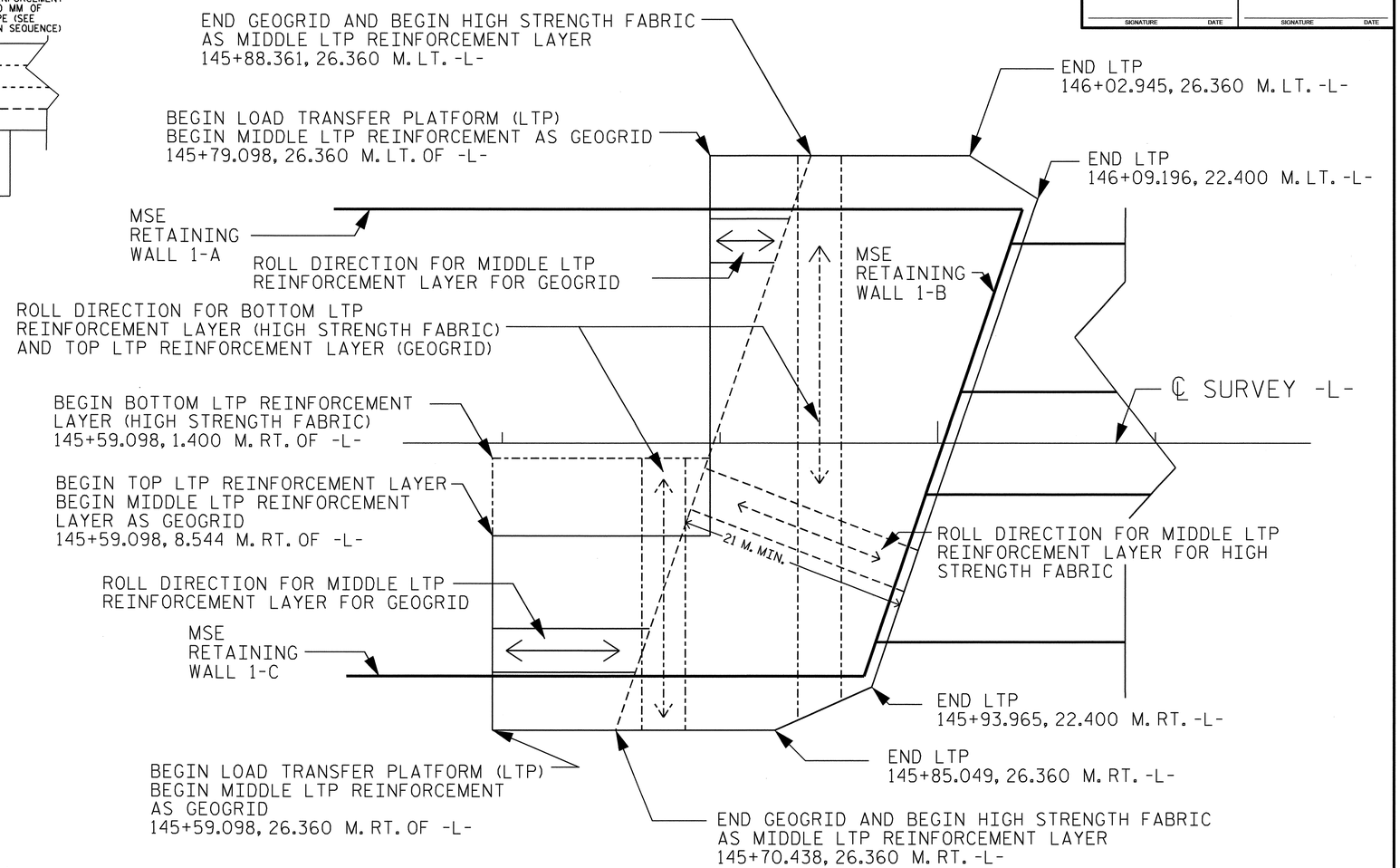

LOAD TRANSFER PLATFORM (LTP) PLAN VIEW

PILE SUPPORTED MSE WALL AND EMBANKMENT NO.1

NOT TO SCALE

PROJECT NO.: X-0002CB

CUMBERLAND ***COUNTY***

STATION: 145+59.086 TO 146+09.196 -L-

SHEET 2 OF 13

GEOTECHNICAL ENGINEERING UNIT

☒ ***EASTERN REGIONAL OFFICE***

☐ ***WESTERN REGIONAL OFFICE***

STATE OF NORTH CAROLINA
DEPARTMENT OF TRANSPORTATION
RALEIGH

PILE SUPPORTED MSE WALL AND EMBANKMENT

REVISIONS						SHEET NO.
NO.	BY	DATE	NO.	BY	DATE	W-9
1			3			TOTAL SHEETS
2			4			20

PREPARED BY: M.D. VALIQUETTE	DATE: 09/2010
REVIEWED BY: K. J. KIM	DATE: 09/2010

METRIC

GEOTECHNICAL ENGINEER

NORTH CAROLINA PROFESSIONAL SEAL 032672 ENGINEER MICHAEL D. VALIQUETTE 10/14/10

SIGNATURE DATE

ENGINEER

SIGNATURE DATE

ROW A			
Pile ID	Station	Offset	Pile Size
A1	145 + 60.301	25.209 R	305 mm
A2	145 + 60.301	23.270 R	305 mm
A3	145 + 60.301	21.331 R	406 mm
A4	145 + 60.301	19.392 R	406 mm
A5	145 + 60.301	17.453 R	406 mm
A6	145 + 60.301	15.514 R	406 mm
A7	145 + 60.301	13.575 R	406 mm
A8	145 + 60.301	11.636 R	305 mm
A9	145 + 60.301	9.697 R	305 mm

ROW B			
Pile ID	Station	Offset	Pile Size
B1	145 + 62.301	25.209 R	305 mm
B2	145 + 62.301	23.270 R	305 mm
B3	145 + 62.301	21.331 R	406 mm
B4	145 + 62.301	19.392 R	406 mm
B5	145 + 62.301	17.453 R	406 mm
B6	145 + 62.301	15.514 R	406 mm
B7	145 + 62.301	13.575 R	406 mm
B8	145 + 62.301	11.636 R	305 mm
B9	145 + 62.301	9.697 R	305 mm

ROW C			
Pile ID	Station	Offset	Pile Size
C1	145 + 64.301	25.209 R	305 mm
C2	145 + 64.301	23.270 R	305 mm
C3	145 + 64.301	21.331 R	406 mm
C4	145 + 64.301	19.392 R	406 mm
C5	145 + 64.301	17.453 R	406 mm
C6	145 + 64.301	15.514 R	406 mm
C7	145 + 64.301	13.575 R	406 mm
C8	145 + 64.301	11.636 R	305 mm
C9	145 + 64.301	9.697 R	305 mm

ROW D			
Pile ID	Station	Offset	Pile Size
D1	145 + 66.301	25.209 R	305 mm
D2	145 + 66.301	23.270 R	305 mm
D3	145 + 66.301	21.331 R	406 mm
D4	145 + 66.301	19.392 R	406 mm
D5	145 + 66.301	17.453 R	406 mm
D6	145 + 66.301	15.514 R	406 mm
D7	145 + 66.301	13.575 R	406 mm
D8	145 + 66.301	11.636 R	305 mm
D9	145 + 66.301	9.697 R	305 mm

ROW E			
Pile ID	Station	Offset	Pile Size
E1	145 + 68.301	25.209 R	305 mm
E2	145 + 68.301	23.270 R	305 mm
E3	145 + 68.301	21.331 R	406 mm
E4	145 + 68.301	19.392 R	406 mm
E5	145 + 68.301	17.453 R	406 mm
E6	145 + 68.301	15.514 R	406 mm
E7	145 + 68.301	13.575 R	406 mm
E8	145 + 68.301	11.636 R	305 mm
E9	145 + 68.301	9.697 R	305 mm

ROW F			
Pile ID	Station	Offset	Pile Size
F1	145 + 70.301	25.209 R	305 mm
F2	145 + 70.301	23.270 R	305 mm
F3	145 + 70.301	21.331 R	406 mm
F4	145 + 70.301	19.392 R	406 mm
F5	145 + 70.301	17.453 R	406 mm
F6	145 + 70.301	15.514 R	406 mm
F7	145 + 70.301	13.575 R	406 mm
F8	145 + 70.301	11.636 R	305 mm
F9	145 + 70.301	9.697 R	305 mm

ROW G			
Pile ID	Station	Offset	Pile Size
G1	145 + 72.301	25.209 R	305 mm
G2	145 + 72.301	23.270 R	305 mm
G3	145 + 72.301	21.331 R	406 mm
G4	145 + 72.301	19.392 R	406 mm
G5	145 + 72.301	17.453 R	406 mm
G6	145 + 72.301	15.514 R	406 mm
G7	145 + 72.301	13.575 R	406 mm
G8	145 + 72.301	11.636 R	305 mm
G9	145 + 72.301	9.697 R	305 mm

ROW H			
Pile ID	Station	Offset	Pile Size
H1	145 + 74.301	25.209 R	305 mm
H2	145 + 74.301	23.270 R	305 mm
H3	145 + 74.301	21.331 R	406 mm
H4	145 + 74.301	19.392 R	406 mm
H5	145 + 74.301	17.453 R	406 mm
H6	145 + 74.301	15.514 R	406 mm
H7	145 + 74.301	13.575 R	406 mm
H8	145 + 74.301	11.636 R	305 mm
H9	145 + 74.301	9.697 R	305 mm

ROW I			
Pile ID	Station	Offset	Pile Size
I1	145 + 76.301	25.209 R	305 mm
I2	145 + 76.301	23.270 R	305 mm
I3	145 + 76.301	21.331 R	406 mm
I4	145 + 76.301	19.392 R	406 mm
I5	145 + 76.301	17.453 R	406 mm
I6	145 + 76.301	15.514 R	406 mm
I7	145 + 76.301	13.575 R	406 mm
I8	145 + 76.301	11.636 R	305 mm
I9	145 + 76.301	9.697 R	305 mm

ROW J			
Pile ID	Station	Offset	Pile Size
J1	145 + 77.978	23.270 R	305 mm
J2	145 + 78.301	21.331 R	406 mm
J3	145 + 78.301	19.392 R	406 mm
J4	145 + 78.301	17.453 R	406 mm
J5	145 + 78.301	15.514 R	406 mm
J6	145 + 78.301	13.575 R	406 mm
J7	145 + 78.301	11.636 R	305 mm
J8	145 + 78.301	9.697 R	305 mm

ROW K			
Pile ID	Station	Offset	Pile Size
K1	145 + 79.859	17.453 R	406 mm
K2	145 + 80.301	15.514 R	406 mm
K3	145 + 80.301	13.575 R	406 mm
K4	145 + 80.301	11.636 R	305 mm
K5	145 + 80.301	9.697 R	305 mm
K6	145 + 80.301	9.697 L	305 mm
K7	145 + 80.301	11.636 L	305 mm
K8	145 + 80.301	13.575 L	406 mm
K9	145 + 80.301	15.514 L	406 mm
K10	145 + 80.301	17.453 L	406 mm
K11	145 + 80.301	19.392 L	406 mm
K12	145 + 80.301	21.331 L	406 mm
K13	145 + 80.301	23.270 L	305 mm
K14	145 + 80.301	25.209 L	305 mm

ROW L			
Pile ID	Station	Offset	Pile Size
L1	145 + 81.881	11.636 R	305 mm
L2	145 + 82.301	9.697 R	305 mm
L3	145 + 82.301	9.697 L	305 mm
L4	145 + 82.301	11.636 L	305 mm
L5	145 + 82.301	13.575 L	406 mm
L6	145 + 82.301	15.514 L	406 mm
L7	145 + 82.301	17.453 L	406 mm
L8	145 + 82.301	19.392 L	406 mm
L9	145 + 82.301	21.331 L	406 mm
L10	145 + 82.301	23.270 L	305 mm
L11	145 + 82.301	25.209 L	305 mm

ROW M			
Pile ID	Station	Offset	Pile Size
M1	145 + 84.301	9.697 L	305 mm
M2	145 + 84.301	11.636 L	305 mm
M3	145 + 84.301	13.575 L	406 mm
M4	145 + 84.301	15.514 L	406 mm
M5	145 + 84.301	17.453 L	406 mm
M6	145 + 84.301	19.392 L	406 mm
M7	145 + 84.301	21.331 L	406 mm
M8	145 + 84.301	23.270 L	305 mm
M9	145 + 84.301	25.209 L	305 mm

ROW N			
Pile ID	Station	Offset	Pile Size
N1	145 + 86.301	9.697 L	305 mm
N2	145 + 86.301	11.636 L	305 mm
N3	145 + 86.301	13.575 L	406 mm
N4	145 + 86.301	15.514 L	406 mm
N5	145 + 86.301	17.453 L	406 mm
N6	145 + 86.301	19.392 L	406 mm
N7	145 + 86.301	21.331 L	406 mm
N8	145 + 86.301	23.270 L	305 mm
N9	145 + 86.301	25.209 L	305 mm

ROW O			
Pile ID	Station	Offset	Pile Size
O1	145 + 88.301	9.697 L	305 mm
O2	145 + 88.301	11.636 L	305 mm
O3	145 + 88.301	13.575 L	406 mm
O4	145 + 88.301	15.514 L	406 mm
O5	145 + 88.301	17.453 L	406 mm
O6	145 + 88.301	19.392 L	406 mm
O7	145 + 88.301	21.331 L	406 mm
O8	145 + 88.301	23.270 L	305 mm
O9	145 + 88.301	25.209 L	305 mm

ROW P			
Pile ID	Station	Offset	Pile Size
P1	145 + 89.860	11.636 L	305 mm
P2	145 + 90.301	13.575 L	406 mm
P3	145 + 90.301	15.514 L	406 mm
P4	145 + 90.301	17.453 L	406 mm
P5	145 + 90.301	19.392 L	406 mm
P6	145 + 90.301	21.331 L	406 mm
P7	145 + 90.301	23.270 L	305 mm
P8	145 + 90.301	25.209 L	305 mm

ROW Q			
Pile ID	Station	Offset	Pile Size
Q1	145 + 91.722	17.453 L	406 mm
Q2	145 + 92.301	19.392 L	406 mm
Q3	145 + 92.301	21.331 L	406 mm
Q4	145 + 92.301	23.270 L	305 mm
Q5	145 + 92.301	25.209 L	305 mm

ROW R			
Pile ID	Station	Offset	Pile Size
R1	145 + 93.686	23.270 L	305 mm
R2	145 + 94.301	25.209 L	305 mm

ROW S			
Pile ID	Station	Offset	Pile Size
S1	145 + 78.656	25.040 R	305 mm
S2	145 + 79.287	23.185 R	305 mm
S3	145 + 79.917	21.330 R	406 mm
S4	145 + 80.548	19.476 R	406 mm
S5	145 + 81.178	17.621 R	406 mm
S6	145 + 81.809	15.766 R	406 mm
S7	145 + 82.439	13.911 R	406 mm
S8	145 + 83.070	12.056 R	305 mm
S9	145 + 83.700	10.201 R	305 mm
S10	145 + 84.331	8.347 R	305 mm
S11	145 + 84.961	6.492 R	305 mm
S12	145 + 85.592	4.637 R	305 mm
S13	145 + 86.222	2.782 R	305 mm
S14	145 + 86.853	0.927 R	305 mm
S15	145 + 87.483	0.927 L	305 mm
S16	145 + 88.114	2.782 L	305 mm
S17	145 + 88.744	4.637 L	305 mm
S18	145 + 89.375	6.492 L	305 mm
S19	145 + 90.005	8.347 L	305 mm
S20	145 + 90.636	10.202 L	305 mm
S21	145 + 91.266	12.056 L	305 mm
S22	145 + 91.897	13.911 L	406 mm
S23	145 + 92.527	15.766 L	406 mm
S24	145 + 93.158	17.621 L	406 mm
S25	145 + 93.788	19.476 L	406 mm
S26	145 + 94.419	21.331 L	406 mm
S27	145 + 95.049	23.185 L	305 mm
S28	145 + 95.679	25.040 L	305 mm

ROW T			
Pile ID	Station	Offset	Pile Size
T1	145 + 80.768	25.040 R	305 mm
T2	145 + 81.399	23.185 R	305 mm
T3	145 + 82.029	21.330 R	406 mm
T4	145 + 82.660	19.476 R	406 mm
T5	145 + 83.290	17.621 R	406 mm
T6	145 + 83.921	15.766 R	406 mm
T7	145 + 84.551	13.911 R	406 mm
T8	145 + 85.182	12.056 R	305 mm
T9	145 + 85.812	10.201 R	305 mm
T10	145 + 86.443	8.347 R	305 mm
T11	145 + 87.073	6.492 R	305 mm
T12	145 + 87.704	4.637 R	305 mm
T13	145 + 88.334	2.782 R	305 mm
T14	145 + 88.965	0.927 R	305 mm
T15	145 + 89.595	0.927 L	305 mm
T16	145 + 90.226	2.782 L	305 mm
T17	145 + 90.856	4.637 L	305 mm
T18	145 + 91.487	6.492 L	305 mm
T19	145 + 92.117	8.347 L	305 mm
T20	145 + 92.748	10.202 L	305 mm
T21	145 + 93.378	12.056 L	305 mm
T22	145 + 94.009	13.911 L	406 mm
T23	145 + 94.639	15.766 L	406 mm
T24	145 + 95.270	17.621 L	406 mm
T25	145 + 95.900	19.476 L	406 mm
T26	145 + 96.530	21.331 L	406 mm
T27	145 + 97.161	23.185 L	305 mm
T28	145 + 97.791	25.040 L	305 mm

ROW U			
Pile ID	Station	Offset	Pile Size
U1	145 + 82.880	25.040 R	406 mm
U2	145 + 83.511	23.185 R	406 mm
U3	145 + 84.141	21.330 R	406 mm
U4	145 + 84.772	19.476 R	406 mm
U5	145 + 85.402	17.621 R	406 mm
U6	145 + 86.033	15.766 R	406 mm
U7	145 + 86.663	13.911 R	406 mm
U8	145 + 87.294	12.056 R	406 mm
U9	145 + 87.924	10.201 R	406 mm
U10	145 + 88.555	8.347 R	406 mm
U11	145 + 89.185	6.492 R	406 mm
U12	145 + 89.816	4.637 R	406 mm
U13	145 + 90.446	2.782 R	406 mm
U14	145 + 91.077	0.927 R	406 mm
U15	145 + 91.707	0.927 L	406 mm
U16	145 + 92.338	2.782 L	406 mm
U17	145 + 92.968	4.637 L	406 mm
U18	145 + 93.599	6.492 L	406 mm
U19	145 + 94.229	8.347 L	406 mm
U20	145 + 94.860	10.202 L	406 mm
U21	145 + 95.490	12.056 L	406 mm
U22	145 + 96.121	13.911 L	406 mm
U23	145 + 96.751	15.766 L	406 mm
U24	145 + 97.381	17.621 L	406 mm
U25	145 + 98.012	19.476 L	406 mm
U26	145 + 98.642	21.331 L	406 mm
U27	145 + 99.273	23.185 L	406 mm
U28	145 + 99.903	25.040 L	406 mm

ROW V			
Pile ID	Station	Offset	Pile Size
V1	145 + 84.992	25.040 R	406 mm
V2	145 + 85.623	23.185 R	406 mm
V3	145 + 86.253	21.330 R	406 mm
V4	145 + 86.884	19.476 R	406 mm
V5	145 + 87.514	17.621 R	406 mm
V6	145 + 88.145	15.766 R	406 mm
V7	145 + 88.775	13.911 R	406 mm
V8	145 + 89.406	12.056 R	406 mm
V9	145 + 90.036	10.201 R	406 mm
V10	145 + 90.667	8.347 R	406 mm
V11	145 + 91.297	6.492 R	406 mm
V12	145 + 91.928	4.637 R	406 mm
V13	145 + 92.558	2.782 R	406 mm
V14	145 + 93.189	0.927 R	406 mm
V15	145 + 93.819	0.927 L	406 mm
V16	145 + 94.450	2.782 L	406 mm
V17	145 + 95.080	4.637 L	406 mm
V18	145 + 95.711	6.492 L	406 mm
V19	145 + 96.341	8.347 L	406 mm
V20	145 + 96.971	10.202 L	406 mm
V21	145 + 97.602	12.056 L	406 mm
V22	145 + 98.232	13.911 L	406 mm
V23	145 + 98.863	15.766 L	406 mm
V24	145 + 99.493	17.621 L	406 mm
V25	146 + 0.124	19.476 L	406 mm
V26	146 + 0.754	21.331 L	406 mm
V27	146 + 1.385	23.185 L	406 mm
V28	146 + 2.015	25.040 L	406 mm

PILE LAYOUT TABLES SHOWING PILE LOCATIONS AND SIZES

(PILES ARE NUMBERED FROM RIGHT TO LEFT)

PILE SUPPORTED MSE WALL AND EMBANKMENT NO.1

PROJECT NO.: X-0002CB

CUMBERLAND ***COUNTY***

STATION: 145+59.086 TO 146+09.196 -L-

SHEET 3 OF 13

GEOTECHNICAL ENGINEERING UNIT

☒ ***EASTERN REGIONAL OFFICE***

☐ ***WESTERN REGIONAL OFFICE***

STATE OF NORTH CAROLINA DEPARTMENT OF TRANSPORTATION

STATE OF NORTH CAROLINA
DEPARTMENT OF TRANSPORTATION
RALEIGH

PILE SUPPORTED MSE WALL AND EMBANKMENT

REVISIONS						SHEET NO.
NO.	BY	DATE	NO.	BY	DATE	W-10
1			3			TOTAL SHEETS
2			4			20

PREPARED BY: M.D. VALIQUETTE	DATE: 09/2010
REVIEWED BY: K. J. KIM	DATE: 09/2010

ROW W			
Pile ID	Station	Offset	Pile Size
W1	145 + 87.735	23.185 R	406 mm
W2	145 + 88.365	21.330 R	406 mm
W3	145 + 88.996	19.476 R	406 mm
W4	145 + 89.626	17.621 R	406 mm
W5	145 + 90.257	15.766 R	406 mm
W6	145 + 90.887	13.911 R	406 mm
W7	145 + 91.518	12.056 R	406 mm
W8	145 + 92.148	10.201 R	406 mm
W9	145 + 92.779	8.347 R	406 mm
W10	145 + 93.409	6.492 R	406 mm
W11	145 + 94.040	4.637 R	406 mm
W12	145 + 94.670	2.782 R	406 mm
W13	145 + 95.301	0.927 R	406 mm
W14	145 + 95.931	0.927 L	406 mm
W15	145 + 96.562	2.782 L	406 mm
W16	145 + 97.192	4.637 L	406 mm
W17	145 + 97.822	6.492 L	406 mm
W18	145 + 98.453	8.347 L	406 mm
W19	145 + 99.083	10.202 L	406 mm
W20	145 + 99.714	12.056 L	406 mm
W21	145 + 0.344	13.911 L	406 mm
W22	145 + 0.975	15.766 L	406 mm
W23	145 + 1.605	17.621 L	406 mm
W24	146 + 2.236	19.476 L	406 mm
W25	146 + 2.866	21.331 L	406 mm
W26	146 + 3.497	23.185 L	406 mm

ROW X			
Pile ID	Station	Offset	Pile Size
X1	145 + 90.818	21.332 R	406 mm
X2	145 + 90.858	20.198 R	406 mm
X3	145 + 91.261	19.015 R	406 mm
X4	145 + 91.744	17.595 R	406 mm
X5	145 + 92.227	16.175 R	406 mm
X6	145 + 92.710	14.755 R	406 mm
X7	145 + 93.192	13.335 R	406 mm
X8	145 + 93.675	11.915 R	406 mm
X9	145 + 94.158	10.495 R	406 mm
X10	145 + 94.641	9.075 R	406 mm
X11	145 + 95.124	7.655 R	406 mm
X12	145 + 95.606	6.235 R	406 mm
X13	145 + 96.089	4.815 R	406 mm
X14	145 + 96.572	3.395 R	406 mm
X15	145 + 97.074	1.917 R	406 mm
X16	145 + 97.576	0.440 R	406 mm
X17	145 + 98.078	1.036 L	406 mm
X18	145 + 98.580	2.513 L	406 mm
X19	145 + 99.082	3.989 L	406 mm
X20	145 + 99.565	5.409 L	406 mm
X21	146 + 0.048	6.829 L	406 mm
X22	146 + 0.531	8.249 L	406 mm
X23	146 + 1.013	9.669 L	406 mm
X24	146 + 1.496	11.089 L	406 mm
X25	146 + 1.979	12.509 L	406 mm
X26	146 + 2.462	13.929 L	406 mm
X27	146 + 2.945	15.349 L	406 mm
X28	146 + 3.427	16.769 L	406 mm
X29	146 + 3.910	18.189 L	406 mm
X30	146 + 4.393	19.609 L	406 mm
X31	146 + 4.980	21.334 L	406 mm
X32	146 + 5.610	23.189 L	305 mm

ROW Y			
Pile ID	Station	Offset	Pile Size
Y1	145 + 93.221	21.266 R	406 mm
Y2	145 + 93.704	19.846 R	406 mm
Y3	145 + 94.187	18.426 R	406 mm
Y4	145 + 94.669	17.006 R	406 mm
Y5	145 + 95.152	15.586 R	406 mm
Y6	145 + 95.635	14.166 R	406 mm
Y7	145 + 96.118	12.746 R	406 mm
Y8	145 + 96.601	11.326 R	406 mm
Y9	145 + 97.083	9.906 R	406 mm
Y10	145 + 97.566	8.486 R	406 mm
Y11	145 + 98.049	7.066 R	406 mm
Y12	145 + 98.532	5.646 R	406 mm
Y13	145 + 99.015	4.226 R	406 mm
Y14	145 + 99.518	2.747 R	406 mm
Y15	146 + 0.020	1.271 R	406 mm
Y16	146 + 0.522	0.205 L	406 mm
Y17	146 + 1.024	1.682 L	406 mm
Y18	146 + 1.526	3.158 L	406 mm
Y19	146 + 2.009	4.578 L	406 mm
Y20	146 + 2.492	5.998 L	406 mm
Y21	146 + 2.975	7.418 L	406 mm
Y22	146 + 3.457	8.838 L	406 mm
Y23	146 + 3.940	10.258 L	406 mm
Y24	146 + 4.423	11.678 L	406 mm
Y25	146 + 4.906	13.098 L	406 mm
Y26	146 + 5.389	14.518 L	406 mm
Y27	146 + 5.871	15.938 L	406 mm
Y28	146 + 6.354	17.358 L	406 mm
Y29	146 + 6.837	18.778 L	406 mm
Y30	146 + 7.320	20.198 L	406 mm
Y31	146 + 7.707	21.294 L	406 mm

GEOTECHNICAL ENGINEER

NORTH CAROLINA PROFESSIONAL SEAL 032672 ENGINEER MICHAEL D. VALIQUETTE

SIGNATURE DATE

ENGINEER

SIGNATURE DATE

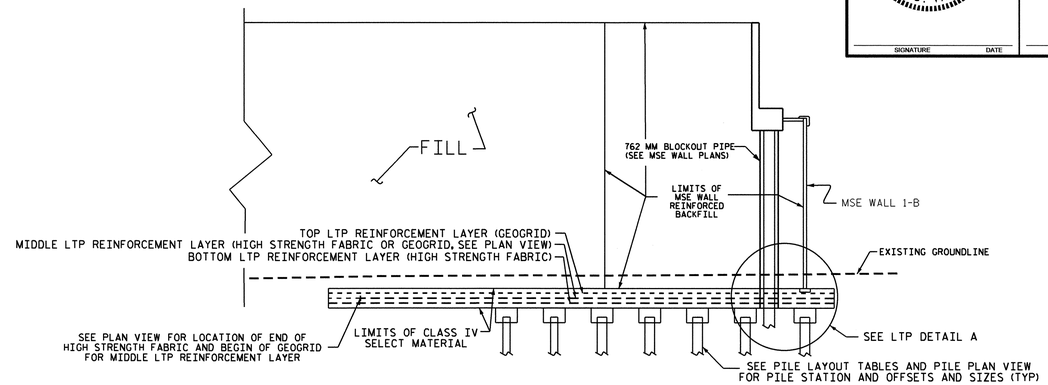

TYPICAL SECTION THROUGH CL OF -L-

PILE SUPPORTED MSE WALL AND EMBANKMENT NO.1

NOT TO SCALE

PILE LAYOUT TABLES SHOWING PILE LOCATIONS AND SIZES
(PILES ARE NUMBERED FROM RIGHT TO LEFT)
PILE SUPPORTED MSE WALL AND EMBANKMENT NO.1

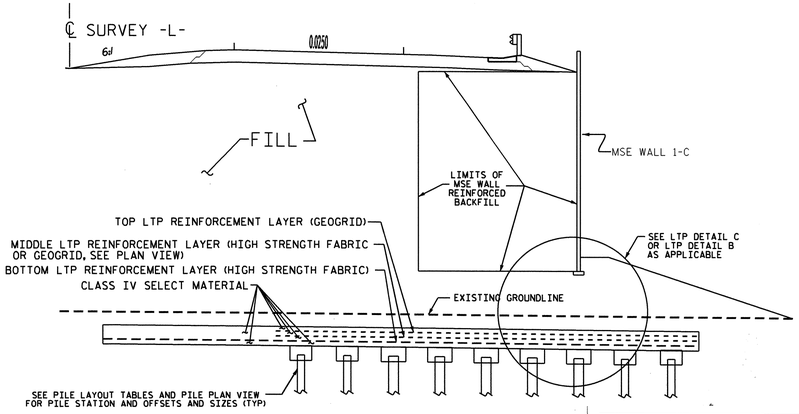

TYPICAL SECTION

(145+59.098 TO 145+79.098 -L-)
SEE PLAN VIEW FOR LIMITS OF LTP AND LIMITS OF LTP REINFORCEMENT TYPE

NOT TO SCALE

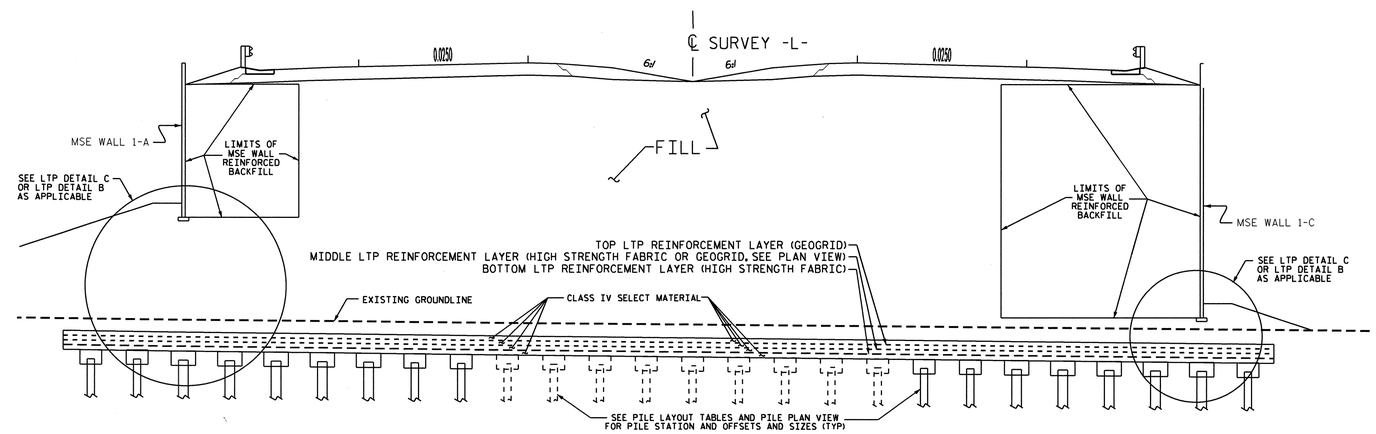

TYPICAL SECTION

(145+79.098 TO 146+09.196 -L-)
SEE PLAN VIEW FOR LIMITS OF LTP AND LIMITS OF LTP REINFORCEMENT TYPE

NOT TO SCALE

PILE SUPPORTED MSE WALL AND EMBANKMENT NO.1
ESTIMATED QUANTITIES

HIGH STRENGTH FABRIC FOR LTP.....2,800 SQ.M. (1),(2)
GEOGRID FOR LTP.....1,900 SQ.M. (1),(2)
SELECT MATERIAL, CLASS IV FOT LTP.....3,000 M.TON (2)
406 MM PRESTRESSED CONCRETE PILES.....1,920 M.
305 MM PRESTRESSED CONCRETE PILES.....936 M.
CAP FOR 406 MM PRESTRESSED CONCRETE PILES.....240 EACH
CAP FOR 305 MM PRESTRESSED CONCRETE PILES.....117 EACH
PDA TESTING.....2 EACH
PDA ASSISTANCE.....2 EACH

(1) HIGH STRENGTH FABRIC FOR LTP AND GEOGRID FOR LTP ESTIMATED QUANTITY DOES NOT INCLUDE OVERLAPS OR WASTE.
(2) EXCAVATION DOWN TO LTP, EXCAVATION OF ACTUAL LTP VOLUME, STOCKPILING OF EXCAVATED MATERIAL, AND REPLACEMENT OF EXCAVATED MATERIAL WILL BE CONSIDERED INCIDENTAL TO THE COST OF THE LTP PAY ITEMS.

PREPARED BY: M.D. VALIQUETTE	DATE: 09/2010
REVIEWED BY: K. J. KIM	DATE: 09/2010

PROJECT NO.: X-0002CB

CUMBERLAND ***COUNTY***

STATION: 145+59.086 TO 146+09.196 -L-

SHEET 4 OF 13

GEOTECHNICAL ENGINEERING UNIT

☒ ***EASTERN REGIONAL OFFICE***
☐ ***WESTERN REGIONAL OFFICE***

STATE OF NORTH CAROLINA
DEPARTMENT OF TRANSPORTATION
RALEIGH

PILE SUPPORTED MSE WALL AND EMBANKMENT

REVISIONS						
NO.	BY	DATE	NO.	BY	DATE	SHEET NO. W-11
1			3			TOTAL SHEETS 20
2			4			

GEOTECHNICAL ENGINEER

NORTH CAROLINA PROFESSIONAL SEAL 032672 ENGINEER MICHAEL D. VALIQUETTE

SIGNATURE DATE

ENGINEER

SIGNATURE DATE

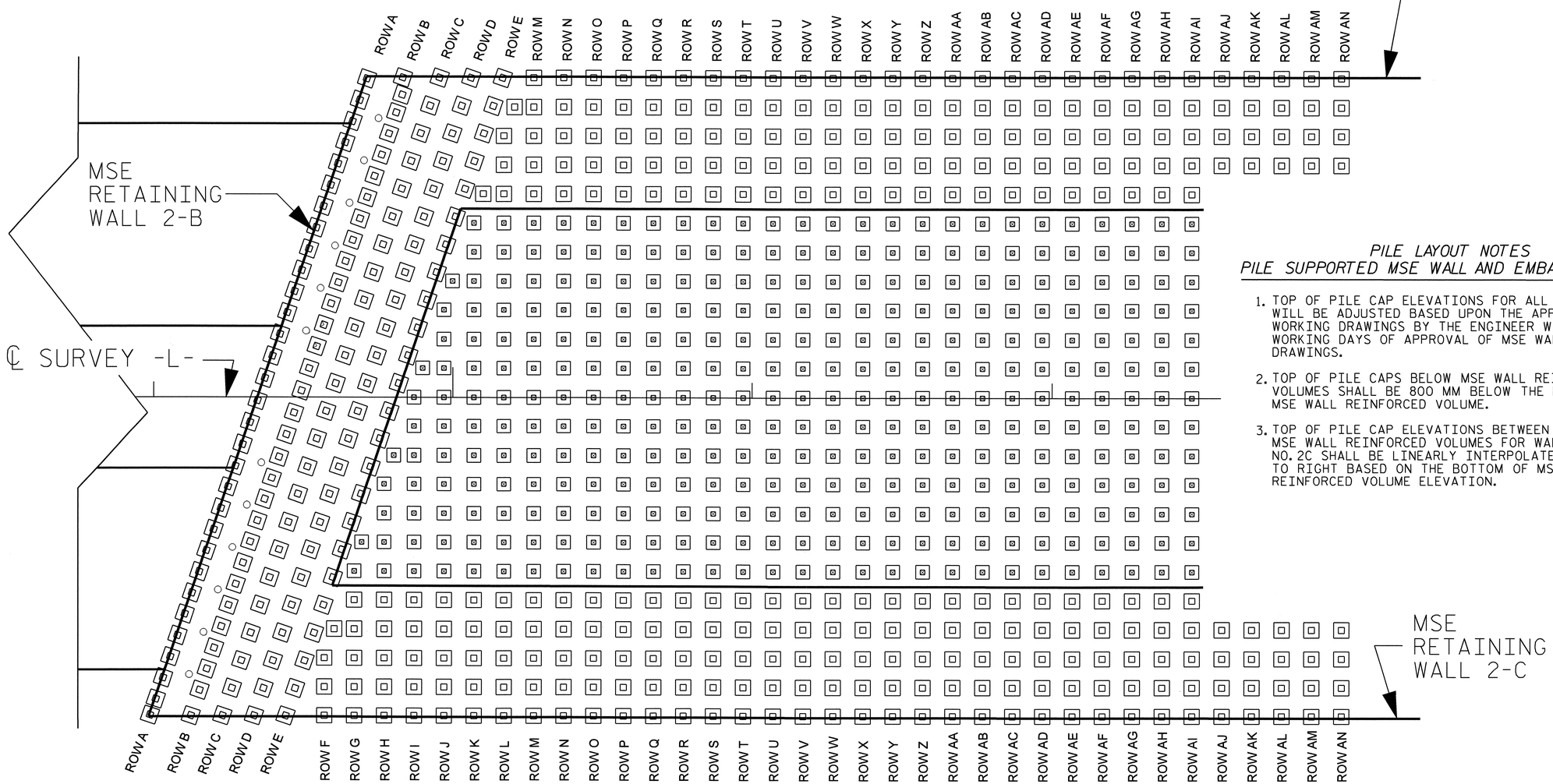

PILE PLAN VIEW

SEE PILE LAYOUT TABLES FOR PILE LOCATIONS AND SIZES
(PILES ARE NUMBERED FROM RIGHT TO LEFT)
PILE SUPPORTED MSE WALL AND EMBANKMENT NO.2
NOT TO SCALE

PILE LAYOUT NOTES
PILE SUPPORTED MSE WALL AND EMBANKMENT NO.2

1. TOP OF PILE CAP ELEVATIONS FOR ALL CONCRETE PILES WILL BE ADJUSTED BASED UPON THE APPROVED MSE WALL WORKING DRAWINGS BY THE ENGINEER WITHIN 20 WORKING DAYS OF APPROVAL OF MSE WALL WORKING DRAWINGS.
2. TOP OF PILE CAPS BELOW MSE WALL REINFORCED VOLUMES SHALL BE 800 MM BELOW THE BOTTOM OF THE MSE WALL REINFORCED VOLUME.
3. TOP OF PILE CAP ELEVATIONS BETWEEN THE BACK OF MSE WALL REINFORCED VOLUMES FOR WALLS NO.2A AND NO.2C SHALL BE LINEARLY INTERPOLATED FROM LEFT TO RIGHT BASED ON THE BOTTOM OF MSE WALL REINFORCED VOLUME ELEVATION.

PROJECT NO.: X-0002CB
CUMBERLAND **COUNTY**
STATION: 146+78.259 TO 147+60.603 -L-

SHEET 5 OF 13

GEOTECHNICAL ENGINEERING UNIT
☒ EASTERN REGIONAL OFFICE
☐ WESTERN REGIONAL OFFICE

STATE OF NORTH CAROLINA
DEPARTMENT OF TRANSPORTATION
RALEIGH

PILE SUPPORTED MSE WALL AND EMBANKMENT

REVISIONS						SHEET NO.
NO.	BY	DATE	NO.	BY	DATE	W-12
1			3			TOTAL SHEETS
2			4			20

PREPARED BY: M.D. VALIQUETTE	DATE: 09/2010
REVIEWED BY: K. J. KIM	DATE: 09/2010

GEOTECHNICAL ENGINEER

NORTH CAROLINA PROFESSIONAL SEAL 032672 ENGINEER MICHAEL D. VALIQUETTE

SIGNATURE DATE

ENGINEER

SIGNATURE DATE

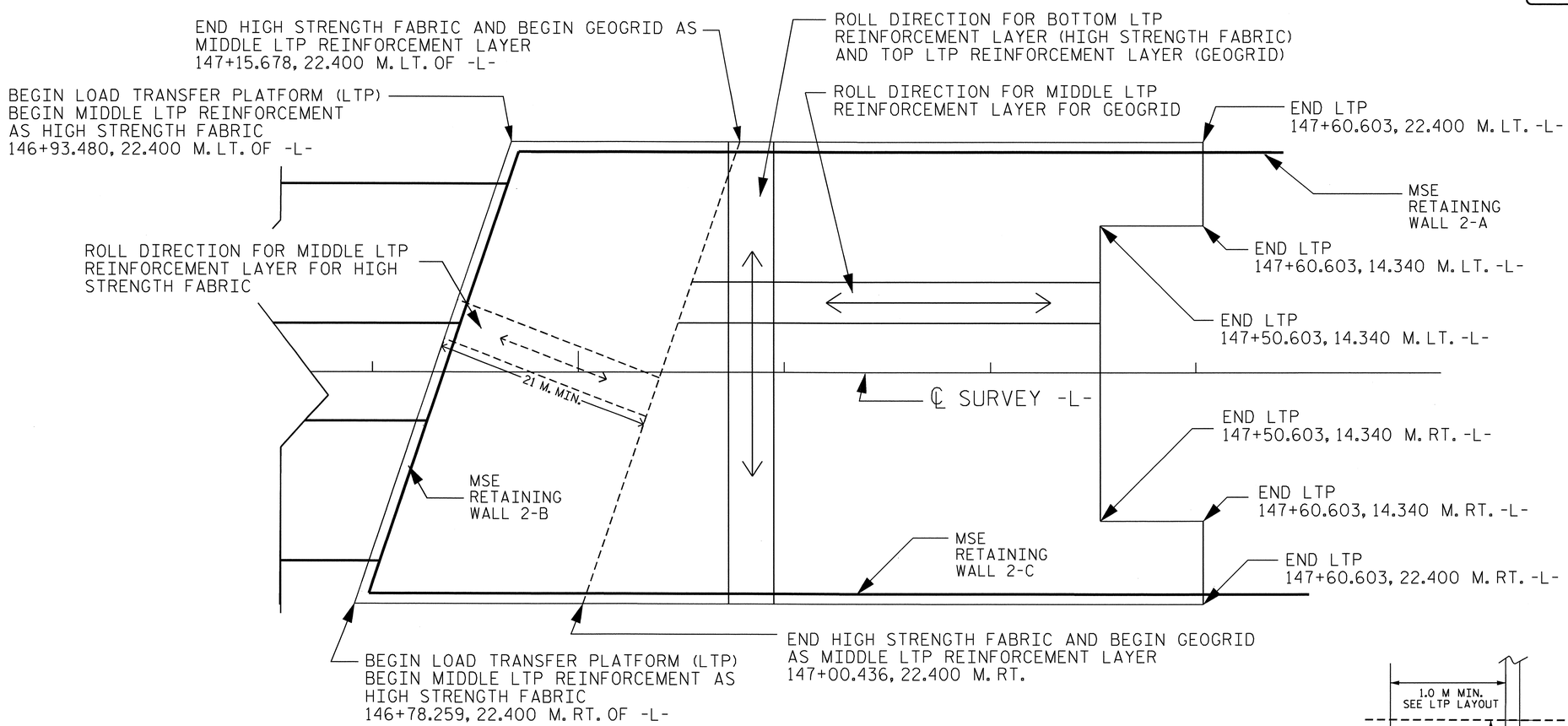

LOAD TRANSFER PLATFORM (LTP) PLAN VIEW

PILE SUPPORTED MSE WALL AND EMBANKMENT NO.2

NOT TO SCALE

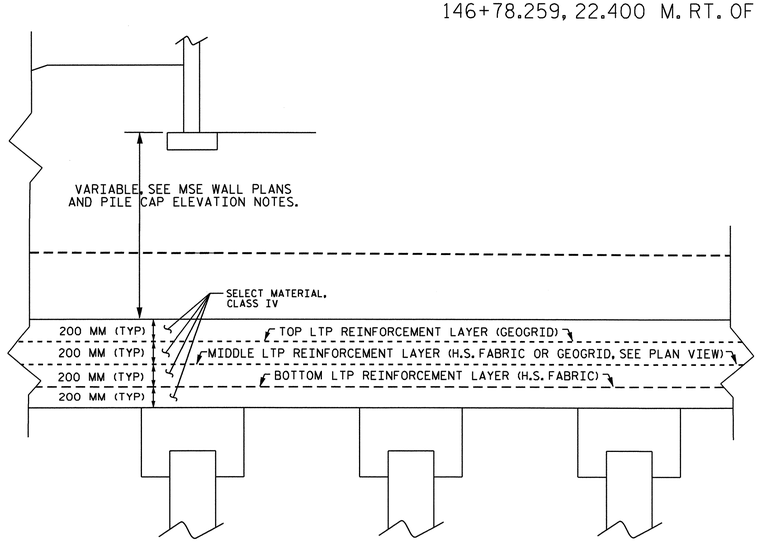

LOAD TRANSFER PLATFORM (LTP) DETAIL C

NTS

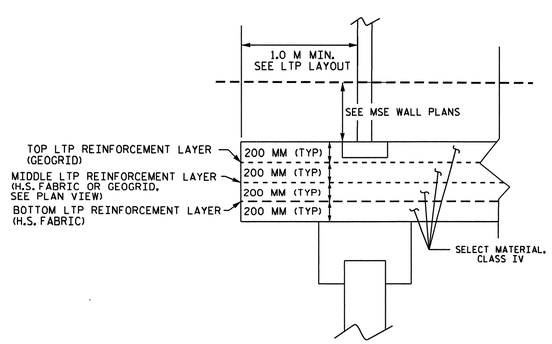

LOAD TRANSFER PLATFORM (LTP) DETAIL B

NTS

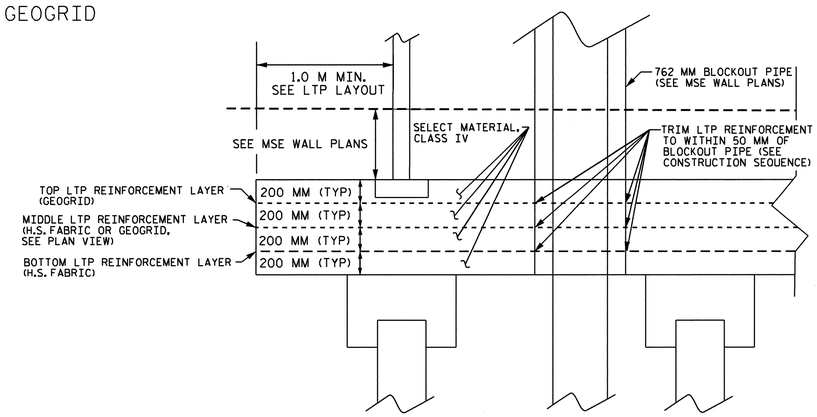

LOAD TRANSFER PLATFORM (LTP) DETAIL A

NTS

PROJECT NO.: X-0002CB

CUMBERLAND ***COUNTY***

STATION: 146+78.259 TO 147+60.603 -L-

SHEET 6 OF 13

GEOTECHNICAL ENGINEERING UNIT

☒ *EASTERN REGIONAL OFFICE*

☐ *WESTERN REGIONAL OFFICE*

STATE OF NORTH CAROLINA
DEPARTMENT OF TRANSPORTATION
RALEIGH

PILE SUPPORTED MSE WALL AND EMBANKMENT

PREPARED BY:	M.D. VALIQUETTE	DATE: 09/2010
REVIEWED BY:	K. J. KIM	DATE: 09/2010

REVISIONS

NO.	BY	DATE	NO.	BY	DATE
1			3		
2			4		

SHEET NO. W-13

TOTAL SHEETS 20

GEOTECHNICAL ENGINEER

NORTH CAROLINA PROFESSIONAL SEAL 032672 ENGINEER MICHAEL D. VALIQUETTE

SIGNATURE DATE

ENGINEER

SIGNATURE DATE

METRIC

ROW A			
Pile ID	Station	Offset	Pile Size
A1	146 + 79.755	21.294 R	406 mm
A2	146 + 80.142	20.200 R	406 mm
A3	146 + 80.624	18.780 R	406 mm
A4	146 + 81.107	17.360 R	406 mm
A5	146 + 81.590	15.940 R	406 mm
A6	146 + 82.073	14.520 R	406 mm
A7	146 + 82.556	13.100 R	406 mm
A8	146 + 83.039	11.680 R	406 mm
A9	146 + 83.522	10.260 R	406 mm
A10	146 + 84.005	8.840 R	406 mm
A11	146 + 84.488	7.420 R	406 mm
A12	146 + 84.971	6.000 R	406 mm
A13	146 + 85.454	4.580 R	406 mm
A14	146 + 85.937	3.160 R	406 mm
A15	146 + 86.438	1.682 R	406 mm
A16	146 + 86.940	0.205 R	406 mm
A17	146 + 87.442	1.271 L	406 mm
A18	146 + 87.944	2.747 L	406 mm
A19	146 + 88.446	4.224 L	406 mm
A20	146 + 88.929	5.644 L	406 mm
A21	146 + 89.412	7.064 L	406 mm
A22	146 + 89.895	8.484 L	406 mm
A23	146 + 90.378	9.904 L	406 mm
A24	146 + 90.861	11.324 L	406 mm
A25	146 + 91.344	12.744 L	406 mm
A26	146 + 91.827	14.164 L	406 mm
A27	146 + 92.310	15.584 L	406 mm
A28	146 + 92.793	17.004 L	406 mm
A29	146 + 93.276	18.424 L	406 mm
A30	146 + 93.759	19.844 L	406 mm
A31	146 + 94.242	21.264 L	406 mm

ROW B			
Pile ID	Station	Offset	Pile Size
B1	146 + 82.482	21.334 R	406 mm
B2	146 + 83.068	19.611 R	406 mm
B3	146 + 83.551	18.181 R	406 mm
B4	146 + 84.034	16.761 R	406 mm
B5	146 + 84.517	15.341 R	406 mm
B6	146 + 85.000	13.921 R	406 mm
B7	146 + 85.483	12.501 R	406 mm
B8	146 + 85.966	11.081 R	406 mm
B9	146 + 86.449	9.661 R	406 mm
B10	146 + 86.932	8.241 R	406 mm
B11	146 + 87.415	6.821 R	406 mm
B12	146 + 87.898	5.401 R	406 mm
B13	146 + 88.381	3.981 R	406 mm
B14	146 + 88.883	2.505 R	406 mm
B15	146 + 89.385	1.029 R	406 mm
B16	146 + 89.887	0.441 L	406 mm
B17	146 + 90.389	1.917 L	406 mm
B18	146 + 90.891	3.393 L	406 mm
B19	146 + 91.374	4.813 L	406 mm
B20	146 + 91.857	6.233 L	406 mm
B21	146 + 92.340	7.653 L	406 mm
B22	146 + 92.823	9.073 L	406 mm
B23	146 + 93.306	10.493 L	406 mm
B24	146 + 93.789	11.913 L	406 mm
B25	146 + 94.272	13.333 L	406 mm
B26	146 + 94.755	14.753 L	406 mm
B27	146 + 95.238	16.173 L	406 mm
B28	146 + 95.721	17.593 L	406 mm
B29	146 + 96.204	19.013 L	406 mm
B30	146 + 96.606	20.196 L	406 mm
B31	146 + 96.647	21.334 L	406 mm

ROW C			
Pile ID	Station	Offset	Pile Size
C1	146 + 84.595	21.335 R	406 mm
C2	146 + 85.226	19.480 R	406 mm
C3	146 + 85.857	17.625 R	406 mm
C4	146 + 86.488	15.770 R	406 mm
C5	146 + 87.119	13.915 R	406 mm
C6	146 + 87.750	12.060 R	406 mm
C7	146 + 88.381	10.205 R	406 mm
C8	146 + 89.012	8.350 R	406 mm
C9	146 + 89.643	6.495 R	406 mm
C10	146 + 90.274	4.640 R	406 mm
C11	146 + 90.905	2.785 R	406 mm
C12	146 + 91.536	0.930 R	406 mm
C13	146 + 92.167	0.930 L	406 mm
C14	146 + 92.798	2.785 L	406 mm
C15	146 + 93.429	4.640 L	406 mm
C16	146 + 94.060	6.495 L	406 mm
C17	146 + 94.691	8.350 L	406 mm
C18	146 + 95.322	10.205 L	406 mm
C19	146 + 95.953	12.060 L	406 mm
C20	146 + 96.584	13.915 L	406 mm
C21	146 + 97.215	15.770 L	406 mm
C22	146 + 97.846	17.625 L	406 mm
C23	146 + 98.477	19.480 L	406 mm
C24	146 + 99.108	21.335 L	406 mm

ROW D			
Pile ID	Station	Offset	Pile Size
D1	146 + 86.707	21.335 R	406 mm
D2	146 + 87.338	19.480 R	406 mm
D3	146 + 87.969	17.625 R	406 mm
D4	146 + 88.600	15.770 R	406 mm
D5	146 + 89.231	13.915 R	406 mm
D6	146 + 89.862	12.060 R	406 mm
D7	146 + 90.493	10.205 R	406 mm
D8	146 + 91.124	8.350 R	406 mm
D9	146 + 91.755	6.495 R	406 mm
D10	146 + 92.386	4.640 R	406 mm
D11	146 + 93.017	2.785 R	406 mm
D12	146 + 93.648	0.930 R	406 mm
D13	146 + 94.279	0.930 L	406 mm
D14	146 + 94.910	2.785 L	406 mm
D15	146 + 95.541	4.640 L	406 mm
D16	146 + 96.172	6.495 L	406 mm
D17	146 + 96.803	8.350 L	406 mm
D18	146 + 97.434	10.205 L	406 mm
D19	146 + 98.065	12.060 L	406 mm
D20	146 + 98.696	13.915 L	406 mm
D21	146 + 99.327	15.770 L	406 mm
D22	146 + 99.958	17.625 L	406 mm
D23	147 + 0.589	19.480 L	406 mm
D24	147 + 1.220	21.335 L	406 mm

ROW E			
Pile ID	Station	Offset	Pile Size
E1	146 + 88.819	21.335 R	406 mm
E2	146 + 89.450	19.480 R	406 mm
E3	146 + 90.081	17.625 R	406 mm
E4	146 + 90.712	15.770 R	406 mm
E5	146 + 91.343	13.915 R	406 mm
E6	146 + 91.974	12.060 R	406 mm
E7	146 + 92.605	10.205 R	406 mm
E8	146 + 93.236	8.350 R	406 mm
E9	146 + 93.867	6.495 R	406 mm
E10	146 + 94.498	4.640 R	406 mm
E11	146 + 95.129	2.785 R	406 mm
E12	146 + 95.760	0.930 R	406 mm
E13	146 + 96.391	0.930 L	406 mm
E14	146 + 97.022	2.785 L	406 mm
E15	146 + 97.653	4.640 L	406 mm
E16	146 + 98.284	6.495 L	406 mm
E17	146 + 98.915	8.350 L	406 mm
E18	146 + 99.546	10.205 L	406 mm
E19	147 + 0.177	12.060 L	406 mm
E20	147 + 0.808	13.915 L	406 mm
E21	147 + 1.439	15.770 L	406 mm
E22	147 + 2.070	17.625 L	406 mm
E23	147 + 2.701	19.480 L	406 mm
E24	147 + 3.332	21.335 L	406 mm

ROW F			
Pile ID	Station	Offset	Pile Size
F1	146 + 91.400	21.324 R	406 mm
F2	146 + 91.400	19.386 R	406 mm
F3	146 + 91.400	17.447 R	406 mm
F4	146 + 92.063	15.509 R	406 mm

ROW G			
Pile ID	Station	Offset	Pile Size
G1	146 + 93.400	21.324 R	406 mm
G2	146 + 93.400	19.386 R	406 mm
G3	146 + 93.400	17.447 R	406 mm
G4	146 + 93.400	15.509 R	406 mm
G5	146 + 93.400	13.570 R	406 mm
G6	146 + 93.400	11.632 R	305 mm
G7	146 + 93.900	9.693 R	305 mm

ROW H			
Pile ID	Station	Offset	Pile Size
H1	146 + 95.400	21.324 R	406 mm
H2	146 + 95.400	19.386 R	406 mm
H3	146 + 95.400	17.447 R	406 mm
H4	146 + 95.400	15.509 R	406 mm
H5	146 + 95.400	13.570 R	406 mm
H6	146 + 95.400	11.632 R	305 mm
H7	146 + 95.400	9.693 R	305 mm
H8	146 + 95.400	7.755 R	305 mm
H9	146 + 95.400	5.816 R	305 mm
H10	146 + 96.044	3.878 R	305 mm

ROW I			
Pile ID	Station	Offset	Pile Size
I1	146 + 97.400	21.324 R	406 mm
I2	146 + 97.400	19.386 R	406 mm
I3	146 + 97.400	17.447 R	406 mm
I4	146 + 97.400	15.509 R	406 mm
I5	146 + 97.400	13.570 R	406 mm
I6	146 + 97.400	11.632 R	305 mm
I7	146 + 97.400	9.693 R	305 mm
I8	146 + 97.400	7.755 R	305 mm
I9	146 + 97.400	5.816 R	305 mm
I10	146 + 97.400	3.878 R	305 mm
I11	146 + 97.400	1.939 R	305 mm
I12	146 + 97.400	0.000 CL	305 mm
I13	146 + 97.981	1.939 L	305 mm

ROW J			
Pile ID	Station	Offset	Pile Size
J1	146 + 99.400	21.324 R	406 mm
J2	146 + 99.400	19.386 R	406 mm
J3	146 + 99.400	17.447 R	406 mm
J4	146 + 99.400	15.509 R	406 mm
J5	146 + 99.400	13.570 R	406 mm
J6	146 + 99.400	11.632 R	305 mm
J7	146 + 99.400	9.693 R	305 mm
J8	146 + 99.400	7.755 R	305 mm
J9	146 + 99.400	5.816 R	305 mm
J10	146 + 99.400	3.878 R	305 mm
J11	146 + 99.400	1.939 R	305 mm
J12	146 + 99.400	0.000 CL	305 mm
J13	146 + 99.400	1.939 L	305 mm
J14	146 + 99.400	3.877 L	305 mm
J15	146 + 99.400	5.816 L	305 mm
J16	146 + 99.969	7.754 L	305 mm

ROW K			
Pile ID	Station	Offset	Pile Size
K1	147 + 1.400	21.324 R	406 mm
K2	147 + 1.400	19.386 R	406 mm
K3	147 + 1.400	17.447 R	406 mm
K4	147 + 1.400	15.509 R	406 mm
K5	147 + 1.400	13.570 R	406 mm
K6	147 + 1.400	11.632 R	305 mm
K7	147 + 1.400	9.693 R	305 mm
K8	147 + 1.400	7.755 R	305 mm
K9	147 + 1.400	5.816 R	305 mm
K10	147 + 1.400	3.878 R	305 mm
K11	147 + 1.400	1.939 R	305 mm
K12	147 + 1.400	0.000 CL	305 mm
K13	147 + 1.400	1.939 L	305 mm
K14	147 + 1.400	3.877 L	305 mm
K15	147 + 1.400	5.816 L	305 mm
K16	147 + 1.400	7.754 L	305 mm
K17	147 + 1.400	9.693 L	305 mm
K18	147 + 1.400	11.631 L	305 mm
K19	147 + 2.022	13.570 L	406 mm

ROW L			
Pile ID	Station	Offset	Pile Size
L1	147 + 3.400	21.324 R	406 mm
L2	147 + 3.400	19.386 R	406 mm
L3	147 + 3.400	17.447 R	406 mm
L4	147 + 3.400	15.509 R	406 mm
L5	147 + 3.400	13.570 R	406 mm
L6	147 + 3.400	11.632 R	305 mm
L7	147 + 3.400	9.693 R	305 mm
L8	147 + 3.400	7.755 R	305 mm
L9	147 + 3.400	5.816 R	305 mm
L10	147 + 3.400	3.878 R	305 mm
L11	147 + 3.400	1.939 R	305 mm
L12	147 + 3.400	0.000 CL	305 mm
L13	147 + 3.400	1.939 L	305 mm
L14	147 + 3.400	3.877 L	305 mm
L15	147 + 3.400	5.816 L	305 mm
L16	147 + 3.400	7.754 L	305 mm
L17	147 + 3.400	9.693 L	305 mm
L18	147 + 3.400	11.631 L	305 mm
L19	147 + 3.400	13.570 L	406 mm
L20	148 + 3.400	15.508 L	406 mm
L21	149 + 3.400	17.447 L	406 mm
L22	150 + 4.114	19.385 L	406 mm

ROW M			
Pile ID	Station	Offset	Pile Size
M1	147 + 5.400	21.324 R	406 mm
M2	147 + 5.400	19.386 R	406 mm
M3	147 + 5.400	17.447 R	406 mm
M4	147 + 5.400	15.509 R	406 mm
M5	147 + 5.400	13.570 R	406 mm
M6	147 + 5.400	11.632 R	305 mm
M7	147 + 5.400	9.693 R	305 mm
M8	147 + 5.400	7.755 R	305 mm
M9	147 + 5.400	5.816 R	305 mm
M10	147 + 5.400	3.878 R	305 mm
M11	147 + 5.400	1.939 R	305 mm
M12	147 + 5.400	0.000 CL	305 mm
M13	147 + 5.400	1.939 L	305 mm
M14	147 + 5.400	3.877 L	305 mm
M15	147 + 5.400	5.816 L	305 mm
M16	147 + 5.400	7.754 L	305 mm
M17	147 + 5.400	9.693 L	305 mm
M18	147 + 5.400	11.631 L	305 mm
M19	147 + 5.400	13.570 L	406 mm
M20	147 + 5.400	15.508 L	406 mm
M21	147 + 5.400	17.447 L	406 mm
M22	148 + 5.400	19.385 L	406 mm
M23	149 + 5.400	21.324 L	406 mm

PILE LAYOUT TABLES SHOWING PILE LOCATIONS AND SIZES
(PILES ARE NUMBERED FROM RIGHT TO LEFT)
PILE SUPPORTED MSE WALL AND EMBANKMENT NO.2

PROJECT NO.: X-0002CB

CUMBERLAND ***COUNTY***

STATION: 146+78.259 TO 147+60.603 -L-

SHEET 7 OF 13

GEOTECHNICAL ENGINEERING UNIT

☒ ***EASTERN REGIONAL OFFICE***

☐ ***WESTERN REGIONAL OFFICE***

STATE OF NORTH CAROLINA DEPARTMENT OF TRANSPORTATION

STATE OF NORTH CAROLINA
DEPARTMENT OF TRANSPORTATION
RALEIGH

PILE SUPPORTED MSE WALL AND EMBANKMENT

REVISIONS							SHEET NO.
NO.	BY	DATE	NO.	BY	DATE		W-14
1			3				TOTAL SHEETS
2			4				20

PREPARED BY: M.D. VALIQUETTE	DATE: 09/2010
REVIEWED BY: K. J. KIM	DATE: 09/2010

METRIC

GEOTECHNICAL ENGINEER	ENGINEER
NORTH CAROLINA PROFESSIONAL SEAL 032672 ENGINEER MICHAEL D. VALIQUETTE 6/1/10	
SIGNATURE DATE	SIGNATURE DATE

ROW N			
Pile ID	Station	Offset	Pile Size
N1	147 + 7.400	21.324 R	406 mm
N2	147 + 7.400	19.386 R	406 mm
N3	147 + 7.400	17.447 R	406 mm
N4	147 + 7.400	15.509 R	406 mm
N5	147 + 7.400	13.570 R	406 mm
N6	147 + 7.400	11.632 R	305 mm
N7	147 + 7.400	9.693 R	305 mm
N8	147 + 7.400	7.755 R	305 mm
N9	147 + 7.400	5.816 R	305 mm
N10	147 + 7.400	3.878 R	305 mm
N11	147 + 7.400	1.939 R	305 mm
N12	147 + 7.400	0.000 CL	305 mm
N13	147 + 7.400	1.939 L	305 mm
N14	147 + 7.400	3.877 L	305 mm
N15	147 + 7.400	5.816 L	305 mm
N16	147 + 7.400	7.754 L	305 mm
N17	147 + 7.400	9.693 L	305 mm
N18	147 + 7.400	11.631 L	305 mm
N19	147 + 7.400	13.570 L	406 mm
N20	147 + 7.400	15.508 L	406 mm
N21	147 + 7.400	17.447 L	406 mm
N22	147 + 7.400	19.385 L	406 mm
N23	147 + 7.400	21.324 L	406 mm

ROW O			
Pile ID	Station	Offset	Pile Size
O1	147 + 9.400	21.324 R	406 mm
O2	147 + 9.400	19.386 R	406 mm
O3	147 + 9.400	17.447 R	406 mm
O4	147 + 9.400	15.509 R	406 mm
O5	147 + 9.400	13.570 R	406 mm
O6	147 + 9.400	11.632 R	305 mm
O7	147 + 9.400	9.693 R	305 mm
O8	147 + 9.400	7.755 R	305 mm
O9	147 + 9.400	5.816 R	305 mm
O10	147 + 9.400	3.878 R	305 mm
O11	147 + 9.400	1.939 R	305 mm
O12	147 + 9.400	0.000 CL	305 mm
O13	147 + 9.400	1.939 L	305 mm
O14	147 + 9.400	3.877 L	305 mm
O15	147 + 9.400	5.816 L	305 mm
O16	147 + 9.400	7.754 L	305 mm
O17	147 + 9.400	9.693 L	305 mm
O18	147 + 9.400	11.631 L	305 mm
O19	147 + 9.400	13.570 L	406 mm
O20	147 + 9.400	15.508 L	406 mm
O21	147 + 9.400	17.447 L	406 mm
O22	147 + 9.400	19.385 L	406 mm
O23	147 + 9.400	21.324 L	406 mm

ROW P			
Pile ID	Station	Offset	Pile Size
P1	147 + 11.400	21.324 R	406 mm
P2	147 + 11.400	19.386 R	406 mm
P3	147 + 11.400	17.447 R	406 mm
P4	147 + 11.400	15.509 R	406 mm
P5	147 + 11.400	13.570 R	406 mm
P6	147 + 11.400	11.632 R	305 mm
P7	147 + 11.400	9.693 R	305 mm
P8	147 + 11.400	7.755 R	305 mm
P9	147 + 11.400	5.816 R	305 mm
P10	147 + 11.400	3.878 R	305 mm
P11	147 + 11.400	1.939 R	305 mm
P12	147 + 11.400	0.000 CL	305 mm
P13	147 + 11.400	1.939 L	305 mm
P14	147 + 11.400	3.877 L	305 mm
P15	147 + 11.400	5.816 L	305 mm
P16	147 + 11.400	7.754 L	305 mm
P17	147 + 11.400	9.693 L	305 mm
P18	147 + 11.400	11.631 L	305 mm
P19	147 + 11.400	13.570 L	406 mm
P20	147 + 11.400	15.508 L	406 mm
P21	147 + 11.400	17.447 L	406 mm
P22	147 + 11.400	19.385 L	406 mm
P23	147 + 11.400	21.324 L	406 mm

ROW Q			
Pile ID	Station	Offset	Pile Size
Q1	147 + 13.400	21.324 R	406 mm
Q2	147 + 13.400	19.386 R	406 mm
Q3	147 + 13.400	17.447 R	406 mm
Q4	147 + 13.400	15.509 R	406 mm
Q5	147 + 13.400	13.570 R	406 mm
Q6	147 + 13.400	11.632 R	305 mm
Q7	147 + 13.400	9.693 R	305 mm
Q8	147 + 13.400	7.755 R	305 mm
Q9	147 + 13.400	5.816 R	305 mm
Q10	147 + 13.400	3.878 R	305 mm
Q11	147 + 13.400	1.939 R	305 mm
Q12	147 + 13.400	0.000 CL	305 mm
Q13	147 + 13.400	1.939 L	305 mm
Q14	147 + 13.400	3.877 L	305 mm
Q15	147 + 13.400	5.816 L	305 mm
Q16	147 + 13.400	7.754 L	305 mm
Q17	147 + 13.400	9.693 L	305 mm
Q18	147 + 13.400	11.631 L	305 mm
Q19	147 + 13.400	13.570 L	406 mm
Q20	147 + 13.400	15.508 L	406 mm
Q21	147 + 13.400	17.447 L	406 mm
Q22	147 + 13.400	19.385 L	406 mm
Q23	147 + 13.400	21.324 L	406 mm

ROW R			
Pile ID	Station	Offset	Pile Size
R1	147 + 15.400	21.324 R	406 mm
R2	147 + 15.400	19.386 R	406 mm
R3	147 + 15.400	17.447 R	406 mm
R4	147 + 15.400	15.509 R	406 mm
R5	147 + 15.400	13.570 R	406 mm
R6	147 + 15.400	11.632 R	305 mm
R7	147 + 15.400	9.693 R	305 mm
R8	147 + 15.400	7.755 R	305 mm
R9	147 + 15.400	5.816 R	305 mm
R10	147 + 15.400	3.878 R	305 mm
R11	147 + 15.400	1.939 R	305 mm
R12	147 + 15.400	0.000 CL	305 mm
R13	147 + 15.400	1.939 L	305 mm
R14	147 + 15.400	3.877 L	305 mm
R15	147 + 15.400	5.816 L	305 mm
R16	147 + 15.400	7.754 L	305 mm
R17	147 + 15.400	9.693 L	305 mm
R18	147 + 15.400	11.631 L	305 mm
R19	147 + 15.400	13.570 L	406 mm
R20	147 + 15.400	15.508 L	406 mm
R21	147 + 15.400	17.447 L	406 mm
R22	147 + 15.400	19.385 L	406 mm
R23	147 + 15.400	21.324 L	406 mm

ROW S			
Pile ID	Station	Offset	Pile Size
S1	147 + 17.400	21.324 R	406 mm
S2	147 + 17.400	19.386 R	406 mm
S3	147 + 17.400	17.447 R	406 mm
S4	147 + 17.400	15.509 R	406 mm
S5	147 + 17.400	13.570 R	406 mm
S6	147 + 17.400	11.632 R	305 mm
S7	147 + 17.400	9.693 R	305 mm
S8	147 + 17.400	7.755 R	305 mm
S9	147 + 17.400	5.816 R	305 mm
S10	147 + 17.400	3.878 R	305 mm
S11	147 + 17.400	1.939 R	305 mm
S12	147 + 17.400	0.000 CL	305 mm
S13	147 + 17.400	1.939 L	305 mm
S14	147 + 17.400	3.877 L	305 mm
S15	147 + 17.400	5.816 L	305 mm
S16	147 + 17.400	7.754 L	305 mm
S17	147 + 17.400	9.693 L	305 mm
S18	147 + 17.400	11.631 L	305 mm
S19	147 + 17.400	13.570 L	406 mm
S20	147 + 17.400	15.508 L	406 mm
S21	147 + 17.400	17.447 L	406 mm
S22	147 + 17.400	19.385 L	406 mm
S23	147 + 17.400	21.324 L	406 mm

ROW T			
Pile ID	Station	Offset	Pile Size
T1	147 + 19.400	21.324 R	406 mm
T2	147 + 19.400	19.386 R	406 mm
T3	147 + 19.400	17.447 R	406 mm
T4	147 + 19.400	15.509 R	406 mm
T5	147 + 19.400	13.570 R	406 mm
T6	147 + 19.400	11.632 R	305 mm
T7	147 + 19.400	9.693 R	305 mm
T8	147 + 19.400	7.755 R	305 mm
T9	147 + 19.400	5.816 R	305 mm
T10	147 + 19.400	3.878 R	305 mm
T11	147 + 19.400	1.939 R	305 mm
T12	147 + 19.400	0.000 CL	305 mm
T13	147 + 19.400	1.939 L	305 mm
T14	147 + 19.400	3.877 L	305 mm
T15	147 + 19.400	5.816 L	305 mm
T16	147 + 19.400	7.754 L	305 mm
T17	147 + 19.400	9.693 L	305 mm
T18	147 + 19.400	11.631 L	305 mm
T19	147 + 19.400	13.570 L	406 mm
T20	147 + 19.400	15.508 L	406 mm
T21	147 + 19.400	17.447 L	406 mm
T22	147 + 19.400	19.385 L	406 mm
T23	147 + 19.400	21.324 L	406 mm

ROW U			
Pile ID	Station	Offset	Pile Size
U1	147 + 21.400	21.324 R	406 mm
U2	147 + 21.400	19.386 R	406 mm
U3	147 + 21.400	17.447 R	406 mm
U4	147 + 21.400	15.509 R	406 mm
U5	147 + 21.400	13.570 R	406 mm
U6	147 + 21.400	11.632 R	305 mm
U7	147 + 21.400	9.693 R	305 mm
U8	147 + 21.400	7.755 R	305 mm
U9	147 + 21.400	5.816 R	305 mm
U10	147 + 21.400	3.878 R	305 mm
U11	147 + 21.400	1.939 R	305 mm
U12	147 + 21.400	0.000 CL	305 mm
U13	147 + 21.400	1.939 L	305 mm
U14	147 + 21.400	3.877 L	305 mm
U15	147 + 21.400	5.816 L	305 mm
U16	147 + 21.400	7.754 L	305 mm
U17	147 + 21.400	9.693 L	305 mm
U18	147 + 21.400	11.631 L	305 mm
U19	147 + 21.400	13.570 L	406 mm
U20	147 + 21.400	15.508 L	406 mm
U21	147 + 21.400	17.447 L	406 mm
U22	147 + 21.400	19.385 L	406 mm
U23	147 + 21.400	21.324 L	406 mm

ROW V			
Pile ID	Station	Offset	Pile Size
V1	147 + 23.400	21.324 R	406 mm
V2	147 + 23.400	19.386 R	406 mm
V3	147 + 23.400	17.447 R	406 mm
V4	147 + 23.400	15.509 R	406 mm
V5	147 + 23.400	13.570 R	406 mm
V6	147 + 23.400	11.632 R	305 mm
V7	147 + 23.400	9.693 R	305 mm
V8	147 + 23.400	7.755 R	305 mm
V9	147 + 23.400	5.816 R	305 mm
V10	147 + 23.400	3.878 R	305 mm
V11	147 + 23.400	1.939 R	305 mm
V12	147 + 23.400	0.000 CL	305 mm
V13	147 + 23.400	1.939 L	305 mm
V14	147 + 23.400	3.877 L	305 mm
V15	147 + 23.400	5.816 L	305 mm
V16	147 + 23.400	7.754 L	305 mm
V17	147 + 23.400	9.693 L	305 mm
V18	147 + 23.400	11.631 L	305 mm
V19	147 + 23.400	13.570 L	406 mm
V20	147 + 23.400	15.508 L	406 mm
V21	147 + 23.400	17.447 L	406 mm
V22	147 + 23.400	19.385 L	406 mm
V23	147 + 23.400	21.324 L	406 mm

ROW W			
Pile ID	Station	Offset	Pile Size
W1	147 + 25.400	21.324 R	406 mm
W2	147 + 25.400	19.386 R	406 mm
W3	147 + 25.400	17.447 R	406 mm
W4	147 + 25.400	15.509 R	406 mm
W5	147 + 25.400	13.570 R	406 mm
W6	147 + 25.400	11.632 R	305 mm
W7	147 + 25.400	9.693 R	305 mm
W8	147 + 25.400	7.755 R	305 mm
W9	147 + 25.400	5.816 R	305 mm
W10	147 + 25.400	3.878 R	305 mm
W11	147 + 25.400	1.939 R	305 mm
W12	147 + 25.400	0.000 CL	305 mm
W13	147 + 25.400	1.939 L	305 mm
W14	147 + 25.400	3.877 L	305 mm
W15	147 + 25.400	5.816 L	305 mm
W16	147 + 25.400	7.754 L	305 mm
W17	147 + 25.400	9.693 L	305 mm
W18	147 + 25.400	11.631 L	305 mm
W19	147 + 25.400	13.570 L	406 mm
W20	147 + 25.400	15.508 L	406 mm
W21	147 + 25.400	17.447 L	406 mm
W22	147 + 25.400	19.385 L	406 mm
W23	147 + 25.400	21.324 L	406 mm

PILE LAYOUT TABLES SHOWING PILE LOCATIONS AND SIZES
(PILES ARE NUMBERED FROM RIGHT TO LEFT)
PILE SUPPORTED MSE WALL AND EMBANKMENT NO.2

PROJECT NO.: X-0002CB
CUMBERLAND ***COUNTY***
STATION: 146+78.259 TO 147+60.603 -L-
SHEET 8 OF 13

GEOTECHNICAL ENGINEERING UNIT
☒ ***EASTERN REGIONAL OFFICE***
☐ ***WESTERN REGIONAL OFFICE***

STATE OF NORTH CAROLINA
DEPARTMENT OF TRANSPORTATION
RALEIGH

PILE SUPPORTED MSE WALL AND EMBANKMENT

REVISIONS						
NO.	BY	DATE	NO.	BY	DATE	SHEET NO. W-15
1			3			TOTAL SHEETS 20
2			4			

PREPARED BY: M.D. VALIQUETTE	DATE: 09/2010
REVIEWED BY: K. J. KIM	DATE: 09/2010

GEOTECHNICAL ENGINEER

NORTH CAROLINA PROFESSIONAL SEAL 032672 ENGINEER MICHAEL D. VALIQUETTE

SIGNATURE DATE

ENGINEER

SIGNATURE DATE

ROW X			
Pile ID	Station	Offset	Pile Size
X1	147 + 27.400	21.324 R	406 mm
X2	147 + 27.400	19.386 R	406 mm
X3	147 + 27.400	17.447 R	406 mm
X4	147 + 27.400	15.509 R	406 mm
X5	147 + 27.400	13.570 R	406 mm
X6	147 + 27.400	11.632 R	305 mm
X7	147 + 27.400	9.693 R	305 mm
X8	147 + 27.400	7.755 R	305 mm
X9	147 + 27.400	5.816 R	305 mm
X10	147 + 27.400	3.878 R	305 mm
X11	147 + 27.400	1.939 R	305 mm
X12	147 + 27.400	0.000 CL	305 mm
X13	147 + 27.400	1.939 L	305 mm
X14	147 + 27.400	3.877 L	305 mm
X15	147 + 27.400	5.816 L	305 mm
X16	147 + 27.400	7.754 L	305 mm
X17	147 + 27.400	9.693 L	305 mm
X18	147 + 27.400	11.631 L	305 mm
X19	147 + 27.400	13.570 L	406 mm
X20	147 + 27.400	15.508 L	406 mm
X21	147 + 27.400	17.447 L	406 mm
X22	147 + 27.400	19.385 L	406 mm
X23	147 + 27.400	21.324 L	406 mm

ROW Y			
Pile ID	Station	Offset	Pile Size
Y1	147 + 29.400	21.324 R	406 mm
Y2	147 + 29.400	19.386 R	406 mm
Y3	147 + 29.400	17.447 R	406 mm
Y4	147 + 29.400	15.509 R	406 mm
Y5	147 + 29.400	13.570 R	406 mm
Y6	147 + 29.400	11.632 R	305 mm
Y7	147 + 29.400	9.693 R	305 mm
Y8	147 + 29.400	7.755 R	305 mm
Y9	147 + 29.400	5.816 R	305 mm
Y10	147 + 29.400	3.878 R	305 mm
Y11	147 + 29.400	1.939 R	305 mm
Y12	147 + 29.400	0.000 CL	305 mm
Y13	147 + 29.400	1.939 L	305 mm
Y14	147 + 29.400	3.877 L	305 mm
Y15	147 + 29.400	5.816 L	305 mm
Y16	147 + 29.400	7.754 L	305 mm
Y17	147 + 29.400	9.693 L	305 mm
Y18	147 + 29.400	11.631 L	305 mm
Y19	147 + 29.400	13.570 L	406 mm
Y20	147 + 29.400	15.508 L	406 mm
Y21	147 + 29.400	17.447 L	406 mm
Y22	147 + 29.400	19.385 L	406 mm
Y23	147 + 29.400	21.324 L	406 mm

ROW Z			
Pile ID	Station	Offset	Pile Size
Z1	147 + 31.400	21.324 R	406 mm
Z2	147 + 31.400	19.386 R	406 mm
Z3	147 + 31.400	17.447 R	406 mm
Z4	147 + 31.400	15.509 R	406 mm
Z5	147 + 31.400	13.570 R	406 mm
Z6	147 + 31.400	11.632 R	305 mm
Z7	147 + 31.400	9.693 R	305 mm
Z8	147 + 31.400	7.755 R	305 mm
Z9	147 + 31.400	5.816 R	305 mm
Z10	147 + 31.400	3.878 R	305 mm
Z11	147 + 31.400	1.939 R	305 mm
Z12	147 + 31.400	0.000 CL	305 mm
Z13	147 + 31.400	1.939 L	305 mm
Z14	147 + 31.400	3.877 L	305 mm
Z15	147 + 31.400	5.816 L	305 mm
Z16	147 + 31.400	7.754 L	305 mm
Z17	147 + 31.400	9.693 L	305 mm
Z18	147 + 31.400	11.631 L	305 mm
Z19	147 + 31.400	13.570 L	406 mm
Z20	147 + 31.400	15.508 L	406 mm
Z21	147 + 31.400	17.447 L	406 mm
Z22	147 + 31.400	19.385 L	406 mm
Z23	147 + 31.400	21.324 L	406 mm

ROW AA			
Pile ID	Station	Offset	Pile Size
AA1	147 + 33.400	21.324 R	406 mm
AA2	147 + 33.400	19.386 R	406 mm
AA3	147 + 33.400	17.447 R	406 mm
AA4	147 + 33.400	15.509 R	406 mm
AA5	147 + 33.400	13.570 R	406 mm
AA6	147 + 33.400	11.632 R	305 mm
AA7	147 + 33.400	9.693 R	305 mm
AA8	147 + 33.400	7.755 R	305 mm
AA9	147 + 33.400	5.816 R	305 mm
AA10	147 + 33.400	3.878 R	305 mm
AA11	147 + 33.400	1.939 R	305 mm
AA12	147 + 33.400	0.000 CL	305 mm
AA13	147 + 33.400	1.939 L	305 mm
AA14	147 + 33.400	3.877 L	305 mm
AA15	147 + 33.400	5.816 L	305 mm
AA16	147 + 33.400	7.754 L	305 mm
AA17	147 + 33.400	9.693 L	305 mm
AA18	147 + 33.400	11.631 L	305 mm
AA19	147 + 33.400	13.570 L	406 mm
AA20	147 + 33.400	15.508 L	406 mm
AA21	147 + 33.400	17.447 L	406 mm
AA22	147 + 33.400	19.385 L	406 mm
AA23	147 + 33.400	21.324 L	406 mm

ROW AB			
Pile ID	Station	Offset	Pile Size
AB1	147 + 35.400	21.324 R	406 mm
AB2	147 + 35.400	19.386 R	406 mm
AB3	147 + 35.400	17.447 R	406 mm
AB4	147 + 35.400	15.509 R	406 mm
AB5	147 + 35.400	13.570 R	406 mm
AB6	147 + 35.400	11.632 R	305 mm
AB7	147 + 35.400	9.693 R	305 mm
AB8	147 + 35.400	7.755 R	305 mm
AB9	147 + 35.400	5.816 R	305 mm
AB10	147 + 35.400	3.878 R	305 mm
AB11	147 + 35.400	1.939 R	305 mm
AB12	147 + 35.400	0.000 CL	305 mm
AB13	147 + 35.400	1.939 L	305 mm
AB14	147 + 35.400	3.877 L	305 mm
AB15	147 + 35.400	5.816 L	305 mm
AB16	147 + 35.400	7.754 L	305 mm
AB17	147 + 35.400	9.693 L	305 mm
AB18	147 + 35.400	11.631 L	305 mm
AB19	147 + 35.400	13.570 L	406 mm
AB20	147 + 35.400	15.508 L	406 mm
AB21	147 + 35.400	17.447 L	406 mm
AB22	147 + 35.400	19.385 L	406 mm
AB23	147 + 35.400	21.324 L	406 mm

ROW AC			
Pile ID	Station	Offset	Pile Size
AC1	147 + 37.400	21.324 R	406 mm
AC2	147 + 37.400	19.386 R	406 mm
AC3	147 + 37.400	17.447 R	406 mm
AC4	147 + 37.400	15.509 R	406 mm
AC5	147 + 37.400	13.570 R	406 mm
AC6	147 + 37.400	11.632 R	305 mm
AC7	147 + 37.400	9.693 R	305 mm
AC8	147 + 37.400	7.755 R	305 mm
AC9	147 + 37.400	5.816 R	305 mm
AC10	147 + 37.400	3.878 R	305 mm
AC11	147 + 37.400	1.939 R	305 mm
AC12	147 + 37.400	0.000 CL	305 mm
AC13	147 + 37.400	1.939 L	305 mm
AC14	147 + 37.400	3.877 L	305 mm
AC15	147 + 37.400	5.816 L	305 mm
AC16	147 + 37.400	7.754 L	305 mm
AC17	147 + 37.400	9.693 L	305 mm
AC18	147 + 37.400	11.631 L	305 mm
AC19	147 + 37.400	13.570 L	406 mm
AC20	147 + 37.400	15.508 L	406 mm
AC21	147 + 37.400	17.447 L	406 mm
AC22	147 + 37.400	19.385 L	406 mm
AC23	147 + 37.400	21.324 L	406 mm

ROW AD			
Pile ID	Station	Offset	Pile Size
AD1	147 + 39.400	21.324 R	406 mm
AD2	147 + 39.400	19.386 R	406 mm
AD3	147 + 39.400	17.447 R	406 mm
AD4	147 + 39.400	15.509 R	406 mm
AD5	147 + 39.400	13.570 R	406 mm
AD6	147 + 39.400	11.632 R	305 mm
AD7	147 + 39.400	9.693 R	305 mm
AD8	147 + 39.400	7.755 R	305 mm
AD9	147 + 39.400	5.816 R	305 mm
AD10	147 + 39.400	3.878 R	305 mm
AD11	147 + 39.400	1.939 R	305 mm
AD12	147 + 39.400	0.000 CL	305 mm
AD13	147 + 39.400	1.939 L	305 mm
AD14	147 + 39.400	3.877 L	305 mm
AD15	147 + 39.400	5.816 L	305 mm
AD16	147 + 39.400	7.754 L	305 mm
AD17	147 + 39.400	9.693 L	305 mm
AD18	147 + 39.400	11.631 L	305 mm
AD19	147 + 39.400	13.570 L	406 mm
AD20	147 + 39.400	15.508 L	406 mm
AD21	147 + 39.400	17.447 L	406 mm
AD22	147 + 39.400	19.385 L	406 mm
AD23	147 + 39.400	21.324 L	406 mm

ROW AE			
Pile ID	Station	Offset	Pile Size
AE1	147 + 41.400	21.324 R	406 mm
AE2	147 + 41.400	19.386 R	406 mm
AE3	147 + 41.400	17.447 R	406 mm
AE4	147 + 41.400	15.509 R	406 mm
AE5	147 + 41.400	13.570 R	406 mm
AE6	147 + 41.400	11.632 R	305 mm
AE7	147 + 41.400	9.693 R	305 mm
AE8	147 + 41.400	7.755 R	305 mm
AE9	147 + 41.400	5.816 R	305 mm
AE10	147 + 41.400	3.878 R	305 mm
AE11	147 + 41.400	1.939 R	305 mm
AE12	147 + 41.400	0.000 CL	305 mm
AE13	147 + 41.400	1.939 L	305 mm
AE14	147 + 41.400	3.877 L	305 mm
AE15	147 + 41.400	5.816 L	305 mm
AE16	147 + 41.400	7.754 L	305 mm
AE17	147 + 41.400	9.693 L	305 mm
AE18	147 + 41.400	11.631 L	305 mm
AE19	147 + 41.400	13.570 L	406 mm
AE20	147 + 41.400	15.508 L	406 mm
AE21	147 + 41.400	17.447 L	406 mm
AE22	147 + 41.400	19.385 L	406 mm
AE23	147 + 41.400	21.324 L	406 mm

ROW AF			
Pile ID	Station	Offset	Pile Size
AF1	147 + 43.400	21.324 R	406 mm
AF2	147 + 43.400	19.386 R	406 mm
AF3	147 + 43.400	17.447 R	406 mm
AF4	147 + 43.400	15.509 R	406 mm
AF5	147 + 43.400	13.570 R	406 mm
AF6	147 + 43.400	11.632 R	305 mm
AF7	147 + 43.400	9.693 R	305 mm
AF8	147 + 43.400	7.755 R	305 mm
AF9	147 + 43.400	5.816 R	305 mm
AF10	147 + 43.400	3.878 R	305 mm
AF11	147 + 43.400	1.939 R	305 mm
AF12	147 + 43.400	0.000 CL	305 mm
AF13	147 + 43.400	1.939 L	305 mm
AF14	147 + 43.400	3.877 L	305 mm
AF15	147 + 43.400	5.816 L	305 mm
AF16	147 + 43.400	7.754 L	305 mm
AF17	147 + 43.400	9.693 L	305 mm
AF18	147 + 43.400	11.631 L	305 mm
AF19	147 + 43.400	13.570 L	406 mm
AF20	147 + 43.400	15.508 L	406 mm
AF21	147 + 43.400	17.447 L	406 mm
AF22	147 + 43.400	19.385 L	406 mm
AF23	147 + 43.400	21.324 L	406 mm

ROW AG			
Pile ID	Station	Offset	Pile Size
AG1	147 + 45.400	21.324 R	406 mm
AG2	147 + 45.400	19.386 R	406 mm
AG3	147 + 45.400	17.447 R	406 mm
AG4	147 + 45.400	15.509 R	406 mm
AG5	147 + 45.400	13.570 R	406 mm
AG6	147 + 45.400	11.632 R	305 mm
AG7	147 + 45.400	9.693 R	305 mm
AG8	147 + 45.400	7.755 R	305 mm
AG9	147 + 45.400	5.816 R	305 mm
AG10	147 + 45.400	3.878 R	305 mm
AG11	147 + 45.400	1.939 R	305 mm
AG12	147 + 45.400	0.000 CL	305 mm
AG13	147 + 45.400	1.939 L	305 mm
AG14	147 + 45.400	3.877 L	305 mm
AG15	147 + 45.400	5.816 L	305 mm
AG16	147 + 45.400	7.754 L	305 mm
AG17	147 + 45.400	9.693 L	305 mm
AG18	147 + 45.400	11.631 L	305 mm
AG19	147 + 45.400	13.570 L	406 mm
AG20	147 + 45.400	15.508 L	406 mm
AG21	147 + 45.400	17.447 L	406 mm
AG22	147 + 45.400	19.385 L	406 mm
AG23	147 + 45.400	21.324 L	406 mm

PILE LAYOUT TABLES SHOWING PILE LOCATIONS AND SIZES
(PILES ARE NUMBERED FROM RIGHT TO LEFT)
PILE SUPPORTED MSE WALL AND EMBANKMENT NO.2

PROJECT NO.: X-0002CB

CUMBERLAND ***COUNTY***

STATION: 146+78.259 TO 147+60.603 -L-

SHEET 9 OF 13

GEOTECHNICAL ENGINEERING UNIT

☒ ***EASTERN REGIONAL OFFICE***

☐ ***WESTERN REGIONAL OFFICE***

STATE OF NORTH CAROLINA
DEPARTMENT OF TRANSPORTATION
RALEIGH

PILE SUPPORTED MSE WALL AND EMBANKMENT

REVISIONS						SHEET NO.
NO.	BY	DATE	NO.	BY	DATE	W-16
1			3			TOTAL SHEETS
2			4			20

PREPARED BY: M.D. VALIQUETTE	DATE: 09/2010
REVIEWED BY: K. J. KIM	DATE: 09/2010

ROW AH			
Pile ID	Station	Offset	Pile Size
AH1	147 + 47.400	21.324 R	406 mm
AH2	147 + 47.400	19.386 R	406 mm
AH3	147 + 47.400	17.447 R	406 mm
AH4	147 + 47.400	15.509 R	406 mm
AH5	147 + 47.400	13.570 R	406 mm
AH6	147 + 47.400	11.632 R	305 mm
AH7	147 + 47.400	9.693 R	305 mm
AH8	147 + 47.400	7.755 R	305 mm
AH9	147 + 47.400	5.816 R	305 mm
AH10	147 + 47.400	3.878 R	305 mm
AH11	147 + 47.400	1.939 R	305 mm
AH12	147 + 47.400	0.000 CL	305 mm
AH13	147 + 47.400	1.939 L	305 mm
AH14	147 + 47.400	3.877 L	305 mm
AH15	147 + 47.400	5.816 L	305 mm
AH16	147 + 47.400	7.754 L	305 mm
AH17	147 + 47.400	9.693 L	305 mm
AH18	147 + 47.400	11.631 L	305 mm
AH19	147 + 47.400	13.570 L	406 mm
AH20	147 + 47.400	15.508 L	406 mm
AH21	147 + 47.400	17.447 L	406 mm
AH22	147 + 47.400	19.385 L	406 mm
AH23	147 + 47.400	21.324 L	406 mm

ROW AI			
Pile ID	Station	Offset	Pile Size
AI1	147 + 49.400	21.324 R	406 mm
AI2	147 + 49.400	19.386 R	406 mm
AI3	147 + 49.400	17.447 R	406 mm
AI4	147 + 49.400	15.509 R	406 mm
AI5	147 + 49.400	13.570 R	406 mm
AI6	147 + 49.400	11.632 R	305 mm
AI7	147 + 49.400	9.693 R	305 mm
AI8	147 + 49.400	7.755 R	305 mm
AI9	147 + 49.400	5.816 R	305 mm
AI10	147 + 49.400	3.878 R	305 mm
AI11	147 + 49.400	1.939 R	305 mm
AI12	147 + 49.400	0.000 CL	305 mm
AI13	147 + 49.400	1.939 L	305 mm
AI14	147 + 49.400	3.877 L	305 mm
AI15	147 + 49.400	5.816 L	305 mm
AI16	147 + 49.400	7.754 L	305 mm
AI17	147 + 49.400	9.693 L	305 mm
AI18	147 + 49.400	11.631 L	305 mm
AI19	147 + 49.400	13.570 L	406 mm
AI20	147 + 49.400	15.508 L	406 mm
AI21	147 + 49.400	17.447 L	406 mm
AI22	147 + 49.400	19.385 L	406 mm
AI23	147 + 49.400	21.324 L	406 mm

ROW AJ			
Pile ID	Station	Offset	Pile Size
AK1	147 + 51.400	21.324 R	406 mm
AK2	147 + 51.400	19.386 R	406 mm
AK3	147 + 51.400	17.447 R	406 mm
AK4	147 + 51.400	15.509 R	406 mm
AK5	147 + 51.400	15.508 L	406 mm
AK6	147 + 51.400	17.447 L	406 mm
AK7	147 + 51.400	19.385 L	406 mm
AK8	147 + 51.400	21.324 L	406 mm

ROW AK			
Pile ID	Station	Offset	Pile Size
AK1	147 + 53.400	21.324 R	406 mm
AK2	147 + 53.400	19.386 R	406 mm
AK3	147 + 53.400	17.447 R	406 mm
AK4	147 + 53.400	15.509 R	406 mm
AK5	147 + 53.400	15.508 L	406 mm
AK6	147 + 53.400	17.447 L	406 mm
AK7	147 + 53.400	19.385 L	406 mm
AK8	147 + 53.400	21.324 L	406 mm

ROW AL			
Pile ID	Station	Offset	Pile Size
AK1	147 + 55.400	21.324 R	406 mm
AK2	147 + 55.400	19.386 R	406 mm
AK3	147 + 55.400	17.447 R	406 mm
AK4	147 + 55.400	15.509 R	406 mm
AK5	147 + 55.400	15.508 L	406 mm
AK6	147 + 55.400	17.447 L	406 mm
AK7	147 + 55.400	19.385 L	406 mm
AK8	147 + 55.400	21.324 L	406 mm

ROW AM			
Pile ID	Station	Offset	Pile Size
AL1	147 + 57.400	21.324 R	406 mm
AL2	147 + 57.400	19.386 R	406 mm
AL3	147 + 57.400	17.447 R	406 mm
AL4	147 + 57.400	15.509 R	406 mm
AL5	147 + 57.400	15.508 L	406 mm
AL6	147 + 57.400	17.447 L	406 mm
AL7	147 + 57.400	19.385 L	406 mm
AL8	147 + 57.400	21.324 L	406 mm

ROW AN			
Pile ID	Station	Offset	Pile Size
AM1	147 + 59.400	21.324 R	406 mm
AM2	147 + 59.400	19.386 R	406 mm
AM3	147 + 59.400	17.447 R	406 mm
AM4	147 + 59.400	15.509 R	406 mm
AM5	147 + 59.400	15.508 L	406 mm
AM6	147 + 59.400	17.447 L	406 mm
AM7	147 + 59.400	19.385 L	406 mm
AM8	147 + 59.400	21.324 L	406 mm

GEOTECHNICAL ENGINEER

NORTH CAROLINA PROFESSIONAL SEAL 032672 ENGINEER MICHAEL D. VALIQUETTE

SIGNATURE DATE

ENGINEER

SIGNATURE DATE

PILE SUPPORTED MSE WALL AND EMBANKMENT NO.2
ESTIMATED QUANTITIES

HIGH STRENGTH FABRIC FOR LTP.....4,055 SQ.M. (1),(2)
GEOGRID FOR LTP.....5,130 SQ.M. (1),(2)
SELECT MATERIAL, CLASS IV FOR LTP.....5,500 M.TON (2)
406 MM PRESTRESSED CONCRETE PILES.....3,544 M.
305 MM PRESTRESSED CONCRETE PILES.....2,808 M.
CAP FOR 406 MM PRESTRESSED CONCRETE PILES.....443 EACH
CAP FOR 305 MM PRESTRESSED CONCRETE PILES.....351 EACH
PDA TESTING.....2 EACH
PDA ASSISTANCE.....2 EACH

(1) HIGH STRENGTH FABRIC FOR LTP AND GEOGRID FOR LTP ESTIMATED QUANTITY DOES NOT INCLUDE OVERLAPS OR WASTE.

(2) EXCAVATION DOWN TO LTP, EXCAVATION OF ACTUAL LTP VOLUME, STOCKPILING OF EXCAVATED MATERIAL, AND REPLACEMENT OF EXCAVATED MATERIAL WILL BE CONSIDERED INCIDENTAL TO THE COST OF THE LTP PAY ITEMS.

PILE LAYOUT TABLES SHOWING PILE LOCATIONS AND SIZES
(PILES ARE NUMBERED FROM RIGHT TO LEFT)
PILE SUPPORTED MSE WALL AND EMBANKMENT NO.2

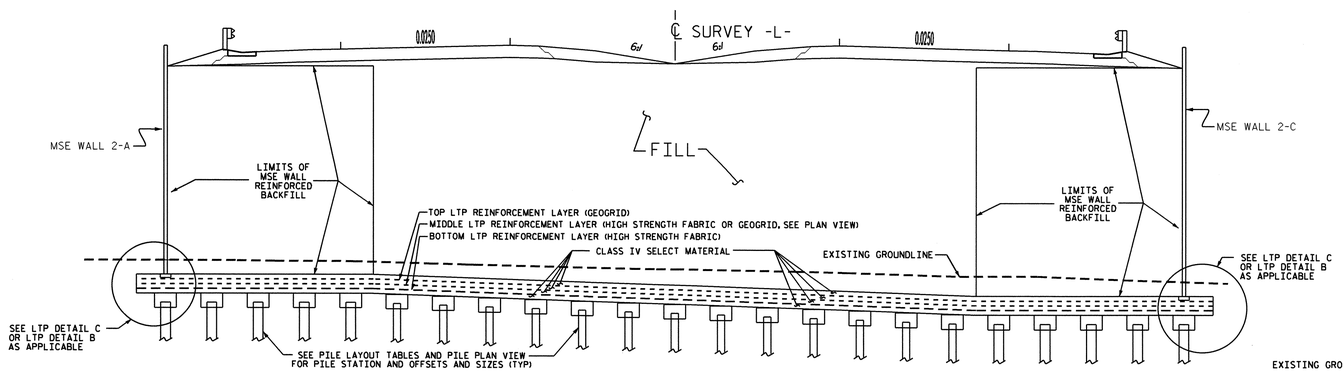

TYPICAL SECTION
(146+78.259 TO 147+50.603 -L-)
SEE PLAN VIEW FOR LIMITS OF LTP AND LIMITS OF LTP REINFORCEMENT TYPE
NOT TO SCALE

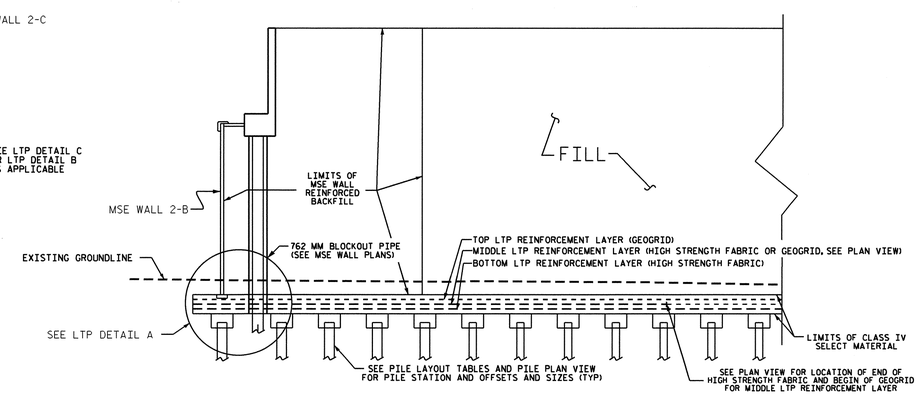

TYPICAL SECTION THROUGH CL OF -L-
PILE SUPPORTED MSE WALL AND EMBANKMENT NO.2
NOT TO SCALE

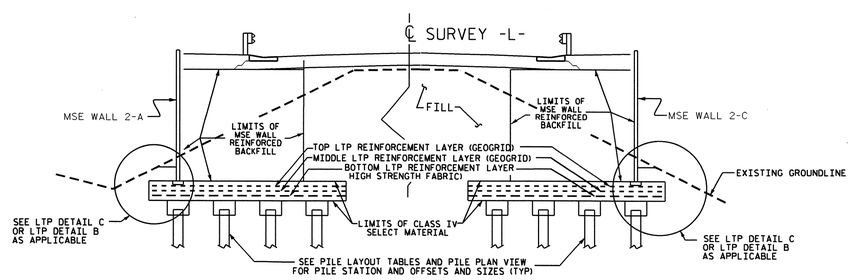

TYPICAL SECTION
(147+50.603 TO 147+60.603 -L-)
NOT TO SCALE

PROJECT NO.: X-0002CB
CUMBERLAND ***COUNTY***
STATION: 146+78.259 TO 147+60.603 -L-
SHEET 10 OF 13

PREPARED BY: M.D. VALIQUETTE	DATE: 09/2010
REVIEWED BY: K. J. KIM	DATE: 09/2010

GEOTECHNICAL ENGINEERING UNIT
☒ ***EASTERN REGIONAL OFFICE***
☐ ***WESTERN REGIONAL OFFICE***

STATE OF NORTH CAROLINA
DEPARTMENT OF TRANSPORTATION
RALEIGH

PILE SUPPORTED MSE WALL AND EMBANKMENT

REVISIONS						
NO.	BY	DATE	NO.	BY	DATE	SHEET NO. W-17
1			3			TOTAL SHEETS 20
2			4			

GEOTECHNICAL ENGINEER	ENGINEER
NORTH CAROLINA PROFESSIONAL SEAL 032672 ENGINEER MICHAEL D. VALIQUETTE	
SIGNATURE DATE	SIGNATURE DATE

NOTES

1. EACH LAYER OF LTP REINFORCEMENT MUST HAVE 200 MM. OF SELECT MATERIAL, CLASS IV ABOVE AND BELOW LAYER.
2. PLACE THE LTP REINFORCEMENT WITHOUT ANY WRINKLES OR CREASES.
3. NO SEAMS OR JOINTS ARE ALLOWED IN THE MACHINE DIRECTION FOR HIGH STRENGTH FABRIC LAYERS.
4. BOTTOM LTP REINFORCEMENT HIGH STRENGTH FABRIC SHEETS MUST BE CONTINUOUS WITHOUT SEAMS OR JOINTS IN THE ROLL DIRECTION FROM THE LEFT TO THE RIGHT LIMITS OF LTP.
5. MIDDLE LTP REINFORCEMENT HIGH STRENGTH FABRIC SHEETS MUST HAVE A CONTINUOUS LENGTH OF 21 M WITHOUT SEAMS OR JOINTS IN THE ROLL DIRECTION.
6. ADJACENT HIGH STRENGTH FABRIC SHEETS JOINTS MUST BE SEWN FOR THE ENTIRE LENGTH OF THE JOINT. SEE HIGH STRENGTH FABRIC SPECIAL PROVISION.
7. THE TERMS ROLL AND MACHINE DIRECTION ARE USED INTERCHANGEABLY.
8. SEE LOAD TRANSFER PLATFORM INSTRUMENTATION PLAN SHEET.
9. SEE MSE RETAINING WALL WORKING DRAWING PLAN SHEETS FOR LEVELING PAD ELEVATIONS.
10. DRIVE CONCRETE PILES FOR PILE SUPPORTED MSE WALL AND EMBANKMENTS NO. 1 AND NO. 2 TO A REQUIRED BEARING CAPACITY OF 2,000 KN PER PILE. THE REQUIRED BEARING CAPACITY IS EQUAL TO THE ALOWABLE BEARING CAPACITY WITH A MINIMUM FACTOR OF SAFETY OF TWO.
11. DRIVE CONCRETE PILES FOR PILE SUPPORTED MSE WALL AND EMBANKMENT NO. 1 AND NO. 2 TO A TIP ELEVATION NO HIGHER THAN 28.0 M.
12. THE ALLOWABLE BEARING CAPACITY FOR PILES FOR PILE SUPPORTED MSE WALL AND EMBANKMENT NO. 1 AND NO. 2 IS 1,000 KN PER PILE.
13. TESTING THE FIRST PRODUCTION 406 MM CONCRETE PILE AT PILE SUPPORTED MSE WALL AND EMBANKMENT NO. 1 AND NO. 2 WITH THE PILE DRIVING ANALYZER DURING DRIVING, RESTRIKING, OR REDRIVING IS REQUIRED FOR PILES FOR PILE SUPPORTED MSE WALL AND EMBANKMENT.
14. TESTING THE FIRST PRODUCTION 305 MM CONCRETE PILE AT PILE SUPPORTED MSE WALL AND EMBANKMENT NO. 1 AND NO. 2 WITH THE PILE DRIVING ANALYZER DURING DRIVING, RESTRIKING, OR REDRIVING IS REQUIRED FOR PILES FOR PILE SUPPORTED MSE WALL AND EMBANKMENT.
15. SEE SECTION 450 OF THE NCDOT STANDARD SPECIFICATIONS FOR PRESTRESSED CONCRETE PILES.
16. SEE CAP FOR PRESTRESSED CONCRETE PILES SPECIAL PROVISION. CAPS FOR PRESTRESSED CONCRETE PILES SHALL BE CAST-IN-PLACE. THE CONTRACTOR MAY SUBMIT PRECAST PILE CAP DESIGNS FOR REVIEW APPROVAL BY THE ENGINEER.
17. SEE LOAD TRANSFER PLATFORM (LTP) SPECIAL PROVISION FOR HIGH STRENGTH FABRIC FOR LTP, GEOGRID FOR LTP, AND SELECT MATERIAL, CLASS IV FOR LTP.
18. FOR PILE DRIVING ANALYZER, SEE SPECIAL PROVISIONS.

CONSTRUCTION SEQUENCE

1. OBSERVE REQUIRED SURCHARGE WAITING PERIOD AT PILE SUPPORTED MSE WALL AND EMBANKMENT NO. 1.
2. EXCAVATE TO BOTTOM OF LTP ELEVATION.
3. DRIVE CONCRETE PILES AND PLACE CONCRETE CAPS.
4. PLACE 200 MM COMPACTED THICKNESS OF CLASS IV SELECT MATERIAL ABOVE TOP OF CONCRETE CAP ELEVATION.
5. INSTALL LTP INSTRUMENTATION.
6. PLACE BOTTOM LTP REINFORCEMENT WITHOUT ANY WRINKLES OR CREASES.
7. PLACE 200 MM COMPACTED THICKNESS OF CLASS IV SELECT MATERIAL ABOVE BOTTOM LTP REINFORCEMENT LAYER.
8. REPEAT LTP REINFORCEMENT AND 200 MM CLASS IV SELECT MATERIAL FOR MIDDLE AND TOP LTP LAYERS.
9. AT 457 MM STEEL PIPE PILE LOCATIONS FOR BRIDGE END BENTS, HAND EXCAVATE TO BOTTOM OF LTP TO INSTALL 762 MM PIPE BLOCKOUT. TRIM LTP REINFORCEMENT DURING EXCAVATION TO WITHIN 50 MM OF BLOCKOUT PIPE TO ALLOW PLACEMENT OF BLOCKOUT PIPE.
10. DRIVE 457 MM STEEL PIPE PILES PER STRUCTURE PLANS.
11. CONSTRUCT MSE RETAINING WALLS AND EMBANKMENTS.

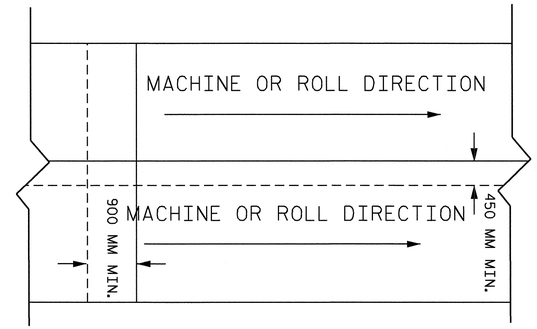

GEOGRID OVERLAP DETAIL
NTS

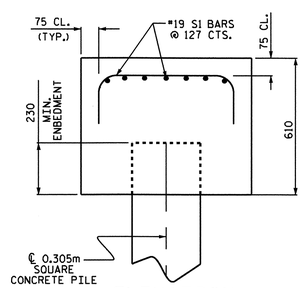

ELEVATION

BILL OF MATERIAL FOR ONE CONCRETE PILE CAP FOR 305mm PRESTRESSED CONCRETE PILE					
BAR	NO.	SIZE	TYPE	LENGTH	WEIGHT
S1	14	#19	1	1540	48
REINFORCING STEEL =					48 kg
CLASS AA CONCRETE =					0.5 CU. METER
PILE CAP FOR 305mm PRESTRESSED CONCRETE PILE EACH					

BAR TYPES

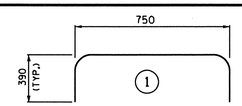

ALL BAR DIMENSIONS ARE OUT TO OUT.

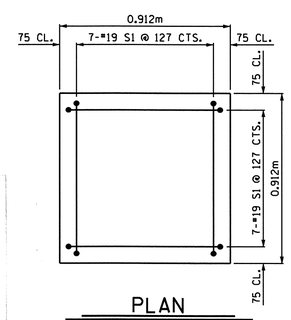

PLAN
CONCRETE PILE NOT SHOWN FOR CLARITY

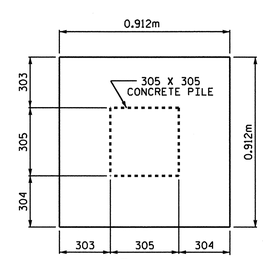

PLAN
REINFORCING STEEL NOT SHOWN FOR CLARITY

CAP FOR 305 X 305 CONCRETE PILE
NOT TO SCALE

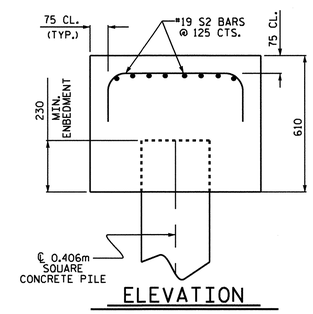

ELEVATION

BILL OF MATERIAL FOR ONE CONCRETE PILE CAP FOR 406mm PRESTRESSED CONCRETE PILE					
BAR	NO.	SIZE	TYPE	LENGTH	WEIGHT
S2	16	#19	1	1640	59
REINFORCING STEEL =					59 kg
CLASS AA CONCRETE =					0.6 CU. METER
PILE CAP FOR 406mm PRESTRESSED CONCRETE PILE EACH					

BAR TYPES

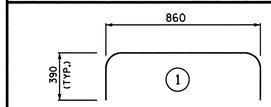

ALL BAR DIMENSIONS ARE OUT TO OUT.

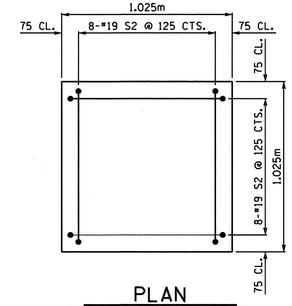

PLAN
CONCRETE PILE NOT SHOWN FOR CLARITY

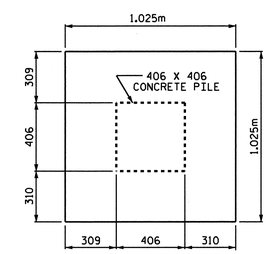

PLAN
REINFORCING STEEL NOT SHOWN FOR CLARITY

CAP FOR 406 X 406 CONCRETE PILE
NOT TO SCALE

PROJECT NO.: X-0002CB
CUMBERLAND **COUNTY**
STATION: 145+59.098 TO 147+60.603 -L-

SHEET 11 OF 13

GEOTECHNICAL ENGINEERING UNIT
☒ EASTERN REGIONAL OFFICE
☐ WESTERN REGIONAL OFFICE

STATE OF NORTH CAROLINA
DEPARTMENT OF TRANSPORTATION
RALEIGH

PILE SUPPORTED MSE WALL AND EMBANKMENT

REVISIONS						SHEET NO.
NO.	BY	DATE	NO.	BY	DATE	W-18
1			3			TOTAL SHEETS
2			4			20

PREPARED BY: M.D. VALIQUETTE	DATE: 09/2010
REVIEWED BY: K. J. KIM	DATE: 09/2010

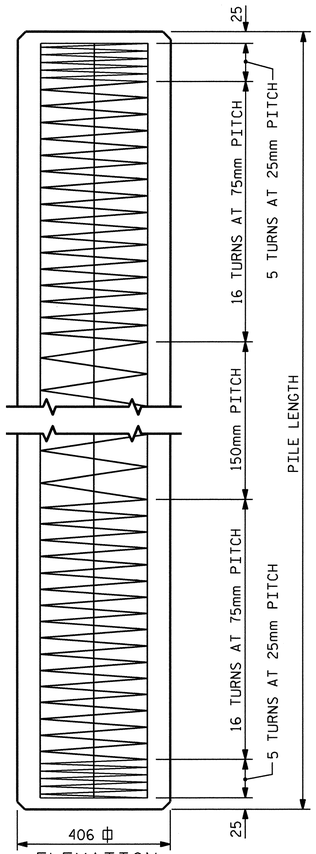

ELEVATION

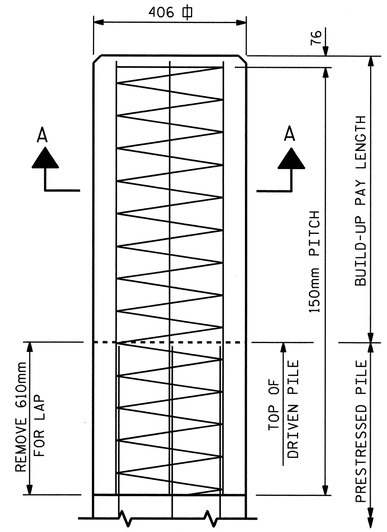

BUILD-UP
WITHOUT DRIVING

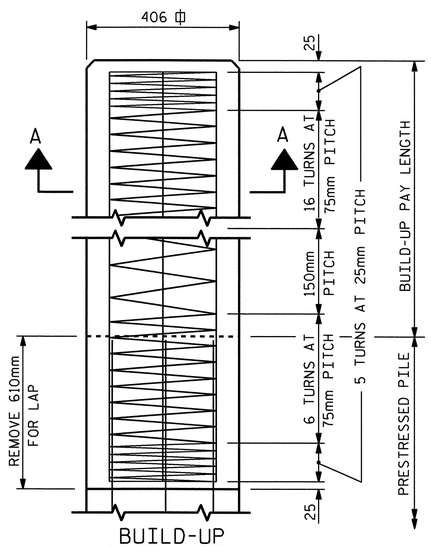

BUILD-UP
WITH DRIVING

* FOR OPTIONAL BUILD-UP SEE "OPTIONAL PRESTRESSED CONCRETE PILE BUILD-UP" PLANSHEET

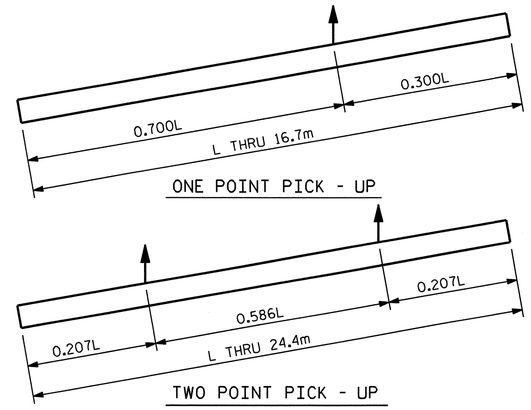

PICK - UP POINTS

NOTES

PRESTRESSED CONCRETE STRENGTH : f'c = 51.7 MPa
BUILD-UP CONCRETE STRENGTH : f'c = 51.7 MPa

STRAND DATA:

SIZE mm	GRADE	AREA mm^2	ULTIMATE STRENGTH	APPLIED PRESTRESS FORCE
12.70	270 L.R.	98.71	183.7 kN PER STRAND	137.8 kN PER STRAND
15.24	270 L.R.	140.0	260.7 kN PER STRAND	195.4 kN PER STRAND

ALL PRESTRESSING STRANDS SHALL BE 7-WIRE LOW-RELAXATION GRADE 270 STRANDS CONFORMING TO AASHTO M203. STRAND SAMPLING REQUIREMENTS SHALL BE IN ACCORDANCE WITH THE STANDARD SPECIFICATIONS.

AT THE CONTRACTOR'S OPTION, 12.70mm OR 15.24mm STRANDS MAY BE USED IN EITHER STRAND CONFIGURATION SHOWN IN THE TYPICAL SECTION DETAIL. MIXING OF STRAND SIZE IS NOT ALLOWED.

THE SLIP-FORM METHOD OF CASTING PILES WILL NOT BE PERMITTED.

TRANSFER THE LOAD FROM THE ANCHORAGES TO THE PILE AFTER THE CONCRETE HAS ATTAINED A MINIMUM COMPRESSIVE STRENGTH OF 27.6 MPa.

IF STRAND STRESS IS RELIEVED BY BURNING, THE STRANDS SHALL BE BURNED IN OPPOSITE PAIRS AS INDICATED IN THE TYPICAL PATTERN SHOWN. FOR ANY NUMBER OF STRANDS, BURN IN OPPOSITE PAIRS AND SYMMETRICALLY ABOUT BOTH THE VERTICAL AND HORIZONTAL AXES. STRANDS 1-1 SHALL BE BURNED BEFORE 2-2, ETC. NOT MORE THAN 4 STRANDS, SAY 3-3 AND 4-4, MAY BE BURNED AT ANY ONE SECTION BEFORE THESE SAME PAIRS OF STRANDS ARE BURNED AT BOTH ENDS OF THE BED BETWEEN EACH PAIR OF PILES IN THE BED.

PROPOSED DEVICES FOR LIFTING PILES, RECESS DETAILS, AND PATCHING MATERIAL SHALL BE DETAILED IN SHOP DRAWINGS. AFTER ATTACHMENTS HAVE BEEN REMOVED, OPENINGS SHALL BE REPAIRED SUCH THAT THE APPEARANCE OF THE PILE IS UNIFORM.

WHERE CAST-IN-PLACE LIFTING DEVICES ARE NOT USED, PICK-UP POINTS ARE TO BE INDICATED WITH A 50mm WIDE BLACK MARK.

DRIVE PILES USING A METHOD APPROVED BY THE ENGINEER, WHEREBY THE HEAD OF THE PILE IS NOT DAMAGED.

DRIVING OF THE BUILT-UP PILE WILL NOT BE PERMITTED UNTIL THE CONCRETE HAS REACHED A COMPRESSIVE STRENGTH OF 34.5 MPa AND UNTIL A PERIOD OF SEVEN DAYS HAS ELAPSED SINCE CASTING OF THE BUILD-UP.

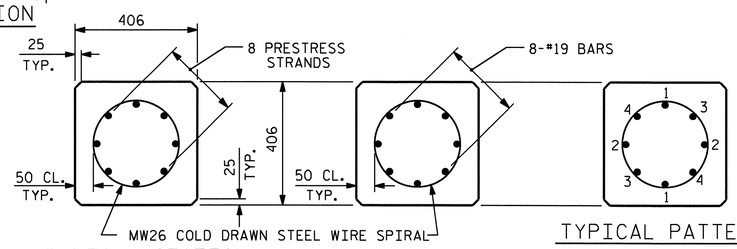

TYPICAL SECTION — SECTION "A-A" — TYPICAL PATTERN FOR BURNING STRANDS

12.70mm OR 15.24mm Ø GRADE 270 L.R. PRESTRESS STRANDS

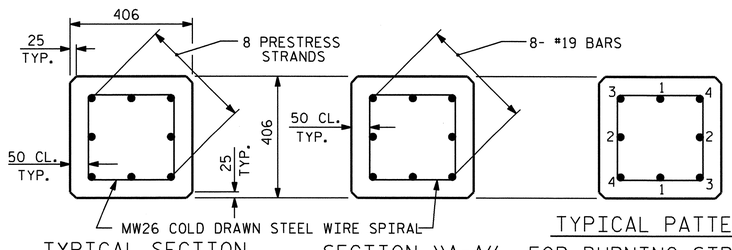

TYPICAL SECTION — SECTION "A-A" — TYPICAL PATTERN FOR BURNING STRANDS

12.70mm OR 15.24mm Ø GRADE 270 L.R. PRESTRESS STRANDS

QUANTITIES FOR ONE 406mm PRESTRESSED PILE						
LENGTH	CONCRETE	PILE WT.	ONE POINT PICK-UP		TWO POINT PICK-UP	
m	m^3	kg	0.300L m	0.700L m	0.207L m	0.586L m
7.5	1.23	2950	2.25	5.25	1.55	4.40
9.0	1.47	3540	2.70	6.30	1.86	5.28
10.5	1.72	4130	3.15	7.35	2.17	6.16
12.0	1.97	4720	3.60	8.40	2.48	7.04
13.5	2.21	5310	4.05	9.45	2.79	7.92
15.0	2.46	5900	4.50	10.50	3.11	8.78
16.5	2.70	6500	4.95	11.55	3.42	9.66
18.0	2.95	7090			3.73	10.54
19.5	3.20	7680			4.04	1 1.42
21.0	3.44	8270			4.35	12.30
22.5	3.69	8860			4.66	13.18
24.0	3.93	9450			4.97	14.06

PROJECT NO. X-0002CB
CUMBERLAND COUNTY
STATION: 145+59.086 TO 146+09.196 -L-
146+78.259 TO 147+60.603 -L-

NORTH CAROLINA PROFESSIONAL SEAL 029441 ENGINEER KIRSTY W. ALFORD 10/24/10

STATE OF NORTH CAROLINA
DEPARTMENT OF TRANSPORTATION
RALEIGH

STANDARD
406mm PRESTRESSED
CONCRETE PILE

REVISIONS						SHEET NO.
NO.	BY:	DATE:	NO.	BY:	DATE:	W-19
1			3			TOTAL SHEETS
2			4			20

STD. NO. PCP2SM

ASSEMBLED BY : K.W. ALFORD DATE : 10/10
CHECKED BY : B.S. COX DATE : 10/10
DRAWN BY : RH 9/98
CHECKED BY : LES 10/98
REV. 8/16/99RR RAL/LES
REV. 5/1/06 TLA/GM
REV. 9/24/10 WMC/GM

13-OCT-2010 09:25
F:\Structures\Str3US401\Single_SpanBridge\Geo_WallsPlans\pilestandards.dgn
kalford

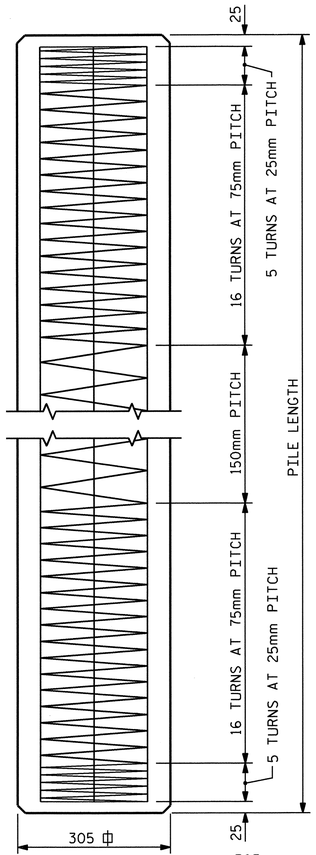

ELEVATION

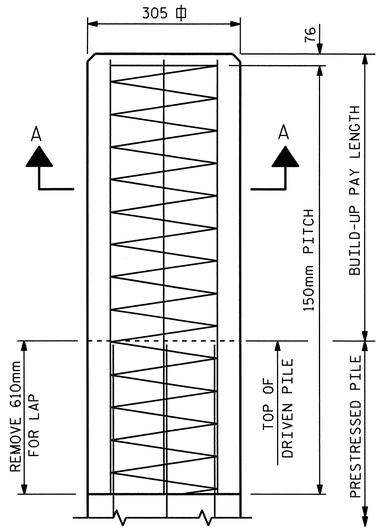

BUILD-UP
WITHOUT DRIVING

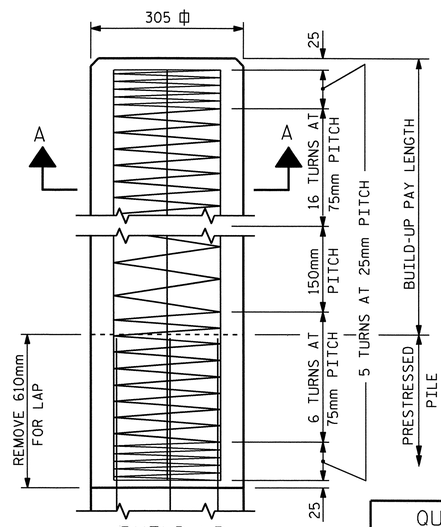

BUILD-UP
WITH DRIVING

*FOR OPTIONAL BUILD-UP SEE "OPTIONAL PRESTRESSED CONCRETE PILE BUILD-UP" PLANSHEET

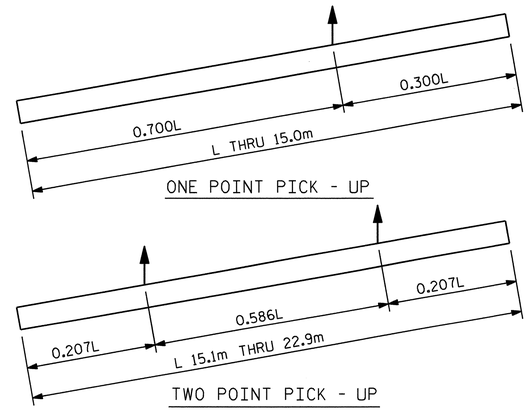

PICK - UP POINTS

QUANTITIES FOR ONE 305mm PRESTRESSED PILE

LENGTH m	CONCRETE m^3	PILE WT. kg	ONE POINT PICK-UP 0.300L m	ONE POINT PICK-UP 0.700L m	TWO POINT PICK-UP 0.207L m	TWO POINT PICK-UP 0.586L m
7.5	0.70	1680	2.25	5.25		
9.0	0.84	2020	2.70	6.30		
10.5	0.98	2350	3.15	7.35		
12.0	1.12	2690	3.60	8.40		
13.5	1.26	3030	4.05	9.45		
15.0	1.40	3360	4.50	10.50		
16.5	1.53	3680			3.42	9.67
18.0	1.67	4010			3.73	10.55
19.5	1.81	4350			4.04	1 1.43
21.0	1.95	4690			4.35	12.31
22.5	2.09	5020			4.66	13.19

NOTES

PRESTRESSED CONCRETE STRENGTH : f'c = 51.7 MPa
BUILD-UP CONCRETE STRENGTH : f'c = 51.7 MPa

STRAND DATA:

SIZE mm	GRADE	AREA mm^2	ULTIMATE STRENGTH	APPLIED PRESTRESS FORCE
12.70	270 L.R.	98.71	183.7 kN PER STRAND	137.8 kN PER STRAND
15.24	270 L.R.	140.0	260.7 kN PER STRAND	195.4 kN PER STRAND

ALL PRESTRESSING STRANDS SHALL BE 7-WIRE LOW-RELAXATION GRADE 270 STRANDS CONFORMING TO AASHTO M203. STRAND SAMPLING REQUIREMENTS SHALL BE IN ACCORDANCE WITH THE STANDARD SPECIFICATIONS.

AT THE CONTRACTOR'S OPTION, 12.70mm OR 15.24mm STRANDS MAY BE USED IN EITHER THE 4 OR 5 STRAND CONFIGURATION SHOWN IN THE TYPICAL SECTION DETAIL. MIXING OF STRAND SIZE IS NOT ALLOWED.

THE SLIP-FORM METHOD OF CASTING PILES WILL NOT BE PERMITTED.

TRANSFER THE LOAD FROM THE ANCHORAGES TO THE PILE AFTER THE CONCRETE HAS ATTAINED A MINIMUM COMPRESSIVE STRENGTH OF 27.6 MPa.

IF STRAND STRESS IS RELIEVED BY BURNING, THE STRANDS SHALL BE BURNED IN PAIRS, EXCEPT WHERE 5 STRANDS ARE USED, THE LAST STRAND MAY BE BURNED SINGLY ACCORDING TO BURNING PATTERNS SHOWN. NOT MORE THAN 4 STRANDS MAY BE BURNED AT ANY ONE SECTION BEFORE THE SAME STRANDS ARE BURNED AT BOTH ENDS OF THE BED AND BETWEEN EACH PAIR OF PILES IN THE BED.

PROPOSED DEVICES FOR LIFTING PILES, RECESS DETAILS, AND PATCHING MATERIAL SHALL BE DETAILED IN SHOP DRAWINGS. AFTER ATTACHMENTS HAVE BEEN REMOVED, OPENINGS SHALL BE REPAIRED SUCH THAT THE APPEARANCE OF THE PILE IS UNIFORM.

WHERE CAST-IN-PLACE LIFTING DEVICES ARE NOT USED, PICK-UP POINTS ARE TO BE INDICATED WITH A 50mm WIDE BLACK MARK.

DRIVE PILES USING A METHOD APPROVED BY THE ENGINEER, WHEREBY THE HEAD OF THE PILE IS NOT DAMAGED.

DRIVING OF THE BUILT-UP PILE WILL NOT BE PERMITTED UNTIL THE CONCRETE HAS REACHED A COMPRESSIVE STRENGTH OF 34.5 MPa AND UNTIL A PERIOD OF SEVEN DAYS HAS ELAPSED SINCE CASTING OF THE BUILD-UP.

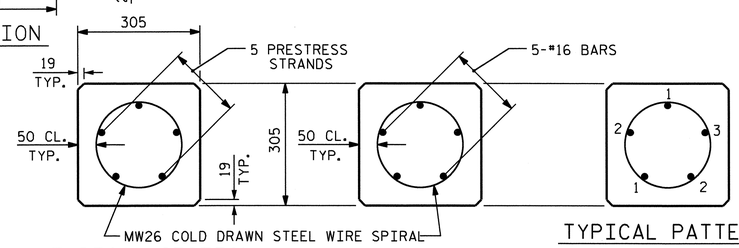

TYPICAL SECTION — SECTION "A-A" — TYPICAL PATTERN FOR BURNING STRANDS

12.70mm OR 15.24mm Ø GRADE 270 L.R. PRESTRESS STRANDS

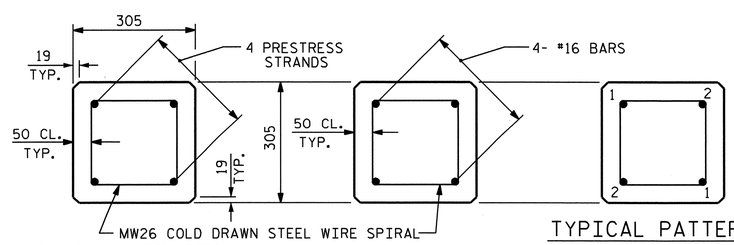

TYPICAL SECTION — SECTION "A-A" — TYPICAL PATTERN FOR BURNING STRANDS

12.70mm OR 15.24mm Ø GRADE 270 L.R. PRESTRESS STRANDS

PROJECT NO. X-0002CB
CUMBERLAND COUNTY
STATION: 145+59.086 TO 146+09.196 -L-
146+78.259 TO 147+60.603 -L-

STATE OF NORTH CAROLINA
DEPARTMENT OF TRANSPORTATION
RALEIGH

STANDARD
305mm PRESTRESSED
CONCRETE PILE

NORTH CAROLINA PROFESSIONAL SEAL 029441 ENGINEER KRISTY W. ALFORD 10/13/10

ASSEMBLED BY : K.W. ALFORD	DATE : 10/10
CHECKED BY : B.S. COX	DATE : 10/10
DRAWN BY : FCJ 7/88	REV. 8/16/99R RWW/LES
CHECKED BY : CRK 3/89	REV. 5/1/06 TLA/GM
	REV. 9/24/10 WMC/GM

REVISIONS						SHEET NO.
NO.	BY:	DATE:	NO.	BY:	DATE:	W-20
1			3			TOTAL SHEETS
2			4			20

STD. NO. PCP1SM

13-OCT-2010 09:24
F:\Structures\Str3US401\Single_SpanBridge\Geo_WallsPlans\pilestandards.dgn
kalford

STANDARD NOTES

DESIGN DATA:

SPECIFICATIONS	A.A.S.H.T.O. (CURRENT)
LIVE LOAD	SEE PLANS
IMPACT ALLOWANCE	SEE A.A.S.H.T.O.
STRESS IN EXTREME FIBER OF	
STRUCTURAL STEEL - AASHTO M270 GRADE 250	140 MPa
- AASHTO M270 GRADE 345W	190 MPa
- AASHTO M270 GRADE 345	190 MPa
REINFORCING STEEL IN TENSION	
GRADE 420	165 MPa
CONCRETE IN COMPRESSION	8.3 MPa
CONCRETE IN SHEAR	SEE A.A.S.H.T.O.
STRUCTURAL TIMBER - TREATED OR	
UNTREATED - EXTREME FIBER STRESS	12 MPa
COMPRESSION PERPENDICULAR TO GRAIN OF TIMBER	2.6 MPa
EQUIVALENT FLUID PRESSURE OF EARTH	480 kg/m^3 (MINIMUM)

MATERIAL AND WORKMANSHIP:

EXCEPT AS MAY OTHERWISE BE SPECIFIED ON PLANS OR IN THE SPECIAL PROVISIONS, ALL MATERIAL AND WORKMANSHIP SHALL BE IN ACCORDANCE WITH THE 2006 "STANDARD SPECIFICATIONS FOR ROADS AND STRUCTURES" OF THE N. C. DEPARTMENT OF TRANSPORTATION.

STEEL SHEET PILING FOR PERMANENT OR TEMPORARY APPLICATIONS SHALL BE HOT ROLLED.

CONCRETE:

UNLESS OTHERWISE REQUIRED ON PLANS, CLASS A CONCRETE SHALL BE USED FOR ALL PORTIONS OF ALL STRUCTURES WITH THE EXCEPTION THAT: CLASS AA CONCRETE SHALL BE USED IN BRIDGE SUPERSTRUCTURES, ABUTMENT BACKWALLS, AND APPROACH SLABS; CLASS B CONCRETE SHALL BE USED FOR SLOPE PROTECTION AND RIP RAP; AND CLASS S SHALL BE USED FOR UNDERWATER FOOTING SEALS.

CONCRETE CHAMFERS:

UNLESS OTHERWISE NOTED ON THE PLANS, ALL EXPOSED CORNERS ON STRUCTURES SHALL BE CHAMFERED 19mm WITH THE FOLLOWING EXCEPTIONS: TOP CORNERS OF CURBS MAY BE ROUNDED TO 38mm RADIUS WHICH IS BUILT INTO CURB FORMS; CORNERS OF TRANSVERSE FLOOR EXPANSION JOINTS SHALL BE ROUNDED WITH A 6mm FINISHING TOOL UNLESS OTHERWISE REQUIRED ON PLANS; AND CORNERS OF EXPANSION JOINTS IN THE ROADWAY FACES AND TOPS OF CURBS AND SIDEWALKS SHALL BE ROUNDED TO A 6mm RADIUS WITH A FINISHING STONE OR TOOL UNLESS OTHERWISE REQUIRED ON PLANS.

DOWELS:

DOWELS WHEN INDICATED ON PLANS AS FOR CULVERT EXTENSIONS, SHALL BE EMBEDDED AT LEAST 300mm INTO THE OLD CONCRETE AND GROUTED INTO PLACE WITH 1 :2 CEMENT MORTAR.

ALLOWANCE FOR DEAD LOAD DEFLECTION, SETTLEMENT, ETC. IN CASTING SUPERSTRUCTURES:

BRIDGES SHALL BE BUILT ON THE GRADE OR VERTICAL CURVE SHOWN ON PLANS. SLABS, CURBS AND PARAPETS SHALL CONFORM TO THE GRADE OR CURVE.

ALL DIMENSIONS WHICH ARE GIVEN IN SECTION AND ARE AFFECTED BY DEAD LOAD DEFLECTIONS ARE DIMENSIONS AT CENTER LINE OF BEARING UNLESS OTHERWISE NOTED ON PLANS. IN SETTING FORMS FOR STEEL BEAM BRIDGES AND PRESTRESSED CONCRETE GIRDER BRIDGES, ADJUSTMENTS SHALL BE MADE DUE TO THE DEAD LOAD DEFLECTIONS FOR THE ELEVATIONS SHOWN. WHERE BLOCKS ARE SHOWN OVER BEAMS FOR BUILDING UP TO THE SLAB, THE VERTICAL DIMENSIONS OF THE BLOCKS SHALL BE ADJUSTED BETWEEN BEARINGS TO COMPENSATE FOR DEAD LOAD DEFLECTIONS, VERTICAL CURVE ORDINATE, AND ACTUAL BEAM CAMBER. WHERE BOTTOM OF SLAB IS IN LINE WITH BOTTOM OF TOP FLANGES, DEPTH OF SLAB BETWEEN BEARINGS SHALL BE ADJUSTED TO COMPENSATE FOR DEAD LOAD DEFLECTION, VERTICAL CURVE ORDINATE, AND ACTUAL BEAM CAMBER.

IN SETTING FALSEWORK AND FORMS FOR REINFORCED CONCRETE SPANS, AN ALLOWANCE SHALL BE MADE FOR DEAD LOAD DEFLECTIONS, SETTLEMENT OF FALSEWORK, AND PERMANENT CAMBER WHICH SHALL BE PROVIDED FOR IN ADDITION TO THE ELEVATIONS SHOWN. AFTER REMOVAL OF THE FALSEWORK, THE FINISHED STRUCTURES SHALL CONFORM TO THE PROFILE AND ELEVATIONS SHOWN ON THE PLANS AND CONSTRUCTION ELEVATIONS FURNISHED BY THE ENGINEER.

DETAILED DRAWINGS FOR FALSEWORK OR FORMS FOR BRIDGE SUPERSTRUCTURE AND ANY STRUCTURE OR PARTS OF A STRUCTURE AS NOTED ON THE PLANS SHALL BE SUBMITTED TO THE ENGINEER FOR APPROVAL BEFORE CONSTRUCTION OF THE FALSEWORK OR FORMS IS STARTED.

REINFORCING STEEL:

ALL REINFORCING STEEL SHALL BE DEFORMED. DIMENSIONS RELATIVE TO PLACEMENT OF REINFORCING ARE TO CENTERS OF BARS UNLESS OTHERWISE INDICATED IN THE PLANS. DIMENSIONS ON BAR DETAILS ARE TO CENTERS OF BARS OR ARE OUT TO OUT AS INDICATED ON PLANS.

WIRE BAR SUPPORTS SHALL BE PROVIDED FOR REINFORCING STEEL WHERE INDICATED ON THE PLANS. WHEN BAR SUPPORT PIECES ARE PLACED IN CONTINUOUS LINES, THEY SHALL BE SO PLACED THAT THE ENDS OF THE SUPPORTING WIRES SHALL BE LAPPED TO LOCK LEGS ON ADJOINING PIECES.

STRUCTURAL STEEL:

AT THE CONTRACTOR'S OPTION, HE MAY SUBSTITUTE 22.23mm Ø SHEAR STUDS FOR THE 19.05mm Ø STUDS SPECIFIED ON THE PLANS. THIS SUBSTITUTION SHALL BE MADE AT THE RATE OF 3 -22.23mm Ø STUDS FOR 4 - 19.05mm Ø STUDS, AND STUD SPACING CHANGES SHALL BE MADE AS NECESSARY TO PROVIDE THE SAME EQUIVALENT NUMBER OF 22.23mm Ø STUDS ALONG THE BEAM AS SHOWN FOR 19.05mm Ø STUDS BASED ON THE RATIO OF 3 - 22.23mm Ø STUDS FOR 4 - 19.05mm Ø STUDS. STUDS OF THE LENGTH SPECIFIED ON THE PLANS MUST BE PROVIDED. THE MAXIMUM SPACING SHALL BE 610mm.

EXCEPT AT THE INTERIOR SUPPORTS OF CONTINUOUS BEAMS WHERE THE COVER PLATE IS IN CONTACT WITH BEARING PLATE, THE CONTRACTOR MAY, AT HIS OPTION, SUBSTITUTE FOR THE COVER PLATES DESIGNATED ON THE PLANS COVER PLATES OF THE EQUIVALENT AREA PROVIDED THESE PLATES ARE AT LEAST 8mm IN THICKNESS AND DO NOT EXCEED A WIDTH EQUAL TO THE FLANGE WIDTH LESS 50mm OR A THICKNESS EQUAL TO 2 TIMES THE FLANGE THICKNESS. THE SIZE OF FILLET WELDS SHALL CONFORM TO THE REQUIREMENTS OF THE CURRENT ANSI/AASHTO/AWS "BRIDGE WELDING CODE". ELECTROSLAG WELDING WILL NOT BE PERMITTED.

PLACEMENT OF BEAM OR GIRDER MEMBERS ON TRUCKS FOR HAULING SHALL BE DONE IN COMPLIANCE WITH LIMITS SHOWN ON SKETCHES PROVIDED TO THE MATERIALS AND TEST UNIT APPROVED BY THE STRUCTURE DESIGN UNIT DATED MAY 8, 1991. THESE SKETCHES PRIMARILY LIMIT THE UNSUPPORTED CANTILEVER LENGTH OF MEMBERS. WHEN THE CONTRACTOR WISHES TO PLACE MEMBERS ON TRUCKS NOT IN ACCORDANCE WITH THESE LIMITS, TO SHIP BY RAIL, TO ATTACH SHIPPING RESTRAINTS TO THE MEMBERS OR TO INVERT MEMBERS, HE SHALL SUBMIT A SKETCH FOR APPROVAL PRIOR TO SHIPPING. SEE ALSO ARTICLE 1072-11.

WITH THE SOLE EXCEPTION OF EDGES AT SURFACES WHICH BEAR ON OTHER SURFACES, ALL SHARP EDGES AND ENDS OF SHAPES AND PLATES SHALL BE SLIGHTLY ROUNDED BY SUITABLE MEANS TO A RADIUS OF APPROXIMATELY 2mm OR EQUIVALENT FLAT SURFACE AT A SUITABLE ANGLE PRIOR TO PAINTING, GALVANIZING, OR METALLIZING.

HANDRAILS AND POSTS:

METAL STANDARDS AND FACES OF THE CONCRETE END POSTS FOR THE METAL RAIL SHALL BE SET NORMAL TO THE GRADE OF THE CURB, UNLESS OTHERWISE SHOWN ON PLANS. THE METAL RAIL AND TOPS OF CONCRETE POSTS USED WITH THE ALUMINUM RAIL SHALL BE BUILT PARALLEL TO THE GRADE OF THE CURB.

METAL HANDRAILS SHALL BE IN ACCORDANCE WITH THE PLANS. RAILS SHALL BE AS MANUFACTURED FOR BRIDGE RAILING. CASTINGS SHALL BE OF A UNIFORM APPEARANCE. FINS AND OTHER DEFORMATIONS RESULTING FROM CASTING OR OTHERWISE SHALL BE REMOVED IN A MANNER SO THAT A UNIFORM COLORING OF THE COMPLETED CASTING SHALL BE OBTAINED. CASTINGS WITH DISCOLORATIONS OR OF NON-UNIFORM COLORING WILL NOT BE ACCEPTED. CERTIFIED MILL REPORTS ARE REQUIRED FOR METAL RAILS AND POSTS.

SPECIAL NOTES:

GENERALLY, IN CASE OF DISCREPANCY, THIS STANDARD SHEET OF NOTES SHALL GOVERN OVER THE SPECIFICATIONS, BUT THE REMAINDER OF THE PLANS SHALL GOVERN OVER NOTES HEREON, AND SPECIAL PROVISIONS SHALL GOVERN OVER ALL. SEE SPECIFICATIONS ARTICLE 105-4.

METRIC

JANUARY, 1990