09/08/99

TIP PROJECT: R-2417AA

See Sheet 1-A For Index of Sheets
See Sheet 1-B For Conventional Symbols

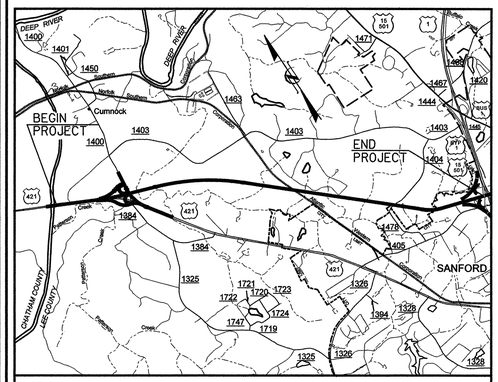

VICINITY MAP

STATE OF NORTH CAROLINA
DIVISION OF HIGHWAYS

LEE COUNTY

STATE	STATE PROJECT REFERENCE NO.	SHEET NO.	TOTAL SHEETS
N.C.	R-2417AA	1	

STATE PROJ. NO.	F.A. PROJ. NO.	DESCRIPTION
34431.1.2		P.E.
34431.2.2		RW & UTIL.
34431.3.7		CONST.

LEGEND:
★ PROPOSED SIGNAL

LOCATION: US 421 – NC 87 SANFORD BYPASS FROM WEST OF SR 1400 TO WEST OF US 1–15–501

TYPE OF WORK: GRADING, DRAINAGE, PAVING, STRUCTURES, SIGNING AND SIGNALS.

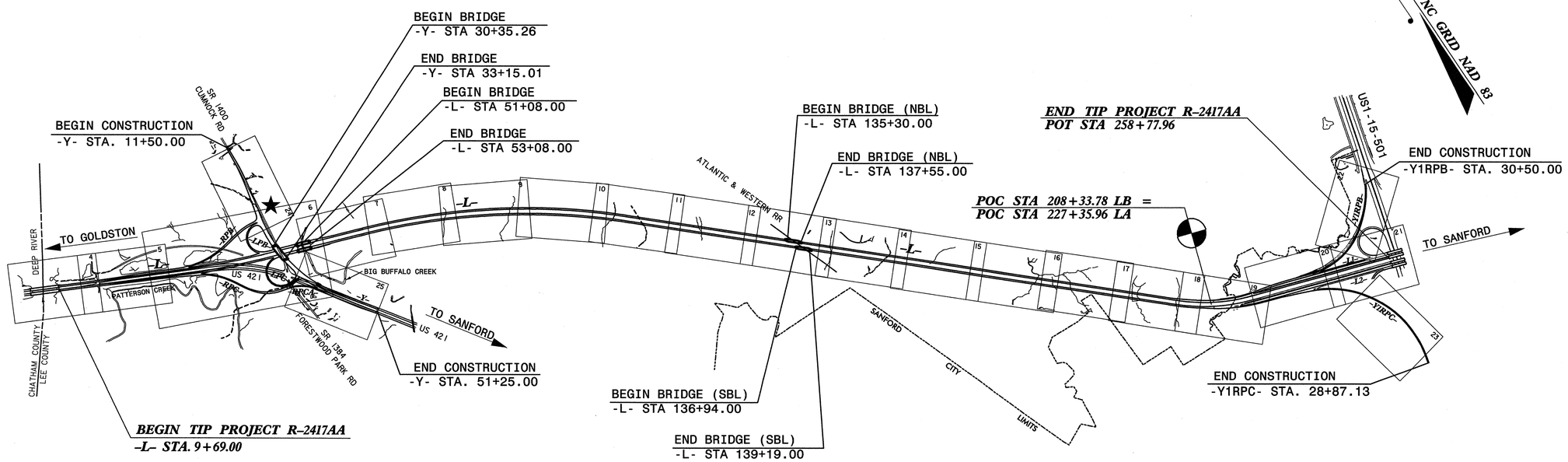

NCDOT CONTACT: DOUG TAYLOR, P.E.
ROADWAY DESIGN - ENGINEERING COORDINATION

THIS IS A CONTROLLED – ACCESS PROJECT WITH ACCESS BEING LIMITED TO INTERCHANGES.

CONTRACT: C202331

GRAPHIC SCALES

50 25 0 50 100
PLANS

50 25 0 50 100
PROFILE (HORIZONTAL)

10 5 0 10 20
PROFILE (VERTICAL)

DESIGN DATA

ADT 2011	=	14,430
ADT 2031	=	21,930
DHV	=	10 %
D	=	60 %
T	=	9 % *
V	=	70 MPH

* TTST 5% DUAL 4%
FUNC. CLASS.: FREEWAY

PROJECT LENGTH

LENGTH ROADWAY TIP PROJECT R-2417AA	=	4.277 MI.
LENGTH STRUCTURES TIP PROJECT R-2417AA	=	0.080 MI.
TOTAL LENGTH OF TIP PROJECT R-2417AA	=	4.357 MI.

Prepared In the Office of:
Florence & Hutcheson
CONSULTING ENGINEERS
5121 KINGDOM WAY, SUITE 100
RALEIGH, N.C. 27607
(919) 851-6066
License No: F-0258

2006 STANDARD SPECIFICATIONS

RIGHT OF WAY DATE:
February 17, 2006

LETTING DATE:
January 18, 2011

David C. Waller, P.E.
PROJECT ENGINEER

Michael A. Young, P.E.
PROJECT DESIGN ENGINEER

HYDRAULICS ENGINEER
NORTH CAROLINA PROFESSIONAL SEAL 021162 ENGINEER W. HERBERT TURNER, JR.
W. Herbert Turner Jr. P.E. 11-9-10
SIGNATURE:

ROADWAY DESIGN ENGINEER
NORTH CAROLINA PROFESSIONAL SEAL 22606 ENGINEER DAVID C. WALLER
D C Waller P.E. 11-9-10
SIGNATURE:

DIVISION OF HIGHWAYS
STATE OF NORTH CAROLINA
STATE OF NORTH CAROLINA DEPARTMENT OF TRANSPORTATION
P.E.
STATE HIGHWAY DESIGN ENGINEER

11/3/2010
R:\Roadway\Proj\r2417aa_rdy_tsh.dgn
Florence & Hutcheson, Inc.

PROJECT REFERENCE NO.	SHEET NO.
R-2417AA	1-A

ROADWAY DESIGN ENGINEER

NORTH CAROLINA PROFESSIONAL SEAL 22606 ENGINEER DAVID C. WALLER

12-13-10

INDEX OF SHEETS

SHEET NUMBER	DESCRIPTION
1	Title Sheet
1-A	Index of Sheets. General Notes. List of Standards
1-B	Conventional Symbols
1-C & 1-D	Survey Control Sheets
1-E	Centerline Coordinate List
2 thru 2-E	Typical Sections and Pavement Schedule
2-F thru 2-G	Ditch Details
2-H thru 2-J	Details of Dry Detention Basin
2-K	Detail of Lateral Swale/Ditch with Rock Checks
2-L thru 2-P	Details of Temporary Detours
2-Q	Cross Section Layout
2-R	Intersection Details
2-S thru 2-T	Details for Method of Pipe Installation
2-U	Detail of Anchorage for Frames
2-V	Deleted
2-W thru 2-AG	Deleted
2-AH	Detail of Temporary 1" Steel Plate over Drainage Structure
2-AI	Detail of Bridge Approach Fill - Sub Regional Tier
2-AJ	Detail of Guardrail at Sign Support
2-AK	Detail of Rock Plating
2-AL	Detail of Reinforced Concrete Endwall (Single 54". Pipe 60 Deg. or 120 Deg. Skew)
2-AM	Detail of Reinforced Concrete Endwall (Single 54". Pipe 45 Deg. or 135 Deg. Skew)
2-AN	Detail to Convert Existing Junction Box to 4 Sided Open Throat Catch Basin
2-AO	Detail of Concrete Endwall for Double Pipe Culverts
2-AP	Detail of Modified Concrete Flume
3	Summary of Quantities
3-A thru 3-I	Drainage Summary Sheets
3-J	Summary of Earthwork
3-K	Guardrail & Cable Guiderail Summary
3-L	Summary of Pavement Breaking and Removal/ Summary of Shoulder Drains
3-M	Parcel Index Sheet
4 thru 25	Plan Sheets
26 thru 46	Profile Sheets
TCP-1 thru TCP-51	Traffic Control Plans
PM-1 thru PM-7	Pavement Marking Plans
EC-1 thru EC-51	Erosion Control Plans
RF-1	Reforestation Plan
SIGN-1 thru SIGN-33	Signing Plans
SIG-1 thru SIG-18	Signal Plans
UC-1 thru UC-6	Utility Construction Plans
UO-1 thru UO-10	Utility Plans by Others
X-1A thru X-1C	Cross-Section Summary
X-2 thru X-426	Cross-Sections
S-1 thru S-	Structure Plans
W-1 thru W-	Retaining Wall Plans

GENERAL NOTES:

2006 SPECIFICATIONS
EFFECTIVE: 07-18-06
REVISED: 07-30-08

GRADE LINE:
GRADING AND SURFACING OR RESURFACING AND WIDENING:

THE GRADE LINES SHOWN DENOTE THE FINISHED ELEVATION OF THE PROPOSED SURFACING AT GRADE POINTS SHOWN ON THE TYPICAL SECTIONS. WHERE NO GRADE LINES ARE SHOWN. THE PROFILES SHOWN DENOTE THE TOP ELEVATION OF THE EXISTING PAVEMENT ALONG THE CENTER LINE OF SURVEY ON WHICH THE PROPOSED RESURFACING WILL BE PLACED. GRADE LINES MAY BE ADJUSTED BY THE ENGINEER IN ORDER TO SECURE A PROPER TIE-IN.

CLEARING:

CLEARING ON THIS PROJECT SHALL BE PERFORMED TO THE LIMITS ESTABLISHED BY METHOD III.

SUPERELEVATION:

ALL CURVES ON THIS PROJECT SHALL BE SUPERELEVATED IN ACCORDANCE WITH STD. NO. 225.04 AND 225.05 USING THE RATE OF SUPERELEVATION AND RUNOFF SHOWN ON THE PLANS. SUPERELEVATION IS TO BE REVOLVED ABOUT THE GRADE POINTS SHOWN ON THE TYPICAL SECTIONS.

SHOULDER CONSTRUCTION:

ASPHALT. EARTH. AND CONCRETE SHOULDER CONSTRUCTION ON THE HIGH SIDE OF SUPERELEVATED CURVES SHALL BE IN ACCORDANCE WITH STD. NO. 560.01 AND 560.02.

SIDE ROADS:

THE CONTRACTOR WILL BE REQUIRED TO DO ALL NECESSARY WORK TO PROVIDE SUITABLE CONNECTIONS WITH ALL ROADS. STREETS. AND DRIVES ENTERING THIS PROJECT. THIS WORK WILL BE PAID FOR AT THE CONTRACT UNIT PRICE FOR THE PARTICULAR ITEMS INVOLVED.

BERM DITCHES:

BERM DITCHES SHALL BE CONSTRUCTED IN ACCORDANCE WITH STD. NO. 240.01 AT LOCATIONS SHOWN ON THE PLANS OR AS DIRECTED BY THE ENGINEER.

UNDERDRAINS:

UNDERDRAINS SHALL BE CONSTRUCTED IN ACCORDANCE WITH STD. NO. 815.03 AT LOCATIONS DIRECTED BY THE ENGINEER.

SHOULDER DRAINS:

SHOULDER DRAINS SHALL BE CONSTRUCTED IN ACCORDANCE WITH STD. NO. 816.02 AND DETAILS IN PLANS AT LOCATIONS DIRECTED BY THE ENGINEER.

STREET TURNOUT:

STREET RETURNS SHALL BE CONSTRUCTED IN ACCORDANCE WITH STD. NO. 848.04 USING THE RADII NOTED ON PLANS.

GUARDRAIL:

THE GUARDRAIL LOCATIONS SHOWN ON THE PLANS MAY BE ADJUSTED DURING CONSTRUCTION AS DIRECTED BY THE ENGINEER. THE CONTRACTOR SHOULD CONSULT WITH THE ENGINEER PRIOR TO ORDERING GUARDRAIL MATERIAL.

TEMPORARY SHORING:

SHORING REQUIRED FOR THE MAINTENANCE OF TRAFFIC NOT SHOWN ON THE PLANS WILL BE PAID FOR AT THE CONTRACT PRICE FOR "TEMPORARY SHORING".

END BENTS:

THE ENGINEER SHALL CHECK THE STRUCTURE END BENT PLANS. DETAILS. AND CROSS-SECTION PRIOR TO SETTING OF THE SLOPE STAKES FOR THE EMBANKMENT OR EXCAVATION APPROACHING A BRIDGE.

UTILITIES:

UTILITY OWNERS ON THIS PROJECT ARE ALLTEL. PROGRESS ENERGY & CITY OF SANFORD.

ANY RELOCATION OF EXISTING UTILITIES WILL BE ACCOMPLISHED BY OTHERS. EXCEPT AS SHOWN ON THE PLANS.

RIGHT-OF-WAY MARKERS:

ALL RIGHT-OF-WAY MARKERS ON THIS PROJECT SHALL BE PLACED BY CONTRACT.

EFF. 07-18-06
REV. 01-02-07

2006 ROADWAY ENGLISH STANDARD DRAWINGS

The following Roadway Standards as appear in "Roadway Standard Drawings" Highway Design Branch - N. C. Department of Transportation - Raleigh. N. C.. Dated July 18. 2006 are applicable to this project and by reference hereby are considered a part of these plans:

STD.NO.	TITLE
DIVISION 2 - EARTHWORK	
200.03	Method of Clearing - Method III
225.01	Guide for Grading Subgrade - Interstate and Freeway
225.02	Guide for Grading Subgrade - Secondary and Local
225.03	Deceleration and Acceleration Lanes
225.04	Method of Obtaining Superelevation - Two Lane Pavement
225.05	Method of Obtaining Superelevation - Divided Highways
225.06	Method of Grading Sight Distance at Intersections
225.07	Grading for False Cut at Grade Separations
225.09	Guide for Shoulder and Ditch Transition at Grade Separations
240.01	Guide for Berm Ditch Construction
DIVISION 3 - PIPE CULVERTS	
310.10	Driveway Pipe Construction
DIVISION 4 - MAJOR STRUCTURES	
422.10	Reinforced Bridge Approach Fills
DIVISION 5 - SUBGRADE. BASES AND SHOULDERS	
560.01	Method of Shoulder Construction - High Side of Superelevated Curve - Method I
560.02	Method of Shoulder Construction - High Side of Superelevated Curve - Method II
DIVISION 6 - ASPHALT BASES AND PAVEMENTS	
610.03	Guide for Paving Shoulders Under Bridges - Method III
654.01	Pavement Repairs
665.01	Milled Rumble Strips - Asphalt Pavements
DIVISION 8 - INCIDENTALS	
806.01	Concrete Right-of-Way Marker
806.02	Granite Right-of-Way Marker
815.03	Pipe Underdrain and Blind Drain
816.01	Concrete Pads - for Shoulder Drain Installation
816.02	Aggregate Shoulder Drain
816.04	Markers for Drainage Structure and Concrete Pad
838.01	Concrete Endwall for Single and Double Pipe Culverts - 15" thru 48" Pipe 90 Skew
838.05	Concrete 'L' Endwall for Single Pipe Culverts - 15" thru 48" Pipe
838.11	Brick Endwall for Single and Double Pipe Culverts - 15" thru 48" Pipe 90 Skew
838.15	Brick 'L' Endwall for Single Pipe Culverts - 15" thru 48" Pipe
838.80	Precast Endwalls - 12" thru 72" Pipe 90 Skew
840.00	Concrete Base Pad for Drainage Structures
840.01	Brick Catch Basin - 12" thru 54" Pipe
840.02	Concrete Catch Basin - 12" thru 54" Pipe
840.03	Frame. Grates and Hood - for Use on Standard Catch Basin
840.04	Concrete Open Throat Catch Basin - 12" thru 48" Pipe
840.05	Brick Open Throat Catch Basin - 12" thru 48" Pipe
840.14	Concrete Drop Inlet - 12" thru 30" Pipe
840.15	Brick Drop Inlet - 12" thru 30" Pipe
840.16	Drop Inlet Frame and Grates - for use with Std. Dwg 840.14 and 840.15
840.17	Concrete Grated Drop Inlet Type 'A' - 12" thru 72" Pipe
840.18	Concrete Grated Drop Inlet Type 'B' - 12" thru 36" Pipe
840.19	Concrete Grated Drop Inlet Type 'D' - 12" thru 36" Pipe
840.22	Frames and Wide Slot Sag Grates
840.26	Brick Grated Drop Inlet Type 'A' - 12" thru 72" Pipe
840.27	Brick Grated Drop Inlet Type 'B' - 12" thru 36" Pipe
840.28	Brick Grated Drop Inlet Type 'D' - 12" thru 36" Pipe
840.29	Frames and Narrow Slot Flat Grates
840.31	Concrete Junction Box - 12" thru 66" Pipe
840.32	Brick Junction Box - 12" thru 66" Pipe
840.35	Traffic Bearing Drop Inlet - for Cast Iron Double Frame and Grates
840.45	Precast Drainage Structure
840.54	Manhole Frame and Cover
840.66	Drainage Structure Steps
840.71	Concrete and Brick Pipe Plug
840.72	Pipe Collar
846.01	Concrete Curb. Gutter and Curb & Gutter
846.04	Drop Inlet Installation in Shoulder Berm Gutter
848.04	Street Turnout
850.01	Concrete Paved Ditches
850.10	Guide for Berm Drainage Outlet - 15" and 18" Pipe
850.11	Guide for Berm Drainage Outlet - 24" and 30" Pipe
852.01	Concrete Islands
852.06	Method for Placement of Drop Inlets in Concrete Islands
862.01	Guardrail Placement
862.02	Guardrail Installation
862.03	Structure Anchor Units
862.04	Anchoring End of Guardrail - B-77 and B-83 Anchor Units
865.01	Cable Guiderail
866.02	Woven Wire Fence - with Wood Post
876.01	Rip Rap in Channels
876.02	Guide for Rip Rap at Pipe Outlets
876.04	Drainage Ditches with Class 'B' Rip Rap

6/17/99

12/13/2010
R:\Roadway\Proj\r-2417aa_rdy_sheet_1A.dgn
Thomas & Hutchesson, Inc.

3/15/06

PROJECT REFERENCE NO.	SHEET NO.
R-2417AA	1-B

Note: Not to Scale

S.U.E. = Subsurface Utility Engineering

STATE OF NORTH CAROLINA
DIVISION OF HIGHWAYS

CONVENTIONAL PLAN SHEET SYMBOLS

BOUNDARIES AND PROPERTY:

- State Line
- County Line
- Township Line
- City Line
- Reservation Line
- Property Line
- Existing Iron Pin — EIP
- Property Corner
- Property Monument — EOM
- Parcel/Sequence Number — 123
- Existing Fence Line
- Proposed Woven Wire Fence
- Proposed Chain Link Fence
- Proposed Barbed Wire Fence
- Existing Wetland Boundary — WLB
- Proposed Wetland Boundary — WLB
- Existing Endangered Animal Boundary — EAB
- Existing Endangered Plant Boundary — EPB

BUILDINGS AND OTHER CULTURE:

- Gas Pump Vent or U/G Tank Cap
- Sign — S
- Well — W
- Small Mine
- Foundation
- Area Outline
- Cemetery
- Building
- School
- Church
- Dam

HYDROLOGY:

- Stream or Body of Water
- Hydro, Pool or Reservoir
- Jurisdictional Stream — JS
- Buffer Zone 1 — BZ 1
- Buffer Zone 2 — BZ 2
- Flow Arrow
- Disappearing Stream
- Spring
- Wetland
- Proposed Lateral, Tail, Head Ditch — FLOW
- False Sump

RAILROADS:

- Standard Gauge — CSX TRANSPORTATION
- RR Signal Milepost — MILEPOST 35
- Switch — SWITCH
- RR Abandoned
- RR Dismantled

RIGHT OF WAY:

- Baseline Control Point
- Existing Right of Way Marker
- Existing Right of Way Line
- Proposed Right of Way Line — RW
- Proposed Right of Way Line with Iron Pin and Cap Marker — RW
- Proposed Right of Way Line with Concrete or Granite Marker — RW
- Existing Control of Access — CA
- Proposed Control of Access — CA
- Existing Easement Line — E
- Proposed Temporary Construction Easement — E
- Proposed Temporary Drainage Easement — TDE
- Proposed Permanent Drainage Easement — PDE
- Proposed Permanent Utility Easement — PUE
- Proposed Temporary Utility Easement — TUE
- Proposed Permanent Easement with Iron Pin and Cap Marker

ROADS AND RELATED FEATURES:

- Existing Edge of Pavement
- Existing Curb
- Proposed Slope Stakes Cut — C
- Proposed Slope Stakes Fill — F
- Proposed Wheel Chair Ramp — WCR
- Existing Metal Guardrail
- Proposed Guardrail
- Existing Cable Guiderail
- Proposed Cable Guiderail
- Equality Symbol
- Pavement Removal

VEGETATION:

- Single Tree
- Single Shrub
- Hedge
- Woods Line
- Orchard
- Vineyard — Vineyard

EXISTING STRUCTURES:

MAJOR:

- Bridge, Tunnel or Box Culvert — CONC
- Bridge Wing Wall, Head Wall and End Wall — CONC WW

MINOR:

- Head and End Wall — CONC HW
- Pipe Culvert
- Footbridge
- Drainage Box: Catch Basin, DI or JB — CB
- Paved Ditch Gutter
- Storm Sewer Manhole — S
- Storm Sewer — S

UTILITIES:

POWER:

- Existing Power Pole
- Proposed Power Pole
- Existing Joint Use Pole
- Proposed Joint Use Pole
- Power Manhole — P
- Power Line Tower
- Power Transformer
- U/G Power Cable Hand Hole — HH
- H-Frame Pole
- Recorded U/G Power Line — P
- Designated U/G Power Line (S.U.E.*) — P

TELEPHONE:

- Existing Telephone Pole
- Proposed Telephone Pole
- Telephone Manhole — T
- Telephone Booth
- Telephone Pedestal — T
- Telephone Cell Tower
- U/G Telephone Cable Hand Hole — HH
- Recorded U/G Telephone Cable — T
- Designated U/G Telephone Cable (S.U.E.*) — T
- Recorded U/G Telephone Conduit — TC
- Designated U/G Telephone Conduit (S.U.E.*) — TC
- Recorded U/G Fiber Optics Cable — T FO
- Designated U/G Fiber Optics Cable (S.U.E.*) — T FO

WATER:

- Water Manhole — W
- Water Meter
- Water Valve
- Water Hydrant
- Recorded U/G Water Line — W
- Designated U/G Water Line (S.U.E.*) — W
- Above Ground Water Line — A/G Water

TV:

- TV Satellite Dish
- TV Pedestal — C
- TV Tower
- U/G TV Cable Hand Hole — HH
- Recorded U/G TV Cable — TV
- Designated U/G TV Cable (S.U.E.*) — TV
- Recorded U/G Fiber Optic Cable — TV FO
- Designated U/G Fiber Optic Cable (S.U.E.*) — TV FO

GAS:

- Gas Valve
- Gas Meter
- Recorded U/G Gas Line — G
- Designated U/G Gas Line (S.U.E.*) — G
- Above Ground Gas Line — A/G Gas

SANITARY SEWER:

- Sanitary Sewer Manhole
- Sanitary Sewer Cleanout
- U/G Sanitary Sewer Line — SS
- Above Ground Sanitary Sewer — A/G Sanitary Sewer
- Recorded SS Forced Main Line — FSS
- Designated SS Forced Main Line (S.U.E.*) — FSS

MISCELLANEOUS:

- Utility Pole
- Utility Pole with Base
- Utility Located Object
- Utility Traffic Signal Box — S
- Utility Unknown U/G Line — ?UTL
- U/G Tank; Water, Gas, Oil
- A/G Tank; Water, Gas, Oil
- U/G Test Hole (S.U.E.*)
- Abandoned According to Utility Records — AATUR
- End of Information — E.O.I.

PROJECT REFERENCE NO.	SHEET NO.
R-2417AA	1C
Location and Surveys	

SURVEY CONTROL SHEET R-2417AA

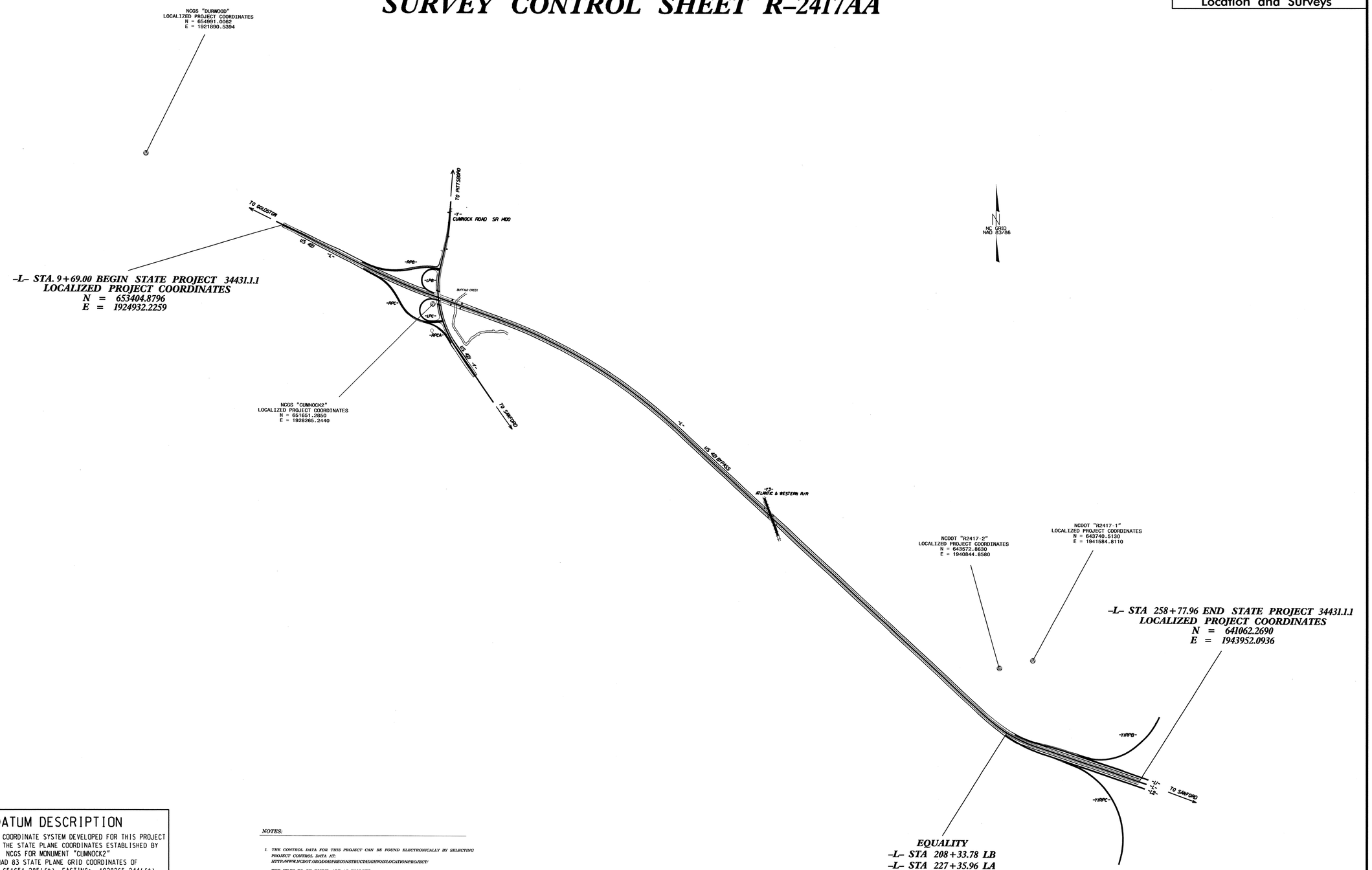

-L- STA. 9+69.00 BEGIN STATE PROJECT 34431.1.1
LOCALIZED PROJECT COORDINATES
N = 653404.8796
E = 1924932.2259

DATUM DESCRIPTION

THE LOCALIZED COORDINATE SYSTEM DEVELOPED FOR THIS PROJECT IS BASED ON THE STATE PLANE COORDINATES ESTABLISHED BY NCGS FOR MONUMENT "CUMNOCK2"
WITH NAD 83 STATE PLANE GRID COORDINATES OF
NORTHING: 651651.285(ft) EASTING: 1928265.244(ft)
ELEVATION: 289.97(ft)
THE AVERAGE COMBINED GRID FACTOR USED ON THIS PROJECT (GROUND TO GRID) IS: 0.999869545
THE N.C. LAMBERT GRID BEARING AND LOCALIZED HORIZONTAL GROUND DISTANCE FROM "CUMNOCK2" TO -L- STATION 9+69.00 IS
N 62 14 59.6 W 3766.179'
ALL LINEAR DIMENSIONS ARE LOCALIZED HORIZONTAL DISTANCES
VERTICAL DATUM USED IS NGVD 29

NOTES:

1. THE CONTROL DATA FOR THIS PROJECT CAN BE FOUND ELECTRONICALLY BY SELECTING PROJECT CONTROL DATA AT:
HTTP://WWW.NCDOT.ORG/DOH/PRECONSTRUCT/HIGHWAY/LOCATION/PROJECT/

THE FILES TO BE FOUND ARE AS FOLLOWS:
R2417AA_LS_CONTROL.TXT

SITE CALIBRATION INFORMATION HAS NOT BEEN PROVIDED FOR THIS PROJECT. IF FURTHER INFORMATION IS NEEDED, PLEASE CONTACT THE LOCATION AND SURVEYS UNIT.

◇ INDICATES GEODETIC CONTROL MONUMENTS USED OR SET FOR HORIZONTAL PROJECT CONTROL BY THE NCDOT LOCATION AND SURVEYS UNIT.
PROJECT CONTROL ESTABLISHED USING GLOBAL POSITIONING SYSTEM & EXISTING NCGS MONUMENTATION.

NOTE: DRAWING NOT TO SCALE

6/2/99

13-DEC-2010 07:37
R:\Roadway\Proj\r2417aa_ls_1c.dgn
$$$$USERNAME$$$$

PROJECT REFERENCE NO.	SHEET NO.
R-2417AA	1D
Location and Surveys	

SURVEY CONTROL SHEET R-2417AA

BL

POINT	DESC.	NORTH	EAST	ELEVATION	L STATION	OFFSET
101	BL-101	653221.8810	1925296.1050	241.84	13+76.30	0.51 LT
102	BL-102	652644.4740	1926449.5990	242.25	26+66.24	4.54 LT
103	BL-103	652213.3160	1927308.1710	242.50	36+26.92	5.42 RT
104	BL-104	651959.7680	1927932.8770	278.26	43+01.02	0.66 RT
105	BL-105	651861.4560	1928199.3140	298.16	45+85.01	0.81 RT
106	BL-106	651784.6740	1928415.5520	288.82	48+14.47	0.87 LT
107	BL-107	651722.8540	1928637.8370	270.35	50+44.50	18.67 LT
108	BL-108	651638.6190	1928841.9200	226.38	52+65.08	9.19 LT
109	BL-109	651518.2060	1929156.1190	250.18	56+01.51	3.30 LT
110	BL-110	651395.0330	1929488.9760	257.93	59+56.42	1.20 LT
111	BL-111	651300.8000	1929734.2400	267.73	62+19.13	3.68 RT
112	BL-112	651211.4230	1929965.9800	252.14	64+67.68	5.72 RT
113	BL-113	651096.8870	1930263.6590	264.63	67+86.68	0.30 RT
114	BL-114	650898.2210	1930723.5970	292.99	72+87.49	5.87 LT
115	BL-115	650615.9550	1931228.5160	296.39	78+65.81	18.77 RT
116	BL-116	650508.7820	1931440.2120	292.58	81+03.26	18.68 RT
117	BL-117	650376.3700	1931682.2840	282.71	83+74.28	3.89 RT
118	BL-118	649894.1730	1932468.7170	290.08	93+00.97	21.38 LT
119	BL-119	649516.8220	1932927.0100	252.99	98+93.68	5.54 RT
120	BL-120	649238.8340	1933274.4770	244.28	103+39.26	0.08 LT
121	BL-121	648776.4150	1933788.5370	248.30	110+38.19	2.20 LT
122	BL-122	648523.8550	1934068.0740	249.94	114+01.02	1.67 LT
123	BL-123	648264.8668	1934338.0460	255.54	117+75.88	4.63 RT
124	BL-124	648031.6970	1934585.5760	245.29	121+28.99	1.83 RT
125	BL-125	647776.4638	1934863.0930	248.83	124+98.83	0.25 RT
126	BL-126	647435.4468	1935248.9280	246.85	130+12.82	12.09 LT
127	BL-127	647111.5430	1935576.7200	250.38	134+73.42	2.49 RT
128	BL-128	646918.0598	1935806.7120	255.42	137+73.62	12.05 LT
129	BL-129	646681.6770	1936044.0710	253.56	141+08.39	0.14 LT
130	BL-130	646510.6260	1936234.9600	252.46	143+64.68	4.52 LT
131	BL-131	646315.5540	1936448.9620	268.24	146+48.36	1.59 LT
132	BL-132	646042.1870	1936729.0880	251.49	150+45.51	2.91 RT
133	BL-133	645799.7140	1936990.5540	247.14	154+02.10	2.89 RT
134	BL-134	645585.5208	1937241.6840	246.84	157+31.89	10.83 LT
135	BL-135	645315.8450	1937515.1320	250.00	161+15.76	0.94 RT
136	BL-136	645088.8568	1937761.8840	263.04	164+51.03	0.43 LT
137	BL-137	644755.4388	1938149.2820	263.68	169+61.88	19.41 LT
138	BL-138	644455.8310	1938445.0290	261.30	173+82.38	0.85 LT
139	BL-139	644194.8548	1938725.3470	248.85	177+65.92	0.47 RT
140	BL-140	644039.3278	1938894.5460	272.81	179+95.19	1.15 LT
157	BL-157	643721.8230	1939240.7120	282.04	184+64.91	3.75 LT
158	BL-158	643567.2210	1939405.9590	299.63	186+91.20	2.77 LT
159	BL-159	643330.4463	1939730.4860	309.44	190+92.15	49.85 LT
A0160	BL-160	643185.8980	1939846.3034	314.57	192+73.37	22.63 LT
161	BL-161	642876.6365	1940150.8790	298.19	197+06.40	2.45 LT
162	BL-162	642719.4436	1940317.2860	307.66	199+35.89	0.90 LT
163	BL-163	642334.1169	1940747.8547	287.56	205+13.86	0.40 RT

POINT	DESC.	NORTH	EAST	ELEVATION	L_A8 STATION	OFFSET
201	BL-201	642107.2780	1941087.2220	279.44	228+24.72	2.67 LT
202	BL-202	641976.1240	1941760.1370	296.92	235+07.82	155.54 LT
203	BL-203	641765.1990	1942448.9270	319.20	242+28.22	178.85 LT

POINT	DESC.	NORTH	EAST	ELEVATION	Y1RPB STATION	OFFSET
204	BL-204	641626.8090	1943155.4480	328.65	7+31.56	29.04 LT
205	BL-205	641855.3180	1943825.3920	319.18	14+59.85	25.81 LT
206	BL-206	642401.1950	1944365.9670	315.49	22+39.53	12.31 RT
207	BL-207	643034.8780	1944561.1140	338.97	OUTSIDE PROJECT LIMITS	

BY

POINT	DESC.	NORTH	EAST	ELEVATION	Y STATION	OFFSET
104	BL-104	651959.7680	1927932.8770	278.26	30+00.39	443.44 RT
141	BY-141	651208.0960	1928300.7410	280.04	37+05.44	195.33 RT
142	BY-142	650716.5280	1928759.0570	280.65	43+23.31	7.89 LT
143	BY-143	649383.9690	1929676.4430	256.46	OUTSIDE PROJECT LIMITS	

BY1

POINT	DESC.	NORTH	EAST	ELEVATION	Y STATION	OFFSET
100	BY1-160	653825.7860	1928636.8870	273.82	11+12.35	15.82 RT
144	BY1-144	653171.8842	1928577.5129	269.85	17+70.46	9.57 RT
106	BL-106	651784.6740	1928415.5520	288.82	31+80.06	31.60 LT

BY2

POINT	DESC.	NORTH	EAST	ELEVATION	Y3 STATION	OFFSET
145	BY2-145	647248.1090	1935651.1840	260.99	10+00.13	9.20 RT
120	BL-120	646918.0590	1935806.7120	255.42	13+63.36	25.18 LT
146	BY2-146	646529.1530	1935911.5260	252.91	17+64.77	8.10 RT

RAMPC

POINT	DESC.	NORTH	EAST	ELEVATION	L_A8 STATION	OFFSET
201	BL-201	642107.2780	1941087.2220	279.44	228+24.72	2.67 LT
208	RPC-208	641602.1610	1941969.8530	303.41	238+27.65	130.40 RT

POINT	DESC.	NORTH	EAST	ELEVATION	Y1RPC STATION	OFFSET
209	RPC-209	641213.1450	1943004.8080	340.26	7+95.44	84.84 LT
210	RPC-210	640837.9870	1943412.2110	341.74	13+16.49	134.80 LT
211	RPC-211	640434.1580	1943625.6270	341.01	17+41.94	146.94 LT
212	RPC-212	639883.3200	1943646.3610	323.58	22+57.73	53.16 LT

BM1 ELEVATION - 246.84
N 653454 E 1924970
L STATION 9+81.00 61 LEFT
PK NAIL IN SE WW OF BRIDGE OVER DEEP RIVER

BM2 ELEVATION - 266.96
N 651772 E 1927724
L STATION 41+75.00 251 RIGHT
RR SPIKE IN BASE OF 15 INCH PINE

BM3 ELEVATION - 254.49
N 651239 E 1929077
L STATION 56+22.00 286 RIGHT
RR SPIKE IN BASE OF 6 INCH PINE

BM4 ELEVATION - 297.16
N 651394 E 1930018
L STATION 64+50.00 183 LEFT
RR SPIKE IN BASE OF 18 INCH OAK

BM5 ELEVATION - 304.25
N 651205 E 1930853
L STATION 72+74.00 339 LEFT
RR SPIKE IN BASE OF 18 INCH PINE

BM6 ELEVATION - 256.56
N 650063 E 1931610
L STATION 84+80.00 318 RIGHT
RR SPIKE IN BASE OF 18 INCH PINE

BM7 ELEVATION - 298.50
N 649925 E 1932919
L STATION 96+41.00 312 LEFT
RR SPIKE IN BASE OF 6 INCH CEDAR

BM8 ELEVATION - 256.97
N 649182 E 1933800
L STATION 108+18.00 249 LEFT
RR SPIKE IN BASE OF 12 INCH MAPLE

BM9 ELEVATION - 256.13
N 648267 E 1934700
L STATION 120+45.00 248 LEFT
RR SPIKE IN BASE OF 15 INCH PINE

BM10 ELEVATION - 243.36
N 646923 E 1935351
L STATION 134+36.00 294 RIGHT
RR SPIKE IN BASE OF 12 INCH PINE

BM11 ELEVATION - 248.78
N 646186 E 1936184
L STATION 145+44.00 381 RIGHT
RR SPIKE IN BASE OF 12 INCH TWIN GUM TREE

BM12 ELEVATION - 285.28
N 645782 E 1937447
L STATION 157+49.00 294 LEFT
RR SPIKE IN BASE OF 6 INCH TWIN OAK TREE

BM13 ELEVATION - 254.19
N 644293 E 1938246
L STATION 173+47.00 254 RIGHT
RR SPIKE IN BASE OF 12 INCH PINE

DATUM DESCRIPTION

THE LOCALIZED COORDINATE SYSTEM DEVELOPED FOR THIS PROJECT IS BASED ON THE STATE PLANE COORDINATES ESTABLISHED BY NCGS FOR MONUMENT "CUMNOCK2"
WITH NAD 83 STATE PLANE GRID COORDINATES OF
NORTHING: 651651.285(ft) EASTING: 1928265.244(ft)
ELEVATION: 289.97(ft)
THE AVERAGE COMBINED GRID FACTOR USED ON THIS PROJECT (GROUND TO GRID) IS: 0.999869545
THE N.C. LAMBERT GRID BEARING AND LOCALIZED HORIZONTAL GROUND DISTANCE FROM "CUMNOCK2" TO -L- STATION 9+69.00 IS
N 62 14 59.6 W 3766.179'
ALL LINEAR DIMENSIONS ARE LOCALIZED HORIZONTAL DISTANCES
VERTICAL DATUM USED IS NGVD 29

NOTES:

1. THE CONTROL DATA FOR THIS PROJECT CAN BE FOUND ELECTRONICALLY BY SELECTING PROJECT CONTROL DATA AT:
HTTP://WWW.NCDOT.ORG/DOH/PRECONSTRUCT/HIGHWAY/LOCATION/PROJECT/

THE FILES TO BE FOUND ARE AS FOLLOWS:
R2417AA_LS_CONTROL.TXT

SITE CALIBRATION INFORMATION HAS NOT BEEN PROVIDED FOR THIS PROJECT. IF FURTHER INFORMATION IS NEEDED, PLEASE CONTACT THE LOCATION AND SURVEYS UNIT.

⊙ INDICATES GEODETIC CONTROL MONUMENTS USED OR SET FOR HORIZONTAL PROJECT CONTROL BY THE NCDOT LOCATION AND SURVEYS UNIT.
PROJECT CONTROL ESTABLISHED USING GLOBAL POSITIONING SYSTEM & EXISTING NCGS MONUMENTATION.

NOTE: DRAWING NOT TO SCALE

6/2/99
13-DEC-2010 07:36
R:\Roadway\Proj\r2417aa_ls_1d.dgn
$$$$USERNAME$$$$
RD248628 12/13/2010 r2417aa_ls_1d djclodgo RD-Oce860-34

PROJ. REFERENCE NO.	SHEET NO.
R-2417AA	1-E

STATE OF NORTH CAROLINA
DIVISION OF HIGHWAYS

CENTERLINE COORDINATE LIST

Point #	Chain	Station	Northing (Y)	Easting (X)
1	L	10+00.00	653390.9168	1924959.9033
2	L	11+00.00	653345.8752	1925049.1851
3	L	12+00.00	653300.8336	1925138.4670
4	L	13+00.00	653255.7920	1925227.7489
5	L	14+00.00	653210.7505	1925317.0308
6	L	15+00.00	653165.7089	1925406.3127
7	L	16+00.00	653120.6673	1925495.5946
8	L	17+00.00	653075.6258	1925584.8765
9	L	18+00.00	653030.5842	1925674.1584
10	L	19+00.00	652985.5426	1925763.4403
11	L	20+00.00	652940.5010	1925852.7222
12	L	21+00.00	652895.4595	1925942.0041
13	L	22+00.00	652850.4179	1926031.2860
14	L	23+00.00	652805.3763	1926120.5679
15	L	24+00.00	652760.3348	1926209.8498
16	L	25+00.00	652715.2932	1926299.1317
17	L	26+00.00	652670.2516	1926388.4136
18	L	27+00.00	652625.2100	1926477.6955
19	L	28+00.00	652580.1685	1926566.9774
20	L	29+00.00	652535.1269	1926656.2593
21	L	30+00.00	652490.0853	1926745.5412
22	L	31+00.00	652445.0505	1926834.8265
23	L	32+00.00	652400.3514	1926924.2801
24	L	33+00.00	652356.4119	1927014.1091
25	L	34+00.00	652313.2579	1927104.3181
26	L	35+00.00	652270.8927	1927194.9003
27	L	36+00.00	652229.3197	1927285.8487
28	L	37+00.00	652188.5419	1927377.1565
29	L	38+00.00	652148.5624	1927468.8166
30	L	39+00.00	652109.3843	1927560.8221
31	L	40+00.00	652071.0107	1927653.1660
32	L	41+00.00	652033.4443	1927745.8413
33	L	42+00.00	651996.6881	1927838.8408
34	L	43+00.00	651960.7448	1927932.1576
35	L	44+00.00	651925.6173	1928025.7845
36	L	45+00.00	651891.2432	1928119.6908
37	L	46+00.00	651857.0950	1928213.6796
38	L	47+00.00	651822.9473	1928307.6686
39	L	48+00.00	651788.7996	1928401.6576
40	L	49+00.00	651754.6519	1928495.6466
41	L	50+00.00	651720.5041	1928589.6356
42	L	51+00.00	651686.3564	1928683.6246
43	L	52+00.00	651652.2087	1928777.6136
44	L	53+00.00	651618.0610	1928871.6026
45	L	54+00.00	651583.9132	1928965.5916
46	L	55+00.00	651549.7655	1929059.5806
47	L	56+00.00	651515.6178	1929153.5696
48	L	57+00.00	651481.4701	1929247.5587
49	L	58+00.00	651447.3223	1929341.5477
50	L	59+00.00	651413.1746	1929435.5367
51	L	60+00.00	651379.0269	1929529.5257
52	L	61+00.00	651344.8792	1929623.5147
53	L	62+00.00	651310.7281	1929717.5025
54	L	63+00.00	651276.2732	1929811.3791
55	L	64+00.00	651241.0364	1929904.9649
56	L	65+00.00	651204.9843	1929998.2396
57	L	66+00.00	651168.1195	1930091.1962
58	L	67+00.00	651130.4450	1930183.8276
59	L	68+00.00	651091.9636	1930276.1266
60	L	69+00.00	651052.6781	1930368.0864
61	L	70+00.00	651012.5917	1930459.6998
62	L	71+00.00	650971.7073	1930550.9598
63	L	72+00.00	650930.0281	1930641.8597
64	L	73+00.00	650887.5573	1930732.3924
65	L	74+00.00	650844.2980	1930822.5510
66	L	75+00.00	650800.2536	1930912.3286
67	L	76+00.00	650755.4275	1931001.7185
68	L	77+00.00	650709.8230	1931090.7138
69	L	78+00.00	650663.4436	1931179.3078
70	L	79+00.00	650616.2928	1931267.4936
71	L	80+00.00	650568.3743	1931355.2646
72	L	81+00.00	650519.6917	1931442.6141
73	L	82+00.00	650470.2486	1931529.5355
74	L	83+00.00	650420.0490	1931616.0221
75	L	84+00.00	650369.0965	1931702.0673
76	L	85+00.00	650317.3950	1931787.6646
77	L	86+00.00	650264.9486	1931872.8075
78	L	87+00.00	650211.7612	1931957.4894
79	L	88+00.00	650157.8368	1932041.7040
80	L	89+00.00	650103.1796	1932125.4448
81	L	90+00.00	650047.7936	1932208.7055
82	L	91+00.00	649991.6832	1932291.4796
83	L	92+00.00	649934.8527	1932373.7610
84	L	93+00.00	649877.3062	1932455.5433
85	L	94+00.00	649819.0483	1932536.8203
86	L	95+00.00	649760.0833	1932617.5858
87	L	96+00.00	649700.4158	1932697.8337
88	L	97+00.00	649640.0502	1932777.5578
89	L	98+00.00	649578.9912	1932856.7521
90	L	99+00.00	649517.2435	1932935.4106
91	L	100+00.00	649454.8117	1933013.5272
92	L	101+00.00	649391.7006	1933091.0960
93	L	102+00.00	649327.9149	1933168.1111
94	L	103+00.00	649263.4597	1933244.5667
95	L	104+00.00	649198.3397	1933320.4569
96	L	105+00.00	649132.5599	1933395.7759
97	L	106+00.00	649066.1253	1933470.5181
98	L	107+00.00	648999.0411	1933544.6776
99	L	108+00.00	648931.3294	1933618.2648
100	L	109+00.00	648863.3340	1933691.5903
101	L	110+00.00	648795.3324	1933764.9100
102	L	111+00.00	648727.3307	1933838.2297
103	L	112+00.00	648659.3291	1933911.5494
104	L	113+00.00	648591.3275	1933984.8691
105	L	114+00.00	648523.3258	1934058.1888
106	L	115+00.00	648455.3242	1934131.5085
107	L	116+00.00	648387.3226	1934204.8282
108	L	117+00.00	648319.3210	1934278.1479
109	L	118+00.00	648251.3193	1934351.4676
110	L	119+00.00	648183.3177	1934424.7873
111	L	120+00.00	648115.3161	1934498.1070
112	L	121+00.00	648047.3144	1934571.4267
113	L	122+00.00	647979.3128	1934644.7464
114	L	123+00.00	647911.3112	1934718.0661
115	L	124+00.00	647843.3095	1934791.3858
116	L	125+00.00	647775.3079	1934864.7055
117	L	126+00.00	647707.3063	1934938.0252
118	L	127+00.00	647639.3047	1935011.3449
119	L	128+00.00	647571.3030	1935084.6646
120	L	129+00.00	647503.3014	1935157.9843
121	L	130+00.00	647435.2998	1935231.3040
122	L	131+00.00	647367.2981	1935304.6237
123	L	132+00.00	647299.2965	1935377.9434
124	L	133+00.00	647231.2949	1935451.2631
125	L	134+00.00	647163.2933	1935524.5828
126	L	135+00.00	647095.2916	1935597.9025
127	L	136+00.00	647027.2900	1935671.2222
128	L	137+00.00	646959.2884	1935744.5419
129	L	138+00.00	646891.2867	1935817.8616
130	L	139+00.00	646823.2851	1935891.1813
131	L	140+00.00	646755.2835	1935964.5010
132	L	141+00.00	646687.2819	1936037.8207
133	L	142+00.00	646619.2802	1936111.1404
134	L	143+00.00	646551.2786	1936184.4601
135	L	144+00.00	646483.2770	1936257.7798
136	L	145+00.00	646415.2753	1936331.0995
137	L	146+00.00	646347.2737	1936404.4192
138	L	147+00.00	646279.2721	1936477.7389
139	L	148+00.00	646211.2705	1936551.0586
140	L	149+00.00	646143.2688	1936624.3783
141	L	150+00.00	646075.2672	1936697.6980
142	L	151+00.00	646007.2656	1936771.0177
143	L	152+00.00	645939.2639	1936844.3374
144	L	153+00.00	645871.2623	1936917.6571
145	L	154+00.00	645803.2607	1936990.9768
146	L	155+00.00	645735.2590	1937064.2965
147	L	156+00.00	645667.2574	1937137.6162
148	L	157+00.00	645599.2558	1937210.9359
149	L	158+00.00	645531.2542	1937284.2556
150	L	159+00.00	645463.2525	1937357.5753
151	L	160+00.00	645395.2509	1937430.8950
152	L	161+00.00	645327.2493	1937504.2147
153	L	162+00.00	645259.2476	1937577.5344
154	L	163+00.00	645191.2460	1937650.8541
155	L	164+00.00	645123.2444	1937724.1738
156	L	165+00.00	645055.2428	1937797.4935
157	L	166+00.00	644987.2411	1937870.8132
158	L	167+00.00	644919.2395	1937944.1329
159	L	168+00.00	644851.2379	1938017.4526
160	L	169+00.00	644783.2362	1938090.7723
161	L	170+00.00	644715.2346	1938164.0920
162	L	171+00.00	644647.2330	1938237.4117
163	L	172+00.00	644579.2314	1938310.7314
164	L	173+00.00	644511.2297	1938384.0511
165	L	174+00.00	644443.2281	1938457.3708
166	L	175+00.00	644375.2265	1938530.6905
167	L	176+00.00	644307.2248	1938604.0102
168	L	177+00.00	644239.2232	1938677.3299
169	L	178+00.00	644171.2216	1938750.6496
170	L	179+00.00	644103.2200	1938823.9693
171	L	180+00.00	644035.2183	1938897.2890
172	L	181+00.00	643967.2167	1938970.6087
173	L	182+00.00	643899.2151	1939043.9284
174	L	183+00.00	643831.2134	1939117.2481
175	L	184+00.00	643763.2118	1939190.5678
176	L	185+00.00	643695.2102	1939263.8875
177	L	186+00.00	643627.2085	1939337.2072
178	L	187+00.00	643559.2069	1939410.5269
179	L	188+00.00	643491.2053	1939483.8466
180	L	189+00.00	643423.2037	1939557.1663
181	L	190+00.00	643355.2020	1939630.4860
182	L	191+00.00	643287.2004	1939703.8057
183	L	192+00.00	643219.1988	1939777.1254
184	L	193+00.00	643151.1971	1939850.4451
185	L	194+00.00	643083.1955	1939923.7648
186	L	195+00.00	643015.1939	1939997.0845
187	L	196+00.00	642947.1923	1940070.4042
188	L	197+00.00	642879.1906	1940143.7239
189	L	198+00.00	642811.1890	1940217.0436
190	L	199+00.00	642743.1874	1940290.3633
191	L	200+00.00	642675.1857	1940363.6830
192	L	201+00.00	642607.1841	1940437.0027
193	L	202+00.00	642539.3034	1940510.4342
194	L	203+00.00	642472.1495	1940584.5299
195	L	204+00.00	642406.4677	1940659.9315
196	L	205+00.00	642343.0186	1940737.2186
197	L	206+00.00	642282.2116	1940816.6009
198	L	207+00.00	642224.1275	1940897.9967
199	L	208+00.00	642168.8327	1940981.3125
200	L	209+00.00	642116.3907	1941066.4529
201	L_AB	228+00.00	642117.5034	1941064.5784
202	L_AB	229+00.00	642067.9102	1941151.4090
203	L_AB	230+00.00	642021.2856	1941239.8691
204	L_AB	231+00.00	641977.6830	1941329.8572
205	L_AB	232+00.00	641937.1525	1941421.2701
206	L_AB	233+00.00	641899.7028	1941513.9883
207	L_AB	234+00.00	641864.8272	1941607.7073
208	L_AB	235+00.00	641831.6316	1941702.0361
209	L_AB	236+00.00	641799.1964	1941796.6297
210	L_AB	237+00.00	641766.8460	1941891.2524
211	L_AB	238+00.00	641734.4956	1941985.8750
212	L_AB	239+00.00	641702.1453	1942080.4977
213	L_AB	240+00.00	641669.7949	1942175.1204
214	L_AB	241+00.00	641637.4445	1942269.7431
215	L_AB	242+00.00	641605.0942	1942364.3658
216	L_AB	243+00.00	641572.7438	1942458.9885
217	L_AB	244+00.00	641540.3934	1942553.6112
218	L_AB	245+00.00	641508.0431	1942648.2339
219	L_AB	246+00.00	641475.6927	1942742.8566
220	L_AB	247+00.00	641443.3423	1942837.4793
221	L_AB	248+00.00	641410.9920	1942932.1020
222	L_AB	249+00.00	641378.6416	1943026.7247
223	L_AB	250+00.00	641346.2912	1943121.3473
224	L_AB	251+00.00	641313.9409	1943215.9700
225	L_AB	252+00.00	641281.5905	1943310.5927
226	L_AB	253+00.00	641249.2401	1943405.2154
227	L_AB	254+00.00	641216.8898	1943499.8381
228	L_AB	255+00.00	641184.5394	1943594.4608
229	L_AB	256+00.00	641152.1890	1943689.0835
230	L_AB	257+00.00	641119.8387	1943783.7062
231	L_AB	258+00.00	641087.4883	1943878.3289
232	L_AB	259+00.00	641055.1379	1943972.9516
233	L1	37+00.00	641290.8579	1943617.1438
234	L1	38+00.00	641323.2082	1943522.5211
235	L1	39+00.00	641355.5586	1943427.8984
236	L1	40+00.00	641387.9090	1943333.2757
237	L1	41+00.00	641420.2593	1943238.6530
238	L1	42+00.00	641452.6097	1943144.0303
239	L1	43+00.00	641484.9601	1943049.4076
240	L1	44+00.00	641517.3104	1942954.7849
241	L1	45+00.00	641549.6608	1942860.1622
242	L1	46+00.00	641582.0112	1942765.5396
243	L1	47+00.00	641614.3615	1942670.9169
244	L1	48+00.00	641646.7119	1942576.2942
245	L1	49+00.00	641679.0623	1942481.6715
246	L1	50+00.00	641711.3905	1942387.0412
247	L1	51+00.00	641743.2262	1942292.2446
248	L1	52+00.00	641773.6874	1942196.9985
249	L1	53+00.00	641802.2405	1942101.1633
250	L1	54+00.00	641828.8573	1942004.7723
251	L1	55+00.00	641853.9730	1941907.9782
252	L1	56+00.00	641878.4899	1941811.0302
253	L1	57+00.00	641903.6416	1941714.2459
254	L1	58+00.00	641931.1108	1941618.0974
255	L1	59+00.00	641962.4760	1941523.1531
256	L1	60+00.00	641998.2512	1941429.7813
257	L1	61+00.00	642038.2990	1941338.1597
258	L1	62+00.00	642082.1894	1941248.3137
259	L1	62+65.62	642112.8424	1941190.2906
260	L2		642101.5238	1940979.1418
261	L2	1+00.00	642044.5350	1941061.3084
262	L2	2+00.00	641990.3061	1941145.3222
263	L2	3+00.00	641938.8971	1941231.0904
264	L2	4+00.00	641890.3645	1941318.5185
265	L2	5+00.00	641844.7620	1941407.5100
266	L2	6+00.00	641802.1398	1941497.9668
267	L2	7+00.00	641762.5449	1941589.7891
268	L2	8+00.00	641726.0144	1941682.8730
269	L2	9+00.00	641692.0984	1941776.9439
270	L2	10+00.00	641659.5287	1941871.4910
271	L2	11+00.00	641627.1783	1941966.1137
272	L2	12+00.00	641594.8279	1942060.7364
273	L2	13+00.00	641562.4776	1942155.3591
274	L2	14+00.00	641530.1272	1942249.9818
275	L2	15+00.00	641497.7768	1942344.6045
276	L2	16+00.00	641465.4265	1942439.2272
277	L2	17+00.00	641433.0761	1942533.8499
278	L2	18+00.00	641400.7257	1942628.4725
279	L2	19+00.00	641368.3754	1942723.0952
280	L2	20+00.00	641336.0250	1942817.7179
281	L2	21+00.00	641303.6746	1942912.3406
282	L2	22+00.00	641271.3243	1943006.9633
283	L2	23+00.00	641238.9739	1943101.5860
284	L2	24+00.00	641206.6235	1943196.2087
285	L2	25+00.00	641174.2732	1943290.8314
286	L2	26+00.00	641141.9228	1943385.4541
287	L2	27+00.00	641109.5724	1943480.0768
288	L2	28+00.00	641077.2221	1943574.6995
289	L2	29+00.00	641044.8717	1943669.3222
290	RPB	10+00.00	652582.4342	1926693.4763
291	RPB	11+00.00	652537.8770	1926782.9996
292	RPB	12+00.00	652496.2534	1926873.9143
293	RPB	13+00.00	652460.3109	1926967.2100
294	RPB	14+00.00	652430.9623	1927062.7851
295	RPB	15+00.00	652408.3522	1927160.1746
296	RPB	16+00.00	652392.5906	1927258.9041
297	RPB	17+00.00	652383.7545	1927358.4926
298	RPB	18+00.00	652381.8869	1927458.4548
299	RPB	19+00.00	652386.9968	1927558.3038
300	RPB	20+00.00	652398.8555	1927657.5821
301	RPB	21+00.00	652415.2857	1927756.2192
302	RPB	22+00.00	652433.0646	1927854.6259
303	RPB	23+00.00	652448.7679	1927953.3787
304	RPB	24+00.00	652458.8126	1928052.8502
305	RPB	25+00.00	652461.1378	1928152.7975
306	RPB	26+00.00	652455.6141	1928252.6190
307	RPB	27+00.00	652442.2754	1928351.6995
308	RPB	27+72.03	652428.8317	1928422.4621
309	RPC	10+00.00	652437.4090	1926718.9666
310	RPC	11+00.00	652388.8207	1926806.3690
311	RPC	12+00.00	652340.2324	1926893.7714
312	RPC	13+00.00	652291.4974	1926981.0918
313	RPC	14+00.00	652240.5255	1927067.1156
314	RPC	15+00.00	652184.0553	1927149.6102
315	RPC	16+00.00	652120.6860	1927226.9277
316	RPC	17+00.00	652050.8193	1927298.4280
317	RPC	18+00.00	651974.9867	1927363.5669
318	RPC	19+00.00	651893.7689	1927421.8538
319	RPC	20+00.00	651808.3726	1927473.8596
320	RPC	21+00.00	651721.0388	1927522.5680
321	RPC	22+00.00	651634.0186	1927571.8272
322	RPC	23+00.00	651550.3757	1927626.5659
323	RPC	24+00.00	651473.7644	1927690.7254
324	RPC	25+00.00	651406.1824	1927764.3353
325	RPC	26+00.00	651348.7867	1927846.1366
326	RPC	27+00.00	651302.5592	1927934.7298
327	RPC	28+00.00	651268.2909	1928028.5989
328	RPC	29+00.00	651246.5681	1928126.1379
329	RPC	30+00.00	651237.7582	1928225.6777
330	RPC	31+00.00	651240.2687	1928325.6149
331	RPC	32+00.00	651247.9898	1928425.3147
332	RPC	32+66.31	651253.4431	1928491.3958
333	RPCA	10+00.00	651249.5184	1928051.7691
334	RPCA	11+00.00	651223.7373	1928148.3833
335	RPCA	12+00.00	651191.4475	1928242.9803
336	RPCA	13+00.00	651147.8928	1928332.9176
337	RPCA	14+00.00	651092.9715	1928416.4004
338	RPCA	15+00.00	651027.6233	1928492.0003
339	RPCA	16+00.00	650952.9665	1928558.4239
340	RPCA	17+00.00	650870.6515	1928615.1220
341	RPCA	18+00.00	650784.3872	1928665.6902
342	RPCA	18+07.07	650778.2420	1928669.1788
343	LPB	10+00.00	651891.1840	1928292.6312
344	LPB	11+00.00	651927.9175	1928199.6555
345	LPB	12+00.00	651979.4457	1928114.2595
346	LPB	13+00.00	652055.4076	1928050.2073
347	LPB	14+00.00	652150.2376	1928020.6330
348	LPB	15+00.00	652249.0987	1928030.3217
349	LPB	16+00.00	652336.3827	1928077.7439
350	LPB	17+00.00	652398.3096	1928155.4127
351	LPB	18+00.00	652425.1275	1928251.0635
352	LPB	19+00.00	652419.6998	1928350.7111
353	LPB	19+68.71	652409.2061	1928418.6097
354	LPC	10+00.00	651718.0142	1928423.7102
355	LPC	11+00.00	651749.5287	1928328.8384
356	LPC	12+00.00	651764.8335	1928230.2818
357	LPC	13+00.00	651747.7021	1928132.4073
358	LPC	14+00.00	651693.9716	1928048.8585
359	LPC	15+00.00	651611.9470	1927992.8286
360	LPC	16+00.00	651514.5783	1927973.1635
361	LPC	17+00.00	651417.2379	1927992.9679
362	LPC	18+00.00	651335.2936	1928049.1151
363	LPC	19+00.00	651281.6827	1928132.7407
364	LPC	20+00.00	651263.3083	1928230.5474
365	LPC	21+00.00	651265.8277	1928330.4843
366	LPC	22+00.00	651270.5690	1928430.3718
367	LPC	22+54.69	651273.1619	1928484.9976
368	1RPBRE	10+00.00	641648.8637	1942606.5067
369	1RPBRE	11+00.00	641617.1718	1942701.3499
370	1RPBRE	12+00.00	641589.4621	1942797.4171
371	1RPBRE	13+00.00	641569.1671	1942895.3064
372	1RPBRE	14+00.00	641557.0905	1942994.5454
373	1RPBRE	15+00.00	641553.3162	1943094.4452
374	1RPBRE	16+00.00	641557.8703	1943194.3125
375	1RPBRE	17+00.00	641570.7212	1943293.4541
376	1RPBRE	18+00.00	641591.7798	1943391.1820
377	1RPBRE	19+00.00	641620.8999	1943486.8180
378	1RPBRE	20+00.00	641657.8794	1943579.6982
379	1RPBRE	21+00.00	641702.4617	1943669.1780
380	1RPBRE	22+00.00	641754.3359	1943754.6373
381	1RPBRE	23+00.00	641812.6649	1943835.8399
382	1RPBRE	24+00.00	641875.4863	1943913.6331
383	1RPBRE	25+00.00	641941.3019	1943988.9139
384	1RPBRE	26+00.00	642009.9303	1944061.6374
385	1RPBRE	27+00.00	642082.0179	1944130.9247
386	1RPBRE	28+00.00	642158.2949	1944195.5628
387	1RPBRE	29+00.00	642238.7263	1944254.9518
388	1RPBRE	30+00.00	642322.9528	1944308.8236
389	1RPBRE	31+00.00	642410.5964	1944356.9365
390	1RPBRE	32+00.00	642501.2641	1944399.0748
391	1RPBRE	32+00.30	642501.5368	1944399.1905

Florence & Hutcheson
CONSULTING ENGINEERS
5121 Kingdom Way, Suite 100 Raleigh, NC 27607
NC License No: F-0258

PROJECT REFERENCE NO.	SHEET NO.
R-2417AA	2

ROADWAY DESIGN ENGINEER
NORTH CAROLINA PROFESSIONAL SEAL 22606 ENGINEER DAVID C. WALLER
11-8-10

PAVEMENT DESIGN ENGINEER
NORTH CAROLINA PROFESSIONAL SEAL 13368 ENGINEER DON-CHI CHEN
11/10/10

PAVEMENT SCHEDULE

C1	PROP. APPROX. 1½" ASPHALT CONCRETE SURFACE COURSE TYPE S9.5B, AT AN AVERAGE RATE OF 168 LBS. PER SQ. YD.	E2	PROP. APPROX. 8" ASPHALT CONCRETE BASE COURSE, TYPE B25.0C, AT AN AVERAGE RATE OF 456 LBS. PER SQ. YD. IN EACH OF TWO LAYERS.
C2	PROP. APPROX. 3" ASPHALT CONCRETE SURFACE COURSE TYPE S9.5B, AT AN AVERAGE RATE OF 168 LBS. PER SQ. YD. IN EACH OF TWO LAYERS.	E3	PROP. VAR. DEPTH ASPHALT CONCRETE BASE COURSE, TYPE B25.0C, AT AN AVERAGE RATE OF 114 LBS. PER SQ. YD. PER 1" DEPTH. TO BE PLACED IN LAYERS NOT LESS THAN 3" IN DEPTH OR GREATER THAN 5½" IN DEPTH.
C3	PROP. APPROX. 1½" ASPHALT CONCRETE SURFACE COURSE TYPE S9.5C, AT AN AVERAGE RATE OF 168 LBS. PER SQ. YD.	J1	PROP. 6" AGGREGATE BASE COURSE.
C4	PROP. APPROX. 3" ASPHALT CONCRETE SURFACE COURSE TYPE S9.5C, AT AN AVERAGE RATE OF 168 LBS. PER SQ. YD. IN EACH OF TWO LAYERS.	J2	PROP. 8" AGGREGATE BASE COURSE.
C5	PROP. VAR. DEPTH ASPHALT CONCRETE SURFACE COURSE, TYPE S9.5C, AT AN AVERAGE RATE OF 112 LBS. PER SQ. YD. PER 1" DEPTH, TO BE PLACED IN LAYERS NOT TO EXCEED 2" IN DEPTH.	J3	PROP. 10" AGGREGATE BASE COURSE.
D1	PROP. APPROX. 2½" ASPHALT CONCRETE INTERMEDIATE COURSE, TYPE I19.0B, AT AN AVERAGE RATE OF 285 LBS. PER SQ. YD.	J4	PROP. VAR. DEPTH AGGREGATE BASE COURSE.
D2	NOT USED.	K1	BASE TO BE TREATED WITH LIME TO A DEPTH OF 8", AT A RATE OF 20 LBS. PER. SQ. YD. AS DIRECTED BY THE ENGINEER. OR BASE TO BE TREATED WITH CEMENT TO A DEPTH OF 7", AT A RATE OF 55 LBS. PER. SQ. YD. AS DIRECTED BY THE ENGINEER.
D3	PROP. VAR. DEPTH ASPHALT CONCRETE INTERMEDIATE COURSE, TYPE I19.0B, AT AN AVERAGE RATE OF 114 LBS. PER SQ. YD. PER 1" DEPTH, TO BE PLACED IN LAYERS NOT LESS THAN 2½" IN DEPTH OR GREATER THAN 4" IN DEPTH.		
D4	PROP. APPROX. 2½" ASPHALT CONCRETE INTERMEDIATE COURSE, TYPE I19.0C, AT AN AVERAGE RATE OF 285 LBS. PER SQ. YD.	P	PRIME COAT AT THE RATE OF .35 GAL. PER SQ. YD.
D5	PROP. APPROX. 3" ASPHALT CONCRETE INTERMEDIATE COURSE, TYPE I19.0C, AT AN AVERAGE RATE OF 342 LBS. PER SQ. YD.	R1	2'-6" CONCRETE CURB AND GUTTER.
D6	PROP. APPROX. 3½" ASPHALT CONCRETE INTERMEDIATE COURSE, TYPE I19.0C, AT AN AVERAGE RATE OF 399 LBS. PER SQ. YD.	R2	PROP. 5" MONOLITHIC CONCRETE ISLAND (SURFACE MOUNTED)
D7	PROP. APPROX. 4" ASPHALT CONCRETE INTERMEDIATE COURSE, TYPE I19.0C, AT AN AVERAGE RATE OF 456 LBS. PER SQ. YD.	R3	PROP. SHOULDER BERM GUTTER.
D8	PROP. VAR. DEPTH ASPHALT CONCRETE INTERMEDIATE COURSE, TYPE I19.0C, AT AN AVERAGE RATE OF 114 LBS. PER SQ. YD. PER 1" DEPTH, TO BE PLACED IN LAYERS NOT LESS THAN 2½" IN DEPTH OR GREATER THAN 4" IN DEPTH.	T	EARTH MATERIAL.
E1	PROP. APPROX. 3" ASPHALT CONCRETE BASE COURSE, TYPE B25.0C, AT AN AVERAGE RATE OF 342 LBS. PER SQ. YD.	U	EXISTING PAVEMENT.
		W	VARIABLE DEPTH ASPHALT PAVEMENT (SEE STANDARD WEDGING DETAIL)

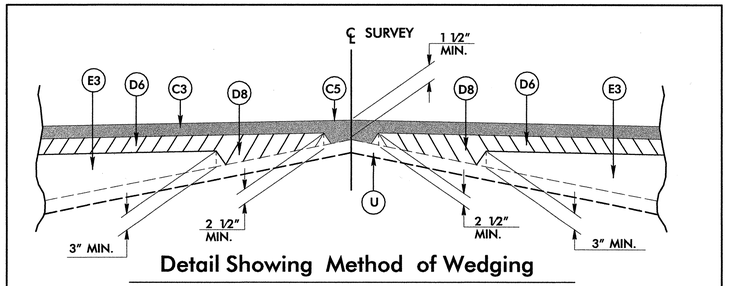

Detail Showing Method of Wedging

Detail Showing Milling Existing Pavement for –L–

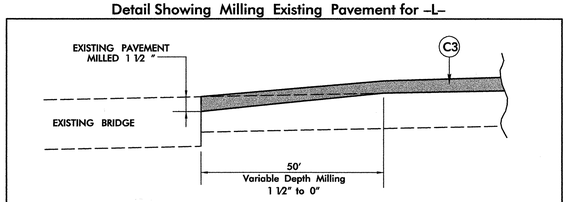

–L –STA. 9+69.00 to 10+19.00 Left & Right

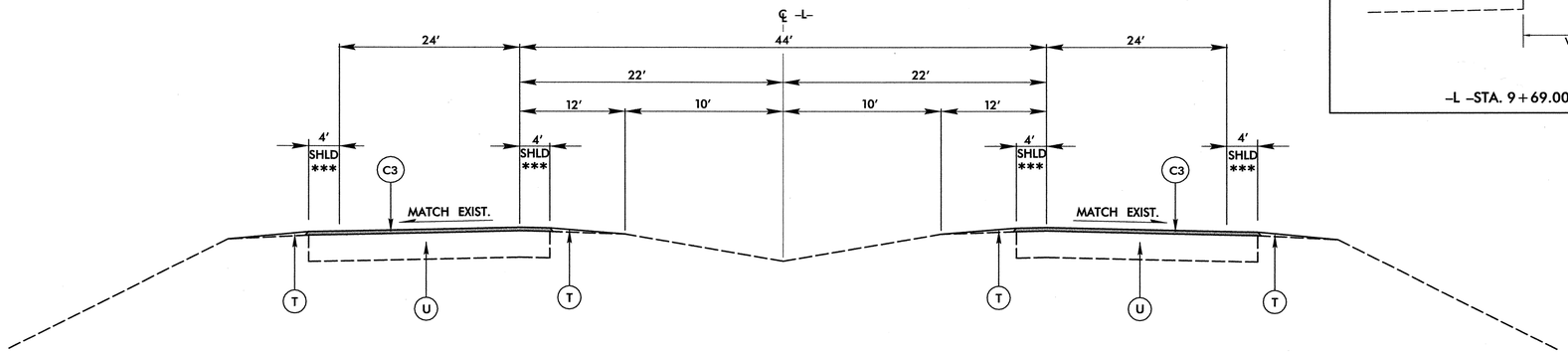

USE TYPICAL SECTION NO. 1 AS FOLLOWS:

–L– STA. 9+69.00 TO –L– STA 12+50.00

TYPICAL SECTION NO. 1

–L–LINE

*** MILLED RUMBLE STRIPS REQUIRED. SEE STD. 665.01.

6/2/99

11/8/2010
E:\Roadway\Proj\r2417aa_rdy_typ.dgn
florence & hutcheson, inc.

Florence & Hutcheson
CONSULTING ENGINEERS
5121 Kingdom Way, Suite 100 Raleigh, NC 27607
NC License No: F-0258

PROJECT REFERENCE NO.	SHEET NO.
R-2417AA	2-A

ROADWAY DESIGN ENGINEER
NORTH CAROLINA PROFESSIONAL SEAL 22606 ENGINEER DAVID C. WALLER
11-8-10

PAVEMENT DESIGN ENGINEER
NORTH CAROLINA PROFESSIONAL SEAL 13368 ENGINEER DONG-CHI CHEN
11/10/10

(X) WHEN THESE DISTANCES INDICATE SLOPES OUTSIDE THE LIMITS 2:1 TO 6:1, THE DISTANCE BECOMES VARIABLE AND THE MAXIMUM OR MINIMUM SLOPE MAINTAINED.

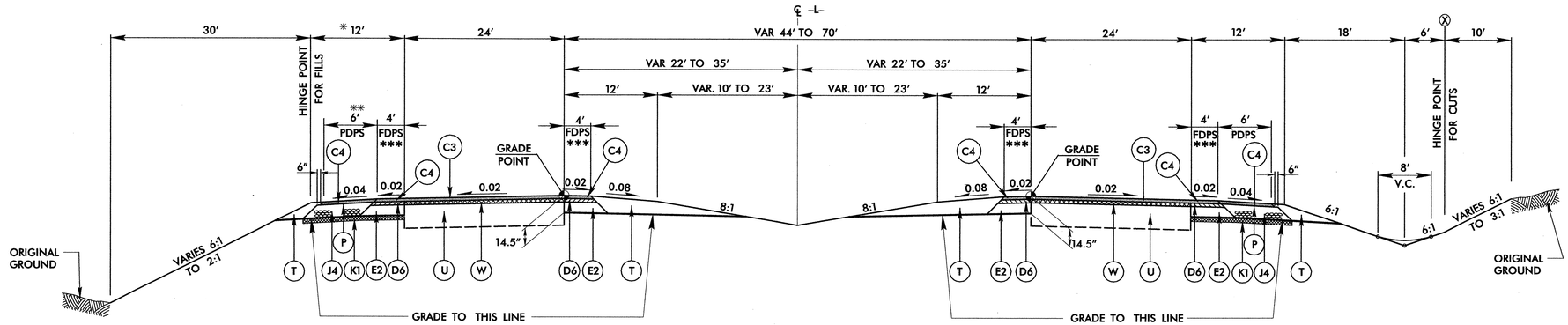

USE TYPICAL SECTION NO. 2 AS FOLLOWS:

-L- STA. 12+50.00 TO -L- STA 36+50.00

TYPICAL SECTION NO. 2

-L-LINE

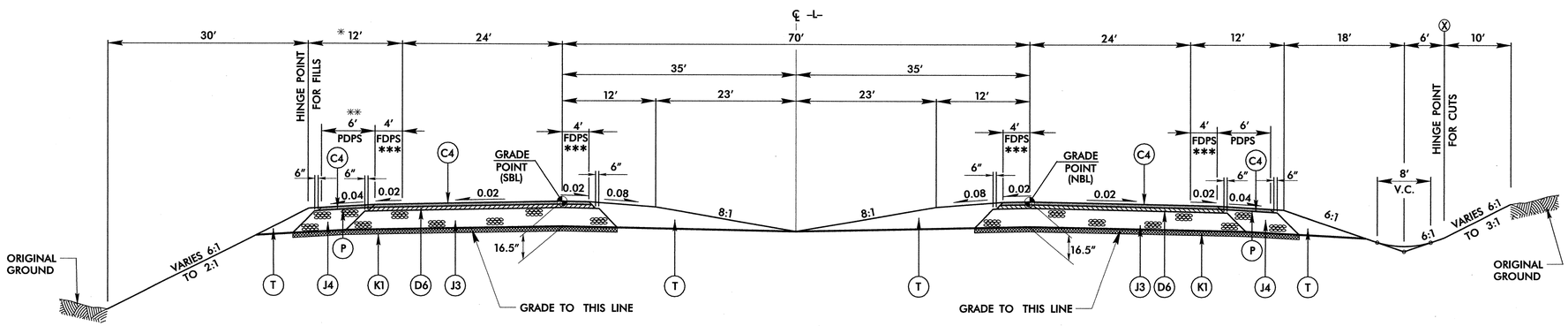

USE TYPICAL SECTION NO. 3 AS FOLLOWS:

-L- STA. 36+50.00 TO -L- STA 51+08.00 (BEGIN BRIDGE)
-L- STA. 53+08.00 (NBL) (END BRIDGE) TO -L- STA 135+30.00 (NBL) (BEGIN BRIDGE)
-L- STA. 53+08.00 (SBL) (END BRIDGE) TO -L- STA 136+94.00 (SBL) (BEGIN BRIDGE)
-L- STA. 137+55.00 (NBL) (END BRIDGE) TO -L- STA 208+33.78 (NBL) L.B.
-L- STA. 139+19.00 (SBL) (END BRIDGE) TO -L- STA 208+33.78 (SBL) L.B.

TYPICAL SECTION NO. 3

-L-LINE

PAVEMENT SCHEDULE	
C1	1 1/2" S9.5B
C2	3" S9.5B
C3	1 1/2 " S9.5C
C4	3" S9.5C
C5	VAR. DEPTH S9.5C
D1	2 1/2" I19.0B
D2	NOT USED
D3	VAR. DEPTH I19.0B
D4	2 1/2" I19.0C
D5	3" I19.0C
D6	3 1/2 " I19.0C
D7	4" I19.0C
D8	VAR. DEPTH I19.0C
E1	3" B25.0C
E2	8" B25.0C
E3	VAR. DEPTH B25.0C
J1	6" ABC
J2	8" ABC
J3	10" ABC
J4	VAR. DEPTH ABC
K1	8" LIME STABILIZATION OR 7" CEMENT STABILIZATION
P	PRIME COAT
R1	2'-6" CURB & GUTTER
R2	5" MONOLITHIC CONC ISLAND (KEYED IN)
R3	CONC. SHOULDER BERM GUTTER
T	EARTH MATERIAL
U	EXIST. PAVEMENT
W	WEDGING

NOTE: SEE SHEET 2 FOR DETAILED DESCRIPTION OF PAVEMENT SCHEDULE

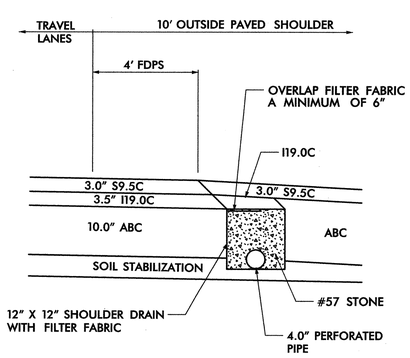

SHOULDER DRAIN DETAIL

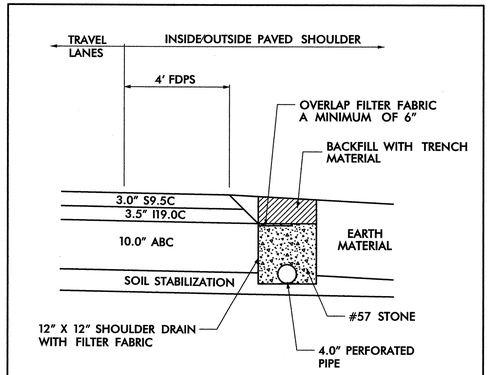

SHOULDER DRAIN DETAIL

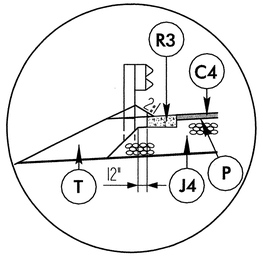

INSET SHOWING SHOULDER BERM GUTTER

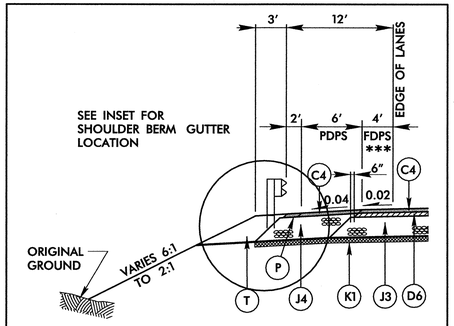

DETAIL SHOWING PAVED SHOULDER IN AREA OF GUARDRAIL

NOTES:

TYPICAL SECTIONS SHOWN ARE FOR TANGENT SECTIONS ONLY. SEE PLANS AND STANDARD DRAWINGS FOR SUPERELEVATION DETAILS AND LANE ADDITIONS/WIDENING AT INTERSECTIONS. MAXIMUM ROLLOVER = 0.05.

WHEN WEDGING SURFACE AND INTERMEDIATE COURSES, DO NOT INTERCHANGE COURSE TYPES.

ALL PAVEMENT EDGE SLOPES ARE 1:1 UNLESS SHOWN OTHERWISE.

ALL SUBGRADE SLOPES PARALLEL TO PAVEMENT SURFACE SLOPES

FDPS – FULL DEPTH PAVED SHOULDER
PDPS – PARTIAL DEPTH PAVED SHOULDER
* ADD 3'-0" WITH GUARDRAIL
** IN AREA OF GUARDRAIL, PAVE TO FACE OF GUARDRAIL. (SEE DETAIL)
*** MILLED RUMBLE STRIPS REQUIRED. SEE STD. 665.01.

6/2/99
11/8/2010
R:\Roadway\Proj\r2417aa_rdy_typ.dgn
Florence & Hutcheson, Inc.

6/2/99

Florence & Hutcheson
CONSULTING ENGINEERS
5121 Kingdom Way, Suite 100 Raleigh, NC 27607
NC License No: F-0258

PROJECT REFERENCE NO.	SHEET NO.
R-2417AA	2-B

ROADWAY DESIGN ENGINEER
NORTH CAROLINA PROFESSIONAL SEAL 22606 ENGINEER DAVID C. WALLER
11-8-10

PAVEMENT DESIGN ENGINEER
NORTH CAROLINA PROFESSIONAL SEAL 13368 ENGINEER DON-CHI CHEN
11/10/10

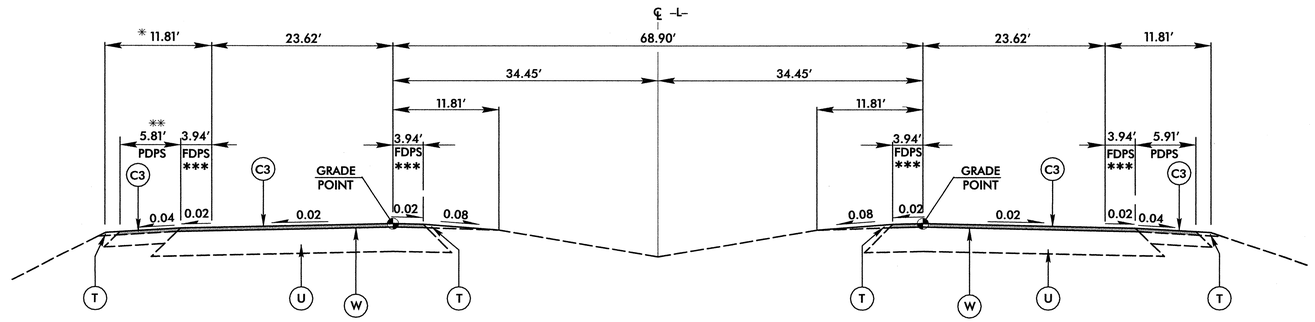

USE TYPICAL SECTION NO. 4 AS FOLLOWS:

-L- STA. 227+35.96 L.A. TO -L- STA 236+86.30 LT.
-L- STA. 227+35.96 L.A. TO -L- STA 232+32.52 RT.

TYPICAL SECTION NO. 4

-L-LINE

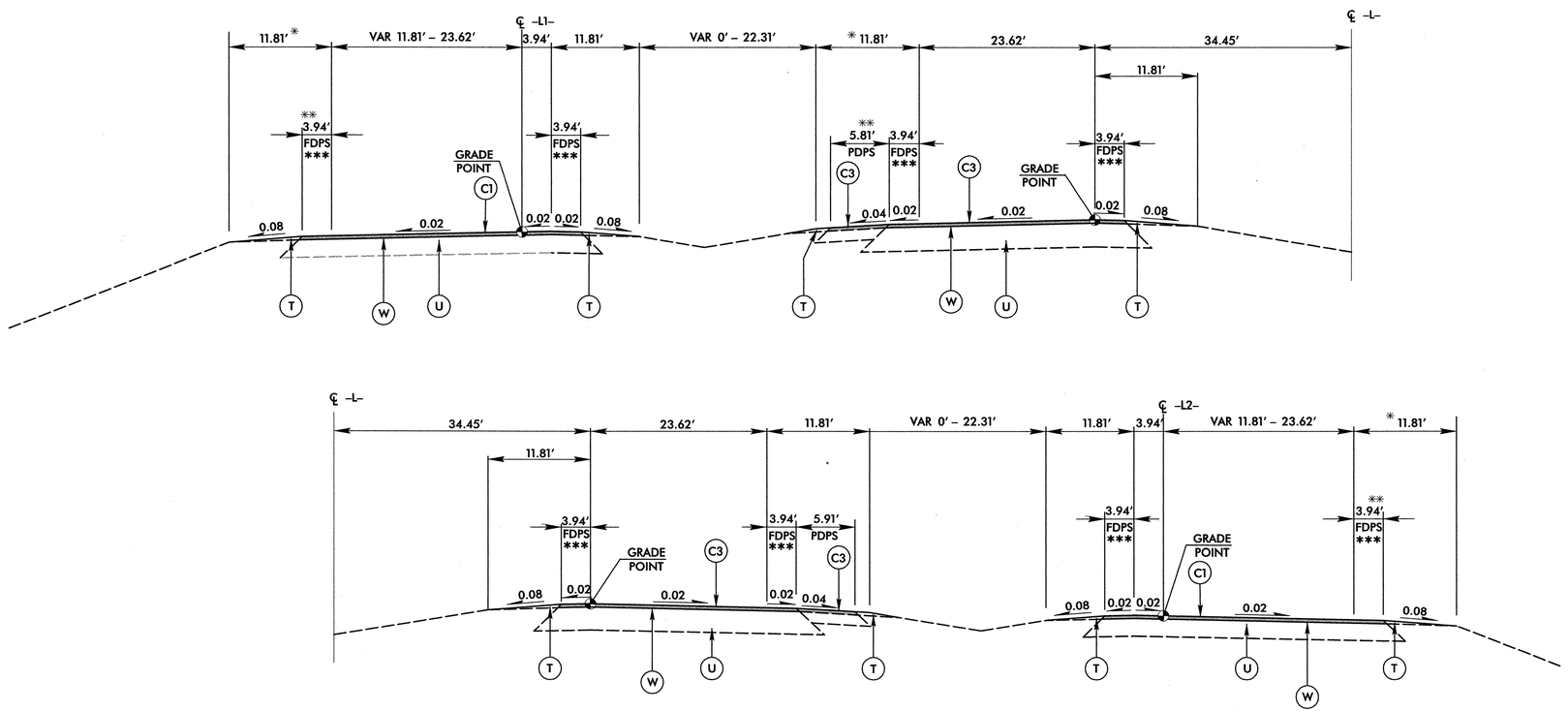

USE TYPICAL SECTION NO. 5 AS FOLLOWS:

-L- STA. 236+86.30 L.A. TO -L- STA 258+77.96 LT.
-L- STA. 232+32.52 L.A. TO -L- STA 258+77.96 RT.

TYPICAL SECTION NO. 5

-L-LINE

PAVEMENT SCHEDULE	
C1	1 1/2" S9.5B
C2	3" S9.5B
C3	1 1/2 " S9.5C
C4	3" S9.5C
C5	VAR. DEPTH S9.5C
D1	2 1/2" I19.0B
D2	NOT USED
D3	VAR. DEPTH I19.0B
D4	2 1/2" I19.0C
D5	3" I19.0C
D6	3 1/2 " I19.0C
D7	4" I19.0C
D8	VAR. DEPTH I19.0C
E1	3" B25.0C
E2	8" B25.0C
E3	VAR. DEPTH B25.0C
J1	6" ABC
J2	8" ABC
J3	10" ABC
J4	VAR. DEPTH ABC
K1	8" LIME STABILIZATION OR 7" CEMENT STABILIZATION
P	PRIME COAT
R1	2'-6" CURB & GUTTER
R2	5" MONOLITHIC CONC ISLAND (KEYED IN)
	CONC. SHOULDER BERM GUTTER
T	EARTH MATERIAL
U	EXIST. PAVEMENT
W	WEDGING

NOTE: SEE SHEET 2 FOR DETAILED DESCRIPTION OF PAVEMENT SCHEDULE

NOTES:

TYPICAL SECTIONS SHOWN ARE FOR TANGENT SECTIONS ONLY. SEE PLANS AND STANDARD DRAWINGS FOR SUPERELEVATION DETAILS AND LANE ADDITIONS/WIDENING AT INTERSECTIONS. MAXIMUM ROLLOVER = 0.05.

WHEN WEDGING SURFACE AND INTERMEDIATE COURSES, DO NOT INTERCHANGE COURSE TYPES.

ALL PAVEMENT EDGE SLOPES ARE 1:1 UNLESS SHOWN OTHERWISE.

ALL SUBGRADE SLOPES PARALLEL TO PAVEMENT SURFACE SLOPES

FDPS – FULL DEPTH PAVED SHOULDER
PDPS – PARTIAL DEPTH PAVED SHOULDER
* ADD 3'-0" WITH GUARDRAIL
** IN AREA OF GUARDRAIL, PAVE TO FACE OF GUARDRAIL. (SEE DETAIL)
*** MILLED RUMBLE STRIPS REQUIRED. SEE STD. 665.01.

11/8/2010
H:\Roadway\Proj\2417aa_rdy_typ.dgn
Florence & Hutcheson, Inc.

6/2/99

Ⓧ WHEN THESE DISTANCES INDICATE SLOPES OUTSIDE THE LIMITS 2:1 TO 6:1, THE DISTANCE BECOMES VARIABLE AND THE MAXIMUM OR MINIMUM SLOPE MAINTAINED.

Florence & Hutcheson
CONSULTING ENGINEERS
5121 Kingdom Way, Suite 100 Raleigh, NC 27607
NC License No: F-0258

PROJECT REFERENCE NO.	SHEET NO.
R-2417AA	2-C

ROADWAY DESIGN ENGINEER: NORTH CAROLINA PROFESSIONAL SEAL 22606 ENGINEER DAVID C. WALLER — 11-9-10

PAVEMENT DESIGN ENGINEER: NORTH CAROLINA PROFESSIONAL SEAL 13368 ENGINEER DON-CHI CHEN — 11/10/10

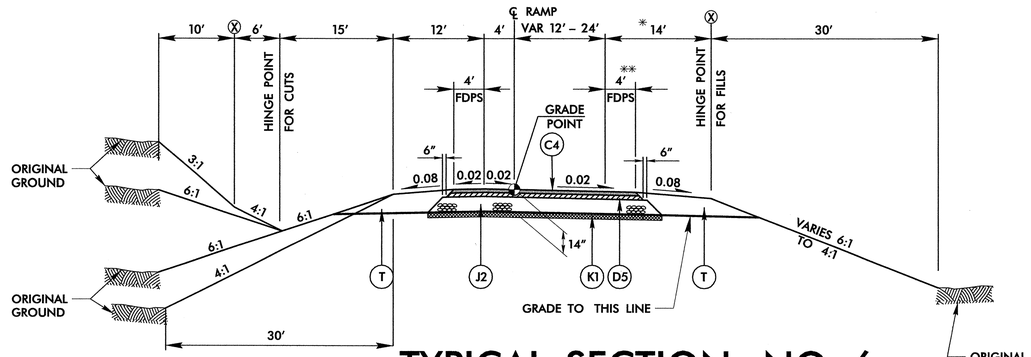

TYPICAL SECTION NO. 6

INTERCHANGE RAMPS

USE TYPICAL SECTION NO. 6 AS FOLLOWS:

–RPB– STA. 14+00.00 TO –RPB– STA 27+40.03
–RPC– STA. 15+10.29 TO –RPC– STA 32+33.41
–RPCA– STA. 10+00.00 TO –RPCA– STA 15+77.10

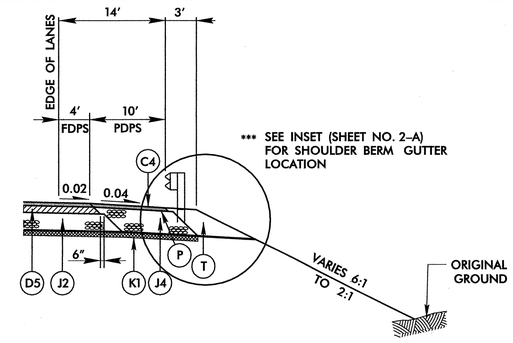

DETAIL SHOWING PAVED SHOULDER IN AREA OF GUARDRAIL

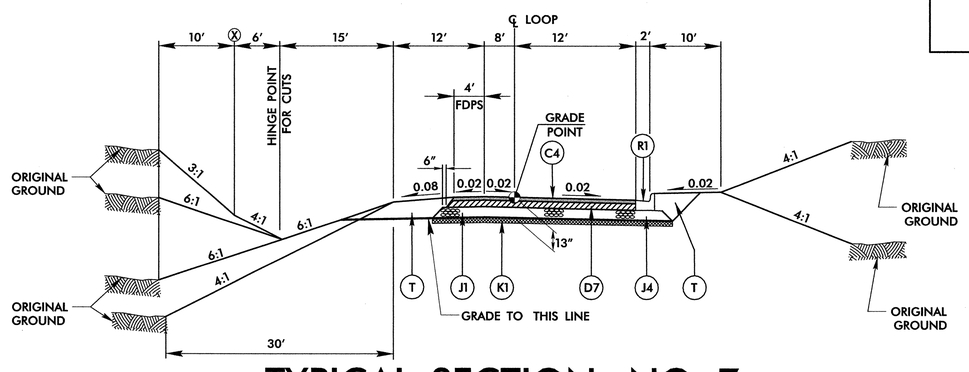

TYPICAL SECTION NO. 7

INTERCHANGE LOOPS

USE TYPICAL SECTION NO. 7 AS FOLLOWS:

–LPB– STA. 13+19.28 TO –LPB– STA 17+91.70
–LPC– STA. 12+28.92 TO –LPC– STA 19+20.82

PAVEMENT SCHEDULE	
C1	1 1/2″ S9.5B
C2	3″ S9.5B
C3	1 1/2 ″ S9.5C
C4	3″ S9.5C
C5	VAR. DEPTH S9.5C
D1	2 1/2″ I19.0B
D2	NOT USED
D3	VAR. DEPTH I19.0B
D4	2 1/2″ I19.0C
D5	3″ I19.0C
D6	3 1/2 ″ I19.0C
D7	4″ I19.0C
D8	VAR. DEPTH I19.0C
E1	3″ B25.0C
E2	8″ B25.0C
E3	VAR. DEPTH B25.0C
J1	6″ ABC
J2	8″ ABC
J3	10″ ABC
J4	VAR. DEPTH ABC
K1	8″ LIME STABILIZATION OR 7″ CEMENT STABILIZATION
P	PRIME COAT
R1	2′–6″ CURB & GUTTER
R2	5″ MONOLITHIC CONC ISLAND (KEYED IN)
	CONC. SHOULDER BERM GUTTER
T	EARTH MATERIAL
U	EXIST. PAVEMENT
W	WEDGING

NOTE: SEE SHEET 2 FOR DETAILED DESCRIPTION OF PAVEMENT SCHEDULE

NOTES:

TYPICAL SECTIONS SHOWN ARE FOR TANGENT SECTIONS ONLY. SEE PLANS AND STANDARD DRAWINGS FOR SUPERELEVATION DETAILS AND LANE ADDITIONS/WIDENING AT INTERSECTIONS. MAXIMUM ROLLOVER = 0.05.

WHEN WEDGING SURFACE AND INTERMEDIATE COURSES, DO NOT INTERCHANGE COURSE TYPES.

ALL PAVEMENT EDGE SLOPES ARE 1:1 UNLESS SHOWN OTHERWISE.

ALL SUBGRADE SLOPES PARALLEL TO PAVEMENT SURFACE SLOPES

FDPS – FULL DEPTH PAVED SHOULDER
PDPS – PARTIAL DEPTH PAVED SHOULDER
* ADD 3′–0″ WITH GUARDRAIL
** IN AREA OF GUARDRAIL, PAVE TO FACE OF GUARDRAIL. (SEE DETAIL)
*** MILLED RUMBLE STRIPS REQUIRED. SEE STD. 665.01.

11/8/2010
H:\Roadway\Proj\r2417aa_rdy_typ.dgn
Florence & Hutcheson, Inc.

6/2/99

Florence & Hutcheson
CONSULTING ENGINEERS
5121 Kingdom Way, Suite 100 Raleigh, NC 27607
NC License No: F-0258

PROJECT REFERENCE NO.	SHEET NO.
R-2417AA	2-D

ROADWAY DESIGN ENGINEER — NORTH CAROLINA PROFESSIONAL SEAL 22606 ENGINEER DAVID C. WALLER — 11-8-10

PAVEMENT DESIGN ENGINEER — NORTH CAROLINA PROFESSIONAL SEAL 13768 ENGINEER CHI CHEN — 11/10/10

WHEN THESE DISTANCES INDICATE SLOPES OUTSIDE THE LIMITS 2:1 TO 6:1, THE DISTANCE BECOMES VARIABLE AND THE MAXIMUM OR MINIMUM SLOPE MAINTAINED.

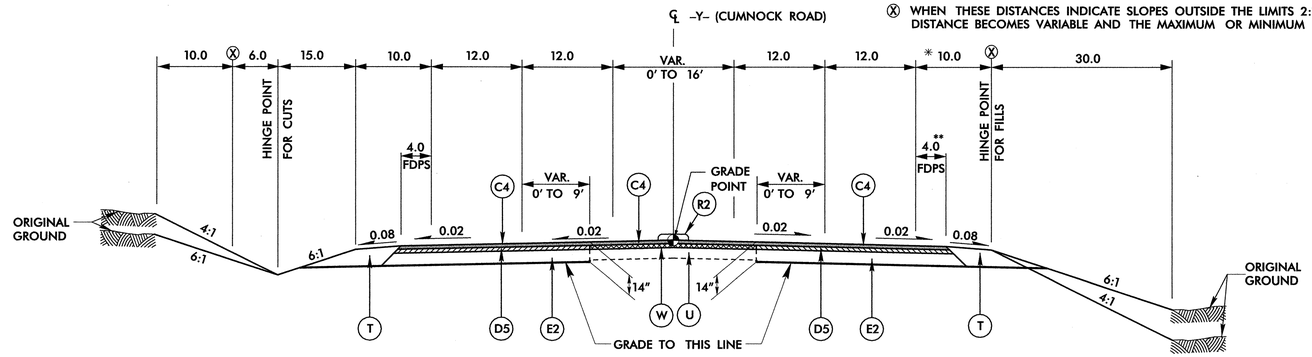

TYPICAL SECTION NO. 8

CUMNOCK ROAD (SR 1400)

USE TYPICAL SECTION NO. 8 AS FOLLOWS:

-Y- STA. 11+50.00 TO -Y- STA 21+00.00

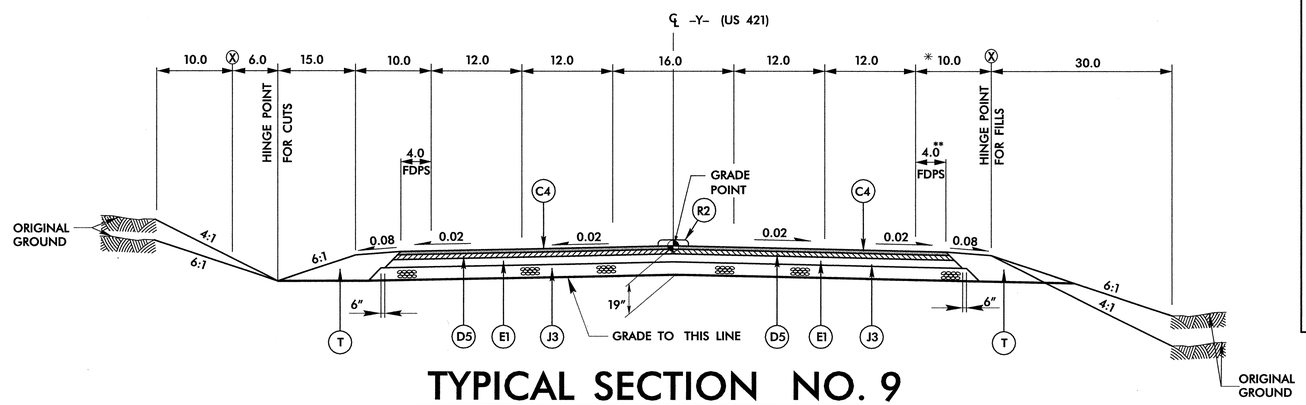

TYPICAL SECTION NO. 9

US 421 (BOONE TRAIL)

USE TYPICAL SECTION NO. 9 AS FOLLOWS:

-Y- STA. 21+00.00 TO -Y- STA 30+35.26 (BEGIN BRIDGE)
-Y- STA. 33+15.01 (END BRIDGE) TO -Y- STA 40+00.00

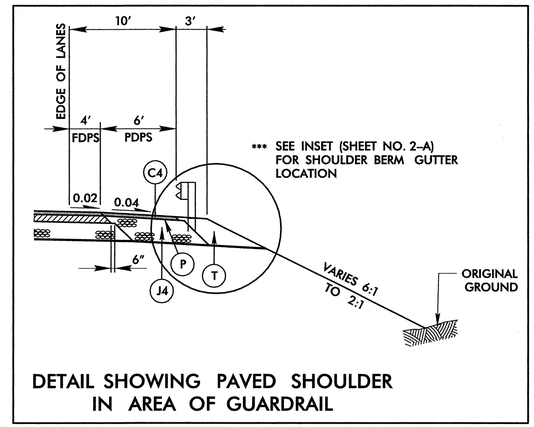

DETAIL SHOWING PAVED SHOULDER IN AREA OF GUARDRAIL

Detail Showing Milling Existing Pavement for -Y-

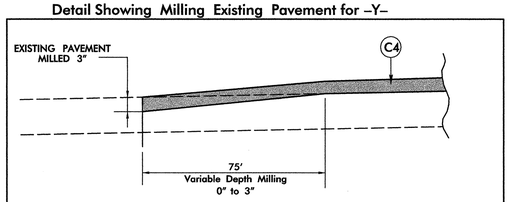

-Y -STA. 50+50.00 to 51+25.00 Left & Right

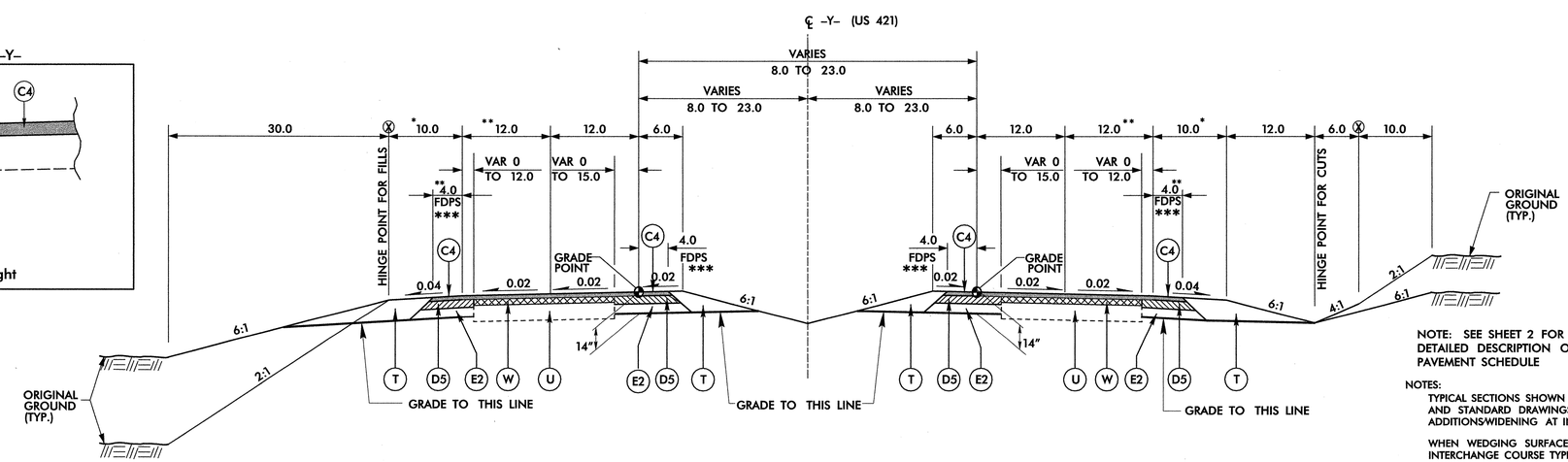

TYPICAL SECTION NO. 10

US 421 (BOONE TRAIL)

USE TYPICAL SECTION NO. 10 AS FOLLOWS:

-Y- STA. 40+00.00 TO -Y- STA 51+25.00

NOTE: FROM -Y- STA 49+00 TO 51+25 OVERLAY WITH 3" S9.5C

PAVEMENT SCHEDULE	
C1	1 1/2" S9.5B
C2	3" S9.5B
C3	1 1/2 " S9.5C
C4	3" S9.5C
C5	VAR. DEPTH S9.5C
D1	2 1/2" I19.0B
D2	NOT USED
D3	VAR. DEPTH I19.0B
D4	2 1/2" I19.0C
D5	3" I19.0C
D6	3 1/2 " I19.0C
D7	4" I19.0C
D8	VAR. DEPTH I19.0C
E1	3" B25.0C
E2	8" B25.0C
E3	VAR. DEPTH B25.0C
J1	6" ABC
J2	8" ABC
J3	10" ABC
J4	VAR. DEPTH ABC
K1	8" LIME STABILIZATION OR 7" CEMENT STABILIZATION
P	PRIME COAT
R1	2'-6" CURB & GUTTER
R2	5" MONOLITHIC CONC ISLAND (KEYED IN)
	CONC. SHOULDER BERM GUTTER
T	EARTH MATERIAL
U	EXIST. PAVEMENT
W	WEDGING

NOTE: SEE SHEET 2 FOR DETAILED DESCRIPTION OF PAVEMENT SCHEDULE

NOTES:

TYPICAL SECTIONS SHOWN ARE FOR TANGENT SECTIONS ONLY. SEE PLANS AND STANDARD DRAWINGS FOR SUPERELEVATION DETAILS AND LANE ADDITIONS/WIDENING AT INTERSECTIONS. MAXIMUM ROLLOVER = 0.05.

WHEN WEDGING SURFACE AND INTERMEDIATE COURSES, DO NOT INTERCHANGE COURSE TYPES.

ALL PAVEMENT EDGE SLOPES ARE 1:1 UNLESS SHOWN OTHERWISE.

ALL SUBGRADE SLOPES PARALLEL TO PAVEMENT SURFACE SLOPES

FDPS – FULL DEPTH PAVED SHOULDER
PDPS – PARTIAL DEPTH PAVED SHOULDER
* ADD 3'-0" WITH GUARDRAIL
** IN AREA OF GUARDRAIL, PAVE TO FACE OF GUARDRAIL. (SEE DETAIL)
*** MILLED RUMBLE STRIPS REQUIRED. SEE STD. 665.01.

11/8/2010
H:\Roadway\Proj\R2417aa_rdy_typ.dgn
Florence & Hutcheson, Inc.

6/2/99

Florence & Hutcheson
CONSULTING ENGINEERS
5121 Kingdom Way, Suite 100 Raleigh, NC 27607
NC License No: F-0258

PROJECT REFERENCE NO.	SHEET NO.
R-2417AA	2-E

ROADWAY DESIGN ENGINEER
NORTH CAROLINA PROFESSIONAL SEAL 22606 ENGINEER DAVID C. WALLER
11-5-10

PAVEMENT DESIGN ENGINEER
NORTH CAROLINA PROFESSIONAL SEAL 13368 ENGINEER DAVID CHI CHEN
11/10/10

Ⓧ WHEN THESE DISTANCES INDICATE SLOPES OUTSIDE THE LIMITS 2:1 TO 6:1, THE DISTANCE BECOMES VARIABLE AND THE MAXIMUM OR MINIMUM SLOPE MAINTAINED.

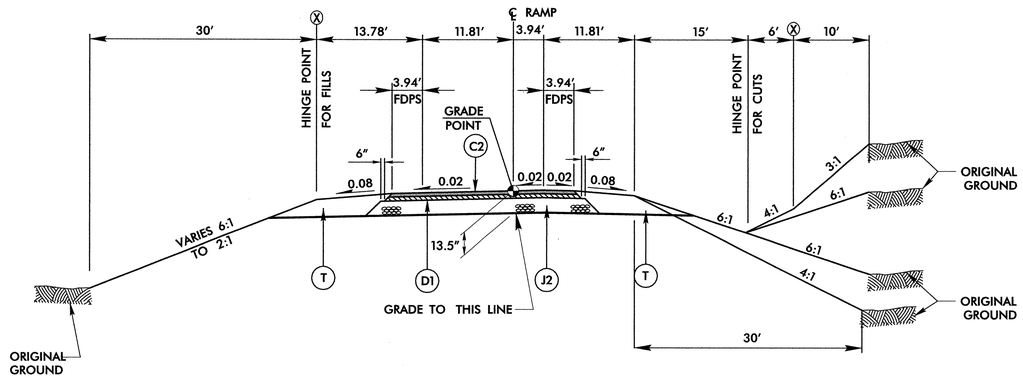

USE TYPICAL SECTION NO. 11 AS FOLLOWS:

–Y1RPB– STA. 10+00.00 TO –Y1RPB– STA 30+50.00

TYPICAL SECTION NO. 11

INTERCHANGE RAMPS (–Y1–)

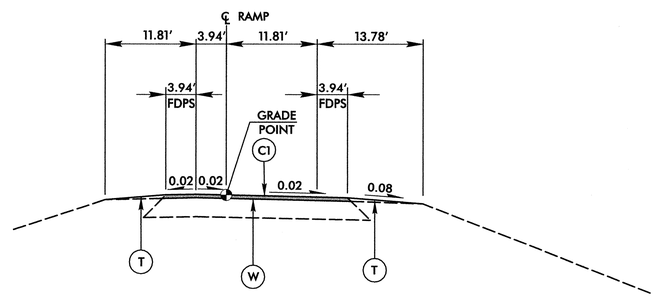

USE TYPICAL SECTION NO. 12 AS FOLLOWS:

–Y1RPC– STA. 0+00.00 TO –Y1RPC– STA 28+87.13

TYPICAL SECTION NO. 12

INTERCHANGE RAMPS (–Y1–)

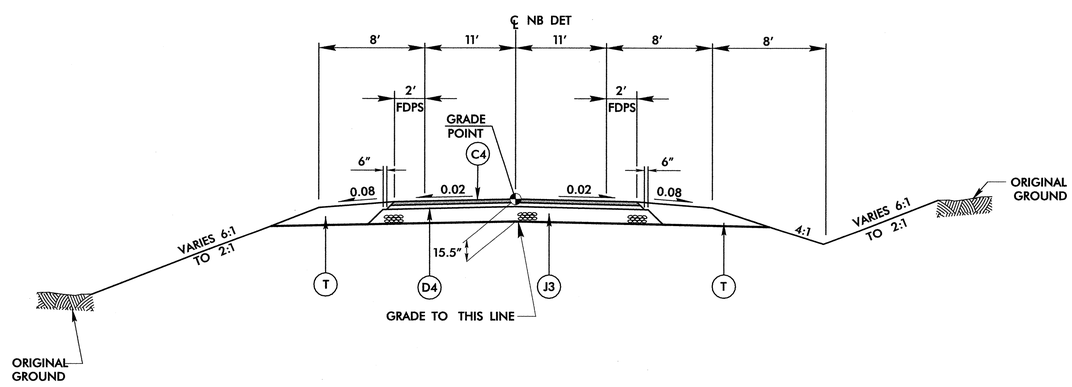

USE TYPICAL SECTION NO. 13 AS FOLLOWS:

–NB_DET– STA. 10+00.00 TO –NB_DET– STA 39+98.60
–TEMPCONN– STA. 10+00.00 TO –TEMPCONN– STA 12+53.89
(SEE PLANS FOR WIDTH)

TYPICAL SECTION NO. 13

TEMPORARY DETOUR (–NB_DET–)

PAVEMENT SCHEDULE	
C1	1 1/2″ S9.5B
C2	3″ S9.5B
C3	1 1/2 ″ S9.5C
C4	3″ S9.5C
C5	VAR. DEPTH S9.5C
D1	2 1/2″ I19.0B
D2	NOT USED
D3	VAR. DEPTH I19.0B
D4	2 1/2″ I19.0C
D5	3″ I19.0C
D6	3 1/2 ″ I19.0C
D7	4″ I19.0C
D8	VAR. DEPTH I19.0C
E1	3″ B25.0C
E2	8″ B25.0C
E3	VAR. DEPTH B25.0C
J1	6″ ABC
J2	8″ ABC
J3	10″ ABC
J4	VAR. DEPTH ABC
K1	8″ LIME STABILIZATION OR 7″ CEMENT STABILIZATION
P	PRIME COAT
R1	2′–6″ CURB & GUTTER
R2	5″ MONOLITHIC CONC ISLAND (KEYED IN)
	CONC. SHOULDER BERM GUTTER
T	EARTH MATERIAL
U	EXIST. PAVEMENT
W	WEDGING

NOTE: SEE SHEET 2 FOR DETAILED DESCRIPTION OF PAVEMENT SCHEDULE

NOTES:

TYPICAL SECTIONS SHOWN ARE FOR TANGENT SECTIONS ONLY. SEE PLANS AND STANDARD DRAWINGS FOR SUPERELEVATION DETAILS AND LANE ADDITIONS/WIDENING AT INTERSECTIONS. MAXIMUM ROLLOVER = 0.05.

WHEN WEDGING SURFACE AND INTERMEDIATE COURSES, DO NOT INTERCHANGE COURSE TYPES.

ALL PAVEMENT EDGE SLOPES ARE 1:1 UNLESS SHOWN OTHERWISE.

ALL SUBGRADE SLOPES PARALLEL TO PAVEMENT SURFACE SLOPES

FDPS – FULL DEPTH PAVED SHOULDER
PDPS – PARTIAL DEPTH PAVED SHOULDER
* ADD 3′–0″ WITH GUARDRAIL
** IN AREA OF GUARDRAIL, PAVE TO FACE OF GUARDRAIL. (SEE DETAIL)
*** MILLED RUMBLE STRIPS REQUIRED. SEE STD. 665.01.

11/8/2010
H:\Roadway\Proj\r-2417aa_rdy_typ.dgn
Florence & Hutcheson, Inc.

8/17/99

REVISIONS

Florence & Hutcheson
CONSULTING ENGINEERS
5121 Kingdom Way, Suite 100 Raleigh, NC 27607
NC License No: F-0258

PROJECT REFERENCE NO.	SHEET NO.
R-2417AA	2-F
R/W SHEET NO.	

ROADWAY DESIGN ENGINEER: NORTH CAROLINA PROFESSIONAL SEAL 22606 ENGINEER DAVID C. WALLER 9-13-10

HYDRAULICS ENGINEER: NORTH CAROLINA PROFESSIONAL SEAL 021162 ENGINEER WILLIAM HERBERT TURNER, III 9-23-10

DETAIL A
LATERAL 'V' DITCH
(Not to Scale)

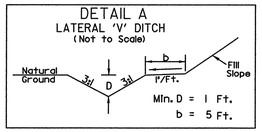

SHEET	RDWY	STATION - STATION	SIDE
4	-L-	10+65 - 14+50	RT
6	-RPC-	30+05 - 31+57	LT
11	-L-	105+74 - 106+50	LT
12	-L-	124+50 - 127+00	LT
12,13	-L-	127+00 - 130+00	LT
19	-L-	206+00 - 207+50	LT

DETAIL B
LATERAL 'V' DITCH
(Not to Scale)

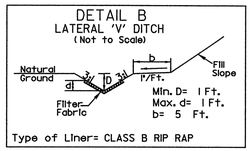

Type of Liner= CLASS B RIP RAP

SHEET	RDWY	STATION - STATION	SIDE
6	-RPC-	24+00 - 24+50	LT
6	-Y-	26+13 - 26+54	RT
18	-L-	201+00 - 202+60	RT

DETAIL C
SPECIAL LATERAL 'V' DITCH
(Not to Scale)

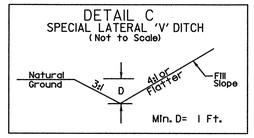

SHEET	RDWY	STATION - STATION	SIDE
4,5	-L-	14+50 - 16+00	RT

DETAIL D
LATERAL BASE DITCH
(Not to Scale)

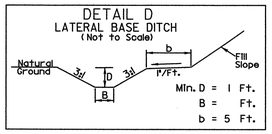

SHEET	RDWY	STATION - STATION	SIDE	BASE
5	-L-	22+80 - 23+30	LT	2'
6	-LPB-	16+50 - 18+50	RT	2'
6&7	-L-	52+50 - 54+85	LT	3'
11	-L-	103+50 - 105+57	LT	2'
13	-L-	130+00 - 135+00	LT	2'
13,14	-L-	141+00 - 142+55	LT	2'
14	-L-	142+70 - 145+00	LT	2'

DETAIL E
LATERAL BASE DITCH
(Not to Scale)

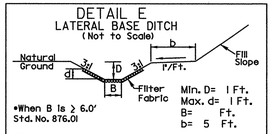

*When B is ≥ 6.0' Std. No. 876.01

Type of Liner= CLASS B RIP RAP

SHEET	RDWY	STATION - STATION	SIDE	BASE
5	-L-	20+50 - 22+75	LT	2'
6	-RPC-	22+50 - 24+00	LT	2'

DETAIL F
STANDARD BASE DITCH
(Not to Scale)

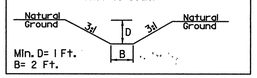

SHEET	RDWY	STATION - STATION	SIDE	MIN. D	BASE
7	-L-	62+50	RT	1'	2'
9	-L-	88+20	LT	3'	4'
13	-L-	130+00	RT	1'	18'
15	-L-	160+28	RT	1'	4' TO 18'
16	-L-	169+25	RT	1'	4'
18	-L-	194+60 - 195+00	LT	1'	2'
18	-L-	195+00 - 195+90	LT	1'	2'
24	-Y-	22+50	RT	1'	3'

DETAIL G
STANDARD BASE DITCH
(Not to Scale)

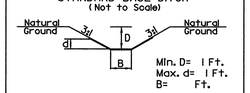

Type of Liner= PSRM

SHEET	RDWY	STATION - STATION	SIDE	BASE
10	-L-	100+00	RT	4' TO 30'

DETAIL H
SPECIAL CUT DITCH
(Not to Scale)

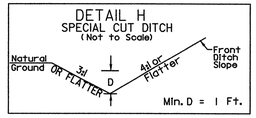

SHEET	RDWY	STATION - STATION	SIDE	BACK SLOPE
2-M	-NBDET-	22+50 - 23+00	LT	3:1
2-M	-NBDET-	22+45 - 23+00	RT	3:1
4,5	-L-	12+10 - 16+00	LT	6:1
6	-RPC-	16+50 - 17+50	LT	4:1
6	-RPC-	18+00 - 21+00	LT	4:1
6	-RPCA-	10+75 - 13+00	RT	6:1
6	-L-	35+00 - 38+00	LT	3:1
6	-L-	36+00 - 39+00	RT	6:1
6	-L-	42+00 - 43+00	LT	6:1
6	-L-	44+50 - 45+50	RT	6:1
6	-LPB-	13+30 - 14+00	LT	6:1
6	-LPC-	13+20 - 14+00	RT	4:1
6	-Y-	25+00 - 27+00	LT	6:1
6,7	-L-	53+50 - 55+00	MED	6:1
7	-L-	55+00 - 56+50	RT	3:1
8	-L-	69+00 - 70+00	RT	6:1
9	-L-	85+50 - 86+50	RT	6:1
11	-L-	106+50 - 108+00	LT	3:1
11	-L-	108+00 - 109+00	LT	6:1
11	-L-	109+00 - 111+50	LT	3:1
15,16	-L-	166+00 - 174+00	RT	3:1
16	-L-	176+00 - 177+00	LT	3:1
18	-L-	194+50 - 195+00	LT	3:1
24	-Y-	11+50 - 13+00	RT	3:1
24	-Y-	22+30 - 23+50	RT	3:1
25	-Y-	44+50 - 48+00	RT	3:1

DETAIL J
SPECIAL CUT DITCH
(Not to Scale)

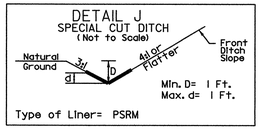

Type of Liner= PSRM

SHEET	RDWY	STATION - STATION	SIDE
6	-RPC-	27+50 - 29+00	RT
18	-L-	202+00 - 202+60	LT

DETAIL K
RIP RAP AT EMBANKMENT
(Not to Scale)

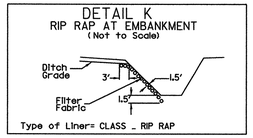

Type of Liner= CLASS _ RIP RAP

SHEET	RDWY	STATION - STATION	SIDE	CLASS
5	-L-	23+32	RT	I
6	-RPC-	20+00	LT	B
6	-L-	51+18 - 51+88	LT	I
6	-L-	52+44	LT	I
7	-L-	63+00	RT	I
16	-L-	177+00	LT	I
19	-L-	205+00 - 205+50	RT	B
25	-Y-	44+90 - 45+50	LT	B

DETAIL L
TOE PROTECTION
(Not to Scale)

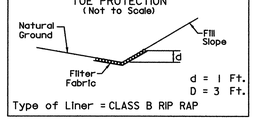

Type of Liner = CLASS B RIP RAP

SHEET	RDWY	STATION - STATION	SIDE
6	-L-	31+00 - 33+40	LT
6	-RPC-	16+50 - 18+00	RT
6	-RPC-	21+00 - 22+50	LT
6	-RPB-	22+00 - 23+00	RT
9	-L-	87+50 - 88+50	LT
10,11	-L-	101+50 - 103+50	LT
12	-L-	120+50 - 124+50	LT
13	-L-	137+30 - 141+00	LT
14	-L-	148+00 - 153+00	LT
15	-L-	157+50 - 159+50	LT
17	-L-	183+50 - 185+00	LT
17	-L-	187+50 - 188+50	LT
18	-L-	202+60 - 203+00	RT
19	-L-	207+50 - 208+34	LT
21	-Y1RPB-	17+50 - 19+50	RT

DETAIL M
TOE PROTECTION
(Not to Scale)

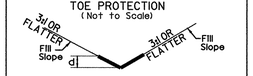

d= 1Ft.

Type of Liner= PSRM

SHEET	RDWY	STATION - STATION	SIDE
5	-L-	16+40 - 16+50	RT
6	-Y-	30+00	LT

DETAIL N
PROPOSED OUTLET CHANNEL
(Not to Scale)

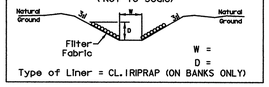

W =
D =

Type of Liner = CL. 1RIPRAP (ON BANKS ONLY)

SHEET	RDWY	STATION - STATION	SIDE	W=	D=
8	-L-	68+00	RT		
8	-L-	76+55	RT		
9	-L-	87+55	RT	4'	3'
12	-L-	120+30	RT	3'	2.5'
15	-L-	155+20	RT	3'	1'
18	-L-	195+70	RT	2'	1.5'
18	-L-	202+60	RT	2'	2'

DETAIL P
BERM DITCH
(Not to Scale)

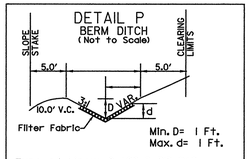

Type of Liner= CLASS B RIP RAP

SHEET	RDWY	STATION - STATION	SIDE
8	-L-	66+50 - 69+00	LT
8	-L-	70+50 - 72+50	LT
9	-L-	85+50 - 87+00	LT

DETAIL S
FALSE CUT
(Not to Scale)

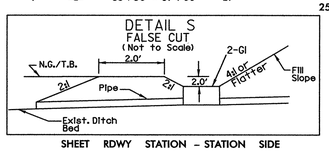

SHEET	RDWY	STATION - STATION	SIDE
15	-L-	160+50	LT

DETAIL T1
CHANNEL TRANSITION - LOOKING DS
(Not to Scale)

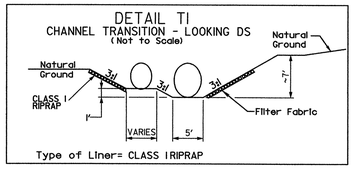

Type of Liner= CLASS 1RIPRAP

SHEET	RDWY	STATION - STATION	SIDE
6	-L-	33+60	RT

DETAIL T2
CHANNEL TRANSITION - LOOKING DS
(Not to Scale)

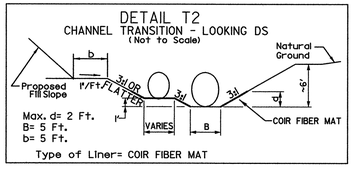

Type of Liner= COIR FIBER MAT

SHEET	RDWY	STATION - STATION	SIDE
6	-RPB-	14+60 - 15+70	LT

DETAIL V
BERM 'V' DITCH w/ SPECIAL EARTH BERM
(Not to Scale)

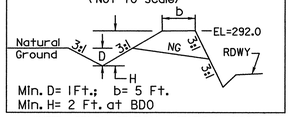

SHEET	RDWY	STATION - STATION	SIDE
9	-L-	80+50 - 81+50	LT

DETAIL W
RIPRAP BERM DITCH w/ SPECIAL EARTH BERM
(Not to Scale)

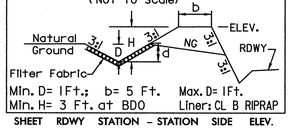

SHEET	RDWY	STATION - STATION	SIDE	ELEV.
8	-L-	69+00 - 70+50	LT	278.0
8,9	-L-	76+00 - 77+50	LT	281.0

DETAIL I
FALSE SUMP
(Not to Scale)

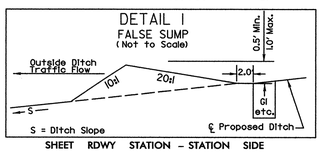

SHEET	RDWY	STATION - STATION	SIDE
2-M	-NBDET-	22+50	LT
2-M	-NBDET-	30+00	LT
6	-L-	42+00	LT
6	-L-	50+75	RT
7	-L-	56+50	LT
7	-L-	62+50	LT
8	-L-	70+00	LT
8	-L-	76+70	LT
10	-L-	95+50	RT
16	-L-	169+25	LT
18	-L-	195+00	RT
25	-Y-	47+00	RT

DETAIL II
FALSE SUMP
(Not to Scale)

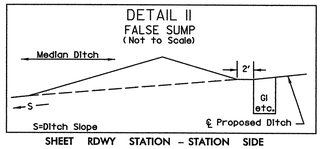

SHEET	RDWY	STATION - STATION	SIDE
6	-L-	38+50	MED
6	-L-	50+75	MED
6	-L-	53+50	MED
7	-L-	56+50	MED
7	-L-	62+50	MED
8	-L-	69+10	MED
8	-L-	76+50	MED
9	-L-	86+50	MED
9	-L-	87+80	MED
10	-L-	95+50	MED
10	-L-	100+00	MED
11	-L-	110+75	MED
12	-L-	119+75	MED
12	-L-	126+50	MED
13	-L-	131+00	MED
14	-L-	145+00	MED
14	-L-	152+00	MED
15	-L-	156+50	MED
16	-L-	169+25	MED
16	-L-	177+00	MED
17	-L-	184+10	MED
18	-L-	195+30	MED
18	-L-	202+60	MED
25	-Y-	46+68	MED

DETAIL U
CHANNEL CHANGE
(Not to Scale)

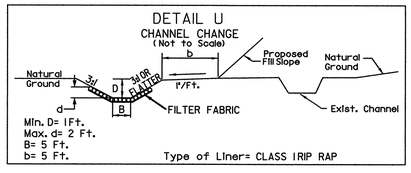

Type of Liner= CLASS 1RIP RAP

SHEET	RDWY	STATION - STATION	SIDE
6	-RPB-	15+70 - 22+70	LT

DETAIL X
PREFORMED SCOUR HOLE
PLAN VIEW

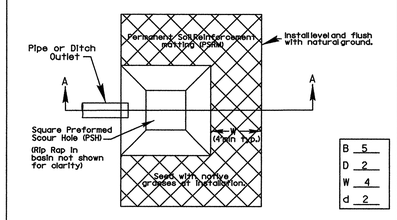

SECTION A-A

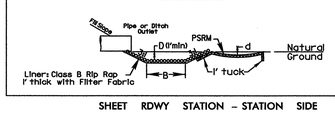

4/4/02

SHEET	RDWY	STATION - STATION	SIDE
6	-L-	29+25	LT
6	-L-	31+50	RT
6	-RPC-	14+55	RT
7	-L-	62+20	RT
10	-L-	100+50	RT
11	-L-	105+49	RT
12	-L-	126+50	RT
13	-L-	131+00	RT
14	-L-	152+00	RT
15	-L-	156+50	RT
16	-L-	177+00	RT
25	-Y-	44+50	LT

DETAIL III
FALSE SUMP
(Not to Scale)

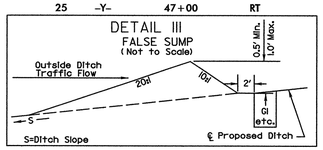

SHEET	RDWY	STATION - STATION	SIDE
6	-L-	38+50	RT
6	-RPC-	21+00	LT
6	-RPC-	25+00	LT
6	-L-	50+75	LT
8	-L-	69+00	RT
9	-L-	81+30	LT
9	-L-	86+50	LT
10	-L-	95+50	LT
10	-L-	100+00	LT
16	-L-	178+50	LT
17	-L-	185+00	LT

DETAIL IV
FALSE SUMP
(Not to Scale)

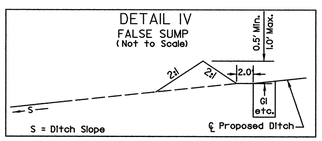

SHEET	RDWY	STATION - STATION	SIDE
6	-LPB-	16+50	RT
20	-Y1RPB-	12+00	LT

DETAIL Z
STANDARD 'V' DITCH
(Not to Scale)

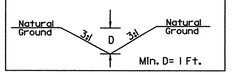

SHEET	RDWY	STATION - STATION	SIDE
6	-LPC-	19+64	LT
6	-LPC-	19+00 - 20+00	LT

9/20/2010
R:\Drainage\r2417aa_hyd_detail_psh_2-F.dgn
Florence & Hutcheson, Inc.

8/17/99

REVISIONS

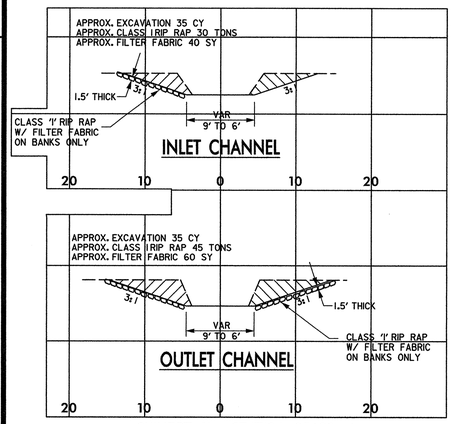

CULVERT #1 - STATION 105+20 -L-

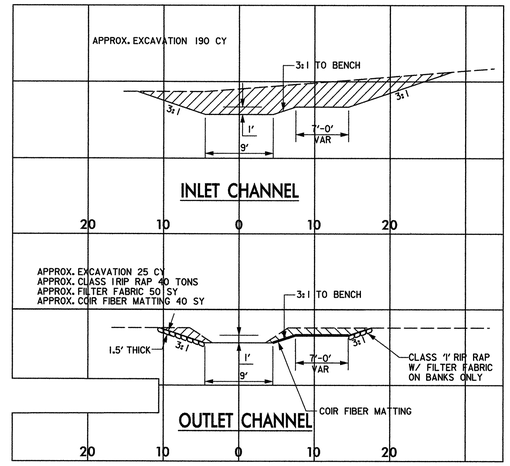

CULVERT #4 - STATION 177+29 -L-

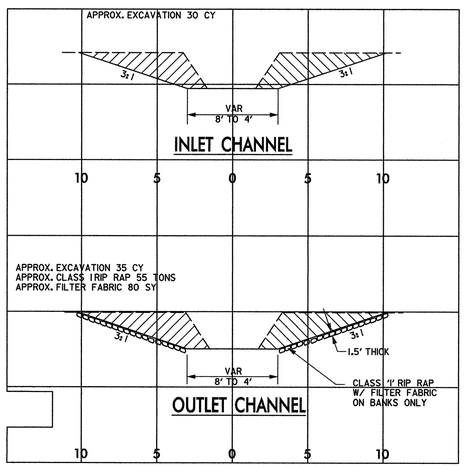

CULVERT #2 - STATION 120+57 -L-

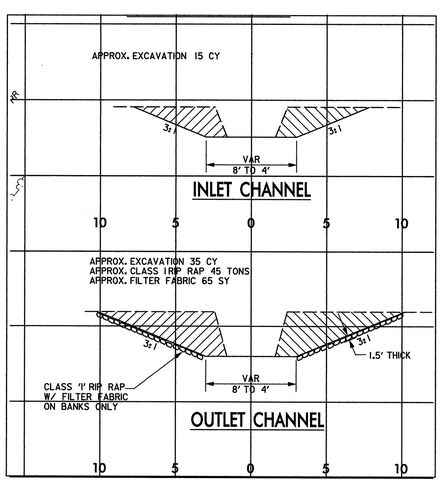

CULVERT #3 - STATION 142+67 -L-

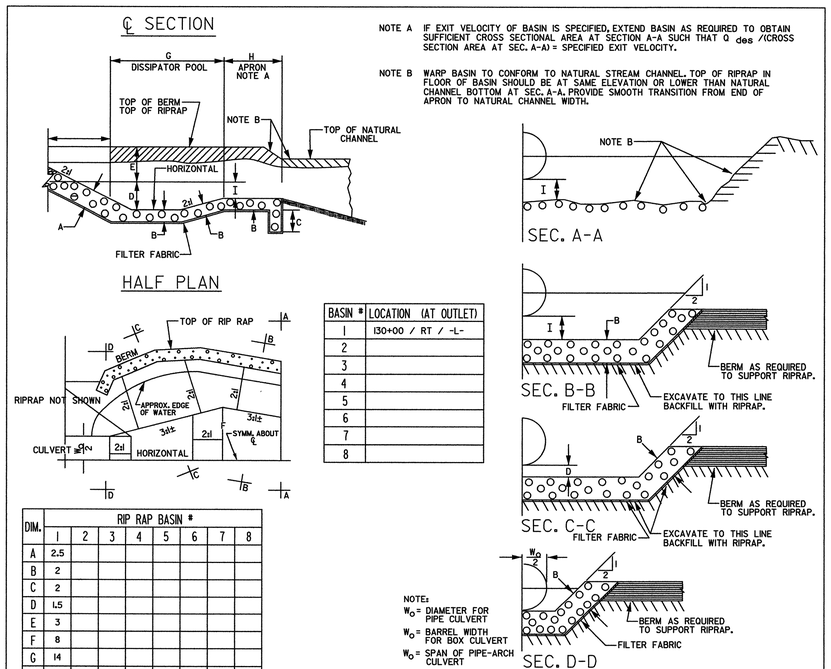

NOTE A IF EXIT VELOCITY OF BASIN IS SPECIFIED, EXTEND BASIN AS REQUIRED TO OBTAIN SUFFICIENT CROSS SECTIONAL AREA AT SECTION A-A SUCH THAT Q_{des} /(CROSS SECTION AREA AT SEC. A-A) = SPECIFIED EXIT VELOCITY.

NOTE B WARP BASIN TO CONFORM TO NATURAL STREAM CHANNEL. TOP OF RIPRAP IN FLOOR OF BASIN SHOULD BE AT SAME ELEVATION OR LOWER THAN NATURAL CHANNEL BOTTOM AT SEC. A-A. PROVIDE SMOOTH TRANSITION FROM END OF APRON TO NATURAL CHANNEL WIDTH.

BASIN #	LOCATION (AT OUTLET)
1	130+00 / RT / -L-
2	
3	
4	
5	
6	
7	
8	

DIM.	RIP RAP BASIN # 1	2	3	4	5	6	7	8
A	2.5							
B	2							
C	2							
D	1.5							
E	3							
F	8							
G	14							
H	18							
I	1							

ALL DIMENSIONS APPROXIMATE

NOTE:
W_D = DIAMETER FOR PIPE CULVERT
W_D = BARREL WIDTH FOR BOX CULVERT
W_D = SPAN OF PIPE-ARCH CULVERT

DETAIL Y
DETAIL OF RIP-RAPPED ENERGY DISSIPATOR BASIN

SHEET	RDWY	STATION - STATION	SIDE	BASIN
13	-L-	130+00	RT	1

Florence & Hutcheson
CONSULTING ENGINEERS
5121 Kingdom Way, Suite 100 Raleigh, NC 27607
NC License No: F-0258

PROJECT REFERENCE NO.	SHEET NO.
R-2417AA	2-G
R/W SHEET NO.	

ROADWAY DESIGN ENGINEER
NORTH CAROLINA PROFESSIONAL SEAL 22606 ENGINEER DAVID C. WALLER
9-23-10

HYDRAULICS ENGINEER
NORTH CAROLINA PROFESSIONAL SEAL 021162 ENGINEER W. HERBERT TURNER, JR.
9-23-10

9/20/2010
R:\Drainage\r2417aa_hyd_detail_psh_2-G.dgn
Florence & Hutcheson, Inc.

8/17/99

Florence & Hutcheson
CONSULTING ENGINEERS
5121 Kingdom Way, Suite 100 Raleigh, NC 27607
NC License No: F-0258

PROJECT REFERENCE NO.	SHEET NO.
R-2417AA	2-H
R/W SHEET NO.	
ROADWAY DESIGN ENGINEER	HYDRAULICS ENGINEER
NORTH CAROLINA PROFESSIONAL SEAL 22606 ENGINEER DAVID C WALLER 9-23-10	NORTH CAROLINA PROFESSIONAL SEAL 021162 ENGINEER HERBERT TURNER, III 9-23-10

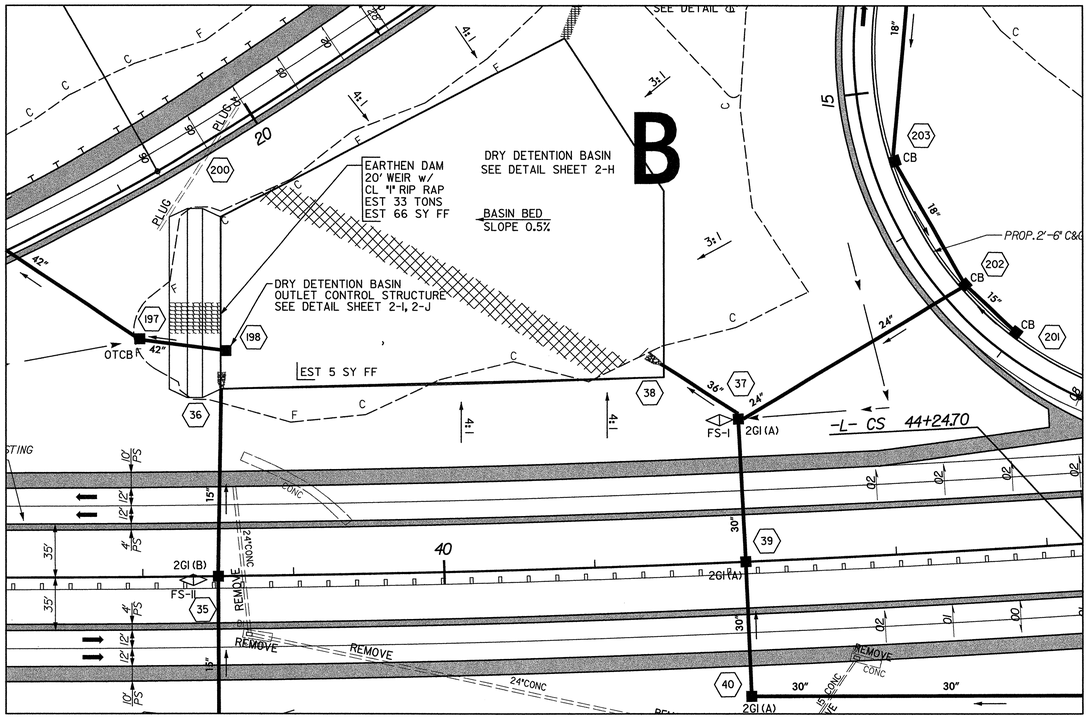

PLAN VIEW

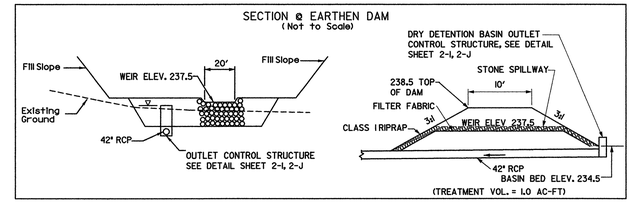

SHEET	RDWY	STATION – STATION	SIDE
6	-L-	38+50	LT

DETAIL

DRY DETENTION BASIN

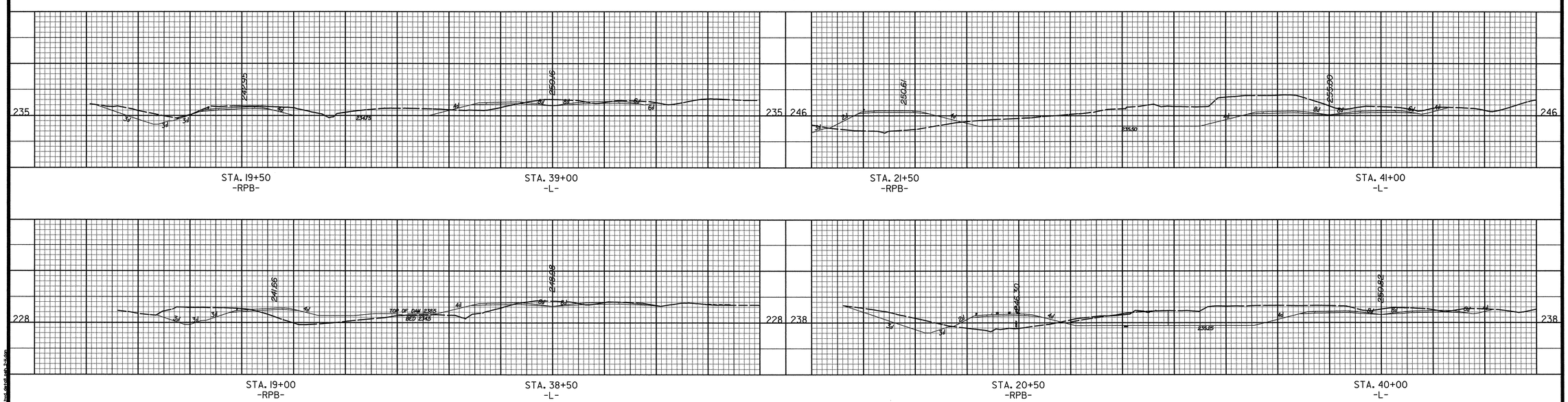

TYPICAL CROSS SECTION

FOR -L- PLAN, SEE SHEET NO. 6

9/20/2010
10:49 PM

Florence & Hutcheson
CONSULTING ENGINEERS
5121 Kingdom Way, Suite 100 Raleigh, NC 27607
NC License No: F-0258

PROJECT REFERENCE NO.	SHEET NO.
R-2417AA	2-I
R/W SHEET NO.	

HYDRAULICS ENGINEER

NORTH CAROLINA PROFESSIONAL SEAL 021162 ENGINEER HERBERT TURNER, JR.
07-13-10

DRY DETENTION BASIN NOTES @ -L- 38+50 LT.

SEQUENCE OF CONSTRUCTION FOR DRY DETENTION BASIN

1. INSTALL ALL EROSION CONTROL MEASURES (AS NEEDED THROUGH CONSTRUCTION STAGES).
2. EXCAVATE FOR THE BASIN. PREPARE THE BASIN FLOOR AT THE GIVEN ELEVATION, BASIN BED SLOPE, AND CROSS SECTIONS (SHEET 2-H).
3. CONSTRUCT AND INSTALL BOXES. CREATE OPENINGS IN BOXES AND CONNECT PIPES WITH BOXES.
4. ADD GRATES/TRASH RACK ON ALL BOXES.

GENERAL NOTES FOR DRY DETENTION BASIN

1. APPLY SEEDING OVER THE SIDE SLOPES AND ANY EXPOSED SURFACE THAT NEEDS TO BE PROTECTED AGAINST IMMEDIATE POTENTIAL STORM EVENT.
2. THE SURVEYOR SHALL VERIFY THE INVERTS AND ELEVATIONS AT THE FOLLOWING POINTS AT THE END OF EACH PHASE OF CONSTRUCTION:
   - INVERTS IN THE PIPE AND THE BOXES.
3. THE BERM SHALL BE CONSTRUCTED WITH SUITABLE FILL MATERIAL PER THE ENGINEER.
4. ANY FILL MATERIAL SHALL BE COMPACTED.

MAINTENANCE RECOMMENDATIONS

1. REMOVE DEBRIS, TRASH AND SEDIMENT BUILDUP FROM THE BASIN AS NECESSARY TO MINIMIZE OUTLET CLOGGING AND IMPROVE AESTHETICS.
2. REPAIR AND REVEGETATE ERODED AREAS AS NEEDED.
3. CHECK INLETS AND OUTLETS FOR STRUCTURAL REPAIR TO CONFIRM THAT THEY ARE OPERATIONAL.
4. MOW AS NECESSARY TO LIMIT UNWANTED VEGETATION AND REMOVE CLIPPINGS AS PRACTICAL.
5. NO PORTION OF THE DRY DETENTION POND SHOULD BE FERTILIZED AFTER THE FIRST INITIAL FERTILIZATION THAT IS REQUIRED TO ESTABLISH VEGETATION.
6. STABLE GROUNDCOVER SHOULD BE MAINTAINED IN THE DRAINAGE AREA TO REDUCE THE SEDIMENT LOAD TO THE DRY DETENTION POND.
7. ONCE A YEAR, A DAM SAFETY EXPERT SHOULD INSPECT THE EMBANKMENT (IF APPLICABLE).
8. RECORDS OF OPERATION AND MAINTENANCE SHOULD BE KEPT IN A KNOWN SET LOCATION AND MUST BE AVAILABLE UPON REQUEST.

TRASH RACKS FOR OUTLET STRUCTURES

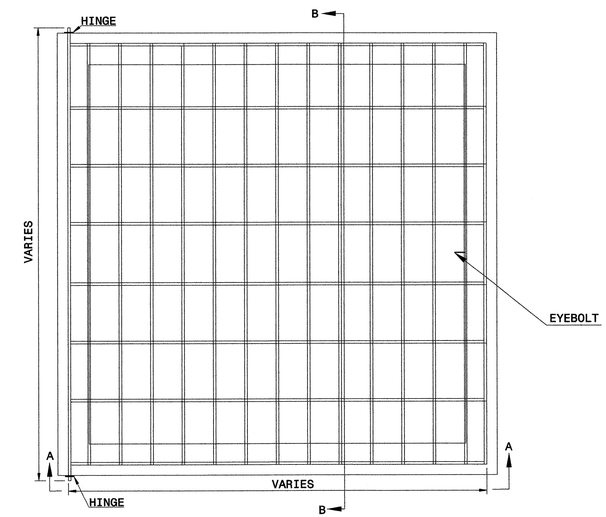

PLAN

RISER TRASH RACK NOTES:
1. ALL JOINTS SHALL BE FULLY WELDED AROUND JOINT WITH A MINIMUM OF A ¼" BEAD.
2. IF BOLTS ARE ANCHORED IN CONCRETE, FOLLOW STD. DWG. 862.03 AND 862.04 FOR ANCHORING PROCEDURE.
3. EYEBOLT FOR CHAIN CLOSURE SHALL BE INSTALLED BY THE SAME METHOD AS THE HINGE PLATE BOLTS.
4. RACK AND HARDWARE SHALL BE REBAR AND GALVANIZED IN ACCORDANCE WITH ASTM A-153.

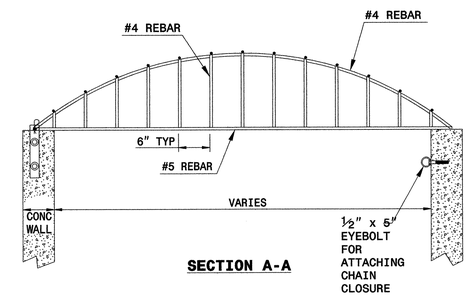

SECTION A-A

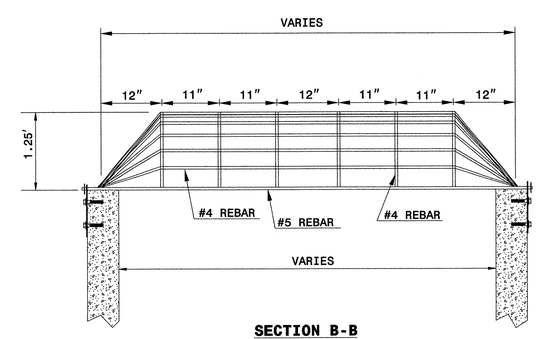

SECTION B-B

9/23/2010
R:\Drainage\r2417aa_hyd_F&H_basin_details.dgn
Florence & Hutcheson, Inc.

Florence & Hutcheson CONSULTING ENGINEERS 5121 Kingdom Way, Suite 100 Raleigh, NC 27607 NC License No: F-0258	PROJECT REFERENCE NO.	SHEET NO.
	R-2417AA	2-J
	R/W SHEET NO.	

HYDRAULICS ENGINEER
NORTH CAROLINA PROFESSIONAL SEAL 021162 ENGINEER W. HERBERT TURNER, JR.
9-23-10

-L- STA. 38+50 LT.
DRY DETENTION BASIN
OUTLET CONTROL STRUCTURE

SECTION VIEW SCHEMATIC OF OUTLET STRUCTURE

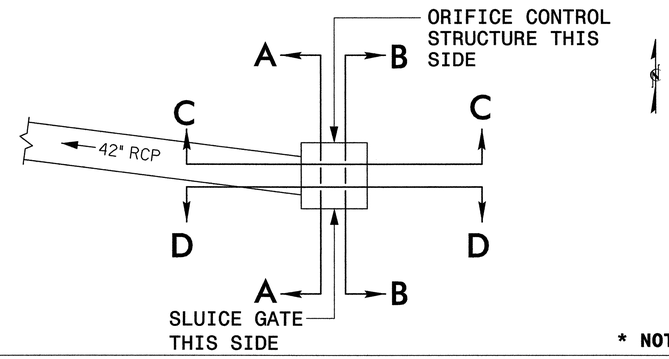

* NOT TO SCALE

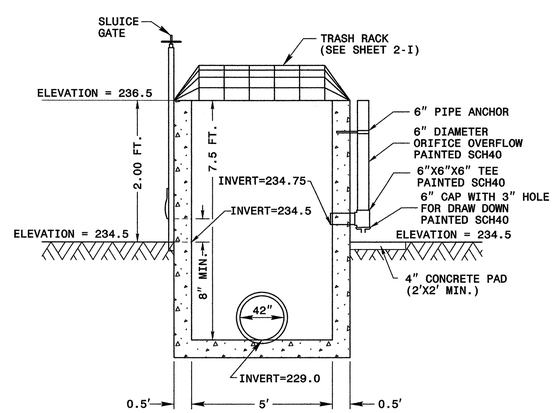

SECTION A-A

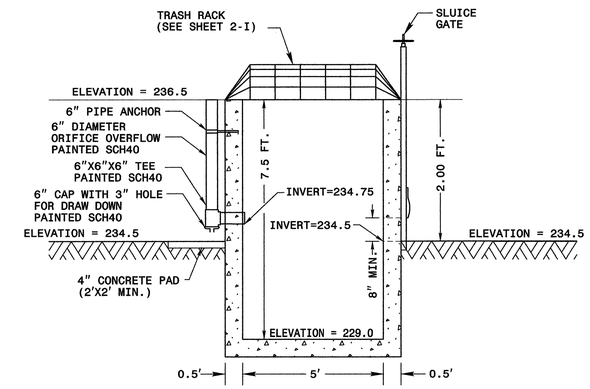

SECTION B-B

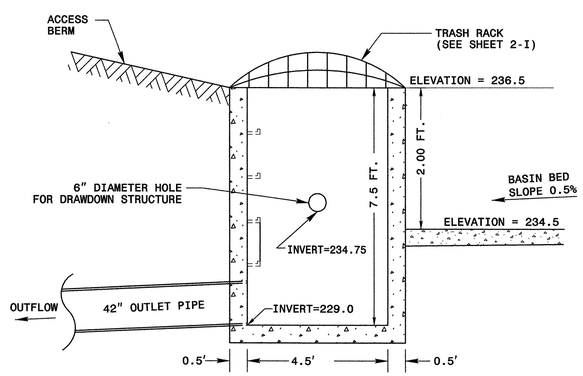

SECTION C-C

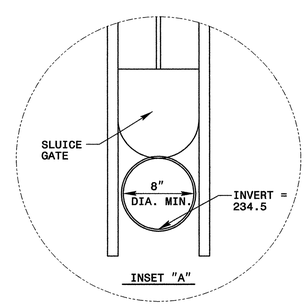

INSET "A"

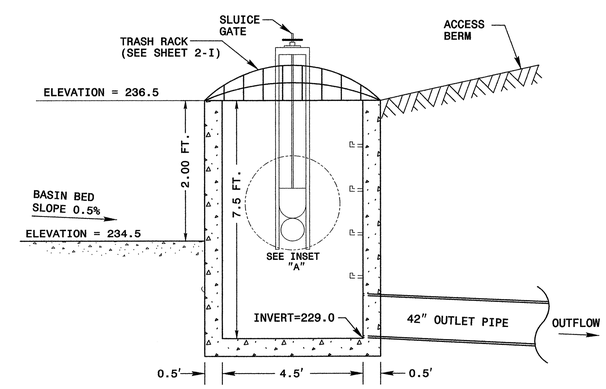

SECTION D-D

NOTES

1. 8" MIN. SLUICE GATE IS FOR MAINTENANCE AND SHOULD REMAIN CLOSED DURING NORMAL OPERATION.

* NOT TO SCALE

DRY DETENTION BASIN
OUTLET CONTROL STRUCTURE

DRY DETENTION BASIN
OUTLET CONTROL STRUCTURE

9/23/2010
R:\Drainage\r2417aa_hyd_F&H_basin_details.dgn

LATERAL SWALE/DITCH W/ROCK CHECKS

Florence & Hutcheson
CONSULTING ENGINEERS
5121 Kingdom Way, Suite 100 Raleigh, NC 27607
NC License No: F-0258

PROJECT REFERENCE NO.	SHEET NO.
R-2417AA	2-K

NORTH CAROLINA PROFESSIONAL SEAL 021162 ENGINEER W. HERBERT TURNER JR.
9-23-10
SIGNATURE P.E.

SEAL SIGNATURE P.E.

LOCATIONS

SHEET	ALIGN	STATION - STATIOIN	SIDE	REMARKS
9	-L-	86+50 - 87+00	RT	11' SPACING
9	-L-	87+00 - 87+50	RT	13' SPACING

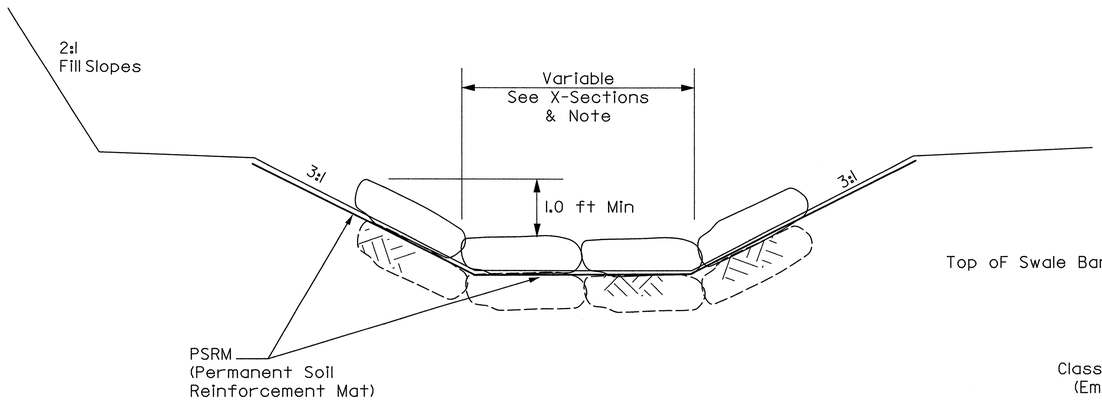

TYPICAL CROSS SECTION

NOT TO SCALE

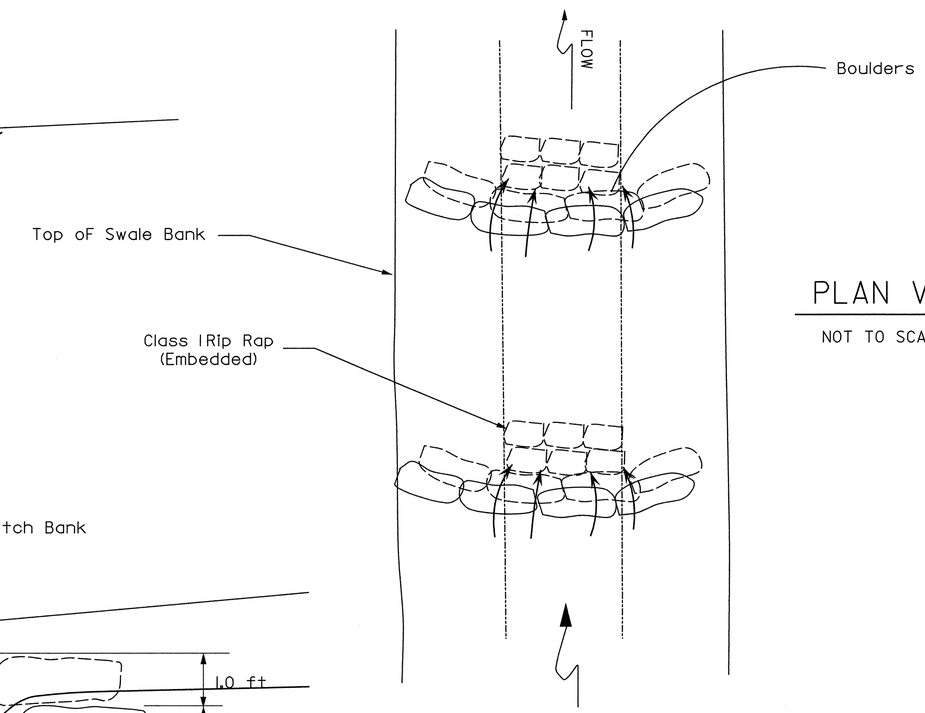

PLAN VIEW

NOT TO SCALE

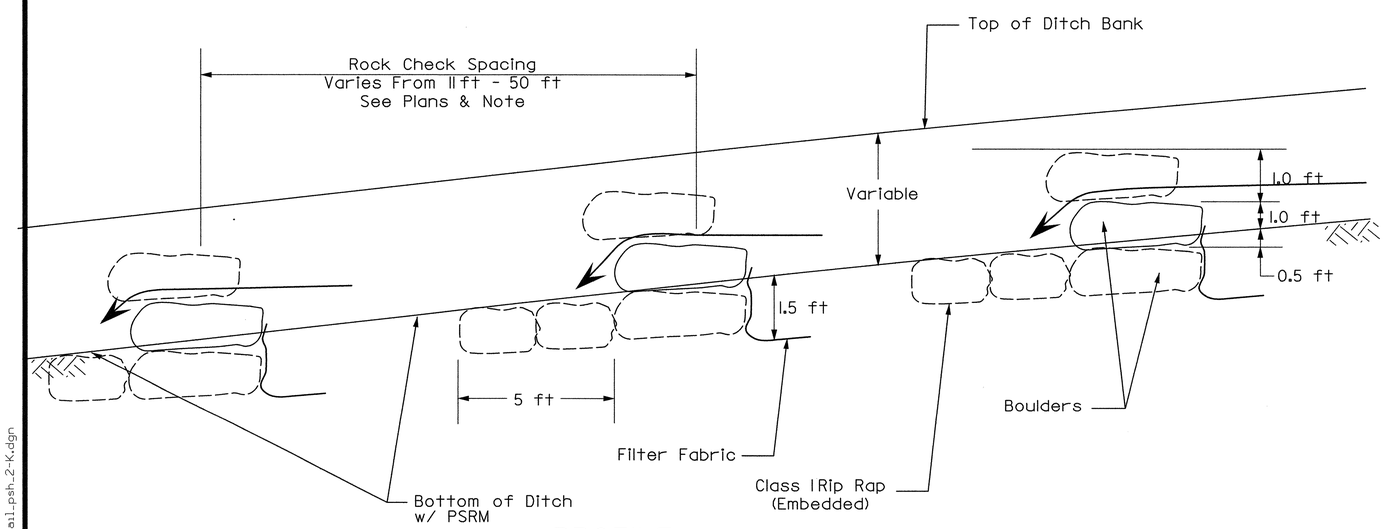

PROFILE

NOT TO SCALE

NOTE:

BOULDERS SHOULD BE ANGULAR AND OBLONG WITH APPROXIMATE DIMENSIONS OF 0.6m x 0.45m x 0.45m (2' x 1.5' x 1.5'). ROCK SHOULD FIT TIGHTLY TOGETHER WITH MINIMAL VOIDS. STAGGER BOULDER JOINTS.

ROCK CHECK SPACING IS DEPENDENT ON DITCH GRADES AT 1' DROP INTERVALS OR SLOPE CONTROL.

DITCH WIDTHS VARY. WIDEN TO EXTENT PRACTICAL WITHIN R/W LIMITS. SEE X-SECTIONS.

6/2/99
R:\Drainage\R2417aa_hyd_detail_psh_2-K.dgn
9/23/2010
Florence & Hutcheson, Inc.

Florence & Hutcheson
Consulting Engineers
5121 Kingdom Way, Suite 100 Raleigh, NC 27607
NC License No: F-0258

PROJECT REFERENCE NO.	SHEET NO.
R-2417AA	2-L
R/W SHEET NO.	
ROADWAY DESIGN ENGINEER	HYDRAULICS ENGINEER

NORTH CAROLINA PROFESSIONAL SEAL 22606 ENGINEER DAVID C. WALLER 9-23-10

NORTH CAROLINA PROFESSIONAL SEAL 021162 ENGINEER W. HERBERT TURNER, JR. 9-23-10

-RPC-

PIs Sta 13+80.55	PI Sta 16+68.20	PIs Sta 19+50.97
Θs = 5° 22' 30.0"	Δ = 21° 21' 16.4" (RT)	Θs = 5° 22' 30.0"
Ls = 215.00'	D = 5° 00' 00.0"	Ls = 215.00'
LT = 143.40'	L = 427.09'	LT = 143.40'
ST = 71.73'	T = 216.05'	ST = 71.73'
	R = 1,145.92'	

NB DET

PI Sta 13+64.52
Δ = 14° 26' 48.7" (RT)
D = 1° 59' 31.9"
L = 725.17'
T = 364.52'
R = 2,876.00'

TEMP.CONN.

PI Sta 12+32.78	PI Sta 14+20.54
Δ = 59° 41' 43.4" (RT)	Δ = 9° 19' 59.2" (LT)
D = 38° 11' 49.9"	D = 3° 58' 43.9"
L = 156.28'	L = 234.57'
T = 86.07'	T = 117.54'
R = 150.00'	R = 1,440.00'

SB DET

PI Sta 12+39.65	PI Sta 19+15.85
Δ = 34° 32' 07.2" (LT)	Δ = 37° 00' 56.1" (RT)
D = 7° 25' 54.8"	D = 7° 32' 20.1"
L = 464.69'	L = 490.99'
T = 239.65'	T = 254.41'
R = 770.94'	R = 760.00'

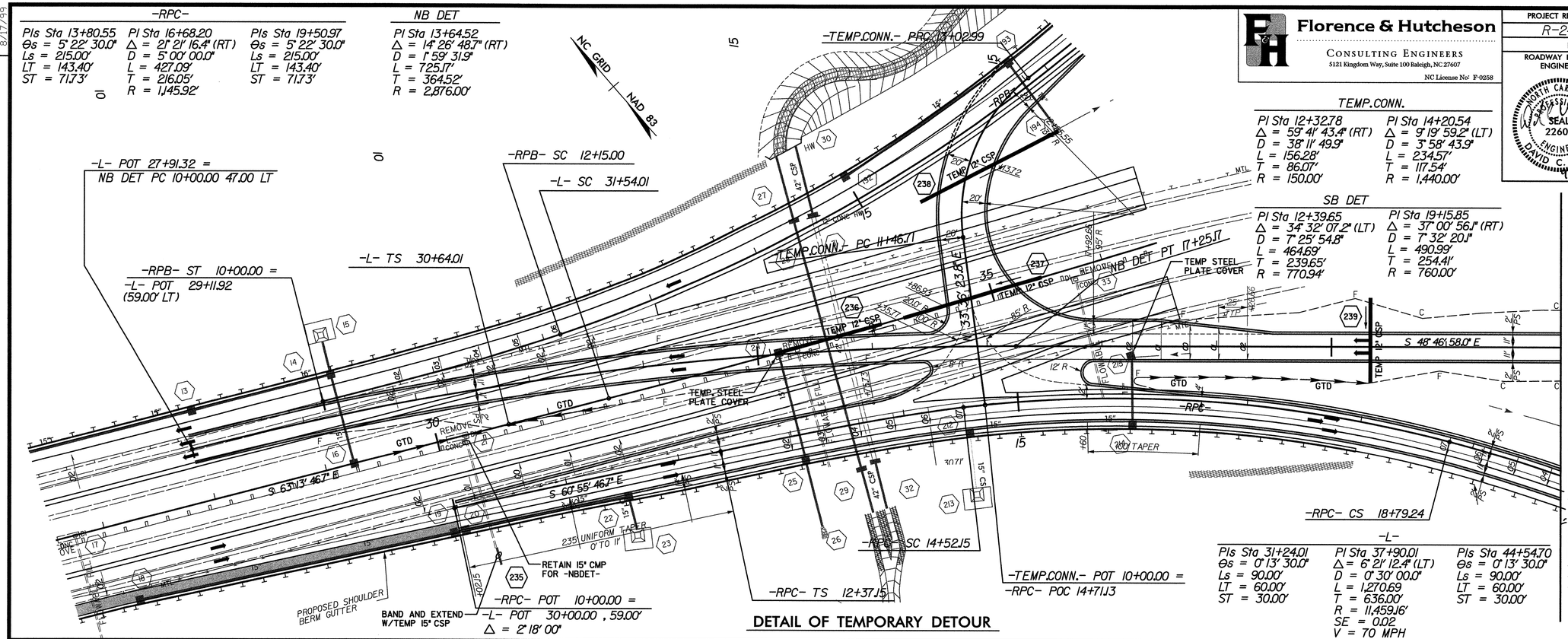

DETAIL OF TEMPORARY DETOUR

-L-

PIs Sta 31+24.01	PI Sta 37+90.01	PIs Sta 44+54.70
Θs = 0° 13' 30.0"	Δ = 6° 21' 12.4" (LT)	Θs = 0° 13' 30.0"
Ls = 90.00'	D = 0° 30' 00.0"	Ls = 90.00'
LT = 60.00'	L = 1,270.69	LT = 60.00'
ST = 30.00'	T = 636.00'	ST = 30.00'
	R = 11,459.16'	
	SE = 0.02	
	V = 70 MPH	

-MATCHLINE- NB DET STA. 22+00.00
SEE SHEET NO. 2-M

FOR PLAN, SEE SHEET NO. 6

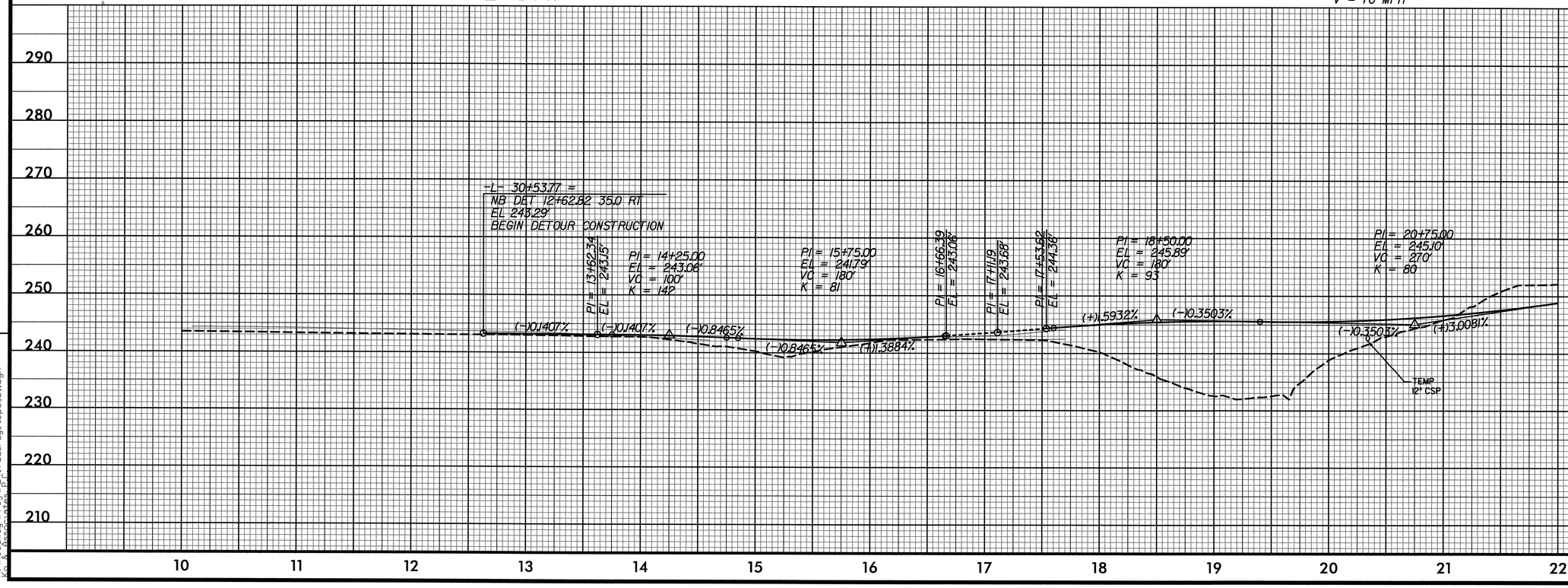

REVISIONS

8/17/99

9/20/2010
R:\Roadway\Proj\r-2417aa_rdy_tcp3_01.dgn
Kg & Associates, P.C.

8/17/99

REVISIONS

-RPC-		
PIs Sta 22+37.72	PI Sta 26+70.60	PIs Sta 30+48.40
Θs = 8° 03' 45.0"	Δ = 50° 37' 48.0" (LT)	Θs = 7° 12' 00.0"
Ls = 215.00'	D = 7° 30' 00.0"	Ls = 192.00'
LT = 143.48'	L = 675.07'	LT = 128.11'
ST = 71.80'	T = 361.36'	ST = 64.10'
	R = 763.94'	

SB DET	
PI Sta 12+39.65	PI Sta 19+15.85
Δ = 34° 32' 07.2" (LT)	Δ = 37° 00' 56.1" (RT)
D = 7° 25' 54.8"	D = 7° 32' 20.1"
L = 464.69'	L = 490.99'
T = 239.65'	T = 254.41'
R = 770.94'	R = 760.00'

NB DET
PI Sta 36+41.88
Δ = 14° 17' 15.5" (RT)
D = 1° 59' 31.9"
L = 717.18'
T = 360.46'
R = 2,876.00'

Florence & Hutcheson
CONSULTING ENGINEERS
5121 Kingdom Way, Suite 100 Raleigh, NC 27607
NC License No: F-0258

PROJECT REFERENCE NO.	SHEET NO.
R-2417AA	2-M
R/W SHEET NO.	
ROADWAY DESIGN ENGINEER	HYDRAULICS ENGINEER

NORTH CAROLINA PROFESSIONAL SEAL 22606 ENGINEER DAVID C. WALLER 4-29-10

NORTH CAROLINA PROFESSIONAL SEAL 021162 ENGINEER W. HERBERT TURNER, JR. 4-29-10

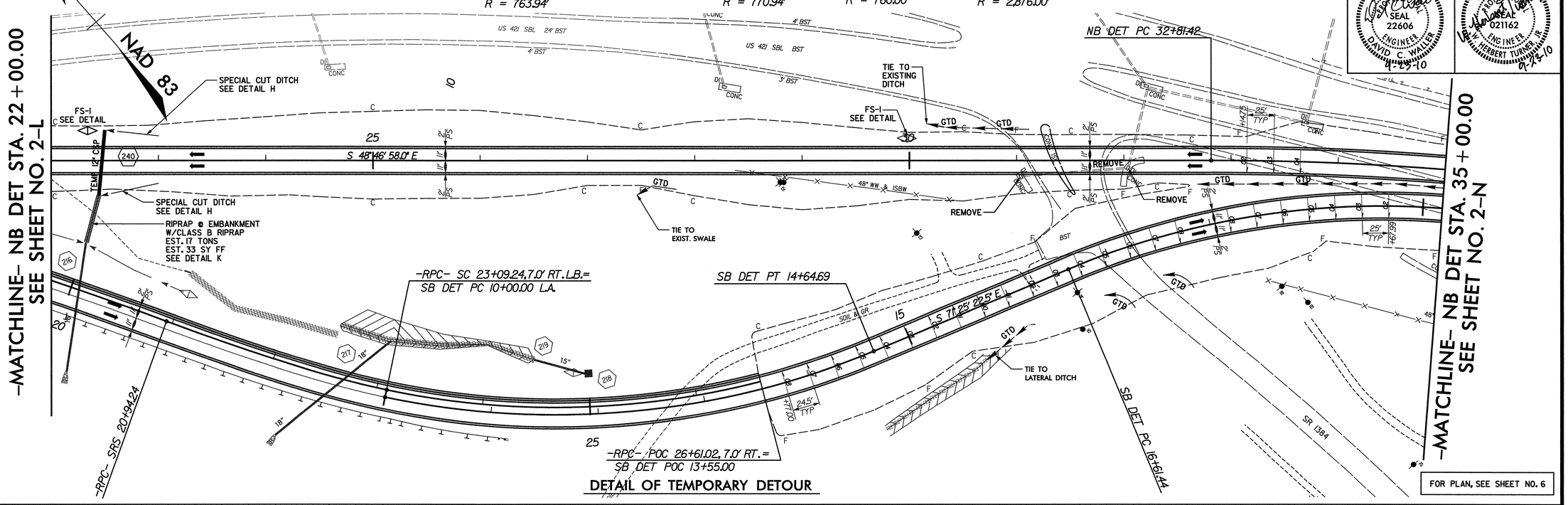

DETAIL OF TEMPORARY DETOUR

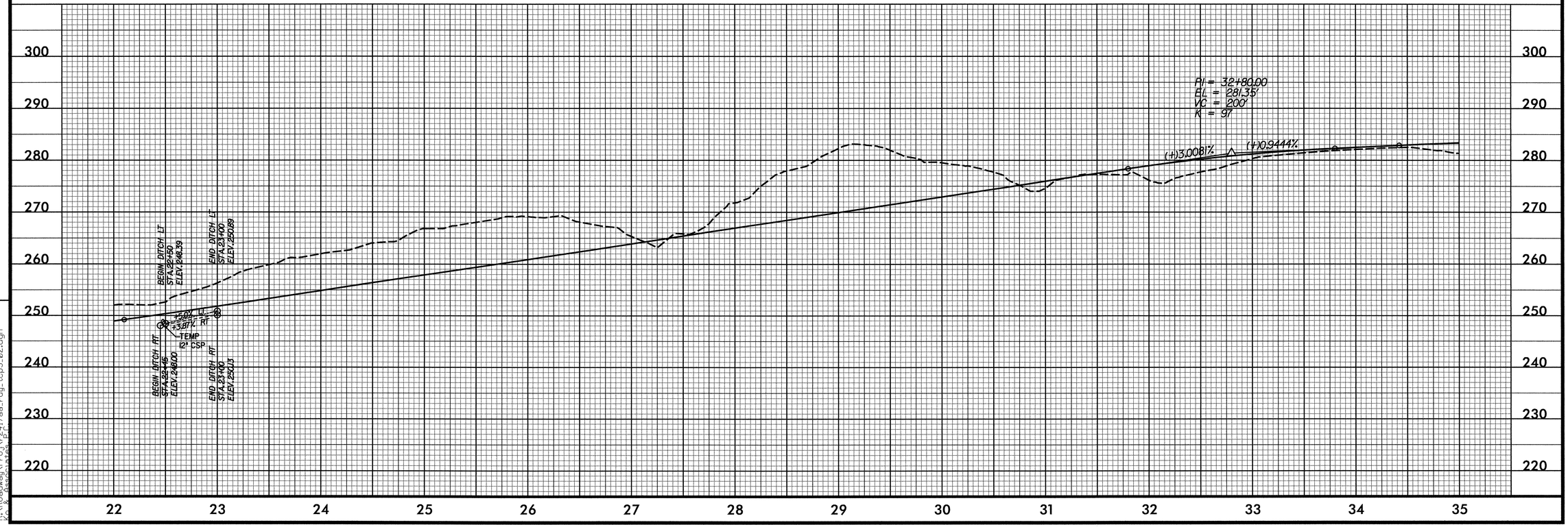

9/30/2010
R:\Roadway\Proj\r2417aa_rdy_top3_02.dgn
Kci & Associates, P.C.

8/17/99

REVISIONS

Florence & Hutcheson
CONSULTING ENGINEERS
5121 Kingdom Way, Suite 100 Raleigh, NC 27607
NC License No: F-0258

PROJECT REFERENCE NO.	SHEET NO.
R-2417AA	2-N
R/W SHEET NO.	

ROADWAY DESIGN ENGINEER — NORTH CAROLINA PROFESSIONAL SEAL 22606 ENGINEER DAVID C. WALLER — 9-23-10

HYDRAULICS ENGINEER — NORTH CAROLINA PROFESSIONAL SEAL 021162 ENGINEER W. HERBERT TURNBULL JR. — 9-23-10

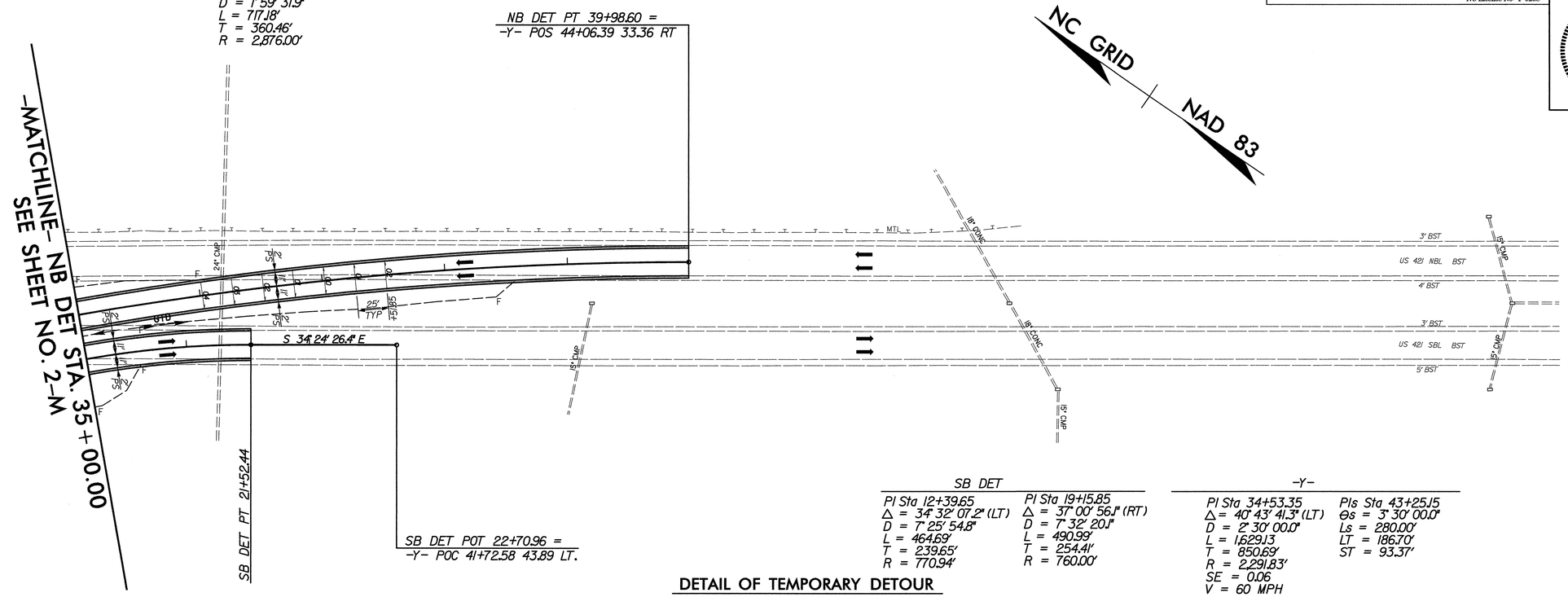

SB DET

PI Sta 12+39.65	PI Sta 19+15.85
Δ = 34° 32' 07.2" (LT)	Δ = 37° 00' 56.1" (RT)
D = 7° 25' 54.8"	D = 7° 32' 20.1"
L = 464.69'	L = 490.99'
T = 239.65'	T = 254.41'
R = 770.94'	R = 760.00'

-Y-

PI Sta 34+53.35	PIs Sta 43+25.15
Δ = 40° 43' 41.3" (LT)	θs = 3° 30' 00.0"
D = 2° 30' 00.0"	Ls = 280.00'
L = 1,629.13	LT = 186.70'
T = 850.69'	ST = 93.37'
R = 2,291.83'	
SE = 0.06	
V = 60 MPH	

DETAIL OF TEMPORARY DETOUR

FOR PLAN, SEE SHEET NOS. 6 & 25

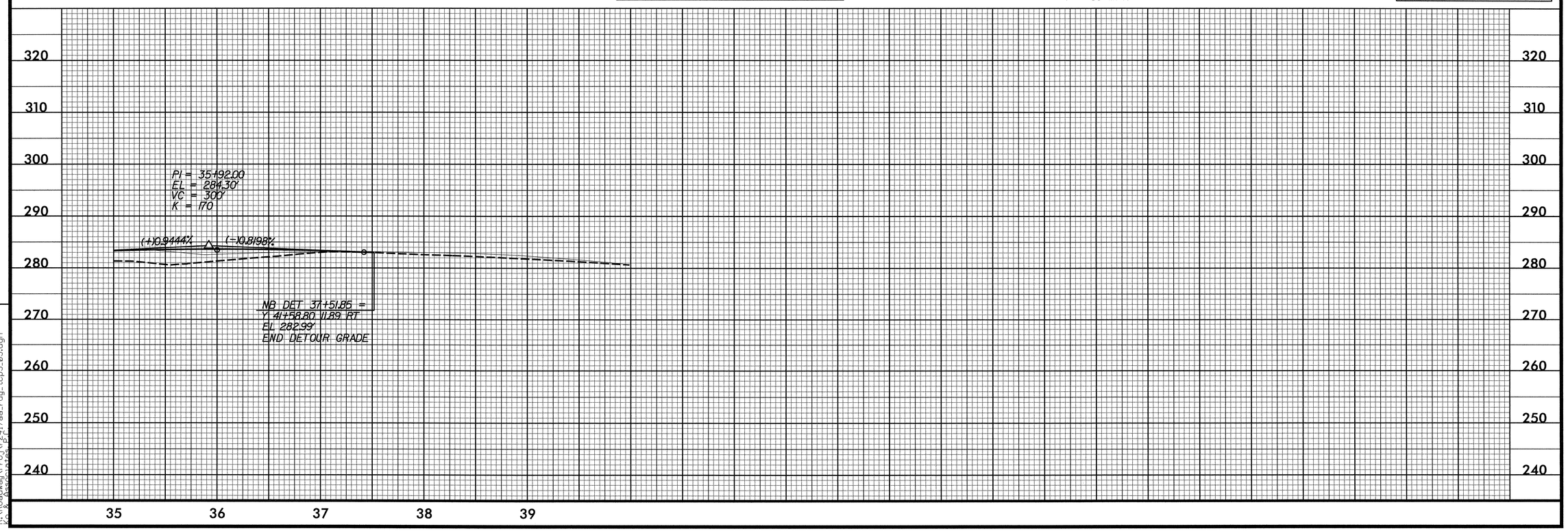

9/20/2010
R:\Roadway\Proj\R-2417aa_rdy_tcp3_03.dgn

PROJECT REFERENCE NO.	SHEET NO.
R-2417AA	2-0
R/W SHEET NO.	
ROADWAY DESIGN ENGINEER	HYDRAULICS ENGINEER

Florence & Hutcheson
CONSULTING ENGINEERS
5121 Kingdom Way, Suite 100 Raleigh, NC 27607
NC License No: F-0258

NORTH CAROLINA PROFESSIONAL SEAL 22606 ENGINEER DAVID C. WALLER 9-23-10

NORTH CAROLINA PROFESSIONAL SEAL 021162 ENGINEER W. HERBERT TURNER, JR. 9-23-10

NC GRID NAD 83

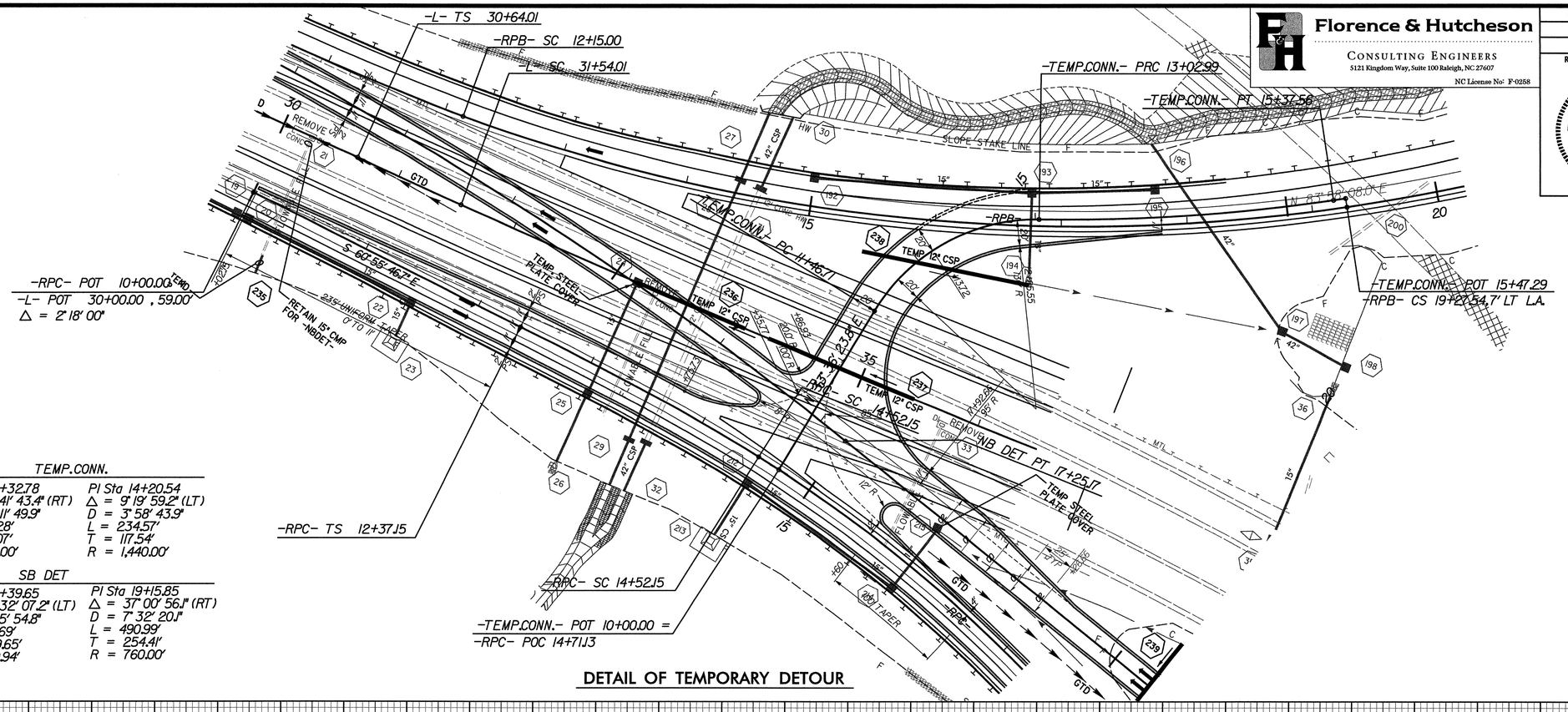

TEMP.CONN.	
PI Sta 12+32.78	PI Sta 14+20.54
Δ = 59° 41' 43.4" (RT)	Δ = 9° 19' 59.2" (LT)
D = 38° 11' 49.9"	D = 3° 58' 43.9"
L = 156.28'	L = 234.57'
T = 86.07'	T = 117.54'
R = 150.00'	R = 1,440.00'

SB DET	
PI Sta 12+39.65	PI Sta 19+15.85
Δ = 34° 32' 07.2" (LT)	Δ = 37° 00' 56.1" (RT)
D = 7° 25' 54.8"	D = 7° 32' 20.1"
L = 464.69'	L = 490.99'
T = 239.65'	T = 254.41'
R = 770.94'	R = 760.00'

DETAIL OF TEMPORARY DETOUR

FOR PLAN, SEE SHEET NO. 6

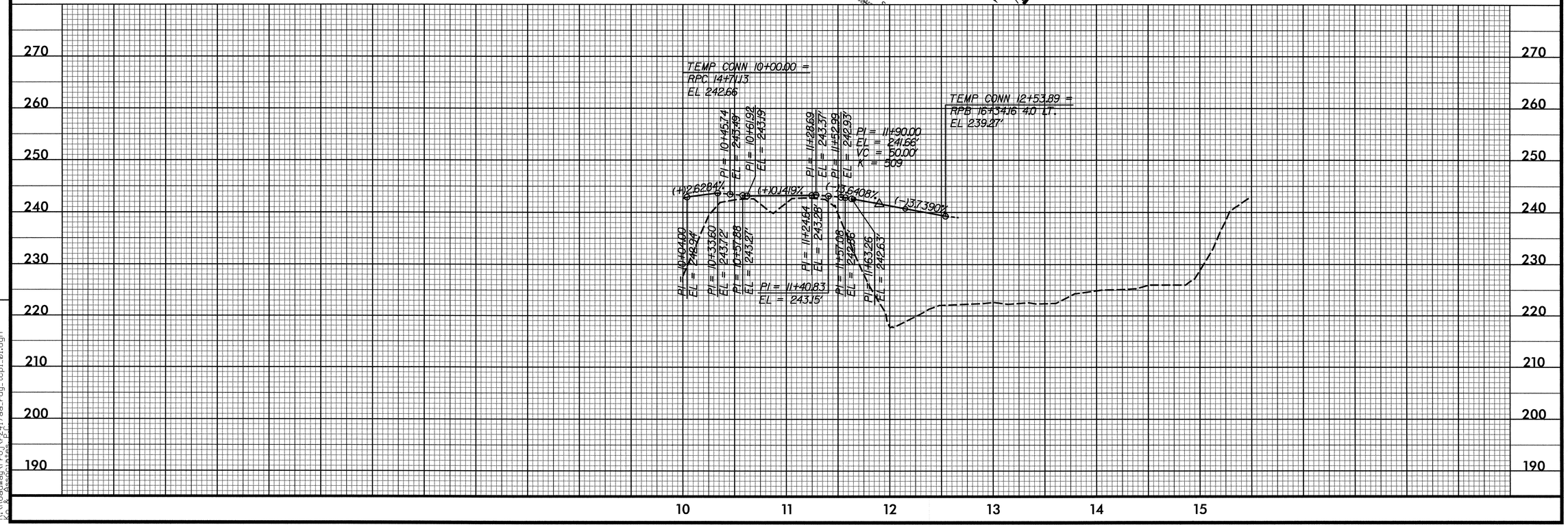

REVISIONS

8/17/99

9/20/2010
R:\Roadway\Proj\r-2417aa_rdy_tcp1_01.dgn
Kp & Associates, P.C.

PROJECT REFERENCE NO.	SHEET NO.
R-2417AA	2-P
R/W SHEET NO.	

Florence & Hutcheson
CONSULTING ENGINEERS
5121 Kingdom Way, Suite 100 Raleigh, NC 27607
NC License No: F-0258

ROADWAY DESIGN ENGINEER: NORTH CAROLINA PROFESSIONAL SEAL 22606 ENGINEER DAVID C. WALLER 9-23-10

HYDRAULICS ENGINEER: NORTH CAROLINA PROFESSIONAL SEAL 021162 ENGINEER HERBERT TURNER, JR. 9-23-10

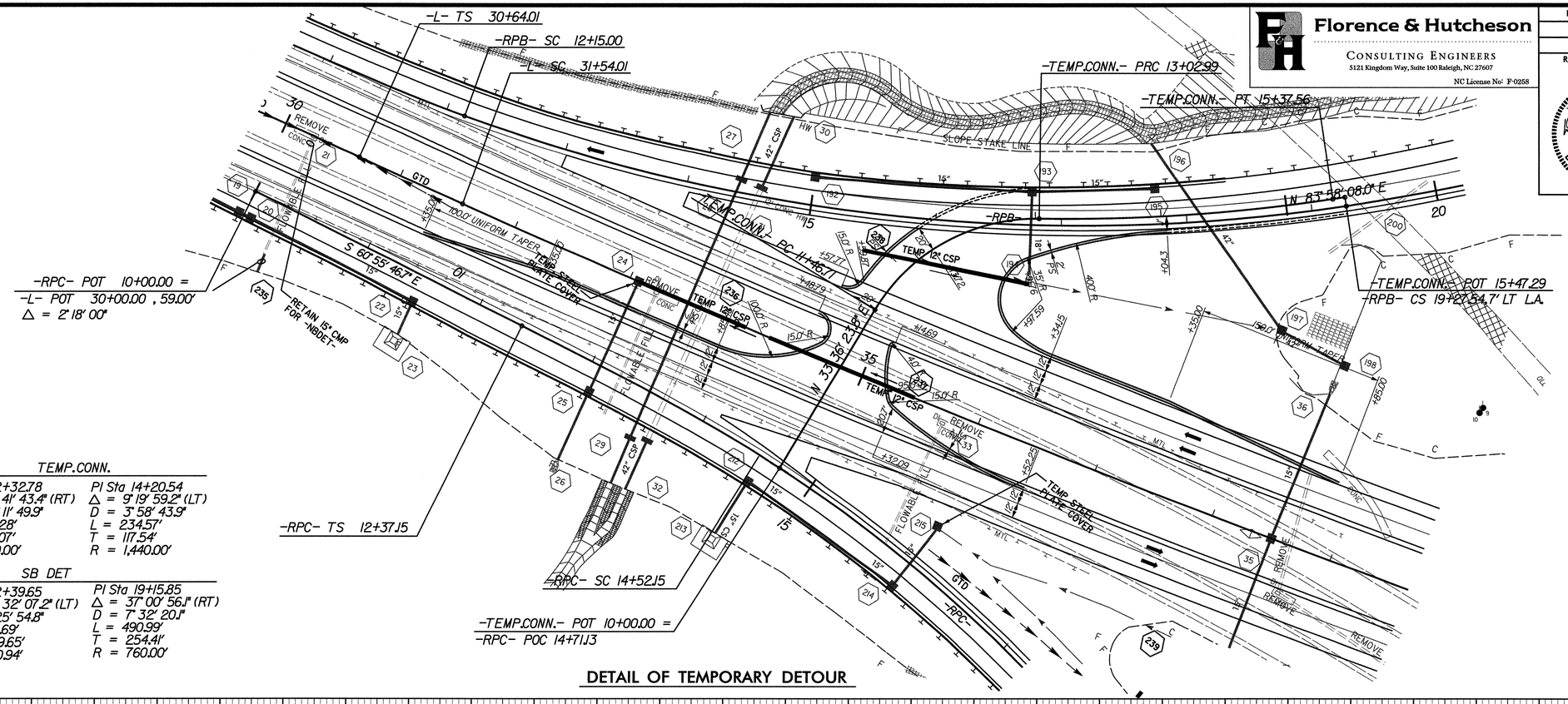

TEMP.CONN.

PI Sta 12+32.78	PI Sta 14+20.54
Δ = 59° 41' 43.4" (RT)	Δ = 9° 19' 59.2" (LT)
D = 38° 11' 49.9"	D = 3° 58' 43.9"
L = 156.28'	L = 234.57'
T = 86.07'	T = 117.54'
R = 150.00'	R = 1,440.00'

SB DET

PI Sta 12+39.65	PI Sta 19+15.85
Δ = 34° 32' 07.2" (LT)	Δ = 37° 00' 56.1" (RT)
D = 7° 25' 54.8"	D = 7° 32' 20.1"
L = 464.69'	L = 490.99'
T = 239.65'	T = 254.41'
R = 770.94'	R = 760.00'

DETAIL OF TEMPORARY DETOUR

FOR PLAN, SEE SHEET NO. 6

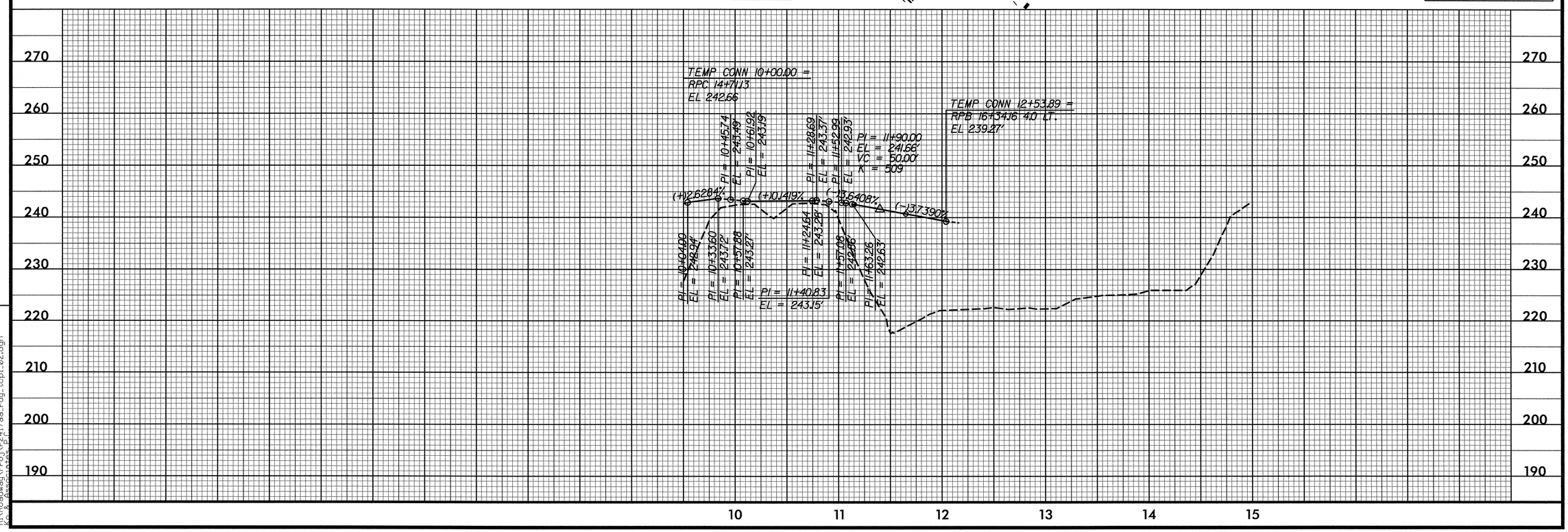

REVISIONS

8/17/99

9/20/2010
R:\Roadway\Proj\r2417aa_rdy_tcp1.02.dgn
Florence & Associates, P.C.

8/17/99

Florence & Hutcheson

CONSULTING ENGINEERS
5121 Kingdom Way, Suite 100 Raleigh, NC 27607
NC License No: F-0258

PROJECT REFERENCE NO.	SHEET NO.
R-2417AA	2-Q
R/W SHEET NO.	

ROADWAY DESIGN ENGINEER

NORTH CAROLINA PROFESSIONAL SEAL 22606 ENGINEER DAVID C. WALLER

11-9-10

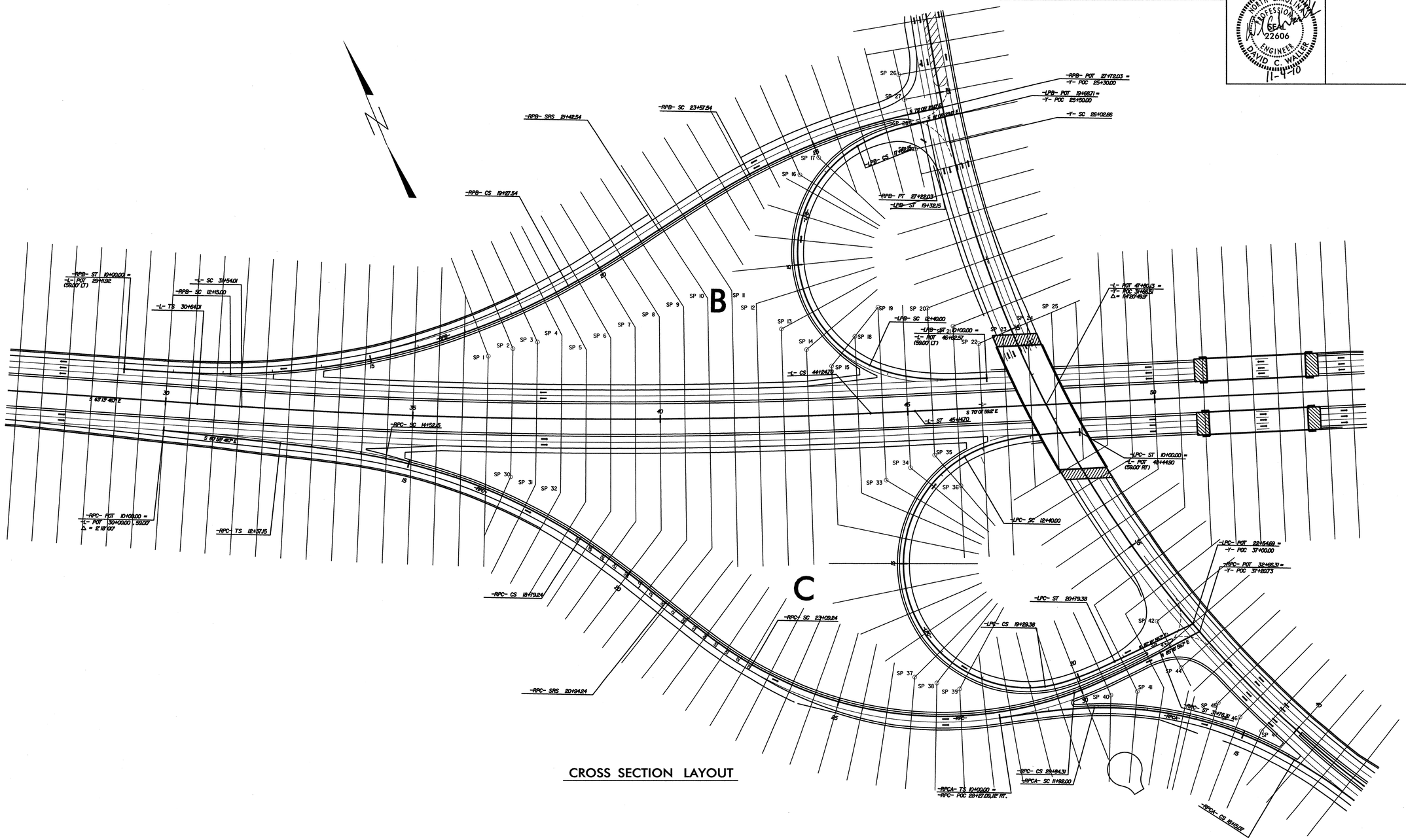

CROSS SECTION LAYOUT

11/3/2010
R:\Roadway\Proj\r2417aa_rdy_xslayout_psh.dgn
Florence & Hutcheson, Inc.

8/17/99

Florence & Hutcheson
CONSULTING ENGINEERS
5121 Kingdom Way, Suite 100 Raleigh, NC 27607
NC License No: F-0258

PROJECT REFERENCE NO.	SHEET NO.
R-2417AA	2-R
R/W SHEET NO.	

ROADWAY DESIGN ENGINEER

NORTH CAROLINA PROFESSIONAL SEAL 22606 ENGINEER DAVID C. WALLER
11-4-10

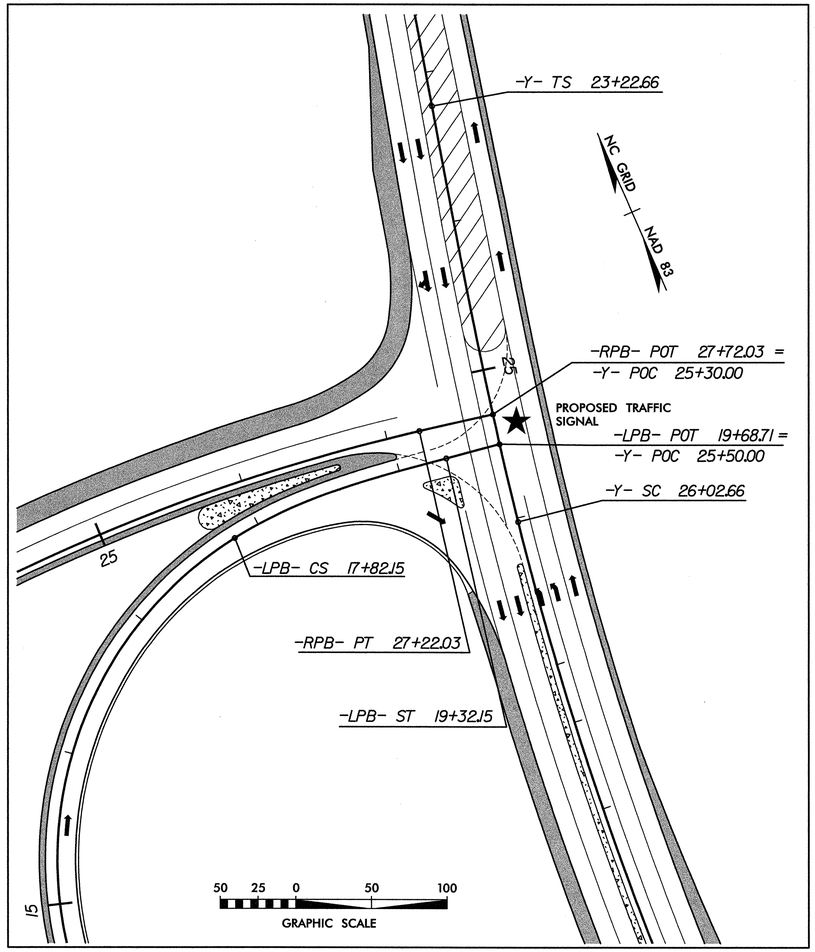

CUMNOCK RD. (-Y-) / RAMP 'B' (-RPB-) / LOOP 'B' (-LPB-) INTERSECTION
INTERSECTION DETAIL SHOWN FROM PLAN SHEET 6

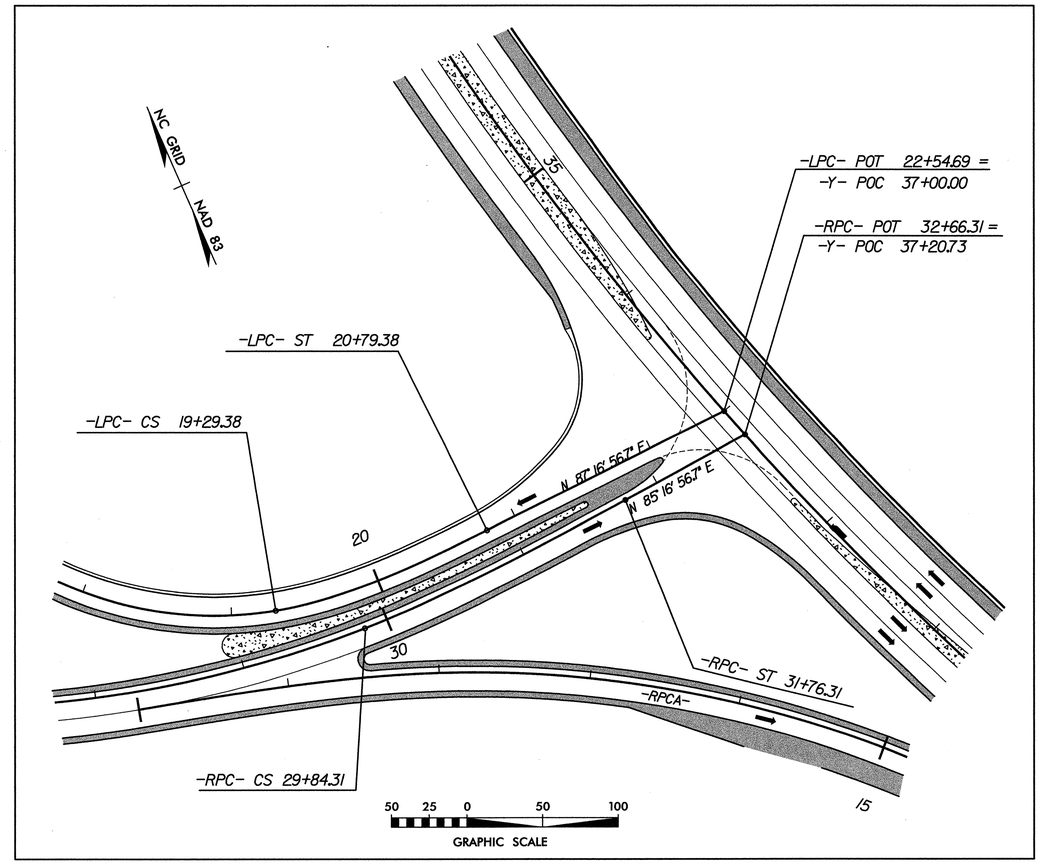

US 421 (-Y-) / RAMP 'C' (-RPC-) / LOOP 'C' (-LPC-) INTERSECTION
INTERSECTION DETAIL SHOWN FROM PLAN SHEET 6

LEGEND
- PAVED SHOULDER
- MONOLITHIC CONCRETE ISLANDS

11/3/2010
pw:\Roadway\Proj\r2417aa_rdy_det_intersections.dgn
Florence & Hutcheson, Inc.

30-JUL-2009 08:48
s:\contracts\contracts\special details\ericward\stds\06' stds to special details\30001\0300d01.dgn
jhowerton AT PS237501

5/14/99

STATE OF NORTH CAROLINA
DEPT. OF TRANSPORTATION
DIVISION OF HIGHWAYS
RALEIGH, N.C.

7-06

ENGLISH DETAIL DRAWING FOR
METHOD OF PIPE INSTALLATION

FLEXIBLE PIPE

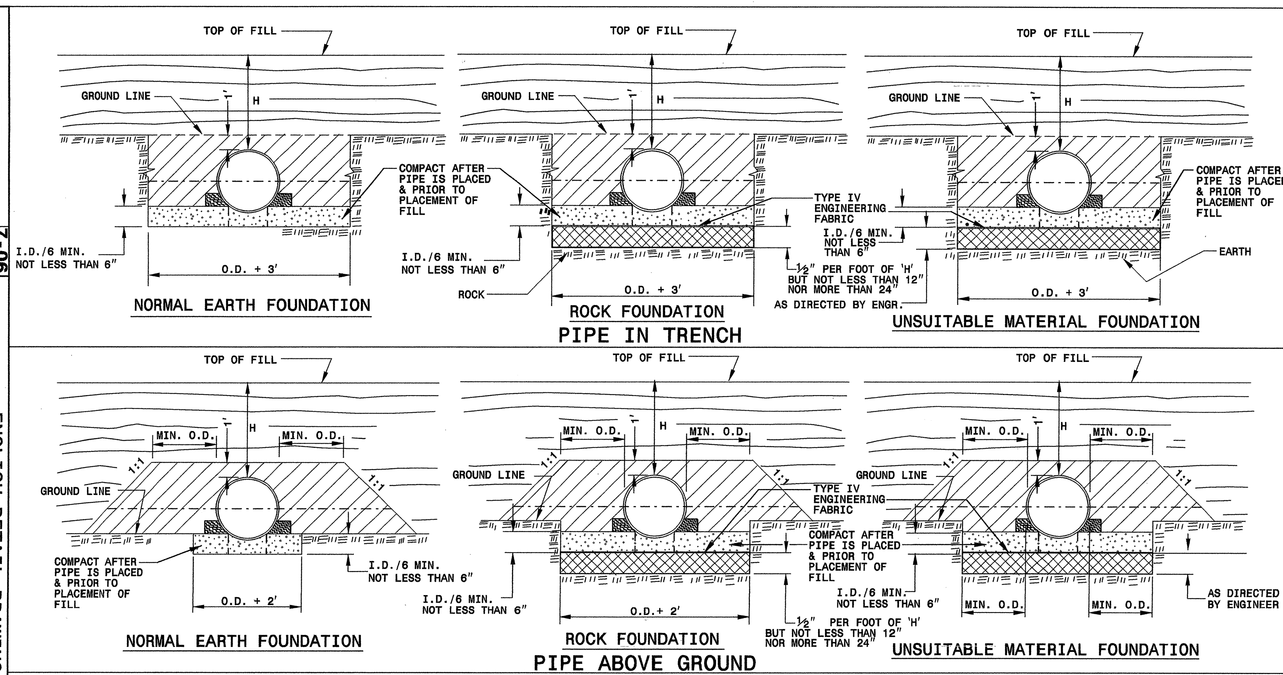

GENERAL NOTES:

I.D. = THE MAXIMUM HORIZONTAL INSIDE DIAMETER DIMENSION.

O.D. = THE MAXIMUM HORIZONTAL OUTSIDE DIAMETER DIMENSION.

H = THE FILL HEIGHT MEASURED VERTICALLY AT ANY POINT ALONG THE PIPE FROM THE TOP OF THE PIPE TO THE TOP OF THE EMBANKMENT AT THAT POINT.

TAKE CARE TO FULLY COMPACT HAUNCH ZONE OF PIPE BACKFILL.

LOOSELY PLACED SELECT MATERIAL CLASS III OR CLASS II, TYPE 1 FOR PIPE BEDDING. LEAVE SECTION DIRECTLY BENEATH PIPE UNCOMPACTED AS PIPE SEATING AND BACKFILL WILL ACCOMPLISH COMPACTION.

DO NOT OPERATE HEAVY EQUIPMENT OVER ANY PIPE CULVERT UNTIL THE PIPE CULVERT HAS BEEN PROPERLY BACKFILLED AND COVERED WITH AT LEAST 3 FEET OF APPROVED MATERIAL.

SPRINGLINE OF PIPE

SELECT BACKFILL MATERIAL CLASS III OR CLASS II, TYPE 1 ABOVE AND BELOW SPRINGLINE.

APPROVED SUITABLE LOCAL MATERIAL.

UNDISTURBED EARTH MATERIAL

SELECT MATERIAL CLASS V OR VI FOR FOUNDATION CONDITIONING. ENCAPSULATE WITH ENGINEERING FABRIC AS DIRECTED BY THE ENGINEER.

SHEET 1 OF 3
300D01

STATE OF NORTH CAROLINA
DEPT. OF TRANSPORTATION
DIVISION OF HIGHWAYS
RALEIGH, N.C.

7-06

ENGLISH DETAIL DRAWING FOR
METHOD OF PIPE INSTALLATION

RIGID PIPE

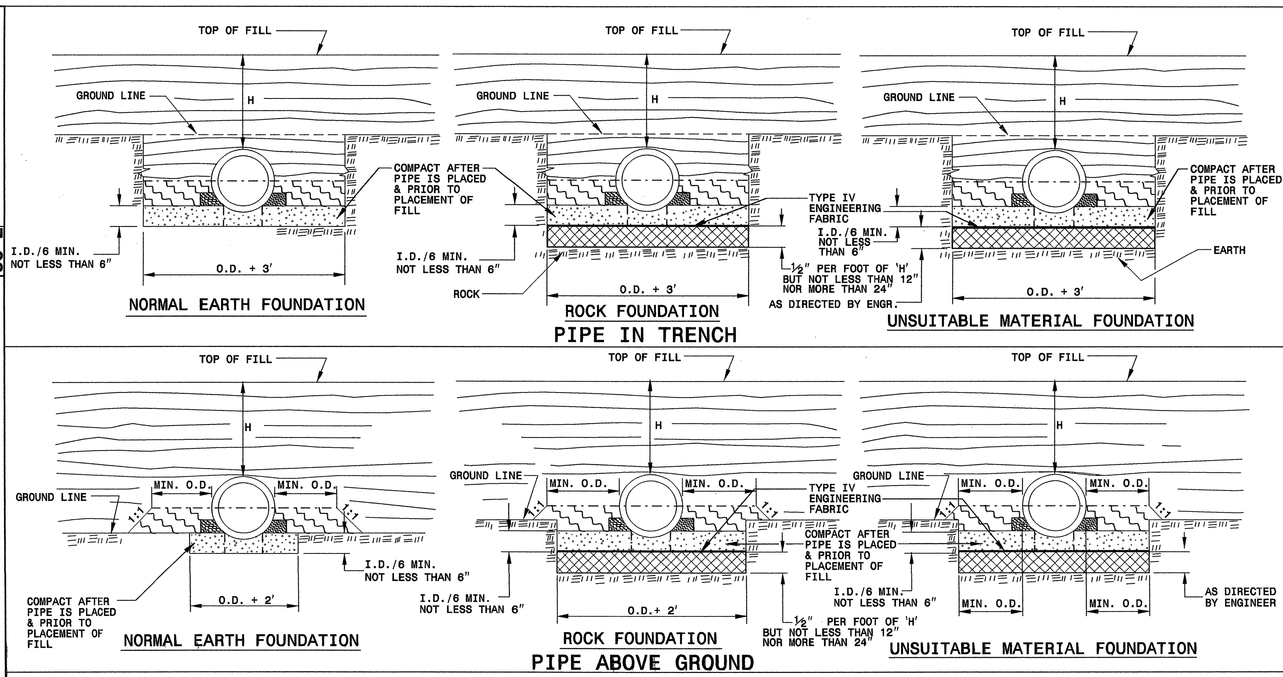

GENERAL NOTES:

I.D. = THE MAXIMUM HORIZONTAL INSIDE DIAMETER DIMENSION.

O.D. = THE MAXIMUM HORIZONTAL OUTSIDE DIAMETER DIMENSION.

H = THE FILL HEIGHT MEASURED VERTICALLY AT ANY POINT ALONG THE PIPE FROM THE TOP OF THE PIPE TO THE TOP OF THE EMBANKMENT AT THAT POINT.

TAKE CARE TO FULLY COMPACT HAUNCH ZONE OF PIPE BACKFILL.

LOOSELY PLACED SELECT MATERIAL CLASS III OR CLASS II, TYPE 1 FOR PIPE BEDDING. LEAVE SECTION DIRECTLY BENEATH PIPE UNCOMPACTED AS PIPE SEATING AND BACKFILL WILL ACCOMPLISH COMPACTION.

DO NOT OPERATE HEAVY EQUIPMENT OVER ANY PIPE CULVERT UNTIL THE PIPE CULVERT HAS BEEN PROPERLY BACKFILLED AND COVERED WITH AT LEAST 3 FEET OF APPROVED MATERIAL.

SPRINGLINE OF PIPE

SELECT BACKFILL MATERIAL CLASS III OR CLASS II, BELOW SPRINGLINE.

APPROVED SUITABLE LOCAL MATERIAL ABOVE SPRINGLINE.

UNDISTURBED EARTH MATERIAL

SELECT MATERIAL CLASS V OR VI FOR FOUNDATION CONDITIONING. ENCAPSULATE WITH ENGINEERING FABRIC AS DIRECTED BY THE ENGINEER.

SHEET 2 OF 3
300D01

PROJECT SERVICES UNIT
STANDARDS AND SPECIAL DESIGN
Office 919-250-4128 FAX 919-250-4119

SEE PLATE FOR TITLE

ORIGINAL BY: KKempf DATE: 5-15-09
MODIFIED BY: DATE:
CHECKED BY: DATE: 7/14/09
FILE SPE6/ericward/stds/stdetdetails/30001/0300d01.dgn

NORTH CAROLINA PROFESSIONAL SEAL 022696 ENGINEER

PROJECT REFERENCE NO. R-2417AA
SHEET NO. 2-S

STATE OF NORTH CAROLINA
DEPT. OF TRANSPORTATION
DIVISION OF HIGHWAYS
RALEIGH, N.C.

7-06

ENGLISH DETAIL DRAWING FOR
METHOD OF PIPE INSTALLATION

FILL HEIGHT TABLES

FLEXIBLE PIPE

Round Corrugated Steel Pipe
2 2/3 x ½ corrugation **

Diameter (inches)	Minimum cover (inches)	Maximum Height of Cover (feet) (Ga) 16	14	12	10	8
12	12	204	256			
15	12	162	204			
18	12	135	169	239		
21	12	115	145	204		
24	12	100	126	178		
30	12	79	100	142		
36	12	65	83	117	152	
42	12	55	70	100	130	160
48	12	48	61	87	113	139
54	12		54	77	100	123
60	12			69	90	111
66	12				81	100
72	12				74	91
78	12					81
84	12					69

Round Corrugated Aluminum Pipe
2 2/3 x ½ corrugation **

Diameter (inches)	Minimum cover (inches)	Maximum Height of Cover (feet) (Ga) 16	14	12	10	8
12	12	123	155	218	281	344
15	12	98	123	174	224	275
18	12	81	102	144	187	228
21	12	69	87	123	160	195
24	12	60	76	108	139	171
27	12		67	95	123	151
30	12		60	85	111	136
36	12		50	71	92	113
42	12			60	78	96
48	12			52	68	84
54	12			46	50	74
60	12				50	62
66	12					51
72	12					41

** FOR DIFFERENT CORRUGATIONS AND ARCH PIPES REFER TO ROADWAY DESIGN MANUAL OR MANUFACTURERS SPECIFICATION.

REFER TO THE FOLLOWING FOR PIPE SPECIFICATIONS

CSP - AASHTO M36
CAAP - AASHTO M196
HDPE - AASHTO M294
PVC - ASTM F949 or AASHTO M304

NOTES: FILL HEIGHTS SHOWN WERE CALCULATED USING AASHTO LRFD BRIDGE DESIGN SPECIFICATIONS

1′ MINIMUM COVER FOR ALL SIDE DRAIN PIPE IN ACCORDANCE WITH THE STANDARD SPECIFICATIONS

HDPE - * (Minimum fill) 2′ for pipe diameters ≥ 12″ and ≤ 60″
* (Maximum fill) 20′ for pipe diameters ≤ 24″
17′ for pipe diameters ≥ 30″ and ≤ 60″

PVC - * (Minimum fill) 2′ for pipe diameters ≥ 12″ and ≤ 36″
* (Maximum fill) 30′ for pipe diameters ≥ 12″ and ≤ 36″

* FILL HEIGHT IS MEASURED FROM THE TOP OF THE PIPE TO THE BOTTOM OF THE PAVEMENT STRUCTURE

RIGID PIPE

RCP - * (Minimum fill) 1′ for Class IV & CLASS V
2′ for Class III & Class II

* (Maximum fill) 10′ - Class II pipe
20′ - Class III pipe
30′ - Class IV pipe
40′ - Class V pipe

(For fills > 40′ & < 80′ use LRFD Direct Design Method)

* FILL HEIGHT IS MEASURED FROM THE TOP OF THE PIPE TO THE BOTTOM OF THE PAVEMENT STRUCTURE

REFER TO THE FOLLOWING FOR PIPE SPECIFICATIONS

RCP - AASHTO M170

NOTES: FILL HEIGHTS SHOWN WERE CALCULATED USING AASHTO LRFD BRIDGE DESIGN SPECIFICATIONS

1′ MINIMUM COVER FOR ALL SIDE DRAIN PIPE IN ACCORDANCE WITH THE STANDARD SPECIFICATIONS

SHEET 3 OF 3
300D01

STATE OF NORTH CAROLINA
DEPT. OF TRANSPORTATION
DIVISION OF HIGHWAYS
RALEIGH, N.C.

7-06

ENGLISH DETAIL DRAWING FOR
METHOD OF PIPE INSTALLATION

FILL HEIGHT TABLES

SHEET 3 OF 3
300D01

PROJECT SERVICES UNIT
STANDARDS AND SPECIAL DESIGN
Office 919-250-4128 FAX 919-250-4119

SEE PLATE FOR TITLE

ORIGINAL BY: KKampf DATE: 5-15-09
MODIFIED BY: DATE:
CHECKED BY: DATE: 7/30/09
FILE SPEC/ericward/stds/stdstodetails/30001/0300d01.dgn

NORTH CAROLINA PROFESSIONAL SEAL 022986 ENGINEER

PROJECT REFERENCE NO. R-2417AA
SHEET NO. 2-T

PROJECT REFERENCE NO.	SHEET NO.
R-2417AA	2-U

STATE OF
NORTH CAROLINA
DEPT. OF TRANSPORTATION
DIVISION OF HIGHWAYS
RALEIGH, N.C.

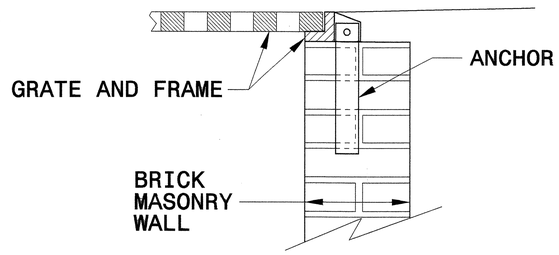

BRICK MASONRY CONSTRUCTION

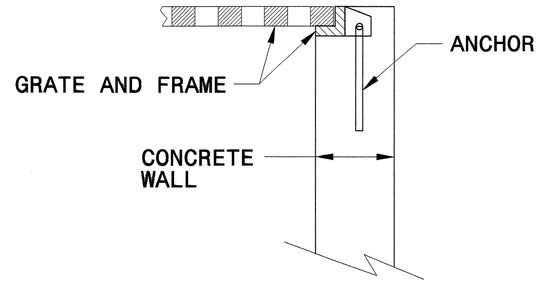

CONCRETE CONSTRUCTION

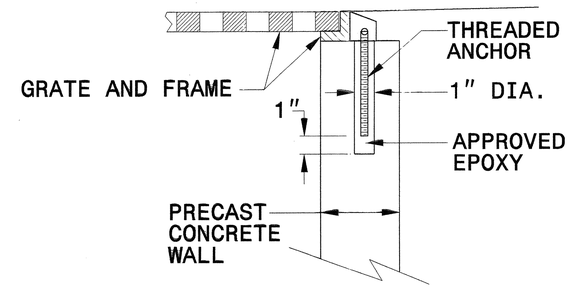

PRECAST CONCRETE CONSTRUCTION

DETAIL SHOWING ANCHORAGE OF FRAME FOR GRATED DROP INLET

NOTE:
CONSTRUCT GRATED DROP INLET TO COINCIDE WITH NORMAL OR SUPERELEVATED SHOULDER OR PAVEMENT SLOPE.

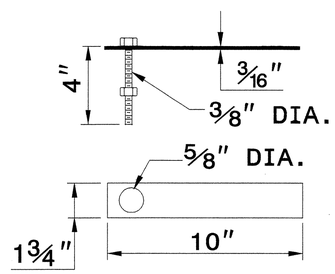

MASONRY ANCHOR
3/8" DIA. BOLT WITH PLATE

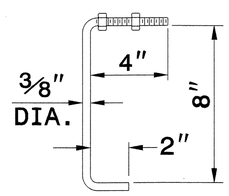

CONCRETE ANCHOR
3/8" DIA. BENT BAR

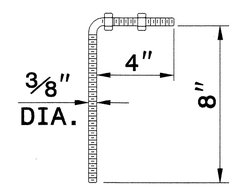

PRECAST CONCRETE ANCHOR
3/8" DIA. BENT BAR

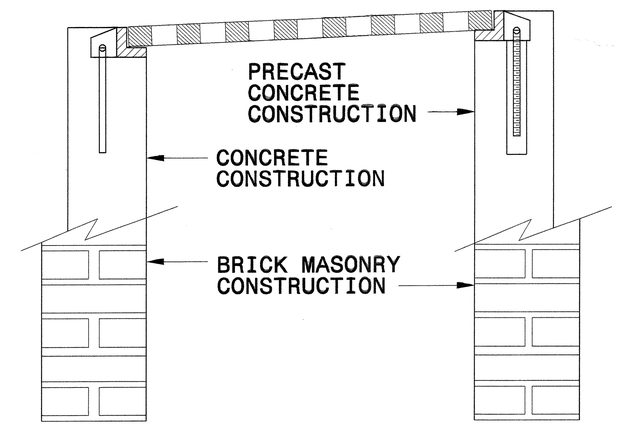

FRAME AND GRATE INSTALLATION FOR NORMAL CROWN AND SUPERELEVATED SECTIONS

STATE OF
NORTH CAROLINA
DEPT. OF TRANSPORTATION
DIVISION OF HIGHWAYS
RALEIGH, N.C.

ENGLISH DETAIL DRAWING FOR
ANCHORAGE FOR FRAMES
BRICK/CONCRETE/PRECAST CONCRETE

SHEET 1 OF 1
840D25

ENGLISH DETAIL DRAWING FOR
ANCHORAGE FOR FRAMES
BRICK/CONCRETE/PRECAST CONCRETE

SHEET 1 OF 1
840D25

NORTH CAROLINA PROFESSIONAL SEAL 022366 ENGINEER JOEL R. HOWERTON
11/4/10

PROJECT SERVICES UNIT
STANDARDS AND SPECIAL DESIGN
Office 919-250-4128 FAX 919-250-4119

SEE PLATE FOR TITLE

ORIGINAL BY:	2006 STD 840.25	DATE:	07/18/06
MODIFIED BY:	F.E. WARD	DATE:	9/25/06
CHECKED BY:	[illegible]	DATE:	11/3/08
FILE SPEC.:			

$$$$$$$$SYSTIME$$$$$$$$
$$$$$$$$SYSTIME$$$$$$$$
$$$$USERNAME$$$$
$$

PROJECT REFERENCE NO.	SHEET NO.
R-2417AA	2-AH

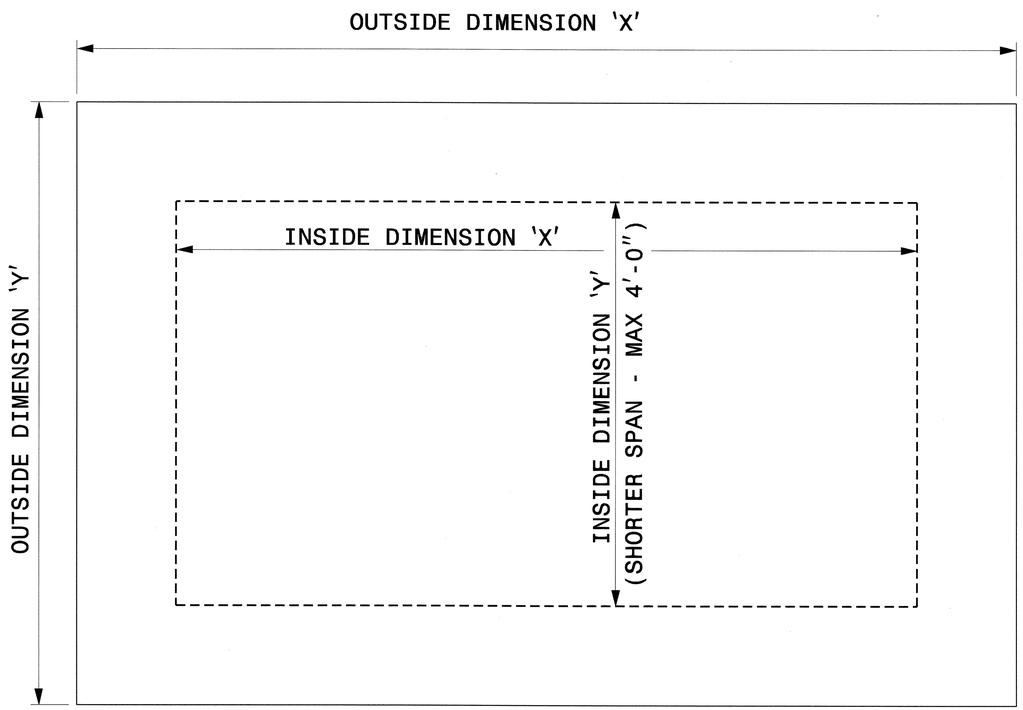

PLAN VIEWS

GENERAL NOTES:

- -USE GRADE A36 STEEL
- -STEEL COVERS ARE FOR TEMPORARY USE DURING PHASE CONSTRUCTION.
- -PLACE FILL DIRECTLY OVER THE STEEL PLATES.
- -SEE ROADWAY PLANS AND PROVISIONS FOR LOCATIONS
- -QUANTITIES TO BE PAID FOR AT THE UNIT PRICE BID PER EACH.

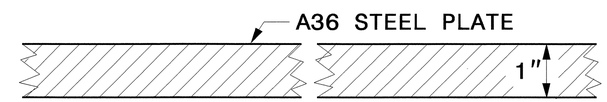

SECTION VIEW OF STEEL TOP PLATE

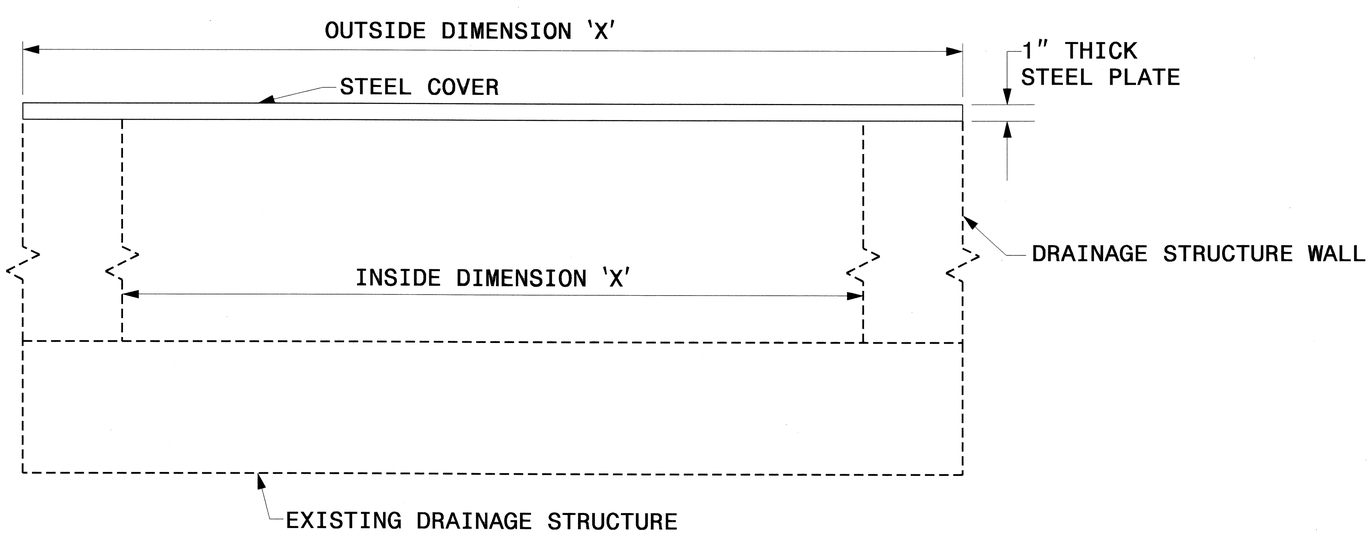

ELEVATION VIEWS

PROJECT SERVICES UNIT
STANDARDS AND SPECIAL DESIGN
Office 919-250-4128 FAX 919-250-4119

DETAIL OF TEMPORARY 1" STEEL COVER OVER DRAINAGE STRUCTURE

ORIGINAL BY: _____ DATE: _____
MODIFIED BY: rnbritt DATE: 04-29-04
CHECKED BY: _____ DATE: 5/19/10
FILE SPEC.: details/nbritt/english/misc/steelcover.dgn

5/14/99
18-MAY-2010 08:05
S:\Contracts\Contracts\Special Details\jhowerton\Temp Steel Cover.dgn
$$$$USERNAME$$$$

PROJECT REFERENCE NO.	SHEET NO.
R-2417AA	2-AI

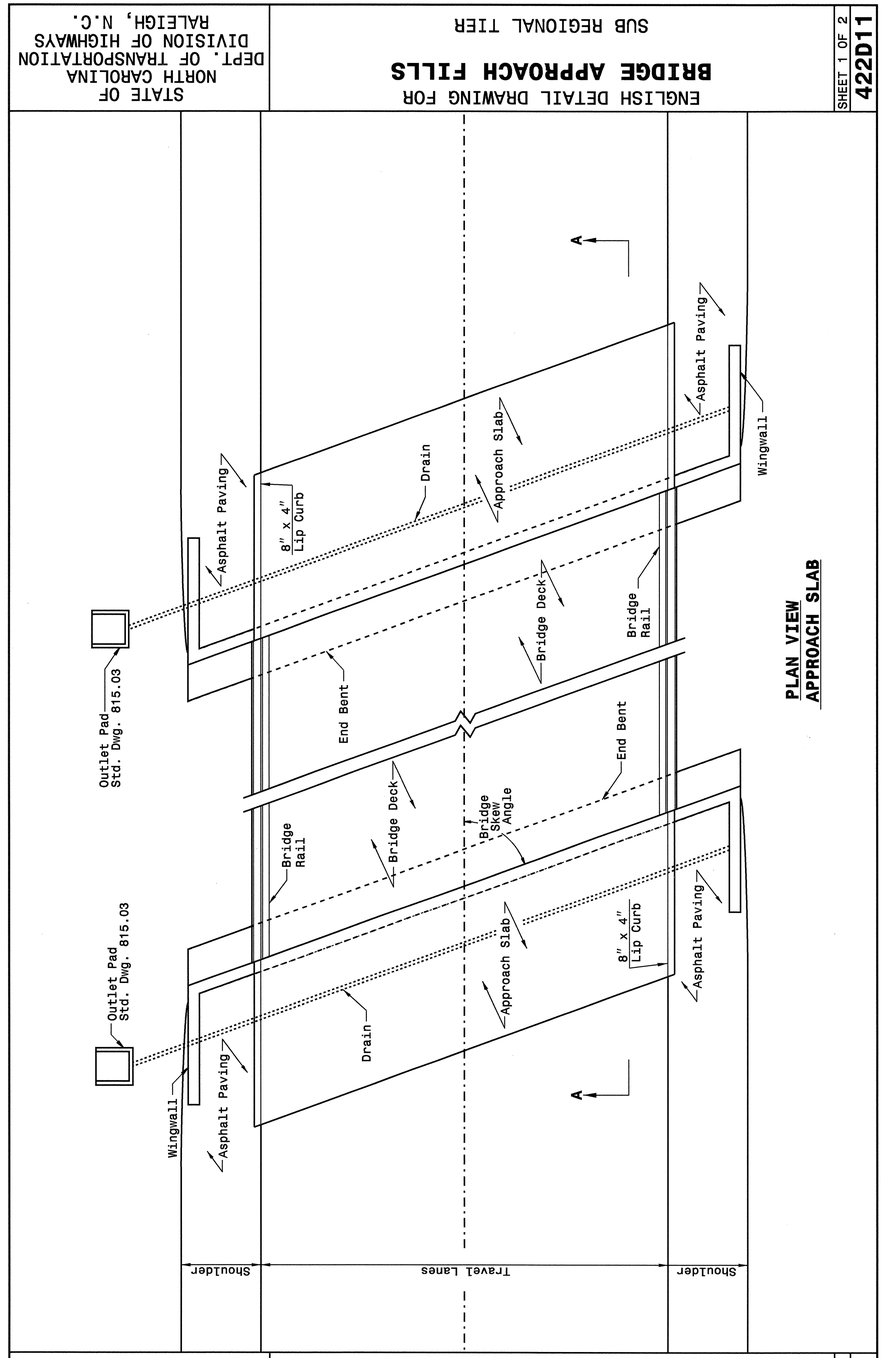

PLAN VIEW
APPROACH SLAB

STATE OF NORTH CAROLINA DEPT. OF TRANSPORTATION DIVISION OF HIGHWAYS RALEIGH, N.C.

ENGLISH DETAIL DRAWING FOR
BRIDGE APPROACH FILLS
SUB REGIONAL TIER

SHEET 1 OF 2
422D11

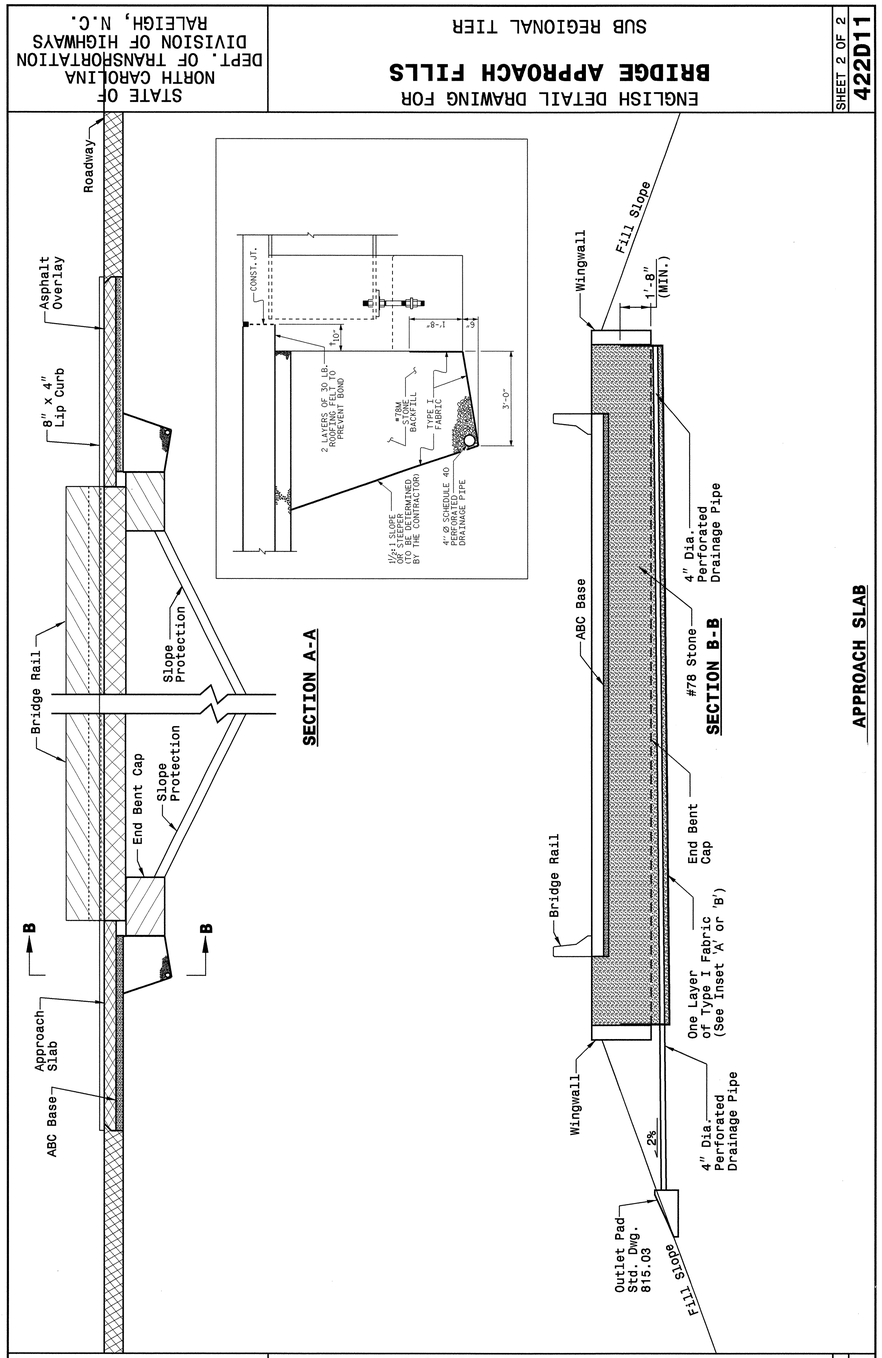

SECTION A-A

SECTION B-B

APPROACH SLAB

STATE OF NORTH CAROLINA DEPT. OF TRANSPORTATION DIVISION OF HIGHWAYS RALEIGH, N.C.

ENGLISH DETAIL DRAWING FOR
BRIDGE APPROACH FILLS
SUB REGIONAL TIER

SHEET 2 OF 2
422D11

STATE OF NORTH CAROLINA DEPT. OF TRANSPORTATION DIVISION OF HIGHWAYS RALEIGH, N.C.

ENGLISH DETAIL DRAWING FOR
BRIDGE APPROACH FILLS
SUB REGIONAL TIER

SHEET 1 OF 2
422D11

STATE OF NORTH CAROLINA DEPT. OF TRANSPORTATION DIVISION OF HIGHWAYS RALEIGH, N.C.

ENGLISH DETAIL DRAWING FOR
BRIDGE APPROACH FILLS
SUB REGIONAL TIER

SHEET 2 OF 2
422D11

NORTH CAROLINA PROFESSIONAL SEAL 022966 ENGINEER
11/9/10

PROJECT SERVICES UNIT
STANDARDS AND SPECIAL DESIGN
Office 919-250-4128 FAX 919-250-4119

BRIDGE APPROACH FILLS

SUB REGIONAL TIER

ORIGINAL BY: K. A. Kempf DATE: 6-10-08
MODIFIED BY: DATE:
CHECKED BY: DATE:
FILE SPEC.: kkempf\english\bridge approach fills.dgn

25-JAN-2010 09:33
r:\roadway\proj\contracts\Special Details\nbritt\english\bridge\bridge approach fill sub reg tier.dgn
$$$$USERNAME$$$$

Florence & Hutcheson
CONSULTING ENGINEERS
5121 Kingdom Way, Suite 100 Raleigh, NC 27607
NC License No: F-0258

PROJECT REFERENCE NO.	SHEET NO.
R-2417AA	2-AJ
R/W SHEET NO.	
ROADWAY DESIGN ENGINEER	

NORTH CAROLINA PROFESSIONAL SEAL 22606 ENGINEER DAVID C. WALLER
10-1-10

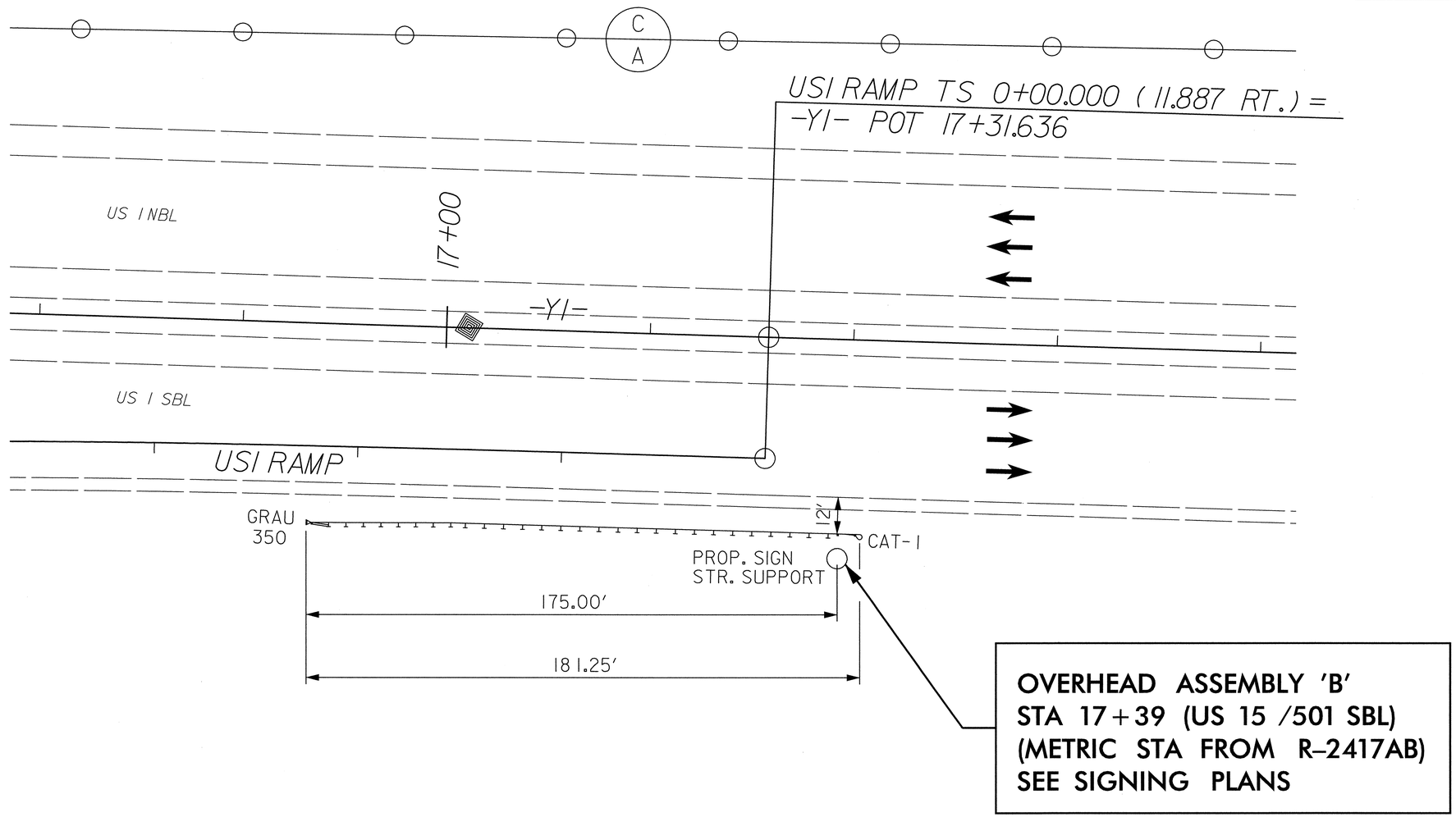

DETAIL OF GUARDRAIL AT SIGN SUPPORT

8/17/99
10/6/2010
R:\Roadway\Proj\r2417aa_rdy_det_gr_r2417ab.dgn
Florence & Hutcheson, Inc.

PROJECT REFERENCE NO.	SHEET
34431.1.1 (R-2417AA)	2-AK

GEOTECHNICAL ENGINEER

NORTH CAROLINA PROFESSIONAL SEAL 023480 ENGINEER JOHN S. W. FARGHER

SIGNATURE DATE

ENGINEER

SIGNATURE DATE

COUNTY: LEE

STATIONS: 38+50 TO 41+00 -Y-, LEFT: 1½:1 (H:V)

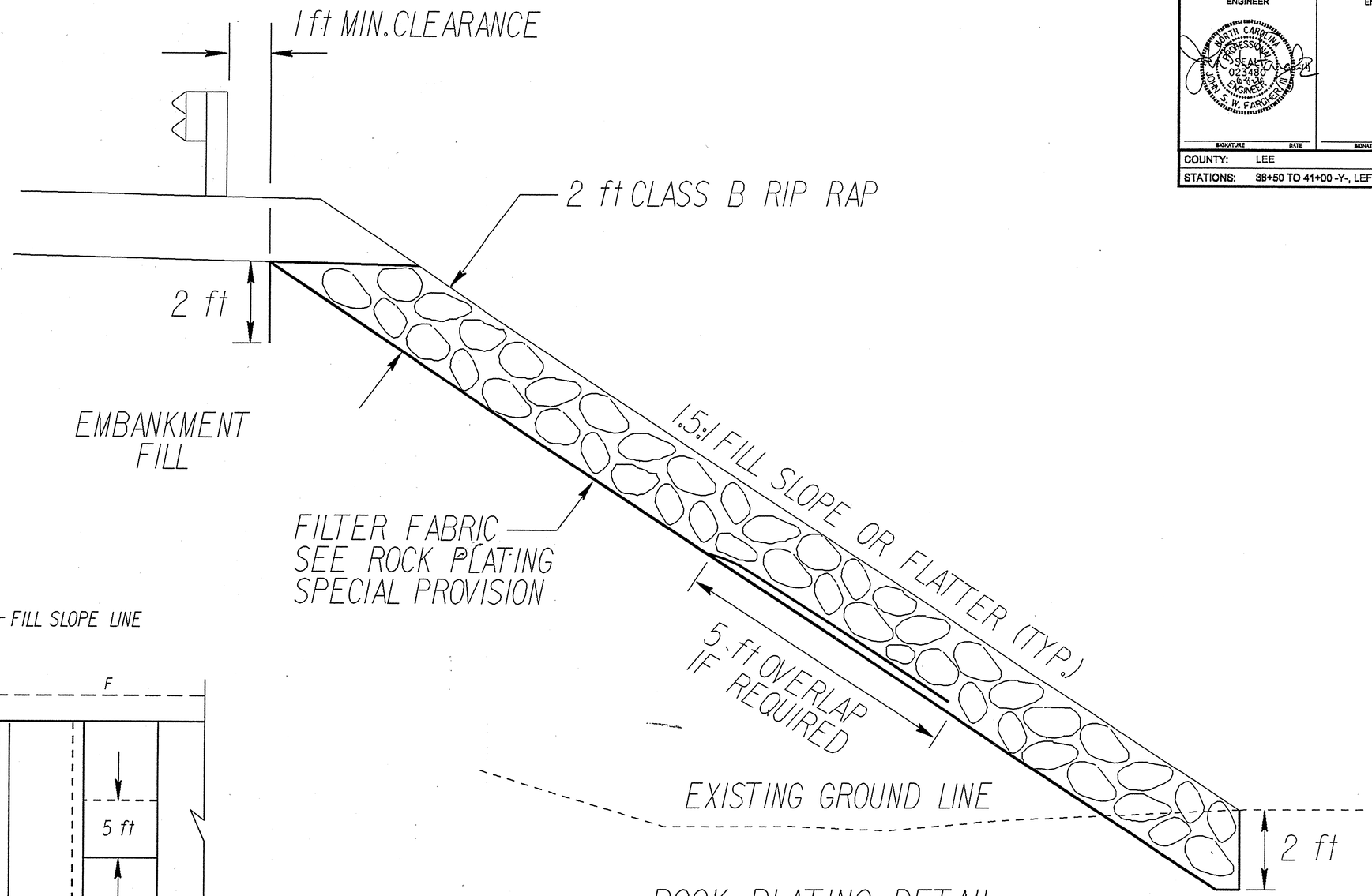

ROCK PLATING DETAIL

N.T.S.

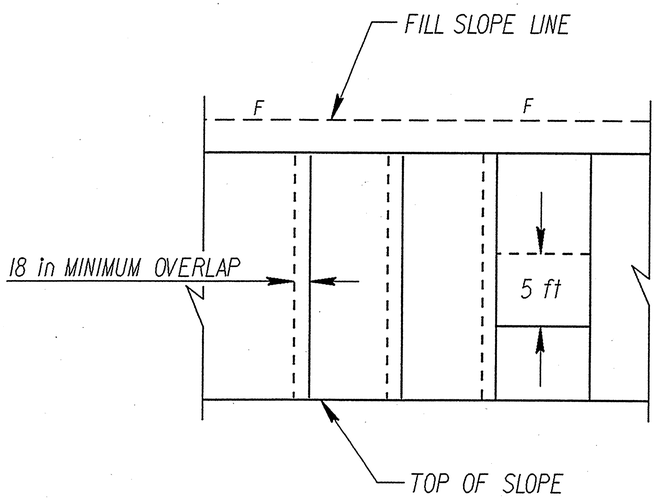

FABRIC OVERLAP DETAIL

N.T.S.

PREPARED BY: E.J. SALVO	DATE: 8/2008
REVIEWED BY: J.S. FARGHER	DATE: 8/2008

GEOTECHNICAL ENGINEERING UNIT

☐ EASTERN REGIONAL OFFICE

☒ WESTERN REGIONAL OFFICE

STATE OF NORTH CAROLINA DEPARTMENT OF TRANSPORTATION RALEIGH

TYPICAL ROCK PLATING CROSS SECTION

REVISIONS

NO.	BY	DATE	NO.	BY	DATE
1			3		

PROJECT REFERENCE NO.	SHEET NO.
R-2417AA	2-AL

STATE OF
NORTH CAROLINA
DEPT. OF TRANSPORTATION
DIVISION OF HIGHWAYS
RALEIGH, N.C.

ENGLISH DETAIL DRAWING FOR
REINFORCED CONCRETE ENDWALL
SINGLE 54" PIPE 60° OR 120° SKEW

SHEET 1 OF 1
838D24

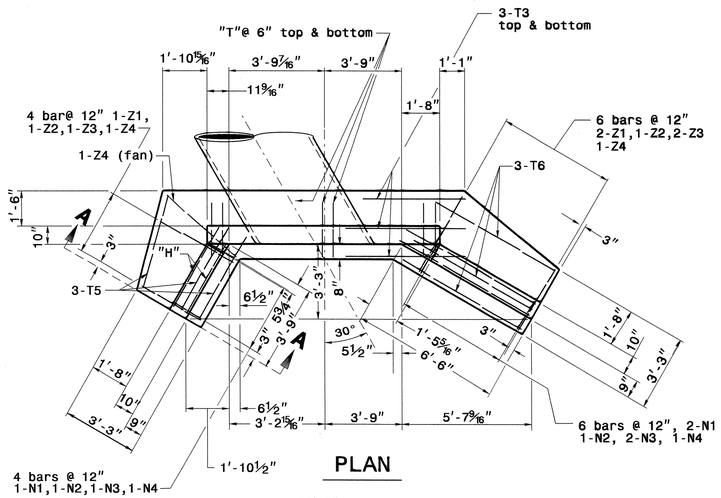

PLAN

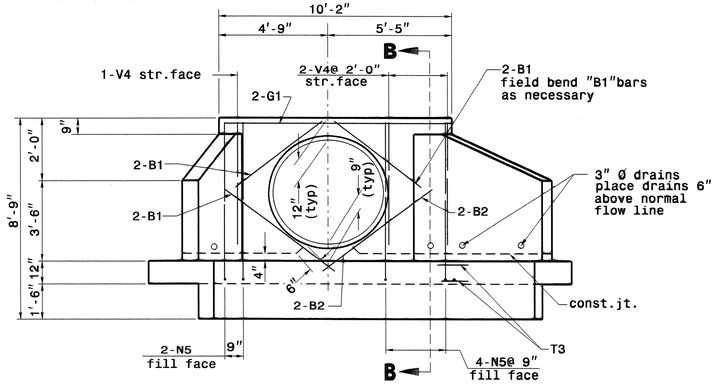

ELEVATION

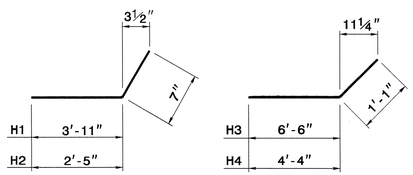

"H" BARS "H" BARS

"H", "N", & "Z" BAR DIMENSIONS ARE OUT TO OUT.

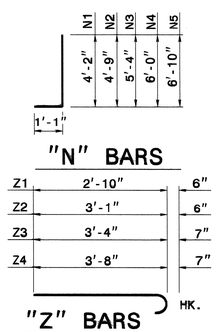

"N" BARS

"Z" BARS

SEE STD. NO. 838.45 FOR GENERAL NOTES.

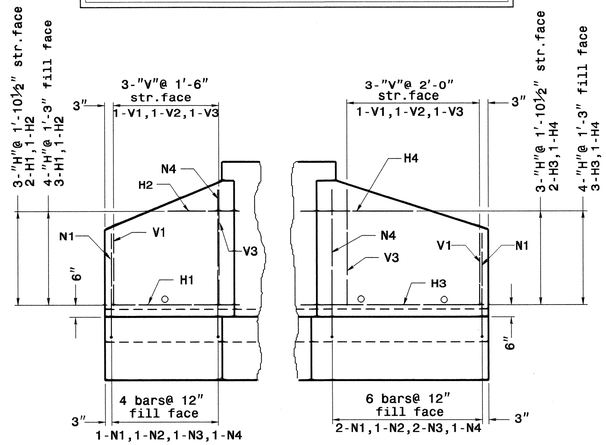

WING ELEVATION

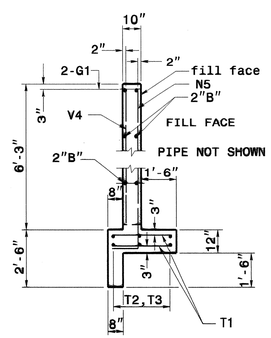

SECTION - BB

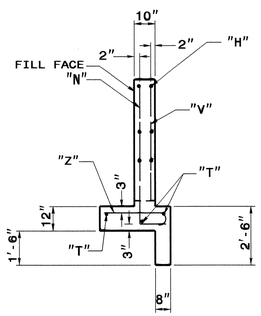

SECTION - AA

BILL OF MATERIAL FOR ENDWALLS				
REINF. STEEL			1-PIPE	
BAR	SIZE	LENGTH	NO.	WEIGHT
Z1	#4	3'-4"	3	7
Z2	#4	3'-7"	2	5
Z3	#5	3'-11"	3	12
Z4	#5	4'-3"	3	13
N1	#4	5'-3"	3	11
N2	#4	5'-10"	2	8
N3	#4	6'-5"	3	13
N4	#5	7'-1"	2	15
N5	#4	7'-11"	6	32
V1	#4	3'-0"	2	4
V2	#4	3'-10"	2	5
V3	#4	4'-8"	2	6
V4	#4	5'-9"	3	12
H1	#4	4'-6"	5	15
H2	#4	3'-0"	2	4
H3	#4	7'-7"	5	25
H4	#4	5'-5"	2	7
G1	#7	9'-10"	2	40
T1	#4	2'-6"	40	67
T2	#4	12'-10"	6	51
T5	#4	4'-2"	3	8
T6	#4	6'-0"	3	12
B1	#4	4'-9"	6	19
B2	#4	6'-0"	2	8
REINF. STEEL LBS.				399
CONC/C.M. CU. YDS.			5.8	
CONC/R.C. CU. YDS.			5.6	

STATE OF
NORTH CAROLINA
DEPT. OF TRANSPORTATION
DIVISION OF HIGHWAYS
RALEIGH, N.C.

ENGLISH DETAIL DRAWING FOR
REINFORCED CONCRETE ENDWALL
SINGLE 54" PIPE 60° OR 120° SKEW

SHEET 1 OF 1
838D24

NORTH CAROLINA PROFESSIONAL SEAL 022666 ENGINEER JOEL S. HOWSLEY
11/9/10

CONTRACT STANDARDS AND DEVELOPMENT UNIT
Office 919-250-4128 FAX 919-250-4119

SEE PLATE FOR TITLE

ORIGINAL BY: DATE:
MODIFIED BY: nbritt DATE: 05-08-06
CHECKED BY: DATE: 11/11/10
FILE SPEC.: nbritt/english/hydro/838d24 54 endwall 60sk.dgn

29-OCT-2010 14:13
S:\Contracts\Contracts\Special Details\nbritt\english\hydro\838d24 54 endwall 60sk.dgn
$$$$USERNAME$$$$

PROJECT REFERENCE NO.	SHEET NO.
R-2417AA	2-AM

STATE OF
NORTH CAROLINA
DEPT. OF TRANSPORTATION
DIVISION OF HIGHWAYS
RALEIGH, N.C.

ENGLISH DETAIL DRAWING FOR
REINFORCED CONCRETE ENDWALL
FOR 54" PIPE 45° OR 135° SKEW

SHEET 1 OF 1
838D25

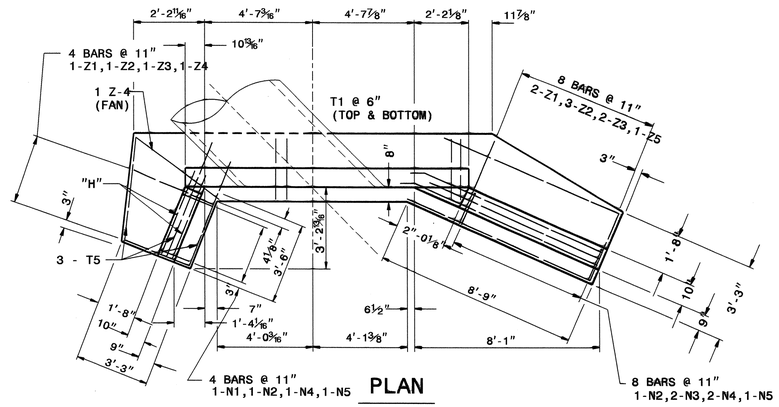

PLAN

SEE STD. NO. 838.45 FOR GENERAL NOTES.

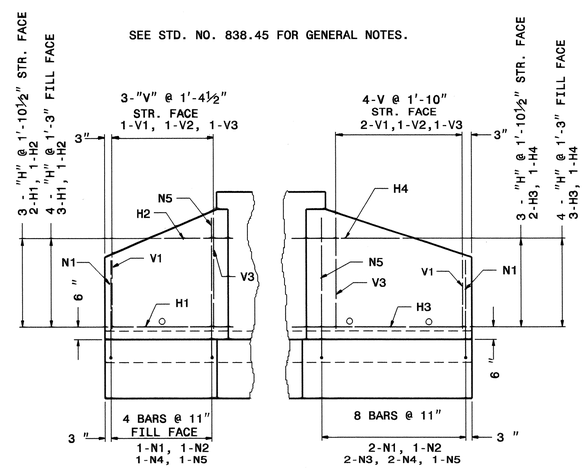

WING ELEVATION

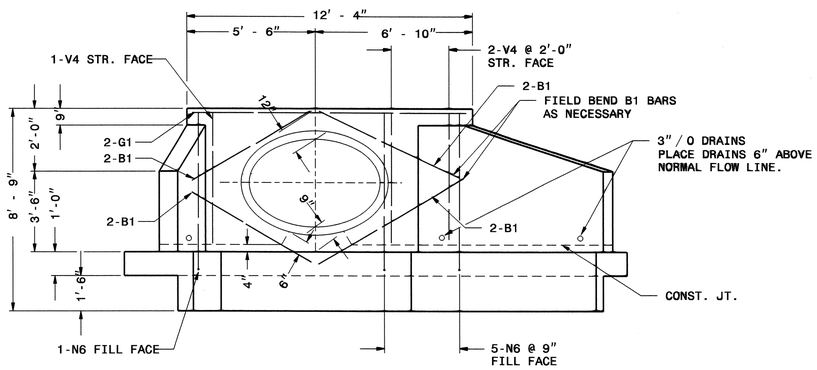

ELEVATION

BILL OF MATERIAL FOR ENDWALLS				
REINF. STEEL				
BAR	SIZE	LENGTH	NO.	WEIGHT
Z1	#4	3'-4"	3	7
Z2	#4	3'-7"	4	10
Z3	#4	3'-11"	3	8
Z4	#5	4'-3"	3	13
N1	#4	5'-3"	3	11
N2	#4	5'-9"	2	8
N3	#4	6'-1"	2	8
N4	#4	6'-5"	3	13
N5	#5	7'-0"	2	15
N6	#4	7'-11"	6	32
V1	#4	3'-1"	3	6
V2	#4	3'-11"	2	5
V3	#4	4'-8"	2	6
V4	#4	5'-9"	3	12
H1	#4	4'-3"	5	14
H2	#4	2'-10"	2	4
H3	#4	9'-10"	5	33
H4	#4	6'-11"	2	9
G1	#7	12'-0"	2	49
T1	#4	2'-6"	50	84
T2	#4	15'-2"	6	61
T5	#4	4'-3"	3	9
T6	#4	8'-0"	3	16
B1	#4	5'-9"	8	31
REINF. STEEL LBS.				464
CONC/C.M. CU. YDS.				6.9
CONC/R.C. CU. YDS.				6.6

"H", "N", & "Z" BAR DIMENSIONS ARE OUT TO OUT.

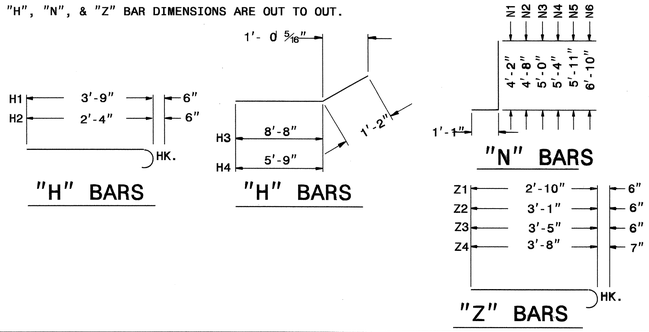

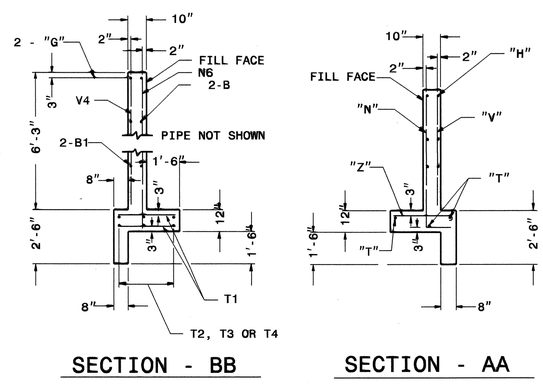

STATE OF
NORTH CAROLINA
DEPT. OF TRANSPORTATION
DIVISION OF HIGHWAYS
RALEIGH, N.C.

ENGLISH DETAIL DRAWING FOR
REINFORCED CONCRETE ENDWALL
FOR 54" PIPE 45° OR 135° SKEW

SHEET 1 OF 1
838D25

NORTH CAROLINA PROFESSIONAL SEAL 022966 ENGINEER
VOELLS HOVEKER & THOMPSON
11/9/10

CONTRACT STANDARDS AND DEVELOPMENT UNIT
Office 919-250-4128 FAX 919-250-4119

SEE PLATE FOR TITLE

ORIGINAL BY: _____ DATE: _____
MODIFIED BY: E. Ward DATE: 10-25-03
CHECKED BY: [signature] DATE: 11/9/10
FILE SPEC.: s:\ds9\stand\838d25.dgn

29-OCT-2010 14:11
s:\contracts\Special Details\vericward\usr\ds9\stand\838d25.dgn
$$$$USERNAME$$$$

PROJECT REFERENCE NO.	SHEET NO.
R-2417AA	2-AN

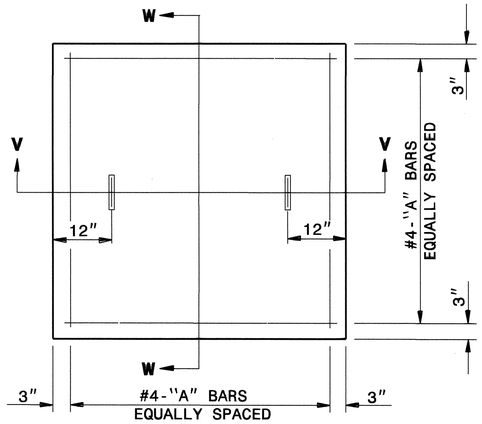

PLAN

PRECAST OR CAST IN PLACE TOP SLAB

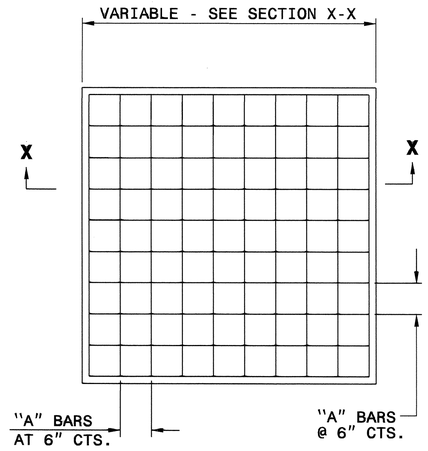

PLAN

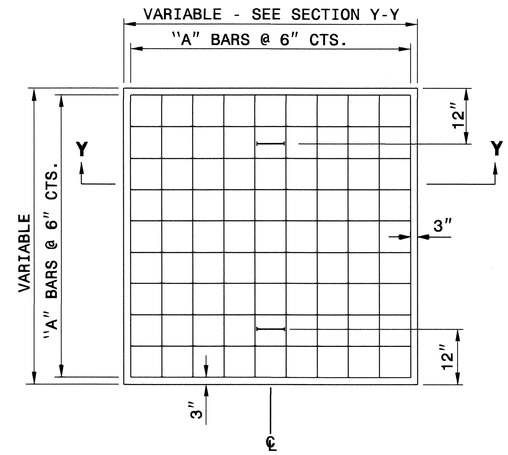

PLAN

GENERAL NOTES:

CONSTRUCT IN ACCORDANCE WITH SECTION 859 OF THE STANDARD SPECIFICATIONS.

THE DIMENSIONS FOR THE EXISTING BOXES ARE APPROXIMATE AND MAY VARY SLIGHTLY.

DETAIL INTENDED FOR NON-TRAFFIC BEARING DRAINAGE STRUCTURES.

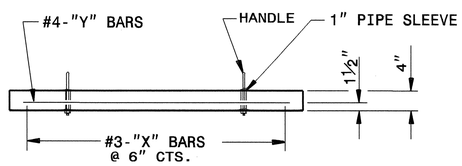

SECTION V-V

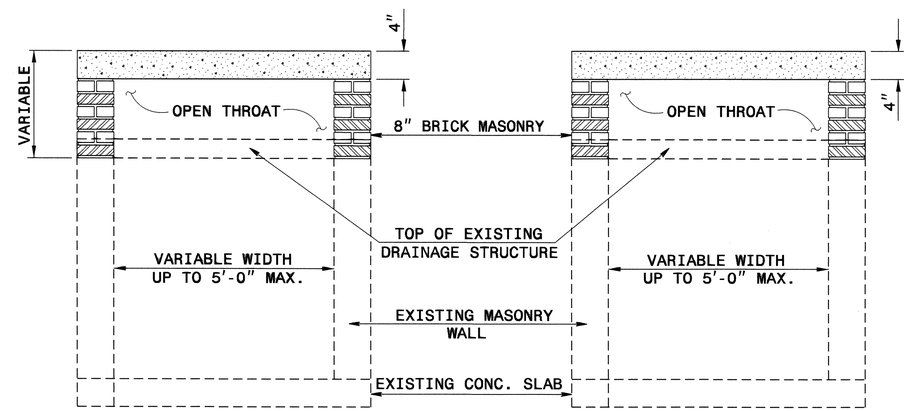

SECTION X-X

SECTION Y-Y

BILL OF MATERIALS				
REINFORCING STEEL				
CODE	SIZE	QTY.	LENGTH	REINF. STEEL LBS.
A	#4	20	4'-6"	60.12
			TOTAL	60.12
MASONRY				CU.YDS.
TOP SLAB CONCRETE CLASS "B"				0.288 *
BRICK MASONRY PER FT.HT.(MIN)				0.063

★ NOTE:
QUANTITIES BASED ON 3'-6" X 3'-6" DRAINAGE STRUCTURE. ADJUST QUANTITIES FOR LARGER STRUCTURES.

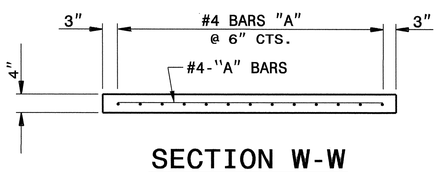

SECTION W-W

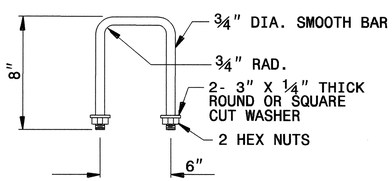

DETAIL OF HANDLE

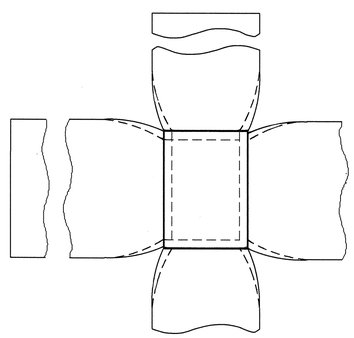

PLAN OF CATCH BASIN

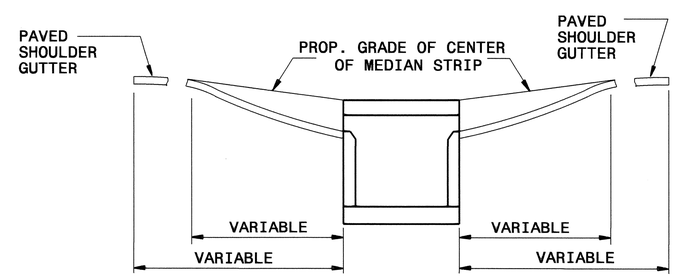

SECTION OF CATCH BASIN

DETAIL SHOWING METHOD OF PLACING CATCH BASIN AND PAVED SHOULDER GUTTER IN MEDIAN STRIP

CONTRACT STANDARDS
AND DEVELOPMENT UNIT
Office 919-250-4128 FAX 919-250-4119

DETAIL TO CONVERT EXISTING CATCH BASIN OR JUNCTION BOX TO 4 SIDED OPEN THROAT CATCH BASIN

ORIGINAL BY: T.S.Spell DATE: 9-12-02
MODIFIED BY: T.S.Spell DATE: 10-28-10
CHECKED BY: [signature] DATE: 11/1/10
FILE SPEC.: s:\details/cb_jbto4sidedotcb.dgn

29-OCT-2010 12:02
S:\Contracts\Contracts\Special Details\nbritt\english\urban\r2417cb_jbto4sidedotcb.dgn
$$$$USERNAME$$$$

PROJECT REFERENCE NO.	SHEET NO.
R-2417AA	2-A0

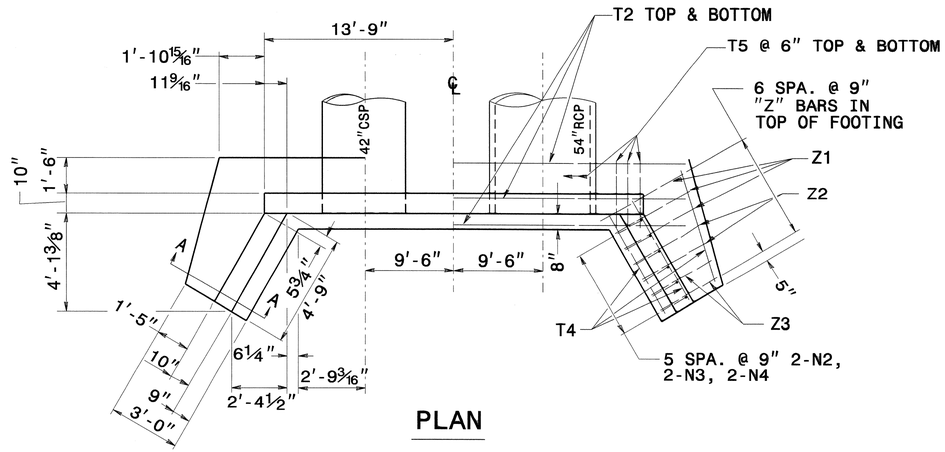

PLAN

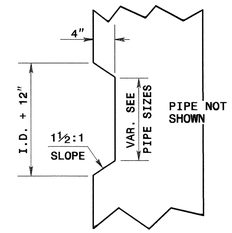

TAPER DETAIL

GENERAL NOTES:

ALL CONCRETE TO BE CLASS "A".

ALL REINFORCING STEEL SHALL BE ASTMA615-GRADE 60.

ALL REINFORCING STEEL SHALL BE DEFORMED BARS. WHERE SPLICING OF REINFORCMENT IS NECESSARY, BARS ARE TO BE LAPPED 45 DIAMETERS. ALL DIMENSIONS RELATIVE TO REINFORCEMENT ARE TO CENTERS OF BARS.

THE FOOTING, CURTAIN WALL AND 4" OF WALL ARE TO BE POURED IN ONE OPERATION ALLOWING NO TIME FOR INITIAL SET TO TAKE PLACE BETWEEN THEM. THE REMAINING WALL SHALL THEN BE POURED IN ONE OPERATION.

ALL EXPOSED CORNERS ARE TO BE CHAMFERED 1".

3" DIAMETER DRAINS SHALL BE PLACED IN WALL AS SHOWN AND BE 6" ABOVE NORMAL FLOW LINE.

ALL MATERIAL AND WORKMANSHIP AS PER N.C.DEPARTMENT OF TRANSPORTATION STANDARD SPECIFICATIONS.

THE EXTRA BARS ARE PROVIDED FOR HOLDING REINFORCING STEEL IN CORRECT POSITION IN WING.

ADJUST QUANTITIES AND DIMENSIONS AS DIRECTED BY THE ENGINEER.

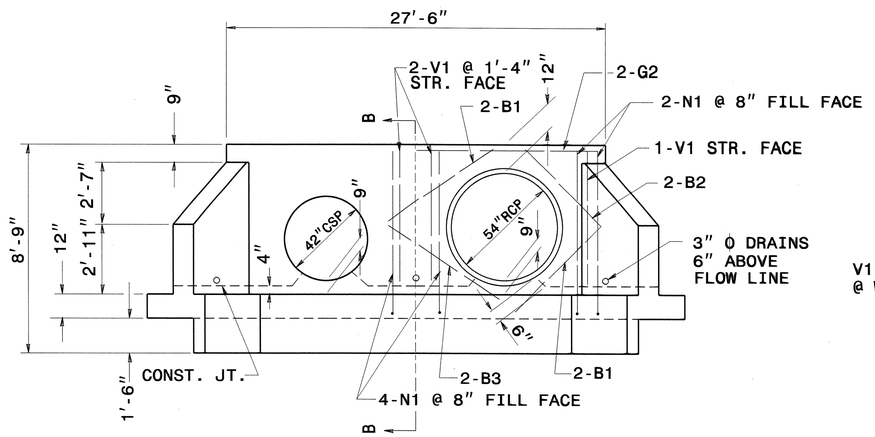

ELEVATION

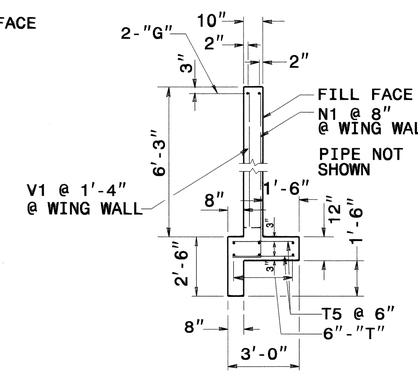

SECTION - BB

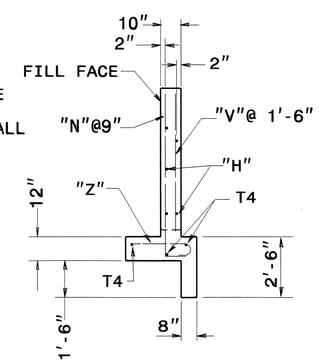

SECTION - AA

BILL OF MATERIAL FOR ENDWALL				
REINF. STEEL			2 PIPES	
BAR	SIZE	LENGTH	NO.	WEIGHT
B1	#4	5'-6"	8	29
B2	#4	4'-6"	4	12
B3	#4	6'-0"	4	16
G2	#7	27'-2"	2	112
H1	#4	5'-6"	10	37
H2	#4	3'-6"	4	9
N1	#4	7'-11"	26	138
N2	#4	6'-7"	4	18
N3	#4	5'-8"	4	15
N4	#4	4'-9"	4	13
T2	#4	27'-2"	6	109
T4	#4	5'-3"	6	21
T5	#4	2'-6"	110	184
V1	#4	5'-9"	14	54
V2	#4	4'-10"	2	6
V3	#4	3'-11"	2	5
V4	#4	3'-1"	2	4
Z1	#4	3'-11"	6	16
Z2	#4	3'-6"	4	9
Z3	#4	3'-1"	4	8
REINF. STEEL LBS.				815
CON./R.C. CU. YDS			11	

* PIPES HAVE BEEN DEDUCTED FROM CONCRETE QUANTITIES.

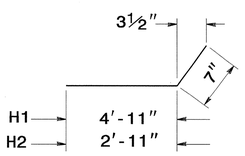

"H" BARS

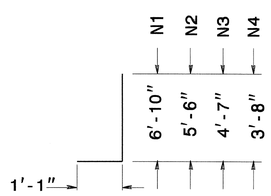

"N" BARS

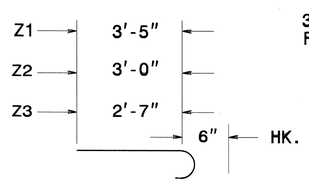

"Z" BARS

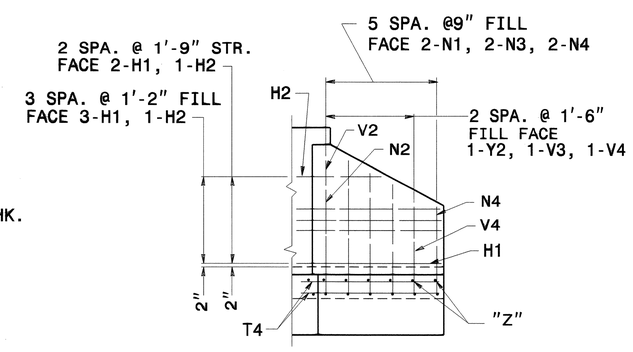

WING ELEVATION

NOTE:
"H","N", & "Z" BAR DIMENSIONS ARE OUT TO OUT.

NORTH CAROLINA PROFESSIONAL SEAL 022966 ENGINEER JOEL S. HOWERTON
11/9/10

CONTRACT STANDARDS & DEVELOPMENT UNIT
STANDARDS AND SPECIAL DESIGN
Office 919-250-4128 FAX 919-250-4119

DETAIL OF REINFORCED CONCRETE ENDWALL FOR 42"& 54" DIAMETER PIPE-90°SKEW

ORIGINAL BY: _____ DATE: _____
MODIFIED BY: rnbritt DATE: 10/31/10
CHECKED BY: _____ DATE: 11/3/10
FILE SPEC.: details/nbritt/english/rural/r2417aa 54endwall.dgn

USERNAME=$USER
SYTIME=$TIME
DGN=$DGN

PROJECT REFERENCE NO.	SHEET NO.
R-24177AA	2-AP

STATE OF
NORTH CAROLINA
DEPT. OF TRANSPORTATION
DIVISION OF HIGHWAYS
RALEIGH, N.C.

ENGLISH DETAIL DRAWING FOR
MODIFIED CONCRETE FLUME
WITH CONCRETE OR RIP-RAP DITCH

SHEET 1 OF 1
MODFLMDTCH

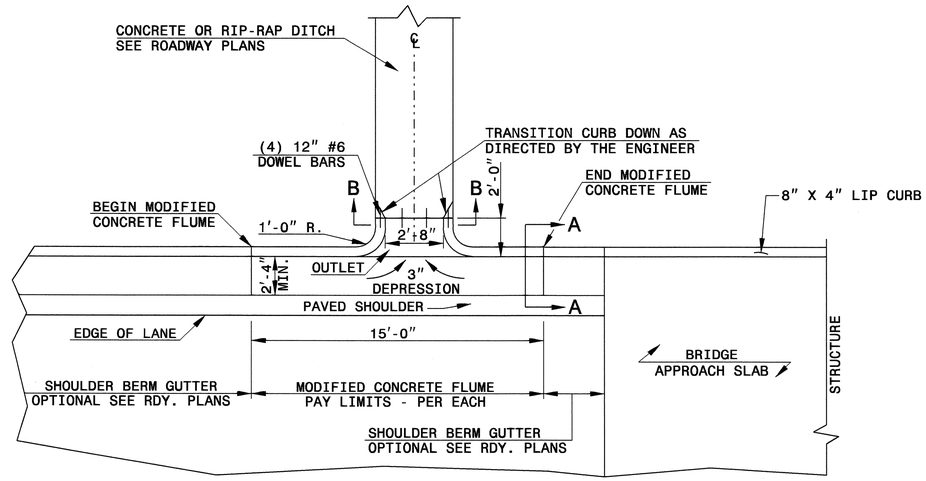

PLAN VIEW

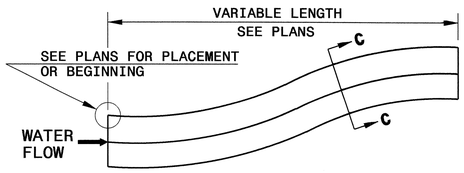

DOWNGRADE OR SAG

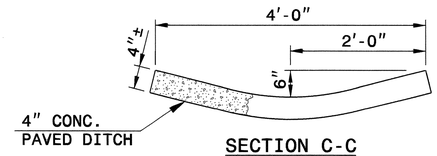

SECTION C-C

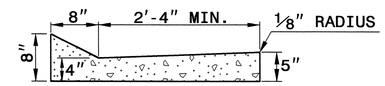

SECTION A-A

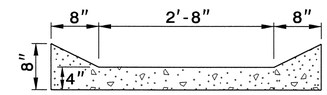

SECTION B-B

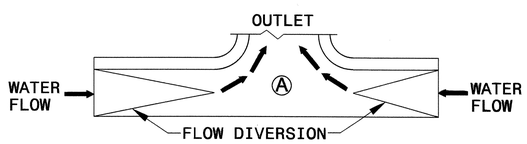

SAG

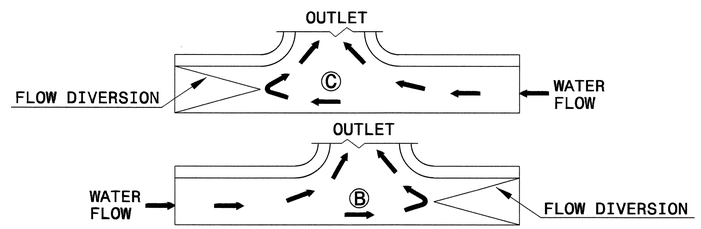

DOWN GRADE

FLOW DIVERSION EXAMPLES

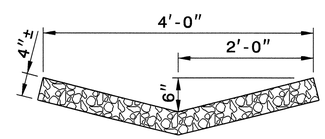

RIP-RAP LINED DITCH

NOTES:

- CONSTRUCT MODIFIED CONCRETE FLUME AND SHOULDER BERM GUTTER IN ACCORDANCE WITH THIS DETAIL.
- CONSTRUCT CONCRETE DITCH IN ACCORDANCE WITH STD. DWG. NO. 850.01.
- CONSTRUCT RIP RAP LINED DITCH IN ACCORDANCE WITH THIS DETAIL, IF CALLED FOR IN PLANS.
- CONCRETE OR RIP RAP LINED DITCH SHALL BE THE TYPE AND LENGTH SPECIFIED BY THE ROADWAY PLANS. THE DITCH SHALL TERMINATE AS SHOWN ON THE PLANS. IF NO TERMINATION IS INDICATED PLACE RIP-RAP AT THE END OF THE DITCH AS INDICATED BY STD. DWG. 876.02 FOR AN 18" PIPE. TRANSITIONS FROM THE DITCH TO TERMINATION SHALL BE AS DIRECTED BY THE ENGINEER.
- MODIFICATIONS SHALL BE AS DICTATED BY SITE CONDITIONS AND DIRECTED BY THE ENGINEER.

STATE OF
NORTH CAROLINA
DEPT. OF TRANSPORTATION
DIVISION OF HIGHWAYS
RALEIGH, N.C.

ENGLISH DETAIL DRAWING FOR
MODIFIED CONCRETE FLUME
WITH CONCRETE OR RIP-RAP DITCH

SHEET 1 OF 1
MODFLMDTCH

NORTH CAROLINA PROFESSIONAL SEAL 022966 ENGINEER JOEL S. HOWERTON 11/9/10

PROJECT SERVICES UNIT
STANDARDS AND SPECIAL DESIGN
Office 919-250-4128 FAX 919-250-4119

SEE PLATE FOR TITLE

ORIGINAL BY: E.E. Ward DATE: Apr. 2002
MODIFIED BY: E.E. Ward DATE: July 2004
CHECKED BY: [signature] DATE: 11/4/10
FILE SPEC.: w:details\stand\modifiedflume.dgn

04-NOV-2010 10:33
S:\Contracts\Contracts\Special Details\ericward\usr\details\stand\modifiedflume.dgn
$$$$USERNAME$$$$

COMPUTED RV.

STATE OF NORTH CAROLINA
DIVISION OF HIGHWAYS
ROADWAY SUMMARY OF QUANTITIES FOR CONTRACT - C202331

SUMMARY OF QUANTITIES

PROJECT REFERENCE NO.	SHEET NO.
R-2417AA	3 (1 of 2)

ItemNumber	Sec #	Quantity	Unit	Description
0000100000-N	800	Lump Sum		MOBILIZATION
0001000000-E	200	Lump Sum		CLEARING & GRUBBING .. ACRE(S)
0008000000-E	200	5	ACR	SUPPLEMENTARY CLEARING & GRUBBING
0022000000-E	225	1,287,700 ~~1,370,700~~	CY	UNCLASSIFIED EXCAVATION
0029000000-N	SP	Lump Sum		REINFORCED BRIDGE APPROACH FILL, STATION ********** (52+08.00-L-NBL)
0029000000-N	SP	Lump Sum		REINFORCED BRIDGE APPROACH FILL, STATION ********** (52+08.00-L-SBL)
0030000000-N	SP	Lump Sum		BRIDGE APPROACH FILL - SUB REGIONAL TIER, STATION ******* (31+75.14-Y-)
0030000000-N	SP	Lump Sum		BRIDGE APPROACH FILL - SUB REGIONAL TIER, STATION ******* (52+08.00-L- SBL)
0030000000-N	SP	Lump Sum		BRIDGE APPROACH FILL - SUB REGIONAL TIER, STATION ******* (52+08.00-L-NBL)
0036000000-E	225	10,000	CY	UNDERCUT EXCAVATION
0038000000-E	SP	3,500	CY	SHALLOW UNDERCUT
0080000000-E	SP	6,300	TON	CLASS IV SUBGRADE STABILIZATION
0134000000-E	240	11,730	CY	DRAINAGE DITCH EXCAVATION
0141000000-E	240	2,060	LF	BERM DITCH CONSTRUCTION
0156000000-E	250	29,900	SY	REMOVAL OF EXISTING ASPHALT PAVEMENT
0177000000-E	250	5,280	SY	BREAKING OF EXISTING ASPHALT PAVEMENT
0192000000-N	260	40	HR	PROOF ROLLING
0195000000-E	SP	10,000	CY	SELECT GRANULAR MATERIAL
0196000000-E	270	23,300	SY	FABRIC FOR SOIL STABILIZATION
0223000000-E	SP	2,100	SY	ROCK PLATING
0318000000-E	SP	1,760	TON	FOUNDATION CONDITIONING MATERIAL, MINOR STRS
0320000000-E	SP	5,890	SY	FOUNDATION CONDITIONING FABRIC
0973100000-E	SP	228	LF	**" WELDED STEEL PIPE, ****" THICK, GRADE ** IN SOIL (24", 0.500", B)
0973100000-E	SP	220	LF	**" WELDED STEEL PIPE, ****" THICK, GRADE ** IN SOIL (54", 0.750", B)
0987000000-E	310	488	LF	GENERIC PIPE ITEM 12" CS PIPE CULVERTS, 0.064" THICK
0987000000-E	310	984	LF	GENERIC PIPE ITEM 15" BIT COAT CS PIPE CULVERTS, TYPE B, 0.064" THICK
0987000000-E	310	20	LF	GENERIC PIPE ITEM 15" CS PIPE CULVERTS, 0.064" THICK
0987000000-E	310	128	LF	GENERIC PIPE ITEM 15" SIDE DRAIN PIPE
0987000000-E	310	574	LF	GENERIC PIPE ITEM 18" BIT COAT CS PIPE CULVERTS, TYPE B, 0.064" THICK
0987000000-E	310	40	LF	GENERIC PIPE ITEM 18" SIDE DRAIN PIPE
0987000000-E	310	112	LF	GENERIC PIPE ITEM 24" BIT COAT CS PIPE CULVERTS, TYPE B, 0.064" THICK
0987000000-E	310	496	LF	GENERIC PIPE ITEM 24" RC PIPE CULVERTS, CLASS IV
0987000000-E	310	108	LF	GENERIC PIPE ITEM 30" BIT COAT CS PIPE CULVERTS, TYPE B, 0.079" THICK
0987000000-E	310	128	LF	GENERIC PIPE ITEM 42" BIT COAT CS PIPE CULVERTS, TYPE B, 0.109" THICK
0987000000-E	310	296	LF	GENERIC PIPE ITEM 42" RC PIPE CULVERTS, CLASS IV
0987000000-E	310	200	LF	GENERIC PIPE ITEM 48" RC PIPE CULVERTS, CLASS III
0987000000-E	310	100	LF	GENERIC PIPE ITEM 54" BIT COAT CS PIPE CULVERTS, TYPE B, 0.109" THICK
0987000000-E	310	744	LF	GENERIC PIPE ITEM 54" RC PIPE CULVERTS, CLASS III
0988000000-E	310	25	EA	GENERIC PIPE ITEM 15" BIT COAT CS PIPE ELBOWS, TYPE B, 0.064" THICK
0988000000-E	310	16	EA	GENERIC PIPE ITEM 18" BIT COAT CS PIPE ELBOWS, TYPE B, 0.064" THICK
0988000000-E	310	3	EA	GENERIC PIPE ITEM 24" BIT COAT CS PIPE ELBOWS, TYPE B, 0.064" THICK
0988000000-E	310	2	EA	GENERIC PIPE ITEM 30" BIT COAT CS PIPE ELBOWS, TYPE B, 0.079" THICK
0995000000-E	340	2,748	LF	PIPE REMOVAL
1000000000-E	462	210	SY	6" SLOPE PROTECTION
1011000000-N	500	Lump Sum		FINE GRADING
1044000000-E	501	93,820	SY	LIME TREATED SOIL (SLURRY METHOD)
1066000000-E	501	940	TON	LIME FOR LIME TREATED SOIL
1077000000-E	SP	35	TON	#57 STONE
1110000000-E	510	500	TON	STABILIZER AGGREGATE
1121000000-E	520	122,400	TON	AGGREGATE BASE COURSE
1176000000-E	542	93,820	SY	SOIL CEMENT BASE
1187000000-E	542	2,581	TON	PORTLAND CEMENT FOR SOIL CEMENT BASE
1198000000-E	SP	710	TON	AGGREGATE FOR SOIL CEMENT BASE
1209000000-E	543	28,150	GAL	ASPHALT CURING SEAL
1220000000-E	545	200	TON	INCIDENTAL STONE BASE
1231000000-E	560	29,100	CY	SHOULDER BORROW
1275000000-E	600	11,568	GAL	PRIME COAT
1308000000-E	607	940	SY	MILLING ASPHALT PAVEMENT, ***" TO ******" DEPTH (0" TO 1-1/2")
1491000000-E	610	14,500	TON	ASPHALT CONC BASE COURSE, TYPE B25.0C
1498000000-E	610	790	TON	ASPHALT CONC INTERMEDIATE COURSE, TYPE I19.0B
1503000000-E	610	37,100	TON	ASPHALT CONC INTERMEDIATE COURSE, TYPE I19.0C
1519000000-E	610	2,900	TON	ASPHALT CONC SURFACE COURSE, TYPE S9.5B
1523000000-E	610	40,600	TON	ASPHALT CONC SURFACE COURSE, TYPE S9.5C
1560000000-E	620	2,580	TON	ASPHALT BINDER FOR PLANT MIX, GRADE PG 64-22
1565000000-E	620	2,440	TON	ASPHALT BINDER FOR PLANT MIX, GRADE PG 70-22
1693000000-E	654	140	TON	ASPHALT PLANT MIX, PAVEMENT REPAIR
1840000000-E	665	94,125	LF	MILLED RUMBLE STRIPS (ASPHALT CEMENT CONCRETE)
1891000000-E	SP	40,000	SY	GENERIC PAVING ITEM GEOTEXTILE FOR PAVEMENT STABILIZATION
2000000000-N	806	120	EA	RIGHT OF WAY MARKERS
2022000000-E	SP	2,520	CY	SUBDRAIN EXCAVATION
2033000000-E	SP	1,260	CY	SUBDRAIN FINE AGGREGATE
2044000000-E	SP	7,500	LF	6" PERFORATED SUBDRAIN PIPE
2070000000-N	SP	15	EA	SUBDRAIN PIPE OUTLETS
2077000000-E	SP	90	LF	6" OUTLET PIPE (SUBDRAINS)
2099000000-E	816	13,050	LF	SHOULDER DRAIN
2110000000-E	816	13,050	LF	4" SHOULDER DRAIN PIPE
2121000000-E	816	930	LF	4" OUTLET PIPE FOR SHOULDER DRAINS
2132000000-N	816	30	EA	CONCRETE PAD FOR SHOULDER DRAIN PIPE OUTLET
2143000000-E	818	20	TON	BLOTTING SAND
2190000000-N	828	2	EA	TEMPORARY STEEL PLATE COVERS FOR MASONRY DRAINAGE STRUCTURE
2209000000-E	838	23	CY	ENDWALLS
2220000000-E	838	30	CY	REINFORCED ENDWALLS
2253000000-E	840	8.61	CY	PIPE COLLARS
2264000000-E	840	1	CY	PIPE PLUGS
2275000000-E	SP	31	CY	FLOWABLE FILL
2286000000-N	840	131	EA	MASONRY DRAINAGE STRUCTURES
2297000000-E	840	6.5	CY	MASONRY DRAINAGE STRUCTURES
2308000000-E	840	53.8	LF	MASONRY DRAINAGE STRUCTURES
2354000000-N	840	4	EA	FRAME WITH GRATE, STD 840.22
2364000000-N	840	8	EA	FRAME WITH TWO GRATES, STD 840.16
2365000000-N	840	57	EA	FRAME WITH TWO GRATES, STD 840.22
2367000000-N	840	52	EA	FRAME WITH TWO GRATES, STD 840.29
2374000000-N	840	2	EA	FRAME WITH GRATE & HOOD, STD 840.03, TYPE ** (E)
2374000000-N	840	4	EA	FRAME WITH GRATE & HOOD, STD 840.03, TYPE ** (F)
2374000000-N	840	3	EA	FRAME WITH GRATE & HOOD, STD 840.03, TYPE ** (G)
2396000000-N	840	4	EA	FRAME WITH COVER, STD 840.54
2451000000-N	852	8	EA	CONCRETE TRANSITIONAL SECTION FOR DROP INLETS
2462000000-E	SP	1	EA	**" SLUICE GATE (8")
2473000000-N	SP	1	EA	GENERIC DRAINAGE ITEM 6" DRAW DOWN PIPE
2549000000-E	846	2,020	LF	2'-6" CONCRETE CURB & GUTTER
2556000000-E	846	14,895	LF	SHOULDER BERM GUTTER
2570000000-N	SP	1	EA	MODIFIED CONCRETE FLUME
2612000000-E	848	15	SY	6" CONCRETE DRIVEWAY
2619000000-E	850	580	SY	4" CONCRETE PAVED DITCH
2655000000-E	852	1,550	SY	5" MONOLITHIC CONCRETE ISLANDS (KEYED IN)
2815000000-N	858	3	EA	ADJUSTMENT OF DROP INLETS
2995000000-N	SP	1	EA	GENERIC DRAINAGE ITEM CONVERT EXISTING JUNCTION BOX TO OPEN THROAT CATCH BASIN
3030000000-E	862	21,500	LF	STEEL BM GUARDRAIL
3150000000-N	862	10	EA	ADDITIONAL GUARDRAIL POSTS
3210000000-N	862	21	EA	GUARDRAIL ANCHOR UNITS, TYPE CAT-1
3270000000-N	SP	22	EA	GUARDRAIL ANCHOR UNITS, TYPE 350
3285000000-N	SP	6	EA	GUARDRAIL ANCHOR UNITS, TYPE M-350
3317000000-N	862	13	EA	GUARDRAIL ANCHOR UNITS, TYPE B-77
3360000000-E	863	4,405	LF	REMOVE EXISTING GUARDRAIL
3389400000-E	865	19,870	LF	DOUBLE FACED CABLE GUIDERAIL
3389500000-N	SP	10	EA	ADDITIONAL GUIDERAIL POSTS
3389600000-N	865	26	EA	CABLE GUIDERAIL ANCHOR UNITS
3503000000-E	866	43,320	LF	WOVEN WIRE FENCE, 47" FABRIC
3509000000-E	866	2,710	EA	4" TIMBER FENCE POSTS, 7'-6" LONG
3515000000-E	866	720	EA	5" TIMBER FENCE POSTS, 8'-0" LONG
3557000000-E	866	500	LF	ADDITIONAL BARBED WIRE
3628000000-E	876	2,400	TON	RIP RAP, CLASS I
3635000000-E	876	100	TON	RIP RAP, CLASS II
3649000000-E	876	2,350	TON	RIP RAP, CLASS B
3651000000-E	SP	130	TON	BOULDERS
3656000000-E	876	15,525	SY	FILTER FABRIC FOR DRAINAGE
3659000000-N	SP	12	EA	PREFORMED SCOUR HOLES WITH LEVEL SPREADER APRON
4048000000-E	902	32	CY	REINFORCED CONCRETE SIGN FOUNDATIONS
4054000000-E	902	2	CY	PLAIN CONCRETE SIGN FOUNDATIONS
4057000000-E	SP	40	CY	OVERHEAD FOOTING
4060000000-E	903	11,252	LB	SUPPORTS, BREAKAWAY STEEL BEAM
4066000000-E	903	12,930	LB	SUPPORTS, SIMPLE STEEL BEAM
4072000000-E	903	2,610	LF	SUPPORTS, 3-LB STEEL U-CHANNEL
4078000000-E	903	12	EA	SUPPORTS, 2-LB STEEL U-CHANNEL
4082100000-N	SP	Lump Sum		SUPPORTS, OVERHEAD SIGN STRUCTURE AT STA ****** (17+39 (METRIC) US 15/501)
4082100000-N	SP	Lump Sum		SUPPORTS, OVERHEAD SIGN STRUCTURE AT STA ****** (227+36 US 421)
4096000000-N	904	6	EA	SIGN ERECTION, TYPE D
4102000000-N	904	58	EA	SIGN ERECTION, TYPE E
4108000000-N	904	83	EA	SIGN ERECTION, TYPE F
4109000000-N	904	9	EA	SIGN ERECTION, TYPE *** (OVERHEAD) (A)
4110000000-N	904	20	EA	SIGN ERECTION, TYPE *** (GROUND MOUNTED) (A)
4110000000-N	904	1	EA	SIGN ERECTION, TYPE *** (GROUND MOUNTED) (B)
4114000000-N	904	12	EA	SIGN ERECTION, MILEMARKERS
4115000000-N	904	4	EA	SIGN ERECTION, OVERLAY (OVERHEAD)
4116000000-N	904	5	EA	SIGN ERECTION, OVERLAY (GROUND MOUNTED)
4116100000-N	904	2	EA	SIGN ERECTION, RELOCATE, TYPE **** (GROUND MOUNTED) (E)
4234000000-N	907	4	EA	DISPOSAL OF SIGN, A OR B (OVERHEAD)
4236000000-N	907	5	EA	DISPOSAL OF SIGN, A OR B (GROUND MOUNTED)
4237000000-N	907	7	EA	STOCKPILE SIGN, D, E OR F
4400000000-E	1110	728	SF	WORK ZONE SIGNS (STATIONARY)
4405000000-E	1110	528	SF	WORK ZONE SIGNS (PORTABLE)
4410000000-E	1110	196	SF	WORK ZONE SIGNS (BARRICADE MOUNTED)
4415000000-N	1115	2	EA	FLASHING ARROW PANELS, TYPE C
4420000000-N	1120	4	EA	CHANGEABLE MESSAGE SIGN
4430000000-N	1130	410	EA	DRUMS
4435000000-N	1135	100	EA	CONES
4445000000-E	1145	312	LF	BARRICADES (TYPE III)
4455000000-N	1150	150	MD	FLAGGER
4465000000-N	1160	2	EA	TEMPORARY CRASH CUSHIONS
4470000000-N	1160	2	EA	RESET TEMPORARY CRASH CUSHIONS
4480000000-N	1165	2	EA	TMIA
4485000000-E	1170	5,960	LF	PORTABLE CONCRETE BARRIER
4495000000-E	1170	1,000	LF	PORTABLE CONCRETE BARRIER (DRAINAGE)
4500000000-E	1170	1,421	LF	RESET PORTABLE CONCRETE BARRIER
4510000000-N	SP	120	HR	LAW ENFORCEMENT
4650000000-N	1251	1,950	EA	TEMPORARY RAISED PAVEMENT MARKERS
4685000000-E	1205	140,100	LF	THERMOPLASTIC PAVEMENT MARKING LINES (4", 90 MILS)
4686000000-E	1205	21,050	LF	THERMOPLASTIC PAVEMENT MARKING LINES (4", 120 MILS)
4695000000-E	1205	12,002	LF	THERMOPLASTIC PAVEMENT MARKING LINES (8", 90 MILS)
4710000000-E	1205	175	LF	THERMOPLASTIC PAVEMENT MARKING LINES (24", 120 MILS)
4721000000-E	1205	4	EA	THERMOPLASTIC PAVEMENT MARKING CHARACTER (120 MILS)
4725000000-E	1205	26	EA	THERMOPLASTIC PAVEMENT MARKING SYMBOL (90 MILS)
4770000000-E	1205	2,269	LF	COLD APPLIED PLASTIC PAVEMENT MARKING LINES, TYPE ** (4") (I)
4770000000-E	1205	4,221	LF	COLD APPLIED PLASTIC PAVEMENT MARKING LINES, TYPE ** (4") (IV)
4795000000-E	1205	12	LF	COLD APPLIED PLASTIC PAVEMENT MARKING LINES, TYPE ** (24") (IV)
4800000000-N	1205	4	EA	COLD APPLIED PLASTIC PAVEMENT MARKING CHARACTER, TYPE ** (I)

10/26/98

9/2/2010
R:\Roadway\Proj\r2417aa_rdy_3series.dgn
Florence & Hutchesson, Inc.

STATE OF NORTH CAROLINA
SUMMARY OF QUANTITIES

PROJECT REFERENCE No.	SHEET No.
R-2417AA	3(2 of 2)

ItemNumber	Sec #	Quantity	Unit	Description
4805000000-N	1205	2	EA	COLD APPLIED PLASTIC PAVEMENT MARKING SYMBOL, TYPE ** (I)
4810000000-E	1205	370,050	LF	PAINT PAVEMENT MARKING LINES (4")
4820000000-E	1205	22,510	LF	PAINT PAVEMENT MARKING LINES (8")
4835000000-E	1205	428	LF	PAINT PAVEMENT MARKING LINES (24")
4840000000-N	1205	16	EA	PAINT PAVEMENT MARKING CHARAC-TER
4845000000-N	1205	40	EA	PAINT PAVEMENT MARKING SYMBOL
4850000000-E	1205	14,728	LF	REMOVAL OF PAVEMENT MARKING LINES (4")
4870000000-E	1205	114	LF	REMOVAL OF PAVEMENT MARKING LINES (24")
4900000000-N	1251	1,205	EA	PERMANENT RAISED PAVEMENT MARKERS
4935000000-N	1267	246	EA	FLEXIBLE DELINEATORS (CRYSTAL)
4940000000-N	1267	232	EA	FLEXIBLE DELINEATORS (YELLOW)
4945000000-N	1267	10	EA	FLEXIBLE DELINEATORS (CRYSTAL & RED)
4950000000-N	1267	10	EA	FLEXIBLE DELINEATORS (YELLOW & RED)
5326200000-E	1510	2,046	LF	12" WATER LINE
5572200000-E	1515	2	EA	12" TAPPING VALVE
5679000000-E	1515	2	EA	12" LINE STOP
5804000000-E	1530	2,035	LF	ABANDON 12" UTILITY PIPE
5835700000-E	1540	310	LF	16" ENCASEMENT PIPE
5871700000-E	1550	75	LF	TRENCHLESS INSTALLATION OF 12" IN SOIL
5871710000-E	1550	75	LF	TRENCHLESS INSTALLATION OF 12" NOT IN SOIL
6000000000-E	1605	20,000	LF	TEMPORARY SILT FENCE
6006000000-E	1610	4,000	TON	STONE FOR EROSION CONTROL, CLASS A
6009000000-E	1610	13,600	TON	STONE FOR EROSION CONTROL, CLASS B
6012000000-E	1610	8,700	TON	SEDIMENT CONTROL STONE
6015000000-E	1615	150	ACR	TEMPORARY MULCHING
6018000000-E	1620	5,650	LB	SEED FOR TEMPORARY SEEDING
6021000000-E	1620	24.5	TON	FERTILIZER FOR TEMPORARY SEED-ING
6024000000-E	1622	10,000	LF	TEMPORARY SLOPE DRAINS
6027000000-N	1622	120	EA	INLET PROTECTION AT TEMPORARY SLOPE DRAINS
6029000000-E	SP	8,000	LF	SAFETY FENCE
6030000000-E	1630	40,350	CY	SILT EXCAVATION
6036000000-E	1631	104,500	SY	MATTING FOR EROSION CONTROL
6037000000-E	SP	2,220	SY	COIR FIBER MAT
6038000000-E	SP	4,030	SY	PERMANENT SOIL REINFORCEMENT MAT
6042000000-E	1632	10,125	LF	1/4" HARDWARE CLOTH
6046000000-E	SP	80	LF	TEMPORARY PIPE FOR STREAM CROSSING
6069000000-E	1638	275	CY	STILLING BASINS
6071012000-E	SP	15,325	LF	COIR FIBER WATTLE
6071020000-E	SP	9,200	LB	POLYACRYLAMIDE (PAM)
6071030000-E	SP	12,500	LF	COIR FIBER BAFFLES
6071050000-E	SP	37	EA	**" SKIMMER (1-1/2")
6071050000-E	SP	1	EA	**" SKIMMER (4")
6084000000-E	1660	150	ACR	SEEDING & MULCHING
6087000000-E	1660	150	ACR	MOWING
6090000000-E	1661	2,200	LB	SEED FOR REPAIR SEEDING
6093000000-E	1661	6.75	TON	FERTILIZER FOR REPAIR SEEDING
6096000000-E	1662	4,150	LB	SEED FOR SUPPLEMENTAL SEEDING
6108000000-E	1665	124	TON	FERTILIZER TOPDRESSING
6111000000-E	SP	240	LF	IMPERVIOUS DIKE

ItemNumber	Sec #	Quantity	Unit	Description
6114500000-N	SP	200	MHR	SPECIALIZED HAND MOWING
6117000000-N	SP	50	EA	RESPONSE FOR EROSION CONTROL
6120000000-E	SP	1,000	CY	CULVERT DIVERSION CHANNEL
6123000000-E	1670	10	ACR	REFORESTATION
7060000000-E	1705	3,220	LF	SIGNAL CABLE
7120000000-E	1705	23	EA	VEHICLE SIGNAL HEAD (12", 3 SECTION)
7252000000-E	1710	285	LF	MESSENGER CABLE (1/4")
7264000000-E	1710	1,400	LF	MESSENGER CABLE (3/8")
7300000000-E	1715	830	LF	UNPAVED TRENCHING (**********) (1, 2")
7324000000-N	1716	6	EA	JUNCTION BOX (STANDARD SIZE)
7360000000-N	1720	8	EA	WOOD POLE
7372000000-N	1721	16	EA	GUY ASSEMBLY
7408000000-E	1722	3	EA	1" RISER WITH WEATHERHEAD
7420000000-E	1722	12	EA	2" RISER WITH WEATHERHEAD
7444000000-E	1725	2,020	LF	INDUCTIVE LOOP SAWCUT
7456000000-E	1726	5,580	LF	LEAD-IN CABLE (**********) (14-2)
7576000000-N	SP	4	EA	METAL STRAIN SIGNAL POLE
7613000000-N	SP	4	EA	SOIL TEST
7614100000-E	SP	32	CY	DRILLED PIER FOUNDATION
7636000000-N	1745	6	EA	SIGN FOR SIGNALS
7684000000-N	1750	1	EA	SIGNAL CABINET FOUNDATION
7756000000-N	1751	1	EA	CONTROLLER WITH CABINET (TYPE 2070L, BASE MOUNTED)
7768000000-N	1751	1	EA	CONTROLLER WITH CABINET (TYPE 2070L, POLE MOUNTED)
7780000000-N	1751	8	EA	DETECTOR CARD (TYPE 2070L)
7901000000-N	1753	1	EA	CABINET BASE EXTENDER
7948000000-N	SP	1	EA	TRAFFIC SIGNAL REMOVAL

ItemNumber	Sec #	Quantity	Unit	Description
******* BEGIN SCHEDULE AA ******* ******* (3 ALTERNATES) *******				
0987000000-E AA1	310	5,880	LF	GENERIC PIPE ITEM 15" RC PIPE CULVERTS, CLASS III
0987000000-E AA1	310	1,744	LF	GENERIC PIPE ITEM 18" RC PIPE CULVERTS, CLASS III
0987000000-E AA1	310	2,006	LF	GENERIC PIPE ITEM 24" RC PIPE CULVERTS, CLASS III
0987000000-E AA1	310	1,236	LF	GENERIC PIPE ITEM 30" RC PIPE CULVERTS, CLASS III
0987000000-E AA1	310	836	LF	GENERIC PIPE ITEM 36" RC PIPE CULVERTS, CLASS III
0987000000-E AA1	310	228	LF	GENERIC PIPE ITEM 42" RC PIPE CULVERTS, CLASS III
*** OR ***				
0536000000-E AA2	SP	772	LF	***" HDPE PIPE CULVERTS (15")
0536000000-E AA2	SP	560	LF	***" HDPE PIPE CULVERTS (18")
0536000000-E AA2	SP	660	LF	***" HDPE PIPE CULVERTS (24")
0536000000-E AA2	SP	296	LF	***" HDPE PIPE CULVERTS (30")
0536000000-E AA2	SP	104	LF	***" HDPE PIPE CULVERTS (36")
0536000000-E AA2	SP	48	LF	***" HDPE PIPE CULVERTS (42")
0987000000-E AA2	310	5,108	LF	GENERIC PIPE ITEM 15" RC PIPE CULVERTS, CLASS III
0987000000-E AA2	310	1,184	LF	GENERIC PIPE ITEM 18" RC PIPE CULVERTS, CLASS III
0987000000-E AA2	310	1,346	LF	GENERIC PIPE ITEM 24" RC PIPE CULVERTS, CLASS III
0987000000-E AA2	310	940	LF	GENERIC PIPE ITEM 30" RC PIPE CULVERTS, CLASS III
0987000000-E AA2	310	732	LF	GENERIC PIPE ITEM 36" RC PIPE CULVERTS, CLASS III
0987000000-E AA2	310	180	LF	GENERIC PIPE ITEM 42" RC PIPE CULVERTS, CLASS III
*** OR ***				
0540000000-E AA3	SP	772	LF	***" ALUMINIZED CORRUGATED STEEL PIPE CULVERTS, ****" THICK (15", 0.064")
0540000000-E AA3	SP	560	LF	***" ALUMINIZED CORRUGATED STEEL PIPE CULVERTS, ****" THICK (18", 0.064")
0540000000-E AA3	SP	660	LF	***" ALUMINIZED CORRUGATED STEEL PIPE CULVERTS, ****" THICK (24", 0.064")
0540000000-E AA3	SP	296	LF	***" ALUMINIZED CORRUGATED STEEL PIPE CULVERTS, ****" THICK (30", 0.079")
0540000000-E AA3	SP	104	LF	***" ALUMINIZED CORRUGATED STEEL PIPE CULVERTS, ****" THICK (36", 0.079")
0540000000-E AA3	SP	48	LF	***" ALUMINIZED CORRUGATED STEEL PIPE CULVERTS, ****" THICK (42", 0.109")
0987000000-E AA3	310	5,108	LF	GENERIC PIPE ITEM 15" RC PIPE CULVERTS, CLASS III
0987000000-E AA3	310	1,184	LF	GENERIC PIPE ITEM 18" RC PIPE CULVERTS, CLASS III
0987000000-E AA3	310	1,346	LF	GENERIC PIPE ITEM 24" RC PIPE CULVERTS, CLASS III
0987000000-E AA3	310	940	LF	GENERIC PIPE ITEM 30" RC PIPE CULVERTS, CLASS III
0987000000-E AA3	310	732	LF	GENERIC PIPE ITEM 36" RC PIPE CULVERTS, CLASS III
0987000000-E AA3	310	180	LF	GENERIC PIPE ITEM 42" RC PIPE CULVERTS, CLASS III
******* END SCHEDULE AA *******				

D8D9R341-BRIAN

COMPUTED BY: MAY DATE: 4/15/2009

CHECKED BY: DCW DATE: 4/30/2009

STATE OF NORTH CAROLINA
DIVISION OF HIGHWAYS

PROJECT NO.	SHEET NO.
R-2417AA	3-A

LIST OF PIPES, ENDWALLS, ETC. (FOR PIPES 48" & UNDER)

ABBREVIATIONS

- C.B. CATCH BASIN
- N.D.I. NARROW DROP INLET
- D.I. DROP INLET
- G.D.I. GRATED DROP INLET
- G.D.I.(N.S.) GRATED DROP INLET (NARROW SLOT)
- BDO BERM DITCH OUTLET
- J.B. JUNCTION BOX
- M.H. MANHOLE
- T.B.D.I. TRAFFIC BEARING DROP INLET
- T.B.J.B. TRAFFIC BEARING JUNCTION BOX

STATION	LOCATION (LT, RT, OR CL)	STRUCTURE NO. FROM	STRUCTURE NO. TO	TOP ELEVATION	INVERT ELEVATION	INVERT ELEVATION	SLOPE CRITICAL	CLASS III R.C.P. (UNLESS NOTED OTHERWISE) 12"	15"	18"	24"	30"	36"	42"	48"	BITUMINOUS COATED C.S. PIPE TYPE B (UNLESS NOTED OTHERWISE) 12" .064	15" .064	18" .064	24" .064	30" .079	36" .079	42" .109	48" .109
14+35L	CL	1		241.8	237.8																		
14+35L	RT	1	2		237.8	237.0			88														
17+16L	CL	3																					
19+25L	CL	4																					
19+75L	LT	5		244.5	241.8																		
19+75L	LT	5	6		241.8	241.4			72														
20+50L	LT	6		244.7	241.4																		
20+50L	LT	6	7		241.4	241.4											56						
22+88L	LT	8			211.3																	28	
23+30L	LT	9			211.7	211.0																	
23+30L	L/R	9	10		211.0	207.1																	
23+30L	RT	10	11		207.1	206.2																	
26+00L	LT	12		244.0	241.2																		
26+00L	LT	12	13		241.2	240.2			200														
28+00L	LT	13		243.3	240.2																		
28+00L	LT	13	14		240.2	237.2			124														
29+25L	LT	14		242.9	237.2																		
29+25L	LT	14	15		237.2	231.5											28						
29+25L	LT	14	16		237.2	237.6			80														
29+25L	CL	16		240.4	237.6																		
26+74L	RT	17																					
27+15L	RT	18		243.9	241.1																		
27+15L	RT	18	19		241.1	239.7			280														
29+95L	RT	19		242.8	239.7																		
29+95L	RT	19	20		239.7	239.6			12														
30+05L	RT	20		242.8	239.6																		
30+05L	RT	20	22		239.6	239.6	X		144														
31+50L	RT	22		242.6	239.6																		
31+50L	RT	22	23		239.6	231.5											28						
30+24L	RT	21																					
33+07L	CL	24		239.5	235.5																		
33+07L	RT	24	25		235.5	235.0	X		92														
13+10RPC	RT	25		242.4	235.0																		
13+10RPC	RT	25	26		235.0	211.0											56						
33+70L	LT	30	31		215.4																	60	
33+70L	RT	31	32			211.6																40	
35+73L	RT	33																					
38+50L	RT	34		243.8	241.0																		
38+50L	RT	34	35		241.0	240.5			96														
SHEET TOTALS									1188								168					128	

STATION	FROM	TO	CLASS III R.C. PIPE OR ALUMINIZED C.S. PIPE, TYPE IR OR HDPE PIPE, TYPE S OR D 12"	15"	18"	24"	30"	36"	42"	48"	15" SIDE DRAIN PIPE	18" SIDE DRAIN PIPE	24" SIDE DRAIN PIPE	ENDWALLS STD. 838.01 OR STD. 838.11 (UNLESS NOTED OTHERWISE) CU. YARDS R.C.P.	C.S.P.	QUANTITIES FOR DRAINAGE STRUCTURES PER EACH (0' THRU 5.0')	*TOTAL L.F. FOR PAY QUANTITY SHALL BE COL. 'A' + (1.3 X COL.'B') LIN. FT. A 5.0' THRU 10.0'	B 10.0' AND ABOVE	C.B. STD. 840.01 OR STD. 840.02	FRAME, GRATES, AND HOOD STANDARD 840.03 TYPE OF GRATE E	F	G	CONCRETE TRANSITIONAL SECTION DROP INLET	CATCH BASIN
14+35L	1															1								
14+35L	1	2																						
17+16L	3																							
19+25L	4																							
19+75L	5															1								
19+75L	5	6																						
20+50L	6															1								
20+50L	6	7																						
22+88L	8														3.8									
23+30L	9					40																		
23+30L	9	10																						
23+30L	10	11				48																		
26+00L	12															1								
26+00L	12	13																						
28+00L	13															1								
28+00L	13	14																						
29+25L	14															1	0.7							
29+25L	14	15																						
29+25L	14	16																						
29+25L	16															1								
26+74L	17																							
27+15L	18															1								
27+15L	18	19																						
29+95L	19															1								
29+95L	19	20																						
30+05L	20															1								
30+05L	20	22																						
31+50L	22															1								
31+50L	22	23																						
30+24L	21																							
33+07L	24															1								
33+07L	24	25																						
13+10RPC	25															1	2.4							
13+10RPC	25	26																						
33+70L	30	31																						
33+70L	31	32																						
35+73L	33																							
38+50L	34															1								
38+50L	34	35																						
SHEET TOTALS						88									3.8	14	3.1							

STATION	FROM	TO	D.I. STD. 840.14 OR STD. 840.15	D.I. FRAME AND GRATE STD. 840.16	G.D.I. TYPE "A" STD. 840.17 OR 840.26	G.D.I. TYPE "B" STD. 840.18 OR 840.27	G.D.I. TYPE "D" STD. 840.19 OR 840.28	G.D.I. FRAME WITH GRATE STD. 840.22	G.D.I. FRAME WITH TWO GRATES STD. 840.22	G.D.I. (N.S.) FRAME WITH GRATE STD. 840.24	G.D.I. (N.S.) FRAME WITH TWO GRATES STD. 840.24	J.B. STD. 840.31 OR 840.32	G.D.I. (N.S.) FRAME WITH TWO GRATES STD. 840.29	MANHOLE STD. 840.51	M.H. STD. 840.51 OR 840.53	M.H. FRAME AND COVER STD. 840.54	24" WELDED STEEL PIPE (0.5" THICK), GRADE B	OTCB STD. 840.04 & 840.05	BERM DITCH OUTLET STD. 850.10 OR 850.11	ADJUSTMENT OF DROP INLETS	TEMPORARY STEEL PLATE COVER	TEMPORARY 12" CSP (UNCOATED)	TEMPORARY 15" CSP (UNCOATED)	FLOWABLE FILL (C.Y.)	CORR. STEEL ELBOWS NO. & SIZE	CONC. COLLARS CL. "B" C.Y. STD. 840.72	CONC. & BRICK PIPE PLUG, C.Y. STD. 840.71	PIPE REMOVAL LIN. FT.	REMARKS
14+35L	1				1			1	1																				3GI(A)
14+35L	1	2																											
17+16L	3																							4.4			0.09	208	REMOVE PIPE & DI'S
19+25L	4																							6.6			0.09		REMOVE DI
19+75L	5					1							1																
19+75L	5	6																											
20+50L	6					1							1																
20+50L	6	7																							2 @ 15"				SEE SECTION 300-6 FOR ROD & LUG
22+88L	8																												HEADWALL
23+30L	9																									0.55			COLLAR - OPEN END PIPE
23+30L	9	10															228												TRENCHLESS
23+30L	10	11																								0.55			COLLAR - OPEN END PIPE
26+00L	12					1							1																
26+00L	12	13																											
28+00L	13					1							1																
28+00L	13	14																											
29+25L	14					1							1																
29+25L	14	15																							2 @ 15"				SEE SECTION 300-6 FOR ROD & LUG
29+25L	14	16																											
29+25L	16					1			1																				
26+74L	17																							4.5			0.09		REMOVE DI
27+15L	18					1							1																
27+15L	18	19																											
29+95L	19					1							1																
29+95L	19	20																											
30+05L	20					1							1																
30+05L	20	22																											
31+50L	22					1							1																
31+50L	22	23																							2 @ 15"				SEE SECTION 300-6 FOR ROD & LUG
30+24L	21																							4.5			0.09		REMOVE DI
33+07L	24				1			1	1												1			4.7			0.09		3GI(A) REMOVE DI
33+07L	24	25																											
13+10RPC	25											1				1													
13+10RPC	25	26																							2 @ 15"				SEE SECTION 300-6 FOR ROD & LUG
33+70L	30	31																								0.89			COLLAR
33+70L	31	32																								0.89			COLLAR
35+73L	33																							4.7			0.09		REMOVE DI
38+50L	34					1			1																				
38+50L	34	35																										464	REMOVE PIPE & DI
SHEET TOTALS					2	11		2	4			1	9			1	228				1			29.4	8 @ 15"	2.88	0.54	672	

COMPUTED BY: MAY DATE: 4/15/2009

CHECKED BY: DCW DATE: 4/30/2009

NC10427

PROJECT NO.	SHEET NO.
R-2417AA	3-B

STATE OF NORTH CAROLINA
DIVISION OF HIGHWAYS

LIST OF PIPES, ENDWALLS, ETC. (FOR PIPES 48" & UNDER)

STATION	LOCATION (LT, RT, OR CL)	STRUCTURE NO. FROM	STRUCTURE NO. TO	TOP ELEVATION	INVERT ELEVATION	INVERT ELEVATION	SLOPE CRITICAL	CLASS III R.C. PIPE (UNLESS NOTED OTHERWISE) 15"	CLASS III R.C. PIPE 18"	CLASS III R.C. PIPE 24"	CLASS III R.C. PIPE 30"	BITUMINOUS COATED C.S. PIPE TYPE B (UNLESS NOTED OTHERWISE) 15" .064	BITUMINOUS COATED C.S. PIPE TYPE B 24" .064	CLASS III R.C. PIPE OR ALUMINIZED C.S. PIPE, TYPE IR OR HDPE PIPE, TYPE S OR D 15"	CLASS III R.C. PIPE OR ALUMINIZED C.S. PIPE, TYPE IR OR HDPE PIPE, TYPE S OR D 30"	CLASS III R.C. PIPE OR ALUMINIZED C.S. PIPE, TYPE IR OR HDPE PIPE, TYPE S OR D 36"	QUANTITIES FOR DRAINAGE STRUCTURES PER EACH (0' THRU 5.0')	*TOTAL L.F. FOR PAY QUANTITY SHALL BE COL. 'A' + (1.3 X COL.'B') LIN. FT. A 5.0' THRU 10.0'	G.D.I. TYPE "A" STD. 840.17 OR 840.26	G.D.I. TYPE "B" STD. 840.18 OR 840.27	G.D.I. FRAME WITH TWO GRATES STD. 840.22	J.B. STD. 840.31 OR 840.32	G.D.I. (N.S.) FRAME WITH TWO GRATES STD. 840.29	M.H. FRAME AND COVER STD. 840.54	CORR. STEEL ELBOWS NO. & SIZE	CONC. COLLARS CL. "B" C.Y. STD. 840.72	PIPE REMOVAL LIN. FT.	REMARKS
38+50L	CL	35		243.9	240.5												1			1	1							
38+50L	LT	35	36		240.5	234.5		120																				
42+00L	LT	37		246.5	239.8												1	1.8	1		1							
42+00L	LT	37	38		239.8	237.0										60												
42+00L	LT	37	39		239.8	240.3					88																	
42+00L	CL	39		247.7	240.3												1	2.4	1		1							
42+00L	CL	39	40		240.3	240.8					84																	
42+00L	RT	40		248.4	240.8												1	2.6	1		1							
42+00L	RT	40	41		240.8	242.3									296												508	REMOVE PIPE & DI'S
45+00L	RT	41		247.5	242.3												1	0.3	1		1							
50+75L	LT	42		247.9	244.1												1			1	1							
50+75L	LT	42	43		244.1	222.0						104													2 @ 15"			SEE SECTION 300-6 FOR ROD & LUG
50+75L	LT	42	44		244.1	244.6		100																				
50+75L	CL	44		248.4	244.6												1			1	1							
50+75L	RT	44	45		244.6	245.1		108																				
50+75L	RT	45		247.9	245.1												1			1	1							
53+70L	RT	46		248.0	245.3												1			1			1					
53+70L	RT	46	47		245.3	245.2		20																				
53+50L	RT	47		248.2	245.2												1			1			1					
53+50L	RT	47	48		245.2	242.9		72																				
53+50L	CL	48		245.7	242.9												1			1	1							
53+50L	LT	48	49		242.9	242.5		72																				
53+50L	LT	49		248.2	242.5												1	0.7		1			1					
53+50L	LT	49	50		242.5	241.1		136																				
54+85L	LT	50		247.8	241.1												1	1.8	1				1					
54+85L	LT	50	51		241.1	226.0							48												2 @ 24"			SEE SECTION 300-6 FOR ROD & LUG
54+85L	LT	50	52		241.1	241.9				166																		
56+50L	LT	52		248.6	241.9												1	1.7				1		1				
56+50L	LT	52	53		241.9	242.8								24														
56+50L	LT	53		245.6	242.8												1			1	1							
56+50L	LT	52	54		241.9	242.2			68																			
56+50L	CL	54		245.9	242.2												1			1	1							
56+50L	CL	54	55		242.2	242.8		92																				
56+50L	RT	55		245.5	242.8												1			1	1							
61+50L	RT	56		254.3	251.6												1			1			1					
61+50L	RT	56	57		251.6	251.2		72																				
62+20L	RT	57		255.1	251.2												1			1			1					
62+20L	RT	57	58		251.2	230.0						72													2 @ 15"			SEE SECTION 300-6 FOR ROD & LUG
62+50L	LT	59		253.3	250.6												1			1	1							
62+50L	LT	59	60		250.9	249.7	X	88																				
SHEET TOTALS								880	68	166	172	176	48	24	296	60	20	11.3	5	14	13	1	6	1	4 @ 15" 2 @ 24"	0	508	

ABBREVIATIONS	
C.B.	CATCH BASIN
N.D.I.	NARROW DROP INLET
D.I.	DROP INLET
G.D.I.	GRATED DROP INLET
G.D.I.(N.S.)	GRATED DROP INLET (NARROW SLOT)
BDO	BERM DITCH OUTLET
J.B.	JUNCTION BOX
M.H.	MANHOLE
T.B.D.I.	TRAFFIC BEARING DROP INLET
T.B.J.B.	TRAFFIC BEARING JUNCTION BOX

COMPUTED BY: MAY DATE: 4/15/2009

CHECKED BY: DCW DATE: 4/30/2009

NC10427

PROJECT NO.	SHEET NO.
R-2417AA	3-C

STATE OF NORTH CAROLINA
DIVISION OF HIGHWAYS

LIST OF PIPES, ENDWALLS, ETC. (FOR PIPES 48" & UNDER)

STATION	LOCATION (LT, RT, OR CL)'	STRUCTURE NO.		TOP ELEVATION	INVERT ELEVATION	INVERT ELEVATION	SLOPE CRITICAL	CLASS III R.C. PIPE (UNLESS NOTED OTHERWISE)								BITUMINOUS COATED C.S. PIPE TYPE B (UNLESS NOTED OTHERWISE)							
SIZE								12"	15"	18"	24"	30"	36"	42"	48"	12"	15"	18"	24"	30"	36"	42"	48"
THICKNESS OR GAUGE		FROM	TO													.064	.064	.064	.064	.079	.079	.109	.109
62+50L	CL	60		252.7	249.7																		
62+50L	RT	60	61		249.7	248.9	X			68													
62+50L	RT	61		255.5	248.9																		
62+50L	RT	61	62		248.9	229.0												76					
70+00L	LT	64		262.1	256.9																		
70+15L	LT	63	64		275.0	256.9														64			
70+00L	LT	64	65		256.9	255.2						128											
69+10L	CL	65		260.4	255.2																		
69+10L	CL	65	66		255.2	245.8						128											
68+15L	RT	66		253.8	245.8																		
68+15L	RT	66	67		245.8	245.0																	
68+15L	RT	66	68		249.8	257.0																	
69+00L	RT	68		259.8	257.0																		
76+70L	LT	70		269.7	265.7																		
76+70L	LT	69	70		278.0	265.7														44			
76+70L	LT	70	71		265.7	263.3						92											
76+50L	CL	71		269.0	263.3																		
76+50L	RT	71	72		263.3	255.5							108										
81+15L	LT	73		271.2	268.2																		
81+15L	LT	73	74		268.2	291.0												78					
81+15L	LT	73	75		268.2	261.4																	
86+50L	LT	75		266.2	261.4																		
86+50L	LT	75	76		261.4	270.1												28					
86+50L	LT	75	77		261.4	260.7					88												
86+50L	CL	77		265.5	260.7																		
86+50L	CL	77	78		260.7	252.9																	
87+75L	CL	78																					
95+50L	LT	81		257.4	254.6																		
95+50L	LT	81	82		254.6	251.9			88														
95+50L	CL	82		256.7	251.9																		
95+50L	RT	82	83		251.9	253.7			88														
95+50L	CL	82	85		251.9	247.5																	
95+50L	RT	83		256.4	253.7																		
100+00L	LT	84		253.0	250.2																		
100+00L	LT	84	85		250.2	247.5			88														
100+00L	CL	85		252.3	247.5																		
100+00L	RT	85	86		247.5	241.0					100												
100+50L	RT	87		254.6	251.1																		
100+50L	RT	87	88		251.1	242.0											28						
100+50L	RT	87	89		251.1	251.3			52														
101+00L	RT	89		254.1	251.3																		
SHEET TOTALS									316	68	188	348	108				28	182		108			

STATION	CLASS III R.C. PIPE OR ALUMINIZED C.S. PIPE, TYPE IR OR HDPE PIPE, TYPE S OR D								15" SIDE DRAIN PIPE	18" SIDE DRAIN PIPE	24" SIDE DRAIN PIPE	ENDWALLS STD. 838.01 OR STD. 838.11 (UNLESS NOTED OTHERWISE) CU. YARDS		QUANITIES FOR DRAINAGE STRUCTURES	*TOTAL L.F. FOR PAY QUANTITY SHALL BE COL. 'A' + (1.3 X COL.'B') LIN. FT.	
	12"	15"	18"	24"	30"	36"	42"	48"				R.C.P.	C.S.P.	PER EACH (0' THRU 5.0')	A 5.0' THRU 10.0'	B 10.0' AND ABOVE
62+50L														1		
62+50L																
62+50L														1	1.6	
62+50L																
70+00L														1	0.3	
70+15L																
70+00L																
69+10L														1	0.3	
69+10L																
68+15L														1	3	
68+15L						24										
68+15L		84														
69+00L														1		
76+70L														1		
76+70L																
76+70L																
76+50L														1	0.8	
76+50L																
81+15L														1		
81+15L																
81+15L			540													
86+50L														1		
86+50L																
86+50L																
86+50L														1		
86+50L				124												
87+75L																
95+50L														1		
95+50L																
95+50L														1		
95+50L																
95+50L				448												
95+50L														1		
100+00L														1		
100+00L																
100+00L														1		
100+00L																
100+50L														1		
100+50L																
100+50L																
101+00L														1		
SHEET TOTALS		84	540	572		24								18	6	

STATION	C.B. STD. 840.01 OR STD. 840.02	FRAME, GRATES, AND HOOD STANDARD 840.03 TYPE OF GRATE E	F	G	CONCRETE TRANSITIONAL SECTION DROP INLET	CATCH BASIN	D.I. STD. 840.14 OR STD. 840.15	D.I. FRAME AND GRATE STD. 840.16	G.D.I. TYPE "A" STD. 840.17 OR 840.26	G.D.I. TYPE "B" STD. 840.18 OR 840.27	G.D.I. TYPE "D" STD. 840.19 OR 840.28	G.D.I. FRAME WITH GRATE STD. 840.22	G.D.I. FRAME WITH TWO GRATES STD. 840.22	G.D.I. (N.S.) FRAME WITH GRATE STD. 840.24	G.D.I. (N.S.) FRAME WITH TWO GRATES STD. 840.24	J.B. STD. 840.31 OR 840.32	G.D.I. (N.S.) FRAME WITH TWO GRATES STD. 840.29	MANHOLE STD. 840.51	M.H. STD. 840.51 OR 840.53	M.H. FRAME AND COVER STD. 840.54	24" WELDED STEEL PIPE (0.5" THICK), GRADE B
62+50L										1			1								
62+50L																					
62+50L																1				1	
62+50L																					
70+00L									1				1								
70+15L																					
70+00L																					
69+10L									1				1								
69+10L																					
68+15L																1				1	
68+15L																					
68+15L																					
69+00L										1			1								
76+70L										1			1								
76+70L																					
76+70L																					
76+50L										1			1								
76+50L																					
81+15L										1			1								
81+15L																					
81+15L																					
86+50L										1			1								
86+50L																					
86+50L																					
86+50L									1				1								
86+50L																					
87+75L																					
95+50L										1			1								
95+50L																					
95+50L									1				1								
95+50L																					
95+50L																					
95+50L										1			1								
100+00L										1			1								
100+00L																					
100+00L									1				1								
100+00L																					
100+50L										1							1				
100+50L																					
100+50L																					
101+00L										1							1				
SHEET TOTALS									5	11			14			2	2			2	

STATION	OTCB STD. 840.04 & 840.05	BERM DITCH OUTLET STD. 850.10 OR 850.11	ADJUSTMENT OF DROP INLETS	TEMPORARY STEEL PLATE COVER	TEMPORARY 12" CSP (UNCOATED)	TEMPORARY 15" CSP (UNCOATED)	FLOWABLE FILL (C.Y.)	CORR. STEEL ELBOWS NO. & SIZE	CONC. COLLARS CL. "B" C.Y. STD. 840.72	CONC. & BRICK PIPE PLUG, C.Y. STD. 840.71	PIPE REMOVAL LIN. FT.	REMARKS
62+50L												
62+50L												
62+50L												
62+50L								2 @ 18"				SEE SECTION 300-6 FOR ROB & LUG
70+00L												
70+15L		1						1 @ 30"				BDO
70+00L												
69+10L												
69+10L												
68+15L												
68+15L												
68+15L												
69+00L												
76+70L												
76+70L		1						1 @ 30"				BDO
76+70L												
76+50L												
76+50L												
81+15L												
81+15L		1						1 @ 18"				BDO
81+15L												
86+50L												
86+50L		1						1 @ 18"				BDO
86+50L												
86+50L												
86+50L												
87+75L												
95+50L												OPEN END PIPE
95+50L												
95+50L												
95+50L												
95+50L												
95+50L												
100+00L												
100+00L												
100+00L												
100+00L												
100+50L												
100+50L								2 @ 15"				SEE SECTION 300-6 FOR ROB & LUG
100+50L												
101+00L												
								2 @ 15"				
								4 @ 18"				
SHEET TOTALS		4						2 @ 30"				

ABBREVIATIONS

C.B.	CATCH BASIN
N.D.I.	NARROW DROP INLET
D.I.	DROP INLET
G.D.I.	GRATED DROP INLET
G.D.I.(N.S.)	GRATED DROP INLET (NARROW SLOT)
BDO	BERM DITCH OUTLET
J.B.	JUNCTION BOX
M.H.	MANHOLE
T.B.D.I.	TRAFFIC BEARING DROP INLET
T.B.J.B.	TRAFFIC BEARING JUNCTION BOX

COMPUTED BY: MAY DATE: 4/15/2009

CHECKED BY: DCW DATE: 4/30/2009

NC10427

PROJECT NO.	SHEET NO.
R-2417AA	3-D

STATE OF NORTH CAROLINA
DIVISION OF HIGHWAYS

LIST OF PIPES, ENDWALLS, ETC. (FOR PIPES 48" & UNDER)

STATION	LOCATION (LT, RT, OR CL)'	STRUCTURE NO. FROM	STRUCTURE NO. TO	TOP ELEVATION	INVERT ELEVATION	INVERT ELEVATION	SLOPE CRITICAL
105+49L	CL	90		247.9	243.9		
105+49L	RT	90	91		243.9	243.5	
105+49L	RT	91		250.7	243.5		
105+49L	RT	91	92		243.5	240.0	
110+75L	LT	93	94		248.3	246.5	
110+75L	CL	94		250.0	246.5		
110+75L	RT	94	95		246.5	245.0	
119+00L	LT	96		260.0	257.3		
119+00L	LT	96	97		257.3	256.9	
119+75L	LT	97		261.5	256.9		
119+75L	LT	97	98		256.9	255.8	
119+75L	CL	98		258.8	255.8		
119+75L	RT	98	99		255.8	255.5	
119+75L	RT	99		261.5	255.5		
119+75L	RT	100	99		257.3	255.5	
119+00L	RT	100		260.0	257.3		
119+75L	RT	99	101		255.5	248.0	
120+04L	L/R	102			244.6	242.7	
124+50L	L/R	103			252.8	243.0	
126+50L	LT	104		275.5	272.8		
126+50L	LT	104	105		272.8	270.0	
126+50L	CL	105		272.8	270.0		
126+50L	RT	105	106		270.0	269.7	
126+50L	RT	106		275.5	269.7		
126+50L	RT	106	107		269.7	242.0	
130+00L	L/R	108			250.4	240.5	
131+00L	LT	109		284.8	282.1		
131+00L	LT	109	110		282.1	279.3	
131+00L	CL	110		282.0	279.3		
131+00L	RT	110	111		279.3	278.7	
131+00L	RT	111		284.8	278.7		
131+00L	RT	111	112		278.7	241.0	
141+00L	RT	113		288.1	285.4		
141+00L	RT	113	114		285.4	282.4	
141+00L	LT	114		288.1	282.4		
141+00L	LT	114	115		282.4	255.0	
145+00L	RT	116		280.3	277.6		
145+00L	RT	116	117		277.6	274.8	
145+00L	CL	117		277.5	274.8		
145+00L	CL	117	118		274.8	274.4	X
SHEET TOTALS							

STATION	FROM	TO	CLASS III R.C. PIPE (UNLESS NOTED OTHERWISE) 12"	15"	18"	24"	30"	36"	42"	48"	BITUMINOUS COATED C.S. PIPE TYPE B (UNLESS NOTED OTHERWISE) 12" .064	15" .064	18" .064	24" .064	30" .079	36" .079	42" .109	48" .109
105+49L	90																	
105+49L	90	91		68														
105+49L	91																	
105+49L	91	92										28						
110+75L	93	94				100												
110+75L	94																	
110+75L	94	95				100												
119+00L	96																	
119+00L	96	97		76														
119+75L	97																	
119+75L	97	98		68														
119+75L	98																	
119+75L	98	99			68													
119+75L	99																	
119+75L	100	99		76														
119+00L	100																	
119+75L	99	101											52					
120+04L	102							216										
124+50L	103					240 (CL IV)												
126+50L	104																	
126+50L	104	105		68														
126+50L	105																	
126+50L	105	106		68														
126+50L	106																	
126+50L	106	107											72					
130+00L	108								296 (CL IV)									
131+00L	109																	
131+00L	109	110		68														
131+00L	110																	
131+00L	110	111		68														
131+00L	111																	
131+00L	111	112											92					
141+00L	113																	
141+00L	113	114		136														
141+00L	114																	
141+00L	114	115										72						
145+00L	116																	
145+00L	116	117		68														
145+00L	117																	
145+00L	117	118		68														
						240 (CL IV)			296 (CL IV)									
SHEET TOTALS				832	68	200		216				100	216					

STATION	FROM	TO	CLASS III R.C. PIPE OR ALUMINIZED C.S. PIPE, TYPE IR OR HDPE PIPE, TYPE S OR D 12"	15"	18"	24"	30"	36"	42"	48"	15" SIDE DRAIN PIPE	18" SIDE DRAIN PIPE	24" SIDE DRAIN PIPE	ENDWALLS STD. 838.01 OR STD. 838.11 (UNLESS NOTED OTHERWISE) CU. YARDS R.C.P.	C.S.P.	QUANITIES FOR DRAINAGE STRUCTURES PER EACH (0' THRU 5.0')	*TOTAL L.F. FOR PAY QUANTITY SHALL BE COL. 'A' + (1.3 X COL.'B') LIN. FT. A 5.0' THRU 10.0'	B 10.0' AND ABOVE	C.B. STD. 840.01 OR STD. 840.02
105+49L	90															1			
105+49L	90	91																	
105+49L	91															1	2.1		
105+49L	91	92																	
110+75L	93	94																	
110+75L	94															1			
110+75L	94	95																	
119+00L	96															1			
119+00L	96	97																	
119+75L	97															1			
119+75L	97	98																	
119+75L	98															1			
119+75L	98	99																	
119+75L	99															1	1.1		
119+75L	100	99																	
119+00L	100															1			
119+75L	99	101																	
120+04L	102													3.4					
124+50L	103													1.7					
126+50L	104															1			
126+50L	104	105																	
126+50L	105															1			
126+50L	105	106																	
126+50L	106															1	0.9		
126+50L	106	107																	
130+00L	108													4.5					
131+00L	109															1			
131+00L	109	110																	
131+00L	110															1			
131+00L	110	111																	
131+00L	111															1	1.1		
131+00L	111	112																	
141+00L	113															1			
141+00L	113	114																	
141+00L	114															1	0.7		
141+00L	114	115																	
145+00L	116															1			
145+00L	116	117																	
145+00L	117															1			
145+00L	117	118																	
SHEET TOTALS														9.6		18	5.9		

STATION	FROM	TO	FRAME, GRATES, AND HOOD STANDARD 840.03 TYPE OF GRATE E	F	G	CONCRETE TRANSITIONAL SECTION DROP INLET	CATCH BASIN	D.I. STD. 840.14 OR STD. 840.15	D.I. FRAME AND GRATE STD. 840.16	G.D.I. TYPE "A" STD. 840.17 OR 840.26	G.D.I. TYPE "B" STD. 840.18 OR 840.27	G.D.I. TYPE "D" STD. 840.19 OR 840.28	G.D.I. FRAME WITH GRATE STD. 840.22	G.D.I. FRAME WITH TWO GRATES STD. 840.22	G.D.I. (N.S.) FRAME WITH GRATE STD. 840.24	G.D.I. (N.S.) FRAME WITH TWO GRATES STD. 840.24	J.B. STD. 840.31 OR 840.32	G.D.I. (N.S.) FRAME WITH TWO GRATES STD. 840.29
105+49L	90									1			1	1				
105+49L	91										1							1
110+75L	94										1			1				
119+00L	96										1							1
119+75L	97										1							1
119+75L	98										1			1				
119+75L	99										1							1
119+00L	100										1							1
126+50L	104										1							1
126+50L	105										1			1				
126+50L	106										1							1
131+00L	109										1							1
131+00L	110										1			1				
131+00L	111										1							1
141+00L	113										1							1
141+00L	114										1							1
145+00L	116										1							1
145+00L	117										1			1				
SHEET TOTALS										1	17		1	6				12

(All other rows have no entries in these columns.)

STATION	FROM	TO	MANHOLE STD. 840.51	M.H. STD. 840.51 OR 840.53	M.H. FRAME AND COVER STD. 840.54	24" WELDED STEEL PIPE (0.5" THICK), GRADE B	OTCB STD. 840.04 & 840.05	BERM DITCH OUTLET STD. 850.10 OR 850.11	ADJUSTMENT OF DROP INLETS	TEMPORARY STEEL PLATE COVER	TEMPORARY 12" CSP (UNCOATED)	TEMPORARY 15" CSP (UNCOATED)	FLOWABLE FILL (C.Y.)	CORR. STEEL ELBOWS NO. & SIZE	CONC. COLLARS CL. "B" C.Y. STD. 840.72	CONC. & BRICK PIPE PLUG, C.Y. STD. 840.71	PIPE REMOVAL LIN. FT.	REMARKS
105+49L	90																	3GI(A)
105+49L	91	92												2 @ 15"				SEE SECTION 300-6 FOR ROD & LUG
119+75L	99	101												2 @ 18"				SEE SECTION 300-6 FOR ROD & LUG
120+04L	102																	HEADWALL - OPEN END PIPE
124+50L	103																	L-SHAPED HW (838.05/838.15) - OPEN END PIPE
126+50L	106	107												2 @ 18"				SEE SECTION 300-6 FOR ROD & LUG
130+00L	108																	HEADWALL - OPEN END PIPE
131+00L	111	112												2 @ 18"				SEE SECTION 300-6 FOR ROD & LUG
141+00L	114	115												2 @ 15"				SEE SECTION 300-6 FOR ROD & LUG
														4 @ 15"				
SHEET TOTALS														6 @ 18"				

(All other rows have no entries in these columns.)

ABBREVIATIONS

C.B.	CATCH BASIN
N.D.I.	NARROW DROP INLET
D.I.	DROP INLET
G.D.I.	GRATED DROP INLET
G.D.I.(N.S.)	GRATED DROP INLET (NARROW SLOT)
BDO	BERM DITCH OUTLET
J.B.	JUNCTION BOX
M.H.	MANHOLE
T.B.D.I.	TRAFFIC BEARING DROP INLET
T.B.J.B.	TRAFFIC BEARING JUNCTION BOX

COMPUTED BY: MAY DATE: 4/15/2009

CHECKED BY: DCW DATE: 4/30/2009

NC10427

PROJECT NO.	SHEET NO.
R-2417AA	3-E

STATE OF NORTH CAROLINA
DIVISION OF HIGHWAYS

LIST OF PIPES, ENDWALLS, ETC. (FOR PIPES 48" & UNDER)

STATION	LOCATION (LT, RT, OR CL)	STRUCTURE NO. FROM	STRUCTURE NO. TO	TOP ELEVATION	INVERT ELEVATION	INVERT ELEVATION	SLOPE CRITICAL	CLASS III R.C. PIPE (UNLESS NOTED OTHERWISE) 12"	15"	18"	24"	30"	36"	42"	48"	BITUMINOUS COATED C.S. PIPE TYPE B (UNLESS NOTED OTHERWISE) 12" .064	15" .064	18" .064	24" .064	30" .079	36" .079	42" .109	48" .109	CLASS III R.C. PIPE OR ALUMINIZED C.S. PIPE, TYPE IR OR HDPE PIPE, TYPE S OR D 12"	15"	18"	24"	30"	36"	42"	48"
145+00L	LT	118		280.3	274.4																										
145+00L	LT	118	119		274.4	256.0											60														
152+00L	LT	120		266.2	263.5																										
152+00L	LT	120	121		263.5	260.5			68																						
152+00L	CL	121		263.5	260.5																										
152+00L	CL	121	122		260.5	260.1			68																						
152+00L	RT	122		266.2	260.1																										
152+00L	RT	122	123		260.1	244.0												48													
156+00L	LT	125		258.2	255.5																										
156+00L	LT	125	126		255.5	254.5			52																						
156+50L	LT	126		257.2	254.5																										
156+50L	LT	126	127		254.5	251.7			68																						
156+50L	CL	127		254.4	251.7																										
156+50L	CL	127	129		251.7	251.4			68																						
156+00L	RT	128		258.2	255.5																										
156+00L	RT	128	129		255.5	251.4			52																						
156+50L	RT	129		257.2	251.4																										
156+50L	RT	129	130		251.4	246.8												28													
157+00L	L/R	131													200																
160+60L	LT	132	133		247.6	246.6	X																						20		
160+60L	LT	133		250.1	246.6																										
160+60L	LT	133	134		246.6	245.7							92																		
160+44L	CL	134		250.4	245.7																										
160+44L	CL	134	135		245.7	245.4							100																		
169+25L	LT	136	137		275.0	250.3													64												
169+25L	LT	137		254.3	250.3																										
169+25L	LT	137	138		250.3	250.0						88																			
169+25L	CL	138		254.6	250.0																										
169+25L	CL	138	139		250.2	249.7	X					120																			
177+50L	LT	140		264.2	261.5																										
177+50L	LT	140	141		261.5	260.4			48																						
177+00L	LT	141		263.2	260.1																										
177+00L	LT	141	142		260.4	257.4			68																						
177+00L	CL	142		260.4	257.4																										
177+00L	CL	142	144		257.4	256.9				68																					
176+25L	RT	143		261.8	259.0																										
176+25L	RT	143	144		259.0	256.9			76																						
177+00L	RT	144		263.2	256.9																										
177+00L	RT	144	145		256.9	248.1												36													
178+50L	RT	146		263.6	260.9																										
SHEET TOTALS									568	68		208	192		200		60	112	64										20		

STATION	LOCATION	FROM	TO	15" SIDE DRAIN PIPE	18" SIDE DRAIN PIPE	24" SIDE DRAIN PIPE	ENDWALLS STD. 838.01 OR STD. 838.11 (UNLESS NOTED OTHERWISE) CU. YARDS R.C.P.	C.S.P.	QUANITIES FOR DRAINAGE STRUCTURES PER EACH (0' THRU 5.0')	*TOTAL L.F. FOR PAY QUANTITY SHALL BE COL. 'A' + (1.3 X COL.'B') LIN. FT. A 5.0' THRU 10.0'	B 10.0' AND ABOVE	C.B. STD. 840.01 OR STD. 840.02	FRAME, GRATES, AND HOOD STANDARD 840.03 TYPE OF GRATE E	F	G	CONCRETE TRANSITIONAL SECTION DROP INLET	CATCH BASIN	D.I. STD. 840.14 OR STD. 840.15	D.I. FRAME AND GRATE STD. 840.16	G.D.I. TYPE "A" STD. 840.17 OR 840.26	G.D.I. TYPE "B" STD. 840.18 OR 840.27	G.D.I. TYPE "D" STD. 840.19 OR 840.28	G.D.I. FRAME WITH GRATE STD. 840.22	G.D.I. FRAME WITH TWO GRATES STD. 840.22	G.D.I. (N.S.) FRAME WITH GRATE STD. 840.24	G.D.I. (N.S.) FRAME WITH TWO GRATES STD. 840.24	J.B. STD. 840.31 OR 840.32	G.D.I. (N.S.) FRAME WITH TWO GRATES STD. 840.29	MANHOLE STD. 840.51	M.H. STD. 840.51 OR 840.53	M.H. FRAME AND COVER STD. 840.54
145+00L	LT	118							1	0.9											1							1			
145+00L	LT	118	119																												
152+00L	LT	120							1												1							1			
152+00L	LT	120	121																												
152+00L	CL	121							1												1			1							
152+00L	CL	121	122																												
152+00L	RT	122							1	1.1											1							1			
152+00L	RT	122	123																												
156+00L	LT	125							1												1							1			
156+00L	LT	125	126																												
156+50L	LT	126							1												1							1			
156+50L	LT	126	127																												
156+50L	CL	127							1												1			1							
156+50L	CL	127	129																												
156+00L	RT	128							1												1							1			
156+00L	RT	128	129																												
156+50L	RT	129							1	0.8											1							1			
156+50L	RT	129	130																												
157+00L	L/R	131					6.0																								
160+60L	LT	132	133																												
160+60L	LT	133							1												1			1							
160+60L	LT	133	134																												
160+44L	CL	134							1											1			1	1							
160+44L	CL	134	135																												
169+25L	LT	136	137																												
169+25L	LT	137							1												1			1							
169+25L	LT	137	138																												
169+25L	CL	138							1												1			1							
169+25L	CL	138	139																												
177+50L	LT	140							1												1							1			
177+50L	LT	140	141																												
177+00L	LT	141							1												1							1			
177+00L	LT	141	142																												
177+00L	CL	142							1												1			1							
177+00L	CL	142	144																												
176+25L	RT	143							1												1							1			
176+25L	RT	143	144																												
177+00L	RT	144							1	1.2											1							1			
177+00L	RT	144	145																												
178+50L	RT	146							1												1			1							
SHEET TOTALS							6.0		19	4										1	18		1	8				11			

STATION	LOCATION	FROM	TO	24" WELDED STEEL PIPE (0.5" THICK), GRADE B	OTCB STD. 840.04 & 840.05	BERM DITCH OUTLET STD. 850.10 OR 850.11	ADJUSTMENT OF DROP INLETS	TEMPORARY STEEL PLATE COVER	TEMPORARY 12" CSP (UNCOATED)	TEMPORARY 15" CSP (UNCOATED)	FLOWABLE FILL (C.Y.)	CORR. STEEL ELBOWS NO. & SIZE	CONC. COLLARS CL. "B" C.Y. STD. 840.72	CONC. & BRICK PIPE PLUG, C.Y. STD. 840.71	PIPE REMOVAL LIN. FT.	REMARKS
145+00L	LT	118														
145+00L	LT	118	119									2 @ 15"				SEE SECTION 300-6 FOR ROD & LUG
152+00L	LT	120														
152+00L	LT	120	121													
152+00L	CL	121														
152+00L	CL	121	122													
152+00L	RT	122														
152+00L	RT	122	123									2 @ 18"				SEE SECTION 300-6 FOR ROD & LUG
156+00L	LT	125														
156+00L	LT	125	126													
156+50L	LT	126														
156+50L	LT	126	127													
156+50L	CL	127														
156+50L	CL	127	129													
156+00L	RT	128														
156+00L	RT	128	129													
156+50L	RT	129														
156+50L	RT	129	130									2 @ 18"				SEE SECTION 300-6 FOR ROD & LUG
157+00L	L/R	131														HEADWALL - OPEN END PIPE
160+60L	LT	132	133													
160+60L	LT	133														
160+60L	LT	133	134													
160+44L	CL	134														3GI(A)
160+44L	CL	134	135													
169+25L	LT	136	137			1						1 @ 24"				BDO
169+25L	LT	137														
169+25L	LT	137	138													
169+25L	CL	138														
169+25L	CL	138	139													
177+50L	LT	140														
177+50L	LT	140	141													
177+00L	LT	141														
177+00L	LT	141	142													
177+00L	CL	142														
177+00L	CL	142	144													
176+25L	RT	143														
176+25L	RT	143	144													
177+00L	RT	144														
177+00L	RT	144	145									2 @ 18"				SEE SECTION 300-6 FOR ROD & LUG
178+50L	RT	146														
												2 @ 15"				
												6 @ 18"				
SHEET TOTALS						1						1 @ 24"				

ABBREVIATIONS

C.B.	CATCH BASIN
N.D.I.	NARROW DROP INLET
D.I.	DROP INLET
G.D.I.	GRATED DROP INLET
G.D.I.(N.S.)	GRATED DROP INLET (NARROW SLOT)
BDO	BERM DITCH OUTLET
J.B.	JUNCTION BOX
M.H.	MANHOLE
T.B.D.I.	TRAFFIC BEARING DROP INLET
T.B.J.B.	TRAFFIC BEARING JUNCTION BOX

COMPUTED BY: MAY DATE: 4/15/2009

CHECKED BY: DCW DATE: 4/30/2009

NC10427

PROJECT NO.	SHEET NO.
R-2417AA	3-F

STATE OF NORTH CAROLINA
DIVISION OF HIGHWAYS

LIST OF PIPES, ENDWALLS, ETC. (FOR PIPES 48" & UNDER)

STATION	LOCATION (LT, RT, OR CL)'	STRUCTURE NO. FROM	STRUCTURE NO. TO	TOP ELEVATION	INVERT ELEVATION	INVERT ELEVATION	SLOPE CRITICAL	CLASS III R.C. PIPE (UNLESS NOTED OTHERWISE) 12"	15"	18"	24"	30"	36"	42"	48"
178+50L	RT	146	147		260.9	249.0									
185+00L	RT	149		281.9	279.1										
185+00L	RT	149	150		279.1	276.9									
184+75L	RT	151	152								120				
184+10L	CL	152		279.5	269.2										
184+10L	CL	152	153		269.2	261.5					128				
195+00L	RT	154		287.5	284.8										
195+00L	RT	154	155		284.8	278.2									
194+98L	LT	156	157										100		
195+30L	CL	157		287.3	280.6										
195+30L	CL	157	158		280.6	277.6							116		
202+61L	LT	159	160									112			
202+60L	CL	160		283.0	274.1										
202+60L	RT	160	161		274.1	269.7						100			
207+65L	L/R	162									256 (CL IV)				
252+72L	LT	241													
11+63Y	LT	163													
12+18Y	LT	164													
12+42Y	RT	165													
14+70Y	RT	166													
20+68Y	LT	167													
21+27Y	RT	168													
26+15.45Y	LT	169		265.8	262.8										
26+15.45Y	LT	169	170		262.8	262.4				68					
26+15.45Y	CL	170		267.0	262.4										
26+15.45Y	RT	170	171		262.4	260.5				88					
26+15.45Y	RT	170	172		262.4	265.2			80						
27+00Y	RT	172		268.4	265.2										
27+00Y	RT	172	173		265.2	267.5			96						
28+00Y	RT	173		270.7	267.5										
28+00Y	RT	173	174		267.5	270.5			96						
29+00Y	RT	174		273.6	270.5										
33+55Y	RT	175		284.2	281.0										
33+55Y	RT	175	176		281.0	280.7			64						
36+61Y	LT	177		281.8	279.0										
36+61Y	LT	177	178		279.0	278.9			40						
36+15Y	LT	178		281.8	278.9										
36+15Y	LT	178	179		278.9	278.8			36						
36+15Y	RT	179		284.4	278.8										
36+15Y	RT	179	180		278.8	278.5			76						
											256 (CL IV)				
SHEET TOTALS									488	156	248	212	216		

STATION	FROM	TO	BITUMINOUS COATED C.S. PIPE TYPE B (UNLESS NOTED OTHERWISE) 12" .064	15" .064	18" .064	24" .064	30" .079	36" .079	42" .109	48" .109	CLASS III R.C. PIPE OR ALUMINIZED C.S. PIPE, TYPE IR OR HDPE PIPE, TYPE S OR D 12"	15"	18"	24"	30"	36"	42"	48"	15" SIDE DRAIN PIPE	18" SIDE DRAIN PIPE	24" SIDE DRAIN PIPE	ENDWALLS STD. 838.01 OR STD. 838.11 (UNLESS NOTED OTHERWISE) CU. YARDS R.C.P.	C.S.P.
178+50L	146	147		104																			
185+00L	149	150										24											
195+00L	154	155		60																			
194+98L	156	157																				3.4	
11+63Y	163																		24				
12+18Y	164																		20				
12+42Y	165																		24				
14+70Y	166																		32				
20+68Y	167																		28				
21+27Y	168																			40			
SHEET TOTALS				164								24							128	40		3.4	

STATION	FROM	TO	QUANITIES FOR DRAINAGE STRUCTURES PER EACH (0' THRU 5.0')	*TOTAL L.F. FOR PAY QUANTITY SHALL BE COL. 'A' + (1.3 X COL.'B') LIN. FT. A 5.0' THRU 10.0'	B 10.0' AND ABOVE	C.B. STD. 840.01 OR STD. 840.02	FRAME, GRATES, AND HOOD STANDARD 840.03 TYPE OF GRATE E	F	G	CONCRETE TRANSITIONAL SECTION DROP INLET	CATCH BASIN	D.I. STD. 840.14 OR STD. 840.15	D.I. FRAME AND GRATE STD. 840.16	G.D.I. TYPE "A" STD. 840.17 OR 840.26	G.D.I. TYPE "B" STD. 840.18 OR 840.27	G.D.I. TYPE "D" STD. 840.19 OR 840.28	G.D.I. FRAME WITH GRATE STD. 840.22	G.D.I. FRAME WITH TWO GRATES STD. 840.22	G.D.I. (N.S.) FRAME WITH GRATE STD. 840.24	G.D.I. (N.S.) FRAME WITH TWO GRATES STD. 840.24	J.B. STD. 840.31 OR 840.32	G.D.I. (N.S.) FRAME WITH TWO GRATES STD. 840.29	MANHOLE STD. 840.51	M.H. STD. 840.51 OR 840.53	M.H. FRAME AND COVER STD. 840.54	24" WELDED STEEL PIPE (0.5" THICK), GRADE B
185+00L	149		1												1			1								
184+10L	152		1	5	0.3										1			1								
195+00L	154		1												1			1								
195+30L	157		1	1.8											1			1								
202+60L	160		1	3.9											1			1								
26+15.45Y	169		1												1			1								
26+15.45Y	170		1							1		1	1													
27+00Y	172		1							1		1	1													
28+00Y	173		1							1		1	1													
29+00Y	174		1							1		1	1													
33+55Y	175		1							1		1	1													
36+61Y	177		1												1							1				
36+15Y	178		1												1							1				
36+15Y	179		1	0.6						1		1	1													
SHEET TOTALS			14	11.3	0.3					6		6	6		8			6				2				

STATION	FROM	TO	OTCB STD. 840.04 & 840.05	BERM DITCH OUTLET STD. 850.10 OR 850.11	CONVERT JB TO OTCB	ADJUSTMENT OF DROP INLETS	TEMPORARY STEEL PLATE COVER	TEMPORARY 12" CSP (UNCOATED)	TEMPORARY 15" CSP (UNCOATED)	FLOWABLE FILL (C.Y.)	CORR. STEEL ELBOWS NO. & SIZE	CONC. COLLARS CL. "B" C.Y. STD. 840.72	CONC. & BRICK PIPE PLUG, C.Y. STD. 840.71	PIPE REMOVAL LIN. FT.	REMARKS
194+98L	156	157													HEADWALL
195+30L	157	158												29	REMOVE PIPE
207+65L	162														OPEN END PIPE (CL.IV)
252+72L	241				1										SEE DETAIL 2-AN
11+63Y	163													20	REMOVE PIPE
12+18Y	164													21	REMOVE PIPE
12+42Y	165													25	REMOVE PIPE
14+70Y	166													25	REMOVE PIPE
20+68Y	167													21	REMOVE PIPE
21+27Y	168													44	REMOVE PIPE
SHEET TOTALS					1									185	

ABBREVIATIONS

C.B.	CATCH BASIN
N.D.I.	NARROW DROP INLET
D.I.	DROP INLET
G.D.I.	GRATED DROP INLET
G.D.I.(N.S.)	GRATED DROP INLET (NARROW SLOT)
BDO	BERM DITCH OUTLET
J.B.	JUNCTION BOX
M.H.	MANHOLE
T.B.D.I.	TRAFFIC BEARING DROP INLET
T.B.J.B.	TRAFFIC BEARING JUNCTION BOX

COMPUTED BY: MAY DATE: 4/15/2009

CHECKED BY: DCW DATE: 4/30/2009

NC10427

PROJECT NO.	SHEET NO.
R-2417AA	3-G

STATE OF NORTH CAROLINA
DIVISION OF HIGHWAYS

LIST OF PIPES, ENDWALLS, ETC. (FOR PIPES 48" & UNDER)

STATION (SIZE / THICKNESS OR GAUGE)	LOCATION (LT, RT, OR CL)'	STRUCTURE NO. FROM	STRUCTURE NO. TO	TOP ELEVATION	INVERT ELEVATION	INVERT ELEVATION	SLOPE CRITICAL	CLASS III R.C. PIPE (UNLESS NOTED OTHERWISE) 12"	15"	18"	24"	30"	36"	42"	48"
37+65Y	RT	181		284.7	281.6										
37+65Y	RT	181	182		281.6	280.0			72						
43+28Y	CL	183													
43+12Y	RT	184													
44+00Y	LT	185													
44+00Y	LT	185	186						44						
44+51Y	LT	186													
44+51Y	LT	186	187												
46+68Y	CL	188													
47+02Y	RT	189	190							16					
47+10Y	RT	190													
47+10Y	RT	190	191												
15+00RPB	LT	192		238.6	235.8										
15+00RPB	LT	192	193		235.8	234.5			168						
16+76RPB	LT	193		237.5	234.5										
16+76RPB	L/R	193	194		234.5	234.1				64					
16+76RPB	LT	193	195		235.5	235.3			92						
17+76RPB	LT	195		238.0	235.3										
17+74RPB	L/R	196	197		223.0	226.5								180	
18+56RPB	RT	197		238.3	226.5										
18+56RPB	RT	197	198		226.5	229.0									
19+00RPB	RT	198		236.5	229.0										
NOT USED	RT	199													
19+78RPB	L/R	200		plug											
13+00LPB	RT	201		248.0	244.3										
13+00LPB	RT	201	202		244.3	245.3			48						
13+50LPB	RT	202		248.3	245.3										
13+50LPB	L/R	202	37		244.3	239.8					168				
13+50LPB	RT	202	203		244.3	246.0				92					
14+50LPB	RT	203		249.2	246.0										
14+50LPB	RT	203	204		246.0	255.6				176					
16+50LPB	RT	204		258.7	255.5										
16+50LPB	RT	204	205		255.5	256.5									
12+68LPC	LT	206		250.0	247.0										
12+68LPC	LT	206	207		247.0	246.0			40						
13+20LPC	LT	207		249.8	246.0										
13+20LPC	LT	207	208		246.0	268.3									
13+20LPC	LT	207	41		246.0	242.3					72				
13+20LPC	LT	207	209		246.4	246.0					44				
SHEET TOTALS									464	348	284			180	

STATION	BITUMINOUS COATED C.S. PIPE TYPE B (UNLESS NOTED OTHERWISE) 12" .064	15" .064	18" .064	24" .064	30" .079	36" .079	42" .109	48" .109	CLASS III R.C. PIPE OR ALUMINIZED C.S. PIPE, TYPE IR OR HDPE PIPE, TYPE S OR D 12"	15"	18"	24"	30"	36"	42"	48"	15" SIDE DRAIN PIPE	18" SIDE DRAIN PIPE	24" SIDE DRAIN PIPE	ENDWALLS STD. 838.01 OR STD. 838.11 (UNLESS NOTED OTHERWISE) CU. YARDS R.C.P.	C.S.P.
37+65Y																					
37+65Y																					
43+28Y																					
43+12Y		4																			
44+00Y																					
44+00Y																					
44+51Y																					
44+51Y		108																			
46+68Y																					
47+02Y																					
47+10Y																					
47+10Y		32																			
15+00RPB																					
15+00RPB																					
16+76RPB																					
16+76RPB																					
16+76RPB																					
17+76RPB																					
17+74RPB																					
18+56RPB																					
18+56RPB																48					
19+00RPB																					
NOT USED																					
19+78RPB																					
13+00LPB																					
13+00LPB																					
13+50LPB																					
13+50LPB																					
13+50LPB																					
14+50LPB																					
14+50LPB																					
16+50LPB																					
16+50LPB											20										
12+68LPC																					
12+68LPC																					
13+20LPC																					
13+20LPC		100																			
13+20LPC																					
13+20LPC																					
SHEET TOTALS		244									20					48					

STATION	QUANITIES FOR DRAINAGE STRUCTURES PER EACH (0' THRU 5.0')	*TOTAL L.F. FOR PAY QUANTITY SHALL BE COL. 'A' + (1.3 X COL.'B') LIN. FT. A 5.0' THRU 10.0'	B 10.0' AND ABOVE	C.B. STD. 840.01 OR STD. 840.02	FRAME, GRATES, AND HOOD STANDARD 840.03 TYPE OF GRATE E	F	G	CONCRETE TRANSITIONAL SECTION DROP INLET	CATCH BASIN	D.I. STD. 840.14 OR STD. 840.15	D.I. FRAME AND GRATE STD. 840.16	G.D.I. TYPE "A" STD. 840.17 OR 840.26	G.D.I. TYPE "B" STD. 840.18 OR 840.27	G.D.I. TYPE "D" STD. 840.19 OR 840.28	G.D.I. FRAME WITH GRATE STD. 840.22	G.D.I. FRAME WITH TWO GRATES STD. 840.22	G.D.I. (N.S.) FRAME WITH GRATE STD. 840.24	G.D.I. (N.S.) FRAME WITH TWO GRATES STD. 840.24	J.B. STD. 840.31 OR 840.32	G.D.I. (N.S.) FRAME WITH TWO GRATES STD. 840.29	MANHOLE STD. 840.51	M.H. STD. 840.51 OR 840.53	M.H. FRAME AND COVER STD. 840.54
37+65Y	1							1		1	1												
37+65Y																							
43+28Y																							
43+12Y																							
44+00Y	1												1							1			
44+00Y																							
44+51Y	1												1							1			
44+51Y																							
46+68Y																							
47+02Y																							
47+10Y	1												1			1							
47+10Y																							
15+00RPB	1												1							1			
15+00RPB																							
16+76RPB	1												1							1			
16+76RPB																							
16+76RPB																							
17+76RPB	1												1							1			
17+74RPB																							
18+56RPB	1	5	1.8																				
18+56RPB																							
19+00RPB	1	2.5																					
NOT USED																							
19+78RPB																							
13+00LPB	1			1		1																	
13+00LPB																							
13+50LPB	1			1	1																		
13+50LPB																							
13+50LPB																							
14+50LPB	1			1			1																
14+50LPB																							
16+50LPB	1			1			1																
16+50LPB																							
12+68LPC	1			1			1																
12+68LPC																							
13+20LPC	1			1	1																		
13+20LPC																							
13+20LPC																							
13+20LPC																							
SHEET TOTALS	15	7.5	1.8	6	2	1	3	1		1	1		6			1				5			

STATION	24" WELDED STEEL PIPE (0.5" THICK), GRADE B	DRY DENTENTION BASIN STRUCTURE	TRASH RACK SEE DETAIL 2-I	8" SLUICE GATE SEE DETAIL 2-J	6" DRAWDOWN PIPE SEE DETAIL 2-J	OTCB STD. 840.04 & 840.05	BERM DITCH OUTLET STD. 850.10 OR 850.11	ADJUSTMENT OF DROP INLETS	TEMPORARY STEEL PLATE COVER	TEMPORARY 12" CSP (UNCOATED)	TEMPORARY 15" CSP (UNCOATED)	FLOWABLE FILL (C.Y.)	CORR. STEEL ELBOWS NO. & SIZE	CONC. COLLARS CL. "B" C.Y. STD. 840.72	CONC. & BRICK PIPE PLUG, C.Y. STD. 840.71	PIPE REMOVAL LIN. FT.	REMARKS
37+65Y																141	REMOVE PIPE & DI'S
37+65Y																324	REMOVE PIPES & DI'S
43+28Y								1									
43+12Y																4	REMOVE PIPE SECTION
44+00Y																	
44+00Y																	
44+51Y																	
44+51Y													2 @ 15"				SEE SECTION FOR ROD & LUG
46+68Y								1									
47+02Y														0.45			COLLAR
47+10Y																	
47+10Y							1						1 @ 15"			42	BDO
15+00RPB																	
15+00RPB																	
16+76RPB																	
16+76RPB																	
16+76RPB																	
17+76RPB																	
17+74RPB																	
18+56RPB						1											OTCB
18+56RPB																	
19+00RPB		1	1	1	1												OUTLET CONTROL STRUCTURE
NOT USED																	
19+78RPB															0.364		
13+00LPB																	
13+00LPB																	
13+50LPB																	
13+50LPB																	
13+50LPB																	
14+50LPB																	
14+50LPB																	
16+50LPB																	
16+50LPB																	
12+68LPC																	
12+68LPC																	
13+20LPC																	
13+20LPC							1										BDO
13+20LPC																	
13+20LPC																	
SHEET TOTALS		1	1	1	1	1	2	2					3 @ 15"	0.45	0.364	511	

ABBREVIATIONS

C.B.	CATCH BASIN
N.D.I.	NARROW DROP INLET
D.I.	DROP INLET
G.D.I.	GRATED DROP INLET
G.D.I.(N.S.)	GRATED DROP INLET (NARROW SLOT)
BDO	BERM DITCH OUTLET
J.B.	JUNCTION BOX
M.H.	MANHOLE
T.B.D.I.	TRAFFIC BEARING DROP INLET
T.B.J.B.	TRAFFIC BEARING JUNCTION BOX

NC10427

COMPUTED BY: MAY DATE: 4/15/2009

CHECKED BY: DCW DATE: 4/30/2009

PROJECT NO.	SHEET NO.
R-2417AA	3-H

STATE OF NORTH CAROLINA
DIVISION OF HIGHWAYS

LIST OF PIPES, ENDWALLS, ETC. (FOR PIPES 48" & UNDER)

STATION	LOCATION (LT, RT, OR CL)	STRUCTURE NO. FROM	STRUCTURE NO. TO	TOP ELEVATION	INVERT ELEVATION	INVERT ELEVATION	SLOPE CRITICAL	CLASS III R.C. PIPE (UNLESS NOTED OTHERWISE) 12"	15"	18"	24"	30"	36"	42"	48"	BITUMINOUS COATED C.S. PIPE TYPE B (UNLESS NOTED OTHERWISE) 12"	15"	18"	24"	30"	36"	42"	48"	CLASS III R.C. PIPE OR ALUMINIZED C.S. PIPE, TYPE IR OR HDPE PIPE, TYPE S OR D 12"	15"	18"	24"	30"	36"	42"	48"	15" SIDE DRAIN PIPE	18" SIDE DRAIN PIPE	24" SIDE DRAIN PIPE	ENDWALLS STD. 838.01 OR STD. 838.11 (UNLESS NOTED OTHERWISE) CU. YARDS R.C.P.	C.S.P.
SIZE																																					
THICKNESS OR GAUGE																.064	.064	.064	.064	.079	.079	.109	.109														
13+74LPC	LT	209		250.2	246.4																																
13+74LPC	LT	209	210		246.4	251.2					156																										
15+50LPC	LT	210		254.9	251.2																																
15+50LPC	LT	210	211		251.2	266.3												64																			
14+55RPC	RT	212		241.0	236.6																																
14+55RPC	RT	212	213		236.0	219.0											44																				
14+55RPC	RT	212	214		236.6	237.3				136																											
16+00RPC	RT	214		241.6	237.3																																
16+00RPC	L/R	214	215		237.3	237.6				52																											
15+98RPC	LT	215		240.4	237.6																																
20+08RPC	L/R	216			239.0	227.0					120																										
22+67RPC	L/R	217			241.5	227.5					140																										
25+00RPC	LT	218		253.6	250.8																																
25+00RPC	LT	218	219		250.8	248.5																			48												
29+70RPC	LT	220		281.4	278.2																																
29+70RPC	LT	220	221		278.2	276.3				32																											
19+66LPC	LT	221		280.3	276.3																																
19+66LPC	LT	221	222		276.3	275.0																			20												
31+80RPC	L/R	223			279.2	278.5					148																										
48+42L1	LT	224																																			
48+30L1	LT	225	226								104																										
10+47Y1RPB	LT	226		324.3	317.8																																
10+47Y1RPB	LT	226	227		317.8	324.2				152																											
12+00Y1RPB	LT	227		328.5	324.2																																
12+00Y1RPB	LT	227	228		324.2	324.4																			16												
30+22 Y	LT	229		274.6	272.7																																
30+20 Y	LT	229	230		272.7	272.0																			16												
12+05 Y3	RT	231		262.9	260.2																																
12+05 Y3	RT	231	232		260.2	252.2																			270												
14+47 Y3	LT	233		261.8	259.0																																
14+47 Y3	LT	233	234		259.0	252.2																			270												
30+27 L	RT	235	OUT		229.9	228.3																															
33+07 L	CL	236	24		239.3	235.5																															
10+94 TEMP. CONN.	CL	237	OUT		240.0	239.4																															
12+00 TEMP. CONN.	CL	238	OUT		235.6	234.0																															
20+34 NBDET	CL	239	OUT		242.5	242.0																															
22+47 NBDET	CL	240	OUT		248.4	248.0																															
SHEET TOTALS									372	408	260						44	64							640												
SHT 3-A TOTALS									1188								168						128				88										3.8
SHT 3-B TOTALS									880	68	166	172					176		48						24			296	60								
SHT 3-C TOTALS									316	68	188	348	108				28	182			108				84	540	572		24								
SHT 3-D TOTALS											240 (CL IV)			296 (CL IV)																						
SHT 3-D TOTALS									832	68	200		216				100	216																		9.6	
SHT 3-E TOTALS									568	68		208	192		200		60	112	64										20							6	
SHT 3-F TOTALS									488	156	248	212	216				164								24							128	40			3.4	
SHT 3-F TOTALS											256 (CL IV)																										
SHT 3-G TOTALS									464	348	284			180			244									20				48							
SHT 3-H TOTALS									372	408	260						44	64							640												
											496 (CL IV)			296 (CL IV)																							
GRAND TOTALS									5108	1184	1346	940	732	180	200		984	574	112		108		128		772	560	660	296	104	48		128	40			23	

STATION	QUANTITIES FOR DRAINAGE STRUCTURES PER EACH (0' THRU 5.0')	LIN. FT. A 5.0' THRU 10.0'	LIN. FT. B 10.0' AND ABOVE	*TOTAL L.F. FOR PAY QUANTITY SHALL BE COL. 'A' + (1.3 X COL. 'B')	C.B. STD. 840.01 OR STD. 840.02	FRAME, GRATES, AND HOOD STANDARD 840.03 TYPE OF GRATE E	F	G	CONCRETE TRANSITIONAL SECTION DROP INLET	CATCH BASIN	D.I. STD. 840.14 OR STD. 840.15	D.I. FRAME AND GRATE STD. 840.16	G.D.I. TYPE "A" STD. 840.17 OR 840.26	G.D.I. TYPE "B" STD. 840.18 OR 840.27	G.D.I. TYPE "D" STD. 840.19 OR 840.28	G.D.I. FRAME WITH GRATE STD. 840.22	G.D.I. FRAME WITH TWO GRATES STD. 840.22	G.D.I. (N.S.) FRAME WITH GRATE STD. 840.24	G.D.I. (N.S.) FRAME WITH TWO GRATES STD. 840.24	J.B. STD. 840.31 OR 840.32	G.D.I. (N.S.) FRAME WITH TWO GRATES STD. 840.29	MANHOLE STD. 840.51	M.H. STD. 840.31 OR 840.33	M.H. FRAME AND COVER STD. 840.54	24" WELDED STEEL PIPE (0.5" THICK), GRADE B	DRY DENTENTION BASIN STRUCTURE	TRASH RACK SEE DETAIL 2-I	8" SLUICE GATE SEE DETAIL 2-J	6" DRAWDOWN PIPE SEE DETAIL 2-J	OTCB STD. 840.04 & 840.05	BERM DITCH OUTLET STD. 840.10 OR 840.11	CONVERT JB TO OTCB	ADJUSTMENT OF DROP INLETS	TEMPORARY STEEL PLATE COVER	TEMPORARY 12" CSP (UNCOATED)	TEMPORARY 15" CSP (UNCOATED)	FLOWABLE FILL (C.I.)	CORR. STEEL ELBOWS NO. & SIZE	CONC. COLLARS CL. "B" C.Y. STD. 840.72	CONC. & BRICK PIPE PLUG, C.Y. STD. 840.71	PIPE REMOVAL LIN. FT.	REMARKS
13+74LPC	1				1		1																																				
13+74LPC																																										149	REMOVE PIPES & DI'S
15+50LPC	1				1		1																																				
15+50LPC																																	1										BDO
14+55RPC	1												1								1																						
14+55RPC																																									2 @ 15"		SEE SECTION 300-6 FOR ROD & LUGS
14+55RPC																																											
16+00RPC	1												1								1																						
16+00RPC																																											
15+98RPC	1												1			1																						1					
20+08RPC																																											OPEN END PIPE
22+67RPC																																											OPEN END PIPE
25+00RPC	1												1			1																											
25+00RPC																																											
29+70RPC	1								1		1	1																															
29+70RPC																																											
19+66LPC	1				1		1																																			98	REMOVE PIPE & DI'S
19+66LPC																																											
31+80RPC																																											OPEN END PIPE
48+42L1																																				1							
48+30L1																																							0.12		111	COLLAR
10+47Y1RPB	1	1.5										1						1																									
10+47Y1RPB																																									6		
12+00Y1RPB	1												1					1																									
12+00Y1RPB																																											OPEN END PIPE
30+22 Y	1													1				1																									
30+20 Y																																											
12+05 Y3	1												1			1																											CONC. PAVED DITCH BEHIND WALL
12+05 Y3																																											
14+47 Y3	1												1			1																											CONC. PAVED DITCH BEHIND WALL
14+47 Y3																																											
30+27 L																																					20	1.0			20	TEMPORARY
33+07 L																																				92					92	TEMPORARY
10+94 TEMP. CONN.																																				124					124	TEMPORARY
12+00 TEMP. CONN.																																				136					136	TEMPORARY
20+34 NBDET																																				72					72	TEMPORARY
22+47 NBDET																																				64					64	TEMPORARY
SHEET TOTALS	13	1.5		3		3		1		1	1	1	7	1		4				5											1			1	1	488	20	1.0	2 @ 15"	0.12		872	
SHT 3-A TOTALS	14	3.1									2	11		2	4			1	9		1		228										1			29.4		2.88	0.54	672	
SHT 3-B TOTALS	20	11.3									5	14			13			1	6		1																				508	
SHT 3-C TOTALS	18	6									5	11			14			2	2		2								4													
SHT 3-D TOTALS																																											
SHT 3-D TOTALS	18	5.9									1	17		1	6				12																							
SHT 3-E TOTALS	19	4									1	18		1	8				11										1													
SHT 3-F TOTALS	14	11.3	0.3				6		6	6		8			6				2												1										185	
SHT 3-F TOTALS																																											
SHT 3-G TOTALS	15	7.5	1.8	6	2	1	3	1		1	1		6			1				5				1	1	1	1	1	2			2								0.45	0.364	511	
SHT 3-H TOTALS	13	1.5		3		3		1		1	1	1	7	1		4				5									1				1	1	488	20	1.0	25 @ 15" 16 @ 18"	0.12		872	
																																						3 @ 24"				
GRAND TOTALS	131	53.8		9	2	4	3	8		8	8	15	92	1	4	56		4	52		4		228	1	1	1	1	1	8		1	3	2	488	20	31.0	2 @ 30"	3.45	0.904	2748	

ABBREVIATIONS	
C.B.	CATCH BASIN
N.D.I.	NARROW DROP INLET
D.I.	DROP INLET
G.D.I.	GRATED DROP INLET
G.D.I.(N.S.)	GRATED DROP INLET (NARROW SLOT)
BDO	BERM DITCH OUTLET
J.B.	JUNCTION BOX
M.H.	MANHOLE
T.B.D.I.	TRAFFIC BEARING DROP INLET
T.B.J.B.	TRAFFIC BEARING JUNCTION BOX

SAY=1

NC10427

COMPUTED BY: MAY DATE: 4/15/2009

CHECKED BY: DCW DATE: 4/15/2009

PROJECT NO.	SHEET NO.
R-2417AA	3-I

STATE OF NORTH CAROLINA
DIVISION OF HIGHWAYS

LIST OF PIPES, ENDWALLS, ETC. (FOR PIPES 54" & OVER)

STATION	LOCATION (LT, RT, OR CL)	STRUCTURE NO. FROM	STRUCTURE NO. TO	TOP ELEVATION	INVERT ELEVATION	INVERT ELEVATION	SLOPE CRITICAL	CLASS III R.C. PIPE (UNLESS NOTED OTHERWISE) 54"	BITUMINOUS COATED C.S. PIPE TYPE B (UNLESS NOTED OTHERWISE) 54" .109	REINFORCED ENDWALLS WITH R.C. - C.Y.	REINFORCED ENDWALLS WITH C.S. - C.Y.	MASONRY DRAINAGE STRUCTURES CUBIC YARDS	54" WELDED STEEL PIPE (0.75" THICK), GRADE B	G.D.I. TYPE "A" STD. 840.17 OR 840.26	G.D.I. FRAME WITH TWO GRATES STD. 840.22	CONC. COLLARS CL. "B" C.Y. STD. 840.72	PIPE REMOVAL LIN. FT.	REMARKS
33+50.73L	LT	27	28		214.4				60	11.0						2.58		COLLAR & HEADWALL
33+50.73L	L/R	28	29										220					
33+50.73L	RT	29				211.6			40							2.58		COLLAR
86+75.54L	LT	79	78		256.0	252.9		108		5.6								HEADWALL
86+75.54L	RT	78	80	264.3	252.9	251.8		104				6.0276		1	1			
154+52L	LT	124			248.0	245.7		240		6.6								
178+50L	L/R	148			249.1	246.4		292		6.6								HEADWALL
																		HEADWALL
										29.8	0	6.0276						
TOTALS								744	100	30.0		6.5	220	1	1	5.16		

ABBREVIATIONS

C.B. CATCH BASIN
N.D.I. NARROW DROP INLET
D.I. DROP INLET
G.D.I. GRATED DROP INLET
G.D.I.(N.S.) GRATED DROP INLET (NARROW SLOT)
J.B. JUNCTION BOX
M.H. MANHOLE
T.B.D.I. TRAFFIC BEARING DROP INLET
T.B.J.B. TRAFFIC BEARING

RD248628 1/12/2011 r2417aa_rdy_3series djclodgo RD-Oce860-34

COMPUTED BY: MAY DATE: 9/30/2009
CHECKED BY: DCW DATE: 10/2/2009

DIVISION OF HIGHWAYS
STATE OF NORTH CAROLINA

SUMMARY OF EARTHWORK

IN CUBIC YARDS

LOCATION	UNCLASSIFIED EXCAVATION	UNDERCUT	EMBT+%	BORROW	WASTE
SUMMARY NO. 1					
-L- 12+50.00 TO 30+00.00	5478		36296	30818	
TOTAL SUMMARY NO. 1	5478		36296	30818	
SUMMARY NO. 2					
-L- 30+00.00 TO 51+08.00	319948		64561		255387
-Y- 11+50.00 TO 30+08.84	42004		4360		37644
-Y- 33+23.12 TO 51+00.00	784		24995	24211	
-RPB- 17+25.83 TO 27+00.00	2656		38144	35488	
-LPB- 13+00.00 TO 17+11.33	33770		845		32925
-RPC- 17+00.00 TO 32+00.00	7954		25050	17096	
-RPCA- 12+25.16 TO 15+31.14	107		2721	2614	
-LPC- 12+84.33 TO 17+69.09	32287		0		32287
TOTAL SUMMARY NO. 2	439510		160677	79410	358243
SUMMARY NO. 3					
-L- 53+08.00 TO 60+00.00	17181		23205	6024	
TOTAL SUMMARY NO. 3	17181		23205	6024	
SUMMARY NO. 4					
-L- 60+00.00 TO 90+00.00	338340		35512		302828
TOTAL SUMMARY NO. 4	338340		35512		302828
SUMMARY NO. 5					
-L- 90+00.00 TO 120+00.00	148082		68750		79332
TOTAL SUMMARY NO. 5	148082		68750		79332
SUMMARY NO. 6					
-L- 120+00 TO 135+80.00	0		399436	399436	
TOTAL SUMMARY NO. 6	0		399436	399436	
SUMMARY NO. 7					
-L- 138+96.00 TO 150+00.00	0		238933	238933	
TOTAL SUMMARY NO. 7	0		238933	238933	
SUMMARY NO. 8					
-L- 150+00.00 TO 180+00.00	106166		119419	19412	6159
TOTAL SUMMARY NO. 8	106166		119419	19412	6159
SUMMARY NO. 9					
-L- 180+00.00 TO 208+33.78	239830		40677		199153
TOTAL SUMMARY NO. 9	239830		40677		199153
SUMMARY NO. 10					
-L- 227+35.95 TO 258+77.96	2029		1948		81
-Y1RPB- 16+27.99 TO 30+50.00	1664		11951	10287	
TOTAL SUMMARY NO. 10	3693		13899	10287	81
CONSTRUCT DETOUR SUMMARY					
-NB DET- 13+09.27 TO 37+93.32	15270		1714		13557
REMOVE DETOUR SUMMARY					
-NB DET- 13+09.27 TO 37+93.32	1490		17561	16071	
SUB-TOTAL SUMMARY	1315040		1156079	800391	959353
ADJUSTMENT FOR DRY DETENTION BASIN	17600		250		17350
SHOULDER MATERIAL			33465	33465	
EST. LOSS DUE TO CLEAR. & GRUB.	-45000				-45000
ROCK WASTE TO REPLACE BORROW				-367944	-367944
WASTE IN LIEU OF BORROW				-465912	-465912
PROJECT TOTAL	1287640		1189794	0	97847
GRAND TOTALS	1287640		1189794	0	97847
SAY	1287700				

-L-, -Y-, -RPB-, -RPC-, -RPCA-, -LPB-, -LPC- & -Y1RPB- PAVEMENT STRUCTURE VOLUME = 68,553 CY
EST. SUBGRADE UNDERCUT (BY GEOTECH.) = 10000 CY
EST. SHALLOW UNDERCUT (BY GEOTECH.) = 3500 CY
EST. D.D.E. = 11730 CY
EST. SHOULDER BORROW = 29100 CY

NOTE: Earthwork quantities are calculated by the Roadway Design Unit. These earthwork quantities are based in part on subsurface data provided by the Geotechnical Engineering Unit.

PROJECT REFERENCE NO. R-2417AA
SHEET NO. 3-J

COMPUTED BY: MAY DATE: 9/29/2009
CHECKED BY: DCW DATE: 9/30/2009

PROJECT REFERENCE NO.	SHEET NO.
R-2417AA	3-K

"N" = DISTANCE FROM EDGE OF LANE TO FACE OF GUARDRAIL.
TOTAL SHOULDER WIDTH = DISTANCE FROM EDGE OF TRAVEL LANE TO SHOULDER BREAK POINT.
FLARE LENGTH = DISTANCE FROM LAST SECTION OF PARALLEL GUARDRAIL TO END OF GUARDRAIL.
W = TOTAL WIDTH OF FLARE FROM BEGINNING OF TAPER TO END OF GUARDRAIL.
G = GATING IMPACT ATTENUATOR TYPE 350
NG = NON-GATING IMPACT ATTENUATOR TYPE 350

GUARDRAIL & CABLE GUIDERAIL SUMMARY

SURVEY LINE	BEG. STA.	SURVEY LINE	END STA.	LOCATION	LENGTH			WARRANT POINT		"N" DIST. FROM E.O.L.	TOTAL SHOULDER WIDTH	FLARE LENGTH		W		ANCHORS							IMPACT ATTENUATOR TYPE 350			DOUBLE FACED CABLE GUIDERAIL	CABLE GUIDERAIL ANCHOR UNITS	REMOVE EXISTING GUARDRAIL	REMARKS
					STRAIGHT	SHOP CURVED	DOUBLE FACED	APPROACH END	TRAILING END			APPROACH END	TRAILING END	APPROACH END	TRAILING END	GRAU 350	CAT-1	M-350	B-77	TERMINAL SECTIONS	TYPE XI MOD		EA	G	NG				
-L-	15+85.00	-RPC-	24+31.25	RT	2856.25			17+50 -L-	24+00 -RPC-	12	15	50		1		1	1											2010	
-L-	10+75.00	-L-	48+40.00	MED																						3765	4		
-L-	19+75.00	-Y-	23+57.00	LT	2768.75			26+50 -RPB-	20+00 -L-	12	15	50		1		1	1											1995	
-Y-	26+51.39	-Y-	30+20.14	RT	368.75			30+20.14 -Y-		10	13	50		1		1			1										
-Y-	33+38.99	-Y-	41+32.74	LT	793.75														1									350	TIE TO EXIST. @ 41+29 -Y-
-RPCA-	14+07.00	-Y-	43+25.00	RT	493.75			15+30 -RPCA-	43+25 -Y-	14	17	50		1		1	1												
-Y-	46+25.00	-Y-	46+75.00	LT	50.00											1												50	INSTALL GRAU-350
-L-	49+01.75	-L-	51+08.00	RT	206.25			51+08.00 -L-		12	15	50		1		1			1										
-L-	47+25.00	-L-	50+65.00	MED																						340	2		
-L-	48+64.25	-L-	51+08.00	RT MED	243.75			51+08.00 -L-		4	12	262.75		17.5				1	1										
-L-	53+08.00	-L-	57+14.25	LT	406.25			55+50.00 -L-		12	15	50		1		1			1										
-L-	53+75.00	-L-	135+35.00	MED																						8160	10		
-L-	53+08.00	-L-	55+51.75	LT MED	243.75			55+50.00 -L-		4	12	262.75		17.5				1	1										
-L-	53+08.00	-L-	53+83.00	RT	75.00				53+70 -L-	12	15	50		1			1		1										
-L-	60+00.00	-L-	69+68.75	RT	968.75			61+50 -L-	68+75 -L-	12	15	50		1		1	1												
-L-	74+75.00	-L-	76+81.25	RT	206.25			76+25 -L-	76+75 -L-	12	15	50		1		1	1												
-L-	85+25.00	-L-	87+81.25	RT	256.25			86+75 -L-	87+75 -L-	12	15	50		1		1	1												
-L-	87+68.75	-L-	89+50.00	LT	181.25			88+25 -L-	87+75 -L-	12	15	50		1		1	1												
-L-	96+00.00	-L-	105+81.25	RT	981.25			97+25 -L-	105+75 -L-	12	15	50		1		1	1												
-L-	105+18.75	-L-	107+75.00	LT	256.25			106+25 -L-	105+25 -L-	12	15	50		1		1	1												
-L-	117+23.16	-L-	137+29.41	RT	2006.25			118+75 -L-		12	15	50		1		1			1										
-L-	118+66.16	-L-	134+97.41	LT	1631.25				118+75 -L-	12	15						1		1										
-L-	134+60.16	-L-	136+91.41	RT MED	231.25			136+91.41 -L-		4	12	262.75		17.5				1	1										
-L-	137+19.59	-L-	159+25.84	LT	2206.25			157+75 -L-		12	15	50		1		1			1										
-L-	137+57.59	-L-	139+88.84	LT MED	231.25			137+57.59 -L-		4	12	262.75		17.5				1	1										
-L-	139+10.00	-L-	207+26.78	MED																						6816.78	8		
-L-	139+53.00	-L-	156+84.25	RT	1731.25				156+75 -L-	12	15						1		1										
-L-	228+41.48	-L-	238+50.00	MED																						1008.52	2		TIE TO EXISTING
-L-	174+25.00	-L-	178+31.25	RT	406.25			175+75 -L-	178+25 -L-	12	15	50		1		1	1												
-L-	176+68.75	-L-	185+75.00	LT	906.25			184+25 -L-	176+75 -L-	12	15	50		1		1	1												
-L-	207+46.28	-L-	227+42.21	RT MED	93.75				208+33.78 -L-	27		37.5		4			1	1											
-L-	208+27.53	-L-	228+23.06	LT MED	93.75				227+35.56 -L-	27		37.5		4			1	1											
-L-	200+71.28	-L2-	3+06.25	RT	1068.50			202+25 -L-		12	15	50		1		1	1												
-L1-	48+56.25	-Y1RPB-	12+53.36	RT	343.75			11+00 -Y1RPB-	48+56 -L1-	14	17	50		1		1	1												
-Y1RPB-	20+05.00	-Y1RPB-	22+39.40	LT	268.75			20+65 -Y1RPB-	22+35 -Y1RPB-	10	13					1	1												ON SHLD. EXIST. LOOP 'B'
-Y1RPB-	20+68.72	-Y1RPB-	25+00.00	LT	431.25			24+00 -Y1RPB-	20+65 -Y1RPB-	12	15					1	1												
R-2417AB - GUARDRAIL AT SIGN SUPPORT																													
US 1	16+88.00	US 1	17+44.00	RT	181.25				17+39 US 1	12	15					1	1												METRIC STATIONS - ENGLISH DISTANCE
SUB TOTAL					23,187.25																								
																22	21	6	13							20,090.30	26	4405	
			LESS ANCHOR DEDUCTIONS																										
			GRAU-350	22@50.0	-1100.00																	CGAU		9@25' =		-225			
			CAT-1	21@6.25	-131.25																								
			M-350	6@37.5	-225.00																								
			B-77	13@18.75	-243.75																								
GRAND TOTAL					21,487.25											22	21	6	13							19,865.30	26	4405	
										(10 ADDITIONAL GUARDRAIL POSTS)															SAY	19,870.00			
SAY					21,500.00					(10 ADDITIONAL GUIDERAIL POSTS)																			

6/16/99

11/3/2010
R:\Roadway\Proj\r2417aa_rdy_3series.dgn
Elmerson, Hutchinson, Inc.

PROJECT REFERENCE NO.	SHEET NO.
R-2417AA	3-L

SUMMARY OF PAVEMENT BREAKING & REMOVAL

SURVEY LINE	STATION TO STATION	LOCATION	ASPHALT REMOVAL (SY)	ASPHALT BREAKING (SY)
-L-	13+30 TO 36+50	RT	2554.1	
-L-	14+60 TO 36+50	LT	3221.8	
-L-	36+50 TO 47+75	RT	4425.2	
-L-	36+50 TO 47+75	LT	5191.4	
-Y-	21+40 TO 36+30	LT & RT	5861.7	
-Y-	36+10 TO 40+45	RT		2013.7
-Y-	37+45 TO 38+50	RT	295.9	
-RPC-	29+45 TO 31+40	LT & RT		1527.6
-RPCA-	11+85 TO 12+55	RT	177.0	
-RPCA-	13+50 TO 18+10	LT & RT		1736.0
-Y1RPB-	10+00 TO 13+86	LT	89.0	
-Y1RPB-	13+91 TO 15+56	LT	40.6	
-Y1RPB-	19+65 TO 21+02	LT	35.1	
-Y1RPB-	21+15 TO 23+65	LT	60.2	
-Y1RPB-	23+70 TO 25+50	LT & RT	46.4	
-NB DET-	13+00 TO 35+60	CL	6528.9	
TEMP.CONN	23+70 TO 25+50	CL	1366.7	
	GRAND TOTAL		29,894.0	5277.3
	SAY		29,900	5280

SUMMARY OF SHOULDER DRAINS

SURVEY LINE	STATION TO STATION	LOCATION	SHOULDER DRAIN PIPE (FT)	OUTLET PIPES (FT)	CONCRETE PADS (EA)
-L-	38+50 TO 43+50	RT MED.	500		
	OUTLET AT 38+50 (2GI)			31	
-L-	47+50 TO 50+70	RT	320		
	OUTLET AT 50+70 (2GI)			35	
-L-	53+60 TO 63+00	RT	940		
	OUTLET AT 54+85+/-			50	2
	OUTLET AT 56+50 (2GI)			26	
	OUTLET AT 59+50			24	1
-L-	97+00 TO 116+00	RT	1900		
	OUTLET AT 100+50 (2GI)			4	
	OUTLET AT 103+00			18	1
	OUTLET AT 105+50+/- (2GI)			8	
	OUTLET AT 107+50			20	1
	OUTLET AT 110+00			20	1
	OUTLET AT 113+00			20	1
-L-	153+00 TO 174+00	RT	2100		
	OUTLET AT 156+00 (2GI)			4	
	OUTLET AT 159+00			20	1
	OUTLET AT 160+43+/-			40	2
	OUTLET AT 162+00			20	1
	OUTLET AT 165+00			20	1
	OUTLET AT 168+00			24	1
	OUTLET AT 171+00			24	1
-L-	192+00 TO 201+00	RT	900		
	OUTLET AT 195+00 (2GI)			26	
	OUTLET AT 198+00			24	1
	OUTLET AT 201+00			24	1
-L-	36+50 TO 43+00	LT	650		
	OUTLET AT 36+50			24	1
	OUTLET AT 39+00			24	1
-L-	46+80 TO 50+70	LT	390		
	OUTLET AT 50+70 (2GI)			25	
-L-	53+60 TO 60+00	LT	640		
	OUTLET AT 54+85+/- (2GI)			8	
	OUTLET AT 56+50 (JB)			4	
-L-	97+00 TO 108+40	LT MED.	1140		
	OUTLET AT 100+00 (2GI)			31	
	OUTLET AT 105+50+/- (3GI)			62	
-L-	108+35 TO 115+00	LT	665		
	OUTLET AT 108+35			31	1
	OUTLET AT 111+00			25	1
-L-	153+00 TO 173+00	LT	2000		
	OUTLET AT 156+00 (2GI)			4	
	OUTLET AT 159+00			20	1
	OUTLET AT 160+60+/- (2GI)			52	
	OUTLET AT 163+00			24	1
	OUTLET AT 166+00			24	1
	OUTLET AT 169+25 (2GI)			24	
-L-	192+00 TO 201+00	LT	900		
	OUTLET AT 194+90			18	1
	OUTLET AT 198+00			24	1
	OUTLET AT 201+00			24	1
	TOTALS		13045	930	26
	SAY		13050	930	30

11/17/2010
R:\Roadway\Proj\r2417aa_rdy_3series.dgn
Florence & Hutchesson, Inc.

COMPUTED BY: YTN DATE:
CHECKED BY: SRW DATE:

PROJECT REFERENCE NO.	SHEET NO.
R-2417AA	3-M

PARCEL INDEX SHEET

PARCEL NO.	R/W SHEET NO.	PROPERTY OWNERS NAME
1	4,5,6,20	Village of Cumnock, LLC
2	4,5,6	Edward Myrick, et al
3	6,20	Phyllis McKoy Heirs
4	6	Reba Holmes Heirs
5	6,7,8,9	Josephine Womack, et al
6	8,9	Julia Goldston Heirs
7	9	Wayman McIver
8	9,10	Helena Edwards, et al
9	10	Kenneth McIver, et al
10	10	Willie Mae Eccles, et al
11	10,11	Ola Prince Heirs
12	10,11	Malory McIver
13	11	Irma Jones Heirs
14	11	Ethel Tootle Heirs
15	11,12,13	William Horner, et al
16	13,14	Robert Townsend
17	14	Ronald Gartin
18	14	NCDOT
19	14	Danette B. Taylor, widow
20	14,15	Charles Gantt
21	15,16	Rexine Lloyd
22	15,16	Paul K. Craig and wife Sarah M. Craig, et al
23	16,17	San-Lee Builders INC
24	17,18,19	James Thomas, et al
25	17	NCDOT
26	20	Aleveolus Smith
27	20	Cumnock Baptist Church
28	20	Winfred R. Tysor and wife Hazel Luoise Tysor
29	20	Mary Jackson Jennings
30	20	Oscar Daniels, Jr.
31	20	Ida Geywitz
32	20	Eddie Taylor
33		NOT USED
34	20	Fred Smith
35	16,17	San-Lee Builders, Inc.

REVISIONS

4-29-10 Parcel 4, 5, 6, 8, 9, 10, 11, 13, 14, 15, 19, 22, 24, 28 & 29 Name Changes
Parcel 33 combined into Parcel 5

10/26/98

8/26/2010
R:\Roadway\Proj\r2417aa_rdy_3series.dgn
Elegance & Hitchcock Inc.

PROJECT REFERENCE NO.	SHEET NO.
R-2417AA	4
R/W SHEET NO.	4

Florence & Hutcheson
CONSULTING ENGINEERS
5121 Kingdom Way, Suite 100 Raleigh, NC 27607
NC License No: F-0258

ROADWAY DESIGN ENGINEER — NORTH CAROLINA PROFESSIONAL SEAL 22606 ENGINEER DAVID C. WALLER — 11-4-10

HYDRAULICS ENGINEER — NORTH CAROLINA PROFESSIONAL SEAL 021162 ENGINEER W. HERBERT TURNER, JR. — 11-4-10

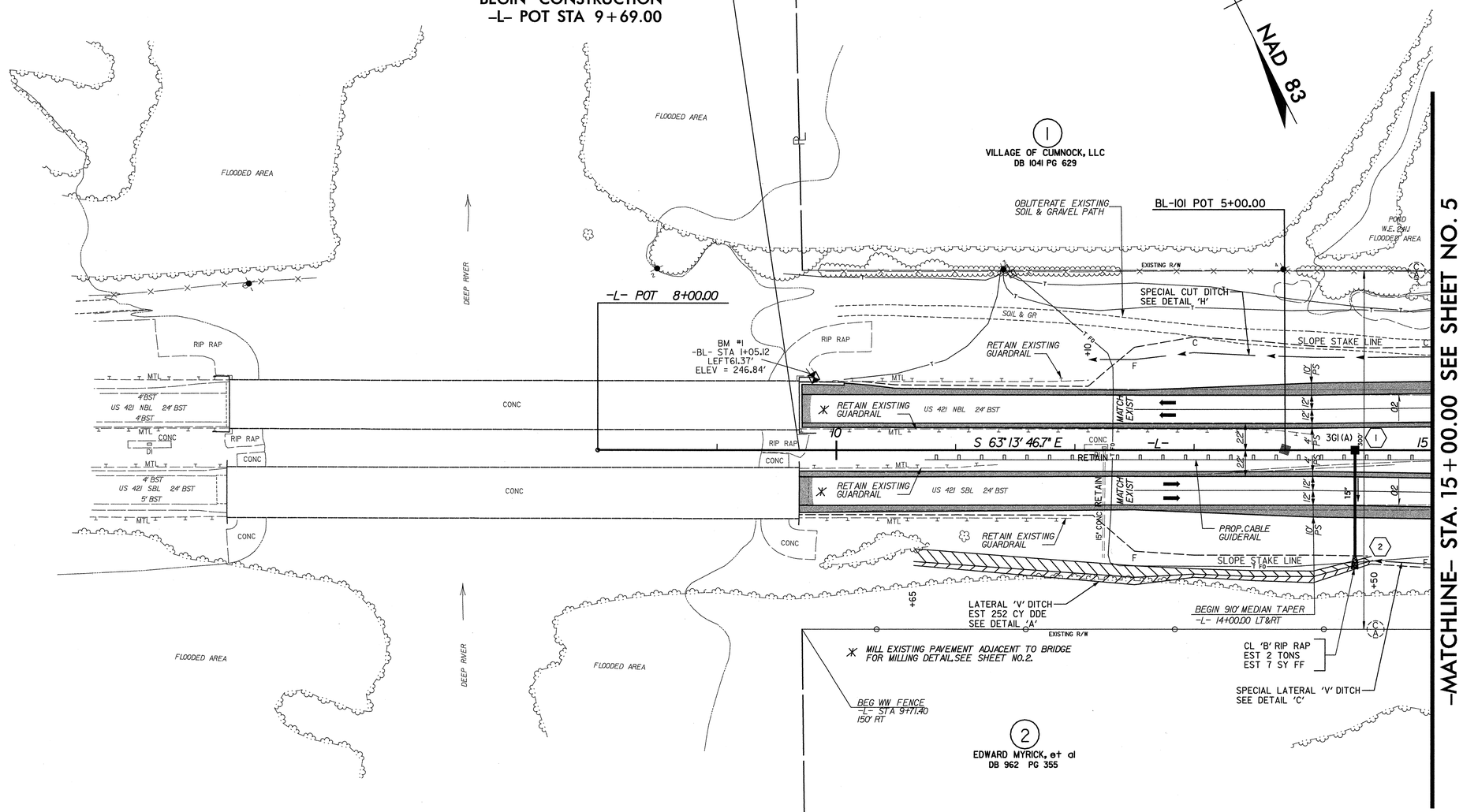

LEGEND
- PAVED SHOULDER
- PAVEMENT REMOVAL

FOR -L- PROFILE, SEE SHEET NO. 26
FOR DITCH DETAILS, SEE SHEET NOS. 2-F & 2-G

REVISIONS

8/17/99

11/3/2010
R:\Roadway\Proj\r2417aa_rdy_psh_04.dgn
Florence & Hutcheson, Inc.

8/17/99

REVISIONS

PROJECT REFERENCE NO.	SHEET NO.
R-2417AA	5
R/W SHEET NO.	5

Florence & Hutcheson
CONSULTING ENGINEERS
5121 Kingdom Way, Suite 100 Raleigh, NC 27607
NC License No: F-0258

ROADWAY DESIGN ENGINEER
NORTH CAROLINA PROFESSIONAL SEAL 22606 ENGINEER DAVID C. WALLER
11-4-10

HYDRAULICS ENGINEER
NORTH CAROLINA PROFESSIONAL SEAL 021162 ENGINEER HERBERT TURNER, JR.
11-4-10

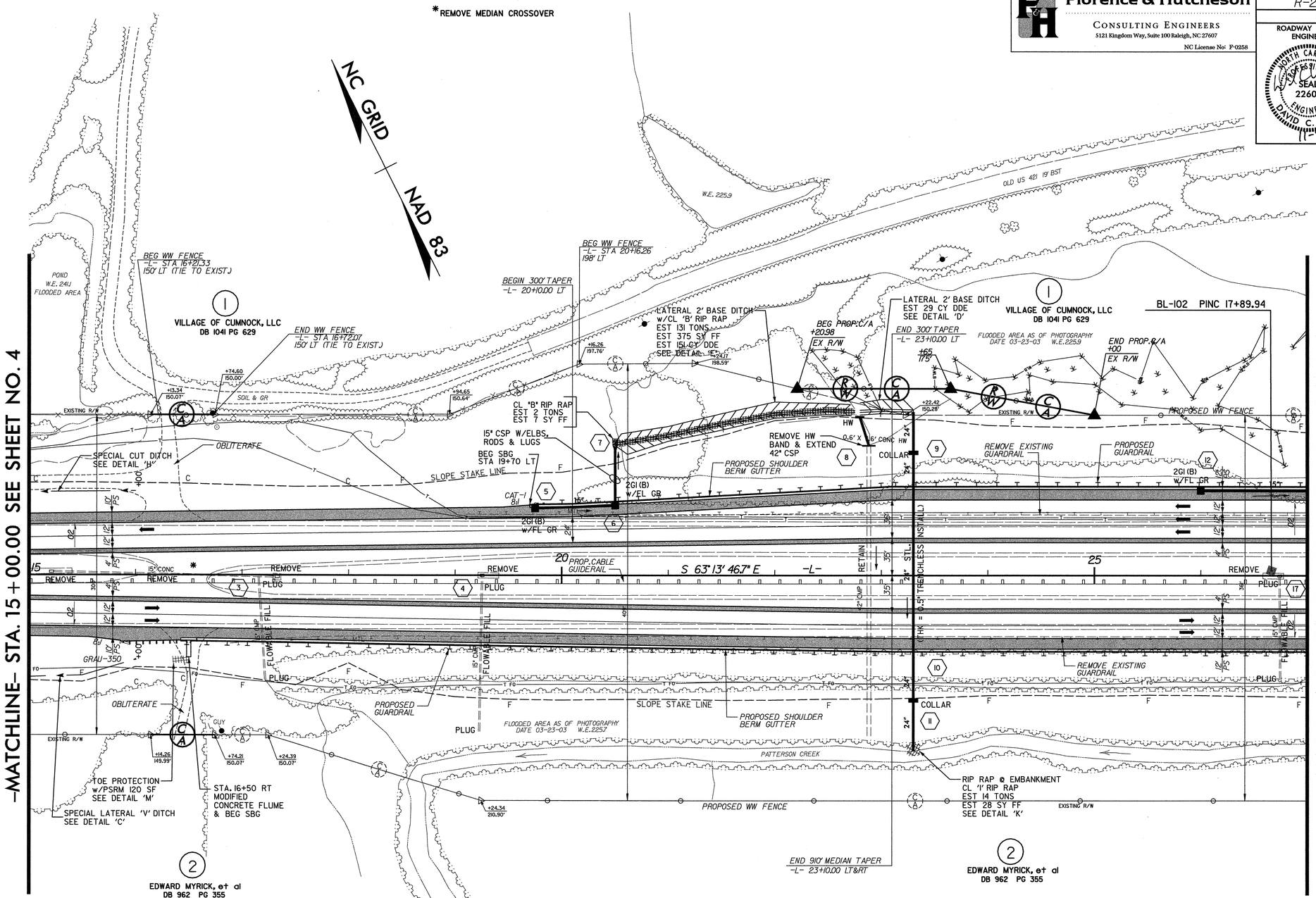

LEGEND

- PAVED SHOULDER
- PAVEMENT REMOVAL

FOR -L- PROFILE, SEE SHEET NO. 26
FOR DITCH DETAILS, SEE SHEET NOS. 2-F & 2-G

11/3/2010
R:\Roadway\Proj\r2417aa_rdy_psh_05.dgn
Florence & Hutcheson, Inc.

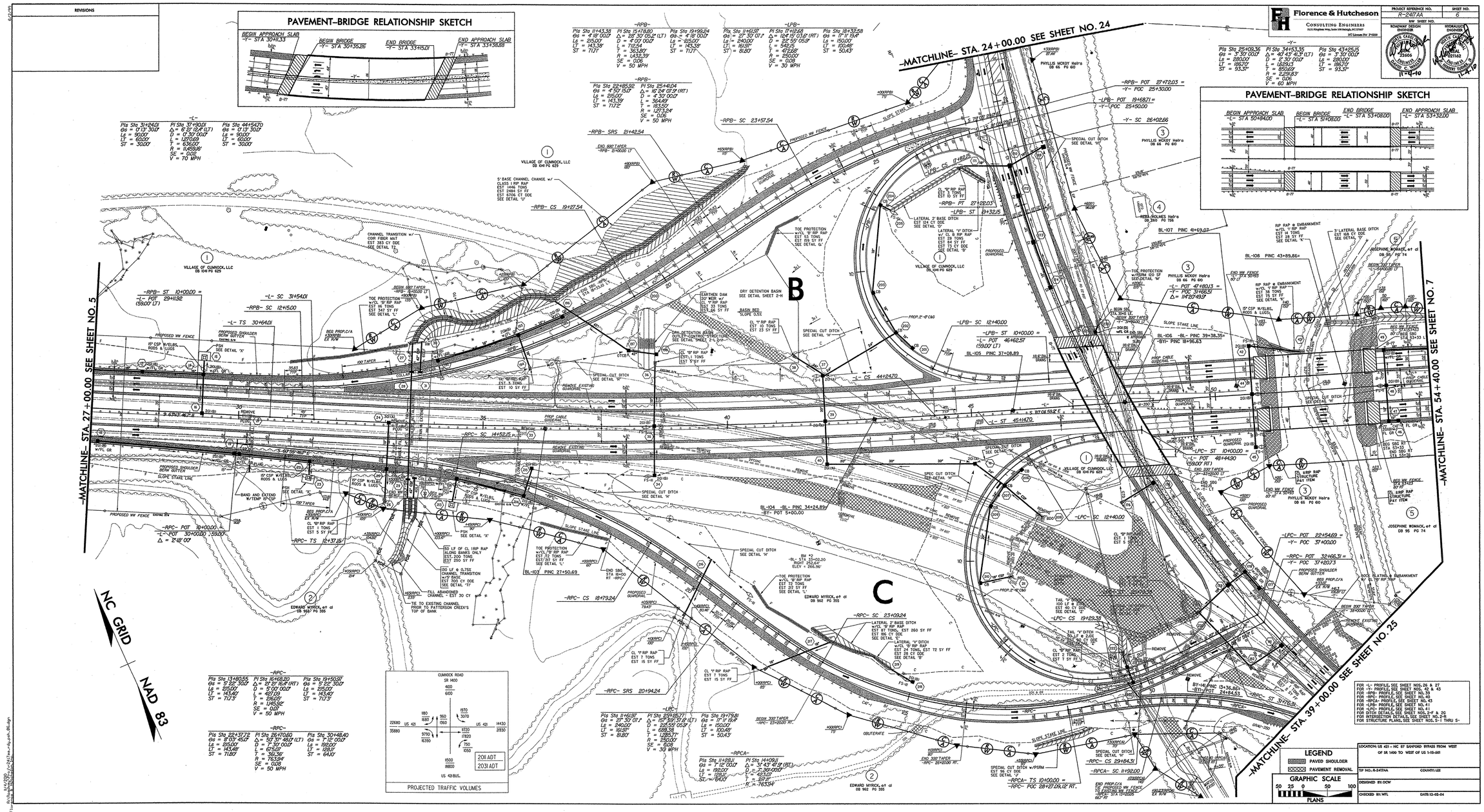

Florence & Hutcheson
CONSULTING ENGINEERS
PROJECT REFERENCE NO.
R-2417AA
SHEET NO.
6
R/W SHEET NO.
ROADWAY DESIGN ENGINEER
HYDRAULICS ENGINEER
REVISIONS
PAVEMENT-BRIDGE RELATIONSHIP SKETCH
BEGIN APPROACH SLAB
BEGIN BRIDGE
END BRIDGE
END APPROACH SLAB
-MATCHLINE- STA. 24+00.00 SEE SHEET NO. 24
-MATCHLINE- STA. 27+00.00 SEE SHEET NO. 5
-MATCHLINE- STA. 54+40.00 SEE SHEET NO. 7
-MATCHLINE- STA. 39+00.00 SEE SHEET NO. 25
NC GRID
NAD 83
B
C
PROJECTED TRAFFIC VOLUMES
2011 ADT
2031 ADT
LEGEND
PAVED SHOULDER
PAVEMENT REMOVAL
GRAPHIC SCALE
PLANS
LOCATION: US 421 - NC 87 SANFORD BYPASS FROM WEST OF SR 1400 TO WEST OF US 1-15-001
TIP NO.: R-2417AA
COUNTY: LEE
DESIGNED BY: DCW
CHECKED BY: WFL
DATE: 12-02-04

PROJECT REFERENCE NO.	SHEET NO.
R-2417AA	7
R/W SHEET NO.	7

Florence & Hutcheson
CONSULTING ENGINEERS
5121 Kingdom Way, Suite 100 Raleigh, NC 27607
NC License No: F-0258

ROADWAY DESIGN ENGINEER — NORTH CAROLINA PROFESSIONAL SEAL 22606 ENGINEER DAVID C. WALLER — 9-27-10

HYDRAULICS ENGINEER — NORTH CAROLINA PROFESSIONAL SEAL 021162 ENGINEER HERBERT TURNER, JR. — 9-23-10

REVISIONS

8/17/99

-L-

Pls Sta 62+31.92
Θs = 0°13' 30.0"
Ls = 90.00'
LT = 60.00'
ST = 30.00'

Pl Sta 85+33.81
Δ = 22° 25' 40.9" (RT)
D = 0° 30' 00.0"
L = 4,485.60
T = 2,271.89'
R = 11,459.16'
SE = 0.02
V = 70 MPH

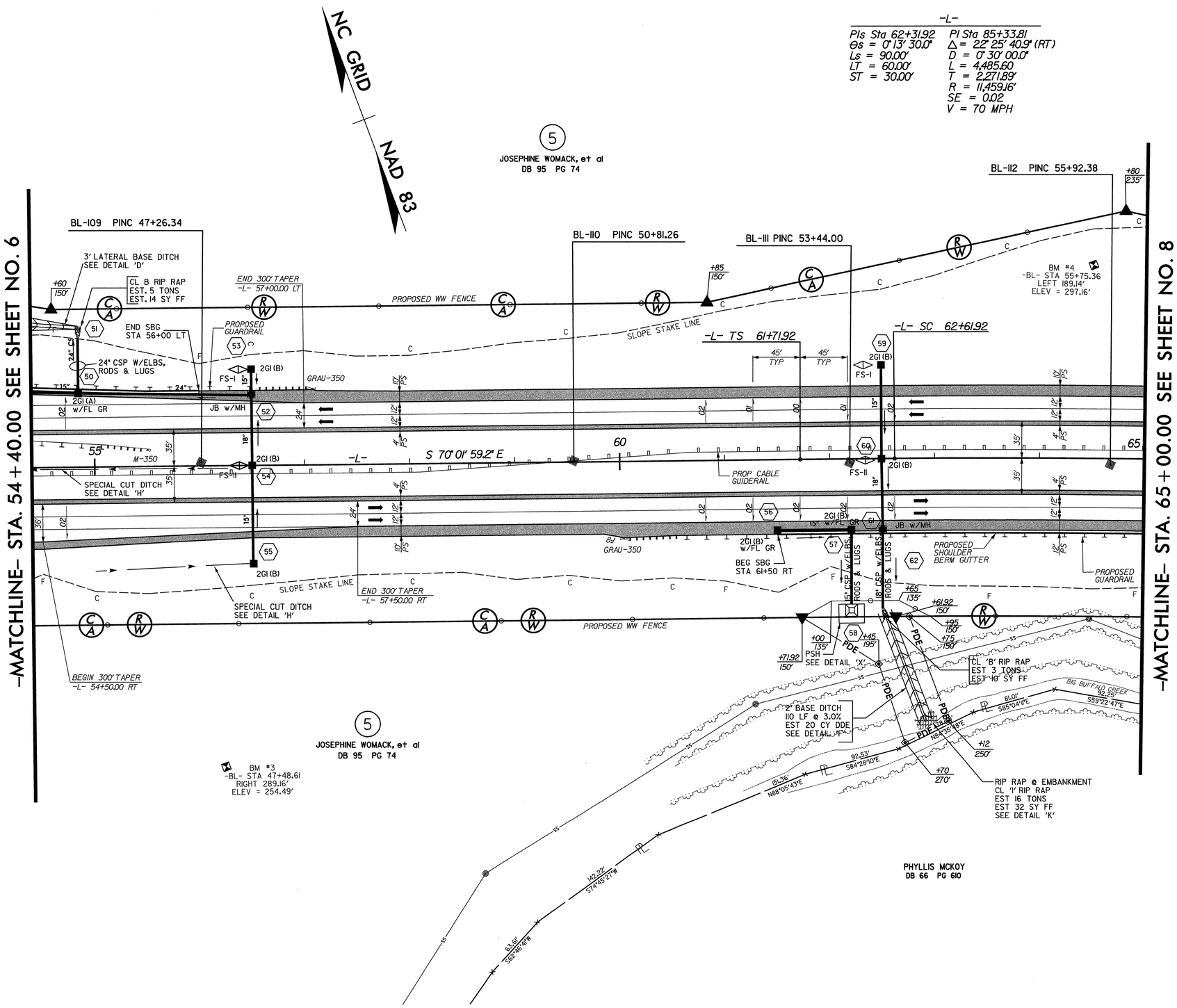

LEGEND

PAVED SHOULDER

FOR -L- PROFILE, SEE SHEET NOS. 27 & 28
FOR DITCH DETAILS, SEE SHEET NOS. 2-F & 2-G

9/21/2010
R:\Roadway\Proj\r-2417aa_rdy_psh_07.dgn
Florence & Hutcheson, Inc.

Florence & Hutcheson
CONSULTING ENGINEERS
5121 Kingdom Way, Suite 100 Raleigh, NC 27607
NC License No: F-0258

PROJECT REFERENCE NO.	SHEET NO.
R-2417AA	8
R/W SHEET NO.	8

ROADWAY DESIGN ENGINEER: NORTH CAROLINA PROFESSIONAL SEAL 22606 ENGINEER DAVID C. WALLER 11-4-10

HYDRAULICS ENGINEER: NORTH CAROLINA PROFESSIONAL SEAL 021162 ENGINEER HERBERT TURNER, JR. 11-4-10

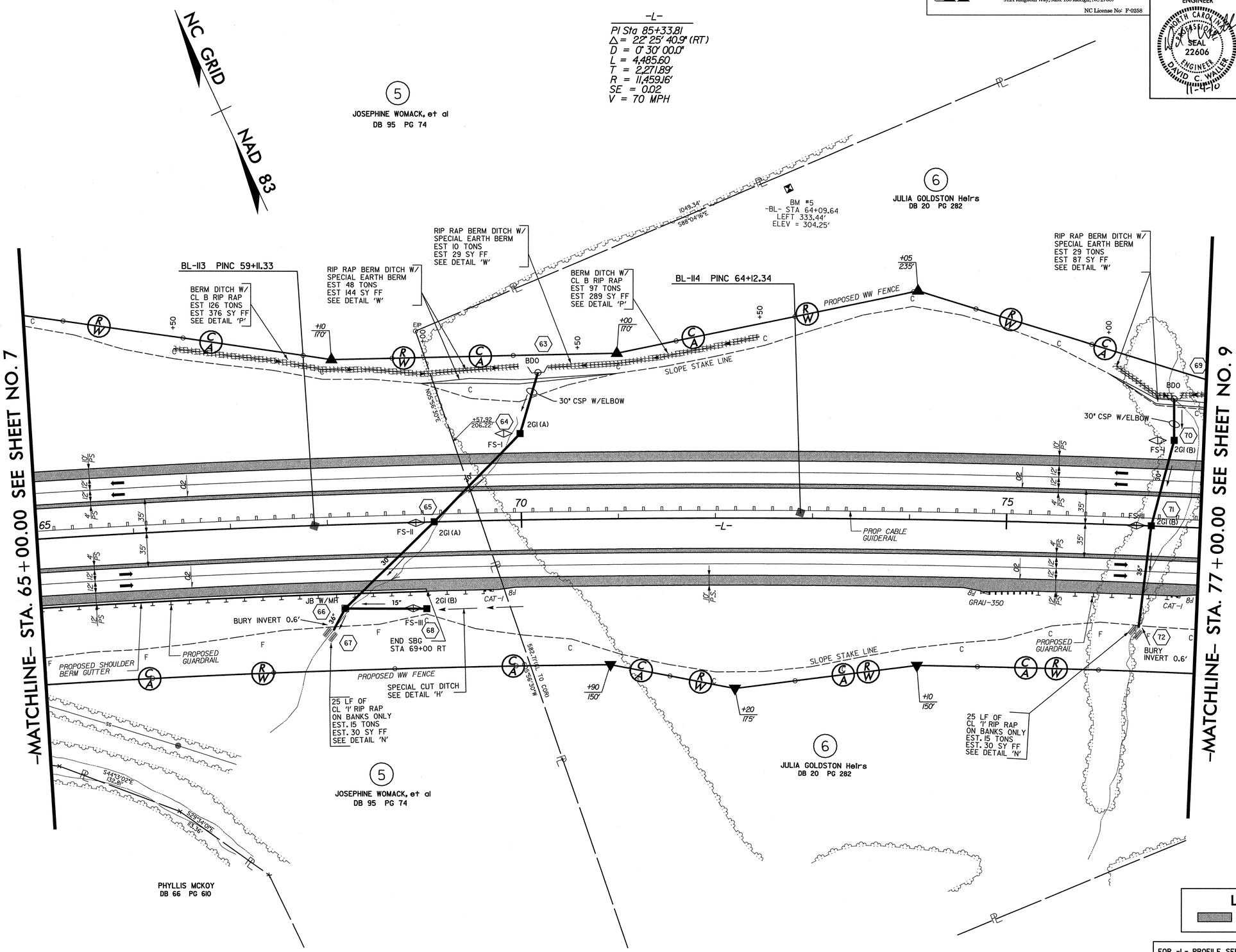

FOR -L- PROFILE, SEE SHEET NO. 28
FOR DITCH DETAILS, SEE SHEET NOS. 2-F & 2-G

REVISIONS

8/17/99

11/3/2010
R:\Roadway\Proj\r2417aa_rdy_psh_08.dgn
Florence & Hutcheson, Inc.

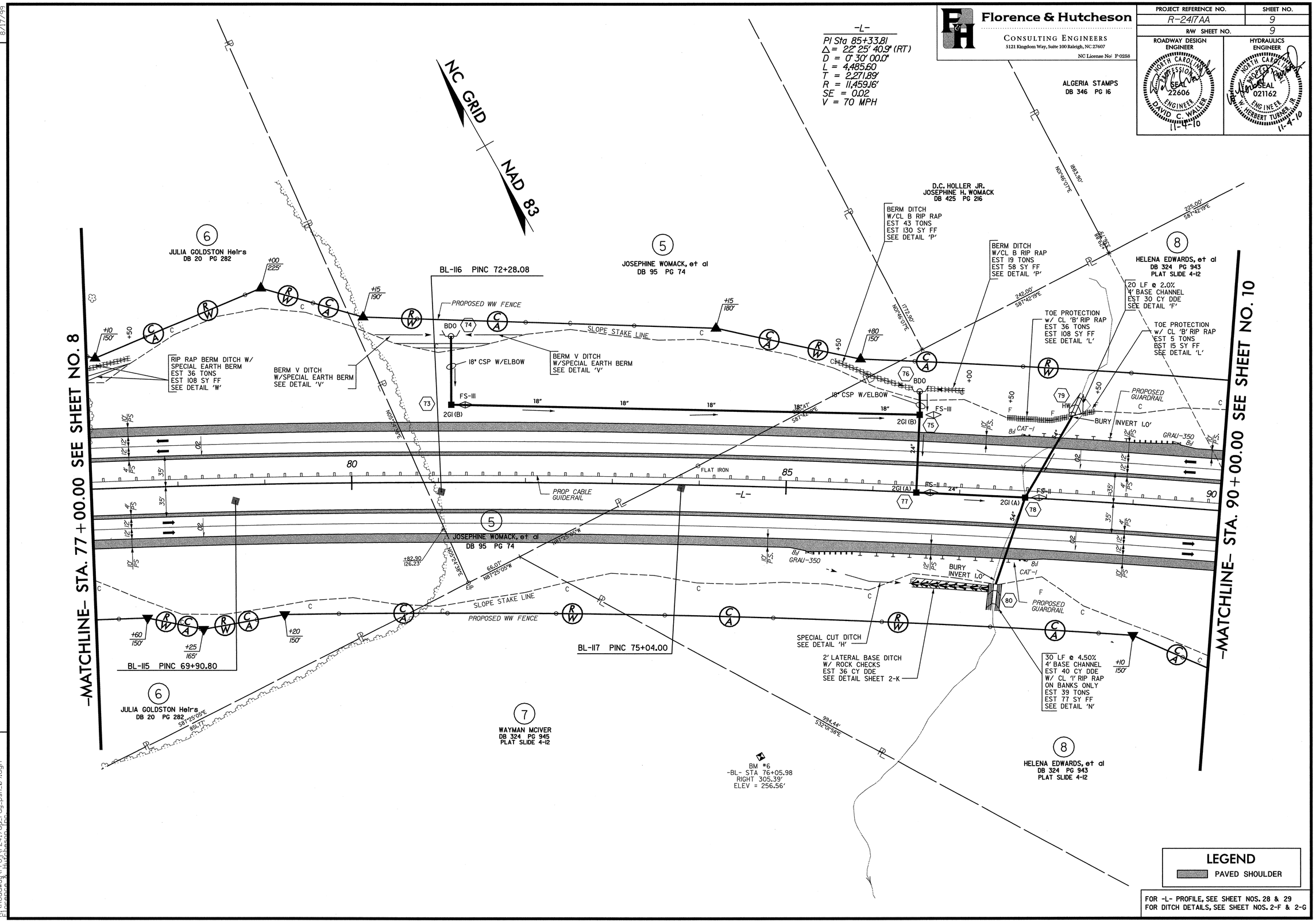

Florence & Hutcheson
CONSULTING ENGINEERS
5121 Kingdom Way, Suite 100 Raleigh, NC 27607
NC License No: F-0258
PROJECT REFERENCE NO. R-2417AA
SHEET NO. 9
R/W SHEET NO. 9
ROADWAY DESIGN ENGINEER
HYDRAULICS ENGINEER
NORTH CAROLINA PROFESSIONAL SEAL 22606 ENGINEER DAVID C. WALLER 11-4-10
NORTH CAROLINA PROFESSIONAL SEAL 021162 ENGINEER W. HERBERT TURNER, JR. 11-4-10
-L-
PI Sta 85+33.81
Δ = 22° 25' 40.9" (RT)
D = 0° 30' 00.0"
L = 4,485.60
T = 2,271.89'
R = 11,459.16'
SE = 0.02
V = 70 MPH
NC GRID
NAD 83
ALGERIA STAMPS
DB 346 PG 16
D.C. HOLLER JR.
JOSEPHINE H. WOMACK
DB 425 PG 216
JULIA GOLDSTON Heirs
DB 20 PG 282
JOSEPHINE WOMACK, et al
DB 95 PG 74
HELENA EDWARDS, et al
DB 324 PG 943
PLAT SLIDE 4-12
BL-116 PINC 72+28.08
BL-115 PINC 69+90.80
BL-117 PINC 75+04.00
PROPOSED WW FENCE
SLOPE STAKE LINE
18" CSP W/ELBOW
RIP RAP BERM DITCH W/ SPECIAL EARTH BERM EST 36 TONS EST 108 SY FF SEE DETAIL 'W'
BERM V DITCH W/SPECIAL EARTH BERM SEE DETAIL 'V'
BERM DITCH W/CL B RIP RAP EST 43 TONS EST 130 SY FF SEE DETAIL 'P'
BERM DITCH W/CL B RIP RAP EST 19 TONS EST 58 SY FF SEE DETAIL 'P'
20 LF @ 2.0% 4' BASE CHANNEL EST 30 CY DDE SEE DETAIL 'F'
TOE PROTECTION W/ CL 'B' RIP RAP EST 36 TONS EST 108 SY FF SEE DETAIL 'L'
TOE PROTECTION W/ CL 'B' RIP RAP EST 5 TONS EST 15 SY FF SEE DETAIL 'L'
PROPOSED GUARDRAIL
BURY INVERT 1.0'
FLAT IRON
PROP CABLE GUIDERAIL
GRAU-350
SPECIAL CUT DITCH SEE DETAIL 'H'
2' LATERAL BASE DITCH W/ ROCK CHECKS EST 36 CY DDE SEE DETAIL SHEET 2-K
30 LF @ 4.50% 4' BASE CHANNEL EST 40 CY DDE W/ CL 'I' RIP RAP ON BANKS ONLY EST 39 TONS EST 77 SY FF SEE DETAIL 'N'
BM #6
-BL- STA 76+05.98
RIGHT 305.39'
ELEV = 256.56'
-MATCHLINE- STA. 77+00.00 SEE SHEET NO. 8
-MATCHLINE- STA. 90+00.00 SEE SHEET NO. 10
LEGEND
PAVED SHOULDER
FOR -L- PROFILE, SEE SHEET NOS. 28 & 29
FOR DITCH DETAILS, SEE SHEET NOS. 2-F & 2-G
REVISIONS
8/17/99
11/3/2010
R:\Roadway\Proj\r2417aa_rdy_psh_09.dgn
Florence & Hutcheson, Inc.

8/17/99

REVISIONS

Florence & Hutcheson
CONSULTING ENGINEERS
5121 Kingdom Way, Suite 100 Raleigh, NC 27607
NC License No: F-0258

PROJECT REFERENCE NO.	SHEET NO.
R-2417AA	10
R/W SHEET NO.	10

ROADWAY DESIGN ENGINEER
NORTH CAROLINA PROFESSIONAL SEAL 22606 ENGINEER DAVID C. WALLER
9-23-10

HYDRAULICS ENGINEER
NORTH CAROLINA PROFESSIONAL SEAL 021162 ENGINEER HERBERT TURNER, JR.
9-23-10

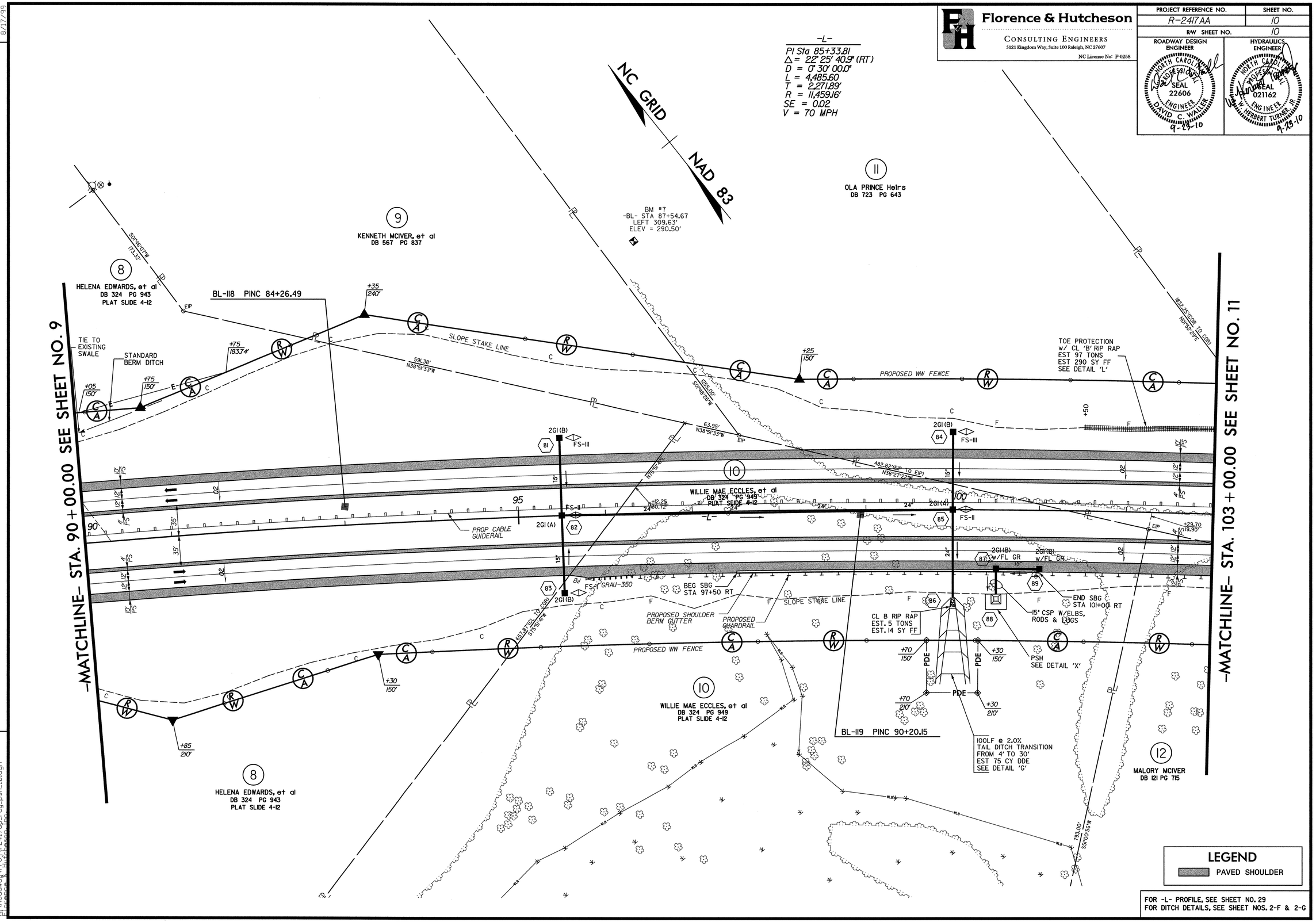

FOR -L- PROFILE, SEE SHEET NO. 29
FOR DITCH DETAILS, SEE SHEET NOS. 2-F & 2-G

8/23/2010
R:\Roadway\Proj\r2417aa_rdy_psh_10.dgn
Florence & Hutcheson, Inc.

Florence & Hutcheson
CONSULTING ENGINEERS
5121 Kingdom Way, Suite 100 Raleigh, NC 27607
NC License No: F-0258

PROJECT REFERENCE NO.	SHEET NO.
R-2417AA	11
R/W SHEET NO.	11

ROADWAY DESIGN ENGINEER: NORTH CAROLINA PROFESSIONAL SEAL 22606 ENGINEER DAVID C. WALLER 11-4-10

HYDRAULICS ENGINEER: NORTH CAROLINA PROFESSIONAL SEAL 021162 ENGINEER W. HERBERT TURNER, JR. 11-4-10

REVISIONS

8/17/99

-L-
PI Sta 85+33.81
Δ = 22° 25' 40.9" (RT)
D = 0° 30' 00.0"
L = 4,485.60
T = 2,271.89'
R = 11,459.16'
SE = 0.02
V = 70 MPH

PIs Sta 107+77.52
Θs = 0° 13' 30.0"
Ls = 90.00'
LT = 60.00'
ST = 30.00'

NC GRID / NAD 83

-MATCHLINE- STA. 103+00.00 SEE SHEET NO. 10

-MATCHLINE- STA. 116+00.00 SEE SHEET NO. 12

13 IRMA JONES Heirs DB 297 PG 361

14 ETHEL TOOTLE Heirs DB 297 PG 363

15 WILLIAM HORNER, et al DB 610 PG 273 PLAT SLIDE 7-9A PLAT SLIDE 3-61

11 OLA PRINCE Heirs DB 723 PG 643

12 MALORY MCIVER DB 121 PG 715

TOE PROTECTION w/ CL 'B' RIP RAP SEE DETAIL 'L'

END WW FENCE -L- STA 105+46 99.97' LT

INLET CHANNEL SEE DETAIL CULVERT #1

BEG WW FENCE -L- STA 105+77.32 101.10' LT

BM #8 -BL- STA 99+48.00 LEFT 249.76' ELEV = 256.97'

OBLITERATE

SPECIAL CUT DITCH SEE DETAIL 'H'

SPECIAL CUT DITCH SEE DETAIL 'H'

BL-120 PINC 94+65.63

2' LATERAL BASE DITCH EST 198 CY DDE SEE DETAIL 'D'

LATERAL V DITCH EST 21 CY DDE SEE DETAIL 'A'

BL-121 PINC 101+56.54

BL-122 PINC 105+27.37

PROPOSED WW FENCE

SLOPE STAKE LINE

PROPOSED GUARDRAIL

GRAU-350

PROP CABLE GUIDERAIL

-L- S 47° 09' 18.3" E

PROPOSED SHOULDER BERM GUTTER

BEG SBG STA 103+50 RT

END SBG STA 105+65 RT 15" CSP W/ELBS, RODS & LUGS

PSH SEE DETAIL 'X'

BEG WW FENCE STA 104+94.69 87.90' RT

END WW FENCE STA 104+62.41 87.77' RT

OUTLET CHANNEL SEE DETAIL CULVERT #1

CS 107+47.52

ST 108+37.52

CL B RIP RAP EST. 3 TONS EST. 11 SY FF

LEGEND
PAVED SHOULDER

FOR -L- PROFILE, SEE SHEET NOS. 29 & 30
FOR DITCH DETAILS, SEE SHEET NOS. 2-F & 2-G

11/3/2010
F:\Roadway\Proj\r2417aa_rdy_psh_11.dgn
Florence & Hutcheson, Inc.

Florence & Hutcheson
CONSULTING ENGINEERS
5121 Kingdom Way, Suite 100 Raleigh, NC 27607
NC License No: F-0258

PROJECT REFERENCE NO.	SHEET NO.
R-2417AA	12
R/W SHEET NO.	12

ROADWAY DESIGN ENGINEER: NORTH CAROLINA PROFESSIONAL SEAL 22606 ENGINEER DAVID C. WALLER 11-17-10

HYDRAULICS ENGINEER: NORTH CAROLINA PROFESSIONAL SEAL 021162 ENGINEER HERBERT TURNER, JR. 11-17-10

NC GRID / NAD 83

REVISIONS

8/17/99

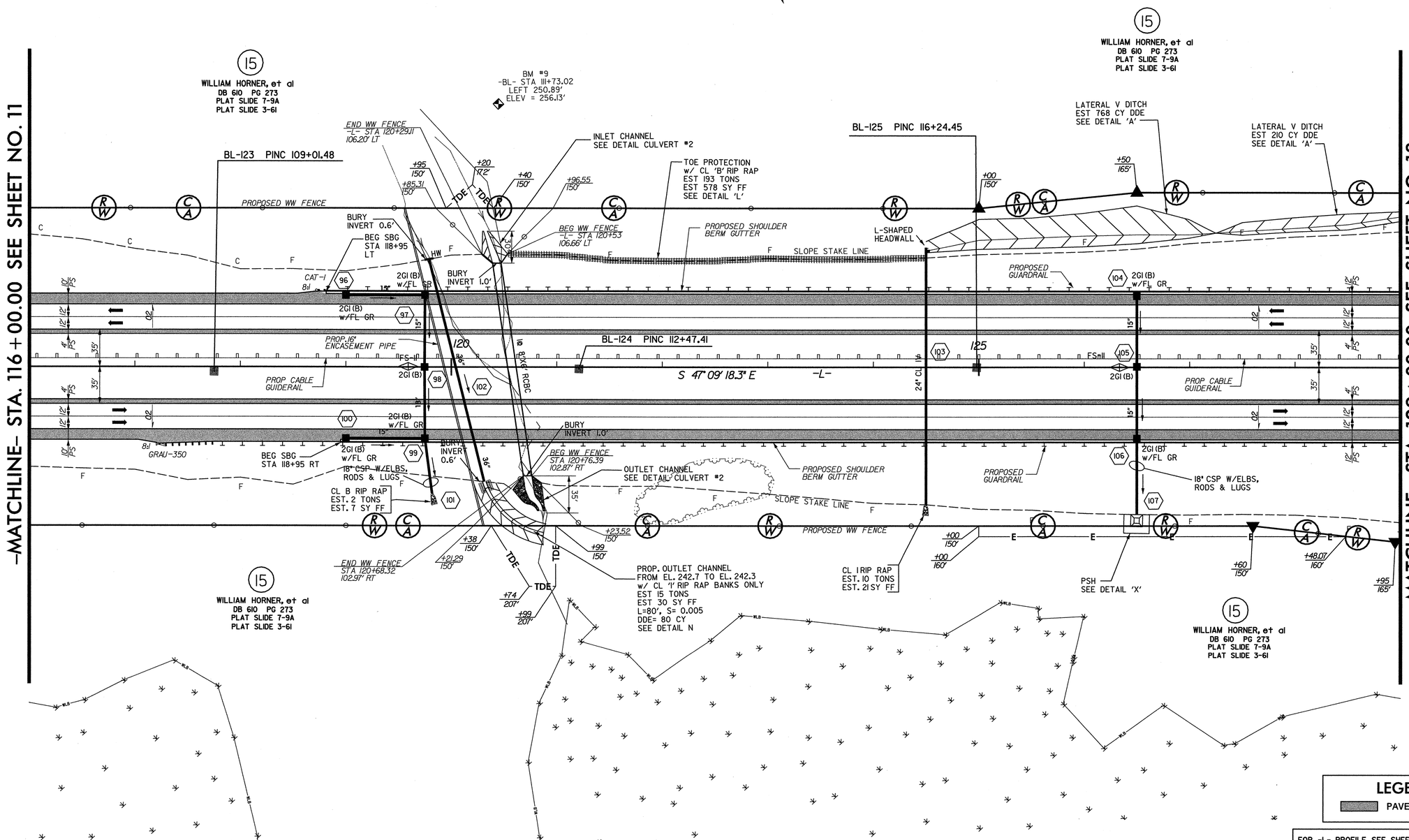

FOR -L- PROFILE, SEE SHEET NO. 30
FOR DITCH DETAILS, SEE SHEET NOS. 2-F & 2-G

11/17/2010
R:\Roadway\Proj\r-2417aa_rdy_psh_12.dgn
Florence & Hutcheson, Inc.

Florence & Hutcheson
CONSULTING ENGINEERS
5121 Kingdom Way, Suite 100 Raleigh, NC 27607
NC License No: F-0258

PROJECT REFERENCE NO.	SHEET NO.
R-2417AA	13
R/W SHEET NO.	13

ROADWAY DESIGN ENGINEER — NORTH CAROLINA PROFESSIONAL SEAL 22606 ENGINEER DAVID C. WALLER — 11-4-10

HYDRAULICS ENGINEER — NORTH CAROLINA PROFESSIONAL SEAL 021162 ENGINEER W. HERBERT TURNER, III — 11-4-10

REVISIONS

8/17/99

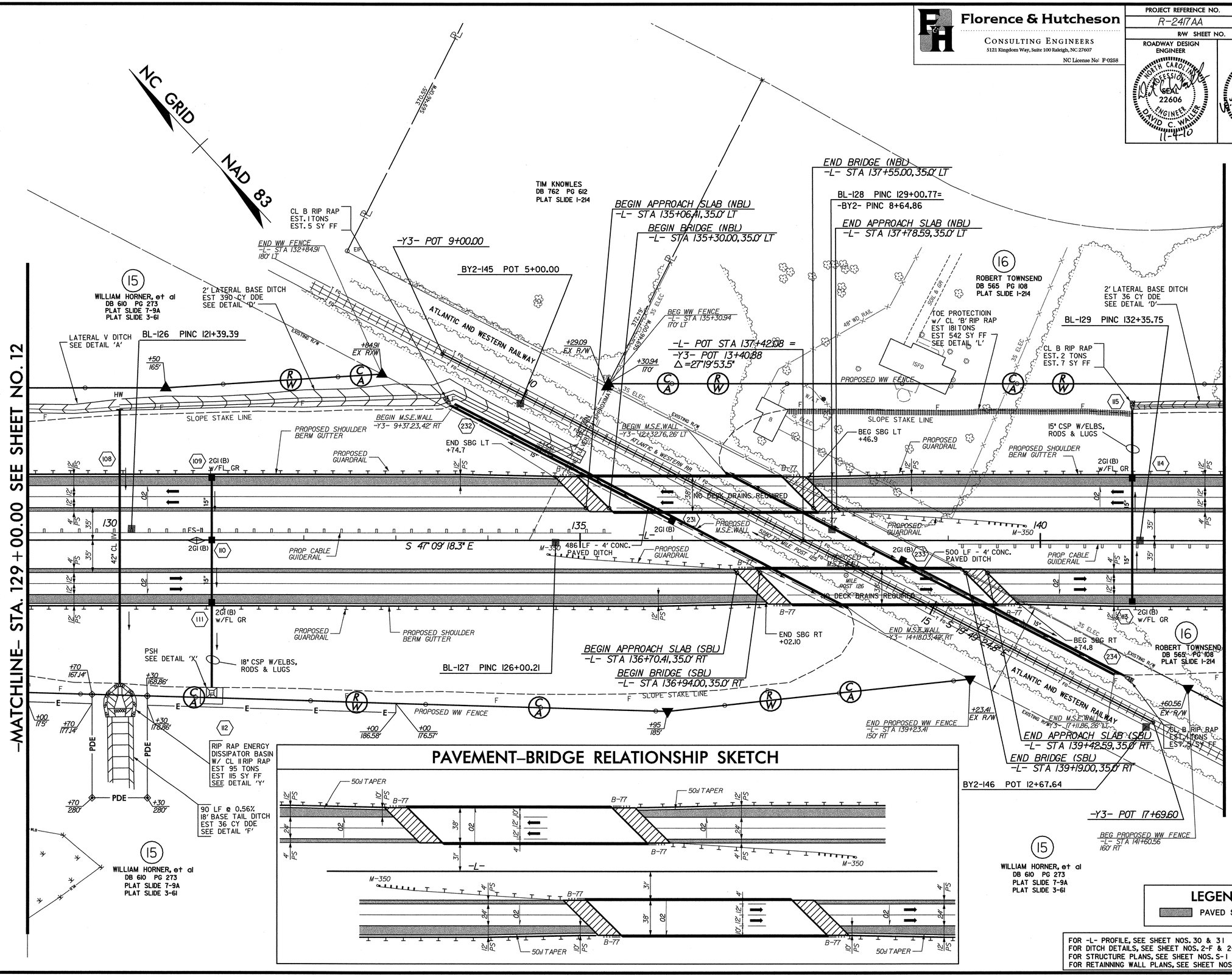

11/3/2010
R:\Roadway\Proj\r-2417aa_rdy_psh_13.dgn
Florence & Hutcheson, Inc.

Florence & Hutcheson
CONSULTING ENGINEERS
5121 Kingdom Way, Suite 100 Raleigh, NC 27607
NC License No: F-0258

PROJECT REFERENCE NO.	SHEET NO.
R-2417AA	14
R/W SHEET NO.	14

ROADWAY DESIGN ENGINEER: NORTH CAROLINA PROFESSIONAL SEAL 22606 ENGINEER DAVID C. WALLER 11-4-10

HYDRAULICS ENGINEER: NORTH CAROLINA PROFESSIONAL SEAL 021162 ENGINEER HERBERT TURNER, JR. 11-4-10

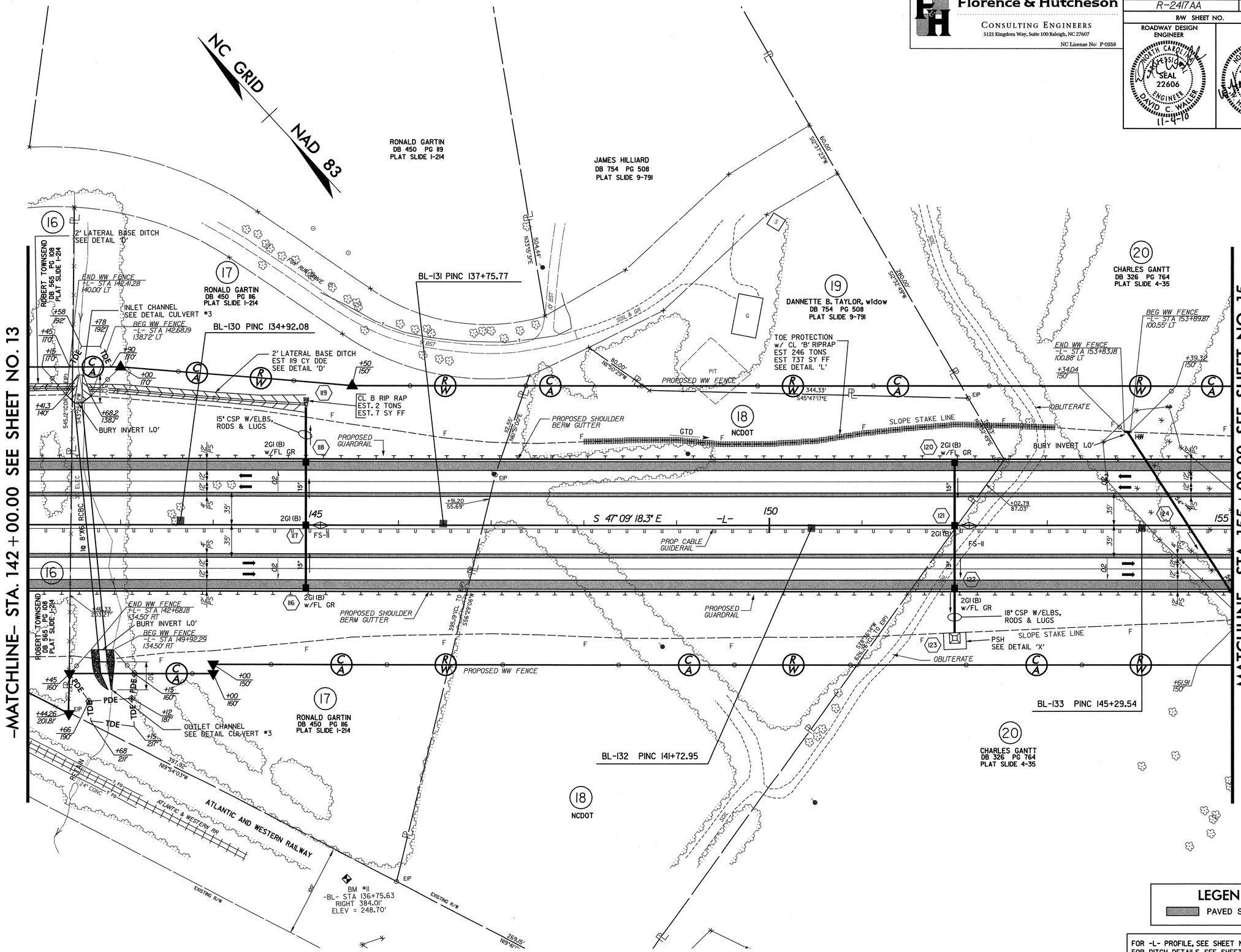

LEGEND

PAVED SHOULDER

FOR -L- PROFILE, SEE SHEET NO. 31
FOR DITCH DETAILS, SEE SHEET NOS. 2-F & 2-G

REVISIONS

8/17/99

11/3/2010
R:\Roadway\Proj\r2417aa_rdy_psh_14.dgn
Florence & Hutcheson, Inc.

Florence & Hutcheson
CONSULTING ENGINEERS
5121 Kingdom Way, Suite 100 Raleigh, NC 27607
NC License No: F-0258

PROJECT REFERENCE NO.	SHEET NO.
R-2417AA	15
R/W SHEET NO.	15

ROADWAY DESIGN ENGINEER — NORTH CAROLINA PROFESSIONAL SEAL 22606 ENGINEER DAVID C. WALLER — 9-23-10

HYDRAULICS ENGINEER — NORTH CAROLINA PROFESSIONAL SEAL 021162 ENGINEER HERBERT TURNER, JR. — 9-23-10

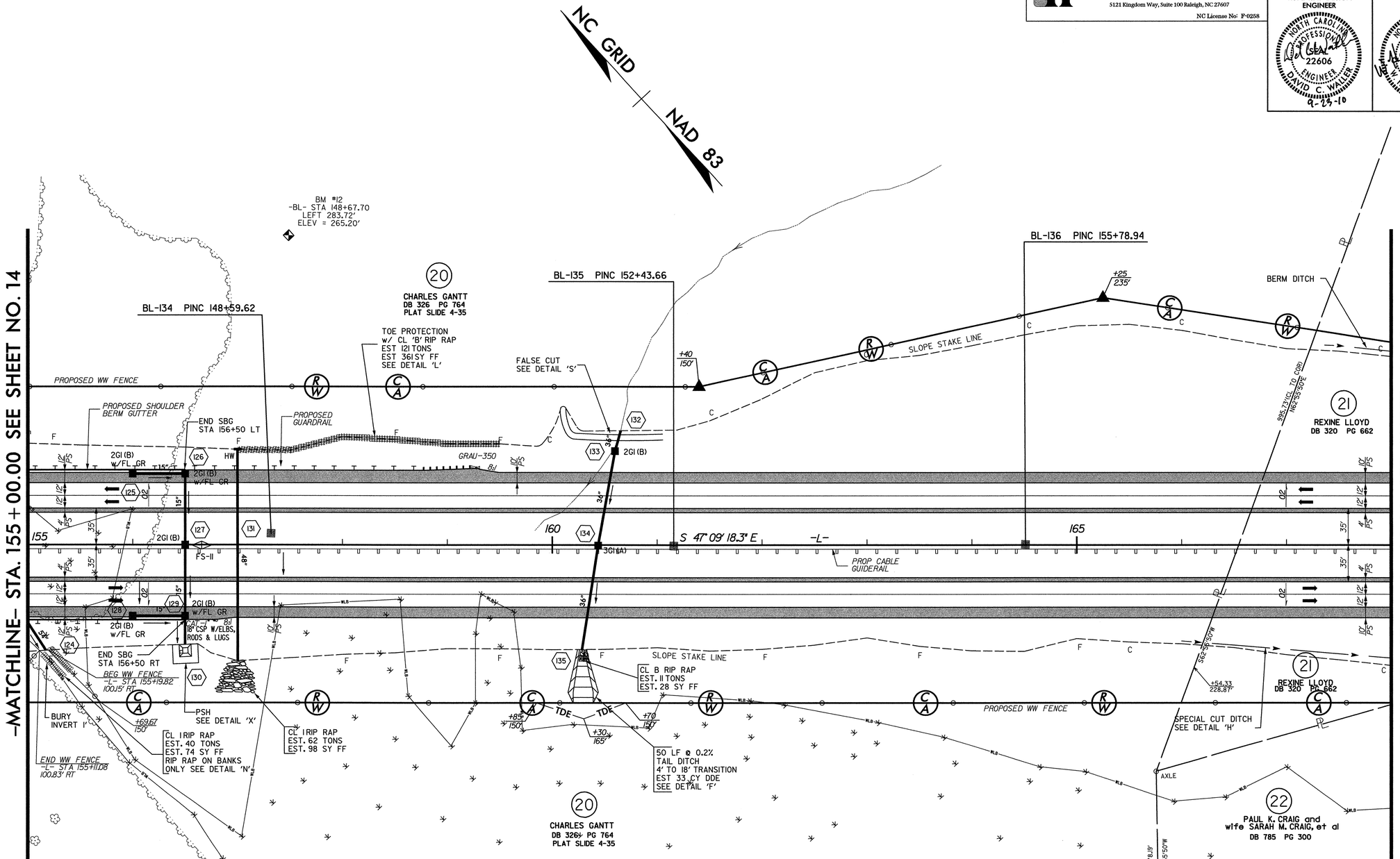

LEGEND
PAVED SHOULDER

FOR -L- PROFILE, SEE SHEET NOS. 31 & 32
FOR DITCH DETAILS, SEE SHEET NOS. 2-F & 2-G

REVISIONS
8/17/99

9/2/2010
R:\Roadway\Proj\r2417aa_rdy_psh_15.dgn
Florence & Hutcheson, Inc.

Florence & Hutcheson
CONSULTING ENGINEERS
5121 Kingdom Way, Suite 100 Raleigh, NC 27607
NC License No: F-0258

PROJECT REFERENCE NO.	SHEET NO.
R-2417AA	16
R/W SHEET NO.	16

ROADWAY DESIGN ENGINEER — NORTH CAROLINA PROFESSIONAL SEAL 22606 ENGINEER DAVID C. WALLER — 9-23-10

HYDRAULICS ENGINEER — NORTH CAROLINA PROFESSIONAL SEAL 021162 ENGINEER HERBERT TURNER, JR. — 9-23-10

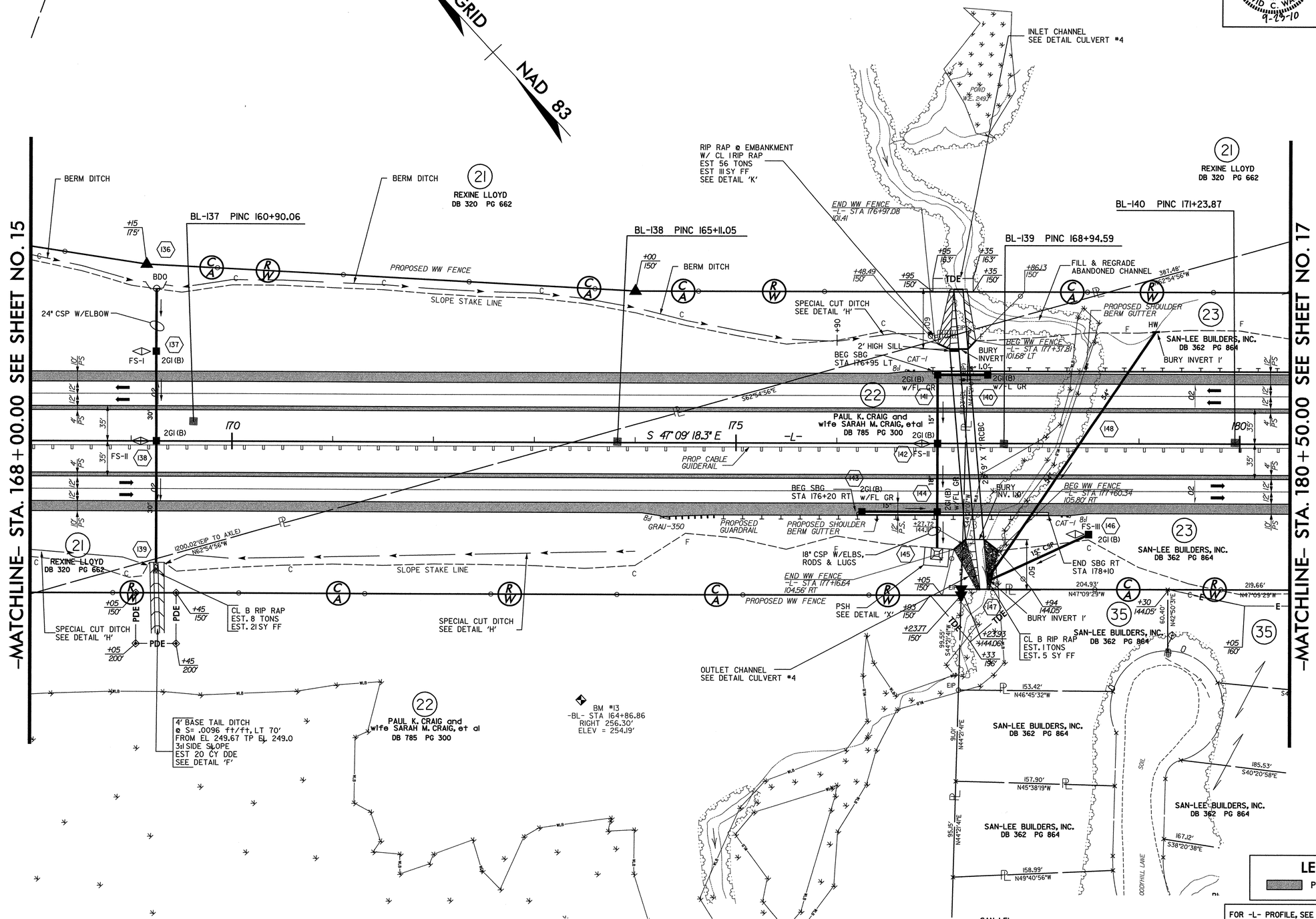

FOR -L- PROFILE, SEE SHEET NO. 32
FOR DITCH DETAILS, SEE SHEET NOS. 2-F & 2-G

REVISIONS

8/17/99

8/20/2010
R:\Roadway\Proj\r2417aa_rdy_psh_16.dgn
FLORENCE & HUTCHESON, INC.

Florence & Hutcheson
CONSULTING ENGINEERS
5121 Kingdom Way, Suite 100 Raleigh, NC 27607
NC License No: F-0258

PROJECT REFERENCE NO.	SHEET NO.
R-2417AA	17
RW SHEET NO.	17
ROADWAY DESIGN ENGINEER	HYDRAULICS ENGINEER
NORTH CAROLINA PROFESSIONAL SEAL 22606 ENGINEER DAVID C. WALLER 9-23-10	NORTH CAROLINA PROFESSIONAL SEAL 021162 ENGINEER W. HERBERT TURNER, JR. 9-23-10

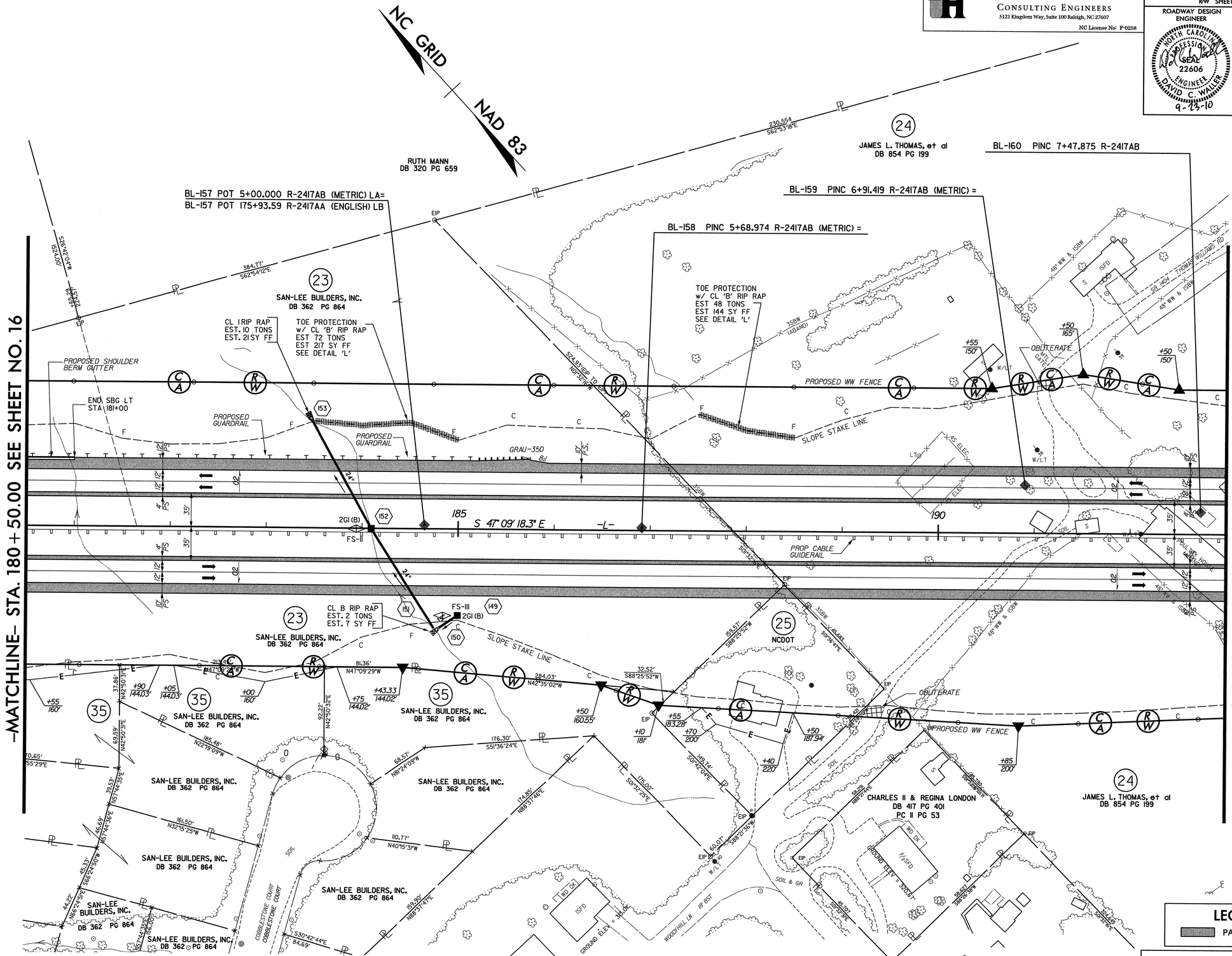

FOR -L- PROFILE, SEE SHEET NO. 33
FOR DITCH DETAILS, SEE SHEET NOS. 2-F & 2-G

REVISIONS

8/17/99

9/21/2010
R:\Roadway\Proj\r2417aa_rdy_psh_17.dgn
Florence & Hutcheson, Inc.

PROJECT REFERENCE NO.	SHEET NO.
R-2417AA	18
R/W SHEET NO.	18

Florence & Hutcheson
CONSULTING ENGINEERS
5121 Kingdom Way, Suite 100 Raleigh, NC 27607
NC License No: F-0258

ROADWAY DESIGN ENGINEER: NORTH CAROLINA PROFESSIONAL SEAL 22606 ENGINEER DAVID C. WALLER — 11-4-10

HYDRAULICS ENGINEER: NORTH CAROLINA PROFESSIONAL SEAL 021162 ENGINEER HERBERT TURNER, JR. — 11-4-10

REVISIONS

8/17/99

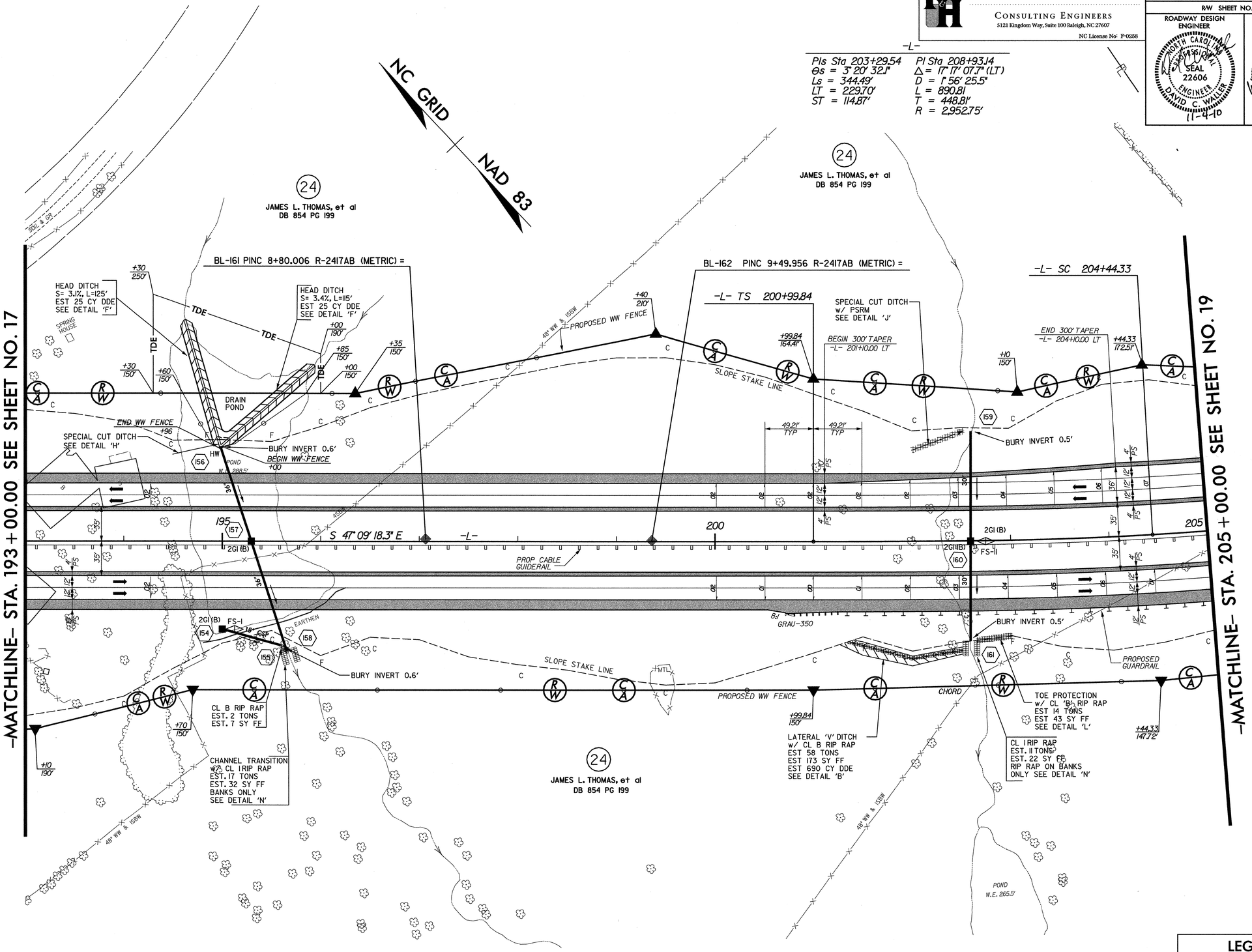

LEGEND

PAVED SHOULDER

FOR -L- PROFILE, SEE SHEET NOS. 33 & 34
FOR DITCH DETAILS, SEE SHEET NOS. 2-F & 2-G

11/3/2010
R:\Roadway\Proj\r-2417aa_rdy_psh_18.dgn
Florence & Hutcheson, Inc.

PROJECT REFERENCE NO.	SHEET NO.
R-2417AA	19
R/W SHEET NO.	19

Florence & Hutcheson
CONSULTING ENGINEERS
5121 Kingdom Way, Suite 100 Raleigh, NC 27607
NC License No: F-0258

ROADWAY DESIGN ENGINEER
NORTH CAROLINA PROFESSIONAL SEAL 22606 ENGINEER DAVID C. WALLER
11-17-10

HYDRAULICS ENGINEER
NORTH CAROLINA PROFESSIONAL SEAL 021162 ENGINEER W. HERBERT TURNER, JR.
11-17-10

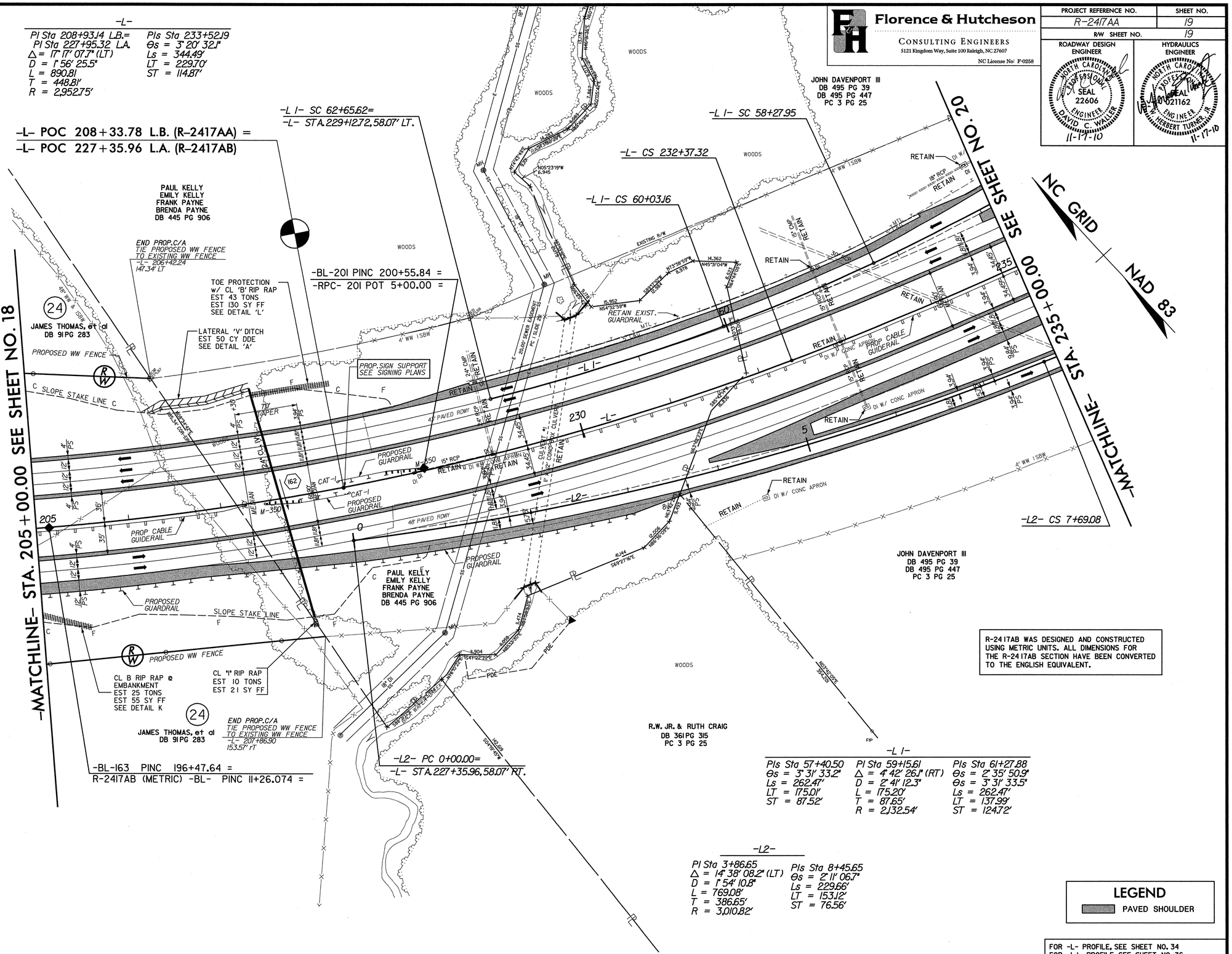

R-2417AB WAS DESIGNED AND CONSTRUCTED USING METRIC UNITS. ALL DIMENSIONS FOR THE R-2417AB SECTION HAVE BEEN CONVERTED TO THE ENGLISH EQUIVALENT.

LEGEND
PAVED SHOULDER

FOR -L- PROFILE, SEE SHEET NO. 34
FOR -L1- PROFILE, SEE SHEET NO. 36
FOR -L2- PROFILE, SEE SHEET NO. 37
FOR DITCH DETAILS, SEE SHEET NOS. 2-F & 2-G

REVISIONS
8/17/99

11/17/2010
R:\Roadway\Proj\r2417aa_rdy_psh_19.dgn
Florence & Hutcheson Inc.

PROJECT REFERENCE NO.	SHEET NO.
R-2417AA	20
R/W SHEET NO.	

Florence & Hutcheson
CONSULTING ENGINEERS
5121 Kingdom Way, Suite 100 Raleigh, NC 27607
NC License No: F-0258

ROADWAY DESIGN ENGINEER — NORTH CAROLINA PROFESSIONAL SEAL 22606 ENGINEER DAVID C. WALLER — 9-23-10

HYDRAULICS ENGINEER — NORTH CAROLINA PROFESSIONAL SEAL 021162 ENGINEER HERBERT TURNER, JR. — 9-23-10

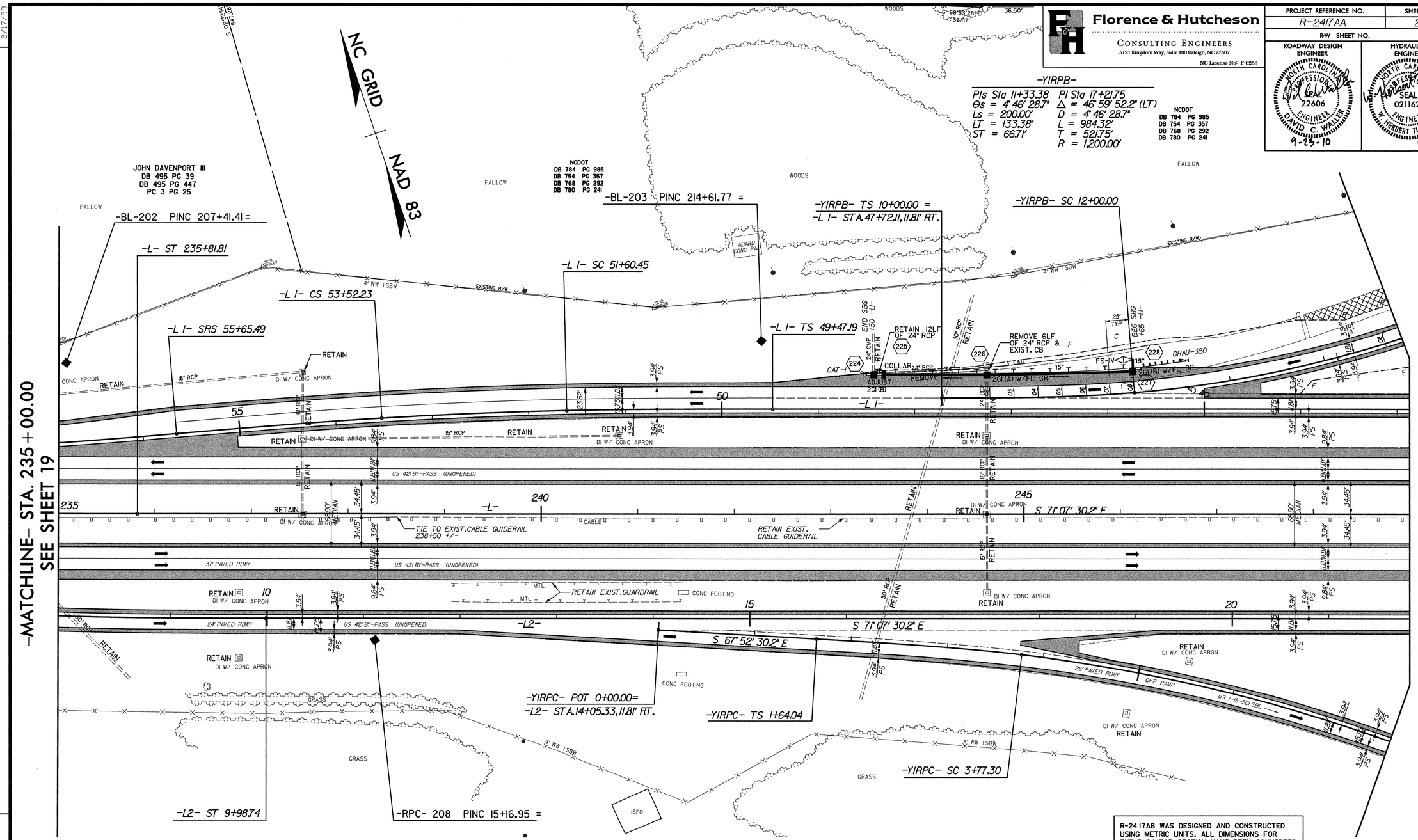

R-2417AB WAS DESIGNED AND CONSTRUCTED USING METRIC UNITS. ALL DIMENSIONS FOR THE R-2417AB SECTION HAVE BEEN CONVERTED TO THE ENGLISH EQUIVALENT.

LEGEND
- PAVED SHOULDER
- PAVEMENT REMOVAL

-L2-

PIs Sta 8+45.65
Θs = 2° 11' 06.7"
Ls = 229.66'
LT = 153.12'
ST = 76.56'

-YIRPC-

PIs Sta 3+06.24
Θs = 3° 28' 50.1"
Ls = 213.25'
LT = 142.20'
ST = 71.11'

PI Sta 17+62.70
Δ = 76° 34' 03.8" (RT)
D = 3° 15' 51.3"
L = 2,345.64'
T = 1,385.41'
R = 1,755.25'

-L1-

PIs Sta 50+89.37
Θs = 1° 14' 29.1"
Ls = 213.25'
LT = 142.17'
ST = 71.09'

PI Sta 52+56.35
Δ = 2° 13' 58.4" (LT)
D = 1° 09' 51.3"
L = 191.79'
T = 95.91'
R = 4,921.25'

PIs Sta 54+23.32
Θs = 1° 14' 29.1"
Ls = 213.25'
LT = 142.17'
ST = 71.09'

PIs Sta 57+40.50
Θs = 3° 31' 33.2"
Ls = 262.47'
LT = 175.01'
ST = 87.52'

FOR -L- PROFILE, SEE SHEET NO. 34 & 35
FOR -L1- PROFILE, SEE SHEET NO. 36
FOR -L2- PROFILE, SEE SHEET NO. 37
FOR -YIRPB- PROFILE, SEE SHEET NO. 44
FOR -YIRPC- PROFILE, SEE SHEET NO. 45
FOR DITCH DETAILS, SEE SHEET NOS. 2-F & 2-G

REVISIONS

8/17/99

9/23/2010
R:\Roadway\Proj\r2417aa_rdy_psh_20.dgn
Florence & Hutcheson, Inc.

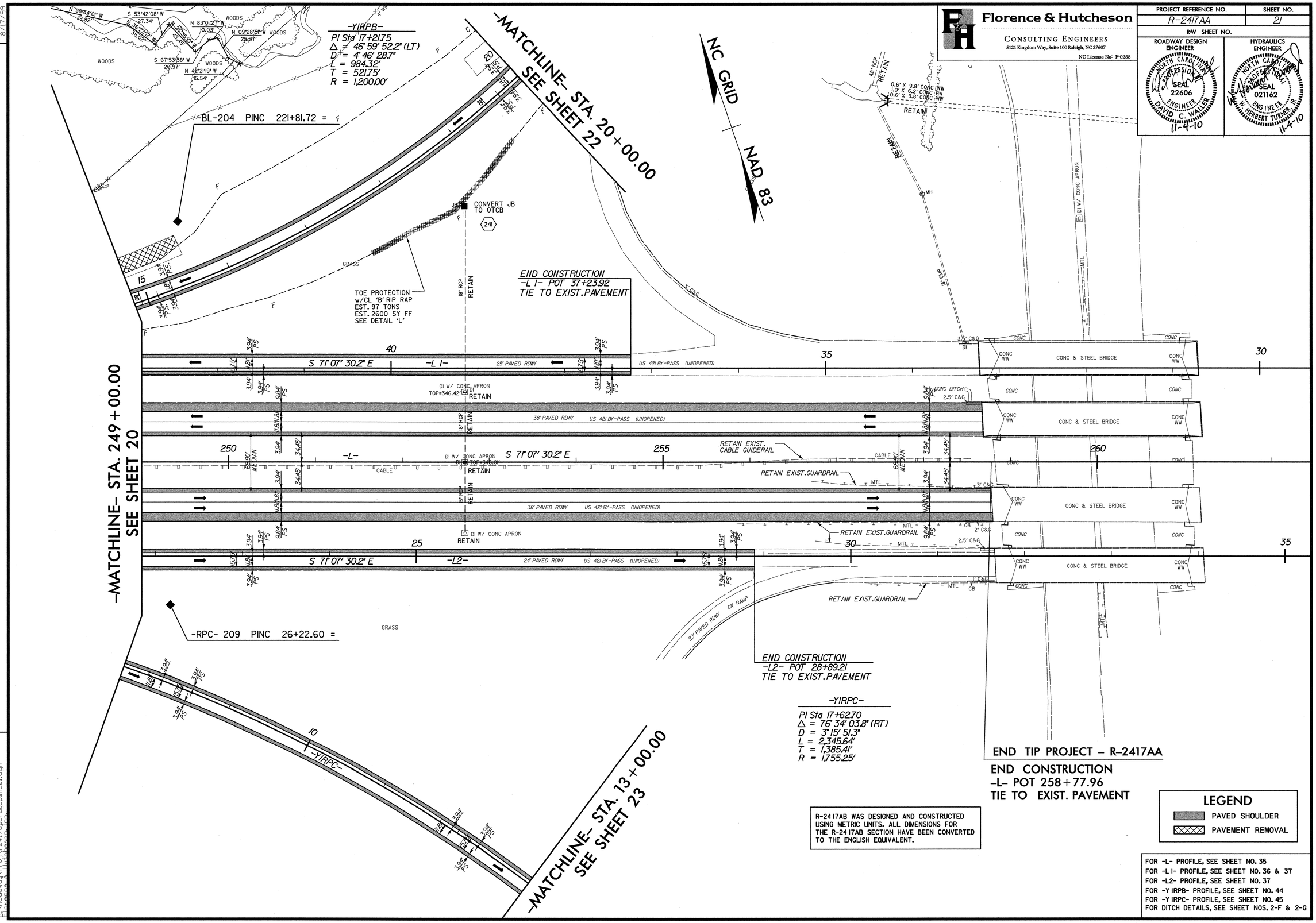

Florence & Hutcheson
CONSULTING ENGINEERS
5121 Kingdom Way, Suite 100 Raleigh, NC 27607
NC License No: F-0258

PROJECT REFERENCE NO.	SHEET NO.
R-2417AA	21
R/W SHEET NO.	

ROADWAY DESIGN ENGINEER
NORTH CAROLINA PROFESSIONAL SEAL 22606 ENGINEER DAVID C. WALLER
11-4-10

HYDRAULICS ENGINEER
NORTH CAROLINA PROFESSIONAL SEAL 021162 ENGINEER W. HERBERT TURNER, JR.
11-4-10

REVISIONS

8/17/99

R-2417AB WAS DESIGNED AND CONSTRUCTED USING METRIC UNITS. ALL DIMENSIONS FOR THE R-2417AB SECTION HAVE BEEN CONVERTED TO THE ENGLISH EQUIVALENT.

LEGEND
- PAVED SHOULDER
- PAVEMENT REMOVAL

FOR -L- PROFILE, SEE SHEET NO. 35
FOR -L1- PROFILE, SEE SHEET NO. 36 & 37
FOR -L2- PROFILE, SEE SHEET NO. 37
FOR -YIRPB- PROFILE, SEE SHEET NO. 44
FOR -YIRPC- PROFILE, SEE SHEET NO. 45
FOR DITCH DETAILS, SEE SHEET NOS. 2-F & 2-G

11/3/2010
R:\Roadway\Proj\r2417aa_rdy_psh_21.dgn
Florence & Hutcheson, Inc.

-YIRPB-				
PI Sta 17+21.75	PIs Sta 22+71.51	PI Sta 24+52.53	PIs Sta 26+30.52	PI Sta 29+62.59
Δ = 46° 59' 52.2" (LT)	θs = 2° 06' 18.4"	Δ = 2° 52' 23.5" (LT)	θs = 2° 06' 20.7"	Δ = 18° 24' 25.6" (LT)
D = 4° 46' 28.7"	θs = 4° 46' 33.6"	D = 2° 06' 23.3"	θs = 3° 50' 20.1"	D = 3° 50' 17.5"
L = 984.32'	Ls = 200.00'	L = 136.40'	Ls = 200.00'	L = 479.58'
T = 521.75'	LT = 113.04'	T = 68.21'	LT = 109.80'	T = 241.87'
R = 1,200.00'	ST = 87.19'	R = 2,720.00'	ST = 90.38'	R = 1,492.78'

Florence & Hutcheson
CONSULTING ENGINEERS
5121 Kingdom Way, Suite 100 Raleigh, NC 27607
NC License No: F-0258

PROJECT REFERENCE NO.	SHEET NO.
R-2417AA	22
R/W SHEET NO.	

ROADWAY DESIGN ENGINEER: NORTH CAROLINA PROFESSIONAL SEAL 22606 ENGINEER DAVID C. WALLER — 11-17-10

HYDRAULICS ENGINEER: NORTH CAROLINA PROFESSIONAL SEAL 021162 ENGINEER W. HERBERT TURNER, JR. — 11-17-10

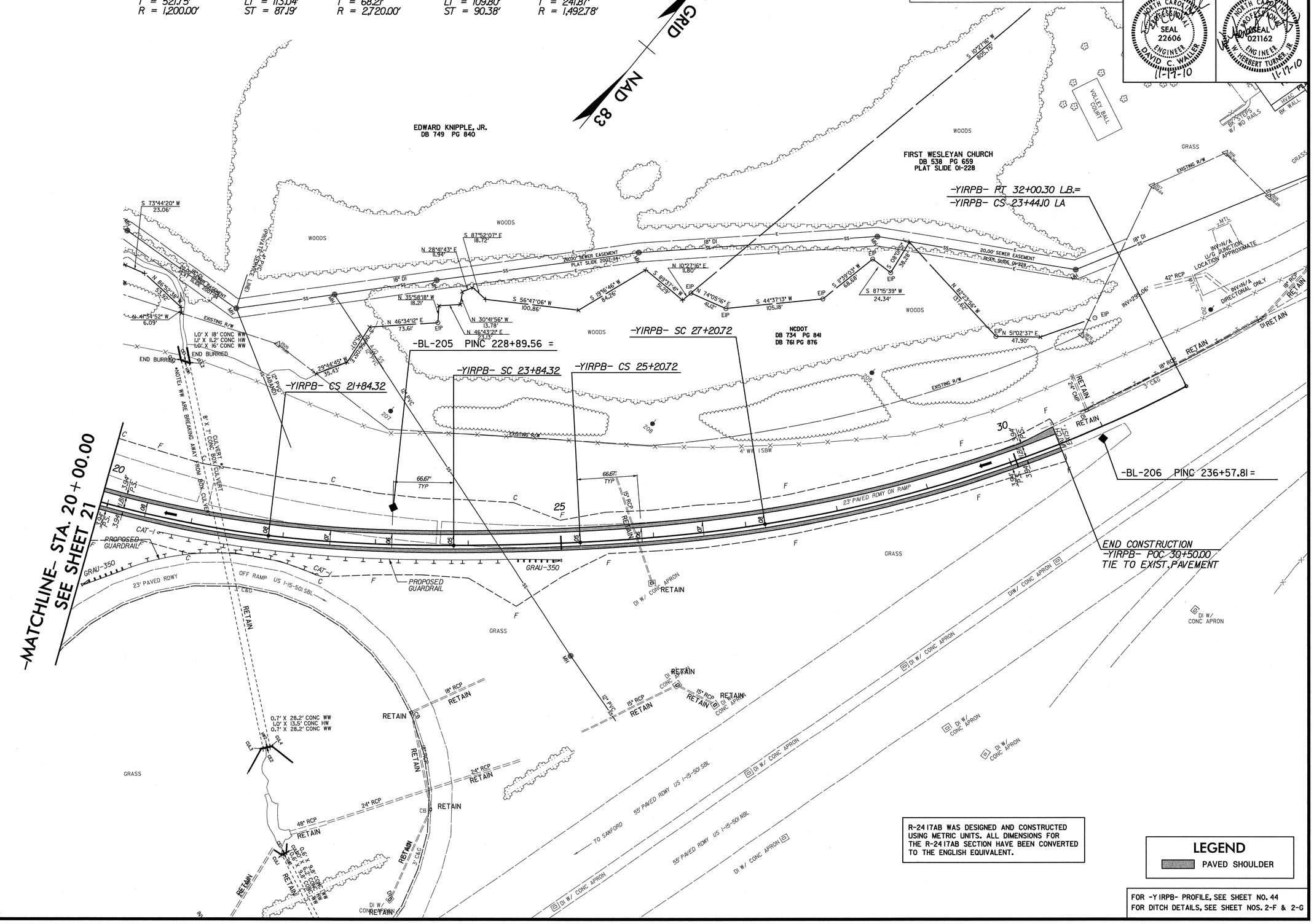

R-2417AB WAS DESIGNED AND CONSTRUCTED USING METRIC UNITS. ALL DIMENSIONS FOR THE R-2417AB SECTION HAVE BEEN CONVERTED TO THE ENGLISH EQUIVALENT.

LEGEND
PAVED SHOULDER

FOR -YIRPB- PROFILE, SEE SHEET NO. 44
FOR DITCH DETAILS, SEE SHEET NOS. 2-F & 2-G

REVISIONS

8/17/99

11/17/2010
R:\Roadway\Proj\r2417aa_rdy_psh_22.dgn
Florence & Hutcheson, Inc.

PROJECT REFERENCE NO.	SHEET NO.
R-2417AA	23
R/W SHEET NO.	

Florence & Hutcheson
CONSULTING ENGINEERS
5121 Kingdom Way, Suite 100 Raleigh, NC 27607
NC License No: F-0258

ROADWAY DESIGN ENGINEER
NORTH CAROLINA PROFESSIONAL SEAL 22606 ENGINEER DAVID C. WALLER
8-23-10

HYDRAULICS ENGINEER
NORTH CAROLINA PROFESSIONAL SEAL 021162 ENGINEER W. HERBERT TURNER, JR.
8-23-10

REVISIONS

8/17/99

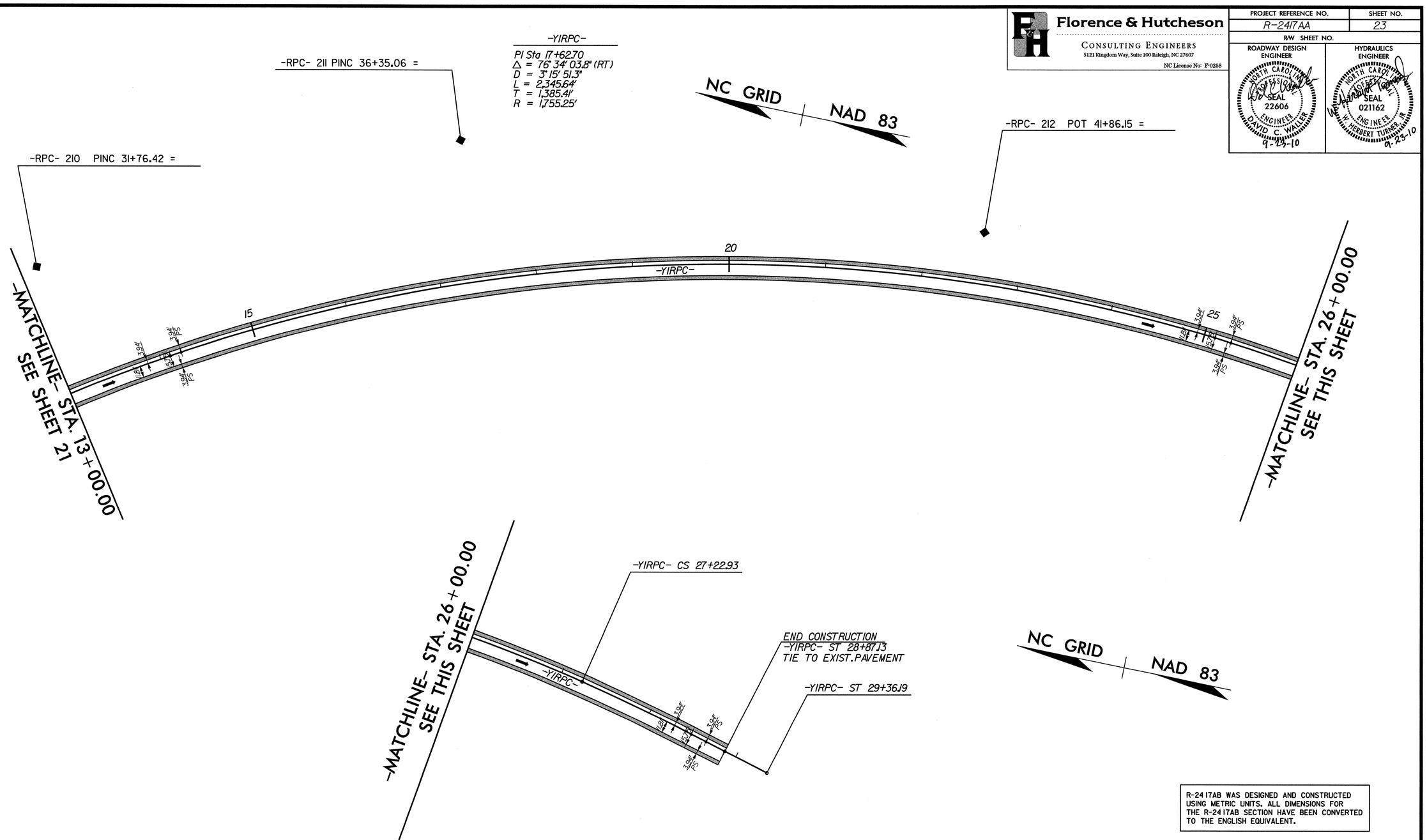

R-2417AB WAS DESIGNED AND CONSTRUCTED USING METRIC UNITS. ALL DIMENSIONS FOR THE R-2417AB SECTION HAVE BEEN CONVERTED TO THE ENGLISH EQUIVALENT.

-YIRPC-

PI Sta 17+62.70	PIs Sta 27+94.04
Δ = 76° 34' 03.8" (RT)	Θs = 3° 28' 50.1"
D = 3° 15' 51.3"	Ls = 213.25'
L = 2,345.64'	LT = 142.20'
T = 1,385.41'	ST = 71.11'
R = 1,755.25'	

LEGEND

PAVED SHOULDER

FOR -Y IRPC- PROFILE, SEE SHEET NO. 45 & 46
FOR DITCH DETAILS, SEE SHEET NOS. 2-F & 2-G

8/21/2010
R:\Roadway\Proj\r2417aa_rdy_psh_23.dgn
Florence & Hutcheson, Inc.

Florence & Hutcheson
CONSULTING ENGINEERS
5121 Kingdom Way, Suite 100 Raleigh, NC 27607
NC License No: F-0258

PROJECT REFERENCE NO.	SHEET NO.
R-2417AA	24
R/W SHEET NO.	20

ROADWAY DESIGN ENGINEER — NORTH CAROLINA PROFESSIONAL SEAL 22606 ENGINEER DAVID C. WALLER — 9-23-10

HYDRAULICS ENGINEER — NORTH CAROLINA PROFESSIONAL SEAL 021162 ENGINEER W. HERBERT TURNER JR. — 9-23-10

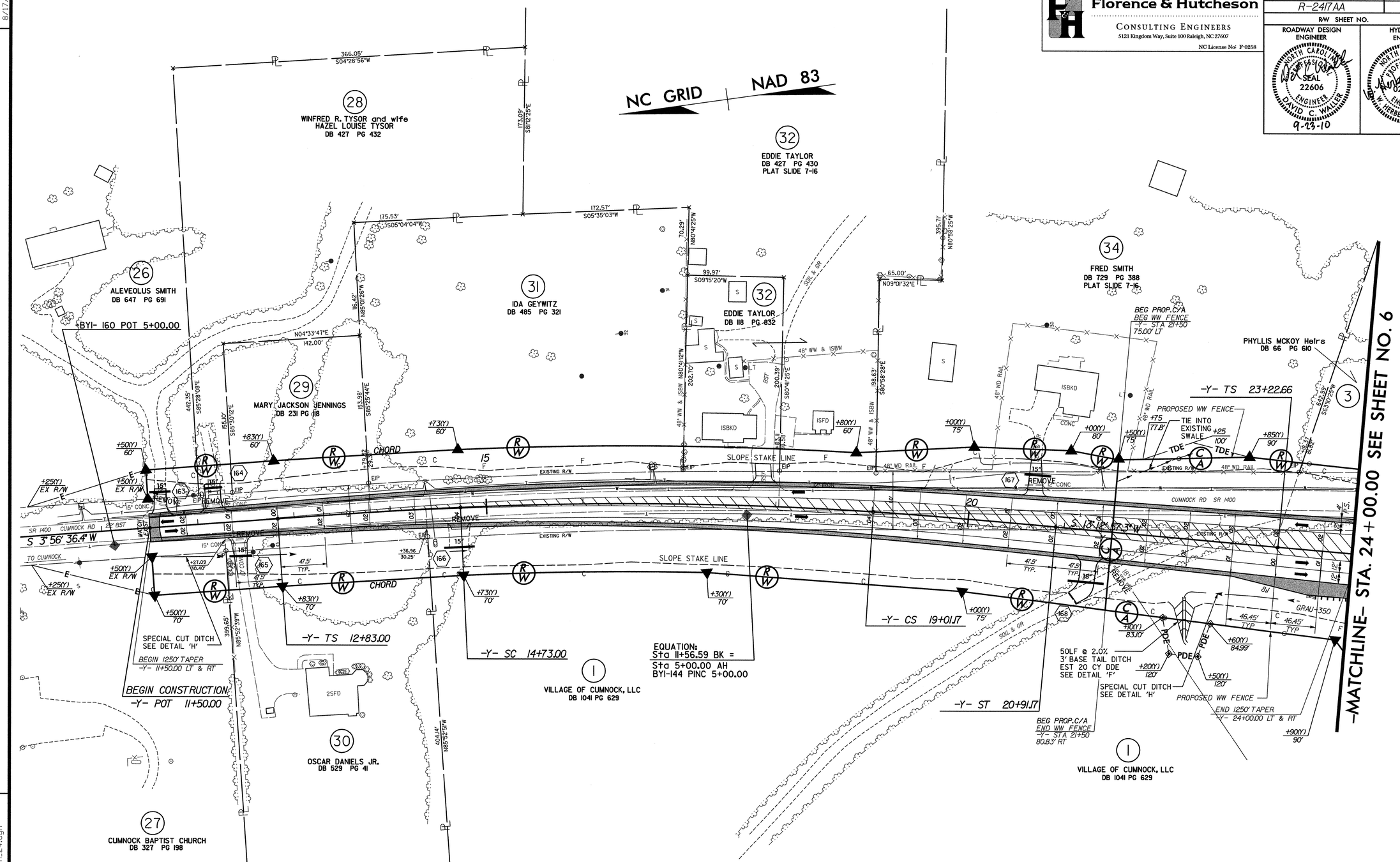

-Y-		
PIs Sta 14+09.67	PI Sta 16+87.31	PIs Sta 19+64.50
Θs = 1° 25' 30.0"	Δ = 6° 25' 20.8" (RT)	Θs = 1° 25' 30.0"
Ls = 190.00'	D = 1° 30' 00.0"	Ls = 190.00'
LT = 126.67'	L = 428.16	LT = 126.67'
ST = 63.34'	T = 214.31'	ST = 63.34'
	R = 3,819.72'	
	SE = 0.04	

NOTE:
ALL DRIVEWAY ENTRANCE RETURNS HAVE A RADIS OF 6' UNLESS OTHERWISE SHOWN.

LEGEND
PAVED SHOULDER

FOR -Y- PROFILE, SEE SHEET NO. 42
FOR DITCH DETAILS, SEE SHEET NOS. 2-F & 2-G

REVISIONS

8/17/99

9/2/2010
R:\Roadway\Proj\r2417aa_rdy_psh_24.dgn
Florence & Hutcheson, Inc.

Florence & Hutcheson
CONSULTING ENGINEERS
5121 Kingdom Way, Suite 100 Raleigh, NC 27607
NC License No: F-0258

PROJECT REFERENCE NO.	SHEET NO.
R-2417AA	25
R/W SHEET NO.	21

ROADWAY DESIGN ENGINEER: NORTH CAROLINA PROFESSIONAL SEAL 22606 ENGINEER DAVID C. WALLER 11-4-10

HYDRAULICS ENGINEER: NORTH CAROLINA PROFESSIONAL SEAL 021162 ENGINEER W. HERBERT TURNER, JR. 11-4-10

REVISIONS 8/17/99

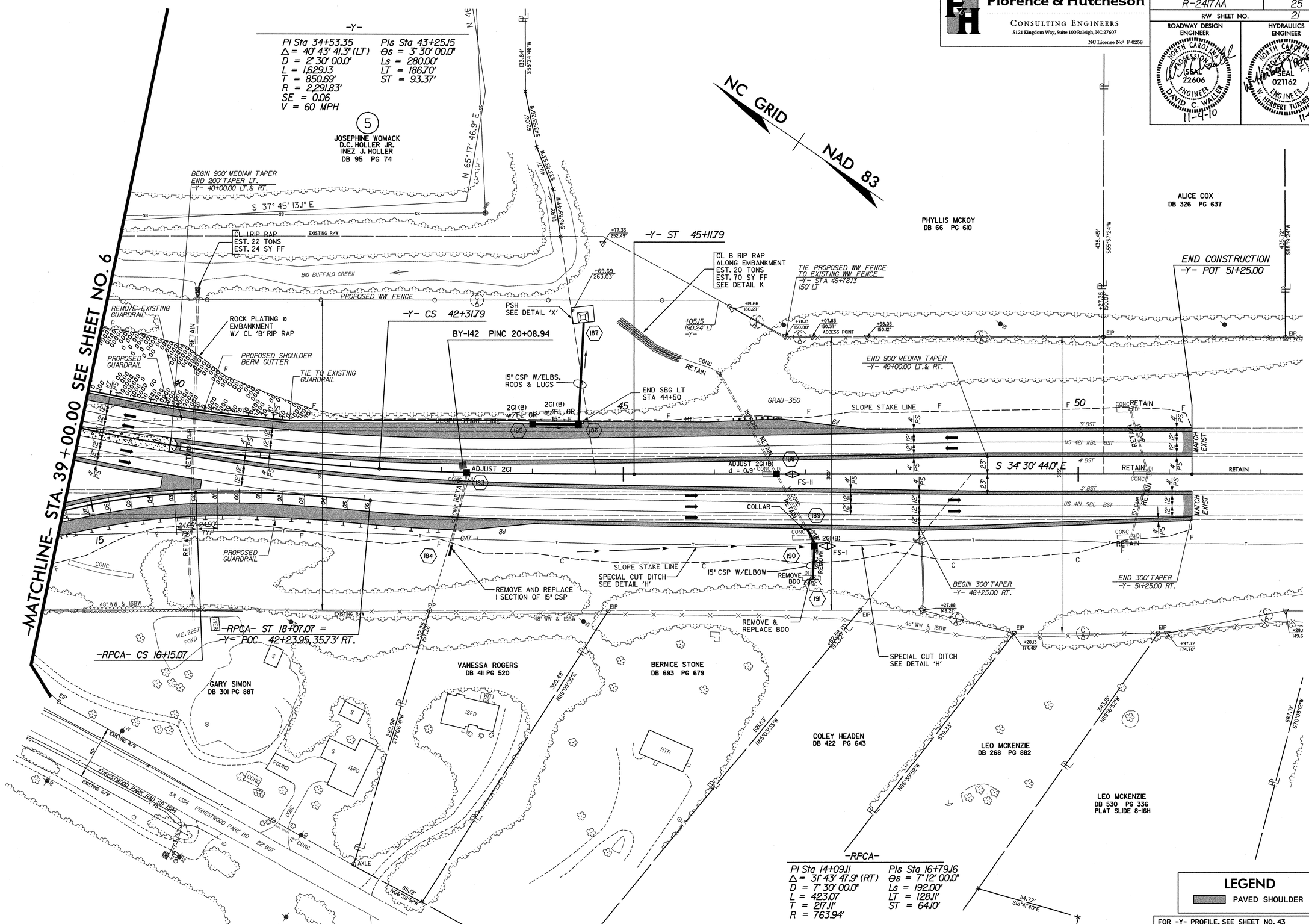

FOR -Y- PROFILE, SEE SHEET NO. 43
FOR -RPCA- PROFILE, SEE SHEET NO. 43
FOR DITCH DETAILS, SEE SHEET NOS. 2-F & 2-G

11/3/2010
R:\Roadway\Proj\r2417aa_rdy_psh_25.dgn

5/28/99

BM# 1
PK NAIL IN END OF SOUTHEAST WINGWALL
OF BRIDGE OVER DEEP RIVER (NBL)
-L- STA 9+80.82 60.44' LT
ELEV = 246.84'

Florence & Hutcheson
CONSULTING ENGINEERS
5121 Kingdom Way, Suite 100 Raleigh, NC 27607
NC License No: F-0258

PROJECT REFERENCE NO.	SHEET NO.
R-2417AA	26

ROADWAY DESIGN ENGINEER
NORTH CAROLINA PROFESSIONAL SEAL 22606 ENGINEER DAVID C. WALLER
11-4-10

HYDRAULICS ENGINEER
NORTH CAROLINA PROFESSIONAL SEAL 021162 ENGINEER HERBERT TURNER, III
11-4-10

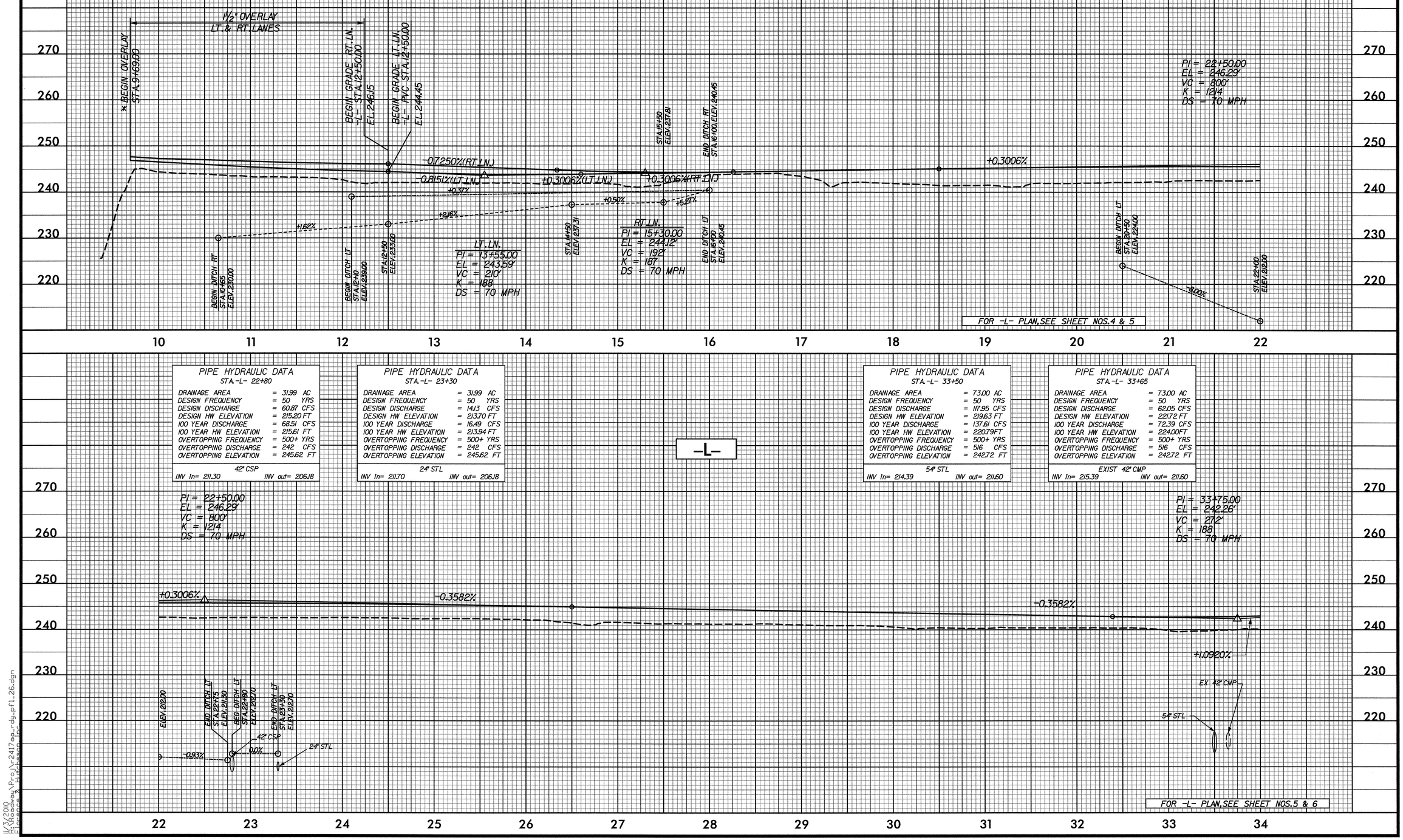

11/3/2010
R:\Roadway\Proj\r2417aa_rdy_pfl_26.dgn
Florence & Hutcheson, Inc.

5/28/99

BM#2
RR SPIKE IN BASE OF 15" PINE TREE
RIGHT OF BL-103
-L- STA 41+75.05 251.37' RT
ELEV = 266.96'

Florence & Hutcheson
CONSULTING ENGINEERS
5121 Kingdom Way, Suite 100 Raleigh, NC 27607
NC License No: F-0258

PROJECT REFERENCE NO.	SHEET NO.
R-2417AA	27

ROADWAY DESIGN ENGINEER
NORTH CAROLINA PROFESSIONAL SEAL 22606 ENGINEER DAVID C. WALLER
9-23-10

HYDRAULICS ENGINEER
NORTH CAROLINA PROFESSIONAL SEAL 021162 ENGINEER HERBERT TURNER JR.
9-23-10

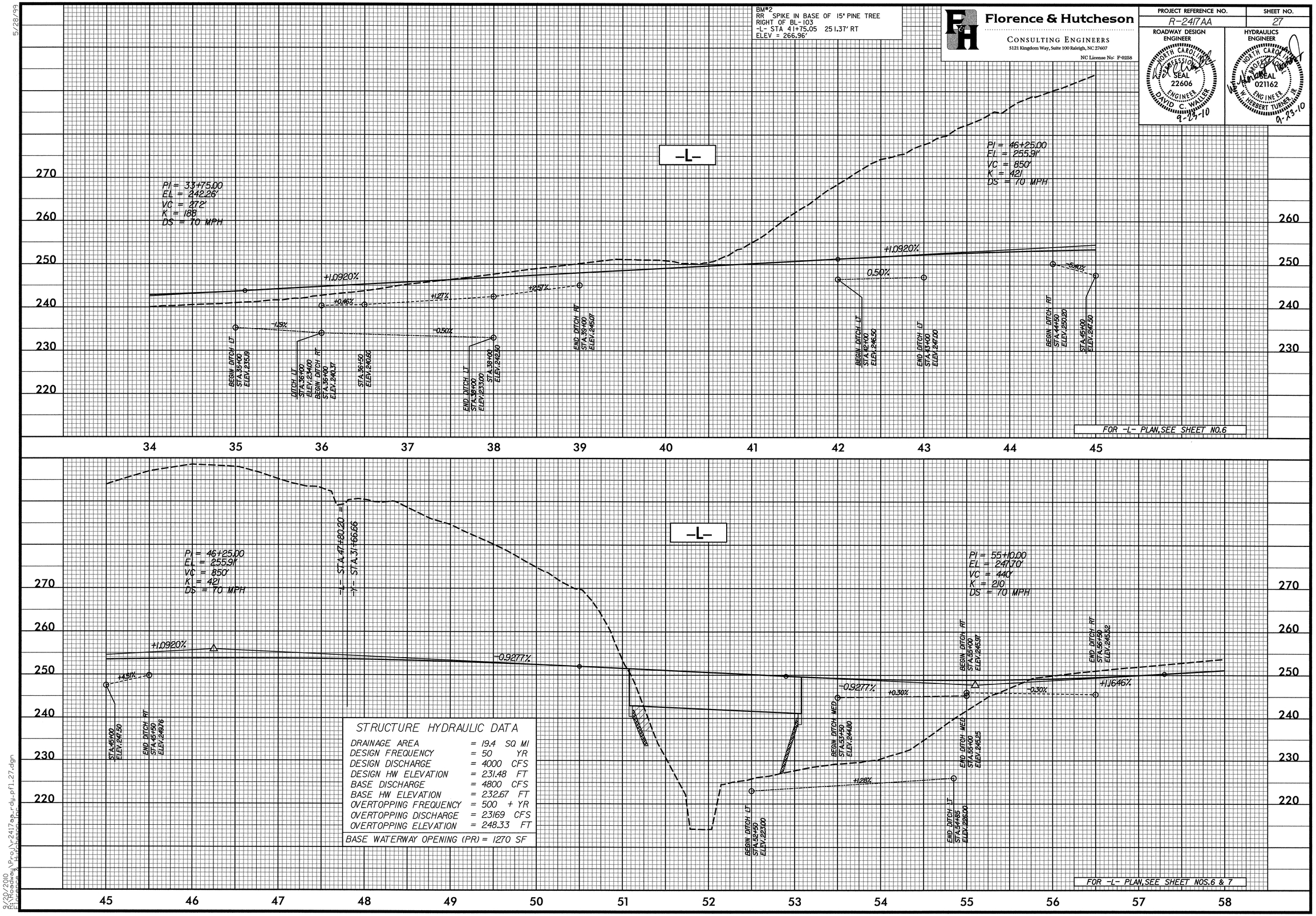

STRUCTURE HYDRAULIC DATA

DRAINAGE AREA	= 19.4	SQ MI
DESIGN FREQUENCY	= 50	YR
DESIGN DISCHARGE	= 4000	CFS
DESIGN HW ELEVATION	= 231.48	FT
BASE DISCHARGE	= 4800	CFS
BASE HW ELEVATION	= 232.67	FT
OVERTOPPING FREQUENCY	= 500 +	YR
OVERTOPPING DISCHARGE	= 23169	CFS
OVERTOPPING ELEVATION	= 248.33	FT

BASE WATERWAY OPENING (PR) = 1270 SF

8/20/2010
R:\Hydraulics\Proj\r2417aa_rdy_pfl_27.dgn
Florence & Hutcheson, Inc.

5/28/99

Florence & Hutcheson
CONSULTING ENGINEERS
5121 Kingdom Way, Suite 100 Raleigh, NC 27607
NC License No- F-0258

PROJECT REFERENCE NO.	SHEET NO.
R-2417AA	28

ROADWAY DESIGN ENGINEER
NORTH CAROLINA PROFESSIONAL SEAL 22606 ENGINEER DAVID C. WALLER
9-23-10

HYDRAULICS ENGINEER
NORTH CAROLINA PROFESSIONAL SEAL 021162 ENGINEER HERBERT TURNER, JR.
9-23-10

BM#4
RR RPIKE IN BASE OF 10" OAK TREE LEFT
OF -BL- 112
-L- STA 64+50.00 183.22' LT
ELEV = 297.16'

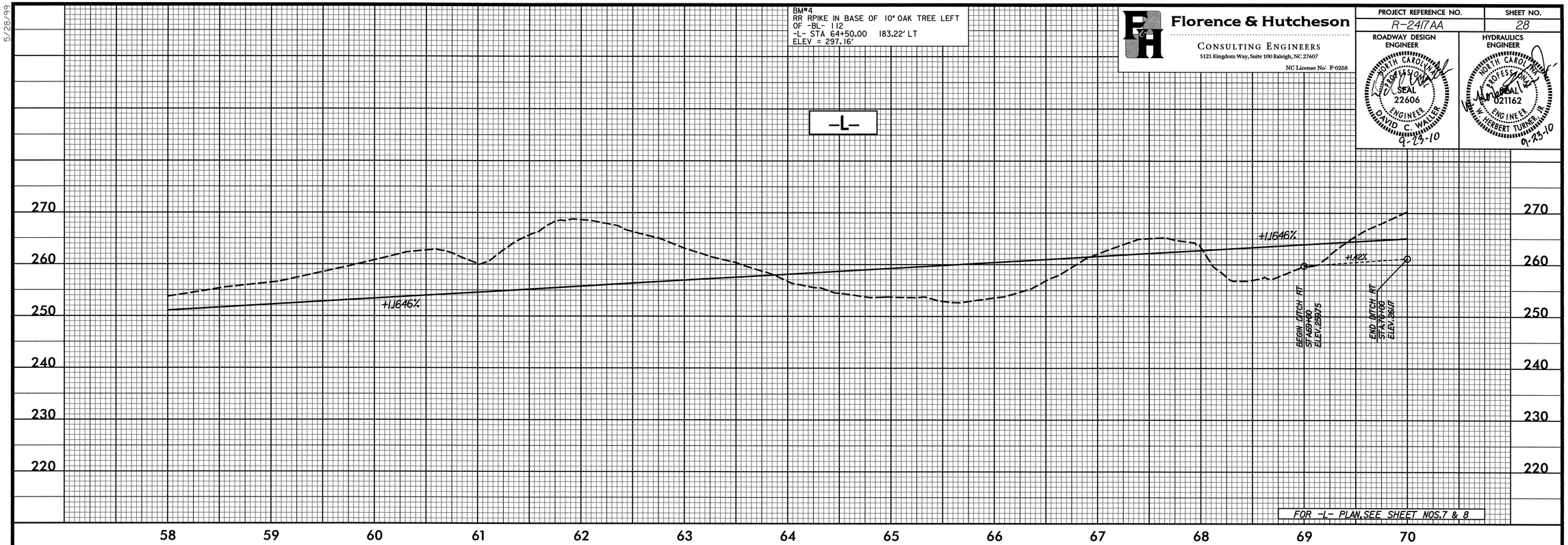

BM#5
RR RPIKE IN BASE OF 10" PINE TREE LEFT
OF -BL- 114
-L- STA 72+73.39 338.84' LT
ELEV = 304.25'

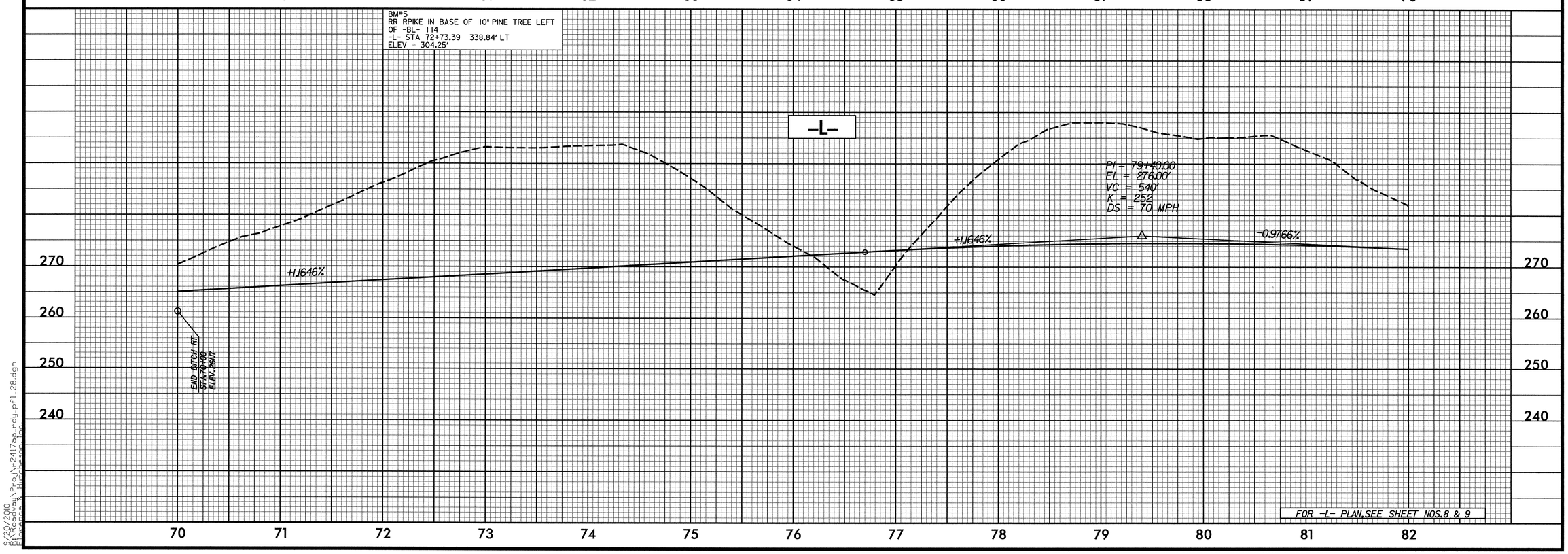

9/20/2010
R:\Roadway\Proj\r2417aa_rdy_pfl_28.dgn
Florence & Hutcheson, Inc.

5/28/99

Florence & Hutcheson
CONSULTING ENGINEERS
5121 Kingdom Way, Suite 100 Raleigh, NC 27607
NC License No. F-0258

PROJECT REFERENCE NO.	SHEET NO.
R-2417AA	29

ROADWAY DESIGN ENGINEER
NORTH CAROLINA PROFESSIONAL SEAL 22606 ENGINEER DAVID C. WALLER
9-23-10

HYDRAULICS ENGINEER
NORTH CAROLINA PROFESSIONAL SEAL 021162 ENGINEER HERBERT TURNER, JR.
9-23-10

BM#6
RR SPIKE IN BASE OF 10" PINE TREE RIGHT OF BL-117
-L- STA 84+79.65 310.38' RT
ELEV = 256.56'

PIPE HYDRAULIC DATA
STA -L- 87+90

DRAINAGE AREA	= 31.72	AC
DESIGN FREQUENCY	= 50	YRS
DESIGN DISCHARGE	= 90	CFS
DESIGN HW ELEVATION	= 260.42	FT
100 YEAR DISCHARGE	= 100	CFS
100 YEAR HW ELEVATION	= 260.77	FT
OVERTOPPING FREQUENCY	= 500+	YRS
OVERTOPPING DISCHARGE	= 204	CFS
OVERTOPPING ELEVATION	= 266.63	FT

54" RCP
INV In= 255.00 INV out= 250.80

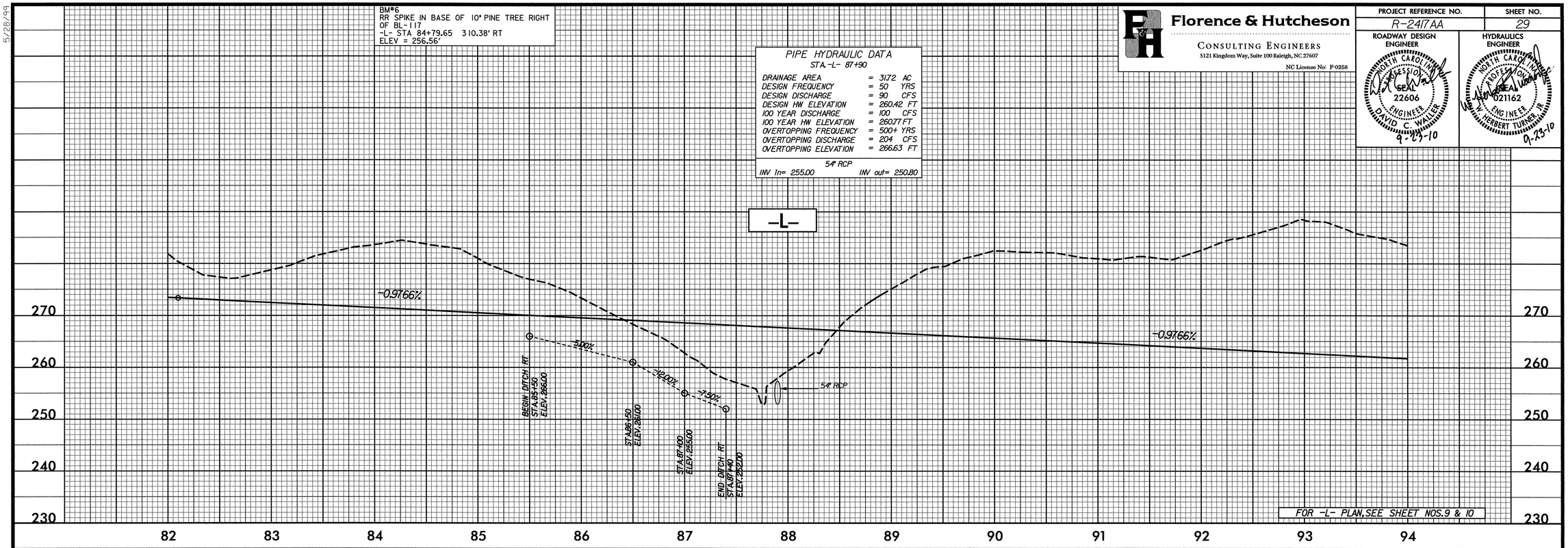

FOR -L- PLAN, SEE SHEET NOS.9 & 10

BM#7
RR SPIKE IN BASE OF 6" CEDAR TREE LEFT BASELINE
-L- STA 96+40.78 311.78' LT
ELEV = 290.50'

CULVERT HYDRAULIC DATA

DESIGN DISCHARGE	= 370	CFS
DESIGN FREQUENCY	= 50	YRS
DESIGN HW ELEVATION	= 243.7	FT
BASE DISCHARGE	= 420	CFS
BASE FREQUENCY	= 100	YRS
BASE HW ELEVATION	= 244.2	FT
OVERTOPPING DISCHARGE	= 830	CFS
OVERTOPPING FREQUENCY	= 500+	YRS
OVERTOPPING ELEVATION	= 251.5	FT

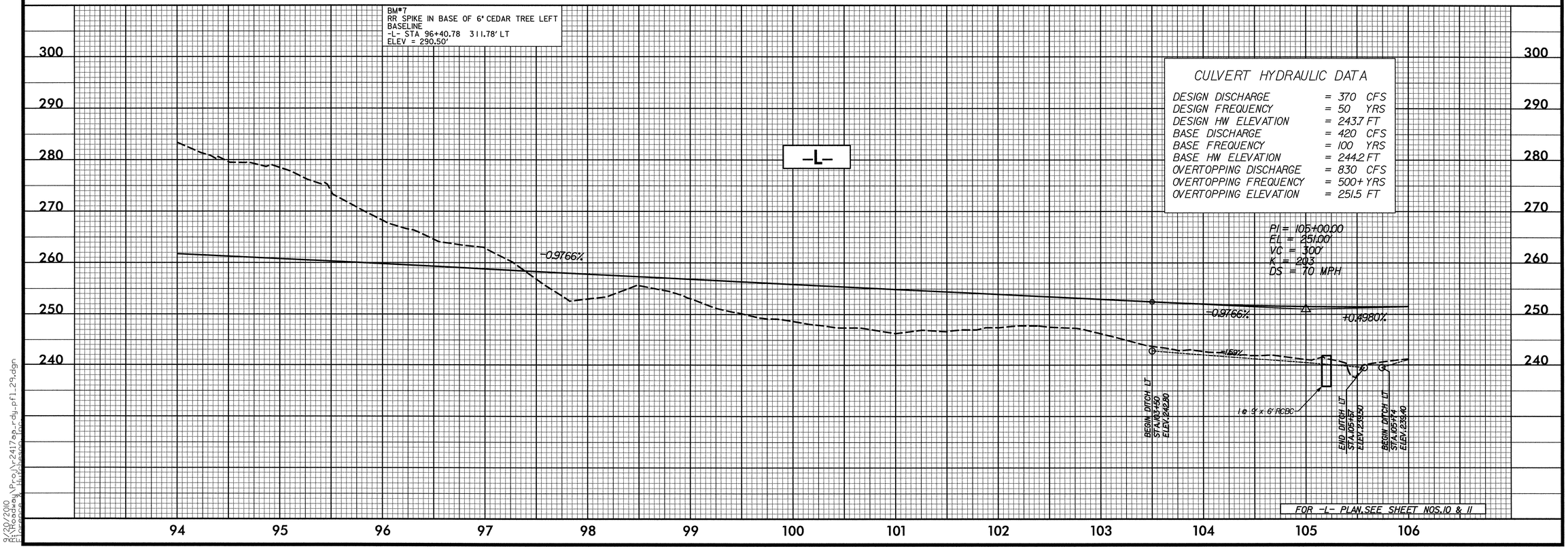

FOR -L- PLAN, SEE SHEET NOS.10 & 11

9/20/2010
R:\Roadway\Proj\r2417aa_rdy_pfl_29.dgn
Florence & Hutcheson, Inc.

5/28/99

Florence & Hutcheson
CONSULTING ENGINEERS
5121 Kingdom Way, Suite 100 Raleigh, NC 27607
NC License No: F-0258

PROJECT REFERENCE NO.	SHEET NO.
R-2417AA	30

ROADWAY DESIGN ENGINEER — NORTH CAROLINA PROFESSIONAL SEAL 22606 ENGINEER DAVID C. WALLER 9-23-10

HYDRAULICS ENGINEER — NORTH CAROLINA PROFESSIONAL SEAL 021162 ENGINEER HERBERT TURNER, JR. 9-23-10

BM#8
RR SPIKE IN BASE OF 12" MAPLE TREE LEFT OF BASELINE
-L- STA 108+17.37 248.26' LT
ELEV = 256.97'

PIPE HYDRAULIC DATA
STA.-L- 110+75

DRAINAGE AREA	= 4.50	AC
DESIGN FREQUENCY	= 50	YRS
DESIGN DISCHARGE	= 17.00	CFS
DESIGN HW ELEVATION	= 250.54	FT
100 YEAR DISCHARGE	= 19.00	CFS
100 YEAR HW ELEVATION	= 250.77	FT
OVERTOPPING FREQUENCY	= 500+	YRS
OVERTOPPING DISCHARGE	= 36	CFS
OVERTOPPING ELEVATION	= 253.86	FT

24" RCP
INV In= 248.25 INV out= 246.13

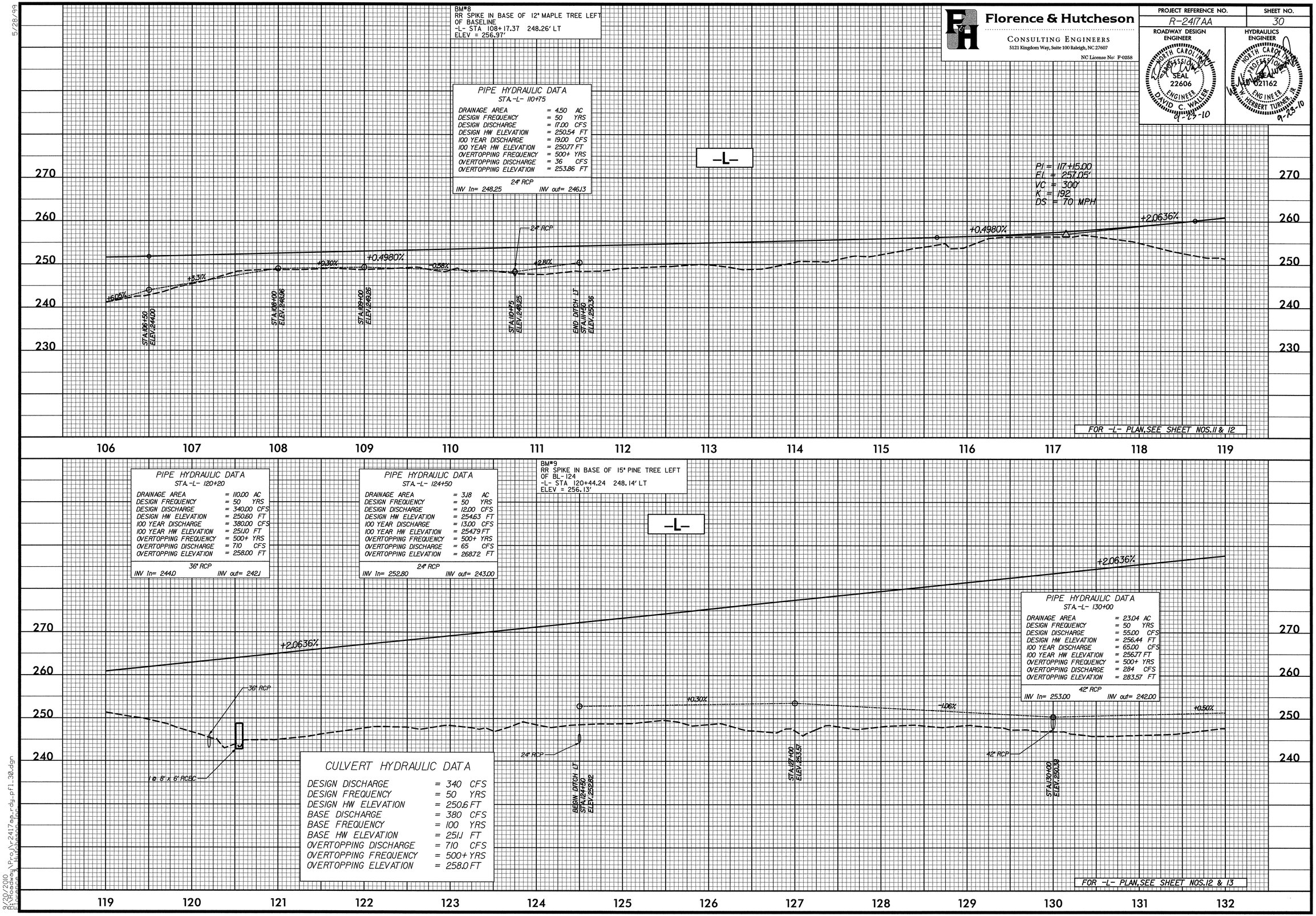

CULVERT HYDRAULIC DATA

DESIGN DISCHARGE	= 340	CFS
DESIGN FREQUENCY	= 50	YRS
DESIGN HW ELEVATION	= 250.6	FT
BASE DISCHARGE	= 380	CFS
BASE FREQUENCY	= 100	YRS
BASE HW ELEVATION	= 251.1	FT
OVERTOPPING DISCHARGE	= 710	CFS
OVERTOPPING FREQUENCY	= 500+	YRS
OVERTOPPING ELEVATION	= 258.0	FT

9/20/2010
R:\Roadway\Proj\r2417aa_rdy_pfl_30.dgn
Florence & Hutcheson, Inc.

5/28/99

BM# 10
RR SPIKE IN BASE OF 12" PINE TREE RIGHT OF BL-127
-L- STA 134+35.80 294.46' RT
ELEV = 243.36'

CULVERT HYDRAULIC DATA

DESIGN DISCHARGE	= 300	CFS
DESIGN FREQUENCY	= 50	YRS
DESIGN HW ELEVATION	= 255.8	FT
BASE DISCHARGE	= 340	CFS
BASE FREQUENCY	= 100	YRS
BASE HW ELEVATION	= 256.3	FT
OVERTOPPING DISCHARGE	= 590	CFS
OVERTOPPING FREQUENCY	= 500+	YRS
OVERTOPPING ELEVATION	= 260.0	FT

Florence & Hutcheson
CONSULTING ENGINEERS
5121 Kingdom Way, Suite 100 Raleigh, NC 27607
NC License No: F-0258

PROJECT REFERENCE NO.	SHEET NO.
R-2417AA	31

ROADWAY DESIGN ENGINEER
NORTH CAROLINA PROFESSIONAL SEAL 22606 ENGINEER DAVID C. WALLER
9-23-10

HYDRAULICS ENGINEER
NORTH CAROLINA PROFESSIONAL SEAL 021162 ENGINEER HERBERT TURNER, JR.
09-23-10

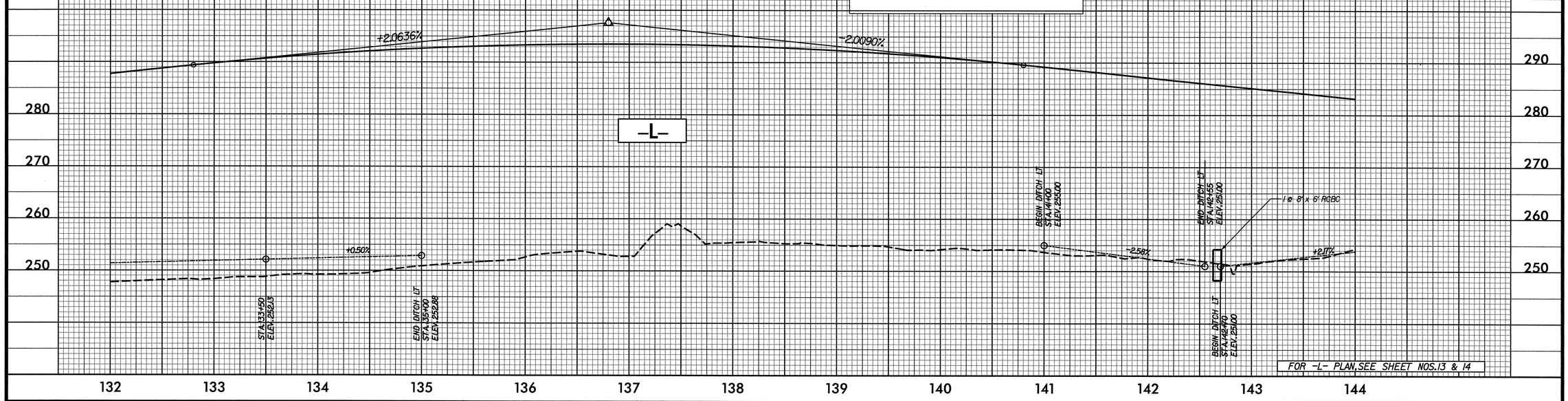

BM# 11
RR SPIKE IN BASE OF 12" TWIN GUM TREE RIGHT OF BL-131
-L- STA 145+43.92 381.68' RT
ELEV = 248.70'

PIPE HYDRAULIC DATA
STA. -L- 154+52

DRAINAGE AREA	= 84.20	AC
DESIGN FREQUENCY	= 50	YRS
DESIGN DISCHARGE	= 74.65	CFS
DESIGN HW ELEVATION	= 251.77	FT
100 YEAR DISCHARGE	= 91.71	CFS
100 YEAR HW ELEVATION	= 252.30	FT
OVERTOPPING FREQUENCY	= 500+	YRS
OVERTOPPING DISCHARGE	= 483	CFS
OVERTOPPING ELEVATION	= 262.00	FT

54" RCP
INV In= 246.97 INV out= 244.83

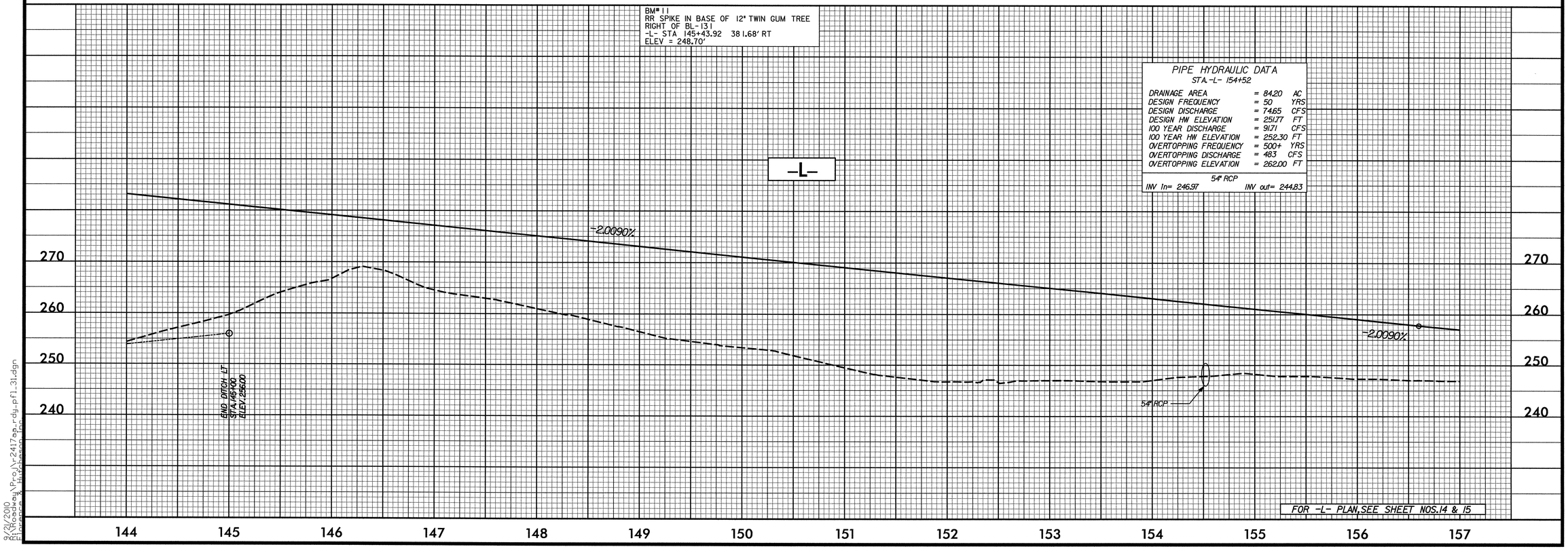

8/21/2010
R:\Roadway\Proj\r2417aa_rdy_pfl_31.dgn
Florence & Hutcheson, Inc.

5/28/99

Florence & Hutcheson
CONSULTING ENGINEERS
5121 Kingdom Way, Suite 100 Raleigh, NC 27607
NC License No: F-0258

PROJECT REFERENCE NO.	SHEET NO.
R-2417AA	32

ROADWAY DESIGN ENGINEER: NORTH CAROLINA PROFESSIONAL SEAL 22606 ENGINEER DAVID C. WALLER 9-23-10

HYDRAULICS ENGINEER: NORTH CAROLINA PROFESSIONAL SEAL 021162 ENGINEER HERBERT TURNER, JR. 9-23-10

BM# 12
RR SPIKE IN BASE OF 6" TWIN OAK TREE
LEFT OF BL-134
-L- STA 157+48.33 293.85' RT
ELEV = 265.20'

PIPE HYDRAULIC DATA
STA.-L- 157+20

DRAINAGE AREA	= 84.20	AC
DESIGN FREQUENCY	= 50	YRS
DESIGN DISCHARGE	= 95.35	CFS
DESIGN HW ELEVATION	= 251.77	FT
100 YEAR DISCHARGE	= 108.29	CFS
100 YEAR HW ELEVATION	= 252.30	FT
OVERTOPPING FREQUENCY	= 500+	YRS
OVERTOPPING DISCHARGE	= 483	CFS
OVERTOPPING ELEVATION	= 262.00	FT

48" RCP
INV In= 247.20 INV out= 246.00

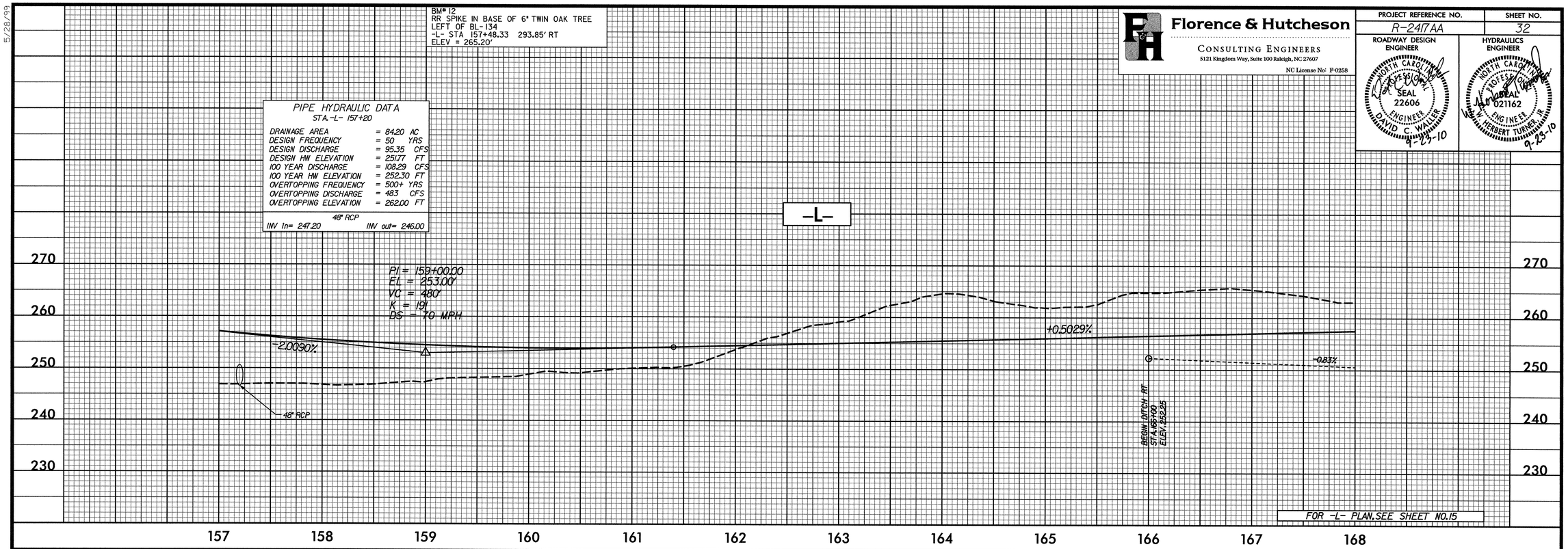

FOR -L- PLAN, SEE SHEET NO.15

BM# 13
RR SPIKE IN BASE OF 12" PINE TREE
RIGHT OF BL-138
-L- STA 173+46.58 254.45' RT
ELEV = 254.19'

PIPE HYDRAULIC DATA
STA.-L- 178+40

DRAINAGE AREA	= 37.00	AC
DESIGN FREQUENCY	= 50	YRS
DESIGN DISCHARGE	= 85.00	CFS
DESIGN HW ELEVATION	= 253.29	FT
100 YEAR DISCHARGE	= 95.00	CFS
100 YEAR HW ELEVATION	= 253.86	FT
OVERTOPPING FREQUENCY	= 500+	YRS
OVERTOPPING DISCHARGE	= 184	CFS
OVERTOPPING ELEVATION	= 261.00	FT

54" RCP
INV In= 248.2 INV out= 245.5

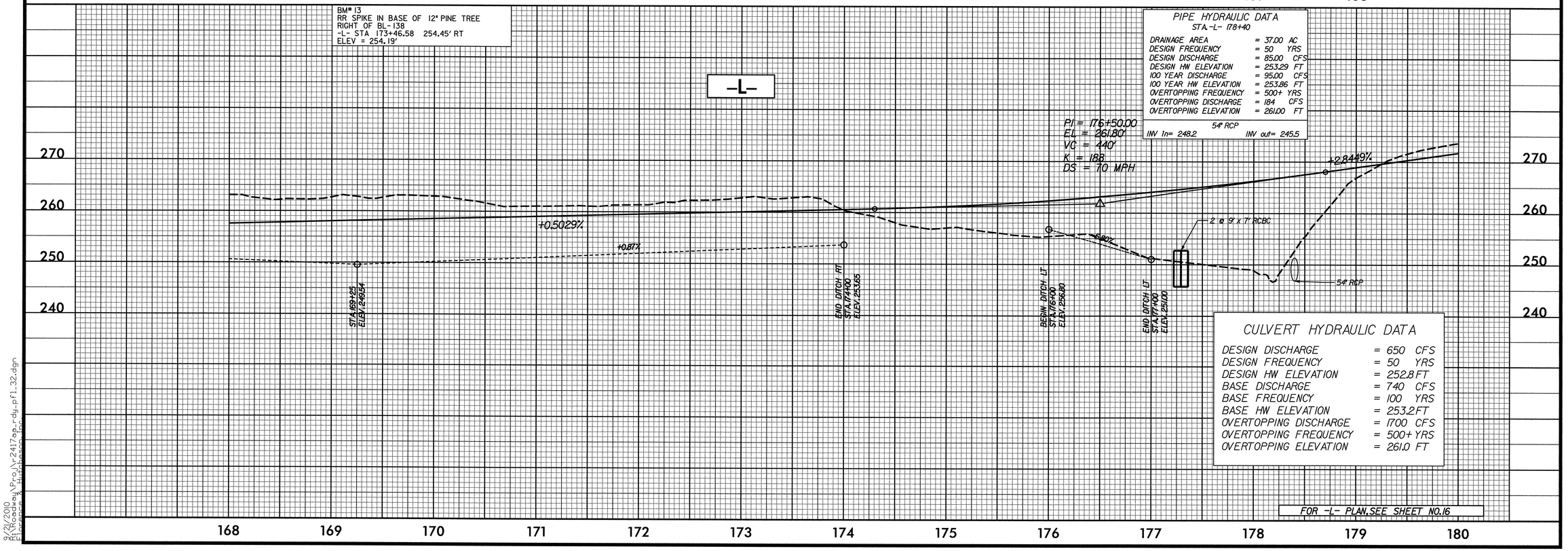

CULVERT HYDRAULIC DATA

DESIGN DISCHARGE	= 650	CFS
DESIGN FREQUENCY	= 50	YRS
DESIGN HW ELEVATION	= 252.8	FT
BASE DISCHARGE	= 740	CFS
BASE FREQUENCY	= 100	YRS
BASE HW ELEVATION	= 253.2	FT
OVERTOPPING DISCHARGE	= 1700	CFS
OVERTOPPING FREQUENCY	= 500+	YRS
OVERTOPPING ELEVATION	= 261.0	FT

FOR -L- PLAN, SEE SHEET NO.16

8/21/2010
R:\Roadway\Proj\r2417aa_rdy_pfl_32.dgn
Florence & Hutcheson, Inc.

5/28/99

Florence & Hutcheson
CONSULTING ENGINEERS
5121 Kingdom Way, Suite 100 Raleigh, NC 27607
NC License No: F-0258

PROJECT REFERENCE NO.	SHEET NO.
R-2417AA	33

ROADWAY DESIGN ENGINEER
NORTH CAROLINA PROFESSIONAL SEAL 022606 ENGINEER DAVID C. WALLER
9-23-10

HYDRAULICS ENGINEER
NORTH CAROLINA PROFESSIONAL SEAL 021162 ENGINEER HERBERT TURNER III
9-23-10

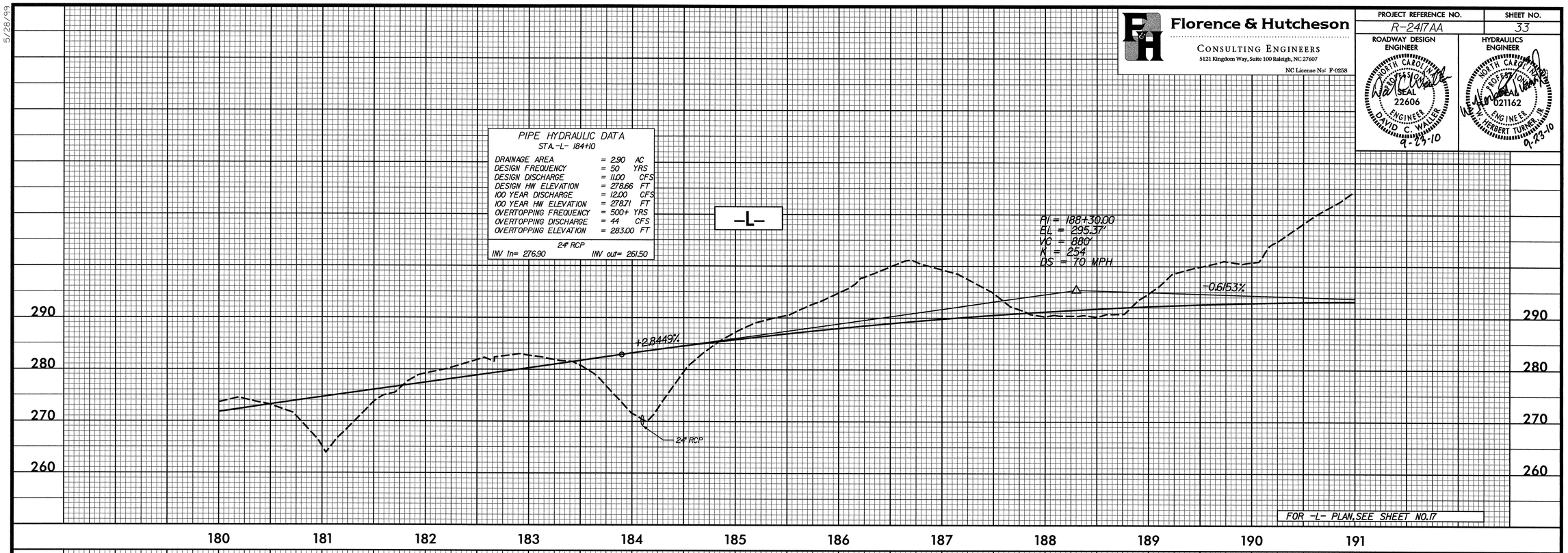

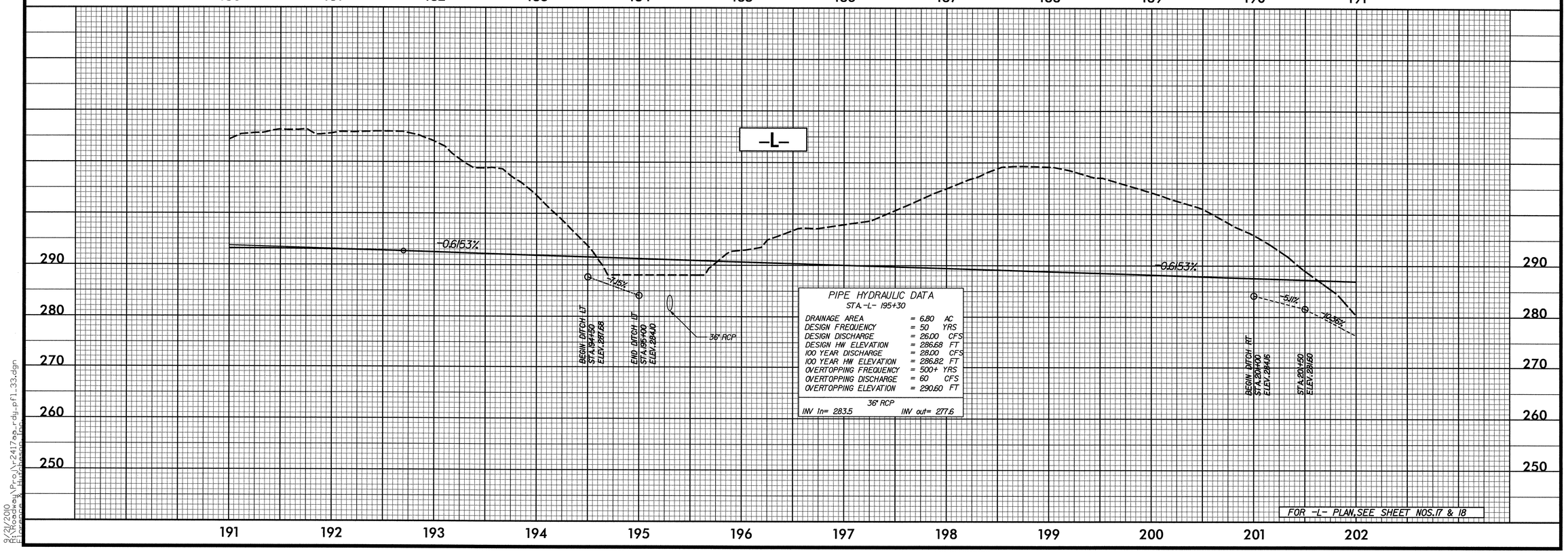

9/21/2010
f:\Roadway\Proj\r2417aa_rdy_pfl_33.dgn
Florence & Hutcheson, Inc.

5/28/99

Florence & Hutcheson
CONSULTING ENGINEERS
5121 Kingdom Way, Suite 100 Raleigh, NC 27607
NC License No: F-0258

PROJECT REFERENCE NO.	SHEET NO.
R-2417AA	34

ROADWAY DESIGN ENGINEER
NORTH CAROLINA PROFESSIONAL SEAL 22606 ENGINEER DAVID C. WALLER
9-23-10

HYDRAULICS ENGINEER
NORTH CAROLINA PROFESSIONAL SEAL 021162 ENGINEER HERBERT TURNER, JR.
9-23-10

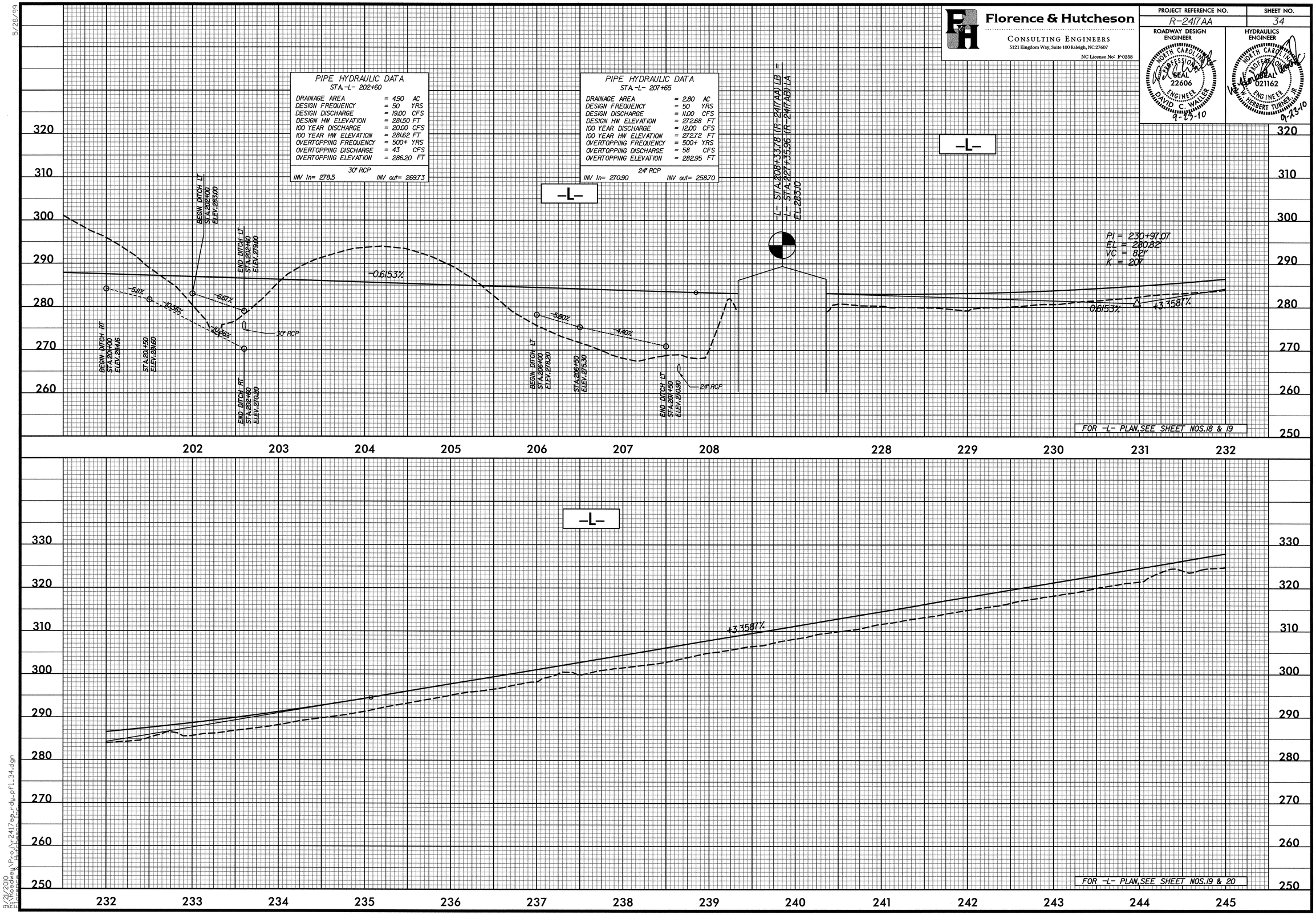

9/23/2010
R:\Roadway\Proj\r2417aa_rdy_pfl_34.dgn
Florence & Hutcheson, Inc.

5/28/99

Florence & Hutcheson
CONSULTING ENGINEERS
5121 Kingdom Way, Suite 100 Raleigh, NC 27607
NC License No: F-0258

PROJECT REFERENCE NO.	SHEET NO.
R-2417AA	35

ROADWAY DESIGN ENGINEER
NORTH CAROLINA PROFESSIONAL SEAL 22606 ENGINEER DAVID C. WALLER
9-23-10

HYDRAULICS ENGINEER
NORTH CAROLINA PROFESSIONAL SEAL 021162 ENGINEER HERBERT TURNER, JR.
9-23-10

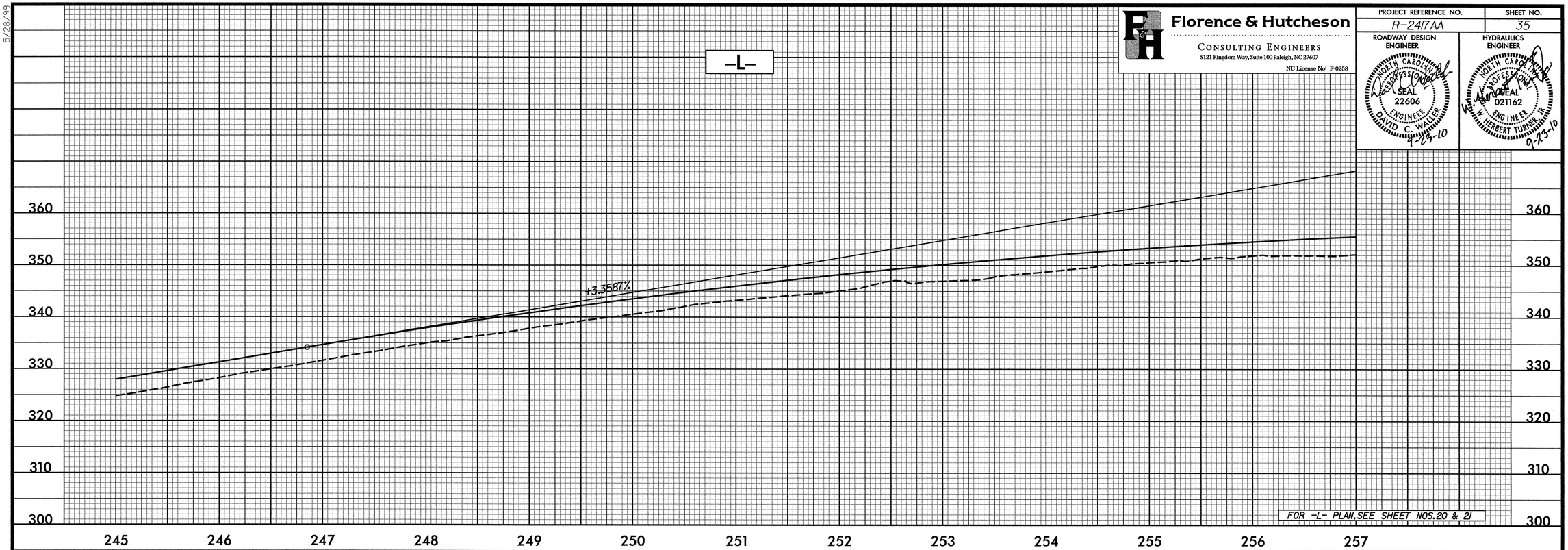

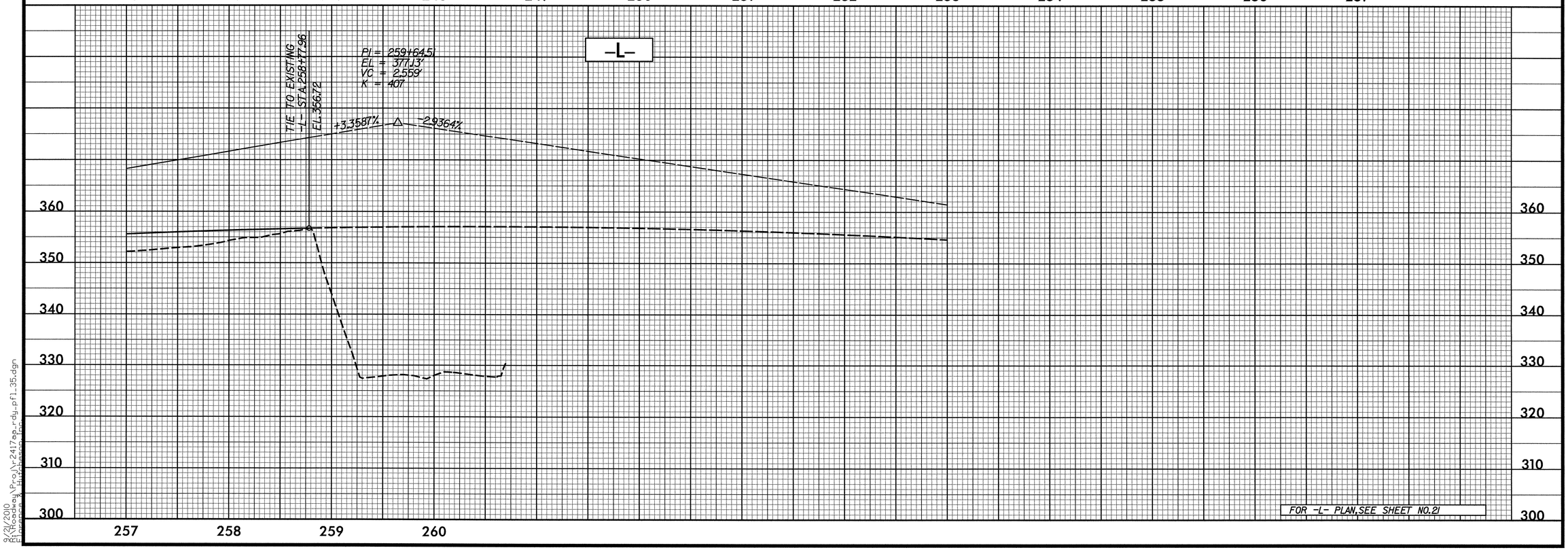

8/21/2010
R:\Roadway\Proj\r2417aa_rdy_pfl_35.dgn
Florence & Hutcheson, Inc.

5/28/99

Florence & Hutcheson
CONSULTING ENGINEERS
5121 Kingdom Way, Suite 100 Raleigh, NC 27607
NC License No: F-0258

PROJECT REFERENCE NO.	SHEET NO.
R-2417AA	36

ROADWAY DESIGN ENGINEER
NORTH CAROLINA PROFESSIONAL SEAL 22606 ENGINEER DAVID C. WALLER
4-23-10

HYDRAULICS ENGINEER
NORTH CAROLINA PROFESSIONAL SEAL 021162 ENGINEER HERBERT TURNER, JR.
4-23-10

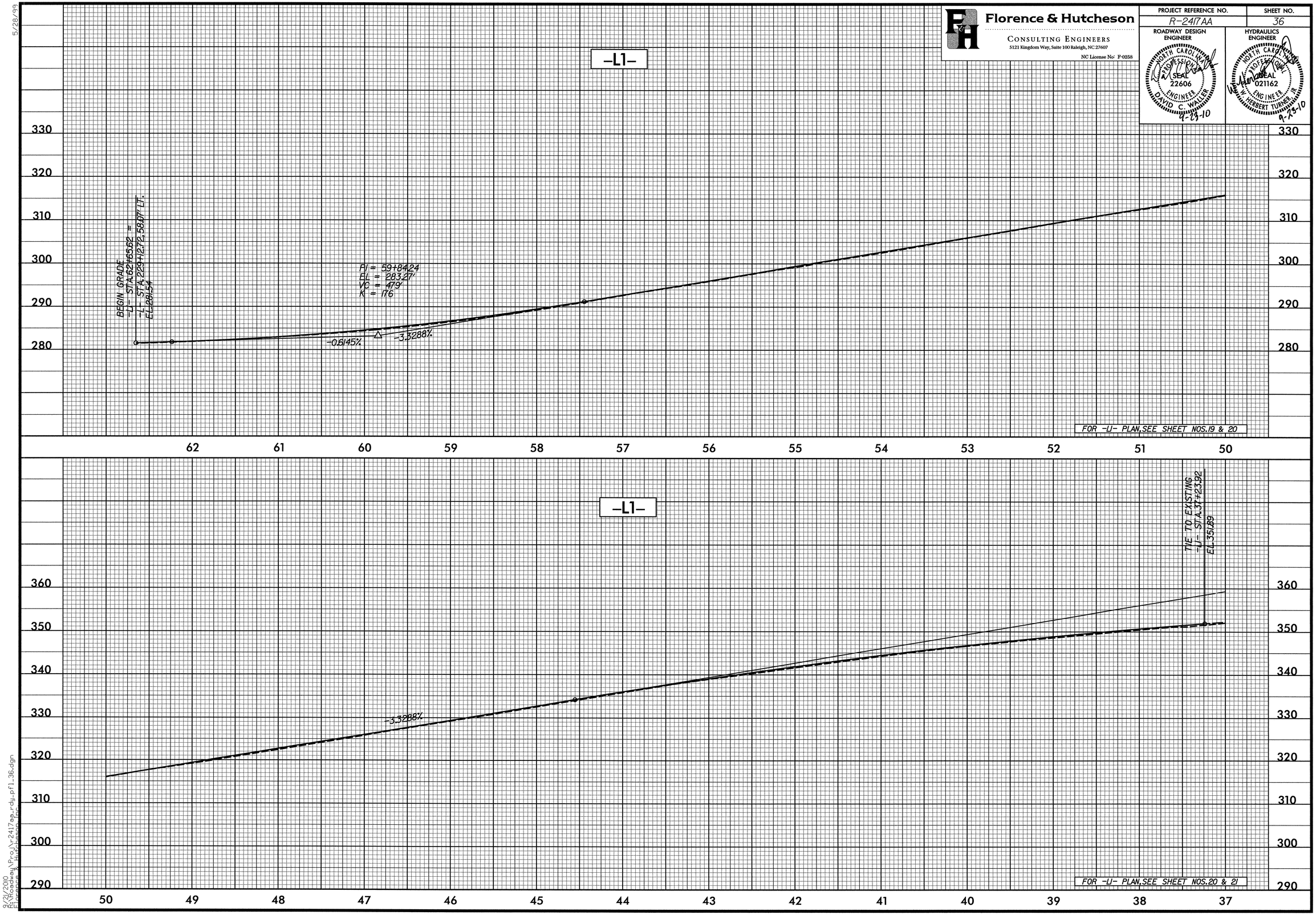

8/21/2010
R:\Roadway\Proj\r2417aa_rdy_pf1_36.dgn
Florence & Hutcheson, Inc.

5/28/99

Florence & Hutcheson
CONSULTING ENGINEERS
5121 Kingdom Way, Suite 100 Raleigh, NC 27607
NC License No: F-0258

PROJECT REFERENCE NO.	SHEET NO.
R-2417AA	37

ROADWAY DESIGN ENGINEER
NORTH CAROLINA PROFESSIONAL SEAL 22606 ENGINEER DAVID C. WALLER
9-23-10

HYDRAULICS ENGINEER
NORTH CAROLINA PROFESSIONAL SEAL 021162 ENGINEER HERBERT TURNER, JR.
9-23-10

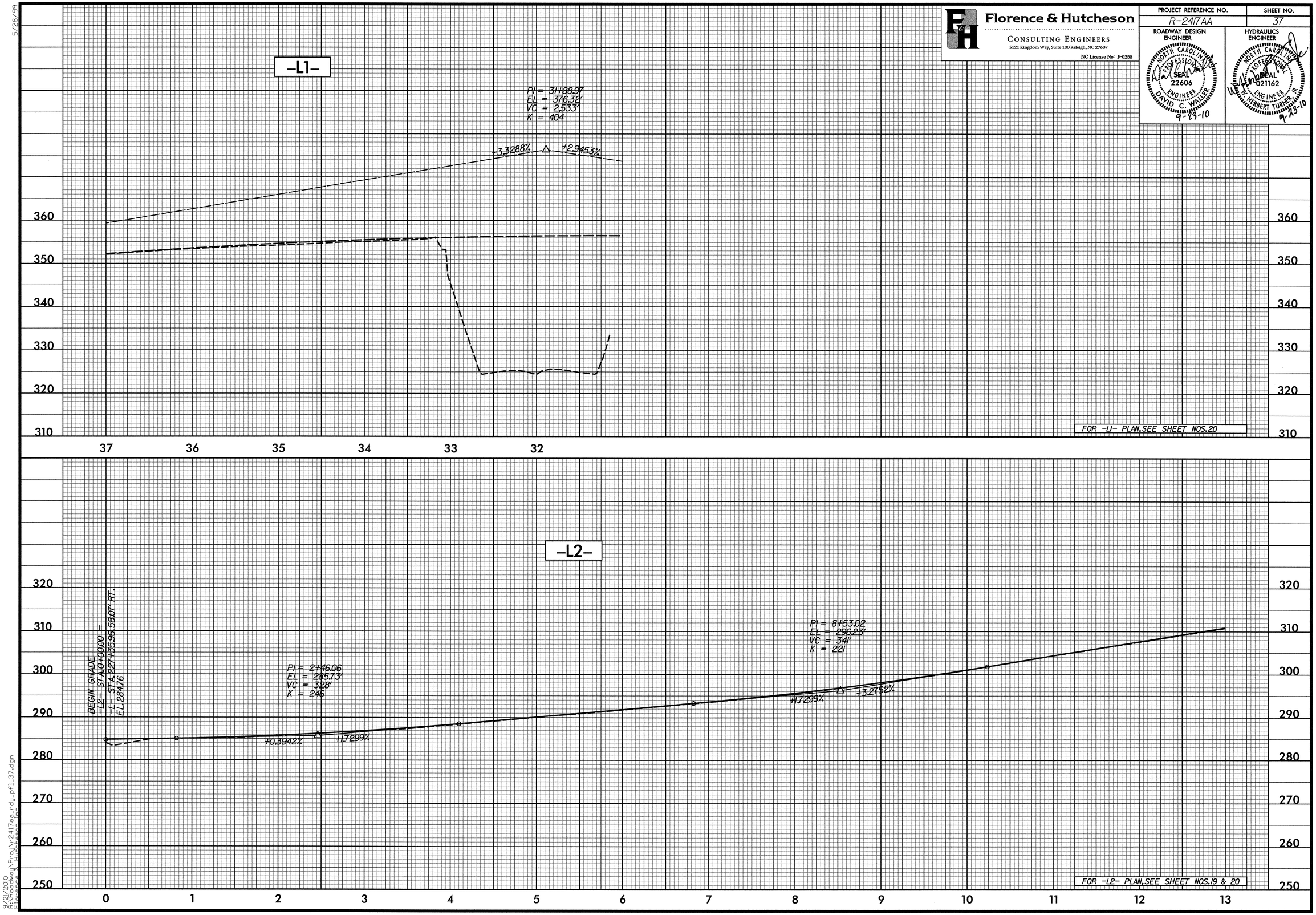

8/21/2010
R:\Roadway\Proj\r2417aa_rdy_pfl_37.dgn
Florence & Hutcheson, Inc.

5/28/99

Florence & Hutcheson
CONSULTING ENGINEERS
5121 Kingdom Way, Suite 100 Raleigh, NC 27607
NC License No: F-0258

PROJECT REFERENCE NO.	SHEET NO.
R-2417AA	38

ROADWAY DESIGN ENGINEER
NORTH CAROLINA PROFESSIONAL SEAL 22606 ENGINEER DAVID C. WALLER
9-23-10

HYDRAULICS ENGINEER
NORTH CAROLINA PROFESSIONAL SEAL 021162 ENGINEER HERBERT TURNER, JR.
9-23-10

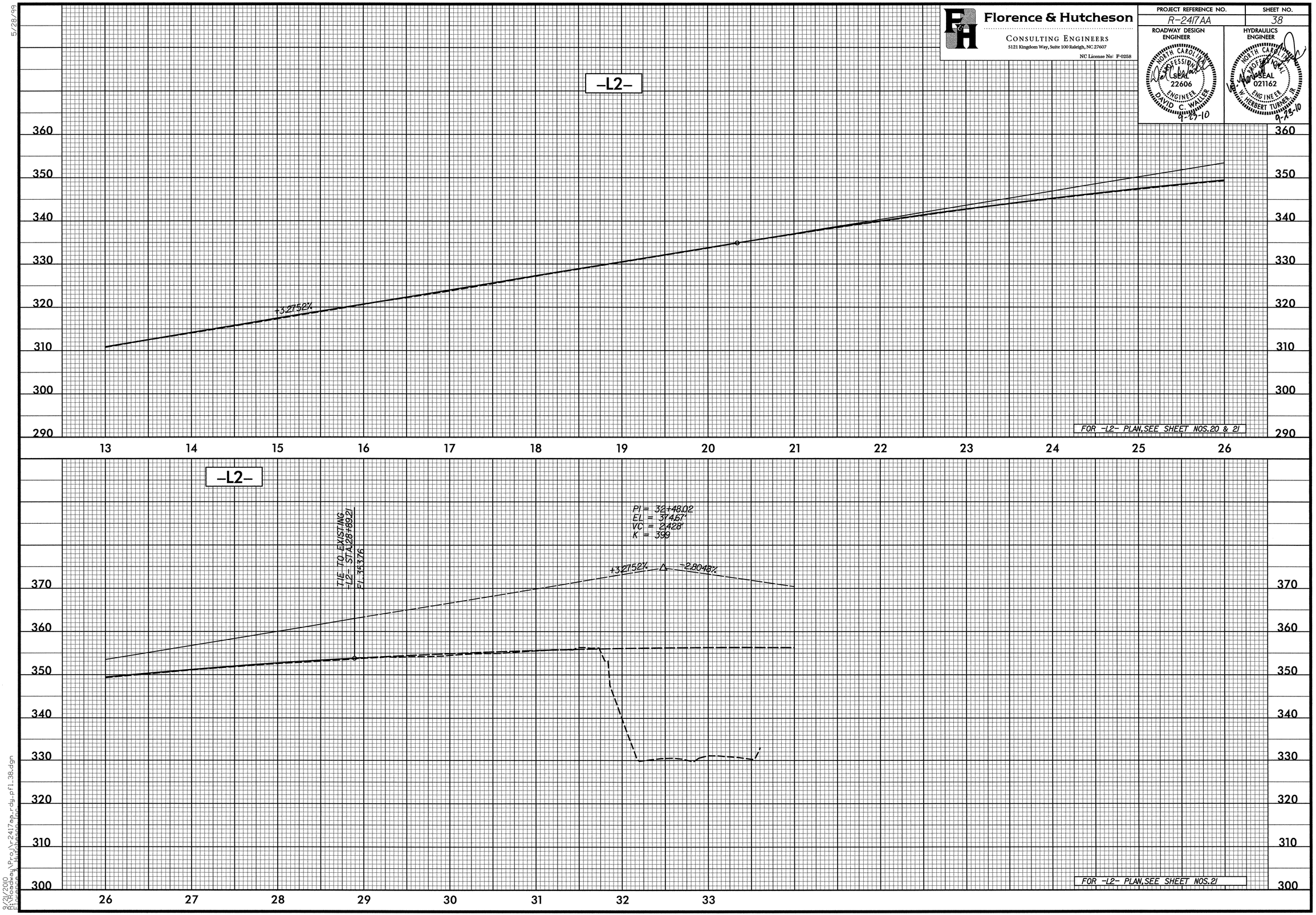

8/21/2010
R:\Roadway\Proj\r2417aa_rdy_pfl_38.dgn
Florence & Hutcheson Inc.

5/28/99

Florence & Hutcheson
CONSULTING ENGINEERS
5121 Kingdom Way, Suite 100 Raleigh, NC 27607
NC License No: F-0258

PROJECT REFERENCE NO.	SHEET NO.
R-2417AA	39

ROADWAY DESIGN ENGINEER
NORTH CAROLINA PROFESSIONAL SEAL 22606 ENGINEER DAVID C. WALLER
9-13-10

HYDRAULICS ENGINEER
NORTH CAROLINA PROFESSIONAL SEAL 021162 ENGINEER HERBERT TURNER, JR.
9-13-10

PIPE HYDRAULIC DATA
STA.-RPB- 18+06

DRAINAGE AREA	= 25.00	AC
DESIGN FREQUENCY	= 50	YRS
DESIGN DISCHARGE	= 60	CFS
DESIGN HW ELEVATION	= 236.69	FT
100 YEAR DISCHARGE	= 70	CFS
100 YEAR HW ELEVATION	= 237.10	FT
OVERTOPPING FREQUENCY	= 200+	YRS
OVERTOPPING DISCHARGE	= 107	CFS
OVERTOPPING ELEVATION	= 239.16	FT

42" RCP
INV In= INV out=

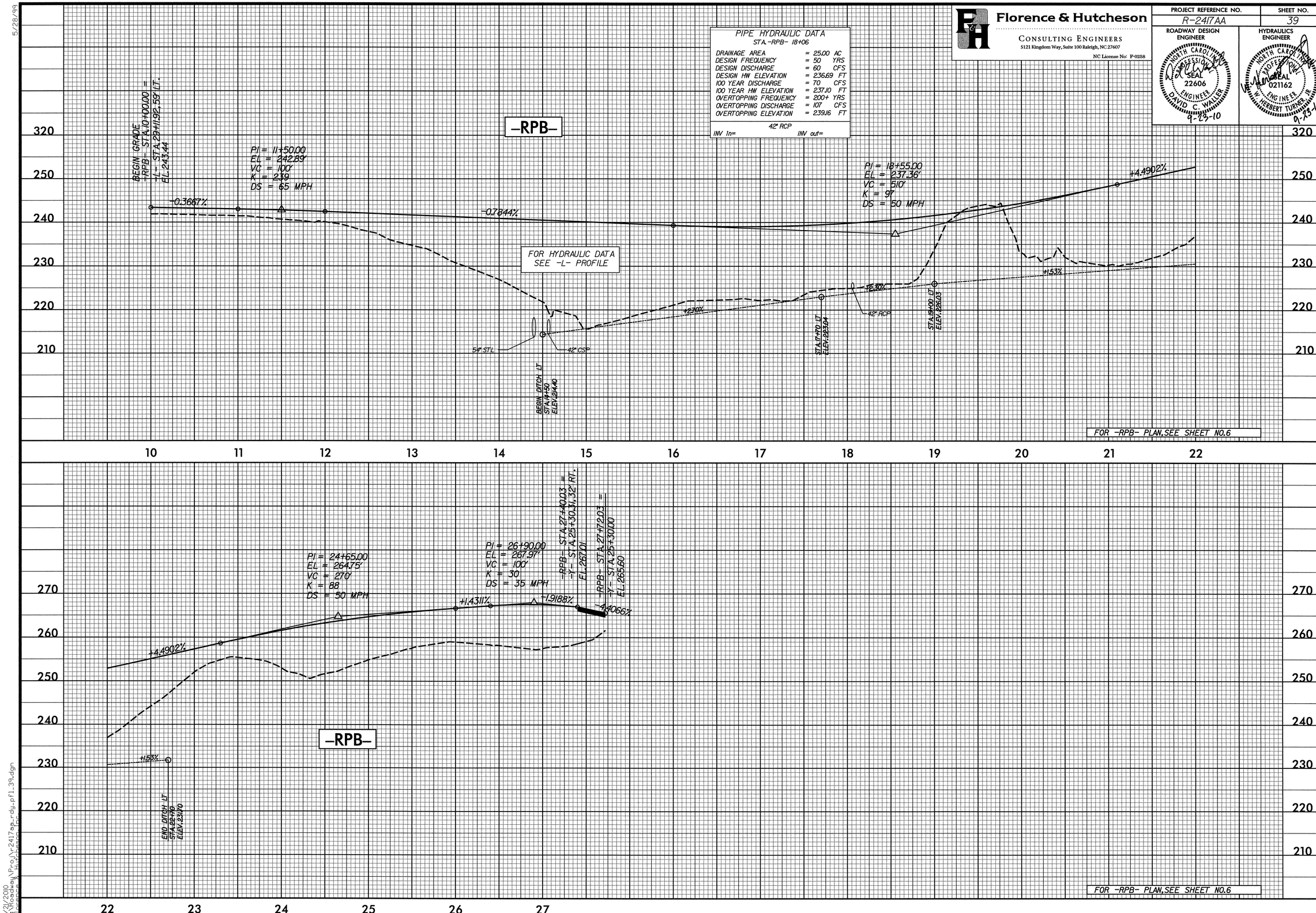

8/21/2010
R:\Roadway\Proj\r2417aa_rdy_pfl_39.dgn
Florence & Hutcheson, Inc.

5/28/99

Florence & Hutcheson
CONSULTING ENGINEERS
5121 Kingdom Way, Suite 100 Raleigh, NC 27607
NC License No: F-0258

PROJECT REFERENCE NO.	SHEET NO.
R-2417AA	40

ROADWAY DESIGN ENGINEER — NORTH CAROLINA PROFESSIONAL SEAL 22606 ENGINEER DAVID C. WALLER 9-23-10

HYDRAULICS ENGINEER — NORTH CAROLINA PROFESSIONAL SEAL 021162 ENGINEER HERBERT TURNER, JR. 9-23-10

-RPC-

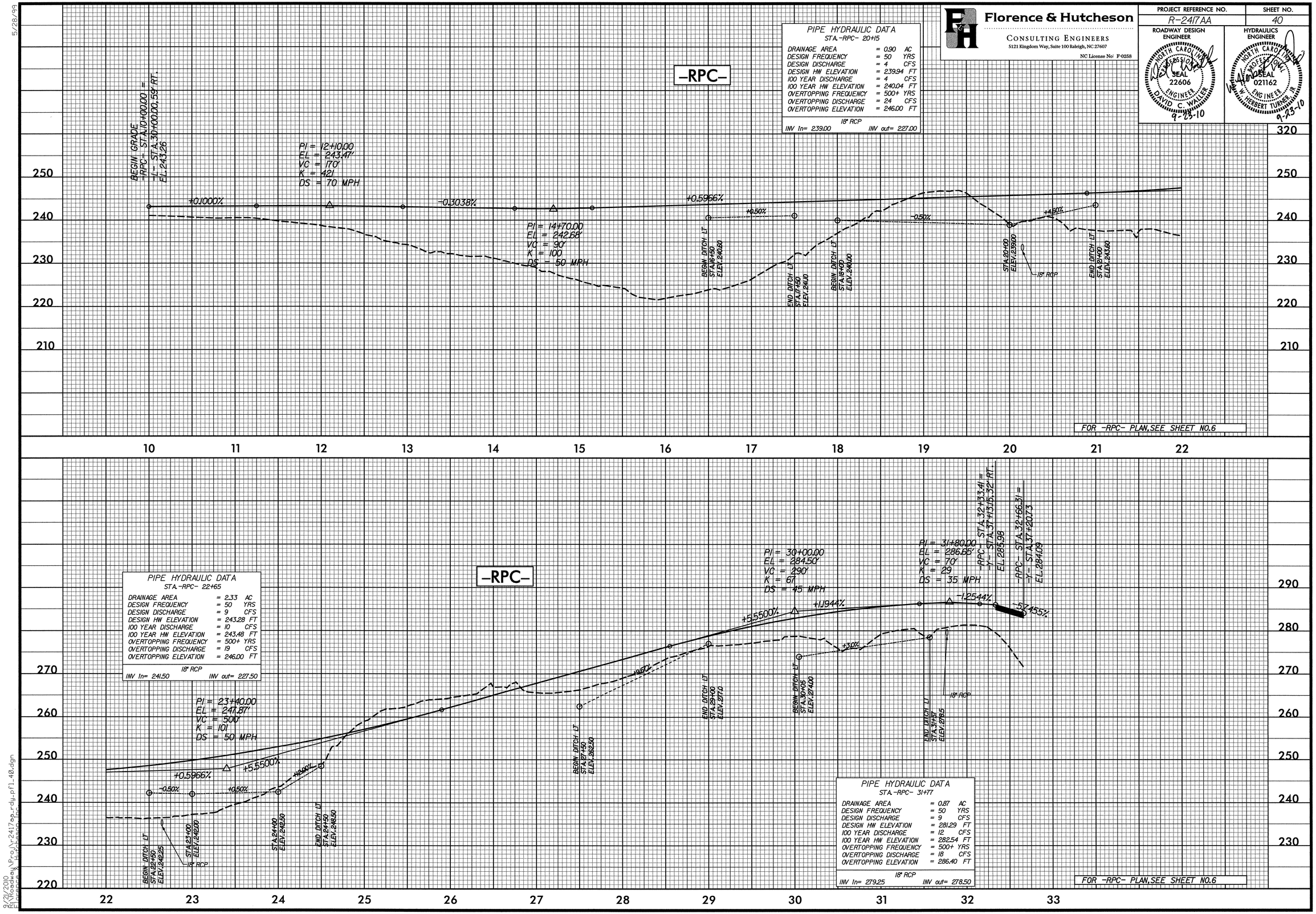

PIPE HYDRAULIC DATA
STA.-RPC- 20+15

DRAINAGE AREA	= 0.90	AC
DESIGN FREQUENCY	= 50	YRS
DESIGN DISCHARGE	= 4	CFS
DESIGN HW ELEVATION	= 239.94	FT
100 YEAR DISCHARGE	= 4	CFS
100 YEAR HW ELEVATION	= 240.04	FT
OVERTOPPING FREQUENCY	= 500+	YRS
OVERTOPPING DISCHARGE	= 24	CFS
OVERTOPPING ELEVATION	= 246.00	FT

18" RCP
INV In= 239.00 INV out= 227.00

-RPC-

PIPE HYDRAULIC DATA
STA.-RPC- 22+65

DRAINAGE AREA	= 2.33	AC
DESIGN FREQUENCY	= 50	YRS
DESIGN DISCHARGE	= 9	CFS
DESIGN HW ELEVATION	= 243.28	FT
100 YEAR DISCHARGE	= 10	CFS
100 YEAR HW ELEVATION	= 243.48	FT
OVERTOPPING FREQUENCY	= 500+	YRS
OVERTOPPING DISCHARGE	= 19	CFS
OVERTOPPING ELEVATION	= 246.00	FT

18" RCP
INV In= 241.50 INV out= 227.50

PIPE HYDRAULIC DATA
STA.-RPC- 31+77

DRAINAGE AREA	= 0.87	AC
DESIGN FREQUENCY	= 50	YRS
DESIGN DISCHARGE	= 9	CFS
DESIGN HW ELEVATION	= 281.29	FT
100 YEAR DISCHARGE	= 12	CFS
100 YEAR HW ELEVATION	= 282.54	FT
OVERTOPPING FREQUENCY	= 500+	YRS
OVERTOPPING DISCHARGE	= 18	CFS
OVERTOPPING ELEVATION	= 286.40	FT

18" RCP
INV In= 279.25 INV out= 278.50

9/21/2010
R:\Roadway\Proj\r-2417aa_rdy_pfl_40.dgn
Florence & Hutcheson, Inc.

5/28/99

Florence & Hutcheson
CONSULTING ENGINEERS
5121 Kingdom Way, Suite 100 Raleigh, NC 27607
NC License No: F-0258

PROJECT REFERENCE NO.	SHEET NO.
R-2417AA	41

ROADWAY DESIGN ENGINEER
NORTH CAROLINA PROFESSIONAL ENGINEER SEAL 22606 DAVID C. WALLER
9-23-10

HYDRAULICS ENGINEER
NORTH CAROLINA PROFESSIONAL ENGINEER SEAL 021162 HERBERT TURNER, JR.
9-23-10

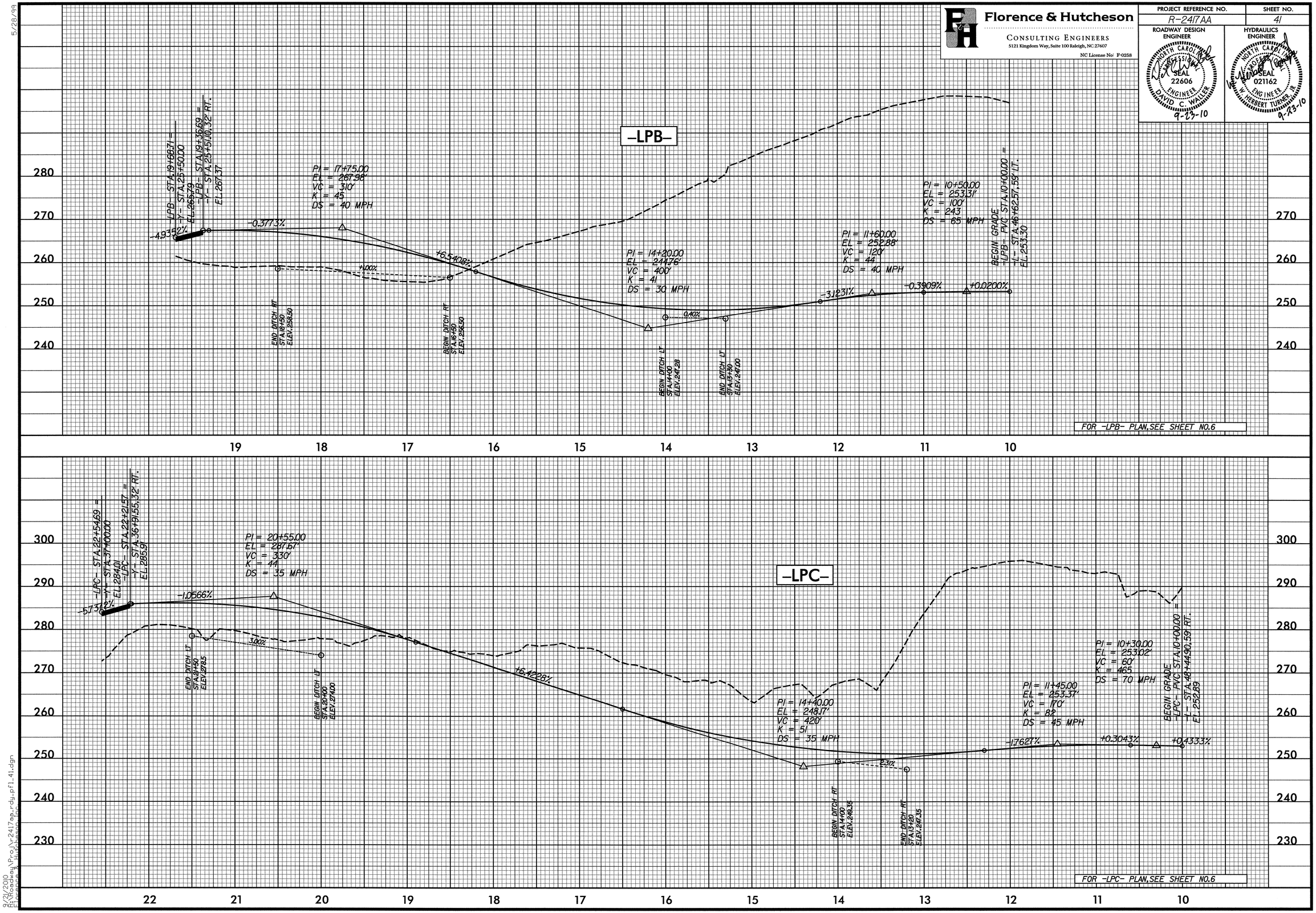

8/21/2010
R:\Roadway\Proj\r-2417aa_rdy_pfl_41.dgn
Florence & Hutcheson, Inc.

5/28/99

Florence & Hutcheson
CONSULTING ENGINEERS
5121 Kingdom Way, Suite 100 Raleigh, NC 27607
NC License No: F-0258

PROJECT REFERENCE NO.	SHEET NO.
R-2417AA	42

ROADWAY DESIGN ENGINEER
NORTH CAROLINA PROFESSIONAL SEAL 22606 ENGINEER DAVID C. WALLER
9-23-10

HYDRAULICS ENGINEER
NORTH CAROLINA PROFESSIONAL SEAL 021162 ENGINEER HERBERT TURNER, JR.
9-23-10

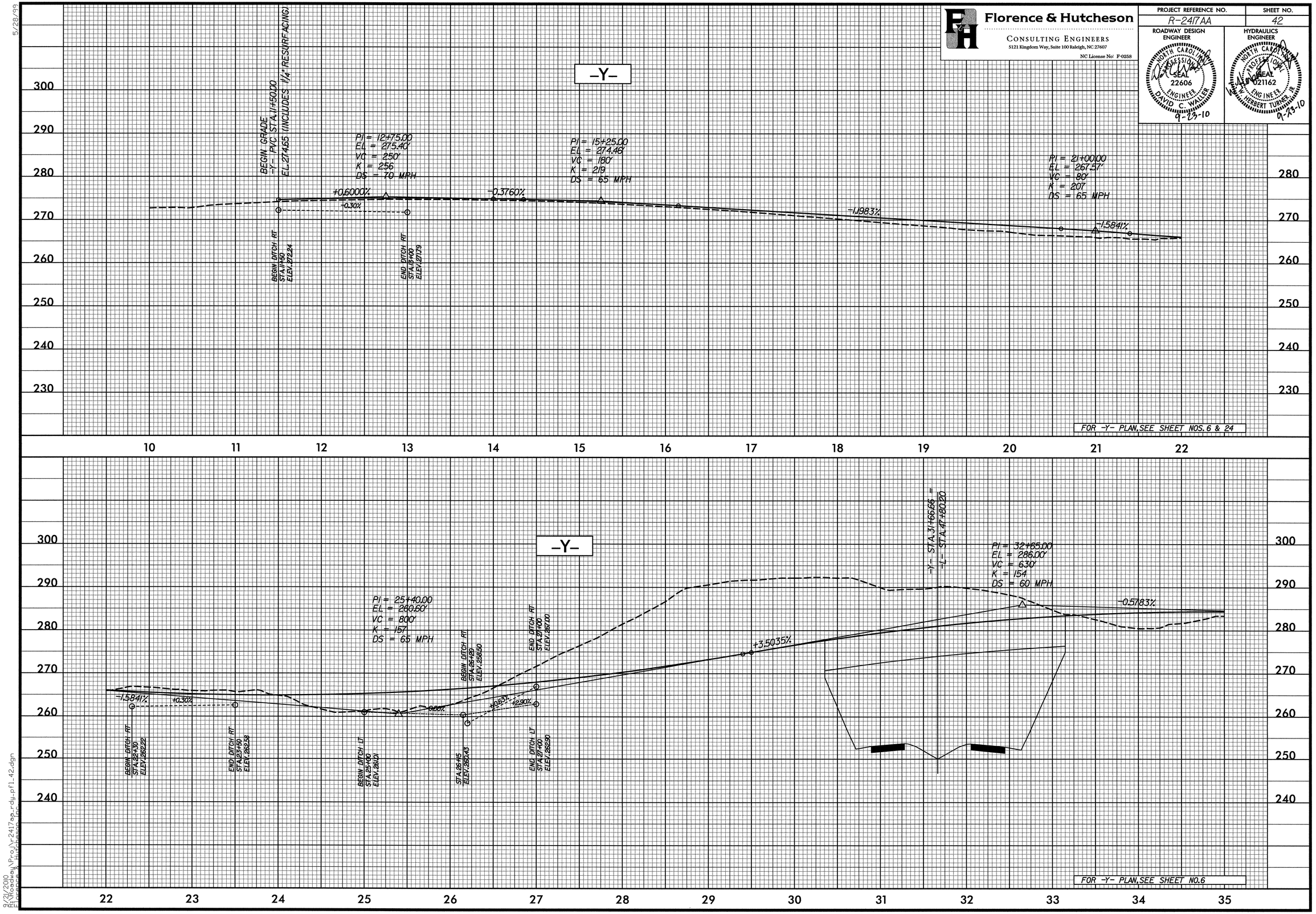

8/24/2010
R:\Roadway\Proj\r-2417aa_rdy_pfl_42.dgn
FLORENCE & HUTCHESON

5/28/99

Florence & Hutcheson
CONSULTING ENGINEERS
5121 Kingdom Way, Suite 100 Raleigh, NC 27607
NC License No: F-0258

PROJECT REFERENCE NO.	SHEET NO.
R-2417AA	43

ROADWAY DESIGN ENGINEER
NORTH CAROLINA PROFESSIONAL SEAL 22606 ENGINEER DAVID C. WALLER
9-23-10

HYDRAULICS ENGINEER
NORTH CAROLINA PROFESSIONAL SEAL 021162 ENGINEER HERBERT TURNER, JR.
9-23-10

PIPE HYDRAULIC DATA
STA.-Y- 40+25

DRAINAGE AREA	= 6.31	AC
DESIGN FREQUENCY	= 50	YRS
DESIGN DISCHARGE	= 16	CFS
DESIGN HW ELEVATION	= 261.77	FT
100 YEAR DISCHARGE	= 17	CFS
100 YEAR HW ELEVATION	= 261.96	FT
OVERTOPPING FREQUENCY	= 500+	YRS
OVERTOPPING DISCHARGE	= 52	CFS
OVERTOPPING ELEVATION	= 285.71	FT

EXISTING 24" CSP
INV In= 259.38 INV out= 222.88

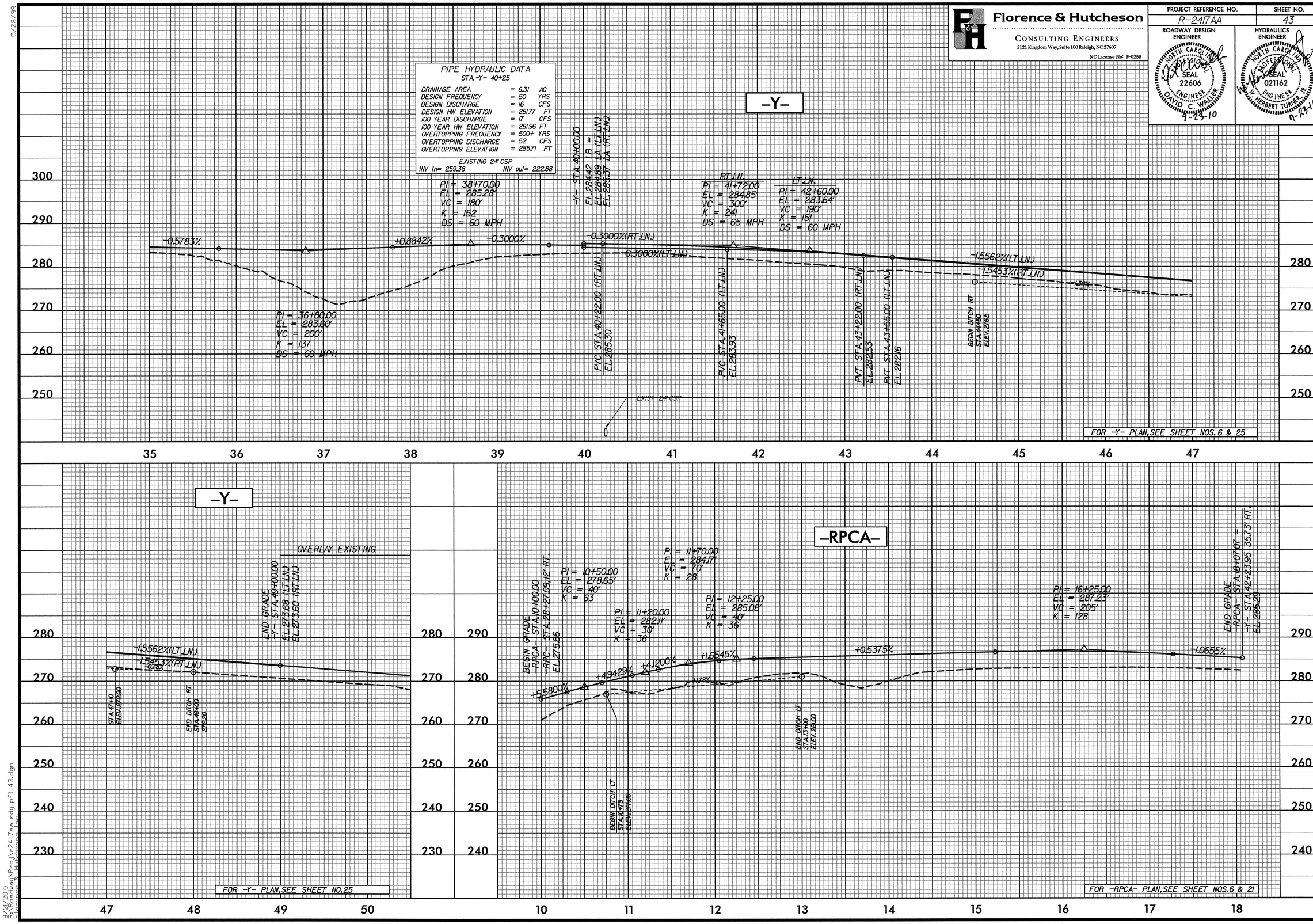

9/21/2010
R:\Roadway\Proj\r2417aa_rdy_pfl_43.dgn
Florence & Hutcheson, Inc.

5/28/99

Florence & Hutcheson
CONSULTING ENGINEERS
5121 Kingdom Way, Suite 100 Raleigh, NC 27607
NC License No: F-0258

PROJECT REFERENCE NO.	SHEET NO.
R-2417AA	44

ROADWAY DESIGN ENGINEER
NORTH CAROLINA PROFESSIONAL SEAL 22606 ENGINEER DAVID C. WALLER
9-23-10

HYDRAULICS ENGINEER
NORTH CAROLINA PROFESSIONAL SEAL 021162 ENGINEER W. HERBERT TURNER, JR.
9-23-10

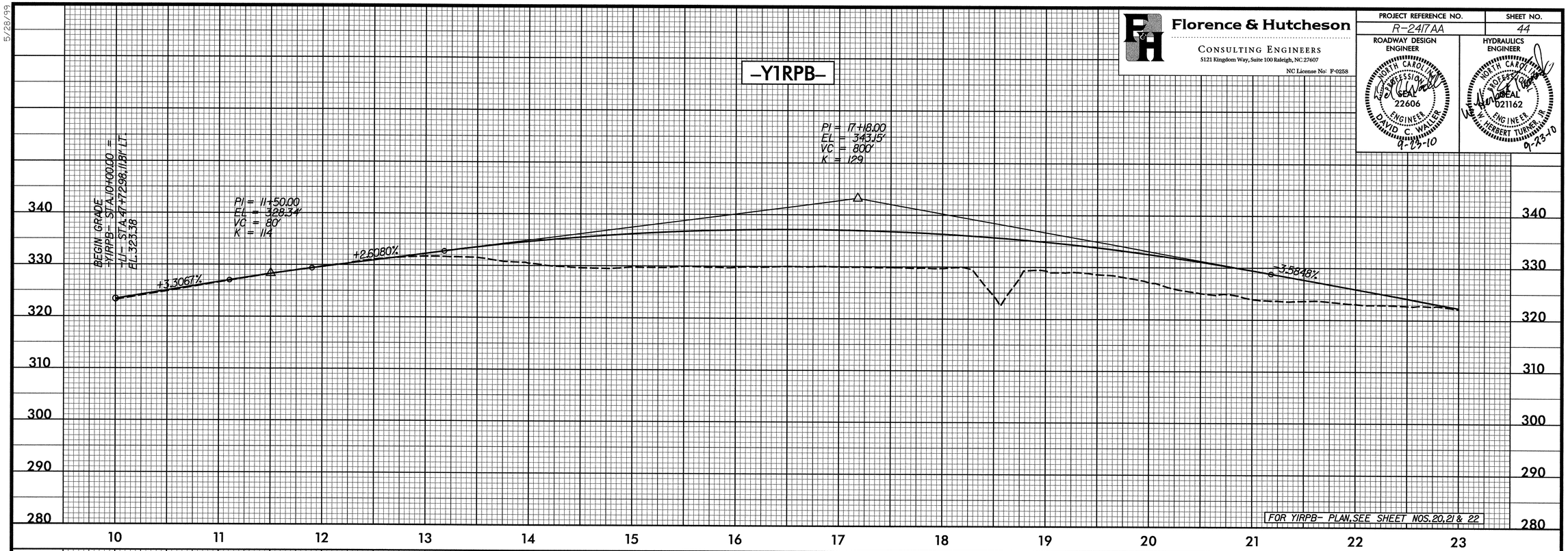

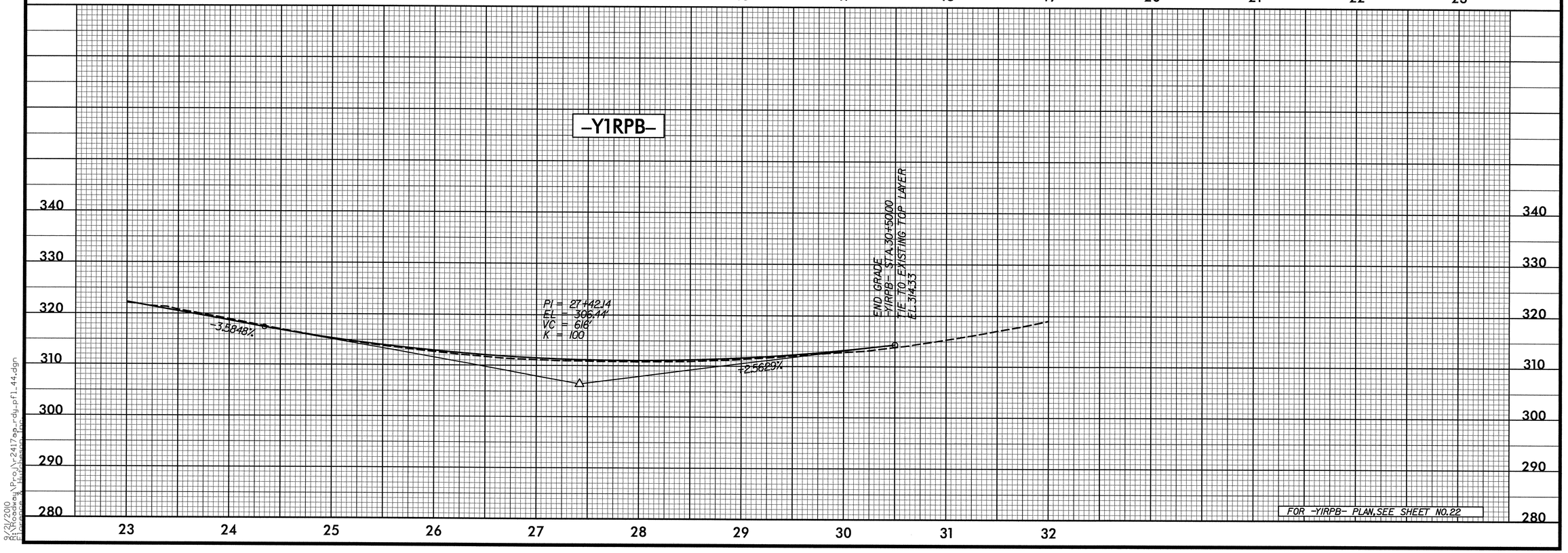

9/21/2010
R:\Roadway\Proj\r-2417aa_rdy.pfl_44.dgn
Florence & Hutcheson, Inc.

5/28/99

Florence & Hutcheson
CONSULTING ENGINEERS
5121 Kingdom Way, Suite 100 Raleigh, NC 27607
NC License No: F-0258

PROJECT REFERENCE NO.	SHEET NO.
R-2417AA	45

ROADWAY DESIGN ENGINEER
NORTH CAROLINA PROFESSIONAL SEAL 22606 ENGINEER DAVID C. WALLER
9-23-10

HYDRAULICS ENGINEER
NORTH CAROLINA PROFESSIONAL SEAL 021162 ENGINEER HERBERT TURNER, JR.
9-23-10

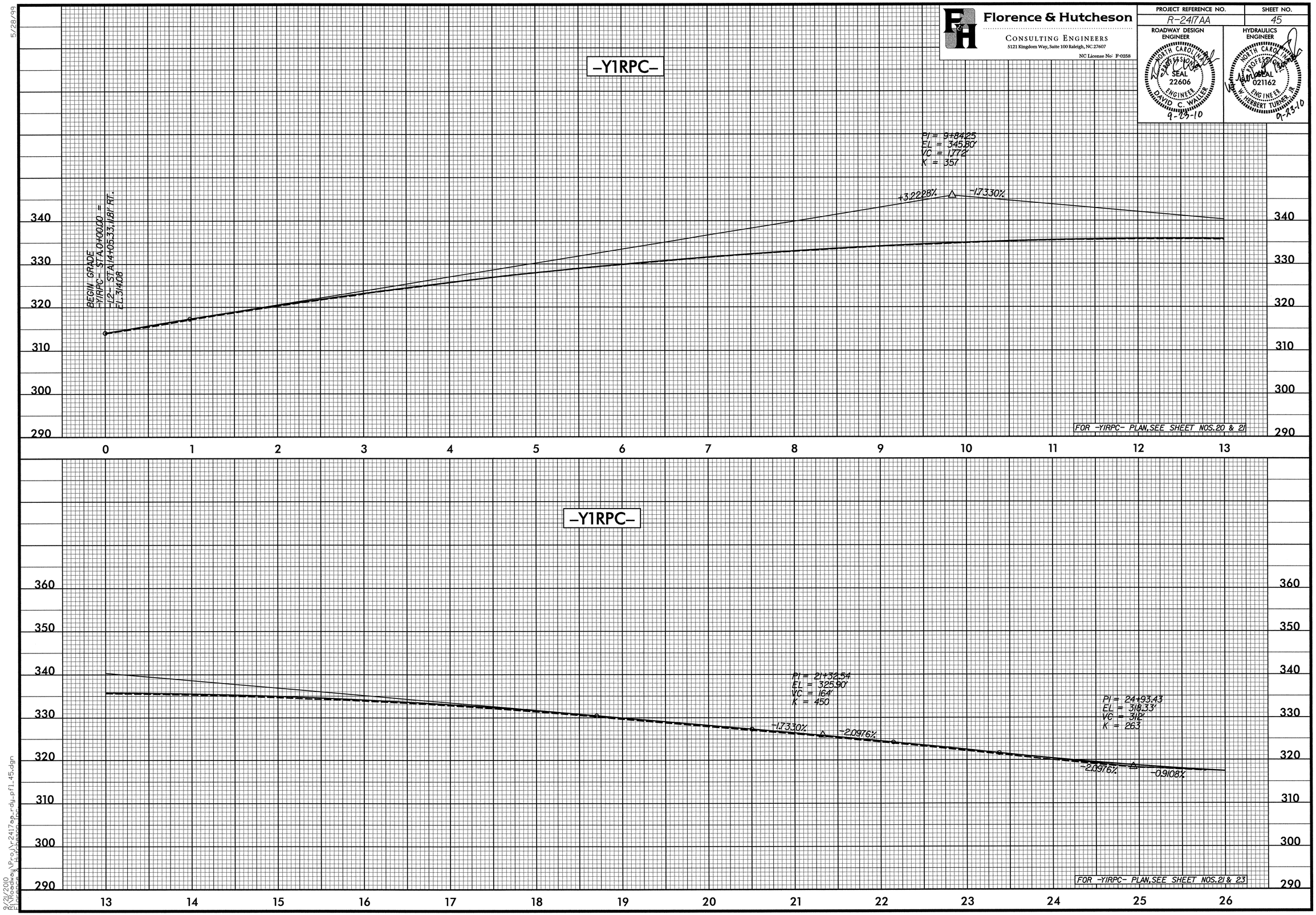

8/23/2010
R:\Roadway\Proj\r2417aa_rdy_pf1_45.dgn
FLORENCE & HUTCHESON, INC.

5/28/99

Florence & Hutcheson
CONSULTING ENGINEERS
5121 Kingdom Way, Suite 100 Raleigh, NC 27607
NC License No: F-0258

PROJECT REFERENCE NO.	SHEET NO.
R-2417AA	46

ROADWAY DESIGN ENGINEER
NORTH CAROLINA PROFESSIONAL SEAL 22606 ENGINEER DAVID C. WALLER
9-23-10

HYDRAULICS ENGINEER
NORTH CAROLINA PROFESSIONAL SEAL 021162 ENGINEER HERBERT TURNER, JR.
09-23-10

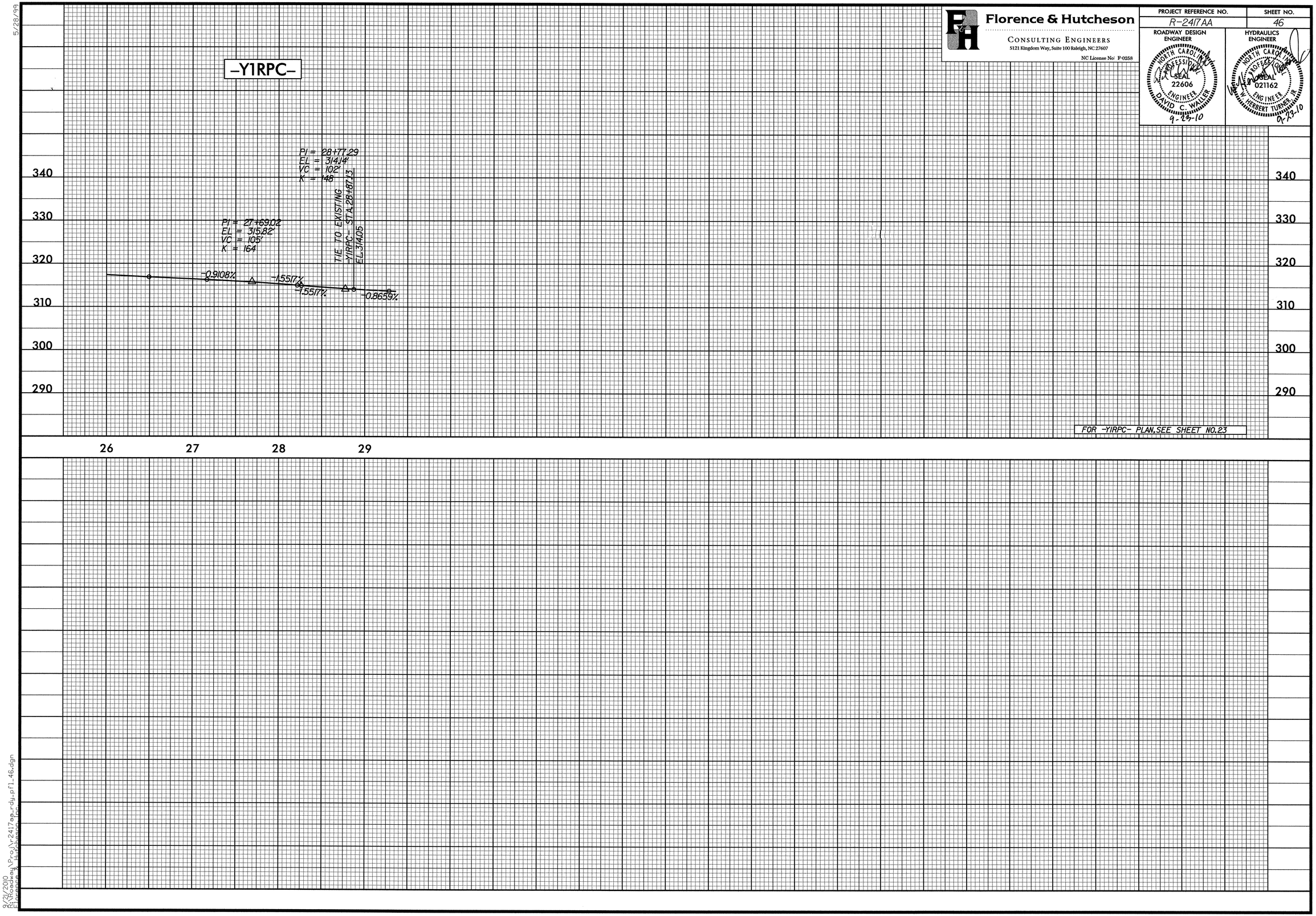

9/21/2010
R:\Roadway\Proj\r2417aa_rdy_pfl_46.dgn
Florence & Hutcheson Inc.