TIP PROJECT: R-2417 AA

CONTRACT: C202331

STRUCTURES

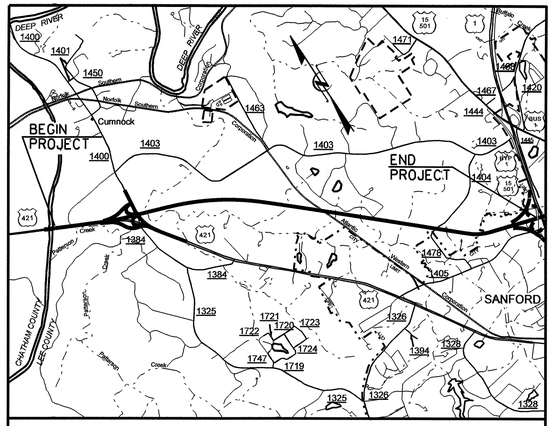

VICINITY MAP

STATE OF NORTH CAROLINA
DIVISION OF HIGHWAYS

LEE COUNTY

STATE	STATE PROJECT REFERENCE NO.		
N.C.	R-2417 AA		
STATE PROJ. NO.	F. A. PROJ. NO.	DESCRIPTION	
34431.1.2	STP-NHF-421(2)	P.E.	
34431.2.2	STP-NHF-421(15)	RW & UTIL.	
34431.3.7		CONST.	

LOCATION: US 421-NC 87 SANFORD BYPASS FROM WEST OF SR 1400 TO WEST OF US 1-15-501

TYPE OF WORK: GRADING, DRAINAGE, PAVING, STRUCTURES, SIGNING AND SIGNALS

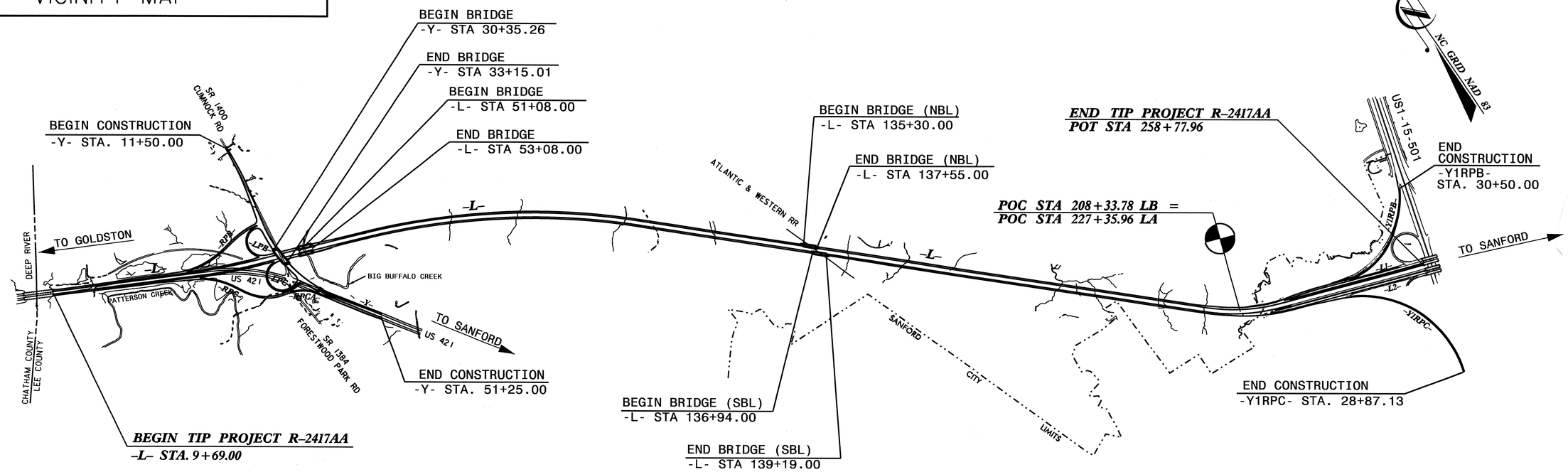

THIS IS A CONTROLLED - ACCESS PROJECT WITH ACCESS BEING LIMITED TO INTERCHANGES.

STATE OF NORTH CAROLINA DEPARTMENT OF TRANSPORTATION

DESIGN DATA

ADT 2011 = 14,430
ADT 2031 = 21,930
DHV = 10 %
D = 60 %
T = 9 % *
V = 70 MPH

* TTST 5% DUAL 4%
FUNC. CLASS.: FREEWAY

PROJECT LENGTH

LENGTH ROADWAY T.I.P. PROJECT R-2417 AA = 4.277 MILES
LENGTH STRUCTURES T.I.P. PROJECT R-2417 AA = 0.080 MILES
TOTAL LENGTH OF T.I.P. PROJECT R-2417 AA = 4.357 MILES

2006 STANDARDS SPECIFICATION

LETTING DATE:
JANUARY 18, 2011

Prepared in the Office of:
DEPARTMENT OF TRANSPORTATION
DIVISION OF HIGHWAYS
1000 Birch Ridge Drive Raleigh, N.C. 27610

B. S. COX, P. E.
PROJECT ENGINEER

T.J. BEACH, P. E.
PROJECT DESIGN ENGINEER

DIVISION OF HIGHWAYS
STATE OF NORTH CAROLINA

P.E.
STATE HIGHWAY ENGINEER - DESIGN

DEPARTMENT OF TRANSPORTATION
FEDERAL HIGHWAY ADMINISTRATION

APPROVED FOR
DIVISION ADMINISTRATOR *DATE*

21-OCT-2010 14:54
R:\Structures\R2417AA_TITLE.dgn
mbritt

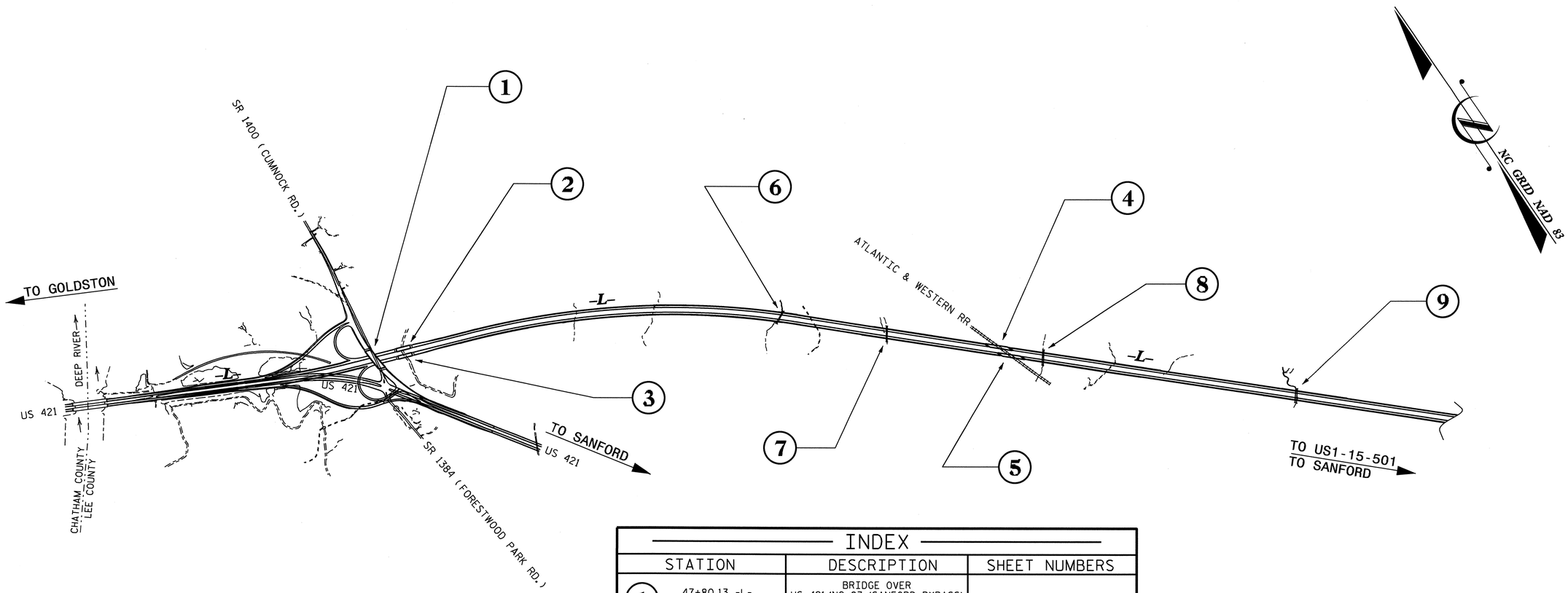

INDEX

STATION	DESCRIPTION	SHEET NUMBERS
1 — 47+80.13 -L- = 31+66.51 -Y-	BRIDGE OVER US 421/NC 87 (SANFORD BYPASS) ON SR 1400 (CUMNOCK RD.) BETWEEN SR 1403 AND SR 1384	S-1 THRU S-43
2 — 52+08.00 -L-	NBL BRIDGE OVER BIG BUFFALO CREEK ON US 421/NC 87 (SANFORD BYPASS) BETWEEN US 421 AND US 1-15-501	S-44 THRU S-69*
3 — 52+08.00 -L-	SBL BRIDGE OVER BIG BUFFALO CREEK ON US 421/NC 87 (SANFORD BYPASS) BETWEEN US 421 AND US 1-15-501	*S-83 THRU S-108
4 — 137+42.08 -L-	NBL BRIDGE OVER ATLANTIC & WESTERN RR ON US 421/NC 87 (SANFORD BYPASS) BETWEEN US 421 AND US 1-15-501	S-109 THRU S-135
5 — 137+42.08 -L-	SBL BRIDGE OVER ATLANTIC & WESTERN RR ON US 421/NC 87 (SANFORD BYPASS) BETWEEN US 421 AND US 1-15-501	S-136 THRU S-162
6 — 105+20.00 -L-	SINGLE 9' x 6' CONCRETE BOX CULVERT	C-1 THRU C-4
7 — 120+57.00 -L-	SINGLE 8' x 6' CONCRETE BOX CULVERT	C-5 THRU C-7
8 — 142+67.00 -L-	SINGLE 8' x 6' CONCRETE BOX CULVERT	C-8 THRU C-11
9 — 177+29.00 -L-	DOUBLE 9' x 7' CONCRETE BOX CULVERT	C-12 THRU C-14

*SHEETS S-70 THROUGH S-82 HAVE BEEN INTENTIONALLY OMITTED

PROJECT NO. R-2417 AA
LEE COUNTY

STATE OF NORTH CAROLINA
DEPARTMENT OF TRANSPORTATION
RALEIGH

INDEX

REVISIONS						SHEET NO.
NO.	BY:	DATE:	NO.	BY:	DATE:	
1			3			TOTAL SHEETS
2			4			

23-NOV-2010 11:06
R:\Structures\R2417AA_INDEX.dgn
tbeach

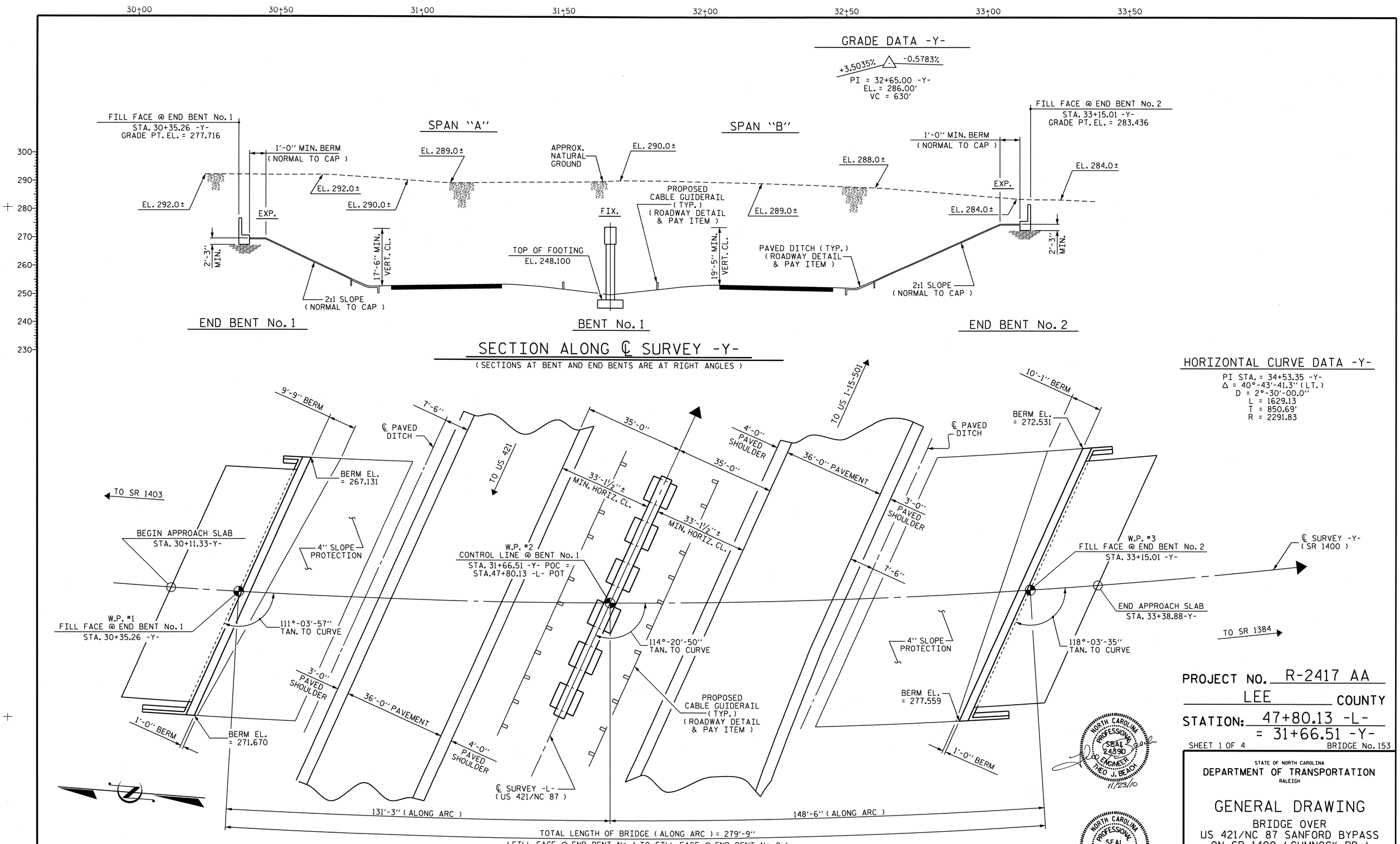

NOTE :
BENT AND END BENTS ARE PARALLEL.

DRAWN BY : MIKE BRITT DATE : 6-24-10
CHECKED BY : T.J. BEACH DATE : 10-12-10

PROJECT NO. R-2417 AA
LEE COUNTY
STATION: 47+80.13 -L-
= 31+66.51 -Y-
SHEET 1 OF 4 BRIDGE No. 153

STATE OF NORTH CAROLINA
DEPARTMENT OF TRANSPORTATION
RALEIGH

GENERAL DRAWING

BRIDGE OVER
US 421/NC 87 SANFORD BYPASS
ON SR 1400 (CUMNOCK RD.)
BETWEEN SR 1403 AND SR 1384

REVISIONS						SHEET NO.
NO.	BY:	DATE:	NO.	BY:	DATE:	S-1
1			3			TOTAL SHEETS
2			4			162

21-OCT-2010 10:46
R:\Structures\strl-Y-over-L-\GeneralDrawing\R2417AA_sd_GD _strl.dgn
mbritt

STR. #1

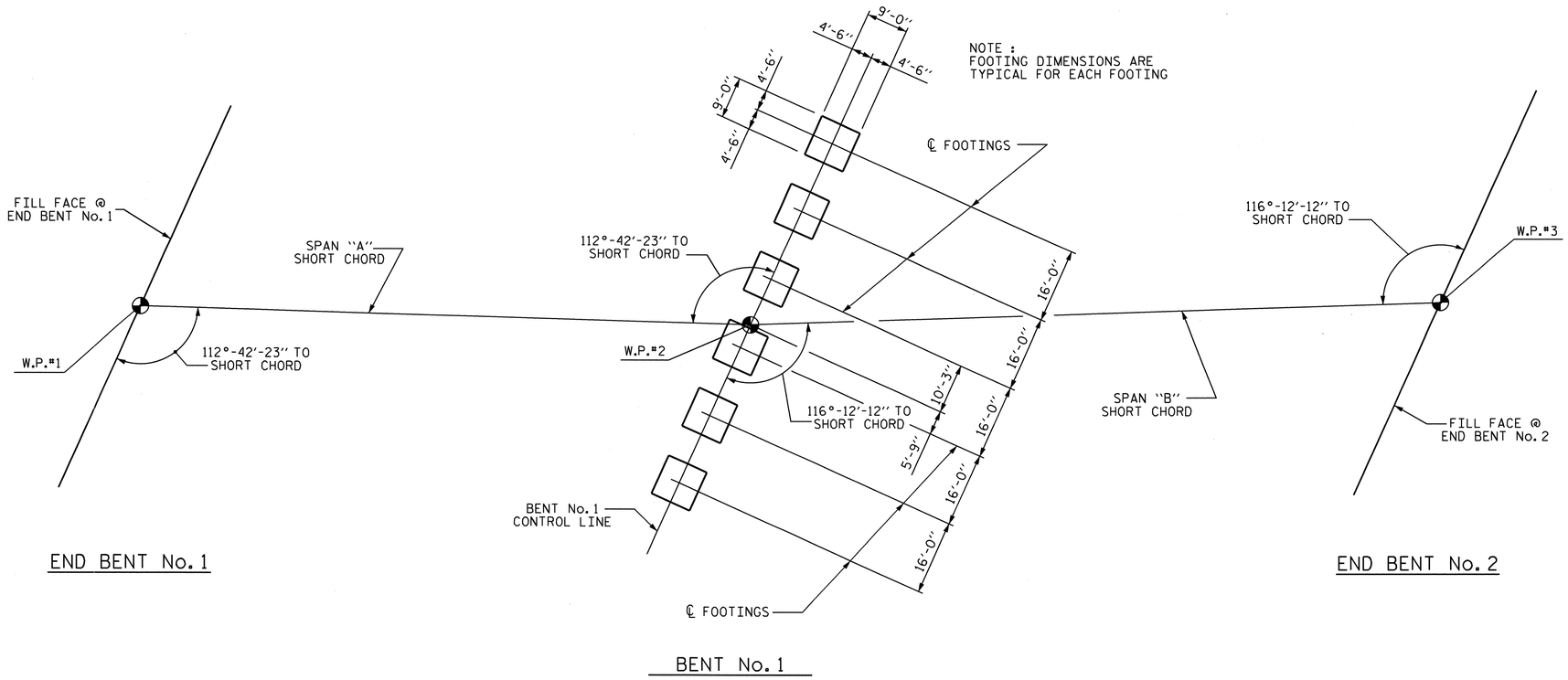

FOUNDATION LAYOUT

FOUNDATION NOTES

THE ALLOWABLE BEARING CAPACITY FOR END BENT No. 1 IS 10 TSF.

THE REQUIRED BEARING CAPACITY FOR END BENT No. 1 IS 20 TSF.
CHECK FIELD CONDITIONS FOR THE REQUIRED BEARING CAPACITY JUST BEFORE PLACING CONCRETE.

KEY END BENT No. 1 AT LEAST 12" INTO ROCK WITH MINIMUM THICKNESS AS SHOWN ON THE PLANS.

THE ALLOWABLE BEARING CAPACITY FOR SPREAD FOOTINGS AT BENT No. 1 IS 10 TSF.

THE REQUIRED BEARING CAPACITY FOR THE SPREAD FOOTINGS AT BENT No. 1 IS 20 TSF.
CHECK FIELD CONDITIONS FOR THE REQUIRED BEARING CAPACITY JUST BEFORE PLACING CONCRETE.

KEY SPREAD FOOTINGS AT BENT No. 1 AT LEAST 12" INTO ROCK WITH MINIMUM THICKNESS AS SHOWN ON THE PLANS.

THE ALLOWABLE BEARING CAPACITY FOR END BENT No. 2 IS 10 TSF.

THE REQUIRED BEARING CAPACITY FOR END BENT No. 2 IS 20 TSF.
CHECK FIELD CONDITIONS FOR THE REQUIRED BEARING CAPACITY JUST BEFORE PLACING CONCRETE.

KEY END BENT No. 2 AT LEAST 12" INTO ROCK WITH MINIMUM THICKNESS AS SHOWN ON THE PLANS.

FOR BLASTING ADJACENT TO HIGHWAY STRUCTURES, SEE ROCK BLASTING PROVISION, IF APPLICABLE, OR ARTICLE 410-11 OF THE STANDARD SPECIFICATIONS.

EXCAVATIONS FOR END BENTS AND BENT FOOTINGS SHALL BE PROTECTED FROM IN-FLOWING WATER WHILE OPEN. IF WATER SHOULD ENTER, EXCAVATE DOWN TO DRY, SOUND ROCK. ADDITIONAL EXCAVATION AND CONCRETE WILL BE AT NO EXPENSE TO THE DEPARTMENT.

NORTH CAROLINA PROFESSIONAL SEAL 24390 P.E. ENGINEER THEO J. BEACH
11/29/10

PROJECT NO. R-2417 AA
LEE COUNTY
STATION: 47+80.13 -L-

SHEET 2 OF 4

STATE OF NORTH CAROLINA
DEPARTMENT OF TRANSPORTATION
RALEIGH

GENERAL DRAWING
BRIDGE OVER
US 421/NC 87 SANFORD BYPASS
ON SR 1400 (CUMNOCK RD.)
BETWEEN SR 1403 AND SR 1384

REVISIONS						SHEET NO.
NO.	BY:	DATE:	NO.	BY:	DATE:	S-2
1			3			TOTAL SHEETS
2			4			162

DRAWN BY : MIKE BRITT DATE : 6-30-10
CHECKED BY : T.J. BEACH DATE : 10-12-10

23-NOV-2010 11:07
R:\Structures\str1-Y-over-L-\GeneralDrawing\R2417AA_sd_GD _str1.dgn
tbeach

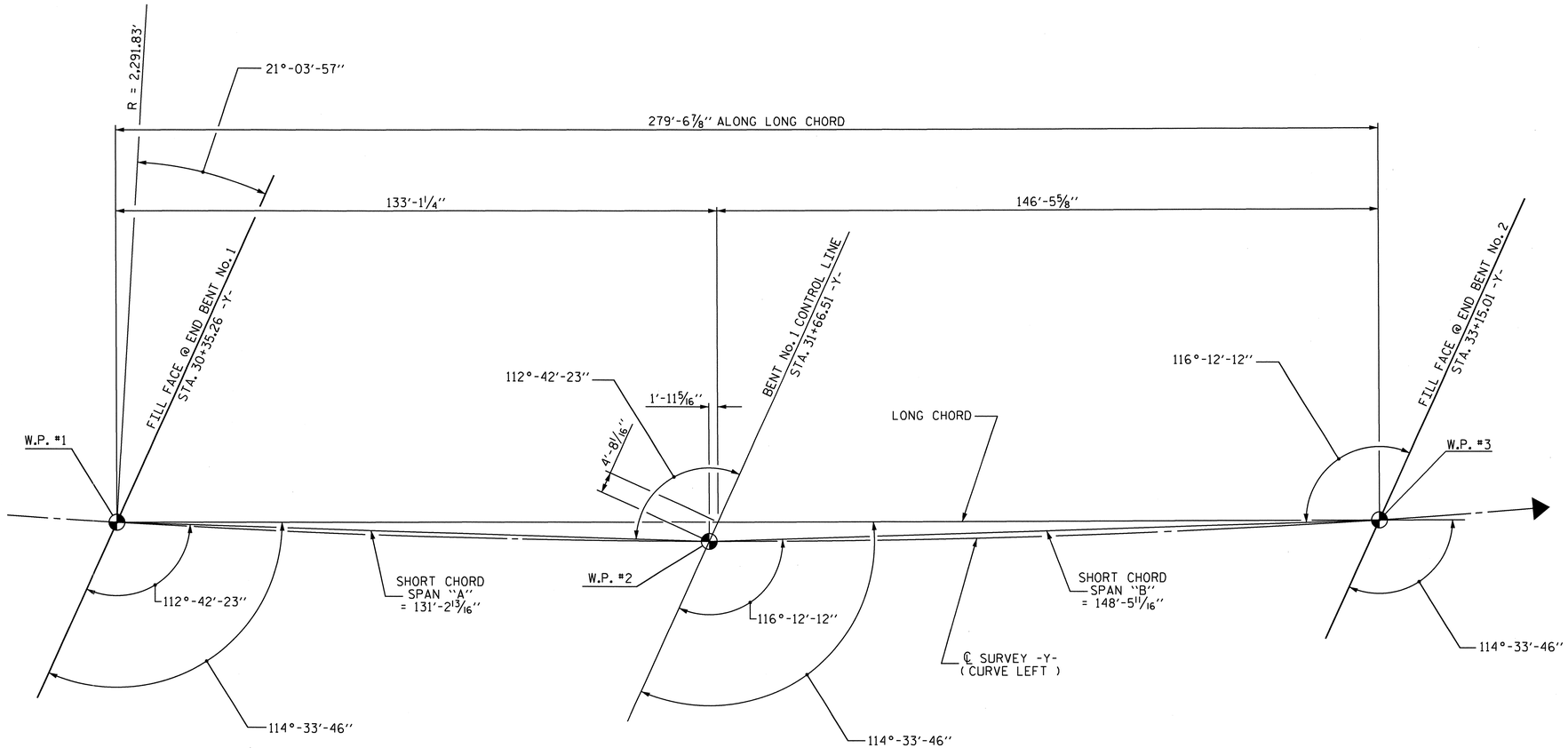

LONG CHORD LAYOUT

HORIZONTAL CURVE DATA

PI STA. = 34+53.35 -Y-
Δ = 40°-43'-41.3" (LT.)
D = 2°-30'-00.0"
L = 1629.13
T = 850.69'
R = 2291.83

PROJECT NO. R-2417 AA
LEE COUNTY
STATION: 47+80.13 -L-

SHEET 3 OF 4

STATE OF NORTH CAROLINA
DEPARTMENT OF TRANSPORTATION
RALEIGH

GENERAL DRAWING

BRIDGE OVER
US 421/NC 87 SANFORD BYPASS
ON SR 1400 (CUMNOCK RD.)
BETWEEN SR 1403 AND SR 1384

NORTH CAROLINA PROFESSIONAL SEAL 24390 ENGINEER THEO J. BEACH
11/23/10

REVISIONS						SHEET NO.
NO.	BY:	DATE:	NO.	BY:	DATE:	S-3
1			3			TOTAL SHEETS
2			4			162

DRAWN BY : MIKE BRITT DATE : 6-30-10
CHECKED BY : T.J. BEACH DATE : 10-12-10

21-OCT-2010 10:39
R:\Structures\str1-Y-over-L-\GeneralDrawing\R2417AA_sd_GD _str1.dgn
mbritt

STR. #1

TOTAL BILL OF MATERIAL

	FOUNDATION EXCAVATION	REINFORCED CONCRETE DECK SLAB	GROOVING BRIDGE FLOORS	CLASS A CONCRETE	BRIDGE APPROACH SLABS	REINFORCING STEEL	SPIRAL COLUMN REINFORCING STEEL	STRUCTURAL STEEL	CONCRETE BARRIER RAIL	4" SLOPE PROTECTION	POT BEARINGS	ELASTOMERIC BEARINGS	EVAZOTE JOINT SEALS
	LUMP SUM	SQ.FT.	SQ.FT.	CU.YDS.	LUMP SUM	LBS.	LBS.	APPROX.LBS.	LIN.FT.	SQ.YDS.	LUMP SUM	LUMP SUM	LUMP SUM
SUPERSTRUCTURE		24,216	26,187		LUMP SUM			1,142,200	555.10		LUMP SUM	LUMP SUM	LUMP SUM
END BENT No. 1				77.1		10,573				422			
BENT No. 1	LUMP SUM			163.6		27,016	2,678						
END BENT No. 2				81.0		11,091				604			
TOTAL	LUMP SUM	24,216	26,187	321.7	LUMP SUM	48,680	2,678	1,142,200	555.10	1,026	LUMP SUM	LUMP SUM	LUMP SUM

NOTES :

ASSUMED LIVE LOAD = HS20 OR ALTERNATE LOADING, EXCEPT THAT THE STEEL PLATE GIRDERS HAVE BEEN DESIGNED FOR HS25.

THIS BRIDGE HAS BEEN DESIGNED BY THE STRENGTH DESIGN METHOD AS SPECIFIED IN AASHTO STANDARD SPECIFICATIONS.

THIS BRIDGE HAS BEEN DESIGNED IN ACCORDANCE WITH THE REQUIREMENTS OF THE "STANDARD SPECIFICATIONS FOR SEISMIC DESIGN OF HIGHWAY BRIDGES", FOR SEISMIC PERFORMANCE CATEGORY A.

FOR OTHER DESIGN DATA AND GENERAL NOTES, SEE SHEET SN.

ALL STRUCTURAL STEEL SHALL BE AASHTO M270 GRADE 50W AND PAINTED IN ACCORDANCE WITH SYSTEM 4 OF ARTICLE 442-7 OF THE STANDARD SPECIFICATIONS UNLESS OTHERWISE NOTED ON THE PLANS.

REMOVABLE FORMS MAY BE USED IN LIEU OF METAL STAY-IN-PLACE FORMS IN ACCORDANCE WITH ARTICLE 420-3 OF THE STANDARD SPECIFICATIONS.

WORK SHALL NOT BE STARTED ON THIS BRIDGE UNTIL ROADWAY SECTION HAS BEEN EXCAVATED.

NEEDLE BEAMS WILL NOT BE ALLOWED UNLESS OTHERWISE CALLED FOR ON THE PLANS OR APPROVED BY THE ENGINEER.

FOR SUBMITTAL OF WORKING DRAWINGS, SEE SPECIAL PROVISIONS.

FOR FALSEWORK AND FORMWORK, SEE SPECIAL PROVISIONS.

FOR CRANE SAFETY, SEE SPECIAL PROVISIONS.

FOR GROUT FOR STRUCTURES, SEE SPECIAL PROVISIONS.

FOR CURING CONCRETE, SEE SPECIAL PROVISIONS.

FOR PLACING LOAD ON STRUCTURE MEMBERS, SEE SPECIAL PROVISIONS.

FOR SHIPPING STEEL STRUCTURAL MEMBERS, SEE SPECIAL PROVISIONS.

FOR DIRECT TENSION INDICATORS, SEE SPECIAL PROVISIONS.

FOR HIGH STRENGTH BOLTS, SEE SPECIAL PROVISIONS.

FOR ADHESIVELY ANCHORED ANCHOR BOLTS OR DOWELS, SEE SPECIAL PROVISIONS.

THE CONTRACTOR SHALL PROVIDE INDEPENDENT ASSURANCE SAMPLES OF REINFORCING STEEL AS FOLLOWS: FOR PROJECTS REQUIRING UP TO 400 TONS OF REINFORCING STEEL, ONE 30 INCH SAMPLE OF EACH SIZE BAR USED, AND FOR PROJECTS REQUIRING OVER 400 TONS OF REINFORCING STEEL, TWO 30 INCH SAMPLES OF EACH SIZE BAR USED. THE BARS FROM WHICH THE SAMPLES ARE TAKEN MUST THEN BE SPLICED WITH REPLACEMENT BARS OF THE SIZE AND LENGTH OF THE SAMPLE, PLUS A MINIMUM LAP SPLICE OF THIRTY BAR DIAMETERS.

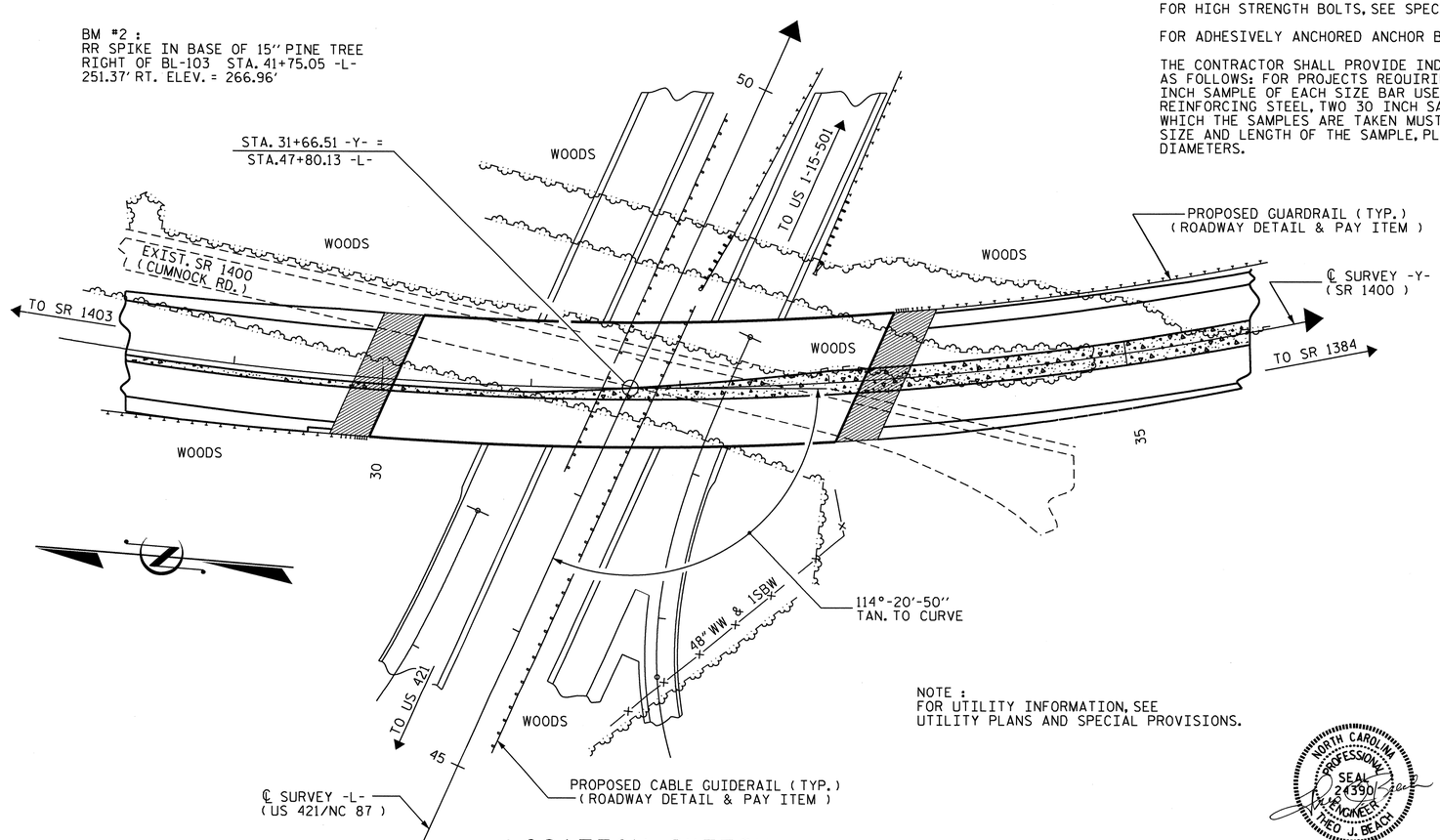

LOCATION SKETCH

NOTE :
FOR UTILITY INFORMATION, SEE
UTILITY PLANS AND SPECIAL PROVISIONS.

NORTH CAROLINA PROFESSIONAL SEAL 24390 ENGINEER THEO J. BEACH
11/23/10

PROJECT NO. R-2417 AA
LEE COUNTY
STATION: 47+80.13 -L-

SHEET 4 OF 4

STATE OF NORTH CAROLINA
DEPARTMENT OF TRANSPORTATION
RALEIGH

GENERAL DRAWING
BRIDGE OVER
US 421/NC 87 SANFORD BYPASS
ON SR 1400 (CUMNOCK RD.)
BETWEEN SR 1403 AND SR 1384

REVISIONS						SHEET NO.
NO.	BY:	DATE:	NO.	BY:	DATE:	S-4
1			3			TOTAL SHEETS
2			4			162

DRAWN BY : MIKE BRITT DATE : 6-25-10
CHECKED BY : T.J. BEACH DATE : 10-12-10

23-NOV-2010 11:07
R:\Structures\str1-Y-over-L-\GeneralDrawing\R2417AA_sd_GD _str1.dgn
tbeach

STR. #1

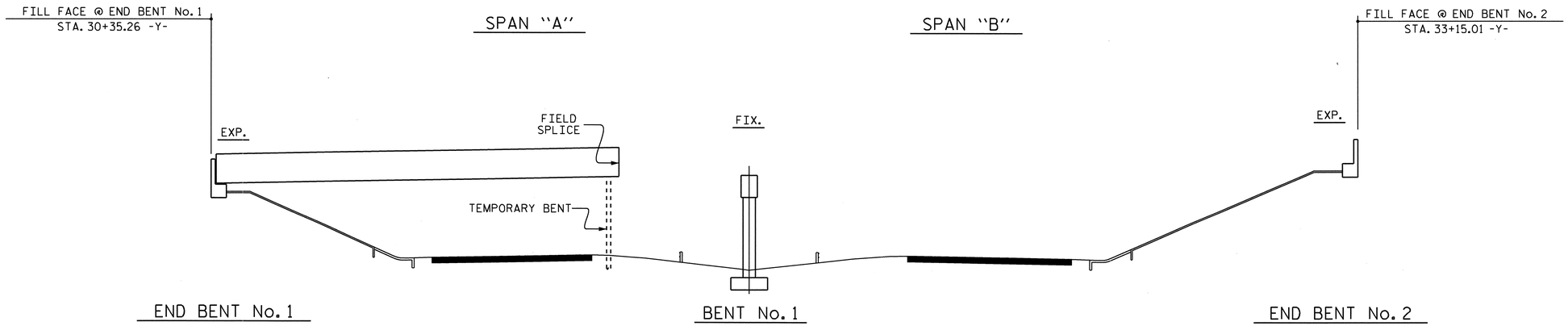

STAGE I GIRDER ERECTION

(SECTIONS AT BENT & END BENTS ARE AT RIGHT ANGLES)

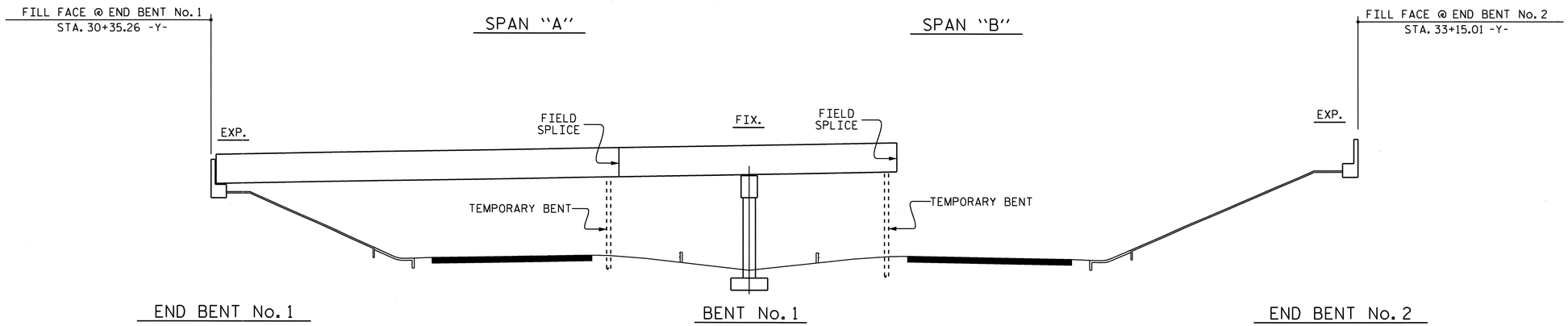

STAGE II GIRDER ERECTION

(SECTIONS AT BENT & END BENTS ARE AT RIGHT ANGLES)

ERECTION NOTES

ERECT A MINIMUM OF TWO GIRDERS WITH ALL DIAPHRAGMS/CROSSFRAMES BETWEEN THE GIRDERS IN PLACE AND THE BOLTS TIGHTENED PRIOR TO RELEASING THE GIRDERS.

ERECT EACH SUBSEQUENT GIRDER WITH DIAPHRAGMS/CROSSFRAMES CONNECTING TO THE ADJACENT PREVIOUSLY ERECTED GIRDER AND TIGHTEN ALL BOLTS BEFORE RELEASING THE GIRDER.

THE STRUCTURAL STEEL SHALL BE SUPPORTED DURING ERECTION IN ITS CAMBERED POSITION. A MINIMUM OF ONE TEMPORARY BENT SHALL BE USED IN BOTH SPANS "A" & "B".

TEMPORARY BENTS SHALL REMAIN IN PLACE UNTIL ALL DIAPHRAGMS/CROSSFRAMES ARE IN PLACE AND ALL HIGH STRENGTH BOLTS ARE TIGHTENED.

TEMPORARY BENTS SHALL PROVIDE BEARING AT CONNECTOR PLATE LOCATIONS. WHEN CONNECTOR PLATES ARE USED AS TEMPORARY BEARING STIFFENERS, DIAPHRAGMS MUST BE ATTACHED.

THE CONTRACTOR'S ERECTION PLANS SHALL INCLUDE A METHOD OF TEMPORARY BENT REMOVAL THAT WILL UNIFORMLY TRANSFER THE STRUCTURAL WEIGHT TO THE DIAPHRAGMS/CROSSFRAMES AND THE GIRDERS WILL REMAIN IN THE CAMBERED POSITIONS.

PLANS FOR TEMPORARY BENT ERECTION AND REMOVAL SHALL BE SUBMITTED TO THE ENGINEER FOR REVIEW.

THE CONTRACTOR IS RESPONSIBLE FOR DESIGNING THE TEMPORARY BENTS. THE DESIGNS SHALL BE COMPLETED BY A PROFESSIONAL ENGINEER REGISTERED IN THE STATE OF NORTH CAROLINA. THE CONTRACTOR SHALL SUBMIT SIGNED AND SEALED WORKING DRAWINGS AND CALCULATIONS FOR APPROVAL BY THE ENGINEER.

DURING THE GIRDER ERECTION PROCEDURE, THE CONTRACTOR IS RESPONSIBLE FOR PROVIDING TEMPORARY LATERAL BRACING AND OTHER MEANS OF SUPPORT, AS REQUIRED, TO ENSURE STABILITY OF THE GIRDERS, AVOID UPLIFT OF THE GIRDERS AT THE TEMPORARY BENTS AND TO ENSURE PLUMBNESS OF THE GIRDERS IN THE FINAL CONDITION.

NO SEPARATE MEASUREMENT OR PAYMENT WILL BE MADE FOR PROVIDING THE TEMPORARY BENT. THE COST FOR ALL MATERIALS, EQUIPMENT, TOOLS, LABOR AND ANY INCIDENTALS NECESSARY TO PROVIDE THE TEMPORARY BENT SHALL BE CONSIDERED INCIDENTAL TO THE LUMP SUM BID PRICE FOR STRUCTURAL STEEL.

THE CONTRACTOR MAY SUBMIT AN ALTERNATE ERECTION METHOD TO THE ENGINEER FOR REVIEW AND APPROVAL.

NORTH CAROLINA PROFESSIONAL SEAL 24390 ENGINEER THEO J. BEACH
11/23/10

PROJECT NO. R-2417 AA
LEE COUNTY
STATION: 47+80.13 -L-

STATE OF NORTH CAROLINA
DEPARTMENT OF TRANSPORTATION
RALEIGH

GIRDER ERECTION DETAILS

REVISIONS						SHEET NO.
NO.	BY:	DATE:	NO.	BY:	DATE:	S-5
1			3			TOTAL SHEETS
2			4			162

DRAWN BY : MIKE BRITT DATE : 6-25-10
CHECKED BY : T.J. BEACH DATE : 10-21-10

23-NOV-2010 11:08
R:\Structures\str1-Y-over-L-\General Drawing\R2417AA_str1_erection.dgn
tbeach

STR. #1

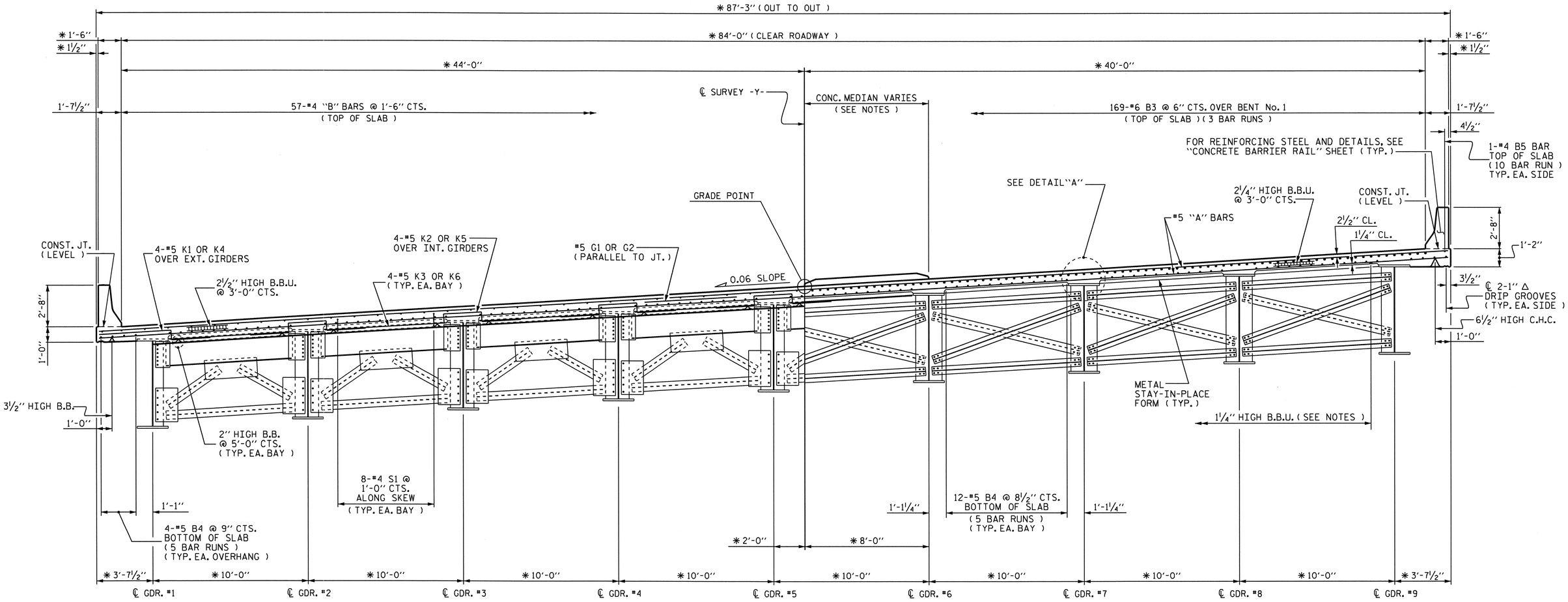

TYPICAL HALF SECTION

(SHOWING END BENT DIAPHRAGMS)

✱ DENOTES RADIAL DIMENSION

TYPICAL HALF SECTION

(SHOWING BENT DIAPHRAGMS)

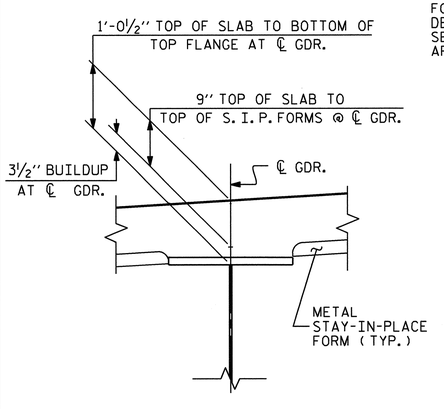

DETAIL "A"

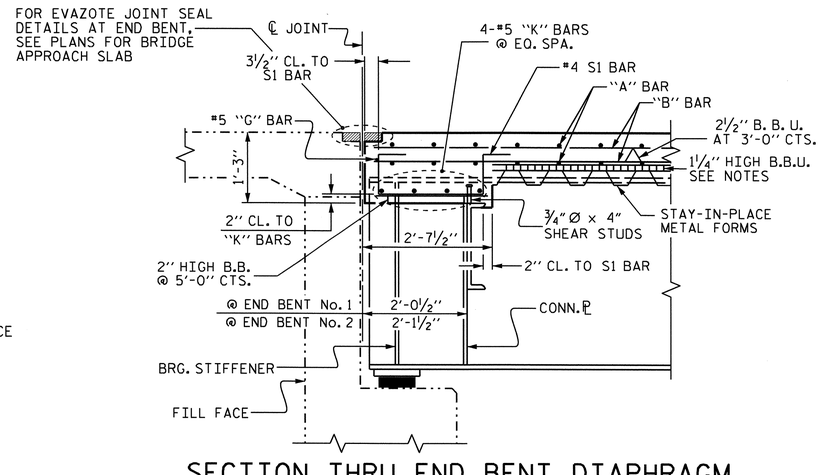

SECTION THRU END BENT DIAPHRAGM

(SECTION TAKEN NORMAL TO FILL FACE)

NOTES

PROVIDE 1¼" HIGH BEAM BOLSTERS UPPER AT 4'-0" CTS. ATOP THE METAL STAY-IN-PLACE FORMS TO SUPPORT THE BOTTOM MAT OF "A" BARS. WHEN USING REMOVABLE FORMS, PROVIDE CONTINUOUS HIGH CHAIRS FOR METAL DECK (C.H.C.M.) @ 4'-0" CTS. WITH A HEIGHT TO SUPPORT THE BOTTOM MAT OF "A" BARS A CLEAR DISTANCE OF 2½" ABOVE THE TOP OF THE REMOVABLE FORM.

PREVIOUSLY CAST CONCRETE IN A CONTINUOUS UNIT SHALL HAVE ATTAINED A MINIMUM COMPRESSIVE STRENGTH OF 3,000 PSI BEFORE ADDITIONAL CONCRETE IS CAST IN THE UNIT.

BARRIER RAIL IN A CONTINUOUS UNIT SHALL NOT BE CAST UNTIL ALL SLAB CONCRETE IN THE UNIT HAS BEEN CAST AND HAS REACHED A MINIMUM COMPRESSIVE STRENGTH OF 3,000 PSI.

METAL STAY-IN-PLACE FORMS SHALL NOT BE WELDED TO BEAM OR GIRDER FLANGES IN THE ZONES REQUIRING CHARPY V-NOTCH TEST. SEE STRUCTURAL STEEL DETAIL SHEETS.

#5 "G" BARS MAY BE SHIFTED SLIGHTLY, AS NECESSARY, TO CLEAR REINFORCING STEEL AND STIRRUPS.

STRUCTURAL STEEL ERECTION IN A CONTINUOUS UNIT SHALL BE COMPLETE BEFORE FALSEWORK OR FORMS ARE PLACED ON THE UNIT.

THE CONTRACTOR MAY, WHEN NECESSARY, PROPOSE A SCHEME FOR AVOIDING INTERFERENCE BETWEEN METAL STAY-IN-PLACE FORM SUPPORTS OR FORMS AND BEAM/GIRDER STIFFENERS OR CONNECTOR PLATES. THE PROPOSAL SHALL BE INDICATED, AS APPROPRIATE, ON EITHER THE STEEL WORKING DRAWINGS OR THE METAL STAY-IN-PLACE FORM WORKING DRAWINGS.

THE NOMINAL UNCOMPRESSED SEAL WIDTH OF THE EVAZOTE JOINT SEAL SHALL BE 2½" AT END BENTS. FOR EVAZOTE JOINT SEALS, SEE SPECIAL PROVISIONS.

FOR LOCATION AND DETAILS OF THE CONCRETE MEDIAN, SEE "CONCRETE MEDIAN" SHEETS.

6"Ø DECK DRAINS ARE REQUIRED BUT NOT SHOWN. FOR DETAILS AND LOCATIONS, SEE "DECK DRAIN DETAILS" SHEET.

THE CONTRACTOR SHALL ADJUST THE GIRDER BUILDUPS AS NECESSARY TO INCORPORATE A MAXIMUM PERMISSIBLE VARIATION IN POT BEARING DEPTH OF ½". SEE SPECIAL PROVISION FOR POT BEARINGS.

PROJECT NO. R-2417 AA

LEE COUNTY

STATION: 47+80.13 -L-

STATE OF NORTH CAROLINA
DEPARTMENT OF TRANSPORTATION
RALEIGH

SUPERSTRUCTURE

TYPICAL SECTIONS

REVISIONS						SHEET NO.
NO.	BY:	DATE:	NO.	BY:	DATE:	S-6
1			3			TOTAL SHEETS
2			4			162

DRAWN BY : MIKE BRITT DATE : 6-6-07
CHECKED BY : D.G. ELY DATE : 3-30-10

19-OCT-2010 11:00
R:\Structures\str1-Y-over-L-\Superstructure Drawings\r2417aa_str1_ts.dgn
sbwilliams

STR.#1

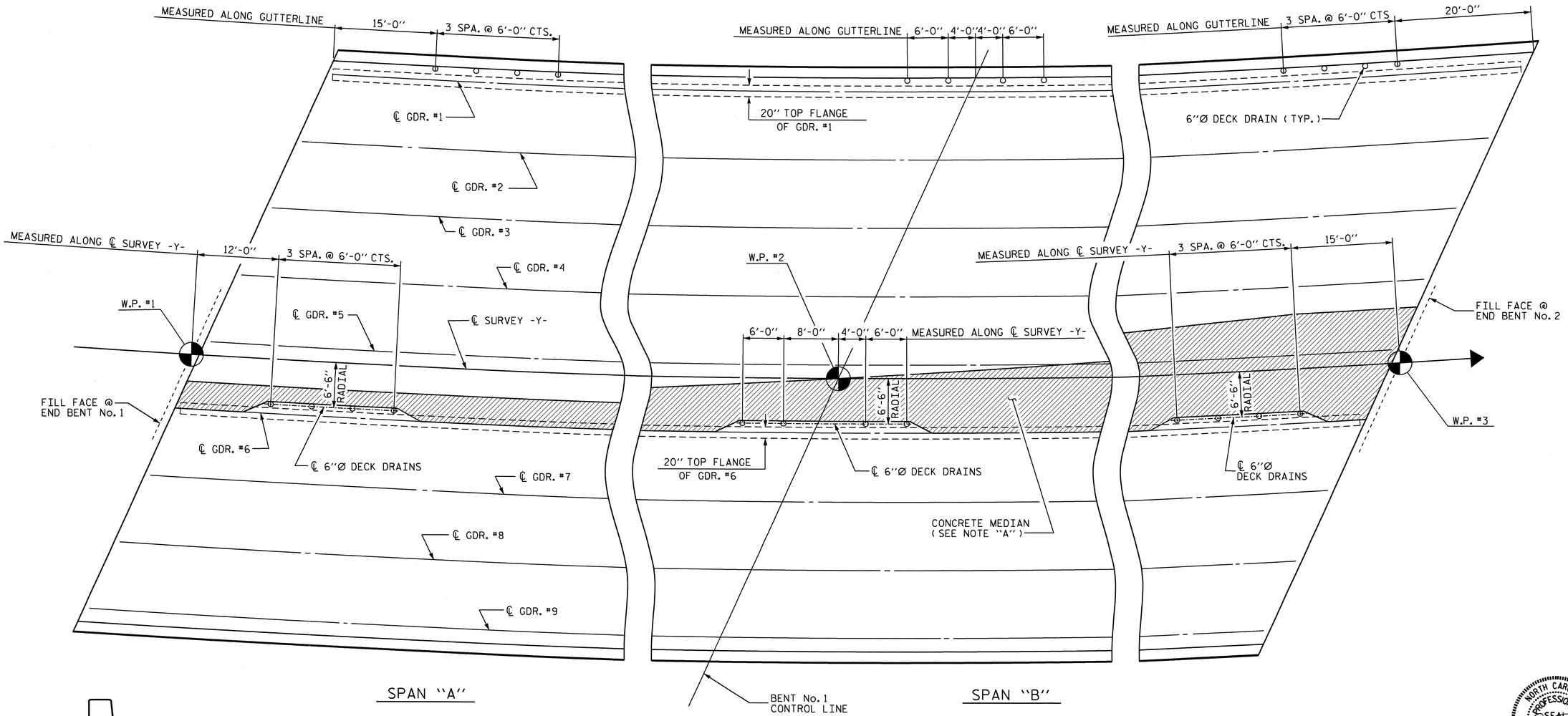

DECK DRAIN LAYOUT

NOTE "A":
FOR DETAILS OF CONCRETE MEDIAN, SEE "CONCRETE MEDIAN DETAILS" SHEETS.

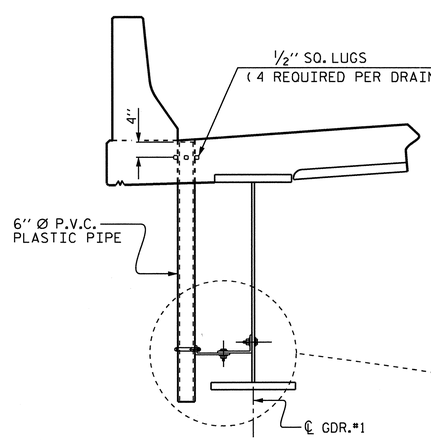

★DRAIN CONNECTOR DETAIL

(24 DECK DRAINS REQUIRED)

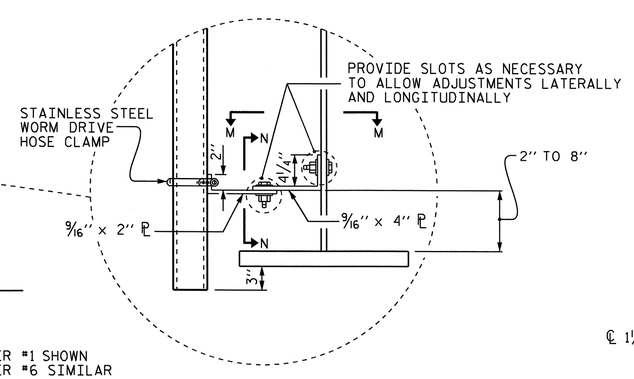

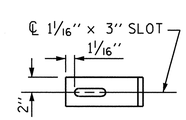

SECTION M-M

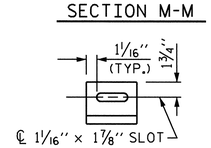

SECTION N-N

★NOTE:
DRAIN AT GIRDER #1 SHOWN
DRAIN AT GIRDER #6 SIMILAR

DRAIN NOTES:

COUPLING IN DRAIN PIPE WILL BE PERMITTED AS APPROVED BY THE ENGINEER.

4- 1/2" SQ. LUGS TO BE GLUED TO THE PVC PLASTIC PIPE AT EQUAL SPACES AROUND THE PIPE DRAIN AT APPROXIMATELY 4" FROM THE TOP OF THE PIPE.

BOLT SIZE TO BE THE SAME AS DIAPHRAGM AND CROSSFRAME CONNECTIONS. STAINLESS STEEL WORMDRIVE HOSE CLAMP SHALL BE COMMERCIAL QUALITY.

TOP OF FLOOR DRAINS TO BE SET 3/8" BELOW SURFACE OF SLAB.

PVC DECK DRAINS SHALL BE PAINTED WITH TWO COATS OF BROWN PRIMER MEETING THE REQUIREMENTS OF ARTICLE 1080-12 OF THE STANDARD SPECIFICATIONS. EACH COAT SHALL BE 2 DRY MILS THICK. DECK DRAINS SHALL BE ROUGHENED PRIOR TO PAINTING. NO SEPARATE PAYMENT SHALL BE MADE FOR PAINTING PVC DECK DRAINS AS THIS IS CONSIDERED INCIDENTAL TO PAY ITEM FOR REINFORCED CONCRETE DECK SLAB.

THE 6" Ø PVC PLASTIC PIPE AND FITTINGS SHALL BE SCHEDULE 40 AND CONFORM TO ASTM D1785.

PLATES FOR PIPE DRAIN BRACKETS SHALL CONFORM TO AASHTO M270 GRADE 50W STEEL OR APPROVED EQUAL.

6" Ø DECK DRAINS IN THE MEDIAN MAY BE MOVED SLIGHTLY TO AVOID INTERFERENCE WITH DIAPHRAGMS. THE CONTRACTOR SHALL FIELD VERIFY BEFORE INSTALLATION OF DRAINS.

NORTH CAROLINA PROFESSIONAL SEAL 24390 ENGINEER THEO J. BEACH
11/23/10

PROJECT NO. R-2417 AA
LEE COUNTY
STATION: 47+80.13 -L-

STATE OF NORTH CAROLINA
DEPARTMENT OF TRANSPORTATION
RALEIGH

SUPERSTRUCTURE

DECK DRAIN DETAILS

REVISIONS						SHEET NO.
NO.	BY:	DATE:	NO.	BY:	DATE:	S-7
1			3			TOTAL SHEETS
2			4			162

DRAWN BY: MIKE BRITT DATE: 3-4-10
CHECKED BY: D.G. ELY DATE: 4-6-10

23-NOV-2010 11:09
R:\Structures\str1-Y-over-L-\Superstructure Drawings\r2417aa_str1_drain.dgn
tbeach

STR. #1

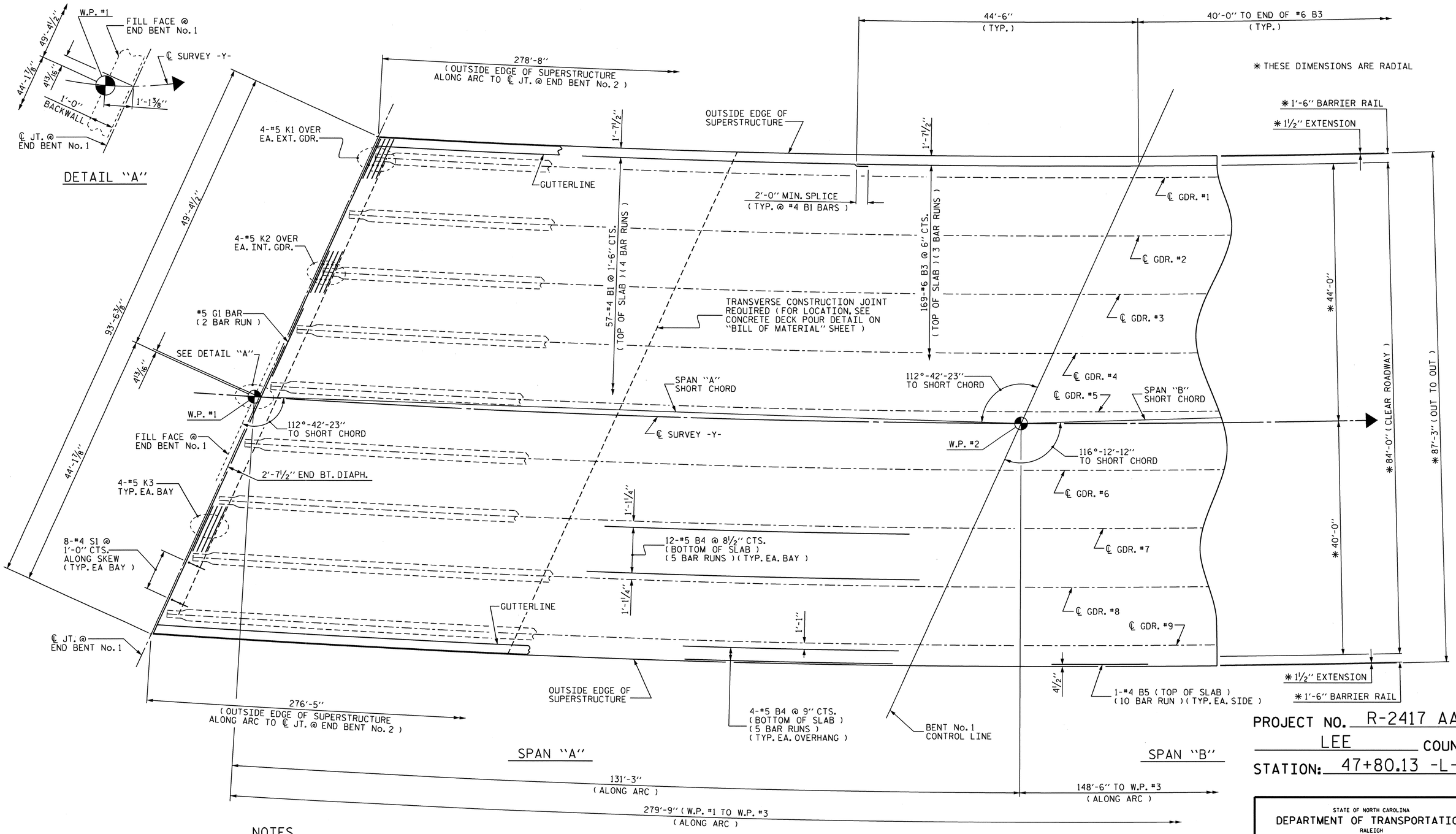

PROJECT NO. R-2417 AA

LEE COUNTY

STATION: 47+80.13 -L-

NOTES

FOR BARRIER RAIL REINFORCING STEEL, SEE "CONCRETE BARRIER RAIL" SHEETS.

CONCRETE MEDIAN IS REQUIRED BUT NOT SHOWN. FOR DETAILS, SEE "CONCRETE MEDIAN" SHEET.

6"Ø DECK DRAINS ARE REQUIRED BUT NOT SHOWN. FOR DETAILS AND LOCATIONS, SEE "DECK DRAIN DETAILS" SHEET.

PARTIAL PLAN OF SPAN

(FOR TOP AND BOTTOM "A" BAR PLACEMENT, SEE "PLACEMENT DETAIL" SHEETS.)

NORTH CAROLINA PROFESSIONAL SEAL 24390 ENGINEER THEO. J. BEACH
11/23/10

STATE OF NORTH CAROLINA
DEPARTMENT OF TRANSPORTATION
RALEIGH

SUPERSTRUCTURE

PLAN OF SPAN "A"

REVISIONS						SHEET NO.
NO.	BY:	DATE:	NO.	BY:	DATE:	S-8
1			3			TOTAL SHEETS
2			4			162

DRAWN BY : MIKE BRITT DATE : 5-17-07
CHECKED BY : D.G. ELY DATE : 4-5-10

19-OCT-2010 10:58
R:\Structures\Str1-Y-over-L-\Superstructure Drawings\R2417AA_STR1_PS.dgn
sbwilliams

STR. #1

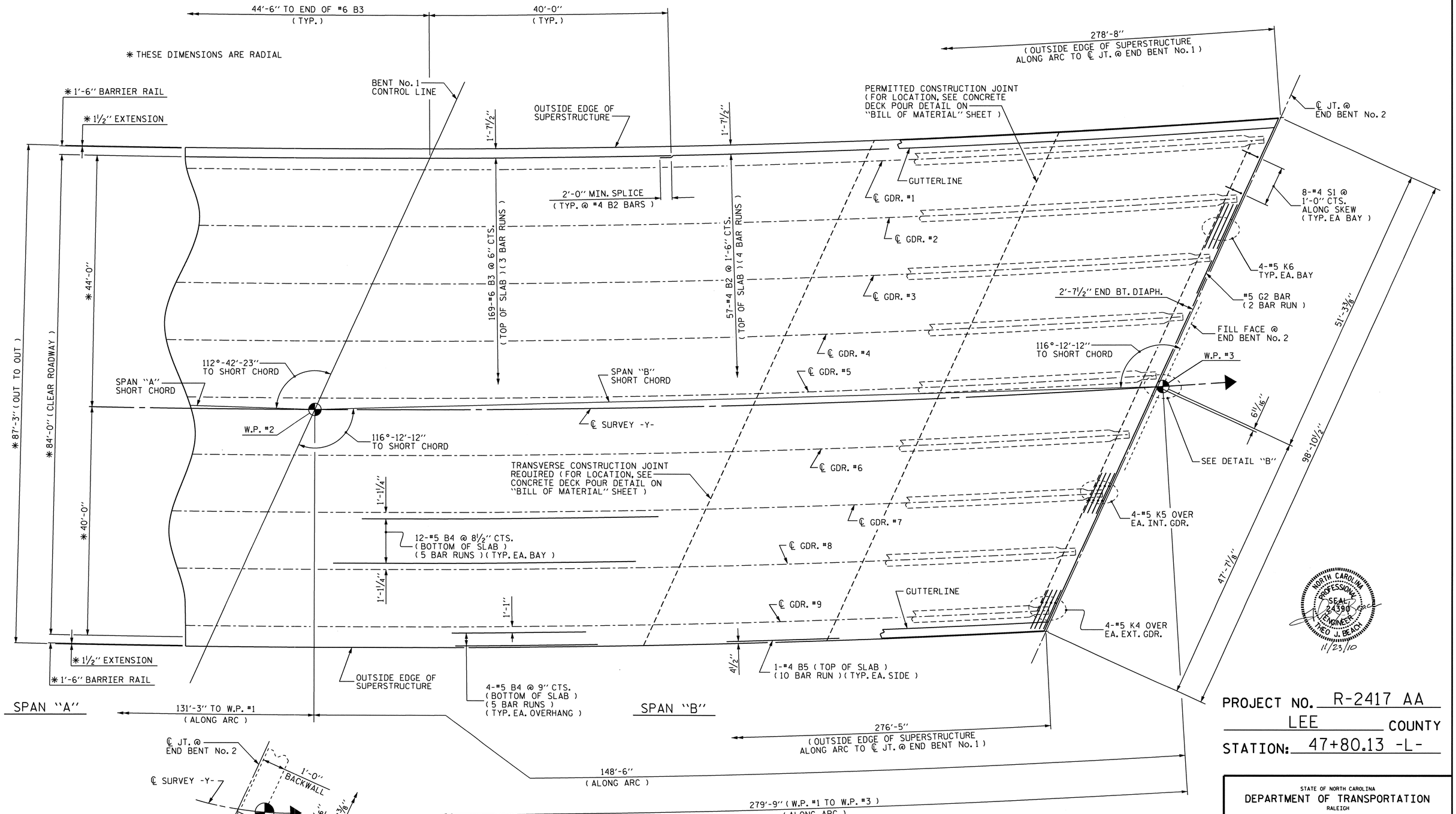

PARTIAL PLAN OF SPAN

(FOR TOP AND BOTTOM "A" BAR PLACEMENT, SEE "PLACEMENT DETAIL" SHEETS.)

NOTES

FOR BARRIER RAIL REINFORCING STEEL, SEE "CONCRETE BARRIER RAIL" SHEETS.

CONCRETE MEDIAN IS REQUIRED BUT NOT SHOWN. FOR DETAILS, SEE "CONCRETE MEDIAN" SHEET.

6"Ø DECK DRAINS ARE REQUIRED BUT NOT SHOWN. FOR DETAILS AND LOCATIONS, SEE "DECK DRAIN DETAILS" SHEET.

NORTH CAROLINA PROFESSIONAL SEAL 24390 ENGINEER REO J. BEACH 11/23/10

PROJECT NO. R-2417 AA
LEE COUNTY
STATION: 47+80.13 -L-

STATE OF NORTH CAROLINA
DEPARTMENT OF TRANSPORTATION
RALEIGH

SUPERSTRUCTURE

PLAN OF SPAN "B"

REVISIONS						SHEET NO.
NO.	BY:	DATE:	NO.	BY:	DATE:	S-9
1			3			TOTAL SHEETS
2			4			162

DRAWN BY : MIKE BRITT DATE : 5-24-07
CHECKED BY : D.G. ELY DATE : 4-5-10

19-OCT-2010 10:58
R:\Structures\str1-Y-over-L-\Superstructure Drawings\R2417AA_STR1_PS.dgn
sbwilliams

STR. #1

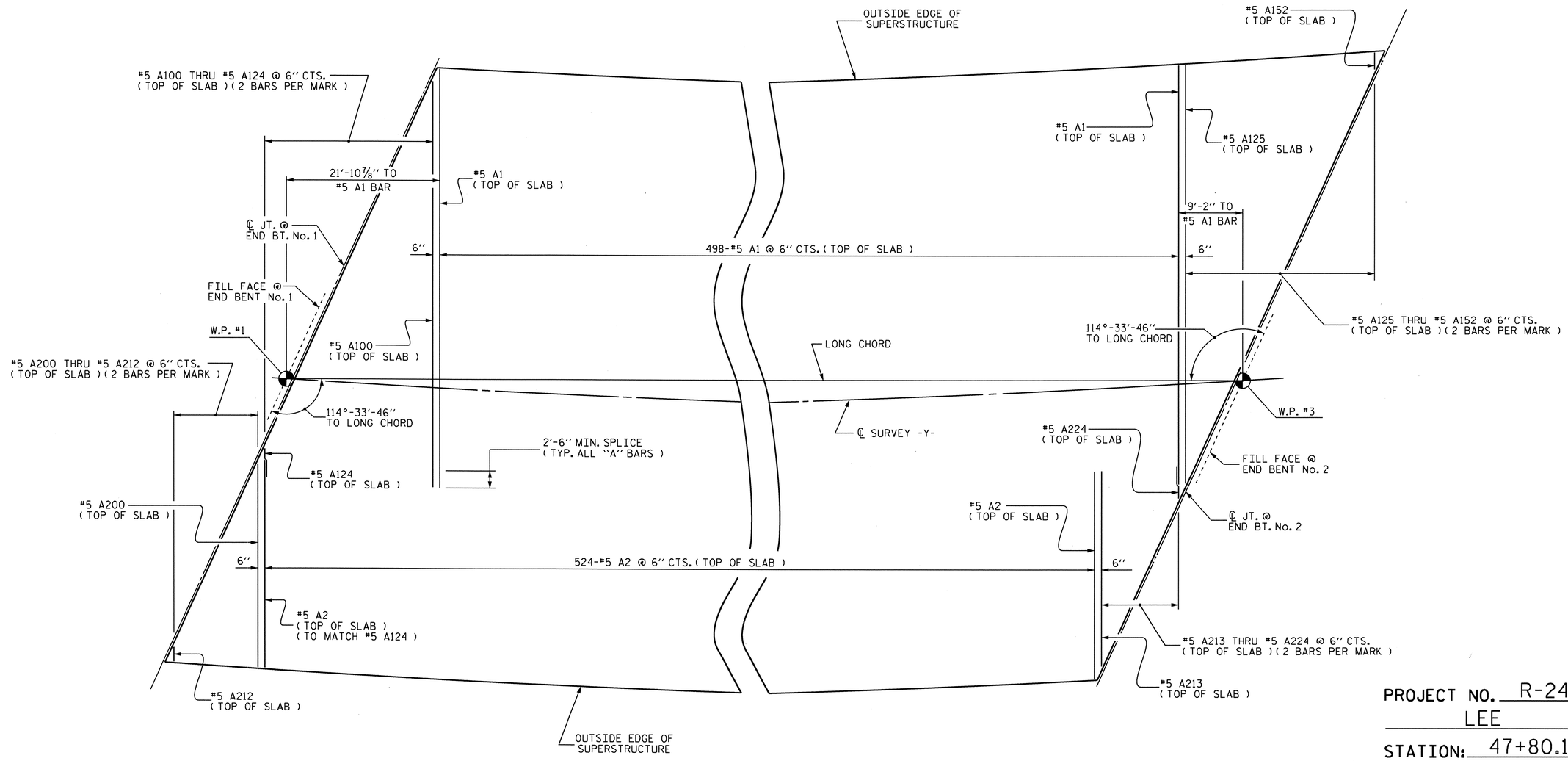

TOP "A" BAR PLACEMENT DETAIL

NOTE : "A" BARS SHALL BE PLACED PERPENDICULAR TO LONG CHORD AND SPACED ALONG LONG CHORD

PROJECT NO. R-2417 AA

LEE COUNTY

STATION: 47+80.13 -L-

STATE OF NORTH CAROLINA
DEPARTMENT OF TRANSPORTATION
RALEIGH

SUPERSTRUCTURE

TOP "A" BAR PLACEMENT DETAIL

NORTH CAROLINA PROFESSIONAL SEAL 24390 ENGINEER THEO J. BEACH
11/23/10

REVISIONS						SHEET NO.
NO.	BY:	DATE:	NO.	BY:	DATE:	S-10
1			3			TOTAL SHEETS
2			4			162

DRAWN BY : MIKE BRITT DATE : 5-15-07
CHECKED BY : D.G. ELY DATE : 3-31-10

19-OCT-2010 10:57
R:\Structures\str1-Y-over-L-\Superstructure Drawings\R2417AA_STR1_PS.dgn
sbwilliams

STR. #1

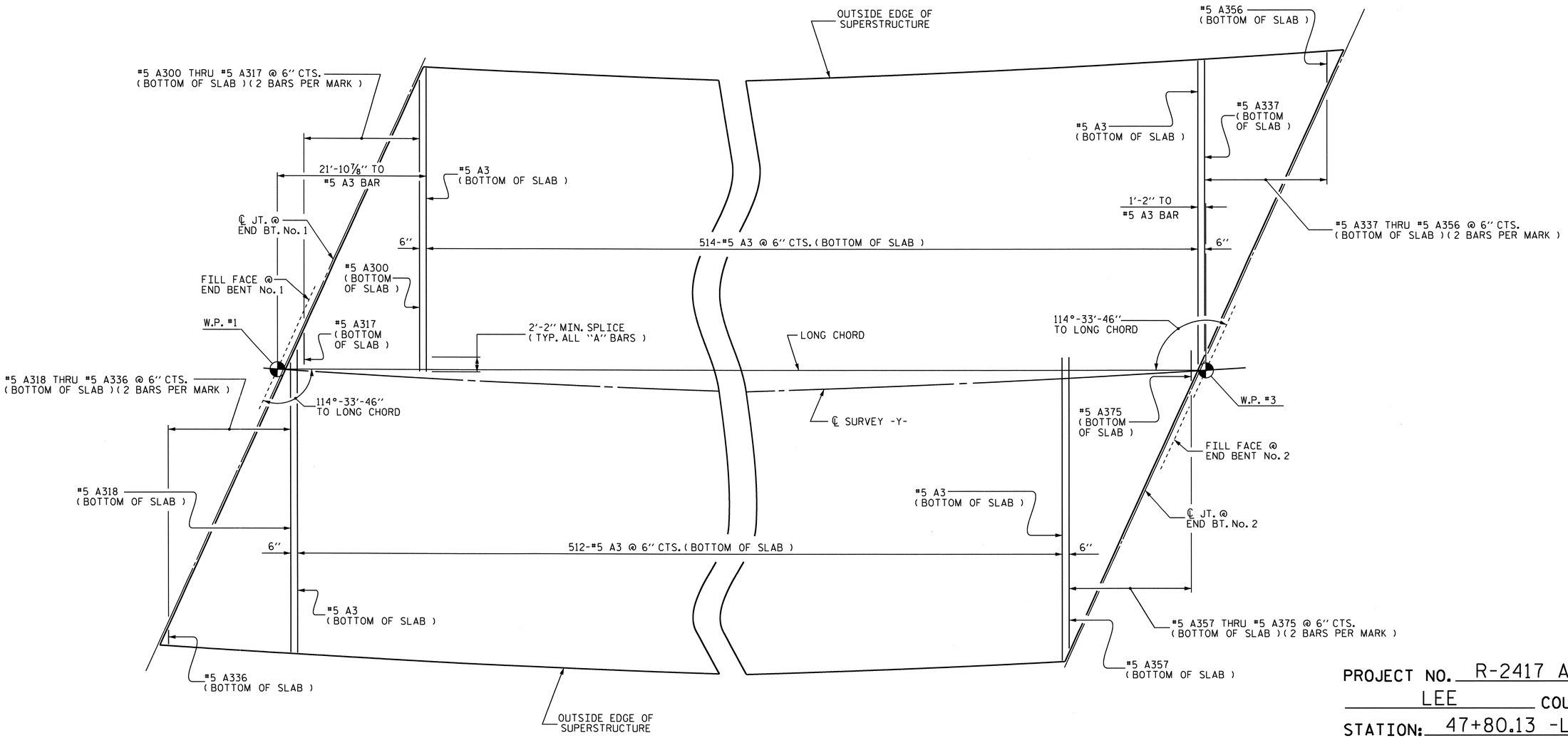

BOTTOM "A" BAR PLACEMENT DETAIL

NOTE : "A" BARS SHALL BE PLACED PERPENDICULAR TO LONG CHORD AND SPACED ALONG LONG CHORD

PROJECT NO. R-2417 AA

LEE COUNTY

STATION: 47+80.13 -L-

NORTH CAROLINA PROFESSIONAL SEAL 24390 ENGINEER THEO J. BEACH

11/23/10

STATE OF NORTH CAROLINA
DEPARTMENT OF TRANSPORTATION
RALEIGH

SUPERSTRUCTURE

BOTTOM "A" BAR PLACEMENT DETAIL

REVISIONS						SHEET NO.
NO.	BY:	DATE:	NO.	BY:	DATE:	S-11
1			3			TOTAL SHEETS
2			4			162

DRAWN BY : MIKE BRITT DATE : 5-15-07
CHECKED BY : D.G. ELY DATE : 4-1-10

19-OCT-2010 10:57
R:\Structures\str1-Y-over-L-\Superstructure Drawings\R2417AA_STR1_PS.dgn
sbwilliams

STR. #1

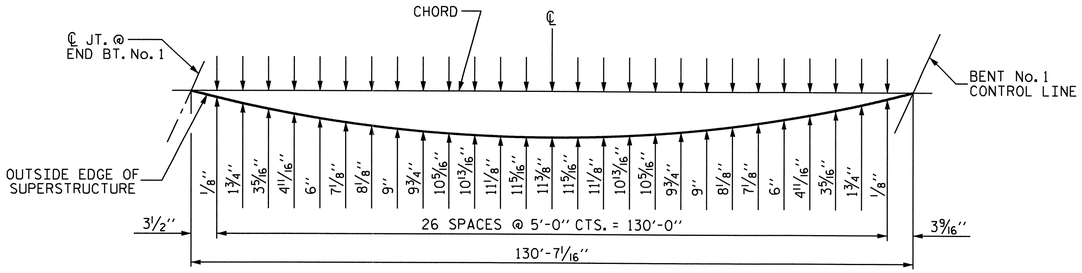

LEFT SIDE SPAN "A" ARC OFFSETS

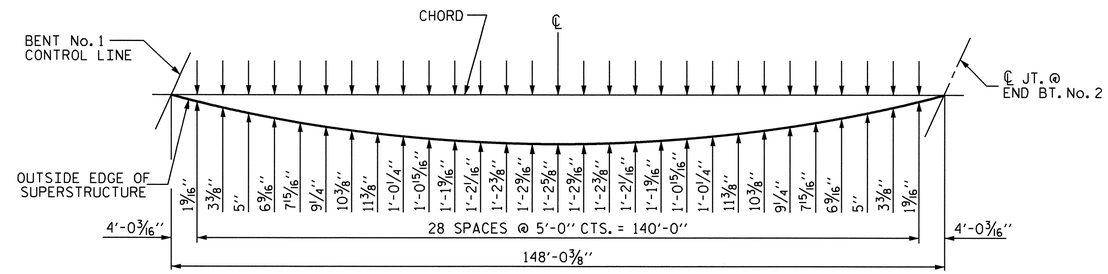

LEFT SIDE SPAN "B" ARC OFFSETS

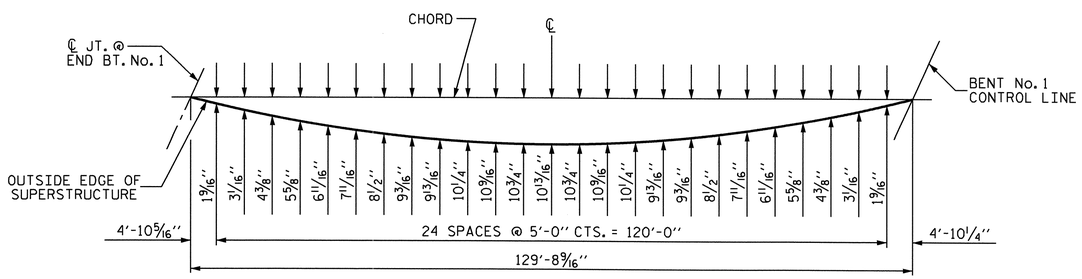

RIGHT SIDE SPAN "A" ARC OFFSETS

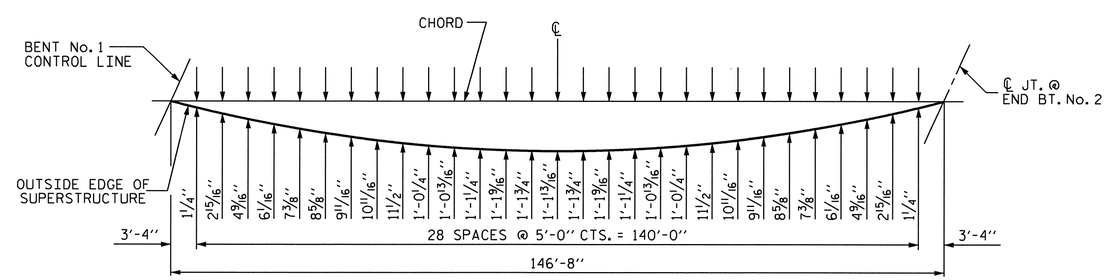

RIGHT SIDE SPAN "B" ARC OFFSETS

PROJECT NO. R-2417 AA
LEE COUNTY
STATION: 47+80.13 -L-

NORTH CAROLINA PROFESSIONAL SEAL 24398 ENGINEER THEO J. BEACH
11/23/10

STATE OF NORTH CAROLINA
DEPARTMENT OF TRANSPORTATION
RALEIGH

SUPERSTRUCTURE

ARC OFFSETS

REVISIONS						SHEET NO.
NO.	BY:	DATE:	NO.	BY:	DATE:	S-12
1			3			TOTAL SHEETS
2			4			162

DRAWN BY : MIKE BRITT DATE : 5-16-07
CHECKED BY : D.G. ELY DATE : 3-30-10

19-OCT-2010 10:55
R:\Structures\str1-Y-over-L-\Superstructure Drawings\R2417AA_STR1_PS.dgn
sbwilliams

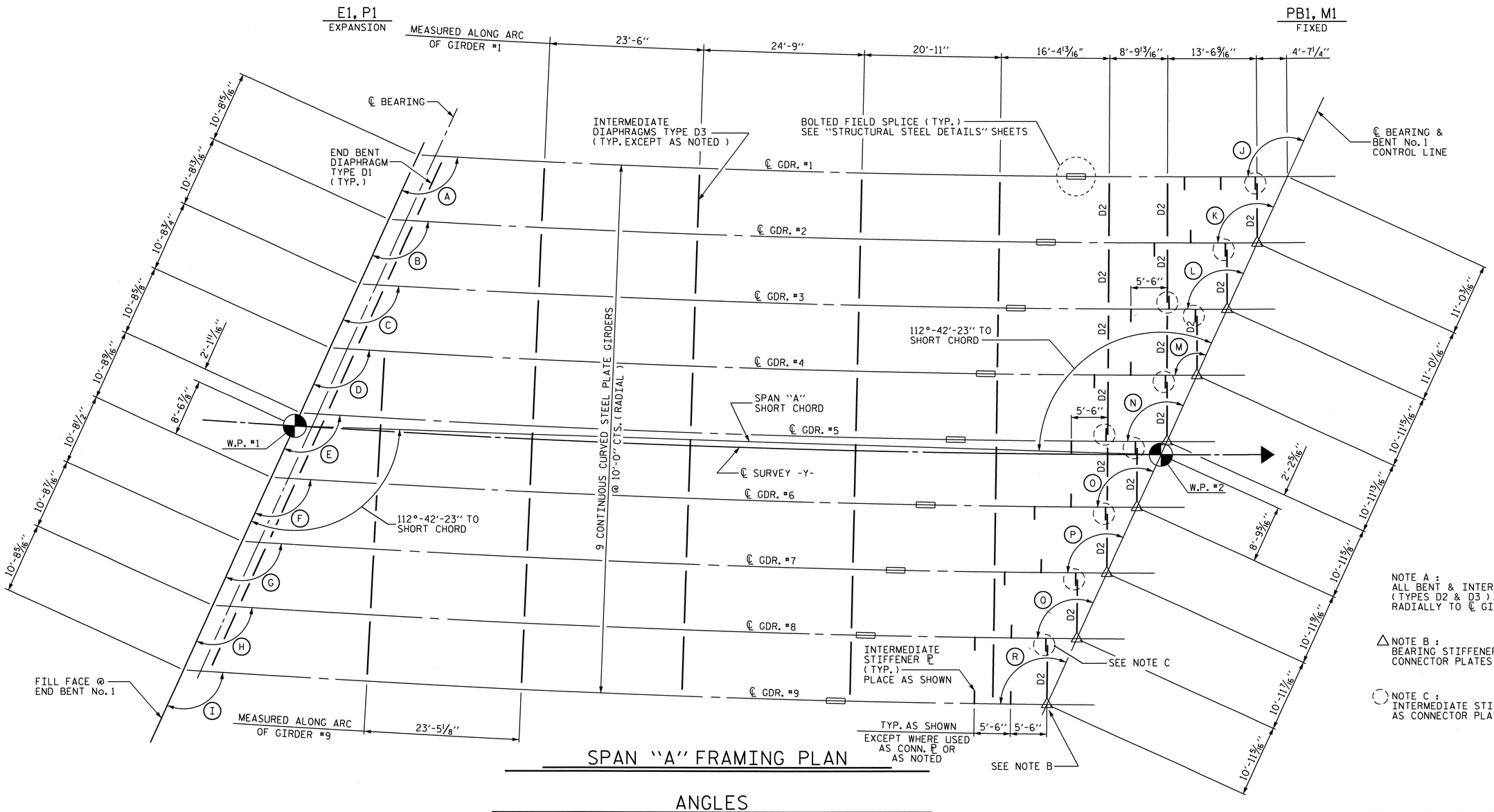

NOTE A :
ALL BENT & INTERMEDIATE DIAPHRAGMS (TYPES D2 & D3) ARE TO BE PLACED RADIALLY TO ℄ GIRDERS.

△ NOTE B :
BEARING STIFFENERS TO BE USED AS CONNECTOR PLATES IN THIS AREA.

◯ NOTE C :
INTERMEDIATE STIFFENERS TO BE USED AS CONNECTOR PLATES IN THIS AREA.

SPAN "A" FRAMING PLAN

ANGLES

ANGLES ARE TANGENT TO CURVE AT FILL FACE AND BENT CONTROL LINE

A	111°-28'-43"	J	114°-49'-56"
B	111°-22'-44"	K	114°-42'-53"
C	111°-16'-48"	L	114°-35'-55"
D	111°-10'-56"	M	114°-29'-01"
E	111°-05'-07"	N	114°-22'-11"
F	110°-59'-21"	O	114°-15'-25"
G	110°-53'-39"	P	114°-08'-43"
H	110°-47'-59"	Q	114°-02'-05"
I	110°-42'-23"	R	113°-55'-30"

PROJECT NO. R-2417 AA
LEE COUNTY
STATION: 47+80.13 -L-

SHEET 1 OF 2

STATE OF NORTH CAROLINA
DEPARTMENT OF TRANSPORTATION
RALEIGH

SUPERSTRUCTURE

FRAMING PLAN

NORTH CAROLINA PROFESSIONAL SEAL 24390 ENGINEER THEO. J. BEACH
11/23/10

REVISIONS						SHEET NO.
NO.	BY:	DATE:	NO.	BY:	DATE:	S-13
1			3			TOTAL SHEETS
2			4			162

DRAWN BY : MIKE BRITT DATE : 2-3-10
CHECKED BY : D.G. ELY DATE : 4-6-10

19-OCT-2010 10:55
R:\Structures\str1-Y-over-L-\Superstructure Drawings\r2417aa_str1_fp.dgn
sbwilliams

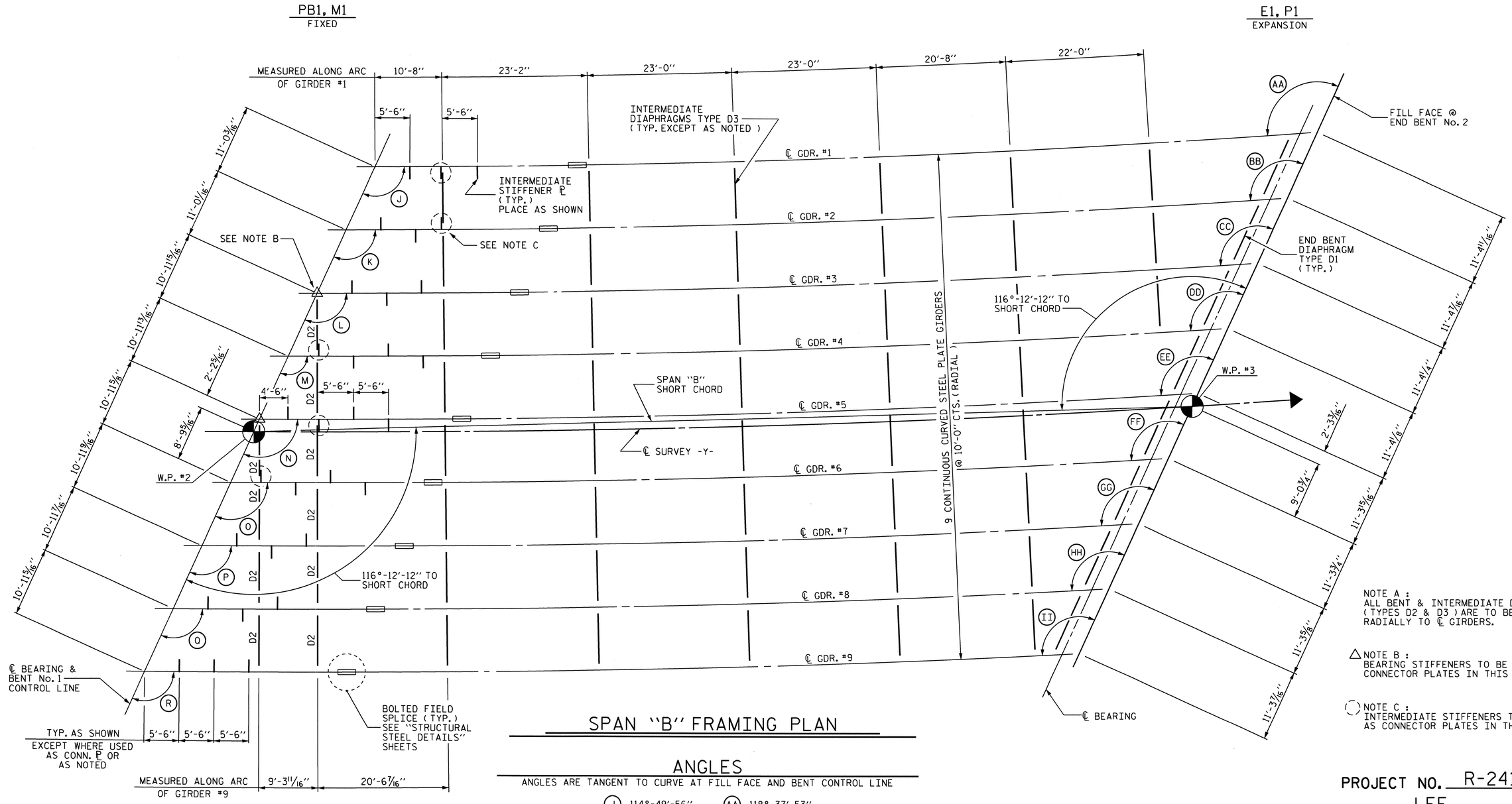

NOTE A :
ALL BENT & INTERMEDIATE DIAPHRAGMS (TYPES D2 & D3) ARE TO BE PLACED RADIALLY TO ℄ GIRDERS.

△ NOTE B :
BEARING STIFFENERS TO BE USED AS CONNECTOR PLATES IN THIS AREA.

◯ NOTE C :
INTERMEDIATE STIFFENERS TO BE USED AS CONNECTOR PLATES IN THIS AREA.

SPAN "B" FRAMING PLAN

ANGLES

ANGLES ARE TANGENT TO CURVE AT FILL FACE AND BENT CONTROL LINE

J	114°-49'-56"	AA	118°-37'-53"
K	114°-42'-53"	BB	118°-29'-35"
L	114°-35'-55"	CC	118°-21'-22"
M	114°-29'-01"	DD	118°-13'-14"
N	114°-22'-11"	EE	118°-05'-11"
O	114°-15'-25"	FF	117°-57'-13"
P	114°-08'-43"	GG	117°-49'-19"
Q	114°-02'-05"	HH	117°-41'-30"
R	113°-55'-30"	II	117°-33'-46"

PROJECT NO. R-2417 AA
LEE COUNTY
STATION: 47+80.13 -L-

SHEET 2 OF 2

STATE OF NORTH CAROLINA
DEPARTMENT OF TRANSPORTATION
RALEIGH

SUPERSTRUCTURE
FRAMING PLAN

NORTH CAROLINA PROFESSIONAL SEAL 24890 ENGINEER THEO J. BEACH
11/23/10

REVISIONS						SHEET NO.
NO.	BY:	DATE:	NO.	BY:	DATE:	S-14
1			3			TOTAL SHEETS
2			4			162

DRAWN BY : MIKE BRITT DATE : 2-4-10
CHECKED BY : D.G. ELY DATE : 4-6-10

19-OCT-2010 10:53
R:\Structures\str1-Y-over-L-\Superstructure Drawings\r2417aa_str1_fp.dgn
sbwilliams

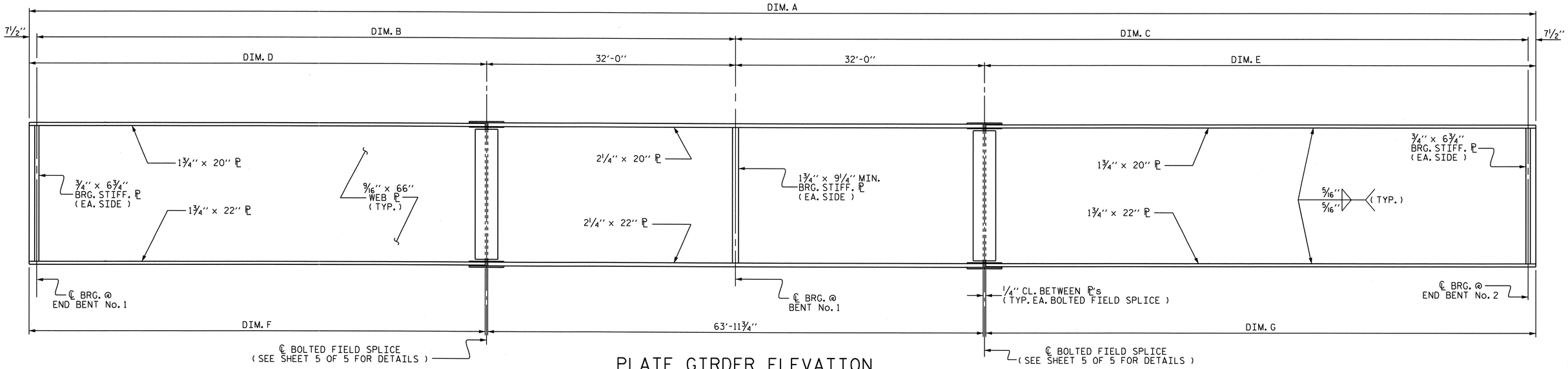

PLATE GIRDER ELEVATION

SEE GIRDER TABLE (ALL DIMENSIONS ARE ALONG ARC)
INTERMEDIATE STIFFENER AND CONNECTOR PL's NOT SHOWN, SEE "FRAMING PLAN" SHEETS.
SHEAR STUDS NOT SHOWN, SEE SHEET 2 OF 5 FOR SHEAR STUD LOCATIONS

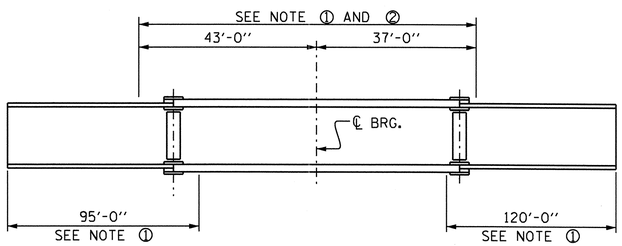

GIRDER MAKE UP

NOTE ①: CHARPY V-NOTCH TESTS ARE REQUIRED FOR ALL TOP OR BOTTOM FLANGE PLATES WHICH FALL WITHIN THESE LIMITS, ALL WEB PLATES, AND ALL SPLICE PLATES. IF A PERMITTED SHOP FLANGE SPLICE IS NOT USED, CHARPY V-NOTCH TESTS WILL BE REQUIRED FOR THE ENTIRE FLANGE PLATE. FOR CHARPY V-NOTCH TESTS, SEE ARTICLE 1072-9 OF THE STANDARD SPECIFICATIONS.

NOTE ②: NO WELDING OF FORMS OR FALSEWORK TO THE TOP FLANGE WILL BE PERMITTED IN THIS REGION

CHARPY V-NOTCH TESTS FOR CONTINUOUS PLATE GIRDERS

NOTE: ALL GIRDER DIMENSIONS IN THE ABOVE DETAIL ARE MEASURED ALONG THE ARC AT THE ℄ GIRDER AND ARE HORIZONTAL DIMENSIONS.

GIRDER TABLE

GIRDER	RADIUS	DIM. A	DIM. B	DIM. B (SLOPED)	DIM. C	DIM. D	DIM. E	DIM. F	DIM. G
#1	2249.83	276'-9¼"	129'-1"	129'-1 7/16"	146'-5¼"	97'-8½"	115'-0¾"	97'-8⅜"	115'-0⅝"
#2	2259.83	276'-6"	128'-11¾"	129'-0 3/16"	146'-3¼"	97'-7¼"	114'-10¾"	97'-7⅛"	114'-10⅝"
#3	2269.83	276'-2¾"	128'-10½"	128'-10 15/16"	146'-1¼"	97'-6"	114'-8¾"	97'-5⅞"	114'-8⅝"
#4	2279.83	275'-11¾"	128'-9⅜"	128'-9 13/16"	145'-11⅜"	97'-4⅞"	114'-6⅞"	97'-4¾"	114'-6¾"
#5	2289.83	275'-8⅝"	128'-8⅛"	128'-8⅝"	145'-9½"	97'-3⅝"	114'-5"	97'-3½"	114'-4⅞"
#6	2299.83	275'-5¾"	128'-7"	128'-7½"	145'-7¾"	97'-2½"	114'-3¼"	97'-2⅜"	114'-3⅛"
#7	2309.83	275'-2⅝"	128'-5¾"	128'-6¼"	145'-5⅞"	97'-1¼"	114'-1⅜"	97'-1⅛"	114'-1¼"
#8	2319.83	274'-11¾"	128'-4⅝"	128'-5⅛"	145'-4⅛"	97'-0⅛"	113'-11⅝"	97'-0"	113'-11½"
#9	2329.83	274'-8⅞"	128'-3½"	128'-4"	145'-2⅜"	96'-11"	113'-9⅞"	96'-10⅞"	113'-9¾"

NOTE: ALL LENGTHS ARE HORIZONTAL DISTANCES UNLESS OTHERWISE NOTED.

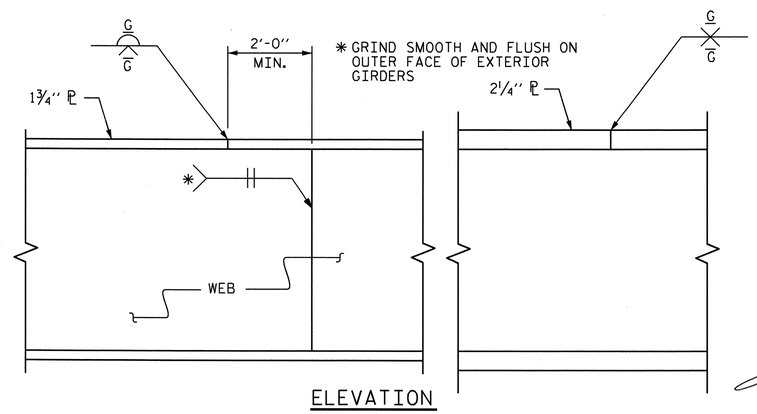

ELEVATION

TYPICAL FLANGE AND WEB BUTT JOINT

NORTH CAROLINA PROFESSIONAL SEAL 24390 ENGINEER THEO J. BEACH
11/22/10

PROJECT NO. R-2417 AA
LEE COUNTY
STATION: 47+80.13 -L-

SHEET 1 OF 5

STATE OF NORTH CAROLINA
DEPARTMENT OF TRANSPORTATION
RALEIGH

SUPERSTRUCTURE
STRUCTURAL STEEL DETAILS

REVISIONS						SHEET NO.
NO.	BY:	DATE:	NO.	BY:	DATE:	S-15
1			3			TOTAL SHEETS
2			4			162

DRAWN BY: MIKE BRITT DATE: 3-29-10
CHECKED BY: D.G. ELY DATE: 4-6-10

24-NOV-2010 09:00
R:\Structures\str1-Y-over-L-\Superstructure Drawings\r2417aa_str1_ss.dgn
sbwilliams

STR. #1

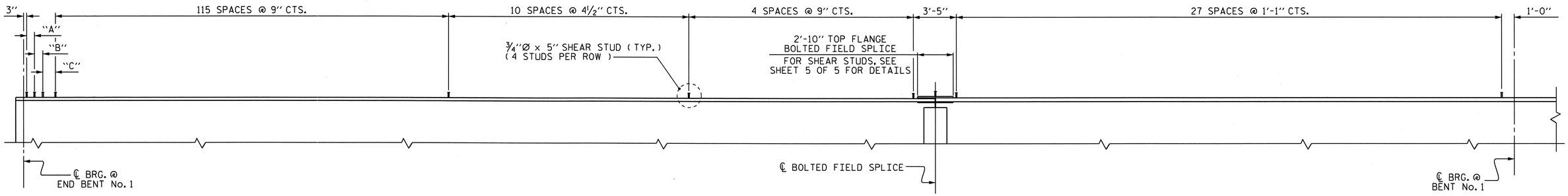

SPAN "A" SHEAR STUD LOCATIONS

SEE TABLE BELOW (ALL SPACES ARE MEASURED ALONG ARC @ ℄ GIRDER)

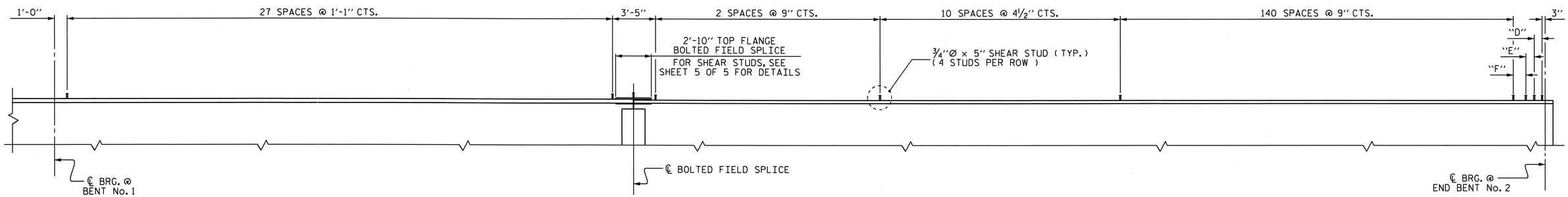

SPAN "B" SHEAR STUD LOCATIONS

SEE TABLE BELOW (ALL SPACES ARE MEASURED ALONG ARC @ ℄ GIRDER)

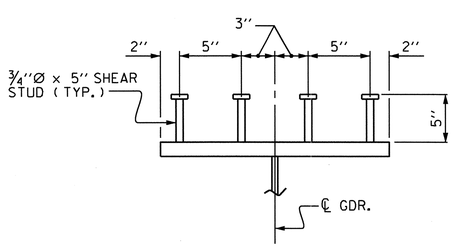

SHEAR STUD DETAIL

TYPICAL EXCEPT @ BOLTED FIELD SPLICE

SHEAR STUD SPACING TABLE

GIRDER	"A"	"B"	"C"	"D"	"E"	"F"
#1	8"	9"	9"	9"	9"	9¼"
#2	6¾"	9"	9"	7¼"	9"	9"
#3	5½"	9"	9"	7¼"	8"	8"
#4	5⅜"	8"	9"	7"	7"	7⅜"
#5	5⅛"	7"	9"	5½"	7"	7"
#6	5"	6"	9"	8¾"	9"	NO SPA. REQ'D
#7	5¾"	6"	7"	7⅞"	8"	NO SPA. REQ'D
#8	5⅝"	6"	6"	7"	7⅛"	NO SPA. REQ'D
#9	5½"	5½"	5½"	6"	6⅜"	NO SPA. REQ'D

PROJECT NO. R-2417 AA

LEE COUNTY

STATION: 47+80.13 -L-

SHEET 2 OF 5

STATE OF NORTH CAROLINA
DEPARTMENT OF TRANSPORTATION
RALEIGH

SUPERSTRUCTURE

STRUCTURAL STEEL DETAILS

NORTH CAROLINA PROFESSIONAL SEAL 24390 ENGINEER THEO J. BEACH

11/23/10

REVISIONS						SHEET NO.
NO.	BY:	DATE:	NO.	BY:	DATE:	S-16
1			3			TOTAL SHEETS
2			4			162

DRAWN BY : MIKE BRITT DATE : 12-22-09
CHECKED BY : D.G. ELY DATE : 4-7-10

21-OCT-2010 11:19
R:\Structures\str1-Y-over-L-\Superstructure Drawings\r2417aa_str1_ss.dgn
mbritt

STR. #1

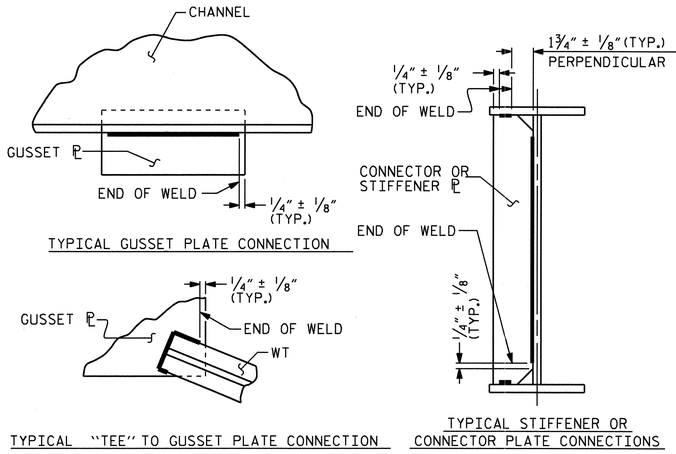

WELD TERMINATION DETAILS

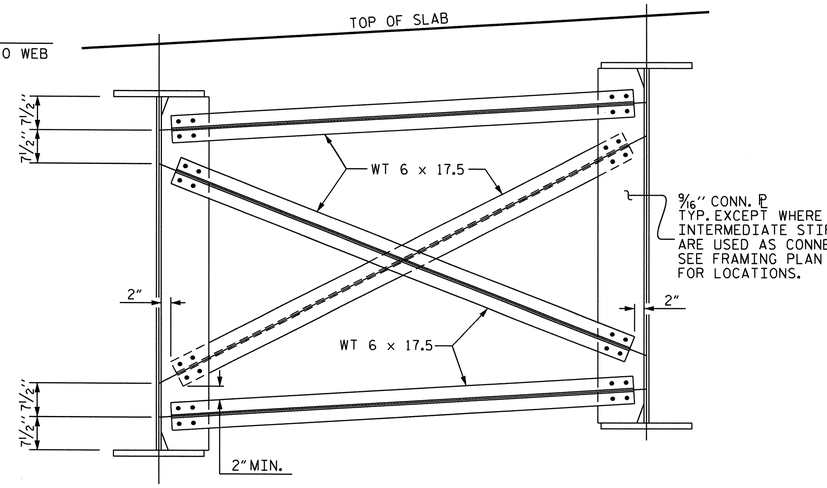

TYPICAL INTERMEDIATE DIAPHRAGM (TYPE D3)

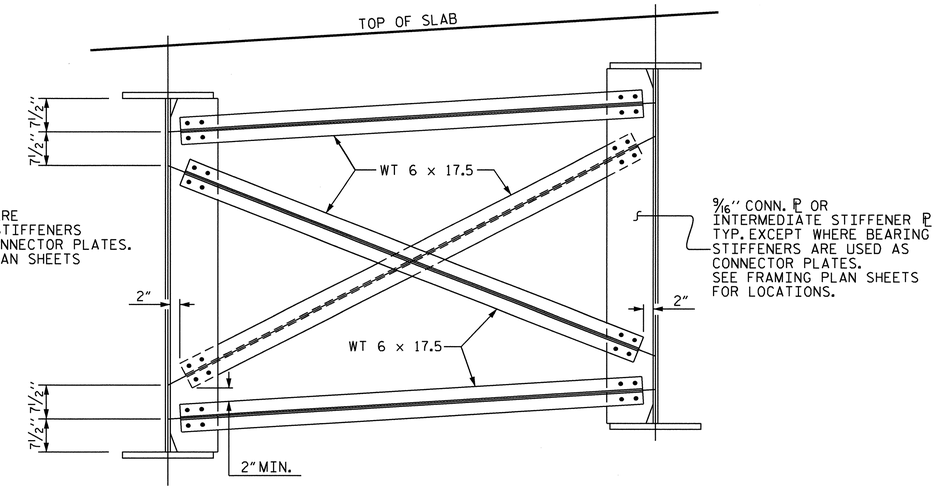

TYPICAL BENT DIAPHRAGM (TYPE D2)

USE 1 3/4" THICK PLATE WHERE BEARING STIFFENERS ARE USED AS CONNECTOR PLATE FOR BENT DIAPHRAGM.

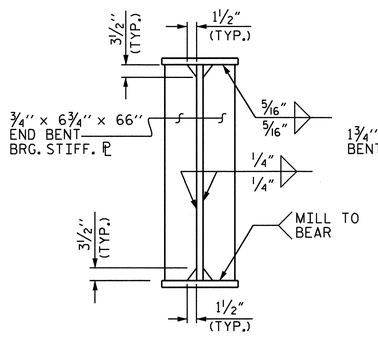

BEARING STIFFENER

(AT END BENTS)

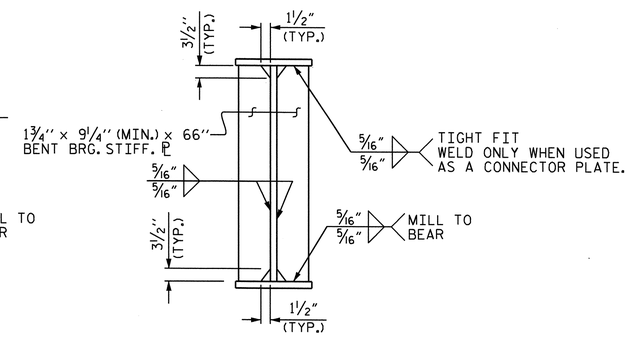

BEARING STIFFENER

(AT BENT No. 1)

TYPICAL END BENT DIAPHRAGM (TYPE D1)

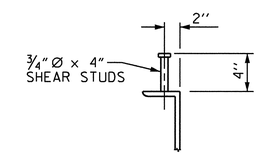

SHEAR STUD DETAILS

(TYP. EA. END BENT DIAPHRAGM)

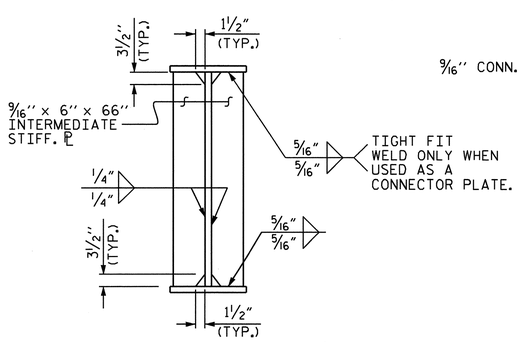

INTERMEDIATE STIFFENER

(SEE FRAMING PLAN FOR LOCATION)

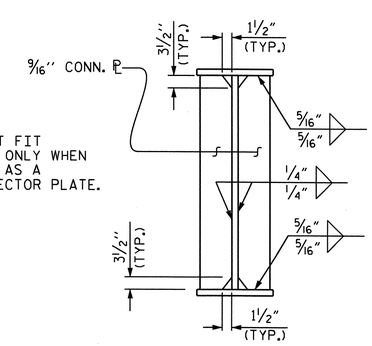

CONNECTOR PL

PROJECT NO. R-2417 AA

LEE COUNTY

STATION: 47+80.13 -L-

SHEET 3 OF 5

STATE OF NORTH CAROLINA
DEPARTMENT OF TRANSPORTATION
RALEIGH

SUPERSTRUCTURE

STRUCTURAL STEEL DETAILS

NORTH CAROLINA PROFESSIONAL SEAL 24390 ENGINEER THEO J. BEACH
11/23/10

REVISIONS						SHEET NO.
NO.	BY:	DATE:	NO.	BY:	DATE:	S-17
1			3			TOTAL SHEETS
2			4			162

DRAWN BY : MIKE BRITT DATE : 1-27-10
CHECKED BY : D.G. ELY DATE : 4-7-10

23-NOV-2010 11:10
R:\Structures\str1-Y-over-L-\Superstructure Drawings\r2417aa_str1_ss.dgn
tbeach

STR. #1

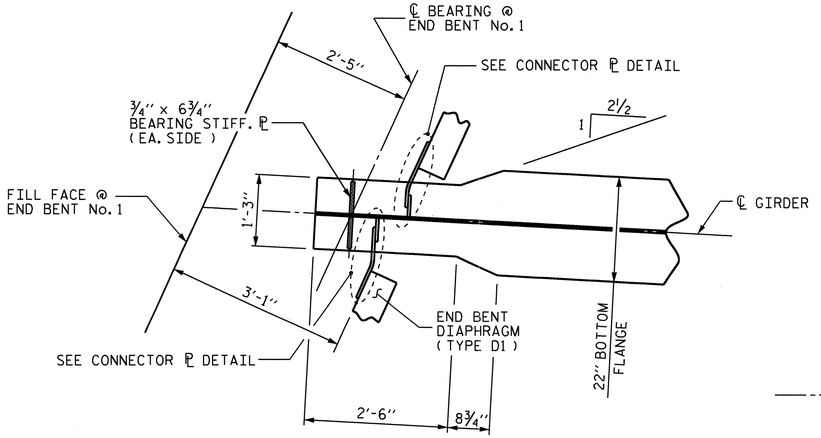

@ END BENT No. 1

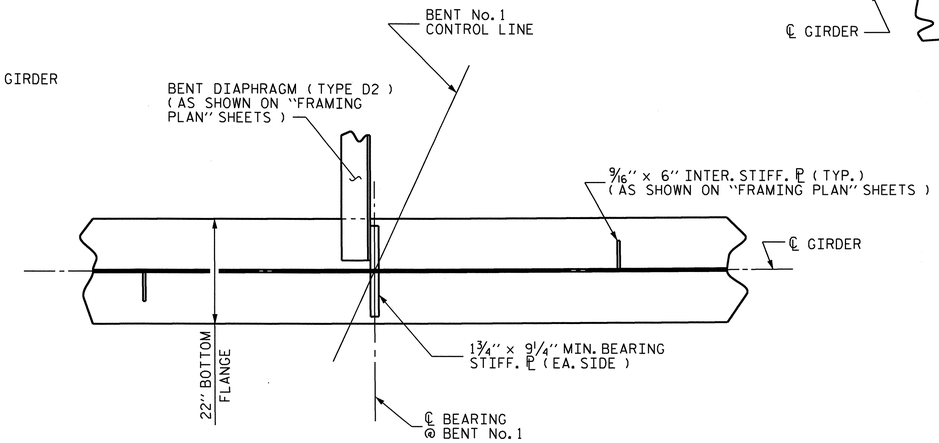

@ BENT No. 1

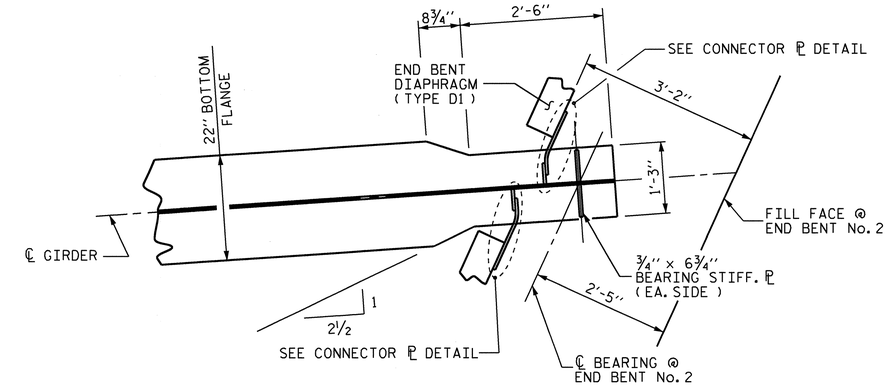

@ END BENT No. 2

SPAN "A-B" BOTTOM FLANGE DETAIL

SEE FRAMING PLAN SHEETS FOR DIAPHRAGM LOCATIONS

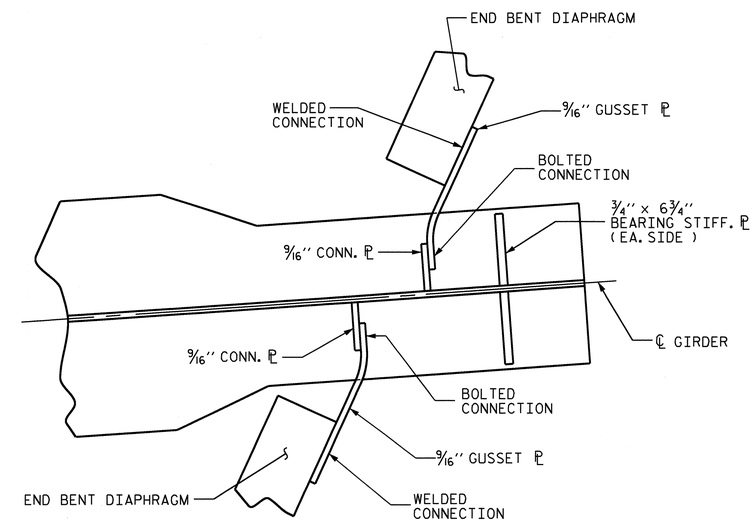

CONNECTOR ℙ DETAIL

(EACH END SIMILAR)

STRUCTURAL STEEL NOTES :

ALL STRUCTURAL STEEL SHALL BE AASHTO M270 GRADE 50W AND PAINTED IN ACCORDANCE WITH SYSTEM 4 OF ARTICLE 442-7 OF THE STANDARD SPECIFICATIONS UNLESS OTHERWISE NOTED ON THE PLANS.

ALL DIMENSIONS SHOWN ARE HORIZONTAL OR VERTICAL, UNLESS OTHERWISE NOTED.

ALL FIELD CONNECTIONS TO BE ⅞" DIA. HIGH STRENGTH BOLTS UNLESS OTHERWISE NOTED.

BEARING STIFFENERS ARE TO BE PLACED NORMAL TO THE WEB OF THE GIRDER AND SHALL BE PLUMB.

SHOP SPLICES ARE PERMITTED TO LIMIT THE MAXIMUM REQUIRED FLANGE PIECE LENGTHS TO 60 FEET AND WEB PIECE LENGTHS TO 45 FEET. PERMITTED FLANGE AND WEB SHOP SPLICES SHALL NOT BE LOCATED WITHIN 15 FEET OF MAXIMUM DEAD LOAD DEFLECTION (NOR WITHIN 15 FEET OF INTERMEDIATE BEARINGS OF CONTINUOUS UNITS). KEEP 2 FEET MINIMUM BETWEEN WEB AND FLANGE SHOP SPLICES. KEEP 6" MINIMUM BETWEEN CONNECTOR PLATE OR TRANSVERSE STIFFENER WELDS AND WEB OR FLANGE SHOP SPLICES.

STUDS ON GIRDERS MAY BE SHIFTED UP TO 1" IF NECESSARY TO CLEAR FLANGE SPLICE WELD.

TENSION ON THE AASHTO M164 BOLTS SHALL BE CALIBRATED USING DIRECT TENSION INDICATOR WASHERS IN ACCORDANCE WITH ARTICLE 440-8 OF THE STANDARD SPECIFICATIONS.

FOR DIRECT TENSION INDICATORS, SEE SPECIAL PROVISIONS.

END OF GIRDERS SHALL BE PLUMB.

THE CONTRACTOR SHALL MAINTAIN STABILITY OF THE CURVED GIRDERS UNTIL ALL FIELD SPLICES AND CROSSFRAME CONNECTIONS HAVE BEEN COMPLETED. STRUCTURAL STEEL ERECTION IN A CONTINUOUS UNIT SHALL BE COMPLETE BEFORE FALSEWORK OR FORMS ARE PLACED ON THE UNIT.

CURVATURE OF STEEL GIRDERS MAY BE ACCOMPLISHED BY CUTTING PLATES TO THE REQUIRED CURVATURE OR BY HEAT TREATMENT.

BEARING STIFFENER PLATE WIDTH SHOWN AT THE BENT IS A MINIMUM WIDTH. THE BEARING STIFFENER PLATE WIDTH AT THE BENT MAY BE INCREASED AS NECESSARY IN ORDER TO CONNECT THE DIAPHRAGM MEMBERS WHEN REQUIRED.

INTERMEDIATE STIFFENER PLATE WIDTH SHOWN IS A MINIMUM WIDTH. THE INTERMEDIATE STIFFENER PLATE WIDTH, WHEN USED AS A CONNECTOR PLATE, MAY BE INCREASED AS NECESSARY IN ORDER TO CONNECT THE DIAPHRAGM MEMBERS.

PROJECT NO. R-2417 AA
LEE COUNTY
STATION: 47+80.13 -L-

SHEET 4 OF 5

STATE OF NORTH CAROLINA
DEPARTMENT OF TRANSPORTATION
RALEIGH

SUPERSTRUCTURE

STRUCTURAL STEEL DETAILS

NORTH CAROLINA PROFESSIONAL SEAL 24590 ENGINEER THEO J. BEACH
11/23/10

REVISIONS						SHEET NO.
NO.	BY:	DATE:	NO.	BY:	DATE:	S-18
1			3			TOTAL SHEETS
2			4			162

DRAWN BY : MIKE BRITT DATE : 2-11-10
CHECKED BY : D.G. ELY DATE : 4-7-10

21-OCT-2010 11:19
R:\Structures\str1-Y-over-L-\Superstructure Drawings\r2417aa_str1_ss.dgn
mbritt

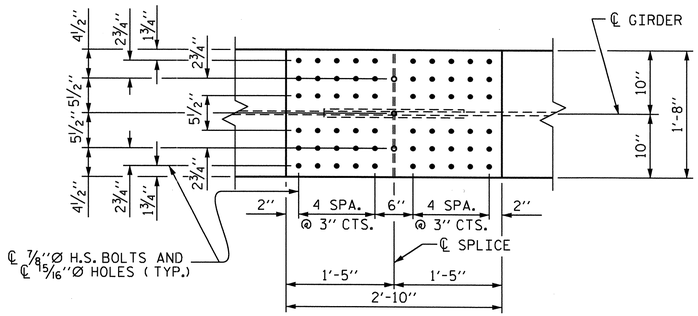

PLAN (TOP OF TOP FLANGE)

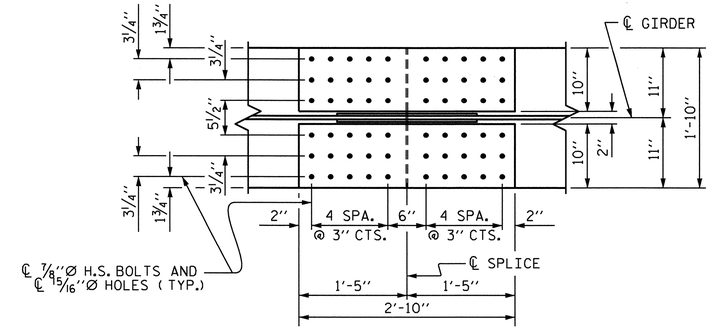

PLAN (TOP OF BOTTOM FLANGE)

* NOTE :
SHEAR STUDS ARE TO BE SHOP WELDED ON TOP OF PLATE BEFORE FIELD ASSEMBLY.

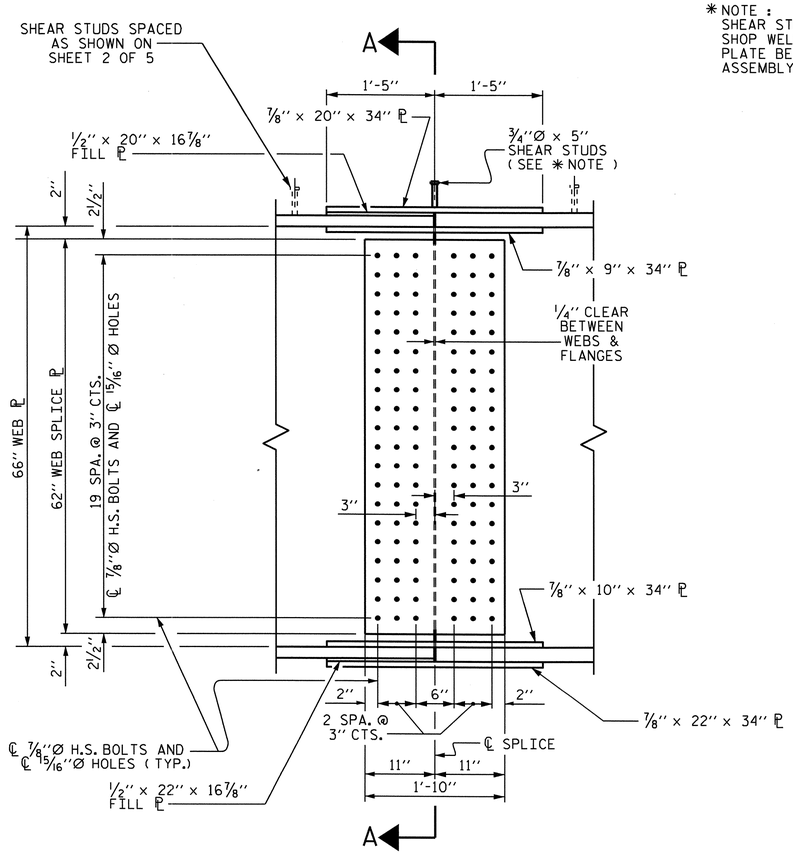

ELEVATION

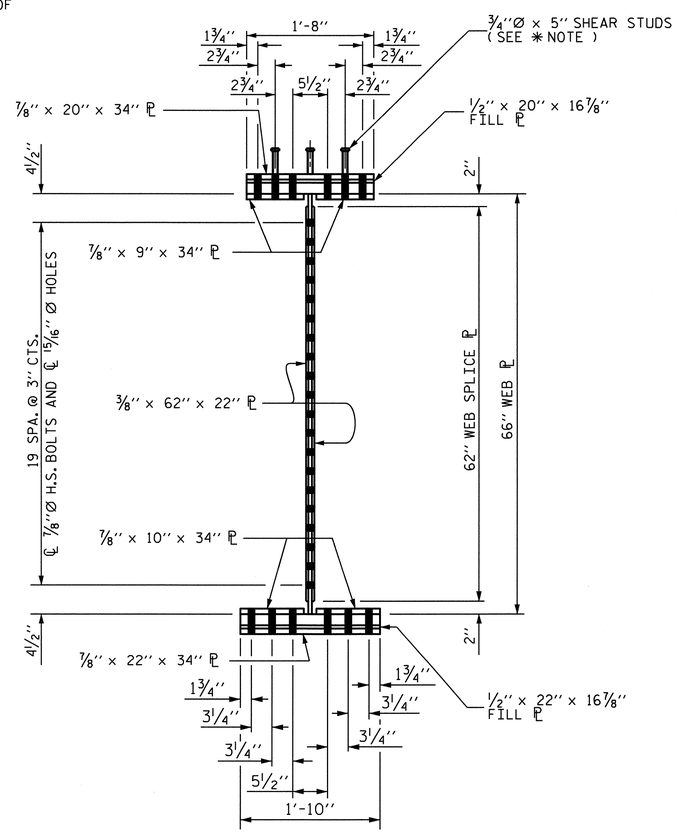

SECTION A-A

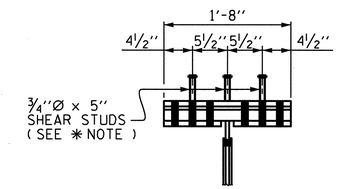

SHEAR STUD DETAIL FOR TOP FLANGE SPLICE PLATE

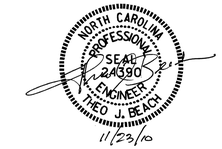

BOLTED FIELD SPLICE DETAILS

(TYPICAL EACH FIELD SPLICE)

PROJECT NO. R-2417 AA
LEE COUNTY
STATION: 47+80.13 -L-

SHEET 5 OF 5

STATE OF NORTH CAROLINA
DEPARTMENT OF TRANSPORTATION
RALEIGH

SUPERSTRUCTURE
STRUCTURAL STEEL DETAILS

REVISIONS						SHEET NO.
NO.	BY:	DATE:	NO.	BY:	DATE:	S-19
1			3			TOTAL SHEETS
2			4			162

DRAWN BY : MIKE BRITT DATE : 1-20-10
CHECKED BY : D.G. ELY DATE : 4-7-10

21-OCT-2010 11:19
R:\Structures\str1-Y-over-L-\Superstructure Drawings\r2417aa_str1_ss.dgn
mbritt

STR. #1

DEAD LOAD DEFLECTION TABLE FOR GIRDERS

GIRDER #1

TWENTIETH POINTS	SPAN "A" 0	.05	.10	.15	.20	.25	.30	.35	.40	.45	.50	.55	.60	.65	.70	.75	.80	.85	.90	.95	0
DEFLECTION DUE TO WEIGHT OF GIRDER	0.000	0.005	0.010	0.014	0.018	0.020	0.022	0.023	0.024	0.023	0.022	0.020	0.017	0.013	0.010	0.007	0.004	0.001	0.000	0.000	0.000
DEFLECTION DUE TO WEIGHT OF SLAB *	0.000	0.014	0.027	0.039	0.049	0.057	0.063	0.066	0.066	0.065	0.060	0.055	0.047	0.037	0.027	0.018	0.009	0.002	0.000	0.000	0.000
DEFLECTION DUE TO WEIGHT OF BARRIER RAIL	0.000	0.000	0.001	0.001	0.002	0.002	0.002	0.002	0.002	0.002	0.002	0.001	0.001	0.001	0.000	0.000	0.000	0.000	0.000	0.000	0.000
TOTAL DEAD LOAD DEFLECTION	0.000	0.019	0.038	0.054	0.069	0.079	0.087	0.091	0.092	0.090	0.084	0.076	0.065	0.051	0.037	0.025	0.013	0.003	0.000	0.000	0.000
VERTICAL CURVE ORDINATE	0.000	0.027	0.050	0.071	0.090	0.105	0.118	0.127	0.134	0.139	0.140	0.139	0.134	0.127	0.118	0.105	0.090	0.071	0.050	0.027	0.000
REQUIRED CAMBER	0	9/16"	1 1/16"	1 1/2"	1 15/16"	2 3/16"	2 7/16"	2 5/8"	2 11/16"	2 3/4"	2 11/16"	2 9/16"	2 3/8"	2 1/8"	1 7/8"	1 9/16"	1 1/4"	7/8"	5/8"	5/16"	0

TWENTIETH POINTS	SPAN "B" 0	.05	.10	.15	.20	.25	.30	.35	.40	.45	.50	.55	.60	.65	.70	.75	.80	.85	.90	.95	0
DEFLECTION DUE TO WEIGHT OF GIRDER	0.000	0.004	0.009	0.016	0.023	0.030	0.038	0.045	0.050	0.055	0.058	0.060	0.059	0.057	0.053	0.048	0.040	0.032	0.022	0.012	0.000
DEFLECTION DUE TO WEIGHT OF SLAB *	0.000	0.010	0.026	0.045	0.065	0.087	0.109	0.129	0.145	0.158	0.167	0.173	0.172	0.166	0.154	0.138	0.117	0.092	0.064	0.034	0.000
DEFLECTION DUE TO WEIGHT OF BARRIER RAIL	0.000	0.001	0.002	0.003	0.004	0.005	0.007	0.008	0.009	0.009	0.010	0.010	0.010	0.010	0.009	0.008	0.007	0.005	0.004	0.002	0.000
TOTAL DEAD LOAD DEFLECTION	0.000	0.015	0.037	0.064	0.092	0.122	0.154	0.182	0.204	0.222	0.235	0.243	0.241	0.233	0.216	0.194	0.164	0.129	0.090	0.048	0.000
VERTICAL CURVE ORDINATE	0.000	0.034	0.065	0.092	0.115	0.135	0.151	0.164	0.173	0.178	0.180	0.178	0.173	0.164	0.151	0.135	0.115	0.092	0.065	0.034	0.000
REQUIRED CAMBER	0	9/16"	1 1/4"	1 7/8"	2 1/2"	3 1/16"	3 11/16"	4 1/8"	4 1/2"	4 13/16"	5"	5 1/16"	4 15/16"	4 3/4"	4 3/8"	3 15/16"	3 3/8"	2 5/8"	1 7/8"	1"	0

DEAD LOAD DEFLECTION TABLE FOR GIRDERS

GIRDER #2

TWENTIETH POINTS	SPAN "A" 0	.05	.10	.15	.20	.25	.30	.35	.40	.45	.50	.55	.60	.65	.70	.75	.80	.85	.90	.95	0
DEFLECTION DUE TO WEIGHT OF GIRDER	0.000	0.005	0.010	0.014	0.018	0.020	0.022	0.024	0.024	0.023	0.022	0.020	0.017	0.014	0.010	0.007	0.004	0.001	0.000	0.000	0.000
DEFLECTION DUE TO WEIGHT OF SLAB *	0.000	0.015	0.029	0.041	0.052	0.060	0.066	0.070	0.070	0.069	0.064	0.058	0.050	0.040	0.030	0.020	0.011	0.004	0.000	0.000	0.000
DEFLECTION DUE TO WEIGHT OF BARRIER RAIL	0.000	0.001	0.001	0.001	0.002	0.002	0.002	0.002	0.002	0.002	0.001	0.001	0.001	0.000	0.000	0.000	0.000	0.000	0.000	0.000	0.000
TOTAL DEAD LOAD DEFLECTION	0.000	0.021	0.040	0.056	0.072	0.082	0.090	0.096	0.096	0.094	0.087	0.079	0.068	0.054	0.040	0.026	0.014	0.004	0.000	0.000	0.000
VERTICAL CURVE ORDINATE	0.000	0.026	0.050	0.071	0.089	0.104	0.116	0.126	0.133	0.137	0.139	0.137	0.133	0.126	0.116	0.104	0.089	0.071	0.050	0.026	0.000
REQUIRED CAMBER	0	9/16"	1 1/16"	1 1/2"	1 15/16"	2 1/4"	2 1/2"	2 11/16"	2 3/4"	2 3/4"	2 11/16"	2 9/16"	2 7/16"	2 3/16"	1 7/8"	1 9/16"	1 1/4"	7/8"	5/8"	5/16"	0

TWENTIETH POINTS	SPAN "B" 0	.05	.10	.15	.20	.25	.30	.35	.40	.45	.50	.55	.60	.65	.70	.75	.80	.85	.90	.95	0
DEFLECTION DUE TO WEIGHT OF GIRDER	0.000	0.004	0.009	0.015	0.022	0.030	0.037	0.044	0.050	0.054	0.057	0.059	0.059	0.057	0.053	0.047	0.040	0.031	0.022	0.011	0.000
DEFLECTION DUE TO WEIGHT OF SLAB *	0.000	0.011	0.025	0.045	0.066	0.088	0.111	0.131	0.148	0.161	0.170	0.174	0.174	0.168	0.157	0.140	0.119	0.093	0.064	0.034	0.000
DEFLECTION DUE TO WEIGHT OF BARRIER RAIL	0.000	0.002	0.003	0.006	0.008	0.010	0.012	0.014	0.015	0.016	0.016	0.016	0.016	0.015	0.014	0.012	0.010	0.008	0.006	0.003	0.000
TOTAL DEAD LOAD DEFLECTION	0.000	0.017	0.037	0.066	0.096	0.128	0.160	0.189	0.213	0.231	0.243	0.249	0.249	0.240	0.224	0.199	0.169	0.132	0.092	0.048	0.000
VERTICAL CURVE ORDINATE	0.000	0.034	0.064	0.091	0.114	0.134	0.150	0.162	0.171	0.176	0.178	0.176	0.171	0.162	0.150	0.134	0.114	0.091	0.064	0.034	0.000
REQUIRED CAMBER	0	5/8"	1 3/16"	1 7/8"	2 1/2"	3 1/8"	3 3/4"	4 3/16"	4 5/8"	4 7/8"	5 1/16"	5 1/8"	5 1/16"	4 13/16"	4 1/2"	4"	3 3/8"	2 11/16"	1 7/8"	1"	0

DEAD LOAD DEFLECTION TABLE FOR GIRDERS

GIRDER #3

TWENTIETH POINTS	SPAN "A" 0	.05	.10	.15	.20	.25	.30	.35	.40	.45	.50	.55	.60	.65	.70	.75	.80	.85	.90	.95	0
DEFLECTION DUE TO WEIGHT OF GIRDER	0.000	0.005	0.010	0.014	0.018	0.021	0.023	0.024	0.024	0.024	0.022	0.020	0.017	0.014	0.011	0.007	0.004	0.002	0.000	0.000	0.000
DEFLECTION DUE TO WEIGHT OF SLAB *	0.000	0.016	0.031	0.043	0.053	0.062	0.068	0.072	0.073	0.071	0.067	0.060	0.052	0.042	0.032	0.021	0.012	0.004	0.000	0.000	0.000
DEFLECTION DUE TO WEIGHT OF BARRIER RAIL	0.000	0.001	0.001	0.002	0.002	0.003	0.003	0.003	0.003	0.002	0.002	0.001	0.000	0.000	0.000	0.000	0.000	0.000	0.000	0.000	0.000
TOTAL DEAD LOAD DEFLECTION	0.000	0.022	0.042	0.059	0.073	0.086	0.094	0.099	0.100	0.097	0.091	0.081	0.069	0.056	0.042	0.028	0.016	0.006	0.000	0.000	0.000
VERTICAL CURVE ORDINATE	0.000	0.026	0.049	0.070	0.088	0.103	0.115	0.125	0.132	0.136	0.137	0.136	0.132	0.125	0.115	0.103	0.088	0.070	0.049	0.026	0.000
REQUIRED CAMBER	0	9/16"	1 1/16"	1 9/16"	1 15/16"	2 1/4"	2 1/2"	2 11/16"	2 13/16"	2 13/16"	2 3/4"	2 5/8"	2 7/16"	2 3/16"	1 7/8"	1 9/16"	1 1/4"	7/8"	9/16"	5/16"	0

TWENTIETH POINTS	SPAN "B" 0	.05	.10	.15	.20	.25	.30	.35	.40	.45	.50	.55	.60	.65	.70	.75	.80	.85	.90	.95	0
DEFLECTION DUE TO WEIGHT OF GIRDER	0.000	0.004	0.009	0.015	0.022	0.029	0.037	0.044	0.050	0.054	0.057	0.058	0.058	0.056	0.053	0.047	0.040	0.032	0.022	0.011	0.000
DEFLECTION DUE TO WEIGHT OF SLAB *	0.000	0.011	0.026	0.045	0.066	0.089	0.111	0.133	0.150	0.163	0.172	0.176	0.176	0.170	0.159	0.142	0.121	0.095	0.065	0.033	0.000
DEFLECTION DUE TO WEIGHT OF BARRIER RAIL	0.000	0.002	0.005	0.008	0.011	0.014	0.017	0.019	0.021	0.023	0.023	0.023	0.023	0.022	0.020	0.018	0.015	0.012	0.008	0.004	0.000
TOTAL DEAD LOAD DEFLECTION	0.000	0.017	0.040	0.068	0.099	0.132	0.165	0.196	0.221	0.240	0.252	0.257	0.257	0.248	0.232	0.207	0.176	0.139	0.095	0.048	0.000
VERTICAL CURVE ORDINATE	0.000	0.034	0.064	0.090	0.113	0.132	0.148	0.160	0.169	0.175	0.176	0.175	0.169	0.160	0.148	0.132	0.113	0.090	0.064	0.034	0.000
REQUIRED CAMBER	0	5/8"	1 1/4"	1 7/8"	2 9/16"	3 3/16"	3 3/4"	4 1/4"	4 11/16"	5"	5 1/8"	5 3/16"	5 1/8"	4 7/8"	4 9/16"	4 1/16"	3 7/16"	2 3/4"	1 15/16"	1"	0

* INCLUDES SLAB, BUILDUPS & STAY-IN-PLACE FORMS.
ALL VALUES ARE SHOWN IN FEET (DECIMAL FORM), EXCEPT "REQUIRED CAMBER", WHICH IS GIVEN IN INCHES (FRACTION FORM).
DEFLECTIONS ARE TAKEN AT TWENTIETH POINTS BETWEEN BEARINGS.

NOTE :
ORDINATE DUE TO SUPERELEVATION AND CAMBER DISSIPATION DUE TO HEAT CURVING ARE ZERO FOR EACH GIRDER.

PROJECT NO. R-2417 AA
LEE COUNTY
STATION: 47+80.13 -L-

SHEET 1 OF 3

NORTH CAROLINA PROFESSIONAL SEAL 24390 ENGINEER THEO J. BEACH
11/23/10

STATE OF NORTH CAROLINA
DEPARTMENT OF TRANSPORTATION
RALEIGH

SUPERSTRUCTURE

DEAD LOAD DEFLECTIONS

REVISIONS						SHEET NO.
NO.	BY:	DATE:	NO.	BY:	DATE:	S-20
1			3			TOTAL SHEETS
2			4			162

DRAWN BY : MIKE BRITT DATE : 2-24-10
CHECKED BY : D.G. ELY DATE : 4-7-10

19-OCT-2010 10:52
R:\Structures\str1-Y-over-L-\Superstructure Drawings\r2417aa_str1_dl.dgn
sbwilliams

DEAD LOAD DEFLECTION TABLE FOR GIRDERS

GIRDER #4

TWENTIETH POINTS	SPAN "A" 0	.05	.10	.15	.20	.25	.30	.35	.40	.45	.50	.55	.60	.65	.70	.75	.80	.85	.90	.95	SPAN "B" 0	.05	.10	.15	.20	.25	.30	.35	.40	.45	.50	.55	.60	.65	.70	.75	.80	.85	.90	.95	0
DEFLECTION DUE TO WEIGHT OF GIRDER	0.000	0.005	0.010	0.014	0.018	0.021	0.023	0.024	0.024	0.024	0.023	0.020	0.017	0.014	0.011	0.007	0.004	0.002	0.000	0.000	0.000	0.003	0.009	0.015	0.022	0.029	0.036	0.043	0.049	0.054	0.057	0.058	0.058	0.056	0.052	0.047	0.040	0.031	0.022	0.011	0.000
DEFLECTION DUE TO WEIGHT OF SLAB ✳	0.000	0.015	0.031	0.044	0.055	0.063	0.070	0.073	0.074	0.073	0.069	0.062	0.053	0.043	0.033	0.022	0.013	0.005	0.000	0.000	0.000	0.010	0.026	0.044	0.066	0.089	0.111	0.132	0.151	0.164	0.173	0.177	0.177	0.171	0.160	0.143	0.121	0.096	0.067	0.033	0.000
DEFLECTION DUE TO WEIGHT OF BARRIER RAIL	0.000	0.001	0.002	0.003	0.003	0.004	0.004	0.004	0.004	0.003	0.003	0.002	0.001	0.000	0.000	0.000	0.000	0.000	0.000	0.000	0.000	0.003	0.006	0.010	0.014	0.018	0.021	0.025	0.027	0.029	0.030	0.030	0.029	0.028	0.026	0.023	0.019	0.015	0.010	0.005	0.000
TOTAL DEAD LOAD DEFLECTION	0.000	0.021	0.043	0.061	0.076	0.088	0.097	0.101	0.102	0.100	0.095	0.084	0.071	0.057	0.044	0.029	0.017	0.007	0.000	0.000	0.000	0.016	0.041	0.069	0.102	0.136	0.168	0.200	0.227	0.247	0.260	0.265	0.264	0.255	0.238	0.213	0.180	0.142	0.099	0.049	0.000
VERTICAL CURVE ORDINATE	0.000	0.026	0.049	0.069	0.087	0.102	0.114	0.124	0.130	0.134	0.136	0.134	0.130	0.124	0.114	0.102	0.087	0.069	0.049	0.026	0.000	0.033	0.063	0.089	0.112	0.131	0.146	0.159	0.167	0.173	0.174	0.173	0.167	0.159	0.146	0.131	0.112	0.089	0.063	0.033	0.000
REQUIRED CAMBER	0	9/16"	1 1/8"	1 9/16"	1 15/16"	2 1/4"	2 9/16"	2 11/16"	2 13/16"	2 13/16"	2 3/4"	2 5/8"	2 7/16"	2 3/16"	1 7/8"	1 9/16"	1 1/4"	15/16"	9/16"	5/16"	0	9/16"	1 1/4"	1 7/8"	2 9/16"	3 3/16"	3 3/4"	4 5/16"	4 3/4"	5 1/16"	5 3/16"	5 1/4"	5 3/16"	4 15/16"	4 5/8"	4 1/8"	3 1/2"	2 3/4"	1 15/16"	1"	0

DEAD LOAD DEFLECTION TABLE FOR GIRDERS

GIRDER #5

TWENTIETH POINTS	SPAN "A" 0	.05	.10	.15	.20	.25	.30	.35	.40	.45	.50	.55	.60	.65	.70	.75	.80	.85	.90	.95	SPAN "B" 0	.05	.10	.15	.20	.25	.30	.35	.40	.45	.50	.55	.60	.65	.70	.75	.80	.85	.90	.95	0
DEFLECTION DUE TO WEIGHT OF GIRDER	0.000	0.005	0.010	0.014	0.018	0.021	0.023	0.024	0.024	0.024	0.023	0.021	0.018	0.014	0.011	0.007	0.004	0.002	0.000	0.000	0.000	0.003	0.008	0.015	0.022	0.029	0.036	0.043	0.049	0.053	0.056	0.058	0.058	0.056	0.052	0.047	0.039	0.031	0.022	0.011	0.000
DEFLECTION DUE TO WEIGHT OF SLAB ✳	0.000	0.016	0.031	0.044	0.055	0.064	0.070	0.073	0.074	0.073	0.069	0.063	0.054	0.043	0.033	0.022	0.013	0.005	0.000	0.000	0.000	0.010	0.026	0.044	0.065	0.088	0.111	0.131	0.148	0.162	0.172	0.178	0.177	0.171	0.160	0.143	0.121	0.095	0.067	0.035	0.000
DEFLECTION DUE TO WEIGHT OF BARRIER RAIL	0.000	0.001	0.002	0.003	0.004	0.004	0.004	0.004	0.004	0.004	0.003	0.003	0.002	0.001	0.000	0.000	0.000	0.000	0.000	0.000	0.000	0.003	0.007	0.011	0.015	0.019	0.023	0.026	0.029	0.031	0.032	0.032	0.032	0.031	0.028	0.025	0.021	0.017	0.012	0.006	0.000
TOTAL DEAD LOAD DEFLECTION	0.000	0.022	0.043	0.061	0.077	0.089	0.097	0.101	0.102	0.101	0.095	0.087	0.074	0.058	0.044	0.029	0.017	0.007	0.000	0.000	0.000	0.016	0.041	0.070	0.102	0.136	0.170	0.200	0.226	0.246	0.260	0.268	0.267	0.258	0.240	0.215	0.181	0.143	0.101	0.052	0.000
VERTICAL CURVE ORDINATE	0.000	0.026	0.048	0.069	0.086	0.101	0.113	0.122	0.129	0.133	0.134	0.133	0.129	0.122	0.113	0.101	0.086	0.069	0.048	0.026	0.000	0.033	0.062	0.088	0.110	0.129	0.145	0.157	0.166	0.171	0.172	0.171	0.166	0.157	0.145	0.129	0.110	0.088	0.062	0.033	0.000
REQUIRED CAMBER	0	9/16"	1 1/16"	1 9/16"	1 15/16"	2 1/4"	2 1/2"	2 11/16"	2 3/4"	2 13/16"	2 3/4"	2 5/8"	2 7/16"	2 3/16"	1 7/8"	1 9/16"	1 1/4"	15/16"	9/16"	5/16"	0	9/16"	1 1/4"	1 7/8"	2 9/16"	3 3/16"	3 3/4"	4 5/16"	4 11/16"	5"	5 3/16"	5 1/4"	5 3/16"	5"	4 5/8"	4 1/8"	3 1/2"	2 3/4"	1 15/16"	1"	0

DEAD LOAD DEFLECTION TABLE FOR GIRDERS

GIRDER #6

TWENTIETH POINTS	SPAN "A" 0	.05	.10	.15	.20	.25	.30	.35	.40	.45	.50	.55	.60	.65	.70	.75	.80	.85	.90	.95	SPAN "B" 0	.05	.10	.15	.20	.25	.30	.35	.40	.45	.50	.55	.60	.65	.70	.75	.80	.85	.90	.95	0
DEFLECTION DUE TO WEIGHT OF GIRDER	0.000	0.005	0.010	0.014	0.018	0.021	0.023	0.024	0.024	0.024	0.022	0.020	0.018	0.014	0.011	0.007	0.004	0.002	0.000	0.000	0.000	0.003	0.008	0.015	0.021	0.029	0.036	0.043	0.049	0.053	0.056	0.058	0.058	0.056	0.052	0.046	0.040	0.031	0.021	0.011	0.000
DEFLECTION DUE TO WEIGHT OF SLAB ✳	0.000	0.016	0.030	0.044	0.055	0.064	0.070	0.073	0.074	0.073	0.069	0.063	0.054	0.043	0.033	0.022	0.013	0.005	0.000	0.000	0.000	0.010	0.025	0.044	0.065	0.088	0.111	0.131	0.148	0.162	0.171	0.177	0.176	0.170	0.159	0.143	0.121	0.095	0.066	0.034	0.000
DEFLECTION DUE TO WEIGHT OF BARRIER RAIL	0.000	0.001	0.002	0.003	0.003	0.004	0.004	0.004	0.004	0.004	0.003	0.003	0.002	0.001	0.000	0.000	0.000	0.000	0.000	0.000	0.000	0.002	0.006	0.009	0.013	0.017	0.021	0.024	0.026	0.028	0.029	0.030	0.029	0.028	0.026	0.023	0.020	0.015	0.011	0.006	0.000
TOTAL DEAD LOAD DEFLECTION	0.000	0.022	0.042	0.061	0.076	0.089	0.097	0.101	0.102	0.101	0.094	0.086	0.074	0.058	0.044	0.029	0.017	0.007	0.000	0.000	0.000	0.015	0.039	0.068	0.099	0.134	0.168	0.198	0.223	0.243	0.256	0.265	0.263	0.254	0.237	0.212	0.181	0.141	0.098	0.051	0.000
VERTICAL CURVE ORDINATE	0.000	0.025	0.048	0.068	0.085	0.100	0.112	0.121	0.128	0.132	0.133	0.132	0.128	0.121	0.112	0.100	0.085	0.068	0.048	0.025	0.000	0.032	0.061	0.087	0.109	0.128	0.143	0.155	0.164	0.169	0.171	0.169	0.164	0.155	0.143	0.128	0.109	0.087	0.061	0.032	0.000
REQUIRED CAMBER	0	9/16"	1 1/16"	1 9/16"	1 15/16"	2 1/4"	2 1/2"	2 11/16"	2 3/4"	2 13/16"	2 3/4"	2 5/8"	2 7/16"	2 1/8"	1 7/8"	1 9/16"	1 1/4"	7/8"	9/16"	5/16"	0	9/16"	1 3/16"	1 7/8"	2 1/2"	3 1/8"	3 3/4"	4 1/4"	4 5/8"	4 15/16"	5 1/8"	5 3/16"	5 1/8"	4 15/16"	4 9/16"	4 1/16"	3 1/2"	2 3/4"	1 15/16"	1"	0

✳ INCLUDES SLAB, BUILDUPS & STAY-IN-PLACE FORMS.
ALL VALUES ARE SHOWN IN FEET (DECIMAL FORM), EXCEPT "REQUIRED CAMBER", WHICH IS GIVEN IN INCHES (FRACTION FORM).
DEFLECTIONS ARE TAKEN AT TWENTIETH POINTS BETWEEN BEARINGS.

NOTE :
ORDINATE DUE TO SUPERELEVATION AND CAMBER DISSIPATION DUE TO HEAT CURVING ARE ZERO FOR EACH GIRDER.

PROJECT NO. R-2417 AA
LEE COUNTY
STATION: 47+80.13 -L-

SHEET 2 OF 3

STATE OF NORTH CAROLINA
DEPARTMENT OF TRANSPORTATION
RALEIGH

SUPERSTRUCTURE
DEAD LOAD DEFLECTIONS

NORTH CAROLINA PROFESSIONAL SEAL 24390 ENGINEER THEO J. BEACH
11/23/10

REVISIONS						SHEET NO.
NO.	BY:	DATE:	NO.	BY:	DATE:	S-21
1			3			TOTAL SHEETS
2			4			162

DRAWN BY : MIKE BRITT DATE : 2-24-10
CHECKED BY : D.G. ELY DATE : 4-7-10

19-OCT-2010 11:32
R:\Structures\str1-Y-over-L-\Superstructure Drawings\r2417aa_str1_dl.dgn
sbwilliams

STR. #1

DEAD LOAD DEFLECTION TABLE FOR GIRDERS

GIRDER #7

TWENTIETH POINTS	SPAN "A" 0	.05	.10	.15	.20	.25	.30	.35	.40	.45	.50	.55	.60	.65	.70	.75	.80	.85	.90	.95	0
DEFLECTION DUE TO WEIGHT OF GIRDER	0.000	0.005	0.010	0.014	0.018	0.021	0.023	0.024	0.024	0.024	0.022	0.020	0.018	0.014	0.011	0.007	0.004	0.002	0.000	0.000	0.000
DEFLECTION DUE TO WEIGHT OF SLAB *	0.000	0.016	0.030	0.043	0.055	0.063	0.070	0.073	0.074	0.072	0.068	0.062	0.054	0.043	0.033	0.022	0.013	0.005	0.000	0.000	0.000
DEFLECTION DUE TO WEIGHT OF BARRIER RAIL	0.000	0.001	0.001	0.002	0.003	0.003	0.003	0.003	0.003	0.003	0.002	0.002	0.001	0.001	0.000	0.000	0.000	0.000	0.000	0.000	0.000
TOTAL DEAD LOAD DEFLECTION	0.000	0.022	0.041	0.059	0.076	0.087	0.096	0.100	0.101	0.099	0.092	0.084	0.073	0.058	0.044	0.029	0.017	0.007	0.000	0.000	0.000
VERTICAL CURVE ORDINATE	0.000	0.025	0.047	0.067	0.084	0.099	0.111	0.120	0.126	0.130	0.132	0.130	0.126	0.120	0.111	0.099	0.084	0.067	0.047	0.025	0.000
REQUIRED CAMBER	0	9/16"	1 1/16"	1 1/2"	1 15/16"	2 1/4"	2 1/2"	2 5/8"	2 3/4"	2 3/4"	2 11/16"	2 9/16"	2 3/8"	2 1/8"	1 7/8"	1 9/16"	1 3/16"	7/8"	9/16"	5/16"	0

TWENTIETH POINTS	SPAN "B" 0	.05	.10	.15	.20	.25	.30	.35	.40	.45	.50	.55	.60	.65	.70	.75	.80	.85	.90	.95	0
DEFLECTION DUE TO WEIGHT OF GIRDER	0.000	0.003	0.008	0.015	0.022	0.029	0.036	0.043	0.049	0.053	0.056	0.058	0.058	0.056	0.052	0.046	0.040	0.031	0.021	0.011	0.000
DEFLECTION DUE TO WEIGHT OF SLAB *	0.000	0.010	0.025	0.044	0.065	0.088	0.110	0.132	0.149	0.162	0.171	0.176	0.176	0.170	0.159	0.142	0.121	0.095	0.065	0.034	0.000
DEFLECTION DUE TO WEIGHT OF BARRIER RAIL	0.000	0.002	0.004	0.007	0.010	0.013	0.016	0.018	0.020	0.022	0.023	0.023	0.023	0.022	0.020	0.018	0.015	0.012	0.008	0.004	0.000
TOTAL DEAD LOAD DEFLECTION	0.000	0.015	0.037	0.066	0.097	0.130	0.162	0.193	0.218	0.237	0.250	0.257	0.257	0.248	0.231	0.206	0.176	0.138	0.094	0.049	0.000
VERTICAL CURVE ORDINATE	0.000	0.032	0.061	0.086	0.108	0.127	0.142	0.154	0.162	0.167	0.169	0.167	0.162	0.154	0.142	0.127	0.108	0.086	0.061	0.032	0.000
REQUIRED CAMBER	0	9/16"	1 3/16"	1 13/16"	2 7/16"	3 1/16"	3 5/8"	4 3/16"	4 9/16"	4 7/8"	5"	5 1/16"	5"	4 13/16"	4 1/2"	4"	3 7/16"	2 11/16"	1 7/8"	1"	0

DEAD LOAD DEFLECTION TABLE FOR GIRDERS

GIRDER #8

TWENTIETH POINTS	SPAN "A" 0	.05	.10	.15	.20	.25	.30	.35	.40	.45	.50	.55	.60	.65	.70	.75	.80	.85	.90	.95	0
DEFLECTION DUE TO WEIGHT OF GIRDER	0.000	0.005	0.010	0.014	0.018	0.021	0.023	0.024	0.025	0.024	0.023	0.021	0.018	0.015	0.011	0.008	0.004	0.002	0.000	0.000	0.000
DEFLECTION DUE TO WEIGHT OF SLAB *	0.000	0.016	0.031	0.043	0.054	0.063	0.069	0.073	0.074	0.072	0.068	0.061	0.053	0.043	0.033	0.022	0.013	0.005	0.000	0.000	0.000
DEFLECTION DUE TO WEIGHT OF BARRIER RAIL	0.000	0.001	0.001	0.002	0.002	0.002	0.003	0.003	0.003	0.002	0.002	0.002	0.001	0.001	0.000	0.000	0.000	0.000	0.000	0.000	0.000
TOTAL DEAD LOAD DEFLECTION	0.000	0.022	0.042	0.059	0.074	0.086	0.095	0.100	0.102	0.098	0.093	0.084	0.072	0.059	0.044	0.030	0.017	0.007	0.000	0.000	0.000
VERTICAL CURVE ORDINATE	0.000	0.025	0.047	0.067	0.083	0.098	0.109	0.119	0.125	0.129	0.130	0.129	0.125	0.119	0.109	0.098	0.083	0.067	0.047	0.025	0.000
REQUIRED CAMBER	0	9/16"	1 1/16"	1 1/2"	1 7/8"	2 3/16"	2 7/16"	2 5/8"	2 3/4"	2 3/4"	2 11/16"	2 9/16"	2 3/8"	2 1/8"	1 13/16"	1 9/16"	1 3/16"	7/8"	9/16"	5/16"	0

TWENTIETH POINTS	SPAN "B" 0	.05	.10	.15	.20	.25	.30	.35	.40	.45	.50	.55	.60	.65	.70	.75	.80	.85	.90	.95	0
DEFLECTION DUE TO WEIGHT OF GIRDER	0.000	0.003	0.008	0.015	0.022	0.029	0.037	0.044	0.050	0.054	0.057	0.058	0.058	0.056	0.053	0.047	0.040	0.032	0.022	0.011	0.000
DEFLECTION DUE TO WEIGHT OF SLAB *	0.000	0.010	0.025	0.044	0.065	0.088	0.110	0.132	0.150	0.163	0.172	0.176	0.176	0.171	0.159	0.142	0.121	0.096	0.066	0.033	0.000
DEFLECTION DUE TO WEIGHT OF BARRIER RAIL	0.000	0.001	0.003	0.005	0.007	0.009	0.011	0.013	0.014	0.015	0.016	0.016	0.016	0.015	0.014	0.013	0.011	0.009	0.006	0.003	0.000
TOTAL DEAD LOAD DEFLECTION	0.000	0.014	0.036	0.064	0.094	0.126	0.158	0.189	0.214	0.232	0.245	0.250	0.250	0.242	0.226	0.202	0.172	0.137	0.094	0.047	0.000
VERTICAL CURVE ORDINATE	0.000	0.032	0.060	0.085	0.107	0.125	0.140	0.152	0.160	0.165	0.167	0.165	0.160	0.152	0.140	0.125	0.107	0.085	0.060	0.032	0.000
REQUIRED CAMBER	0	9/16"	1 1/8"	1 13/16"	2 7/16"	3"	3 9/16"	4 1/16"	4 1/2"	4 3/4"	4 15/16"	5"	4 15/16"	4 3/4"	4 3/8"	3 15/16"	3 3/8"	2 11/16"	1 7/8"	15/16"	0

DEAD LOAD DEFLECTION TABLE FOR GIRDERS

GIRDER #9

TWENTIETH POINTS	SPAN "A" 0	.05	.10	.15	.20	.25	.30	.35	.40	.45	.50	.55	.60	.65	.70	.75	.80	.85	.90	.95	0
DEFLECTION DUE TO WEIGHT OF GIRDER	0.000	0.006	0.011	0.015	0.018	0.022	0.024	0.025	0.025	0.025	0.024	0.021	0.018	0.015	0.011	0.008	0.005	0.002	0.000	0.000	0.000
DEFLECTION DUE TO WEIGHT OF SLAB *	0.000	0.017	0.031	0.044	0.054	0.064	0.070	0.074	0.075	0.073	0.069	0.062	0.053	0.043	0.033	0.022	0.013	0.005	0.000	0.000	0.000
DEFLECTION DUE TO WEIGHT OF BARRIER RAIL	0.000	0.001	0.001	0.002	0.002	0.002	0.002	0.002	0.002	0.002	0.002	0.002	0.001	0.001	0.001	0.000	0.000	0.000	0.000	0.000	0.000
TOTAL DEAD LOAD DEFLECTION	0.000	0.024	0.043	0.061	0.074	0.088	0.096	0.101	0.102	0.100	0.095	0.085	0.072	0.059	0.045	0.030	0.018	0.007	0.000	0.000	0.000
VERTICAL CURVE ORDINATE	0.000	0.025	0.046	0.066	0.083	0.097	0.108	0.117	0.124	0.128	0.129	0.128	0.124	0.117	0.108	0.097	0.083	0.066	0.046	0.025	0.000
REQUIRED CAMBER	0	9/16"	1 1/16"	1 1/2"	1 7/8"	2 1/4"	2 7/16"	2 5/8"	2 11/16"	2 3/4"	2 11/16"	2 9/16"	2 3/8"	2 1/8"	1 13/16"	1 1/2"	1 3/16"	7/8"	9/16"	5/16"	0

TWENTIETH POINTS	SPAN "B" 0	.05	.10	.15	.20	.25	.30	.35	.40	.45	.50	.55	.60	.65	.70	.75	.80	.85	.90	.95	0
DEFLECTION DUE TO WEIGHT OF GIRDER	0.000	0.004	0.008	0.015	0.022	0.030	0.037	0.045	0.051	0.056	0.059	0.060	0.060	0.058	0.054	0.049	0.041	0.032	0.023	0.012	0.000
DEFLECTION DUE TO WEIGHT OF SLAB *	0.000	0.011	0.025	0.044	0.066	0.088	0.111	0.133	0.151	0.166	0.175	0.179	0.179	0.173	0.162	0.145	0.123	0.097	0.068	0.035	0.000
DEFLECTION DUE TO WEIGHT OF BARRIER RAIL	0.000	0.001	0.002	0.003	0.005	0.006	0.007	0.008	0.009	0.010	0.010	0.010	0.010	0.009	0.009	0.008	0.006	0.005	0.003	0.002	0.000
TOTAL DEAD LOAD DEFLECTION	0.000	0.016	0.035	0.062	0.093	0.124	0.155	0.186	0.211	0.232	0.244	0.249	0.249	0.240	0.225	0.202	0.170	0.134	0.094	0.049	0.000
VERTICAL CURVE ORDINATE	0.000	0.031	0.060	0.084	0.106	0.124	0.139	0.150	0.159	0.164	0.165	0.164	0.159	0.150	0.139	0.124	0.106	0.084	0.060	0.031	0.000
REQUIRED CAMBER	0	9/16"	1 1/8"	1 3/4"	2 3/8"	3"	3 1/2"	4 1/16"	4 7/16"	4 3/4"	4 15/16"	4 15/16"	4 7/8"	4 11/16"	4 3/8"	3 15/16"	3 5/16"	2 5/8"	1 7/8"	15/16"	0

* INCLUDES SLAB, BUILDUPS & STAY-IN-PLACE FORMS.
ALL VALUES ARE SHOWN IN FEET (DECIMAL FORM), EXCEPT "REQUIRED CAMBER", WHICH IS GIVEN IN INCHES (FRACTION FORM).
DEFLECTIONS ARE TAKEN AT TWENTIETH POINTS BETWEEN BEARINGS.

NOTE :
ORDINATE DUE TO SUPERELEVATION AND CAMBER DISSIPATION DUE TO HEAT CURVING ARE ZERO FOR EACH GIRDER.

PROJECT NO. R-2417 AA
LEE COUNTY
STATION: 47+80.13 -L-

SHEET 3 OF 3

NORTH CAROLINA PROFESSIONAL SEAL 24890 ENGINEER THEO J. BEACH
11/23/10

STATE OF NORTH CAROLINA
DEPARTMENT OF TRANSPORTATION
RALEIGH

SUPERSTRUCTURE

DEAD LOAD DEFLECTIONS

REVISIONS						SHEET NO.
NO.	BY:	DATE:	NO.	BY:	DATE:	S-22
1			3			TOTAL SHEETS
2			4			162

DRAWN BY : MIKE BRITT DATE : 2-24-10
CHECKED BY : D.G. ELY DATE : 4-7-10

19-OCT-2010 10:50
R:\Structures\str1-Y-over-L-\Superstructure Drawings\r2417aa_str1_dl.dgn
sbwilliams

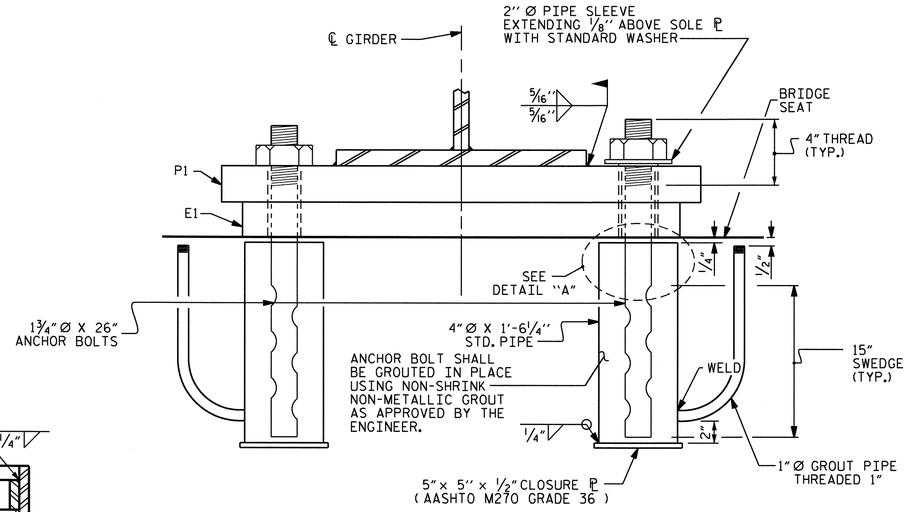

EXPANSION

END VIEW

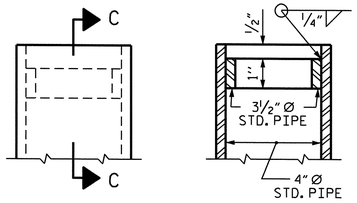

SECTION C-C

DETAIL "A"

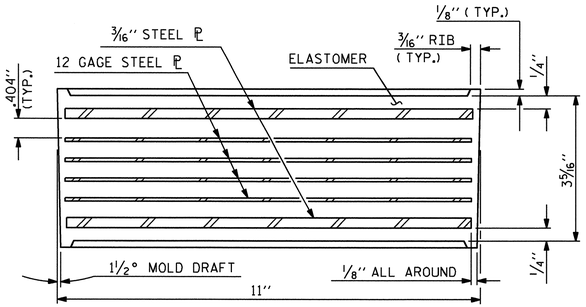

TYPICAL SECTION OF ELASTOMERIC BEARING

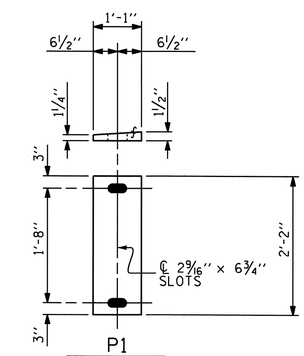

P1

(EXPANSION)

P1 (18 REQ'D)

SOLE PLATE DETAIL ("P")

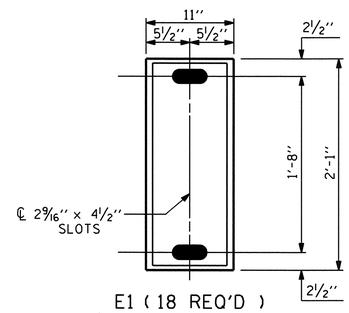

E1 (18 REQ'D)

PLAN VIEW OF ELASTOMERIC BEARING

TYPE IV

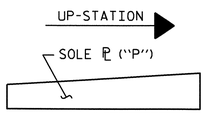

SOLE PL PLACEMENT DETAIL

NOTES

AT ALL FIXED POINTS OF SUPPORT, NUTS FOR ANCHOR BOLTS ARE TO BE TIGHTENED FINGER TIGHT AND THEN BACKED OFF ½ TURN. THE THREAD OF THE NUT AND BOLT SHALL THEN BE BURRED WITH A SHARP POINTED TOOL.

THE 2" Ø PIPE SLEEVE SHALL BE CUT FROM SCHEDULE 40 PVC PLASTIC PIPE. THE PVC PLASTIC PIPE SHALL MEET THE REQUIREMENTS OF ASTM D1785.

THE PAYMENT FOR THE PIPE SLEEVES AND 4"Ø x 1-6¼" STANDARD PIPE ASSEMBLY SHALL BE INCLUDED IN THE SEVERAL PAY ITEMS.

FOR AASHTO M270 GRADE 50W STRUCTURAL STEEL, SOLE PLATE SHALL BE AASHTO M270 GRADE 50W AND SHALL NOT BE GALVANIZED. ANCHOR BOLTS, NUTS AND WASHERS SHALL BE GALVANIZED IN ACCORDANCE WITH THE STANDARD SPECIFICATIONS.

ANCHOR BOLTS SHALL MEET THE REQUIREMENTS OF ASTM A449. NUTS SHALL MEET THE REQUIREMENTS OF AASHTO M291-DH OR AASHTO M292-2H. WASHERS SHALL MEET THE REQUIREMENTS OF AASHTO M293. SHOP DRAWINGS ARE NOT REQUIRED FOR ANCHOR BOLTS, NUTS AND WASHERS. SHOP INSPECTION IS REQUIRED.

WHEN FIELD WELDING THE SOLE PLATE TO THE GIRDER FLANGE, USE TEMPERATURE INDICATING WAX PENS, OR OTHER SUITABLE MEANS, TO ENSURE THAT THE TEMPERATURE OF THE SOLE PLATE DOES NOT EXCEED 300°F. TEMPERATURES ABOVE THIS MAY DAMAGE THE ELASTOMER.

ALL SURFACES OF BEARING PLATES SHALL BE SMOOTH AND STRAIGHT.
THE CLOSURE PLATE, GROUT PIPE AND STANDARD PIPE FOR THE EXPANSION ASSEMBLY NEED NOT BE GALVANIZED.

THE CONTRACTOR'S ATTENTION IS CALLED TO THE FOLLOWING PROCEDURES, WHICH MAY BE REQUIRED BY THE ENGINEER, TO RESET ELASTOMERIC BEARINGS DUE TO GIRDER TRANSLATION AND END ROTATION :

1. ONCE THE DECK HAS CURED, THE GIRDERS SHALL BE JACKED THEN THE ANCHOR BOLTS AND ELASTOMERIC BEARING SLOTS SHALL BE CENTERED AS NEARLY AS PRACTICAL ABOUT THE BEARING STIFFENER. THIS OPERATION SHALL BE PERFORMED AT APPROXIMATELY 60° F.
2. AFTER CENTERING THE ELASTOMERIC BEARING SLOTS AND ANCHOR BOLTS, THE ANCHOR BOLTS SHALL BE GROUTED.

THE CONTRACTOR MAY PROPOSE ALTERNATE METHODS, PROVIDED DETAILS ARE SUBMITTED TO THE ENGINEER FOR REVIEW AND APPROVAL.

LOAD RATINGS	
	MAX.D.L.+ L.L.
TYPE IV	184 K

PROJECT NO. R-2417 AA
LEE COUNTY
STATION: 47+80.13 -L-

NORTH CAROLINA PROFESSIONAL SEAL 24890 ENGINEER THEO J. BEACH
11/23/10

STATE OF NORTH CAROLINA
DEPARTMENT OF TRANSPORTATION
RALEIGH

STANDARD

ELASTOMERIC BEARING DETAILS

REVISIONS							SHEET NO.
NO.	BY:	DATE:	NO.	BY:	DATE:		S-23
1			3				TOTAL SHEETS
2			4				162

ASSEMBLED BY : MIKE BRITT DATE : 2-16-10
CHECKED BY : D.G. ELY DATE : 4-9-10

DRAWN BY : EEM 10/95
CHECKED BY : PEK 10/95

REV. 10/17/00 RWW/LES
REV. 7/10/01 LES/RDR
REV. 5/1/06 TLA/GM

23-NOV-2010 11:13
R:\Structures\str1-Y-over-L-\Superstructure Drawings\r2417aa_str1_bg.dgn
tbeach

STD. NO. EB2 STR. #1

NOTES

FOR POT BEARINGS, SEE SPECIAL PROVISIONS.

AT ALL POINTS OF SUPPORT AT BENT No. 1, NUTS FOR ANCHOR BOLTS SHALL BE TIGHTENED FINGER TIGHT AND GIVEN AN ADDITIONAL 1/4 TURN. THE THREAD OF THE NUT AND BOLT SHALL THEN BE BURRED WITH A SHARP POINTED TOOL.

WHEN WELDING THE SOLE PLATE TO THE GIRDER, USE TEMPERATURE INDICATING WAX PENS, OR OTHER SUITABLE MEANS, TO ENSURE THAT THE TEMPERATURE OF THE BEARING DOES NOT EXCEED 250°F TEMPERATURES ABOVE THIS MAY DAMAGE THE ELASTOMER.

SOLE PLATES SHOULD BE WELDED TO GIRDER FLANGES BEFORE FALSEWORK IS PLACED.

ALL SURFACES OF BEARING PLATES SHALL BE SMOOTH AND STRAIGHT.

FOR THERMAL SPRAYED COATINGS (METALLIZATION), SEE SPECIAL PROVISIONS.

THE CONTRACTOR MAY SUBSTITUTE DISC BEARINGS FOR THE POT BEARINGS SHOWN. FOR OPTIONAL DISC BEARINGS, SEE SPECIAL PROVISIONS.

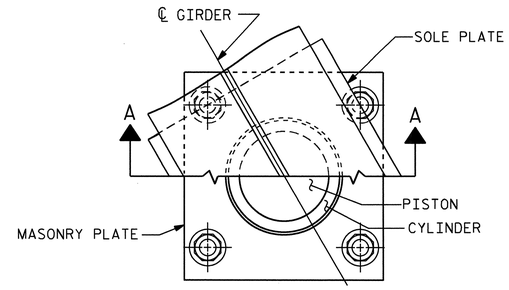

CUT-AWAY PLAN

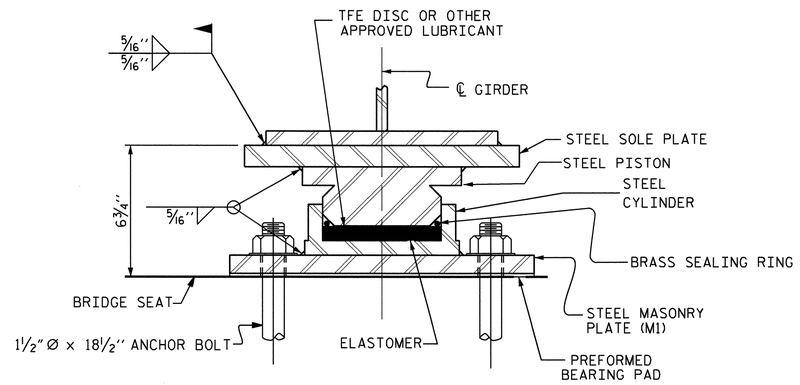

SECTION A-A

PB1, FIXED
(9 REQ'D.)

POT BEARING DETAILS

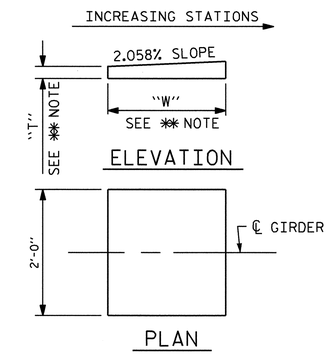

✱✱ NOTE:
DIMENSIONS "W" AND "T" ARE TO BE DETERMINED BY THE MANUFACTURER.

SOLE PLATE DETAILS

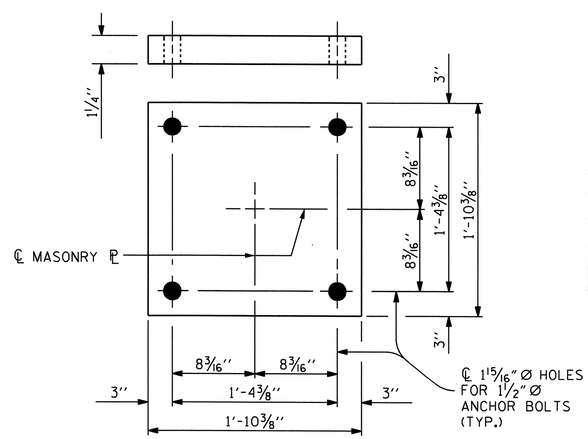

PLAN
M1 (9 REQ'D.)

MASONRY PLATE DETAILS

TABLE FOR UNFACTORED LOADS AND MOVEMENTS

BEARING	LOCATION	VERTICAL LOAD (KIPS)			LATERAL LOAD (KIPS)	TOTAL MOVEMENT (INCHES)
		DEAD	LIVE	TOTAL		
PB1 (FIXED)	BENT No. 1	408 k	84 k	492 k	81.6 k	0

PROJECT NO. R-2417 AA
LEE COUNTY
STATION: 47+80.13 -L-

STATE OF NORTH CAROLINA
DEPARTMENT OF TRANSPORTATION
RALEIGH

STANDARD

POT BEARING DETAILS

NORTH CAROLINA PROFESSIONAL SEAL 24390 ENGINEER THEO J. BEACH
11/23/10

REVISIONS								SHEET NO.
NO.	BY:	DATE:	NO.	BY:	DATE:			S-24
1			3					TOTAL SHEETS
2			4					162

ASSEMBLED BY : MIKE BRITT		DATE : 2-16-10	
CHECKED BY : D.G. ELY		DATE : 4-9-10	
DRAWN BY : RWW 8/99	REV. 7/10/01	LES/RDR	
CHECKED BY : LES 8/99	REV. 5/7/03	RWW/JTE	
	REV. 5/1/06	TLA/GM	

23-NOV-2010 11:13
R:\Structures\str1-Y-over-L-\Superstructure Drawings\r2417aa_str1_pb.dgn
tbeach

STD. NO. PB1 STR. #1

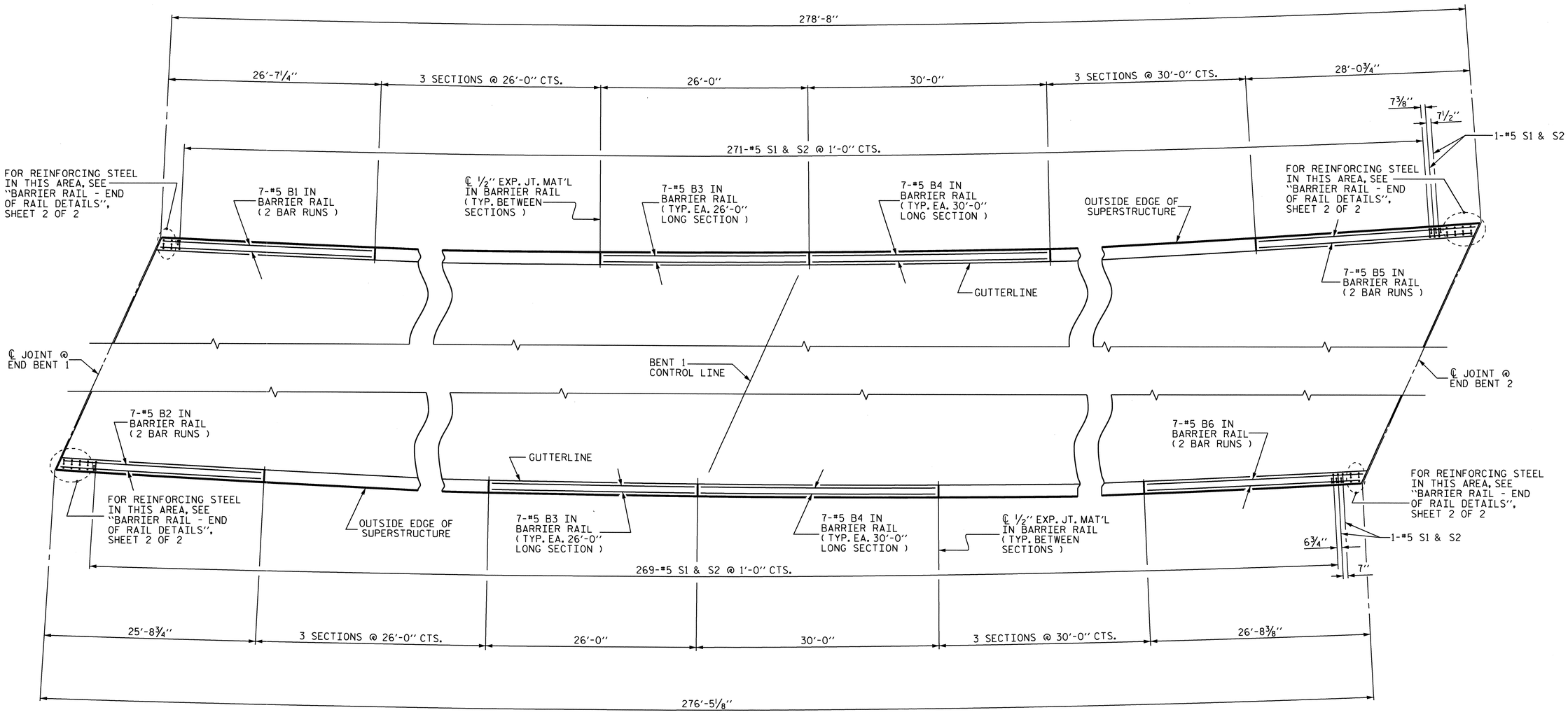

PLAN OF BARRIER RAIL

NOTE : ALL BARRIER RAIL DIMENSIONS ARE MEASURED ALONG THE ARC AT THE BACK FACE OF BARRIER RAIL

PROJECT NO. R-2417 AA

LEE COUNTY

STATION: 47+80.13 -L-

SHEET 1 OF 2

STATE OF NORTH CAROLINA
DEPARTMENT OF TRANSPORTATION
RALEIGH

SUPERSTRUCTURE

CONCRETE BARRIER RAIL

NORTH CAROLINA PROFESSIONAL SEAL 24390 ENGINEER THEO J. BEACH
11/23/10

REVISIONS						SHEET NO.
NO.	BY:	DATE:	NO.	BY:	DATE:	S-25
1			3			TOTAL SHEETS
2			4			162

DRAWN BY : MIKE BRITT DATE : 5-18-06
CHECKED BY : D.G. ELY DATE : 4-9-10

19-OCT-2010 10:48
R:\Structures\str1-Y-over-L-\Superstructure Drawings\R2417AA_STR1_BR.dgn
sbwilliams

STR. #1

NOTES

THE BARRIER RAIL IN A CONTINUOUS UNIT SHALL NOT BE CAST UNTIL ALL SLAB CONCRETE IN THE UNIT HAS BEEN CAST AND HAS REACHED A MINIMUM COMPRESSIVE STRENGTH OF 3,000 PSI.

THE JOINT IN THE DECK SHALL BE SAWED PRIOR TO THE CASTING OF BARRIER RAIL.

ALL REINFORCING STEEL IN BARRIER RAILS SHALL BE EPOXY COATED.

THE #5 S3 AND #5 S4 BARS SHALL BE INSTALLED, USING AN ADHESIVE ANCHORING SYSTEM, AFTER SAWING THE JOINT. FOR ADHESIVELY ANCHORED ANCHOR BOLTS OR DOWELS, SEE SPECIAL PROVISIONS. THE YIELD LOAD FOR THE #5 S3 AND #5 S4 BARS IS 18.6 KIPS. FIELD TESTING FOR THE ADHESIVE BONDING SYSTEM IS NOT REQUIRED.

VERTICAL GROOVED CONTRACTION JOINTS, 1/2" IN DEPTH, SHALL BE TOOLED IN ALL EXPOSED FACES OF THE BARRIER RAIL AND IN ACCORDANCE WITH ARTICLE 825-10(B) OF THE STANDARD SPECIFICATIONS. THE CONTRACTION JOINT SHALL BE LOCATED AT EACH THIRD POINT BETWEEN BARRIER RAIL EXPANSION JOINTS. ONLY ONE CONTRACTION JOINT IS REQUIRED AT MIDPOINT OF BARRIER RAIL SEGMENTS LESS THAN 20 FEET IN LENGTH AND NO CONTRACTION JOINTS ARE REQUIRED FOR THOSE SEGMENTS LESS THAN 10 FEET IN LENGTH.

THE #5 "S" BARS MAY BE SHIFTED SLIGHTLY IN ORDER TO MAINTAIN A 2" MINIMUM CLEARANCE TO THE 1/2" EXPANSION JOINT MATERIAL IN BARRIER RAIL.

BAR TYPES

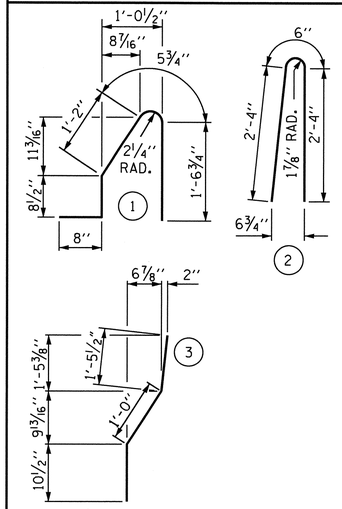

ALL BAR DIMENSIONS ARE OUT TO OUT

BILL OF MATERIAL

FOR CONCRETE BARRIER RAIL ONLY

BAR	NO.	SIZE	TYPE	LENGTH	WEIGHT
* S1	544	#5	1	4'-7"	2601
* S2	544	#5	2	5'-2"	2932
* S3	12	#5	3	3'-4"	42
* S4	12	#5	STR	3'-2"	40
* B1	14	#5	STR	15'-1"	220
* B2	14	#5	STR	14'-3"	208
* B3	56	#5	STR	25'-7"	1494
* B4	56	#5	STR	29'-7"	1728
* B5	14	#5	STR	15'-5"	225
* B6	14	#5	STR	15'-2"	221
* EPOXY COATED REINFORCING STEEL					9,711 LBS.
CLASS AA CONCRETE					55.6 CU. YDS.
CONCRETE BARRIER RAIL					555.10 LIN. FT.

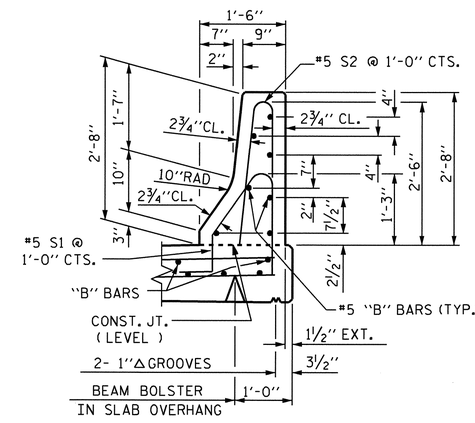

SECTION THRU RAIL

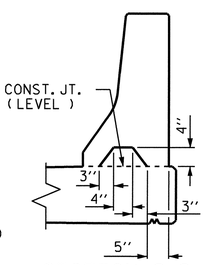

SECTION S-S

AT DAM IN OPEN JOINT
(THIS IS TO BE USED ONLY WHEN SLIP FORM IS USED)

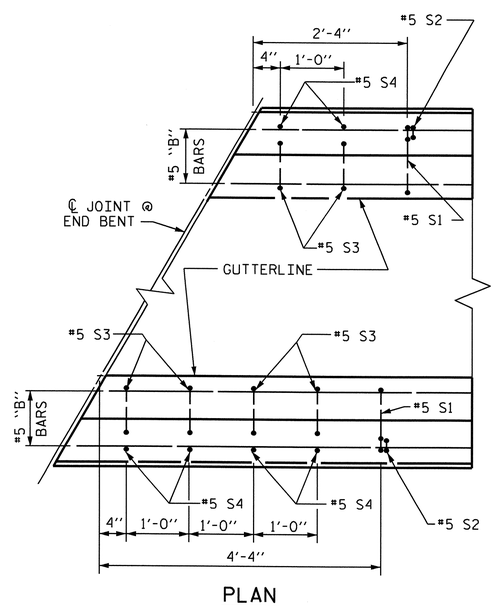

PLAN

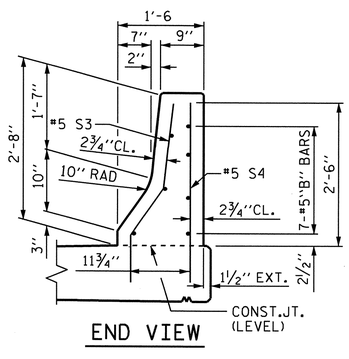

END VIEW

END OF RAIL DETAILS

FOR ADHESIVE ANCHORING AT SAWED JOINTS

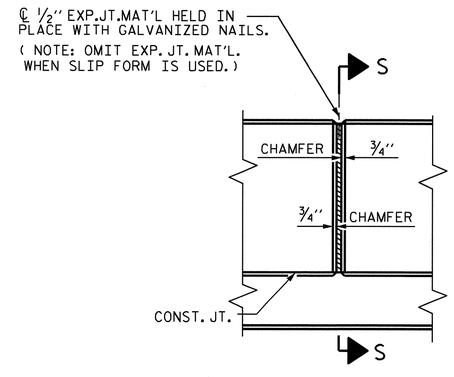

ELEVATION AT EXPANSION JOINTS

BARRIER RAIL DETAILS

NORTH CAROLINA PROFESSIONAL SEAL 24890 ENGINEER THEO J. BEACH
11/23/10

PROJECT NO. R-2417 AA

LEE COUNTY

STATION: 47+80.13 -L-

SHEET 2 OF 2

STATE OF NORTH CAROLINA
DEPARTMENT OF TRANSPORTATION
RALEIGH

STANDARD
CONCRETE
BARRIER RAIL

OCTOBER 1987

REVISIONS						SHEET NO.
NO.	BY:	DATE:	NO.	BY:	DATE:	S-26
1			3			TOTAL SHEETS
2			4			162

ASSEMBLED BY : MIKE BRITT		DATE : 5-18-06	
CHECKED BY : D.G. ELY		DATE : 4-9-10	
DRAWN BY : ARB 5/87	REV. 8/16/99	RWW/LES	
CHECKED BY : SJD 9/87	REV. 10/17/00	RWW/LES	
	REV. 5/7/03R	RWW/JTE	

19-OCT-2010 10:47
R:\Structures\str1-Y-over-L-\Superstructure Drawings\R2417AA_STR1_BR.dgn
sbwilliams

STD. NO. CBRI STR. #1

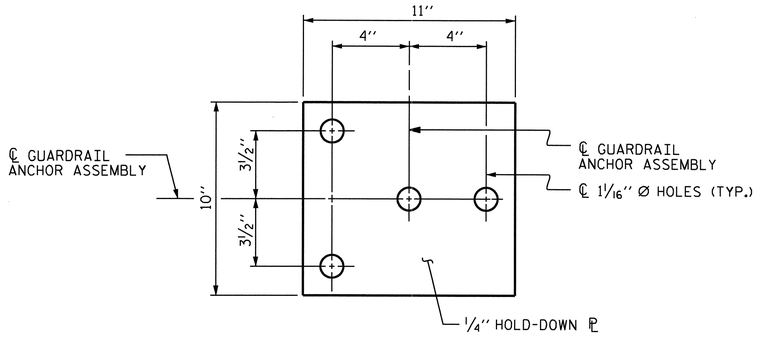

PLAN

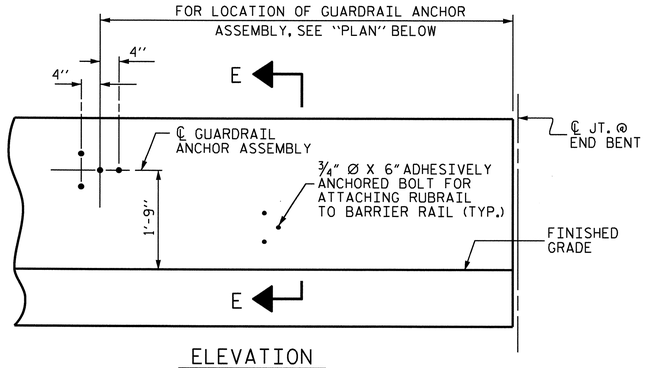

ELEVATION

FOR LOCATION OF RUBRAIL, SEE ROADWAY STD. 862.03

NOTES

THE GUARDRAIL ANCHOR ASSEMBLY SHALL CONSIST OF A 1/4" HOLD DOWN PLATE AND 4 - 7/8" Ø BOLTS WITH NUTS AND WASHERS, RUBRAIL, AND ADHESIVELY ANCHORED BOLTS.

THE HOLD-DOWN PLATE SHALL CONFORM TO AASHTO M270 GRADE 36. AFTER FABRICATION, THE HOLD-DOWN PLATE SHALL BE HOT-DIP GALVANIZED IN ACCORDANCE WITH AASHTO M111.

BOLTS SHALL CONFORM TO THE REQUIREMENTS OF ASTM A307 AND NUTS SHALL CONFORM TO THE REQUIREMENTS OF AASHTO M291. BOLTS, NUTS AND WASHERS SHALL BE GALVANIZED. (AT THE CONTRACTOR'S OPTION, STAINLESS STEEL BOLTS, NUTS AND WASHERS MAY BE USED AS AN ALTERNATE FOR THE 7/8" Ø GALVANIZED BOLTS, NUTS AND WASHERS. THEY SHALL CONFORM TO OR EXCEED THE MECHANICAL REQUIREMENTS OF ASTM A307. THE USE OF THIS ALTERNATE SHALL BE APPROVED BY THE ENGINEER.)

THE GUARDRAIL ANCHOR ASSEMBLY IS REQUIRED AT ALL POINTS WHERE APPROACH GUARDRAIL IS TO BE ATTACHED TO THE END OF BARRIER RAIL. FOR POINTS OF ATTACHMENT, SEE SKETCH.

AFTER INSTALLATION, THE EXPOSED THREAD OF THE BOLT SHALL BE BURRED WITH A SHARP POINTED TOOL.

THE COST OF THE GUARDRAIL ANCHOR ASSEMBLY SHALL BE INCLUDED IN THE UNIT CONTRACT PRICE BID FOR CONCRETE BARRIER RAIL.

THE 1 1/4" Ø HOLES SHALL BE FORMED OR DRILLED WITH A CORE BIT. IMPACT TOOLS WILL NOT BE PERMITTED. ANY CONCRETE DAMAGED BY THIS WORK SHALL BE REPAIRED TO THE SATISFACTION OF THE ENGINEER.

THE C6 X 8.2 RUBRAIL IS TO BE ADHESIVELY ANCHORED TO THE RAIL USING THREE 3/4" Ø X 6" BOLTS WITH WASHERS. LEVEL ONE FIELD TESTING IS REQUIRED, AND THE YIELD LOAD OF THE 3/4" Ø BOLT IS 12 KIPS. FOR ADHESIVELY ANCHORED ANCHOR BOLTS OR DOWELS, SEE SPECIAL PROVISIONS. SEE ROADWAY STANDARD 862.03 FOR DETAILS AND LOCATION OF THE RUBRAIL.

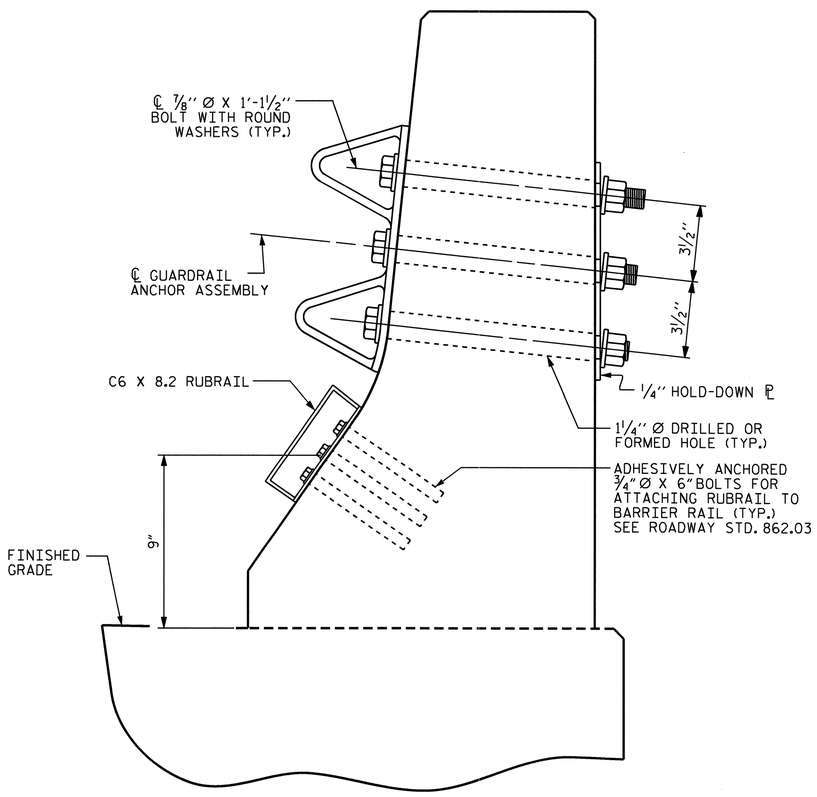

SECTION E-E

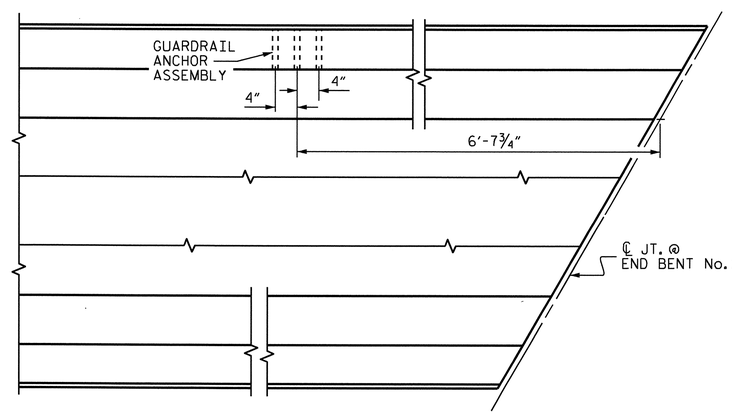

PLAN

LOCATION OF ANCHORS FOR GUARDRAIL

END BENT No. 2 SHOWN, END BENT No. 1 SIMILAR.

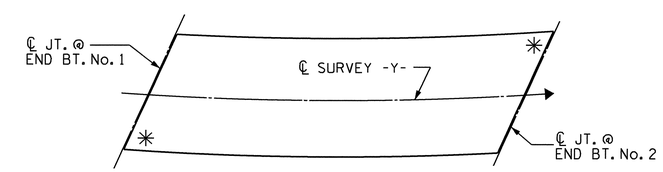

SKETCH SHOWING POINTS OF ATTACHMENTS

✳ DENOTES GUARDRAIL ANCHOR ASSEMBLY

GUARDRAIL ANCHOR ASSEMBLY DETAILS

PROJECT NO. R-2417 AA

LEE COUNTY

STATION: 47+80.13 -L-

NORTH CAROLINA PROFESSIONAL SEAL 24390 ENGINEER THEO J. BEACH

11/22/10

STATE OF NORTH CAROLINA
DEPARTMENT OF TRANSPORTATION
RALEIGH

STANDARD

GUARDRAIL ANCHORAGE FOR BARRIER RAIL

REVISIONS						SHEET NO.
NO.	BY:	DATE:	NO.	BY:	DATE:	S-27
1			3			TOTAL SHEETS
2			4			162

ASSEMBLED BY : MIKE BRITT	DATE : 4-15-10
CHECKED BY : D.G. ELY	DATE : 4-16-10
DRAWN BY : TLA 5/06	ADDED 5/1/06R KMM/GM
CHECKED BY : GM 5/06	

19-OCT-2010 10:46
R:\Structures\str1-Y-over-L-\Superstructure Drawings\r2417aa_str1_gra.dgn
sbwilliams

STD. NO. GRA2 STR. #1

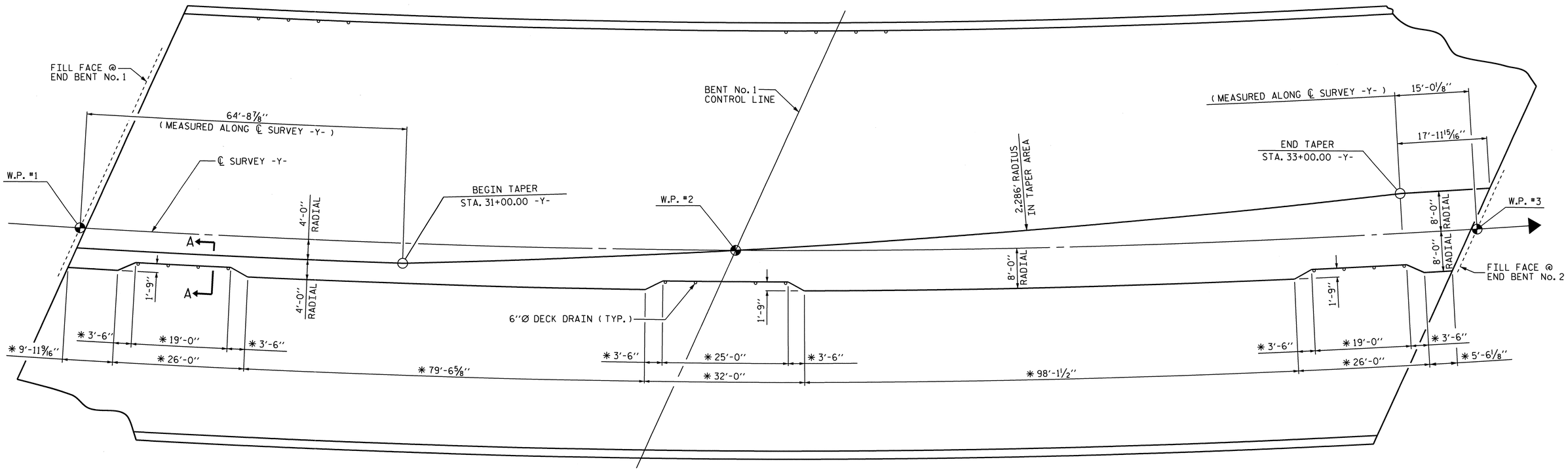

LAYOUT OF CONCRETE MEDIAN

* DENOTES THESE DIMENSIONS ARE TAKEN ALONG THE ARC

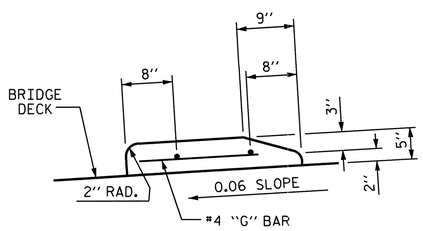

SECTION A-A @ MEDIAN DRAINAGE

VERTICAL FACE TYPICAL AT EACH DRAIN LOCATION

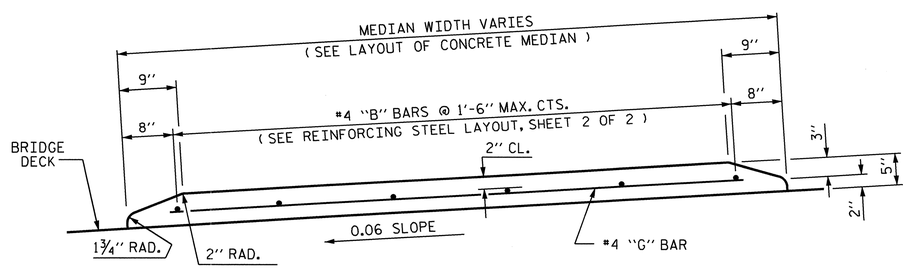

SECTION THRU CONCRETE MEDIAN

NOTES :

ALL REINFORCING STEEL IN THE CONCRETE MEDIAN SHALL BE EPOXY COATED.

FOR CONCRETE MEDIAN ON APPROACH SLABS, SEE "APPROACH SLAB" PLAN SHEETS.

FOR JOINTS IN THE CONCRETE MEDIAN AT END BENTS, SEE "APPROACH SLAB" PLAN SHEETS.

THE CONCRETE AND REINFORCING STEEL REQUIRED FOR THE CONCRETE MEDIAN ON THE BRIDGE DECK IS INCLUDED IN THE SUPERSTRUCTURE BILL OF MATERIAL AND INCLUDED IN THE SQUARE FOOT PRICE BID FOR "REINFORCED CONCRETE DECK SLAB".

CONCRETE MEDIAN SHALL NOT BE CAST UNTIL ALL SLAB CONCRETE HAS BEEN CAST AND HAS REACHED A MINIMUM COMPRESSIVE STRENGTH OF 3,000 PSI.

GROOVED CONTRACTION JOINTS, 1/2" IN DEPTH, SHALL BE TOOLED IN ALL EXPOSED FACES OF THE CONCRETE MEDIAN IN ACCORDANCE WITH ARTICLE 825-10(B) OF THE STANDARD SPECIFICATIONS. THE CONTRACTION JOINTS SHALL BE LOCATED AT A MAXIMUM SPACING OF 10 FT.±.

#4 "B" BARS SHALL BE FIELD BENT AS REQUIRED. SEE "REINFORCING STEEL LAYOUT", SHEET 2 OF 2.

THE CONTRACTOR SHALL VERIFY DRAIN LOCATIONS BEFORE CASTING CONCRETE MEDIAN.

NORTH CAROLINA PROFESSIONAL SEAL 24390 ENGINEER THEO J. BEACH
11/23/10

PROJECT NO. R-2417 AA
LEE COUNTY
STATION: 47+80.13 -L-

SHEET 1 OF 2

STATE OF NORTH CAROLINA
DEPARTMENT OF TRANSPORTATION
RALEIGH

SUPERSTRUCTURE
CONCRETE MEDIAN DETAILS

REVISIONS						SHEET NO.
NO.	BY:	DATE:	NO.	BY:	DATE:	S-28
1			3			TOTAL SHEETS
2			4			162

DRAWN BY : MIKE BRITT DATE : 3-10-10
CHECKED BY : D.G. ELY DATE : 4-9-10

19-OCT-2010 10:45
R:\Structures\str1-Y-over-L-\Superstructure Drawings\r2417aa_str1_med.dgn
sbwilliams

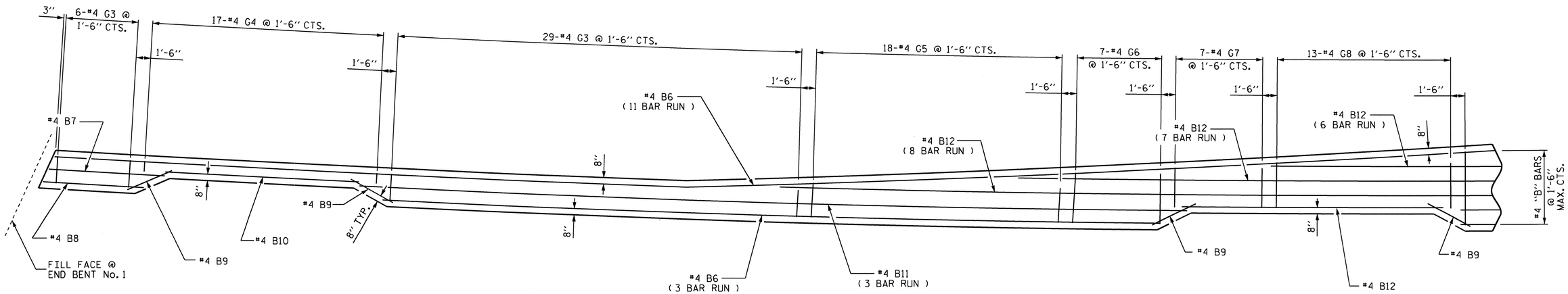

PART REINFORCING STEEL LAYOUT

(SEE SHEET 1 OF 2 FOR LAYOUT OF CONCRETE MEDIAN)
("B" BARS SHALL BE FIELD BENT AS REQUIRED)
"G" BARS SHALL BE STAGGERED AS REQUIRED TO SUPPORT "B" BARS

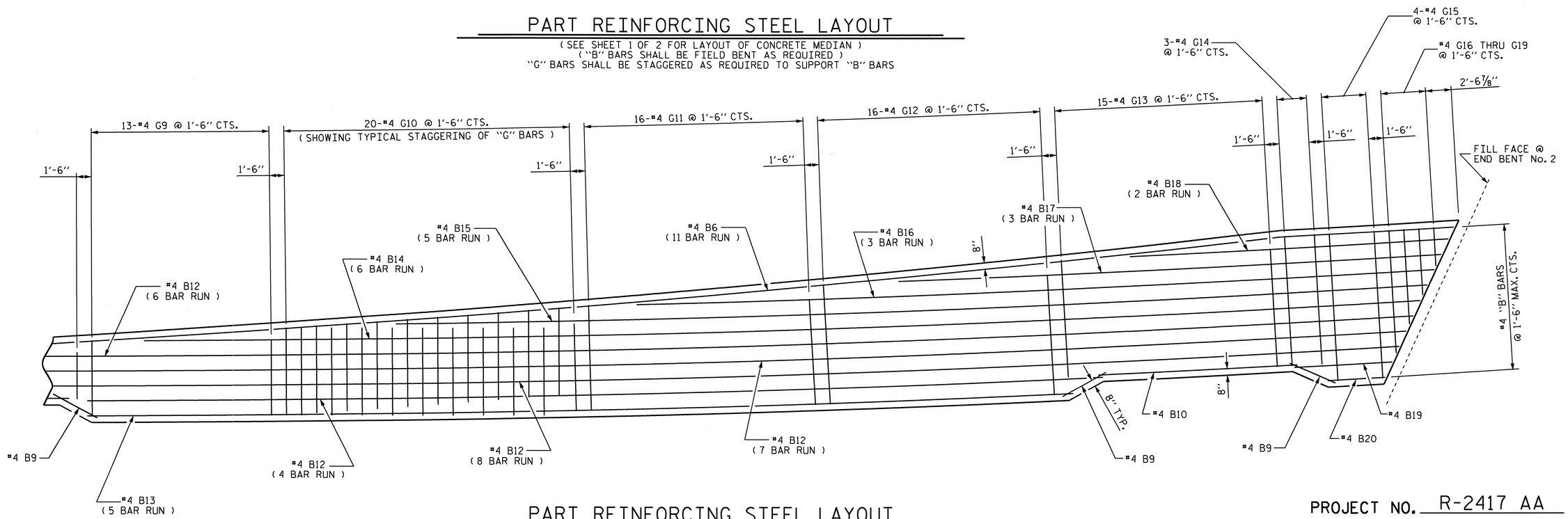

PART REINFORCING STEEL LAYOUT

(SEE SHEET 1 OF 2 FOR LAYOUT OF CONCRETE MEDIAN)
("B" BARS SHALL BE FIELD BENT AS REQUIRED)
"G" BARS SHALL BE STAGGERED AS REQUIRED TO SUPPORT "B" BARS

PROJECT NO. R-2417 AA
LEE COUNTY
STATION: 47+80.13 -L-

SHEET 2 OF 2

STATE OF NORTH CAROLINA
DEPARTMENT OF TRANSPORTATION
RALEIGH

SUPERSTRUCTURE
CONCRETE MEDIAN DETAILS

NORTH CAROLINA PROFESSIONAL SEAL 24390 ENGINEER THEO J. BEACH
11/23/10

REVISIONS						SHEET NO.
NO.	BY:	DATE:	NO.	BY:	DATE:	S-29
1			3			TOTAL SHEETS
2			4			162

DRAWN BY : MIKE BRITT DATE : 3-15-10
CHECKED BY : D.G. ELY DATE : 4-12-10

19-OCT-2010 10:44
R:\Structures\str1-Y-over-L-\Superstructure Drawings\r2417aa_str1_med.dgn
sbwilliams

STR. #1

SUPERSTRUCTURE REINFORCING STEEL LENGTHS ARE BASED ON THE FOLLOWING MINIMUM SPLICE LENGTHS					
BAR SIZE	SUPERSTRUCTURE EXCEPT APPROACH SLABS, PARAPET, AND BARRIER RAIL		APPROACH SLABS		PARAPET AND BARRIER RAIL
	EPOXY COATED	UNCOATED	EPOXY COATED	UNCOATED	
#4	2'-0"	1'-9"	2'-0"	1'-9"	2'-9"
#5	2'-6"	2'-2"	2'-6"	2'-2"	3'-5"
#6	3'-0"	2'-7"	3'-10"	2'-7"	4'-4"
#7	5'-3"	3'-6"			
#8	6'-10"	4'-7"			

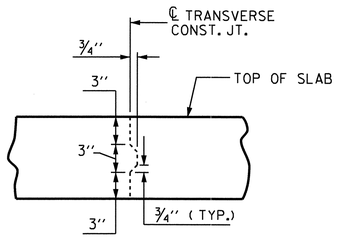

TRANSVERSE CONSTRUCTION JOINT DETAIL

NOTE: REINFORCING STEEL IN SLAB NOT SHOWN. LONGITUDINAL REINFORCING STEEL SHALL BE CONTINUOUS THRU JOINT.

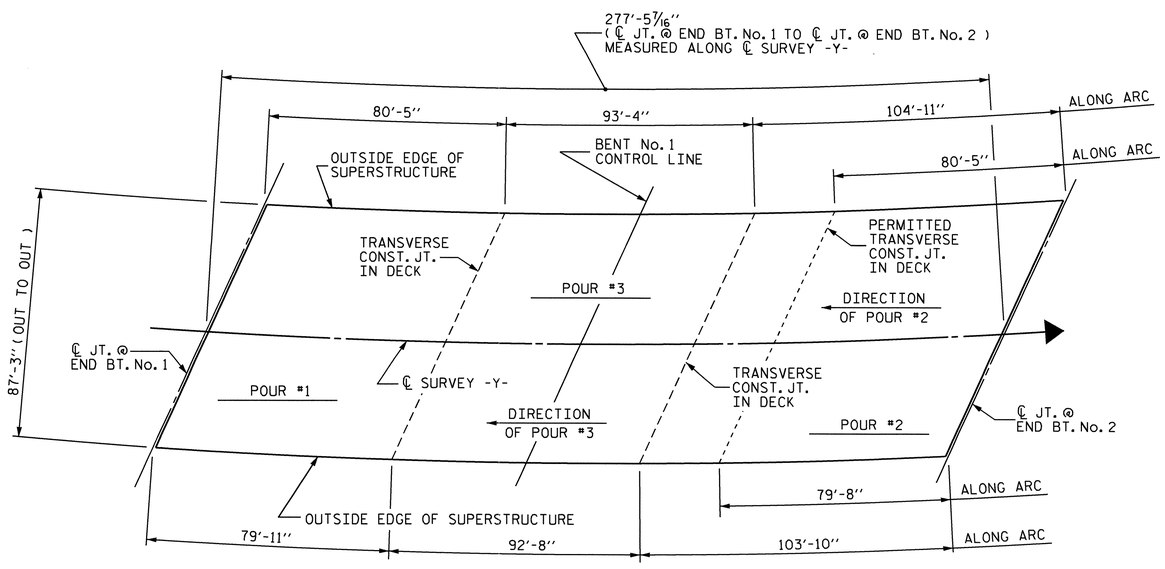

CONCRETE POURING SEQUENCE AND LAYOUT FOR COMPUTING AREA OF REINFORCED CONCRETE DECK SLAB (SQ. FT. = 24,216)

BILL OF MATERIAL

SPAN "A" & "B"

BAR	No.	SIZE	TYPE	LENGTH	WEIGHT
* A1	498	#5	STR.	59'-10"	31078
* A2	524	#5	STR.	29'-9"	16259
A3	1026	#5	STR.	44'-7"	47709
* A100	2	#5	STR.	58'-0"	121
* A101	2	#5	STR.	55'-9"	116
* A102	2	#5	STR.	53'-6"	112
* A103	2	#5	STR.	51'-3"	107
* A104	2	#5	STR.	49'-0"	102
* A105	2	#5	STR.	46'-9"	98
* A106	2	#5	STR.	44'-6"	93
* A107	2	#5	STR.	42'-3"	88
* A108	2	#5	STR.	40'-0"	83
* A109	2	#5	STR.	37'-9"	79
* A110	2	#5	STR.	35'-7"	74
* A111	2	#5	STR.	33'-4"	70
* A112	2	#5	STR.	31'-1"	65
* A113	2	#5	STR.	28'-10"	60
* A114	2	#5	STR.	26'-7"	55
* A115	2	#5	STR.	24'-4"	51
* A116	2	#5	STR.	22'-1"	46
* A117	2	#5	STR.	19'-10"	41
* A118	2	#5	STR.	17'-7"	37
* A119	2	#5	STR.	15'-4"	32
* A120	2	#5	STR.	13'-1"	27
* A121	2	#5	STR.	10'-10"	23
* A122	2	#5	STR.	8'-7"	18
* A123	2	#5	STR.	6'-4"	13
* A124	2	#5	STR.	4'-1"	9
* A125	2	#5	STR.	59'-8"	124
* A126	2	#5	STR.	57'-7"	120
* A127	2	#5	STR.	55'-5"	116
* A128	2	#5	STR.	53'-4"	111
* A129	2	#5	STR.	51'-2"	107
* A130	2	#5	STR.	49'-1"	102
* A131	2	#5	STR.	46'-11"	98
* A132	2	#5	STR.	44'-10"	94
* A133	2	#5	STR.	42'-8"	89
* A134	2	#5	STR.	40'-6"	84
* A135	2	#5	STR.	38'-5"	80
* A136	2	#5	STR.	36'-4"	76
* A137	2	#5	STR.	34'-2"	71
* A138	2	#5	STR.	32'-1"	67
* A139	2	#5	STR.	29'-11"	62

BAR	No.	SIZE	TYPE	LENGTH	WEIGHT
* A140	2	#5	STR.	27'-10"	58
* A141	2	#5	STR.	25'-8"	54
* A142	2	#5	STR.	23'-7"	49
* A143	2	#5	STR.	21'-5"	45
* A144	2	#5	STR.	19'-4"	40
* A145	2	#5	STR.	17'-2"	36
* A146	2	#5	STR.	15'-1"	31
* A147	2	#5	STR.	12'-11"	27
* A148	2	#5	STR.	10'-10"	23
* A149	2	#5	STR.	8'-9"	18
* A150	2	#5	STR.	6'-7"	14
* A151	2	#5	STR.	4'-6"	9
* A152	2	#5	STR.	2'-4"	5
* A200	2	#5	STR.	29'-1"	61
* A201	2	#5	STR.	26'-10"	56
* A202	2	#5	STR.	24'-7"	51
* A203	2	#5	STR.	22'-4"	47
* A204	2	#5	STR.	20'-1"	42
* A205	2	#5	STR.	17'-10"	37
* A206	2	#5	STR.	15'-7"	33
* A207	2	#5	STR.	13'-4"	28
* A208	2	#5	STR.	11'-1"	23
* A209	2	#5	STR.	8'-10"	18
* A210	2	#5	STR.	6'-7"	14
* A211	2	#5	STR.	4'-4"	9
* A212	2	#5	STR.	2'-1"	4
* A213	2	#5	STR.	28'-0"	58
* A214	2	#5	STR.	25'-10"	54
* A215	2	#5	STR.	23'-9"	50
* A216	2	#5	STR.	21'-7"	45
* A217	2	#5	STR.	19'-5"	41
* A218	2	#5	STR.	17'-4"	36
* A219	2	#5	STR.	15'-2"	32
* A220	2	#5	STR.	13'-1"	27
* A221	2	#5	STR.	10'-11"	23
* A222	2	#5	STR.	8'-9"	18
* A223	2	#5	STR.	6'-8"	14
* A224	2	#5	STR.	4'-6"	9
A300	2	#5	STR.	42'-9"	89
A301	2	#5	STR.	40'-6"	84
A302	2	#5	STR.	38'-4"	80
A303	2	#5	STR.	36'-1"	75
A304	2	#5	STR.	33'-10"	71
A305	2	#5	STR.	31'-7"	66
A306	2	#5	STR.	29'-4"	61
A307	2	#5	STR.	27'-1"	56
A308	2	#5	STR.	24'-10"	52
A309	2	#5	STR.	22'-7"	47
A310	2	#5	STR.	20'-4"	42
A311	2	#5	STR.	18'-1"	38
A312	2	#5	STR.	15'-10"	33
A313	2	#5	STR.	13'-8"	29
A314	2	#5	STR.	11'-5"	24
A315	2	#5	STR.	9'-2"	19
A316	2	#5	STR.	6'-11"	14
A317	2	#5	STR.	4'-8"	10
A318	2	#5	STR.	42'-7"	89
A319	2	#5	STR.	40'-4"	84
A320	2	#5	STR.	38'-1"	79
A321	2	#5	STR.	35'-10"	75
A322	2	#5	STR.	33'-7"	70
A323	2	#5	STR.	31'-4"	65
A324	2	#5	STR.	29'-1"	61
A325	2	#5	STR.	26'-10"	56
A326	2	#5	STR.	24'-7"	51
A327	2	#5	STR.	22'-4"	47
A328	2	#5	STR.	20'-1"	42
A329	2	#5	STR.	17'-10"	37
A330	2	#5	STR.	15'-7"	33
A331	2	#5	STR.	13'-4"	28
A332	2	#5	STR.	11'-1"	23
A333	2	#5	STR.	8'-10"	18
A334	2	#5	STR.	6'-7"	14
A335	2	#5	STR.	4'-4"	9
A336	2	#5	STR.	2'-1"	4
A337	2	#5	STR.	42'-8"	89
A338	2	#5	STR.	40'-7"	85
A339	2	#5	STR.	38'-5"	80
A340	2	#5	STR.	36'-4"	76
A341	2	#5	STR.	34'-2"	71
A342	2	#5	STR.	32'-1"	67
A343	2	#5	STR.	29'-11"	62
A344	2	#5	STR.	27'-10"	58

BAR	No.	SIZE	TYPE	LENGTH	WEIGHT
A345	2	#5	STR.	25'-8"	54
A346	2	#5	STR.	23'-7"	49
A347	2	#5	STR.	21'-5"	45
A348	2	#5	STR.	19'-4"	40
A349	2	#5	STR.	17'-2"	36
A350	2	#5	STR.	15'-1"	31
A351	2	#5	STR.	13'-0"	27
A352	2	#5	STR.	10'-10"	23
A353	2	#5	STR.	8'-9"	18
A354	2	#5	STR.	6'-7"	14
A355	2	#5	STR.	4'-6"	9
A356	2	#5	STR.	2'-4"	5
A357	2	#5	STR.	42'-10"	89
A358	2	#5	STR.	40'-9"	85
A359	2	#5	STR.	38'-7"	80
A360	2	#5	STR.	36'-5"	76
A361	2	#5	STR.	34'-4"	72
A362	2	#5	STR.	32'-2"	67
A363	2	#5	STR.	30'-0"	63
A364	2	#5	STR.	27'-11"	58
A365	2	#5	STR.	25'-9"	54
A366	2	#5	STR.	23'-8"	49
A367	2	#5	STR.	21'-6"	45
A368	2	#5	STR.	19'-5"	41
A369	2	#5	STR.	17'-3"	36
A370	2	#5	STR.	15'-1"	31
A371	2	#5	STR.	13'-0"	27
A372	2	#5	STR.	10'-10"	23
A373	2	#5	STR.	8'-9"	18
A374	2	#5	STR.	6'-7"	14
A375	2	#5	STR.	4'-6"	9
* B1	228	#4	STR.	23'-6"	3579
* B2	228	#4	STR.	28'-11"	4404
* B3	507	#6	STR.	30'-2"	22972
B4	520	#5	STR.	57'-5"	31141
* B5	20	#4	STR.	29'-8"	396
* B6	14	#4	STR.	28'-1"	263
* B7	1	#4	STR.	12'-0"	8
* B8	1	#4	STR.	10'-5"	7
* B9	6	#4	STR.	5'-0"	20
* B10	2	#4	STR.	20'-0"	27
* B11	3	#4	STR.	29'-10"	60
* B12	26	#4	STR.	27'-2"	472
* B13	5	#4	STR.	21'-5"	72
* B14	6	#4	STR.	23'-0"	92
* B15	5	#4	STR.	22'-4"	75
* B16	3	#4	STR.	28'-0"	56
* B17	3	#4	STR.	19'-6"	39
* B18	2	#4	STR.	17'-0"	23
* B19	1	#4	STR.	9'-10"	7
* B20	1	#4	STR.	5'-9"	4
* G1	2	#5	STR.	47'-10"	100
* G2	2	#5	STR.	50'-6"	105
* G3	35	#4	STR.	2'-10"	66
* G4	17	#4	STR.	1'-3"	14
* G5	18	#4	STR.	3'-7"	43
* G6	7	#4	STR.	5'-2"	24
* G7	7	#4	STR.	4'-1"	19
* G8	13	#4	STR.	4'-8"	41
* G9	13	#4	STR.	7'-7"	66
* G10	20	#4	STR.	8'-9"	117
* G11	16	#4	STR.	10'-6"	112
* G12	16	#4	STR.	12'-0"	128
* G13	15	#4	STR.	11'-10"	119
* G14	3	#4	STR.	13'-0"	26
* G15	4	#4	STR.	14'-10"	40
* G16	1	#4	STR.	12'-4"	8
* G17	1	#4	STR.	9'-6"	6
* G18	1	#4	STR.	6'-8"	4
* G19	1	#4	STR.	3'-10"	3
* K1	8	#5	1	8'-1"	67
* K2	28	#5	2	8'-11"	260
* K3	32	#5	STR.	10'-3"	342
* K4	8	#5	1	8'-4"	70
* K5	28	#5	2	9'-0"	263
* K6	32	#5	STR.	10'-9"	359
* S1	128	#4	3	4'-6"	385

REINFORCING STEEL 82,501 LBS.

* EPOXY COATED REINFORCING STEEL 86,960 LBS.

* THESE BARS ARE EPOXY COATED

BAR TYPES

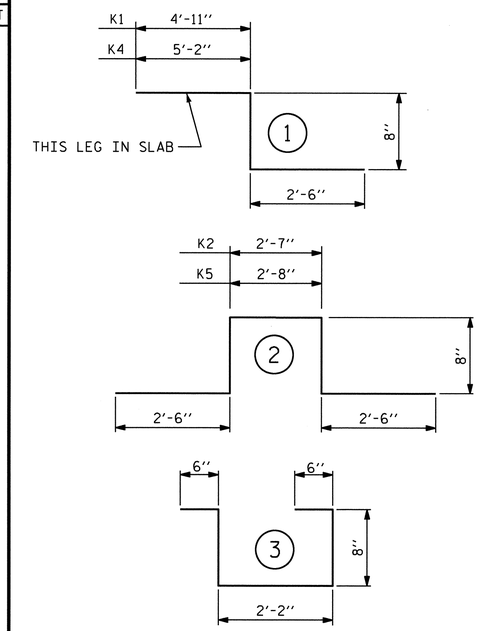

ALL BAR DIMENSIONS ARE OUT TO OUT

SUPERSTRUCTURE BILL OF MATERIAL

	CLASS AA CONCRETE	REINFORCING STEEL	EPOXY COATED REINFORCING STEEL
	(CU.YDS.)	(LBS.)	(LBS.)
SPAN "A" & "B" TOTALS**	810.0	82,501	86,960

** QUANTITIES FOR CONCRETE BARRIER RAIL ARE NOT INCLUDED

NORTH CAROLINA PROFESSIONAL SEAL 24390 ENGINEER THEO J. BEACH
11/23/10

PROJECT NO. R-2417 AA
LEE COUNTY
STATION: 47+80.13 -L-

CLASS AA CONCRETE BREAKDOWN	
POUR #1	225.7 CU. YDS.
POUR #2	293.1 CU. YDS.
POUR #3	256.5 CU. YDS.
CONCRETE MEDIAN	34.7 CU. YDS.
TOTAL	810.0 CU. YDS.

GROOVING BRIDGE FLOORS		
APPROACH SLABS	3,820	SQ.FT.
BRIDGE DECK	22,367	SQ.FT.
TOTAL	26,187	SQ.FT.

STATE OF NORTH CAROLINA
DEPARTMENT OF TRANSPORTATION
RALEIGH

STANDARD
SUPERSTRUCTURE BILL OF MATERIAL

ASSEMBLED BY : MIKE BRITT	DATE : 3-29-10
CHECKED BY : D.G. ELY	DATE : 4-12-10
DRAWN BY : JMB 5/87	REV. 6/1/94 EEM/GRP
CHECKED BY : SJD 9/87	REV. 8/16/99 RWW/LES

REVISIONS							SHEET NO.
NO.	BY:	DATE:	NO.	BY:	DATE:		S-30
1			3				TOTAL SHEETS
2			4				162

19-OCT-2010 10:43
R:\Structures\str1-Y-over-L-\Superstructure Drawings\r2417aa_str1_bm.dgn
sbwilliams

STD. NO. BOM1

STR. #1

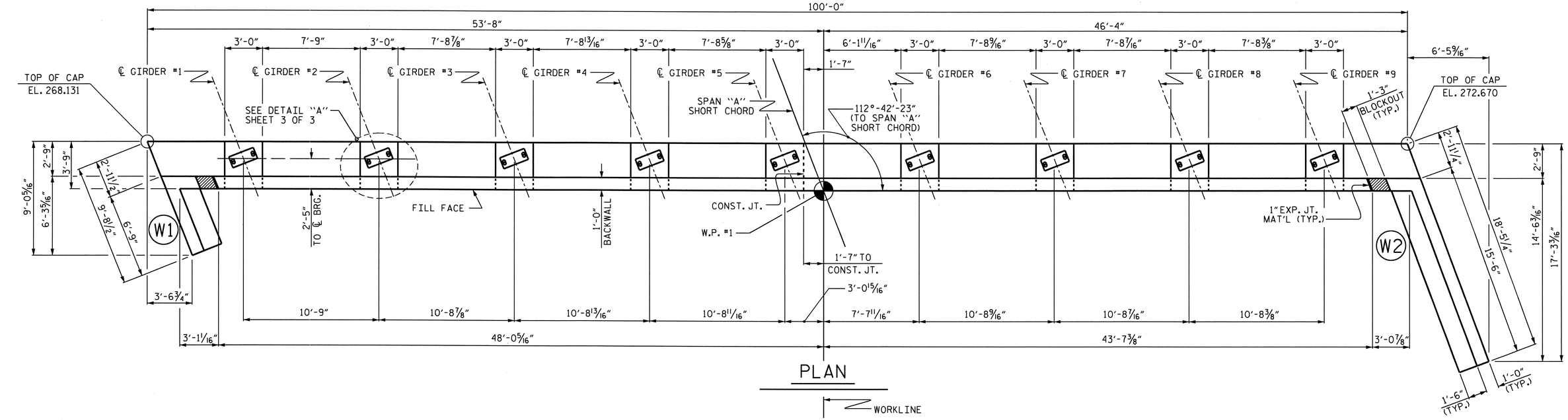

PLAN

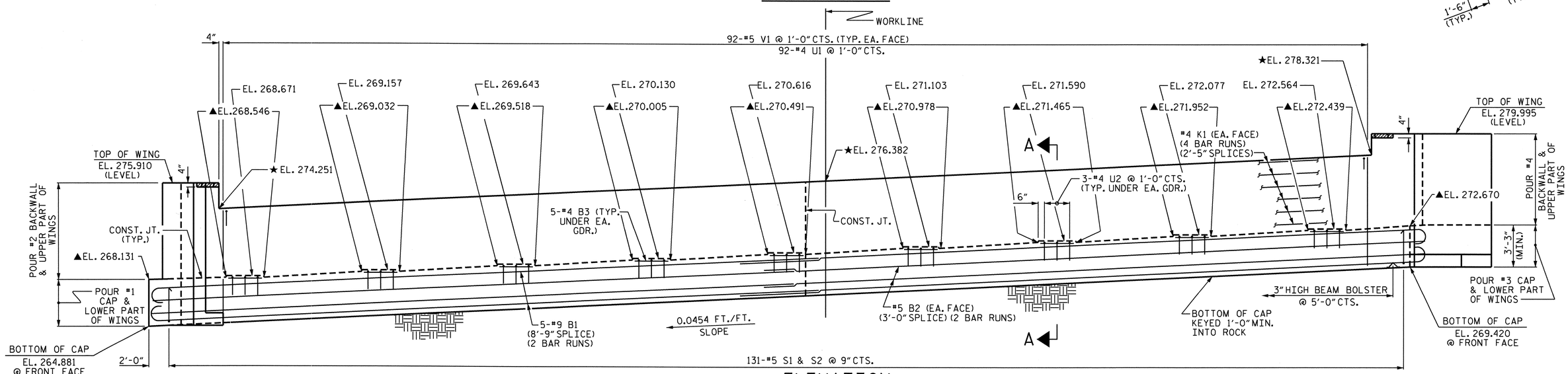

ELEVATION

PROJECT NO. R-2417AA

LEE COUNTY

STATION: 47+80.13 -L-

SHEET 1 OF 3

NOTES:

▲ FOR LOCATION OF ELEVATION BETWEEN BUILDUPS, SEE SECTION A-A, ON SHEET 3 OF 3.

★ THIS ELEVATION TAKEN ON FILL FACE OF BACKWALL.

FOR SECTION A-A, SEE SHEET 3 OF 3.

STIRRUPS AND U2 BARS IN CAP MAY BE SHIFTED AS NECESSARY TO CLEAR ANCHOR BOLTS.

THE #5 "V" BARS IN THE BACKWALL SHALL BE PLACED 2" FROM TOP OF BACKWALL.

BACKWALL SHALL BE PLACED BEFORE APPLYING THE EPOXY PROTECTIVE COATING.

THE TOP SURFACE OF THE CAP EXCEPT THE BRIDGE SEAT BUILDUPS SHALL BE SLOPED TRANSVERSELY FROM THE FILL FACE TO THE BACK FACE AT THE RATE OF 2%.

THE CONCRETE IN THE SHADED AREA OF THE WING SHALL BE POURED AFTER THE JOINT BETWEEN THE DECK & APPROACH SLAB HAS BEEN SAWED AND THE BARRIER RAIL IS CAST IF SLIP FORMING IS USED.

EPOXY COAT THE END BENT CAP AFTER ADJUSTMENTS ARE MADE TO BEARINGS AND ANCHOR BOLTS ARE GROUTED.

NORTH CAROLINA PROFESSIONAL SEAL 24380 ENGINEER THEO J. BEACH
11/23/10

STATE OF NORTH CAROLINA
DEPARTMENT OF TRANSPORTATION
RALEIGH

SUBSTRUCTURE

END BENT No. 1

REVISIONS						SHEET NO.
NO.	BY:	DATE:	NO.	BY:	DATE:	S-31
1			3			TOTAL SHEETS
2			4			162

DRAWN BY : S. B. WILLIAMS DATE : 6/10
CHECKED BY : T. BANKOVICH DATE : 7/10

23-NOV-2010 11:15
R:\Structures\str1-Y-over-L-\Substructure Drawings\r2417aa_sd_el.dgn
tbeach

STR. #1

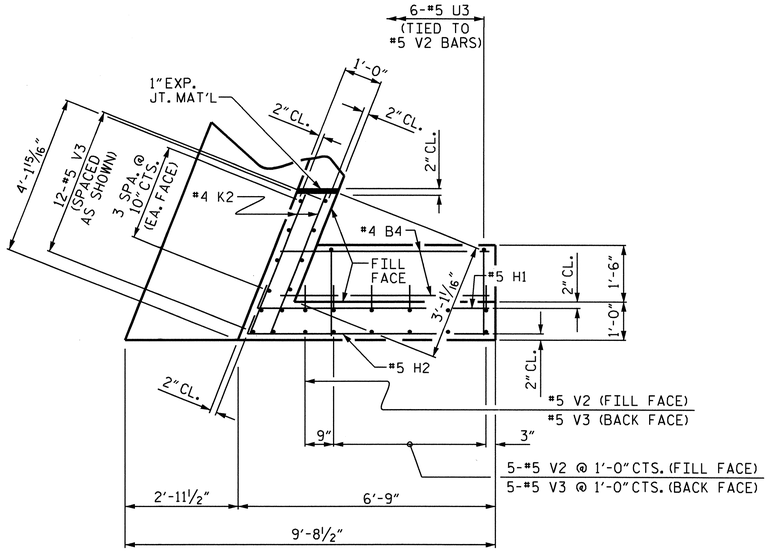

PLAN OF WING (W1)

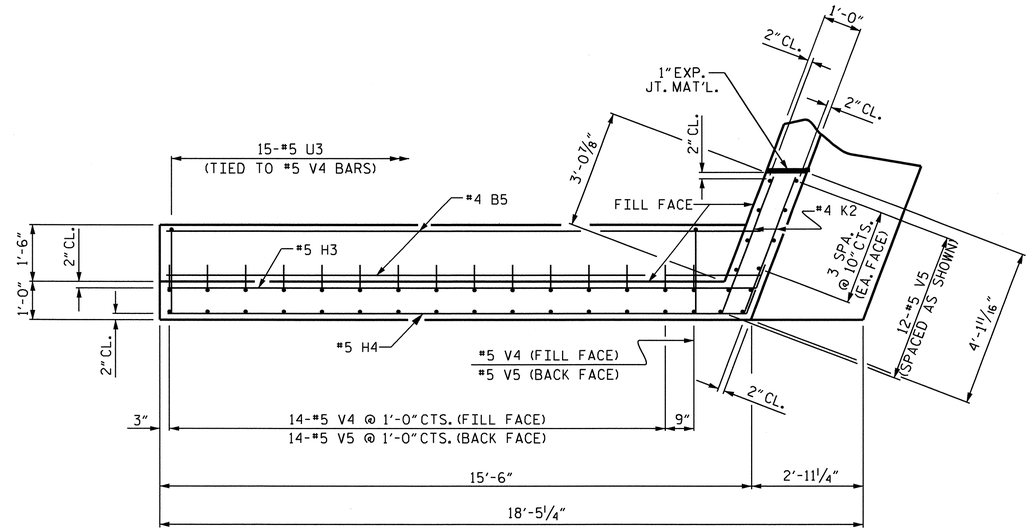

PLAN OF WING (W2)

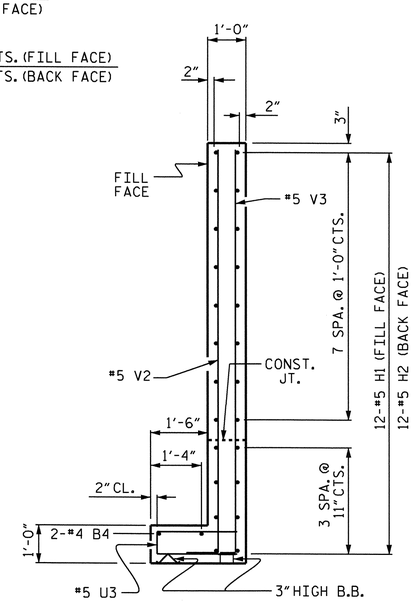

SECTION X-X

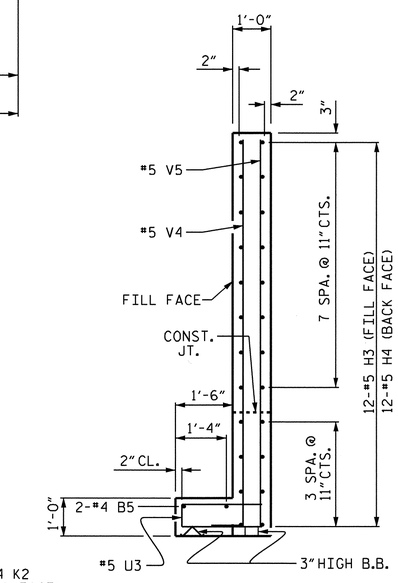

SECTION Y-Y

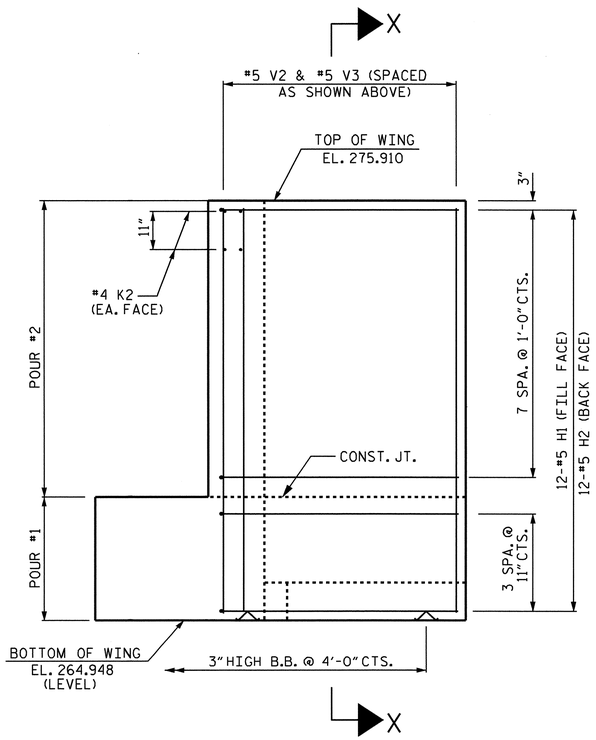

ELEVATION OF WING (W1)

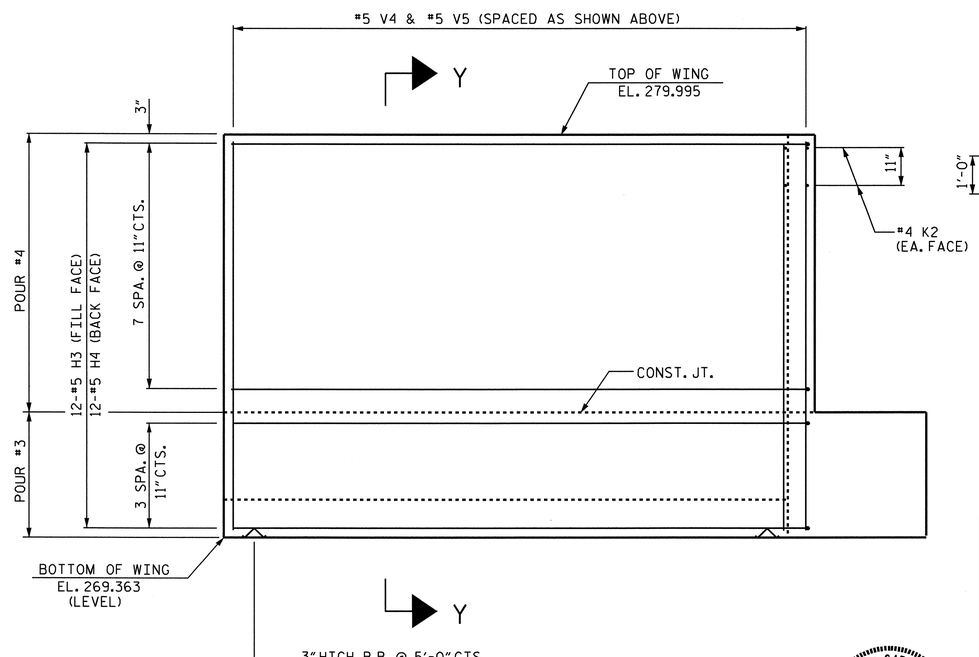

ELEVATION OF WING (W2)

PROJECT NO. R-2417AA

LEE COUNTY

STATION: 47+80.13 -L-

SHEET 2 OF 3

STATE OF NORTH CAROLINA
DEPARTMENT OF TRANSPORTATION
RALEIGH

SUBSTRUCTURE

END BENT No. 1

NORTH CAROLINA PROFESSIONAL SEAL 24390 ENGINEER THEO J. BEACH
11/23/10

REVISIONS						SHEET NO.
NO.	BY:	DATE:	NO.	BY:	DATE:	S-32
1			3			TOTAL SHEETS
2			4			162

DRAWN BY : S. B. WILLIAMS DATE : 6-10
CHECKED BY : T. BANKOVICH DATE : 7-10

23-NOV-2010 11:15
R:\Structures\str1-Y-over-L-\Substructure Drawings\r2417aa_sd_el.dgn
tbeach

STR.#1

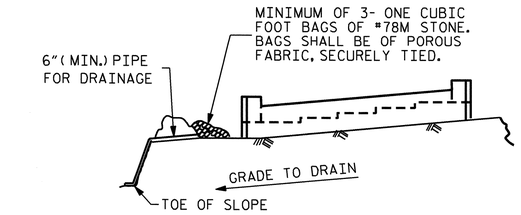

BAGGED STONE AND PIPE SHALL BE PLACED IMMEDIATELY AFTER COMPLETION OF END BENT EXCAVATION. PIPE MAY BE EITHER CONCRETE, CORRUGATED STEEL, CORRUGATED ALUMINUM ALLOY, OR CORRUGATED PLASTIC. PERFORATED PIPE WILL NOT BE ALLOWED.

BAGGED STONE SHALL REMAIN IN PLACE UNTIL THE ENGINEER DIRECTS THAT IT BE REMOVED. THE CONTRACTOR SHALL REMOVE AND DISPOSE OF SILT ACCUMULATIONS AT BAGGED STONE WHEN SO DIRECTED BY THE ENGINEER. BAGS SHALL BE REMOVED AND REPLACED WHENEVER THE ENGINEER DETERMINES THAT THEY HAVE DETERIORATED AND LOST THEIR EFFECTIVENESS.

NO SEPARATE PAYMENT WILL BE MADE FOR THIS WORK AND THE ENTIRE COST OF THIS WORK SHALL BE INCLUDED IN THE UNIT CONTRACT PRICE BID FOR THE SEVERAL PAY ITEMS.

TEMPORARY DRAINAGE AT END BENT

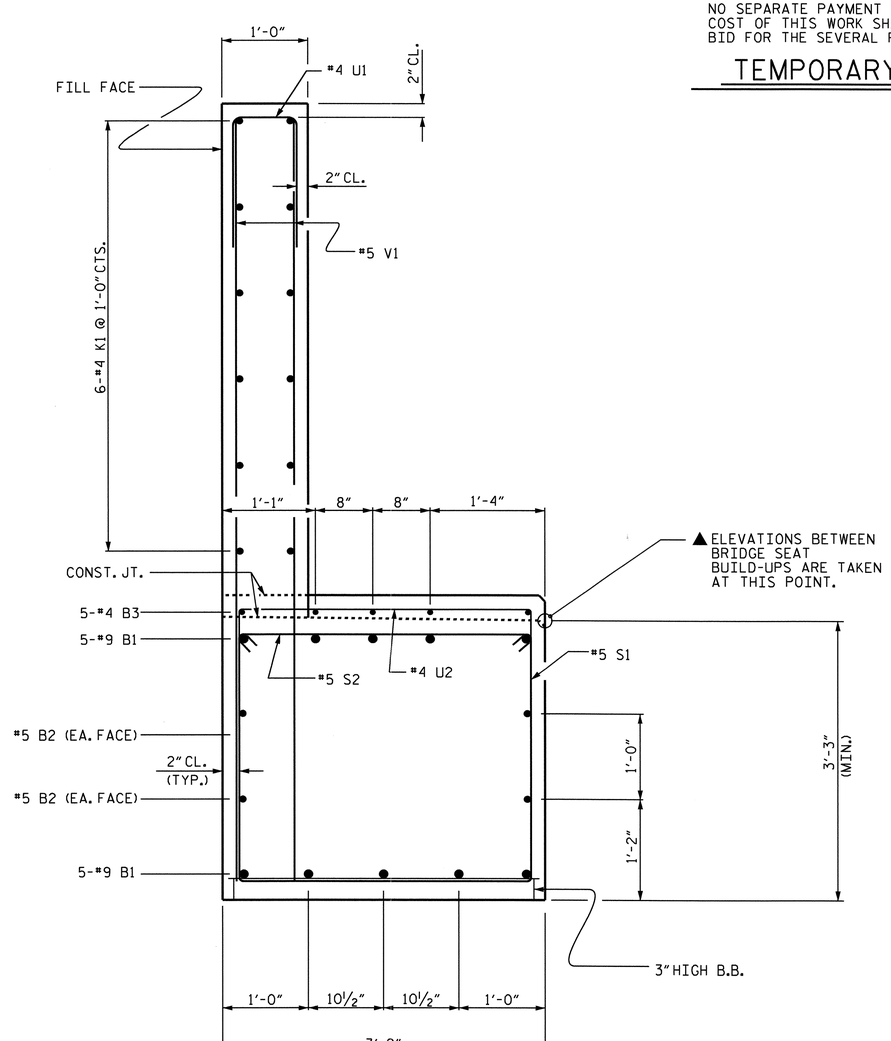

SECTION A-A

BAR TYPES

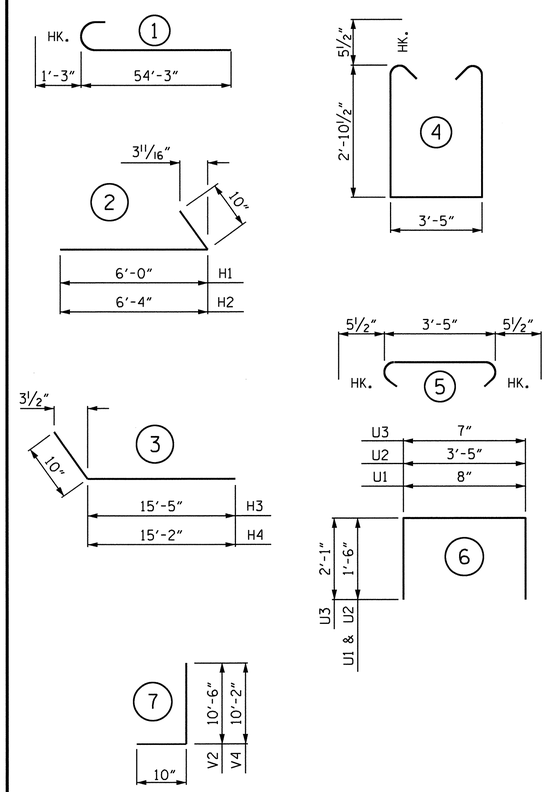

ALL BAR DIMENSIONS ARE OUT TO OUT

BILL OF MATERIAL
END BENT No. 1

BAR	NO.	SIZE	TYPE	LENGTH	WEIGHT
B1	20	#9	1	55'-6"	3774
B2	8	#5	STR	51'-6"	430
B3	45	#4	STR	2'-8"	80
B4	2	#4	STR	5'-6"	7
B5	2	#4	STR	15'-7"	21
H1	12	#5	2	6'-10"	86
H2	12	#5	2	7'-2"	90
H3	12	#5	3	16'-3"	203
H4	12	#5	3	16'-0"	200
K1	48	#4	STR	26'-9"	858
K2	8	#4	STR	3'-9"	20
S1	131	#5	4	10'-1"	1378
S2	131	#5	5	4'-4"	592
U1	92	#4	6	3'-8"	225
U2	27	#4	6	6'-5"	116
U3	21	#5	6	4'-9"	104
V1	184	#5	STR	8'-8"	1663
V2	6	#5	7	11'-4"	71
V3	18	#5	STR	10'-6"	197
V4	15	#5	7	11'-0"	172
V5	27	#5	STR	10'-2"	286
REINFORCING STEEL					10,573 LBS.

CLASS A CONCRETE BREAKDOWN	
POUR #1 CAP & LOWER WING W1	24.6 C.Y.
POUR #2 BACKWALL & UPPER WING W1	12.7 C.Y.
POUR #3 CAP & LOWER WING W2	24.8 C.Y.
POUR #4 BACKWALL & UPPER WING W2	15.0 C.Y.
TOTAL CLASS A CONCRETE	77.1 C.Y.

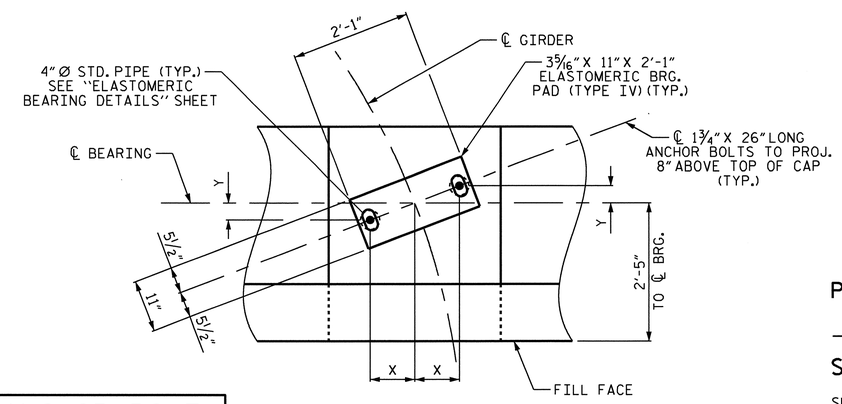

DETAIL "A"
(TYP. EA. GIRDER)

ANCHOR BOLT LOCATION

GIRDER	X	Y
1	9 5/16"	3 11/16"
2	9 5/16"	3 11/16"
3	9 5/16"	3 5/8"
4	9 5/16"	3 5/8"
5	9 5/16"	3 5/8"
6	9 5/16"	3 9/16"
7	9 5/16"	3 9/16"
8	9 5/16"	3 9/16"
9	9 5/16"	3 9/16"

PROJECT NO. R-2417AA
LEE COUNTY
STATION: 47+80.13-L-

SHEET 3 OF 3

STATE OF NORTH CAROLINA
DEPARTMENT OF TRANSPORTATION
RALEIGH

SUBSTRUCTURE

END BENT No. 1

NORTH CAROLINA PROFESSIONAL SEAL 24890 ENGINEER THEO J. BEACH
11/23/10

REVISIONS						SHEET NO.
NO.	BY:	DATE:	NO.	BY:	DATE:	S-33
1			3			TOTAL SHEETS
2			4			162

STR. #1

DRAWN BY : S.B. WILLIAMS DATE : 6-10
CHECKED BY : T. BANKOVICH DATE : 7-10

19-OCT-2010 10:39
R:\Structures\str1-Y-over-L-\Substructure Drawings\r2417aa_sd_e1.dgn
sbwilliams

NOTES

STIRRUPS AND "U" BARS IN CAP MAY BE SHIFTED AS NECESSARY TO CLEAR ANCHOR BOLTS.

HOOKS ON "V" BARS MAY BE TURNED AS NECESSARY FOR PLACING REINFORCING STEEL.

THE CONTRACTOR SHALL ADJUST THE GIRDER BUILDUPS AS NECESSARY TO INCORPORATE A MAXIMUM PERMISSIBLE VARIATION IN POT BEARINGS DEPTH OF 1/2", SEE SPECIAL PROVISION FOR POT BEARINGS.

★ INVERT ALTERNATE STIRRUPS AS SHOWN.

THE CONTRACTOR'S ATTENTION IS CALLED TO THE FACT THAT THE "M" BARS IN THE FOOTING ARE DETAILED WITH 3 FEET OF EXTRA LENGTH.

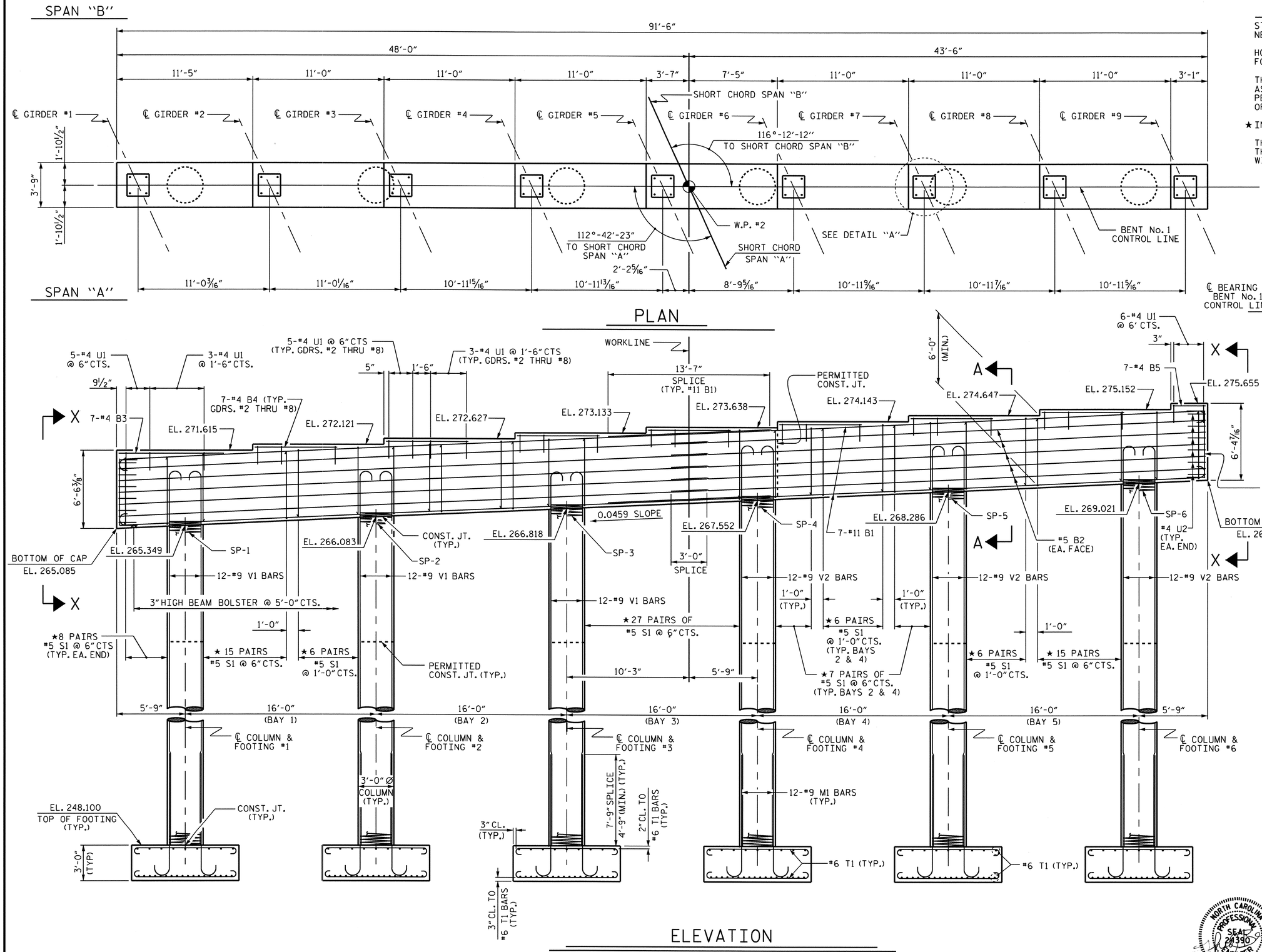

ELEVATION

DIMENSIONS & REINFORCING STEEL ARE TYPICAL FOR EACH FOOTING

PROJECT NO. R-2417AA

LEE COUNTY

STATION: 47+80.13 -L-

SHEET 1 OF 2

STATE OF NORTH CAROLINA
DEPARTMENT OF TRANSPORTATION
RALEIGH

SUBSTRUCTURE

BENT No. 1

NORTH CAROLINA PROFESSIONAL SEAL 24390 ENGINEER THEO J. BEACH 11/23/10

REVISIONS						SHEET NO.
NO.	BY:	DATE:	NO.	BY:	DATE:	S-34
1			3			TOTAL SHEETS
2			4			162

DRAWN BY : M. L. BROWN DATE : 6/10
CHECKED BY : S. B. WILLIAMS DATE : 6/10

23-NOV-2010 13:26
R:\Structures\str1-Y-over-L-\Substructure Drawings\r2417aa_sd_bent.dgn
tjbankovich

STR. #1

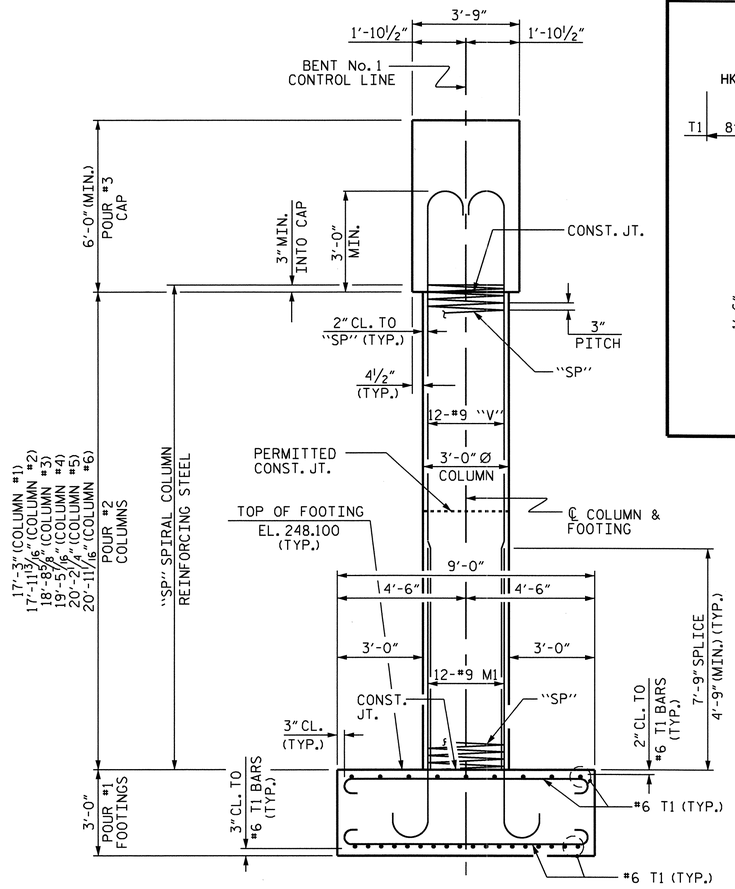

END ELEVATION

REINFORCING STEEL, DIMENSIONS, & DETAILS ARE TYPICAL FOR EACH COLUMN & FOOTING UNLESS OTHERWISE NOTED.

BAR TYPES

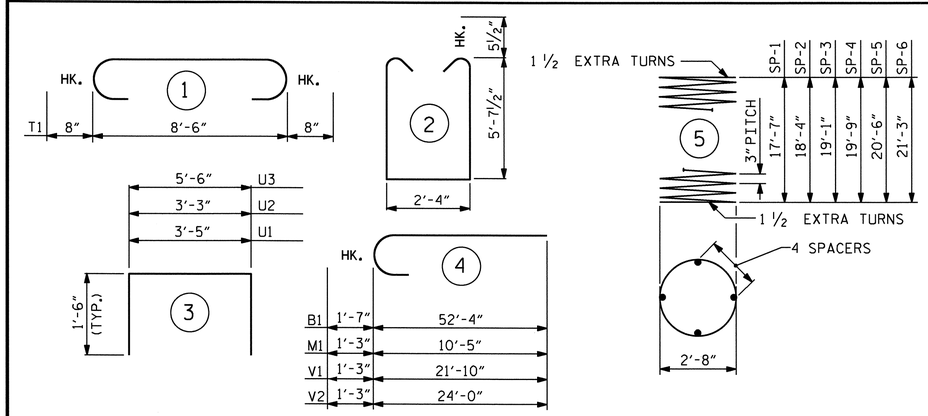

ALL BAR DIMENSIONS ARE OUT TO OUT.

BILL OF MATERIAL

BENT No. 1

BAR	NO.	SIZE	TYPE	LENGTH	WEIGHT
B1	28	#11	4	53'-11"	8021
B2	20	#5	STR	47'-1"	982
B3	7	#4	STR	8'-10"	41
B4	49	#4	STR	6'-11"	226
B5	7	#4	STR	2'-9"	13
M1	72	#9	4	11'-8"	2856
S1	250	#5	2	14'-6"	3781
T1	324	#6	1	9'-10"	4785
U1	70	#4	3	6'-5"	300
U2	12	#4	3	6'-3"	50
U3	8	#4	3	8'-6"	45
V1	36	#9	4	23'-1"	2825
V2	36	#9	4	25'-3"	3091

REINFORCING STEEL 27016 LBS.

BAR	NO.	SIZE	TYPE	LENGTH	WEIGHT
SP-1	1	*	5	610'-7"	408
SP-2	1	*	5	635'-4"	424
SP-3	1	*	5	660'-1"	441
SP-4	1	*	5	676'-7"	452
SP-5	1	*	5	701'-4"	468
SP-6	1	*	5	726'-1"	485

SPIRAL COLUMN REINFORCING STEEL 2678 LBS.

* THE "SP" SPIRAL REINFORCING STEEL SHALL BE W20 OR D-20 COLD DRAWN WIRE OR #4 PLAIN OR DEFORMED BAR.

CLASS A CONCRETE BREAKDOWN

POUR #1 (FOOTINGS)	54.0 C.Y.
POUR #2 (COLUMNS)	30.0 C.Y.
POUR #3 (CAP)	79.6 C.Y.
TOTAL CLASS A CONCRETE	163.6 C.Y.

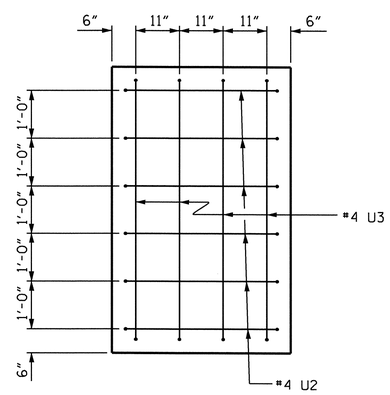

VIEW X-X

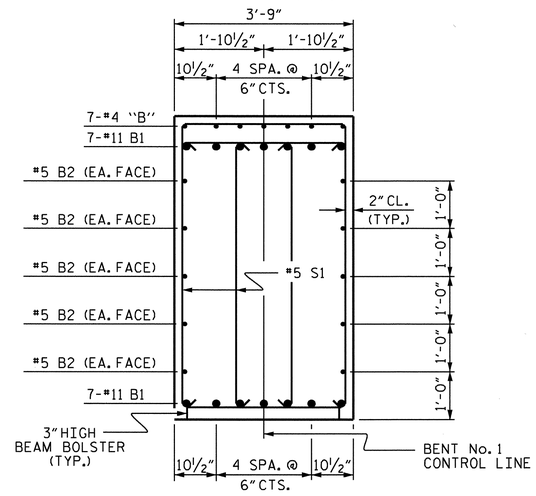

SECTION A-A

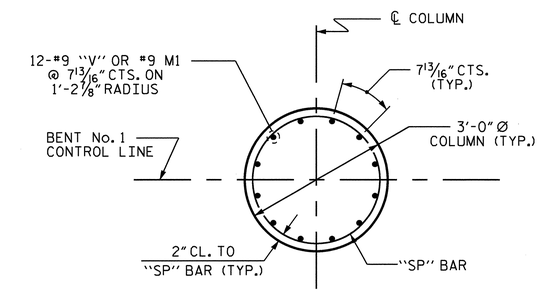

PLAN OF COLUMN

REINFORCING STEEL AND DIMENSIONS ARE TYPICAL FOR EACH COLUMN

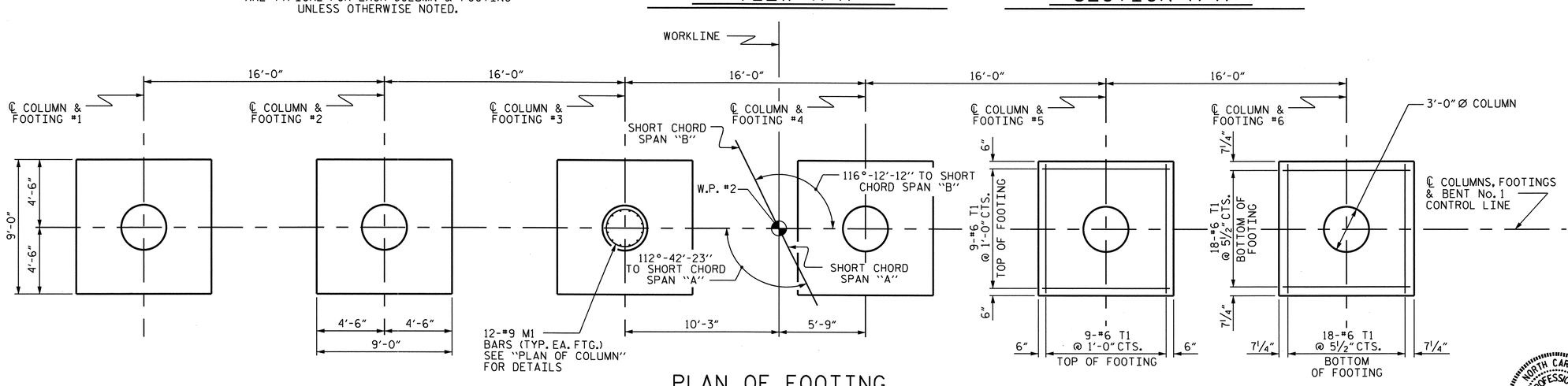

PLAN OF FOOTING

PILE PLACEMENT, DIMENSIONS, & REINFORCING STEEL ARE TYPICAL FOR EACH COLUMN AND FOOTING

PROJECT NO. R-2417AA
LEE COUNTY
STATION: 47+80.13 -L-

SHEET 2 OF 2

STATE OF NORTH CAROLINA
DEPARTMENT OF TRANSPORTATION
RALEIGH

SUBSTRUCTURE

BENT No. 1

NORTH CAROLINA PROFESSIONAL SEAL 24390 ENGINEER THEO J. BEACH
11/23/10

REVISIONS							SHEET NO.
NO.	BY:	DATE:	NO.	BY:	DATE:		S-35
1			3				TOTAL SHEETS
2			4				162

DRAWN BY : M. L. BROWN DATE : 6/10
CHECKED BY : S. B. WILLIAMS DATE : 6/10

23-NOV-2010 11:18
R:\Structures\Str1-Y-over-L-\Substructure Drawings\r2417aa_sd_bent.dgn
tbeach

STR. #1

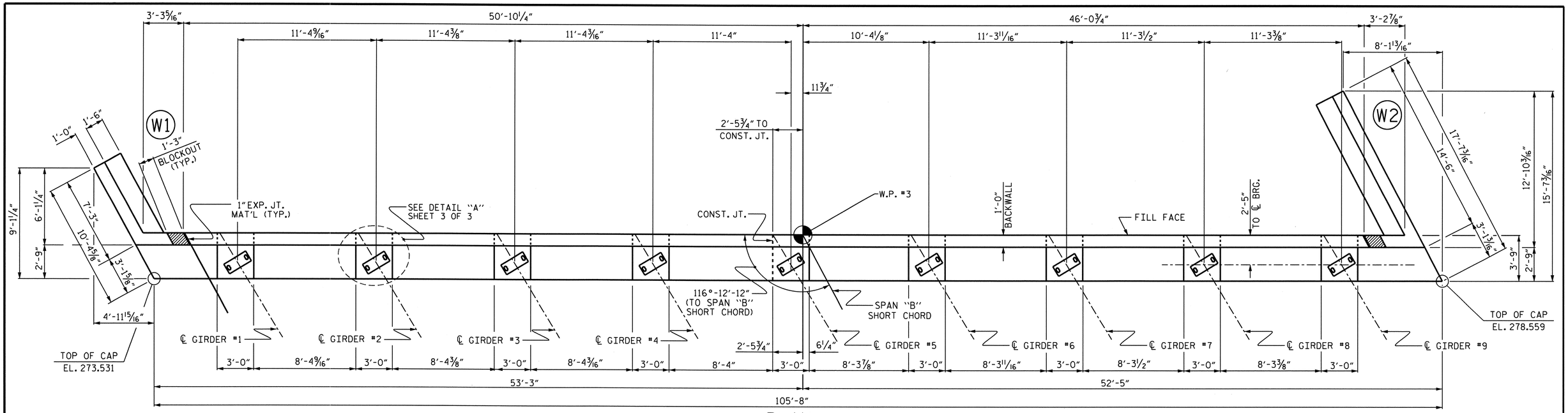

PLAN

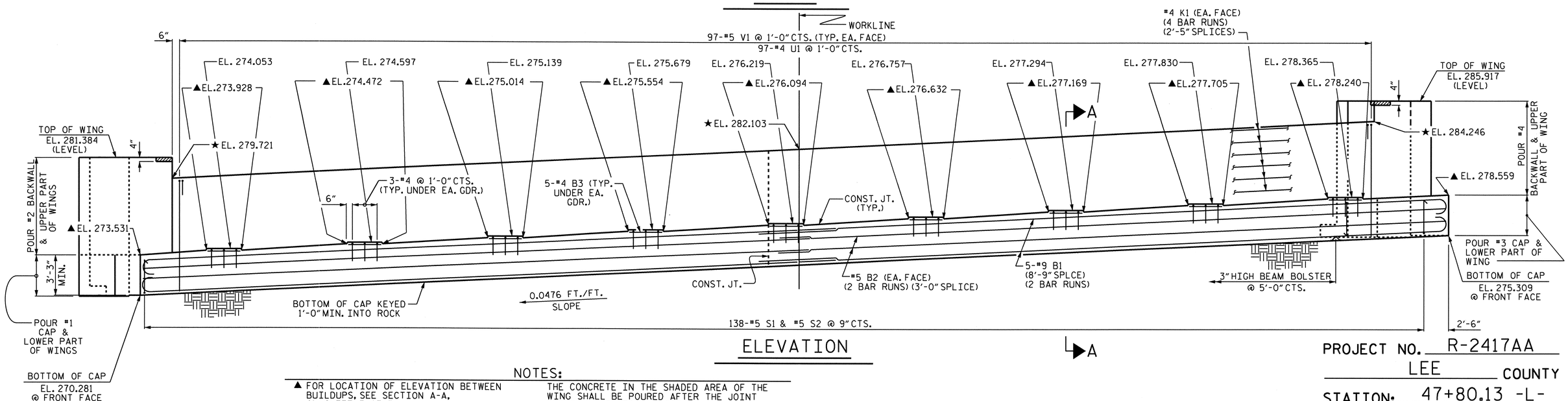

ELEVATION

A

NOTES:

▲ FOR LOCATION OF ELEVATION BETWEEN BUILDUPS, SEE SECTION A-A, ON SHEET 3 OF 3.

★ THIS ELEVATION TAKEN ON FILL FACE OF BACKWALL.

FOR SECTION A-A, SEE SHEET 3 OF 3.

STIRRUPS AND U2 BARS IN CAP MAY BE SHIFTED AS NECESSARY TO CLEAR ANCHOR BOLTS.

THE #5 "V" BARS IN THE BACKWALL SHALL BE PLACED 2" FROM TOP OF BACKWALL.

BACKWALL SHALL BE PLACED BEFORE APPLYING THE EPOXY PROTECTIVE COATING.

THE TOP SURFACE OF THE CAP EXCEPT THE BRIDGE SEAT BUILDUPS SHALL BE SLOPED TRANSVERSELY FROM THE FILL FACE TO THE BACK FACE AT THE RATE OF 2%.

THE CONCRETE IN THE SHADED AREA OF THE WING SHALL BE POURED AFTER THE JOINT BETWEEN THE DECK & APPROACH SLAB HAS BEEN SAWED AND THE BARRIER RAIL IS CAST IF SLIP FORMING IS USED.

EPOXY COAT THE END BENT CAP AFTER ADJUSTMENTS ARE MADE TO BEARINGS AND ANCHOR BOLTS ARE GROUTED.

PROJECT NO. R-2417AA

LEE COUNTY

STATION: 47+80.13 -L-

SHEET 1 OF 3

STATE OF NORTH CAROLINA
DEPARTMENT OF TRANSPORTATION
RALEIGH

SUBSTRUCTURE

END BENT No. 2

NORTH CAROLINA PROFESSIONAL SEAL 24290 ENGINEER THEO J. BEACH
11/23/10

REVISIONS						SHEET NO.
NO.	BY:	DATE:	NO.	BY:	DATE:	S-36
1			3			TOTAL SHEETS
2			4			162

STR. #1

DRAWN BY : S. B. WILLIAMS DATE : 6/10
CHECKED BY : T. BANKOVICH DATE : 7/10

23-NOV-2010 11:20
R:\Structures\str1-Y-over-L-\Substructure Drawings\r2417aa_sd_e2.dgn
tbeach

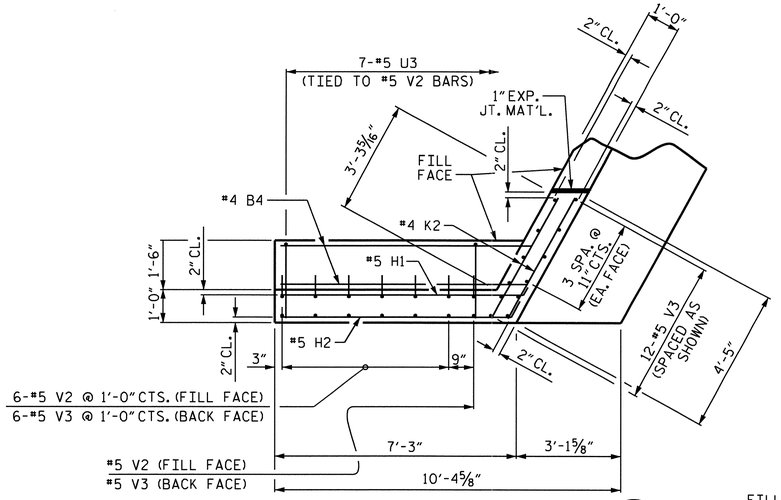

PLAN OF WING (W1)

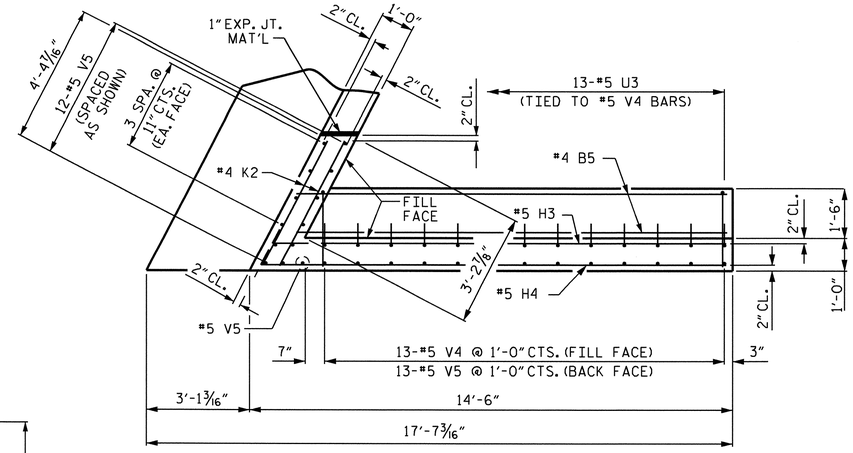

PLAN OF WING (W2)

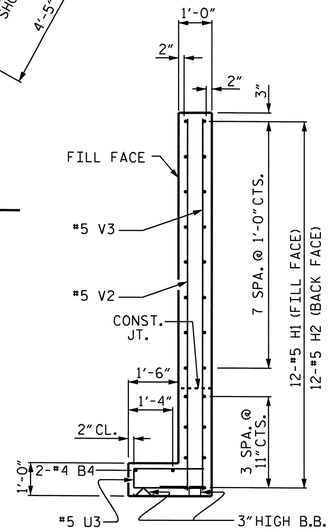

SECTION X-X

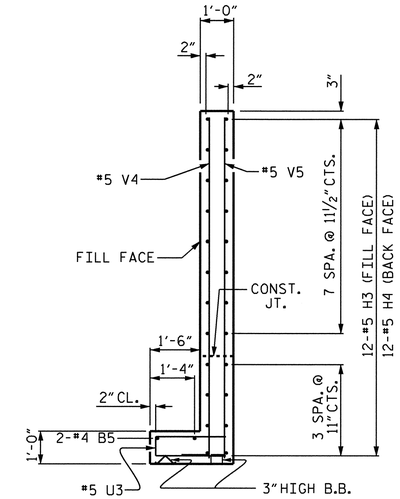

SECTION Y-Y

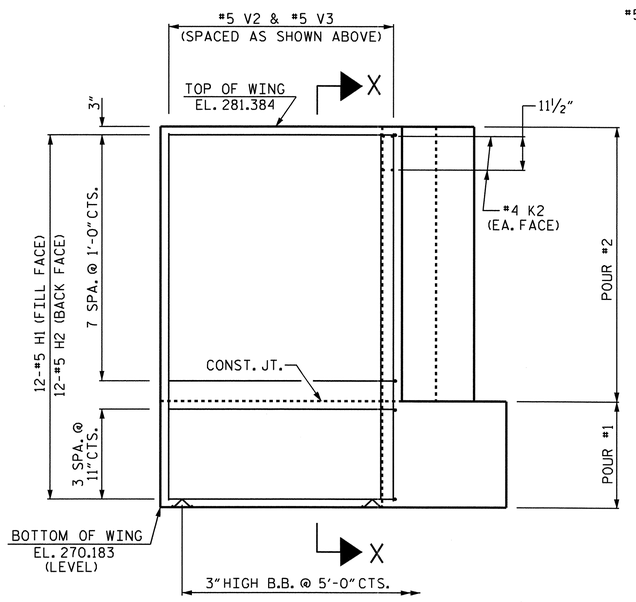

ELEVATION OF WING (W1)

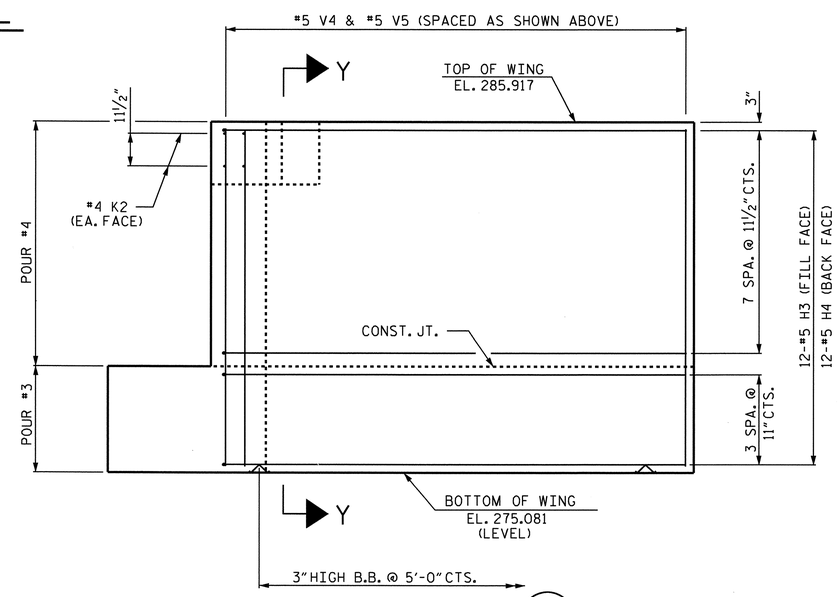

ELEVATION OF WING (W2)

PROJECT NO. R-2417AA
LEE COUNTY
STATION: 47+80.13 -L-

SHEET 2 OF 3

STATE OF NORTH CAROLINA
DEPARTMENT OF TRANSPORTATION
RALEIGH

SUBSTRUCTURE

END BENT No. 2

NORTH CAROLINA PROFESSIONAL SEAL 21390 ENGINEER THEO. J. BEACH
11/23/10

REVISIONS						SHEET NO.
NO.	BY:	DATE:	NO.	BY:	DATE:	S-37
1			3			TOTAL SHEETS
2			4			162

DRAWN BY : S. B. WILLIAMS DATE : 6-10
CHECKED BY : T. BANKOVICH DATE : 7-10

19-OCT-2010 10:34
R:\Structures\str1-Y-over-L-\Substructure Drawings\r2417aa_sd_e2.dgn
sbwilliams

STR. #1

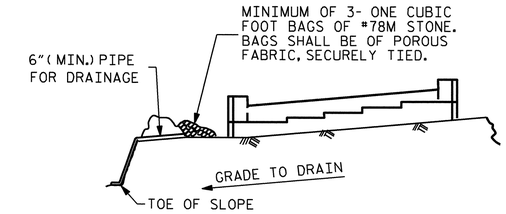

BAGGED STONE AND PIPE SHALL BE PLACED IMMEDIATELY AFTER COMPLETION OF END BENT EXCAVATION. PIPE MAY BE EITHER CONCRETE, CORRUGATED STEEL, CORRUGATED ALUMINUM ALLOY, OR CORRUGATED PLASTIC. PERFORATED PIPE WILL NOT BE ALLOWED.

BAGGED STONE SHALL REMAIN IN PLACE UNTIL THE ENGINEER DIRECTS THAT IT BE REMOVED. THE CONTRACTOR SHALL REMOVE AND DISPOSE OF SILT ACCUMULATIONS AT BAGGED STONE WHEN SO DIRECTED BY THE ENGINEER. BAGS SHALL BE REMOVED AND REPLACED WHENEVER THE ENGINEER DETERMINES THAT THEY HAVE DETERIORATED AND LOST THEIR EFFECTIVENESS.

NO SEPARATE PAYMENT WILL BE MADE FOR THIS WORK AND THE ENTIRE COST OF THIS WORK SHALL BE INCLUDED IN THE UNIT CONTRACT PRICE BID FOR THE SEVERAL PAY ITEMS.

TEMPORARY DRAINAGE AT END BENT

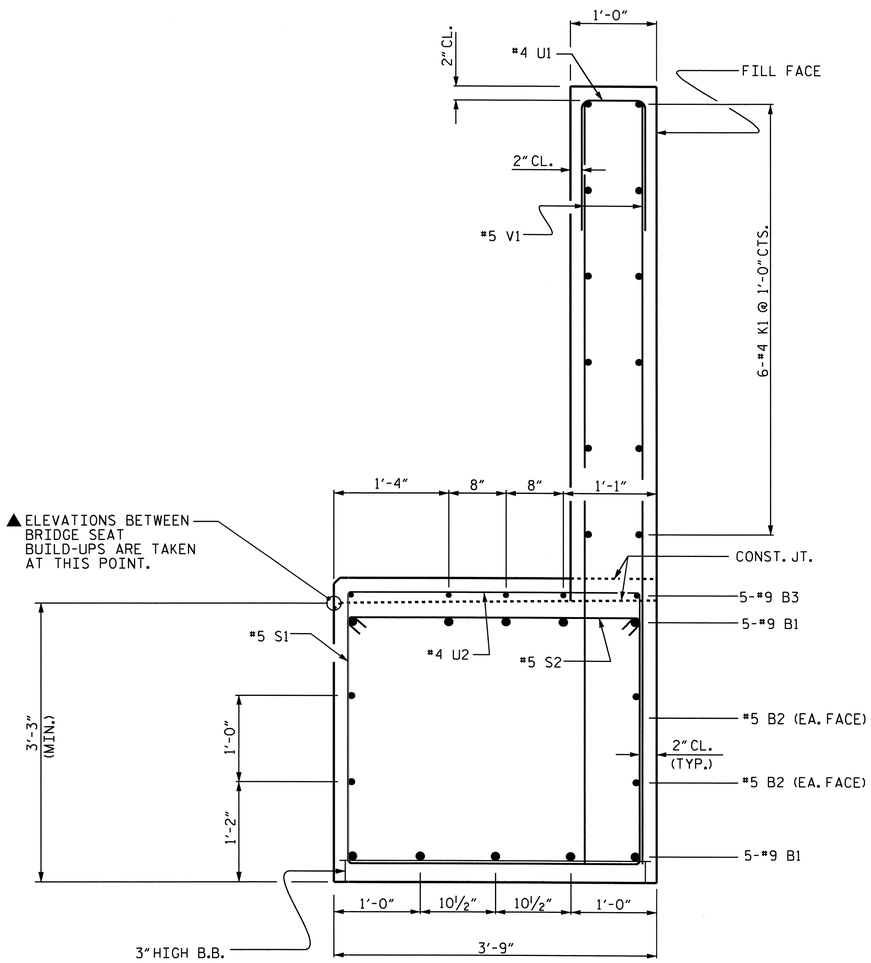

SECTION A-A

BAR TYPES

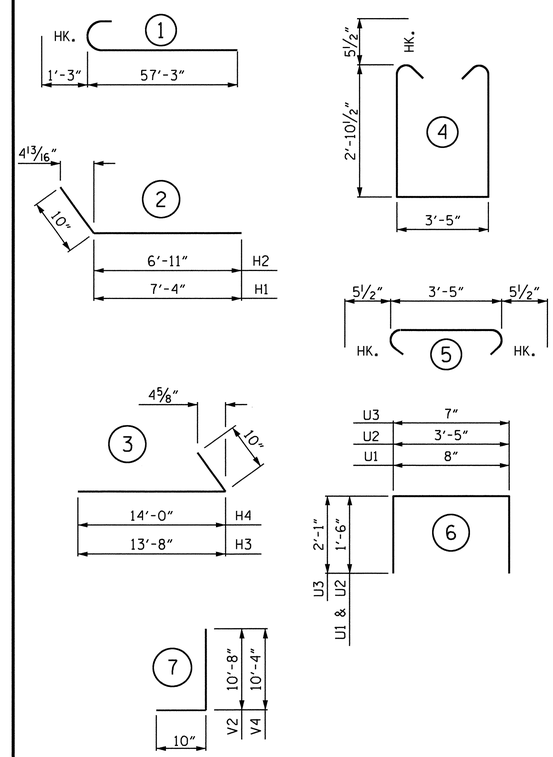

ALL BAR DIMENSIONS ARE OUT TO OUT

BILL OF MATERIAL
END BENT No. 2

BAR	NO.	SIZE	TYPE	LENGTH	WEIGHT
B1	20	#9	1	58'-6"	3978
B2	8	#5	STR	54'-4"	453
B3	45	#4	STR	2'-8"	80
B4	2	#4	STR	7'-6"	10
B5	2	#4	STR	12'-11"	17
H1	12	#5	2	8'-2"	102
H2	12	#5	2	7'-9"	97
H3	12	#5	3	14'-6"	181
H4	12	#5	3	14'-10"	186
K1	48	#4	STR	28'-3"	906
K2	8	#4	STR	3'-11"	21
S1	138	#5	4	10'-1"	1451
S2	138	#5	5	4'-4"	624
U1	97	#4	6	3'-8"	238
U2	27	#4	6	6'-5"	116
U3	20	#5	6	4'-9"	99
V1	194	#5	STR	8'-11"	1804
V2	7	#5	7	11'-6"	84
V3	19	#5	STR	10'-9"	213
V4	13	#5	7	11'-2"	151
V5	26	#5	STR	10'-4"	280
REINFORCING STEEL					11,091 LBS.

CLASS A CONCRETE BREAKDOWN	
POUR #1 CAP & LOWER WING W1	24.8 C.Y.
POUR #2 BACKWALL & UPPER WING W1	13.9 C.Y.
POUR #3 CAP & LOWER WING W2	26.9 C.Y.
POUR #4 BACKWALL & UPPER WING W2	15.4 C.Y.
TOTAL CLASS A CONCRETE	81.0 C.Y.

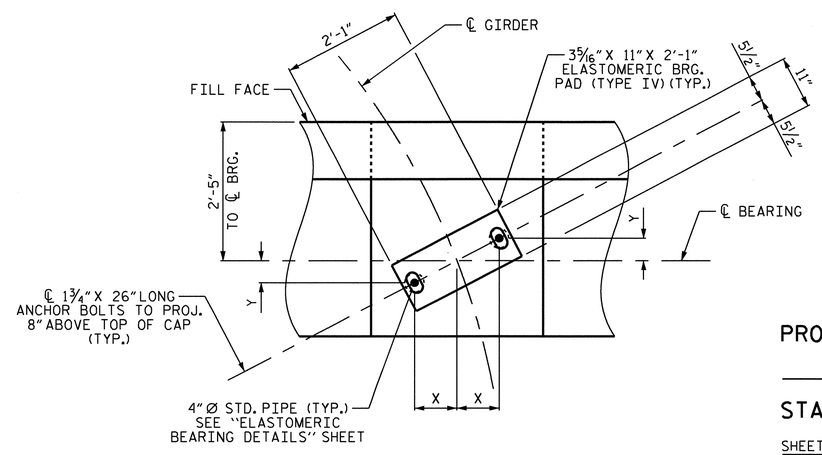

DETAIL "A"
(TYP. EA. GIRDER)

ANCHOR BOLT LOCATION

GIRDER	X	Y
1	8 13/16"	4¾"
2	8 13/16"	4¾"
3	8 13/16"	4¾"
4	8 13/16"	4¾"
5	8 13/16"	4 11/16"
6	8 13/16"	4 11/16"
7	8⅞"	4 11/16"
8	8⅞"	4⅝"
9	8⅞"	4⅝"

PROJECT NO. R-2417AA

LEE COUNTY

STATION: 47+80.13-L-

SHEET 3 OF 3

STATE OF NORTH CAROLINA
DEPARTMENT OF TRANSPORTATION
RALEIGH

SUBSTRUCTURE

END BENT No. 2

NORTH CAROLINA PROFESSIONAL SEAL 2390 ENGINEER THEO J. BEACH
11/23/10

REVISIONS							SHEET NO.
NO.	BY:	DATE:	NO.	BY:	DATE:		S-38
1			3				TOTAL SHEETS
2			4				162

DRAWN BY : S.B. WILLIAMS DATE : 6-10
CHECKED BY : T. BANKOVICH DATE : 7-10

19-OCT-2010 10:33
R:\Structures\Str1-Y-over-L-\Substructure Drawings\r2417aa_sd_e2.dgn
sbwilliams

STR. #1

NOTES

SLOPE PROTECTION SHALL BE PLACED UNDER THE ENDS OF THE BRIDGE AS SHOWN IN THE DETAILS. MEASUREMENT AND PAYMENT SHALL BE AS PRESCRIBED IN SECTION 462 OF THE STANDARD SPECIFICATIONS.

SLOPE PROTECTION SHALL CONSIST OF 4" POURED-IN-PLACE CONCRETE PAVING AS SHOWN IN THE DETAILS ON THIS SHEET. CONCRETE SHALL BE CLASS "B". THE CONCRETE SURFACE SHALL BE FLOATED WITH A WOODEN FLOAT AND FINISHED. WELDED WIRE FABRIC REINFORCING SHALL BE 6 X 6 - W1.4 X W1.4, 60" WIDE. SLOPE PROTECTION SHALL BE POURED IN 5' STRIPS AS SHOWN IN THE "POURING DETAIL" WITH 2'-0" LONG #4 BARS PLACED ALONG THE SLOPE BETWEEN STRIPS AT 1'-6" MAXIMUM SPACING. SLOPE PROTECTION MAY BE POURED IN ALTERNATE 4' AND 5' STRIPS AS SHOWN IN THE "OPTIONAL POURING DETAIL" WITH ADJACENT RUNS OF WELDED WIRE FABRIC LAPPING AT LEAST 6". THE COST OF THE WELDED WIRE FABRIC AND #4 BARS, IF USED, SHALL BE INCLUDED IN THE CONTRACT UNIT PRICE BID PER SQUARE YARD FOR SLOPE PROTECTION.

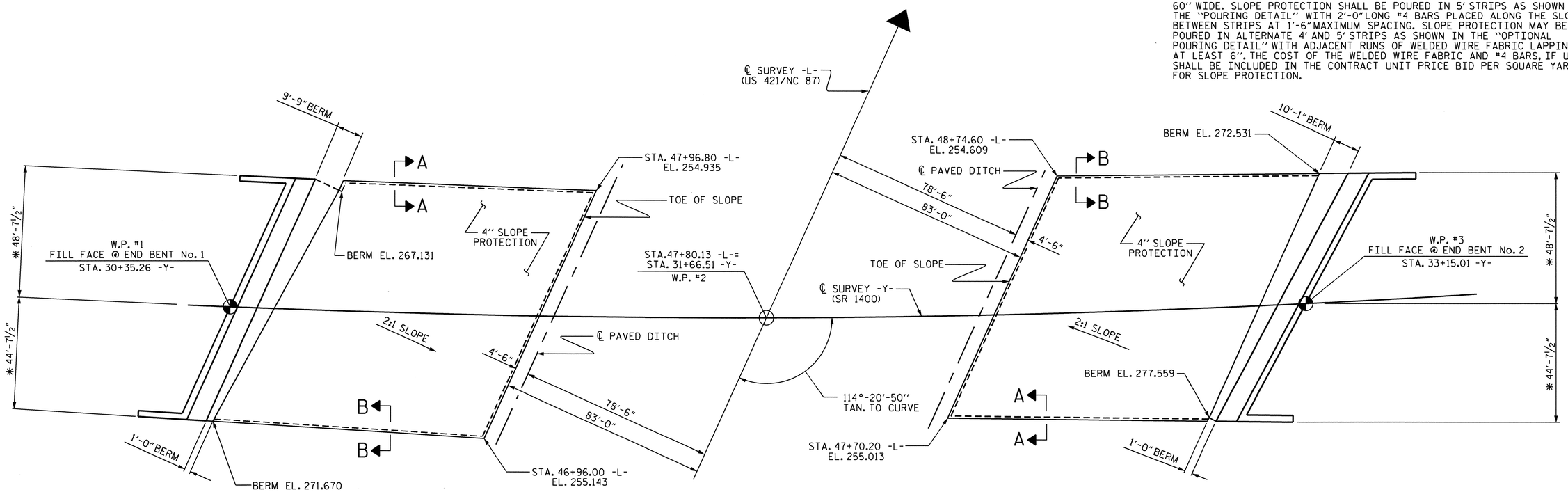

PLAN

✱ DENOTES RADIAL DIMENSIONS

BRIDGE @ STA. 47+80.13 -L-	4 INCH SLOPE PROTECTION	✱ WELDED WIRE FABRIC 60 INCHES WIDE
	SQUARE YARDS	APPROX. L.F.
END BENT No. 1	422	759
END BENT No. 2	604	1087

✱ QUANTITY SHOWN IS BASED ON 5' POURS.

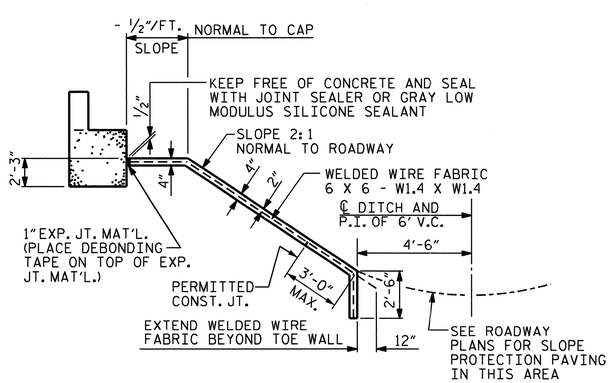

SECTION ALONG ℄ ROADWAY WHEN FILL CATCHES IN DITCH

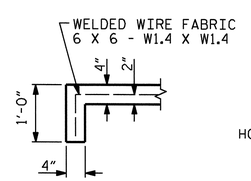

SECTION A-A

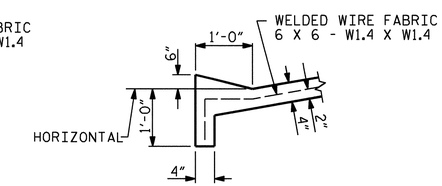

SECTION B-B

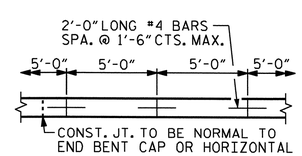

STRIP WIDTHS MAY VARY IN CURVED PORTION.

POURING DETAIL

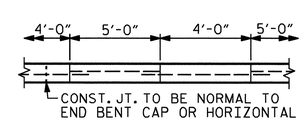

POUR A 4'-0" STRIP FIRST. STRIP WIDTHS MAY VARY IN CURVED PORTION.

OPTIONAL POURING DETAIL

DETAILS FOR SLOPE PROTECTION

PROJECT NO. R-2417AA
LEE COUNTY
STATION: 47+80.13 -L-

STATE OF NORTH CAROLINA
DEPARTMENT OF TRANSPORTATION
RALEIGH

STANDARD SLOPE PROTECTION DETAILS

NORTH CAROLINA PROFESSIONAL SEAL 24990 ENGINEER THEO. J. BEACH
11/23/10

REVISIONS						SHEET NO.
NO.	BY:	DATE:	NO.	BY:	DATE:	S-39
1			3			TOTAL SHEETS
2			4			162

DRAWN BY : M. L. BROWN DATE : 3/10
CHECKED BY : S. B. WILLIAMS DATE : 4/10

19-OCT-2010 10:32
R:\Structures\str1-Y-over-L-\Miscellaneous Drawings\R2417AA_sd_SP.dgn
sbwilliams

STR #1

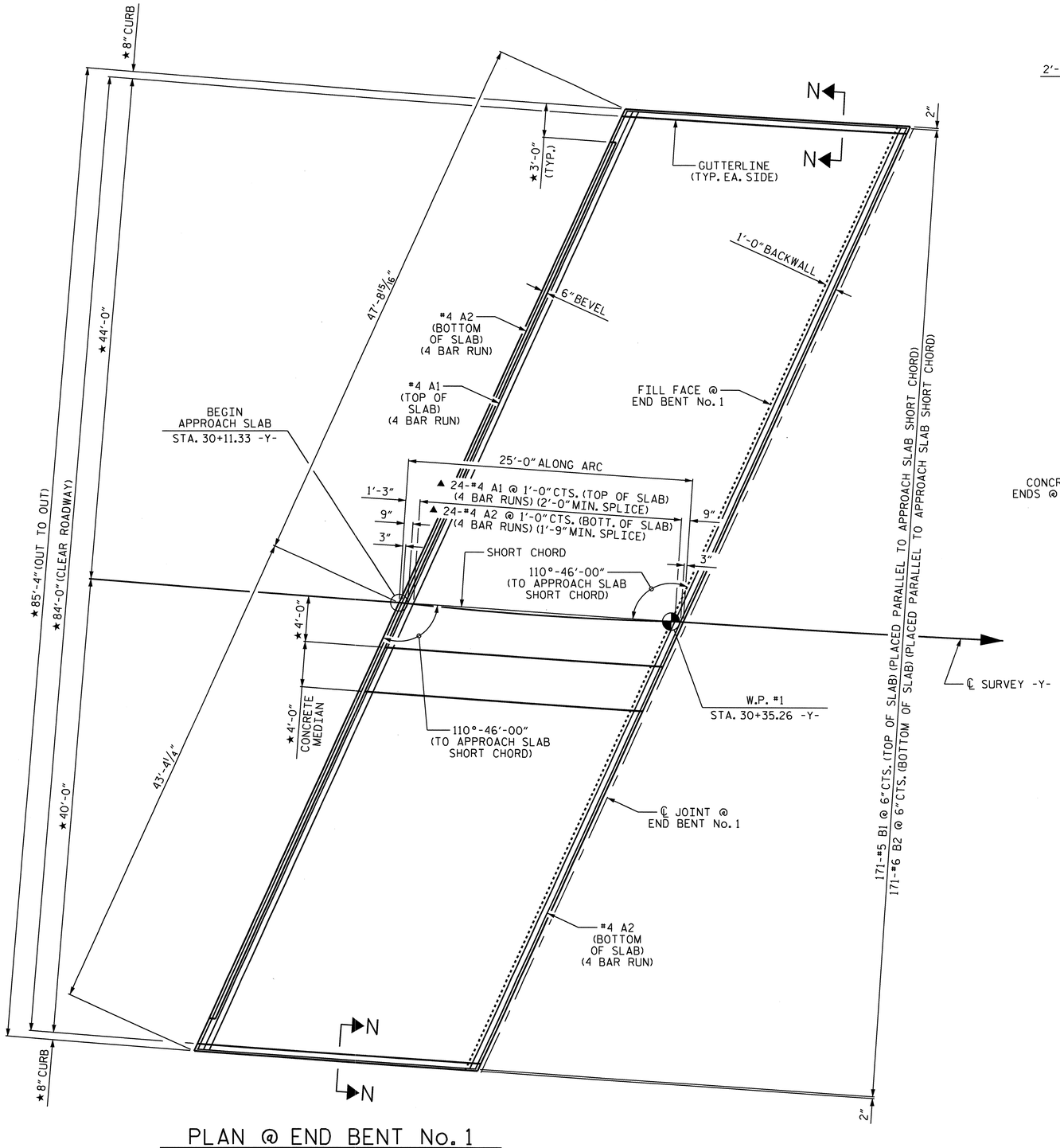

PLAN @ END BENT No. 1

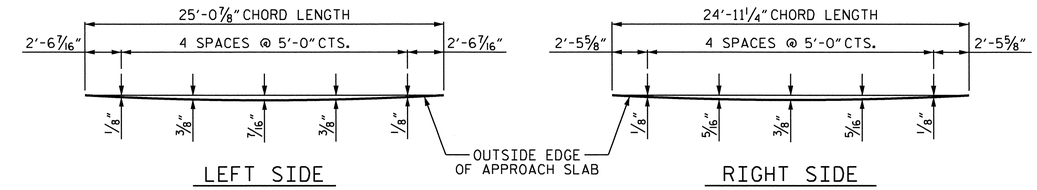

ARC OFFSETS @ END BENT No. 1

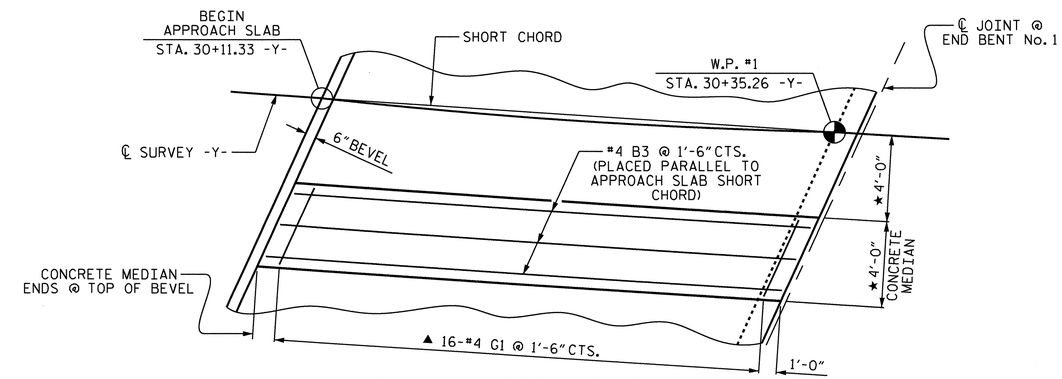

PLAN OF CONCRETE MEDIAN

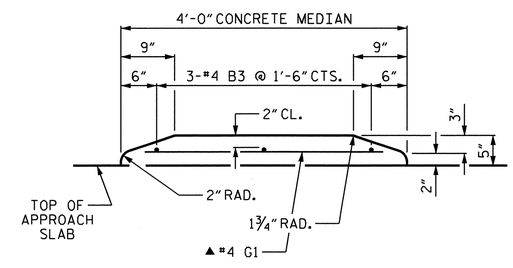

SECTION THRU CONCRETE MEDIAN

NOTES:

★ MEASURED RADIALLY

▲ "A" & G1 BARS ARE SPACED ALONG THE APPROACH SLAB CHORD AND PLACED PARALLEL TO FILL FACE

FOR SECTION N-N, SEE SHEET 3 OF 4

FOR "END OF CONCRETE MEDIAN @ JOINTS" DETAIL, SEE SHEET 4 OF 4

PROJECT NO. R-2417AA

LEE COUNTY

STATION: 47+80.13 -L-

SHEET 1 OF 4

STATE OF NORTH CAROLINA
DEPARTMENT OF TRANSPORTATION
RALEIGH

BRIDGE APPROACH SLAB AND ARC OFFSETS

NORTH CAROLINA PROFESSIONAL SEAL 24890 ENGINEER THEO J. BEACH
11/23/10

REVISIONS						SHEET NO.
NO.	BY:	DATE:	NO.	BY:	DATE:	S-40
1			3			TOTAL SHEETS
2			4			162

STR. #1

DRAWN BY : T. BANKOVICH DATE : 10/09
CHECKED BY : M.L. BROWN DATE : 11/09

19-OCT-2010 10:31
R:\Structures\str1-Y-over-L-\Miscellaneous Drawings\R2417AA_SD_AS.dgn
sbwilliams

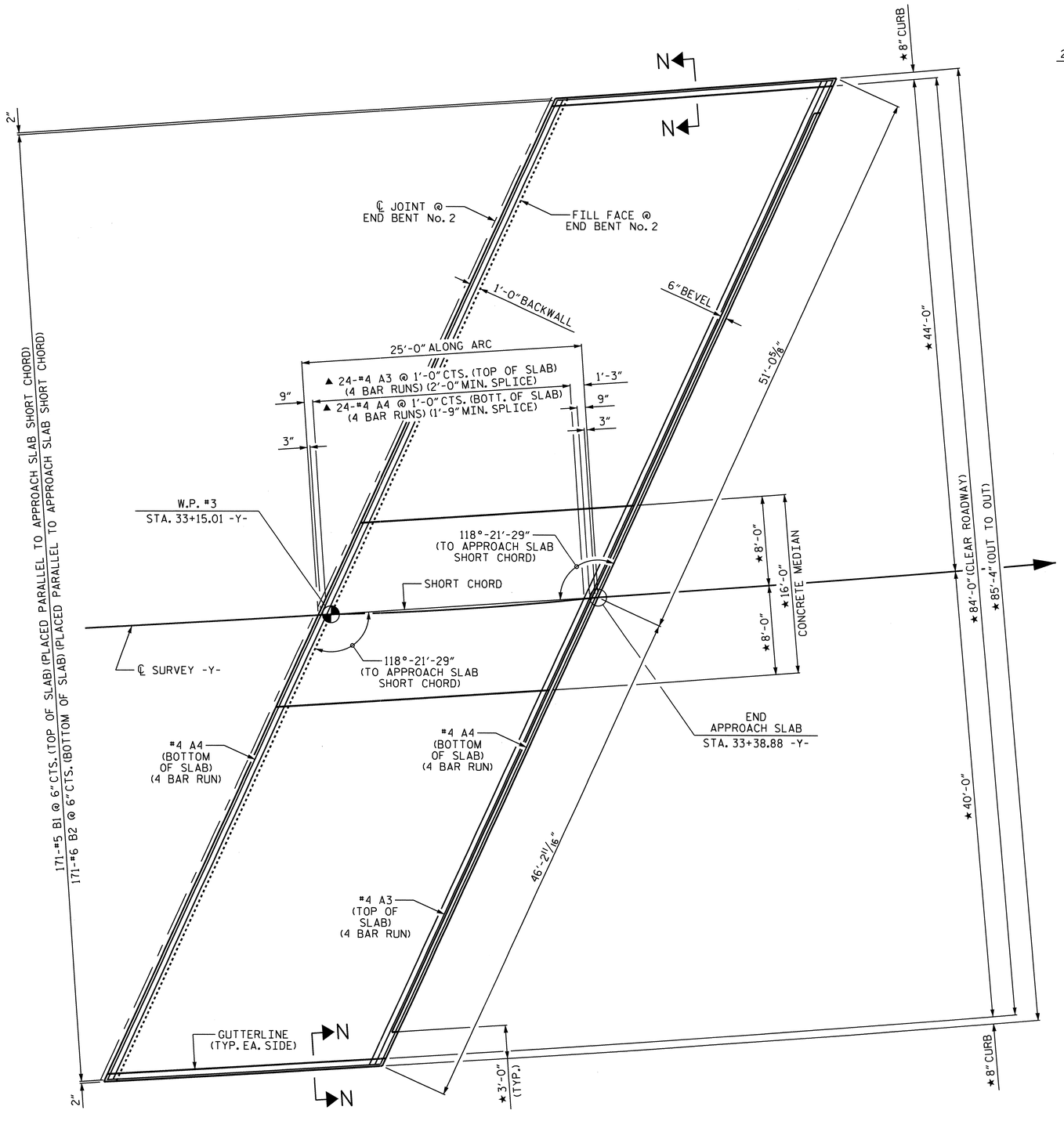

PLAN @ END BENT No. 2

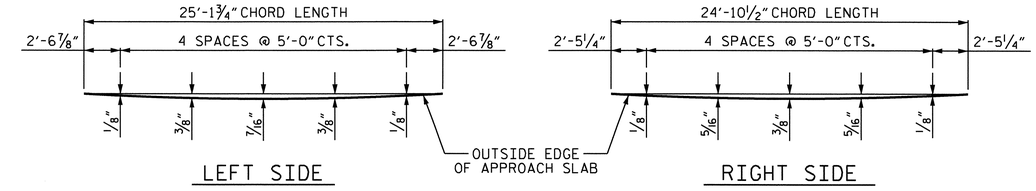

ARC OFFSETS @ END BENT No. 2

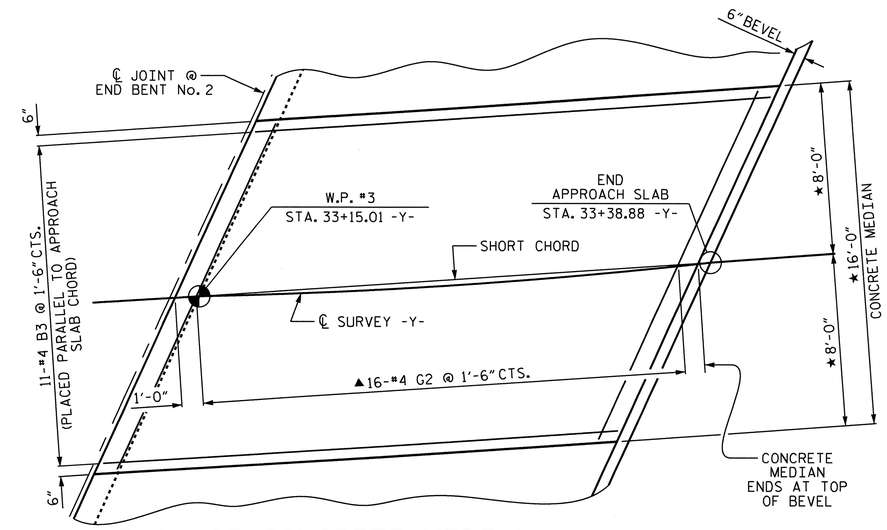

PLAN OF CONCRETE MEDIAN

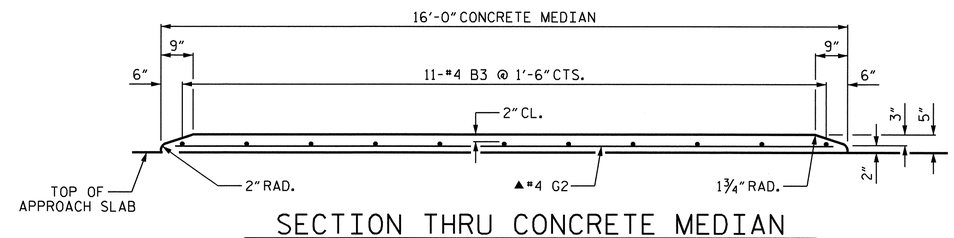

SECTION THRU CONCRETE MEDIAN

NOTES:

★ MEASURED RADIALLY

▲ "A" & G2 BARS ARE SPACED ALONG THE APPROACH SLAB CHORD AND PLACED PARALLEL TO FILL FACE

FOR SECTION N-N, SEE SHEET 3 OF 4

FOR "END OF CONCRETE MEDIAN @ JOINTS" DETAIL, SEE SHEET 4 OF 4

PROJECT NO. R-2417AA

LEE COUNTY

STATION: 47+80.13 -L-

SHEET 2 OF 4

STATE OF NORTH CAROLINA
DEPARTMENT OF TRANSPORTATION
RALEIGH

BRIDGE APPROACH SLAB AND ARC OFFSETS

NORTH CAROLINA PROFESSIONAL SEAL 24690 ENGINEER THEO J. BEACH
11/23/10

REVISIONS							SHEET NO.
NO.	BY:	DATE:	NO.	BY:	DATE:		S-41
1			3				TOTAL SHEETS
2			4				162

DRAWN BY : T. BANKOVICH DATE : 10/09
CHECKED BY : M.L. BROWN DATE : 11/09

19-OCT-2010 10:30
R:\Structures\str1-Y-over-L-\Miscellaneous Drawings\R2417AA_SD_AS.dgn
sbwilliams

STR. #1

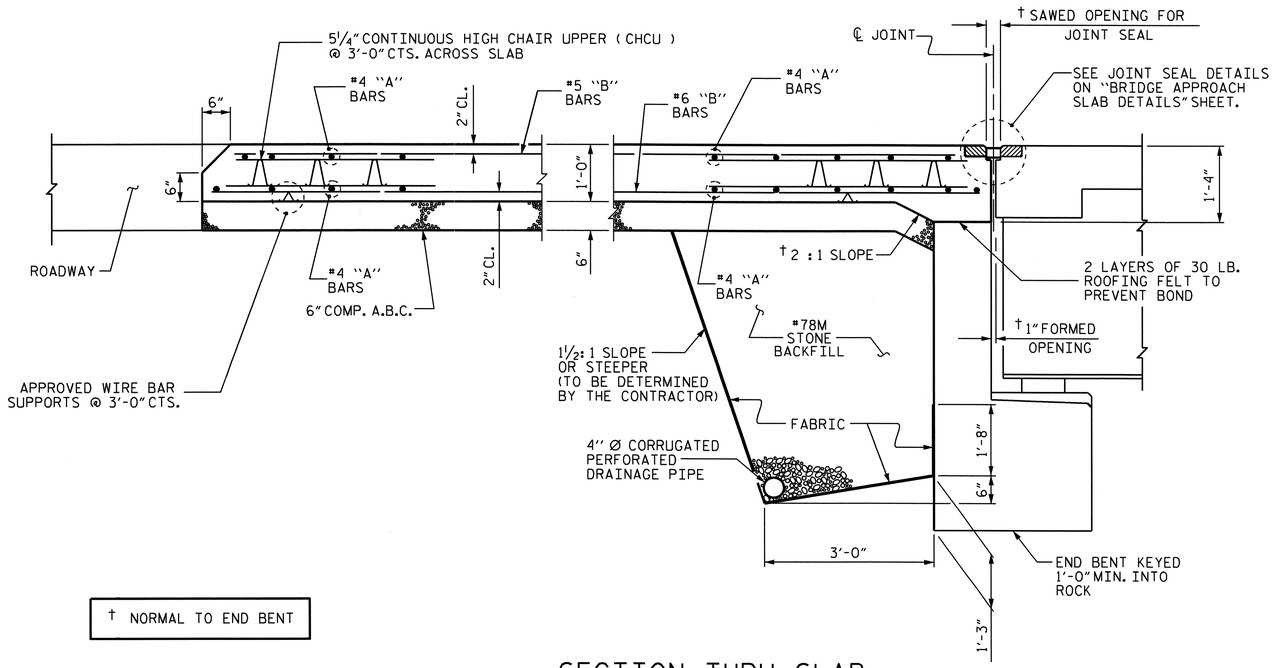

† NORMAL TO END BENT

SECTION THRU SLAB

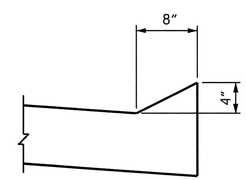

SECTION N-N

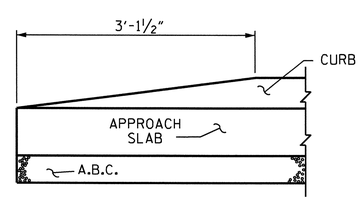

END OF CURB WITHOUT SHOULDER BERM GUTTER

CURB DETAILS

NOTES:

APPROACH SLAB SHALL NOT BE CONSTRUCTED PRIOR TO COMPLETION OF THE BRIDGE DECK.

FOR BRIDGE APPROACH FILL INCLUDING FABRIC, 4" Ø DRAINAGE PIPE AND #78M STONE BACKFILL, SEE ROADWAY PLANS.

FABRIC SHALL BE TYPE 1 ENGINEERING FABRIC IN ACCORDANCE WITH THE STANDARD SPECIFICATIONS SECTION 1056.

#78M STONE BACKFILL (CLASS V SELECT MATERIAL) SHALL BE IN ACCORDANCE WITH STANDARD SPECIFICATIONS SECTION 1016.

#78M STONE BACKFILL IS TO BE CONTINUOUS ALONG FILL FACE OF BACKWALL FROM OUTSIDE EDGE TO OUTSIDE EDGE OF APPROACH SLAB.

FOR THE 4" Ø DRAINAGE PIPE OUTLET(S), SEE ROADWAY STANDARD DRAWINGS.

AREA BETWEEN THE WINGWALL AND APPROACH SLAB SHALL BE GRADED TO DRAIN THE WATER AWAY FROM THE FILL FACE OF THE BRIDGE AND SHALL BE PAVED. SEE ROADWAY PLANS.

THE 6" COMP. A.B.C. SHALL BE FLUSH WITH THE ROADWAY END OF THE APPROACH SLAB AND SHALL EXTEND 1'-0" OUTSIDE EACH EDGE OF THE APPROACH SLAB.

THE CONTRACTOR MAY USE 4" TYPE B-25.0B ASPHALT CONCRETE BASE COURSE IN LIEU OF 6" COMP. A.B.C. IF THIS OPTION IS USED, THE BASE COURSE SHALL BE FLUSH WITH THE ROADWAY END OF THE APPROACH SLAB, AND THE WIDTH SHALL BE THE SAME AS THAT OF THE APPROACH SLAB.

THE CONTRACTOR MAY USE 5" CLASS "A" CONCRETE BASE IN LIEU OF 6" COMP. A.B.C. IF THIS OPTION IS USED, THE CONCRETE BASE SHALL BE FLUSH WITH THE ROADWAY END OF THE APPROACH SLAB, AND THE WIDTH SHALL BE THE SAME AS THAT OF THE APPROACH SLAB. THE CONCRETE SHALL BE FINISHED TO A SMOOTH SURFACE AND A LAYER OF 30 LB ROOFING FELT SHALL BE PLACED BETWEEN THE CONCRETE BASE AND THE APPROACH SLAB TO PREVENT BOND. THE APPROACH SLAB SHALL NOT BE CAST UNTIL THE CONCRETE BASE HAS REACHED AN AGE OF THREE CURING DAYS.

THE JOINT SHALL BE SAWED PRIOR TO THE CASTING OF THE BARRIER RAIL.

FOR EVAZOTE JOINT SEALS, SEE SPECIAL PROVISIONS.

THE NOMINAL UNCOMPRESSED SEAL WIDTH OF THE EVAZOTE JOINT SEAL SHALL BE 2½".

FOR ELASTOMERIC CONCRETE, SEE SPECIAL PROVISIONS.

THE CONCRETE AND REINFORCING STEEL REQUIRED FOR THE CONCRETE MEDIAN ON THE APPROACH SLABS ARE INCLUDED IN THE APPROACH SLAB BILL OF MATERIAL AND INCLUDED IN THE LUMP SUM PRICE BID FOR APPROACH SLABS.

CONCRETE MEDIAN SHALL NOT BE CAST UNTIL EVAZOTE JOINT SEAL IS SAWED.

ALL REINFORCING STEEL IN THE CONCRETE MEDIAN SHALL BE EPOXY COATED.

GROOVED CONTRACTION JOINTS 1/2" IN DEPTH, SHALL BE TOOLED IN ALL EXPOSED FACES OF CONCRETE MEDIAN IN ACCORDANCE WITH ARTICLE 825-10(B) OF THE STANDARD SPECIFICATIONS. THE CONTRACTION JOINTS SHALL BE LOCATED AT A SPACING OF 8 FEET TO 10 FEET BETWEEN EXPANSION JOINTS.

BILL OF MATERIAL

APPROACH SLAB AT EB #1

BAR	NO.	SIZE	TYPE	LENGTH	WEIGHT
* A1	100	#4	STR	24'-3"	1620
A2	104	#4	STR	24'-1"	1673
* B1	171	#5	STR	23'-9"	4236
B2	171	#6	STR	24'-7"	6314
* B3	3	#4	STR	24'-0"	48
* G1	16	#4	STR	3'-5"	37
REINFORCING STEEL					7987 LBS.
* EPOXY COATED REINFORCING STEEL					5941 LBS.
CLASS AA CONCRETE BREAKDOWN					
SLAB & CURBS					80.4 C.Y.
CONCRETE MEDIAN					1.3 C.Y.
				TOTAL =	81.7 C.Y.

APPROACH SLAB AT EB #2

BAR	NO.	SIZE	TYPE	LENGTH	WEIGHT
* A3	100	#4	STR	25'-9"	1720
A4	104	#4	STR	25'-7"	1777
* B1	171	#5	STR	23'-9"	4236
B2	171	#6	STR	24'-7"	6314
* B3	11	#4	STR	24'-0"	176
* G2	16	#4	STR	17'-3"	184
REINFORCING STEEL					8091 LBS.
* EPOXY COATED REINFORCING STEEL					6316 LBS.
CLASS AA CONCRETE BREAKDOWN					
SLAB & CURBS					80.4 C.Y.
CONCRETE MEDIAN					5.9 C.Y.
				TOTAL =	86.3 C.Y.

PROJECT NO. R-2417AA
LEE COUNTY
STATION: 47+80.13 -L-

SHEET 3 OF 4

STATE OF NORTH CAROLINA
DEPARTMENT OF TRANSPORTATION
RALEIGH

STANDARD

BRIDGE APPROACH SLAB FOR FLEXIBLE PAVEMENT

NORTH CAROLINA PROFESSIONAL SEAL 24890 ENGINEER THEO J. BEACH
11/23/10

REVISIONS						SHEET NO.
NO.	BY:	DATE:	NO.	BY:	DATE:	S-42
1			3			TOTAL SHEETS
2			4			162

ASSEMBLED BY : T. BANKOVICH	DATE : 10/09		
CHECKED BY : M.L. BROWN	DATE : 11/09		
DRAWN BY : EEM 3/95	REV. 7/10/01	LES/RDR	
CHECKED BY : VAP 3/95	REV. 5/7/03R	RWW/JTE	
	REV. 5/1/06R	KMM/GM	

19-OCT-2010 10:29
R:\Structures\str1-Y-over-L-\Miscellaneous Drawings\R2417AA_SD_AS.dgn
sbwilliams

STR. #1

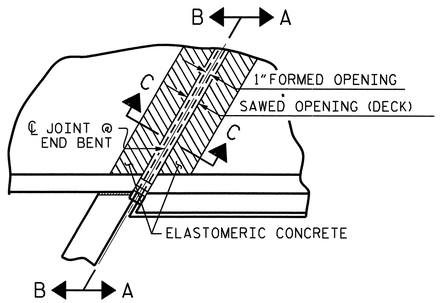

PLAN

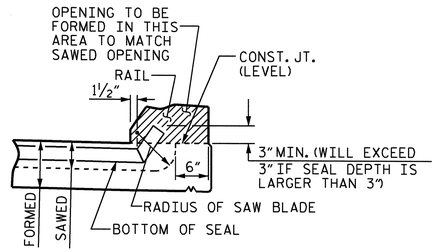

SECTION A-A

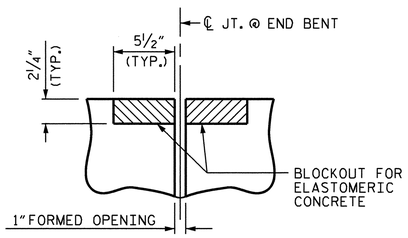

SECTION C-C
EVAZOTE JOINT SEAL
(PRE-SAWED ELASTOMERIC CONCRETE DIMENSIONS)

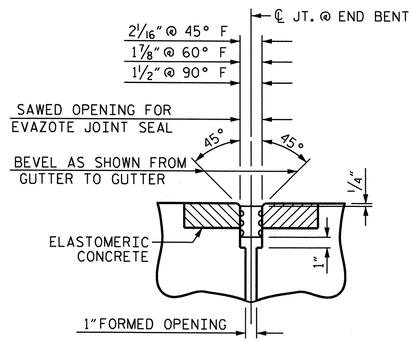

SECTION C-C
EVAZOTE JOINT SEAL
(EXPANSION - TYP. BOTH APP. SLABS)

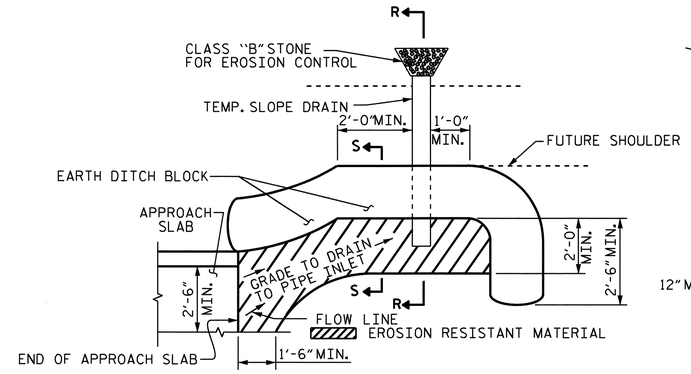

NOTE: IMMEDIATELY AFTER THE CONSTRUCTION OF THE APPROACH SLAB, THE CONTRACTOR SHALL PROVIDE TEMPORARY BERM AND SLOPE DRAIN. CONTRACTOR SHALL GRADE TO PIPE INLET AND PROVIDE EROSION RESISTANT MATERIAL AS SHOWN. THE EROSION RESISTANT MATERIAL SHALL BE EITHER 1) ASPHALT PLANT MIX, TYPE 1 OR TYPE 2, MIN. 2" DEPTH, 2) EROSION CONTROL MAT, OR 3) CONCRETE, AS DIRECTED BY THE ENGINEER. THE SLOPE DRAIN SHALL CONSIST OF A NON-PERFORATED TEMPORARY DRAINAGE PIPE, 12 INCHES IN DIAMETER.

PLAN VIEW

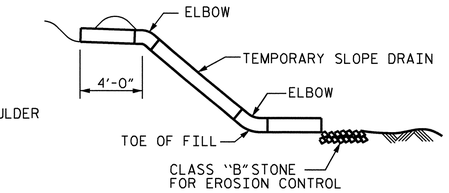

SECTION R-R

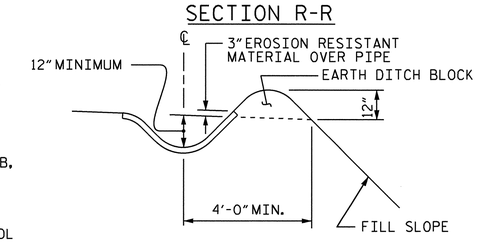

SECTION S-S

TEMPORARY BERM AND SLOPE DRAIN DETAILS

(TO BE USED WHEN SHOULDER BERM GUTTER IS REQUIRED)

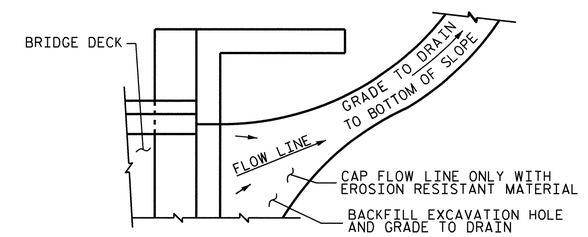

NOTE: IF THE APPROACH SLAB IS NOT CONSTRUCTED IMMEDIATELY AFTER THE BACKFILLING OF THE END BENT EXCAVATION, GRADE TO DRAIN TO THE BOTTOM OF THE SLOPE AND PROVIDE EROSION RESISTANT MATERIAL, SUCH AS FIBERGLASS ROVING OR AS DIRECTED BY THE ENGINEER TO PREVENT SOIL EROSION AND TO PROTECT THE AREA ADJACENT TO THE STRUCTURE. THE CONTRACTOR WILL BE REQUIRED TO REMOVE THESE MATERIALS PRIOR TO CONSTRUCTION OF THE APPROACH SLAB.

TEMPORARY DRAINAGE DETAIL

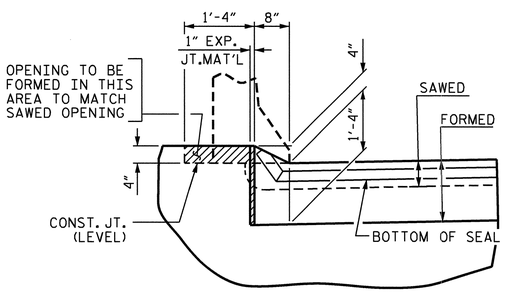

SECTION B-B

ELASTOMERIC CONCRETE	
END BENT NO.	ELASTOMERIC CONCRETE ⬢ (CU. FT.)
1	15.5
2	16.4
TOTAL	31.9

⬢ BASED ON THE MINIMUM BLOCKOUT SHOWN.

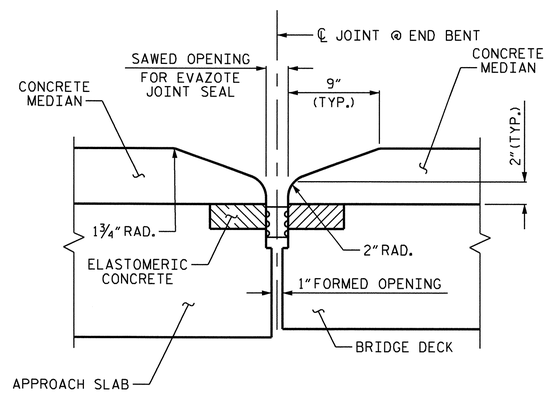

END OF CONCRETE MEDIAN @ JOINTS
END BENT No. 1 SHOWN, END BENT No. 2 SIMILAR

JOINT SEAL DETAILS @ END BENT

EVAZOTE JOINT SEAL TO BE CUT, HEAT WELDED AND TURNED UP PARALLEL TO SLOPED FACE OF THE BARRIER RAIL.

THE JOINT SHALL BE SAWED PRIOR TO THE CASTING OF THE BARRIER RAIL AND CONCRETE MEDIAN.

PROJECT NO. R-2417AA
LEE COUNTY
STATION: 47+80.13 -L-

SHEET 4 OF 4

STATE OF NORTH CAROLINA
DEPARTMENT OF TRANSPORTATION
RALEIGH

STANDARD

BRIDGE APPROACH SLAB DETAILS

NORTH CAROLINA PROFESSIONAL SEAL 18890 ENGINEER THEO J. BEACH
11/23/10

REVISIONS							SHEET NO.
NO.	BY:	DATE:	NO.	BY:	DATE:		S-43
1			3				TOTAL SHEETS
2			4				162

STD. NO. BAS10 STR. #1

ASSEMBLED BY : T. BANKOVICH		DATE : 10/09	
CHECKED BY : M.L. BROWN		DATE : 11/09	
DRAWN BY : FCJ 11/88	REV. 10/17/00	RWW/LES	
CHECKED BY : ARB 11/88	REV. 5/7/03	RWW/JTE	
	REV. 5/1/06R	MAA/KMM	

19-OCT-2010 10:28
R:\Structures\str1-Y-over-L-\Miscellaneous Drawings\R2417AA_SD_AS.dgn
sbwilliams

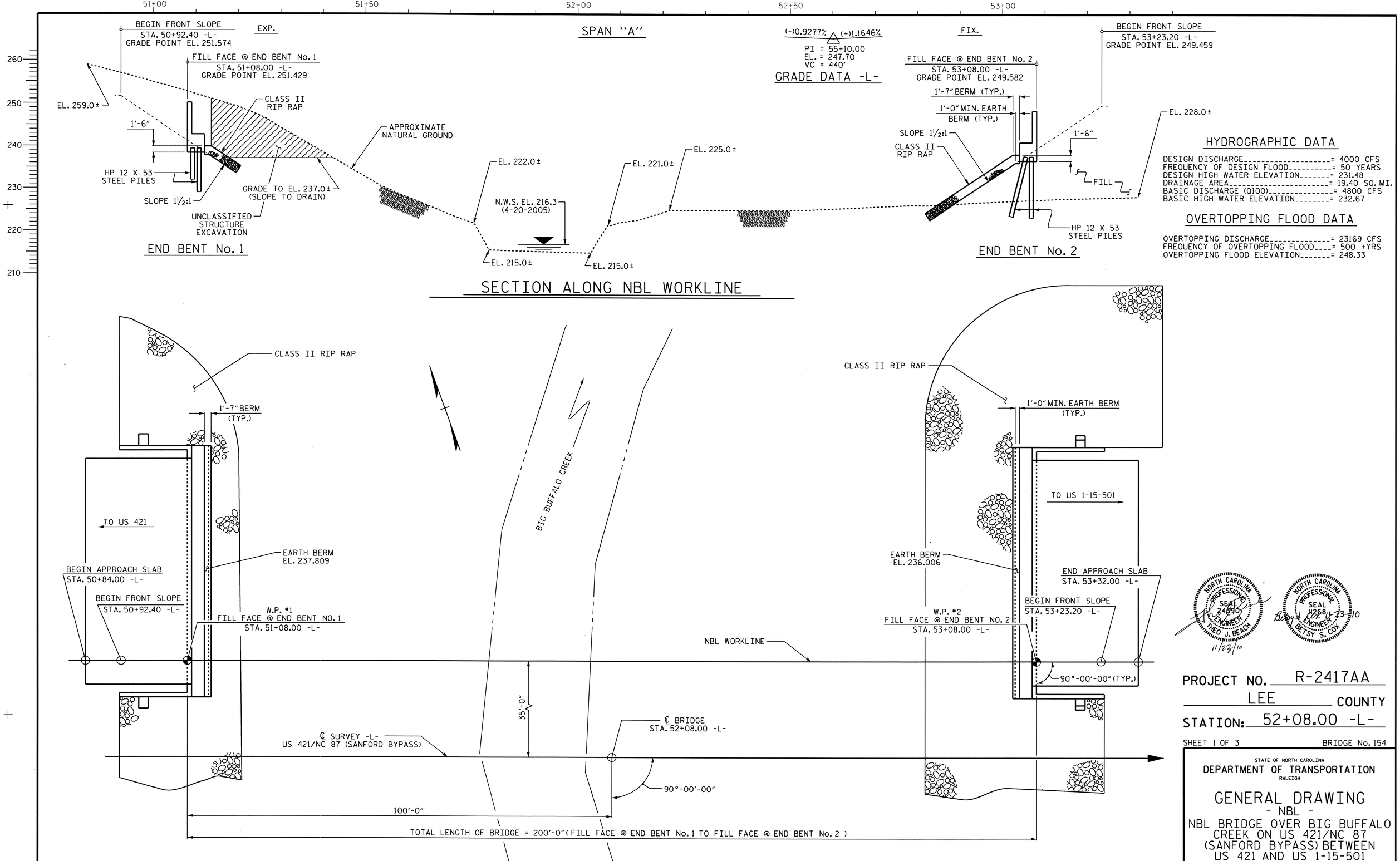

HYDROGRAPHIC DATA

DESIGN DISCHARGE = 4000 CFS
FREQUENCY OF DESIGN FLOOD = 50 YEARS
DESIGN HIGH WATER ELEVATION = 231.48
DRAINAGE AREA = 19.40 SQ. MI.
BASIC DISCHARGE (Q100) = 4800 CFS
BASIC HIGH WATER ELEVATION = 232.67

OVERTOPPING FLOOD DATA

OVERTOPPING DISCHARGE = 23169 CFS
FREQUENCY OF OVERTOPPING FLOOD = 500 +YRS
OVERTOPPING FLOOD ELEVATION = 248.33

NORTH CAROLINA PROFESSIONAL SEAL 24590 ENGINEER THEO J. BEACH 11/23/10

NORTH CAROLINA PROFESSIONAL SEAL 11268 ENGINEER BETSY S. COX 11-23-10

PROJECT NO. R-2417AA
LEE COUNTY
STATION: 52+08.00 -L-

SHEET 1 OF 3 BRIDGE No. 154

STATE OF NORTH CAROLINA
DEPARTMENT OF TRANSPORTATION
RALEIGH

GENERAL DRAWING
- NBL -
NBL BRIDGE OVER BIG BUFFALO CREEK ON US 421/NC 87 (SANFORD BYPASS) BETWEEN US 421 AND US 1-15-501

REVISIONS						SHEET NO.
NO.	BY:	DATE:	NO.	BY:	DATE:	S-44
1			3			TOTAL SHEETS
2			4			162

DRAWN BY : M. L. BROWN DATE : 04-10
CHECKED BY : T. J. BEACH DATE : 04-10

23-NOV-2010 15:25
R:\Structures\str2-L-overBuffaloCk(LtLane)\Gen_draw\R-2417AA_sd_GD.dgn
tbeach

STR. #2

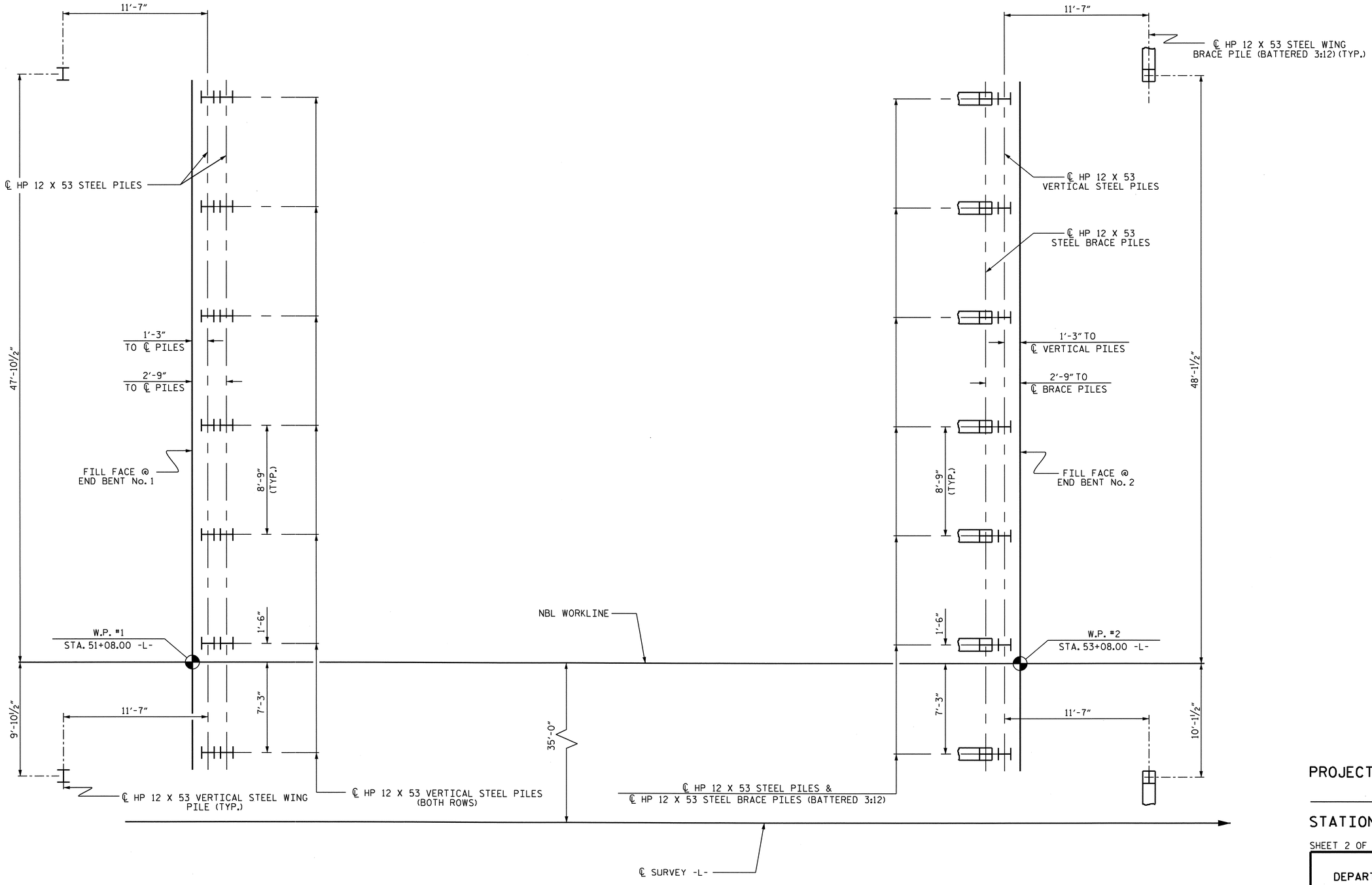

END BENT No. 1

END BENT No. 2

FOUNDATION LAYOUT

(DIMENSIONS LOCATING PILES ARE SHOWN TO THE PILES CENTERLINE AT THE BOTTOM OF CAP)
(DIMENSIONS LOCATING END BENT WING PILES ARE SHOWN TO THE PILE CENTERLINE AT THE BOTTOM OF THE WING ELEVATION)

PROJECT NO. R-2417AA
LEE COUNTY
STATION: 52+08.00 -L-

SHEET 2 OF 3

STATE OF NORTH CAROLINA
DEPARTMENT OF TRANSPORTATION
RALEIGH

GENERAL DRAWING
- NBL -
NBL BRIDGE OVER BIG BUFFALO CREEK ON US 421/NC 87 (SANFORD BYPASS) BETWEEN US 421 AND US 1-15-501

NORTH CAROLINA PROFESSIONAL SEAL 24390 ENGINEER THEO J. BEACH
11/23/10

REVISIONS						SHEET NO.
NO.	BY:	DATE:	NO.	BY:	DATE:	S-45
1			3			TOTAL SHEETS
2			4			162

DRAWN BY : M. L. BROWN DATE : 04-10
CHECKED BY : T. J. BEACH DATE : 04-10

19-OCT-2010 10:12
R:\Structures\str2-L-overBuffaloCk(LtLane)\Gen_draw\R-2417AA_sd_GD.dgn
sbwilliams

STR. #2

BENCHMARK: BM #2 RR SPIKE IN BASE OF 15" PINE TREE, 251.37' RIGHT OF STA. 41+75.05 -L-, ELEV. 266.96

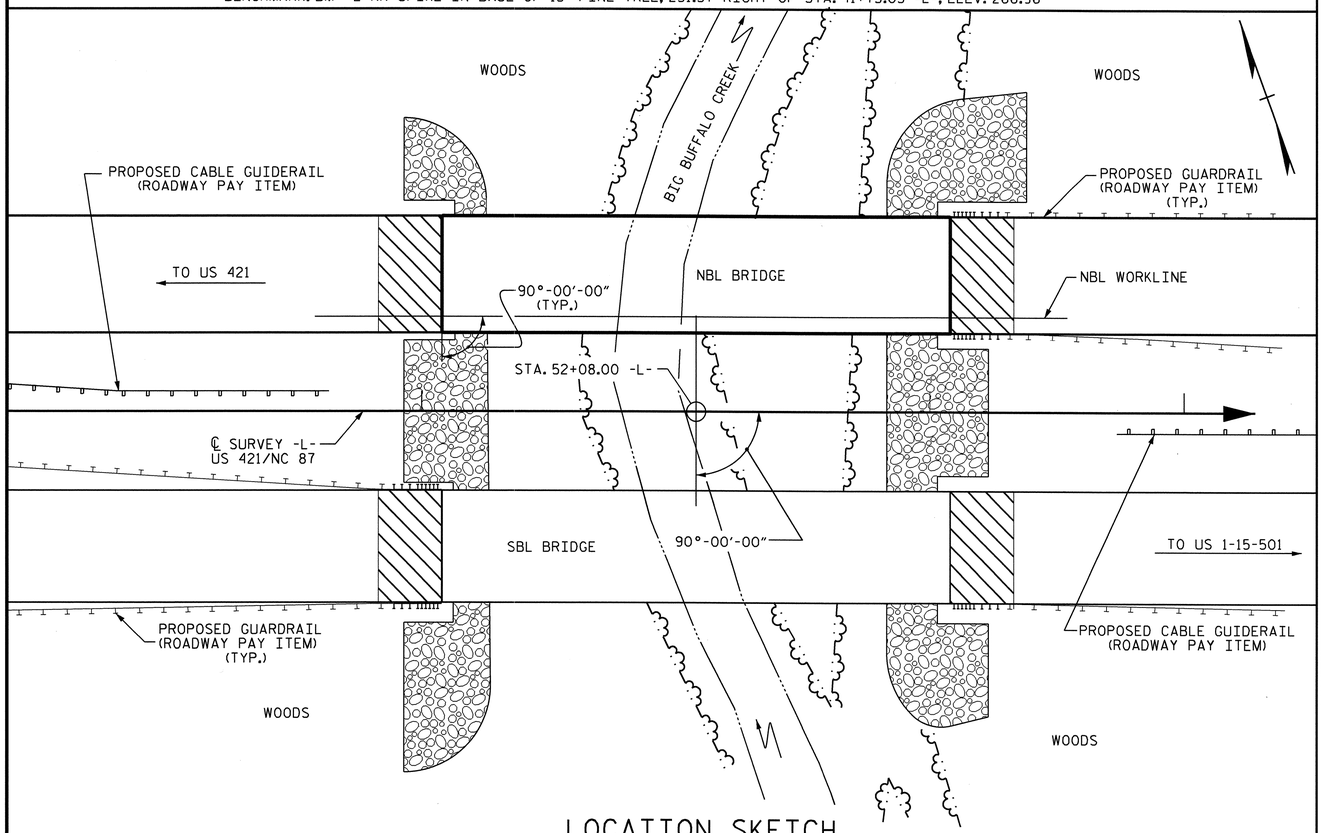

LOCATION SKETCH

NOTE: FOR UTILITY INFORMATION, SEE UTILITY PLANS AND SPECIAL PROVISIONS.

NOTES:

ASSUMED LIVE LOAD = HS 20 OR ALTERNATE LOADING, EXCEPT THAT THE STEEL PLATE GIRDERS HAVE BEEN DESIGNED FOR HS 25.

THIS BRIDGE HAS BEEN DESIGNED BY THE STRENGTH DESIGN METHOD AS SPECIFIED IN AASHTO STANDARD SPECIFICATIONS.

THIS BRIDGE HAS BEEN DESIGNED IN ACCORDANCE WITH THE REQUIREMENTS OF THE AASHTO STANDARD SPECIFICATIONS FOR SEISMIC DESIGN OF HIGHWAY BRIDGES FOR SEISMIC PERFORMANCE CATEGORY A.

FOR OTHER DESIGN DATA AND GENERAL NOTES, SEE SHEET SN.

FOR EROSION CONTROL MEASURES, SEE EROSION CONTROL PLANS.

ALL STRUCTURAL STEEL SHALL BE AASHTO M270 GRADE 50W AND PAINTED IN ACCORDANCE WITH SYSTEM 4 OF ARTICLE 442-7 OF THE STANDARD SPECIFICATIONS UNLESS OTHERWISE NOTED ON THE PLANS.

REMOVABLE FORMS MAY BE USED IN LIEU OF METAL STAY-IN-PLACE FORMS IN ACCORDANCE WITH ARTICLE 420-3 OF THE STANDARD SPECIFICATIONS.

THE MATERIAL SHOWN IN THE CROSS-HATCHED AREA SHALL BE EXCAVATED FOR A DISTANCE OF 55 FT. LEFT AND 35 FT. RIGHT OF THE NBL WORKLINE AS DIRECTED BY THE ENGINEER. THIS WORK WILL BE PAID FOR AT THE CONTRACT LUMP SUM PRICE FOR UNCLASSIFIED STRUCTURE EXCAVATION. SEE SECTION 412 OF THE STANDARD SPECIFICATIONS.

THIS STRUCTURE HAS BEEN DESIGNED IN ACCORDANCE WITH HEC 18, "EVALUATING SCOUR AT BRIDGES", MAY, 2001.

THE CONTRACTOR SHALL PROVIDE INDEPENDENT ASSURANCE SAMPLES OF REINFORCING STEEL AS FOLLOWS: FOR PROJECTS REQUIRING UP TO 400 TONS OF REINFORCING STEEL, ONE 30 INCH SAMPLE OF EACH SIZE BAR USED, AND FOR PROJECTS REQUIRING OVER 400 TONS OF REINFORCING STEEL, TWO 30 INCH SAMPLES OF EACH SIZE BAR USED. THE BARS FROM WHICH THE SAMPLES ARE TAKEN MUST THEN BE SPLICED WITH REPLACEMENT BARS OF THE SIZE AND LENGTH OF THE SAMPLE, PLUS A MINIMUM LAP SPLICE OF THIRTY BAR DIAMETERS.

THE CONTRACTOR'S ATTENTION IS CALLED TO THE FACT THAT A 36" GRAVITY SEWER LINE CROSSES UNDER THE BRIDGE AT APPROXIMATELY STA. 52+74.00-L-. EXTREME CAUTION IS TO BE TAKEN TO NOT DISTURB THE SEWER LINE DURING CONSTRUCTION INCLUDING, BUT NOT LIMITED TO PLACEMENT OF TEMPORARY BENTS AND PLACING OF RIP RAP. FOR LOCATION OF SEWER LINE, SEE UTILITY PLANS.

FOR GROUT FOR STRUCTURES, SEE SPECIAL PROVISIONS.

FOR DIRECT TENSION INDICATORS, SEE SPECIAL PROVISIONS.

FOR CURING CONCRETE, SEE SPECIAL PROVISIONS.

FOR PLACING LOAD ON STRUCTURE MEMBERS, SEE SPECIAL PROVISIONS.

FOR SHIPPING STEEL STRUCTURAL MEMBERS, SEE SPECIAL PROVISIONS.

FOR HIGH STRENGTH BOLTS, SEE SPECIAL PROVISIONS.

NEEDLE BEAMS WILL NOT BE ALLOWED UNLESS OTHERWISE CALLED FOR ON THE PLANS OR APPROVED BY THE ENGINEER.

FOR SUBMITTAL OF WORKING DRAWINGS, SEE SPECIAL PROVISIONS.

FOR FALSEWORK AND FORMWORK, SEE SPECIAL PROVISIONS.

FOR CRANE SAFETY, SEE SPECIAL PROVISIONS.

FOR ADHESIVELY ANCHORED ANCHORED BOLTS OR DOWELS, SEE SPECIAL PROVISIONS.

FOR PILES, SEE SPECIAL PROVISIONS.

DRIVE PILES AT END BENT No. 1 TO A REQUIRED BEARING CAPACITY OF 120 TONS PER PILE. THE REQUIRED BEARING IS EQUAL TO THE ALLOWABLE BEARING CAPACITY WITH A MINIMUM FACTOR OF SAFETY OF TWO.

THE ALLOWABLE BEARING CAPACITY FOR PILES AT END BENT No. 1 IS 60 TONS PER PILE.

PILE EXCAVATION IS REQUIRED TO INSTALL PILES AT END BENT No. 1. EXCAVATE HOLES AT PILE LOCATIONS TO ELEVATION 233.0 FT. FOR PILE EXCAVATION, SEE SPECIAL PROVISIONS.

THE EXCAVATED HOLES SHOULD BE FILLED WITH CONCRETE THE VERY DAY THE HOLES ARE EXCAVATED.

DRIVE PILES AT END BENT No. 2 TO A REQUIRED BEARING CAPACITY OF 120 TONS PER PILE. THE REQUIRED BEARING IS EQUAL TO THE ALLOWABLE BEARING CAPACITY WITH A MINIMUM FACTOR OF SAFETY OF TWO.

THE ALLOWABLE BEARING CAPACITY FOR PILES AT END BENT No. 2 IS 60 TONS PER PILE.

FOR BLASTING ADJACENT TO HIGHWAY STRUCTURES, SEE ROCK BLASTING PROVISION, IF APPLICABLE, OR ARTICLE 410-11 OF THE STANDARD SPECIFICATIONS.

TOTAL BILL OF MATERIAL

NBL	PILE EXCAVATION NOT IN SOIL	UNCLASSIFIED STRUCTURE EXCAVATION	REINFORCED CONCRETE DECK SLAB	GROOVING BRIDGE FLOORS	CLASS A CONCRETE	BRIDGE APPROACH SLABS	REINFORCING STEEL	STRUCTURAL STEEL	HP 12 X 53 STEEL PILES		CONCRETE BARRIER RAIL	RIP RAP CLASS II (2'-0" THICK)	FILTER FABRIC FOR DRAINAGE	ELASTOMERIC BEARINGS	EVAZOTE JOINT SEALS
	LIN. FT.	LUMP SUM	SQ. FT.	SQ. FT.	CU. YDS.	LUMP SUM	LBS.	APPROX. LBS.	No.	LIN. FT.	LIN. FT.	TONS	SQ. YDS.	LUMP SUM	LUMP SUM
SUPERSTRUCTURE			9,746	10,538		LUMP SUM		584,700			395.77			LUMP SUM	LUMP SUM
END BENT No. 1	80.0				66.3		9,361		16	160		205	228		
END BENT No. 2					65.9		9,360		16	320		515	572		
TOTAL	80.0	LUMP SUM	9,746	10,538	132.2	LUMP SUM	18,721	584,700	32	480	395.77	720	800	LUMP SUM	LUMP SUM

PROJECT NO. R-2417AA
LEE COUNTY
STATION: 52+08.00 -L-

SHEET 3 OF 3

STATE OF NORTH CAROLINA
DEPARTMENT OF TRANSPORTATION
RALEIGH

GENERAL DRAWING
- NBL -
NBL BRIDGE OVER BIG BUFFALO CREEK ON US 421/NC 87 (SANFORD BYPASS) BETWEEN US 421 AND US 1-15-501

NORTH CAROLINA PROFESSIONAL SEAL 24390 ENGINEER THEO J. BEACH
11/23/10

REVISIONS								SHEET NO.
NO.	BY:	DATE:	NO.	BY:	DATE:			S-46
1			3					TOTAL SHEETS
2			4					162

DRAWN BY : M. L. BROWN DATE : 04-10
CHECKED BY : T. J. BEACH DATE : 04-10

24-NOV-2010 06:36
R:\Structures\str2-L-overBuffaloCk(LtLane)\Gen_draw\R-2417AA_sd_GD.dgn
tbeach

STR.#2

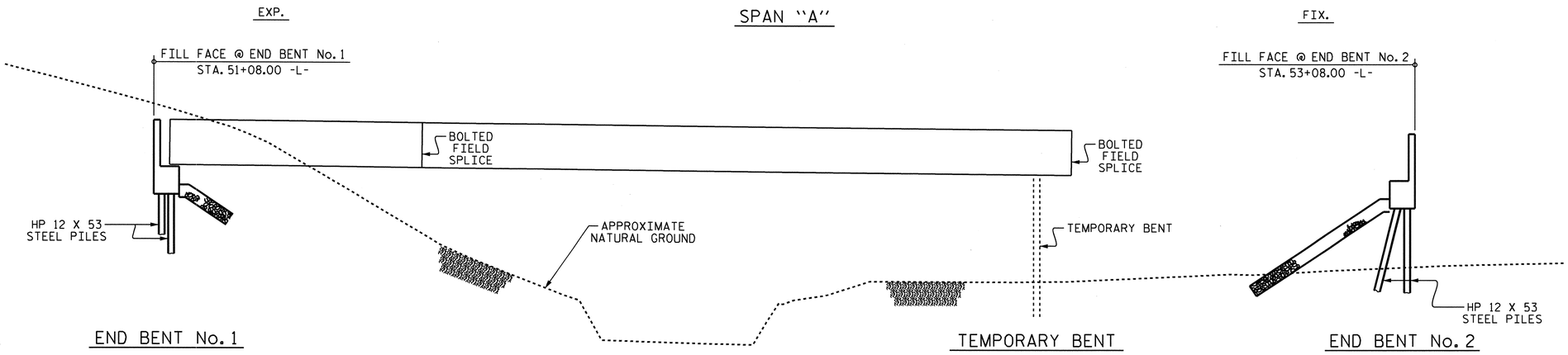

GIRDER ERECTION

NOTES:

ERECT A MINIMUM OF TWO GIRDERS WITH ALL DIAPHRAGMS/CROSSFRAMES BETWEEN THE GIRDERS IN PLACE AND THE BOLTS TIGHTENED PRIOR TO RELEASING THE GIRDERS.

ERECT EACH SUBSEQUENT GIRDER WITH DIAPHRAGMS/CROSSFRAMES CONNECTING TO THE ADJACENT PREVIOUSLY ERECTED GIRDER AND TIGHTEN ALL BOLTS BEFORE RELEASING THE GIRDER.

THE STRUCTURAL STEEL SHALL BE SUPPORTED DURING ERECTION IN ITS CAMBERED POSITION.

THE TEMPORARY BENT SHALL REMAIN IN PLACE UNTIL ALL DIAPHRAGMS/CROSSFRAMES ARE IN PLACE AND ALL HIGH STRENGTH BOLTS ARE TIGHTENED.

THE TEMPORARY BENT SHALL PROVIDE BEARING AT A CONNECTOR PLATE LOCATION. WHEN CONNECTOR PLATES ARE USED AS TEMPORARY BEARING STIFFENERS, DIAPHRAGMS MUST BE ATTACHED.

THE CONTRACTOR'S ERECTION PLANS SHALL INCLUDE A METHOD OF TEMPORARY BENT REMOVAL THAT WILL UNIFORMLY TRANSFER THE STRUCTURAL WEIGHT TO THE DIAPHRAGMS/CROSSFRAMES AND THE GIRDERS WILL REMAIN IN THE CAMBERED POSITIONS.

PLANS FOR TEMPORARY BENT ERECTION AND REMOVAL SHALL BE SUBMITTED TO THE ENGINEER FOR REVIEW.

THE CONTRACTOR IS RESPONSIBLE FOR DESIGNING THE TEMPORARY BENTS. THE DESIGNS SHALL BE COMPLETED BY A PROFESSIONAL ENGINEER REGISTERED IN THE STATE OF NORTH CAROLINA. THE CONTRACTOR SHALL SUBMIT SIGNED AND SEALED WORKING DRAWINGS AND CALCULATIONS FOR APPROVAL BY THE ENGINEER.

DURING THE GIRDER ERECTION PROCEDURE, THE CONTRACTOR IS RESPONSIBLE FOR PROVIDING TEMPORARY LATERAL BRACING AND OTHER MEANS OF SUPPORT, AS REQUIRED TO ENSURE STABILITY OF THE GIRDERS, AVOID UPLIFT OF THE GIRDERS AT THE TEMPORARY BENTS AND TO ENSURE PLUMBNESS OF THE GIRDERS IN THE FINAL CONDITION.

NO SEPARATE MEASUREMENT OR PAYMENT WILL BE MADE FOR PROVIDING THE TEMPORARY BENT. THE COST FOR ALL MATERIALS, EQUIPMENT, TOOLS, LABOR AND ANY INCIDENTALS NECESSARY TO PROVIDE THE TEMPORARY BENT SHALL BE CONSIDERED INCIDENTAL TO THE LUMP SUM BID PRICE FOR STRUCTURAL STEEL.

THE CONTRACTOR MAY SUBMIT AN ALTERNATE ERECTION METHOD TO THE ENGINEER FOR REVIEW AND APPROVAL.

PROJECT NO. R-2417AA
LEE COUNTY
STATION: 52+08.00 -L-

NORTH CAROLINA PROFESSIONAL SEAL 24390 ENGINEER THEO J. BEACH
11/23/10

STATE OF NORTH CAROLINA
DEPARTMENT OF TRANSPORTATION
RALEIGH

GIRDER ERECTION DETAILS
(NBL)

REVISIONS						SHEET NO.
NO.	BY:	DATE:	NO.	BY:	DATE:	S-47
1			3			TOTAL SHEETS
2			4			162

DRAWN BY : T. BANKOVICH DATE : 10-2010
CHECKED BY : T.J. BEACH DATE : 10-2010

23-NOV-2010 15:26
R:\Structures\str2-L-overBuffaloCk(LtLane)\Gen_draw\R-2417AA_str2_ERECT.dgn
tbeach

STR. #2

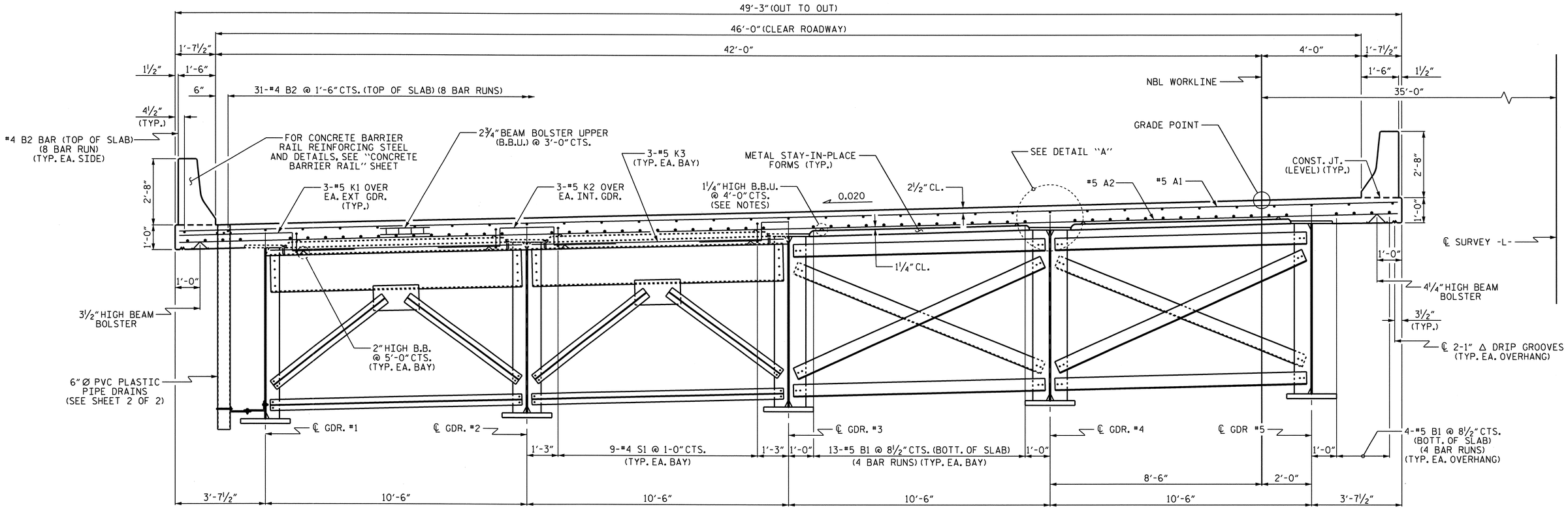

HALF TYPICAL SECTION

(SHOWING END BENT DIAPHRAGMS)

HALF TYPICAL SECTION

(SHOWING INTERMEDIATE DIAPHRAGMS)

NOTES:

PROVIDE 1¼" HIGH BEAM BOLSTERS UPPER AT 4'-0" CTS. ATOP THE METAL STAY-IN-PLACE FORMS TO SUPPORT THE BOTTOM MAT OF "A" BARS. WHEN USING REMOVABLE FORMS, PROVIDE CONTINUOUS HIGH CHAIRS FOR METAL DECK (C.H.C.M.) @ 4'-0" CTS. WITH A HEIGHT TO SUPPORT THE BOTTOM MAT OF "A" BARS A CLEAR DISTANCE OF 2½" ABOVE THE TOP OF THE REMOVABLE FORM.

PREVIOUSLY CAST CONCRETE IN THE SPAN SHALL HAVE ATTAINED A MINIMUM COMPRESSIVE STRENGTH OF 3,000 PSI BEFORE ADDITIONAL CONCRETE IS CAST IN THE SPAN.

DIRECTION OF CASTING DECK CONCRETE SHALL BE FROM THE FIXED BEARING END TOWARDS THE EXPANSION BEARING END OF THE SPAN.

BARRIER RAIL SHALL NOT BE CAST UNTIL ALL SLAB CONCRETE HAS BEEN CAST AND HAS REACHED A MINIMUM COMPRESSIVE STRENGTH OF 3,000 PSI.

THE CONTRACTOR MAY, WHEN NECESSARY, PROPOSE A SCHEME FOR AVOIDING INTERFERENCE BETWEEN METAL STAY-IN-PLACE FORM SUPPORTS OR FORMS AND GIRDER STIFFENERS OR CONNECTOR PLATES. THE PROPOSAL SHALL BE INDICATED, AS APPROPRIATE, ON EITHER THE STEEL WORKING DRAWINGS OR THE METAL STAY-IN-PLACE FORM WORKING DRAWINGS.

ALL REINFORCING STEEL IN BARRIER RAILS SHALL BE EPOXY COATED.

6" Ø PVC PLASTIC PIPE DRAINS ARE REQUIRED, FOR LOCATIONS AND DETAILS SEE SHEET 2 OF 2.

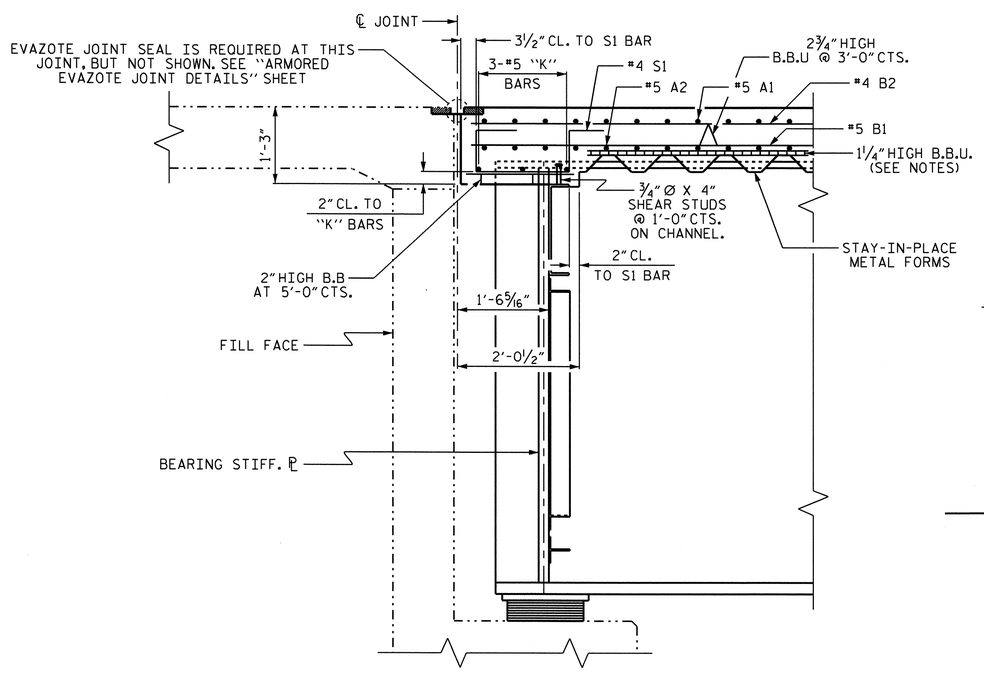

SECTION A-A

END BENT No. 1 SHOWN, END BENT No. 2 SIMILAR

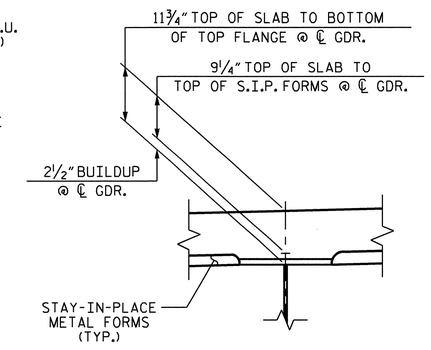

DETAIL "A"

PROJECT NO. R-2417AA

LEE COUNTY

STATION: 52+08.00 -L-

SHEET 1 OF 2

STATE OF NORTH CAROLINA
DEPARTMENT OF TRANSPORTATION
RALEIGH

SUPERSTRUCTURE

TYPICAL SECTION
(NBL)

NORTH CAROLINA PROFESSIONAL SEAL 24390 ENGINEER THEO J. BEACH
11/23/10

REVISIONS						SHEET NO.
NO.	BY:	DATE:	NO.	BY:	DATE:	S-48
1			3			TOTAL SHEETS
2			4			162

DRAWN BY : T. BANKOVICH DATE : 1-2009
CHECKED BY : S.B. WILLIAMS DATE : 2-2009

23-NOV-2010 15:26
R:\Structures\str2-L-overBuffaloCk(LtLane)\Super_Draw\R-2417AA_str2_TS.dgn
tbeach

STR. #2

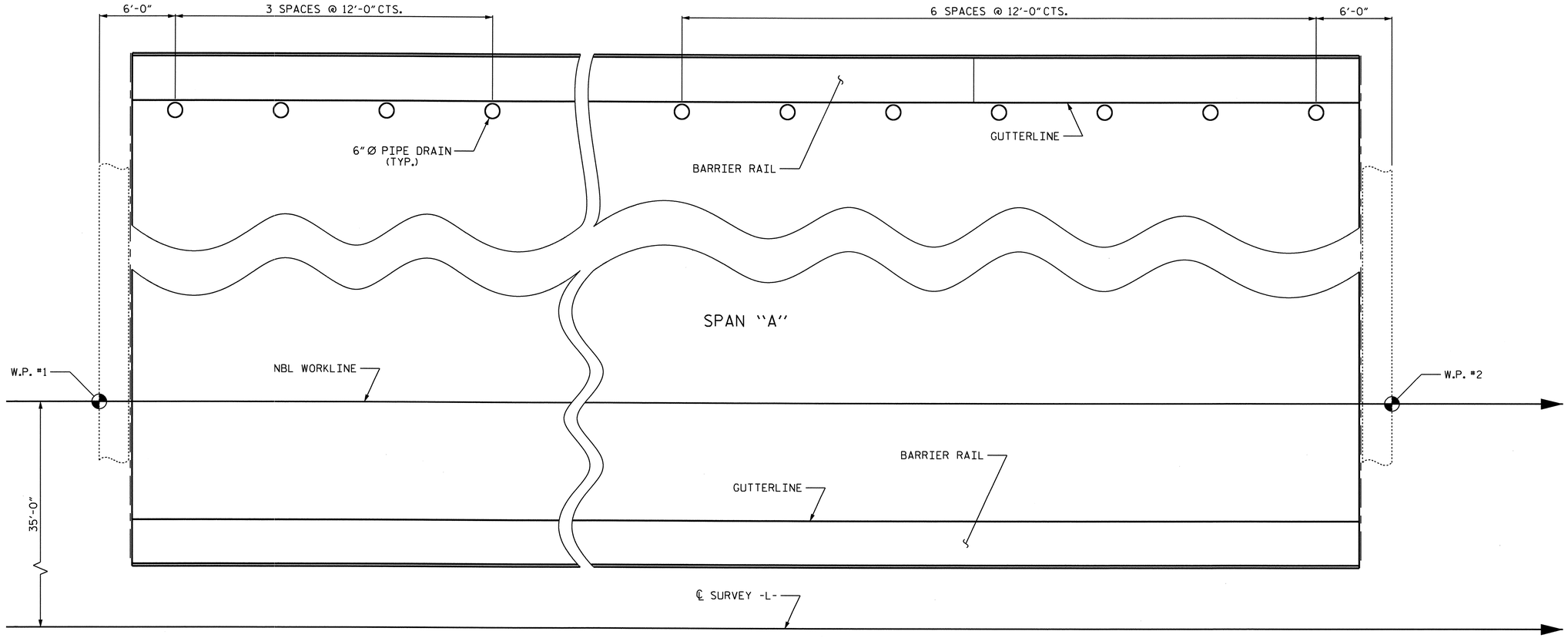

PIPE DRAIN LOCATION DETAIL

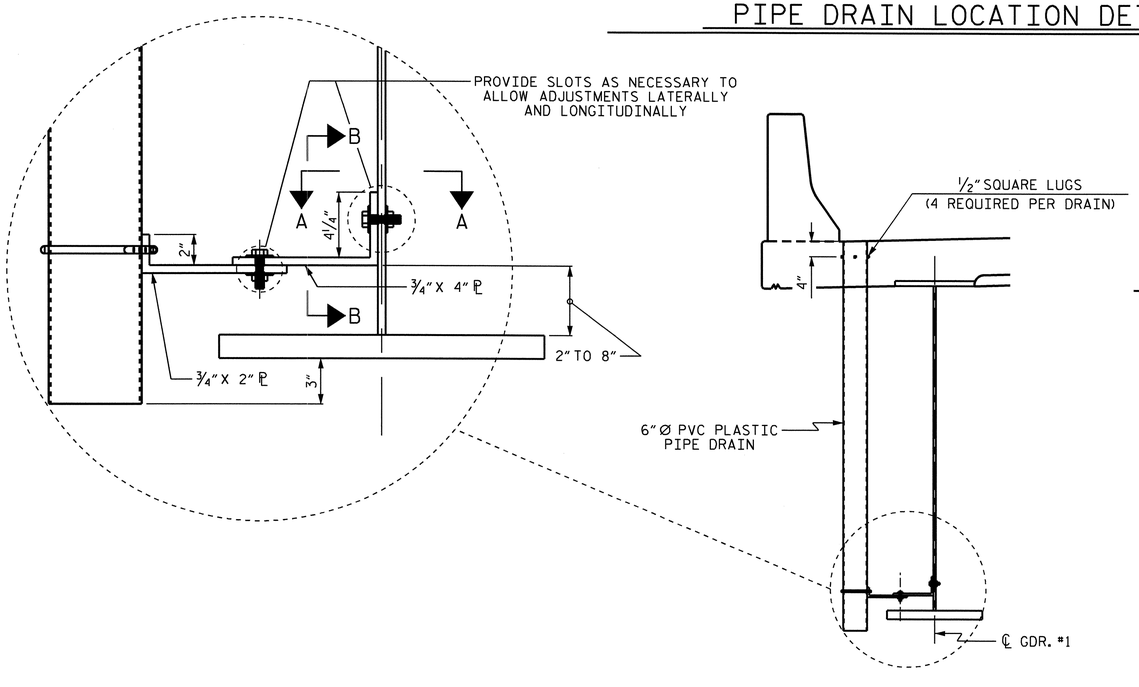

DRAIN CONNECTOR DETAIL

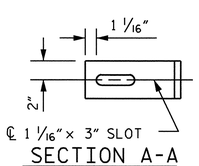

SECTION A-A

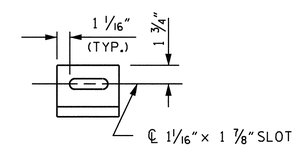

SECTION B-B

DRAIN NOTES:

COUPLING IN DRAIN PIPE WILL BE PERMITTED AS APPROVED BY THE ENGINEER.

TOP OF FLOOR DRAIN TO BE SET ⅜" BELOW SURFACE OF SLAB.

4 -½" SQUARE LUGS TO BE GLUED TO THE PVC PLASTIC PIPE AT EQUAL SPACES AROUND THE PIPE DRAIN APPROXIMATELY 4" FROM THE TOP OF THE PIPE.

BOLT SIZE TO BE SAME AS DIAPHRAGM AND CROSSFRAME CONNECTIONS. STAINLESS STEEL WORM DRIVE HOSE CLAMP SHALL BE COMMERCIAL QUALITY.

THE 6" Ø PVC PLASTIC PIPE AND FITTINGS SHALL BE SCHEDULE 40 AND CONFORM TO ASTM D1785.

PROJECT NO. R-2417AA

LEE COUNTY

STATION: 52+08.00 -L-

SHEET 2 OF 2

STATE OF NORTH CAROLINA
DEPARTMENT OF TRANSPORTATION
RALEIGH

SUPERSTRUCTURE

TYPICAL SECTION
(NBL)

NORTH CAROLINA PROFESSIONAL SEAL 26390 ENGINEER THEO J. BEACH
11/23/10

REVISIONS						SHEET NO.
NO.	BY:	DATE:	NO.	BY:	DATE:	S-49
1			3			TOTAL SHEETS
2			4			162

DRAWN BY : T. BANKOVICH DATE : 1-2009
CHECKED BY : S.B. WILLIAMS DATE : 2-2009

19-OCT-2010 10:07
R:\Structures\str2-L-overBuffaloCk(LtLane)\Super_Draw\R-2417AA_str2_TS.dgn
sbwilliams

STR. #2

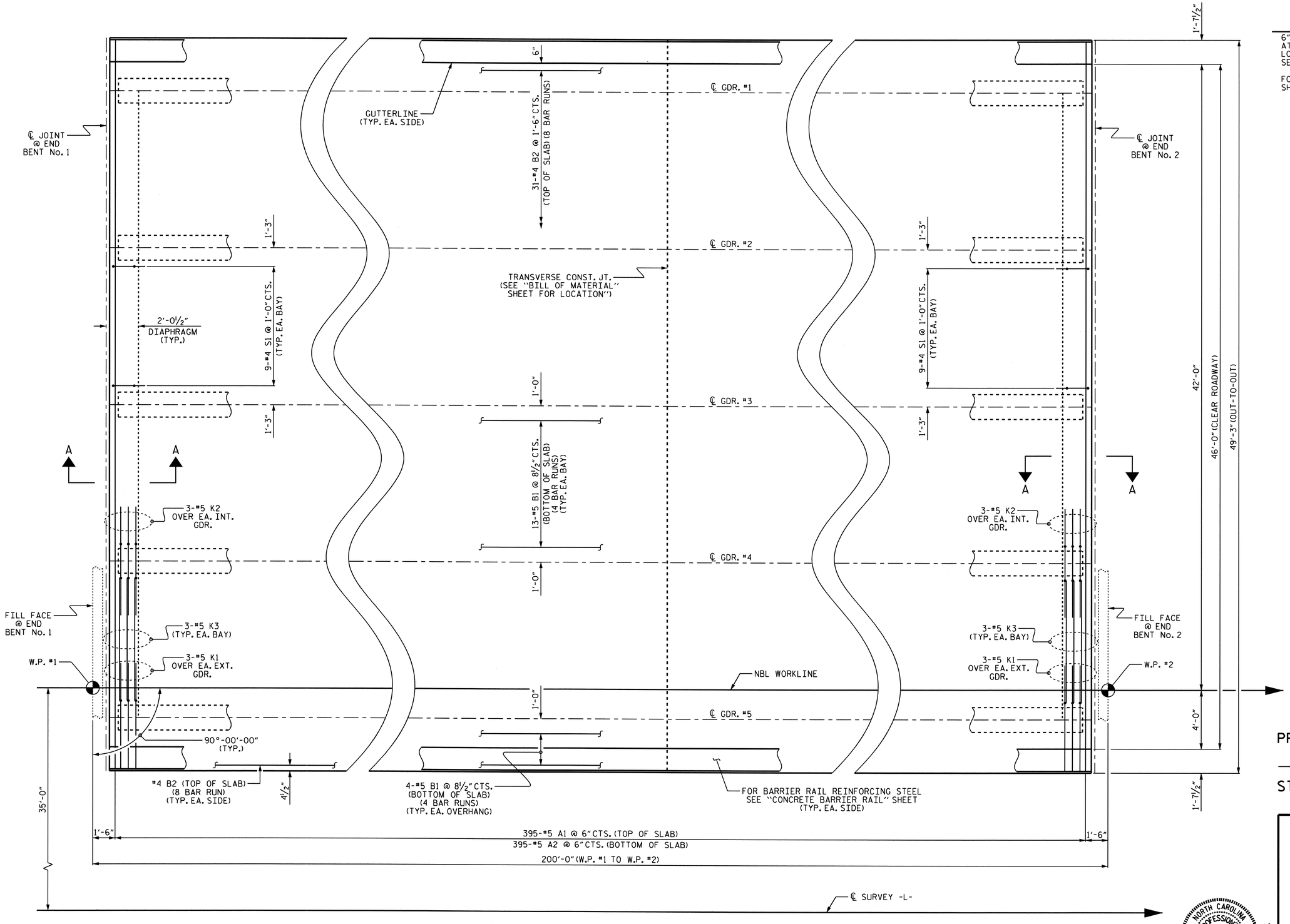

PLAN OF SPAN

NOTES:

6" Ø PVC PLASTIC PIPE DRAINS ARE REQUIRED AT LEFT GUTTERLINE BUT ARE NOT SHOWN. FOR LOCATION AND DETAILS OF PIPE DRAINS SEE "TYPICAL SECTION", SHEET 2 OF 2.

FOR SECTION A-A, SEE "TYPICAL SECTION" SHEET 1 OF 2.

PROJECT NO. R-2417AA

LEE COUNTY

STATION: 52+08.00 -L-

STATE OF NORTH CAROLINA
DEPARTMENT OF TRANSPORTATION
RALEIGH

SUPERSTRUCTURE

PLAN OF SPAN
(NBL)

NORTH CAROLINA PROFESSIONAL SEAL 24390 ENGINEER THEO J. BEACH
11/23/10

REVISIONS						SHEET NO.
NO.	BY:	DATE:	NO.	BY:	DATE:	S-50
1			3			TOTAL SHEETS
2			4			162

DRAWN BY : T. BANKOVICH DATE : 1-2009
CHECKED BY : S.B. WILLIAMS DATE : 2-2009

19-OCT-2010 10:06
R:\Structures\str2-L-overBuffaloCk(LtLane)\Super_Draw\R-2417AA_str2_PS.dgn
sbwilliams

STR. #2

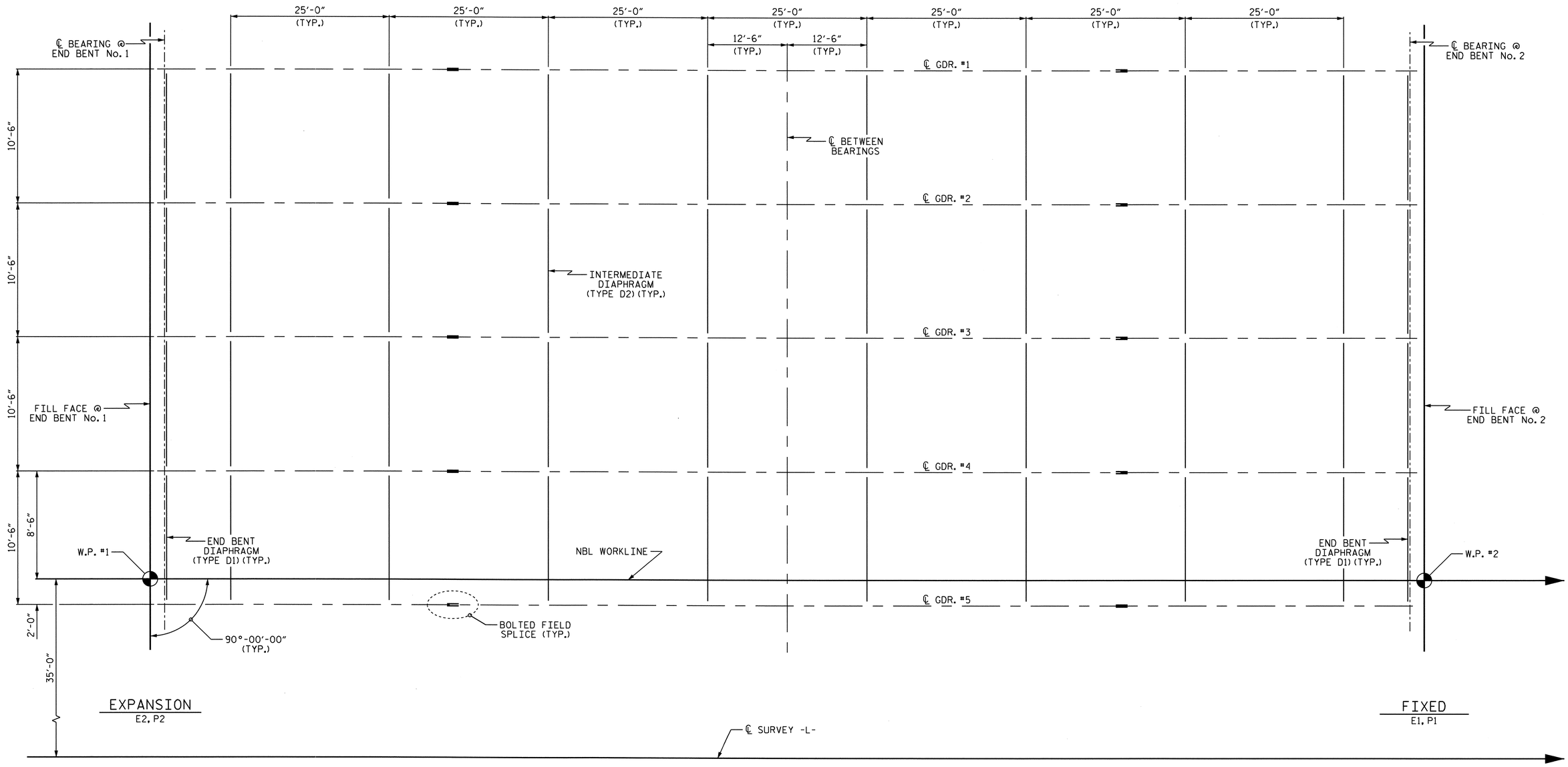

FRAMING PLAN

PROJECT NO. R-2417AA
LEE COUNTY
STATION: 52+08.00 -L-

STATE OF NORTH CAROLINA
DEPARTMENT OF TRANSPORTATION
RALEIGH
SUPERSTRUCTURE

FRAMING PLAN
(NBL)

NORTH CAROLINA PROFESSIONAL SEAL 24690 ENGINEER THEO J. BEACH
11/23/10

REVISIONS						SHEET NO.
NO.	BY:	DATE:	NO.	BY:	DATE:	S-51
1			3			TOTAL SHEETS
2			4			162

DRAWN BY : T. BANKOVICH DATE : 1-2009
CHECKED BY : S.B. WILLIAMS DATE : 2-2009

19-OCT-2010 10:05
R:\Structures\str2-L-overBuffaloCk(LtLane)\Super_Draw\R-2417AA_str2_FP.dgn
sbwilliams

STR. #2

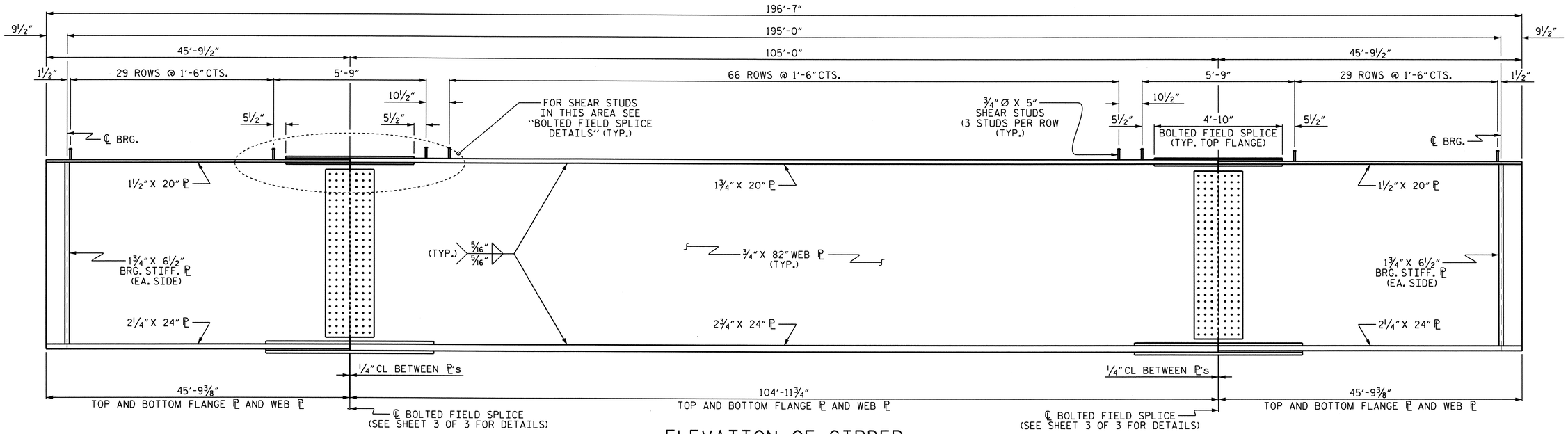

ELEVATION OF GIRDER

(FOR CLARITY, CONNECTOR ℙ's NOT SHOWN. FOR PLACEMENT, SEE "FRAMING PLAN" SHEET.)

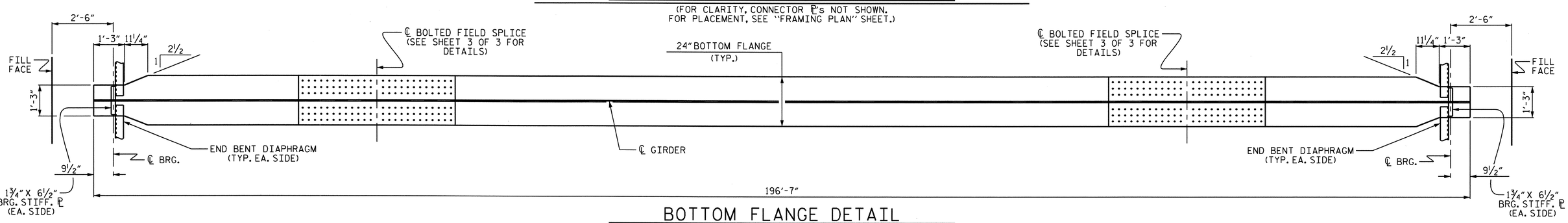

BOTTOM FLANGE DETAIL

(FOR CLARITY, CONNECTOR ℙ's NOT SHOWN. FOR PLACEMENT, SEE "FRAMING PLAN" SHEET.)

NOTES:

ALL STRUCTURAL STEEL SHALL BE AASHTO M270 GRADE 50W AND PAINTED IN ACCORDANCE WITH SYSTEM 4 OF ARTICLE 442-7 OF THE STANDARD SPECIFICATIONS UNLESS OTHERWISE NOTED ON THE PLANS.

ALL DIMENSIONS SHOWN ARE HORIZONTAL OR VERTICAL, UNLESS OTHERWISE NOTED.

ALL FIELD CONNECTIONS TO BE ⅞" Ø HIGH STRENGTH BOLTS UNLESS OTHERWISE NOTED. FOR HIGH STRENGTH BOLTS, SEE SPECIAL PROVISIONS.

BEARING STIFFENERS ARE TO BE PLACED NORMAL TO THE WEB OF THE GIRDER AND SHALL BE PLUMB.

A CHARPY V-NOTCH TEST IS REQUIRED FOR WEB PLATES, BOTTOM FLANGE PLATES, BOTTOM FLANGE SPLICE PLATES, AND WEB FLANGE SPLICE PLATES FOR ALL GIRDERS AND IN ACCORDANCE WITH ARTICLE 1072-9 OF THE STANDARD SPECIFICATIONS.

SHOP SPLICES ARE PERMITTED TO LIMIT THE MAXIMUM REQUIRED FLANGE PIECE LENGTHS TO 60 FEET AND WEB PIECE LENGTHS TO 45 FEET. PERMITTED FLANGE AND WEB SHOP SPLICES SHALL NOT BE LOCATED WITHIN 15 FEET OF MAXIMUM DEAD LOAD DEFLECTION. KEEP 2 FEET MINIMUM BETWEEN WEB AND FLANGE SHOP SPLICES. KEEP 6" MINIMUM BETWEEN CONNECTOR PLATE OR TRANSVERSE STIFFENER WELDS AND WEB OR FLANGE SHOP SPLICES.

STUDS ON GIRDERS MAY BE SHIFTED UP TO 1" IF NECESSARY TO CLEAR FLANGE SPLICE WELD.

TENSION ON THE AASHTO M164 BOLTS SHALL BE CALIBRATED USING DIRECT TENSION INDICATOR WASHERS IN ACCORDANCE WITH ARTICLE 440-8 OF THE STANDARD SPECIFICATIONS.

FOR DIRECT TENSION INDICATORS, SEE SPECIAL PROVISIONS.

END OF GIRDERS SHALL BE PLUMB.

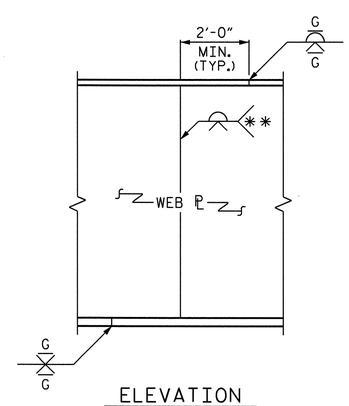

ELEVATION

PERMISSIBLE SHOP FLANGE & WEB SPLICE

** GRIND SMOOTH AND FLUSH ON OUTER FACE OF EXTERIOR GIRDERS

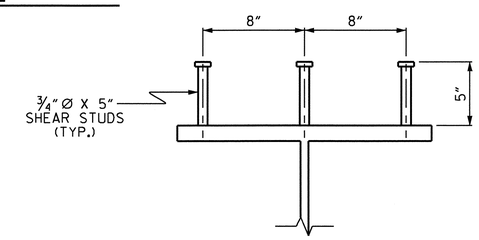

SHEAR STUD DETAIL

(EXCEPT AT BOLTED FIELD SPLICE)

PROJECT NO. R-2417AA

LEE COUNTY

STATION: 52+08.00 -L-

SHEET 1 OF 3

STATE OF NORTH CAROLINA
DEPARTMENT OF TRANSPORTATION
RALEIGH

SUPERSTRUCTURE

STRUCTURAL STEEL DETAIL

(NBL)

NORTH CAROLINA PROFESSIONAL SEAL 24390 ENGINEER THEO J. BEACH 11/23/10

REVISIONS						SHEET NO.
NO.	BY:	DATE:	NO.	BY:	DATE:	S-52
1			3			TOTAL SHEETS
2			4			162

DRAWN BY : T. BANKOVICH DATE : 1-2009
CHECKED BY : S.B. WILLIAMS DATE : 2-2009

24-NOV-2010 07:00
R:\Structures\str2-L-overBuffaloCk(LtLane)\Super_Draw\R-2417AA_str2_SS.dgn
tbeach

STR. #2

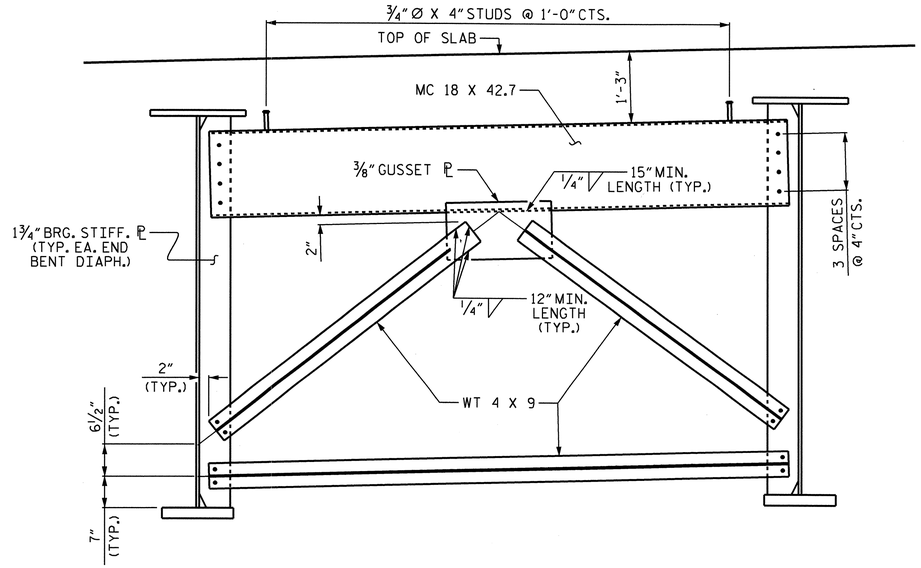

TYPICAL END BENT DIAPHRAGM (TYPE D1)

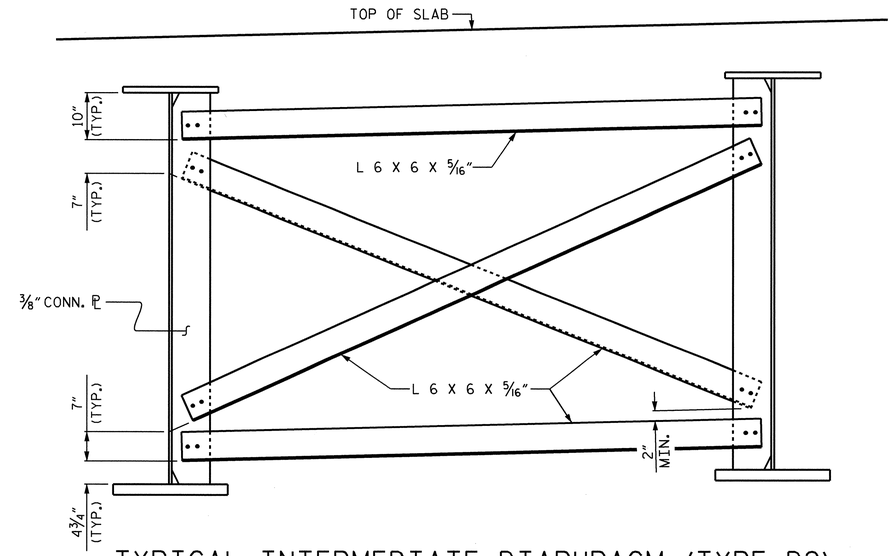

TYPICAL INTERMEDIATE DIAPHRAGM (TYPE D2)

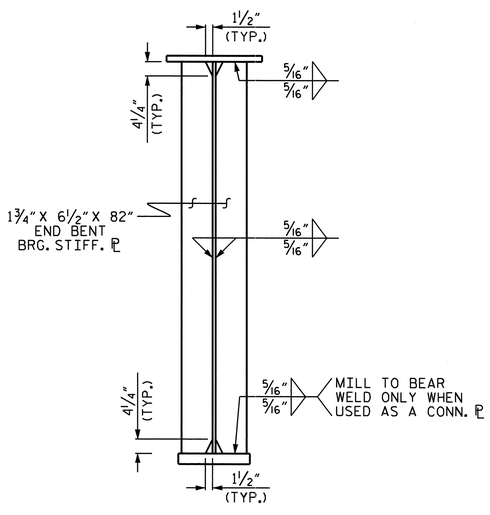

BEARING STIFFENER

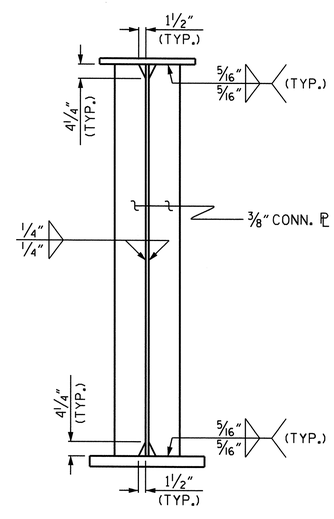

CONNECTOR PLATE

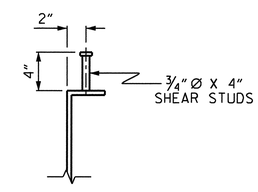

SHEAR STUD DETAIL

(TYP. EA. END BENT DIAPHRAGM)

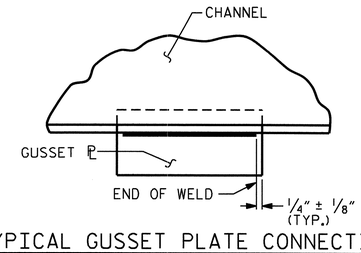

TYPICAL GUSSET PLATE CONNECTION

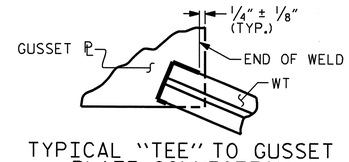

TYPICAL "TEE" TO GUSSET PLATE CONNECTION

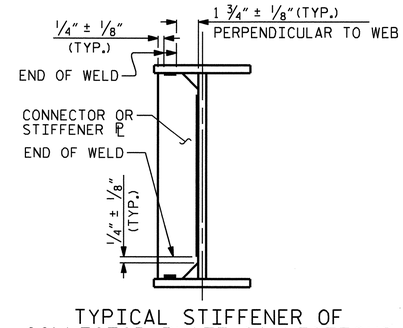

TYPICAL STIFFENER OF CONNECTOR PLATE CONNECTIONS

WELD TERMINATION DETAILS

PROJECT NO. R-2417AA

LEE COUNTY

STATION: 52+08.00 -L-

SHEET 2 OF 3

STATE OF NORTH CAROLINA
DEPARTMENT OF TRANSPORTATION
RALEIGH

SUPERSTRUCTURE

STRUCTURAL STEEL DETAIL

(NBL)

NORTH CAROLINA PROFESSIONAL SEAL 24390 ENGINEER THEO J. BEACH
11/23/10

REVISIONS						SHEET NO.
NO.	BY:	DATE:	NO.	BY:	DATE:	S-53
1			3			TOTAL SHEETS
2			4			162

DRAWN BY : T. BANKOVICH DATE : 1-2009
CHECKED BY : S.B WILLIAMS DATE : 2-2009

23-NOV-2010 15:27
R:\Structures\str2-L-overBuffaloCk(LtLane)\Super_Draw\R-2417AA_str2_SS.dgn
tbeach

STR. #2

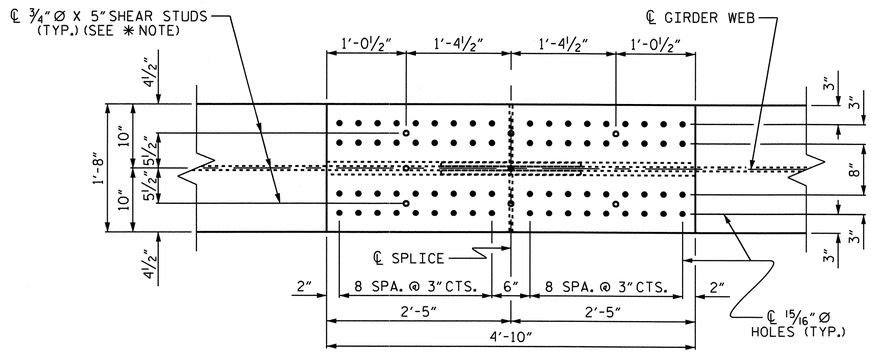

PLAN (TOP OF TOP FLANGE)

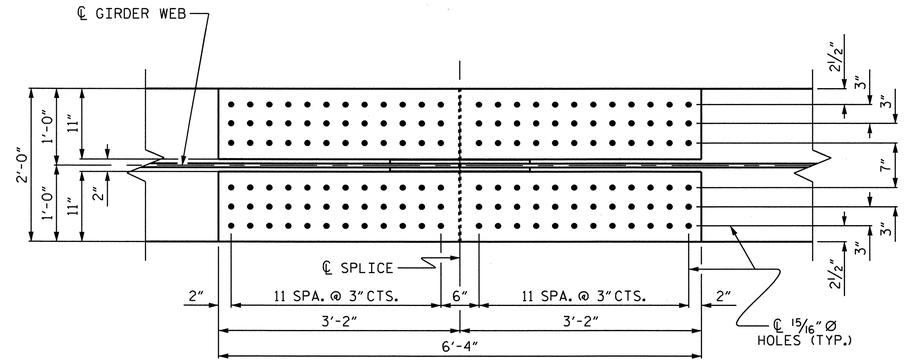

PLAN (TOP OF BOTTOM FLANGE)

✱ NOTE:
SHEAR STUDS ARE TO BE SHOP WELDED ON TOP OF PLATE BEFORE FIELD ASSEMBLY

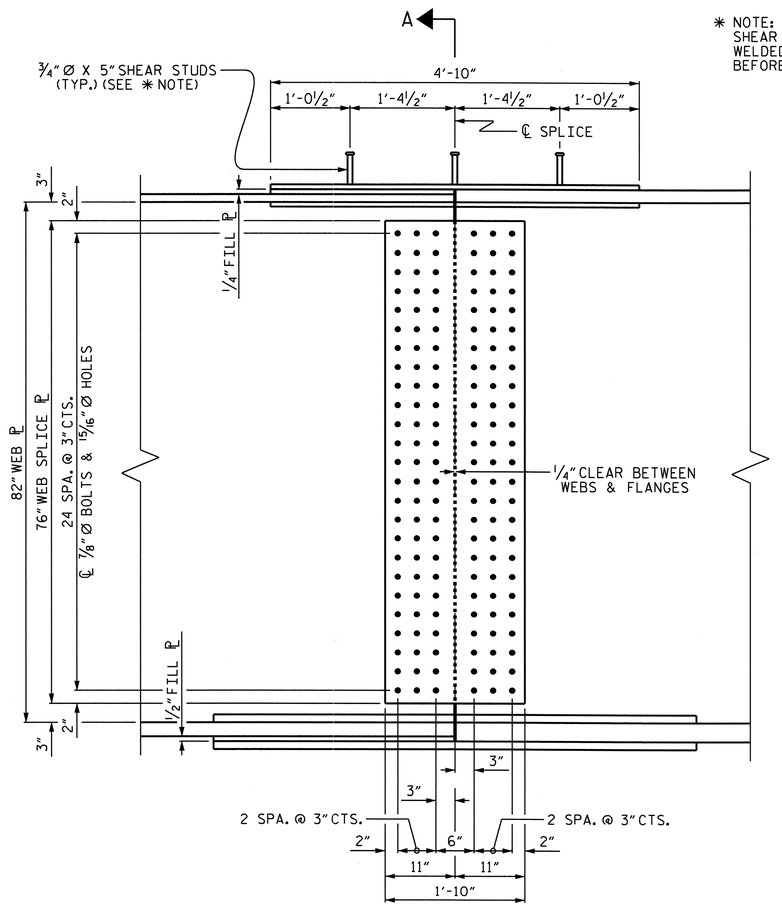

ELEVATION

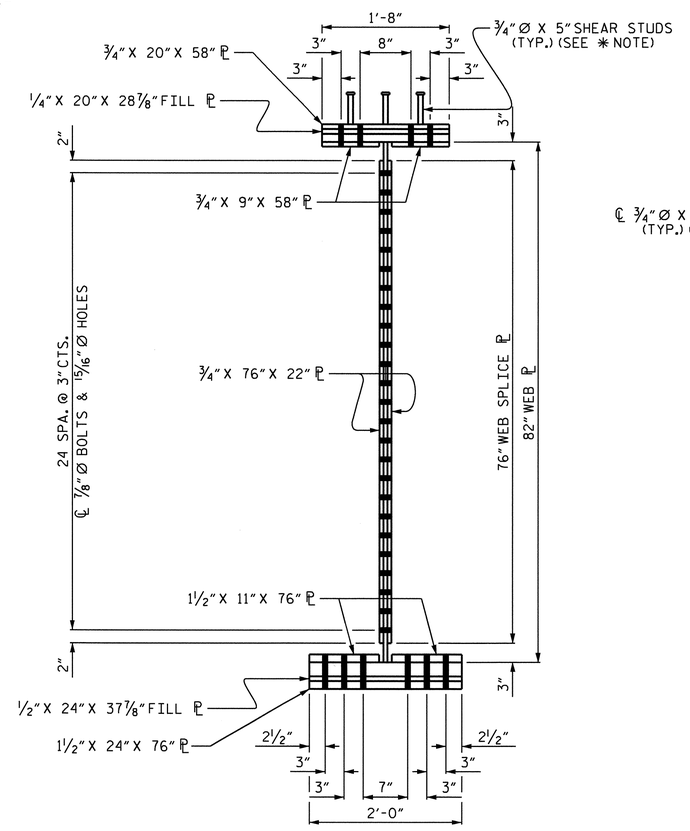

SECTION A-A

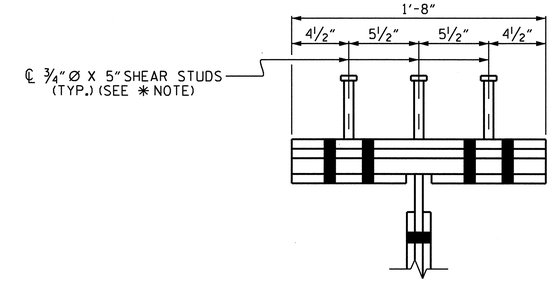

SHEAR STUD DETAIL
FOR TOP FLANGE SPLICE PLATE

BOLTED FIELD SPLICE DETAILS

(TYP. EA. BOLTED FIELD SPLICE)

PROJECT NO. R-2417AA
LEE COUNTY
STATION: 52+08.00 -L-

SHEET 3 OF 3

STATE OF NORTH CAROLINA
DEPARTMENT OF TRANSPORTATION
RALEIGH

SUPERSTRUCTURE

STRUCTURAL STEEL DETAILS

(NBL)

NORTH CAROLINA PROFESSIONAL SEAL 24390 ENGINEER THEO J. BEACH
11/23/10

REVISIONS						SHEET NO.
NO.	BY:	DATE:	NO.	BY:	DATE:	S-54
1			3			TOTAL SHEETS
2			4			162

DRAWN BY : T. BANKOVICH DATE : 1-2009
CHECKED BY : S.B. WILLIAMS DATE : 2-2009

24-NOV-2010 07:00
R:\Structures\str2-L-overBuffaloCk(LtLane)\Super_Draw\R-2417AA_str2_SS.dgn
tbeach

STR. #2

DEAD LOAD DEFLECTION TABLE FOR GIRDERS

	SPAN "A" GIRDER #1 & #5																				
TWENTIETH POINT	BRG.	0.05	0.10	0.15	0.20	0.25	0.30	0.35	0.40	0.45	0.50	0.55	0.60	0.65	0.70	0.75	0.80	0.85	0.90	0.95	BRG.
DEFLECTION DUE TO WEIGHT OF GIRDER	0	0.042	0.082	0.120	0.153	0.182	0.206	0.225	0.239	0.247	0.250	0.247	0.239	0.225	0.206	0.182	0.153	0.120	0.082	0.042	0
DEFLECTION DUE TO WEIGHT OF SLAB *	0	0.077	0.181	0.277	0.363	0.437	0.498	0.548	0.584	0.605	0.613	0.605	0.584	0.548	0.498	0.437	0.363	0.277	0.181	0.077	0
DEFLECTION DUE TO BARRIER RAIL	0	0.008	0.017	0.024	0.031	0.037	0.042	0.046	0.049	0.051	0.051	0.051	0.049	0.046	0.042	0.037	0.031	0.024	0.017	0.008	0
TOTAL DEAD LOAD DEFLECTION	0	0.127	0.279	0.421	0.548	0.655	0.746	0.818	0.871	0.903	0.914	0.903	0.871	0.818	0.746	0.655	0.548	0.421	0.279	0.127	0
REQUIRED CAMBER	0	1 1/2"	3 3/8"	5 1/16"	6 9/16"	7 7/8"	8 15/16"	9 13/16"	10 7/16"	10 13/16"	10 15/16"	10 13/16"	10 7/16"	9 13/16"	8 15/16"	7 7/8"	6 9/16"	5 1/16"	3 3/8"	1 1/2"	0

	SPAN "A" GIRDER #2, #3, & #4																				
TWENTIETH POINT	BRG.	0.05	0.10	0.15	0.20	0.25	0.30	0.35	0.40	0.45	0.50	0.55	0.60	0.65	0.70	0.75	0.80	0.85	0.90	0.95	BRG.
DEFLECTION DUE TO WEIGHT OF GIRDER	0	0.042	0.082	0.120	0.153	0.182	0.206	0.225	0.239	0.247	0.250	0.247	0.239	0.225	0.206	0.182	0.153	0.120	0.082	0.042	0
DEFLECTION DUE TO WEIGHT OF SLAB *	0	0.077	0.182	0.279	0.365	0.439	0.501	0.551	0.587	0.609	0.616	0.609	0.587	0.551	0.501	0.439	0.365	0.279	0.182	0.077	0
DEFLECTION DUE TO BARRIER RAIL	0	0.008	0.016	0.024	0.030	0.036	0.041	0.045	0.048	0.049	0.050	0.049	0.048	0.045	0.041	0.036	0.030	0.024	0.016	0.008	0
TOTAL DEAD LOAD DEFLECTION	0	0.127	0.280	0.422	0.549	0.657	0.748	0.820	0.873	0.906	0.916	0.906	0.873	0.820	0.748	0.657	0.549	0.422	0.280	0.127	0
REQUIRED CAMBER	0	1 1/2"	3 3/8"	5 1/16"	6 9/16"	7 7/8"	9"	9 7/8"	10 1/2"	10 7/8"	11"	10 7/8"	10 1/2"	9 7/8"	9"	7 7/8"	6 9/16"	5 1/16"	3 3/8"	1 1/2"	0

* INCLUDES SLAB, BUILDUPS & STAY-IN-PLACE FORMS.
ALL VALUES ARE SHOWN IN FEET (DECIMAL FORM), EXCEPT "REQUIRED CAMBER", WHICH IS GIVEN IN INCHES (FRACTION FORM)

VERTICAL CURVE ORDINATES ARE NEGLIGIBLE AND ARE NOT PROVIDED.

PROJECT NO. R-2417AA
LEE COUNTY
STATION: 52+08.00 -L-

STATE OF NORTH CAROLINA
DEPARTMENT OF TRANSPORTATION
RALEIGH
SUPERSTRUCTURE

DEAD LOAD DEFLECTIONS
(NBL)

NORTH CAROLINA PROFESSIONAL SEAL 24390 ENGINEER THEO J. BEACH
11/23/10

REVISIONS							SHEET NO.
NO.	BY:	DATE:	NO.	BY:	DATE:		S-55
1			3				TOTAL SHEETS
2			4				162

DRAWN BY : T. BANKOVICH DATE : 1-2009
CHECKED BY : S.B. WILLIAMS DATE : 2-2009

19-OCT-2010 10:02
R:\Structures\str2-L-overBuffaloCk(LtLane)\Super_Draw\R-2417AA_str2_DL.dgn
sbwilliams

STR. #2

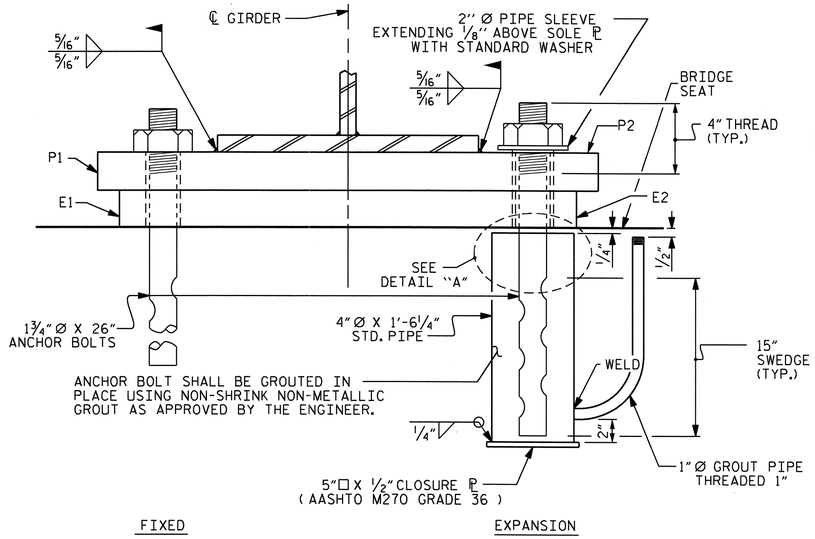

END VIEW

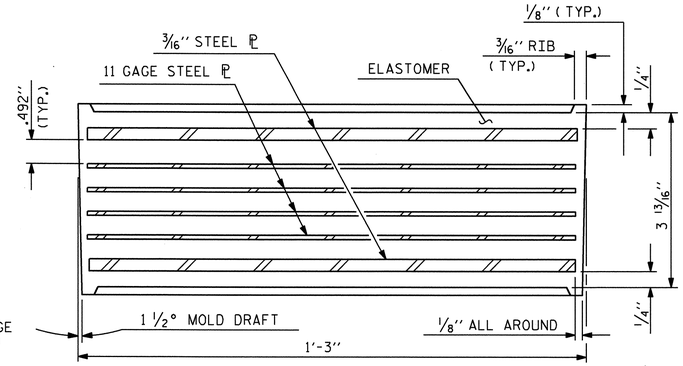

TYPICAL SECTION OF ELASTOMERIC BEARING

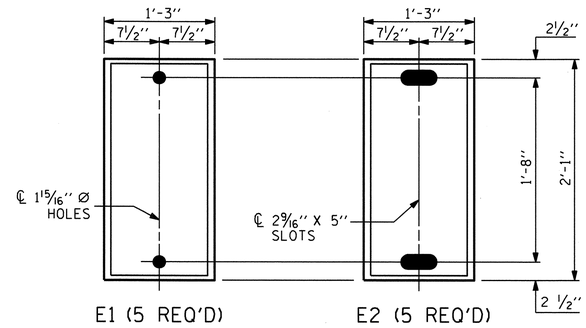

PLAN VIEW OF ELASTOMERIC BEARING

TYPE VI

60 DUROMETER HARDNESS

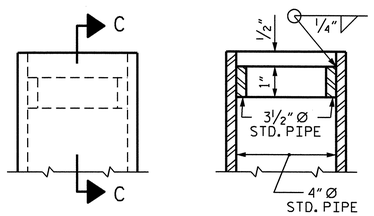

SECTION C-C

DETAIL "A"

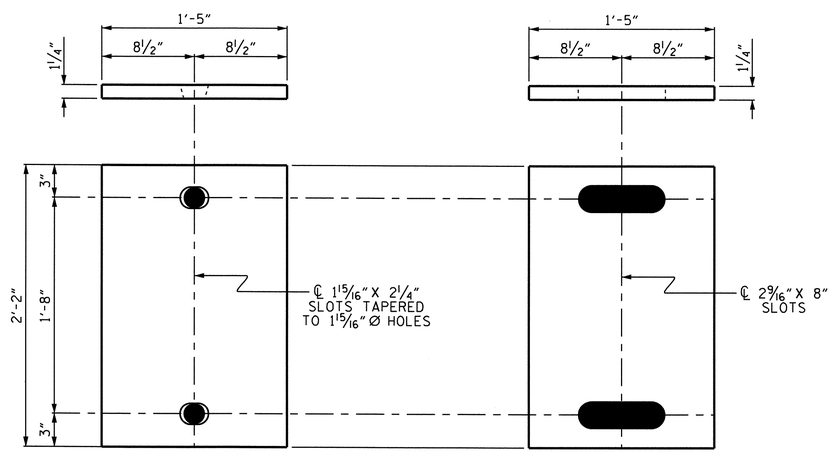

P1 (FIXED) P1 (5 REQ'D)

P2 (EXPANSION) P2 (5 REQ'D)

SOLE PLATE DETAILS ("P")

NOTES

AT ALL FIXED POINTS OF SUPPORT, NUTS FOR ANCHOR BOLTS ARE TO BE TIGHTENED FINGER TIGHT AND THEN BACKED OFF 1/2 TURN. THE THREAD OF THE NUT AND BOLT SHALL THEN BE BURRED WITH A SHARP POINTED TOOL.

THE 2" Ø PIPE SLEEVE SHALL BE CUT FROM SCHEDULE 40 PVC PLASTIC PIPE. THE PVC PLASTIC PIPE SHALL MEET THE REQUIREMENTS OF ASTM D1785.

THE PAYMENT FOR THE PIPE SLEEVES AND 4" Ø X 1'-6 1/4" STANDARD PIPE ASSEMBLY SHALL BE INCLUDED IN THE SEVERAL PAY ITEMS.

FOR AASHTO M270 GRADE 50W STRUCTURAL STEEL, SOLE PLATE SHALL BE AASHTO M270 GRADE 50W AND SHALL NOT BE GALVANIZED. ANCHOR BOLTS, NUTS AND WASHERS SHALL BE GALVANIZED IN ACCORDANCE WITH THE STANDARD SPECIFICATIONS.

ANCHOR BOLTS SHALL MEET THE REQUIREMENTS OF ASTM A449. NUTS SHALL MEET THE REQUIREMENTS OF AASHTO M291-DH OR AASHTO M292-2H. WASHERS SHALL MEET THE REQUIREMENTS OF AASHTO M293. SHOP DRAWINGS ARE NOT REQUIRED FOR ANCHOR BOLTS, NUTS AND WASHERS. SHOP INSPECTION IS REQUIRED.

WHEN FIELD WELDING THE SOLE PLATE TO THE GIRDER FLANGE, USE TEMPERATURE INDICATING WAX PENS, OR OTHER SUITABLE MEANS, TO ENSURE THAT THE TEMPERATURE OF THE SOLE PLATE DOES NOT EXCEED 300°F. TEMPERATURES ABOVE THIS MAY DAMAGE THE ELASTOMER.

ALL SURFACES OF BEARING PLATES SHALL BE SMOOTH AND STRAIGHT.

THE CLOSURE PLATE, GROUT PIPE AND STANDARD PIPE FOR THE EXPANSION ASSEMBLY NEED NOT BE GALVANIZED.

THE CONTRACTOR'S ATTENTION IS CALLED TO THE FOLLOWING PROCEDURE, WHICH MAY BE REQUIRED BY THE ENGINEER, TO RESET ELASTOMERIC BEARINGS DUE TO GIRDER TRANSLATION AND END ROTATION:

1. ONCE THE DECK HAS CURED, THE GIRDERS SHALL BE JACKED THEN THE ANCHOR BOLTS AND ELASTOMERIC BEARING SLOTS CENTERED AS NEARLY AS PRACTICAL ABOUT THE BEARING STIFFENER. THIS OPERATION SHALL BE PERFORMED AT APPROXIMATELY 60° F.

2. AFTER CENTERING THE ELASTOMERIC BEARING SLOTS AND ANCHOR BOLTS, THE ANCHOR BOLTS SHALL BE GROUTED.

   THE CONTRACTOR MAY PROPOSE ALTERNATE METHODS, PROVIDED DETAILS ARE SUBMITTED TO THE ENGINEER FOR REVIEW AND APPROVAL.

ELASTOMER IN ALL BEARING PADS SHALL BE 60 DUROMETER HARDNESS.

LOAD RATINGS

	MAX.D.L.+ L.L.
TYPE VI	380 K

PROJECT NO. R-2417AA

LEE COUNTY

STATION: 52+08.00 -L-

STATE OF NORTH CAROLINA
DEPARTMENT OF TRANSPORTATION
RALEIGH

STANDARD

ELASTOMERIC BEARING DETAILS

(NBL)

NORTH CAROLINA PROFESSIONAL SEAL 24390 ENGINEER MANFRED J. BEACH

REVISIONS						SHEET NO.
NO.	BY:	DATE:	NO.	BY:	DATE:	S-56
1			3			TOTAL SHEETS
2			4			162

ASSEMBLED BY : T. BANKOVICH DATE : 1-2009
CHECKED BY : S.B. WILLIAMS DATE : 2-2009

DRAWN BY : EEM 10/95
CHECKED BY : PEK 10/95

REV. 10/17/00 RWW/LES
REV. 7/10/01 LES/RDR
REV. 5/1/06 TLA/GM

23-NOV-2010 15:35
R:\Structures\str2-L-overBuffaloCk(LtLane)\Super_Draw\R-2417AA_str2_BG.dgn
tbeach

STD. NO. EB2

STR. #2

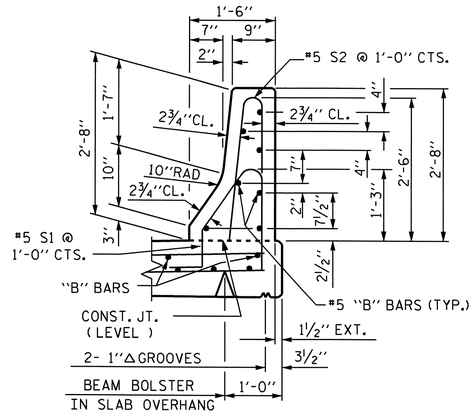

SECTION THRU RAIL

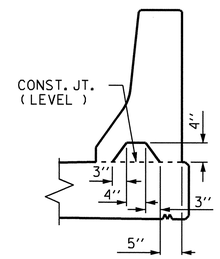

SECTION S-S

AT DAM IN OPEN JOINT
(THIS IS TO BE USED ONLY
WHEN SLIP FORM IS USED)

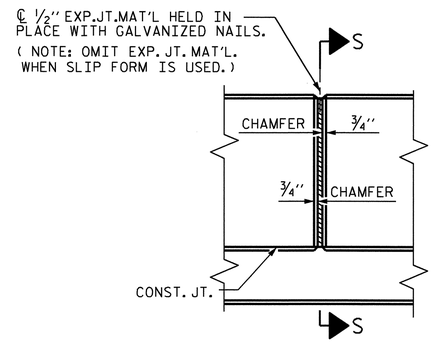

ELEVATION AT EXPANSION JOINTS

BAR TYPES

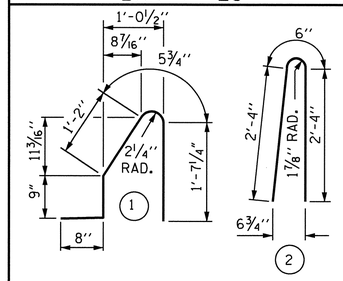

ALL BAR DIMENSIONS ARE OUT TO OUT

BILL OF MATERIAL

FOR CONCRETE BARRIER RAIL ONLY

BAR	NO.	SIZE	TYPE	LENGTH	WEIGHT
* B1	28	#5	STR	23'-6"	686
* B2	70	#5	STR	29'-7"	2160
* S1	396	#5	1	4'-8"	1927
* S2	396	#5	2	5'-2"	2134

* EPOXY COATED REINFORCING STEEL	6907 LBS.
CLASS AA CONCRETE	40.0 CU. YDS.
CONCRETE BARRIER RAIL	395.77 LIN. FT.

BARRIER RAIL DETAILS

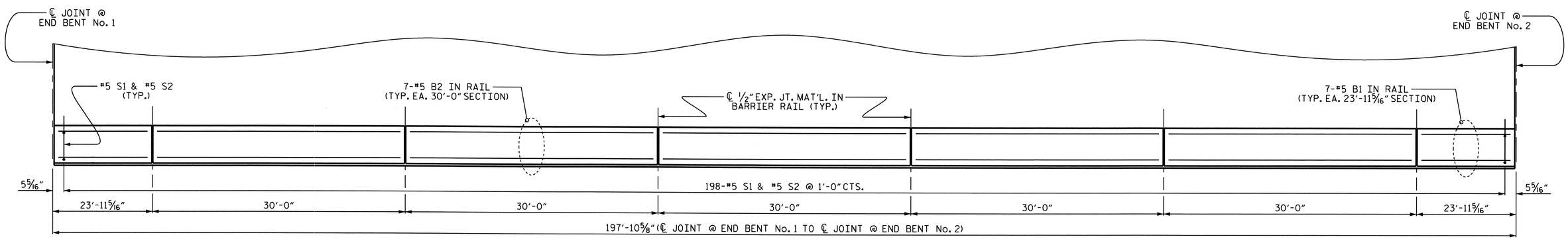

PLAN OF BARRIER PLAN

RIGHT SIDE SHOWN, LEFT SIDE SIMILAR

NOTES:

THE BARRIER RAIL IN THE SPAN SHALL NOT BE CAST UNTIL ALL SLAB CONCRETE IN THAT SPAN HAS BEEN CAST AND HAS REACHED A MINIMUM COMPRESSIVE STRENGTH OF 3,000 PSI.

ALL REINFORCING STEEL IN BARRIER RAILS SHALL BE EPOXY COATED.

VERTICAL GROOVED CONTRACTION JOINTS, ½" IN DEPTH, SHALL BE TOOLED IN ALL EXPOSED FACES OF THE BARRIER RAIL AND IN ACCORDANCE WITH ARTICLE 825-10(B) OF THE STANDARD SPECIFICATIONS. THE CONTRACTION JOINT SHALL BE LOCATED AT EACH THIRD POINT BETWEEN BARRIER RAIL EXPANSION JOINTS. ONLY ONE CONTRACTION JOINT IS REQUIRED AT MIDPOINT OF BARRIER RAIL SEGMENTS LESS THAN 20 FEET IN LENGTH AND NO CONTRACTION JOINTS ARE REQUIRED FOR THOSE SEGMENTS LESS THAN 10 FEET IN LENGTH.

THE #5 "S" BARS MAY BE SHIFTED AS NECESSARY IN ORDER TO MAINTAIN A 2" MINIMUM CLEARANCE TO THE ½" EXPANSION JOINT MATERIAL IN BARRIER RAIL.

PROJECT NO. R-2417AA

LEE COUNTY

STATION: 52+08.00 -L-

STATE OF NORTH CAROLINA
DEPARTMENT OF TRANSPORTATION
RALEIGH

SUPERSTRUCTURE

CONCRETE BARRIER RAIL

(NBL)

NORTH CAROLINA PROFESSIONAL SEAL 24390 ENGINEER THEO J. BEACH
11/23/10

REVISIONS						SHEET NO.
NO.	BY:	DATE:	NO.	BY:	DATE:	S-57
1			3			TOTAL SHEETS
2			4			162

DRAWN BY : T. BANKOVICH DATE : 1-2009
CHECKED BY : S.B. WILLIAMS DATE : 2-2009

19-OCT-2010 10:01
R:\Structures\str2-L-overBuffaloCk(LtLane)\Super_Draw\R-2417AA_str2_BR.dgn
sbwilliams

STD. NO. CBR1

STR. #2

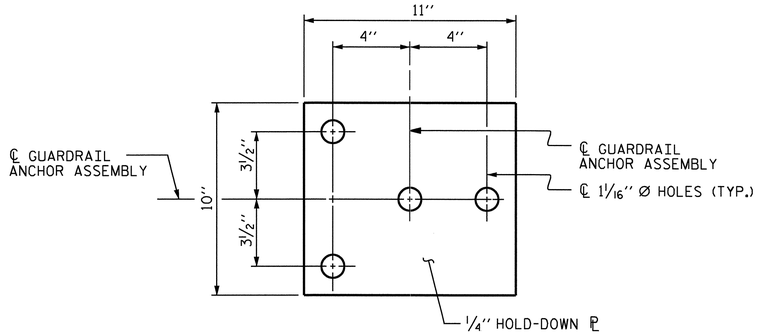

PLAN

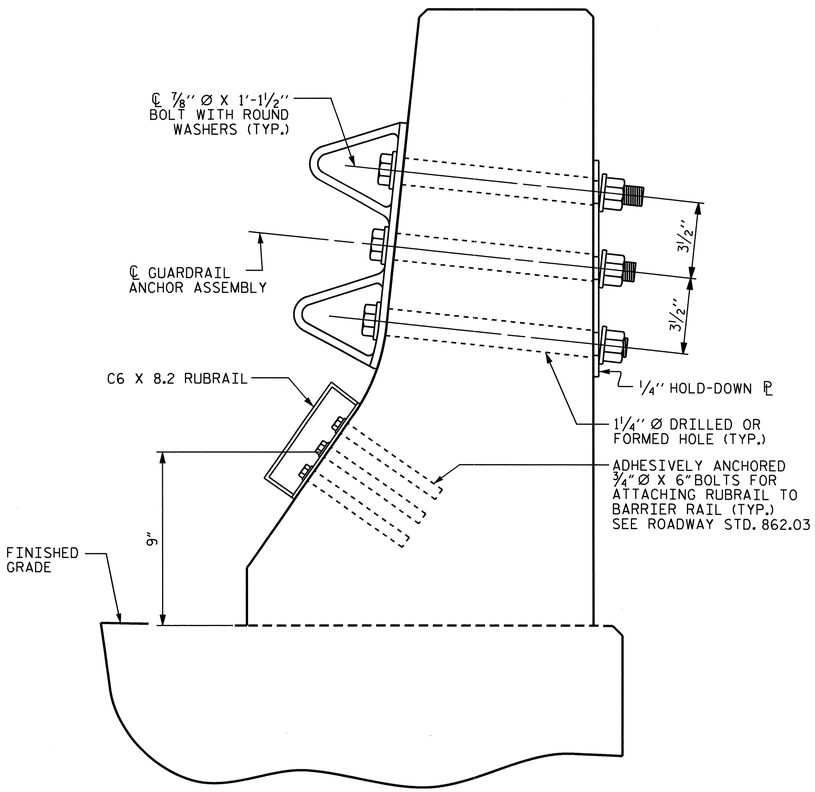

SECTION E-E

GUARDRAIL ANCHOR ASSEMBLY DETAILS

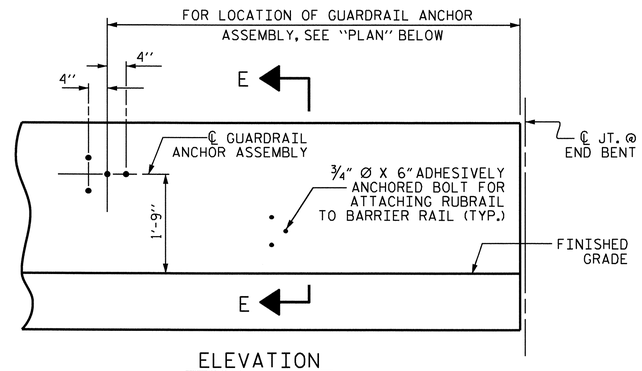

ELEVATION

FOR LOCATION OF RUBRAIL, SEE ROADWAY STD. 862.03

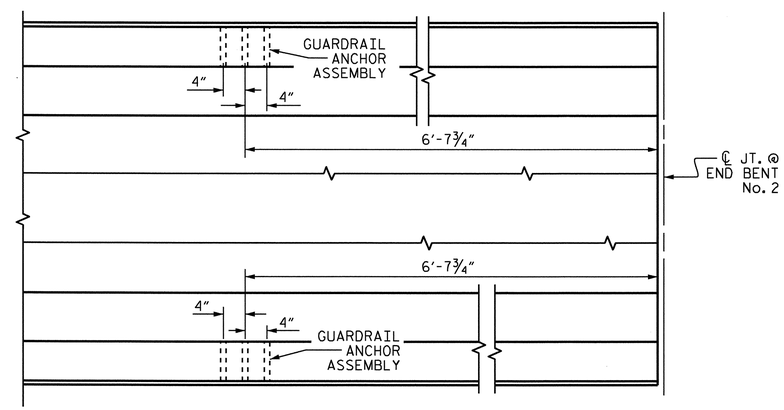

PLAN

LOCATION OF ANCHORS FOR GUARDRAIL

NOTES

THE GUARDRAIL ANCHOR ASSEMBLY SHALL CONSIST OF A 1/4'' HOLD DOWN PLATE AND 4 - 7/8'' Ø BOLTS WITH NUTS AND WASHERS, RUBRAIL, AND ADHESIVELY ANCHORED BOLTS.

THE HOLD-DOWN PLATE SHALL CONFORM TO AASHTO M270 GRADE 36. AFTER FABRICATION, THE HOLD-DOWN PLATE SHALL BE HOT-DIP GALVANIZED IN ACCORDANCE WITH AASHTO M111.

BOLTS SHALL CONFORM TO THE REQUIREMENTS OF ASTM A307 AND NUTS SHALL CONFORM TO THE REQUIREMENTS OF AASHTO M291. BOLTS, NUTS AND WASHERS SHALL BE GALVANIZED. (AT THE CONTRACTOR'S OPTION, STAINLESS STEEL BOLTS, NUTS AND WASHERS MAY BE USED AS AN ALTERNATE FOR THE 7/8'' Ø GALVANIZED BOLTS, NUTS AND WASHERS. THEY SHALL CONFORM TO OR EXCEED THE MECHANICAL REQUIREMENTS OF ASTM A307. THE USE OF THIS ALTERNATE SHALL BE APPROVED BY THE ENGINEER.)

THE GUARDRAIL ANCHOR ASSEMBLY IS REQUIRED AT ALL POINTS WHERE APPROACH GUARDRAIL IS TO BE ATTACHED TO THE END OF BARRIER RAIL. FOR POINTS OF ATTACHMENT, SEE SKETCH.

AFTER INSTALLATION, THE EXPOSED THREAD OF THE BOLT SHALL BE BURRED WITH A SHARP POINTED TOOL.

THE COST OF THE GUARDRAIL ANCHOR ASSEMBLY SHALL BE INCLUDED IN THE UNIT CONTRACT PRICE BID FOR CONCRETE BARRIER RAIL.

THE 1 1/4'' Ø HOLES SHALL BE FORMED OR DRILLED WITH A CORE BIT. IMPACT TOOLS WILL NOT BE PERMITTED. ANY CONCRETE DAMAGED BY THIS WORK SHALL BE REPAIRED TO THE SATISFACTION OF THE ENGINEER.

THE C6 X 8.2 RUBRAIL IS TO BE ADHESIVELY ANCHORED TO THE RAIL USING THREE 3/4'' Ø X 6'' BOLTS WITH WASHERS. LEVEL ONE FIELD TESTING IS REQUIRED, AND THE YIELD LOAD OF THE 3/4'' Ø BOLT IS 12 KIPS. FOR ADHESIVELY ANCHORED ANCHOR BOLTS OR DOWELS, SEE SPECIAL PROVISIONS. SEE ROADWAY STANDARD 862.03 FOR DETAILS AND LOCATION OF THE RUBRAIL.

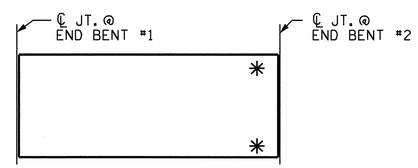

SKETCH SHOWING POINTS OF ATTACHMENTS

✳ DENOTES GUARDRAIL ANCHOR ASSEMBLY

PROJECT NO. R-2417AA

LEE COUNTY

STATION: 52+08.00 -L-

STATE OF NORTH CAROLINA
DEPARTMENT OF TRANSPORTATION
RALEIGH

SUPERSTRUCTURE

GUARDRAIL ANCHORAGE FOR BARRIER RAIL

(NBL)

NORTH CAROLINA PROFESSIONAL SEAL 24390 ENGINEER THEO J. BEACH
11/23/10

REVISIONS						SHEET NO.
NO.	BY:	DATE:	NO.	BY:	DATE:	S-58
1			3			TOTAL SHEETS
2			4			162

ASSEMBLED BY : T. BANKOVICH DATE : 1-2009
CHECKED BY : S.B. WILLIAMS DATE : 2-2009

DRAWN BY : TLA 5/06
CHECKED BY : GM 5/06

ADDED 5/1/06R KMM/GM

19-OCT-2010 09:56
R:\Structures\str2-L-overBuffaloCk(LtLane)\Super_Draw\R-2417AA_str2_BR.dgn
sbwilliams

STD. NO. GRA2

STR. #2

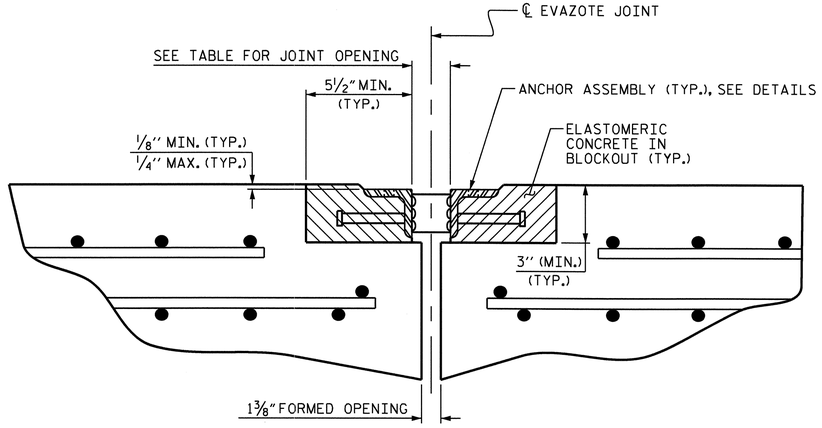

ARMORED JOINT DETAILS

SECTION NORMAL TO JOINT AT BENT

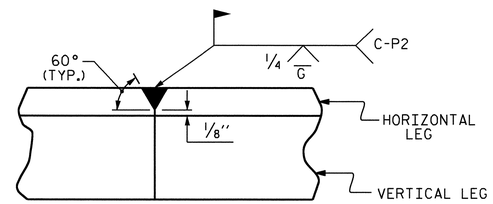

DETAIL- FIELD WELD SPLICE OF ANGLE

NOTES

ANGLES SHALL CONFORM TO AASHTO M270 GRADE 36 STEEL OR APPROVED EQUAL. ALL STUD ANCHORS SHALL CONFORM TO AASHTO M169 GRADES 1010 THRU 1020 OR APPROVED EQUAL.

STUD ANCHORS SHALL BE SHOP WELDED AND ALL HOLES SHALL BE SHOP DRILLED AS SHOWN ON THE PLANS. STUD ANCHORS SHALL BE ELECTRIC ARC END WELDED WITH COMPLETE FUSION.

UPON COMPLETION OF SHOP FABRICATION, THE ENTIRE ANCHOR ASSEMBLY SHALL BE METALLIZED. THE ½" Ø STUD ANCHORS AND ANCHOR TABS NEED NOT BE METALLIZED. SEE SPECIAL PROVISION FOR THERMAL SPRAYED COATINGS (METALLIZATION).

ANCHOR ASSEMBLY SHALL BE MADE CONTINUOUS THE LENGTH OF THE JOINT FROM GUTTER TO GUTTER. FOR FIELD SPLICES AT ALL CROWN BREAK POINTS, THE ENDS OF THE STEEL ANGLES SHALL BE CUT PARALLEL TO THE BRIDGE CENTERLINE. FINISHED FIELD WELDS SHALL BE GROUND SMOOTH AND COATED WITH A MINIMUM THICKNESS OF 4 DRY MILS OF ZINC-RICH PAINT IN ACCORDANCE WITH THE STANDARD SPECIFICATIONS.

ANCHOR ASSEMBLY SEGMENTS SHALL NOT BE LESS THAN 12 FEET NOR MORE THAN 20 FEET IN LENGTH. SHORTER SEGMENTS MAY BE USED AT THE EDGE OF ROADWAY OR AT POINTS OF STAGED CONSTRUCTION.

THE ANCHOR ASSEMBLY SHALL BE SECURED AND LEVELED AS SHOWN IN THE "ARMORED JOINT ANCHOR ASSEMBLY DETAILS". NO SUBMITTALS ARE REQUIRED FOR ⅜" Ø EXPANSION ANCHORS, NUTS OR WASHERS. THE CONTRACTOR MAY SUBMIT FOR APPROVAL AN ALTERNATE METHOD OF ALIGNING AND LEVELING THE ANGLES. THE ALTERNATE METHOD SHALL NOT INCLUDE ANY WELDING TO THE OUTSIDE FACE OF THE ANGLES.

AFTER THE ELASTOMERIC CONCRETE HAS BEEN CAST ON BOTH SIDES OF THE JOINT, REMOVE ANY EXCESS CONCRETE THAT COMES THROUGH THE WEEP HOLES AND THOROUGHLY CLEAN THE ANGLES. ANY DAMAGED STEEL SHALL BE COATED WITH A MINIMUM OF 4 MILS OF ZINC-RICH PAINT IN ACCORDANCE WITH THE STANDARD SPECIFICATIONS.

SEE SPECIAL PROVISIONS FOR EVAZOTE JOINT SEALS.

SEE SPECIAL PROVISIONS FOR ELASTOMERIC CONCRETE.

LOCATION	SKEW ANGLE	NOMINAL UNCOMPRESSED SEAL WIDTH	TOTAL MOVEMENT (ALONG ℄ RDWY)	PERPENDICULAR JOINT OPENING AT 45° F	PERPENDICULAR JOINT OPENING AT 60° F	PERPENDICULAR JOINT OPENING AT 90° F
END BENT No. 1 (EXP.)	90°-00'-00"	3⅛"	1 9/16"	2⅝"	2⅜"	1 15/16"
END BENT No. 2 (FIX.)	90°-00'-00"	3⅛"	—	—	2⅜"	—

TOTAL MOVEMENT IS CALCULATED ALONG THE CENTERLINE OF ROADWAY.
JOINT OPENINGS ARE MEASURED PERPENDICULAR TO THE JOINT.

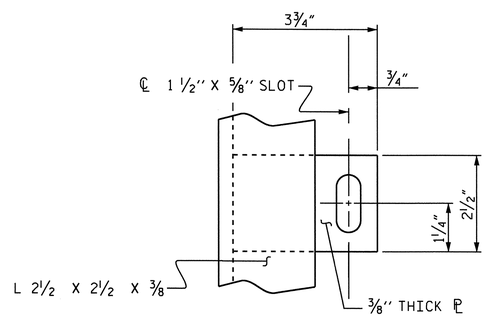

PLAN VIEW OF TAB

BILL OF MATERIAL		
LOCATION	ELASTOMERIC CONCRETE * (CU. FT.)	TOTAL LENGTH OF ANGLE (FT.)
END BENT No. 1	10.5	92'-0"
END BENT No. 2	10.5	92'-0"

* BASED ON THE MINIMUM BLOCKOUT SHOWN.

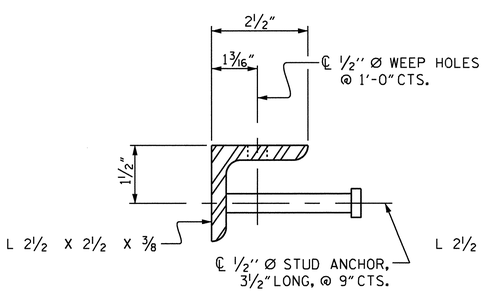

SECTION VIEW OF STUD

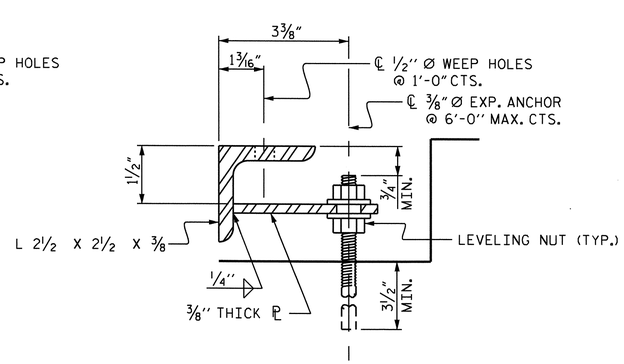

SECTION VIEW OF TAB

ARMORED JOINT ANCHOR ASSEMBLY DETAILS

PROJECT NO. R-2417AA
LEE COUNTY
STATION: 52+08.00 -L-

STATE OF NORTH CAROLINA
DEPARTMENT OF TRANSPORTATION
RALEIGH

STANDARD
ARMORED EVAZOTE JOINT DETAILS
(NBL)

NORTH CAROLINA PROFESSIONAL SEAL 24390 ENGINEER THEO. J. BEACH
11/23/10

ASSEMBLED BY : T. BANKOVICH	DATE : 3-2009
CHECKED BY : S.B. WILLIAMS	DATE : 3-2009

DRAWN BY : EEM 1/96	REV. 7/10/01 LES/RDR
CHECKED BY : RGW 1/96	REV. 5/7/03RR RWW/JTE
	REV. 5/1/06 TLA/GM

REVISIONS								SHEET NO.
NO.	BY:	DATE:	NO.	BY:	DATE:			S-59
1			3					TOTAL SHEETS
2			4					162

19-OCT-2010 09:55
R:\Structures\str2-L-overBuffaloCk(LtLane)\Super_Draw\r-2417aa_str2_AEJT.dgn
sbwilliams

STD. NO. AEJ1

STR. #2

SUPERSTRUCTURE REINFORCING STEEL LENGTHS ARE BASED ON THE FOLLOWING MINIMUM SPLICE LENGTHS					
BAR SIZE	SUPERSTRUCTURE EXCEPT APPROACH SLABS, PARAPET, AND BARRIER RAIL		APPROACH SLABS		PARAPET AND BARRIER RAIL
	EPOXY COATED	UNCOATED	EPOXY COATED	UNCOATED	
#4	2'-0"	1'-9"	2'-0"	1'-9"	2'-9"
#5	2'-6"	2'-2"	2'-6"	2'-2"	3'-5"
#6	3'-0"	2'-7"	3'-10"	2'-7"	4'-4"
#7	5'-3"	3'-6"			
#8	6'-10"	4'-7"			

GROOVING BRIDGE FLOOR	
APPROACH SLABS	2,068 SQ. FT.
BRIDGE DECK	8,470 SQ. FT.
TOTAL	10,538 SQ. FT.

BAR TYPE

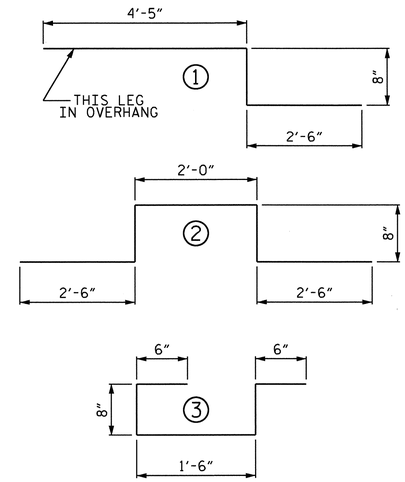

ALL BAR DIMENSIONS ARE OUT TO OUT.

BILL OF MATERIAL

BAR	NO.	SIZE	TYPE	LENGTH	WEIGHT
* A1	395	#5	STR	48'-11"	20153
A2	395	#5	STR	48'-11"	20153
B1	240	#5	STR	51'-0"	12766
* B2	264	#4	STR	26'-6"	4673
* K1	12	#5	1	7'-7"	95
* K2	18	#5	2	8'-4"	156
* K3	24	#5	STR	9'-6"	238
* S1	72	#4	3	3'-10"	184
REINFORCING STEEL					32,919 LBS.
*EPOXY COATED REINFORCING STEEL					25,499 LBS.

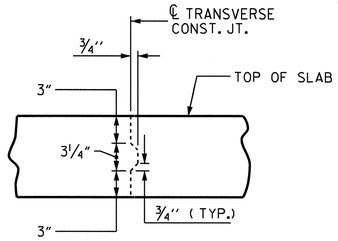

TRANSVERSE CONSTRUCTION JOINT DETAIL

NOTE: REINFORCING STEEL IN SLAB NOT SHOWN. LONGITUDINAL REINFORCING STEEL SHALL BE CONTINUOUS THRU JOINT

SUPERSTRUCTURE BILL OF MATERIAL			
	CLASS AA CONCRETE	REINFORCING STEEL	EPOXY COATED REINFORCING STEEL
	(CU. YDS.)	(LBS.)	(LBS.)
POUR #1	226.0	———	———
POUR #2	71.2	———	———
POUR #3	18.7	———	———
TOTAL **	315.9	32,919 LBS.	25,499 LBS.

** QUANTITIES FOR BARRIER RAIL ARE NOT INCLUDED

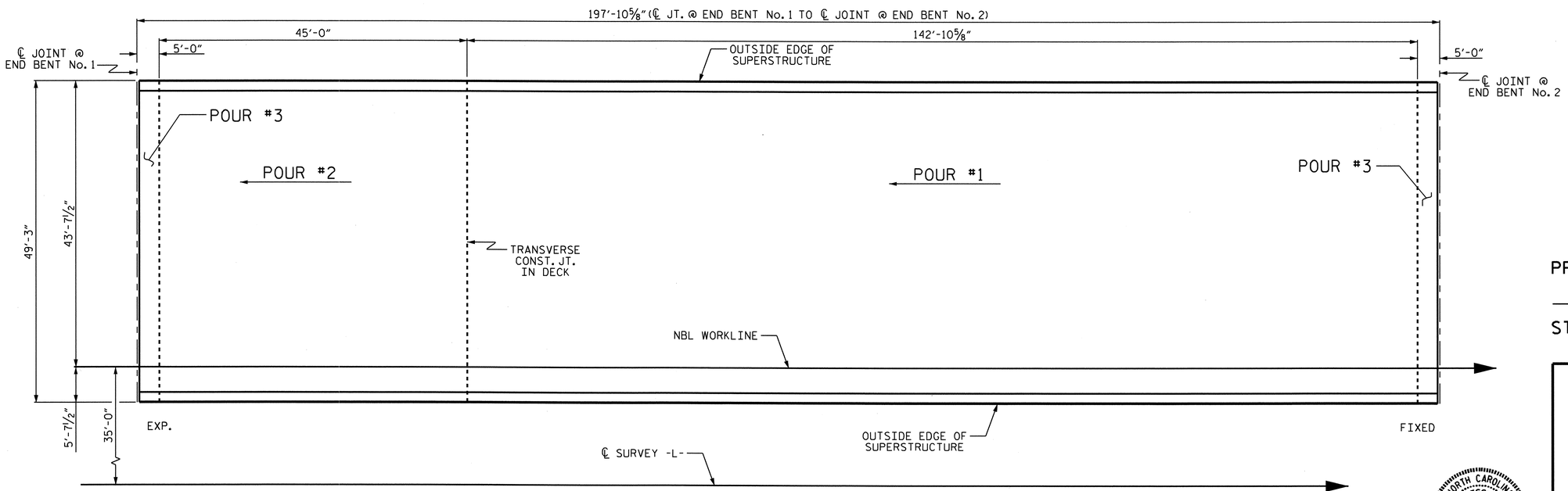

LAYOUT FOR COMPUTING AREA OF REINFORCED CONCRETE DECK SLAB

(SQ. FT. = 9,746)

PROJECT NO. R-2417AA

LEE COUNTY

STATION: 52+08.00 -L-

STATE OF NORTH CAROLINA
DEPARTMENT OF TRANSPORTATION
RALEIGH

SUPERSTRUCTURE

BILL OF MATERIAL

(NBL)

NORTH CAROLINA PROFESSIONAL SEAL 24390 ENGINEER THEO J. BEACH 11/23/10

REVISIONS						SHEET NO.
NO.	BY:	DATE:	NO.	BY:	DATE:	S-60
1			3			TOTAL SHEETS
2			4			162

DRAWN BY : T. BANKOVICH DATE : 1-2009
CHECKED BY : S.B. WILLIAMS DATE : 2-2009

23-NOV-2010 15:35
R:\Structures\str2-L-overBuffaloCk(LtLane)\Super_Draw\R-2417AA_str2_BM.dgn
tbeach

STR. #2

NOTES

▲ FOR LOCATION OF ELEVATIONS BETWEEN BUILDUPS SEE SECTION A-A ON SHEET 3 OF 3.

★ THIS ELEVATION TAKEN ON FILL FACE OF BACKWALL

SEE ADDITIONAL NOTES SHEET 3 OF 3.

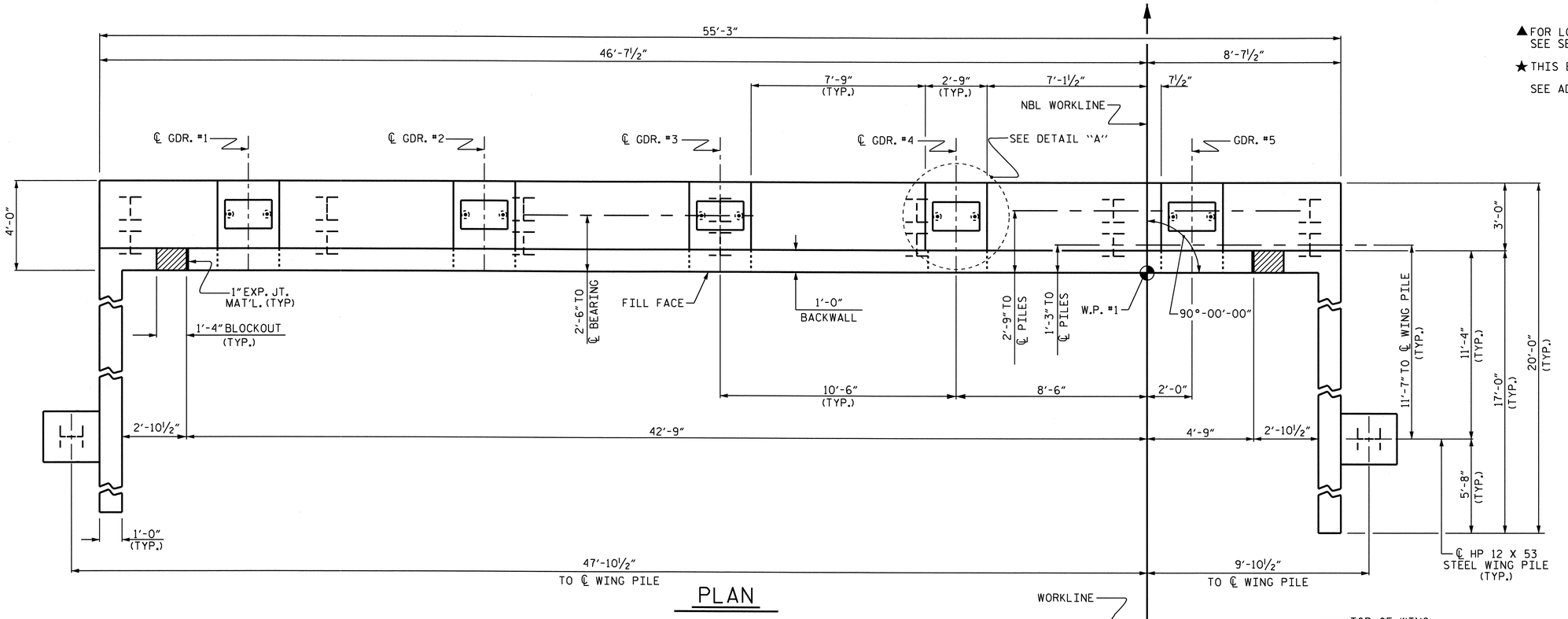

PLAN

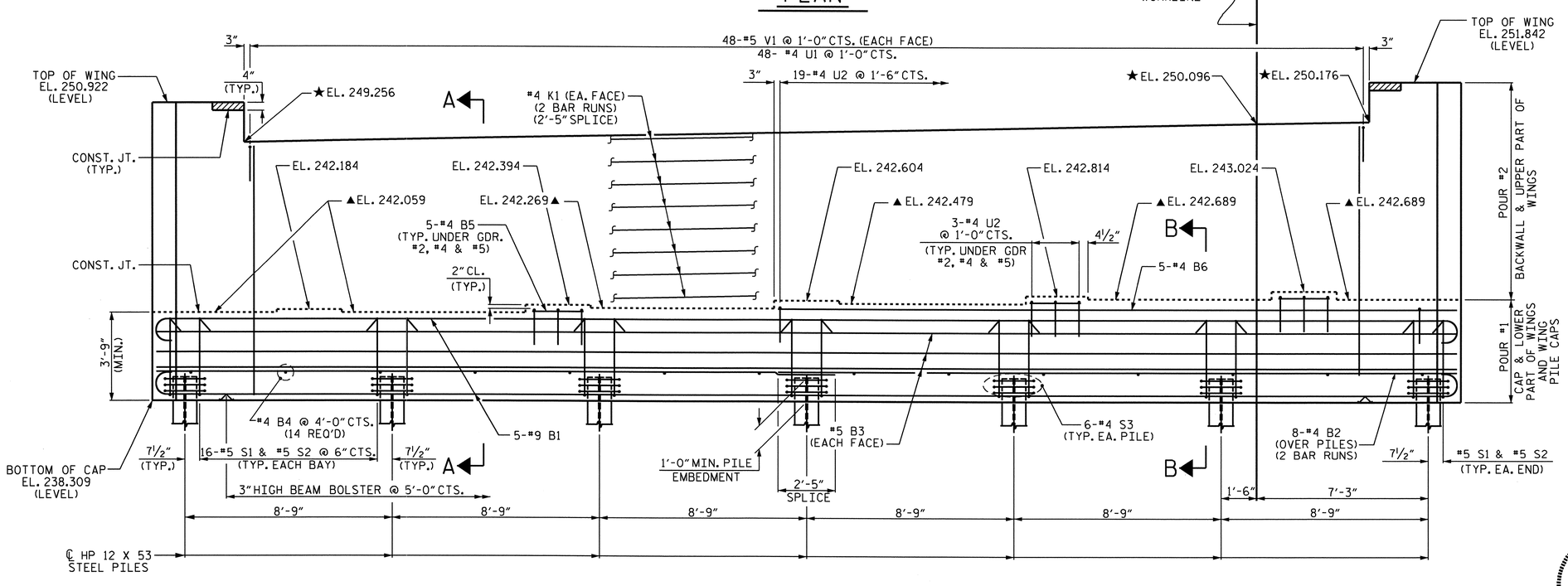

ELEVATION

(WING PILES ARE NOT SHOWN FOR CLARITY)

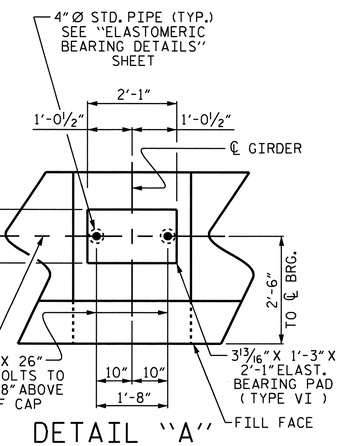

DETAIL "A"

(TYP. EA. GIRDER)

PROJECT NO. R-2417AA

LEE COUNTY

STATION: 52+08.00 -L-

SHEET 1 OF 3

STATE OF NORTH CAROLINA
DEPARTMENT OF TRANSPORTATION
RALEIGH

SUBSTRUCTURE

END BENT No. 1

(NBL)

NORTH CAROLINA PROFESSIONAL SEAL 24390 ENGINEER THEO J. BEACH
11/23/10

REVISIONS						SHEET NO.
NO.	BY:	DATE:	NO.	BY:	DATE:	S-61
1			3			TOTAL SHEETS
2			4			162

DRAWN BY : S.B. WILLIAMS DATE : 3-31-09
CHECKED BY : T. BANKOVICH DATE : 6-2009

19-OCT-2010 09:47
R:\Structures\str2-L-overBuffaloCk(LtLane)\Sub_Draw\R2417AA_sd_Eb1.dgn
sbwilliams

STR. #2

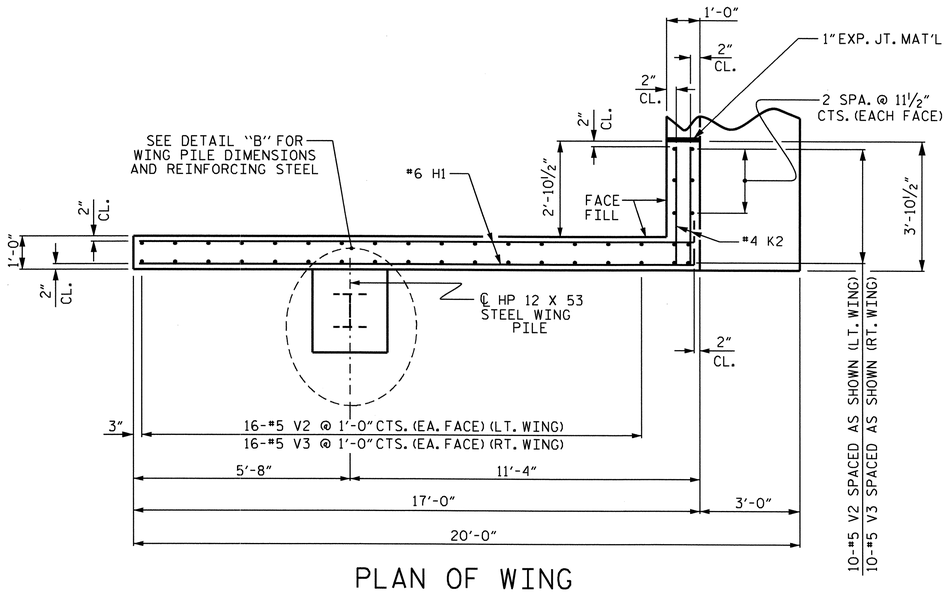

PLAN OF WING

(RIGHT WING SHOWN, LEFT WING SIMILAR)

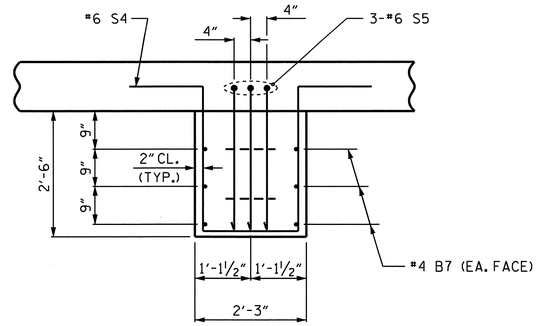

DETAIL "B"

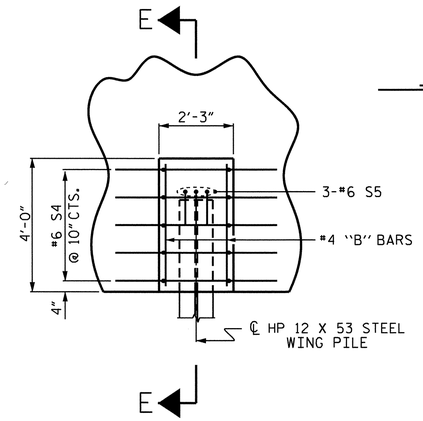

DETAIL "C"

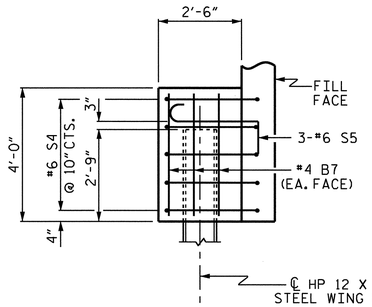

SECTION E-E

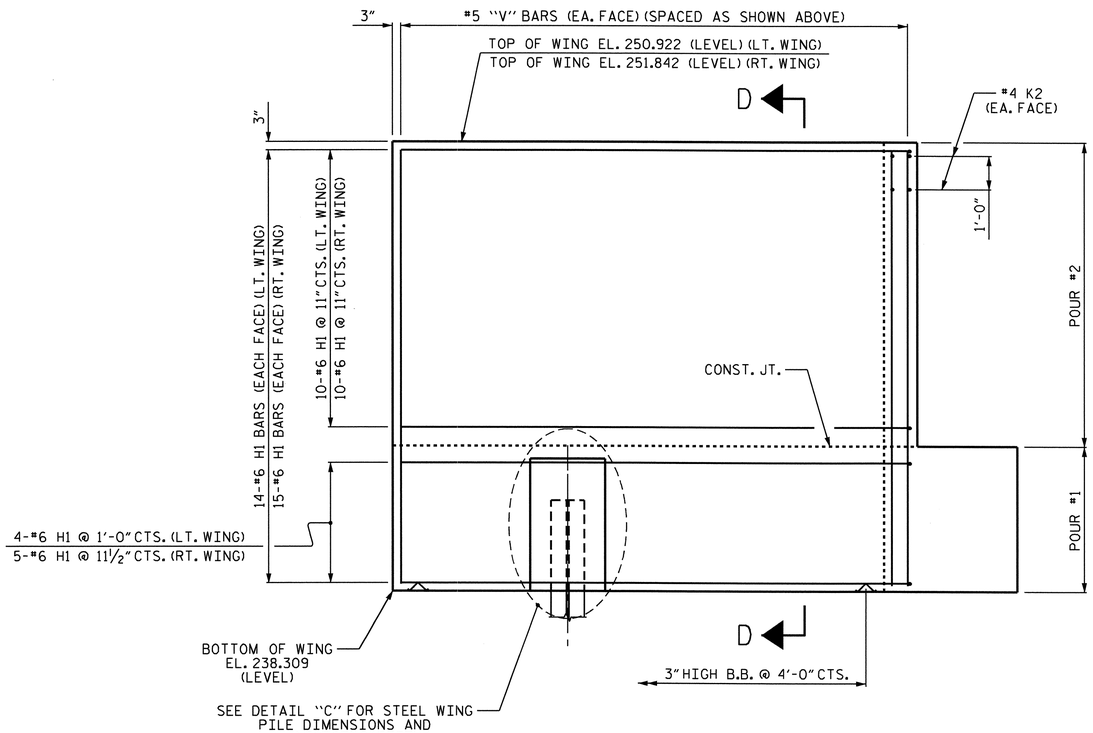

ELEVATION OF WING

(RIGHT WING SHOWN, LEFT WING SIMILAR)

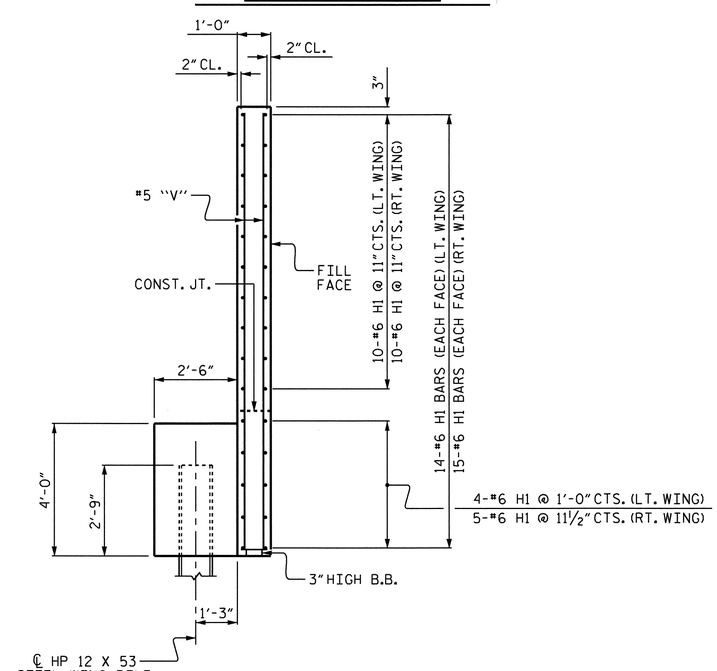

SECTION D-D

(RIGHT WING SHOWN, LEFT WING SIMILAR)

PROJECT NO. R-2417AA

LEE COUNTY

STATION: 52+08.00 -L-

SHEET 2 OF 3

STATE OF NORTH CAROLINA
DEPARTMENT OF TRANSPORTATION
RALEIGH

SUBSTRUCTURE

END BENT No. 1

(NBL)

NORTH CAROLINA PROFESSIONAL SEAL 28390 ENGINEER THEO J. BEACH
11/23/10

REVISIONS							SHEET NO.
NO.	BY:	DATE:	NO.	BY:	DATE:		S-62
1			3				TOTAL SHEETS
2			4				162

DRAWN BY : S.B. WILLIAMS DATE : 4-09
CHECKED BY : T. BANKOVICH DATE : 6-09

19-OCT-2010 09:46
R:\Structures\str2-L-overBuffaloCk(LtLane)\Sub_Draw\R2417AA_sd_Eb1.dgn
sbwilliams

STR. #2

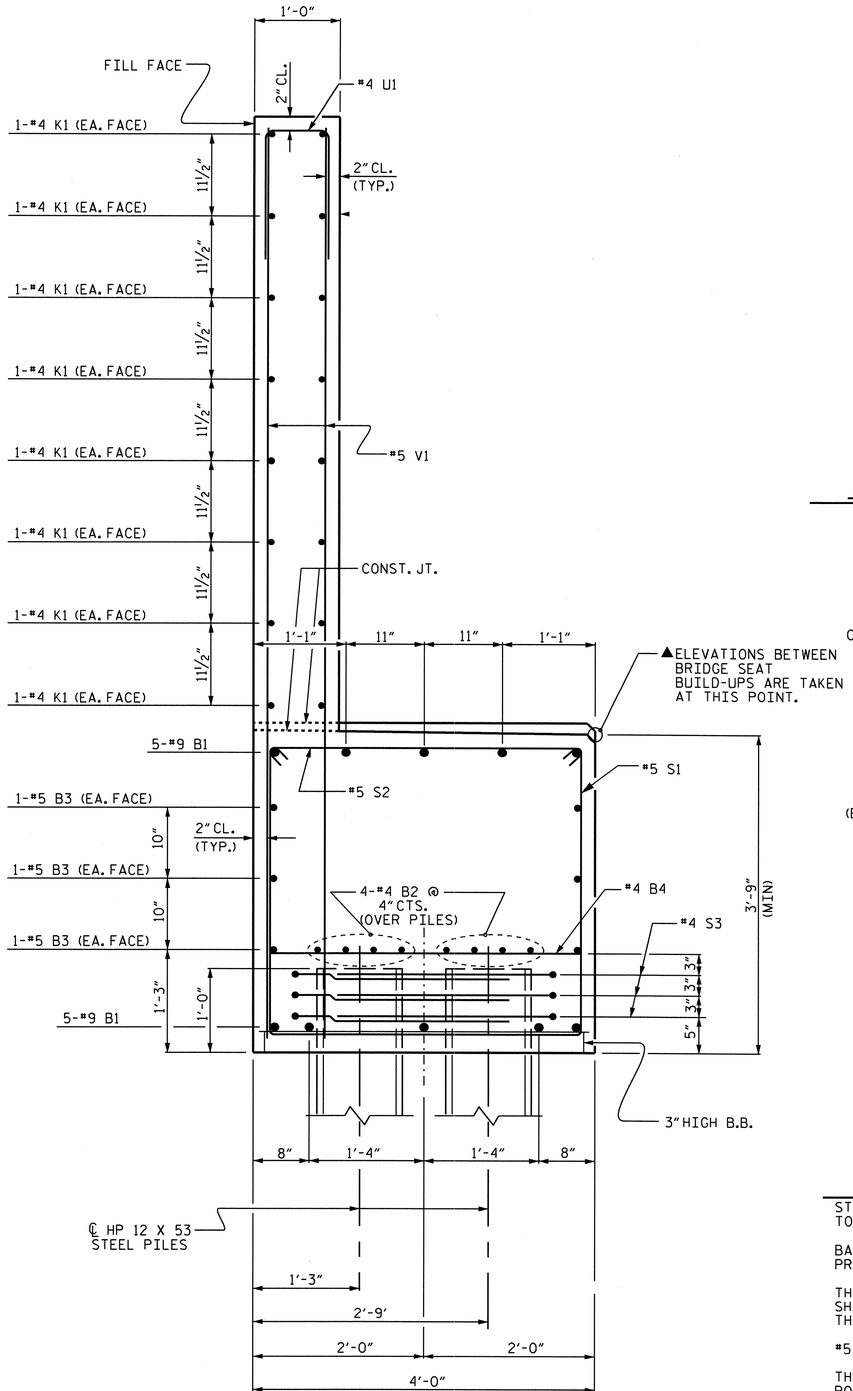

SECTION A-A

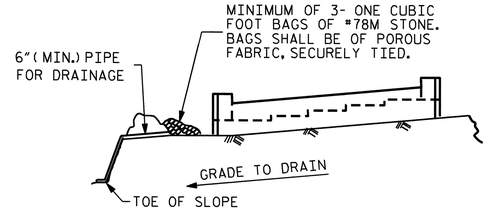

BAGGED STONE AND PIPE SHALL BE PLACED IMMEDIATELY AFTER COMPLETION OF END BENT EXCAVATION. PIPE MAY BE EITHER CONCRETE, CORRUGATED STEEL, CORRUGATED ALUMINUM ALLOY, OR CORRUGATED PLASTIC. PERFORATED PIPE WILL NOT BE ALLOWED.

BAGGED STONE SHALL REMAIN IN PLACE UNTIL THE ENGINEER DIRECTS THAT IT BE REMOVED. THE CONTRACTOR SHALL REMOVE AND DISPOSE OF SILT ACCUMULATIONS AT BAGGED STONE WHEN SO DIRECTED BY THE ENGINEER. BAGS SHALL BE REMOVED AND REPLACED WHENEVER THE ENGINEER DETERMINES THAT THEY HAVE DETERIORATED AND LOST THEIR EFFECTIVENESS.

NO SEPARATE PAYMENT WILL BE MADE FOR THIS WORK AND THE ENTIRE COST OF THIS WORK SHALL BE INCLUDED IN THE UNIT CONTRACT PRICE BID FOR THE SEVERAL PAY ITEMS.

TEMPORARY DRAINAGE AT END BENT

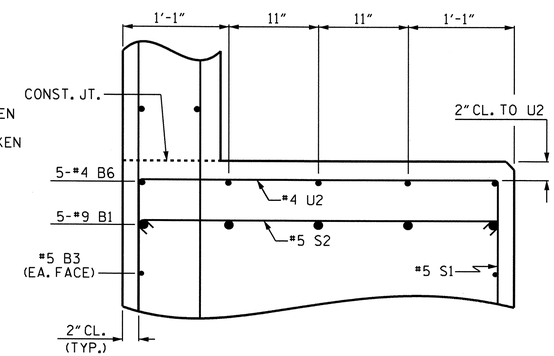

PARTIAL SECTION B-B

BAR TYPES

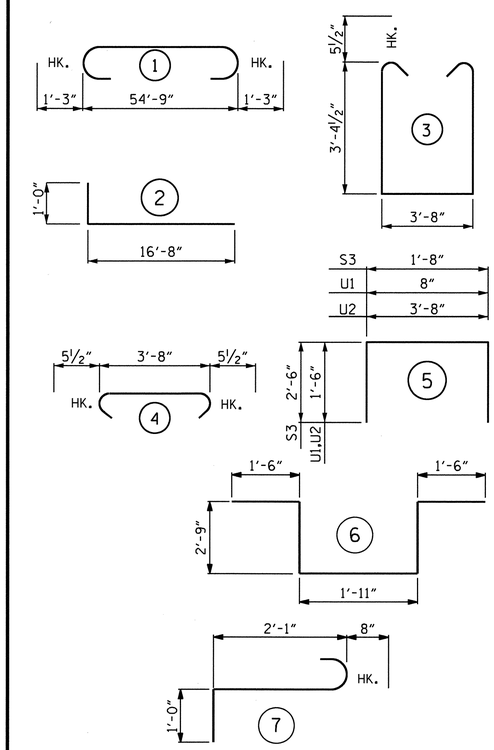

ALL BAR DIMENSIONS ARE OUT TO OUT

BILL OF MATERIAL
END BENT No. 1

BAR	NO.	SIZE	TYPE	LENGTH	WEIGHT
B1	10	#9	1	57'-3"	1947
B2	16	#4	STR	28'-8"	306
B3	6	#5	STR	54'-11"	344
B4	14	#4	STR	3'-8"	34
B5	15	#4	STR	2'-5"	24
B6	5	#4	STR	28'-6"	95
B7	12	#4	STR	3'-8"	29
H1	58	#6	2	17'-8"	1539
K1	32	#4	STR	28'-8"	613
K2	8	#4	STR	3'-6"	19
S1	98	#5	3	11'-4"	1158
S2	98	#5	4	4'-7"	468
S3	42	#4	5	6'-8"	187
S4	10	#6	6	10'-5"	156
S5	6	#6	7	3'-9"	34
U1	48	#4	5	3'-8"	118
U2	28	#4	5	6'-8"	125
V1	96	#5	STR	10'-6"	1051
V2	42	#5	STR	12'-3"	537
V3	42	#5	STR	13'-2"	577
REINFORCING STEEL					9361 LBS.

CLASS A CONCRETE BREAKDOWN

POUR #1 (CAP & LOWER PART OF WINGS & WING PILE CAPS)	40.2 C.Y.
POUR #2 (BACKWALL & UPPER PART OF WINGS)	26.1 C.Y.
TOTAL CLASS A CONCRETE	66.3 C.Y.

HP 12 X 53 STEEL PILES
No. = 16 — 160 LIN. FT.

PILE EXCAVATION NOT IN SOIL: 80 FT.

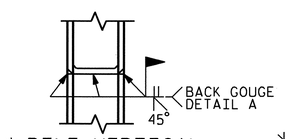

✳ PILE VERTICAL

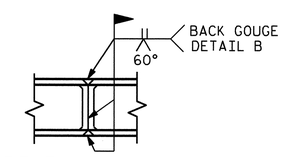

✳ PILE HORIZONTAL OR VERTICAL

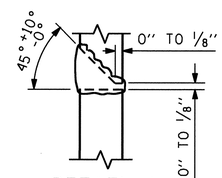

DETAIL A

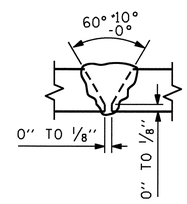

DETAIL B

✳ POSITION OF PILE DURING WELDING.

PILE SPLICE DETAILS

NOTES:

STIRRUPS AND U2 BARS IN CAP MAY BE SHIFTED AS NECESSARY TO CLEAR ANCHOR BOLTS.

BACKWALL SHALL BE PLACED BEFORE APPLYING THE EPOXY PROTECTIVE COATING.

THE TOP SURFACE OF THE CAP EXCEPT THE BRIDGE SEAT BUILDUPS SHALL BE SLOPED TRANSVERSELY FROM THE FILL FACE TO THE BACK FACE AT THE RATE OF 2%.

#5 V1 BARS IN BACKWALL SHALL BE PLACED 2" FROM TOP OF BACKWALL.

THE CONCRETE IN THE SHADED AREA OF THE WING WALL SHALL BE POURED AFTER THE BARRIER RAIL IS CAST IF SLIP FORMING IS USED.

EPOXY COAT THE END BENT CAP AFTER ADJUSTMENTS ARE MADE TO BEARINGS AND ANCHOR BOLTS ARE GROUTED. SEE "ELASTOMERIC BEARING DETAILS" SHEET.

PROJECT NO. R-2417AA
LEE COUNTY
STATION: 52+08.00 -L-

SHEET 3 OF 3

STATE OF NORTH CAROLINA
DEPARTMENT OF TRANSPORTATION
RALEIGH
SUBSTRUCTURE

END BENT No. 1
(NBL)

NORTH CAROLINA PROFESSIONAL SEAL 24390 ENGINEER THEO J. BEACH
11/23/10

REVISIONS						SHEET NO.
NO.	BY:	DATE:	NO.	BY:	DATE:	S-63
1			3			TOTAL SHEETS
2			4			S-162

DRAWN BY : S.B. WILLIAMS DATE : 4-1-09
CHECKED BY : T. BANKOVICH DATE : 6-09

23-NOV-2010 15:36
R:\Structures\str2-L-overBuffaloCk(LtLane)\Sub_Draw\R2417AA_sd_Eb1.dgn
tbeach

STR. #2

NOTES

▲ FOR LOCATION OF ELEVATIONS BETWEEN BUILDUPS SEE SECTION A-A ON SHEET 3 OF 3.

★ THIS ELEVATION TAKEN ON FILL FACE OF BACKWALL SEE ADDITIONAL NOTES SHEET 3 OF 3.

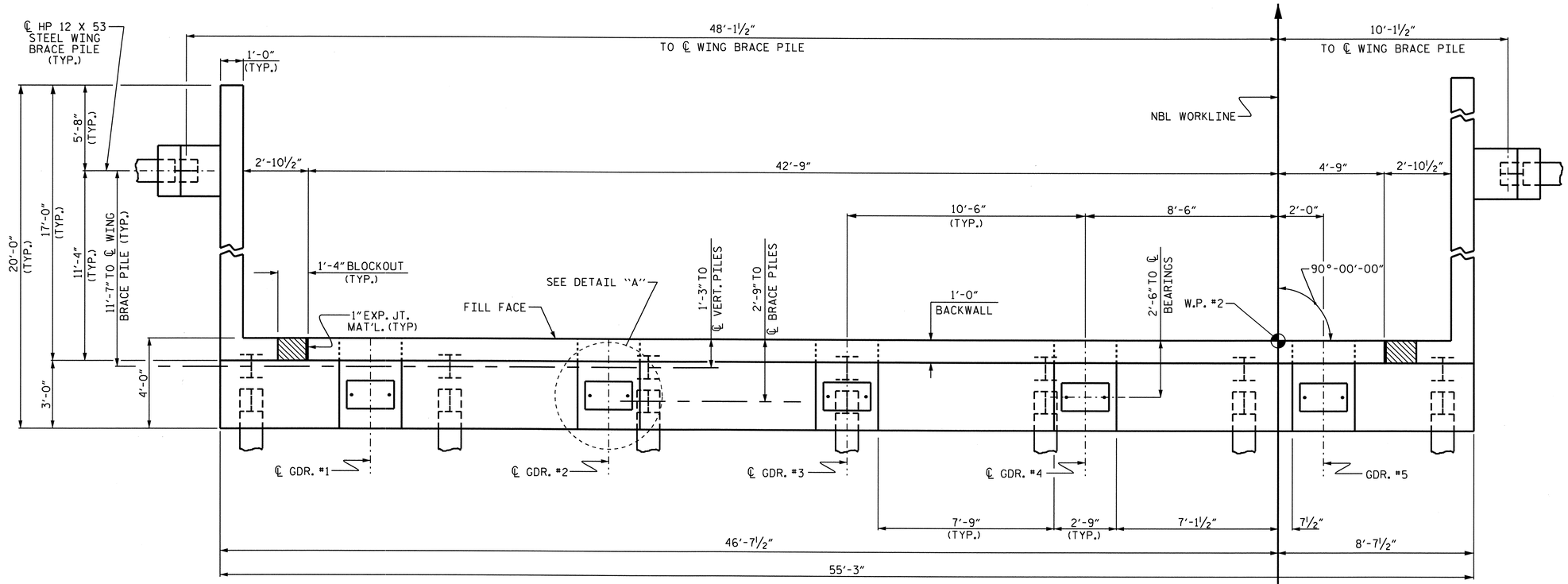

PLAN

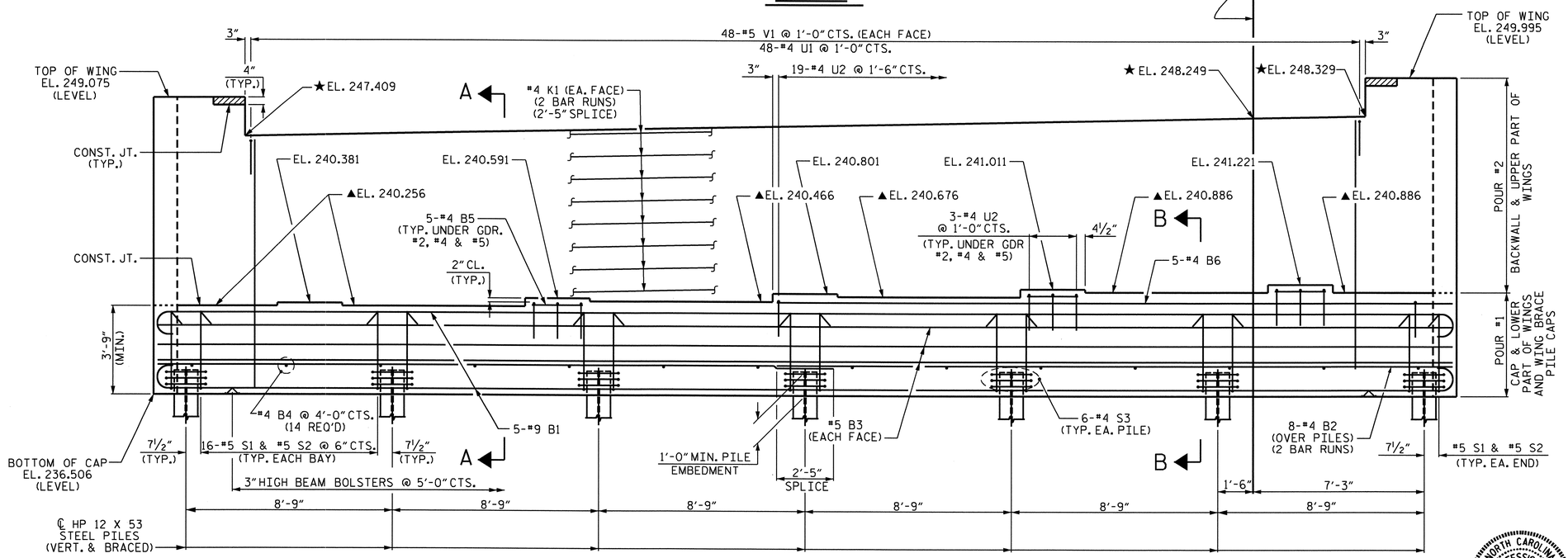

ELEVATION

(WING BRACE PILES ARE NOT SHOWN FOR CLARITY)

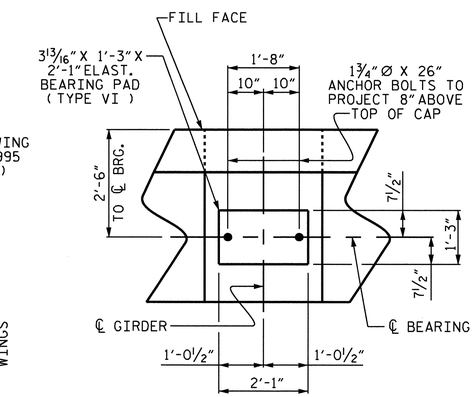

DETAIL "A"

(TYP. EA. GIRDER)

PROJECT NO. R-2417AA

LEE COUNTY

STATION: 52+08.00 -L-

SHEET 1 OF 3

STATE OF NORTH CAROLINA
DEPARTMENT OF TRANSPORTATION
RALEIGH

SUBSTRUCTURE

END BENT No. 2

(NBL)

NORTH CAROLINA PROFESSIONAL SEAL 24390 ENGINEER THEO J. BEACH

11/23/10

REVISIONS						SHEET NO.
NO.	BY:	DATE:	NO.	BY:	DATE:	S-64
1			3			TOTAL SHEETS
2			4			S-162

DRAWN BY : S.B. WILLIAMS DATE : 4-09
CHECKED BY : T. BANKOVICH DATE : 6-09

23-NOV-2010 15:41
R:\Structures\str2-L-overBuffaloCk(LtLane)\Sub_Draw\R2417AA_SD_Eb2.dgn
tbeach

STR. #2

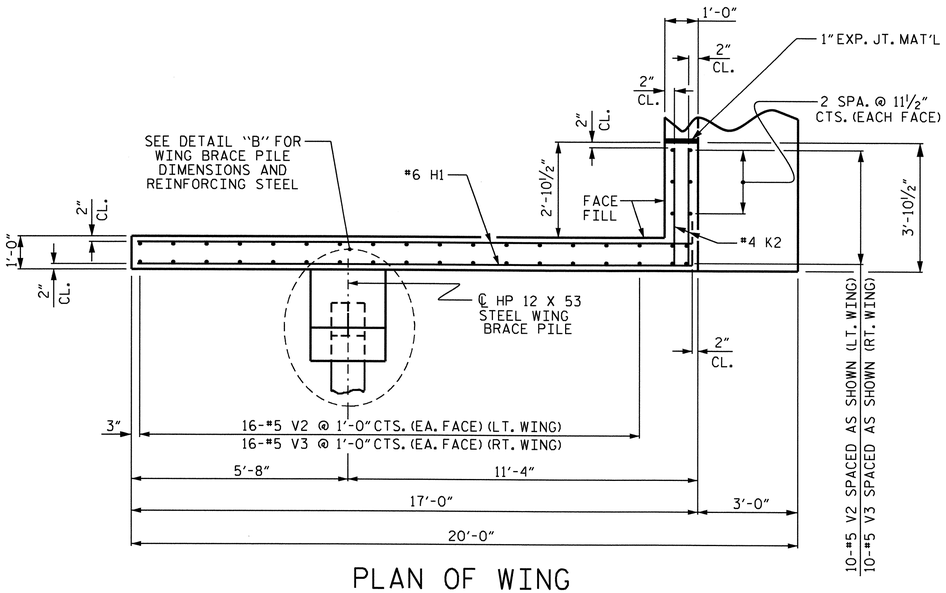

PLAN OF WING

(LEFT WING SHOWN, RIGHT WING SIMILAR)

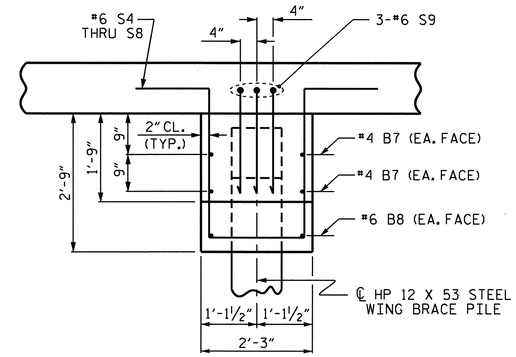

DETAIL "B"

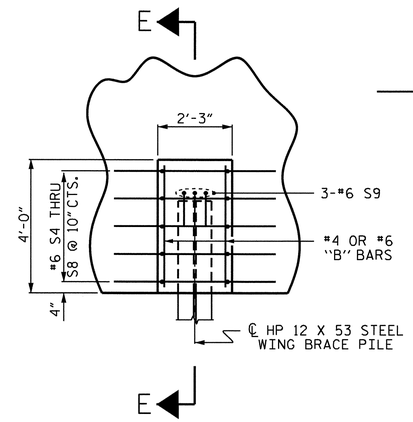

DETAIL "C"

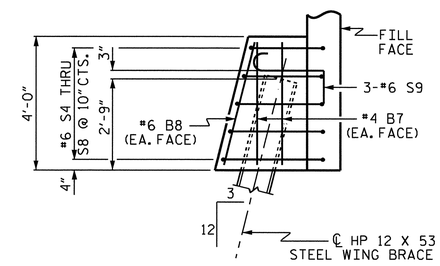

SECTION E-E

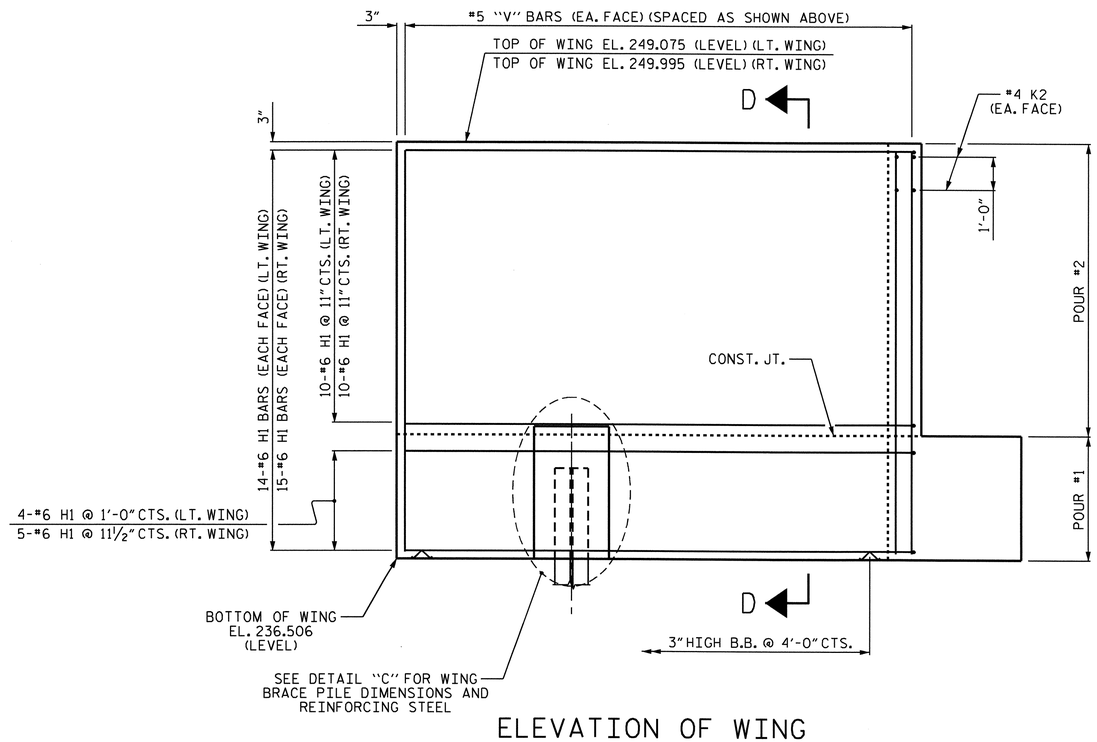

ELEVATION OF WING

(LEFT WING SHOWN, RIGHT WING SIMILAR)

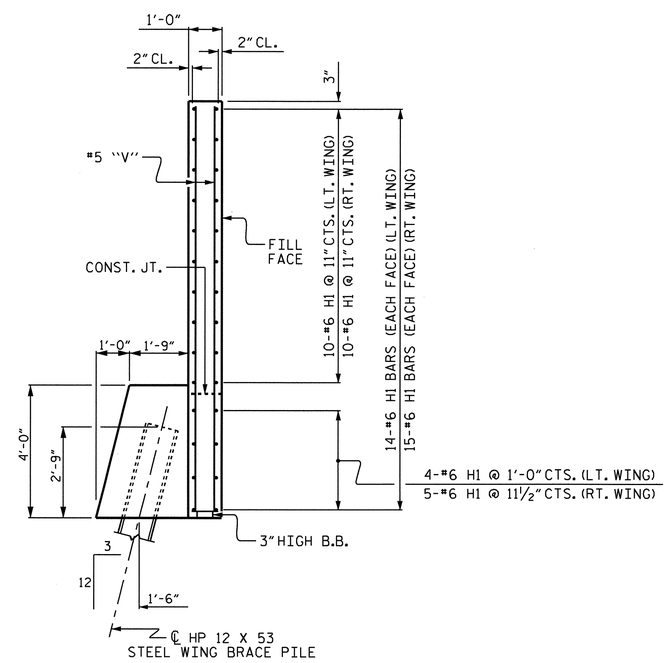

SECTION D-D

(LEFT WING SHOWN, RIGHT WING SIMILAR)

NORTH CAROLINA PROFESSIONAL SEAL 24390 ENGINEER THEO J. BEACH
11/23/10

PROJECT NO. R-2417AA
LEE COUNTY
STATION: 52+08.00 -L-

SHEET 2 OF 3

STATE OF NORTH CAROLINA
DEPARTMENT OF TRANSPORTATION
RALEIGH

SUBSTRUCTURE
END BENT No. 2

(NBL)

REVISIONS						SHEET NO.
NO.	BY:	DATE:	NO.	BY:	DATE:	S-65
1			3			TOTAL SHEETS
2			4			S-162

DRAWN BY : S.B. WILLIAMS DATE : 4-09
CHECKED BY : T. BANKOVICH DATE : 6-09

19-OCT-2010 09:42
R:\Structures\str2-L-overBuffaloCk(LtLane)\Sub_Draw\R2417AA_SD_Eb2.dgn
sbwilliams

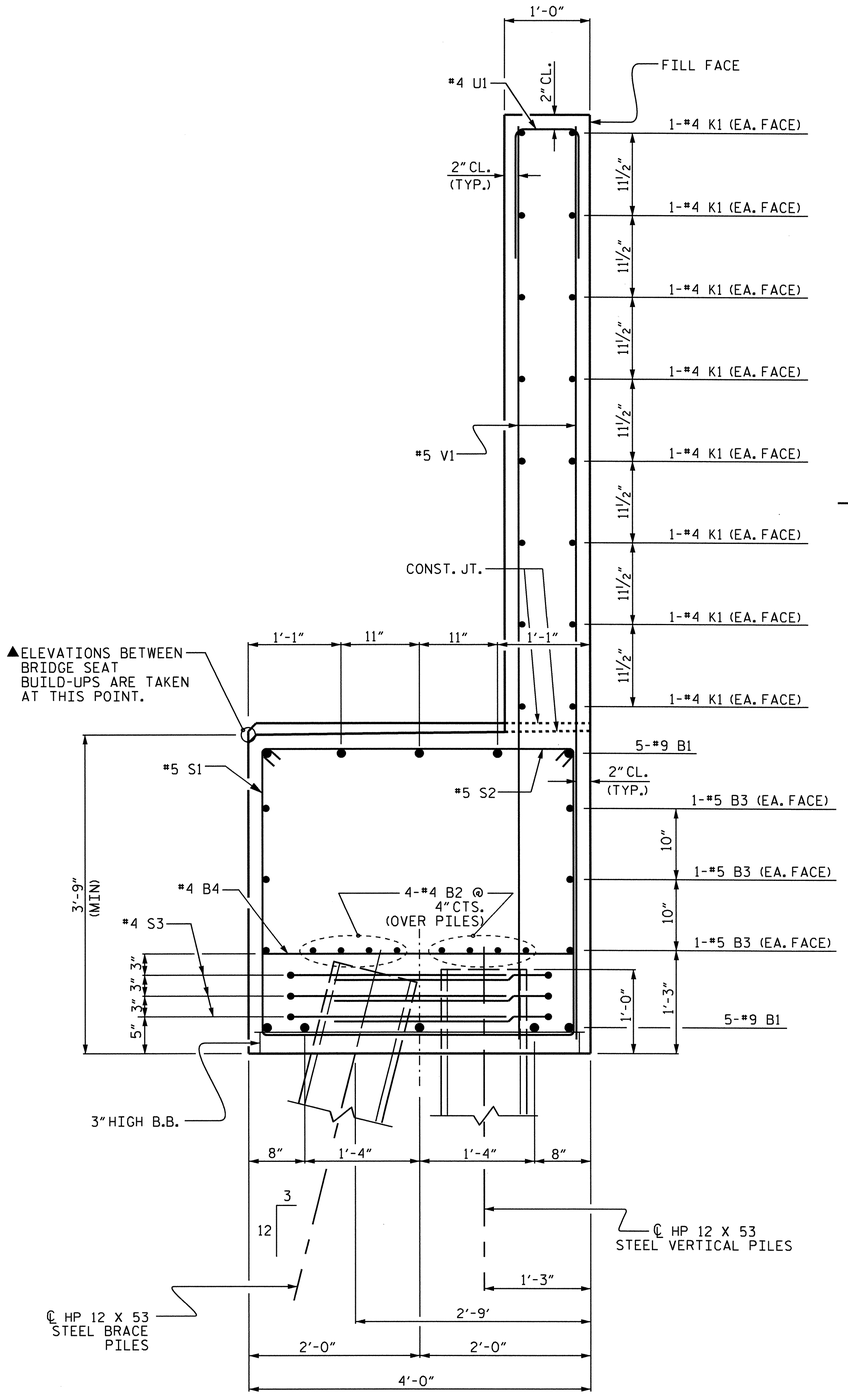

SECTION A-A

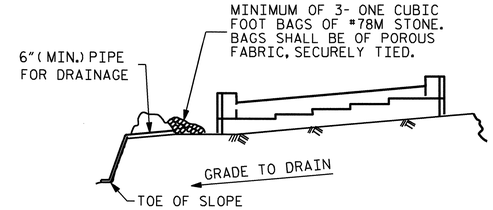

BAGGED STONE AND PIPE SHALL BE PLACED IMMEDIATELY AFTER COMPLETION OF END BENT EXCAVATION. PIPE MAY BE EITHER CONCRETE, CORRUGATED STEEL, CORRUGATED ALUMINUM ALLOY, OR CORRUGATED PLASTIC. PERFORATED PIPE WILL NOT BE ALLOWED.

BAGGED STONE SHALL REMAIN IN PLACE UNTIL THE ENGINEER DIRECTS THAT IT BE REMOVED. THE CONTRACTOR SHALL REMOVE AND DISPOSE OF SILT ACCUMULATIONS AT BAGGED STONE WHEN SO DIRECTED BY THE ENGINEER. BAGS SHALL BE REMOVED AND REPLACED WHENEVER THE ENGINEER DETERMINES THAT THEY HAVE DETERIORATED AND LOST THEIR EFFECTIVENESS.

NO SEPARATE PAYMENT WILL BE MADE FOR THIS WORK AND THE ENTIRE COST OF THIS WORK SHALL BE INCLUDED IN THE UNIT CONTRACT PRICE BID FOR THE SEVERAL PAY ITEMS.

TEMPORARY DRAINAGE AT END BENT

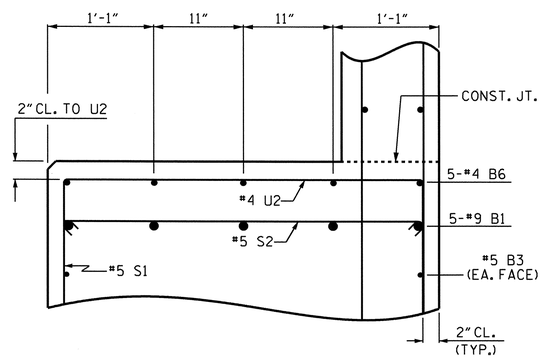

PARTIAL SECTION B-B

NOTES:

STIRRUPS AND U2 BARS IN CAP MAY BE SHIFTED AS NECESSARY TO CLEAR ANCHOR BOLTS.

BACKWALL SHALL BE PLACED BEFORE APPLYING THE EPOXY PROTECTIVE COATING.

THE TOP SURFACE OF THE CAP EXCEPT THE BRIDGE SEAT BUILDUPS SHALL BE SLOPED TRANSVERSELY FROM THE FILL FACE TO THE BACK FACE AT THE RATE OF 2%.

THE CONTRACTOR SHALL PROVIDE FOR INSTALLATION OF THE 4" DIAMETER DRAIN PIPE THROUGH THE WING WALL AS REQUIRED FOR REINFORCED BRIDGE APPROACH FILLS, SEE THE ROADWAY PLANS. REINFORCING STEEL IN THE WING WALL MAY BE SHIFTED AS NECESSARY TO CLEAR THE DRAIN PIPE.

#5 V1 BARS IN BACKWALL SHALL BE PLACED 2" FROM TOP OF BACKWALL.

THE CONCRETE IN THE SHADED AREA OF THE WING WALL SHALL BE POURED AFTER THE BARRIER RAIL IS CAST IF SLIP FORMING IS USED.

BAR TYPES

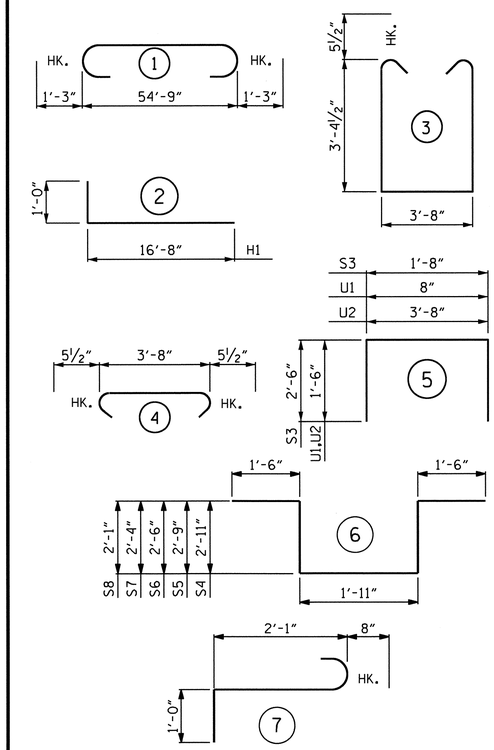

ALL BAR DIMENSIONS ARE OUT TO OUT

BILL OF MATERIAL

END BENT No. 2

BAR	NO.	SIZE	TYPE	LENGTH	WEIGHT
B1	10	#9	1	57'-3"	1947
B2	16	#4	STR	28'-8"	306
B3	6	#5	STR	54'-11"	344
B4	14	#4	STR	3'-8"	34
B5	15	#4	STR	2'-5"	24
B6	5	#4	STR	28'-6"	95
B7	8	#4	STR	3'-8"	20
B8	4	#6	STR	3'-9"	23
H1	58	#6	2	17'-8"	1539
K1	32	#4	STR	28'-8"	613
K2	8	#4	STR	3'-6"	19
S1	98	#5	3	11'-4"	1158
S2	98	#5	4	4'-7"	468
S3	42	#4	5	6'-8"	187
S4	2	#6	6	10'-9"	32
S5	2	#6	6	10'-5"	31
S6	2	#6	6	9'-11"	30
S7	2	#6	6	9'-7"	29
S8	2	#6	6	9'-1"	27
S9	6	#6	7	3'-9"	34
U1	48	#4	5	3'-8"	118
U2	28	#4	5	6'-8"	125
V1	96	#5	STR	10'-6"	1051
V2	42	#5	STR	12'-2'	533
V3	42	#5	STR	13'-1"	573
REINFORCING STEEL					9360 LBS.

CLASS A CONCRETE BREAKDOWN

POUR #1 (CAP & LOWER PART OF WINGS & WING PILE CAPS)	40.0 C.Y.
POUR #2 (BACKWALL & UPPER PART OF WINGS)	25.9 C.Y.
TOTAL CLASS A CONCRETE	65.9 C.Y.

HP 12 X 53 STEEL PILES
No. = 16 — 320 LIN. FT.

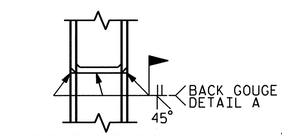

✳ PILE VERTICAL

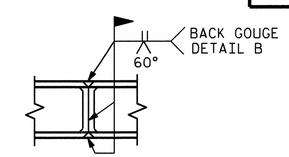

✳ PILE HORIZONTAL OR VERTICAL

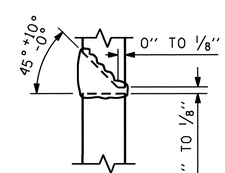

DETAIL A

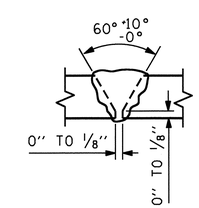

DETAIL B

✳ POSITION OF PILE DURING WELDING.

PILE SPLICE DETAILS

PROJECT NO. R-2417AA
LEE COUNTY
STATION: 52+08.00 -L-

SHEET 3 OF 3

STATE OF NORTH CAROLINA
DEPARTMENT OF TRANSPORTATION
RALEIGH

SUBSTRUCTURE

END BENT No. 2

(NBL)

NORTH CAROLINA PROFESSIONAL SEAL 24390 ENGINEER THEO J. BEACH
11/23/10

REVISIONS							SHEET NO.
NO.	BY:	DATE:	NO.	BY:	DATE:		S-66
1			3				TOTAL SHEETS
2			4				S-162

DRAWN BY : S.B. WILLIAMS DATE : 4-1-09
CHECKED BY : T. BANKOVICH DATE : 6-09

19-OCT-2010 09:40
R:\Structures\str2-L-overBuffaloCk(LtLane)\Sub_Draw\R2417AA_SD_Eb2.dgn
sbwilliams

STR. #2

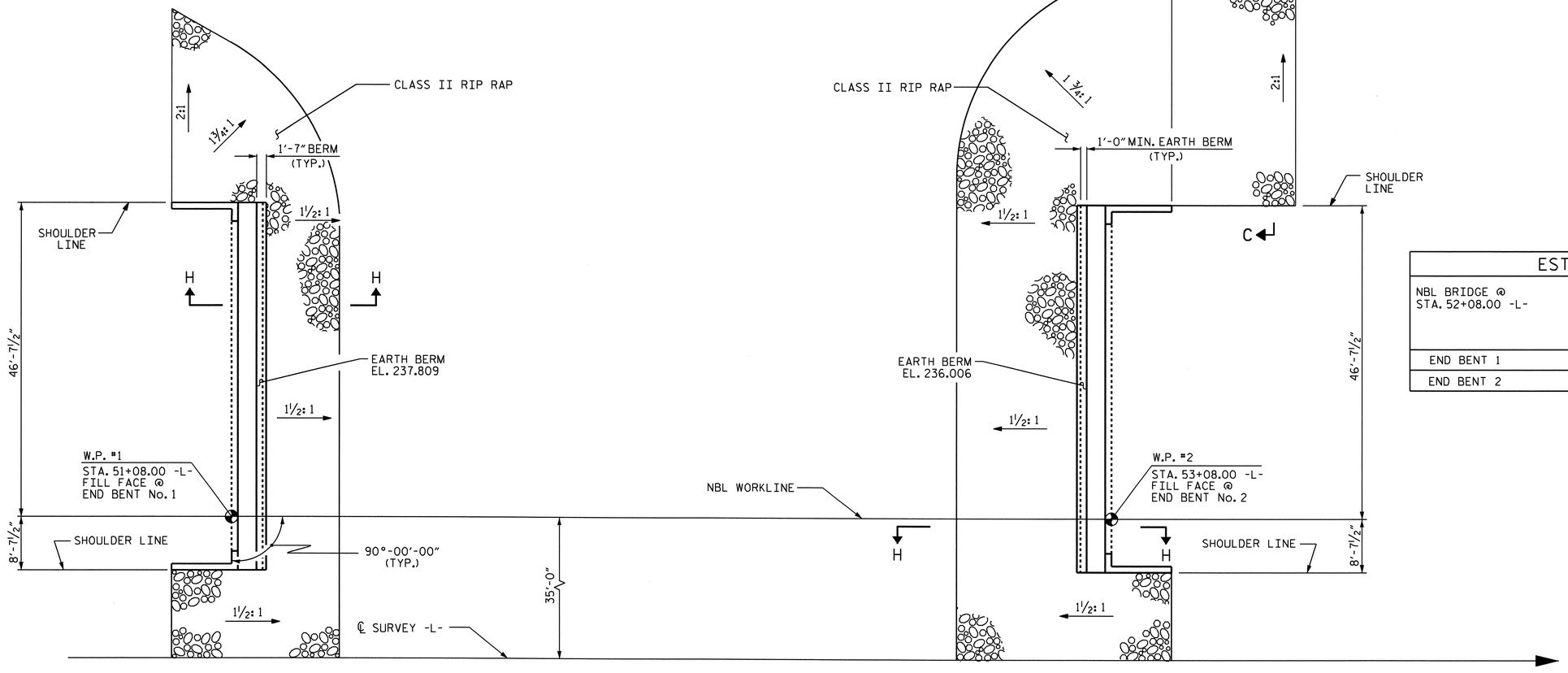

ESTIMATED QUANTITIES

NBL BRIDGE @ STA. 52+08.00 -L-	RIP RAP CLASS II (2'-0" THICK)	FILTER FABRIC FOR DRAINAGE
	TONS	SQUARE YARDS
END BENT 1	205	228
END BENT 2	515	572

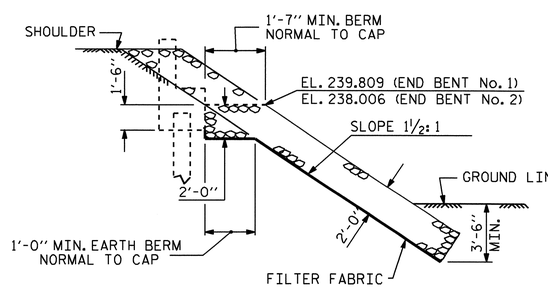

SECTION H-H

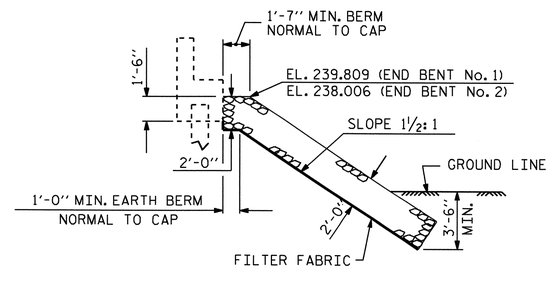

℄ SECTION
BERM RIP RAPPED

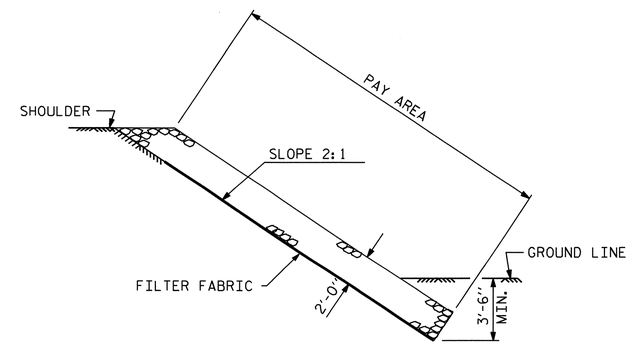

SECTION C-C

PROJECT NO. R-2417AA
LEE COUNTY
STATION: 52+08.00 -L-

STATE OF NORTH CAROLINA
DEPARTMENT OF TRANSPORTATION
RALEIGH

STANDARD
RIP RAP DETAILS
(NBL)

NORTH CAROLINA PROFESSIONAL SEAL 24390 ENGINEER THEO J. BEACH
11/23/10

REVISIONS						SHEET NO.
NO.	BY:	DATE:	NO.	BY:	DATE:	S-67
1			3			TOTAL SHEETS
2			4			162

ASSEMBLED BY : M. L. BROWN	DATE : 6-09	
CHECKED BY : S. B. WILLIAMS	DATE : 9-09	
DRAWN BY : FCJ 2/88	REV. 8/16/99	RWW/LES
CHECKED BY : ARB 8/88	REV. 10/17/00	RWW/LES
	REV. 5/1/06	TLA/GM

19-OCT-2010 09:39
R:\Structures\str2-L-overBuffaloCk(LtLane)\Misc_draw\R-2417AA_sd_RR.dgn
sbwilliams

STR. #2

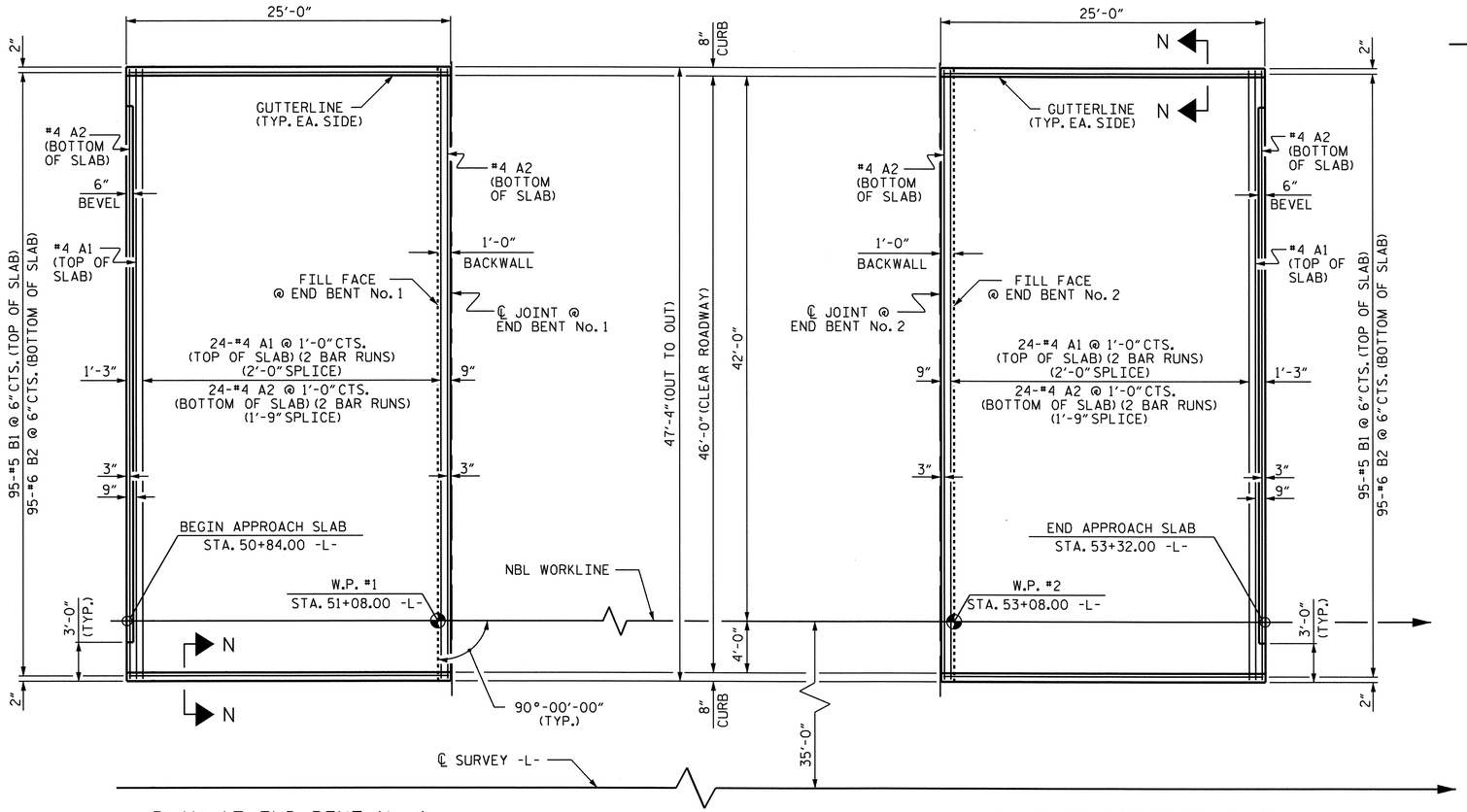

PLAN AT END BENT No. 1

PLAN AT END BENT No. 2

PLAN OF APPROACH SLABS

NOTES:

APPROACH SLAB SHALL NOT BE CONSTRUCTED PRIOR TO COMPLETION OF THE BRIDGE DECK.

FOR APPROACH SLAB @ END BENT No. 1:
FOR BRIDGE APPROACH FILL @ END BENT No. 1 INCLUDING FABRIC, 4" Ø DRAINAGE PIPE AND #78M STONE BACKFILL, SEE ROADWAY PLANS.

FABRIC SHALL BE TYPE 1 ENGINEERING FABRIC IN ACCORDANCE WITH THE STANDARD SPECIFICATIONS SECTION 1056.

#78 STONE BACKFILL (CLASS V SELECT MATERIAL) SHALL BE IN ACCORDANCE WITH STANDARD SPECIFICATIONS SECTION 1016.

#78 STONE BACKFILL IS TO BE CONTINUOUS ALONG FILL FACE OF BACKWALL FROM OUTSIDE EDGE TO OUTSIDE EDGE OF APPROACH SLAB.

FOR THE 4" Ø DRAINAGE PIPE OUTLET(S), SEE ROADWAY STANDARD DRAWINGS.

FOR REINFORCED BRIDGE APPROACH FILL @ END BENT No. 2 INCLUDING FABRIC, IMPERMEABLE GEOMEMBRANE, 4" Ø DRAINAGE PIPE, #78M STONE, AND SELECT MATERIAL, SEE ROADWAY PLANS.

AREA BETWEEN THE WINGWALL AND APPROACH SLAB SHALL BE GRADED TO DRAIN THE WATER AWAY FROM THE FILL FACE OF THE BRIDGE AND SHALL BE PAVED. SEE ROADWAY PLANS.

THE 6" COMP. A.B.C. SHALL BE FLUSH WITH THE ROADWAY END OF THE APPROACH SLAB AND SHALL EXTEND 1'-0" OUTSIDE EACH EDGE OF THE APPROACH SLAB.

THE CONTRACTOR MAY USE 4" TYPE B-25.0B ASPHALT CONCRETE BASE COURSE IN LIEU OF 6" COMP. A.B.C. IF THIS OPTION IS USED, THE BASE COURSE SHALL BE FLUSH WITH THE ROADWAY END OF THE APPROACH SLAB, AND THE WIDTH SHALL BE THE SAME AS THAT OF THE APPROACH SLAB.

THE CONTRACTOR MAY USE 5" CLASS "A" CONCRETE BASE IN LIEU OF 6" COMP. A.B.C. IF THIS OPTION IS USED, THE CONCRETE BASE SHALL BE FLUSH WITH THE ROADWAY END OF THE APPROACH SLAB, AND THE WIDTH SHALL BE THE SAME AS THAT OF THE APPROACH SLAB. THE CONCRETE SHALL BE FINISHED TO A SMOOTH SURFACE AND A LAYER OF 30 LB ROOFING FELT SHALL BE PLACED BETWEEN THE CONCRETE BASE AND THE APPROACH SLAB TO PREVENT BOND. THE APPROACH SLAB SHALL NOT BE CAST UNTIL THE CONCRETE BASE HAS REACHED AN AGE OF THREE CURING DAYS.

FOR EVAZOTE JOINT SEALS, SEE SPECIAL PROVISIONS.

THE NOMINAL UNCOMPRESSED SEAL WIDTH OF THE EVAZOTE JOINT SEAL SHALL BE 3 1/8".

FOR ELASTOMERIC CONCRETE, SEE SPECIAL PROVISIONS.

BILL OF MATERIAL

APPROACH SLAB AT EB No. 1

BAR	NO.	SIZE	TYPE	LENGTH	WEIGHT
* A1	50	#4	STR	24'-6"	818
A2	52	#4	STR	24'-5"	848
* B1	95	#5	STR	23'-9"	2353
B2	95	#6	STR	24'-8"	3520
REINFORCING STEEL				LBS.	4368
* EPOXY COATED REINFORCING STEEL				LBS.	3171
CLASS AA CONCRETE				C. Y.	44.6

APPROACH SLAB AT EB No. 2

BAR	NO.	SIZE	TYPE	LENGTH	WEIGHT
* A1	50	#4	STR	24'-6"	818
A2	52	#4	STR	24'-5"	848
* B1	95	#5	STR	23'-9"	2353
B2	95	#6	STR	24'-8"	3520
REINFORCING STEEL				LBS.	4368
* EPOXY COATED REINFORCING STEEL				LBS.	3171
CLASS AA CONCRETE				C. Y.	44.6

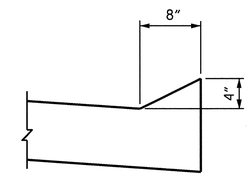

SECTION N-N

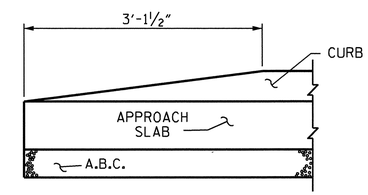

END OF CURB WITHOUT SHOULDER BERM GUTTER

CURB DETAILS

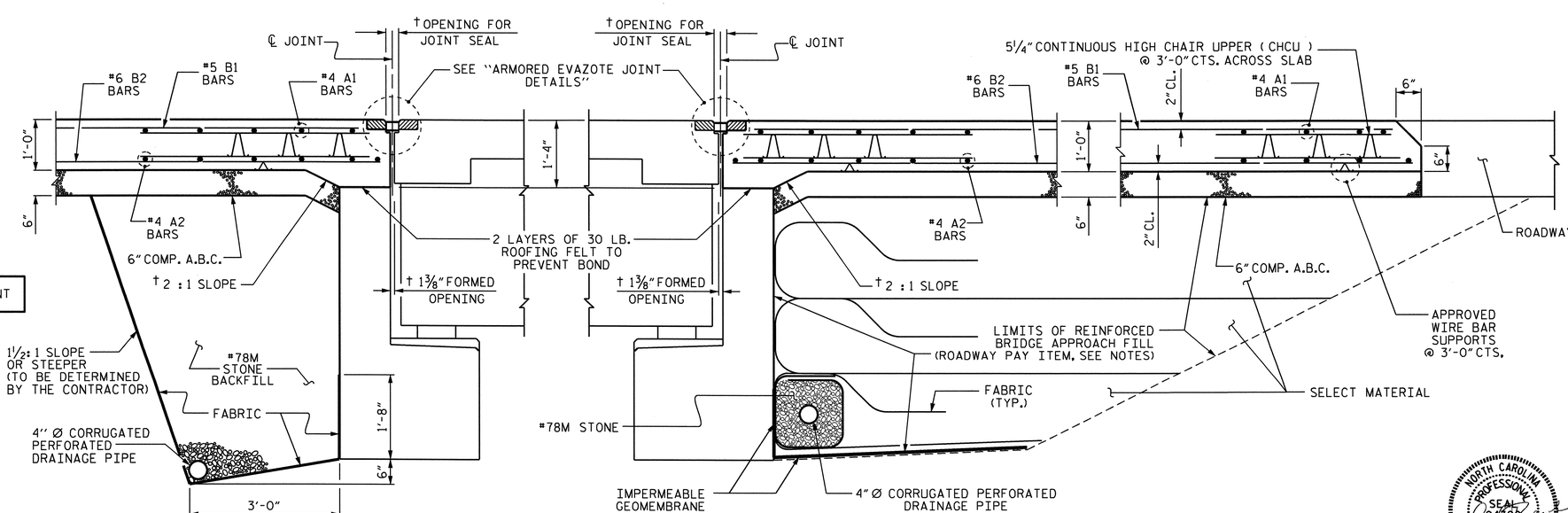

PARTIAL SECTION THRU SLAB

@ END BENT No. 1

SECTION THRU SLAB

@ END BENT No. 2

PROJECT NO. R-2417AA

LEE COUNTY

STATION: 52+08.00 -L-

SHEET 1 OF 2

STATE OF NORTH CAROLINA
DEPARTMENT OF TRANSPORTATION
RALEIGH

STANDARD

BRIDGE APPROACH SLAB FOR FLEXIBLE PAVEMENT

(NBL)

NORTH CAROLINA PROFESSIONAL SEAL 24590 ENGINEER THEO J. BEACH 11/23/10

ASSEMBLED BY : M.L. BROWN	DATE : 6/09		
CHECKED BY : S.B. WILLIAMS	DATE : 9/09		
DRAWN BY : EEM 3/95	REV. 7/10/01	LES/RDR	
CHECKED BY : VAP 3/95	REV. 5/17/03R	RWW/JTE	
	REV. 5/1/06	TLA/GM	

REVISIONS							SHEET NO.
NO.	BY:	DATE:	NO.	BY:	DATE:		S-68
1			3				TOTAL SHEETS
2			4				162

STR. #2

19-OCT-2010 09:37
R:\Structures\str2-L-overBuffaloCk(LtLane)\Misc_draw\R-2417AA_sd_AS.dgn
sbwilliams

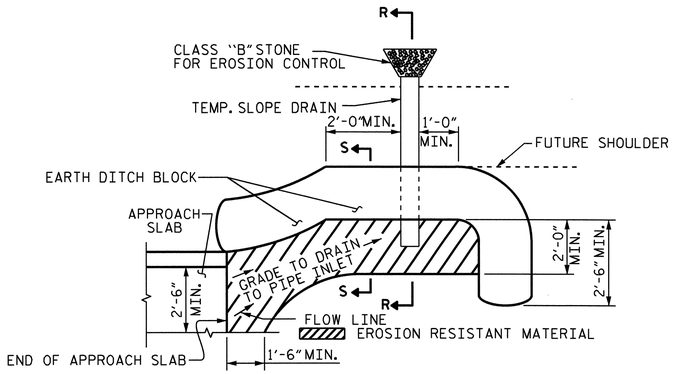

NOTE: IMMEDIATELY AFTER THE CONSTRUCTION OF THE APPROACH SLAB, THE CONTRACTOR SHALL PROVIDE TEMPORARY BERM AND SLOPE DRAIN. CONTRACTOR SHALL GRADE TO PIPE INLET AND PROVIDE EROSION RESISTANT MATERIAL AS SHOWN. THE EROSION RESISTANT MATERIAL SHALL BE EITHER 1) ASPHALT PLANT MIX, TYPE 1 OR TYPE 2, MIN. 2" DEPTH, 2) EROSION CONTROL MAT, OR 3) CONCRETE, AS DIRECTED BY THE ENGINEER. THE SLOPE DRAIN SHALL CONSIST OF A NON-PERFORATED TEMPORARY DRAINAGE PIPE, 12 INCHES IN DIAMETER.

PLAN VIEW

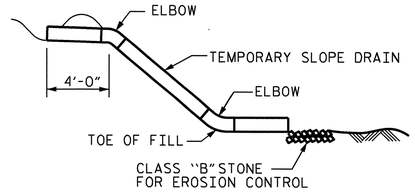

SECTION R-R

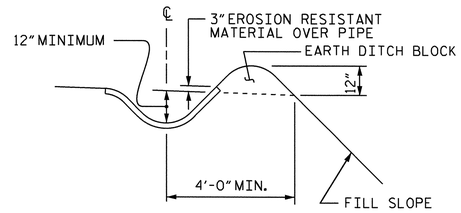

SECTION S-S

TEMPORARY BERM AND SLOPE DRAIN DETAILS

(TO BE USED WHEN SHOULDER BERM GUTTER IS REQUIRED)

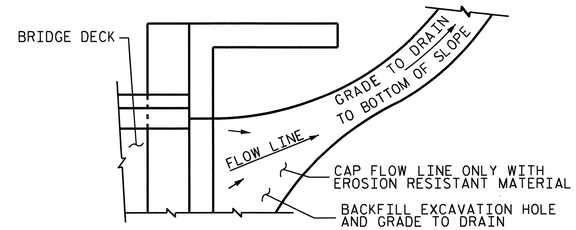

NOTE: IF THE APPROACH SLAB IS NOT CONSTRUCTED IMMEDIATELY AFTER THE BACKFILLING OF THE END BENT EXCAVATION, GRADE TO DRAIN TO THE BOTTOM OF THE SLOPE AND PROVIDE EROSION RESISTANT MATERIAL, SUCH AS FIBERGLASS ROVING OR AS DIRECTED BY THE ENGINEER TO PREVENT SOIL EROSION AND TO PROTECT THE AREA ADJACENT TO THE STRUCTURE. THE CONTRACTOR WILL BE REQUIRED TO REMOVE THESE MATERIALS PRIOR TO CONSTRUCTION OF THE APPROACH SLAB.

TEMPORARY DRAINAGE DETAIL

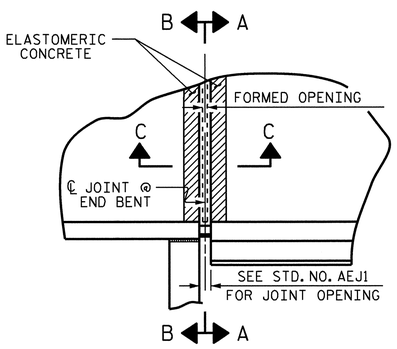

PLAN

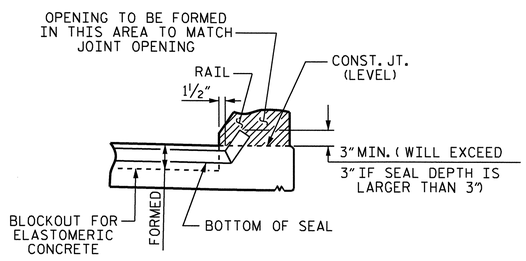

SECTION A-A

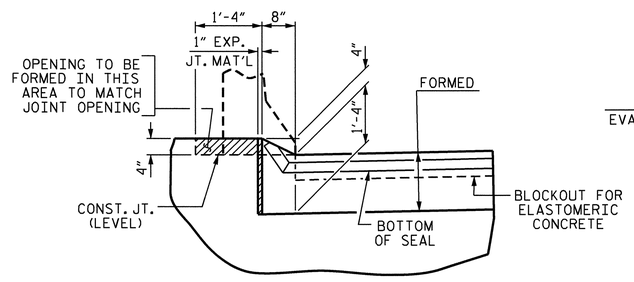

SECTION B-B

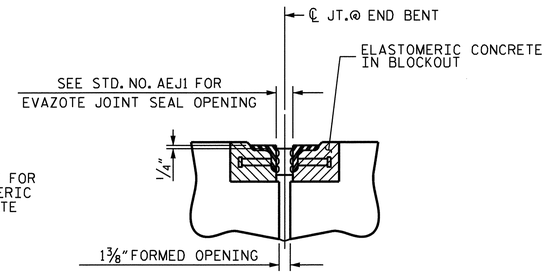

SECTION C-C
ARMORED EVAZOTE JOINT SEAL

NOTE: EVAZOTE JOINT SEAL TO BE CUT, HEAT WELDED AND TURNED UP PARALLEL TO SLOPED FACE OF THE BARRIER RAIL.

JOINT SEAL DETAILS @ END BENT

END BENT NO. 1 SHOWN, END BENT No. 2 SIMILAR

PROJECT NO. R-2417AA
LEE COUNTY
STATION: 52+08.00 -L-

SHEET 2 OF 2

STATE OF NORTH CAROLINA
DEPARTMENT OF TRANSPORTATION
RALEIGH

STANDARD

BRIDGE APPROACH SLAB DETAILS
(NBL)

NORTH CAROLINA PROFESSIONAL SEAL 28390 ENGINEER THEO J. BEACH
11/23/10

REVISIONS						SHEET NO.
NO.	BY:	DATE:	NO.	BY:	DATE:	S-69
1			3			TOTAL SHEETS
2			4			162

ASSEMBLED BY : M.L. BROWN		DATE :	6/09
CHECKED BY : S.B. WILLIAMS		DATE :	9/09
DRAWN BY : FCJ	11/88	REV. 10/17/00	RWW/LES
CHECKED BY : ARB	11/88	REV. 5/7/03	RWW/JTE
		REV. 5/1/06R	MAA/KMM

19-OCT-2010 09:37
R:\Structures\str2-L-overBuffaloCk(LtLane)\Misc_draw\R-2417AA_sd_AS.dgn
sbwilliams

STR. #2

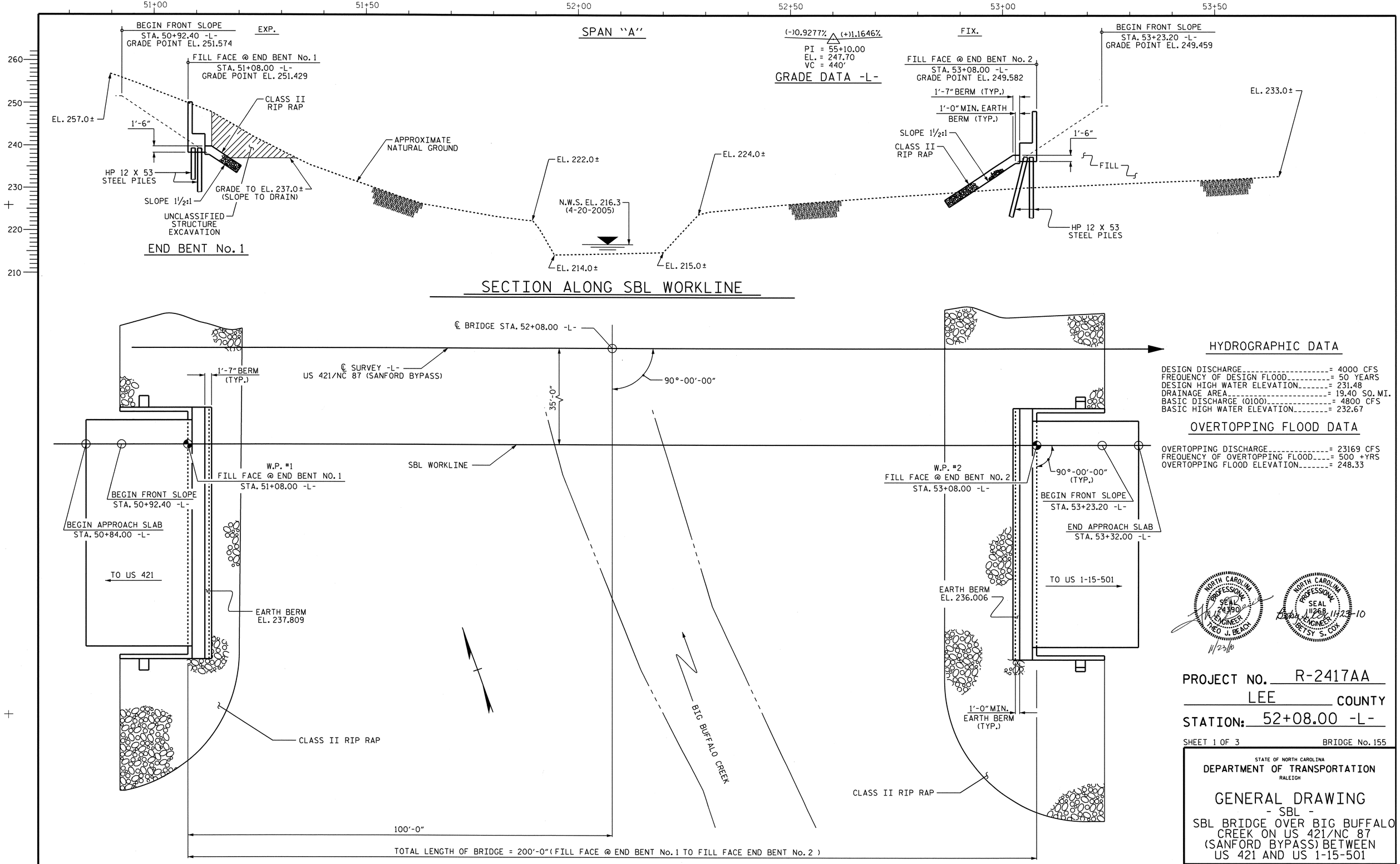

HYDROGRAPHIC DATA

DESIGN DISCHARGE = 4000 CFS
FREQUENCY OF DESIGN FLOOD = 50 YEARS
DESIGN HIGH WATER ELEVATION = 231.48
DRAINAGE AREA = 19.40 SQ. MI.
BASIC DISCHARGE (0100) = 4800 CFS
BASIC HIGH WATER ELEVATION = 232.67

OVERTOPPING FLOOD DATA

OVERTOPPING DISCHARGE = 23169 CFS
FREQUENCY OF OVERTOPPING FLOOD = 500 +YRS
OVERTOPPING FLOOD ELEVATION = 248.33

NORTH CAROLINA PROFESSIONAL SEAL 24390 ENGINEER THEO J. BEACH
11/23/10

NORTH CAROLINA PROFESSIONAL SEAL 11268 ENGINEER BETSY S. COX
11-23-10

PROJECT NO. R-2417AA
LEE COUNTY
STATION: 52+08.00 -L-

SHEET 1 OF 3 BRIDGE No. 155

STATE OF NORTH CAROLINA
DEPARTMENT OF TRANSPORTATION
RALEIGH

GENERAL DRAWING
- SBL -
SBL BRIDGE OVER BIG BUFFALO CREEK ON US 421/NC 87 (SANFORD BYPASS) BETWEEN US 421 AND US 1-15-501

REVISIONS						SHEET NO.
NO.	BY:	DATE:	NO.	BY:	DATE:	S-83
1			3			TOTAL SHEETS
2			4			162

DRAWN BY : M. L. BROWN DATE : 04-10
CHECKED BY : T. J. BEACH DATE : 04-10

23-NOV-2010 15:42
R:\Structures\str3-L-overBuffaloCk(RtLane)\GeneralDrawing\R-2417AA_sd_GD.dgn
tbeach

STR. #3

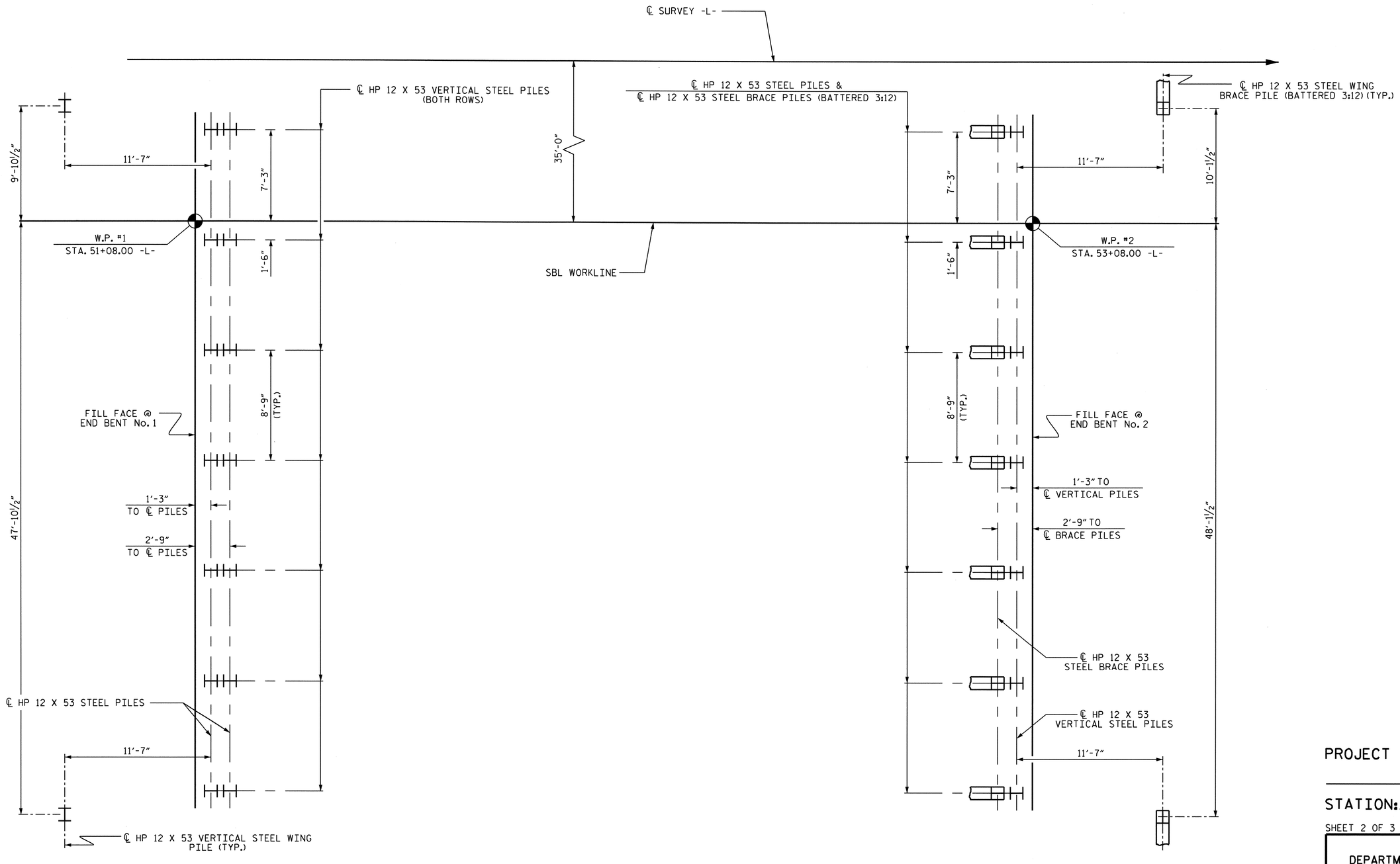

FOUNDATION LAYOUT

(DIMENSIONS LOCATING PILES ARE SHOWN TO THE PILE CENTERLINE AT THE BOTTOM OF CAP)
(DIMENSIONS LOCATING END BENT WING PILES ARE SHOWN TO THE PILE CENTERLINE AT THE BOTTOM OF THE WING ELEVATION)

PROJECT NO. R-2417AA
LEE COUNTY
STATION: 52+08.00 -L-

SHEET 2 OF 3

STATE OF NORTH CAROLINA
DEPARTMENT OF TRANSPORTATION
RALEIGH

GENERAL DRAWING
- SBL -
SBL BRIDGE OVER BIG BUFFALO CREEK ON US 421/NC 87 (SANFORD BYPASS) BETWEEN US 421 AND US 1-15-501

NORTH CAROLINA PROFESSIONAL SEAL 24390 ENGINEER THEO J. BEACH
11/23/10

REVISIONS						SHEET NO.
NO.	BY:	DATE:	NO.	BY:	DATE:	S-84
1			3			TOTAL SHEETS
2			4			162

DRAWN BY : M. L. BROWN DATE : 04-10
CHECKED BY : T. J. BEACH DATE : 04-10

19-OCT-2010 08:35
R:\Structures\str3-L-overBuffaloCk(RtLane)\GeneralDrawing\R-2417AA_sd_GD.dgn
sbwilliams

STR. #3

BENCHMARK: BM #2 RR SPIKE IN BASE OF 15" PINE TREE 251.37' RIGHT OF STA. 41+75.05 -L-, ELEV. 266.96

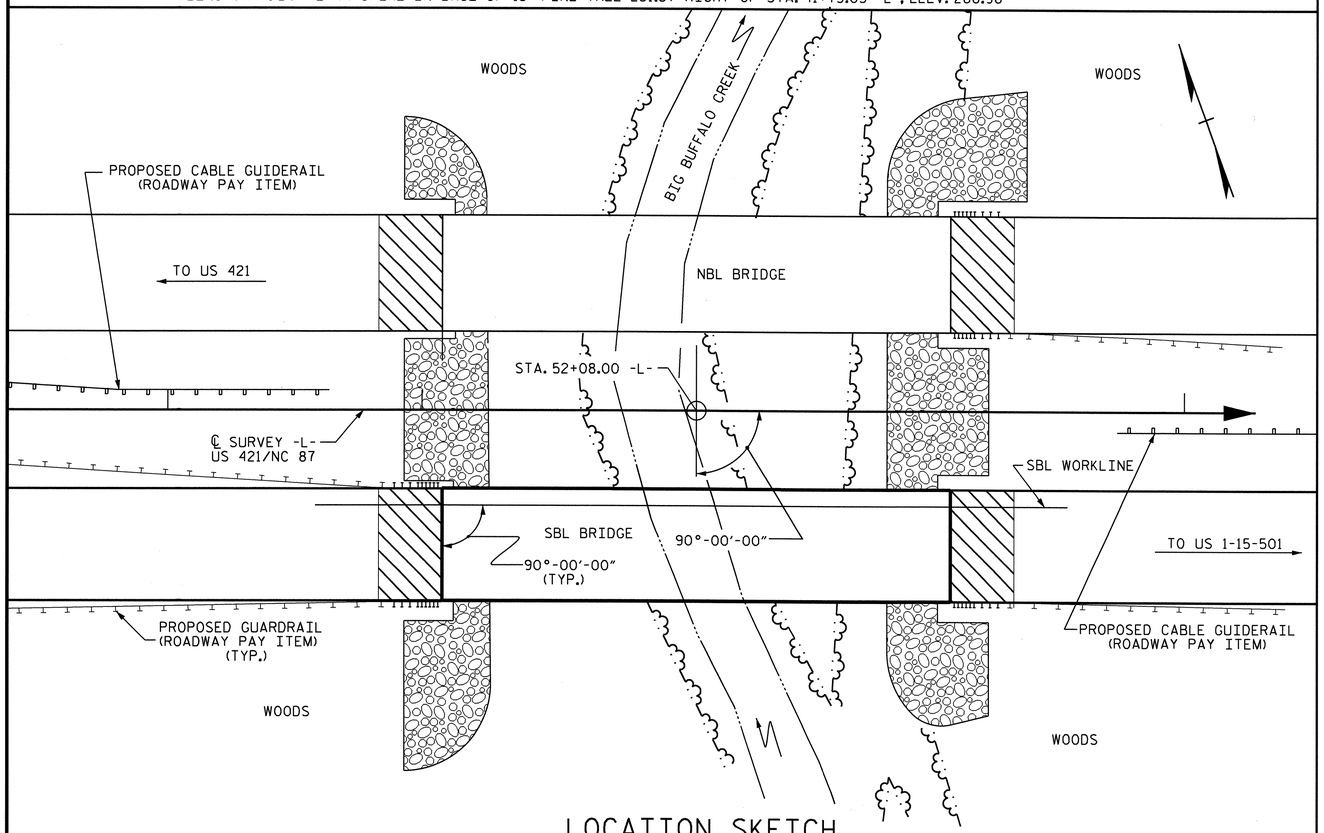

LOCATION SKETCH

NOTE: FOR UTILITY INFORMATION, SEE UTILITY PLANS AND SPECIAL PROVISIONS.

NOTES:

ASSUMED LIVE LOAD = HS 20 OR ALTERNATE LOADING, EXCEPT THAT THE STEEL PLATE GIRDERS HAVE BEEN DESIGNED FOR HS 25.

THIS BRIDGE HAS BEEN DESIGNED BY THE STRENGTH DESIGN METHOD AS SPECIFIED IN AASHTO STANDARD SPECIFICATIONS.

THIS BRIDGE HAS BEEN DESIGNED IN ACCORDANCE WITH THE REQUIREMENTS OF THE AASHTO STANDARD SPECIFICATIONS FOR SEISMIC DESIGN OF HIGHWAY BRIDGES FOR SEISMIC PERFORMANCE CATEGORY A.

FOR OTHER DESIGN DATA AND GENERAL NOTES, SEE SHEET SN.

FOR EROSION CONTROL MEASURES, SEE EROSION CONTROL PLANS.

ALL STRUCTURAL STEEL SHALL BE AASHTO M270 GRADE 50W AND PAINTED IN ACCORDANCE WITH SYSTEM 4 OF ARTICLE 442-7 OF THE STANDARD SPECIFICIATIONS UNLESS OTHERWISE NOTED ON THE PLANS.

REMOVABLE FORMS MAY BE USED IN LIEU OF METAL STAY-IN-PLACE FORMS IN ACCORDANCE WITH ARTICLE 420-3 OF THE STANDARD SPECIFICATIONS.

THE MATERIAL SHOWN IN THE CROSS-HATCHED AREA SHALL BE EXCAVATED FOR A DISTANCE OF 35 FT. LEFT AND 55 FT. RIGHT OF THE SBL WORKLINE AS DIRECTED BY THE ENGINEER. THIS WORK WILL BE PAID FOR AT THE CONTRACT LUMP SUM PRICE FOR UNCLASSIFIED STRUCTURE EXCAVATION. SEE SECTION 412 OF THE STANDARD SPECIFICATIONS.

THIS STRUCTURE HAS BEEN DESIGNED IN ACCORDANCE WITH HEC 18, "EVALUATING SCOUR AT BRIDGES", MAY, 2001.

THE CONTRACTOR SHALL PROVIDE INDEPENDENT ASSURANCE SAMPLES OF REINFORCING STEEL AS FOLLOWS: FOR PROJECTS REQUIRING UP TO 400 TONS OF REINFORCING STEEL, ONE 30 INCH SAMPLE OF EACH SIZE BAR USED, AND FOR PROJECTS REQUIRING OVER 400 TONS OF REINFORCING STEEL, TWO 30 INCH SAMPLES OF EACH SIZE BAR USED. THE BARS FROM WHICH THE SAMPLES ARE TAKEN MUST THEN BE SPLICED WITH REPLACEMENT BARS OF THE SIZE AND LENGTH OF THE SAMPLE, PLUS A MINIMUM LAP SPLICE OF THIRTY BAR DIAMETERS.

THE CONTRACTOR'S ATTENTION IS CALLED TO THE FACT THAT A 36" GRAVITY SEWER LINE CROSSES UNDER THE BRIDGE AT APPROXIMATELY STA. 52+74.00-L-. EXTREME CAUTION IS TO BE TAKEN TO NOT DISTURB THE SEWER LINE DURING CONSTRUCTION INCLUDING, BUT NOT LIMITED TO PLACEMENT OF TEMPORARY BENTS AND PLACING OF RIP RAP. FOR LOCATION OF SEWER LINE, SEE UTILITY PLANS.

FOR GROUT FOR STRUCTURES, SEE SPECIAL PROVISIONS.

FOR DIRECT TENSION INDICATORS, SEE SPECIAL PROVISIONS.

FOR CURING CONCRETE, SEE SPECIAL PROVISIONS.

FOR PLACING LOAD ON STRUCTURE MEMBERS, SEE SPECIAL PROVISIONS.

FOR SHIPPING STEEL STRUCTURAL MEMBERS, SEE SPECIAL PROVISIONS.

FOR HIGH STRENGTH BOLTS, SEE SPECIAL PROVISIONS.

NEEDLE BEAMS WILL NOT BE ALLOWED UNLESS OTHERWISE CALLED FOR ON THE PLANS OR APPROVED BY THE ENGINEER.

FOR SUBMITTAL OF WORKING DRAWINGS, SEE SPECIAL PROVISIONS.

FOR FALSEWORK AND FORMWORK, SEE SPECIAL PROVISIONS.

FOR CRANE SAFETY, SEE SPECIAL PROVISIONS.

FOR ADHESIVELY ANCHORED ANCHORED BOLTS OR DOWELS, SEE SPECIAL PROVISIONS.

FOR PILES, SEE SPECIAL PROVISIONS.

DRIVE PILES AT END BENT No. 1 TO A REQUIRED BEARING CAPACITY OF 120 TONS PER PILE. THE REQUIRED BEARING IS EQUAL TO THE ALLOWABLE BEARING CAPACITY WITH A MINIMUM FACTOR OF SAFETY OF TWO.

THE ALLOWABLE BEARING CAPACITY FOR PILES AT END BENT No. 1 IS 60 TONS PER PILE.

PILE EXCAVATION IS REQUIRED TO INSTALL PILES AT END BENT No. 1. EXCAVATE HOLES AT PILE LOCATIONS TO ELEVATION 233.0 FT. FOR PILE EXCAVATION, SEE SPECIAL PROVISIONS.

THE EXCAVATED HOLES SHOULD BE FILLED WITH CONCRETE THE VERY DAY THE HOLES ARE EXCAVATED.

DRIVE PILES AT END BENT No. 2 TO A REQUIRED BEARING CAPACITY OF 120 TONS PER PILE. THE REQUIRED BEARING IS EQUAL TO THE ALLOWABLE BEARING CAPACITY WITH A MINIMUM FACTOR OF SAFETY OF TWO.

THE ALLOWABLE BEARING CAPACITY FOR PILES AT END BENT No. 2 IS 60 TONS PER PILE.

FOR BLASTING ADJACENT TO HIGHWAY STRUCTURES, SEE ROCK BLASTING PROVISION, IF APPLICABLE, OR ARTICLE 410-11 OF THE STANDARD SPECIFICATIONS.

TOTAL BILL OF MATERIAL

SBL	PILE EXCAVATION NOT IN SOIL	UNCLASSIFIED STRUCTURE EXCAVATION	REINFORCED CONCRETE DECK SLAB	GROOVING BRIDGE FLOORS	CLASS A CONCRETE	BRIDGE APPROACH SLABS	REINFORCING STEEL	STRUCTURAL STEEL	HP 12 X 53 STEEL PILES		CONCRETE BARRIER RAIL	RIP RAP CLASS II (2'-0" THICK)	FILTER FABRIC FOR DRAINAGE	ELASTOMERIC BEARINGS	EVAZOTE JOINT SEALS
	LIN. FT.	LUMP SUM	SQ. FT.	SQ. FT.	CU. YDS.	LUMP SUM	LBS.	APPROX. LBS.	No.	LIN. FT.	LIN. FT.	TONS	SQ. YDS.	LUMP SUM	LUMP SUM
SUPERSTRUCTURE			9,746	10,538		LUMP SUM		584,700			395.77			LUMP SUM	LUMP SUM
END BENT No. 1	80.0				66.3		9,361		16	160		205	228		
END BENT No. 2					65.9		9,360		16	320		360	400		
TOTAL	80.0	LUMP SUM	9,746	10,538	132.2	LUMP SUM	18,721	584,700	32	480	395.77	565	628	LUMP SUM	LUMP SUM

PROJECT NO. R-2417AA
LEE COUNTY
STATION: 52+08.00 -L-

SHEET 3 OF 3

STATE OF NORTH CAROLINA
DEPARTMENT OF TRANSPORTATION
RALEIGH

GENERAL DRAWING
- SBL -
SBL BRIDGE OVER BIG BUFFALO CREEK ON US 421/NC 87 (SANFORD BYPASS) BETWEEN US 421 AND US 1-15-501

NORTH CAROLINA PROFESSIONAL SEAL 24390 ENGINEER THEO J. BEACH
11/23/10

REVISIONS						SHEET NO.
NO.	BY:	DATE:	NO.	BY:	DATE:	S-85
1			3			TOTAL SHEETS
2			4			162

DRAWN BY : M. L. BROWN DATE : 04-10
CHECKED BY : T. J. BEACH DATE : 04-10

24-NOV-2010 06:36
R:\Structures\str3-L-overBuffaloCk(RtLane)\GeneralDrawing\R-2417AA_sd_GD.dgn
tbeach

STR. #3

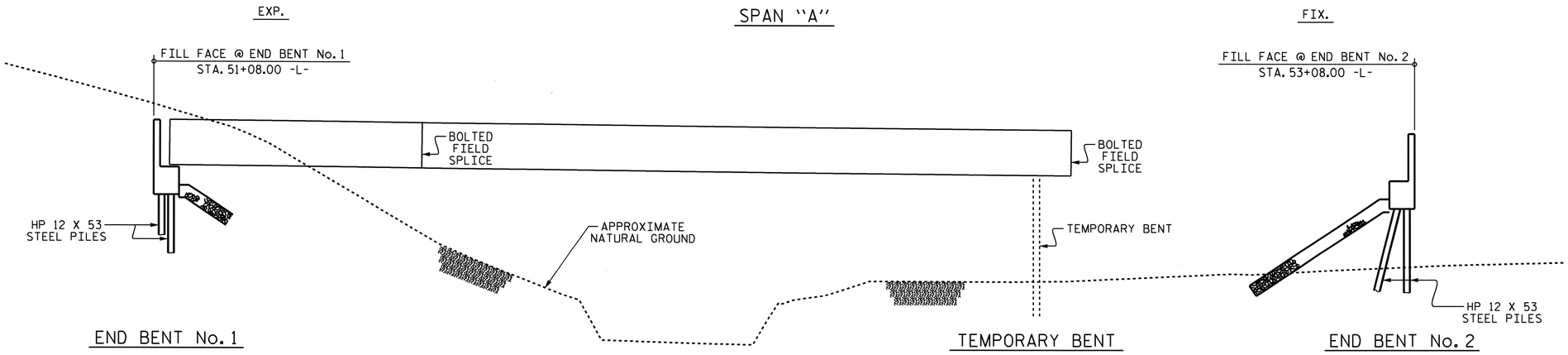

GIRDER ERECTION

NOTES:

ERECT A MINIMUM OF TWO GIRDERS WITH ALL DIAPHRAGMS/CROSSFRAMES BETWEEN THE GIRDERS IN PLACE AND THE BOLTS TIGHTENED PRIOR TO RELEASING THE GIRDERS.

ERECT EACH SUBSEQUENT GIRDER WITH DIAPHRAGMS/CROSSFRAMES CONNECTING TO THE ADJACENT PREVIOUSLY ERECTED GIRDER AND TIGHTEN ALL BOLTS BEFORE RELEASING THE GIRDER.

THE STRUCTURAL STEEL BE SUPPORTED DURING ERECTION IN ITS CAMBERED POSITION.

THE TEMPORARY BENT SHALL REMAIN IN PLACE UNTIL ALL DIAPHRAGMS/CROSSFRAMES ARE IN PLACE AND ALL HIGH STRENGTH BOLTS ARE TIGHTENED.

THE TEMPORARY BENT SHALL PROVIDE BEARING AT A CONNECTOR PLATE LOCATION. WHEN CONNECTOR PLATES ARE USED AS TEMPORARY BEARING STIFFENERS, DIAPHRAGMS MUST BE ATTACHED.

THE CONTRACTOR'S ERECTION PLANS SHALL INCLUDE A METHOD OF TEMPORARY BENT REMOVAL THAT WILL UNIFORMLY TRANSFER THE STRUCTURAL WEIGHT TO THE DIAPHRAGMS/CROSSFRAMES AND THE GIRDERS WILL REMAIN IN THE CAMBERED POSITIONS.

PLANS FOR TEMPORARY BENT ERECTION AND REMOVAL SHALL BE SUBMITTED TO THE ENGINEER FOR REVIEW.

THE CONTRACTOR IS RESPONSIBLE FOR DESIGNING THE TEMPORARY BENTS. THE DESIGNS SHALL BE COMPLETED BY A PROFESSIONAL ENGINEER REGISTERED IN THE STATE OF NORTH CAROLINA. THE CONTRACTOR SHALL SUBMIT SIGNED AND SEALED WORKING DRAWINGS AND CALCULATIONS FOR APPROVAL BY THE ENGINEER.

DURING THE GIRDER ERECTION PROCEDURE, THE CONTRACTOR IS RESPONSIBLE FOR PROVIDING TEMPORARY LATERAL BRACING AND OTHER MEANS OF SUPPORT, AS REQUIRED TO ENSURE STABILITY OF THE GIRDERS, AVOID UPLIFT OF THE GIRDERS AT THE TEMPORARY BENTS AND TO ENSURE PLUMBNESS OF THE GIRDERS IN THE FINAL CONDITION.

NO SEPARATE MEASUREMENT OR PAYMENT WILL BE MADE FOR PROVIDING THE TEMPORARY BENT. THE COST FOR ALL MATERIALS, EQUIPMENT, TOOLS, LABOR AND ANY INCIDENTALS NECESSARY TO PROVIDE THE TEMPORARY BENT SHALL BE CONSIDERED INCIDENTAL TO THE LUMP SUM BID PRICE FOR STRUCTURAL STEEL.

THE CONTRACTOR MAY SUBMIT AN ALTERNATE ERECTION METHOD TO THE ENGINEER FOR REVIEW AND APPROVAL.

PROJECT NO. R-2417AA
LEE COUNTY
STATION: 52+08.00 -L-

STATE OF NORTH CAROLINA
DEPARTMENT OF TRANSPORTATION
RALEIGH

GIRDER ERECTION DETAILS

(SBL)

NORTH CAROLINA PROFESSIONAL SEAL 24390 ENGINEER THEO J. BEACH
11/23/10

REVISIONS						SHEET NO.
NO.	BY:	DATE:	NO.	BY:	DATE:	S-86
1			3			TOTAL SHEETS
2			4			162

DRAWN BY : T. BANKOVICH DATE : 10-2010
CHECKED BY : T.J. BEACH DATE : 10-2010

23-NOV-2010 15:43
R:\Structures\str3-L-overBuffaloCk(RtLane)\GeneralDrawing\R-2417AA_str3_ERECT.dgn
tbeach

STR. #3

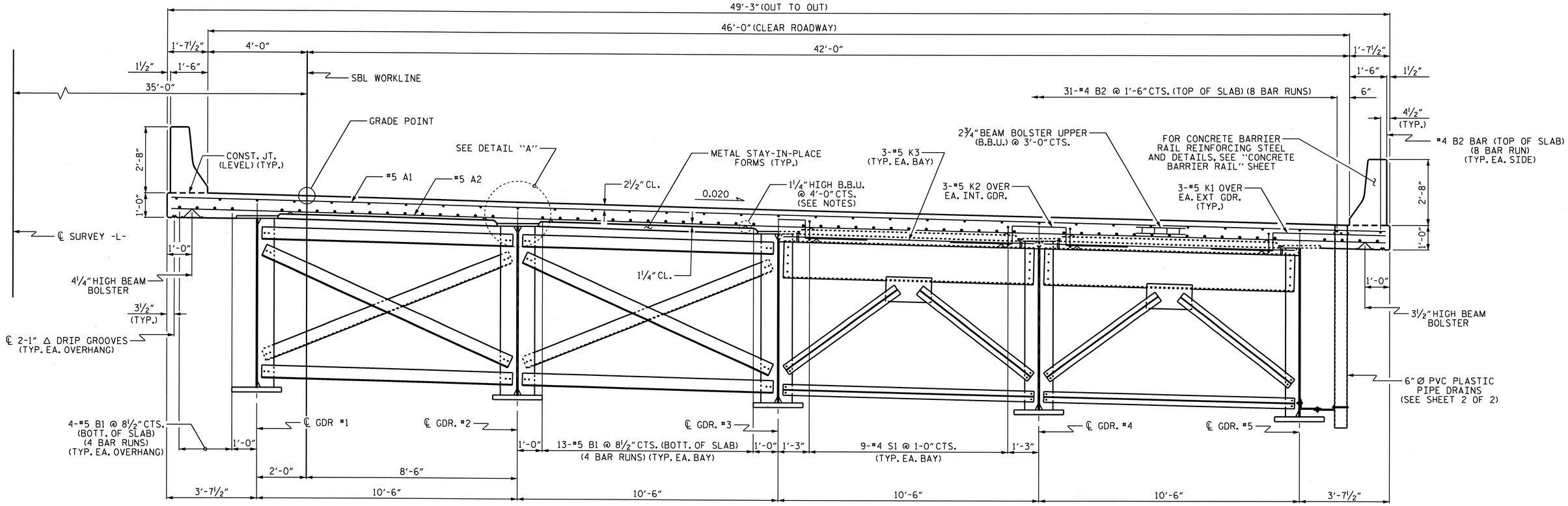

HALF TYPICAL SECTION
(SHOWING INTERMEDIATE DIAPHRAGMS)

HALF TYPICAL SECTION
(SHOWING END BENT DIAPHRAGMS)

NOTES:

PROVIDE 1¼" HIGH BEAM BOLSTERS UPPER AT 4'-0" CTS. ATOP THE METAL STAY-IN-PLACE FORMS TO SUPPORT THE BOTTOM MAT OF "A" BARS. WHEN USING REMOVABLE FORMS, PROVIDE CONTINUOUS HIGH CHAIRS FOR METAL DECK (C.H.C.M.) @ 4'-0" CTS. WITH A HEIGHT TO SUPPORT THE BOTTOM MAT OF "A" BARS A CLEAR DISTANCE OF 2½" ABOVE THE TOP OF THE REMOVABLE FORM.

PREVIOUSLY CAST CONCRETE IN THE SPAN SHALL HAVE ATTAINED A MINIMUM COMPRESSIVE STRENGTH OF 3,000 PSI BEFORE ADDITIONAL CONCRETE IS CAST IN THE SPAN.

DIRECTION OF CASTING DECK CONCRETE SHALL BE FROM THE FIXED BEARING END TOWARDS THE EXPANSION BEARING END OF THE SPAN.

BARRIER RAIL SHALL NOT BE CAST UNTIL ALL SLAB CONCRETE HAS BEEN CAST AND HAS REACHED A MINIMUM COMPRESSIVE STRENGTH OF 3,000 PSI.

THE CONTRACTOR MAY, WHEN NECESSARY, PROPOSE A SCHEME FOR AVOIDING INTERFERENCE BETWEEN METAL STAY-IN-PLACE FORM SUPPORTS OR FORMS AND GIRDER STIFFENERS OR CONNECTOR PLATES. THE PROPOSAL SHALL BE INDICATED, AS APPROPRIATE, ON EITHER THE STEEL WORKING DRAWINGS OR THE METAL STAY-IN-PLACE FORM WORKING DRAWINGS.

ALL REINFORCING STEEL IN BARRIER RAILS SHALL BE EPOXY COATED.

6" Ø PVC PLASTIC PIPE DRAINS ARE REQUIRED, FOR LOCATIONS AND DETAILS SEE SHEET 2 OF 2.

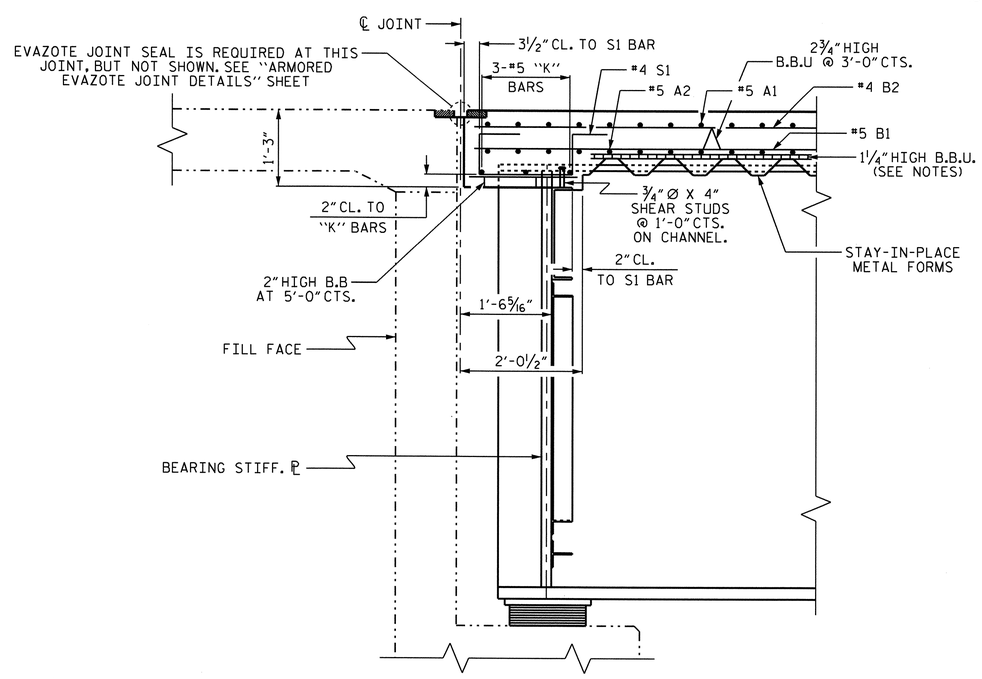

SECTION A-A
END BENT No. 1 SHOWN, END BENT No. 2 SIMILAR

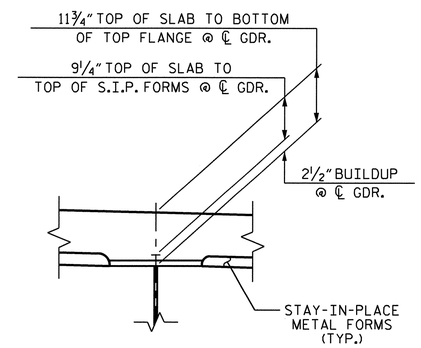

DETAIL "A"

PROJECT NO. R-2417AA
LEE COUNTY
STATION: 52+08.00 -L-

SHEET 1 OF 2

STATE OF NORTH CAROLINA
DEPARTMENT OF TRANSPORTATION
RALEIGH
SUPERSTRUCTURE

TYPICAL SECTION
(SBL)

NORTH CAROLINA PROFESSIONAL SEAL 24390 ENGINEER THEO J. BEACH 11/23/10

REVISIONS						SHEET NO.
NO.	BY:	DATE:	NO.	BY:	DATE:	S-87
1			3			TOTAL SHEETS
2			4			162

DRAWN BY : T. BANKOVICH DATE : 1-2009
CHECKED BY : S.B. WILLIAMS DATE : 2-2009

23-NOV-2010 16:14
R:\Structures\str3-L-overBuffaloCk(RtLane)\Superstructure\R-2417AA_str3_TS.dgn
tbeach

STR. #3

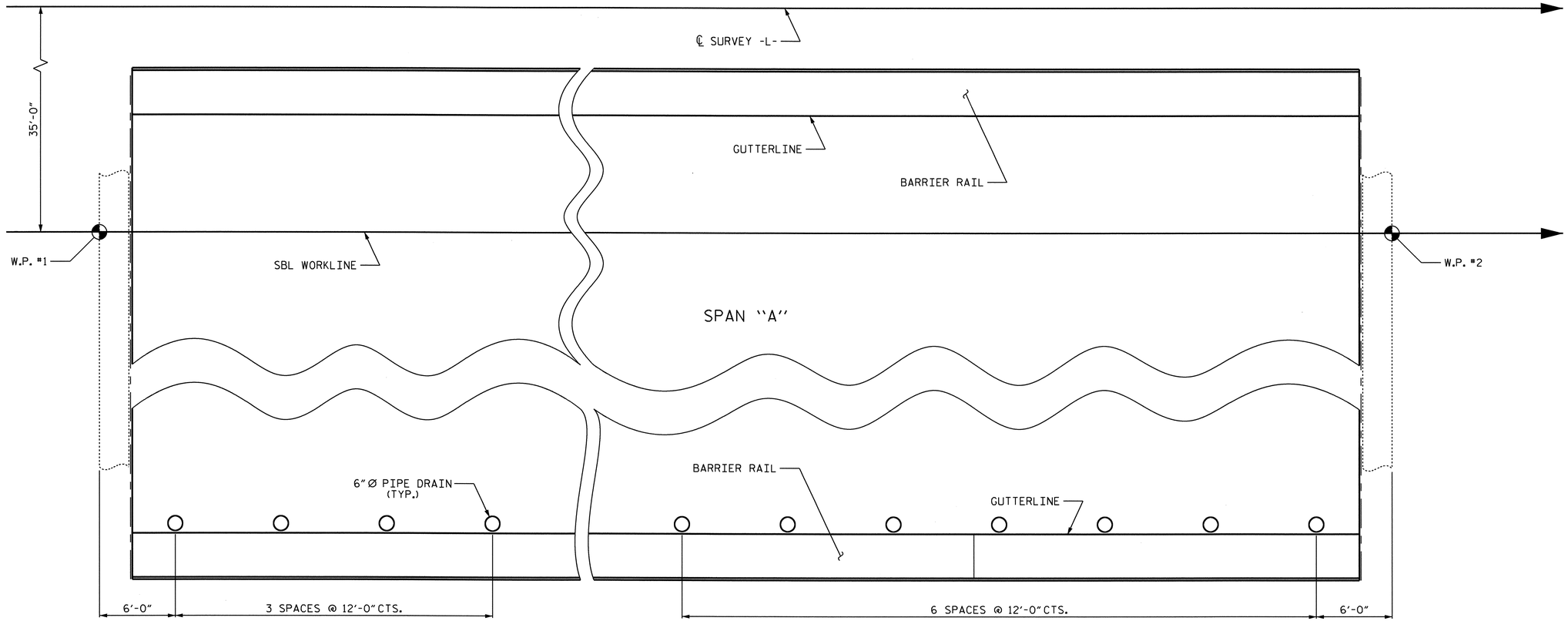

PIPE DRAIN LOCATION DETAIL

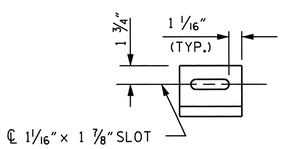

SECTION B-B

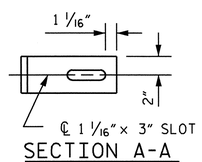

SECTION A-A

DRAIN NOTES:

COUPLING IN DRAIN PIPE WILL BE PERMITTED AS APPROVED BY THE ENGINEER.

TOP OF FLOOR DRAIN TO BE SET 3/8" BELOW SURFACE OF SLAB.

4 -1/2" SQUARE LUGS TO BE GLUED TO THE PVC PLASTIC PIPE AT EQUAL SPACES AROUND THE PIPE DRAIN APPROXIMATELY 4" FROM THE TOP OF THE PIPE.

BOLT SIZE TO BE SAME AS DIAPHRAGM AND CROSSFRAME CONNECTIONS. STAINLESS STEEL WORM DRIVE HOSE CLAMP SHALL BE COMMERCIAL QUALITY.

THE 6"Ø PVC PLASTIC PIPE AND FITTINGS SHALL BE SCHEDULE 40 AND CONFORM TO ASTM D1785.

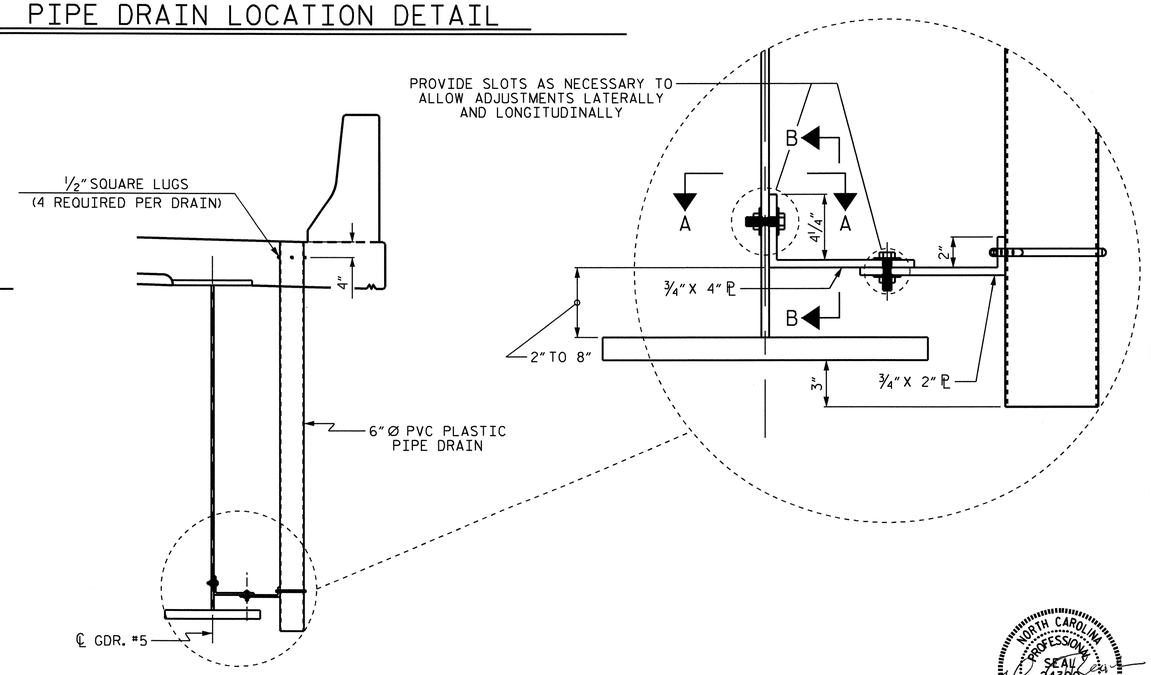

DRAIN CONNECTOR DETAIL

PROJECT NO. R-2417AA

LEE COUNTY

STATION: 52+08.00 -L-

SHEET 2 OF 2

STATE OF NORTH CAROLINA
DEPARTMENT OF TRANSPORTATION
RALEIGH

SUPERSTRUCTURE

TYPICAL SECTION
(SBL)

NORTH CAROLINA PROFESSIONAL SEAL 24390 ENGINEER THEO J. BEACH
11/23/10

REVISIONS						SHEET NO.
NO.	BY:	DATE:	NO.	BY:	DATE:	S-88
1			3			TOTAL SHEETS
2			4			162

DRAWN BY : T. BANKOVICH DATE : 1-2009
CHECKED BY : S.B. WILLIAMS DATE : 2-2009

19-OCT-2010 08:28
R:\Structures\str3-L-overBuffaloCk(RtLane)\Superstructure\R-2417AA_str3_TS.dgn
sbwilliams

STR. #3

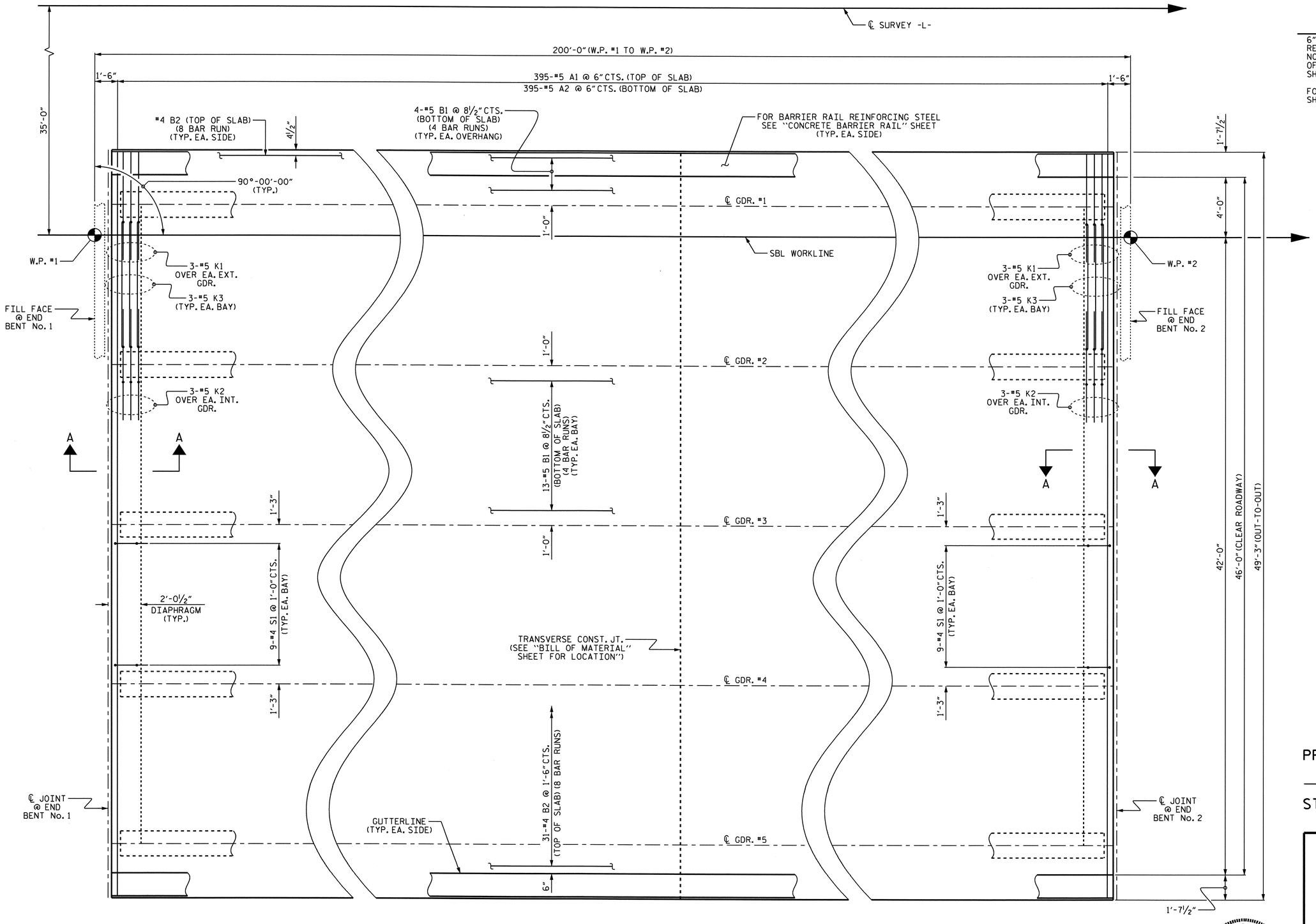

PLAN OF SPAN

NOTES:

6"Ø PVC PLASTIC PIPE DRAINS ARE REQUIRED AT RIGHT GUTTERLINE BUT ARE NOT SHOWN. FOR LOCATION AND DETAILS OF PIPE DRAINS SEE "TYPICAL SECTION", SHEET 2 OF 2.

FOR SECTION A-A, SEE "TYPICAL SECTION" SHEET 1 OF 2.

PROJECT NO. R-2417AA

LEE COUNTY

STATION: 52+08.00 -L-

STATE OF NORTH CAROLINA
DEPARTMENT OF TRANSPORTATION
RALEIGH

SUPERSTRUCTURE

PLAN OF SPAN
(SBL)

NORTH CAROLINA PROFESSIONAL SEAL 24390 ENGINEER THEO J. BEACH
11/23/10

REVISIONS						SHEET NO.
NO.	BY:	DATE:	NO.	BY:	DATE:	S-89
1			3			TOTAL SHEETS
2			4			162

DRAWN BY : T. BANKOVICH DATE : 1-2009
CHECKED BY : S.B. WILLIAMS DATE : 2-2009

19-OCT-2010 08:27
R:\Structures\str3-L-overBuffaloCk(RtLane)\Superstructure\R-2417AA_str3_PS.dgn
sbwilliams

STR. #3

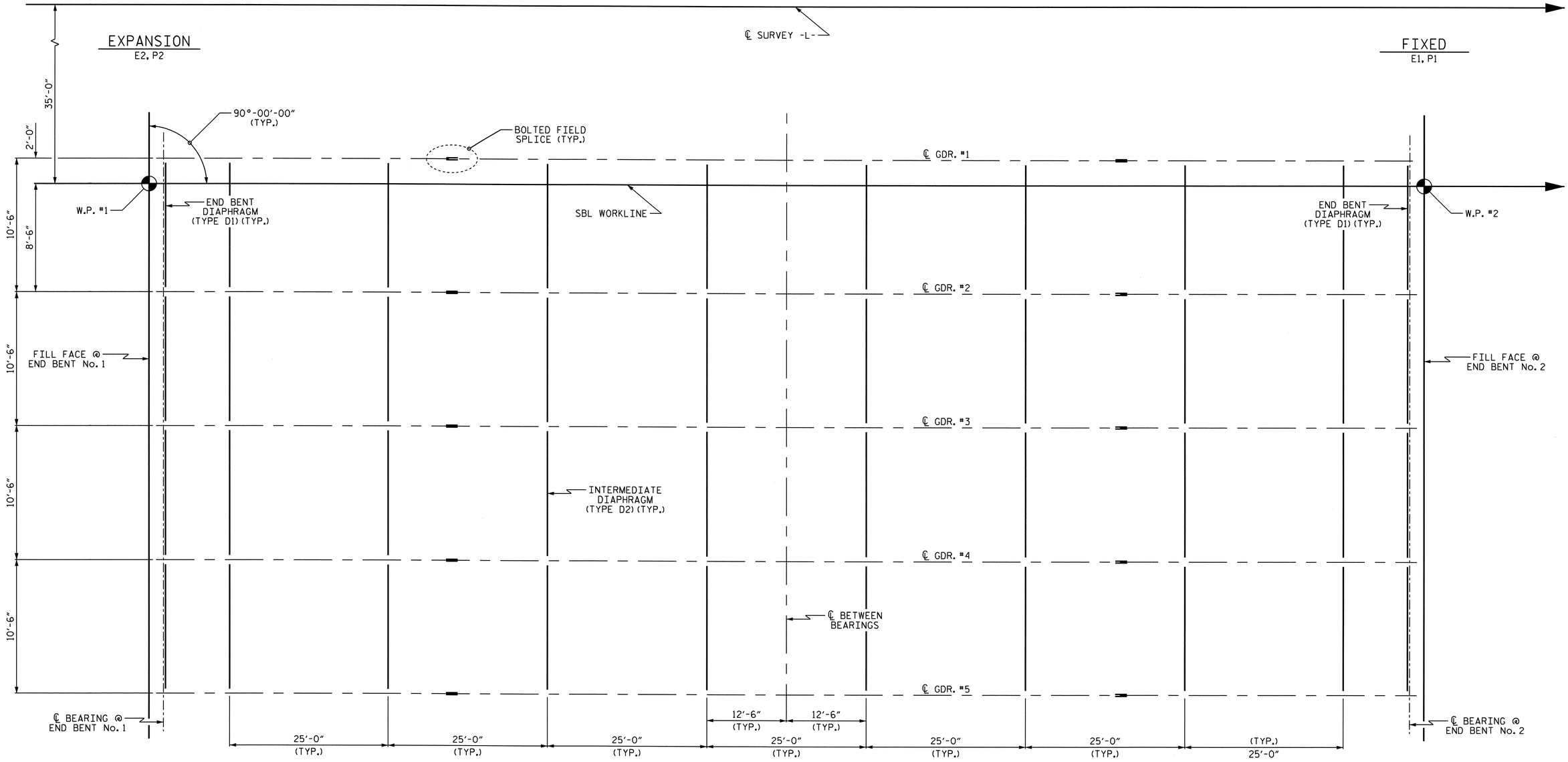

FRAMING PLAN

PROJECT NO. R-2417AA
LEE COUNTY
STATION: 52+08.00 -L-

STATE OF NORTH CAROLINA
DEPARTMENT OF TRANSPORTATION
RALEIGH
SUPERSTRUCTURE

FRAMING PLAN
(SBL)

NORTH CAROLINA PROFESSIONAL SEAL 24390 ENGINEER THEO J. BEACH
11/23/10

REVISIONS						SHEET NO.
NO.	BY:	DATE:	NO.	BY:	DATE:	S-90
1			3			TOTAL SHEETS
2			4			162

DRAWN BY : T. BANKOVICH DATE : 1-2009
CHECKED BY : S.B. WILLIAMS DATE : 2-2009

19-OCT-2010 08:26
R:\Structures\str3-L-overBuffaloCk(RtLane)\Superstructure\R-2417AA_str3_FP.dgn
sbwilliams

STR. #3

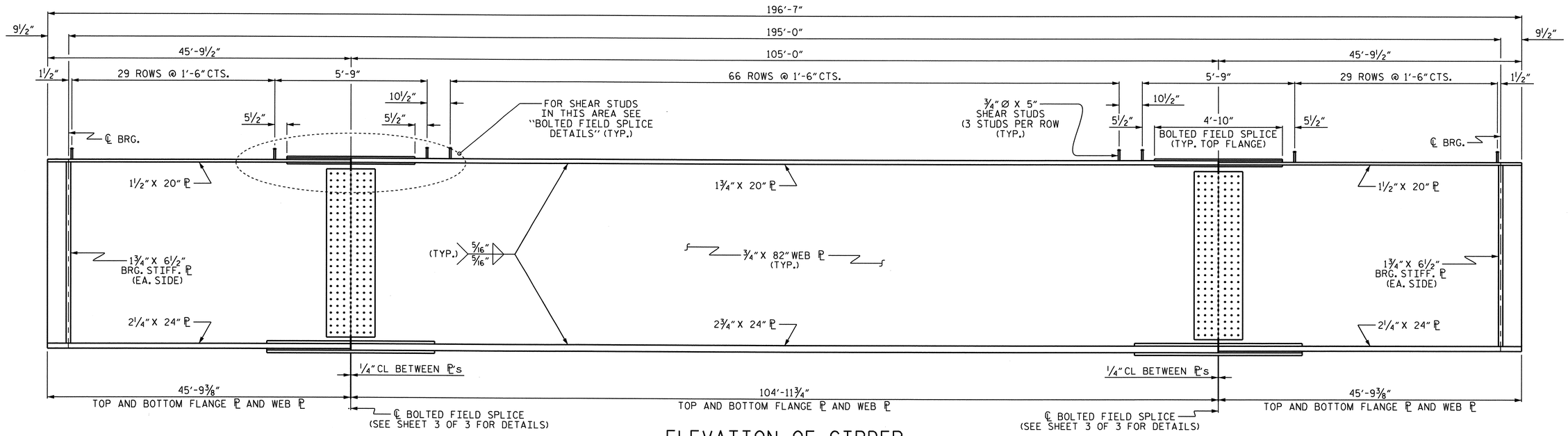

ELEVATION OF GIRDER

(FOR CLARITY, CONNECTOR ℙ's NOT SHOWN.
FOR PLACEMENT, SEE "FRAMING PLAN" SHEET.)

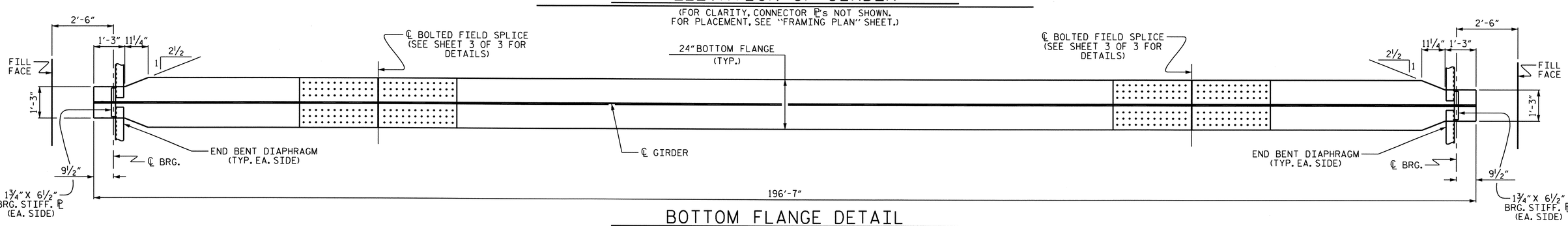

BOTTOM FLANGE DETAIL

(FOR CLARITY, CONNECTOR ℙ's NOT SHOWN.
FOR PLACEMENT, SEE "FRAMING PLAN" SHEET.)

NOTES:

ALL STRUCTURAL STEEL SHALL BE AASHTO M270 GRADE 50W AND PAINTED IN ACCORDANCE WITH SYSTEM 4 OF ARTICLE 442-7 OF THE STANDARD SPECIFICATIONS UNLESS OTHERWISE NOTED ON THE PLANS.

ALL DIMENSIONS SHOWN ARE HORIZONTAL OR VERTICAL, UNLESS OTHERWISE NOTED.

ALL FIELD CONNECTIONS TO BE ⅞" Ø HIGH STRENGTH BOLTS UNLESS OTHERWISE NOTED. FOR HIGH STRENGTH BOLTS SEE SPECIAL PROVISIONS.

BEARING STIFFENERS ARE TO BE PLACED NORMAL TO THE WEB OF THE GIRDER AND SHALL BE PLUMB.

A CHARPY V-NOTCH TEST IS REQUIRED FOR WEB PLATES, BOTTOM FLANGE PLATES, BOTTOM FLANGE SPLICE PLATES, AND WEB FLANGE SPLICE PLATES FOR ALL GIRDERS AND IN ACCORDANCE WITH ARTICLE 1072-9 OF THE STANDARD SPECIFICATIONS.

SHOP SPLICES ARE PERMITTED TO LIMIT THE MAXIMUM REQUIRED FLANGE PIECE LENGTHS TO 60 FEET AND WEB PIECE LENGTHS TO 45 FEET. PERMITTED FLANGE AND WEB SHOP SPLICES SHALL NOT BE LOCATED WITHIN 15 FEET OF MAXIMUM DEAD LOAD DEFLECTION. KEEP 2 FEET MINIMUM BETWEEN WEB AND FLANGE SHOP SPLICES. KEEP 6" MINIMUM BETWEEN CONNECTOR PLATE OR TRANSVERSE STIFFENER WELDS AND WEB OR FLANGE SHOP SPLICES.

STUDS ON GIRDERS MAY BE SHIFTED UP TO 1" IF NECESSARY TO CLEAR FLANGE SPLICE WELD.

TENSION ON THE AASHTO M164 BOLTS SHALL BE CALIBRATED USING DIRECT TENSION INDICATOR WASHERS IN ACCORDANCE WITH ARTICLE 440-8 OF THE STANDARD SPECIFICATIONS.

FOR DIRECT TENSION INDICATORS, SEE SPECIAL PROVISIONS.

END OF GIRDERS SHALL BE PLUMB.

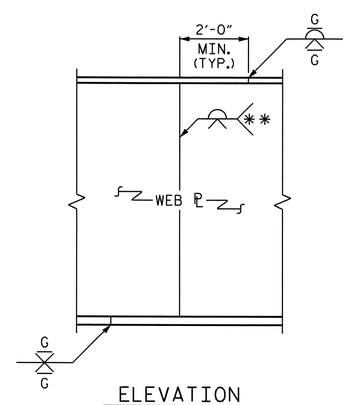

ELEVATION

PERMISSIBLE SHOP FLANGE & WEB SPLICE

** GRIND SMOOTH AND FLUSH ON OUTER FACE OF EXTERIOR GIRDERS

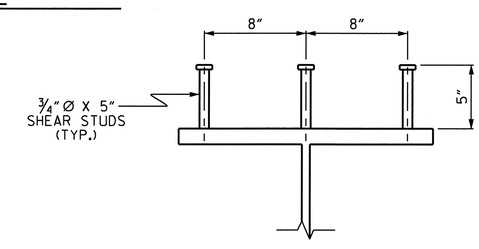

SHEAR STUD DETAIL

(EXCEPT AT BOLTED FIELD SPLICE)

PROJECT NO. R-2417AA
LEE COUNTY
STATION: 52+08.00 -L-

SHEET 1 OF 3

STATE OF NORTH CAROLINA
DEPARTMENT OF TRANSPORTATION
RALEIGH

SUPERSTRUCTURE

STRUCTURAL STEEL DETAIL
(SBL)

NORTH CAROLINA PROFESSIONAL SEAL 24390 ENGINEER THEO J. BEACH
11/23/10

REVISIONS						SHEET NO.
NO.	BY:	DATE:	NO.	BY:	DATE:	S-91
1			3			TOTAL SHEETS
2			4			162

DRAWN BY : T. BANKOVICH DATE : 1-2009
CHECKED BY : S.B. WILLIAMS DATE : 2-2009

19-OCT-2010 08:25
R:\Structures\str3-L-overBuffaloCk(RtLane)\Superstructure\R-2417AA_str3_SS.dgn
sbwilliams

STR. #3

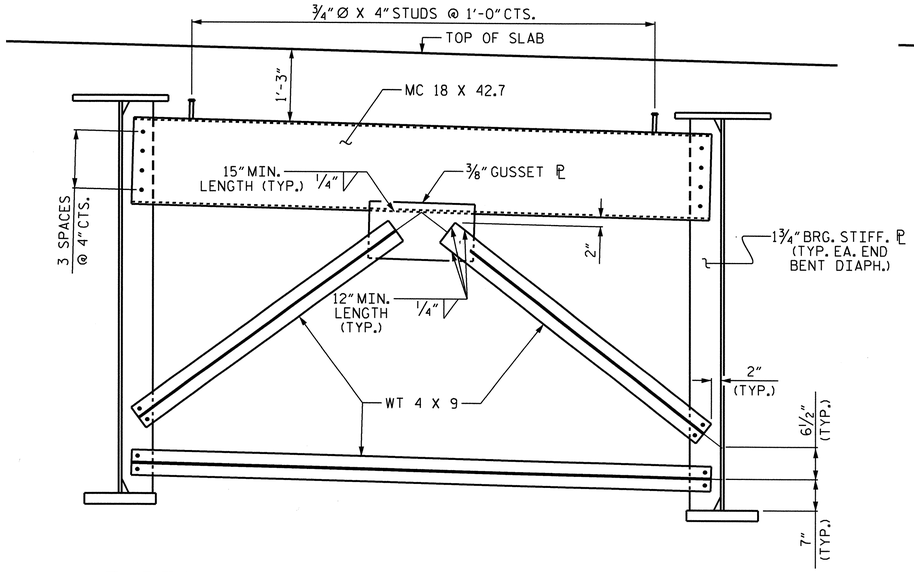

TYPICAL END BENT DIAPHRAGM (TYPE D1)

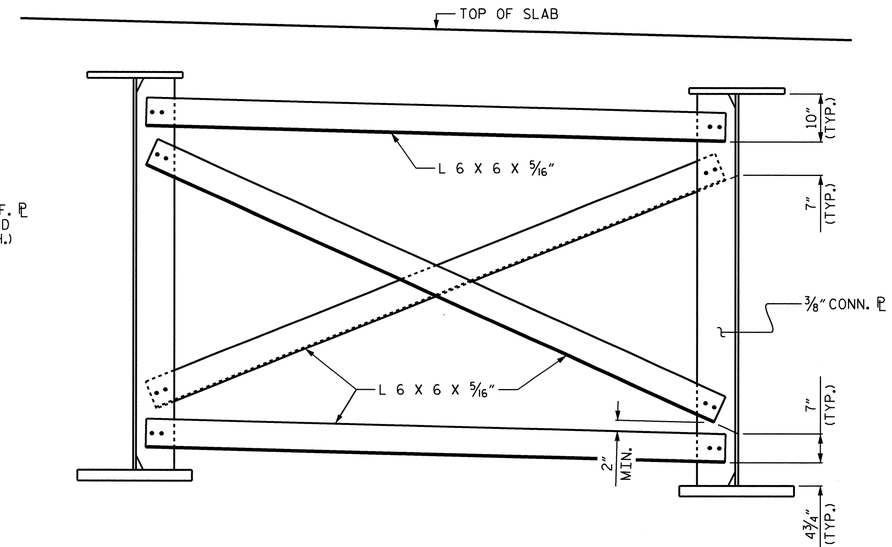

TYPICAL INTERMEDIATE DIAPHRAGM (TYPE D2)

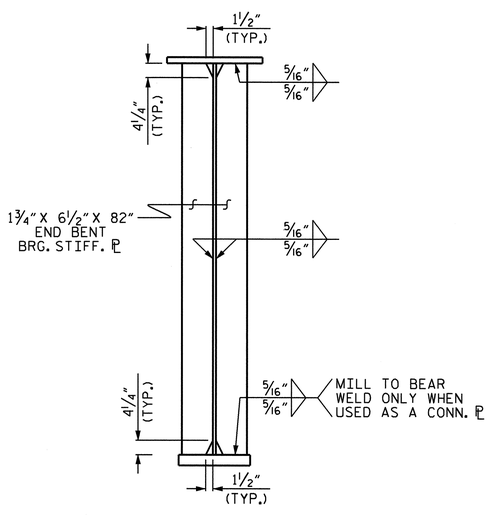

BEARING STIFFENER

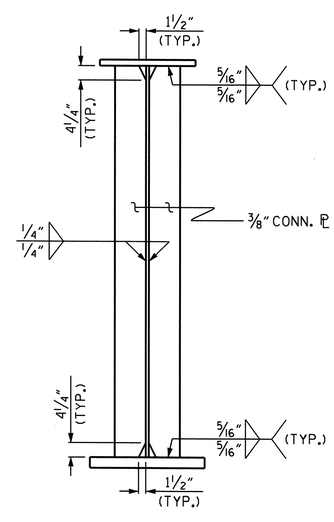

CONNECTOR PLATE

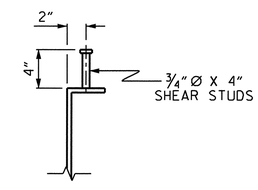

SHEAR STUD DETAIL

(TYP. EA. END BENT DIAPHRAGM)

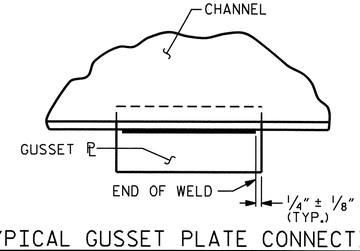

TYPICAL GUSSET PLATE CONNECTION

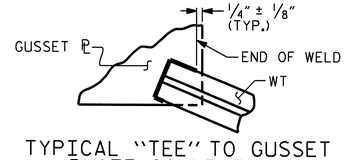

TYPICAL "TEE" TO GUSSET PLATE CONNECTION

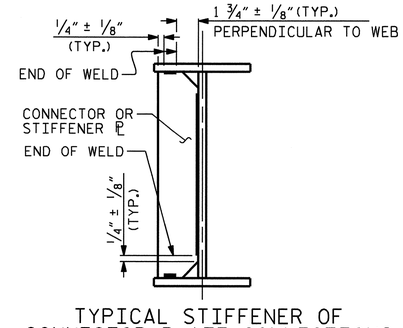

TYPICAL STIFFENER OF CONNECTOR PLATE CONNECTIONS

WELD TERMINATION DETAILS

PROJECT NO. R-2417AA

LEE COUNTY

STATION: 52+08.00 -L-

SHEET 2 OF 3

STATE OF NORTH CAROLINA
DEPARTMENT OF TRANSPORTATION
RALEIGH

SUPERSTRUCTURE

STRUCTURAL STEEL DETAIL

(SBL)

NORTH CAROLINA PROFESSIONAL SEAL 24390 ENGINEER THEO J. BEACH
11/23/10

REVISIONS							SHEET NO.
NO.	BY:	DATE:	NO.	BY:	DATE:		S-92
1			3				TOTAL SHEETS
2			4				162

DRAWN BY : T. BANKOVICH DATE : 1-2009
CHECKED BY : S.B WILLIAMS DATE : 2-2009

24-NOV-2010 07:34
R:\Structures\str3-L-overBuffaloCk(RtLane)\Superstructure\R-2417AA_str3_SS.dgn
tbeach

STR. #3

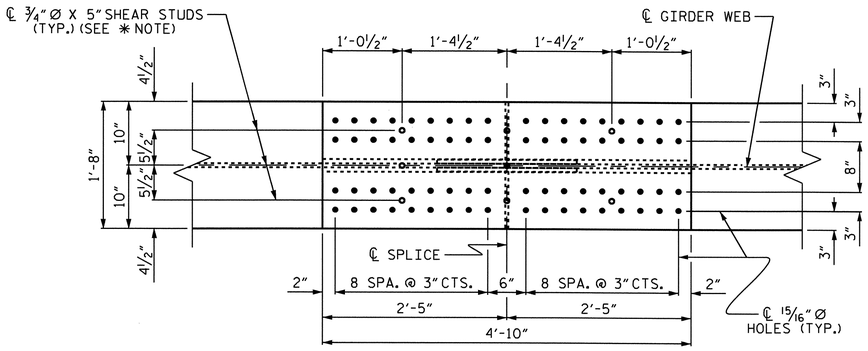

PLAN (TOP OF TOP FLANGE)

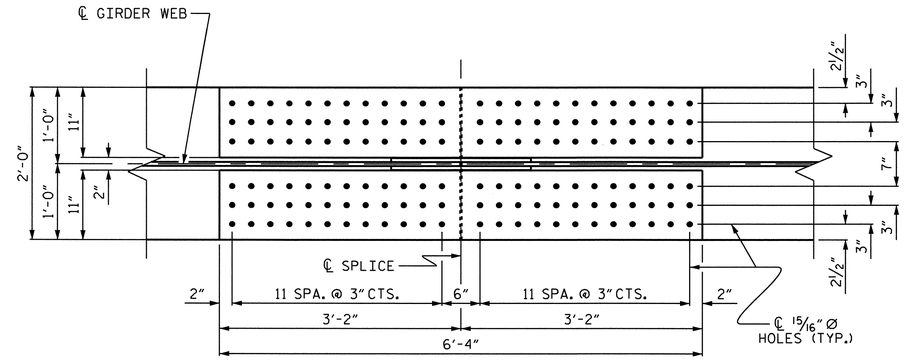

PLAN (TOP OF BOTTOM FLANGE)

✱ NOTE:
SHEAR STUDS ARE TO BE SHOP WELDED ON TOP OF PLATE BEFORE FIELD ASSEMBLY

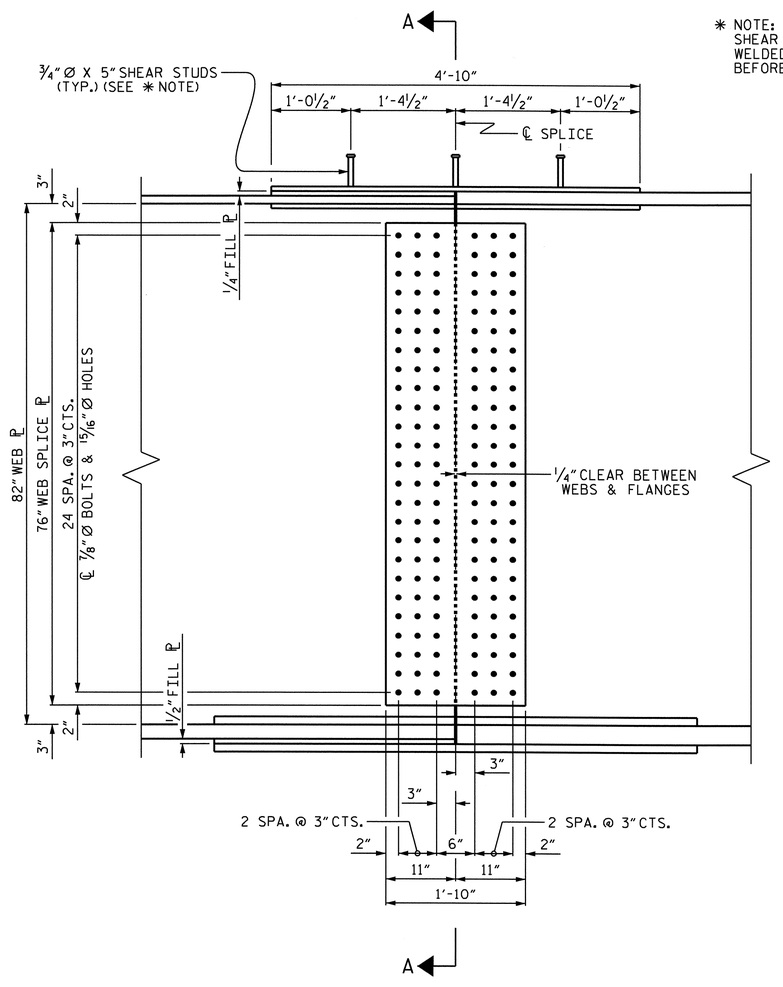

ELEVATION

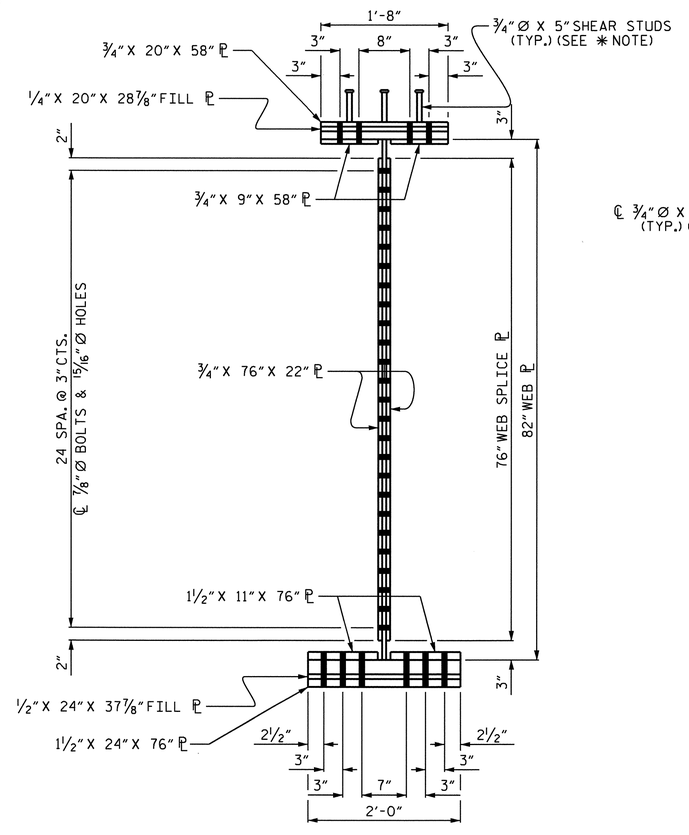

SECTION A-A

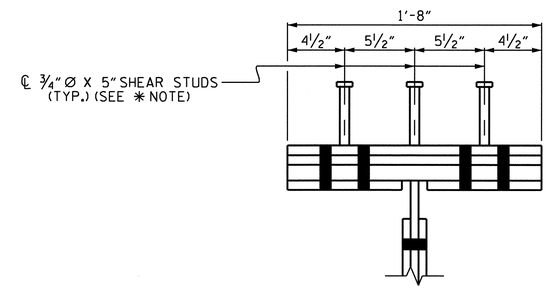

SHEAR STUD DETAIL
FOR TOP FLANGE SPLICE PLATE

BOLTED FIELD SPLICE DETAILS

(TYP. EA. BOLTED FIELD SPLICE)

PROJECT NO. R-2417AA
LEE COUNTY
STATION: 52+08.00 -L-

SHEET 3 OF 3

STATE OF NORTH CAROLINA
DEPARTMENT OF TRANSPORTATION
RALEIGH
SUPERSTRUCTURE

STRUCTURAL STEEL DETAILS
(SBL)

NORTH CAROLINA PROFESSIONAL SEAL 24390 ENGINEER THEO J. BEACH
11/23/10

REVISIONS						SHEET NO.
NO.	BY:	DATE:	NO.	BY:	DATE:	S-93
1			3			TOTAL SHEETS
2			4			162

STR. #3

DRAWN BY : T. BANKOVICH DATE : 1-2009
CHECKED BY : S.B. WILLIAMS DATE : 2-2009

19-OCT-2010 08:23
R:\Structures\str3-L-overBuffaloCk(RtLane)\Superstructure\R-2417AA_str3_SS.dgn
sbwilliams

DEAD LOAD DEFLECTION TABLE FOR GIRDERS

	SPAN "A" GIRDER #1 & #5																				
TWENTIETH POINT	BRG.	0.05	0.10	0.15	0.20	0.25	0.30	0.35	0.40	0.45	0.50	0.55	0.60	0.65	0.70	0.75	0.80	0.85	0.90	0.95	BRG.
DEFLECTION DUE TO WEIGHT OF GIRDER	0	0.042	0.082	0.120	0.153	0.182	0.206	0.225	0.239	0.247	0.250	0.247	0.239	0.225	0.206	0.182	0.153	0.120	0.082	0.042	0
DEFLECTION DUE TO WEIGHT OF SLAB *	0	0.077	0.181	0.277	0.363	0.437	0.498	0.548	0.584	0.605	0.613	0.605	0.584	0.548	0.498	0.437	0.363	0.277	0.181	0.077	0
DEFLECTION DUE TO BARRIER RAIL	0	0.008	0.017	0.024	0.031	0.037	0.042	0.046	0.049	0.051	0.051	0.051	0.049	0.046	0.042	0.037	0.031	0.024	0.017	0.008	0
TOTAL DEAD LOAD DEFLECTION	0	0.127	0.279	0.421	0.548	0.655	0.746	0.818	0.871	0.903	0.914	0.903	0.871	0.818	0.746	0.655	0.548	0.421	0.279	0.127	0
REQUIRED CAMBER	0	1 1/2"	3 3/8"	5 1/16"	6 9/16"	7 7/8"	8 15/16"	9 13/16"	10 7/16"	10 13/16"	10 15/16"	10 13/16"	10 7/16"	9 13/16"	8 15/16"	7 7/8"	6 9/16"	5 1/16"	3 3/8"	1 1/2"	0

	SPAN "A" GIRDER #2, #3, & #4																				
TWENTIETH POINT	BRG.	0.05	0.10	0.15	0.20	0.25	0.30	0.35	0.40	0.45	0.50	0.55	0.60	0.65	0.70	0.75	0.80	0.85	0.90	0.95	BRG.
DEFLECTION DUE TO WEIGHT OF GIRDER	0	0.042	0.082	0.120	0.153	0.182	0.206	0.225	0.239	0.247	0.250	0.247	0.239	0.225	0.206	0.182	0.153	0.120	0.082	0.042	0
DEFLECTION DUE TO WEIGHT OF SLAB *	0	0.077	0.182	0.279	0.365	0.439	0.501	0.551	0.587	0.609	0.616	0.609	0.587	0.551	0.501	0.439	0.365	0.279	0.182	0.077	0
DEFLECTION DUE TO BARRIER RAIL	0	0.008	0.016	0.024	0.030	0.036	0.041	0.045	0.048	0.049	0.050	0.049	0.048	0.045	0.041	0.036	0.030	0.024	0.016	0.008	0
TOTAL DEAD LOAD DEFLECTION	0	0.127	0.280	0.422	0.549	0.657	0.748	0.820	0.873	0.906	0.916	0.906	0.873	0.820	0.748	0.657	0.549	0.422	0.280	0.127	0
REQUIRED CAMBER	0	1 1/2"	3 3/8"	5 1/16"	6 9/16"	7 7/8"	9"	9 7/8"	10 1/2"	10 7/8"	11"	10 7/8"	10 1/2"	9 7/8"	9"	7 7/8"	6 9/16"	5 1/16"	3 3/8"	1 1/2"	0

* INCLUDES SLAB, BUILDUPS & STAY-IN-PLACE FORMS.
ALL VALUES ARE SHOWN IN FEET (DECIMAL FORM), EXCEPT "REQUIRED CAMBER", WHICH IS GIVEN IN INCHES (FRACTION FORM)

VERTICAL CURVE ORDINATES ARE NEGLIGIBLE AND ARE NOT PROVIDED.

PROJECT NO. R-2417AA
LEE COUNTY
STATION: 52+08.00 -L-

STATE OF NORTH CAROLINA
DEPARTMENT OF TRANSPORTATION
RALEIGH
SUPERSTRUCTURE

DEAD LOAD DEFLECTIONS
(SBL)

NORTH CAROLINA PROFESSIONAL SEAL 24390 ENGINEER THEO J. BEACH
11/23/10

REVISIONS						SHEET NO.
NO.	BY:	DATE:	NO.	BY:	DATE:	S-94
1			3			TOTAL SHEETS
2			4			162

DRAWN BY : T. BANKOVICH DATE : 1-2009
CHECKED BY : S.B. WILLIAMS DATE : 2-2009

19-OCT-2010 08:22
R:\Structures\str3-L-overBuffaloCk(RtLane)\Superstructure\R-2417AA_str3_DL.dgn
sbwilliams

STR. #3

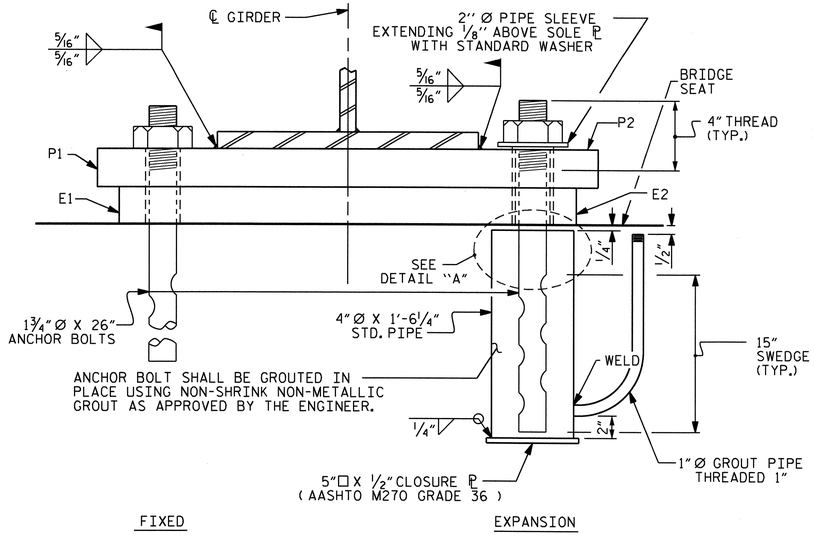

END VIEW

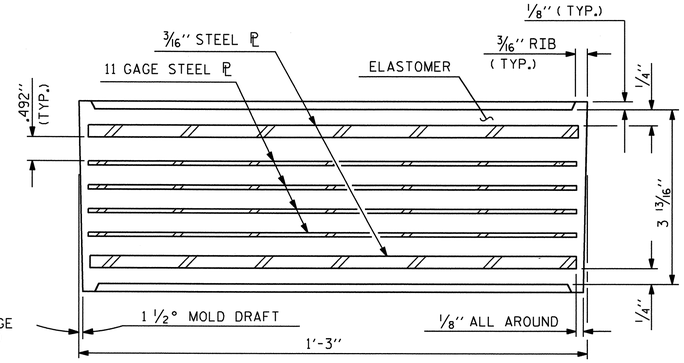

TYPICAL SECTION OF ELASTOMERIC BEARING

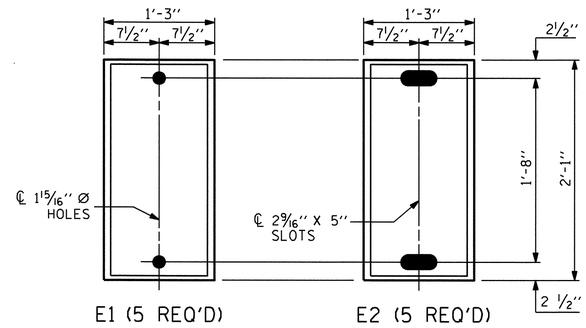

PLAN VIEW OF ELASTOMERIC BEARING

TYPE VI

60 DUROMETER HARDNESS

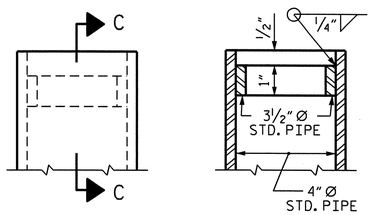

SECTION C-C

DETAIL "A"

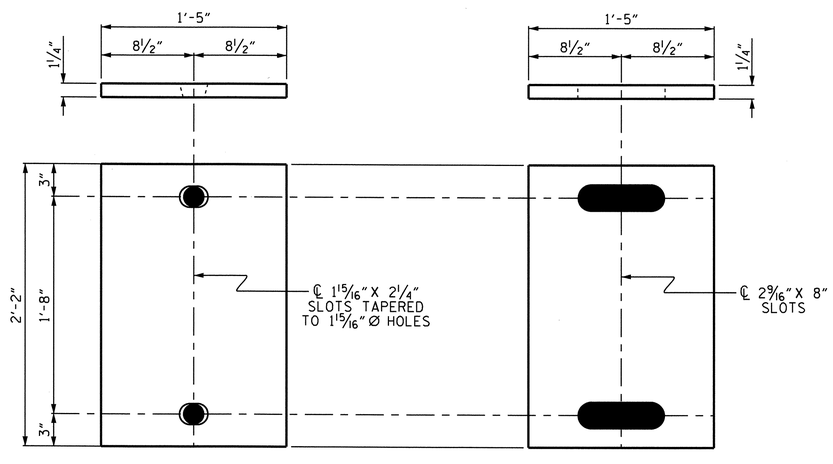

P1 (FIXED) P1 (5 REQ'D)

P2 (EXPANSION) P2 (5 REQ'D)

SOLE PLATE DETAILS ("P")

NOTES

AT ALL FIXED POINTS OF SUPPORT, NUTS FOR ANCHOR BOLTS ARE TO BE TIGHTENED FINGER TIGHT AND THEN BACKED OFF 1/2 TURN. THE THREAD OF THE NUT AND BOLT SHALL THEN BE BURRED WITH A SHARP POINTED TOOL.

THE 2" Ø PIPE SLEEVE SHALL BE CUT FROM SCHEDULE 40 PVC PLASTIC PIPE. THE PVC PLASTIC PIPE SHALL MEET THE REQUIREMENTS OF ASTM D1785.

THE PAYMENT FOR THE PIPE SLEEVES AND 4" Ø X 1'-6 1/4" STANDARD PIPE ASSEMBLY SHALL BE INCLUDED IN THE SEVERAL PAY ITEMS.

FOR AASHTO M270 GRADE 50W STRUCTURAL STEEL, SOLE PLATE SHALL BE AASHTO M270 GRADE 50W AND SHALL NOT BE GALVANIZED. ANCHOR BOLTS, NUTS AND WASHERS SHALL BE GALVANIZED IN ACCORDANCE WITH THE STANDARD SPECIFICATIONS.

ANCHOR BOLTS SHALL MEET THE REQUIREMENTS OF ASTM A449. NUTS SHALL MEET THE REQUIREMENTS OF AASHTO M291-DH OR AASHTO M292-2H. WASHERS SHALL MEET THE REQUIREMENTS OF AASHTO M293. SHOP DRAWINGS ARE NOT REQUIRED FOR ANCHOR BOLTS, NUTS AND WASHERS. SHOP INSPECTION IS REQUIRED.

WHEN FIELD WELDING THE SOLE PLATE TO THE GIRDER FLANGE, USE TEMPERATURE INDICATING WAX PENS, OR OTHER SUITABLE MEANS, TO ENSURE THAT THE TEMPERATURE OF THE SOLE PLATE DOES NOT EXCEED 300°F. TEMPERATURES ABOVE THIS MAY DAMAGE THE ELASTOMER.

ALL SURFACES OF BEARING PLATES SHALL BE SMOOTH AND STRAIGHT.

THE CLOSURE PLATE, GROUT PIPE AND STANDARD PIPE FOR THE EXPANSION ASSEMBLY NEED NOT BE GALVANIZED.

THE CONTRACTOR'S ATTENTION IS CALLED TO THE FOLLOWING PROCEDURE, WHICH MAY BE REQUIRED BY THE ENGINEER, TO RESET ELASTOMERIC BEARINGS DUE TO GIRDER TRANSLATION AND END ROTATION:

1. ONCE THE DECK HAS CURED, THE GIRDERS SHALL BE JACKED THEN THE ANCHOR BOLTS AND ELASTOMERIC BEARING SLOTS CENTERED AS NEARLY AS PRACTICAL ABOUT THE BEARING STIFFENER. THIS OPERATION SHALL BE PERFORMED AT APPROXIMATELY 60° F.

2. AFTER CENTERING THE ELASTOMERIC BEARINGS SLOTS AND ANCHOR BOLTS, THE ANCHOR BOLTS SHALL BE GROUTED.

   THE CONTRACTOR MAY PROPOSE ALTERNATE METHODS, PROVIDED DETAILS ARE SUBMITTED TO THE ENGINEER FOR REVIEW AND APPROVAL.

ELASTOMER IN ALL BEARING PADS SHALL BE 60 DUROMETER HARDNESS.

LOAD RATINGS

	MAX.D.L.+ L.L.
TYPE VI	380 K

PROJECT NO. R-2417AA

LEE COUNTY

STATION: 52+08.00 -L-

STATE OF NORTH CAROLINA
DEPARTMENT OF TRANSPORTATION
RALEIGH

STANDARD

ELASTOMERIC BEARING DETAILS

(SBL)

NORTH CAROLINA PROFESSIONAL SEAL 24390 ENGINEER TEO J. BEACH
11/23/10

REVISIONS						SHEET NO.
NO.	BY:	DATE:	NO.	BY:	DATE:	S-95
1			3			TOTAL SHEETS
2			4			162

ASSEMBLED BY : T. BANKOVICH		DATE : 1-2009	
CHECKED BY : S.B. WILLIAMS		DATE : 2-2009	
DRAWN BY : EEM 10/95	REV. 10/17/00	RWW/LES	
CHECKED BY : PEK 10/95	REV. 7/10/01	LES/RDR	
	REV. 5/1/06	TLA/GM	

23-NOV-2010 16:15
R:\Structures\str3-L-overBuffaloCk(RtLane)\Superstructure\R-2417AA_str3_BG.dgn
tbeach

STD. NO. EB2

STR. #3

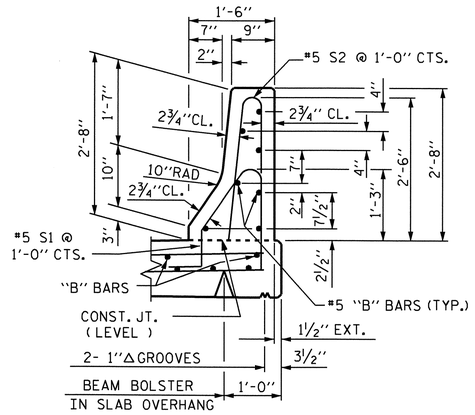

SECTION THRU RAIL

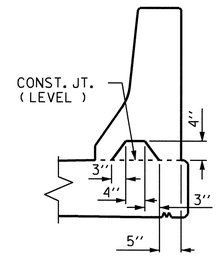

SECTION S-S

AT DAM IN OPEN JOINT
(THIS IS TO BE USED ONLY
WHEN SLIP FORM IS USED)

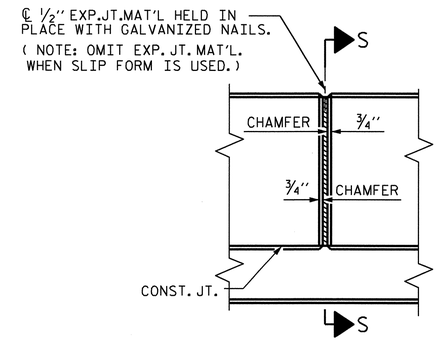

ELEVATION AT EXPANSION JOINTS

BAR TYPES

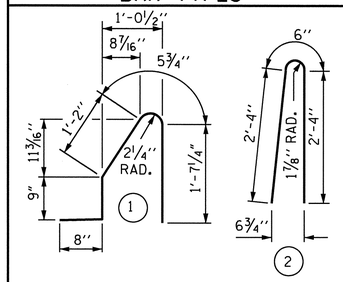

ALL BAR DIMENSIONS ARE OUT TO OUT

BILL OF MATERIAL

FOR CONCRETE BARRIER RAIL ONLY

BAR	NO.	SIZE	TYPE	LENGTH	WEIGHT
* B1	28	#5	STR	23'-6"	686
* B2	70	#5	STR	29'-7"	2160
* S1	396	#5	1	4'-8"	1927
* S2	396	#5	2	5'-2"	2134

* EPOXY COATED REINFORCING STEEL	6907 LBS.
CLASS AA CONCRETE	40.0 CU. YDS.
CONCRETE BARRIER RAIL	395.77 LIN. FT.

BARRIER RAIL DETAILS

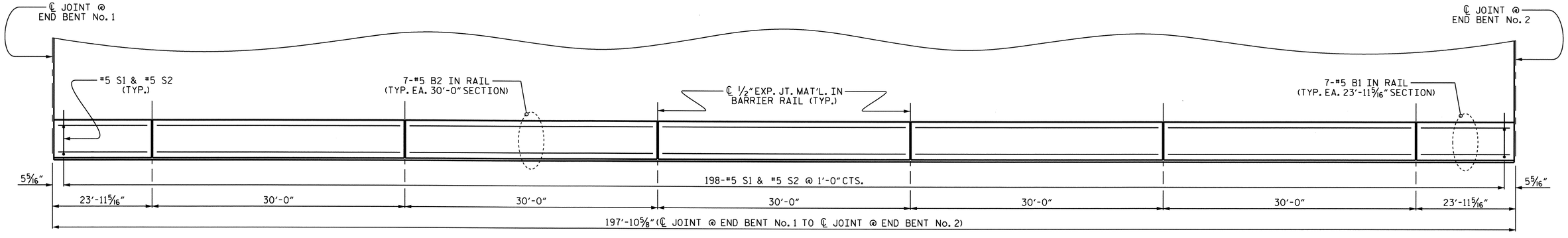

PLAN OF BARRIER PLAN

RIGHT SIDE SHOWN, LEFT SIDE SIMILAR

NOTES:

THE BARRIER RAIL IN THE SPAN SHALL NOT BE CAST UNTIL ALL SLAB CONCRETE IN THAT SPAN HAS BEEN CAST AND HAS REACHED A MINIMUM COMPRESSIVE STRENGTH OF 3,000 PSI.

ALL REINFORCING STEEL IN BARRIER RAILS SHALL BE EPOXY COATED.

VERTICAL GROOVED CONTRACTION JOINTS, ½" IN DEPTH, SHALL BE TOOLED IN ALL EXPOSED FACES OF THE BARRIER RAIL AND IN ACCORDANCE WITH ARTICLE 825-10(B) OF THE STANDARD SPECIFICATIONS. THE CONTRACTION JOINT SHALL BE LOCATED AT EACH THIRD POINT BETWEEN BARRIER RAIL EXPANSION JOINTS. ONLY ONE CONTRACTION JOINT IS REQUIRED AT MIDPOINT OF BARRIER RAIL SEGMENTS LESS THAN 20 FEET IN LENGTH AND NO CONTRACTION JOINTS ARE REQUIRED FOR THOSE SEGMENTS LESS THAN 10 FEET IN LENGTH.

THE #5 "S" BARS MAY BE SHIFTED AS NECESSARY IN ORDER TO MAINTAIN A 2" MINIMUM CLEARANCE TO THE ½" EXPANSION JOINT MATERIAL IN BARRIER RAIL.

PROJECT NO. R-2417AA
LEE COUNTY
STATION: 52+08.00 -L-

STATE OF NORTH CAROLINA
DEPARTMENT OF TRANSPORTATION
RALEIGH
SUPERSTRUCTURE

CONCRETE
BARRIER RAIL
(SBL)

NORTH CAROLINA PROFESSIONAL SEAL 24390 ENGINEER THEO. J. BEACH
11/23/10

REVISIONS						SHEET NO.
NO.	BY:	DATE:	NO.	BY:	DATE:	S-96
1			3			TOTAL SHEETS
2			4			162

DRAWN BY : T. BANKOVICH DATE : 1-2009
CHECKED BY : S.B. WILLIAMS DATE : 2-2009

19-OCT-2010 08:05
R:\Structures\str3-L-overBuffaloCk(RtLane)\Superstructure\R-2417AA_str3_BR.dgn
sbwilliams

STD. NO. CBR1

STR. #3

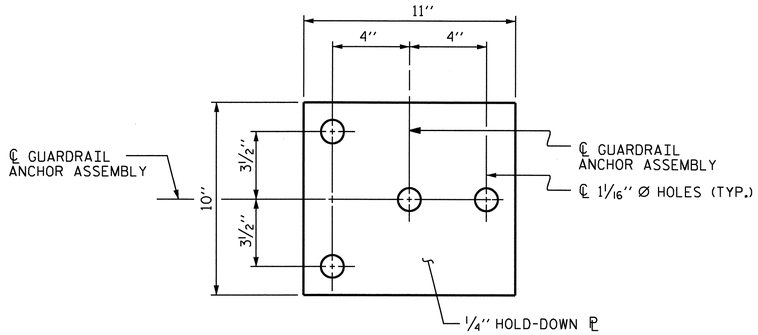

PLAN

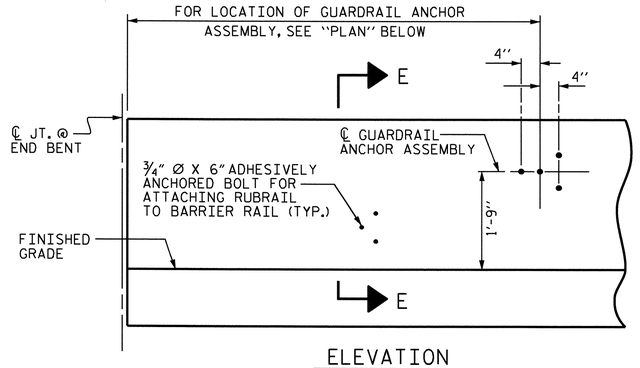

ELEVATION

FOR LOCATION OF RUBRAIL, SEE ROADWAY STD. 862.03

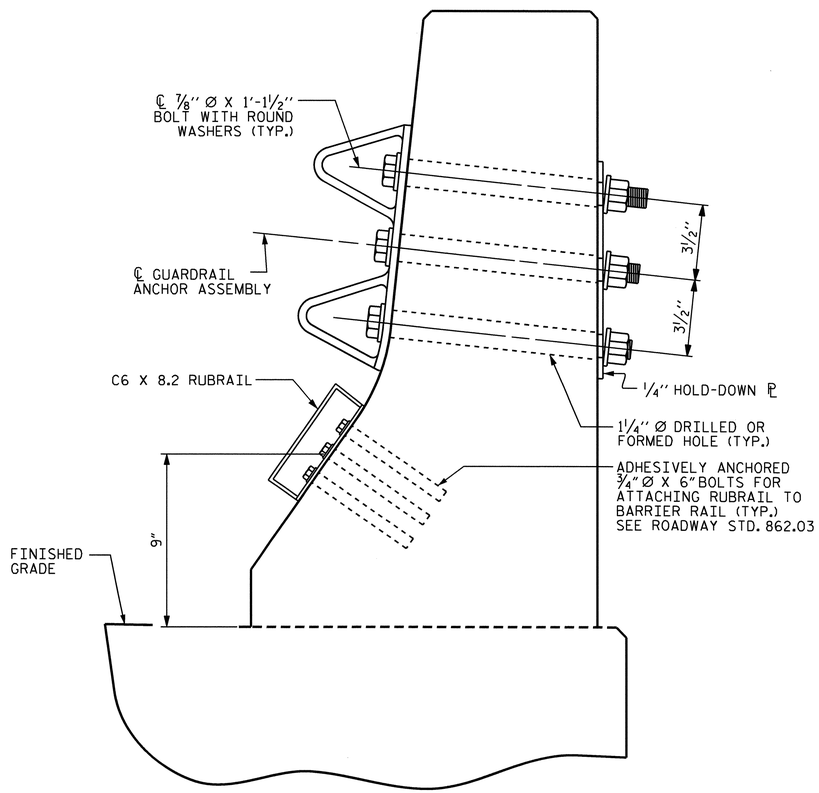

SECTION E-E

GUARDRAIL ANCHOR ASSEMBLY DETAILS

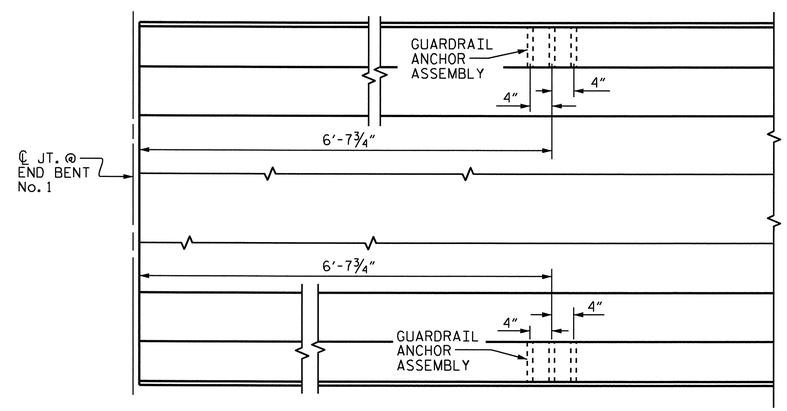

PLAN

LOCATION OF ANCHORS FOR GUARDRAIL

END BENT No. 1 SHOWN, END BENT No. 2 END SIMILAR

NOTES

THE GUARDRAIL ANCHOR ASSEMBLY SHALL CONSIST OF A 1/4'' HOLD DOWN PLATE AND 4 - 7/8'' Ø BOLTS WITH NUTS AND WASHERS, RUBRAIL, AND ADHESIVELY ANCHORED BOLTS.

THE HOLD-DOWN PLATE SHALL CONFORM TO AASHTO M270 GRADE 36. AFTER FABRICATION, THE HOLD-DOWN PLATE SHALL BE HOT-DIP GALVANIZED IN ACCORDANCE WITH AASHTO M111.

BOLTS SHALL CONFORM TO THE REQUIREMENTS OF ASTM A307 AND NUTS SHALL CONFORM TO THE REQUIREMENTS OF AASHTO M291. BOLTS, NUTS AND WASHERS SHALL BE GALVANIZED. (AT THE CONTRACTOR'S OPTION, STAINLESS STEEL BOLTS, NUTS AND WASHERS MAY BE USED AS AN ALTERNATE FOR THE 7/8'' Ø GALVANIZED BOLTS, NUTS AND WASHERS. THEY SHALL CONFORM TO OR EXCEED THE MECHANICAL REQUIREMENTS OF ASTM A307. THE USE OF THIS ALTERNATE SHALL BE APPROVED BY THE ENGINEER.)

THE GUARDRAIL ANCHOR ASSEMBLY IS REQUIRED AT ALL POINTS WHERE APPROACH GUARDRAIL IS TO BE ATTACHED TO THE END OF BARRIER RAIL. FOR POINTS OF ATTACHMENT, SEE SKETCH.

AFTER INSTALLATION, THE EXPOSED THREAD OF THE BOLT SHALL BE BURRED WITH A SHARP POINTED TOOL.

THE COST OF THE GUARDRAIL ANCHOR ASSEMBLY SHALL BE INCLUDED IN THE UNIT CONTRACT PRICE BID FOR CONCRETE BARRIER RAIL.

THE 1 1/4'' Ø HOLES SHALL BE FORMED OR DRILLED WITH A CORE BIT. IMPACT TOOLS WILL NOT BE PERMITTED. ANY CONCRETE DAMAGED BY THIS WORK SHALL BE REPAIRED TO THE SATISFACTION OF THE ENGINEER.

THE C6 X 8.2 RUBRAIL IS TO BE ADHESIVELY ANCHORED TO THE RAIL USING THREE 3/4'' Ø X 6'' BOLTS WITH WASHERS. LEVEL ONE FIELD TESTING IS REQUIRED, AND THE YIELD LOAD OF THE 3/4'' Ø BOLT IS 12 KIPS. FOR ADHESIVELY ANCHORED ANCHOR BOLTS OR DOWELS, SEE SPECIAL PROVISIONS. SEE ROADWAY STANDARD 862.03 FOR DETAILS AND LOCATION OF THE RUBRAIL.

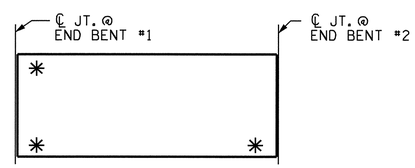

SKETCH SHOWING POINTS OF ATTACHMENTS

✳ DENOTES GUARDRAIL ANCHOR ASSEMBLY

PROJECT NO. R-2417AA

LEE COUNTY

STATION: 52+08.00 -L-

STATE OF NORTH CAROLINA
DEPARTMENT OF TRANSPORTATION
RALEIGH

SUPERSTRUCTURE

GUARDRAIL ANCHORAGE FOR BARRIER RAIL

(SBL)

NORTH CAROLINA PROFESSIONAL SEAL 24390 ENGINEER THEO J. BEACH
11/23/10

REVISIONS						SHEET NO.
NO.	BY:	DATE:	NO.	BY:	DATE:	S-97
1			3			TOTAL SHEETS
2			4			162

ASSEMBLED BY : T. BANKOVICH DATE : 1-2009
CHECKED BY : S.B. WILLIAMS DATE : 2-2009

DRAWN BY : TLA 5/06
CHECKED BY : GM 5/06

ADDED 5/1/06R KMM/GM

19-OCT-2010 08:04
R:\Structures\str3-L-overBuffaloCk(RtLane)\Superstructure\R-2417AA_str3_BR.dgn
sbwilliams

STD. NO. GRA2

STR. #3

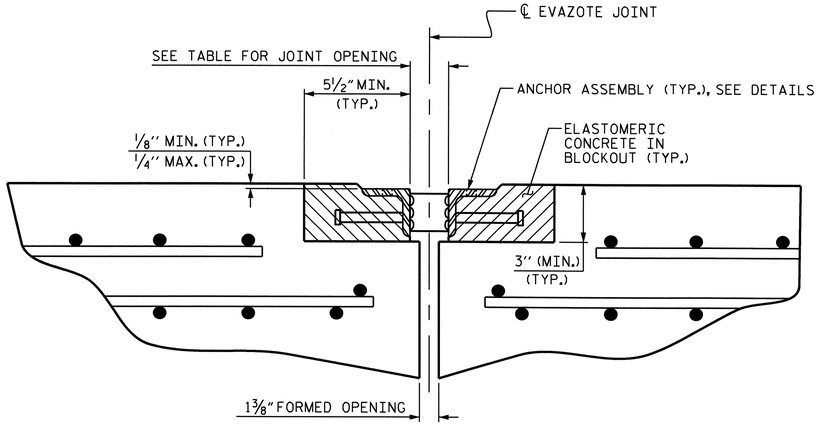

ARMORED JOINT DETAILS

SECTION NORMAL TO JOINT AT BENT

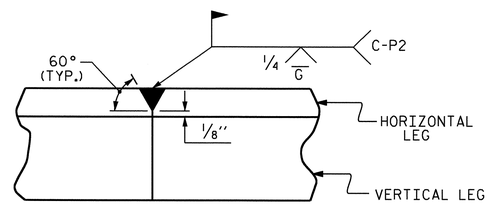

DETAIL- FIELD WELD SPLICE OF ANGLE

NOTES

ANGLES SHALL CONFORM TO AASHTO M270 GRADE 36 STEEL OR APPROVED EQUAL. ALL STUD ANCHORS SHALL CONFORM TO AASHTO M169 GRADES 1010 THRU 1020 OR APPROVED EQUAL.

STUD ANCHORS SHALL BE SHOP WELDED AND ALL HOLES SHALL BE SHOP DRILLED AS SHOWN ON THE PLANS. STUD ANCHORS SHALL BE ELECTRIC ARC END WELDED WITH COMPLETE FUSION.

UPON COMPLETION OF SHOP FABRICATION, THE ENTIRE ANCHOR ASSEMBLY SHALL BE METALLIZED. THE ½" Ø STUD ANCHORS AND ANCHOR TABS NEED NOT BE METALLIZED. SEE SPECIAL PROVISION FOR THERMAL SPRAYED COATINGS (METALLIZATION).

ANCHOR ASSEMBLY SHALL BE MADE CONTINUOUS THE LENGTH OF THE JOINT FROM GUTTER TO GUTTER. FOR FIELD SPLICES AT ALL CROWN BREAK POINTS, THE ENDS OF THE STEEL ANGLES SHALL BE CUT PARALLEL TO THE BRIDGE CENTERLINE. FINISHED FIELD WELDS SHALL BE GROUND SMOOTH AND COATED WITH A MINIMUM THICKNESS OF 4 DRY MILS OF ZINC-RICH PAINT IN ACCORDANCE WITH THE STANDARD SPECIFICATIONS.

ANCHOR ASSEMBLY SEGMENTS SHALL NOT BE LESS THAN 12 FEET NOR MORE THAN 20 FEET IN LENGTH. SHORTER SEGMENTS MAY BE USED AT THE EDGE OF ROADWAY OR AT POINTS OF STAGED CONSTRUCTION.

THE ANCHOR ASSEMBLY SHALL BE SECURED AND LEVELED AS SHOWN IN THE "ARMORED JOINT ANCHOR ASSEMBLY DETAILS". NO SUBMITTALS ARE REQUIRED FOR ⅜" Ø EXPANSION ANCHORS, NUTS OR WASHERS. THE CONTRACTOR MAY SUBMIT FOR APPROVAL AN ALTERNATE METHOD OF ALIGNING AND LEVELING THE ANGLES. THE ALTERNATE METHOD SHALL NOT INCLUDE ANY WELDING TO THE OUTSIDE FACE OF THE ANGLES.

AFTER THE ELASTOMERIC CONCRETE HAS BEEN CAST ON BOTH SIDES OF THE JOINT, REMOVE ANY EXCESS CONCRETE THAT COMES THROUGH THE WEEP HOLES AND THOROUGHLY CLEAN THE ANGLES. ANY DAMAGED STEEL SHALL BE COATED WITH A MINIMUM OF 4 MILS OF ZINC-RICH PAINT IN ACCORDANCE WITH THE STANDARD SPECIFICATIONS.

SEE SPECIAL PROVISIONS FOR EVAZOTE JOINT SEALS.

SEE SPECIAL PROVISIONS FOR ELASTOMERIC CONCRETE.

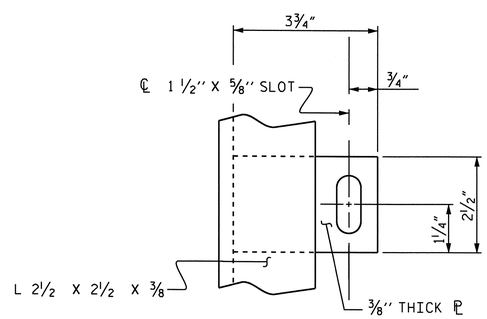

PLAN VIEW OF TAB

LOCATION	SKEW ANGLE	NOMINAL UNCOMPRESSED SEAL WIDTH	TOTAL MOVEMENT (ALONG ℄ RDWY)	PERPENDICULAR JOINT OPENING AT 45° F	PERPENDICULAR JOINT OPENING AT 60° F	PERPENDICULAR JOINT OPENING AT 90° F
END BENT No. 1 (EXP.)	90°-00'-00"	3⅛"	1 9/16"	2⅝"	2¾"	1 15/16"
END BENT No. 2 (FIX.)	90°-00'-00"	3⅛"	—	—	2⅜"	—

TOTAL MOVEMENT IS CALCULATED ALONG THE CENTERLINE OF ROADWAY.
JOINT OPENINGS ARE MEASURED PERPENDICULAR TO THE JOINT.

BILL OF MATERIAL

LOCATION	ELASTOMERIC CONCRETE * (CU. FT.)	TOTAL LENGTH OF ANGLE (FT.)
END BENT No. 1	10.5	92'-0"
END BENT No. 2	10.5	92'-0"

* BASED ON THE MINIMUM BLOCKOUT SHOWN.

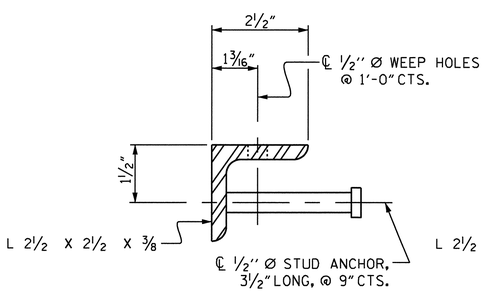

SECTION VIEW OF STUD

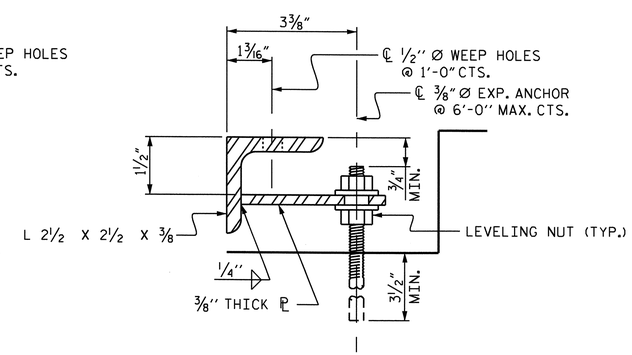

SECTION VIEW OF TAB

ARMORED JOINT ANCHOR ASSEMBLY DETAILS

PROJECT NO. R-2417AA
LEE COUNTY
STATION: 52+08.00 -L-

STATE OF NORTH CAROLINA
DEPARTMENT OF TRANSPORTATION
RALEIGH

STANDARD
ARMORED EVAZOTE JOINT DETAILS
(SBL)

NORTH CAROLINA PROFESSIONAL SEAL 24390 ENGINEER THEO J. BEACH
11/22/10

ASSEMBLED BY : T. BANKOVICH	DATE : 3-2009
CHECKED BY : S.B. WILLIAMS	DATE : 3-2009
DRAWN BY : EEM 1/96	REV. 7/10/01 LES/RDR
CHECKED BY : RGW 1/96	REV. 5/7/03RR RWW/JTE
	REV. 5/1/06 TLA/GM

REVISIONS								SHEET NO.
NO.	BY:	DATE:	NO.	BY:	DATE:			S-98
1			3					TOTAL SHEETS
2			4					162

19-OCT-2010 08:02
R:\Structures\str3-L-overBuffaloCk(RtLane)\Superstructure\r-2417aa_str3_AEJT.dgn
sbwilliams

STD. NO. AEJ1

STR. #3

SUPERSTRUCTURE REINFORCING STEEL LENGTHS ARE BASED ON THE FOLLOWING MINIMUM SPLICE LENGTHS					
BAR SIZE	SUPERSTRUCTURE EXCEPT APPROACH SLABS, PARAPET, AND BARRIER RAIL		APPROACH SLABS		PARAPET AND BARRIER RAIL
	EPOXY COATED	UNCOATED	EPOXY COATED	UNCOATED	
#4	2'-0"	1'-9"	2'-0"	1'-9"	2'-9"
#5	2'-6"	2'-2"	2'-6"	2'-2"	3'-5"
#6	3'-0"	2'-7"	3'-10"	2'-7"	4'-4"
#7	5'-3"	3'-6"			
#8	6'-10"	4'-7"			

GROOVING BRIDGE FLOOR	
APPROACH SLABS	2,068 SQ. FT.
BRIDGE DECK	8,470 SQ. FT.
TOTAL	10,538 SQ. FT.

BAR TYPE

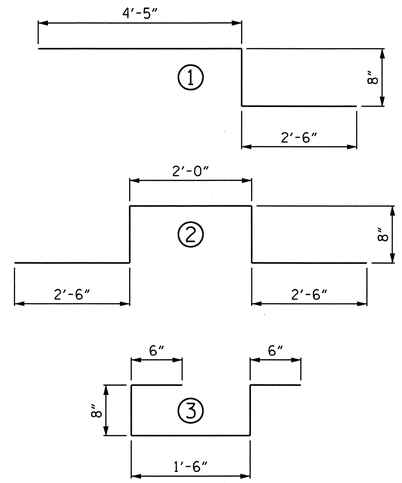

ALL BAR DIMENSIONS ARE OUT TO OUT.

BILL OF MATERIAL

BAR	NO.	SIZE	TYPE	LENGTH	WEIGHT
✱ A1	395	#5	STR	48'-11"	20153
A2	395	#5	STR	48'-11"	20153
B1	240	#5	STR	51'-0"	12766
✱ B2	264	#4	STR	26'-6"	4673
✱ K1	12	#5	1	7'-7"	95
✱ K2	18	#5	2	8'-4"	156
✱ K3	24	#5	STR	9'-6"	238
✱ S1	72	#4	3	3'-10"	184
REINFORCING STEEL					32,919 LBS.
✱EPOXY COATED REINFORCING STEEL					25,499 LBS.

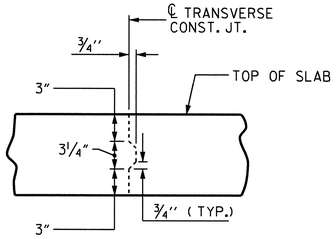

TRANSVERSE CONSTRUCTION JOINT DETAIL

NOTE: REINFORCING STEEL IN SLAB NOT SHOWN.
LONGITUDINAL REINFORCING STEEL SHALL BE CONTINUOUS THRU JOINT

SUPERSTRUCTURE BILL OF MATERIAL			
	CLASS AA CONCRETE	REINFORCING STEEL	EPOXY COATED REINFORCING STEEL
	(CU. YDS.)	(LBS.)	(LBS.)
POUR #1	2226.0	———	———
POUR #2	71.2	———	———
POUR #3	18.7	———	———
TOTAL ✱✱	315.9	32,919 LBS.	25,499 LBS.

✱✱QUANTITIES FOR BARRIER RAIL ARE NOT INCLUDED

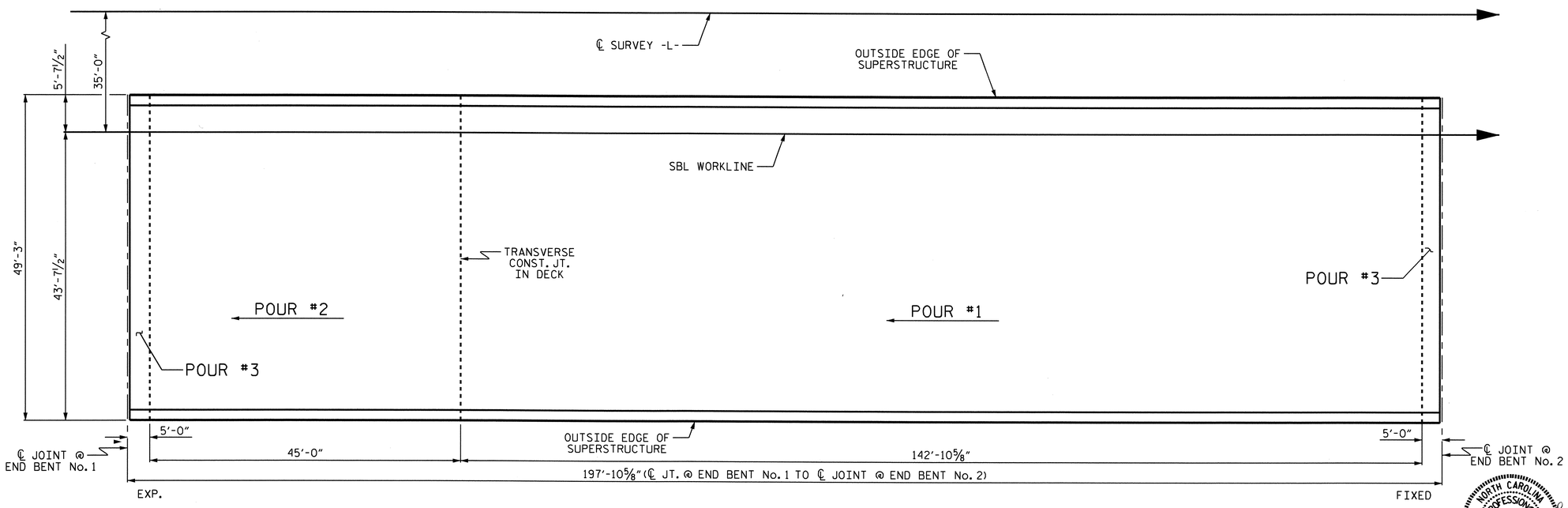

LAYOUT FOR COMPUTING AREA OF REINFORCED CONCRETE DECK SLAB
(SQ. FT. = 9,746)

PROJECT NO. R-2417AA
LEE COUNTY
STATION: 52+08.00 -L-

STATE OF NORTH CAROLINA
DEPARTMENT OF TRANSPORTATION
RALEIGH

SUPERSTRUCTURE

BILL OF MATERIAL
(SBL)

NORTH CAROLINA PROFESSIONAL SEAL 24390 ENGINEER THEO J. BEACH
11/23/10

REVISIONS						SHEET NO.
NO.	BY:	DATE:	NO.	BY:	DATE:	S-99
1			3			TOTAL SHEETS
2			4			162

DRAWN BY : T. BANKOVICH DATE : 1-2009
CHECKED BY : S.B. WILLIAMS DATE : 2-2009

23-NOV-2010 16:15
R:\Structures\str3-L-overBuffaloCk(RtLane)\Superstructure\R-2417AA_str3_BM.dgn
tbeach

STR. #3

NOTES

▲ FOR LOCATION OF ELEVATIONS BETWEEN BUILDUPS SEE SECTION A-A ON SHEET 3 OF 3.

★ THIS ELEVATION TAKEN ON FILL FACE OF BACKWALL

SEE ADDITIONAL NOTES SHEET 3 OF 3.

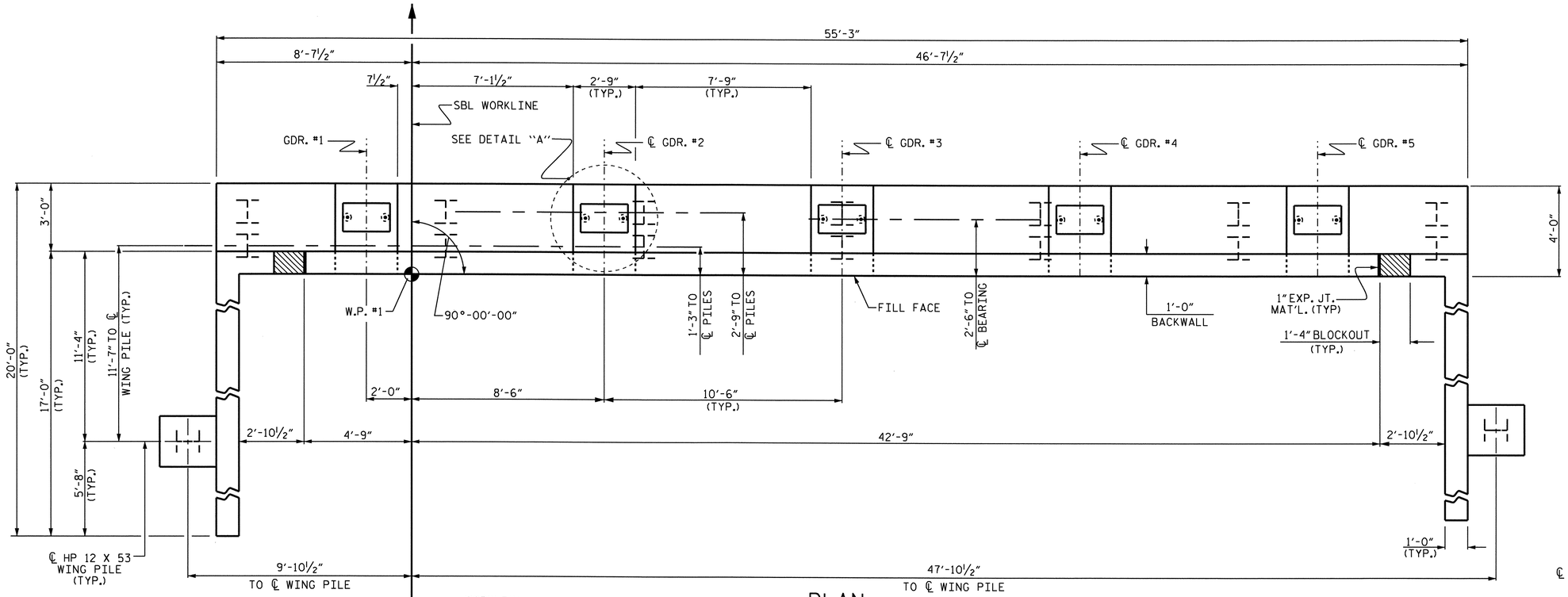

PLAN

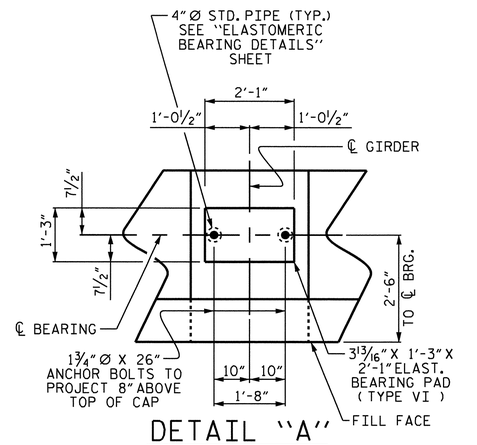

DETAIL "A"

(TYP. EA. GIRDER)

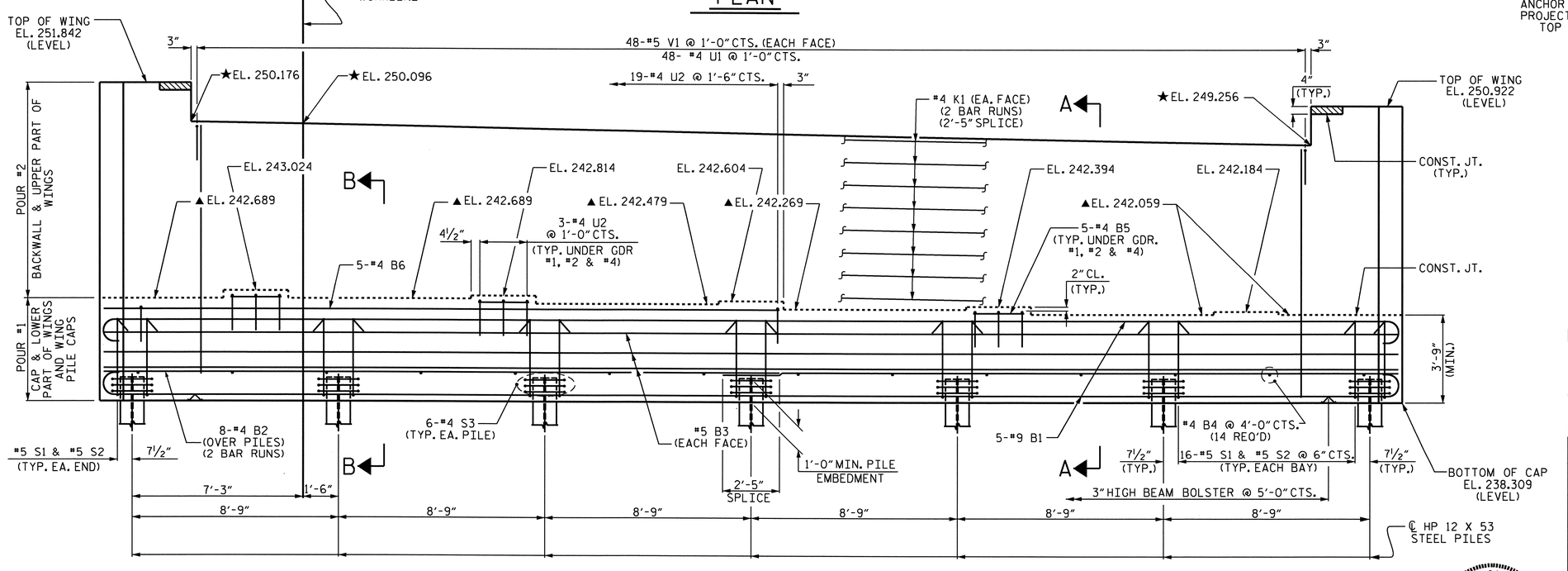

ELEVATION

(WING PILES ARE NOT SHOWN FOR CLARITY)

PROJECT NO. R-2417AA

LEE COUNTY

STATION: 52+08.00 -L-

SHEET 1 OF 3

STATE OF NORTH CAROLINA
DEPARTMENT OF TRANSPORTATION
RALEIGH

SUBSTRUCTURE

END BENT No. 1

(SBL)

NORTH CAROLINA PROFESSIONAL SEAL 24390 ENGINEER THEO J. BEACH 11/23/10

REVISIONS								SHEET NO.
NO.	BY:	DATE:	NO.	BY:	DATE:			S-100
1			3					TOTAL SHEETS
2			4					162

DRAWN BY : S.B. WILLIAMS DATE : 3-31-09
CHECKED BY : T. BANKOVICH DATE : 6-2009

19-OCT-2010 08:00
R:\Structures\str3-L-overBuffaloCk(RtLane)\Substructure\R2417AA_sd_Eb1.dgn
sbwilliams

STR. #3

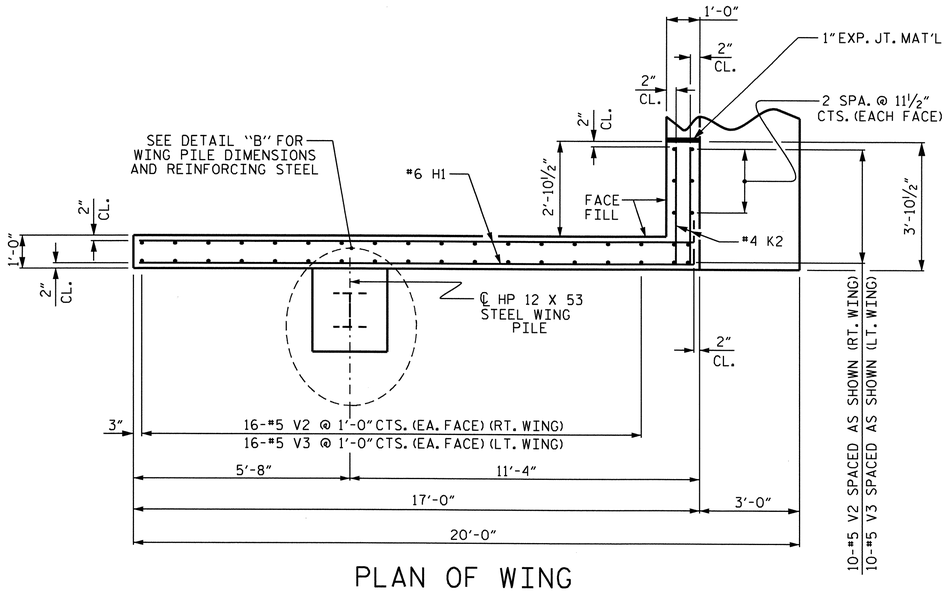

PLAN OF WING

(RIGHT WING SHOWN, LEFT WING SIMILAR)

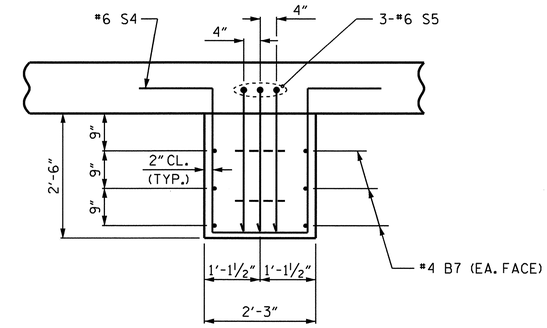

DETAIL "B"

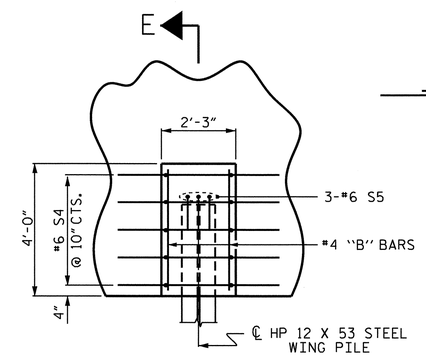

DETAIL "C"

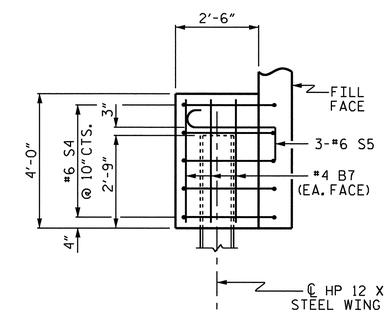

SECTION E-E

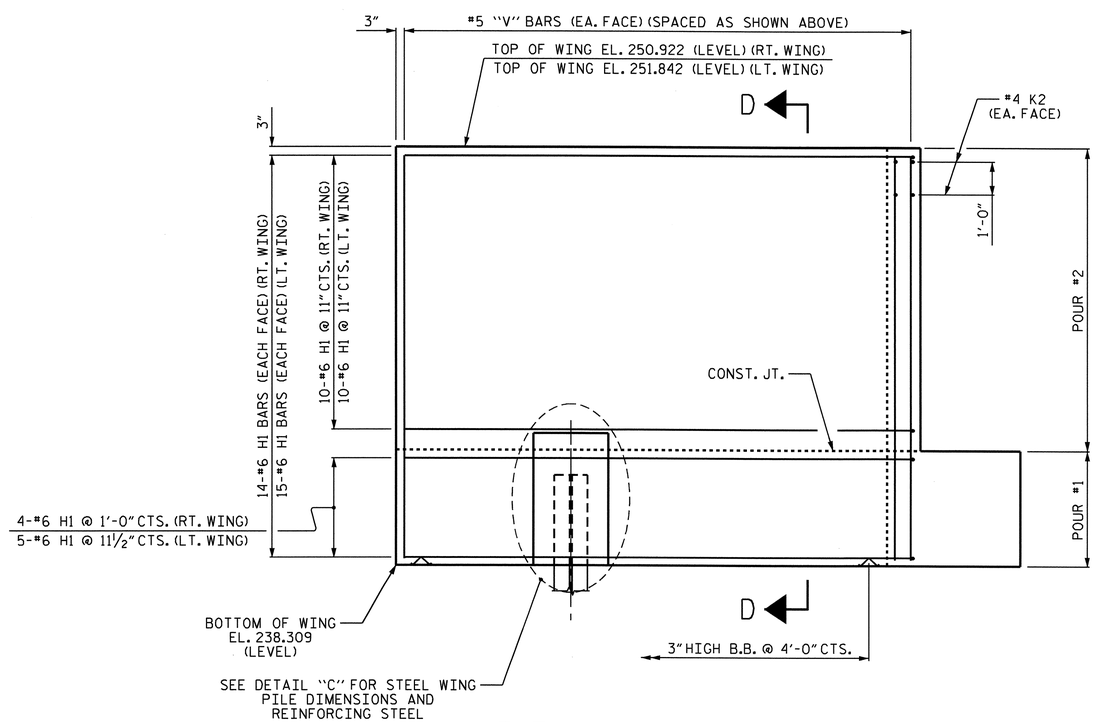

ELEVATION OF WING

(RIGHT WING SHOWN, LEFT WING SIMILAR)

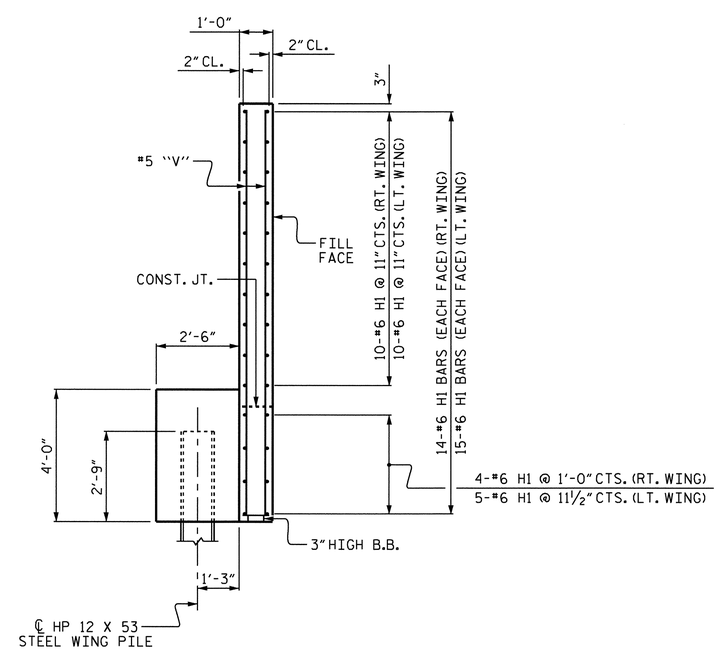

SECTION D-D

(RIGHT WING SHOWN, LEFT WING SIMILAR)

PROJECT NO. R-2417AA

LEE COUNTY

STATION: 52+08.00 -L-

SHEET 2 OF 3

STATE OF NORTH CAROLINA
DEPARTMENT OF TRANSPORTATION
RALEIGH

SUBSTRUCTURE

END BENT No. 1

(SBL)

NORTH CAROLINA PROFESSIONAL SEAL 24390 ENGINEER THEO J. BEACH
11/23/10

REVISIONS						SHEET NO.
NO.	BY:	DATE:	NO.	BY:	DATE:	S-101
1			3			TOTAL SHEETS
2			4			162

DRAWN BY : S.B. WILLIAMS DATE : 4-09
CHECKED BY : T. BANKOVICH DATE : 6-09

19-OCT-2010 07:58
R:\Structures\str3-L-overBuffaloCk(RtLane)\Substructure\R2417AA_sd_Eb1.dgn
sbwilliams

STR. #3

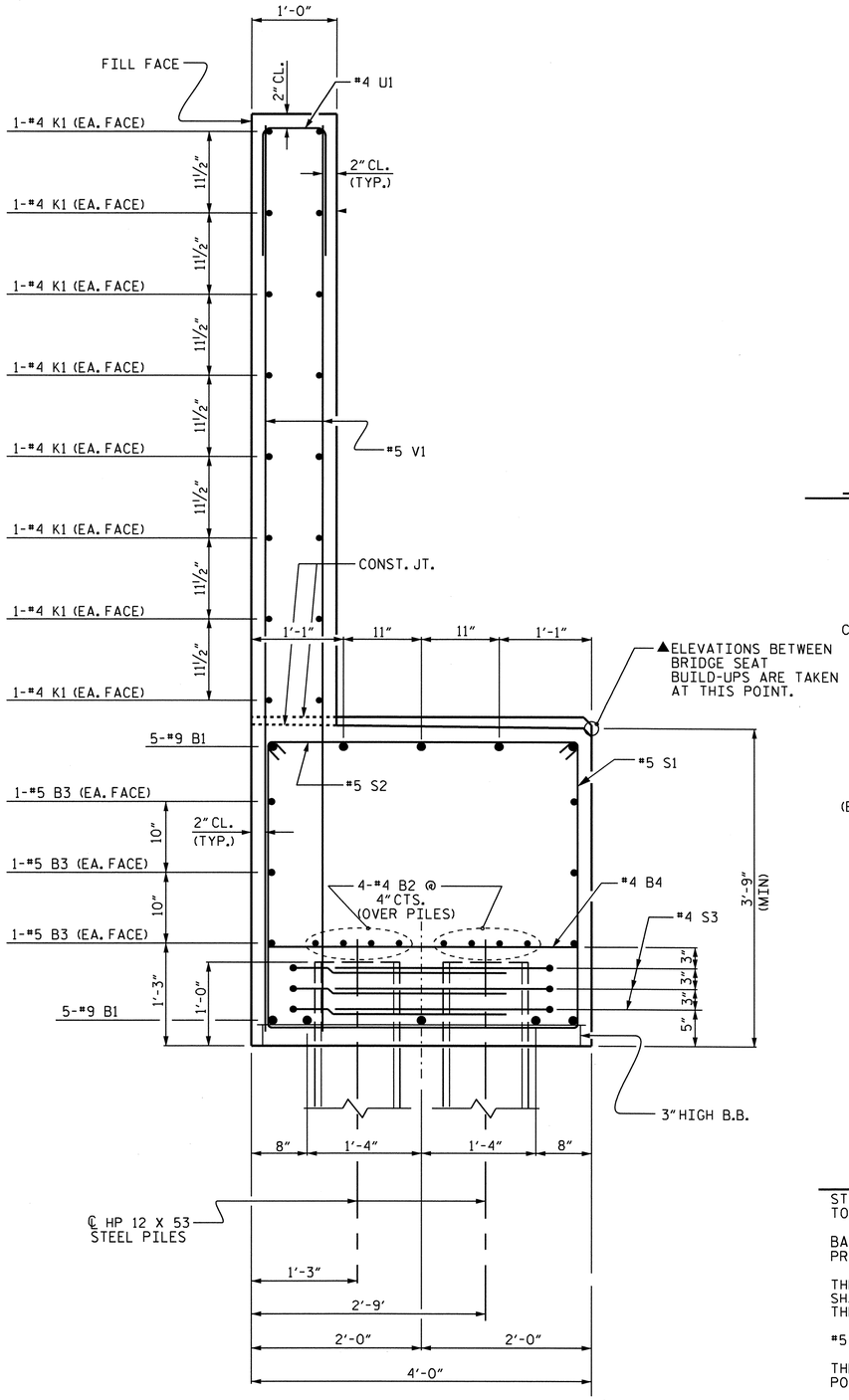

SECTION A-A

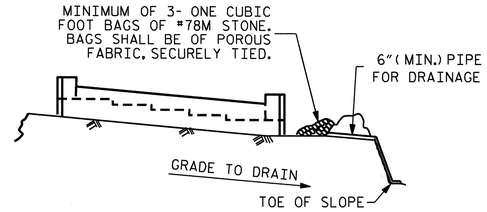

BAGGED STONE AND PIPE SHALL BE PLACED IMMEDIATELY AFTER COMPLETION OF END BENT EXCAVATION. PIPE MAY BE EITHER CONCRETE, CORRUGATED STEEL, CORRUGATED ALUMINUM ALLOY, OR CORRUGATED PLASTIC. PERFORATED PIPE WILL NOT BE ALLOWED.

BAGGED STONE SHALL REMAIN IN PLACE UNTIL THE ENGINEER DIRECTS THAT IT BE REMOVED. THE CONTRACTOR SHALL REMOVE AND DISPOSE OF SILT ACCUMULATIONS AT BAGGED STONE WHEN SO DIRECTED BY THE ENGINEER. BAGS SHALL BE REMOVED AND REPLACED WHENEVER THE ENGINEER DETERMINES THAT THEY HAVE DETERIORATED AND LOST THEIR EFFECTIVENESS.

NO SEPARATE PAYMENT WILL BE MADE FOR THIS WORK AND THE ENTIRE COST OF THIS WORK SHALL BE INCLUDED IN THE UNIT CONTRACT PRICE BID FOR THE SEVERAL PAY ITEMS.

TEMPORARY DRAINAGE AT END BENT

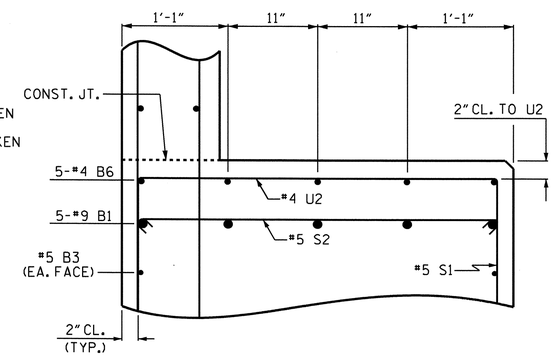

PARTIAL SECTION B-B

BAR TYPES

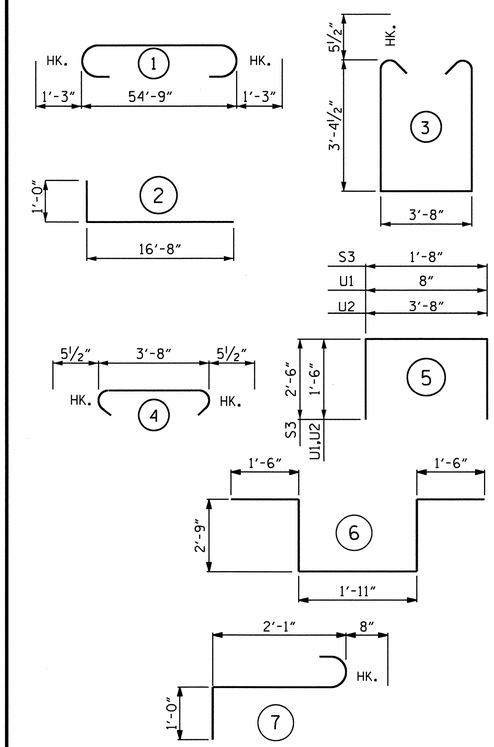

ALL BAR DIMENSIONS ARE OUT TO OUT

BILL OF MATERIAL

END BENT No. 1

BAR	NO.	SIZE	TYPE	LENGTH	WEIGHT
B1	10	#9	1	57'-3"	1947
B2	16	#4	STR	28'-8"	306
B3	6	#5	STR	54'-11"	344
B4	14	#4	STR	3'-8"	34
B5	15	#4	STR	2'-5"	24
B6	5	#4	STR	28'-6"	95
B7	12	#4	STR	3'-8"	29
H1	58	#6	2	17'-8"	1539
K1	32	#4	STR	28'-8"	613
K2	8	#4	STR	3'-6"	19
S1	98	#5	3	11'-4"	1158
S2	98	#5	4	4'-7"	468
S3	42	#4	5	6'-8"	187
S4	10	#6	6	10'-5"	156
S5	6	#6	7	3'-9"	34
U1	48	#4	5	3'-8"	118
U2	28	#4	5	6'-8"	125
V1	96	#5	STR	10'-6"	1051
V2	42	#5	STR	12'-3"	537
V3	42	#5	STR	13'-2"	577
REINFORCING STEEL					9361 LBS.

CLASS A CONCRETE BREAKDOWN

POUR #1 (CAP & LOWER PART OF WINGS & WING PILE CAPS)	40.2 C.Y.
POUR #2 (BACKWALL & UPPER PART OF WINGS)	26.1 C.Y.
TOTAL CLASS A CONCRETE	66.3 C.Y.

HP 12 X 53 STEEL PILES
No. = 16 — 160 LIN. FT.

PILE EXCAVATION NOT IN SOIL: 80 FT.

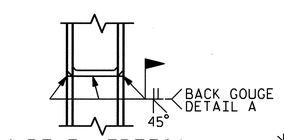

✳ PILE VERTICAL

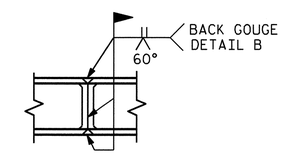

✳ PILE HORIZONTAL OR VERTICAL

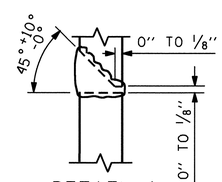

DETAIL A

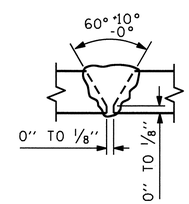

DETAIL B

✳ POSITION OF PILE DURING WELDING.

PILE SPLICE DETAILS

NOTES:

STIRRUPS AND U2 BARS IN CAP MAY BE SHIFTED AS NECESSARY TO CLEAR ANCHOR BOLTS.

BACKWALL SHALL BE PLACED BEFORE APPLYING THE EPOXY PROTECTIVE COATING.

THE TOP SURFACE OF THE CAP EXCEPT THE BRIDGE SEAT BUILDUPS SHALL BE SLOPED TRANSVERSELY FROM THE FILL FACE TO THE BACK FACE AT THE RATE OF 2%.

#5 V1 BARS IN BACKWALL SHALL BE PLACED 2" FROM TOP OF BACKWALL.

THE CONCRETE IN THE SHADED AREA OF THE WING WALL SHALL BE POURED AFTER THE BARRIER RAIL IS CAST IF SLIP FORMING IS USED.

EPOXY COAT THE END BENT CAP AFTER ADJUSTMENTS ARE MADE TO BEARINGS AND ANCHOR BOLTS ARE GROUTED. SEE "ELASTOMERIC BEARING DETAILS" SHEET.

PROJECT NO. R-2417AA
LEE COUNTY
STATION: 52+08.00 -L-

SHEET 3 OF 3

STATE OF NORTH CAROLINA
DEPARTMENT OF TRANSPORTATION
RALEIGH

SUBSTRUCTURE

END BENT No. 1

(SBL)

NORTH CAROLINA PROFESSIONAL SEAL 2390 ENGINEER THEO. J. BEACH
11/23/10

REVISIONS						SHEET NO.
NO.	BY:	DATE:	NO.	BY:	DATE:	S-102
1			3			TOTAL SHEETS
2			4			162

DRAWN BY : S.B. WILLIAMS DATE : 4-1-09
CHECKED BY : T. BANKOVICH DATE : 6-09

23-NOV-2010 16:16
R:\Structures\str3-L-overBuffaloCk(RtLane)\Substructure\R2417AA_sd_Eb1.dgn
tbeach

STR. #3

NOTES

▲ FOR LOCATION OF ELEVATIONS BETWEEN BUILDUPS SEE SECTION A-A ON SHEET 3 OF 3.

★ THIS ELEVATION TAKEN ON FILL FACE OF BACKWALL

SEE ADDITIONAL NOTES SHEET 3 OF 3.

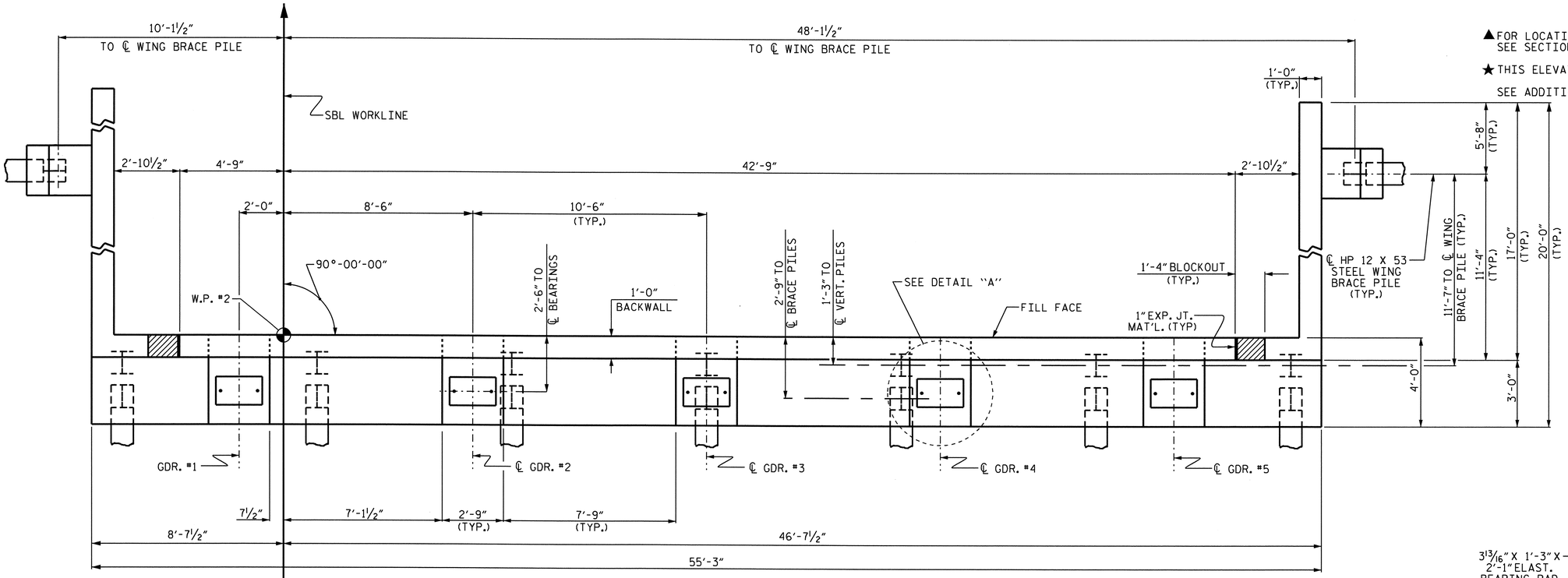

PLAN

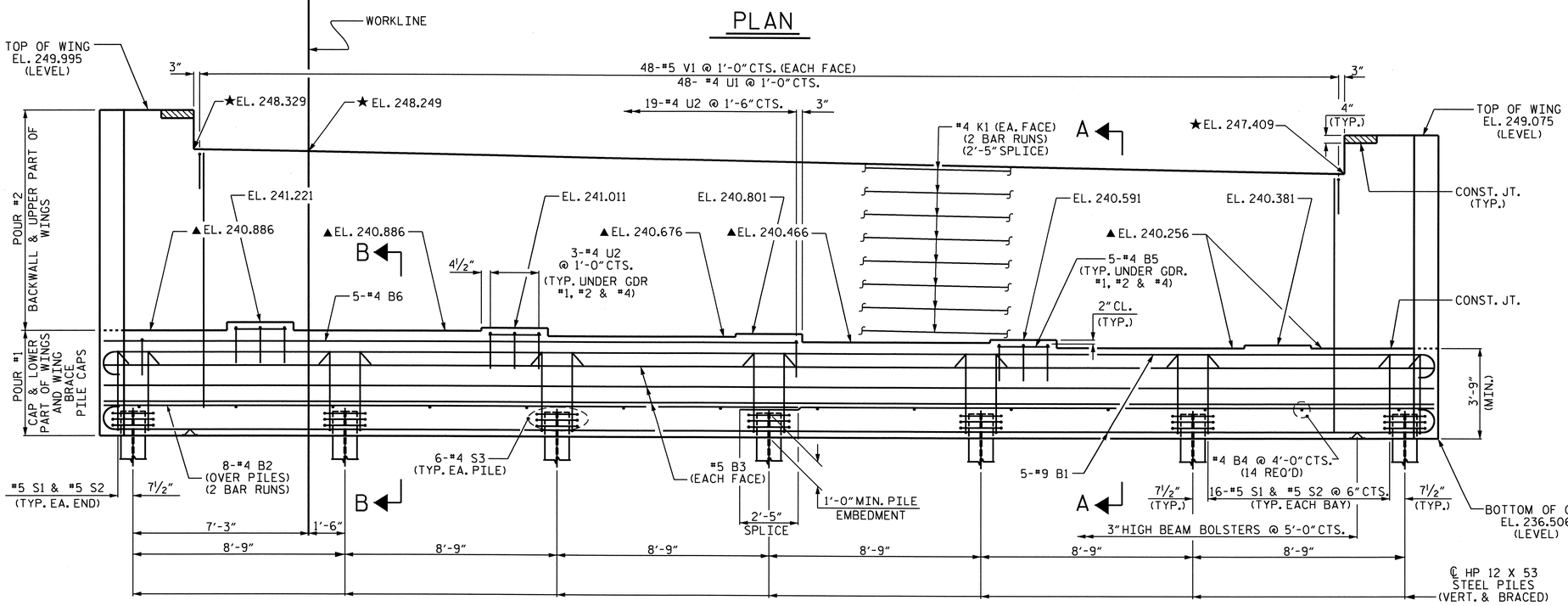

ELEVATION

(WING BRACE PILES ARE NOT SHOWN FOR CLARITY)

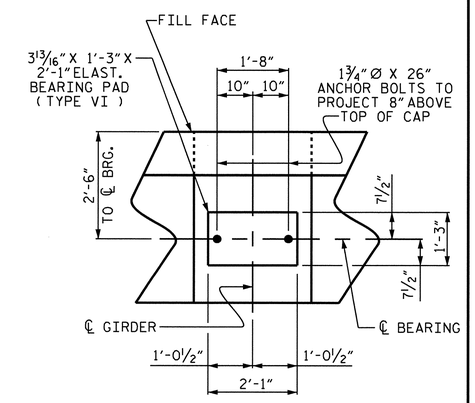

DETAIL "A"

(TYP. EA. GIRDER)

PROJECT NO. R-2417AA

LEE COUNTY

STATION: 52+08.00 -L-

SHEET 1 OF 3

STATE OF NORTH CAROLINA
DEPARTMENT OF TRANSPORTATION
RALEIGH

SUBSTRUCTURE

END BENT No. 2

(SBL)

NORTH CAROLINA PROFESSIONAL SEAL 24390 ENGINEER THEO. J. BEACH 11/23/10

REVISIONS								SHEET NO.
NO.	BY:	DATE:	NO.	BY:	DATE:			S-103
1			3					TOTAL SHEETS
2			4					162

DRAWN BY : S.B. WILLIAMS DATE : 4-09
CHECKED BY : T. BANKOVICH DATE : 6-09

19-OCT-2010 07:56
R:\Structures\str3-L-overBuffaloCk(RtLane)\Substructure\R2417AA_SD_Eb2.dgn
sbwilliams

STR. #3

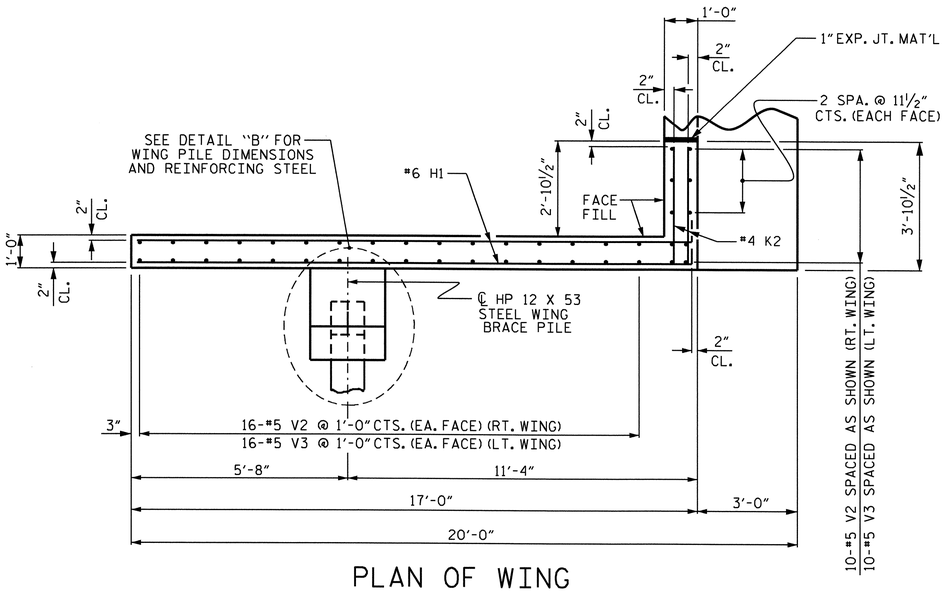

PLAN OF WING

(LEFT WING SHOWN, RIGHT WING SIMILAR)

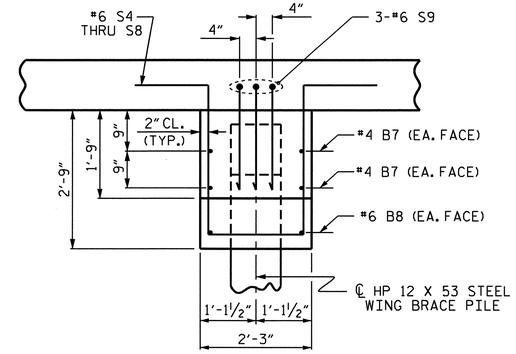

DETAIL "B"

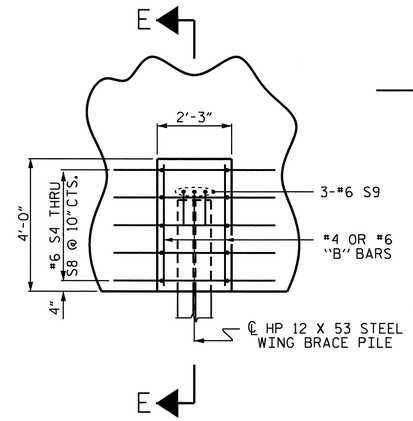

DETAIL "C"

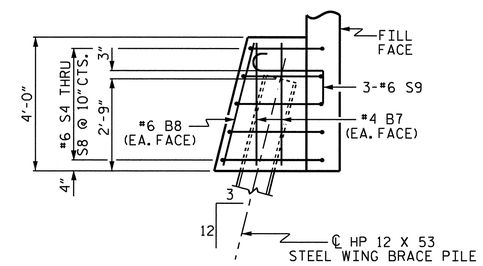

SECTION E-E

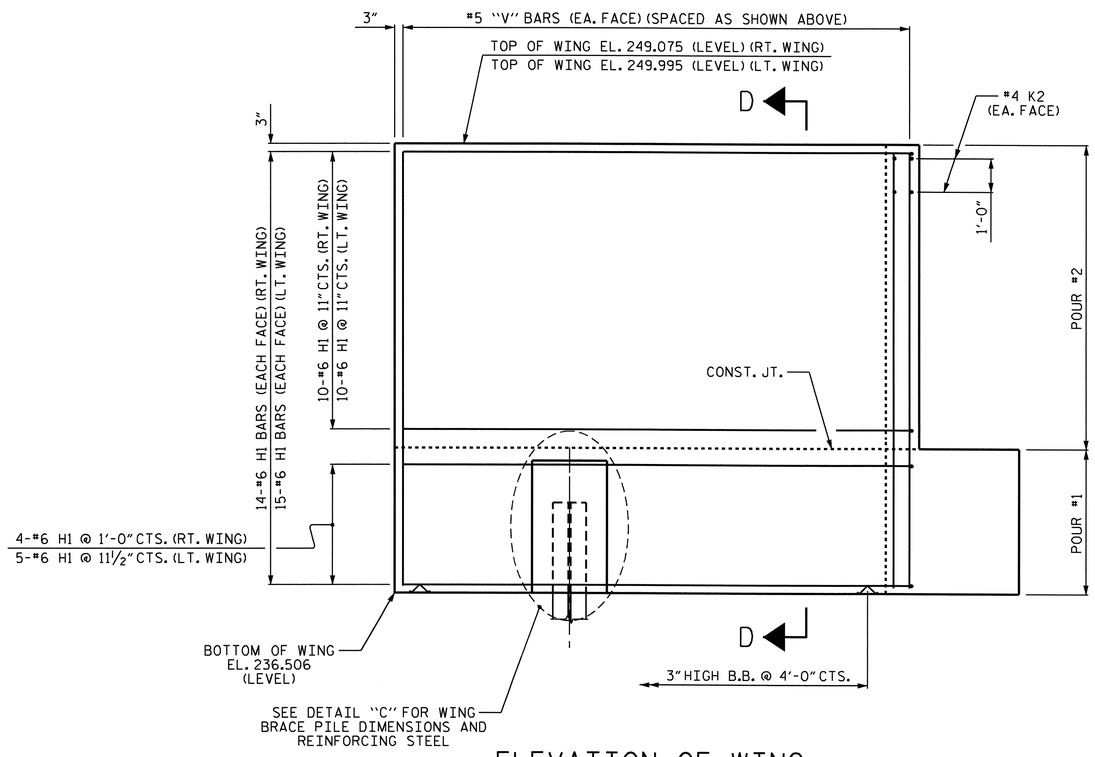

ELEVATION OF WING

(LEFT WING SHOWN, RIGHT WING SIMILAR)

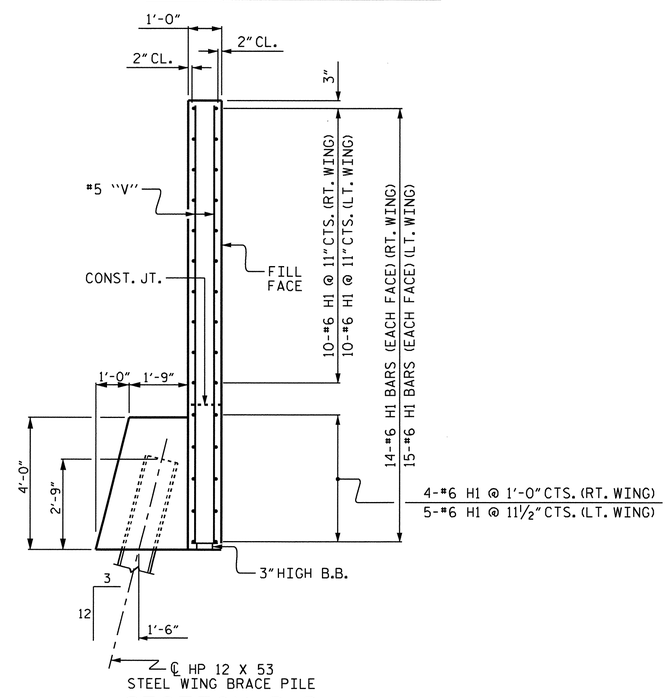

SECTION D-D

(LEFT WING SHOWN, RIGHT WING SIMILAR)

PROJECT NO. R-2417AA

LEE COUNTY

STATION: 52+08.00 -L-

SHEET 2 OF 3

STATE OF NORTH CAROLINA
DEPARTMENT OF TRANSPORTATION
RALEIGH

SUBSTRUCTURE

END BENT No. 2

(SBL)

NORTH CAROLINA PROFESSIONAL SEAL 24390 ENGINEER THEO J. BEACH
11/23/10

REVISIONS						SHEET NO.
NO.	BY:	DATE:	NO.	BY:	DATE:	S-104
1			3			TOTAL SHEETS
2			4			162

DRAWN BY : S.B. WILLIAMS DATE : 4-09
CHECKED BY : T. BANKOVICH DATE : 6-09

19-OCT-2010 07:54
R:\Structures\str3-L-overBuffaloCk(RtLane)\Substructure\R2417AA_SD_Eb2.dgn
sbwilliams

STR. #3

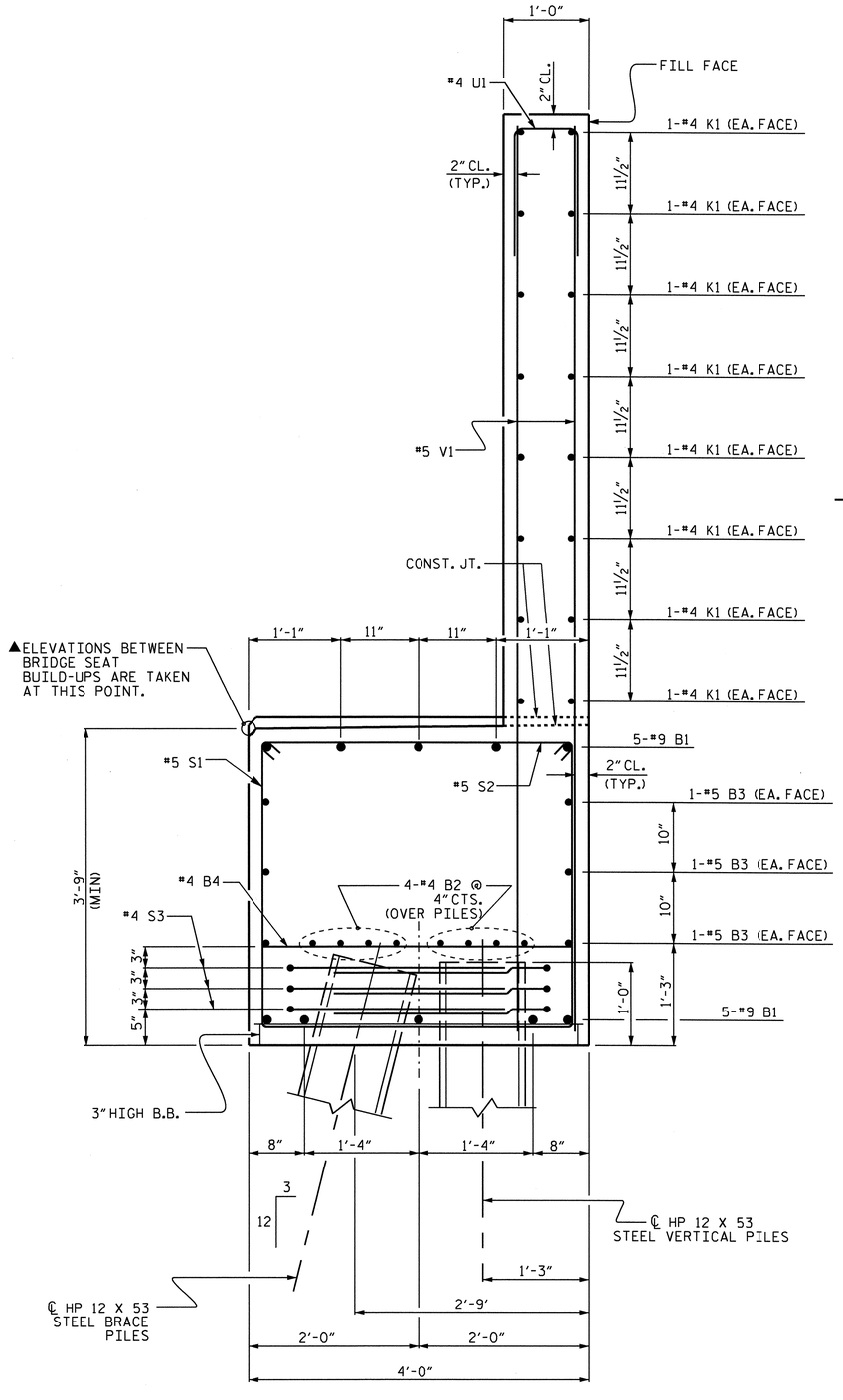

SECTION A-A

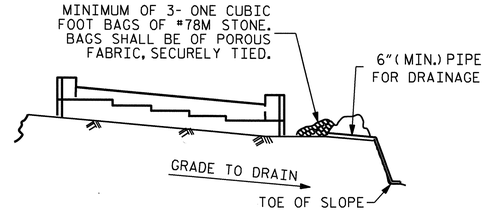

BAGGED STONE AND PIPE SHALL BE PLACED IMMEDIATELY AFTER COMPLETION OF END BENT EXCAVATION. PIPE MAY BE EITHER CONCRETE, CORRUGATED STEEL, CORRUGATED ALUMINUM ALLOY, OR CORRUGATED PLASTIC. PERFORATED PIPE WILL NOT BE ALLOWED.

BAGGED STONE SHALL REMAIN IN PLACE UNTIL THE ENGINEER DIRECTS THAT IT BE REMOVED. THE CONTRACTOR SHALL REMOVE AND DISPOSE OF SILT ACCUMULATIONS AT BAGGED STONE WHEN SO DIRECTED BY THE ENGINEER. BAGS SHALL BE REMOVED AND REPLACED WHENEVER THE ENGINEER DETERMINES THAT THEY HAVE DETERIORATED AND LOST THEIR EFFECTIVENESS.

NO SEPARATE PAYMENT WILL BE MADE FOR THIS WORK AND THE ENTIRE COST OF THIS WORK SHALL BE INCLUDED IN THE UNIT CONTRACT PRICE BID FOR THE SEVERAL PAY ITEMS.

TEMPORARY DRAINAGE AT END BENT

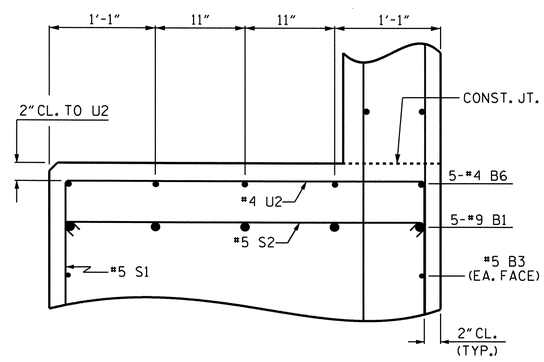

PARTIAL SECTION B-B

NOTES:

STIRRUPS AND U2 BARS IN CAP MAY BE SHIFTED AS NECESSARY TO CLEAR ANCHOR BOLTS.

BACKWALL SHALL BE PLACED BEFORE APPLYING THE EPOXY PROTECTIVE COATING.

THE TOP SURFACE OF THE CAP EXCEPT THE BRIDGE SEAT BUILDUPS SHALL BE SLOPED TRANSVERSELY FROM THE FILL FACE TO THE BACK FACE AT THE RATE OF 2%.

THE CONTRACTOR SHALL PROVIDE FOR INSTALLATION OF THE 4" DIAMETER DRAIN PIPE THROUGH THE WING WALL AS REQUIRED FOR REINFORCED BRIDGE APPROACH FILLS, SEE THE ROADWAY PLANS. REINFORCING STEEL IN THE WING WALL MAY BE SHIFTED AS NECESSARY TO CLEAR THE DRAIN PIPE.

#5 V1 BARS IN BACKWALL SHALL BE PLACED 2" FROM TOP OF BACKWALL.

THE CONCRETE IN THE SHADED AREA OF THE WING WALL SHALL BE POURED AFTER THE BARRIER RAIL IS CAST IF SLIP FORMING IS USED.

BAR TYPES

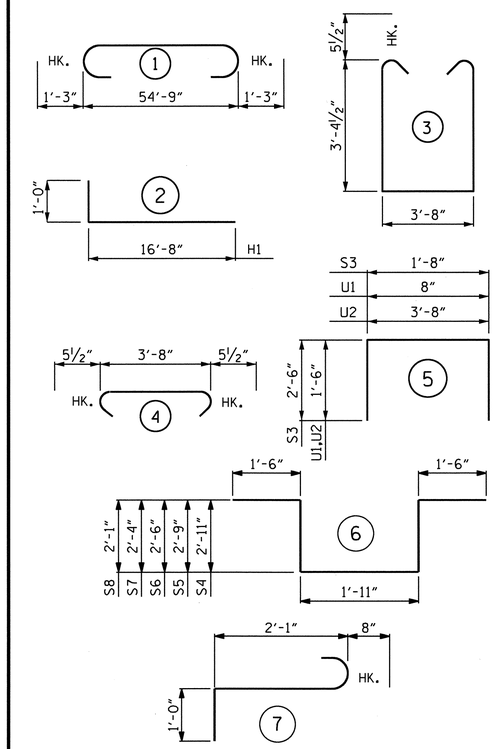

ALL BAR DIMENSIONS ARE OUT TO OUT

BILL OF MATERIAL

END BENT No. 2

BAR	NO.	SIZE	TYPE	LENGTH	WEIGHT
B1	10	#9	1	57'-3"	1947
B2	16	#4	STR	28'-8"	306
B3	6	#5	STR	54'-11"	344
B4	14	#4	STR	3'-8"	34
B5	15	#4	STR	2'-5"	24
B6	5	#4	STR	28'-6"	95
B7	8	#4	STR	3'-8"	20
B8	4	#6	STR	3'-9"	23
H1	58	#6	2	17'-8"	1539
K1	32	#4	STR	28'-8"	613
K2	8	#4	STR	3'-6"	19
S1	98	#5	3	11'-4"	1158
S2	98	#5	4	4'-7"	468
S3	42	#4	5	6'-8"	187
S4	2	#6	6	10'-9"	32
S5	2	#6	6	10'-5"	31
S6	2	#6	6	9'-11"	30
S7	2	#6	6	9'-7"	29
S8	2	#6	6	9'-1"	27
S9	6	#6	7	3'-9"	34
U1	48	#4	5	3'-8"	118
U2	28	#4	5	6'-8"	125
V1	96	#5	STR	10'-6"	1051
V2	42	#5	STR	12'-2'	533
V3	42	#5	STR	13'-1"	573
REINFORCING STEEL					9360 LBS.

CLASS A CONCRETE BREAKDOWN

POUR #1 (CAP & LOWER PART OF WINGS & WING PILE CAPS)	40.0 C.Y.
POUR #2 (BACKWALL & UPPER PART OF WINGS)	25.9 C.Y.
TOTAL CLASS A CONCRETE	65.9 C.Y.

HP 12 X 53 STEEL PILES
No. = 16 — 320 LIN. FT.

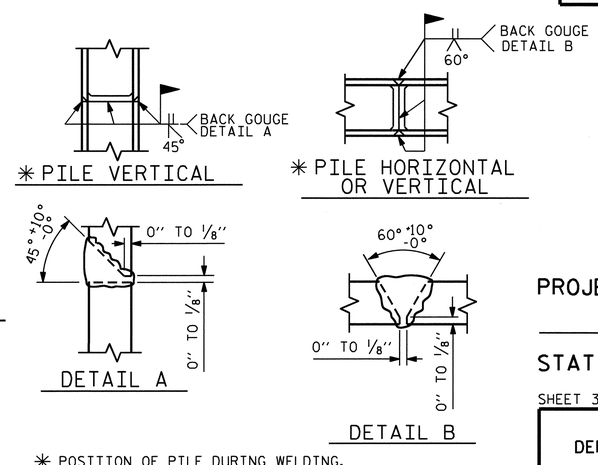

✳ POSITION OF PILE DURING WELDING.

PILE SPLICE DETAILS

PROJECT NO. R-2417AA
LEE COUNTY
STATION: 52+08.00 -L-

SHEET 3 OF 3

STATE OF NORTH CAROLINA
DEPARTMENT OF TRANSPORTATION
RALEIGH

SUBSTRUCTURE

END BENT No. 2

(SBL)

NORTH CAROLINA PROFESSIONAL SEAL 24390 ENGINEER THEO J. BEACH
8/23/10

REVISIONS						SHEET NO.
NO.	BY:	DATE:	NO.	BY:	DATE:	S-105
1			3			TOTAL SHEETS
2			4			162

DRAWN BY : S.B. WILLIAMS DATE : 4-1-09
CHECKED BY : T. BANKOVICH DATE : 6-09

24-NOV-2010 07:41
R:\Structures\str3-L-overBuffaloCk(RtLane)\Substructure\R2417AA_SD_Eb2.dgn
tbeach

STR. #3

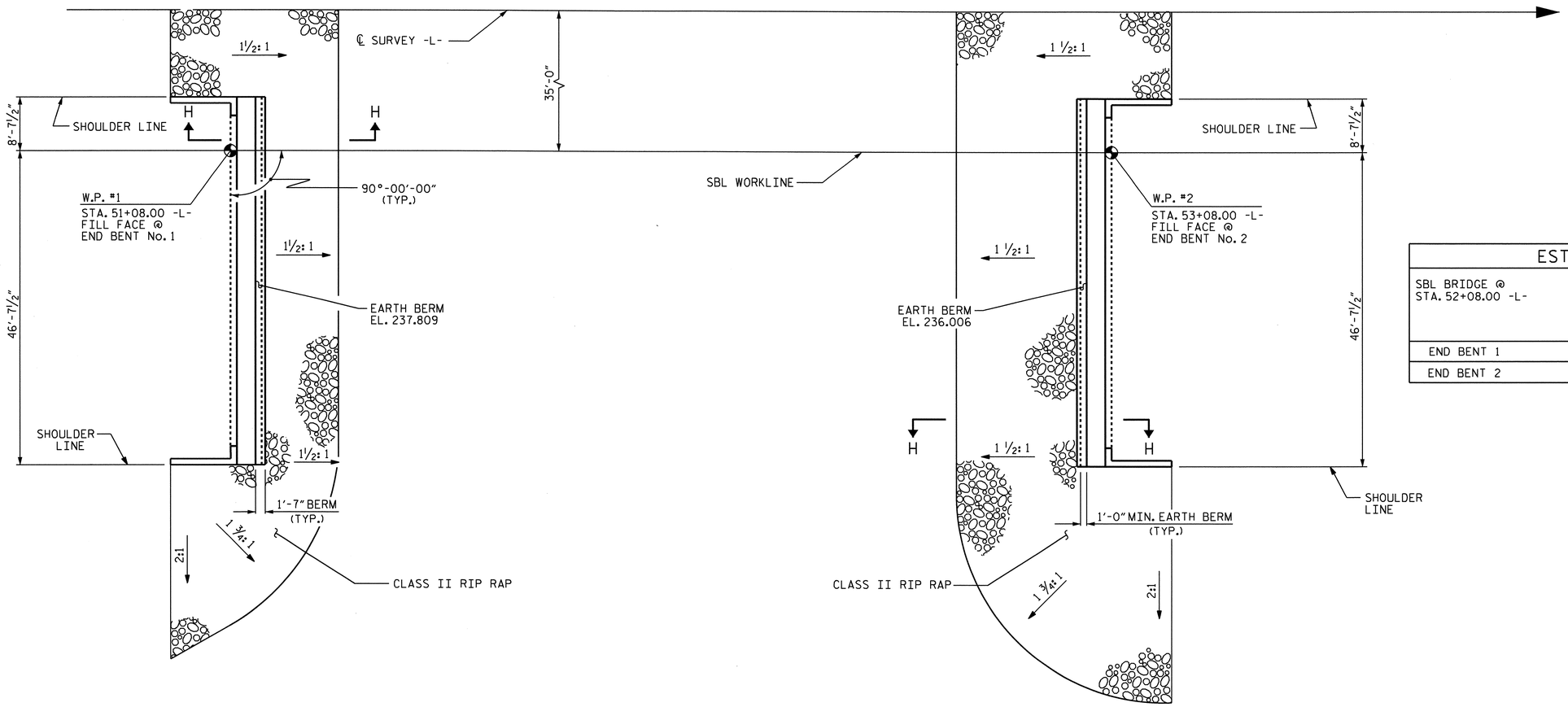

ESTIMATED QUANTITIES		
SBL BRIDGE @ STA. 52+08.00 -L-	RIP RAP CLASS II (2'-0" THICK)	FILTER FABRIC FOR DRAINAGE
	TONS	SQUARE YARDS
END BENT 1	205	228
END BENT 2	360	400

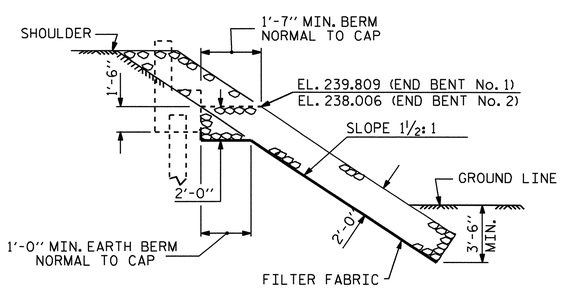

SECTION H-H

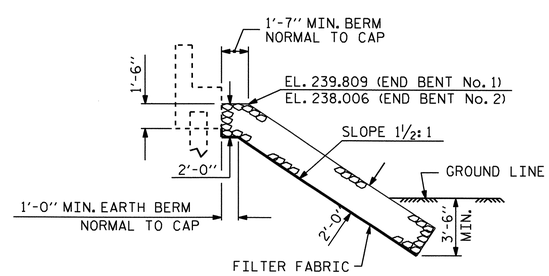

℄ SECTION
BERM RIP RAPPED

PROJECT NO. R-2417AA
LEE COUNTY
STATION: 52+08.00 -L-

STATE OF NORTH CAROLINA
DEPARTMENT OF TRANSPORTATION
RALEIGH

STANDARD

RIP RAP DETAILS
(SBL)

NORTH CAROLINA PROFESSIONAL SEAL 24390 ENGINEER THEO J. BEACH
11/23/10

REVISIONS						
NO.	BY:	DATE:	NO.	BY:	DATE:	
1			3			
2			4			

SHEET NO. S-106
TOTAL SHEETS 162

ASSEMBLED BY : M. L. BROWN	DATE :	6-09
CHECKED BY : S. B. WILLIAMS	DATE :	9-09
DRAWN BY : FCJ 2/88	REV. 8/16/99	RWW/LES
CHECKED BY : ARB 8/88	REV. 10/17/00	RWW/LES
	REV. 5/1/06	TLA/GM

19-OCT-2010 07:51
R:\Structures\str3-L-overBuffaloCk(RtLane)\Miscellaneous\R-2417AA_sd_RR.dgn
sbwilliams

STR #3

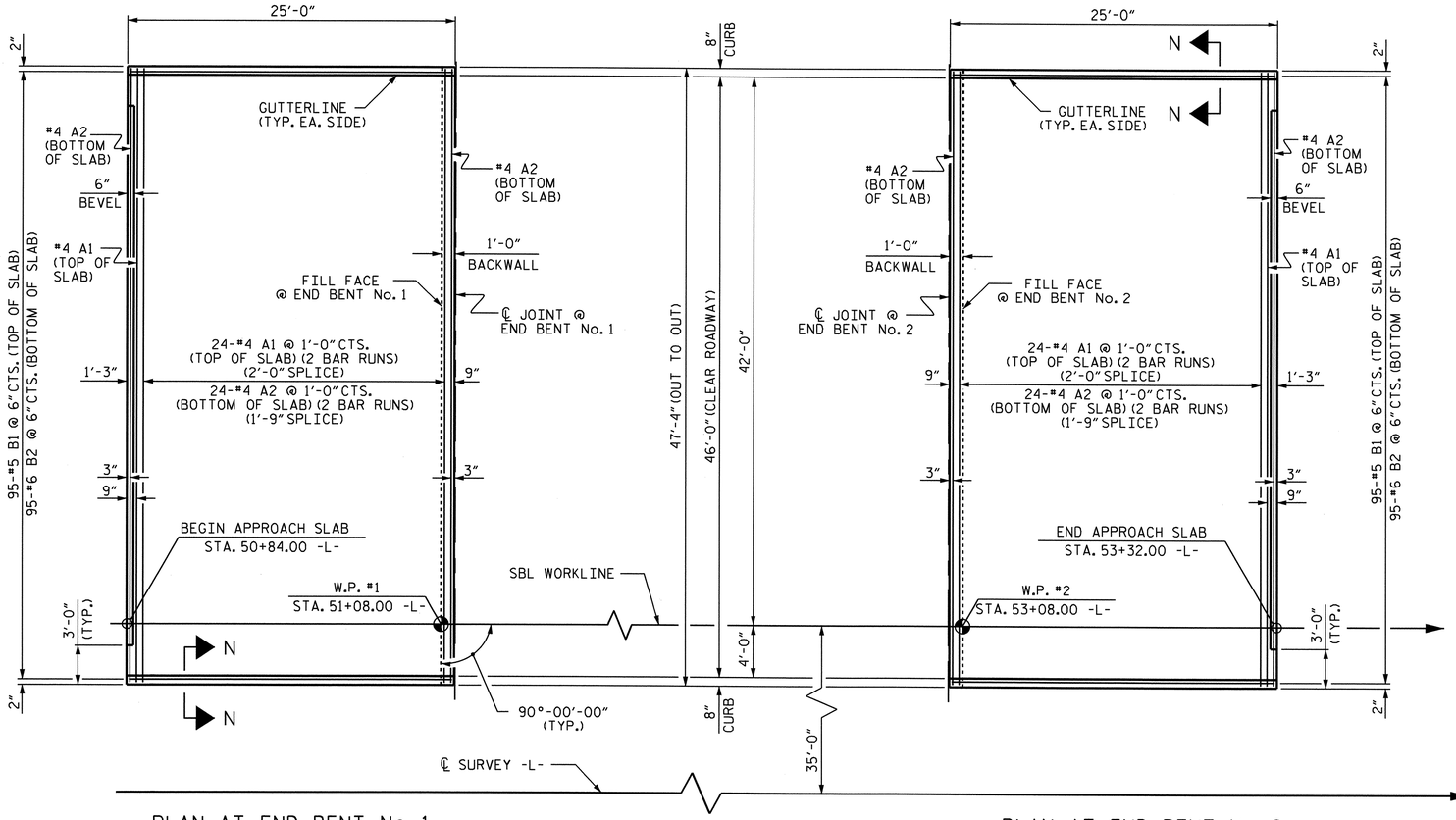

PLAN AT END BENT No. 1

PLAN AT END BENT No. 2

PLAN OF APPROACH SLABS

NOTES:

APPROACH SLAB SHALL NOT BE CONSTRUCTED PRIOR TO COMPLETION OF THE BRIDGE DECK.

FOR APPROACH SLAB @ END BENT No. 1:
FOR BRIDGE APPROACH FILL @ END BENT No. 1 INCLUDING FABRIC, 4" Ø DRAINAGE PIPE AND #78M STONE BACKFILL, SEE ROADWAY PLANS.

FABRIC SHALL BE TYPE 1 ENGINEERING FABRIC IN ACCORDANCE WITH THE STANDARD SPECIFICATIONS SECTION 1056.

#78 STONE BACKFILL (CLASS V SELECT MATERIAL) SHALL BE IN ACCORDANCE WITH STANDARD SPECIFICATIONS SECTION 1016.

#78 STONE BACKFILL IS TO BE CONTINUOUS ALONG FILL FACE OF BACKWALL FROM OUTSIDE EDGE TO OUTSIDE EDGE OF APPROACH SLAB.

FOR THE 4" Ø DRAINAGE PIPE OUTLET(S), SEE ROADWAY STANDARD DRAWINGS.

FOR REINFORCED BRIDGE APPROACH FILL @ END BENT No. 2 INCLUDING FABRIC, IMPERMEABLE GEOMEMBRANE, 4" Ø DRAINAGE PIPE, #78M STONE, AND SELECT MATERIAL, SEE ROADWAY PLANS.

AREA BETWEEN THE WINGWALL AND APPROACH SLAB SHALL BE GRADED TO DRAIN THE WATER AWAY FROM THE FILL FACE OF THE BRIDGE AND SHALL BE PAVED. SEE ROADWAY PLANS.

THE 6" COMP. A.B.C. SHALL BE FLUSH WITH THE ROADWAY END OF THE APPROACH SLAB AND SHALL EXTEND 1'-0" OUTSIDE EACH EDGE OF THE APPROACH SLAB.

THE CONTRACTOR MAY USE 4" TYPE B-25.0B ASPHALT CONCRETE BASE COURSE IN LIEU OF 6" COMP. A.B.C. IF THIS OPTION IS USED, THE BASE COURSE SHALL BE FLUSH WITH THE ROADWAY END OF THE APPROACH SLAB, AND THE WIDTH SHALL BE THE SAME AS THAT OF THE APPROACH SLAB.

THE CONTRACTOR MAY USE 5" CLASS "A" CONCRETE BASE IN LIEU OF 6" COMP. A.B.C. IF THIS OPTION IS USED, THE CONCRETE BASE SHALL BE FLUSH WITH THE ROADWAY END OF THE APPROACH SLAB, AND THE WIDTH SHALL BE THE SAME AS THAT OF THE APPROACH SLAB. THE CONCRETE SHALL BE FINISHED TO A SMOOTH SURFACE AND A LAYER OF 30 LB ROOFING FELT SHALL BE PLACED BETWEEN THE CONCRETE BASE AND THE APPROACH SLAB TO PREVENT BOND. THE APPROACH SLAB SHALL NOT BE CAST UNTIL THE CONCRETE BASE HAS REACHED AN AGE OF THREE CURING DAYS.

FOR EVAZOTE JOINT SEALS, SEE SPECIAL PROVISIONS.

THE NOMINAL UNCOMPRESSED SEAL WIDTH OF THE EVAZOTE JOINT SEAL SHALL BE 3 1/8".

FOR ELASTOMERIC CONCRETE, SEE SPECIAL PROVISIONS.

BILL OF MATERIAL

APPROACH SLAB AT EB No. 1

BAR	NO.	SIZE	TYPE	LENGTH	WEIGHT
* A1	50	#4	STR	24'-6"	818
A2	52	#4	STR	24'-5"	848
* B1	95	#5	STR	23'-9"	2353
B2	95	#6	STR	24'-8"	3520

REINFORCING STEEL	LBS.	4368
* EPOXY COATED REINFORCING STEEL	LBS.	3171
CLASS AA CONCRETE	C. Y.	44.6

APPROACH SLAB AT EB No. 2

BAR	NO.	SIZE	TYPE	LENGTH	WEIGHT
* A1	50	#4	STR	24'-6"	818
A2	52	#4	STR	24'-5"	848
* B1	95	#5	STR	23'-9"	2353
B2	95	#6	STR	24'-8"	3520

REINFORCING STEEL	LBS.	4368
* EPOXY COATED REINFORCING STEEL	LBS.	3171
CLASS AA CONCRETE	C. Y.	44.6

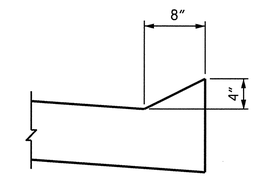

SECTION N-N

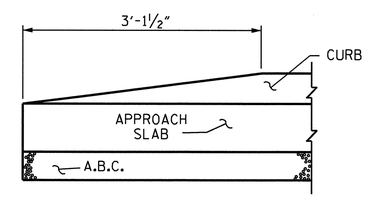

END OF CURB WITHOUT SHOULDER BERM GUTTER

CURB DETAILS

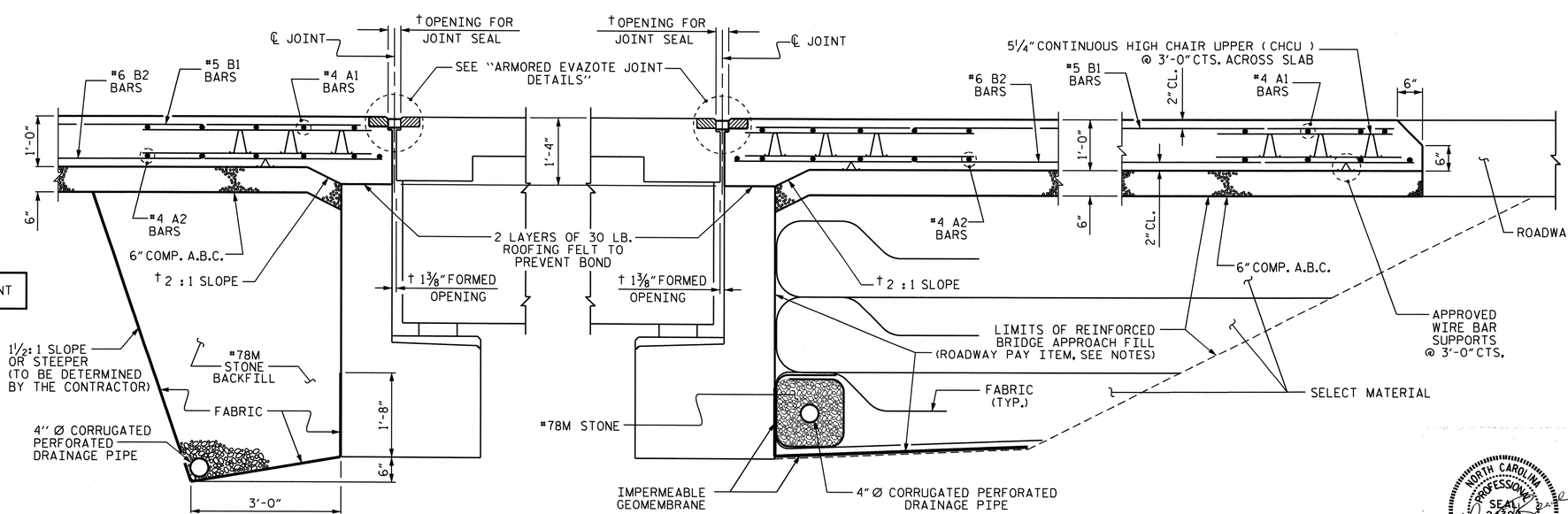

† NORMAL TO END BENT

PARTIAL SECTION THRU SLAB
@ END BENT No. 1

SECTION THRU SLAB
@ END BENT No. 2

PROJECT NO. R-2417AA
LEE COUNTY
STATION: 52+08.00 -L-

SHEET 1 OF 2

STATE OF NORTH CAROLINA
DEPARTMENT OF TRANSPORTATION
RALEIGH

STANDARD

BRIDGE APPROACH SLAB FOR FLEXIBLE PAVEMENT

(SBL)

NORTH CAROLINA PROFESSIONAL SEAL 24390 ENGINEER THEO. J. BEACH
11/23/10

ASSEMBLED BY : M.L. BROWN	DATE : 6/09		
CHECKED BY : S.B. WILLIAMS	DATE : 9/09		
DRAWN BY : EEM 3/95	REV. 7/10/01	LES/RDR	
CHECKED BY : VAP 3/95	REV. 5/7/03R	RWW/JTE	
	REV. 5/1/06	TLA/GM	

REVISIONS							SHEET NO.
NO.	BY:	DATE:	NO.	BY:	DATE:		S-107
1			3				TOTAL SHEETS
2			4				162

23-NOV-2010 16:16
R:\Structures\str3-L-overBuffaloCk(RtLane)\Miscellaneous\R-2417AA_sd_AS.dgn
tbeach

STR. #3

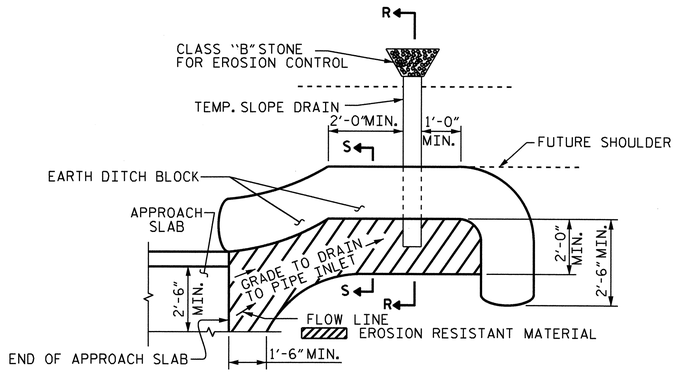

NOTE: IMMEDIATELY AFTER THE CONSTRUCTION OF THE APPROACH SLAB, THE CONTRACTOR SHALL PROVIDE TEMPORARY BERM AND SLOPE DRAIN. CONTRACTOR SHALL GRADE TO PIPE INLET AND PROVIDE EROSION RESISTANT MATERIAL AS SHOWN. THE EROSION RESISTANT MATERIAL SHALL BE EITHER 1) ASPHALT PLANT MIX, TYPE 1 OR TYPE 2, MIN. 2" DEPTH, 2) EROSION CONTROL MAT, OR 3) CONCRETE, AS DIRECTED BY THE ENGINEER. THE SLOPE DRAIN SHALL CONSIST OF A NON-PERFORATED TEMPORARY DRAINAGE PIPE, 12 INCHES IN DIAMETER.

PLAN VIEW

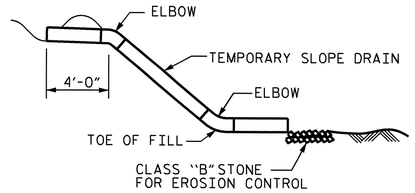

SECTION R-R

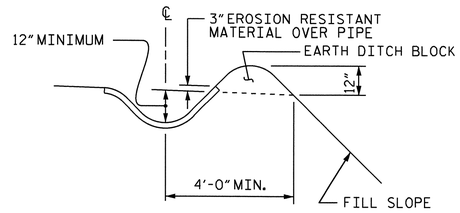

SECTION S-S

TEMPORARY BERM AND SLOPE DRAIN DETAILS

(TO BE USED WHEN SHOULDER BERM GUTTER IS REQUIRED)

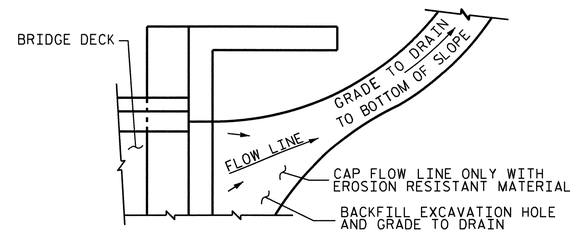

NOTE: IF THE APPROACH SLAB IS NOT CONSTRUCTED IMMEDIATELY AFTER THE BACKFILLING OF THE END BENT EXCAVATION, GRADE TO DRAIN TO THE BOTTOM OF THE SLOPE AND PROVIDE EROSION RESISTANT MATERIAL, SUCH AS FIBERGLASS ROVING OR AS DIRECTED BY THE ENGINEER TO PREVENT SOIL EROSION AND TO PROTECT THE AREA ADJACENT TO THE STRUCTURE. THE CONTRACTOR WILL BE REQUIRED TO REMOVE THESE MATERIALS PRIOR TO CONSTRUCTION OF THE APPROACH SLAB.

TEMPORARY DRAINAGE DETAIL

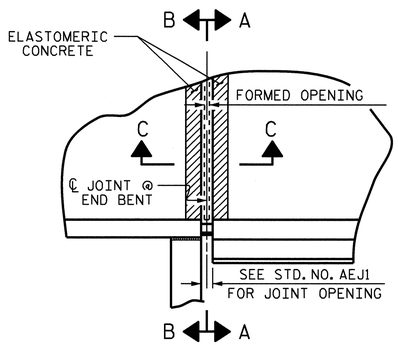

PLAN

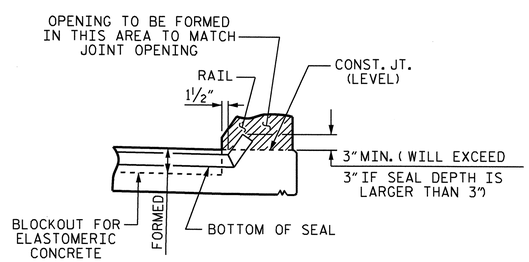

SECTION A-A

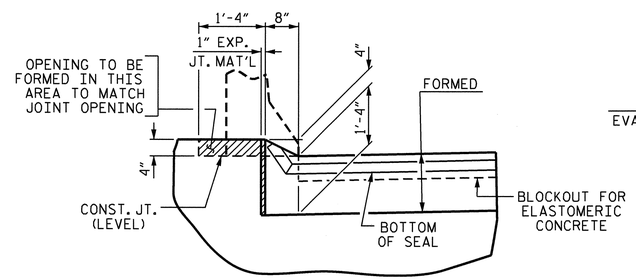

SECTION B-B

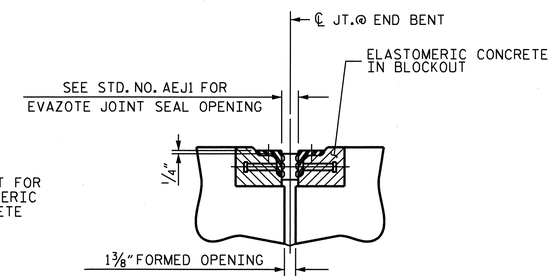

SECTION C-C
ARMORED EVAZOTE JOINT SEAL

NOTE: EVAZOTE JOINT SEAL TO BE CUT, HEAT WELDED AND TURNED UP PARALLEL TO SLOPED FACE OF THE BARRIER RAIL.

JOINT SEAL DETAILS @ END BENT

END BENT NO. 1 SHOWN, END BENT No. 2 SIMILAR

PROJECT NO. R-2417AA
LEE COUNTY
STATION: 52+08.00 -L-

SHEET 2 OF 2

STATE OF NORTH CAROLINA
DEPARTMENT OF TRANSPORTATION
RALEIGH

STANDARD

BRIDGE APPROACH SLAB DETAILS
(SBL)

NORTH CAROLINA PROFESSIONAL SEAL 24390 ENGINEER THEO J. BEACH
11/23/10

REVISIONS						SHEET NO.
NO.	BY:	DATE:	NO.	BY:	DATE:	S-108
1			3			TOTAL SHEETS
2			4			S-162

ASSEMBLED BY : M.L. BROWN		DATE : 6/09	
CHECKED BY : S.B. WILLIAMS		DATE : 9/09	
DRAWN BY : FCJ 11/88	REV. 10/17/00	RWW/LES	
CHECKED BY : ARB 11/88	REV. 5/7/03	RWW/JTE	
	REV. 5/1/06R	MAA/KMM	

23-NOV-2010 16:17
R:\Structures\str3-L-overBuffaloCk(RtLane)\Miscellaneous\R-2417AA_sd_AS.dgn
tbeach

STR. #3

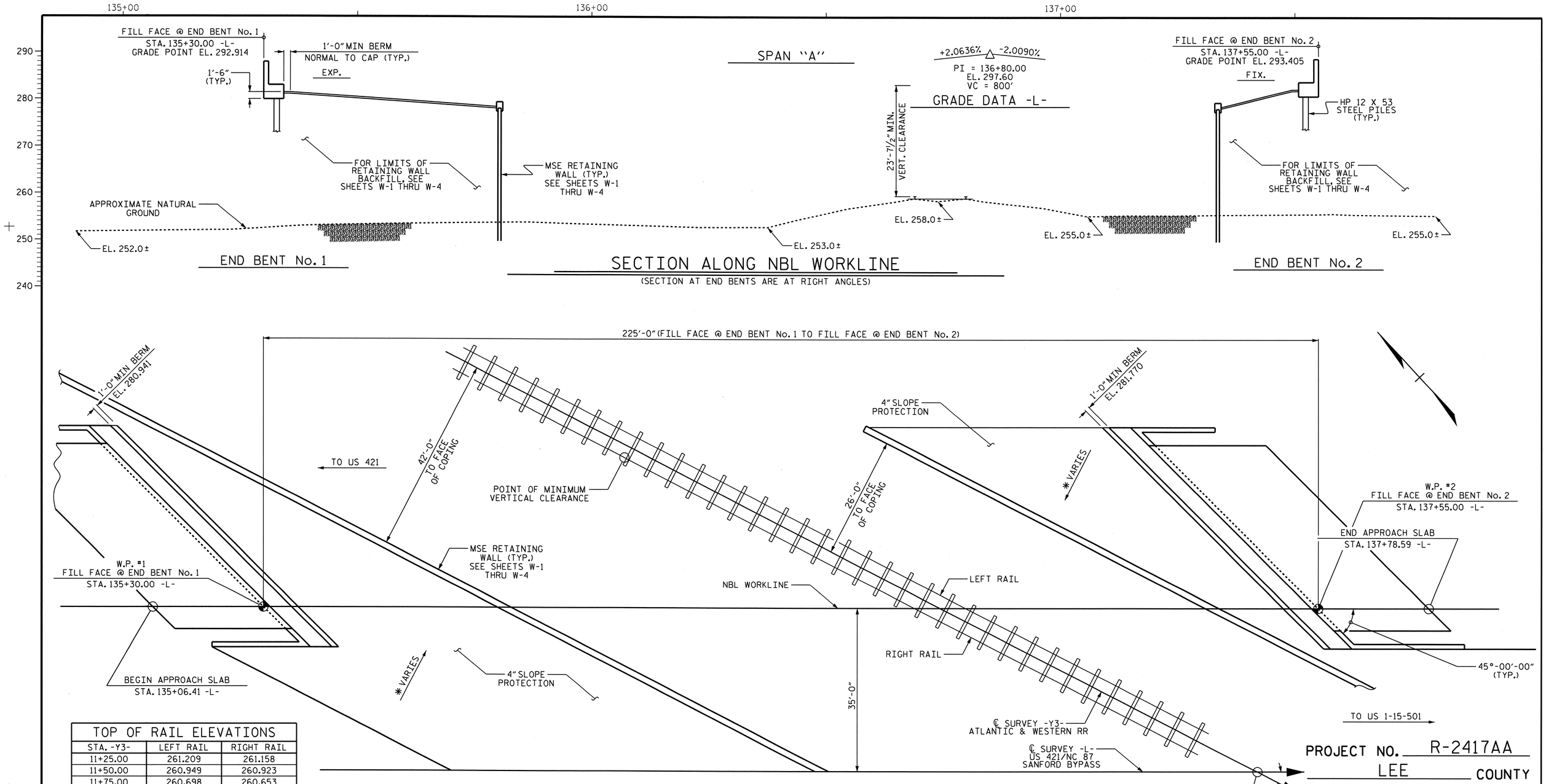

SECTION ALONG NBL WORKLINE

(SECTION AT END BENTS ARE AT RIGHT ANGLES)

PLAN VIEW

(PILES NOT SHOWN IN PLAN VIEW FOR CLARITY)

* SLOPE VARIES FROM 2:1 TO NO STEEPER THAN 1½:1

TOP OF RAIL ELEVATIONS		
STA. -Y3-	LEFT RAIL	RIGHT RAIL
11+25.00	261.209	261.158
11+50.00	260.949	260.923
11+75.00	260.698	260.653
12+00.00	260.453	260.387
12+25.00	260.219	260.126
12+50.00	259.971	259.866
12+75.00	259.696	259.607
13+00.00	259.442	259.357
13+25.00	259.219	259.120
13+50.00	258.982	258.891

PROJECT NO. R-2417AA

LEE COUNTY

STATION: 137+42.08 -L-

SHEET 1 OF 3 M.P. 126 BRIDGE No. 156

STATE OF NORTH CAROLINA
DEPARTMENT OF TRANSPORTATION
RALEIGH

GENERAL DRAWING
NBL BRIDGE OVER ATLANTIC & WESTERN RR ON US 421/NC 87 (SANFORD BYPASS) BETWEEN US 421 AND US 1-15-501
(NBL)

NORTH CAROLINA PROFESSIONAL SEAL 11268 ENGINEER BETSY S. COX

NORTH CAROLINA PROFESSIONAL SEAL 24390 ENGINEER THEO J. BEACH

11/23/10

REVISIONS						SHEET NO.
NO.	BY:	DATE:	NO.	BY:	DATE:	S-109
1			3			TOTAL SHEETS
2			4			162

DRAWN BY : T. BANKOVICH DATE : 5-2010
CHECKED BY : T. BEACH DATE : 10-2010

24-NOV-2010 08:14
R:\Structures\str4-L-overAWRR(LtLane)\GeneralDrawings\R-2417AA_str4_gd.dgn
tjbankovich

STR. #4

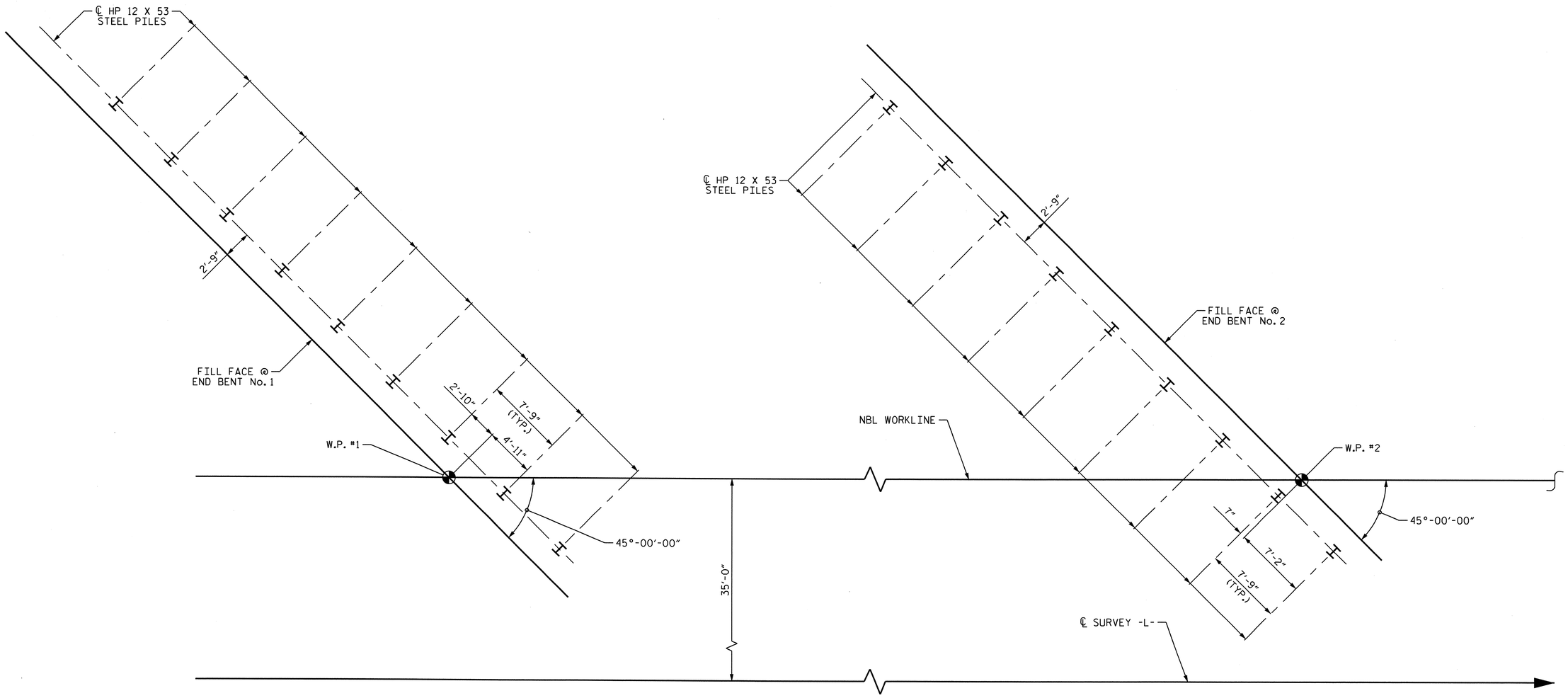

FOUNDATION LAYOUT

(DIMENSIONS LOCATING PILES ARE TO THE CENTERLINE OF THE PILE AT THE BOTTOM OF THE CAP)

NOTES:

FOR PILES, SEE SPECIAL PROVISIONS.

THE ALLOWABLE BEARING CAPACITY FOR PILES AT END BENT No. 1 AND END BENT No. 2 IS 120 TONS PER PILE.

PILE EXCAVATION IS REQUIRED TO INSTALL PILES AT END BENT No. 1 AND END BENT No. 2. EXCAVATE HOLES TO AN ELEVATION WHICH PROVIDES A MINIMUM PENETRATION OF 10 FT. INTO ROCK. DRIVING PILES IS NOT REQUIRED. FOR PILE EXCAVATION, SEE SPECIAL PROVISIONS.

PERFORM UNDERCUT FOR RETAINING WALL PRIOR TO INSTALLATION OF PILES. FOR UNDERCUT SEE RETAINING WALL PLANS.

PILE EXCAVATION AT END BENT No. 1 AND END BENT No. 2 WILL EXTEND INTO MATERIAL THAT DETERIORATES WHEN EXPOSED TO THE ELEMENTS. INSTALL PILE AND PLACE CONCRETE IMMEDIATELY AFTER THE EXCAVATION IS COMPLETED.

PROJECT NO. R-2417AA
LEE COUNTY
STATION: 137+42.08 -L-

SHEET 2 OF 3

STATE OF NORTH CAROLINA
DEPARTMENT OF TRANSPORTATION
RALEIGH

GENERAL DRAWING
NBL BRIDGE OVER ATLANTIC & WESTERN RR ON US 421/NC 87 (SANFORD BYPASS) BETWEEN US 421 AND US 1-15-501
(NBL)

NORTH CAROLINA PROFESSIONAL SEAL 24390 ENGINEER THEO J. BEACH
11/23/10

REVISIONS						SHEET NO.
NO.	BY:	DATE:	NO.	BY:	DATE:	S-110
1			3			TOTAL SHEETS
2			4			162

DRAWN BY : T. BANKOVICH DATE : 5-2010
CHECKED BY : T. BEACH DATE : 10-2010

24-NOV-2010 08:14
R:\Structures\str4-L-overAWRR(LtLane)\GeneralDrawings\R-2417AA_str4_gd.dgn
tjbankovich

STR. #4

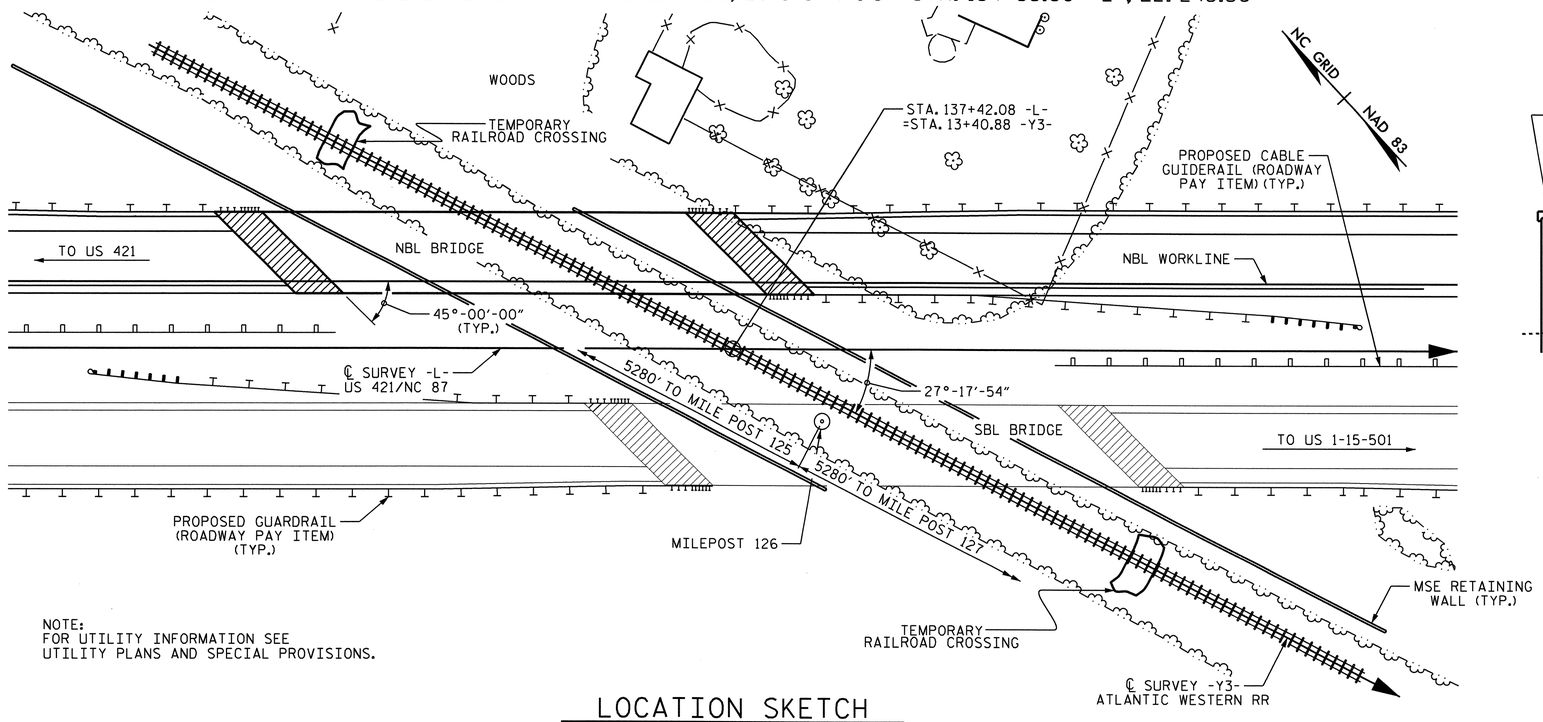

NOTE:
FOR UTILITY INFORMATION SEE
UTILITY PLANS AND SPECIAL PROVISIONS.

LOCATION SKETCH

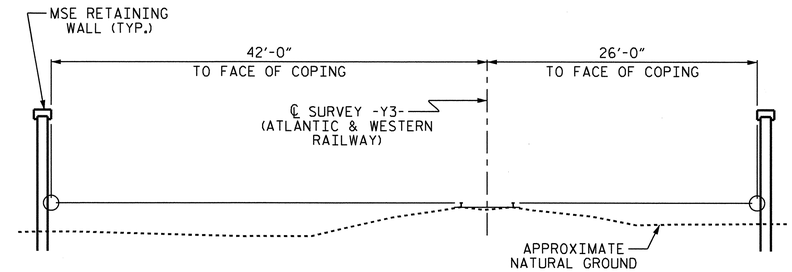

RAILWAY SECTION CLEARANCE

(SECTION TAKEN AT RIGHT ANGLE TO RAILWAY)
(SPAN LENGTHS BASED ON THIS SECTION)
(SECTION LOOKING DOWN STATION)

NOTES: (CONTINUED FROM SHEET 2 OF 3)

ASSUMED LIVE LOAD = HS 20 OR ALTERNATE LOADING, EXCEPT THAT THE STEEL PLATE GIRDERS HAVE BEEN DESIGNED FOR HS 25.

THIS BRIDGE HAS BEEN DESIGNED BY THE STRENGTH DESIGN METHOD AS SPECIFIED IN AASHTO STANDARD SPECIFICATIONS.

THIS BRIDGE HAS BEEN DESIGNED IN ACCORDANCE WITH THE REQUIREMENTS OF THE AASHTO STANDARD SPECIFICATIONS FOR SEISMIC DESIGN OF HIGHWAY BRIDGES FOR SEISMIC PERFORMANCE CATEGORY A.

FOR OTHER DESIGN DATA AND GENERAL NOTES, SEE SHEET SN.

FOR SUBMITTAL OF WORKING DRAWINGS, SEE SPECIAL PROVISIONS.

FOR FALSEWORK AND FORMWORK, SEE SPECIAL PROVISIONS.

FOR CRANE SAFETY, SEE SPECIAL PROVISIONS.

FOR GROUT FOR STRUCTURES, SEE SPECIAL PROVISIONS.

FOR MSE RETAINING WALL, SEE SPECIAL PROVISIONS AND RETAINING WALL No. 1 FOR DETAILS AND PAY ITEMS.

REMOVABLE FORMS MAY BE USED IN LIEU OF METAL STAY-IN-PLACE FORMS IN ACCORDANCE WITH ARTICLE 420-3 OF THE STANDARD SPECIFICATIONS.

ALL STRUCTURAL STEEL SHALL BE AASHTO M270 GRADE 50W AND PAINTED IN ACCORDANCE WITH SYSTEM 4 OF ARTICLE 442-7 OF THE STANDARD SPECIFICATIONS UNLESS OTHERWISE NOTED ON THE PLANS.

THE CONTRACTOR SHALL PROVIDE INDEPENDENT ASSURANCE SAMPLES OF REINFORCING STEEL AS FOLLOWS: FOR PROJECTS REQUIRING UP TO 400 TONS OF REINFORCING STEEL, ONE 30 INCH SAMPLE OF EACH SIZE BAR USED, AND FOR PROJECTS REQUIRING OVER 400 TONS OF REINFORCING STEEL, TWO 30 INCH SAMPLES OF EACH SIZE BAR USED. THE BARS FROM WHICH THE SAMPLES ARE TAKEN MUST THEN BE SPLICED WITH REPLACEMENT BARS OF THE SIZE AND LENGTH OF THE SAMPLE, PLUS A MINIMUM LAP SPLICE OF THIRTY BAR DIAMETERS.

FOR PLACING LOAD ON STRUCTURE MEMBERS, SEE SPECIAL PROVISIONS.

FOR CURING CONCRETE, SEE SPECIAL PROVISIONS.

FOR SHIPPING STEEL STRUCTURAL MEMBERS, SEE SPECIAL PROVISIONS.

FOR HIGH STRENGTH BOLTS, SEE SPECIAL PROVISIONS.

FOR DIRECT TENSION INDICATORS, SEE SPECIAL PROVISIONS.

FOR ADHESIVELY ANCHORED ANCHOR BOLTS OR DOWELS, SEE SPECIAL PROVISIONS.

THE RAILROAD TRACK TOP OF RAIL ELEVATIONS SHOWN ON THE PLANS ARE FROM THE BEST INFORMATION AVAILABLE. PRIOR TO BEGINNING BRIDGE CONSTRUCTION, VERIFY THE TOP OF RAIL ELEVATIONS AND REPORT ANY VARIATIONS TO THE ENGINEER. ANY PLAN REVISIONS NECESSARY TO ACHIEVE THE REQUIRED MINIMUM VERTICAL CLEARANCE WILL BE PROVIDED BY THE DEPARTMENT.

PROJECT NO. R-2417AA
LEE COUNTY
STATION: 137+42.08 -L-

SHEET 3 OF 3

TOTAL BILL OF MATERIAL

	PILE EXCAVATION IN SOIL	PILE EXCAVATION NOT IN SOIL	REINFORCED CONCRETE DECK SLAB	GROOVING BRIDGE FLOORS	CLASS A CONCRETE	BRIDGE APPROACH SLABS	REINFORCING STEEL	STRUCTURAL STEEL	HP 12 X 53 STEEL PILES		CONCRETE BARRIER RAIL	4" SLOPE PROTECTION	ELASTOMERIC BEARINGS	EVAZOTE JOINT SEALS
	LIN. FT.	LIN. FT.	SQ. FT.	SQ. FT.	CU. YD.	LUMP SUM	LBS.	APPROX. LBS.	NO.	LIN. FT.	LIN. FT.	SQ. YD.	LUMP SUM	LUMP SUM
SUPERSTRUCTURE			9,157	9,385		LUMP SUM		644,500			443.99		LUMP SUM	LUMP SUM
END BENT No. 1	90	90			82.2		11,069		9	450		940		
END BENT No. 2	90	135			78.9		10,892		9	540		855		
TOTAL	180	225	9,157	9,385	161.1	LUMP SUM	21,961	644,500	18	990	443.99	1795	LUMP SUM	LUMP SUM

NORTH CAROLINA PROFESSIONAL SEAL 24390 ENGINEER THEO J. BEACH
11/23/10

STATE OF NORTH CAROLINA
DEPARTMENT OF TRANSPORTATION
RALEIGH

GENERAL DRAWING
NBL BRIDGE OVER ATLANTIC & WESTERN RR ON US 421/NC 87 (SANFORD BYPASS) BETWEEN US 421 AND US 1-15-501
(NBL)

REVISIONS						SHEET NO.
NO.	BY:	DATE:	NO.	BY:	DATE:	S-111
1			3			TOTAL SHEETS
2			4			162

DRAWN BY : T. BANKOVICH DATE : 5-2010
CHECKED BY : T. BEACH DATE : 10-2010

24-NOV-2010 08:14
R:\Structures\str4-L-overAWRR(LtLane)\GeneralDrawings\R-2417AA_str4_gd.dgn
tjbankovich

STR. #4

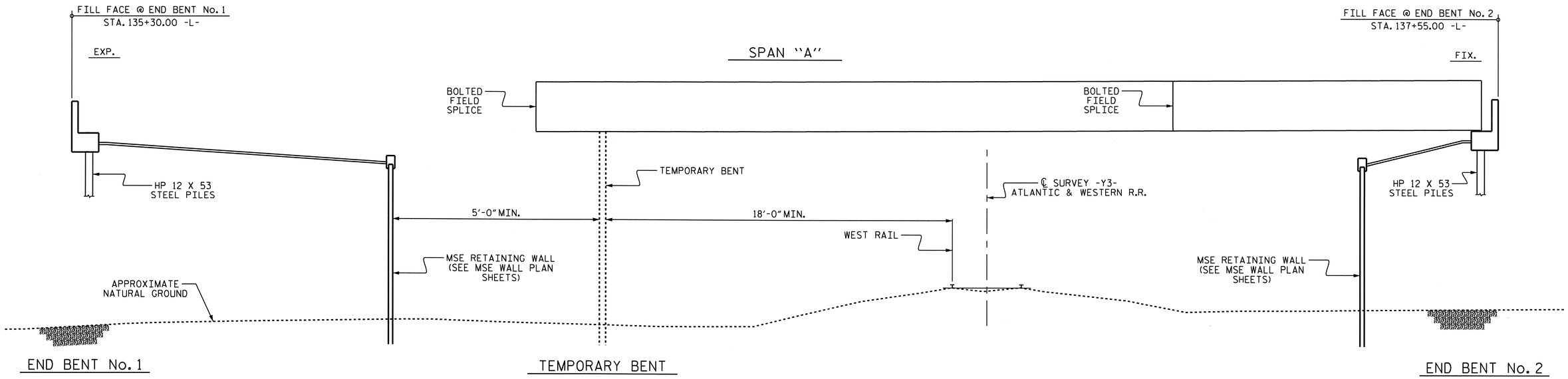

GIRDER ERECTION

(SECTION AT END BENTS ARE TAKEN @ RIGHT ANGLES AND ALONG NBL WORKLINE)

NOTES:

ERECT A MINIMUM OF TWO GIRDERS WITH ALL DIAPHRAGMS/CROSSFRAMES AND LATERAL BRACING BETWEEN THE GIRDERS IN PLACE AND THE BOLTS TIGHTENED PRIOR TO RELEASING THE GIRDERS.

ERECT EACH SUBSEQUENT GIRDER WITH DIAPHRAGMS/CROSSFRAMES CONNECTING TO THE ADJACENT PREVIOUSLY ERECTED GIRDER AND TIGHTEN ALL BOLTS BEFORE RELEASING THE GIRDER.

THE STRUCTURAL STEEL SHALL BE SUPPORTED DURING ERECTION IN ITS CAMBERED POSITION.

TEMPORARY BENTS SHALL REMAIN IN PLACE UNTIL ALL DIAPHRAGMS/CROSSFRAMES ARE IN PLACE AND ALL HIGH STRENGTH BOLTS ARE TIGHTENED.

TEMPORARY BENTS SHALL PROVIDE BEARING AT A CONNECTOR PLATE LOCATION. WHEN CONNECTOR PLATES ARE USED AS TEMPORARY BEARING STIFFENERS, DIAPHRAGMS MUST BE ATTACHED.

THE CONTRACTOR'S ERECTION PLANS SHALL INCLUDE A METHOD OF TEMPORARY BENT REMOVAL THAT WILL UNIFORMLY TRANSFER THE STRUCTURAL WEIGHT TO THE DIAPHRAGMS/CROSSFRAMES AND THE GIRDERS WILL REMAIN IN THE CAMBERED POSITIONS.

PLANS FOR TEMPORARY BENT ERECTION AND REMOVAL SHALL BE SUBMITTED TO THE ENGINEER FOR REVIEW.

THE CONTRACTOR IS RESPONSIBLE FOR DESIGNING THE TEMPORARY BENTS. THE DESIGNS SHALL BE COMPLETED BY A PROFESSIONAL ENGINEER REGISTERED IN THE STATE OF NORTH CAROLINA. THE CONTRACTOR SHALL SUBMIT SIGNED AND SEALED WORKING DRAWINGS AND CALCULATIONS FOR APPROVAL BY THE ENGINEER.

DURING THE GIRDER ERECTION PROCEDURE, THE CONTRACTOR IS RESPONSIBLE FOR PROVIDING TEMPORARY LATERAL BRACING AND OTHER MEANS OF SUPPORT, AS REQUIRED TO ENSURE STABILITY OF THE GIRDERS, AVOID UPLIFT OF THE GIRDERS AT THE TEMPORARY BENTS AND TO ENSURE PLUMBNESS OF THE GIRDERS IN THE FINAL CONDITION.

NO SEPARATE MEASUREMENT OR PAYMENT WILL BE MADE FOR PROVIDING THE TEMPORARY BENT. THE COST FOR ALL MATERIALS, EQUIPMENT, TOOLS, LABOR AND ANY INCIDENTALS NECESSARY TO PROVIDE THE TEMPORARY BENT SHALL BE CONSIDERED INCIDENTAL TO THE LUMP SUM BID PRICE FOR STRUCTURAL STEEL.

THE CONTRACTOR MAY SUBMIT AN ALTERNATE ERECTION METHOD TO THE ENGINEER FOR REVIEW AND APPROVAL.

TEMPORARY BENTS SHALL BE LOCATED TO PROVIDE A MINIMUM DISTANCE OF 18'-0" FROM THE WEST RAIL OF THE EXISTING RAILROAD TRACK AND A MINIMUM DISTANCE OF 5'-0" FROM THE FRONT FACE OF THE MSE WALL.

PROJECT NO. R-2417AA
LEE COUNTY
STATION: 137+42.08 -L-

STATE OF NORTH CAROLINA
DEPARTMENT OF TRANSPORTATION
RALEIGH

GIRDER ERECTION DETAILS

(NBL)

NORTH CAROLINA PROFESSIONAL SEAL 24390 ENGINEER THEO J. BEACH
11/23/10

REVISIONS						SHEET NO.
NO.	BY:	DATE:	NO.	BY:	DATE:	S-112
1			3			TOTAL SHEETS
2			4			162

DRAWN BY : T. BANKOVICH DATE : 10-2010
CHECKED BY : T. BEACH DATE : 10-2010

24-NOV-2010 08:15
R:\Structures\str4-L-overAWRR(LtLane)\GeneralDrawings\R-2417AA_str4_ERECT.dgn
tjbankovich

STR. #4

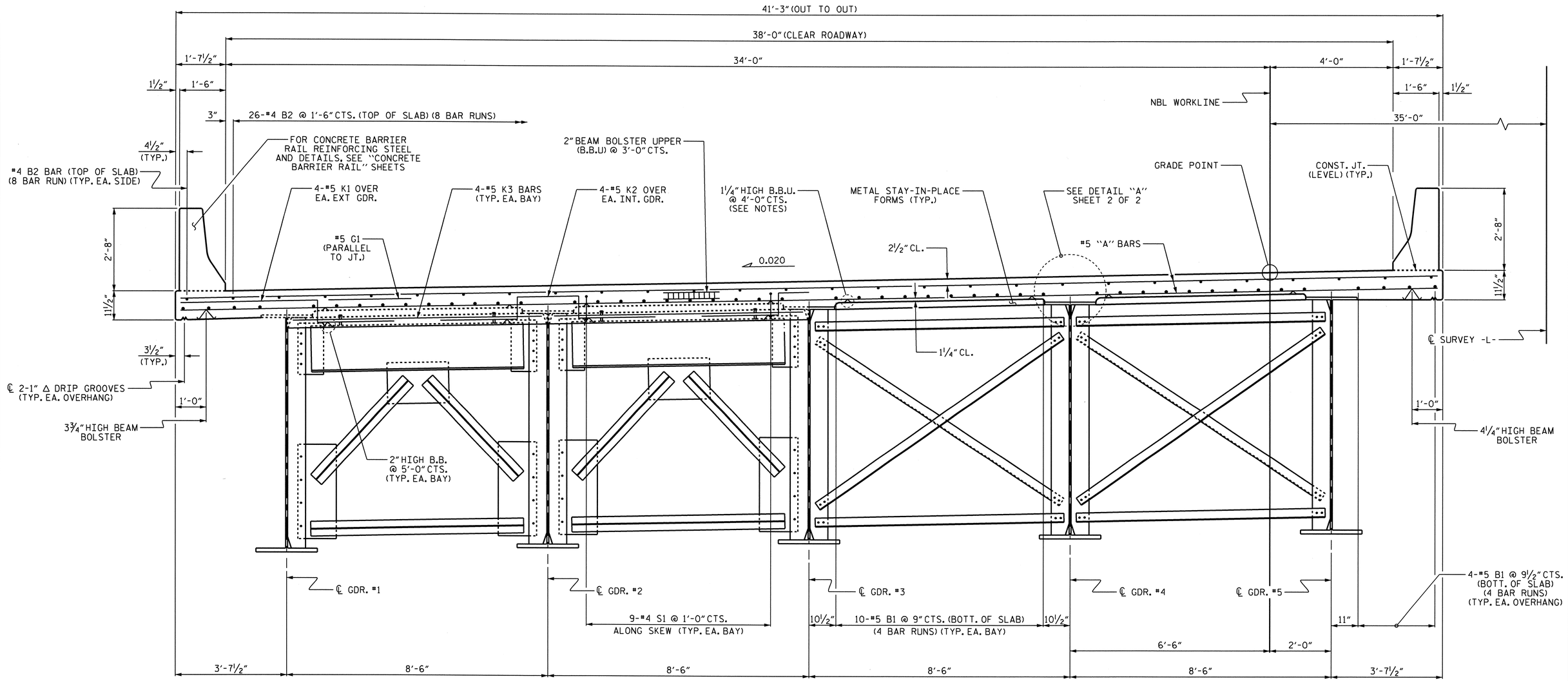

HALF TYPICAL SECTION

(SHOWING END BENT DIAPHRAGMS)

HALF TYPICAL SECTION

(SHOWING INTERMEDIATE DIAPHRAGMS)

PROJECT NO. R-2417AA

LEE COUNTY

STATION: 137+42.08 -L-

SHEET 1 OF 2

STATE OF NORTH CAROLINA
DEPARTMENT OF TRANSPORTATION
RALEIGH

SUPERSTRUCTURE

TYPICAL SECTION

(NBL)

NORTH CAROLINA PROFESSIONAL SEAL 24390 ENGINEER FRED J. BEACH
11/23/10

REVISIONS						SHEET NO.
NO.	BY:	DATE:	NO.	BY:	DATE:	S-113
1			3			TOTAL SHEETS
2			4			162

DRAWN BY : T. BANKOVICH DATE : 9-2009
CHECKED BY : N. PIERCE DATE : 10-2009

24-NOV-2010 08:16
R:\Structures\str4-L-overAWRR(LtLane)\SuperDrawings\R-2417AA_str4_TS.dgn
tjbankovich

STR. #4

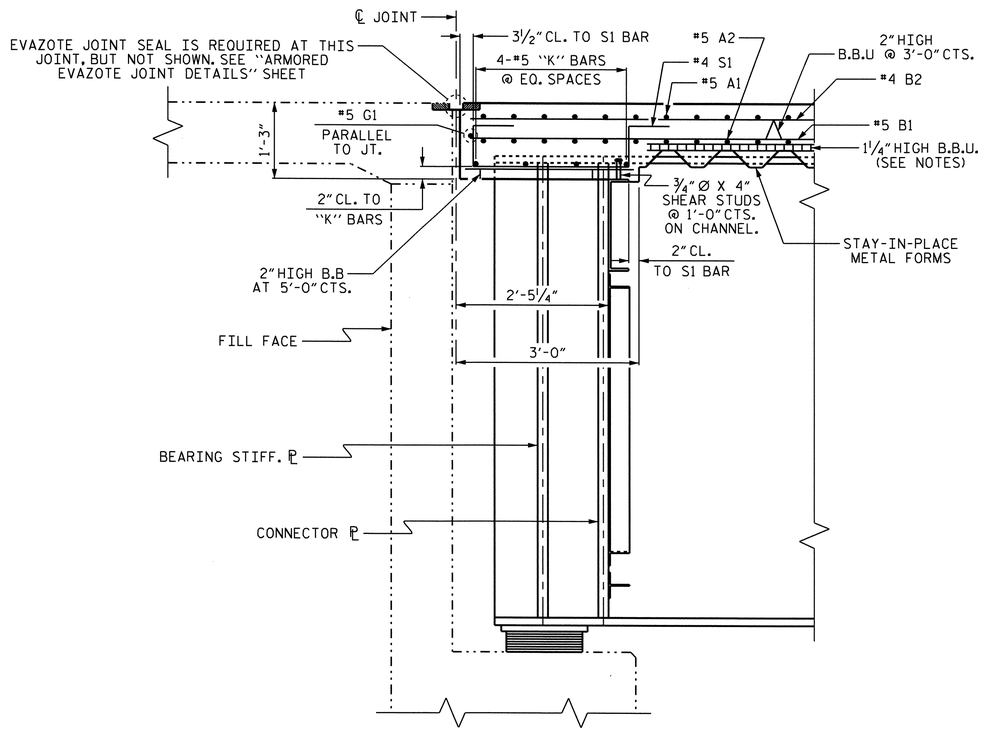

SECTION A-A

END BENT No. 1 SHOWN, END BENT No. 2 SIMILAR

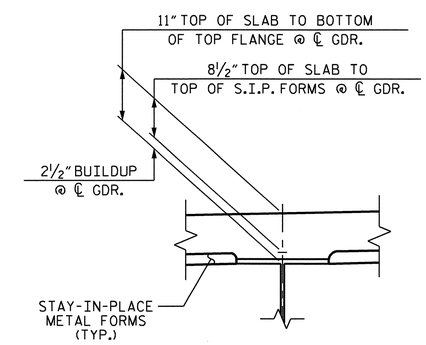

DETAIL "A"

NOTES:

PROVIDE 1¼" HIGH BEAM BOLSTERS UPPER AT 4'-0" CTS. ATOP THE METAL STAY-IN-PLACE FORMS TO SUPPORT THE BOTTOM MAT OF "A" BARS. WHEN USING REMOVABLE FORMS, PROVIDE CONTINUOUS HIGH CHAIRS FOR METAL DECK (C.H.C.M.) @ 4'-0" CTS. WITH A HEIGHT TO SUPPORT THE BOTTOM MAT OF "A" BARS A CLEAR DISTANCE OF 2½" ABOVE THE TOP OF THE REMOVABLE FORM.

PREVIOUSLY CAST CONCRETE IN THE SPAN SHALL HAVE ATTAINED A MINIMUM COMPRESSIVE STRENGTH OF 3,000 PSI BEFORE ADDITIONAL CONCRETE IS CAST IN THE SPAN.

DIRECTION OF CASTING DECK CONCRETE SHALL BE FROM FIXED BEARING END TOWARDS THE EXPANSION BEARING END OF THE SPAN.

#5 G1 BAR MAY BE SHIFTED SLIGHTLY, AS NECESSARY, TO CLEAR REINFORCING STEEL AND STIRRUPS.

BARRIER RAIL SHALL NOT BE CAST UNTIL ALL SLAB CONCRETE HAS BEEN CAST AND HAS REACHED A MINIMUM COMPRESSIVE STRENGTH OF 3,000 PSI.

THE CONTRACTOR MAY, WHEN NECESSARY, PROPOSE A SCHEME FOR AVOIDING INTERFERENCE BETWEEN METAL STAY-IN-PLACE FORM SUPPORTS OR FORMS AND GIRDER STIFFENERS OR CONNECTOR PLATES. THE PROPOSAL SHALL BE INDICATED, AS APPROPRIATE, ON EITHER THE STEEL WORKING DRAWINGS OR THE METAL STAY-IN-PLACE FORM WORKING DRAWINGS.

ALL REINFORCING STEEL IN BARRIER RAILS SHALL BE EPOXY COATED.

PROJECT NO. R-2417AA
LEE COUNTY
STATION: 137+42.08 -L-

SHEET 2 OF 2

STATE OF NORTH CAROLINA
DEPARTMENT OF TRANSPORTATION
RALEIGH

SUPERSTRUCTURE

TYPICAL SECTION
(NBL)

NORTH CAROLINA PROFESSIONAL SEAL 24390 ENGINEER THEO J. BEACH
11/23/10

REVISIONS						SHEET NO.
NO.	BY:	DATE:	NO.	BY:	DATE:	S-114
1			3			TOTAL SHEETS
2			4			162

DRAWN BY : T. BANKOVICH DATE : 9-2009
CHECKED BY : N. PIERCE DATE : 10-2009

STR. #4

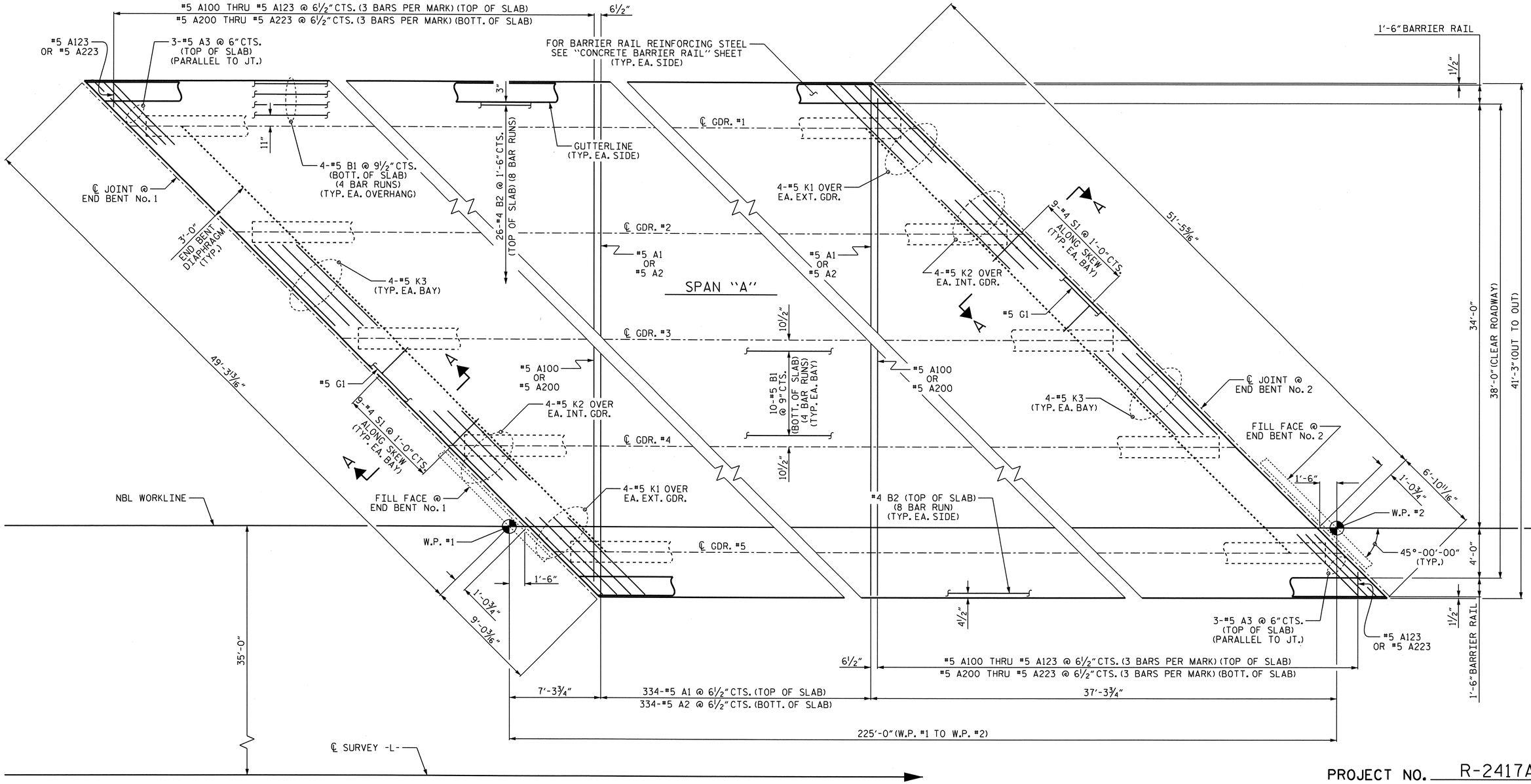

PLAN OF SPAN

PROJECT NO. R-2417AA
LEE COUNTY
STATION: 137+42.08 -L-

NOTES:

PERMITTED TRANSVERSE CONSTRUCTION JOINT NOT SHOWN. FOR LOCATION SEE "BILL OF MATERIAL" SHEET.

FOR SECTION A-A, SEE "TYPICAL SECTION" SHEET 2 OF 2.

#5 A3 BARS IN THE ACUTE CORNERS OF THE SLAB SHALL BE TIED BELOW THE TOP MAT OF LONGITUDINAL REINFORCEMENT.

STATE OF NORTH CAROLINA
DEPARTMENT OF TRANSPORTATION
RALEIGH
SUPERSTRUCTURE

PLAN OF SPAN
(NBL)

NORTH CAROLINA PROFESSIONAL SEAL 24390 ENGINEER THEO J. BEACH
11/23/10

REVISIONS						SHEET NO.
NO.	BY:	DATE:	NO.	BY:	DATE:	S-115
1			3			TOTAL SHEETS
2			4			162

DRAWN BY : T. BANKOVICH DATE : 9-2009
CHECKED BY : N. PIERCE DATE : 10-2009

24-NOV-2010 08:20
R:\Structures\str4-L-overAWRR(LtLane)\SuperDrawings\R-2417AA_str4_PS.dgn
tjbankovich

STR. #4

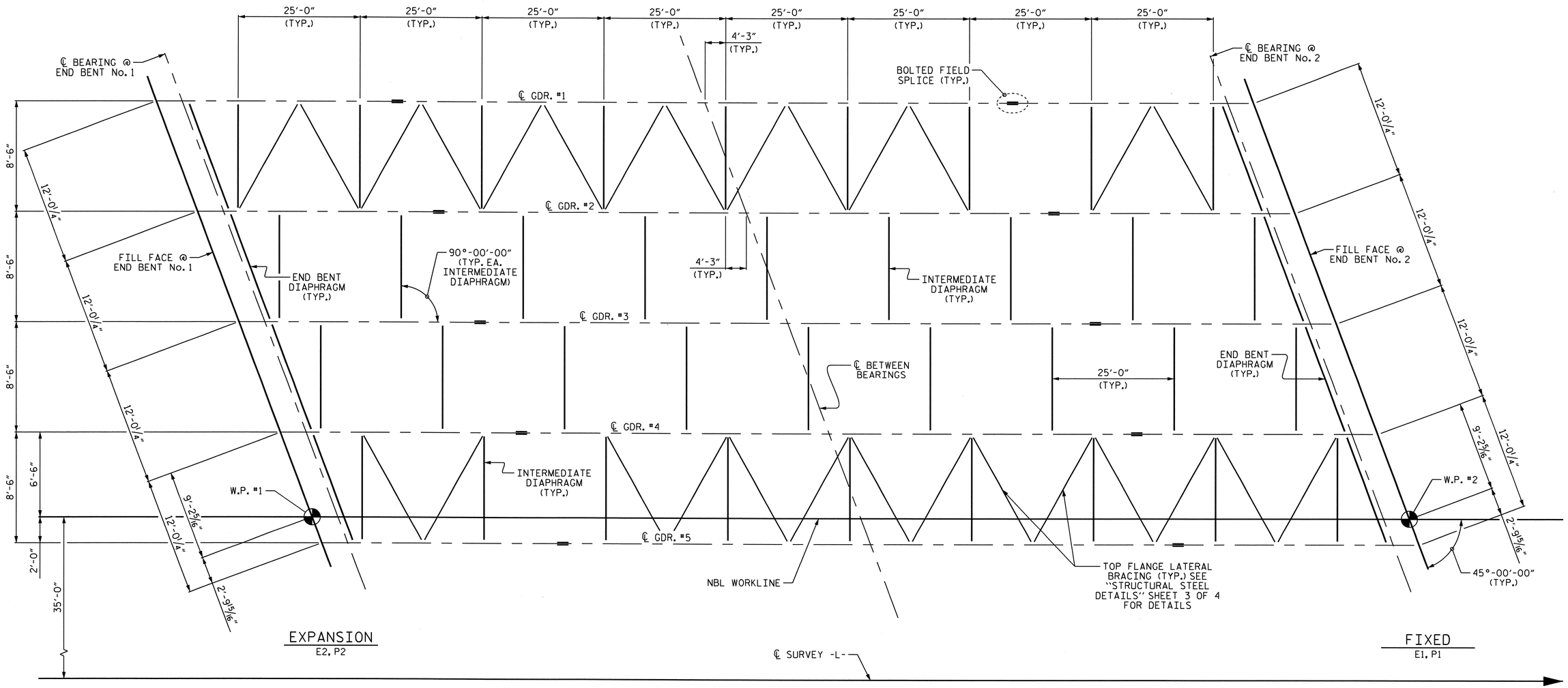

FRAMING PLAN

PROJECT NO. R-2417AA
LEE COUNTY
STATION: 137+42.08 -L-

STATE OF NORTH CAROLINA
DEPARTMENT OF TRANSPORTATION
RALEIGH
SUPERSTRUCTURE

FRAMING PLAN
(NBL)

NORTH CAROLINA PROFESSIONAL SEAL 24390 ENGINEER THEO J. BEACH
11/23/10

REVISIONS							SHEET NO.
NO.	BY:	DATE:	NO.	BY:	DATE:		S-116
1			3				TOTAL SHEETS
2			4				162

DRAWN BY : T. BANKOVICH DATE : 9-2009
CHECKED BY : N. PIERCE DATE : 10-2009

19-OCT-2010 07:31
R:\Structures\str4-L-overAWRR(LtLane)\SuperDrawings\R-2417AA_str4_FP.dgn
sbwilliams

STR. #4

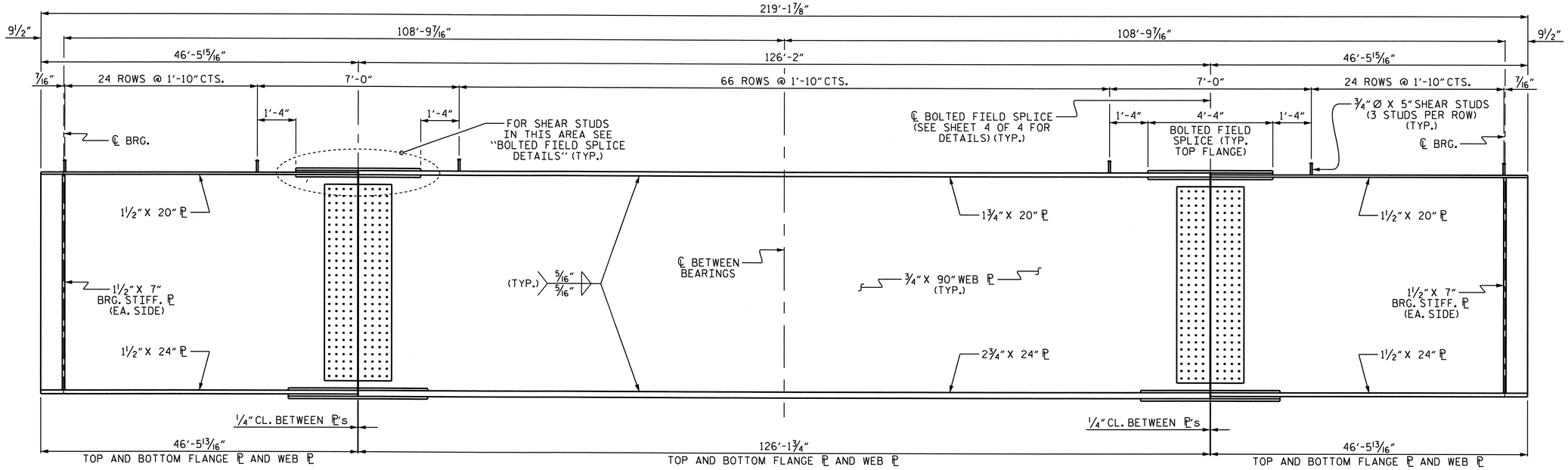

ELEVATION OF GIRDER

(FOR CLARITY, CONNECTOR PLs NOT SHOWN.
FOR PLACEMENT, SEE "FRAMING PLAN" SHEET.)

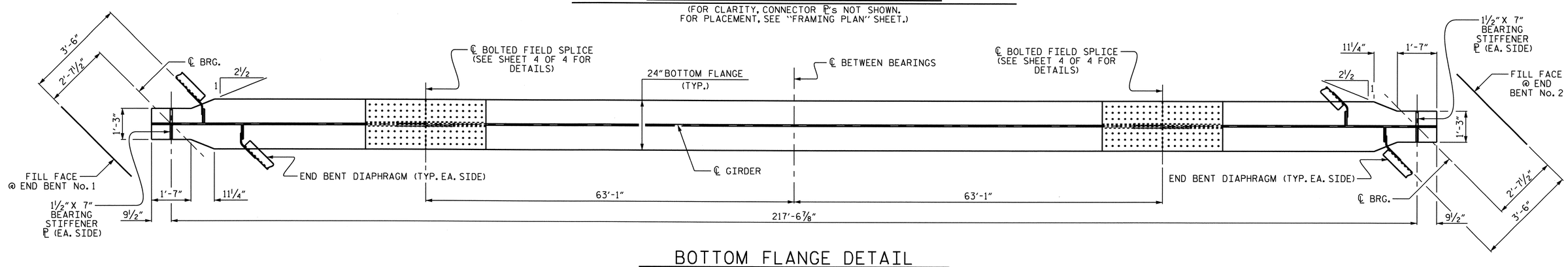

BOTTOM FLANGE DETAIL

(FOR CLARITY, CONNECTOR PLs NOT SHOWN.
FOR PLACEMENT, SEE "FRAMING PLAN" SHEET.)

NOTES:

ALL STRUCTURAL STEEL SHALL BE AASHTO M270 GRADE 50W AND PAINTED IN ACCORDANCE WITH SYSTEM 4 OF ARTICLE 442-7 OF THE STANDARD SPECIFICATIONS UNLESS OTHERWISE NOTED ON THE PLANS.

ALL DIMENSIONS SHOWN ARE HORIZONTAL OR VERTICAL, UNLESS OTHERWISE NOTED.

ALL FIELD CONNECTIONS TO BE 7/8" DIA. HIGH STRENGTH BOLTS, UNLESS OTHERWISE NOTED. FOR HIGH STRENGTH BOLTS, SEE SPECIAL PROVISIONS.

BEARING STIFFENERS ARE TO BE PLACED NORMAL TO THE WEB OF THE GIRDER AND SHALL BE PLUMB.

A CHARPY V-NOTCH TEST IS REQUIRED FOR WEB PLATES, BOTTOM FLANGE PLATES, BOTTOM FLANGE SPLICE PLATES, AND WEB FLANGE SPLICE PLATES FOR ALL GIRDERS AND IN ACCORDANCE WITH ARTICLE 1072-9 OF THE STANDARD SPECIFICATIONS.

SHOP SPLICES ARE PERMITTED TO LIMIT THE MAXIMUM REQUIRED FLANGE PIECE LENGTHS TO 60 FEET AND WEB PIECE LENGTHS TO 45 FEET. PERMITTED FLANGE AND WEB SHOP SPLICES SHALL NOT BE LOCATED WITHIN 15 FEET OF MAXIMUM DEAD LOAD DEFLECTION. KEEP 2 FEET MINIMUM BETWEEN WEB AND FLANGE SHOP SPLICES. KEEP 6" MINIMUM BETWEEN CONNECTOR PLATE OR TRANSVERSE STIFFENER WELDS AND WEB OR FLANGE SHOP SPLICES.

STUDS ON GIRDERS MAY BE SHIFTED UP TO 1" IF NECESSARY TO CLEAR FLANGE SPLICE WELD.

TENSION ON THE AASHTO M164 BOLTS SHALL BE CALIBRATED USING DIRECT TENSION INDICATOR WASHERS IN ACCORDANCE WITH ARTICLE 440-8 OF THE STANDARD SPECIFICATIONS.

FOR DIRECT TENSION INDICATORS, SEE SPECIAL PROVISIONS.

END OF GIRDERS SHALL BE PLUMB.

AT THE CONTRACTOR'S OPTION, THE INTERMEDIATE DIAPHRAGM WITH THE WELDED GUSSET PLATES MAY BE USED IN LIEU OF THE INTERMEDIATE DIAPHRAGM WITH BOLTED ANGLES AT NO ADDITIONAL COST TO THE DEPARTMENT.

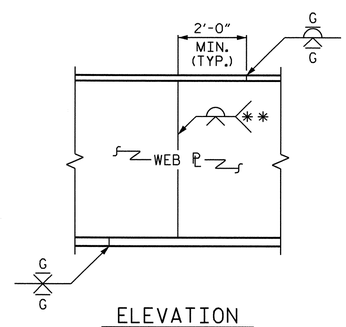

ELEVATION

PERMISSIBLE SHOP FLANGE & WEB SPLICE

** GRIND SMOOTH AND FLUSH ON OUTER FACE OF EXTERIOR GIRDER

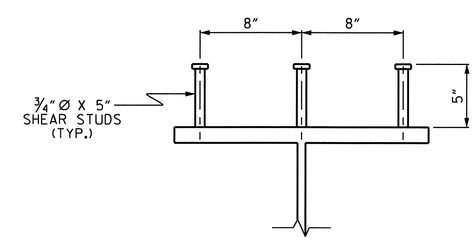

SHEAR STUD DETAIL

(EXCEPT AT BOLTED FIELD SPLICE)

PROJECT NO. R-2417AA
LEE COUNTY
STATION: 137+42.08 -L-

SHEET 1 OF 4

STATE OF NORTH CAROLINA
DEPARTMENT OF TRANSPORTATION
RALEIGH

SUPERSTRUCTURE

STRUCTURAL STEEL DETAILS

(NBL)

NORTH CAROLINA PROFESSIONAL SEAL 24390 ENGINEER THEO J. BEACH
11/23/10

REVISIONS						SHEET NO.
NO.	BY:	DATE:	NO.	BY:	DATE:	S-117
1			3			TOTAL SHEETS
2			4			162

STR. #4

DRAWN BY : T. BANKOVICH DATE : 9-2009
CHECKED BY : N. PIERCE DATE : 10-2009

19-OCT-2010 07:23
R:\Structures\str4-L-overAWRR(LtLane)\SuperDrawings\R-2417AA_str4_SS.dgn
sbwilliams

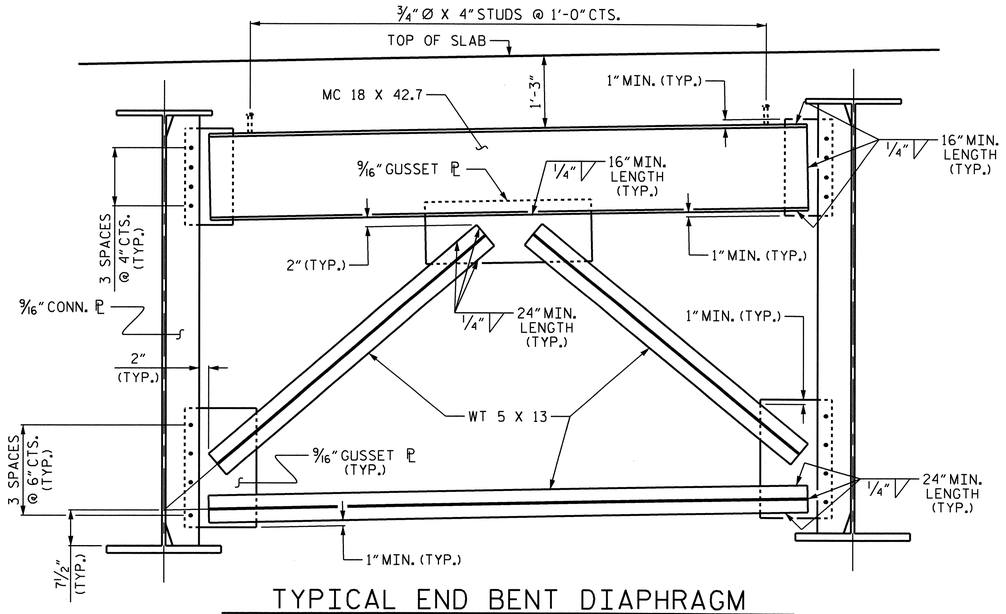

TYPICAL END BENT DIAPHRAGM

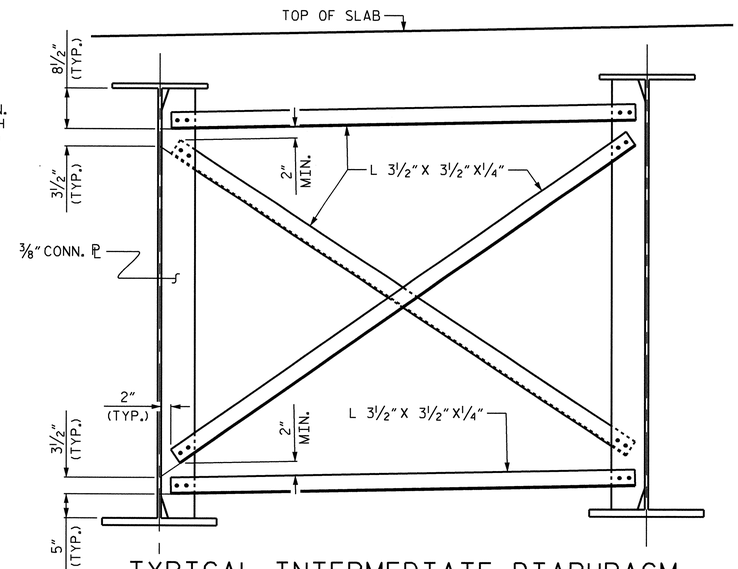

TYPICAL INTERMEDIATE DIAPHRAGM

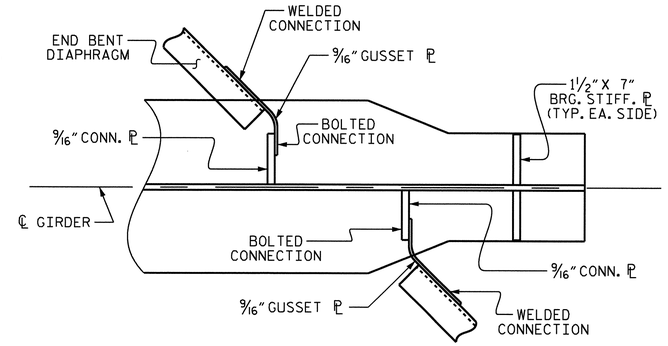

CONNECTOR ℙ DETAIL

(EACH END SIMILAR)

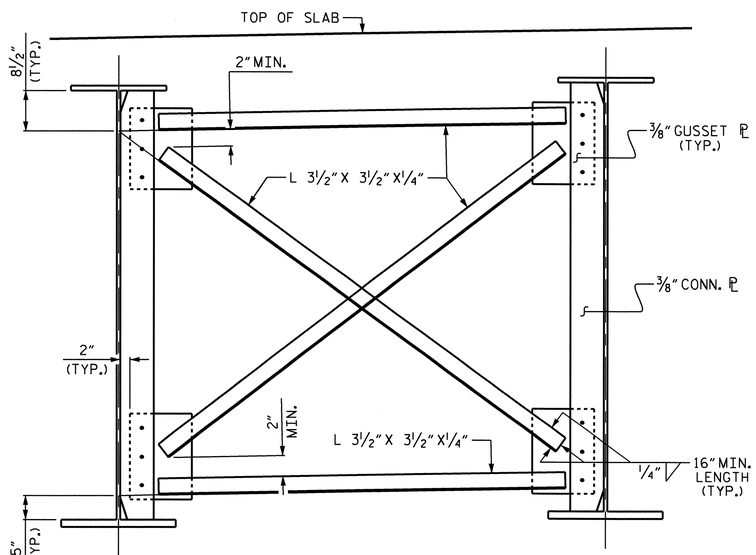

OPTIONAL INTERMEDIATE DIAPHRAGM

(SEE NOTES, SHEET 1 OF 4)

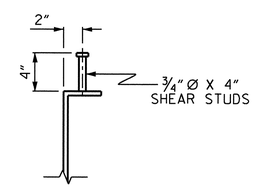

SHEAR STUD DETAIL

(TYP. EA. END BENT DIAPHRAGM)

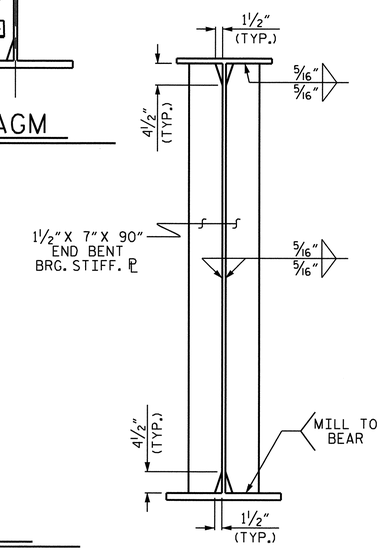

BEARING STIFFENER

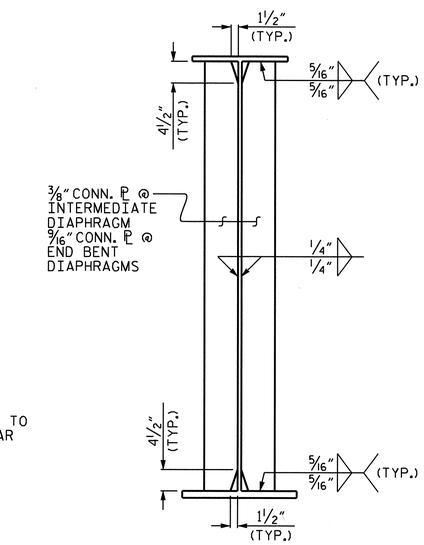

CONNECTOR PLATE

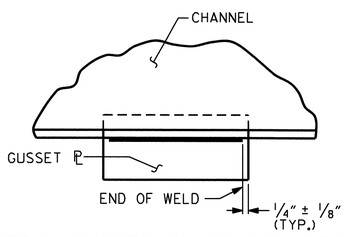

TYPICAL GUSSET PLATE CONNECTION

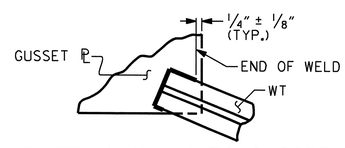

TYPICAL "TEE" TO GUSSET PLATE CONNECTION

WELD TERMINATION DETAILS

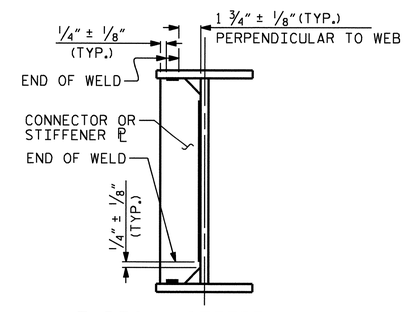

TYPICAL STIFFENER OF CONNECTOR PLATE CONNECTIONS

PROJECT NO. R-2417AA

LEE COUNTY

STATION: 137+42.08 -L-

SHEET 2 OF 4

STATE OF NORTH CAROLINA
DEPARTMENT OF TRANSPORTATION
RALEIGH

SUPERSTRUCTURE

STRUCTURAL STEEL DETAILS

(NBL)

NORTH CAROLINA PROFESSIONAL SEAL 28390 ENGINEER THEO. J. BEACH
11/22/10

REVISIONS						SHEET NO.
NO.	BY:	DATE:	NO.	BY:	DATE:	S-118
1			3			TOTAL SHEETS
2			4			162

DRAWN BY : T. BANKOVICH DATE : 9-2009
CHECKED BY : N. PIERCE DATE : 10-2009

19-OCT-2010 07:20
R:\Structures\str4-L-overAWRR(LtLane)\SuperDrawings\R-2417AA_str4_SS.dgn
sbwilliams

STR. #4

NOTE:

THE TOP FLANGE LATERAL BRACING DETAIL IS PROVIDED TO ASSIST IN LIMITING GIRDER DISPLACEMENT DUE TO WIND FORCES DURING ERECTION. IT SHALL BE INSTALLED IMMEDIATELY AFTER ERECTION OF EACH PAIR OF GIRDER SECTIONS. THE DEPARTMENT ASSUMES NO LIABILITY IN THE ERECTION OR STABILIZATION OF THE GIRDERS.

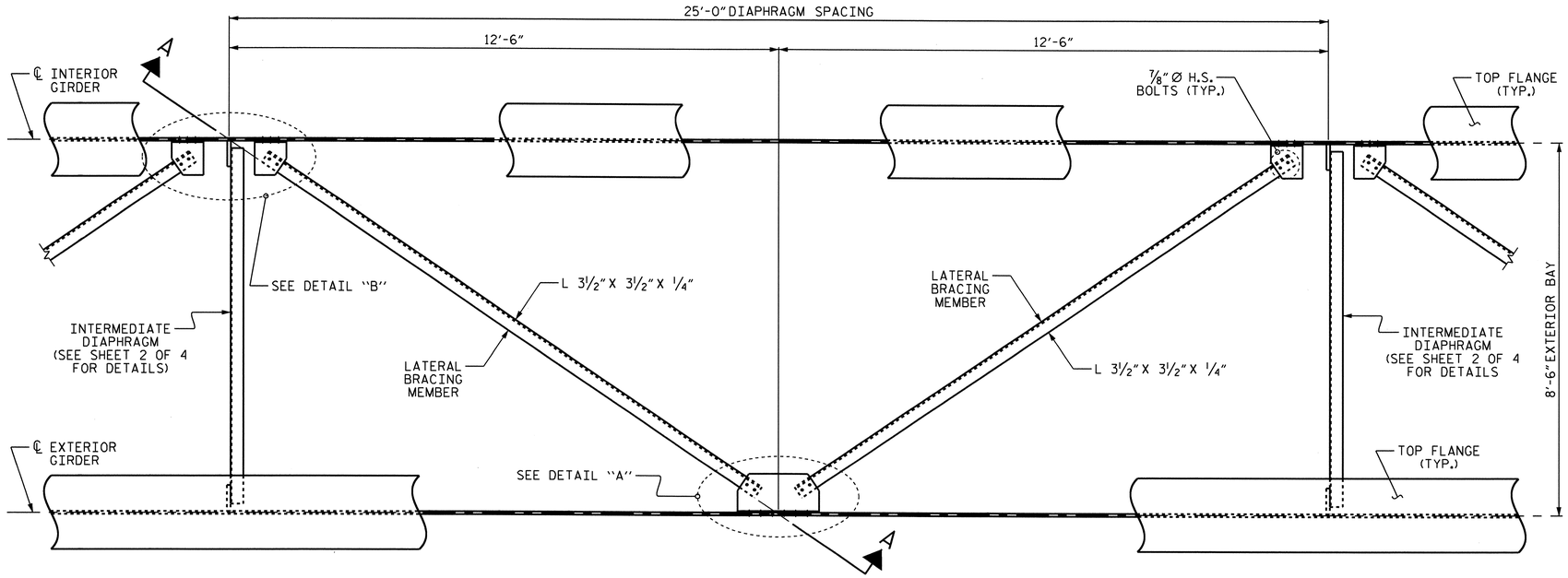

PART PLAN - TOP FLANGE LATERAL BRACING

SEE "FRAMING PLAN" FOR LOCATIONS
(GIRDERS #4 AND #5 SHOWN, GIRDERS #1 AND #2 SIMILAR)

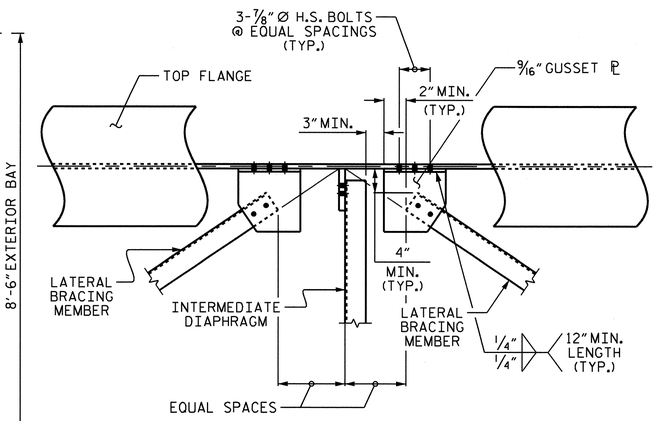

DETAIL "B"

LATERAL BRACING AT TOP FLANGE

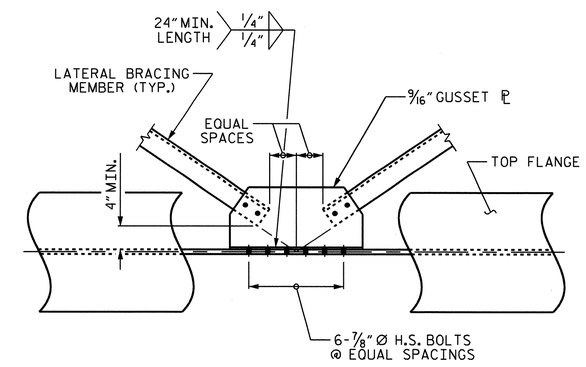

DETAIL "A"

LATERAL BRACING AT TOP FLANGE

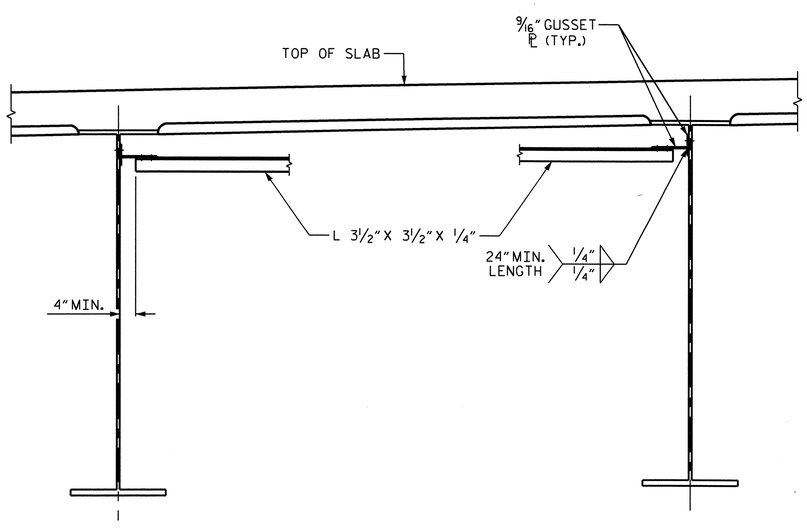

SECTION A-A

LATERAL BRACING AT TOP FLANGE

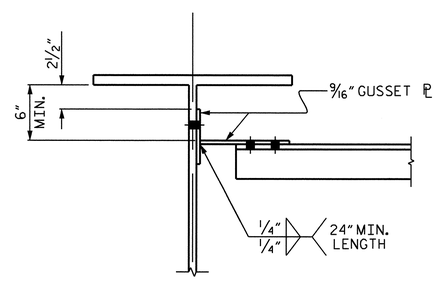

SECTION THRU CONNECTION

(LATERAL BRACING AT TOP FLANGE)

PROJECT NO. R-2417AA

LEE COUNTY

STATION: 137+42.08 -L-

SHEET 3 OF 4

STATE OF NORTH CAROLINA
DEPARTMENT OF TRANSPORTATION
RALEIGH

SUPERSTRUCTURE

STRUCTURAL STEEL DETAILS

(NBL)

NORTH CAROLINA PROFESSIONAL SEAL 24390 ENGINEER THEO J. BEACH 11/23/10

REVISIONS						SHEET NO.
NO.	BY:	DATE:	NO.	BY:	DATE:	S-119
1			3			TOTAL SHEETS
2			4			162

DRAWN BY : T. BANKOVICH DATE : 9-2009
CHECKED BY : N. PIERCE DATE : 10-2009

24-NOV-2010 08:20
R:\Structures\str4-L-overAWRR(LtLane)\SuperDrawings\R-2417AA_str4_SS.dgn
tjbankovich

STR. #4

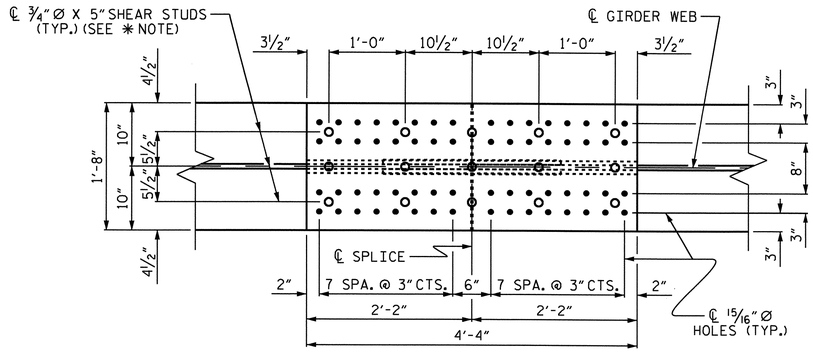

PLAN (TOP OF TOP FLANGE)

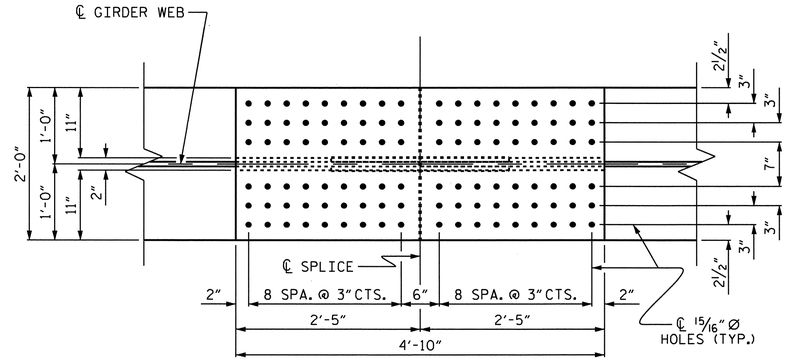

PLAN (TOP OF BOTTOM FLANGE)

✱ NOTE:
SHEAR STUDS ARE TO BE SHOP WELDED ON TOP OF PLATE BEFORE FIELD ASSEMBLY

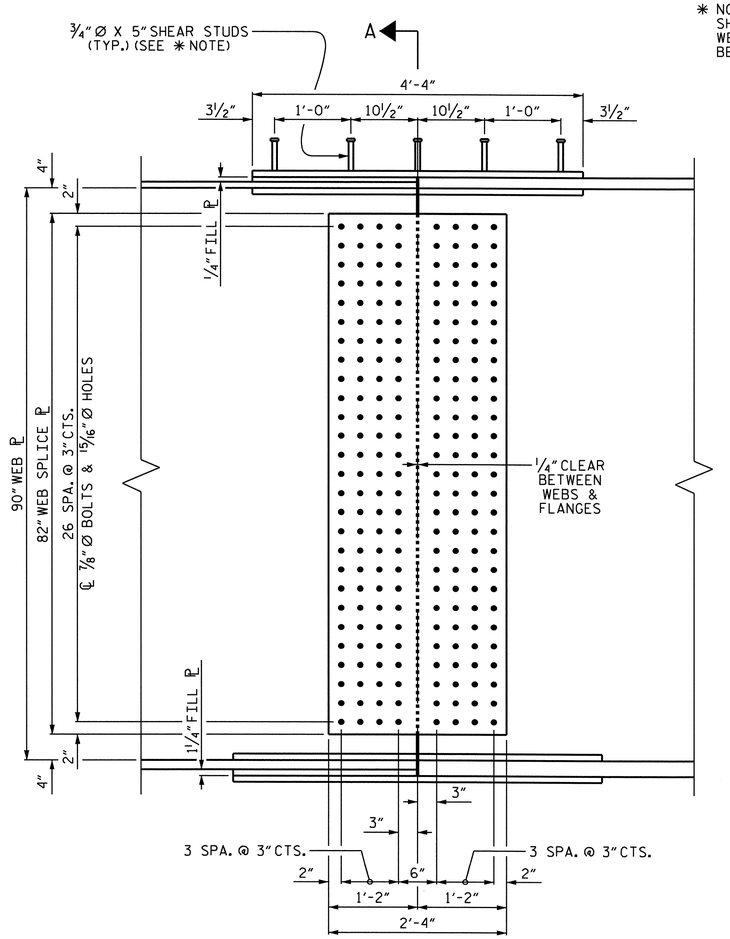

ELEVATION

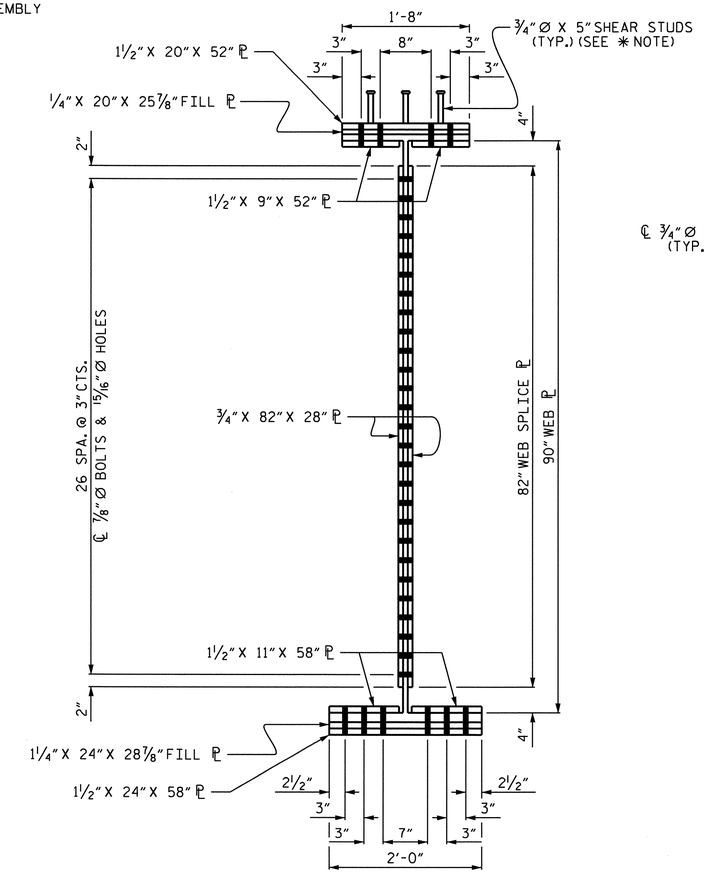

SECTION A-A

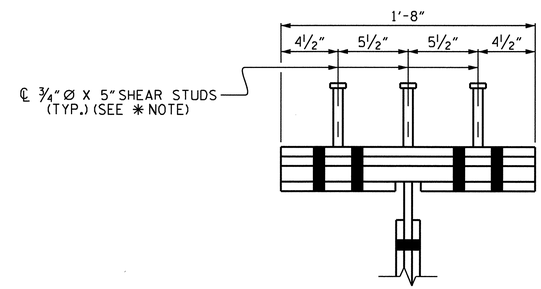

SHEAR STUD DETAIL
FOR TOP FLANGE SPLICE PLATE

PROJECT NO. R-2417AA
LEE COUNTY
STATION: 137+42.08 -L-

SHEET 4 OF 4

STATE OF NORTH CAROLINA
DEPARTMENT OF TRANSPORTATION
RALEIGH
SUPERSTRUCTURE

STRUCTURAL STEEL DETAILS
(NBL)

NORTH CAROLINA PROFESSIONAL SEAL 24390 ENGINEER THEO J. BEACH
11/23/10

REVISIONS						SHEET NO.
NO.	BY:	DATE:	NO.	BY:	DATE:	S-120
1			3			TOTAL SHEETS
2			4			162

STR. #4

BOLTED FIELD SPLICE DETAILS
(TYP. EA. BOLTED FIELD SPLICE)

DRAWN BY : T. BANKOVICH DATE : 9-2009
CHECKED BY : N. PIERCE DATE : 10-2009

18-OCT-2010 15:24
R:\Structures\str4-L-overAWRR(LtLane)\SuperDrawings\R-2417AA_str4_SS.dgn
sbwilliams

DEAD LOAD DEFLECTION TABLE FOR GIRDERS

SPAN "A" GIRDER #1 & #5

THIRTIETH POINTS	BRG.	0.03	0.07	0.10	0.13	0.17	0.20	0.23	0.27	0.30	0.33	0.37	0.40	0.43	0.47	0.50	0.53	0.57	0.60	0.63	0.67	0.70	0.73	0.77	0.80	0.83	0.87	0.90	0.93	0.97	BRG.
DEFLECTION DUE TO WEIGHT OF GIRDER	0	0.041	0.082	0.121	0.159	0.193	0.225	0.253	0.279	0.302	0.322	0.338	0.351	0.360	0.366	0.368	0.366	0.360	0.351	0.338	0.322	0.302	0.279	0.253	0.225	0.193	0.159	0.121	0.082	0.041	0
DEFLECTION DUE TO WEIGHT OF SLAB *	0	0.063	0.128	0.190	0.249	0.304	0.354	0.399	0.440	0.476	0.507	0.533	0.553	0.568	0.576	0.579	0.576	0.568	0.553	0.533	0.507	0.476	0.440	0.399	0.354	0.304	0.249	0.190	0.128	0.063	0
DEFLECTION DUE TO BARRIER RAIL	0	0.008	0.017	0.025	0.032	0.039	0.046	0.052	0.057	0.062	0.066	0.069	0.072	0.074	0.075	0.075	0.075	0.074	0.072	0.069	0.066	0.062	0.057	0.052	0.046	0.039	0.032	0.025	0.017	0.008	0
TOTAL DEAD LOAD DEFLECTION	0	0.113	0.226	0.336	0.440	0.537	0.625	0.704	0.776	0.840	0.894	0.940	0.976	1.002	1.017	1.022	1.017	1.002	0.976	0.940	0.894	0.840	0.776	0.704	0.625	0.537	0.440	0.336	0.226	0.113	0
VERTICAL CURVE ORDINATE	0	0.039	0.075	0.108	0.139	0.167	0.193	0.216	0.236	0.253	0.268	0.280	0.289	0.296	0.300	0.301	0.300	0.296	0.289	0.280	0.268	0.253	0.236	0.216	0.193	0.167	0.139	0.108	0.075	0.039	0
REQUIRED CAMBER	0	1 13/16"	3 5/8"	5 5/16"	6 15/16"	8 7/16"	9 13/16"	11 1/16"	12 1/8"	13 1/8"	13 15/16"	14 5/8"	15 3/16"	15 9/16"	15 13/16"	15 7/8"	15 13/16"	15 9/16"	15 3/16"	14 5/8"	13 15/16"	13 1/8"	12 1/8"	11 1/16"	9 13/16"	8 7/16"	6 15/16"	5 5/16"	3 5/8"	1 13/16"	0

SPAN "A" GIRDER #2 & #4

THIRTIETH POINTS	BRG.	0.03	0.07	0.10	0.13	0.17	0.20	0.23	0.27	0.30	0.33	0.37	0.40	0.43	0.47	0.50	0.53	0.57	0.60	0.63	0.67	0.70	0.73	0.77	0.80	0.83	0.87	0.90	0.93	0.97	BRG.
DEFLECTION DUE TO WEIGHT OF GIRDER	0	0.041	0.082	0.121	0.159	0.193	0.225	0.253	0.279	0.302	0.322	0.338	0.351	0.360	0.366	0.368	0.366	0.360	0.351	0.338	0.322	0.302	0.279	0.253	0.225	0.193	0.159	0.121	0.082	0.041	0
DEFLECTION DUE TO WEIGHT OF SLAB *	0	0.062	0.125	0.186	0.244	0.298	0.347	0.391	0.431	0.466	0.496	0.522	0.542	0.556	0.565	0.567	0.565	0.556	0.542	0.522	0.496	0.466	0.431	0.391	0.347	0.298	0.244	0.186	0.125	0.062	0
DEFLECTION DUE TO BARRIER RAIL	0	0.008	0.016	0.024	0.032	0.039	0.045	0.051	0.056	0.061	0.065	0.068	0.071	0.073	0.074	0.074	0.074	0.073	0.071	0.068	0.065	0.061	0.056	0.051	0.045	0.039	0.032	0.024	0.016	0.008	0
TOTAL DEAD LOAD DEFLECTION	0	0.111	0.224	0.331	0.434	0.530	0.617	0.695	0.766	0.829	0.883	0.928	0.963	0.989	1.004	1.009	1.004	0.989	0.963	0.928	0.883	0.829	0.766	0.695	0.617	0.530	0.434	0.331	0.224	0.111	0
VERTICAL CURVE ORDINATE	0	0.039	0.075	0.108	0.139	0.167	0.193	0.216	0.236	0.253	0.269	0.280	0.289	0.296	0.300	0.301	0.300	0.296	0.289	0.280	0.269	0.253	0.236	0.216	0.193	0.167	0.139	0.108	0.075	0.039	0
REQUIRED CAMBER	0	1 13/16"	3 9/16"	5 1/4"	6 7/8"	8 3/8"	9 11/16"	10 15/16"	12"	13"	13 13/16"	14 1/2"	15"	15 7/16"	15 5/8"	15 3/4"	15 5/8"	15 7/16"	15"	14 1/2"	13 13/16"	13"	12"	10 15/16"	9 11/16"	8 3/8"	6 7/8"	5 1/4"	3 9/16"	1 13/16"	0

SPAN "A" GIRDER #3

THIRTIETH POINTS	BRG.	0.03	0.07	0.10	0.13	0.17	0.20	0.23	0.27	0.30	0.33	0.37	0.40	0.43	0.47	0.50	0.53	0.57	0.60	0.63	0.67	0.70	0.73	0.77	0.80	0.83	0.87	0.90	0.93	0.97	BRG.
DEFLECTION DUE TO WEIGHT OF GIRDER	0	0.041	0.082	0.121	0.159	0.193	0.225	0.253	0.279	0.302	0.322	0.338	0.351	0.360	0.366	0.368	0.366	0.360	0.351	0.338	0.322	0.302	0.279	0.253	0.225	0.193	0.159	0.121	0.082	0.041	0
DEFLECTION DUE TO WEIGHT OF SLAB *	0	0.060	0.122	0.182	0.239	0.292	0.340	0.383	0.422	0.456	0.486	0.511	0.530	0.544	0.553	0.555	0.553	0.544	0.530	0.511	0.486	0.456	0.422	0.383	0.340	0.292	0.239	0.182	0.122	0.060	0
DEFLECTION DUE TO BARRIER RAIL	0	0.009	0.017	0.025	0.033	0.041	0.047	0.053	0.059	0.064	0.068	0.071	0.074	0.076	0.077	0.078	0.077	0.076	0.074	0.071	0.068	0.064	0.059	0.053	0.047	0.041	0.033	0.025	0.017	0.009	0
TOTAL DEAD LOAD DEFLECTION	0	0.110	0.222	0.329	0.431	0.525	0.612	0.690	0.760	0.822	0.875	0.920	0.955	0.980	0.996	1.001	0.996	0.980	0.955	0.920	0.875	0.822	0.760	0.690	0.612	0.525	0.431	0.329	0.222	0.110	0
VERTICAL CURVE ORDINATE	0	0.039	0.075	0.108	0.139	0.167	0.193	0.216	0.236	0.253	0.268	0.280	0.289	0.296	0.300	0.301	0.300	0.296	0.289	0.280	0.268	0.253	0.236	0.216	0.193	0.167	0.139	0.108	0.075	0.039	0
REQUIRED CAMBER	0	1 13/16"	3 9/16"	5 1/4"	6 13/16"	8 5/16"	9 5/8"	10 7/8"	11 15/16"	12 7/8"	13 11/16"	14 3/8"	14 15/16"	15 5/16"	15 9/16"	15 5/8"	15 9/16"	15 5/16"	14 15/16"	14 3/8"	13 11/16"	12 7/8"	11 15/16"	10 7/8"	9 5/8"	8 5/16"	6 13/16"	5 1/4"	3 9/16"	1 13/16"	0

* INCLUDES SLAB, BUILDUPS & STAY-IN-PLACE FORMS.
ALL VALUES ARE SHOWN IN FEET (DECIMAL FORM), EXCEPT "REQUIRED CAMBER", WHICH IS GIVEN IN INCHES (FRACTION FORM)

PROJECT NO. R-2417AA
LEE COUNTY
STATION: 137+42.08 -L-

STATE OF NORTH CAROLINA
DEPARTMENT OF TRANSPORTATION
RALEIGH
SUPERSTRUCTURE

DEAD LOAD DEFLECTIONS
(NBL)

NORTH CAROLINA PROFESSIONAL SEAL 24390 ENGINEER THEO J. BEACH
11/23/10

REVISIONS						SHEET NO.
NO.	BY:	DATE:	NO.	BY:	DATE:	S-121
1			3			TOTAL SHEETS
2			4			162

DRAWN BY : T. BANKOVICH DATE : 9-2009
CHECKED BY : N. PIERCE DATE : 10-2009

18-OCT-2010 15:21
R:\Structures\str4-L-overAWRR(LtLane)\SuperDrawings\R-2417AA_str4_DL.dgn
sbwilliams

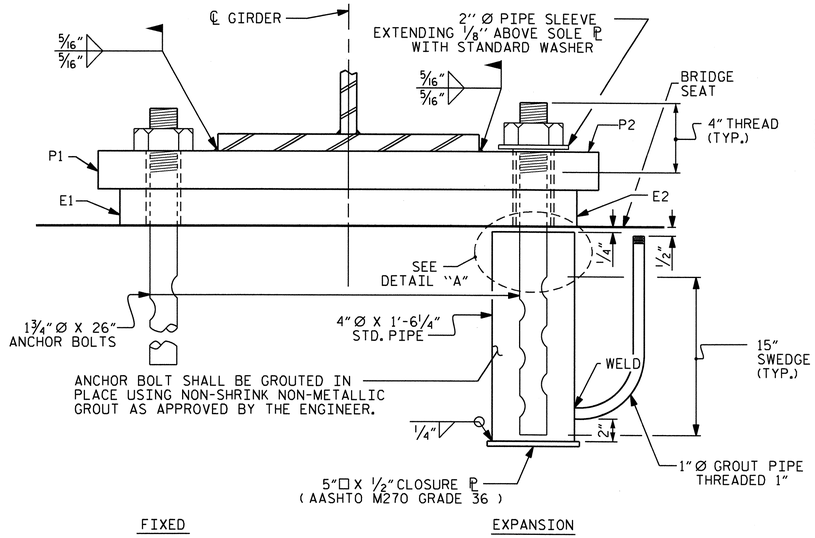

END VIEW

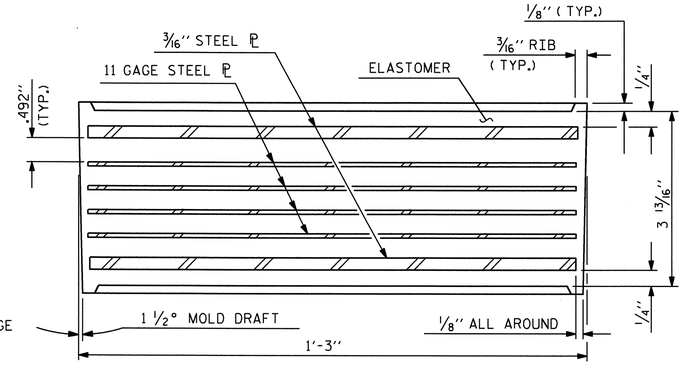

TYPICAL SECTION OF ELASTOMERIC BEARING

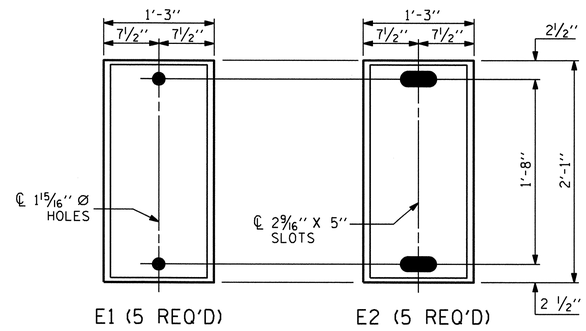

PLAN VIEW OF ELASTOMERIC BEARING

TYPE VI

(60 DUROMETER HARDNESS)

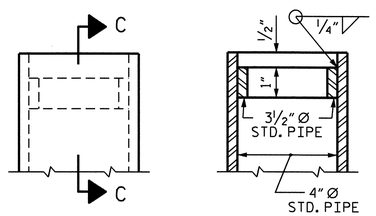

SECTION C-C

DETAIL "A"

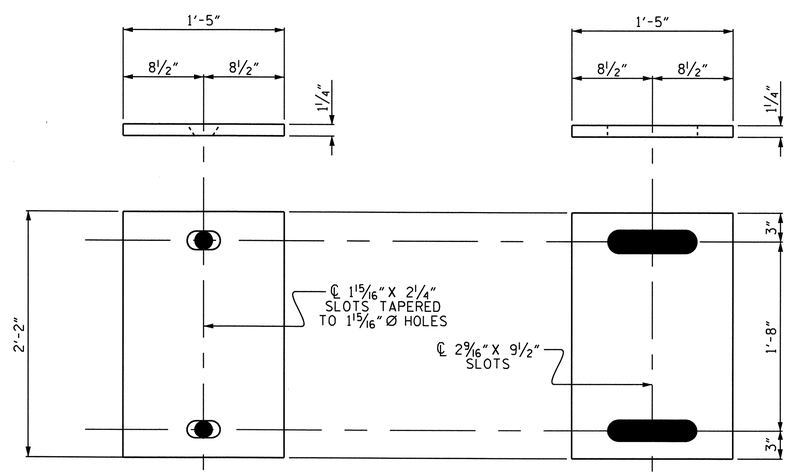

P1 (FIXED)

P1 (5 REQ'D)

P2 (EXPANSION)

P2 (5 REQ'D)

SOLE PLATE DETAILS ("P")

NOTES

AT ALL FIXED POINTS OF SUPPORT, NUTS FOR ANCHOR BOLTS ARE TO BE TIGHTENED FINGER TIGHT AND THEN BACKED OFF 1/2 TURN. THE THREAD OF THE NUT AND BOLT SHALL THEN BE BURRED WITH A SHARP POINTED TOOL.

THE 2" Ø PIPE SLEEVE SHALL BE CUT FROM SCHEDULE 40 PVC PLASTIC PIPE. THE PVC PLASTIC PIPE SHALL MEET THE REQUIREMENTS OF ASTM D1785.

THE PAYMENT FOR THE PIPE SLEEVES AND 4" Ø X 1'-6 1/4" STANDARD PIPE ASSEMBLY SHALL BE INCLUDED IN THE SEVERAL PAY ITEMS.

FOR AASHTO M270 GRADE 50W STRUCTURAL STEEL, SOLE PLATE SHALL BE AASHTO M270 GRADE 50W AND SHALL NOT BE GALVANIZED. ANCHOR BOLTS, NUTS AND WASHERS SHALL BE GALVANIZED IN ACCORDANCE WITH THE STANDARD SPECIFICATIONS.

ANCHOR BOLTS SHALL MEET THE REQUIREMENTS OF ASTM A449. NUTS SHALL MEET THE REQUIREMENTS OF AASHTO M291-DH OR AASHTO M292-2H. WASHERS SHALL MEET THE REQUIREMENTS OF AASHTO M293. SHOP DRAWINGS ARE NOT REQUIRED FOR ANCHOR BOLTS, NUTS AND WASHERS. SHOP INSPECTION IS REQUIRED.

WHEN FIELD WELDING THE SOLE PLATE TO THE GIRDER FLANGE, USE TEMPERATURE INDICATING WAX PENS, OR OTHER SUITABLE MEANS, TO ENSURE THAT THE TEMPERATURE OF THE SOLE PLATE DOES NOT EXCEED 300°F. TEMPERATURES ABOVE THIS MAY DAMAGE THE ELASTOMER.

ALL SURFACES OF BEARING PLATES SHALL BE SMOOTH AND STRAIGHT.

THE CLOSURE PLATE, GROUT PIPE AND STANDARD PIPE FOR THE EXPANSION ASSEMBLY NEED NOT BE GALVANIZED.

THE CONTRACTOR'S ATTENTION IS CALLED TO THE FOLLOWING PROCEDURE, WHICH MAY BE REQUIRED BY THE ENGINEER, TO RESET ELASTOMERIC BEARINGS DUE TO GIRDER TRANSLATION AND END ROTATION:

1. ONCE THE DECK HAS CURED, THE GIRDERS SHALL BE JACKED THEN THE ANCHOR BOLTS AND ELASTOMERIC BEARING SLOTS CENTERED AS NEARLY AS PRACTICAL ABOUT THE BEARING STIFFENER. THIS OPERATION SHALL BE PERFORMED AT APPROXIMATELY 60° F.

2. AFTER CENTERING THE ELASTOMERIC BEARING SLOTS AND ANCHOR BOLTS, THE ANCHOR BOLTS SHALL BE GROUTED.

   THE CONTRACTOR MAY PROPOSE ALTERNATE METHODS, PROVIDED DETAILS ARE SUBMITTED TO THE ENGINEER FOR REVIEW AND APPROVAL.

ELASTOMER IN ALL BEARING PADS SHALL BE 60 DUROMETER HARDNESS.

—LOAD RATINGS—	
60 DUROMETER	MAX.D.L.+ L.L.
TYPE VI	380 k

PROJECT NO. R-2417AA

LEE COUNTY

STATION: 137+42.08 -L-

STATE OF NORTH CAROLINA
DEPARTMENT OF TRANSPORTATION
RALEIGH

STANDARD

ELASTOMERIC BEARING DETAILS

(NBL)

NORTH CAROLINA PROFESSIONAL SEAL 24390 ENGINEER THEO J. BEACH
11/23/10

REVISIONS						SHEET NO.
NO.	BY:	DATE:	NO.	BY:	DATE:	S-122
1			3			TOTAL SHEETS
2			4			162

ASSEMBLED BY : T. BANKOVICH		DATE : 9-2009	
CHECKED BY : N. PIERCE		DATE : 10-2009	
DRAWN BY : EEM 10/95	REV. 10/17/00	RWW/LES	
CHECKED BY : PEK 10/95	REV. 7/10/01	LES/RDR	
	REV. 5/1/06	TLA/GM	

24-NOV-2010 08:21
R:\Structures\str4-L-overAWRR(LtLane)\SuperDrawings\R-2417AA_str4_BG.dgn
tjbankovich

STD. NO. EB2

STR. #4

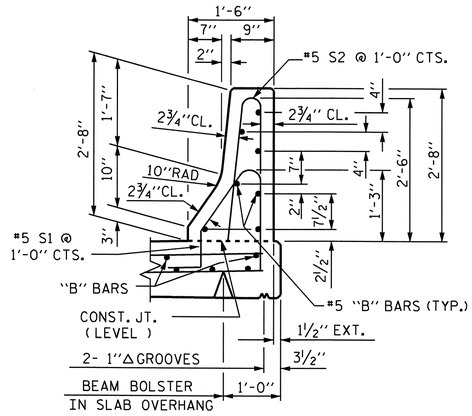

SECTION THRU RAIL

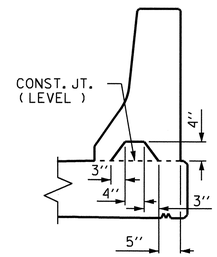

SECTION S-S

AT DAM IN OPEN JOINT
(THIS IS TO BE USED ONLY
WHEN SLIP FORM IS USED)

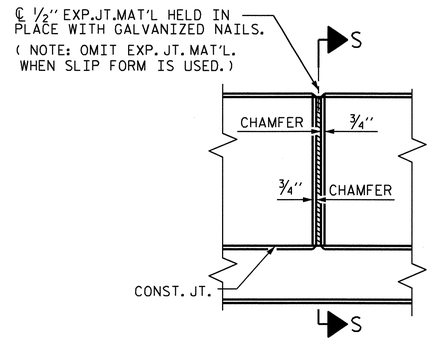

ELEVATION AT EXPANSION JOINTS

BAR TYPES

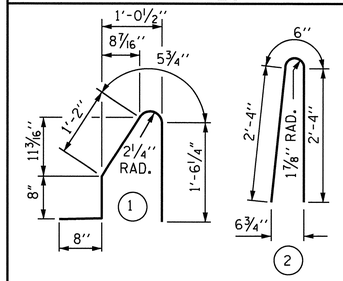

ALL BAR DIMENSIONS ARE OUT TO OUT

BILL OF MATERIAL

FOR CONCRETE BARRIER RAIL ONLY

BAR	NO.	SIZE	TYPE	LENGTH	WEIGHT
* B1	56	#5	STR	12'-5"	725
* B2	84	#5	STR	29'-7"	2592
* S1	442	#5	1	4'-6"	2075
* S2	448	#5	2	5'-2"	2414

* EPOXY COATED REINFORCING STEEL	7806 LBS.
CLASS AA CONCRETE	44.5 CU. YDS.
CONCRETE BARRIER RAIL	443.99 LIN. FT.

BARRIER RAIL DETAILS

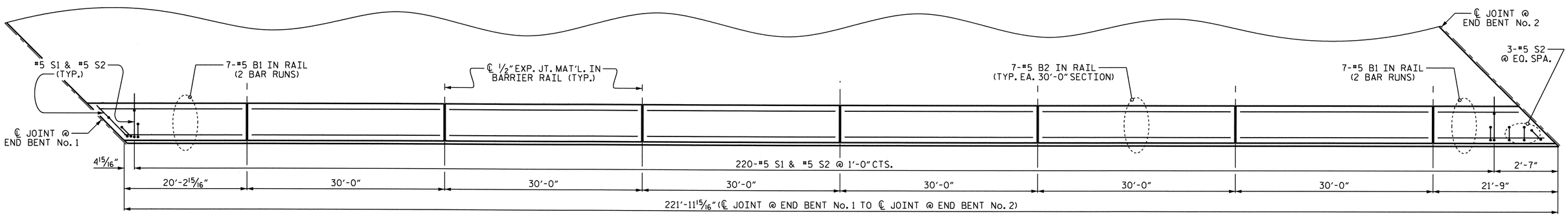

PLAN OF BARRIER PLAN

RIGHT SIDE SHOWN, LEFT SIDE SIMILAR
DIMENSIONS SHOWN ARE ALONG BACK FACE OF BARRIER RAIL

NOTES:

THE BARRIER RAIL IN THE SPAN SHALL NOT BE CAST UNTIL ALL SLAB CONCRETE IN THAT SPAN HAS BEEN CAST AND HAS REACHED A MINIMUM COMPRESSIVE STRENGTH OF 3,000 PSI.

ALL REINFORCING STEEL IN BARRIER RAILS SHALL BE EPOXY COATED.

THE #5 S1 AND #5 S2 BARS MAY BE SHIFTED AS NECESSARY IN ORDER TO MAINTAIN A 2" MINIMUM CLEARANCE TO THE ½" EXPANSION JOINT MATERIAL IN BARRIER RAIL.

VERTICAL GROOVED CONTRACTION JOINTS, ½" IN DEPTH, SHALL BE TOOLED IN ALL EXPOSED FACES OF THE BARRIER RAIL AND IN ACCORDANCE WITH ARTICLE 825-10(B) OF THE STANDARD SPECIFICATIONS. THE CONTRACTION JOINT SHALL BE LOCATED AT EACH THIRD POINT BETWEEN BARRIER RAIL EXPANSION JOINTS. ONLY ONE CONTRACTION JOINT IS REQUIRED AT MIDPOINT OF BARRIER RAIL SEGMENTS LESS THAN 20 FEET IN LENGTH AND NO CONTRACTION JOINTS ARE REQUIRED FOR THOSE SEGMENTS LESS THAN 10 FEET IN LENGTH.

PROJECT NO. R-2417AA
LEE COUNTY
STATION: 137+42.08 -L-

STATE OF NORTH CAROLINA
DEPARTMENT OF TRANSPORTATION
RALEIGH
SUPERSTRUCTURE

CONCRETE
BARRIER RAIL
(NBL)

NORTH CAROLINA PROFESSIONAL SEAL 24390 ENGINEER THEO J. BEACH
11/23/10

REVISIONS						SHEET NO.
NO.	BY:	DATE:	NO.	BY:	DATE:	S-123
1			3			TOTAL SHEETS
2			4			162

STD. NO. CBR1 STR. #4

DRAWN BY : T. BANKOVICH DATE : 9-2009
CHECKED BY : N. PIERCE DATE : 10-2009

24-NOV-2010 08:22
R:\Structures\str4-L-overAWRR(LtLane)\SuperDrawings\R-2417AA_str4_BR.dgn
tjbankovich

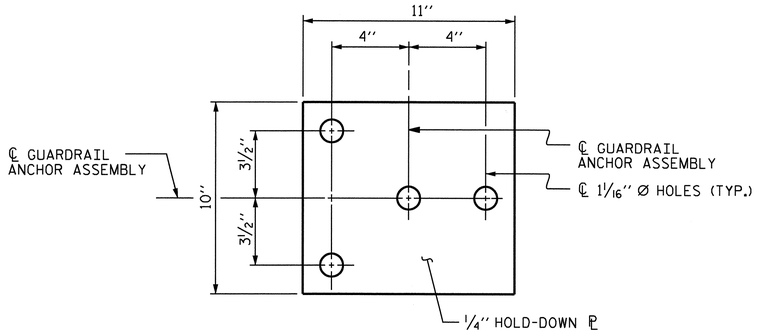

PLAN

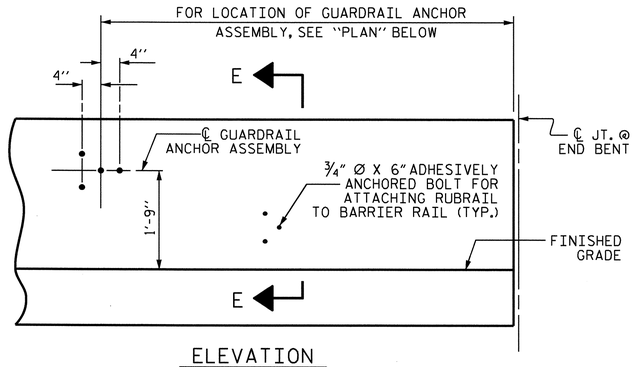

ELEVATION

FOR LOCATION OF RUBRAIL, SEE ROADWAY STD. 862.03

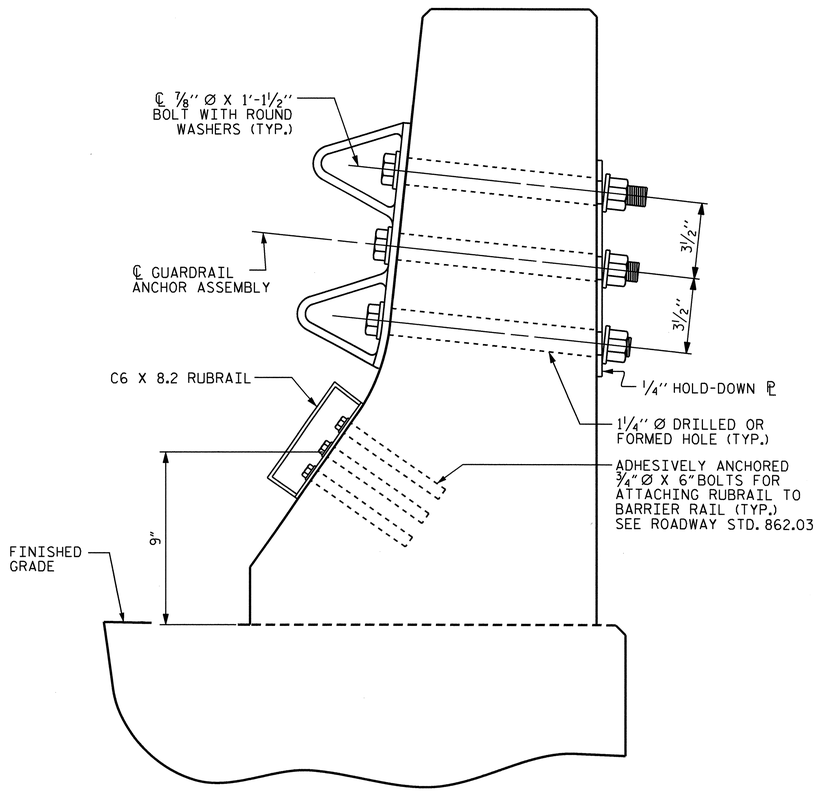

SECTION E-E

GUARDRAIL ANCHOR ASSEMBLY DETAILS

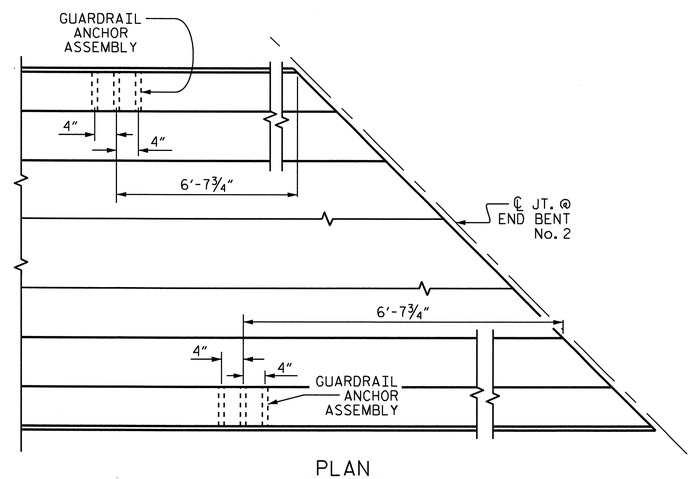

PLAN

LOCATION OF ANCHORS FOR GUARDRAIL

END BENT No. 2 SHOWN, END BENT No. 1 SIMILAR

NOTES

THE GUARDRAIL ANCHOR ASSEMBLY SHALL CONSIST OF A 1/4'' HOLD DOWN PLATE AND 4 - 7/8'' Ø BOLTS WITH NUTS AND WASHERS, RUBRAIL, AND ADHESIVELY ANCHORED BOLTS.

THE HOLD-DOWN PLATE SHALL CONFORM TO AASHTO M270 GRADE 36. AFTER FABRICATION, THE HOLD-DOWN PLATE SHALL BE HOT-DIP GALVANIZED IN ACCORDANCE WITH AASHTO M111.

BOLTS SHALL CONFORM TO THE REQUIREMENTS OF ASTM A307 AND NUTS SHALL CONFORM TO THE REQUIREMENTS OF AASHTO M291. BOLTS, NUTS AND WASHERS SHALL BE GALVANIZED. (AT THE CONTRACTOR'S OPTION, STAINLESS STEEL BOLTS, NUTS AND WASHERS MAY BE USED AS AN ALTERNATE FOR THE 7/8'' Ø GALVANIZED BOLTS, NUTS AND WASHERS. THEY SHALL CONFORM TO OR EXCEED THE MECHANICAL REQUIREMENTS OF ASTM A307. THE USE OF THIS ALTERNATE SHALL BE APPROVED BY THE ENGINEER.)

THE GUARDRAIL ANCHOR ASSEMBLY IS REQUIRED AT ALL POINTS WHERE APPROACH GUARDRAIL IS TO BE ATTACHED TO THE END OF BARRIER RAIL. FOR POINTS OF ATTACHMENT, SEE SKETCH.

AFTER INSTALLATION, THE EXPOSED THREAD OF THE BOLT SHALL BE BURRED WITH A SHARP POINTED TOOL.

THE COST OF THE GUARDRAIL ANCHOR ASSEMBLY SHALL BE INCLUDED IN THE UNIT CONTRACT PRICE BID FOR CONCRETE BARRIER RAIL.

THE 1 1/4'' Ø HOLES SHALL BE FORMED OR DRILLED WITH A CORE BIT. IMPACT TOOLS WILL NOT BE PERMITTED. ANY CONCRETE DAMAGED BY THIS WORK SHALL BE REPAIRED TO THE SATISFACTION OF THE ENGINEER.

THE C6 X 8.2 RUBRAIL IS TO BE ADHESIVELY ANCHORED TO THE RAIL USING THREE 3/4''Ø X 6'' BOLTS WITH WASHERS. LEVEL ONE FIELD TESTING IS REQUIRED, AND THE YIELD LOAD OF THE 3/4''Ø BOLT IS 12 KIPS. FOR ADHESIVELY ANCHORED ANCHOR BOLTS OR DOWELS, SEE SPECIAL PROVISIONS. SEE ROADWAY STANDARD 862.03 FOR DETAILS AND LOCATION OF THE RUBRAIL.

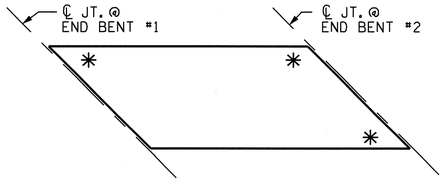

SKETCH SHOWING POINTS OF ATTACHMENTS

✳ DENOTES GUARDRAIL ANCHOR ASSEMBLY

PROJECT NO. R-2417AA

LEE COUNTY

STATION: 137+42.08 -L-

STATE OF NORTH CAROLINA
DEPARTMENT OF TRANSPORTATION
RALEIGH

SUPERSTRUCTURE

GUARDRAIL ANCHORAGE FOR BARRIER RAIL

(NBL)

NORTH CAROLINA PROFESSIONAL SEAL 24390 ENGINEER THEO J. BEACH
11/23/10

REVISIONS						SHEET NO.
NO.	BY:	DATE:	NO.	BY:	DATE:	S-124
1			3			TOTAL SHEETS
2			4			162

ASSEMBLED BY : T. BANKOVICH	DATE : 9-2009
CHECKED BY : N. PIERCE	DATE : 10-2009
DRAWN BY : TLA 5/06	ADDED 5/11/06R KMM/GM
CHECKED BY : GM 5/06	

24-NOV-2010 08:22
R:\Structures\str4-L-overAWRR(LtLane)\SuperDrawings\R-2417AA_str4_BR.dgn
tjbankovich

STD. NO. GRA2

STR. #4

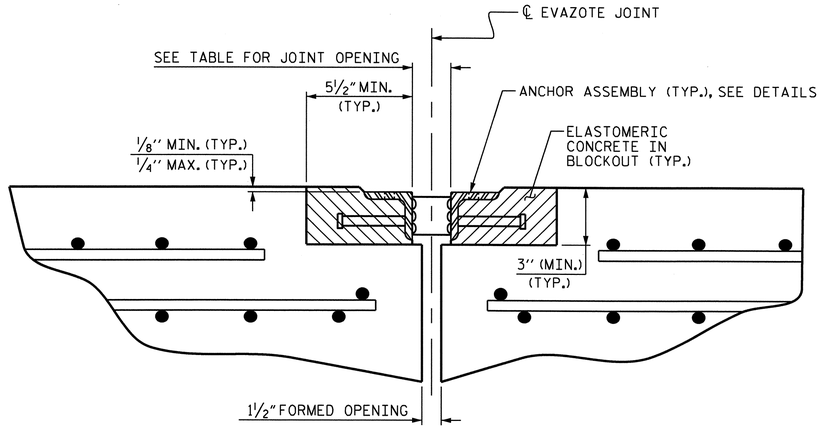

ARMORED JOINT DETAILS

SECTION NORMAL TO JOINT AT BENT

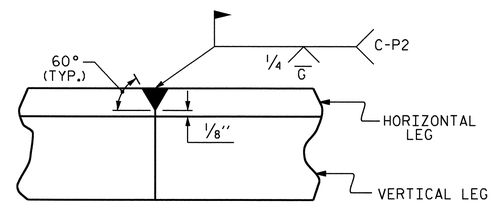

DETAIL- FIELD WELD SPLICE OF ANGLE

NOTES

ANGLES SHALL CONFORM TO AASHTO M270 GRADE 36 STEEL OR APPROVED EQUAL. ALL STUD ANCHORS SHALL CONFORM TO AASHTO M169 GRADES 1010 THRU 1020 OR APPROVED EQUAL.

STUD ANCHORS SHALL BE SHOP WELDED AND ALL HOLES SHALL BE SHOP DRILLED AS SHOWN ON THE PLANS. STUD ANCHORS SHALL BE ELECTRIC ARC END WELDED WITH COMPLETE FUSION.

UPON COMPLETION OF SHOP FABRICATION, THE ENTIRE ANCHOR ASSEMBLY SHALL BE METALLIZED. THE ½" Ø STUD ANCHORS AND ANCHOR TABS NEED NOT BE METALLIZED. SEE SPECIAL PROVISION FOR THERMAL SPRAYED COATINGS (METALLIZATION).

ANCHOR ASSEMBLY SHALL BE MADE CONTINUOUS THE LENGTH OF THE JOINT FROM GUTTER TO GUTTER. FOR FIELD SPLICES AT ALL CROWN BREAK POINTS, THE ENDS OF THE STEEL ANGLES SHALL BE CUT PARALLEL TO THE BRIDGE CENTERLINE. FINISHED FIELD WELDS SHALL BE GROUND SMOOTH AND COATED WITH A MINIMUM THICKNESS OF 4 DRY MILS OF ZINC-RICH PAINT IN ACCORDANCE WITH THE STANDARD SPECIFICATIONS.

ANCHOR ASSEMBLY SEGMENTS SHALL NOT BE LESS THAN 12 FEET NOR MORE THAN 20 FEET IN LENGTH. SHORTER SEGMENTS MAY BE USED AT THE EDGE OF ROADWAY OR AT POINTS OF STAGED CONSTRUCTION.

THE ANCHOR ASSEMBLY SHALL BE SECURED AND LEVELED AS SHOWN IN THE "ARMORED JOINT ANCHOR ASSEMBLY DETAILS". NO SUBMITTALS ARE REQUIRED FOR ⅜" Ø EXPANSION ANCHORS, NUTS OR WASHERS. THE CONTRACTOR MAY SUBMIT FOR APPROVAL AN ALTERNATE METHOD OF ALIGNING AND LEVELING THE ANGLES. THE ALTERNATE METHOD SHALL NOT INCLUDE ANY WELDING TO THE OUTSIDE FACE OF THE ANGLES.

AFTER THE ELASTOMERIC CONCRETE HAS BEEN CAST ON BOTH SIDES OF THE JOINT, REMOVE ANY EXCESS CONCRETE THAT COMES THROUGH THE WEEP HOLES AND THOROUGHLY CLEAN THE ANGLES. ANY DAMAGED STEEL SHALL BE COATED WITH A MINIMUM OF 4 MILS OF ZINC-RICH PAINT IN ACCORDANCE WITH THE STANDARD SPECIFICATIONS.

SEE SPECIAL PROVISIONS FOR EVAZOTE JOINT SEALS.

SEE SPECIAL PROVISIONS FOR ELASTOMERIC CONCRETE.

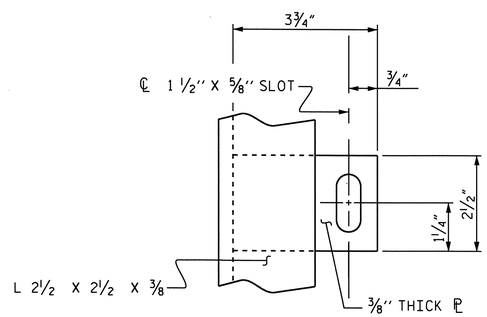

PLAN VIEW OF TAB

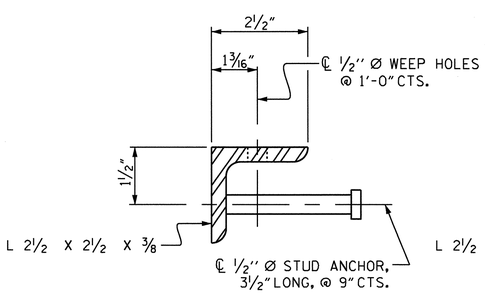

SECTION VIEW OF STUD

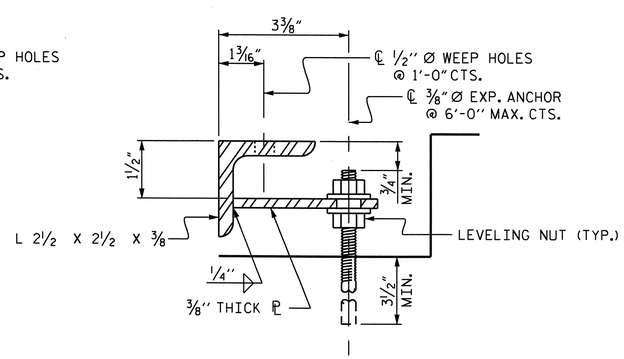

SECTION VIEW OF TAB

ARMORED JOINT ANCHOR ASSEMBLY DETAILS

MOVEMENT AND SETTING AT EVAZOTE JOINT						
LOCATION	SKEW ANGLE	NOMINAL UNCOMPRESSED SEAL WIDTH	TOTAL MOVEMENT (ALONG ℄ RDWY)	PERPENDICULAR JOINT OPENING AT 45° F	PERPENDICULAR JOINT OPENING AT 60° F	PERPENDICULAR JOINT OPENING AT 90° F
END BENT No. 1 (EXP.)	45°-00'-00"	3⁷⁄₁₆"	2⁵⁄₁₆"	2¹³⁄₁₆"	2⁹⁄₁₆"	2¹⁄₁₆"
END BENT No. 2 (FIX.)	45°-00'-00"	3⁷⁄₁₆"	—	—	2⁹⁄₁₆"	—

TOTAL MOVEMENT IS CALCULATED ALONG THE CENTERLINE OF ROADWAY.
JOINT OPENINGS ARE MEASURED PERPENDICULAR TO THE JOINT.

BILL OF MATERIAL		
LOCATION	ELASTOMERIC CONCRETE * (CU. FT.)	TOTAL LENGTH OF ANGLE (FT.)
END BENT No. 1	12.3	107.5'
END BENT No. 2	12.3	107.5'

* BASED ON THE MINIMUM BLOCKOUT SHOWN.

PROJECT NO. R-2417AA
LEE COUNTY
STATION: 137+42.08 -L-

STATE OF NORTH CAROLINA
DEPARTMENT OF TRANSPORTATION
RALEIGH

STANDARD
ARMORED EVAZOTE JOINT DETAILS
(NBL)

NORTH CAROLINA PROFESSIONAL SEAL 24890 ENGINEER DAVID J. BEACH
11/23/10

REVISIONS						SHEET NO.
NO.	BY:	DATE:	NO.	BY:	DATE:	S-125
1			3			TOTAL SHEETS
2			4			162

STD. NO. AEJ1 STR. #4

ASSEMBLED BY : T. BANKOVICH	DATE : 9-2009
CHECKED BY : N. PIERCE	DATE : 10-2009
DRAWN BY : EEM 1/96	REV. 7/10/01 LES/RDR
CHECKED BY : RGW 1/96	REV. 5/7/03RR RWW/JTE
	REV. 5/1/06 TLA/GM

18-OCT-2010 15:16
R:\Structures\str4-L-overAWRR(LtLane)\SuperDrawings\R-2417AA_str4_AEJT.dgn
sbwilliams

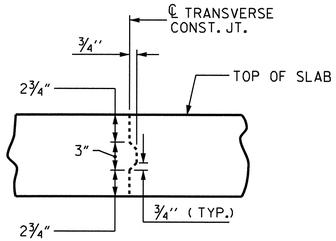

TRANSVERSE CONSTRUCTION JOINT DETAIL

NOTE: REINFORCING STEEL IN SLAB NOT SHOWN. LONGITUDINAL REINFORCING STEEL SHALL BE CONTINUOUS THRU JOINT

BAR TYPE

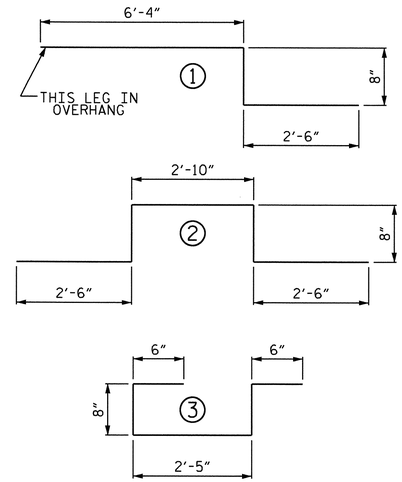

ALL BAR DIMENSIONS ARE OUT TO OUT.

BILL OF MATERIAL

BAR	NO.	SIZE	TYPE	LENGTH	WEIGHT	BAR	NO.	SIZE	TYPE	LENGTH	WEIGHT
* A1	334	#5	STR	40'-11"	14254	A204	6	#5	STR	32'-9"	205
A2	334	#5	STR	40'-11"	14254	A205	6	#5	STR	31'-2"	195
* A3	6	#5	STR	7'-0"	44	A206	6	#5	STR	29'-6"	185
						A207	6	#5	STR	27'-11"	175
* A100	6	#5	STR	39'-3"	246	A208	6	#5	STR	26'-3"	164
* A101	6	#5	STR	37'-8"	236	A209	6	#5	STR	24'-8"	154
* A102	6	#5	STR	36'-0"	225	A210	6	#5	STR	23'-0"	144
* A103	6	#5	STR	34'-5"	215	A211	6	#5	STR	21'-5"	134
* A104	6	#5	STR	32'-9"	205	A212	6	#5	STR	19'-9"	124
* A105	6	#5	STR	31'-2"	195	A213	6	#5	STR	18'-2"	114
* A106	6	#5	STR	29'-6"	185	A214	6	#5	STR	16'-6"	103
* A107	6	#5	STR	27'-11"	175	A215	6	#5	STR	14'-11"	93
* A108	6	#5	STR	26'-3"	164	A216	6	#5	STR	13'-3"	83
* A109	6	#5	STR	24'-8"	154	A217	6	#5	STR	11'-8"	73
* A110	6	#5	STR	23'-0"	144	A218	6	#5	STR	10'-0"	63
* A111	6	#5	STR	21'-5"	134	A219	6	#5	STR	8'-5"	53
* A112	6	#5	STR	19'-9"	124	A220	6	#5	STR	6'-9"	42
* A113	6	#5	STR	18'-2"	114	A221	6	#5	STR	5'-2"	32
* A114	6	#5	STR	16'-6"	103	A222	6	#5	STR	3'-6"	22
* A115	6	#5	STR	14'-11"	93	A223	6	#5	STR	1'-11"	12
* A116	6	#5	STR	13'-3"	83						
* A117	6	#5	STR	11'-8"	73	B1	192	#5	STR	57'-0"	11415
* A118	6	#5	STR	10'-0"	63	* B2	224	#4	STR	29'-6"	4414
* A119	6	#5	STR	8'-5"	53						
* A120	6	#5	STR	6'-9"	42	* G1	2	#5	STR	57'-9"	120
* A121	6	#5	STR	5'-2"	32						
* A122	6	#5	STR	3'-6"	22	* K1	16	#5	1	9'-6"	159
* A123	6	#5	STR	1'-11"	12	* K2	24	#5	2	9'-2"	229
						* K3	32	#5	STR	11'-5"	381
A200	6	#5	STR	39'-3"	246						
A201	6	#5	STR	37'-8"	236	* S1	72	#4	3	4'-9"	228
A202	6	#5	STR	36'-0"	225						
A203	6	#5	STR	34'-5"	215						

REINFORCING STEEL 28,761 LBS.
*EPOXY COATED REINFORCING STEEL 22,921 LBS.

GROOVING BRIDGE FLOOR

APPROACH SLABS	1,660 SQ. FT.
BRIDGE DECK	7,725 SQ. FT.
TOTAL	9,385 SQ. FT.

SUPERSTRUCTURE BILL OF MATERIAL

	CLASS AA CONCRETE	REINFORCING STEEL	EPOXY COATED REINFORCING STEEL
	(CU. YDS.)	(LBS.)	(LBS.)
POUR #1	249.2	———	———
POUR #2	28.8	———	———
TOTAL **	278.0	28,761 LBS.	22,921 LBS.

** QUANTITIES FOR BARRIER RAIL ARE NOT INCLUDED

SUPERSTRUCTURE REINFORCING STEEL LENGTHS ARE BASED ON THE FOLLOWING MINIMUM SPLICE LENGTHS

BAR SIZE	SUPERSTRUCTURE EXCEPT APPROACH SLABS, PARAPET, AND BARRIER RAIL		APPROACH SLABS		PARAPET AND BARRIER RAIL
	EPOXY COATED	UNCOATED	EPOXY COATED	UNCOATED	
#4	2'-0"	1'-9"	2'-0"	1'-9"	2'-9"
#5	2'-6"	2'-2"	2'-6"	2'-2"	3'-5"
#6	3'-0"	2'-7"	3'-10"	2'-7"	4'-4"
#7	5'-3"	3'-6"			
#8	6'-10"	4'-7"			

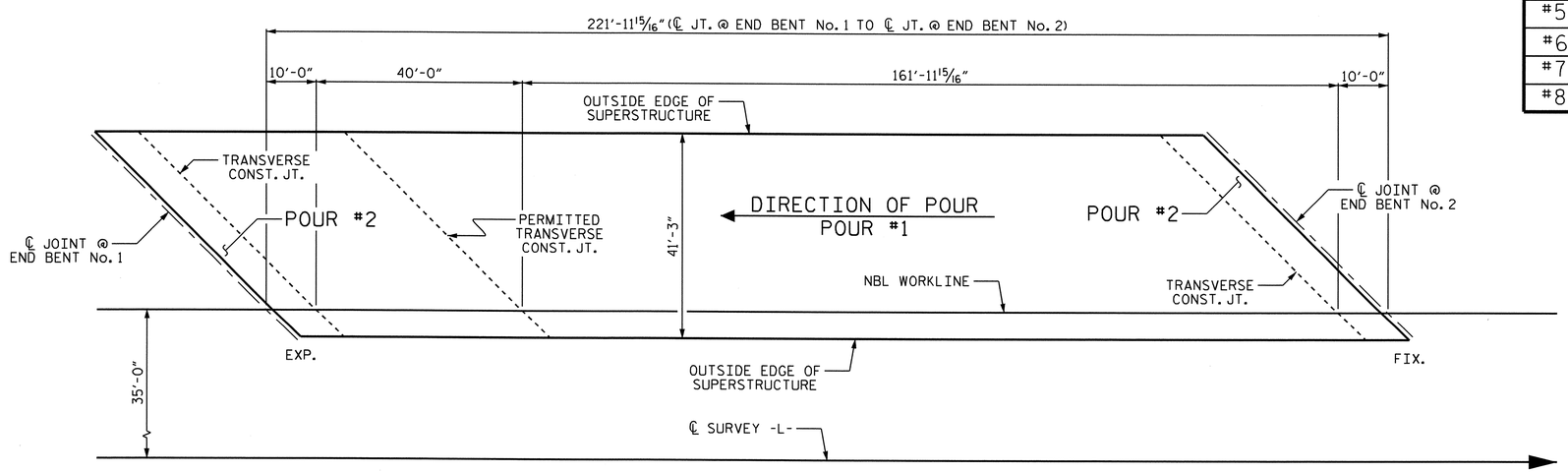

LAYOUT FOR COMPUTING AREA OF REINFORCED CONCRETE DECK SLAB (SQ. FT. 9,157)

PROJECT NO. R-2417AA
LEE COUNTY
STATION: 137+42.08 -L-

STATE OF NORTH CAROLINA
DEPARTMENT OF TRANSPORTATION
RALEIGH

SUPERSTRUCTURE

BILL OF MATERIAL
(NBL)

NORTH CAROLINA PROFESSIONAL SEAL 24390 ENGINEER THEO J. BEACH
11/23/10

REVISIONS						SHEET NO.
NO.	BY:	DATE:	NO.	BY:	DATE:	S-126
1			3			TOTAL SHEETS
2			4			162

DRAWN BY : T. BANKOVICH DATE : 9-2009
CHECKED BY : N. PIERCE DATE : 10-2009

24-NOV-2010 08:49
R:\Structures\str4-L-overAWRR(LtLane)\SuperDrawings\R-2417AA_str4_BM.dgn
tjbankovich

STR. #4

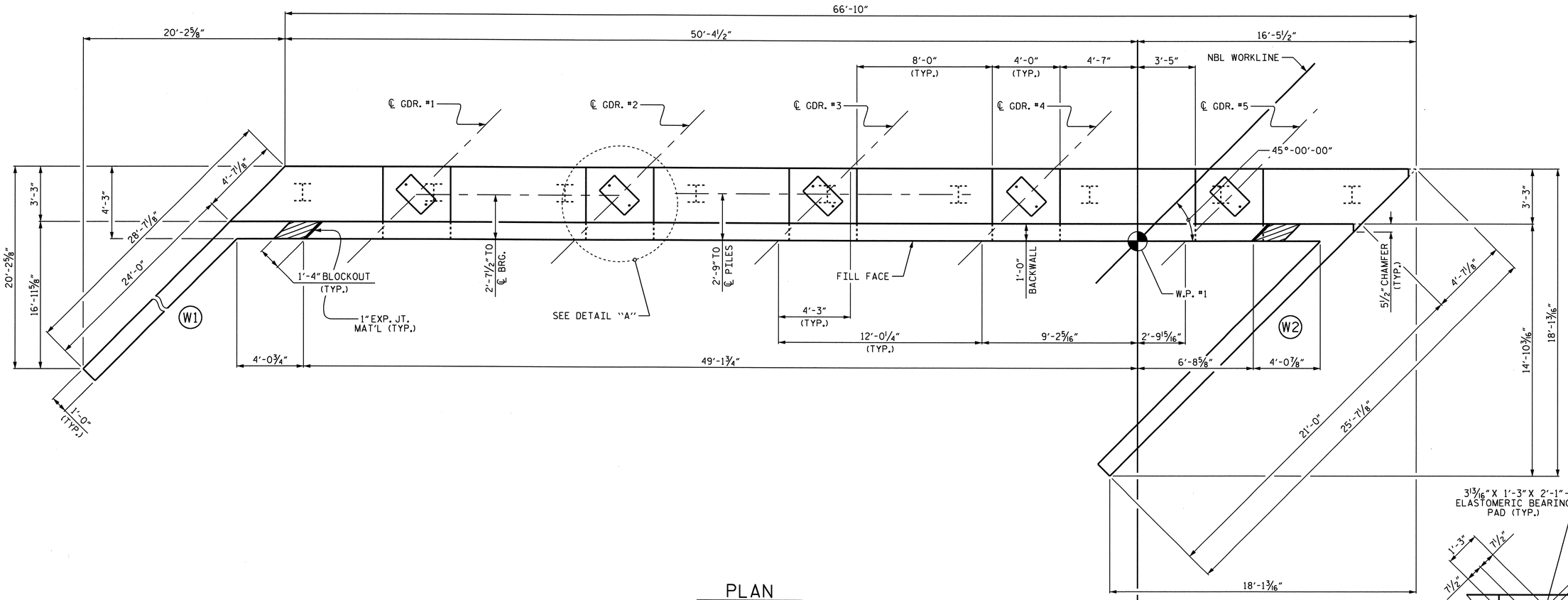

PLAN

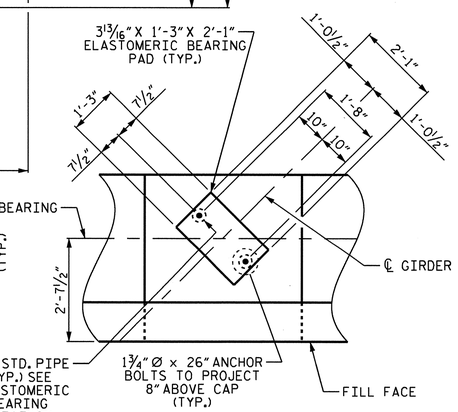

DETAIL "A"

(TYP. EA. GIRDER)

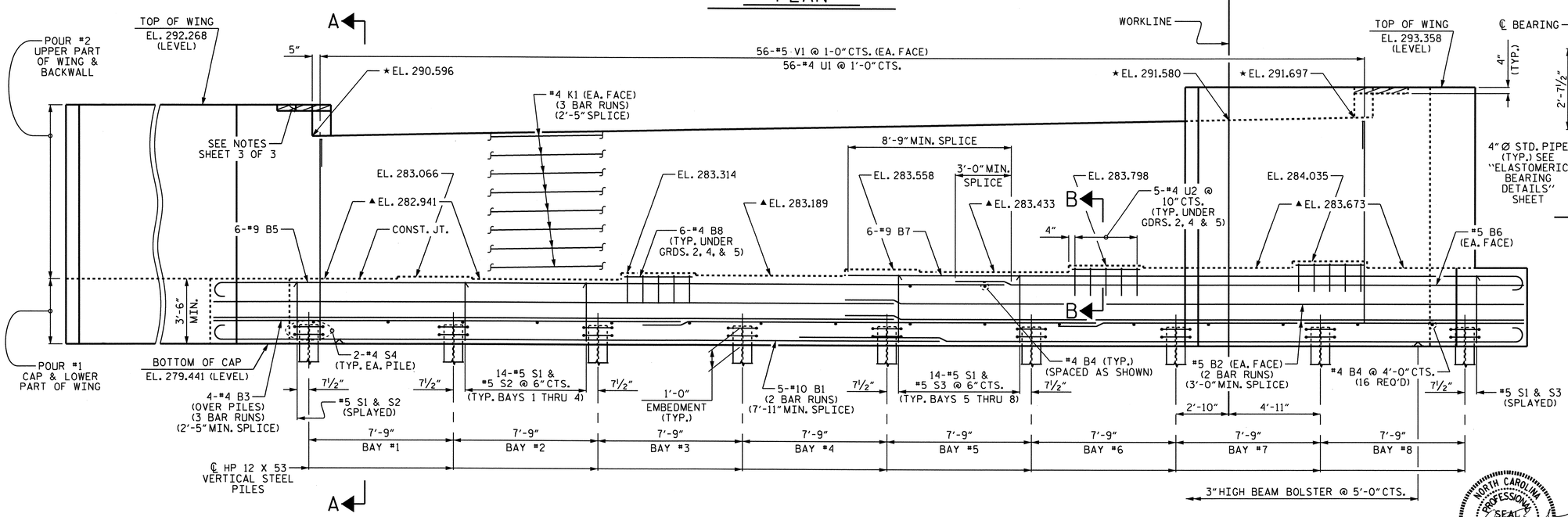

ELEVATION

▲FOR LOCATIONS OF ELEVATIONS BETWEEN BRIDGE SEAT BUILD-UPS SEE SECTION A-A, SHEET 3 OF 3.

★THIS ELEVATION TAKEN AT FILL FACE OF BACKWALL.

PROJECT NO. R-2417AA

LEE COUNTY

STATION: 137+42.08 -L-

SHEET 1 OF 3

STATE OF NORTH CAROLINA
DEPARTMENT OF TRANSPORTATION
RALEIGH

SUBSTRUCTURE

END BENT No. 1
(NBL)

NORTH CAROLINA PROFESSIONAL SEAL 24390 ENGINEER THEO J. BEACH 11/23/10

REVISIONS						SHEET NO.
NO.	BY:	DATE:	NO.	BY:	DATE:	S-127
1			3			TOTAL SHEETS
2			4			162

DRAWN BY : T. BANKOVICH DATE : 6-2010
CHECKED BY : T.N. CARROLL DATE : 8-2010

24-NOV-2010 08:53
R:\Structures\str4-L-overAWRR(LtLane)\SubDrawings\R-2417AA_str4_E*_1.dgn
tjbankovich

STR. #4

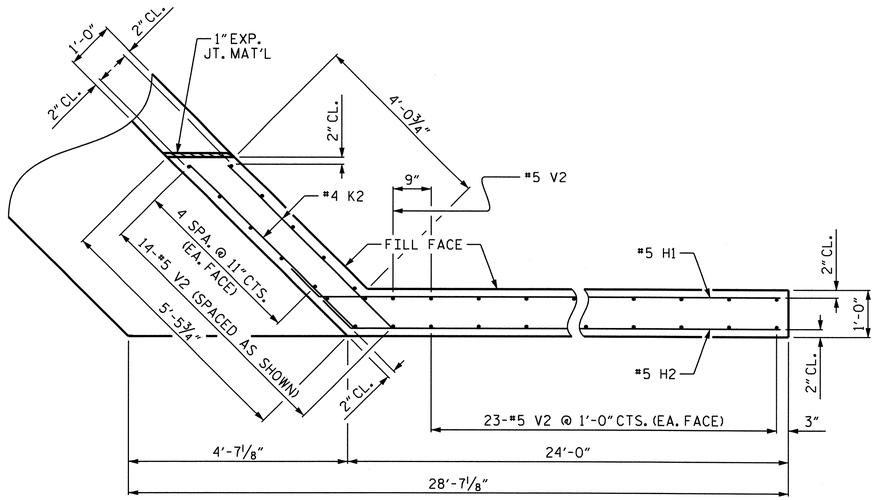

PLAN OF WING (W1)

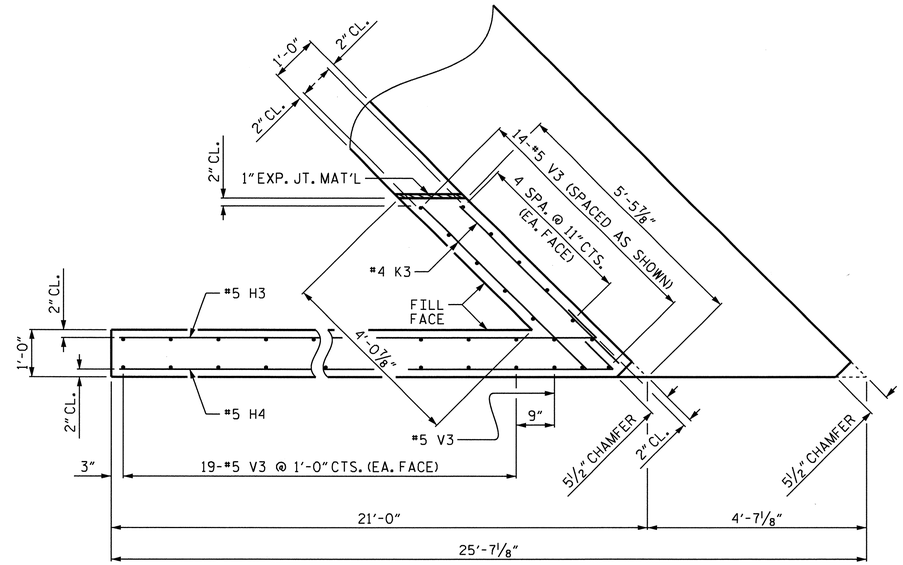

PLAN OF WING (W2)

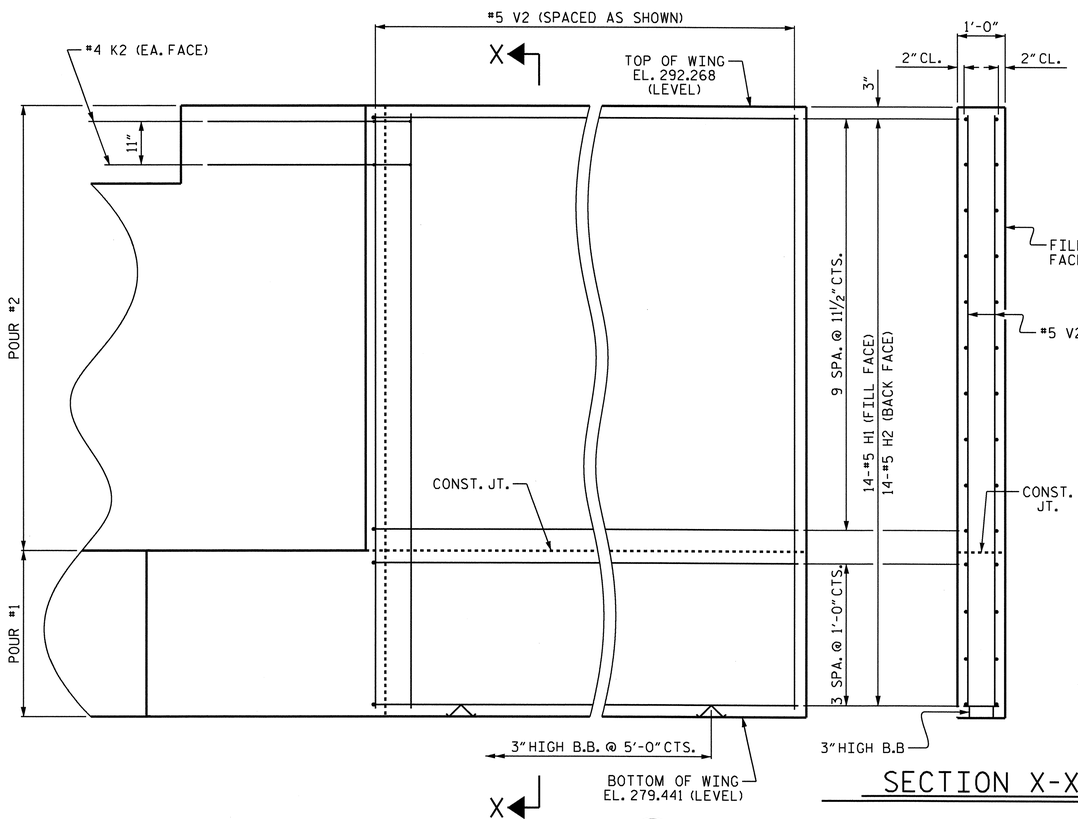

ELEVATION OF WING (W1)

SECTION X-X

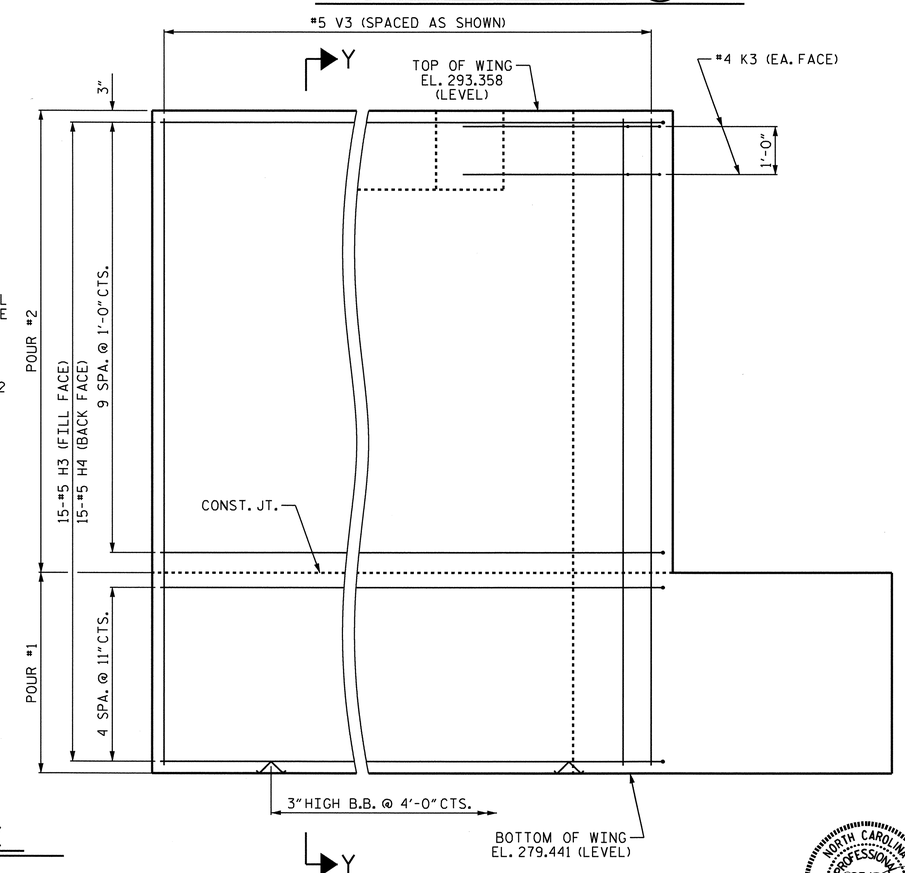

ELEVATION OF WING (W2)

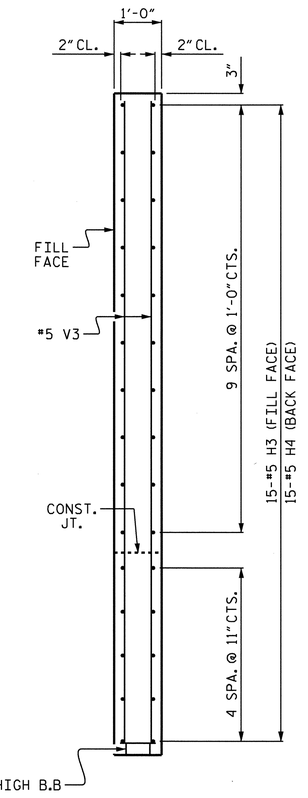

SECTION Y-Y

PROJECT NO. R-2417AA

LEE COUNTY

STATION: 137+42.08 -L-

SHEET 2 OF 3

STATE OF NORTH CAROLINA
DEPARTMENT OF TRANSPORTATION
RALEIGH

SUBSTRUCTURE

END BENT No. 1
(NBL)

NORTH CAROLINA PROFESSIONAL SEAL 24390 ENGINEER THEO J. BEACH
11/23/10

REVISIONS						SHEET NO.
NO.	BY:	DATE:	NO.	BY:	DATE:	S-128
1			3			TOTAL SHEETS
2			4			162

DRAWN BY : T. BANKOVICH DATE : 6-2010
CHECKED BY : T.N. CARROLL DATE : 8-2010

24-NOV-2010 08:53
R:\Structures\str4-L-overAWRR(LtLane)\SubDrawings\R-2417AA_str4_E*_1.dgn
tjbankovich

STR. #4

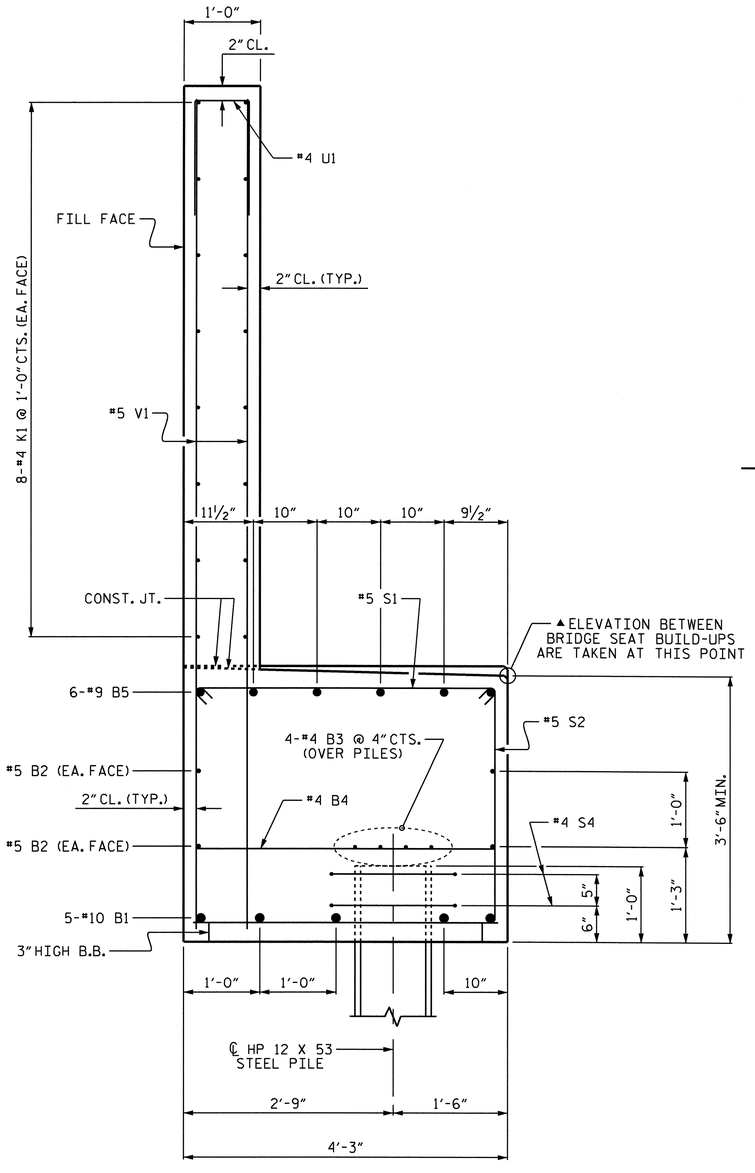

SECTION A-A

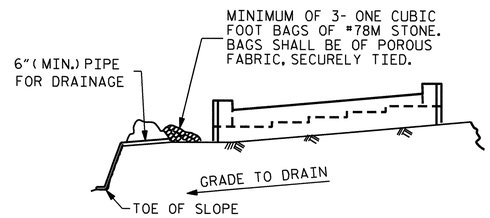

BAGGED STONE AND PIPE SHALL BE PLACED IMMEDIATELY AFTER COMPLETION OF END BENT EXCAVATION. PIPE MAY BE EITHER CONCRETE, CORRUGATED STEEL, CORRUGATED ALUMINUM ALLOY, OR CORRUGATED PLASTIC. PERFORATED PIPE WILL NOT BE ALLOWED.

BAGGED STONE SHALL REMAIN IN PLACE UNTIL THE ENGINEER DIRECTS THAT IT BE REMOVED. THE CONTRACTOR SHALL REMOVE AND DISPOSE OF SILT ACCUMULATIONS AT BAGGED STONE WHEN SO DIRECTED BY THE ENGINEER. BAGS SHALL BE REMOVED AND REPLACED WHENEVER THE ENGINEER DETERMINES THAT THEY HAVE DETERIORATED AND LOST THEIR EFFECTIVENESS.

NO SEPARATE PAYMENT WILL BE MADE FOR THIS WORK AND THE ENTIRE COST OF THIS WORK SHALL BE INCLUDED IN THE UNIT CONTRACT PRICE BID FOR THE SEVERAL PAY ITEMS.

TEMPORARY DRAINAGE AT END BENT

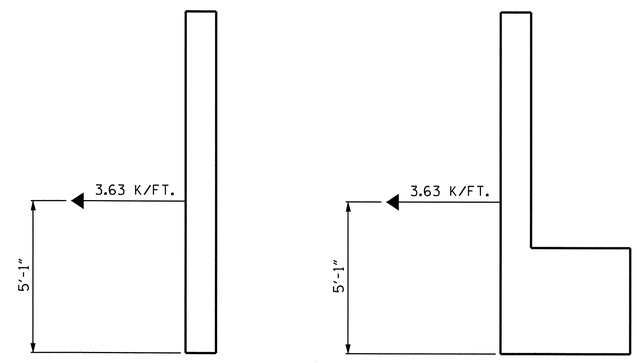

WING CAP

TIEBACK DETAILS

(DETAIL SHOWING TIEBACK RESTRAINT FOR END BENT No. 1)

BAR TYPES

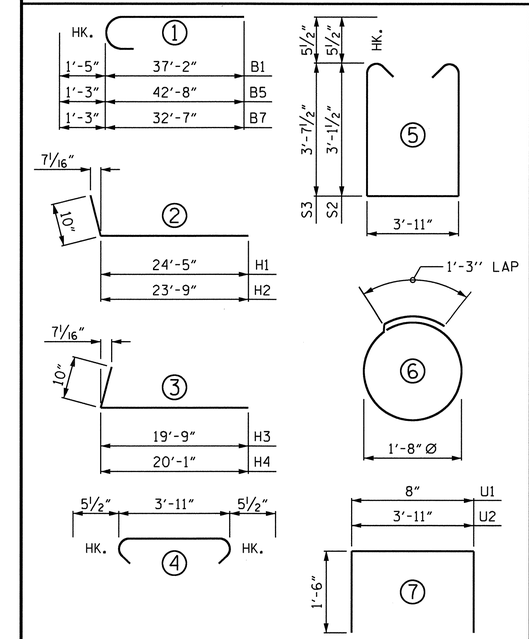

ALL BAR DIMENSIONS ARE OUT TO OUT

NOTES:

#5 V1 BARS IN BACKWALL SHALL BE PLACED 2" CLEAR FROM TOP OF BACKWALL.

STIRRUPS AND "U" BARS IN CAP MAY BE SHIFTED AS NECESSARY TO CLEAR ANCHOR BOLTS.

BACKWALL SHALL BE PLACED BEFORE APPLYING THE EPOXY PROTECTIVE COATING.

THE TOP SURFACE OF THE CAP EXCEPT THE BRIDGE SEAT BUILD-UPS SHALL BE SLOPED TRANSVERSELY FROM THE FILL FACE TO THE BACK FACE AT THE RATE OF 2%.

THE CONCRETE IN THE SHADED AREA OF THE WING SHALL BE POURED AFTER THE BARRIER RAIL IS CAST IF SLIP FORMING IS USED.

EPOXY COAT THE END BENT CAP AFTER ADJUSTMENTS ARE MADE TO BEARINGS AND ANCHOR BOLTS ARE GROUTED.

BILL OF MATERIAL

END BENT No. 1

BAR	NO.	SIZE	TYPE	LENGTH	WEIGHT
B1	10	#10	1	38'-7"	1660
B2	8	#5	STR	34'-9"	290
B3	12	#4	STR	23'-10"	191
B4	18	#4	STR	3'-11"	47
B5	6	#9	1	43'-11"	896
B6	2	#5	STR	27'-2"	57
B7	6	#9	1	33'-10"	690
B8	18	#4	STR	3'-8"	44
H1	14	#5	2	25'-3"	369
H2	14	#5	2	24'-7"	359
H3	15	#5	3	20'-7"	322
H4	15	#5	3	20'-11"	327
K1	48	#4	STR	23'-10"	764
K2	4	#4	STR	4'-10"	13
K3	4	#4	STR	4'-8"	12
S1	114	#5	4	4'-10"	575
S2	57	#5	5	11'-1"	659
S3	57	#5	5	12'-1"	718
S4	18	#4	6	6'-6"	78
U1	56	#4	7	3'-8"	137
U2	15	#4	7	6'-11"	69
V1	112	#5	STR	10'-9"	1256
V2	61	#5	STR	12'-5"	790
V3	53	#5	STR	13'-6"	746
REINFORCING STEEL					11,069 LBS.

CLASS A CONCRETE	
POUR #1 (CAP & LOWER WING)	47.4 C.Y.
POUR #2 (UPPER WING & BACKWALL)	34.8 C.Y.
TOTAL =	82.2 C.Y.

HP 12 X 53 STEEL PILES	
NO. = 9	450 LIN. FT.
PILE EXCAVATION IN SOIL	90 LIN. FT.
PILE EXCAVATION NOT IN SOIL	90 LIN. FT.

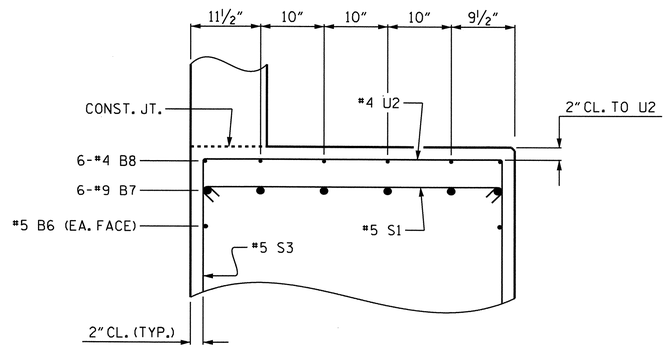

PARTIAL SECTION B-B

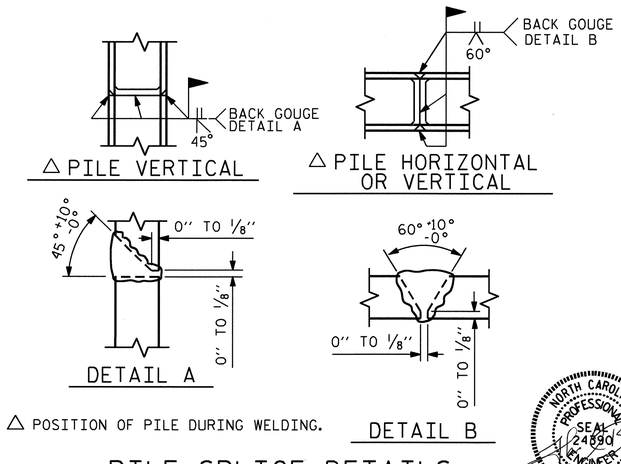

△ POSITION OF PILE DURING WELDING.

PILE SPLICE DETAILS

PROJECT NO. R-2417AA

LEE COUNTY

STATION: 137+42.08 -L-

SHEET 3 OF 3

STATE OF NORTH CAROLINA
DEPARTMENT OF TRANSPORTATION
RALEIGH

SUBSTRUCTURE

END BENT No. 1

(NBL)

NORTH CAROLINA PROFESSIONAL SEAL 24890 ENGINEER KEO J. BEACH
11/23/10

REVISIONS						SHEET NO.
NO.	BY:	DATE:	NO.	BY:	DATE:	S-129
1			3			TOTAL SHEETS
2			4			162

DRAWN BY : T. BANKOVICH DATE : 6-2010
CHECKED BY : T.N. CARROLL DATE : 8-2010

24-NOV-2010 08:52
R:\Structures\str4-L-overAWRR(LtLane)\SubDrawings\R-2417AA_str4_E*_1.dgn
tjbankovich

STR. #4

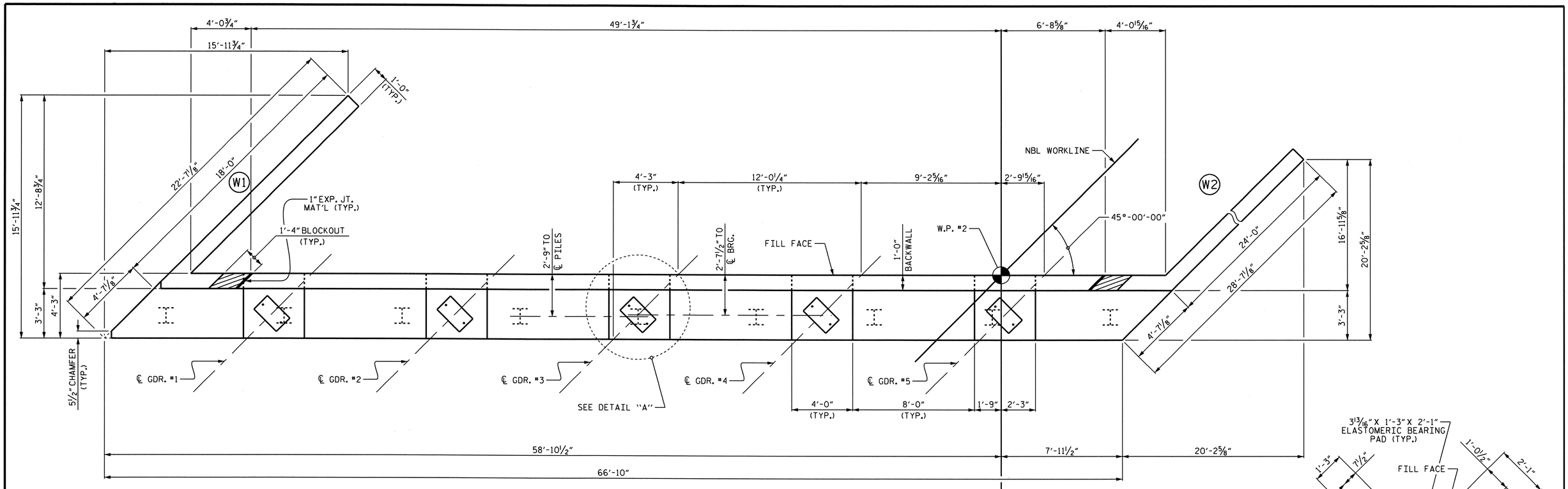

▲FOR LOCATIONS OF ELEVATIONS BETWEEN BRIDGE SEAT BUILD-UPS SEE SECTION A-A, SHEET 3 OF 3.

★THIS ELEVATION TAKEN AT FILL FACE OF BACKWALL.

NORTH CAROLINA PROFESSIONAL SEAL 26390 ENGINEER THEO J. BEACH 11/23/10

PROJECT NO. R-2417AA

LEE COUNTY

STATION: 137+42.08 -L-

SHEET 1 OF 3

STATE OF NORTH CAROLINA
DEPARTMENT OF TRANSPORTATION
RALEIGH

SUBSTRUCTURE

END BENT No. 2
(NBL)

REVISIONS						SHEET NO.
NO.	BY:	DATE:	NO.	BY:	DATE:	S-130
1			3			TOTAL SHEETS
2			4			162

DRAWN BY : T. BANKOVICH DATE : 6-2010
CHECKED BY : T.N. CARROLL DATE : 8-2010

24-NOV-2010 08:54
R:\Structures\str4-L-overAWRR(LtLane)\SubDrawings\R-2417AA_str4_E*_2.dgn
tjbankovich

STR. #4

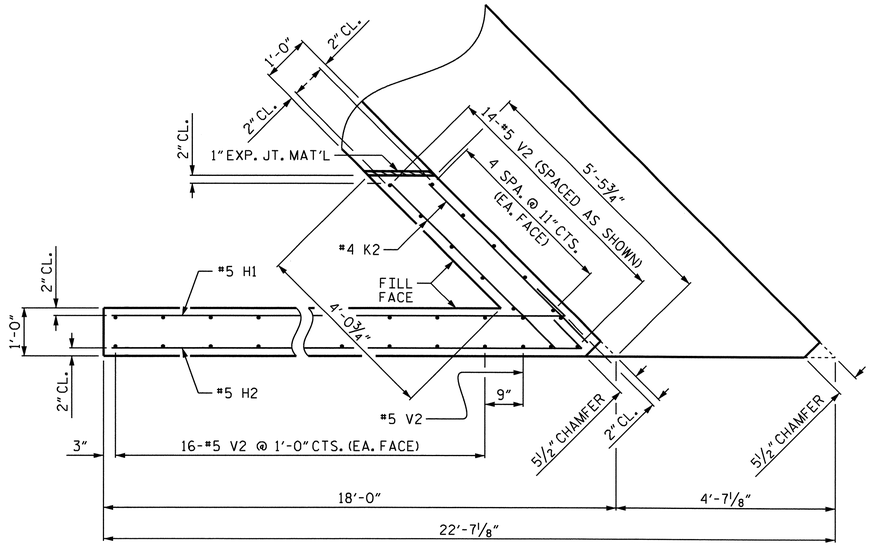

PLAN OF WING (W1)

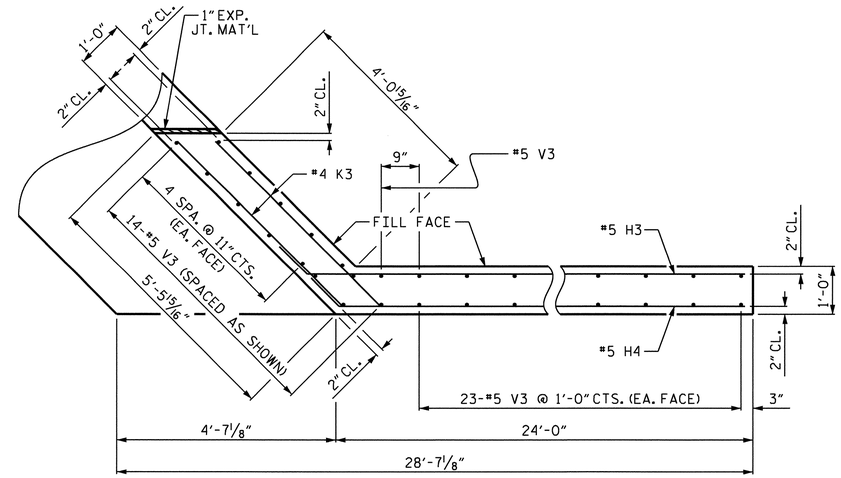

PLAN OF WING (W2)

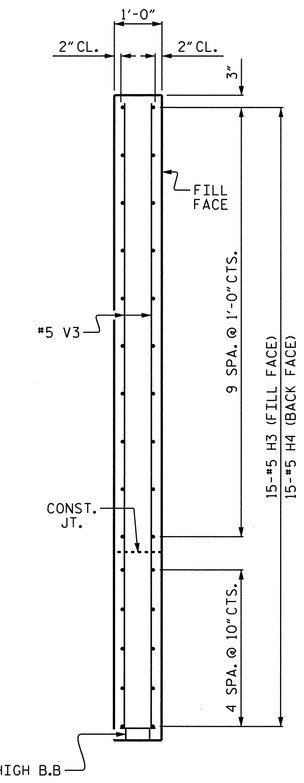

SECTION Y-Y

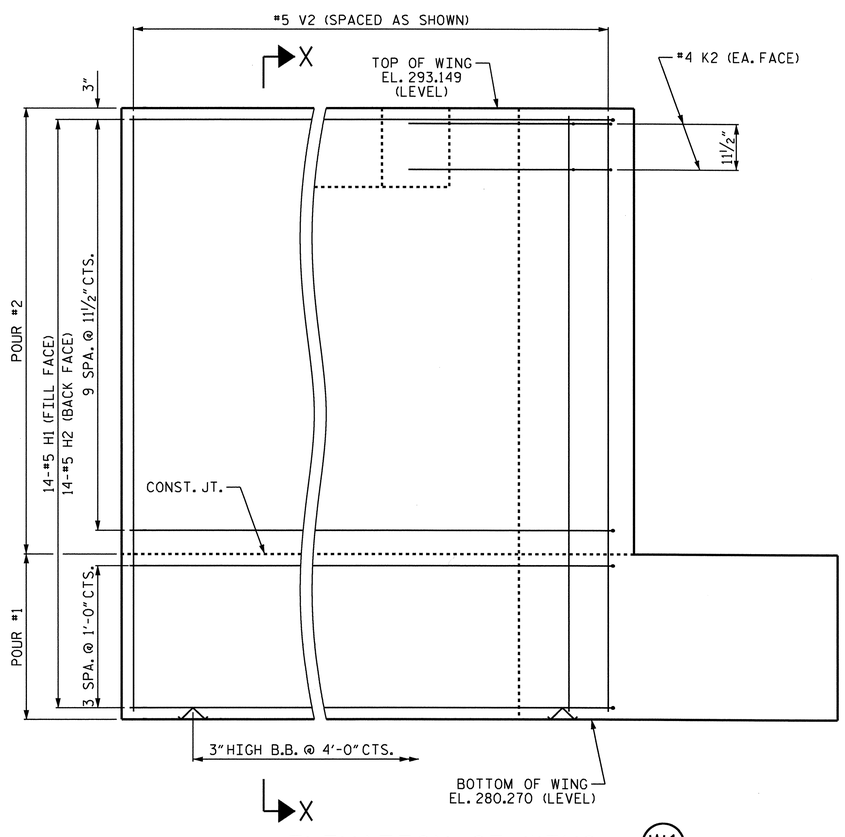

ELEVATION OF WING (W1)

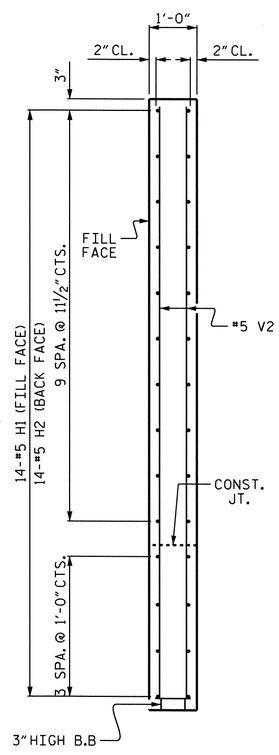

SECTION X-X

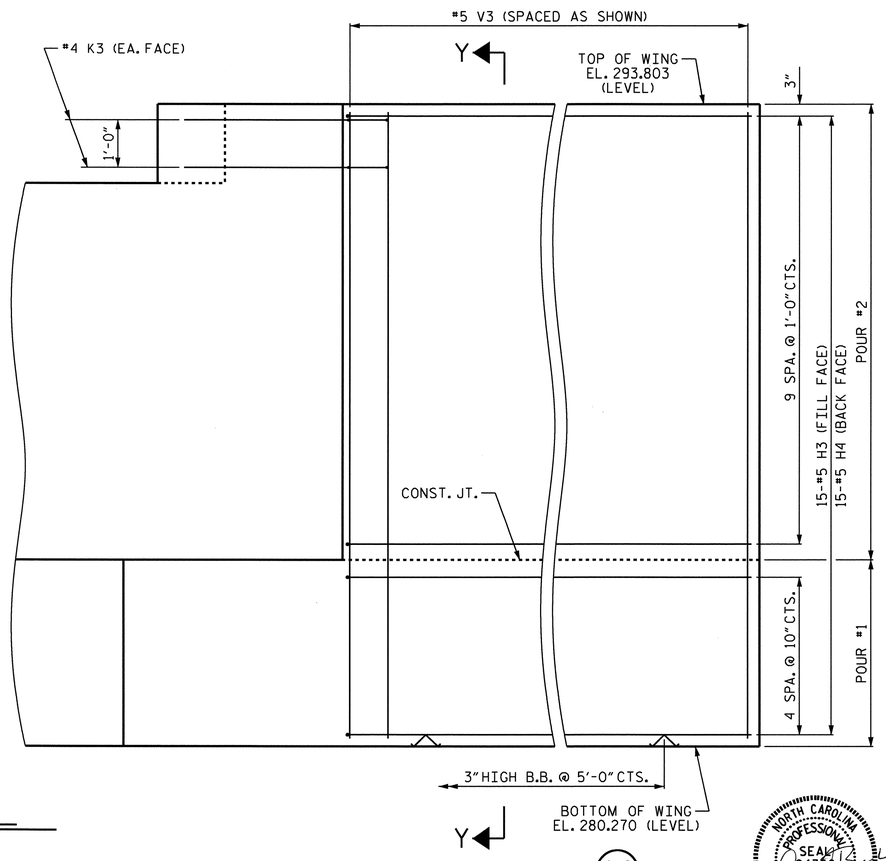

ELEVATION OF WING (W2)

NORTH CAROLINA PROFESSIONAL SEAL 24380 ENGINEER THEO J. BEACH
11/23/10

PROJECT NO. R-2417AA
LEE COUNTY
STATION: 137+42.08 -L-

SHEET 2 OF 3

STATE OF NORTH CAROLINA
DEPARTMENT OF TRANSPORTATION
RALEIGH

SUBSTRUCTURE

END BENT No. 2
(NBL)

REVISIONS								SHEET NO.
NO.	BY:	DATE:	NO.	BY:	DATE:			S-131
1			3					TOTAL SHEETS
2			4					162

DRAWN BY : T. BANKOVICH DATE : 6-2010
CHECKED BY : T.N. CARROLL DATE : 8-2010

18-OCT-2010 15:09
R:\Structures\str4-L-overAWRR(LtLane)\SubDrawings\R-2417AA_str4_E*_2.dgn
sbwilliams

STR. #4

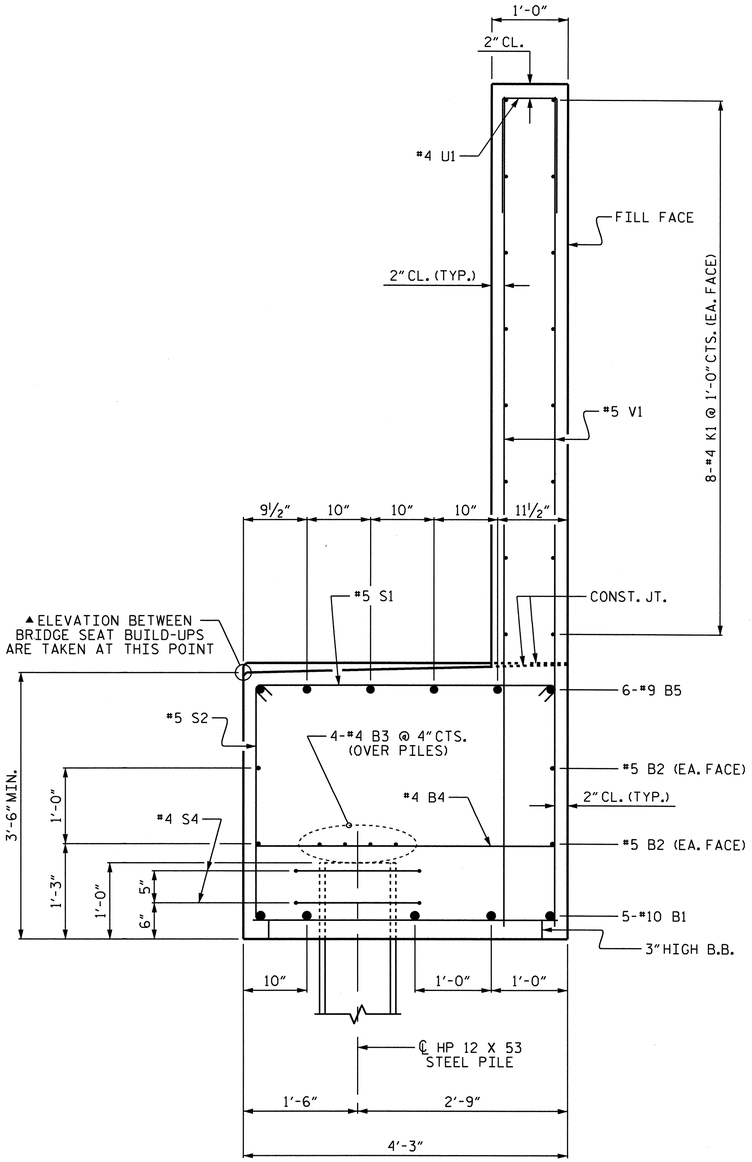

SECTION A-A

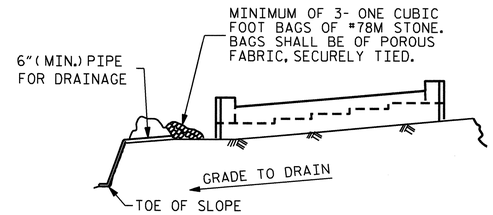

BAGGED STONE AND PIPE SHALL BE PLACED IMMEDIATELY AFTER COMPLETION OF END BENT EXCAVATION. PIPE MAY BE EITHER CONCRETE, CORRUGATED STEEL, CORRUGATED ALUMINUM ALLOY, OR CORRUGATED PLASTIC. PERFORATED PIPE WILL NOT BE ALLOWED.

BAGGED STONE SHALL REMAIN IN PLACE UNTIL THE ENGINEER DIRECTS THAT IT BE REMOVED. THE CONTRACTOR SHALL REMOVE AND DISPOSE OF SILT ACCUMULATIONS AT BAGGED STONE WHEN SO DIRECTED BY THE ENGINEER. BAGS SHALL BE REMOVED AND REPLACED WHENEVER THE ENGINEER DETERMINES THAT THEY HAVE DETERIORATED AND LOST THEIR EFFECTIVENESS.

NO SEPARATE PAYMENT WILL BE MADE FOR THIS WORK AND THE ENTIRE COST OF THIS WORK SHALL BE INCLUDED IN THE UNIT CONTRACT PRICE BID FOR THE SEVERAL PAY ITEMS.

TEMPORARY DRAINAGE AT END BENT

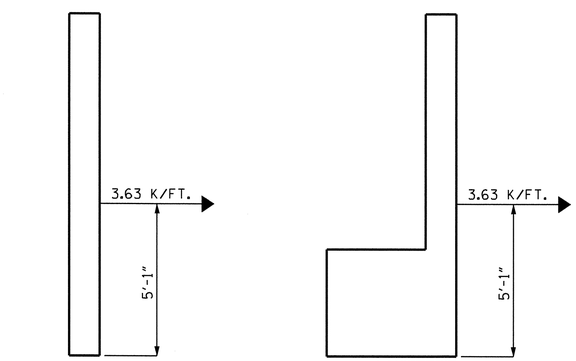

WING

CAP

TIEBACK DETAILS

(DETAIL SHOWING TIEBACK RESTRAINT FOR END BENT No. 2)

BAR TYPES

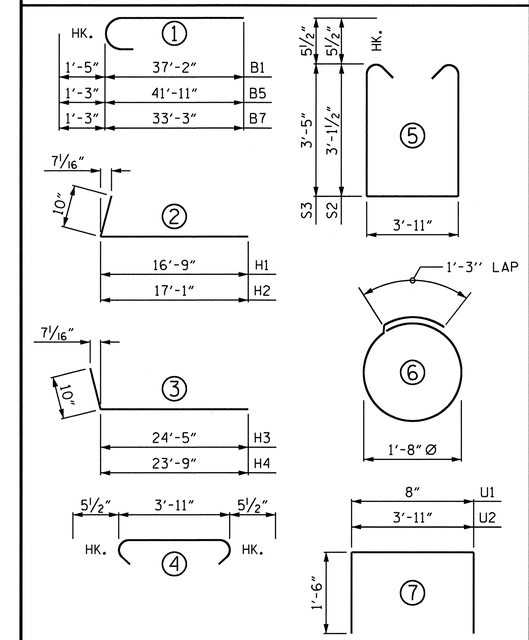

ALL BAR DIMENSIONS ARE OUT TO OUT

NOTES:

#5 V1 BARS IN BACKWALL SHALL BE PLACED 2" CLEAR FROM TOP OF BACKWALL.

STIRRUPS AND "U" BARS IN CAP MAY BE SHIFTED AS NECESSARY TO CLEAR ANCHOR BOLTS.

BACKWALL SHALL BE PLACED BEFORE APPLYING THE EPOXY PROTECTIVE COATING.

THE TOP SURFACE OF THE CAP EXCEPT THE BRIDGE SEAT BUILD-UPS SHALL BE SLOPED TRANSVERSELY FROM THE FILL FACE TO THE BACK FACE AT THE RATE OF 2%.

THE CONCRETE IN THE SHADED AREA OF THE WING SHALL BE POURED AFTER BARRIER RAIL IS CAST IF SLIP FORMING IS USED.

BILL OF MATERIAL

END BENT No. 2

BAR	NO.	SIZE	TYPE	LENGTH	WEIGHT
B1	10	#10	1	38'-7"	1660
B2	8	#5	STR	34'-9"	290
B3	12	#4	STR	23'-10"	191
B4	18	#4	STR	3'-11"	47
B5	6	#9	1	43'-2"	881
B6	2	#5	STR	27'-11"	58
B7	6	#9	1	34'-6"	704
B8	18	#4	STR	3'-8"	44
H1	14	#5	2	17'-7"	257
H2	14	#5	2	17'-11"	262
H3	15	#5	3	25'-3"	395
H4	15	#5	3	24'-7"	385
K1	48	#4	STR	23'-10"	764
K2	4	#4	STR	4'-8"	12
K3	4	#4	STR	4'-10"	13
S1	114	#5	4	4'-10"	575
S2	57	#5	5	11'-1"	659
S3	57	#5	5	11'-8"	694
S4	18	#4	6	6'-6"	78
U1	56	#4	7	3'-8"	137
U2	15	#4	7	6'-11"	69
V1	112	#5	STR	10'-10"	1266
V2	47	#5	STR	12'-6"	613
V3	61	#5	STR	13'-2"	838
REINFORCING STEEL					10,892 LBS.

CLASS A CONCRETE	
POUR #1 (CAP & LOWER WING)	45.3 C.Y.
POUR #2 (UPPER WING & BACKWALL)	33.6 C.Y.
TOTAL =	78.9 C.Y.

HP 12 X 53 STEEL PILES	
NO. = 9	540 LIN. FT.
PILE EXCAVATION IN SOIL	90 LIN. FT.
PILE EXCAVATION NOT IN SOIL	135 LIN. FT.

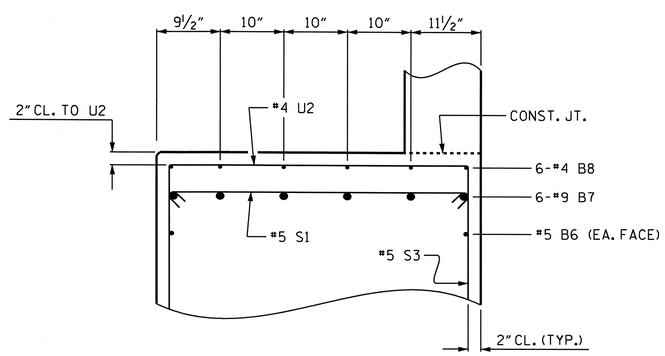

PARTIAL SECTION B-B

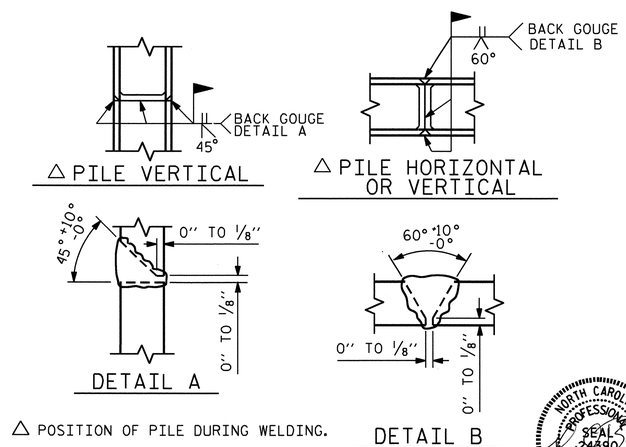

△ POSITION OF PILE DURING WELDING.

PILE SPLICE DETAILS

PROJECT NO. R-2417AA

LEE COUNTY

STATION: 137+42.08 -L-

SHEET 3 OF 3

STATE OF NORTH CAROLINA
DEPARTMENT OF TRANSPORTATION
RALEIGH

SUBSTRUCTURE

END BENT No. 2

(NBL)

NORTH CAROLINA PROFESSIONAL SEAL 24390 ENGINEER THEO J. BEACH 11/23/10

REVISIONS						SHEET NO.
NO.	BY:	DATE:	NO.	BY:	DATE:	S-132
1			3			TOTAL SHEETS
2			4			162

DRAWN BY : T. BANKOVICH DATE : 6-2010
CHECKED BY : T.N. CARROLL DATE : 8-2010

24-NOV-2010 08:53
R:\Structures\str4-L-overAWRR(LtLane)\SubDrawings\R-2417AA_str4_E*_2.dgn
tjbankovich

STR. #4

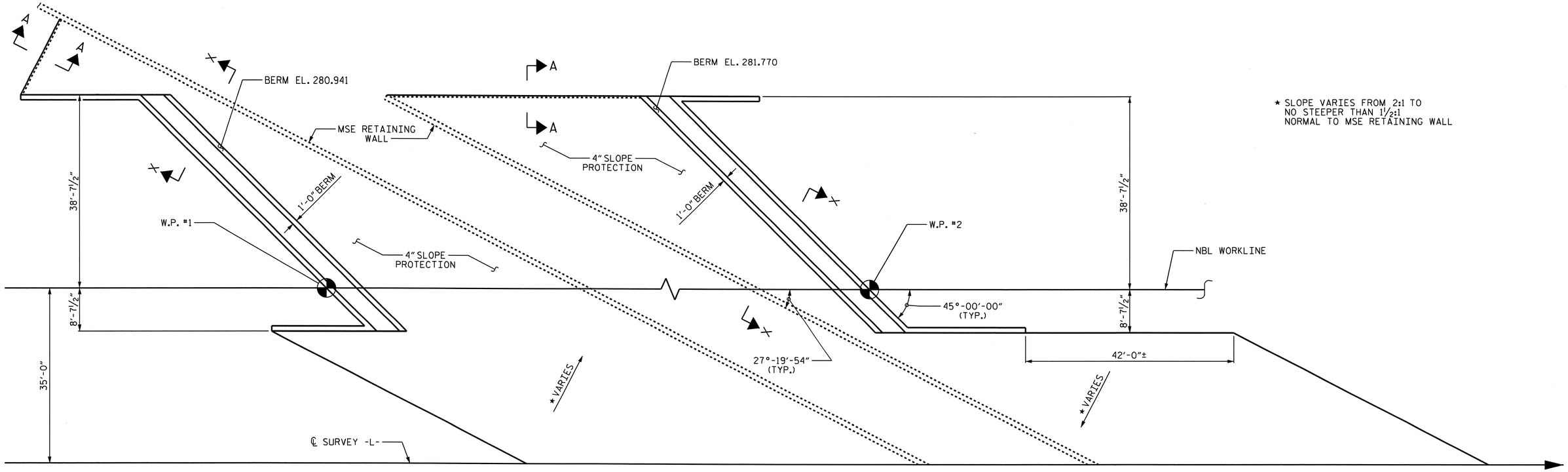

PLAN AT END BENT No. 1

PLAN AT END BENT No. 2

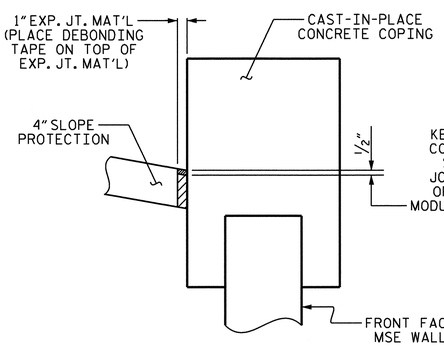

DETAIL "A"

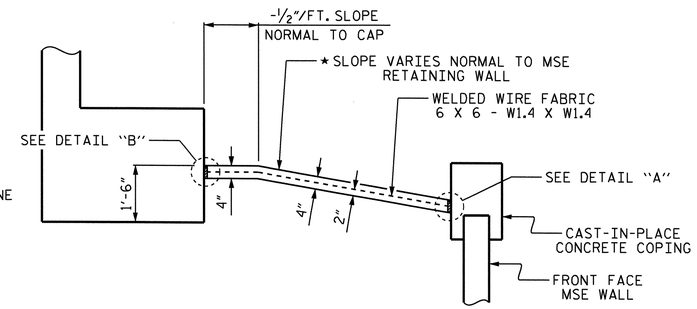

SECTION X-X

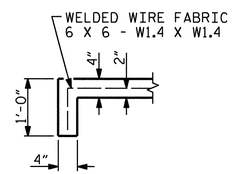

SECTION A-A

GENERAL NOTES:

SLOPE PROTECTION SHALL BE PLACED UNDER THE ENDS OF THE BRIDGE AS SHOWN IN THE DETAILS. MEASUREMENT AND PAYMENT SHALL BE AS PRESCRIBED IN SECTION 462 OF THE STANDARD SPECIFICATIONS.

SLOPE PROTECTION

SLOPE PROTECTION SHALL CONSIST OF 4" POURED-IN-PLACE CONCRETE PAVING AS SHOWN IN THE DETAILS ON THIS SHEET. CONCRETE SHALL BE CLASS "B". THE CONCRETE SURFACE SHALL BE FLOATED WITH A WOODEN FLOAT AND FINISHED. WELDED WIRE FABRIC REINFORCING SHALL BE 6 X 6 - W1.4 X W1.4, 60" WIDE. SLOPE PROTECTION SHALL BE POURED IN 5' STRIPS AS SHOWN IN THE "POURING DETAIL" WITH 2'-0" LONG #4 BARS PLACED ALONG THE SLOPE BETWEEN STRIPS AT 1'-6" MAXIMUM SPACING. SLOPE PROTECTION MAY BE POURED IN ALTERNATE 4' AND 5' STRIPS AS SHOWN IN THE "OPTIONAL POURING DETAIL" WITH ADJACENT RUNS OF WELDED WIRE FABRIC LAPPING AT LEAST 6". THE COST OF THE WELDED WIRE FABRIC AND #4 BARS, IF USED, SHALL BE INCLUDED IN THE CONTRACT UNIT PRICE BID PER SQUARE YARD FOR SLOPE PROTECTION.

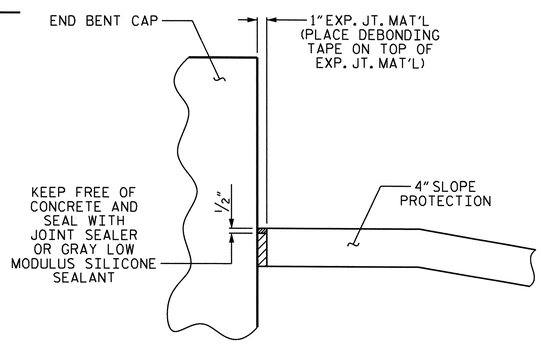

DETAIL "B"

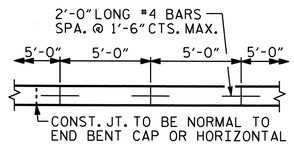

STRIP WIDTHS MAY VARY IN CURVED PORTION.

POURING DETAIL

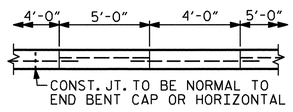

POUR A 4'-0" STRIP FIRST. STRIP WIDTHS MAY VARY IN CURVED PORTION.

OPTIONAL POURING DETAIL

BRIDGE @ STA.137+42.08 -L-	4 INCH SLOPE PROTECTION	* WELDED WIRE FABRIC 60 INCHES WIDE
	SQUARE YARDS	APPROX. L.F.
END BENT No. 1	940	1692
END BENT No. 2	855	1539

* QUANTITY SHOWN IS BASED ON 5'-0" POURS.

PROJECT NO. R-2417AA

LEE COUNTY

STATION: 137+42.08 -L-

STATE OF NORTH CAROLINA
DEPARTMENT OF TRANSPORTATION
RALEIGH

SLOPE PROTECTION DETAILS

(NBL)

NORTH CAROLINA PROFESSIONAL SEAL 24390 ENGINEER THEO. J. BEACH
11/23/10

REVISIONS							SHEET NO.
NO.	BY:	DATE:	NO.	BY:	DATE:		S-133
1			3				TOTAL SHEETS
2			4				162

DRAWN BY : T. BANKOVICH DATE : 10-2010
CHECKED BY : T.J. BEACH DATE : 10-2010

19-OCT-2010 14:52
R:\Structures\str4-L-overAWRR(LtLane)\MiscDrawings\R-2417AA_SD_str4.dgn
tbeach

STR. #4

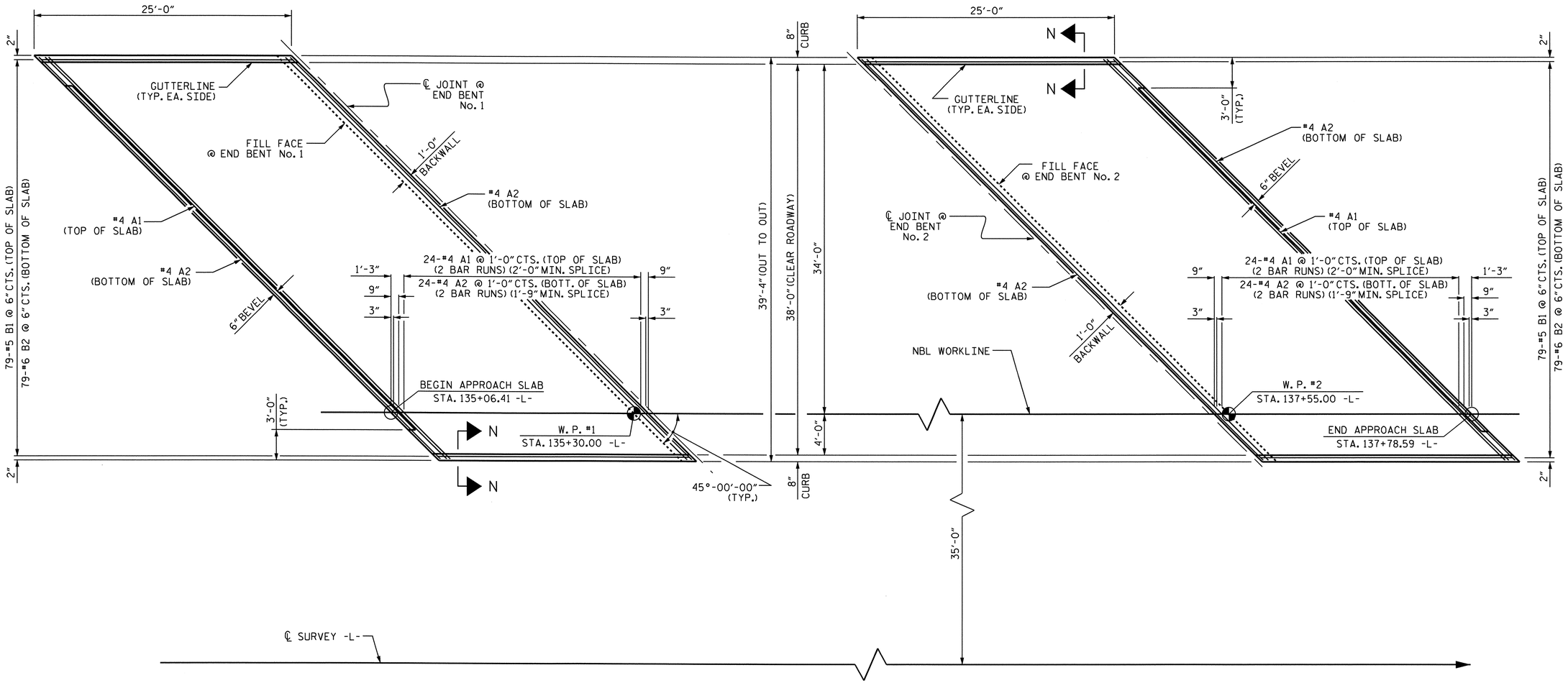

PLAN AT END BENT No. 1

PLAN AT END BENT No. 2

PLAN OF APPROACH SLABS

FOR SECTIONS N-N, SEE SHEET 2 OF 2

PROJECT NO. R-2417AA

LEE COUNTY

STATION: 137+42.08 -L-

SHEET 1 OF 2

STATE OF NORTH CAROLINA
DEPARTMENT OF TRANSPORTATION
RALEIGH

BRIDGE APPROACH SLAB FOR FLEXIBLE PAVEMENT

(NBL)

NORTH CAROLINA PROFESSIONAL SEAL 24390 ENGINEER THEO J. BENCH
11/23/10

REVISIONS						SHEET NO.
NO.	BY:	DATE:	NO.	BY:	DATE:	S-134
1			3			TOTAL SHEETS
2			4			162

DRAWN BY : A. V. ROYAL DATE : 04/10
CHECKED BY : T. BANKOVICH DATE : 04/10

18-OCT-2010 15:07
R:\Structures\str4-L-overAWRR(LtLane)\MiscDrawings\R2417AA_SD_AS.dgn
sbwilliams

STR. #4

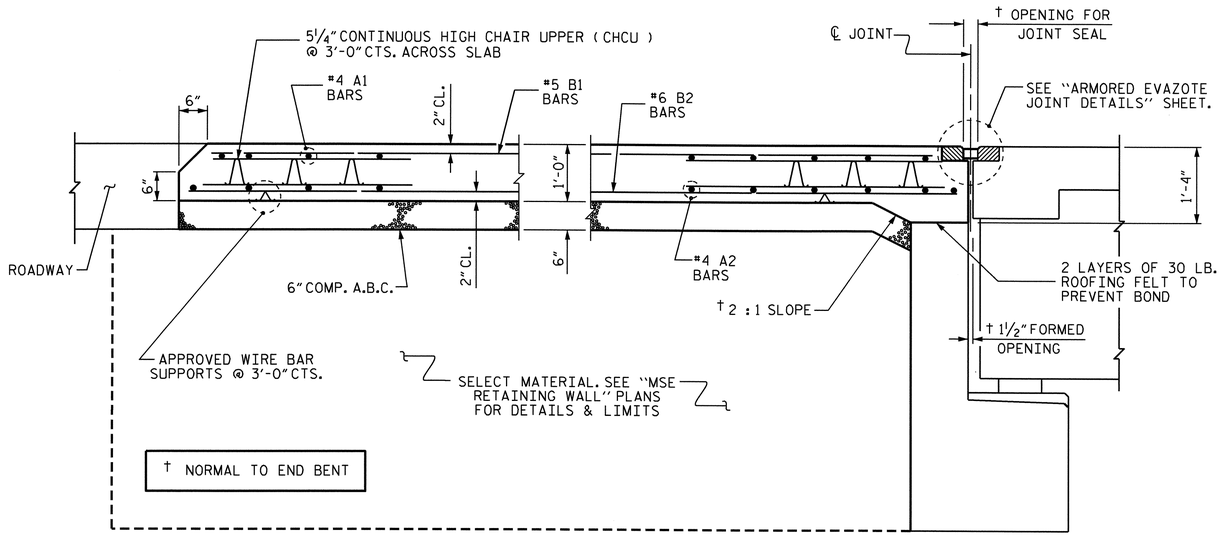

SECTION THRU SLAB

BACKWALL RESTRAINTS ON END BENT NOT SHOWN FOR CLARITY.

NOTES:

APPROACH SLAB SHALL NOT BE CONSTRUCTED PRIOR TO COMPLETION OF THE BRIDGE DECK.

AREA BETWEEN THE WINGWALL AND APPROACH SLAB SHALL BE GRADED TO DRAIN THE WATER AWAY FROM THE FILL FACE OF THE BRIDGE AND SHALL BE PAVED. SEE ROADWAY PLANS.

THE 6" COMP. A.B.C. SHALL BE FLUSH WITH THE ROADWAY END OF THE APPROACH SLAB AND SHALL EXTEND 1'-0" OUTSIDE EACH EDGE OF THE APPROACH SLAB.

THE CONTRACTOR MAY USE 4" TYPE B-25.0B ASPHALT CONCRETE BASE COURSE IN LIEU OF 6" COMP. A.B.C. IF THIS OPTION IS USED, THE BASE COURSE SHALL BE FLUSH WITH THE ROADWAY END OF THE APPROACH SLAB, AND THE WIDTH SHALL BE THE SAME AS THAT OF THE APPROACH SLAB.

THE CONTRACTOR MAY USE 5" CLASS "A" CONCRETE BASE IN LIEU OF 6" COMP. A.B.C. IF THIS OPTION IS USED, THE CONCRETE BASE SHALL BE FLUSH WITH THE ROADWAY END OF THE APPROACH SLAB, AND THE WIDTH SHALL BE THE SAME AS THAT OF THE APPROACH SLAB. THE CONCRETE SHALL BE FINISHED TO A SMOOTH SURFACE AND A LAYER OF 30 LB ROOFING FELT SHALL BE PLACED BETWEEN THE CONCRETE BASE AND THE APPROACH SLAB TO PREVENT BOND. THE APPROACH SLAB SHALL NOT BE CAST UNTIL THE CONCRETE BASE HAS REACHED AN AGE OF THREE CURING DAYS.

FOR EVAZOTE JOINT SEALS, SEE SPECIAL PROVISIONS.

THE NOMINAL UNCOMPRESSED SEAL WIDTH OF THE EVAZOTE JOINT SEAL SHALL BE 3/16".

FOR ELASTOMERIC CONCRETE, SEE SPECIAL PROVISIONS.

BILL OF MATERIAL

APPROACH SLAB AT EB No. 1

BAR	NO.	SIZE	TYPE	LENGTH	WEIGHT
* A1	50	#4	STR	28'-8"	957
A2	52	#4	STR	28'-7"	993
* B1	79	#5	STR	23'-3"	1916
B2	79	#6	STR	24'-7"	2917
REINFORCING STEEL				LBS.	3910
* EPOXY COATED REINFORCING STEEL				LBS.	2873
CLASS AA CONCRETE				C. Y.	37.3

APPROACH SLAB AT EB No. 2

BAR	NO.	SIZE	TYPE	LENGTH	WEIGHT
* A1	50	#4	STR	28'-8"	957
A2	52	#4	STR	28'-7"	993
* B1	79	#5	STR	23'-3"	1916
B2	79	#6	STR	24'-7"	2917
REINFORCING STEEL				LBS.	3910
* EPOXY COATED REINFORCING STEEL				LBS.	2873
CLASS AA CONCRETE				C. Y.	37.3

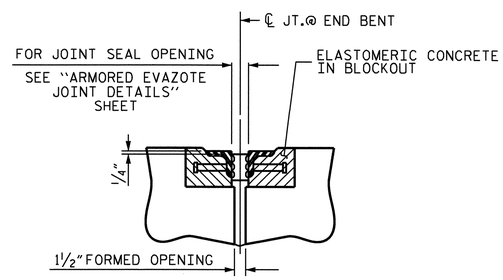

SECTION C-C

ARMORED EVAZOTE JOINT SEAL

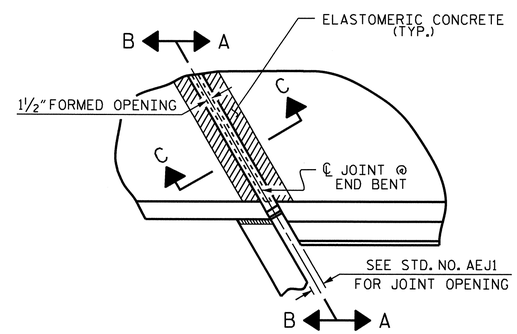

PLAN

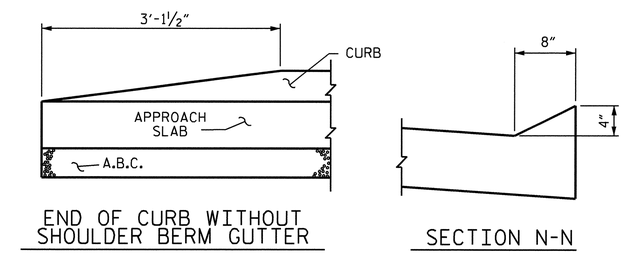

END OF CURB WITHOUT SHOULDER BERM GUTTER

SECTION N-N

CURB DETAILS

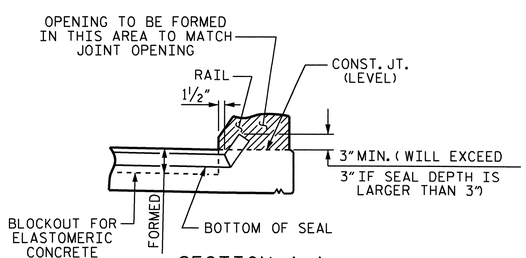

SECTION A-A

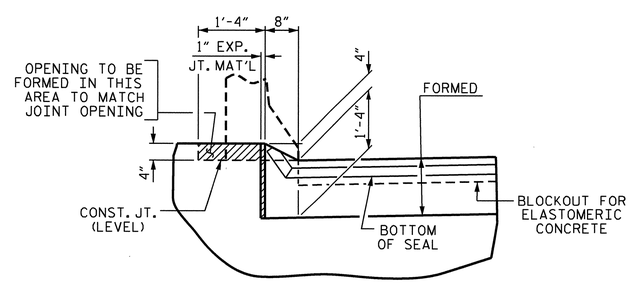

SECTION B-B

ARMORED EVAZOTE JOINT SEAL DETAILS @ END BENT

NOTE: EVAZOTE JOINT SEAL TO BE CUT, HEAT WELDED AND TURNED UP PARALLEL TO SLOPED FACE OF THE BARRIER RAIL.
END BENT No. 1 SHOWN, END BENT No. 2 SIMILAR

PROJECT NO. R-2417AA
LEE COUNTY
STATION: 137+42.08 -L-

SHEET 2 OF 2

STATE OF NORTH CAROLINA
DEPARTMENT OF TRANSPORTATION
RALEIGH

BRIDGE APPROACH SLAB FOR FLEXIBLE PAVEMENT

(NBL)

NORTH CAROLINA PROFESSIONAL SEAL 24990 ENGINEER THEO J. BEACH 11/23/10

ASSEMBLED BY : A. V. ROYAL		DATE : 04/10			
CHECKED BY : T. BANKOVICH		DATE : 04/10			
DRAWN BY : EEM 3/95	REV. 7/10/01	LES/RDR			
CHECKED BY : VAP 3/95	REV. 5/7/03R	RWW/JTE			
	REV. 5/1/06R	KMM/GM			

REVISIONS						SHEET NO.
NO.	BY:	DATE:	NO.	BY:	DATE:	S-135
1			3			TOTAL SHEETS
2			4			162

18-OCT-2010 15:07
R:\Structures\str4-L-overAWRR(LtLane)\MiscDrawings\R2417AA_SD_AS.dgn
sbwilliams

STR. #4

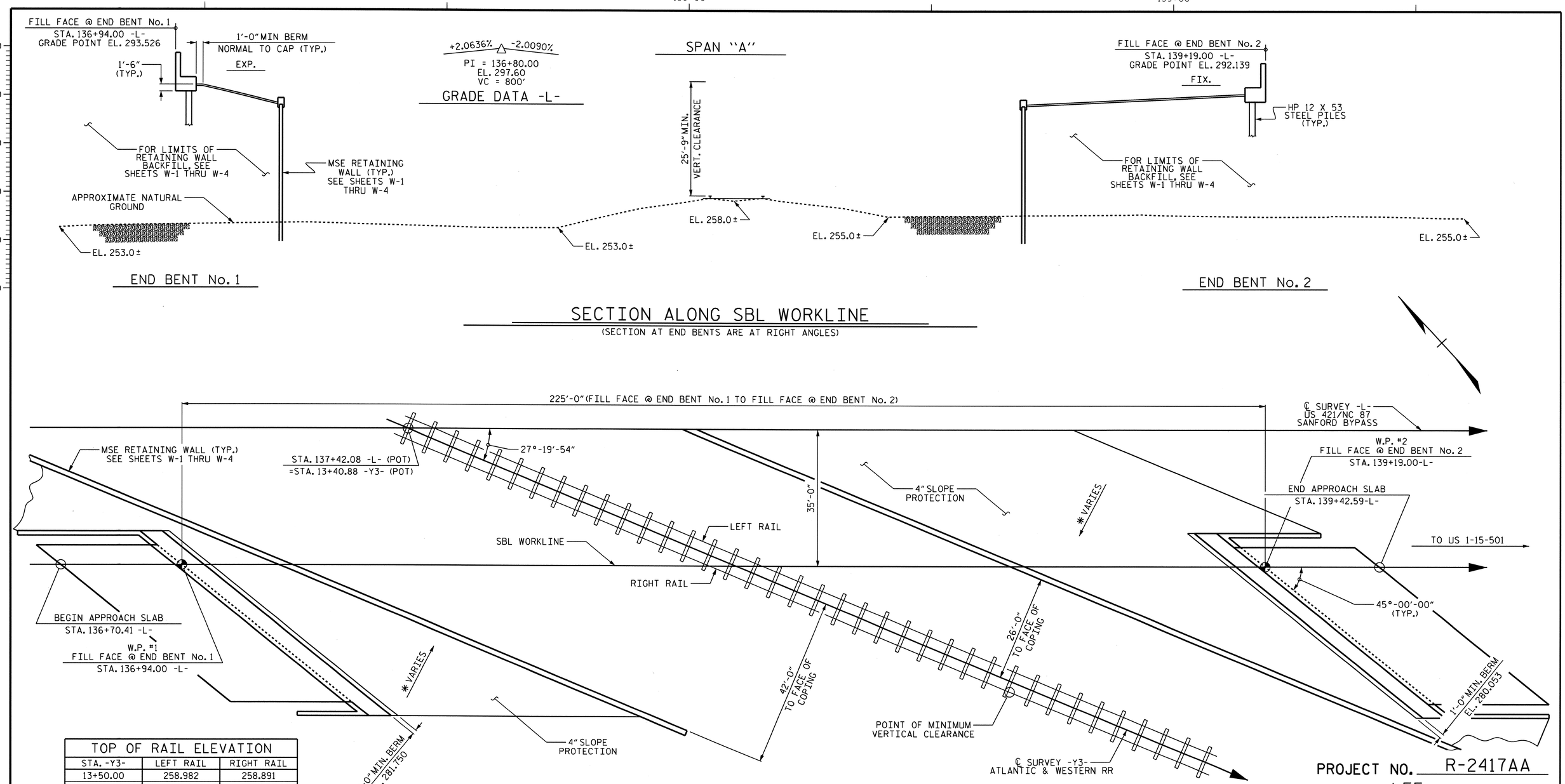

SECTION ALONG SBL WORKLINE

(SECTION AT END BENTS ARE AT RIGHT ANGLES)

PLAN VIEW

(PILES NOT SHOWN IN PLAN VIEW FOR CLARITY)

TOP OF RAIL ELEVATION		
STA. -Y3-	LEFT RAIL	RIGHT RAIL
13+50.00	258.982	258.891
13+75.00	258.717	258.683
14+00.00	258.478	258.478
14+25.00	258.279	258.277
14+50.00	258.023	258.035
14+75.00	257.725	257.760
15+00.00	257.452	257.486
15+25.00	257.212	257.214
15+50.00	256.935	256.937

* SLOPE VARIES FROM 2:1 TO NO STEEPER THAN 1½:1

PROJECT NO. R-2417AA

LEE COUNTY

STATION: 137+42.08 -L-

SHEET 1 OF 3 M.P. 126 BRIDGE No. 157

STATE OF NORTH CAROLINA
DEPARTMENT OF TRANSPORTATION
RALEIGH

GENERAL DRAWING

SBL BRIDGE OVER ATLANTIC & WESTERN RR ON US 421/NC 87 (SANFORD BYPASS) BETWEEN US 421 AND US 1-15-501

(SBL)

NORTH CAROLINA PROFESSIONAL SEAL 11268 ENGINEER BETSY S. COX — Betsy S. Cox 11-24-10

NORTH CAROLINA PROFESSIONAL SEAL 24390 ENGINEER THEO J. BEACH — 11/23/10

REVISIONS							SHEET NO.
NO.	BY:	DATE:	NO.	BY:	DATE:		S-136
1			3				TOTAL SHEETS
2			4				162

DRAWN BY : T. BANKOVICH DATE : 7-2010
CHECKED BY : T. BEACH DATE : 10-2010

24-NOV-2010 08:57
R:\Structures\str5-L-overAWRR(RtLane)\Gen_draw\R-2417AA_str5_GD.dgn
tjbankovich

STR. #5

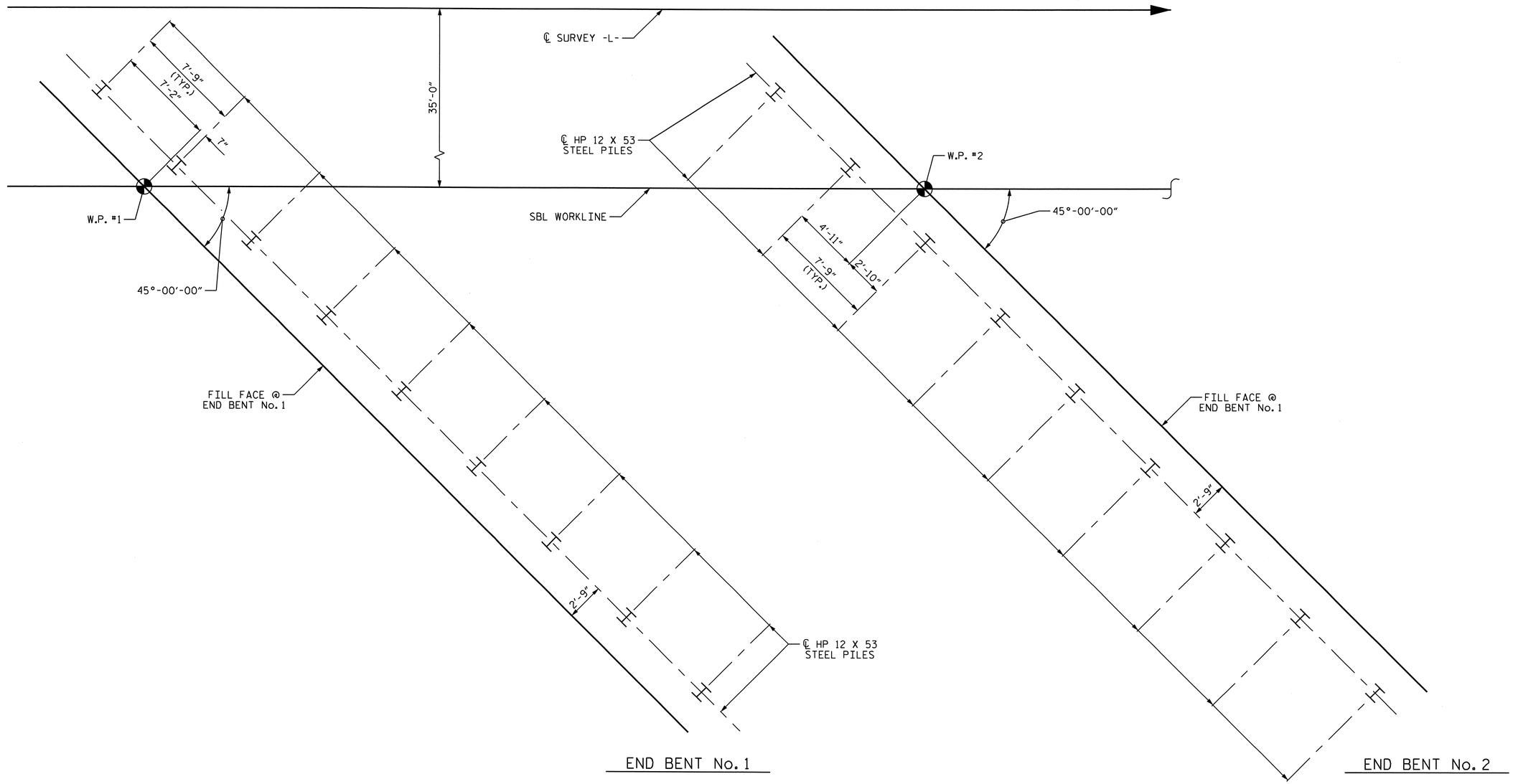

FOUNDATION LAYOUT

(DIMENSIONS LOCATING PILES ARE TO THE CENTERLINE OF THE PILES AT THE BOTTOM OF THE CAP)

PROJECT NO. R-2417AA

LEE COUNTY

STATION: 137+42.08 -L-

SHEET 2 OF 3

NOTES:

FOR PILES, SEE SPECIAL PROVISIONS.

THE ALLOWABLE BEARING CAPACITY FOR PILES AT END BENT No. 1 AND END BENT No. 2 IS 120 TONS PER PILE.

PILE EXCAVATION IS REQUIRED TO INSTALL PILES AT END BENT No. 1 AND END BENT No. 2. EXCAVATE HOLES TO AN ELEVATION WHICH PROVIDES A MINIMUM PENETRATION OF 10 FT. INTO ROCK. DRIVING PILES IS NOT REQUIRED. FOR PILE EXCAVATION, SEE SPECIAL PROVISIONS.

PERFORM UNDERCUT FOR RETAINING WALL PRIOR TO INSTALLATION OF PILES. FOR UNDERCUT SEE RETAINING WALL PLANS.

PILE EXCAVATION AT END BENT No. 1 AND END BENT No. 2 WILL EXTEND INTO MATERIAL THAT DETERIORATES WHEN EXPOSED TO THE ELEMENTS. INSTALL PILE AND PLACE CONCRETE IMMEDIATELY AFTER THE EXCAVATION IS COMPLETED.

NORTH CAROLINA PROFESSIONAL SEAL 24390 ENGINEER THEO J. BEACH
11/23/10

STATE OF NORTH CAROLINA
DEPARTMENT OF TRANSPORTATION
RALEIGH

GENERAL DRAWING
SBL BRIDGE OVER ATLANTIC & WESTERN RR ON US 421/NC 87 (SANFORD BYPASS) BETWEEN US 421 AND US 1-15-501
(SBL)

REVISIONS						SHEET NO.
NO.	BY:	DATE:	NO.	BY:	DATE:	S-137
1			3			TOTAL SHEETS
2			4			162

DRAWN BY : T. BANKOVICH DATE : 7-2010
CHECKED BY : T. BEACH DATE : 10-2010

18-OCT-2010 14:57
R:\Structures\str5-L-overAWRR(RtLane)\Gen_draw\R-2417AA_str5_GD.dgn
sbwilliams

STR. #5

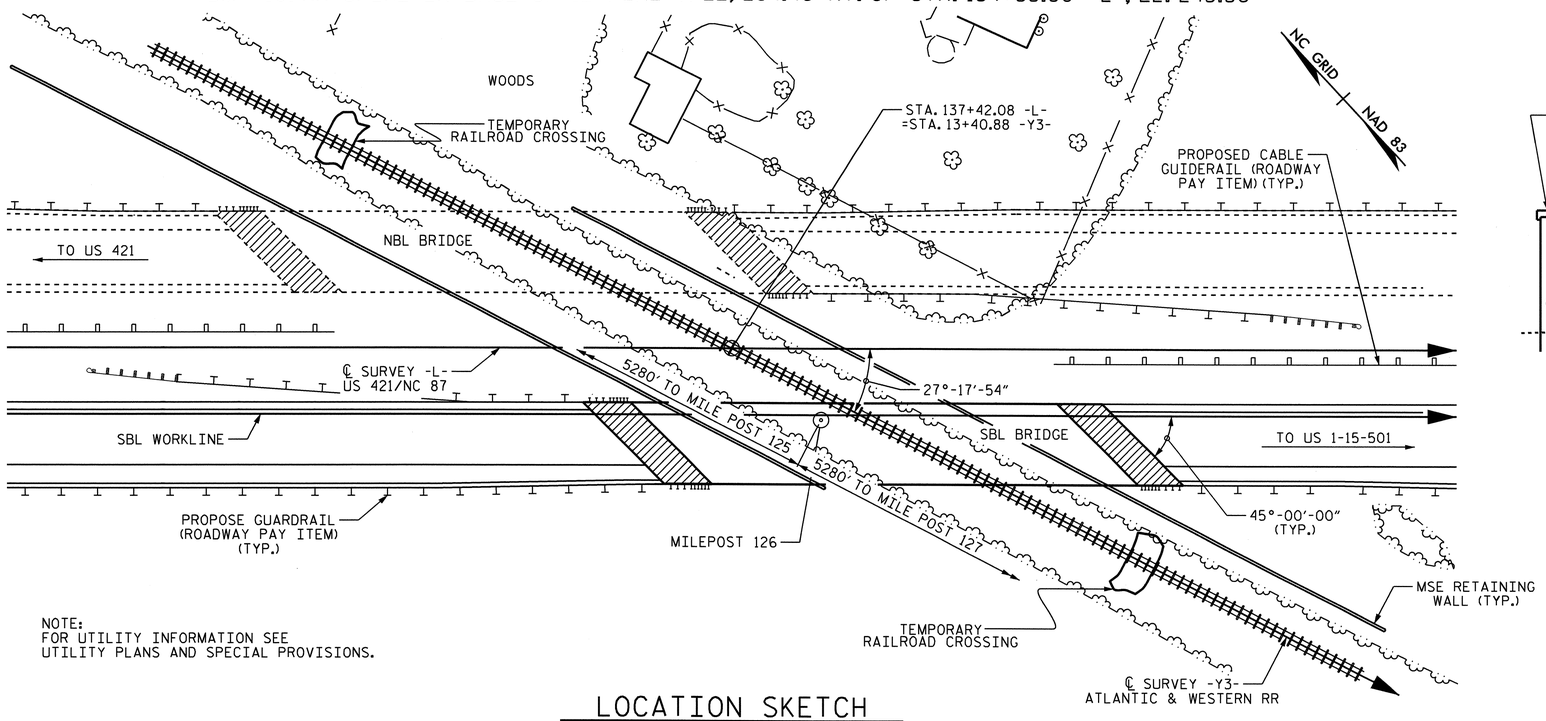

NOTE:
FOR UTILITY INFORMATION SEE
UTILITY PLANS AND SPECIAL PROVISIONS.

LOCATION SKETCH

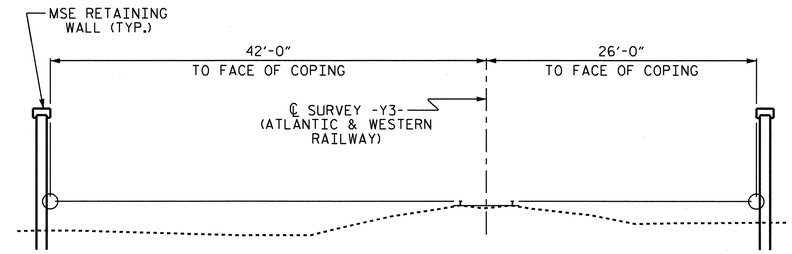

RAILWAY SECTION CLEARANCE

(SECTION TAKEN AT RIGHT ANGLE TO RAILWAY)
(SPAN LENGTHS BASED ON THIS SECTION)
(SECTION LOOKING DOWN STATION)

NOTES: (CONTINUED FROM SHEET 2 OF 3)

ASSUMED LIVE LOAD = HS 20 OR ALTERNATE LOADING, EXCEPT THAT THE STEEL PLATE GIRDERS HAVE BEEN DESIGNED FOR HS 25.

THIS BRIDGE HAS BEEN DESIGNED BY THE STRENGTH DESIGN METHOD AS SPECIFIED IN AASHTO STANDARD SPECIFICATIONS.

THIS BRIDGE HAS BEEN DESIGNED IN ACCORDANCE WITH THE REQUIREMENTS OF THE AASHTO STANDARD SPECIFICATIONS FOR SEISMIC DESIGN OF HIGHWAY BRIDGES FOR SEISMIC PERFORMANCE CATEGORY A.

FOR OTHER DESIGN DATA AND GENERAL NOTES, SEE SHEET SN.

FOR SUBMITTAL OF WORKING DRAWINGS, SEE SPECIAL PROVISIONS.

FOR FALSEWORK AND FORMWORK, SEE SPECIAL PROVISIONS.

FOR CRANE SAFETY, SEE SPECIAL PROVISIONS.

FOR GROUT FOR STRUCTURES, SEE SPECIAL PROVISIONS.

FOR MSE RETAINING WALL, SEE SPECIAL PROVISIONS AND RETAINING WALL No. 2 FOR DETAILS AND PAY ITEMS.

REMOVABLE FORMS MAY BE USED IN LIEU OF METAL STAY-IN-PLACE FORMS IN ACCORDANCE WITH ARTICLE 420-3 OF THE STANDARD SPECIFICATIONS.

ALL STRUCTURAL STEEL SHALL BE AASHTO M270 GRADE 50W AND PAINTED IN ACCORDANCE WITH SYSTEM 4 OF ARTICLE 442-7 OF THE STANDARD SPECIFICATIONS UNLESS OTHERWISE NOTED ON THE PLANS.

THE CONTRACTOR SHALL PROVIDE INDEPENDENT ASSURANCE SAMPLES OF REINFORCING STEEL AS FOLLOWS: FOR PROJECTS REQUIRING UP TO 400 TONS OF REINFORCING STEEL, ONE 30 INCH SAMPLE OF EACH SIZE BAR USED, AND FOR PROJECTS REQUIRING OVER 400 TONS OF REINFORCING STEEL, TWO 30 INCH SAMPLES OF EACH SIZE BAR USED. THE BARS FROM WHICH THE SAMPLES ARE TAKEN MUST THEN BE SPLICED WITH REPLACEMENT BARS OF THE SIZE AND LENGTH OF THE SAMPLE, PLUS A MINIMUM LAP SPLICE OF THIRTY BAR DIAMETERS.

FOR PLACING LOAD ON STRUCTURE MEMBERS, SEE SPECIAL PROVISIONS.

FOR CURING CONCRETE, SEE SPECIAL PROVISIONS.

FOR SHIPPING STEEL STRUCTURAL MEMBERS, SEE SPECIAL PROVISIONS.

FOR HIGH STRENGTH BOLTS, SEE SPECIAL PROVISIONS.

FOR DIRECT TENSION INDICATORS, SEE SPECIAL PROVISIONS.

FOR ADHESIVELY ANCHORED ANCHOR BOLTS OR DOWELS, SEE SPECIAL PROVISIONS.

THE RAILROAD TRACK TOP OF RAIL ELEVATIONS SHOWN ON THE PLANS ARE FROM THE BEST INFORMATION AVAILABLE. PRIOR TO BEGINNING BRIDGE CONSTRUCTION, VERIFY THE TOP OF RAIL ELEVATIONS AND REPORT ANY VARIATIONS TO THE ENGINEER. ANY PLAN REVISIONS NECESSARY TO ACHIEVE THE REQUIRED MINIMUM VERTICAL CLEARANCE WILL BE PROVIDED BY THE DEPARTMENT.

TOTAL BILL OF MATERIAL

	PILE EXCAVATION IN SOIL	PILE EXCAVATION NOT IN SOIL	REINFORCED CONCRETE DECK SLAB	GROOVING BRIDGE FLOORS	CLASS A CONCRETE	BRIDGE APPROACH SLABS	REINFORCING STEEL	STRUCTURAL STEEL	HP 12 X 53 STEEL PILES		CONCRETE BARRIER RAIL	4" SLOPE PROTECTION	ELASTOMERIC BEARINGS	EVAZOTE JOINT SEALS
	LIN. FT.	LIN. FT.	SQ. FT.	SQ. FT.	CU. YD.	LUMP SUM	LBS.	APPROX. LBS.	NO.	LIN. FT.	LIN. FT.	SQ. YD.	LUMP SUM	LUMP SUM
SUPERSTRUCTURE			9,157	9,385		LUMP SUM		644,500			443.99		LUMP SUM	LUMP SUM
END BENT No. 1	90	90			79.7		10,885		9	450		860		
END BENT No. 2	90	90			82.8		11,111		9	450		930		
TOTAL	180	180	9,157	9,385	162.5	LUMP SUM	21,996	644,500	18	900	443.99	1790	LUMP SUM	LUMP SUM

PROJECT NO. R-2417AA
LEE COUNTY
STATION: 137+42.08 -L-

SHEET 3 OF 3

STATE OF NORTH CAROLINA
DEPARTMENT OF TRANSPORTATION
RALEIGH

GENERAL DRAWING
SBL BRIDGE OVER ATLANTIC & WESTERN RR ON US 421/NC 87 (SANFORD BYPASS) BETWEEN US 421 AND US 1-15-501
(SBL)

NORTH CAROLINA PROFESSIONAL SEAL 24390 ENGINEER THEO J. BEACH
11/23/10

REVISIONS						SHEET NO.
NO.	BY:	DATE:	NO.	BY:	DATE:	S-138
1			3			TOTAL SHEETS
2			4			162

DRAWN BY : T. BANKOVICH DATE : 7-2010
CHECKED BY : T. BEACH DATE : 10-2010

24-NOV-2010 08:57
R:\Structures\str5-L-overAWRR(RtLane)\Gen_draw\R-2417AA_str5_GD.dgn
tjbankovich

STR. #5

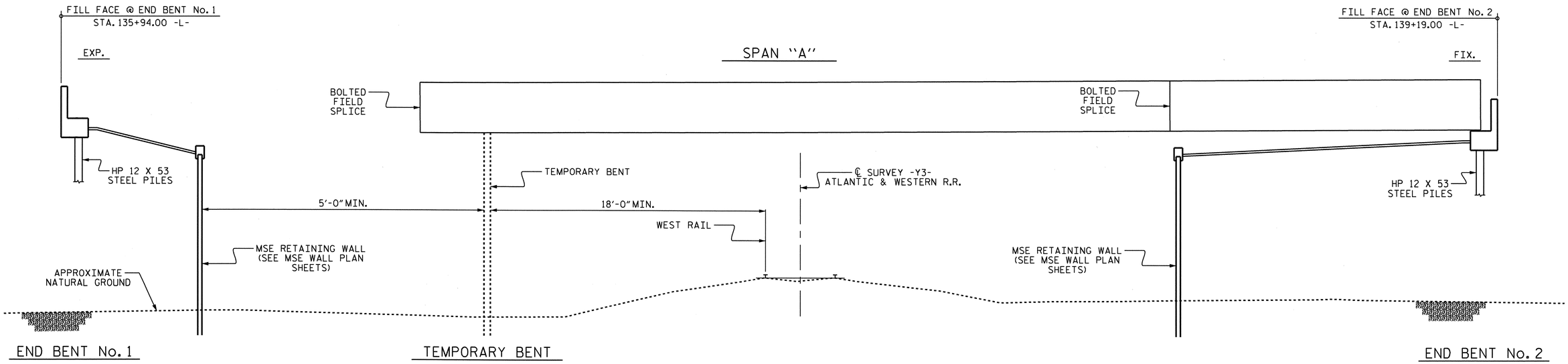

GIRDER ERECTION

(SECTION AT END BENTS ARE TAKEN @ RIGHT ANGLES AND ALONG SBL WORKLINE)

NOTES:

ERECT A MINIMUM OF TWO GIRDERS WITH ALL DIAPHRAGMS/CROSSFRAMES BETWEEN THE GIRDERS IN PLACE AND THE BOLTS TIGHTENED PRIOR TO RELEASING THE GIRDERS.

ERECT EACH SUBSEQUENT GIRDER WITH DIAPHRAGMS/CROSSFRAMES CONNECTING TO THE ADJACENT PREVIOUSLY ERECTED GIRDER AND TIGHTEN ALL BOLTS BEFORE RELEASING THE GIRDER.

THE STRUCTURAL STEEL SHALL BE SUPPORTED DURING ERECTION IN ITS CAMBERED POSITION.

TEMPORARY BENTS SHALL REMAIN IN PLACE UNTIL ALL DIAPHRAGMS/CROSSFRAMES ARE IN PLACE AND ALL HIGH STRENGTH BOLTS ARE TIGHTENED.

TEMPORARY BENTS SHALL PROVIDE BEARING AT A CONNECTOR PLATE LOCATION. WHEN CONNECTOR PLATES ARE USED AS TEMPORARY BEARING STIFFENERS, DIAPHRAGMS MUST BE ATTACHED.

THE CONTRACTOR'S ERECTION PLANS SHALL INCLUDE A METHOD OF TEMPORARY BENT REMOVAL THAT WILL UNIFORMLY TRANSFER THE STRUCTURAL WEIGHT TO THE DIAPHRAGMS/CROSSFRAMES AND THE GIRDERS WILL REMAIN IN THE CAMBERED POSITIONS.

PLANS FOR TEMPORARY BENT ERECTION AND REMOVAL SHALL BE SUBMITTED TO THE ENGINEER FOR REVIEW.

THE CONTRACTOR IS RESPONSIBLE FOR DESIGNING THE TEMPORARY BENTS. THE DESIGNS SHALL BE COMPLETED BY A PROFESSIONAL ENGINEER REGISTERED IN THE STATE OF NORTH CAROLINA. THE CONTRACTOR SHALL SUBMIT SIGNED AND SEALED WORKING DRAWINGS AND CALCULATIONS FOR APPROVAL BY THE ENGINEER.

DURING THE GIRDER ERECTION PROCEDURE, THE CONTRACTOR IS RESPONSIBLE FOR PROVIDING TEMPORARY LATERAL BRACING AND OTHER MEANS OF SUPPORT, AS REQUIRED TO ENSURE STABILITY OF THE GIRDERS, AVOID UPLIFT OF THE GIRDERS AT THE TEMPORARY BENTS AND TO ENSURE PLUMBNESS OF THE GIRDERS IN THE FINAL CONDITION.

NO SEPARATE MEASUREMENT OR PAYMENT WILL BE MADE FOR PROVIDING THE TEMPORARY BENT. THE COST FOR ALL MATERIALS, EQUIPMENT, TOOLS, LABOR AND ANY INCIDENTALS NECESSARY TO PROVIDE THE TEMPORARY BENT SHALL BE CONSIDERED INCIDENTAL TO THE LUMP SUM BID PRICE FOR STRUCTURAL STEEL.

THE CONTRACTOR MAY SUBMIT AN ALTERNATE ERECTION METHOD TO THE ENGINEER FOR REVIEW AND APPROVAL.

TEMPORARY BENTS SHALL BE LOCATED TO PROVIDE A MINIMUM DISTANCE OF 18'-0" FROM THE WEST RAIL OF THE EXISTING RAILROAD TRACK AND A MINIMUM DISTANCE OF 5'-0" FROM THE FRONT FACE OF THE MSE WALL.

PROJECT NO. R-2417AA
LEE COUNTY
STATION: 137+42.08 -L-

STATE OF NORTH CAROLINA
DEPARTMENT OF TRANSPORTATION
RALEIGH

GIRDER ERECTION DETAILS

(SBL)

NORTH CAROLINA PROFESSIONAL SEAL 24390 ENGINEER THEO J. BEACH
11/23/10

REVISIONS						SHEET NO.
NO.	BY:	DATE:	NO.	BY:	DATE:	S-139
1			3			TOTAL SHEETS
2			4			162

DRAWN BY : T. BANKOVICH DATE : 10-2010
CHECKED BY : T. BEACH DATE : 10-2010

24-NOV-2010 10:10
R:\Structures\str5-L-overAWRR(RtLane)\Gen_draw\R-2417AA_str5_ERECT.dgn
tjbankovich

STR. #5

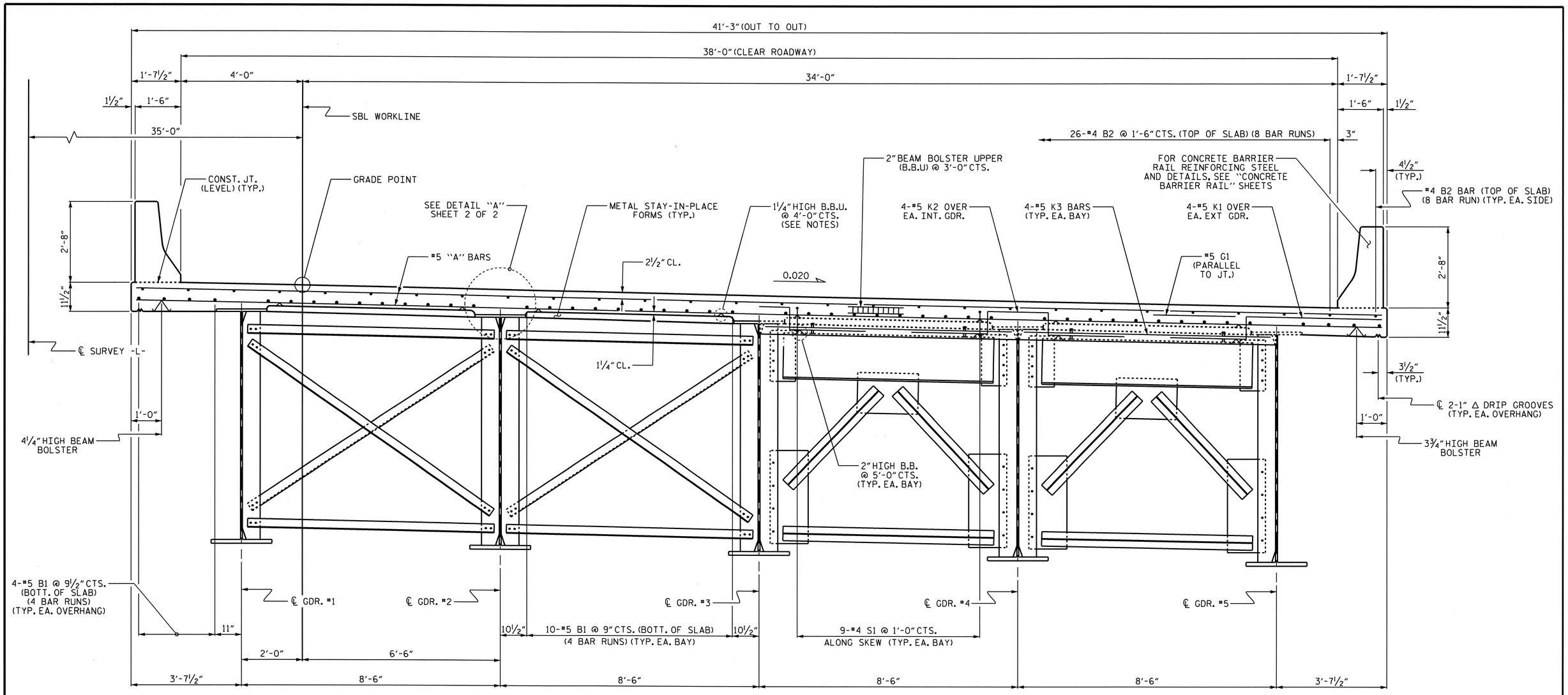

HALF TYPICAL SECTION

(SHOWING INTERMEDIATE DIAPHRAGMS)

HALF TYPICAL SECTION

(SHOWING END BENT DIAPHRAGMS)

PROJECT NO. R-2417AA

LEE COUNTY

STATION: 137+42.08 -L-

SHEET 1 OF 2

STATE OF NORTH CAROLINA
DEPARTMENT OF TRANSPORTATION
RALEIGH

SUPERSTRUCTURE

TYPICAL SECTION

(SBL)

NORTH CAROLINA PROFESSIONAL SEAL 24390 ENGINEER THEO J. BEACH
11/23/10

REVISIONS							SHEET NO.
NO.	BY:	DATE:	NO.	BY:	DATE:		S-140
1			3				TOTAL SHEETS
2			4				162

DRAWN BY : T. BANKOVICH DATE : 9-2009
CHECKED BY : N. PIERCE DATE : 10-2009

18-OCT-2010 14:53
R:\Structures\str5-L-overAWRR(RtLane)\Super_draw\R-2417AA_str5_TS.dgn
sbwilliams

STR. #5

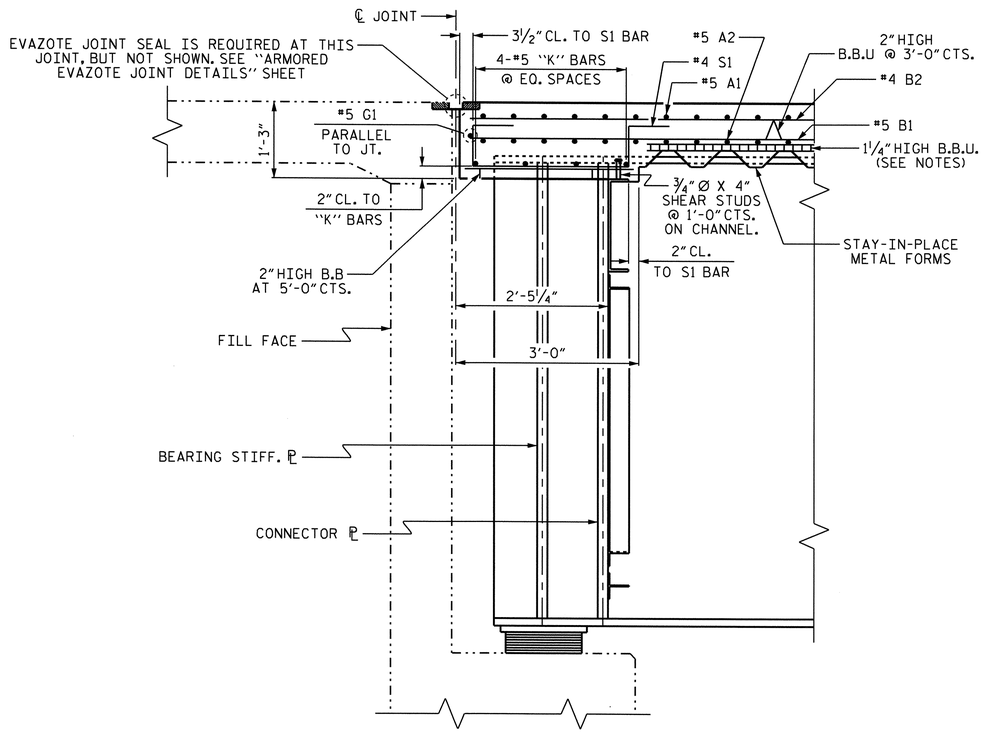

SECTION A-A

END BENT No. 1 SHOWN, END BENT No. 2 SIMILAR

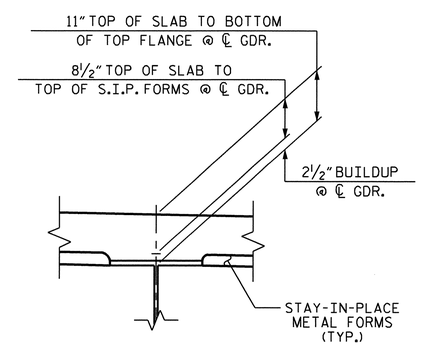

DETAIL "A"

NOTES:

PROVIDE 1¼" HIGH BEAM BOLSTERS UPPER AT 4'-0" CTS. ATOP THE METAL STAY-IN-PLACE FORMS TO SUPPORT THE BOTTOM MAT OF "A" BARS. WHEN USING REMOVABLE FORMS, PROVIDE CONTINUOUS HIGH CHAIRS FOR METAL DECK (C.H.C.M.) @ 4'-0" CTS. WITH A HEIGHT TO SUPPORT THE BOTTOM MAT OF "A" BARS A CLEAR DISTANCE OF 2½" ABOVE THE TOP OF THE REMOVABLE FORM.

PREVIOUSLY CAST CONCRETE IN THE SPAN SHALL HAVE ATTAINED A MINIMUM COMPRESSIVE STRENGTH OF 3,000 PSI BEFORE ADDITIONAL CONCRETE IS CAST IN THE SPAN.

DIRECTION OF CASTING DECK CONCRETE SHALL BE FROM FIXED BEARING END TOWARDS THE EXPANSION BEARING END OF THE SPAN.

#5 G1 BAR MAY BE SHIFTED SLIGHTLY, AS NECESSARY, TO CLEAR REINFORCING STEEL AND STIRRUPS.

BARRIER RAIL SHALL NOT BE CAST UNTIL ALL SLAB CONCRETE HAS BEEN CAST AND HAS REACHED A MINIMUM COMPRESSIVE STRENGTH OF 3,000 PSI.

THE CONTRACTOR MAY, WHEN NECESSARY, PROPOSE A SCHEME FOR AVOIDING INTERFERENCE BETWEEN METAL STAY-IN-PLACE FORM SUPPORTS OR FORMS AND GIRDER STIFFENERS OR CONNECTOR PLATES. THE PROPOSAL SHALL BE INDICATED, AS APPROPRIATE, ON EITHER THE STEEL WORKING DRAWINGS OR THE METAL STAY-IN-PLACE FORM WORKING DRAWINGS.

ALL REINFORCING STEEL IN BARRIER RAILS SHALL BE EPOXY COATED.

PROJECT NO. R-2417AA
LEE COUNTY
STATION: 137+42.08 -L-

SHEET 2 OF 2

STATE OF NORTH CAROLINA
DEPARTMENT OF TRANSPORTATION
RALEIGH

SUPERSTRUCTURE

TYPICAL SECTION
(SBL)

NORTH CAROLINA PROFESSIONAL SEAL 24390 ENGINEER THEO J. BEACH
11/23/10

REVISIONS						SHEET NO.
NO.	BY:	DATE:	NO.	BY:	DATE:	S-141
1			3			TOTAL SHEETS
2			4			162

DRAWN BY : T. BANKOVICH DATE : 9-2009
CHECKED BY : N. PIERCE DATE : 10-2009

STR. #5

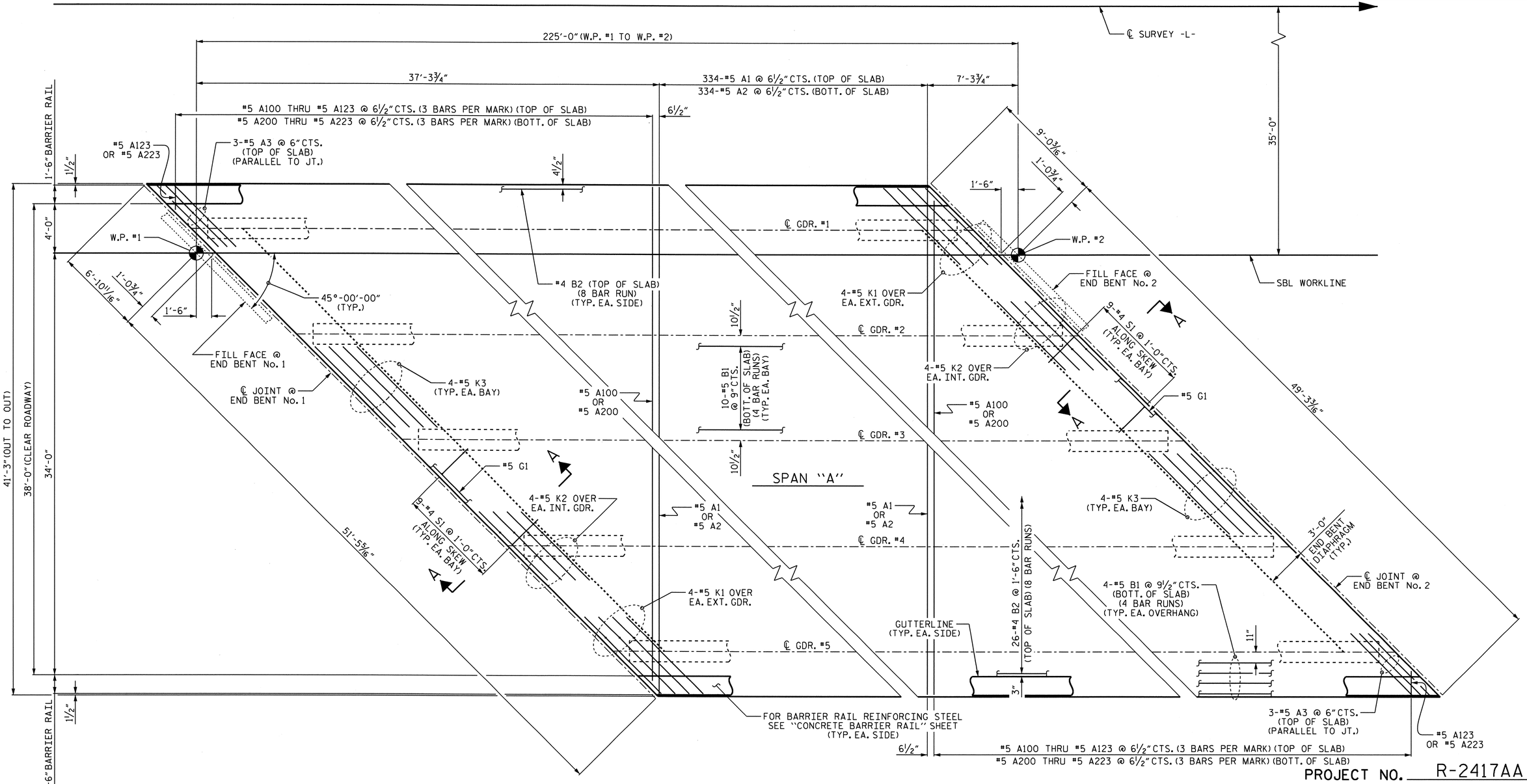

PLAN OF SPAN

PROJECT NO. R-2417AA

LEE COUNTY

STATION: 137+42.08 -L-

NOTES:

PERMITTED TRANSVERSE CONSTRUCTION JOINT NOT SHOWN. FOR LOCATION SEE "BILL OF MATERIAL" SHEET.

FOR SECTION A-A, SEE "TYPICAL SECTION" SHEET 2 OF 2.

#5 A3 BARS IN THE ACUTE CORNERS OF THE SLAB SHALL BE TIED BELOW THE TOP MAT OF LONGITUDINAL REINFORCEMENT.

NORTH CAROLINA PROFESSIONAL SEAL 24390 ENGINEER THEO J. BEACH
11/23/10

STATE OF NORTH CAROLINA
DEPARTMENT OF TRANSPORTATION
RALEIGH

SUPERSTRUCTURE

PLAN OF SPAN
(SBL)

REVISIONS						SHEET NO.
NO.	BY:	DATE:	NO.	BY:	DATE:	S-142
1			3			TOTAL SHEETS
2			4			162

DRAWN BY : T. BANKOVICH DATE : 9-2009
CHECKED BY : N. PIERCE DATE : 10-2009

24-NOV-2010 08:58
R:\Structures\str5-L-overAWRR(RtLane)\Super_draw\R-2417AA_str5_PS.dgn
tjbankovich

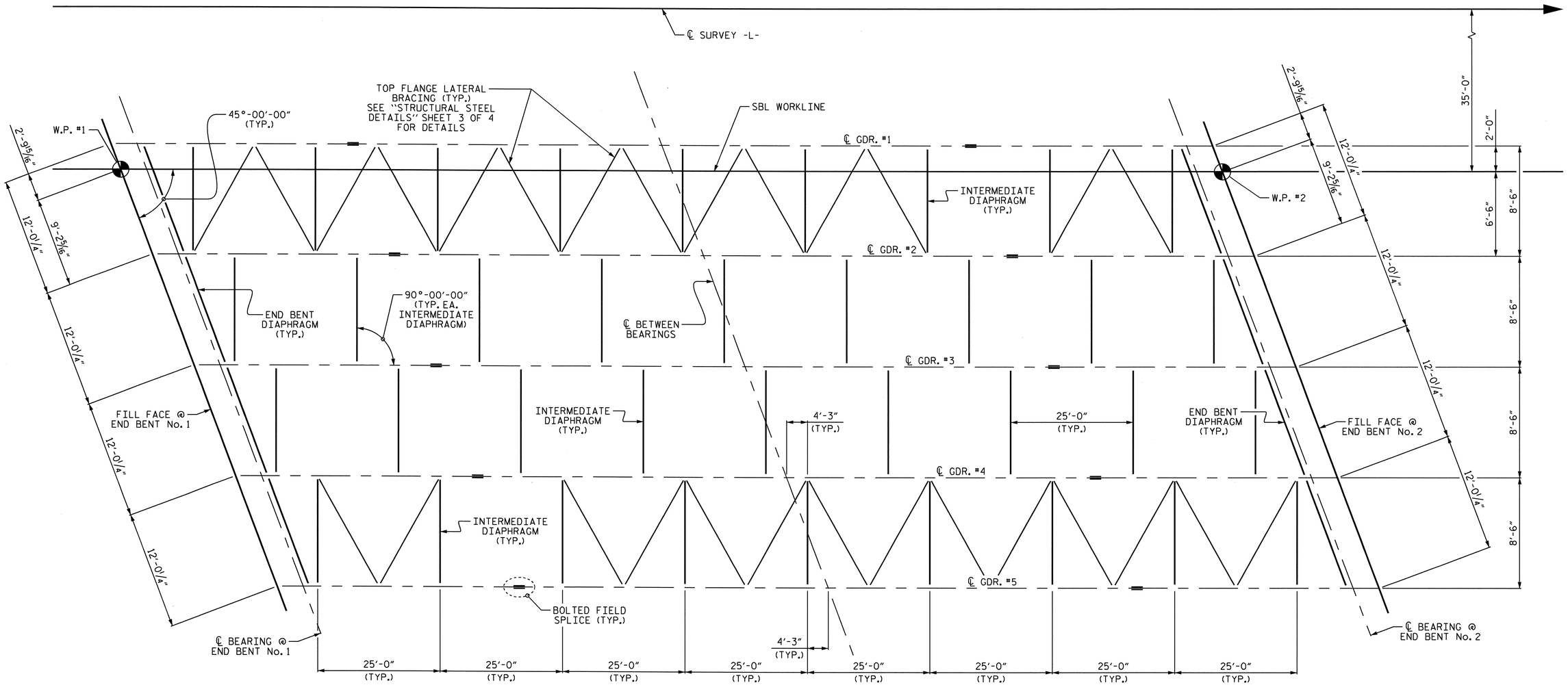

FRAMING PLAN

PROJECT NO. R-2417AA
LEE COUNTY
STATION: 137+42.08 -L-

STATE OF NORTH CAROLINA
DEPARTMENT OF TRANSPORTATION
RALEIGH
SUPERSTRUCTURE

FRAMING PLAN
(SBL)

NORTH CAROLINA PROFESSIONAL SEAL 24390 ENGINEER THEO J. BEACH
11/23/10

REVISIONS						SHEET NO.
NO.	BY:	DATE:	NO.	BY:	DATE:	S-143
1			3			TOTAL SHEETS
2			4			162

DRAWN BY : T. BANKOVICH DATE : 9-2009
CHECKED BY : N. PIERCE DATE : 10-2009

18-OCT-2010 14:50
R:\Structures\str5-L-overAWRR(RtLane)\Super_draw\R-2417AA_str5_FP.dgn
sbwilliams

STR. #5

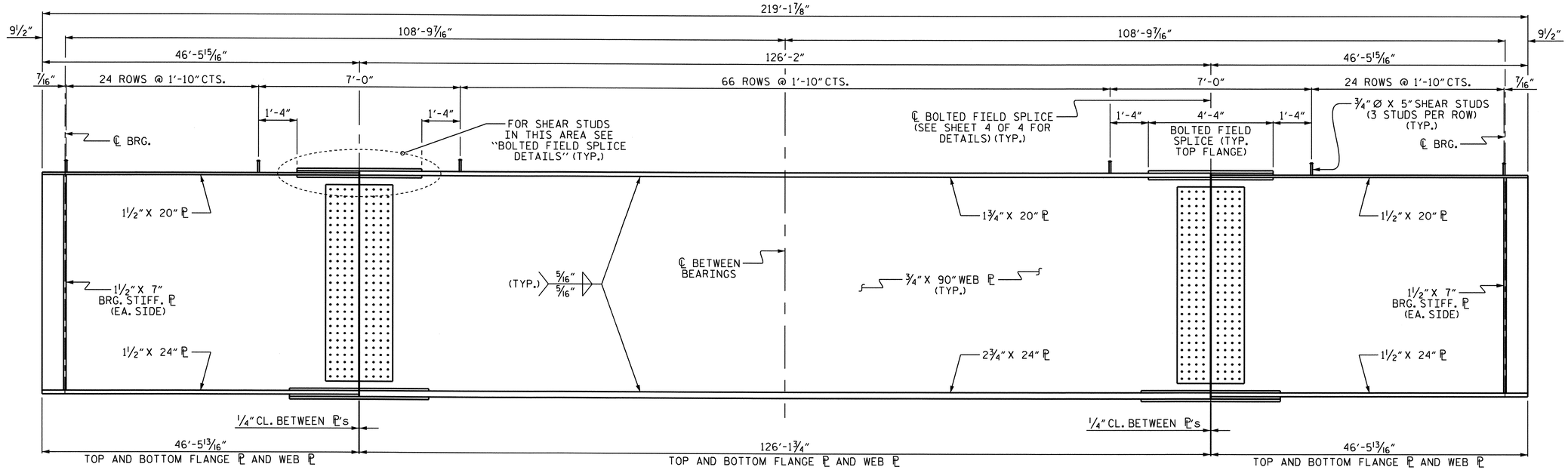

ELEVATION OF GIRDER

(FOR CLARITY, CONNECTOR ℙ's NOT SHOWN.
FOR PLACEMENT, SEE "FRAMING PLAN" SHEET.)

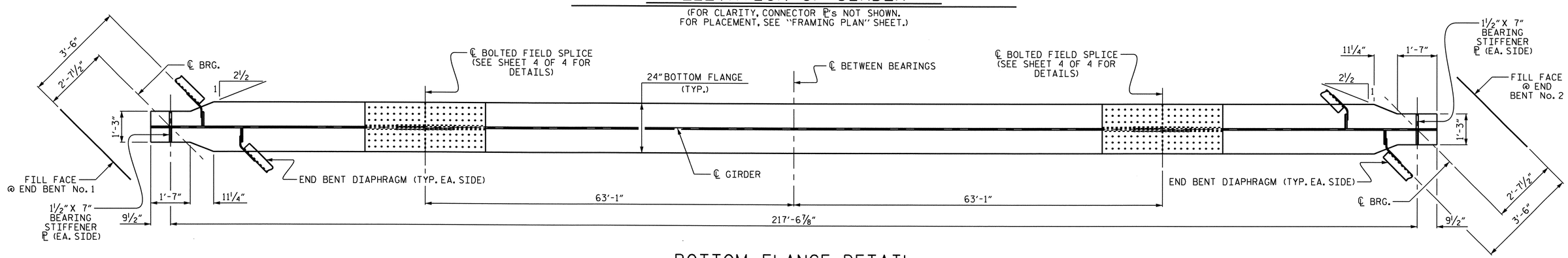

BOTTOM FLANGE DETAIL

(FOR CLARITY, CONNECTOR ℙ's NOT SHOWN.
FOR PLACEMENT, SEE "FRAMING PLAN" SHEET.)

NOTES:

ALL STRUCTURAL STEEL SHALL BE AASHTO M270 GRADE 50W AND PAINTED IN ACCORDANCE WITH SYSTEM 4 OF ARTICLE 442-7 OF THE STANDARD SPECIFICATIONS UNLESS OTHERWISE NOTED ON THE PLANS.

ALL DIMENSIONS SHOWN ARE HORIZONTAL OR VERTICAL, UNLESS OTHERWISE NOTED.

ALL FIELD CONNECTIONS TO BE 7/8" DIA. HIGH STRENGTH BOLTS, UNLESS OTHERWISE NOTED. FOR HIGH STRENGTH BOLTS, SEE SPECIAL PROVISIONS.

BEARING STIFFENERS ARE TO BE PLACED NORMAL TO THE WEB OF THE GIRDER AND SHALL BE PLUMB.

A CHARPY V-NOTCH TEST IS REQUIRED FOR WEB PLATES, BOTTOM FLANGE PLATES, BOTTOM FLANGE SPLICE PLATES, AND WEB FLANGE SPLICE PLATES FOR ALL GIRDERS AND IN ACCORDANCE WITH ARTICLE 1072-9 OF THE STANDARD SPECIFICATIONS.

SHOP SPLICES ARE PERMITTED TO LIMIT THE MAXIMUM REQUIRED FLANGE PIECE LENGTHS TO 60 FEET AND WEB PIECE LENGTHS TO 45 FEET. PERMITTED FLANGE AND WEB SHOP SPLICES SHALL NOT BE LOCATED WITHIN 15 FEET OF MAXIMUM DEAD LOAD DEFLECTION. KEEP 2 FEET MINIMUM BETWEEN WEB AND FLANGE SHOP SPLICES. KEEP 6" MINIMUM BETWEEN CONNECTOR PLATE OR TRANSVERSE STIFFENER WELDS AND WEB OR FLANGE SHOP SPLICES.

STUDS ON GIRDERS MAY BE SHIFTED UP TO 1" IF NECESSARY TO CLEAR FLANGE SPLICE WELD.

TENSION ON THE AASHTO M164 BOLTS SHALL BE CALIBRATED USING DIRECT TENSION INDICATOR WASHERS IN ACCORDANCE WITH ARTICLE 440-8 OF THE STANDARD SPECIFICATIONS.

FOR DIRECT TENSION INDICATORS, SEE SPECIAL PROVISIONS.

END OF GIRDERS SHALL BE PLUMB.

AT THE CONTRACTOR'S OPTION, THE INTERMEDIATE DIAPHRAGM WITH THE WELDED GUSSET PLATES MAY BE USED IN LIEU OF THE INTERMEDIATE DIAPHRAGM WITH BOLTED ANGLES AT NO ADDITIONAL COST TO THE DEPARTMENT.

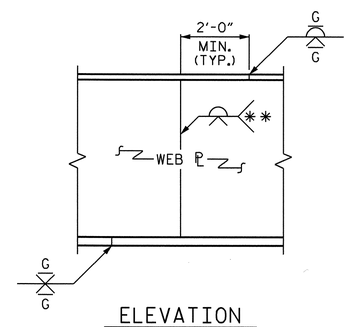

ELEVATION

PERMISSIBLE SHOP FLANGE & WEB SPLICE

** GRIND SMOOTH AND FLUSH ON OUTER FACE OF EXTERIOR GIRDERS

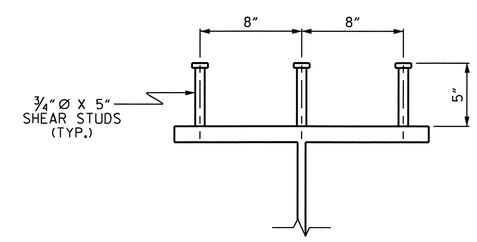

SHEAR STUD DETAIL

(EXCEPT AT BOLTED FIELD SPLICE)

PROJECT NO. R-2417AA
LEE COUNTY
STATION: 137+42.08 -L-

SHEET 1 OF 4

STATE OF NORTH CAROLINA
DEPARTMENT OF TRANSPORTATION
RALEIGH

SUPERSTRUCTURE

STRUCTURAL STEEL DETAILS

(SBL)

NORTH CAROLINA PROFESSIONAL SEAL 24390 ENGINEER THEO J. BEACH
11/23/10

REVISIONS						SHEET NO.
NO.	BY:	DATE:	NO.	BY:	DATE:	S-144
1			3			TOTAL SHEETS
2			4			162

STR. #5

DRAWN BY : T. BANKOVICH DATE : 9-2009
CHECKED BY : N. PIERCE DATE : 10-2009

18-OCT-2010 14:49
R:\Structures\str5-L-overAWRR(RtLane)\Super_draw\R-2417AA_str5_SS.dgn
sbwilliams

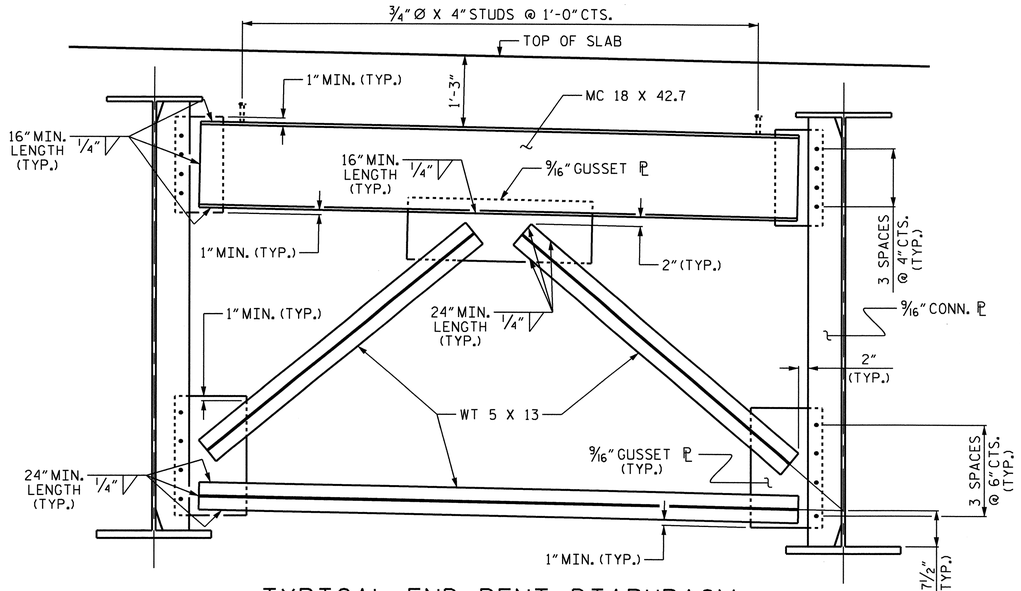

TYPICAL END BENT DIAPHRAGM

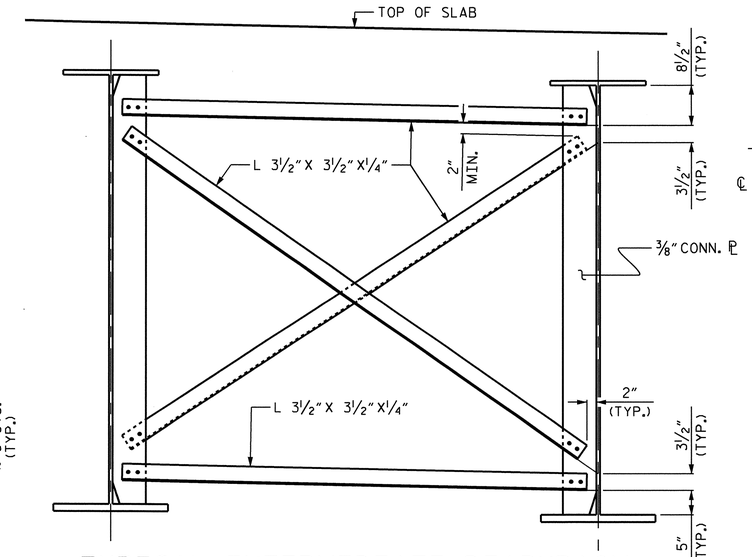

TYPICAL INTERMEDIATE DIAPHRAGM

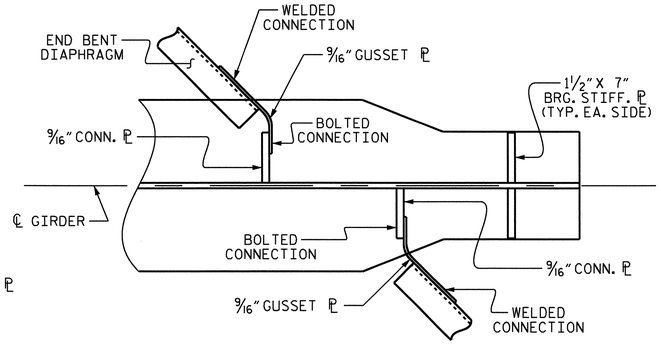

CONNECTOR PL DETAIL

(EACH END SIMILAR)

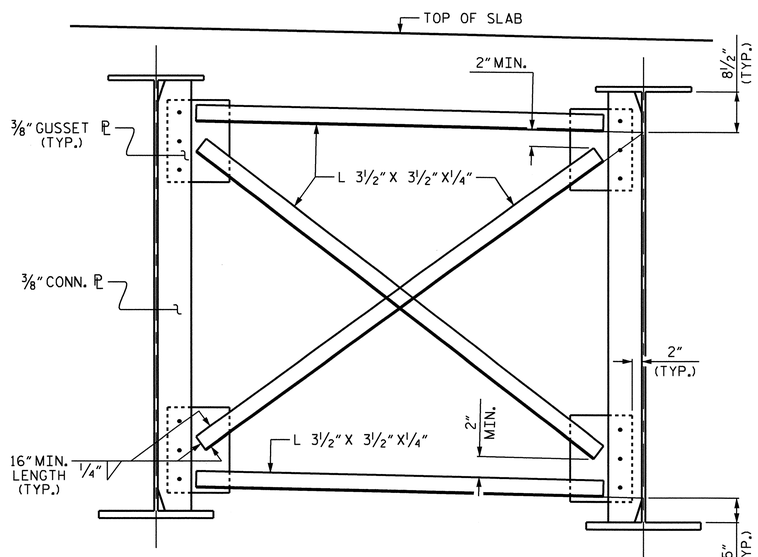

OPTIONAL INTERMEDIATE DIAPHRAGM

(SEE NOTES, SHEET 1 OF 4)

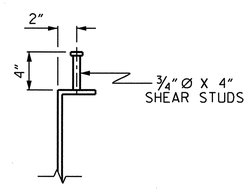

SHEAR STUD DETAIL

(TYP. EA. END BENT DIAPHRAGM)

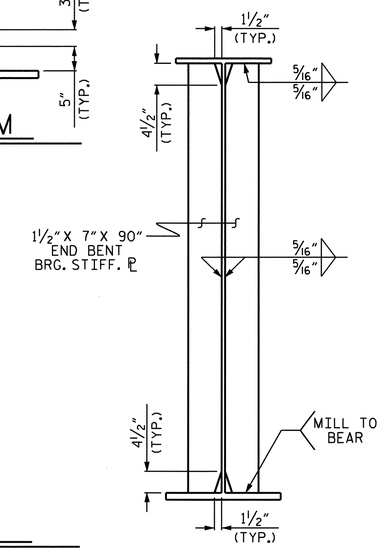

BEARING STIFFENER

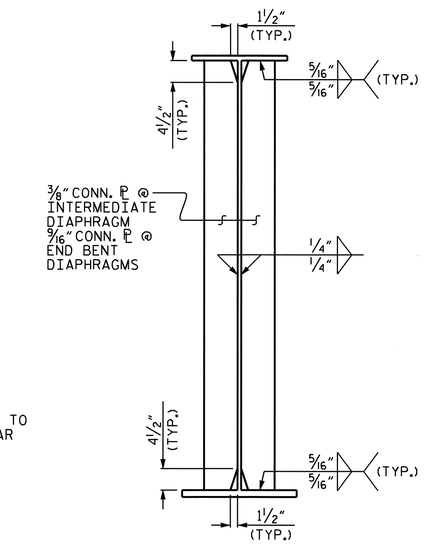

CONNECTOR PLATE

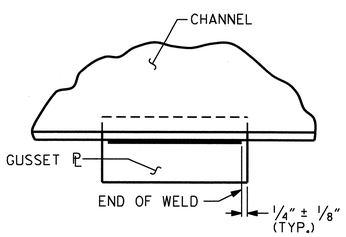

TYPICAL GUSSET PLATE CONNECTION

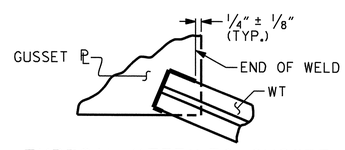

TYPICAL "TEE" TO GUSSET PLATE CONNECTION

WELD TERMINATION DETAILS

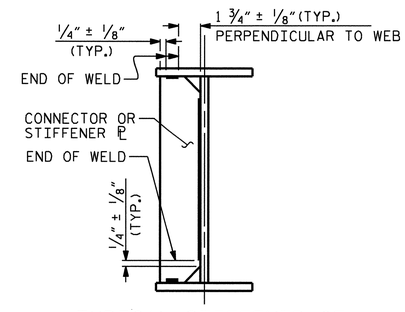

TYPICAL STIFFENER OF CONNECTOR PLATE CONNECTIONS

PROJECT NO. R-2417AA

LEE COUNTY

STATION: 137+42.08 -L-

SHEET 2 OF 4

STATE OF NORTH CAROLINA
DEPARTMENT OF TRANSPORTATION
RALEIGH

SUPERSTRUCTURE

STRUCTURAL STEEL DETAILS

(SBL)

NORTH CAROLINA PROFESSIONAL SEAL 24390 ENGINEER THEO J. BEACH
11/23/10

REVISIONS						SHEET NO.
NO.	BY:	DATE:	NO.	BY:	DATE:	S-145
1			3			TOTAL SHEETS
2			4			162

DRAWN BY : T. BANKOVICH DATE : 9-2009
CHECKED BY : N. PIERCE DATE : 10-2009

18-OCT-2010 14:40
R:\Structures\str5-L-overAWRR(RtLane)\Super_draw\R-2417AA_str5_SS.dgn
sbwilliams

STR. #5

NOTE:

THE TOP FLANGE LATERAL BRACING DETAIL IS PROVIDED TO ASSIST IN LIMITING GIRDER DISPLACEMENT DUE TO WIND FORCES DURING ERECTION. IT SHALL BE INSTALLED IMMEDIATELY AFTER ERECTION OF EACH PAIR OF GIRDER SECTIONS. THE DEPARTMENT ASSUMES NO LIABILITY IN THE ERECTION OR STABILIZATION OF THE GIRDERS.

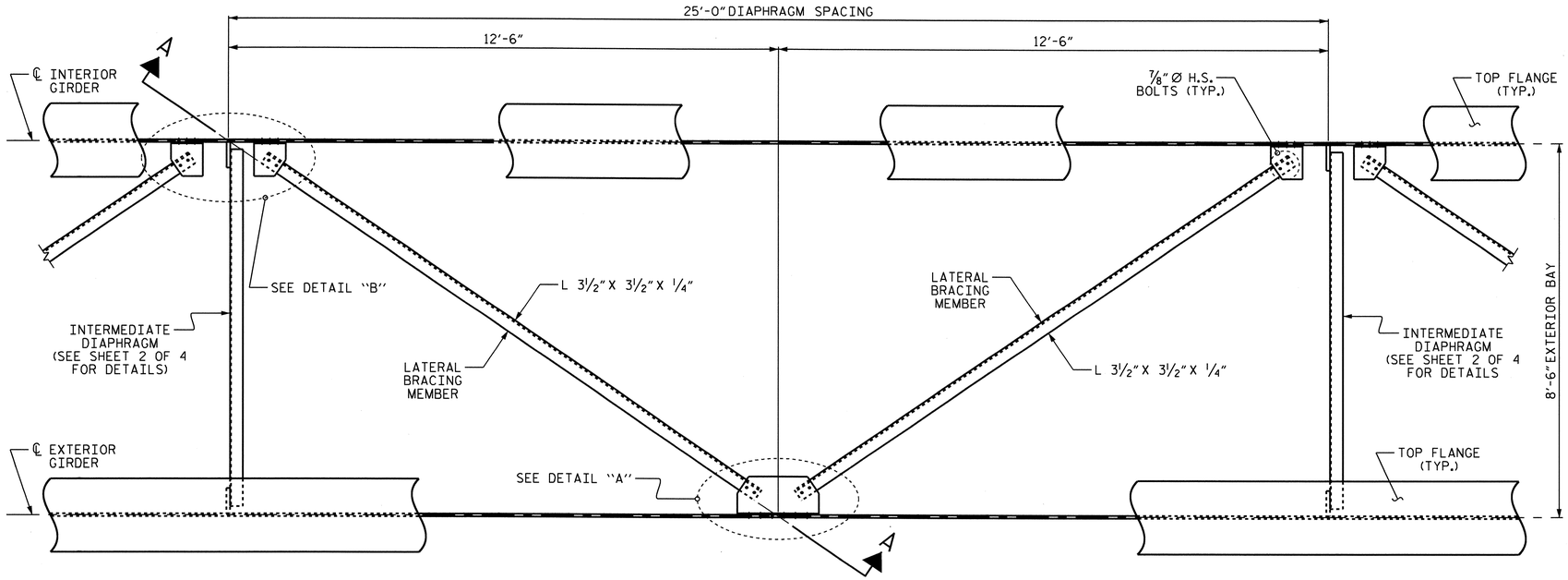

PART PLAN - TOP FLANGE LATERAL BRACING

SEE "FRAMING PLAN" FOR LOCATIONS
(GIRDERS #4 AND #5 SHOWN, GIRDERS #1 AND #2 SIMILAR)

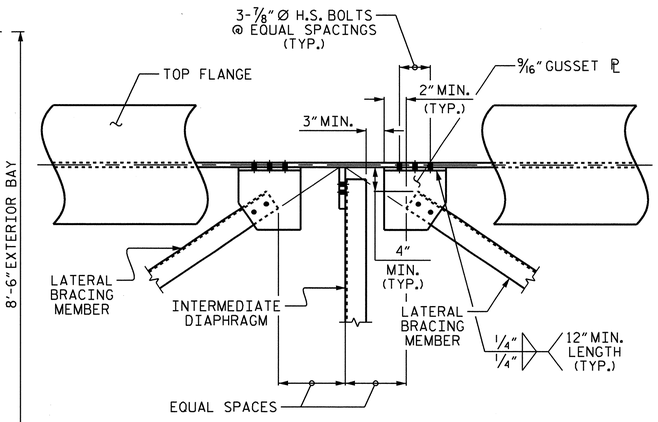

DETAIL "B"

LATERAL BRACING AT TOP FLANGE

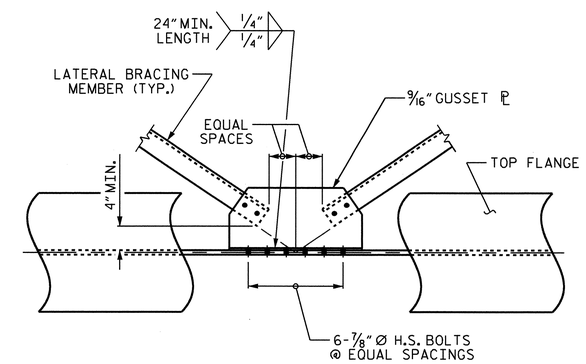

DETAIL "A"

LATERAL BRACING AT TOP FLANGE

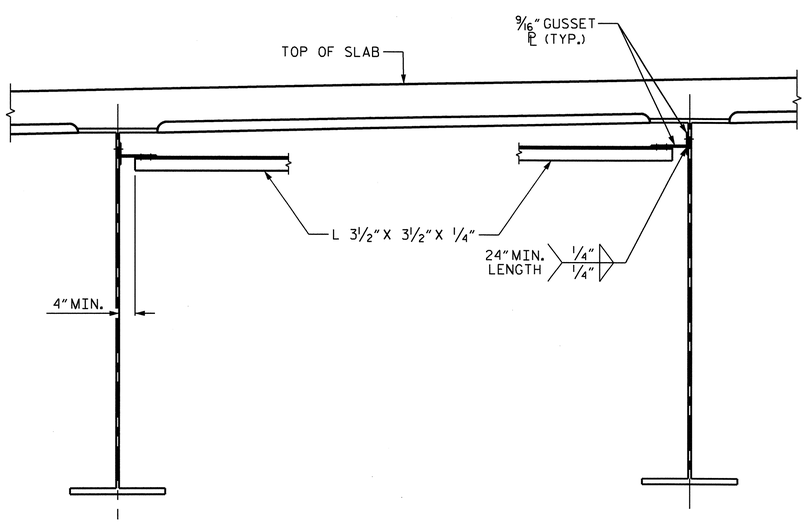

SECTION A-A

LATERAL BRACING AT TOP FLANGE

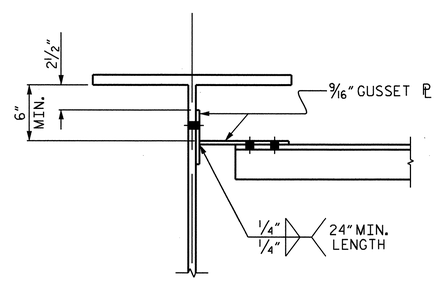

SECTION THRU CONNECTION

(LATERAL BRACING AT TOP FLANGE)

PROJECT NO. R-2417AA
LEE COUNTY
STATION: 137+42.08 -L-

SHEET 3 OF 4

STATE OF NORTH CAROLINA
DEPARTMENT OF TRANSPORTATION
RALEIGH

SUPERSTRUCTURE

STRUCTURAL STEEL DETAILS

(SBL)

NORTH CAROLINA PROFESSIONAL SEAL 24390 ENGINEER THEO J. BEACH
11/23/10

REVISIONS						SHEET NO.
NO.	BY:	DATE:	NO.	BY:	DATE:	S-146
1			3			TOTAL SHEETS
2			4			162

DRAWN BY : T. BANKOVICH DATE : 9-2009
CHECKED BY : N. PIERCE DATE : 10-2009

24-NOV-2010 08:59
R:\Structures\str5-L-overAWRR(RtLane)\Super_draw\R-2417AA_str5_SS.dgn
tjbankovich

STR. #5

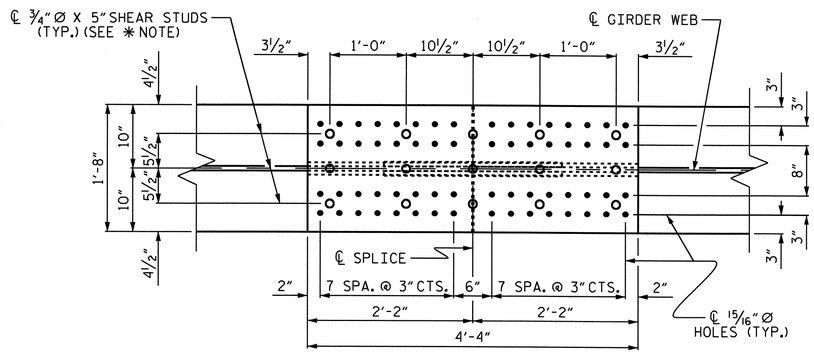

PLAN (TOP OF TOP FLANGE)

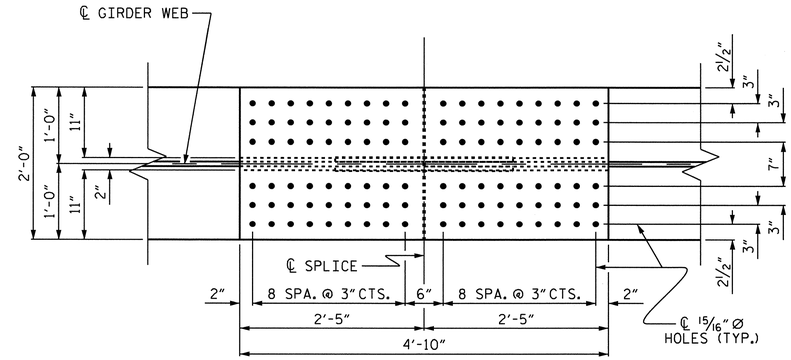

PLAN (TOP OF BOTTOM FLANGE)

✱ NOTE:
SHEAR STUDS ARE TO BE SHOP WELDED ON TOP OF PLATE BEFORE FIELD ASSEMBLY

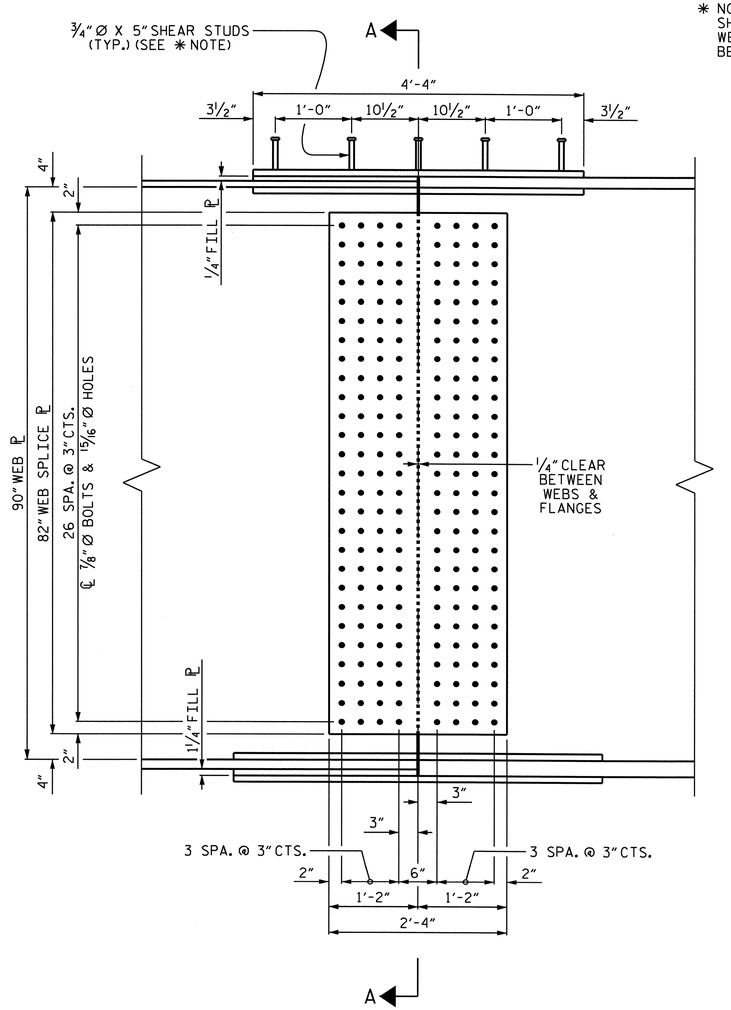

ELEVATION

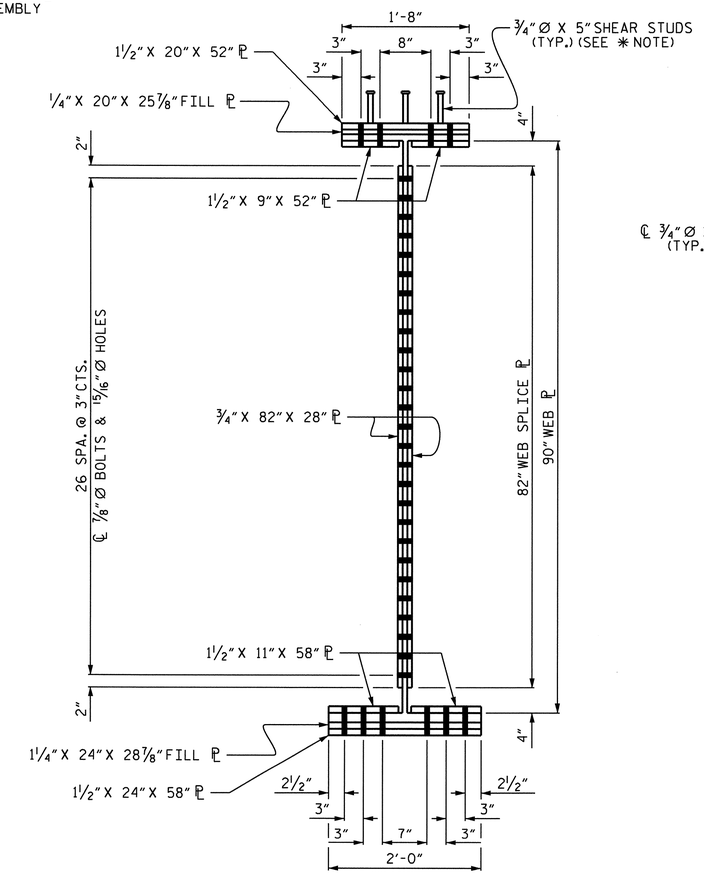

SECTION A-A

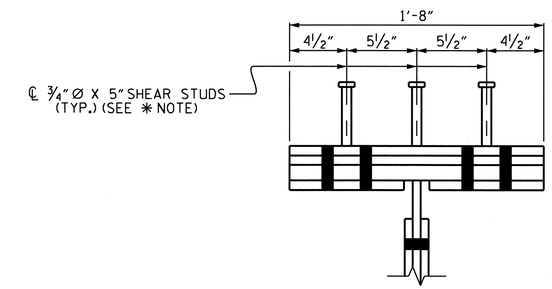

SHEAR STUD DETAIL
FOR TOP FLANGE SPLICE PLATE

PROJECT NO. R-2417AA
LEE COUNTY
STATION: 137+42.08 -L-

SHEET 4 OF 4

STATE OF NORTH CAROLINA
DEPARTMENT OF TRANSPORTATION
RALEIGH
SUPERSTRUCTURE

STRUCTURAL STEEL DETAILS
(SBL)

NORTH CAROLINA PROFESSIONAL SEAL 24390 ENGINEER THEO J. BEACH
11/23/10

REVISIONS						SHEET NO.
NO.	BY:	DATE:	NO.	BY:	DATE:	S-147
1			3			TOTAL SHEETS
2			4			162

BOLTED FIELD SPLICE DETAILS

(TYP. EA. BOLTED FIELD SPLICE)

DRAWN BY : T. BANKOVICH DATE : 9-2009
CHECKED BY : N. PIERCE DATE : 10-2009

18-OCT-2010 14:36
R:\Structures\str5-L-overAWRR(RtLane)\Super_draw\R-2417AA_str5_SS.dgn
sbwilliams

STR. #5

DEAD LOAD DEFLECTION TABLE FOR GIRDERS

SPAN "A" GIRDER #1 & #5

THIRTIETH POINTS	BRG.	0.03	0.07	0.10	0.13	0.17	0.20	0.23	0.27	0.30	0.33	0.37	0.40	0.43	0.47	0.50	0.53	0.57	0.60	0.63	0.67	0.70	0.73	0.77	0.80	0.83	0.87	0.90	0.93	0.97	BRG.
DEFLECTION DUE TO WEIGHT OF GIRDER	0	0.041	0.082	0.121	0.159	0.193	0.225	0.253	0.279	0.302	0.322	0.338	0.351	0.360	0.366	0.368	0.366	0.360	0.351	0.338	0.322	0.302	0.279	0.253	0.225	0.193	0.159	0.121	0.082	0.041	0
DEFLECTION DUE TO WEIGHT OF SLAB *	0	0.063	0.128	0.190	0.249	0.304	0.354	0.399	0.440	0.476	0.507	0.533	0.553	0.568	0.576	0.579	0.576	0.568	0.553	0.533	0.507	0.476	0.440	0.399	0.354	0.304	0.249	0.190	0.128	0.063	0
DEFLECTION DUE TO BARRIER RAIL	0	0.008	0.017	0.025	0.032	0.039	0.046	0.052	0.057	0.062	0.066	0.069	0.072	0.074	0.075	0.075	0.075	0.074	0.072	0.069	0.066	0.062	0.057	0.052	0.046	0.039	0.032	0.025	0.017	0.008	0
TOTAL DEAD LOAD DEFLECTION	0	0.113	0.226	0.336	0.440	0.537	0.625	0.704	0.776	0.840	0.894	0.940	0.976	1.002	1.017	1.022	1.017	1.002	0.976	0.940	0.894	0.840	0.776	0.704	0.625	0.537	0.440	0.336	0.226	0.113	0
VERTICAL CURVE ORDINATE	0	0.039	0.075	0.108	0.139	0.167	0.193	0.216	0.236	0.253	0.268	0.280	0.289	0.296	0.300	0.301	0.300	0.296	0.289	0.280	0.268	0.253	0.236	0.216	0.193	0.167	0.139	0.108	0.075	0.039	0
REQUIRED CAMBER	0	1 13/16"	3 5/8"	5 5/16"	6 15/16"	8 7/16"	9 13/16"	11 1/16"	12 1/8"	13 1/8"	13 15/16"	14 5/8"	15 3/16"	15 9/16"	15 13/16"	15 7/8"	15 13/16"	15 9/16"	15 3/16"	14 5/8"	13 15/16"	13 1/8"	12 1/8"	11 1/16"	9 13/16"	8 7/16"	6 15/16"	5 5/16"	3 5/8"	1 13/16"	0

SPAN "A" GIRDER #2 & #4

THIRTIETH POINTS	BRG.	0.03	0.07	0.10	0.13	0.17	0.20	0.23	0.27	0.30	0.33	0.37	0.40	0.43	0.47	0.50	0.53	0.57	0.60	0.63	0.67	0.70	0.73	0.77	0.80	0.83	0.87	0.90	0.93	0.97	BRG.
DEFLECTION DUE TO WEIGHT OF GIRDER	0	0.041	0.082	0.121	0.159	0.193	0.225	0.253	0.279	0.302	0.322	0.338	0.351	0.360	0.366	0.368	0.366	0.360	0.351	0.338	0.322	0.302	0.279	0.253	0.225	0.193	0.159	0.121	0.082	0.041	0
DEFLECTION DUE TO WEIGHT OF SLAB *	0	0.062	0.125	0.186	0.244	0.298	0.347	0.391	0.431	0.466	0.496	0.522	0.542	0.556	0.565	0.567	0.565	0.556	0.542	0.522	0.496	0.466	0.431	0.391	0.347	0.298	0.244	0.186	0.125	0.062	0
DEFLECTION DUE TO BARRIER RAIL	0	0.008	0.016	0.024	0.032	0.039	0.045	0.051	0.056	0.061	0.065	0.068	0.071	0.073	0.074	0.074	0.074	0.073	0.071	0.068	0.065	0.061	0.056	0.051	0.045	0.039	0.032	0.024	0.016	0.008	0
TOTAL DEAD LOAD DEFLECTION	0	0.111	0.224	0.331	0.434	0.530	0.617	0.695	0.766	0.829	0.883	0.928	0.963	0.989	1.004	1.009	1.004	0.989	0.963	0.928	0.883	0.829	0.766	0.695	0.617	0.530	0.434	0.331	0.224	0.111	0
VERTICAL CURVE ORDINATE	0	0.039	0.075	0.108	0.139	0.167	0.193	0.216	0.236	0.253	0.269	0.280	0.289	0.296	0.300	0.301	0.300	0.296	0.289	0.280	0.269	0.253	0.236	0.216	0.193	0.167	0.139	0.108	0.075	0.039	0
REQUIRED CAMBER	0	1 13/16"	3 9/16"	5 1/4"	6 7/8"	8 3/8"	9 11/16"	10 15/16"	12"	13"	13 13/16"	14 1/2"	15"	15 7/16"	15 5/8"	15 3/4"	15 5/8"	15 7/16"	15"	14 1/2"	13 13/16"	13"	12"	10 15/16"	9 11/16"	8 3/8"	6 7/8"	5 1/4"	3 9/16"	1 13/16"	0

SPAN "A" GIRDER #3

THIRTIETH POINTS	BRG.	0.03	0.07	0.10	0.13	0.17	0.20	0.23	0.27	0.30	0.33	0.37	0.40	0.43	0.47	0.50	0.53	0.57	0.60	0.63	0.67	0.70	0.73	0.77	0.80	0.83	0.87	0.90	0.93	0.97	BRG.
DEFLECTION DUE TO WEIGHT OF GIRDER	0	0.041	0.082	0.121	0.159	0.193	0.225	0.253	0.279	0.302	0.322	0.338	0.351	0.360	0.366	0.368	0.366	0.360	0.351	0.338	0.322	0.302	0.279	0.253	0.225	0.193	0.159	0.121	0.082	0.041	0
DEFLECTION DUE TO WEIGHT OF SLAB *	0	0.060	0.122	0.182	0.239	0.292	0.340	0.383	0.422	0.456	0.486	0.511	0.530	0.544	0.553	0.555	0.553	0.544	0.530	0.511	0.486	0.456	0.422	0.383	0.340	0.292	0.239	0.182	0.122	0.060	0
DEFLECTION DUE TO BARRIER RAIL	0	0.009	0.017	0.025	0.033	0.041	0.047	0.053	0.059	0.064	0.068	0.071	0.074	0.076	0.077	0.078	0.077	0.076	0.074	0.071	0.068	0.064	0.059	0.053	0.047	0.041	0.033	0.025	0.017	0.009	0
TOTAL DEAD LOAD DEFLECTION	0	0.110	0.222	0.329	0.431	0.525	0.612	0.690	0.760	0.822	0.875	0.920	0.955	0.980	0.996	1.001	0.996	0.980	0.955	0.920	0.875	0.822	0.760	0.690	0.612	0.525	0.431	0.329	0.222	0.110	0
VERTICAL CURVE ORDINATE	0	0.039	0.075	0.108	0.139	0.167	0.193	0.216	0.236	0.253	0.268	0.280	0.289	0.296	0.300	0.301	0.300	0.296	0.289	0.280	0.268	0.253	0.236	0.216	0.193	0.167	0.139	0.108	0.075	0.039	0
REQUIRED CAMBER	0	1 13/16"	3 9/16"	5 1/4"	6 13/16"	8 5/16"	9 5/8"	10 7/8"	11 15/16"	12 7/8"	13 11/16"	14 3/8"	14 15/16"	15 5/16"	15 9/16"	15 5/8"	15 9/16"	15 5/16"	14 15/16"	14 3/8"	13 11/16"	12 7/8"	11 15/16"	10 7/8"	9 5/8"	8 5/16"	6 13/16"	5 1/4"	3 9/16"	1 13/16"	0

* INCLUDES SLAB, BUILDUPS & STAY-IN-PLACE FORMS.
ALL VALUES ARE SHOWN IN FEET (DECIMAL FORM), EXCEPT "REQUIRED CAMBER", WHICH IS GIVEN IN INCHES (FRACTION FORM)

PROJECT NO. R-2417AA
LEE COUNTY
STATION: 137+42.08 -L-

STATE OF NORTH CAROLINA
DEPARTMENT OF TRANSPORTATION
RALEIGH
SUPERSTRUCTURE

DEAD LOAD DEFLECTIONS
(SBL)

NORTH CAROLINA PROFESSIONAL SEAL 24390 ENGINEER THEO J. BEACH
11/23/10

REVISIONS						SHEET NO.
NO.	BY:	DATE:	NO.	BY:	DATE:	S-148
1			3			TOTAL SHEETS
2			4			162

STR. #5

DRAWN BY : T. BANKOVICH DATE : 9-2009
CHECKED BY : N. PIERCE DATE : 10-2009

18-OCT-2010 14:32
R:\Structures\str5-L-overAWRR(RtLane)\Super_draw\R-2417AA_str5_DL.dgn
sbwilliams

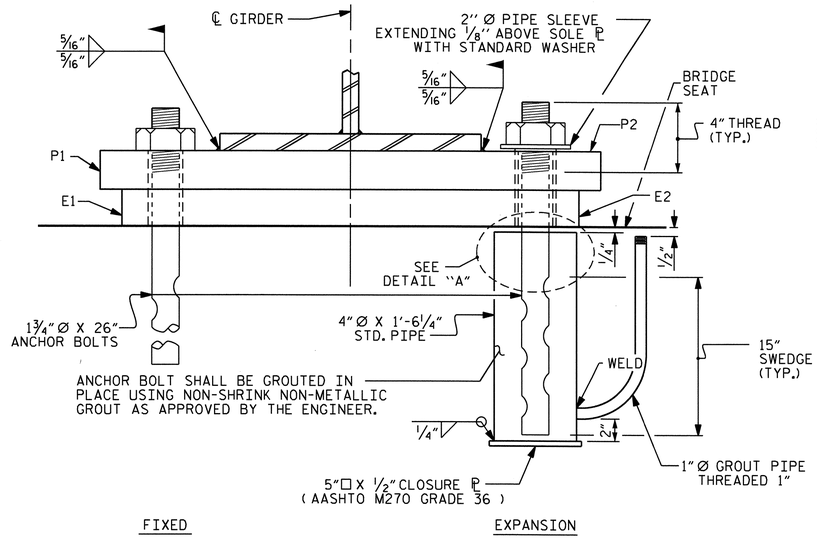

END VIEW

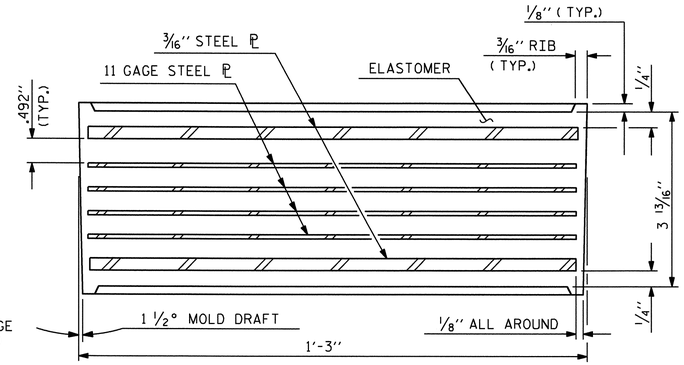

TYPICAL SECTION OF ELASTOMERIC BEARING

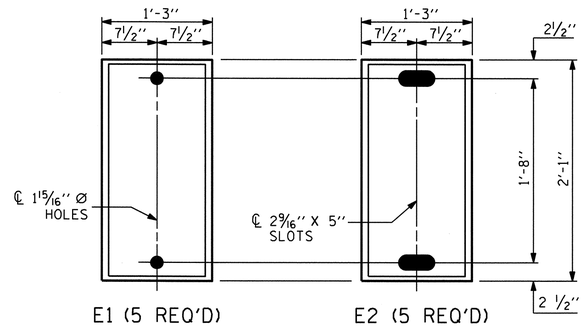

PLAN VIEW OF ELASTOMERIC BEARING

TYPE VI

(60 DUROMETER HARDNESS)

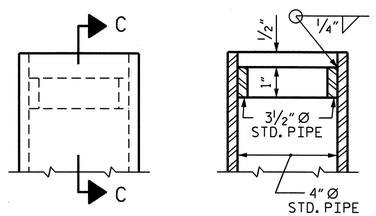

SECTION C-C

DETAIL "A"

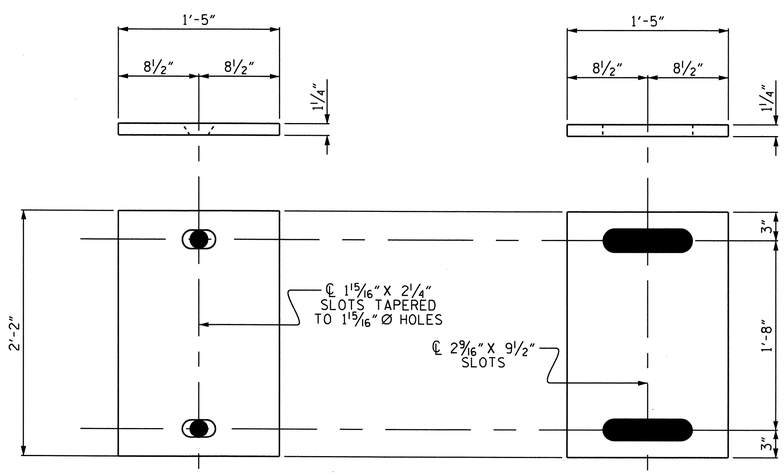

P1 (FIXED) — P1 (5 REQ'D)

P2 (EXPANSION) — P2 (5 REQ'D)

SOLE PLATE DETAILS ("P")

NOTES

AT ALL FIXED POINTS OF SUPPORT, NUTS FOR ANCHOR BOLTS ARE TO BE TIGHTENED FINGER TIGHT AND THEN BACKED OFF 1/2 TURN. THE THREAD OF THE NUT AND BOLT SHALL THEN BE BURRED WITH A SHARP POINTED TOOL.

THE 2" Ø PIPE SLEEVE SHALL BE CUT FROM SCHEDULE 40 PVC PLASTIC PIPE. THE PVC PLASTIC PIPE SHALL MEET THE REQUIREMENTS OF ASTM D1785.

THE PAYMENT FOR THE PIPE SLEEVES AND 4" Ø X 1'-6 1/4" STANDARD PIPE ASSEMBLY SHALL BE INCLUDED IN THE SEVERAL PAY ITEMS.

FOR AASHTO M270 GRADE 50W STRUCTURAL STEEL, SOLE PLATE SHALL BE AASHTO M270 GRADE 50W AND SHALL NOT BE GALVANIZED. ANCHOR BOLTS, NUTS AND WASHERS SHALL BE GALVANIZED IN ACCORDANCE WITH THE STANDARD SPECIFICATIONS.

ANCHOR BOLTS SHALL MEET THE REQUIREMENTS OF ASTM A449. NUTS SHALL MEET THE REQUIREMENTS OF AASHTO M291-DH OR AASHTO M292-2H. WASHERS SHALL MEET THE REQUIREMENTS OF AASHTO M293. SHOP DRAWINGS ARE NOT REQUIRED FOR ANCHOR BOLTS, NUTS AND WASHERS. SHOP INSPECTION IS REQUIRED.

WHEN FIELD WELDING THE SOLE PLATE TO THE GIRDER FLANGE, USE TEMPERATURE INDICATING WAX PENS, OR OTHER SUITABLE MEANS, TO ENSURE THAT THE TEMPERATURE OF THE SOLE PLATE DOES NOT EXCEED 300°F. TEMPERATURES ABOVE THIS MAY DAMAGE THE ELASTOMER.

ALL SURFACES OF BEARING PLATES SHALL BE SMOOTH AND STRAIGHT.

THE CLOSURE PLATE, GROUT PIPE AND STANDARD PIPE FOR THE EXPANSION ASSEMBLY NEED NOT BE GALVANIZED.

THE CONTRACTOR'S ATTENTION IS CALLED TO THE FOLLOWING PROCEDURE, WHICH MAY BE REQUIRED BY THE ENGINEER, TO RESET ELASTOMERIC BEARINGS DUE TO GIRDER TRANSLATION AND END ROTATION:

1. ONCE THE DECK HAS CURED, THE GIRDERS SHALL BE JACKED THEN THE ANCHOR BOLTS AND ELASTOMERIC BEARING SLOTS CENTERED AS NEARLY AS PRACTICAL ABOUT THE BEARING STIFFENER. THIS OPERATION SHALL BE PERFORMED AT APPROXIMATELY 60° F.

2. AFTER CENTERING THE ELASTOMERIC BEARING SLOTS AND ANCHOR BOLTS, THE ANCHOR BOLTS SHALL BE GROUTED.

   THE CONTRACTOR MAY PROPOSE ALTERNATE METHODS, PROVIDED DETAILS ARE SUBMITTED TO THE ENGINEER FOR REVIEW AND APPROVAL.

ELASTOMER IN ALL BEARING PADS SHALL BE 60 DUROMETER HARDNESS.

—LOAD RATINGS—	
60 DUROMETER	MAX.D.L.+ L.L.
TYPE VI	380 k

PROJECT NO. R-2417AA

LEE COUNTY

STATION: 137+42.08 -L-

STATE OF NORTH CAROLINA
DEPARTMENT OF TRANSPORTATION
RALEIGH

STANDARD

ELASTOMERIC BEARING DETAILS

(SBL)

NORTH CAROLINA PROFESSIONAL SEAL 24399 ENGINEER THEO J. BEACH
11/23/10

REVISIONS						SHEET NO.
NO.	BY:	DATE:	NO.	BY:	DATE:	S-149
1			3			TOTAL SHEETS
2			4			162

STD. NO. EB2

STR. #5

ASSEMBLED BY : T. BANKOVICH		DATE : 9-2009	
CHECKED BY : N. PIERCE		DATE : 10-2009	
DRAWN BY : EEM 10/95	REV. 10/17/00	RWW/LES	
CHECKED BY : PEK 10/95	REV. 7/10/01	LES/RDR	
	REV. 5/1/06	TLA/GM	

24-NOV-2010 08:59
R:\Structures\str5-L-overAWRR(RtLane)\Super_draw\R-2417AA_str5_BG.dgn
tjbankovich

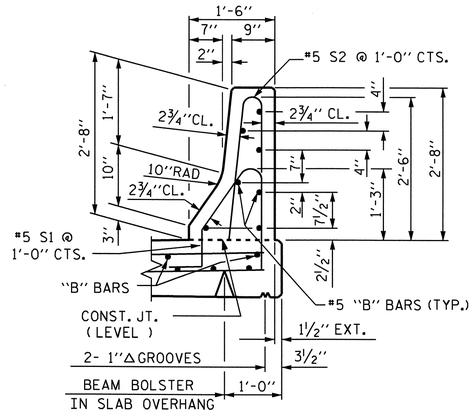

SECTION THRU RAIL

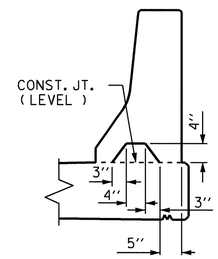

SECTION S-S

AT DAM IN OPEN JOINT
(THIS IS TO BE USED ONLY
WHEN SLIP FORM IS USED)

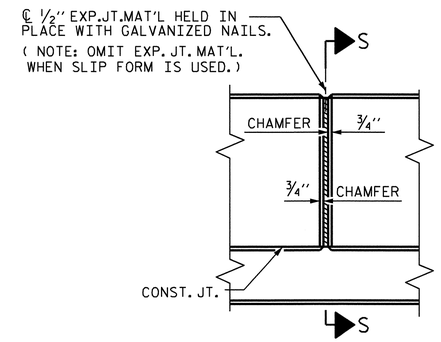

ELEVATION AT EXPANSION JOINTS

BARRIER RAIL DETAILS

BAR TYPES

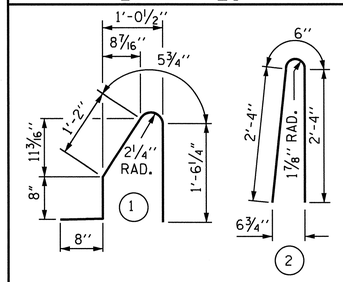

ALL BAR DIMENSIONS ARE OUT TO OUT

BILL OF MATERIAL

FOR CONCRETE BARRIER RAIL ONLY

BAR	NO.	SIZE	TYPE	LENGTH	WEIGHT
* B1	56	#5	STR	12'-5"	725
* B2	84	#5	STR	29'-7"	2592
* S1	442	#5	1	4'-6"	2075
* S2	448	#5	2	5'-2"	2414

* EPOXY COATED REINFORCING STEEL	7806 LBS.
CLASS AA CONCRETE	44.5 CU. YDS.
CONCRETE BARRIER RAIL	443.99 LIN. FT.

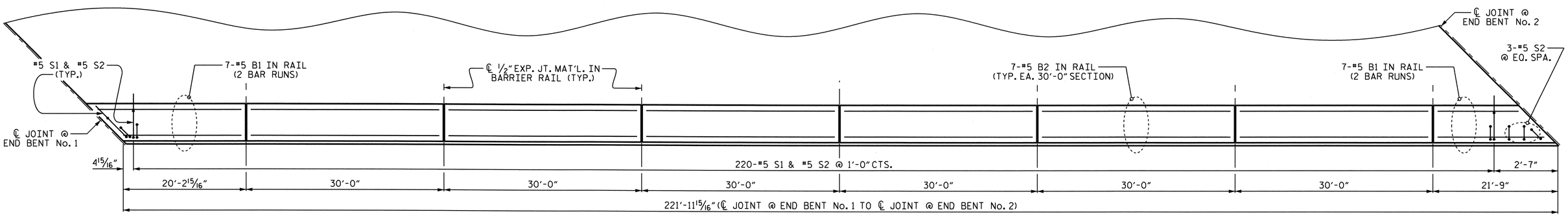

PLAN OF BARRIER PLAN

RIGHT SIDE SHOWN, LEFT SIDE SIMILAR
DIMENSIONS SHOWN ARE ALONG BACK FACE OF BARRIER RAIL

NOTES:

THE BARRIER RAIL IN THE SPAN SHALL NOT BE CAST UNTIL ALL SLAB CONCRETE IN THAT SPAN HAS BEEN CAST AND HAS REACHED A MINIMUM COMPRESSIVE STRENGTH OF 3,000 PSI.

ALL REINFORCING STEEL IN BARRIER RAILS SHALL BE EPOXY COATED.

THE #5 S1 AND #5 S2 BARS MAY BE SHIFTED AS NECESSARY IN ORDER TO MAINTAIN A 2" MINIMUM CLEARANCE TO THE ½" EXPANSION JOINT MATERIAL IN BARRIER RAIL.

VERTICAL GROOVED CONTRACTION JOINTS, ½" IN DEPTH, SHALL BE TOOLED IN ALL EXPOSED FACES OF THE BARRIER RAIL AND IN ACCORDANCE WITH ARTICLE 825-10(B) OF THE STANDARD SPECIFICATIONS. THE CONTRACTION JOINT SHALL BE LOCATED AT EACH THIRD POINT BETWEEN BARRIER RAIL EXPANSION JOINTS. ONLY ONE CONTRACTION JOINT IS REQUIRED AT MIDPOINT OF BARRIER RAIL SEGMENTS LESS THAN 20 FEET IN LENGTH AND NO CONTRACTION JOINTS ARE REQUIRED FOR THOSE SEGMENTS LESS THAN 10 FEET IN LENGTH.

PROJECT NO. R-2417AA
LEE COUNTY
STATION: 137+42.08 -L-

STATE OF NORTH CAROLINA
DEPARTMENT OF TRANSPORTATION
RALEIGH
SUPERSTRUCTURE

CONCRETE
BARRIER RAIL
(SBL)

NORTH CAROLINA PROFESSIONAL SEAL 24390 ENGINEER THEO J. BEACH
11/23/10

REVISIONS						SHEET NO.
NO.	BY:	DATE:	NO.	BY:	DATE:	S-150
1			3			TOTAL SHEETS
2			4			162

STD. NO. CBR1 STR. #5

DRAWN BY : T. BANKOVICH DATE : 9-2009
CHECKED BY : N. PIERCE DATE : 10-2009

18-OCT-2010 14:30
R:\Structures\str5-L-overAWRR(RtLane)\Super_draw\R-2417AA_str5_BR.dgn
sbwilliams

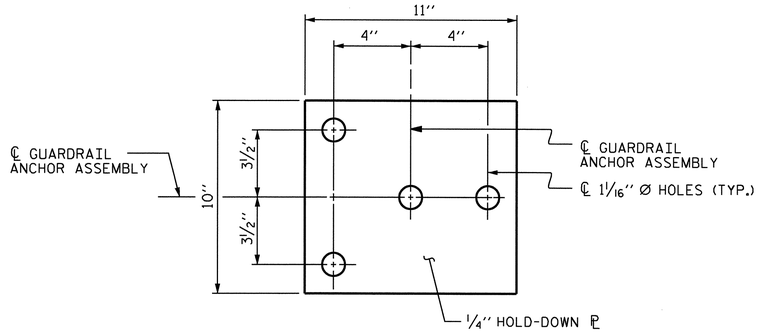

PLAN

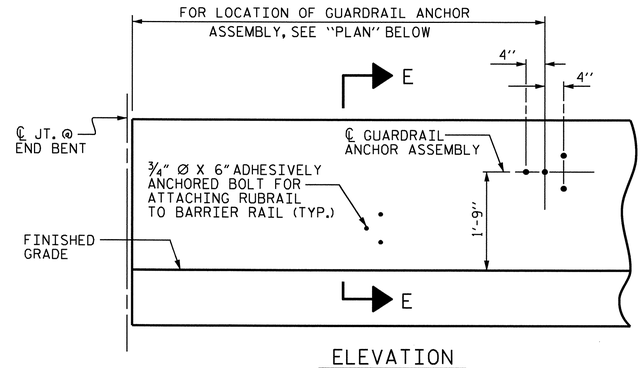

ELEVATION

FOR LOCATION OF RUBRAIL, SEE ROADWAY STD. 862.03

NOTES

THE GUARDRAIL ANCHOR ASSEMBLY SHALL CONSIST OF A 1/4'' HOLD DOWN PLATE AND 4 - 7/8'' Ø BOLTS WITH NUTS AND WASHERS, RUBRAIL, AND ADHESIVELY ANCHORED BOLTS.

THE HOLD-DOWN PLATE SHALL CONFORM TO AASHTO M270 GRADE 36. AFTER FABRICATION, THE HOLD-DOWN PLATE SHALL BE HOT-DIP GALVANIZED IN ACCORDANCE WITH AASHTO M111.

BOLTS SHALL CONFORM TO THE REQUIREMENTS OF ASTM A307 AND NUTS SHALL CONFORM TO THE REQUIREMENTS OF AASHTO M291. BOLTS, NUTS AND WASHERS SHALL BE GALVANIZED. (AT THE CONTRACTOR'S OPTION, STAINLESS STEEL BOLTS, NUTS AND WASHERS MAY BE USED AS AN ALTERNATE FOR THE 7/8'' Ø GALVANIZED BOLTS, NUTS AND WASHERS. THEY SHALL CONFORM TO OR EXCEED THE MECHANICAL REQUIREMENTS OF ASTM A307. THE USE OF THIS ALTERNATE SHALL BE APPROVED BY THE ENGINEER.)

THE GUARDRAIL ANCHOR ASSEMBLY IS REQUIRED AT ALL POINTS WHERE APPROACH GUARDRAIL IS TO BE ATTACHED TO THE END OF BARRIER RAIL. FOR POINTS OF ATTACHMENT, SEE SKETCH.

AFTER INSTALLATION, THE EXPOSED THREAD OF THE BOLT SHALL BE BURRED WITH A SHARP POINTED TOOL.

THE COST OF THE GUARDRAIL ANCHOR ASSEMBLY SHALL BE INCLUDED IN THE UNIT CONTRACT PRICE BID FOR CONCRETE BARRIER RAIL.

THE 1 1/4'' Ø HOLES SHALL BE FORMED OR DRILLED WITH A CORE BIT. IMPACT TOOLS WILL NOT BE PERMITTED. ANY CONCRETE DAMAGED BY THIS WORK SHALL BE REPAIRED TO THE SATISFACTION OF THE ENGINEER.

THE C6 X 8.2 RUBRAIL IS TO BE ADHESIVELY ANCHORED TO THE RAIL USING THREE 3/4" Ø X 6" BOLTS WITH WASHERS. LEVEL ONE FIELD TESTING IS REQUIRED, AND THE YIELD LOAD OF THE 3/4" Ø BOLT IS 12 KIPS. FOR ADHESIVELY ANCHORED ANCHOR BOLTS OR DOWELS, SEE SPECIAL PROVISIONS. SEE ROADWAY STANDARD 862.03 FOR DETAILS AND LOCATION OF THE RUBRAIL.

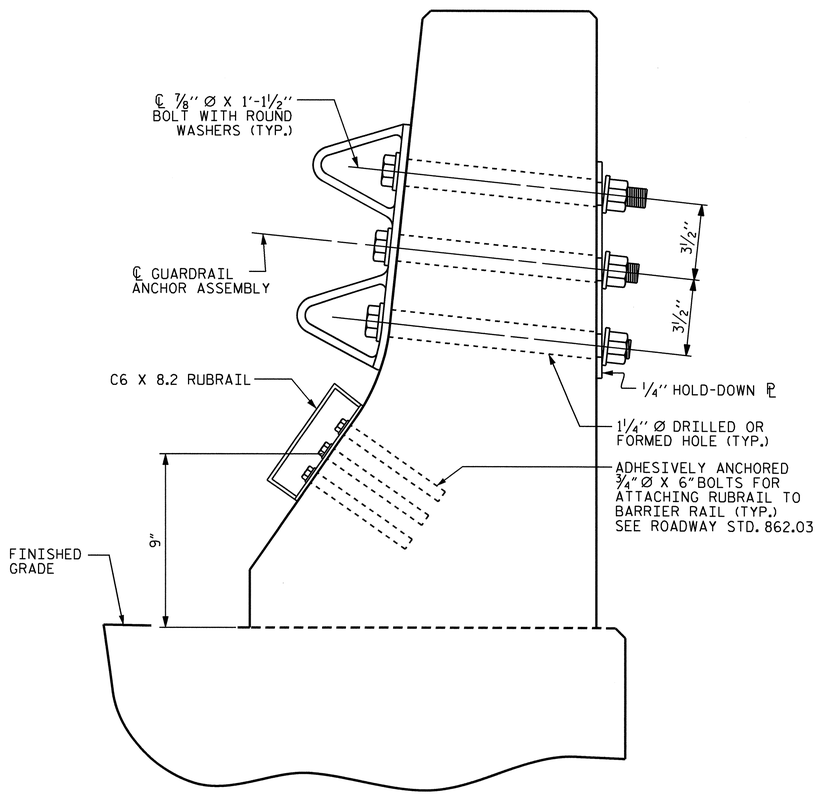

SECTION E-E

GUARDRAIL ANCHOR ASSEMBLY DETAILS

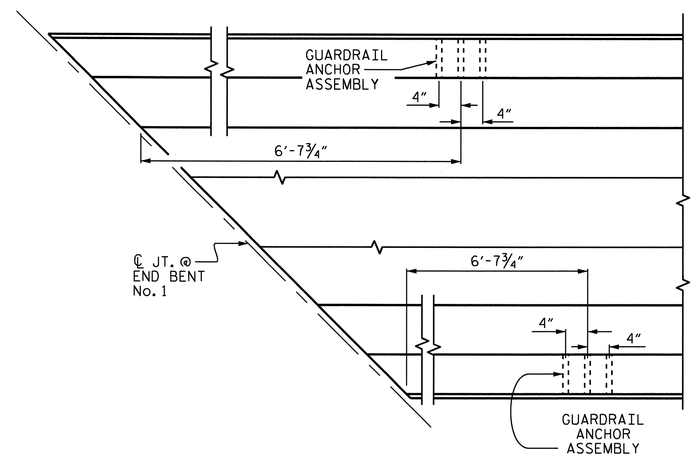

PLAN

LOCATION OF ANCHORS FOR GUARDRAIL

END BENT No. 1 SHOWN, END BENT No. 2 SIMILAR

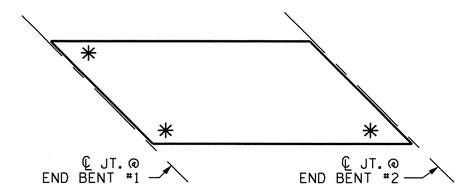

SKETCH SHOWING POINTS OF ATTACHMENTS

✳ DENOTES GUARDRAIL ANCHOR ASSEMBLY

PROJECT NO. R-2417AA

LEE COUNTY

STATION: 137+42.08 -L-

STATE OF NORTH CAROLINA
DEPARTMENT OF TRANSPORTATION
RALEIGH

SUPERSTRUCTURE

GUARDRAIL ANCHORAGE FOR BARRIER RAIL

(SBL)

NORTH CAROLINA PROFESSIONAL SEAL 24390 ENGINEER THEO J. BEACH
11/23/10

REVISIONS						SHEET NO.
NO.	BY:	DATE:	NO.	BY:	DATE:	S-151
1			3			TOTAL SHEETS
2			4			162

ASSEMBLED BY : T. BANKOVICH	DATE : 9-2009
CHECKED BY : N. PIERCE	DATE : 10-2009
DRAWN BY : TLA 5/06	ADDED 5/1/06R KMM/GM
CHECKED BY : GM 5/06	

18-OCT-2010 14:29
R:\Structures\Str5-L-overAWRR(RtLane)\Super_draw\R-2417AA_str5_BR.dgn
sbwilliams

STD. NO. GRA2

STR. #5

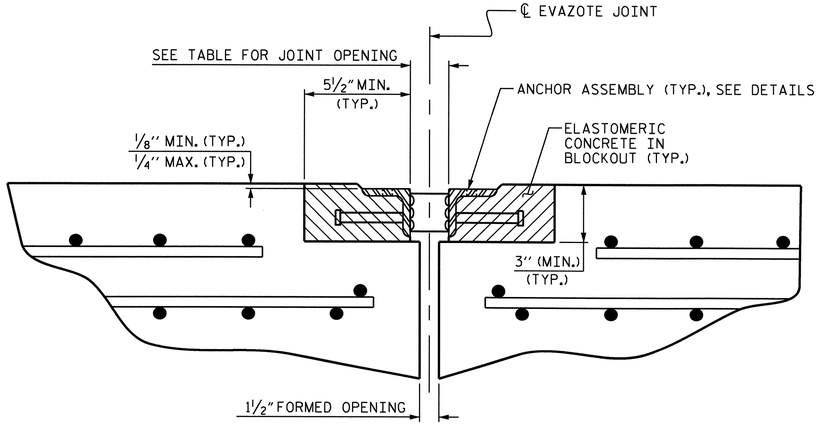

ARMORED JOINT DETAILS

SECTION NORMAL TO JOINT AT BENT

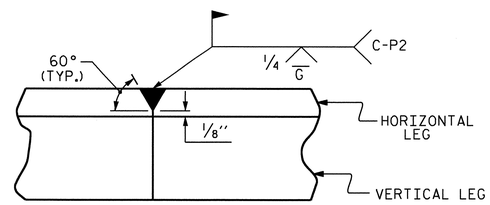

DETAIL- FIELD WELD SPLICE OF ANGLE

NOTES

ANGLES SHALL CONFORM TO AASHTO M270 GRADE 36 STEEL OR APPROVED EQUAL. ALL STUD ANCHORS SHALL CONFORM TO AASHTO M169 GRADES 1010 THRU 1020 OR APPROVED EQUAL.

STUD ANCHORS SHALL BE SHOP WELDED AND ALL HOLES SHALL BE SHOP DRILLED AS SHOWN ON THE PLANS. STUD ANCHORS SHALL BE ELECTRIC ARC END WELDED WITH COMPLETE FUSION.

UPON COMPLETION OF SHOP FABRICATION, THE ENTIRE ANCHOR ASSEMBLY SHALL BE METALLIZED. THE ½" Ø STUD ANCHORS AND ANCHOR TABS NEED NOT BE METALLIZED. SEE SPECIAL PROVISION FOR THERMAL SPRAYED COATINGS (METALLIZATION).

ANCHOR ASSEMBLY SHALL BE MADE CONTINUOUS THE LENGTH OF THE JOINT FROM GUTTER TO GUTTER. FOR FIELD SPLICES AT ALL CROWN BREAK POINTS, THE ENDS OF THE STEEL ANGLES SHALL BE CUT PARALLEL TO THE BRIDGE CENTERLINE. FINISHED FIELD WELDS SHALL BE GROUND SMOOTH AND COATED WITH A MINIMUM THICKNESS OF 4 DRY MILS OF ZINC-RICH PAINT IN ACCORDANCE WITH THE STANDARD SPECIFICATIONS.

ANCHOR ASSEMBLY SEGMENTS SHALL NOT BE LESS THAN 12 FEET NOR MORE THAN 20 FEET IN LENGTH. SHORTER SEGMENTS MAY BE USED AT THE EDGE OF ROADWAY OR AT POINTS OF STAGED CONSTRUCTION.

THE ANCHOR ASSEMBLY SHALL BE SECURED AND LEVELED AS SHOWN IN THE "ARMORED JOINT ANCHOR ASSEMBLY DETAILS". NO SUBMITTALS ARE REQUIRED FOR ⅜" Ø EXPANSION ANCHORS, NUTS OR WASHERS. THE CONTRACTOR MAY SUBMIT FOR APPROVAL AN ALTERNATE METHOD OF ALIGNING AND LEVELING THE ANGLES. THE ALTERNATE METHOD SHALL NOT INCLUDE ANY WELDING TO THE OUTSIDE FACE OF THE ANGLES.

AFTER THE ELASTOMERIC CONCRETE HAS BEEN CAST ON BOTH SIDES OF THE JOINT, REMOVE ANY EXCESS CONCRETE THAT COMES THROUGH THE WEEP HOLES AND THOROUGHLY CLEAN THE ANGLES. ANY DAMAGED STEEL SHALL BE COATED WITH A MINIMUM OF 4 MILS OF ZINC-RICH PAINT IN ACCORDANCE WITH THE STANDARD SPECIFICATIONS.

SEE SPECIAL PROVISIONS FOR EVAZOTE JOINT SEALS.

SEE SPECIAL PROVISIONS FOR ELASTOMERIC CONCRETE.

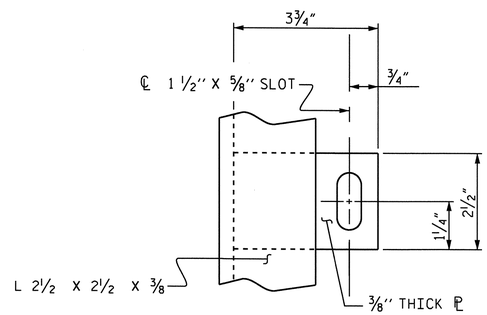

PLAN VIEW OF TAB

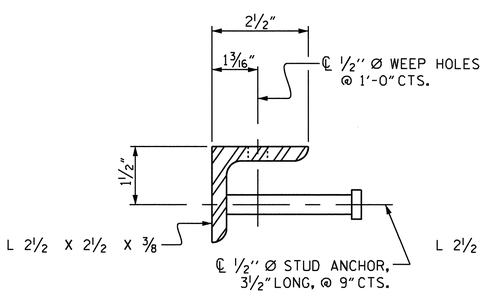

SECTION VIEW OF STUD

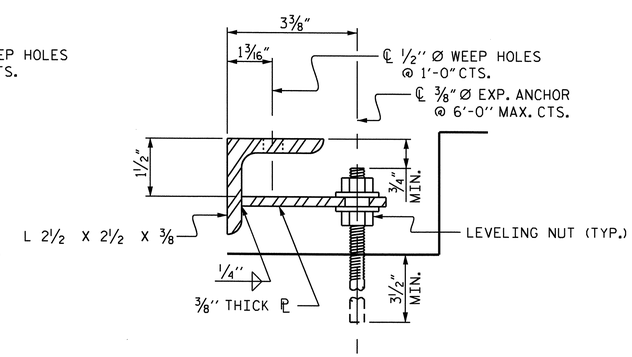

SECTION VIEW OF TAB

ARMORED JOINT ANCHOR ASSEMBLY DETAILS

MOVEMENT AND SETTING AT EVAZOTE JOINT						
LOCATION	SKEW ANGLE	NOMINAL UNCOMPRESSED SEAL WIDTH	TOTAL MOVEMENT (ALONG ℄ RDWY)	PERPENDICULAR JOINT OPENING AT 45° F	PERPENDICULAR JOINT OPENING AT 60° F	PERPENDICULAR JOINT OPENING AT 90° F
END BENT No. 1 (EXP.)	45°-00'-00"	3 7/16'	2 5/16"	2 13/16"	2 9/16"	2 1/16"
END BENT No. 2 (FIX.)	45°-00'-00"	3 7/16"	——	——	2 9/16"	——

TOTAL MOVEMENT IS CALCULATED ALONG THE CENTERLINE OF ROADWAY.
JOINT OPENINGS ARE MEASURED PERPENDICULAR TO THE JOINT.

BILL OF MATERIAL		
LOCATION	ELASTOMERIC CONCRETE * (CU. FT.)	TOTAL LENGTH OF ANGLE (FT.)
END BENT No. 1	12.3	107.5'
END BENT No. 2	12.3	107.5'

* BASED ON THE MINIMUM BLOCKOUT SHOWN.

PROJECT NO. R-2417AA
LEE COUNTY
STATION: 137+42.08 -L-

STATE OF NORTH CAROLINA
DEPARTMENT OF TRANSPORTATION
RALEIGH

STANDARD
ARMORED EVAZOTE JOINT DETAILS
(SBL)

NORTH CAROLINA PROFESSIONAL SEAL 24390 ENGINEER THEO J. BEACH
11/23/10

REVISIONS						SHEET NO.
NO.	BY:	DATE:	NO.	BY:	DATE:	S-152
1			3			TOTAL SHEETS
2			4			162

STD. NO. AEJ1 STR. #5

ASSEMBLED BY : T. BANKOVICH	DATE : 9-2009
CHECKED BY : N. PIERCE	DATE : 10-2009
DRAWN BY : EEM 1/96	REV. 7/10/01 LES/RDR
CHECKED BY : RGW 1/96	REV. 5/7/03RR RWW/JTE
	REV. 5/1/06 TLA/GM

18-OCT-2010 14:28
R:\Structures\str5-L-overAWRR(RtLane)\Super_draw\R-2417AA_str5_AEJT.dgn
sbwilliams

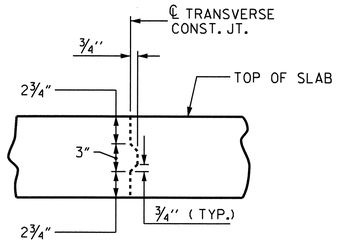

TRANSVERSE CONSTRUCTION JOINT DETAIL

NOTE: REINFORCING STEEL IN SLAB NOT SHOWN.
LONGITUDINAL REINFORCING STEEL SHALL BE CONTINUOUS THRU JOINT

BAR TYPE

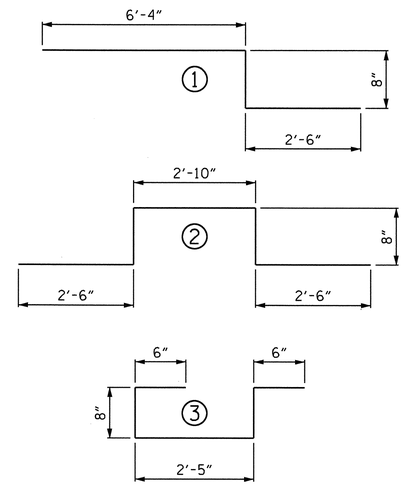

ALL BAR DIMENSIONS ARE OUT TO OUT.

BILL OF MATERIAL

BAR	NO.	SIZE	TYPE	LENGTH	WEIGHT	BAR	NO.	SIZE	TYPE	LENGTH	WEIGHT
* A1	334	#5	STR	40'-11"	14254	A204	6	#5	STR	32'-9"	205
A2	334	#5	STR	40'-11"	14254	A205	6	#5	STR	31'-2"	195
* A3	6	#5	STR	7'-0"	44	A206	6	#5	STR	29'-6"	185
						A207	6	#5	STR	27'-11"	175
* A100	6	#5	STR	39'-3"	246	A208	6	#5	STR	26'-3"	164
* A101	6	#5	STR	37'-8"	236	A209	6	#5	STR	24'-8"	154
* A102	6	#5	STR	36'-0"	225	A210	6	#5	STR	23'-0"	144
* A103	6	#5	STR	34'-5"	215	A211	6	#5	STR	21'-5"	134
* A104	6	#5	STR	32'-9"	205	A212	6	#5	STR	19'-9"	124
* A105	6	#5	STR	31'-2"	195	A213	6	#5	STR	18'-2"	114
* A106	6	#5	STR	29'-6"	185	A214	6	#5	STR	16'-6"	103
* A107	6	#5	STR	27'-11"	175	A215	6	#5	STR	14'-11"	93
* A108	6	#5	STR	26'-3"	164	A216	6	#5	STR	13'-3"	83
* A109	6	#5	STR	24'-8"	154	A217	6	#5	STR	11'-8"	73
* A110	6	#5	STR	23'-0"	144	A218	6	#5	STR	10'-0"	63
* A111	6	#5	STR	21'-5"	134	A219	6	#5	STR	8'-5"	53
* A112	6	#5	STR	19'-9"	124	A220	6	#5	STR	6'-9"	42
* A113	6	#5	STR	18'-2"	114	A221	6	#5	STR	5'-2"	32
* A114	6	#5	STR	16'-6"	103	A222	6	#5	STR	3'-6"	22
* A115	6	#5	STR	14'-11"	93	A223	6	#5	STR	1'-11"	12
* A116	6	#5	STR	13'-3"	83						
* A117	6	#5	STR	11'-8"	73	B1	192	#5	STR	57'-0"	11415
* A118	6	#5	STR	10'-0"	63	* B2	224	#4	STR	29'-6"	4414
* A119	6	#5	STR	8'-5"	53						
* A120	6	#5	STR	6'-9"	42	* G1	2	#5	STR	57'-9"	120
* A121	6	#5	STR	5'-2"	32						
* A122	6	#5	STR	3'-6"	22	* K1	16	#5	1	9'-6"	159
* A123	6	#5	STR	1'-11"	12	* K2	24	#5	2	9'-2"	229
						* K3	32	#5	STR	11'-5"	381
A200	6	#5	STR	39'-3"	246						
A201	6	#5	STR	37'-8"	236	* S1	72	#4	3	4'-9"	228
A202	6	#5	STR	36'-0"	225						
A203	6	#5	STR	34'-5"	215						

REINFORCING STEEL 28,761 LBS.
*EPOXY COATED REINFORCING STEEL 22,921 LBS.

GROOVING BRIDGE FLOOR

APPROACH SLABS	1,660 SQ. FT.
BRIDGE DECK	7,725 SQ. FT.
TOTAL	9,385 SQ. FT.

SUPERSTRUCTURE BILL OF MATERIAL

	CLASS AA CONCRETE	REINFORCING STEEL	EPOXY COATED REINFORCING STEEL
	(CU. YDS.)	(LBS.)	(LBS.)
POUR #1	249.2	———	———
POUR #2	28.8	———	———
TOTAL **	278.0	28,761 LBS.	22,921 LBS.

** QUANTITIES FOR BARRIER RAIL ARE NOT INCLUDED

SUPERSTRUCTURE REINFORCING STEEL LENGTHS ARE BASED ON THE FOLLOWING MINIMUM SPLICE LENGTHS

BAR SIZE	SUPERSTRUCTURE EXCEPT APPROACH SLABS, PARAPET, AND BARRIER RAIL		APPROACH SLABS		PARAPET AND BARRIER RAIL
	EPOXY COATED	UNCOATED	EPOXY COATED	UNCOATED	
#4	2'-0"	1'-9"	2'-0"	1'-9"	2'-9"
#5	2'-6"	2'-2"	2'-6"	2'-2"	3'-5"
#6	3'-0"	2'-7"	3'-10"	2'-7"	4'-4"
#7	5'-3"	3'-6"			
#8	6'-10"	4'-7"			

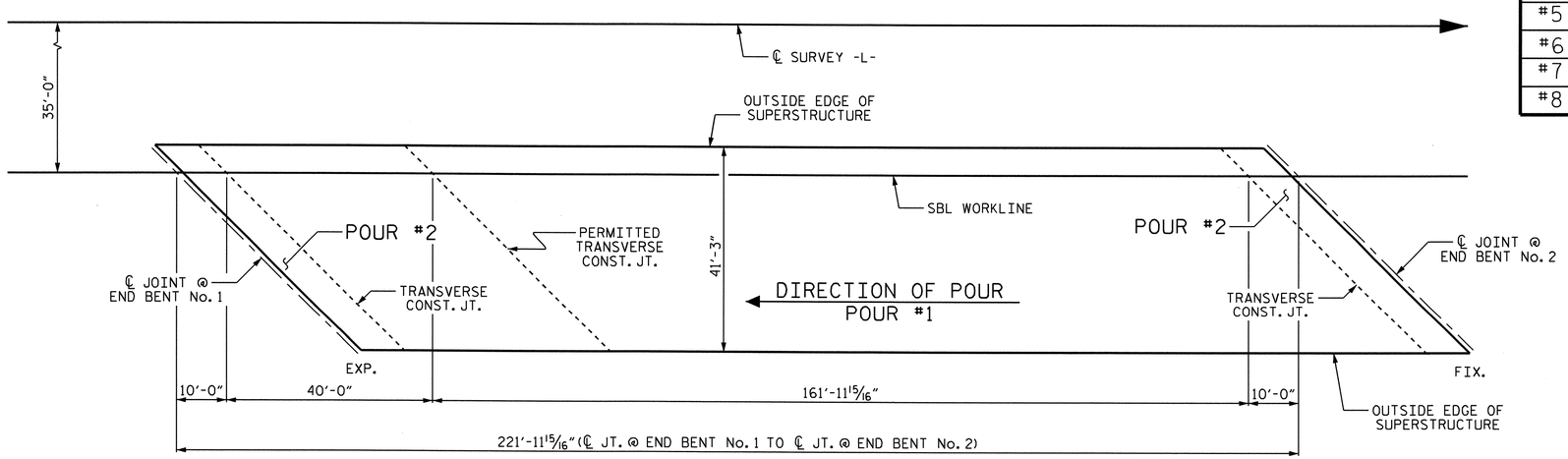

LAYOUT FOR COMPUTING AREA OF REINFORCED CONCRETE DECK SLAB (SQ. FT. 9,157)

PROJECT NO. R-2417AA
LEE COUNTY
STATION: 137+42.08 -L-

STATE OF NORTH CAROLINA
DEPARTMENT OF TRANSPORTATION
RALEIGH

SUPERSTRUCTURE

BILL OF MATERIAL
(SBL)

NORTH CAROLINA PROFESSIONAL SEAL 24390 ENGINEER THEO J. BEACH
11/23/10

REVISIONS						SHEET NO.
NO.	BY:	DATE:	NO.	BY:	DATE:	S-153
1			3			TOTAL SHEETS
2			4			162

DRAWN BY : T. BANKOVICH DATE : 9-2009
CHECKED BY : N. PIERCE DATE : 10-2009

24-NOV-2010 09:44
R:\Structures\str5-L-overAWRR(RtLane)\Super_draw\R-2417AA_str5_BM.dgn
tjbankovich

STR. #5

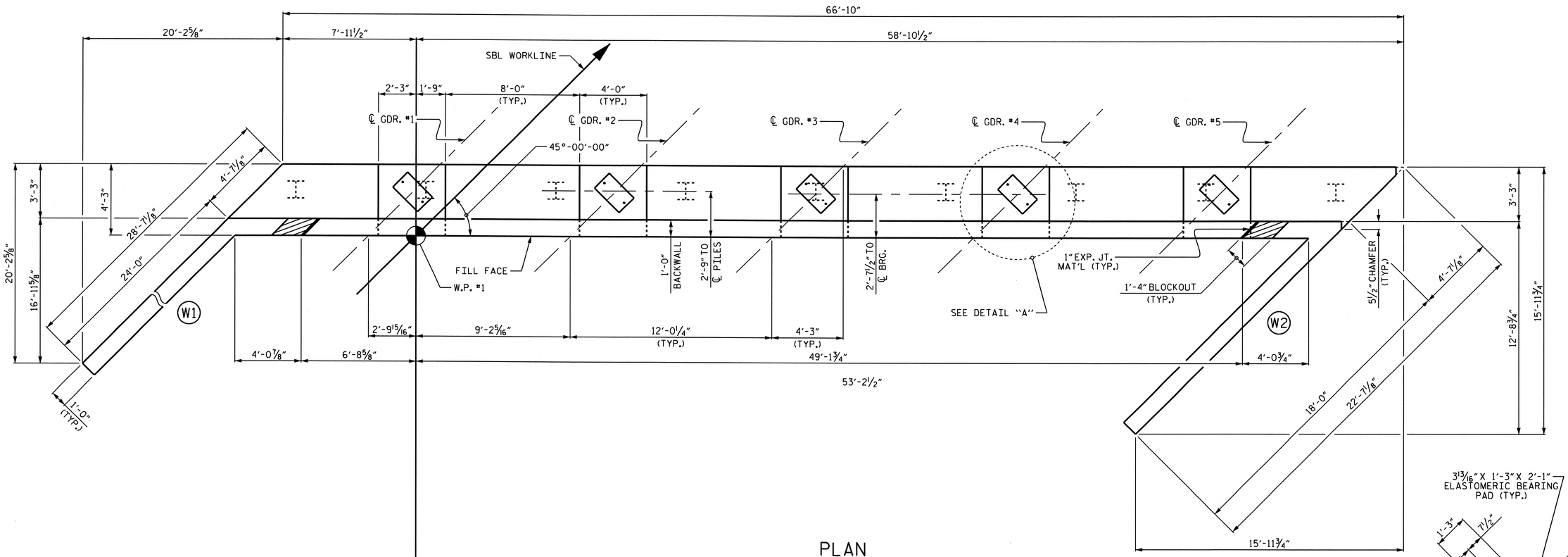

PLAN

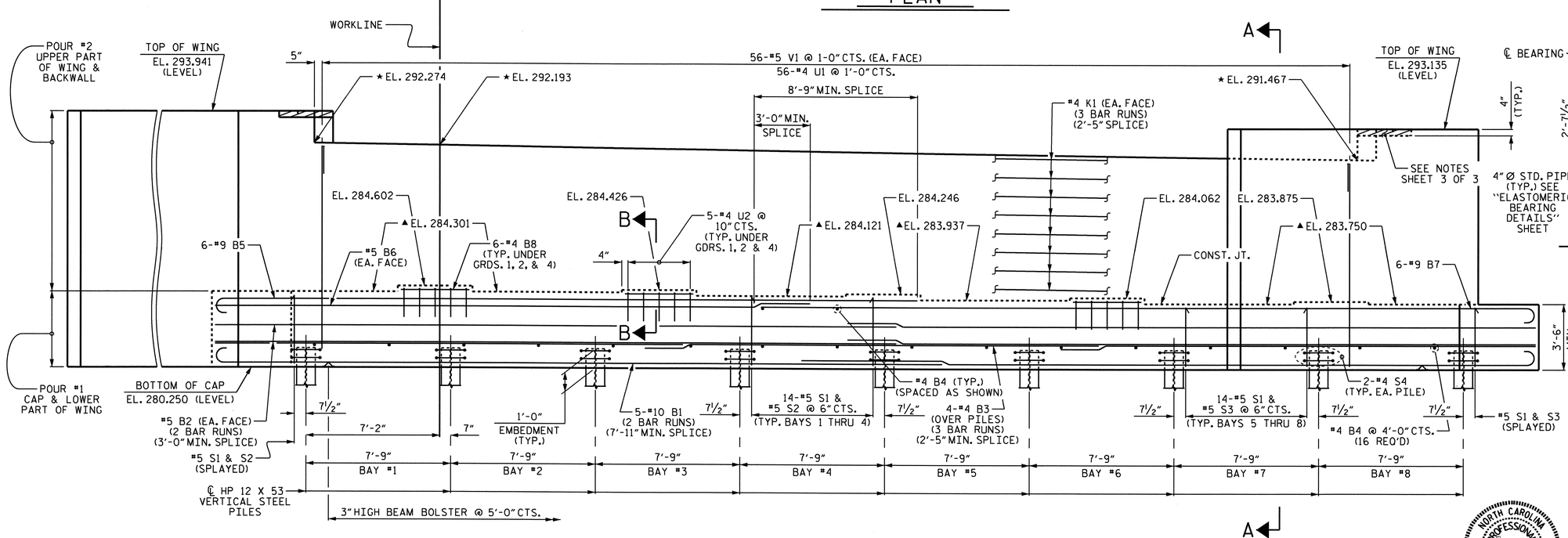

ELEVATION

▲FOR LOCATIONS OF ELEVATIONS BETWEEN BRIDGE SEAT BUILD-UPS SEE SECTION A-A, SHEET 3 OF 3.

★THIS ELEVATION TAKEN AT FILL FACE OF BACKWALL.

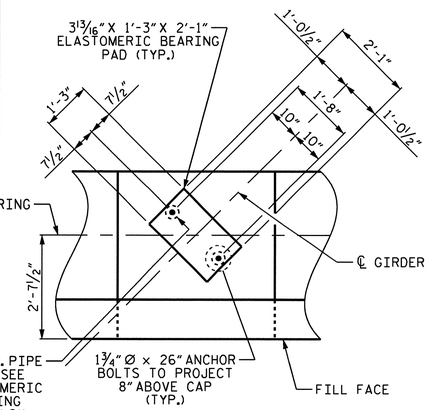

DETAIL "A"

(TYP. EA. GIRDER)

PROJECT NO. R-2417AA

LEE COUNTY

STATION: 137+42.08 -L-

SHEET 1 OF 3

STATE OF NORTH CAROLINA
DEPARTMENT OF TRANSPORTATION
RALEIGH

SUBSTRUCTURE

END BENT No. 1
(SBL)

NORTH CAROLINA PROFESSIONAL SEAL 24390 ENGINEER THEO J. BEACH
11/23/10

REVISIONS						SHEET NO.
NO.	BY:	DATE:	NO.	BY:	DATE:	S-154
1			3			TOTAL SHEETS
2			4			162

DRAWN BY : T. BANKOVICH DATE : 6-2010
CHECKED BY : T.N. CARROLL DATE : 8-2010

18-OCT-2010 14:21
R:\Structures\str5-L-overAWRR(RtLane)\Sub_draw\R-2417AA_str5_E*_1.dgn
sbwilliams

STR. #5

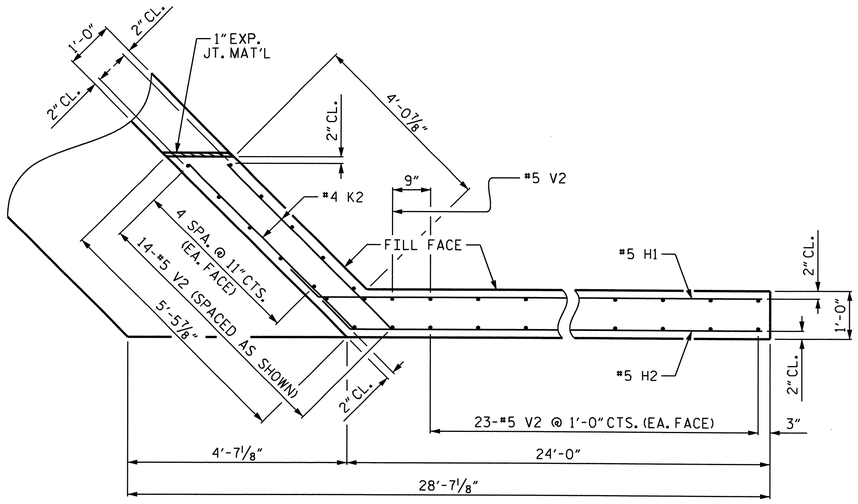

PLAN OF WING (W1)

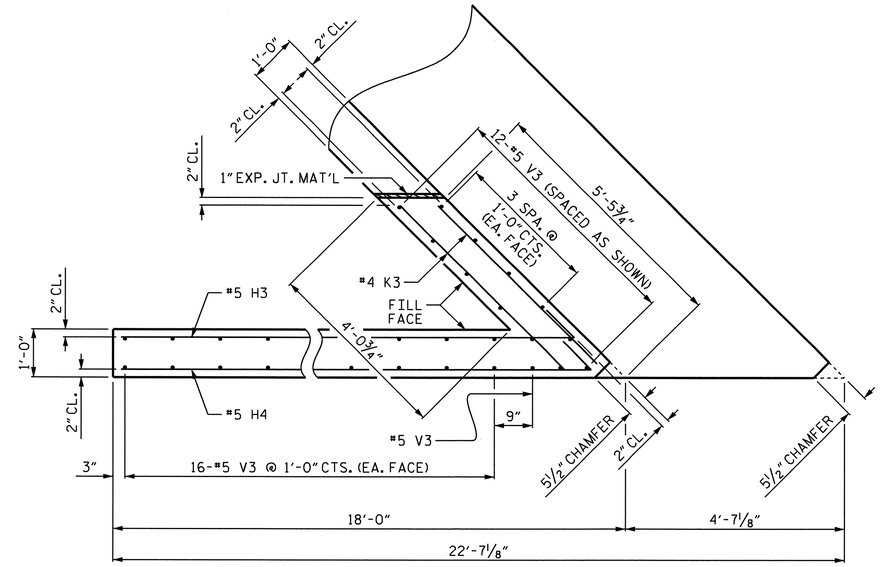

PLAN OF WING (W2)

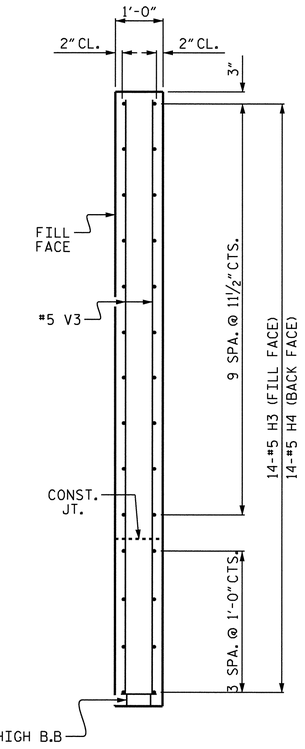

SECTION Y-Y

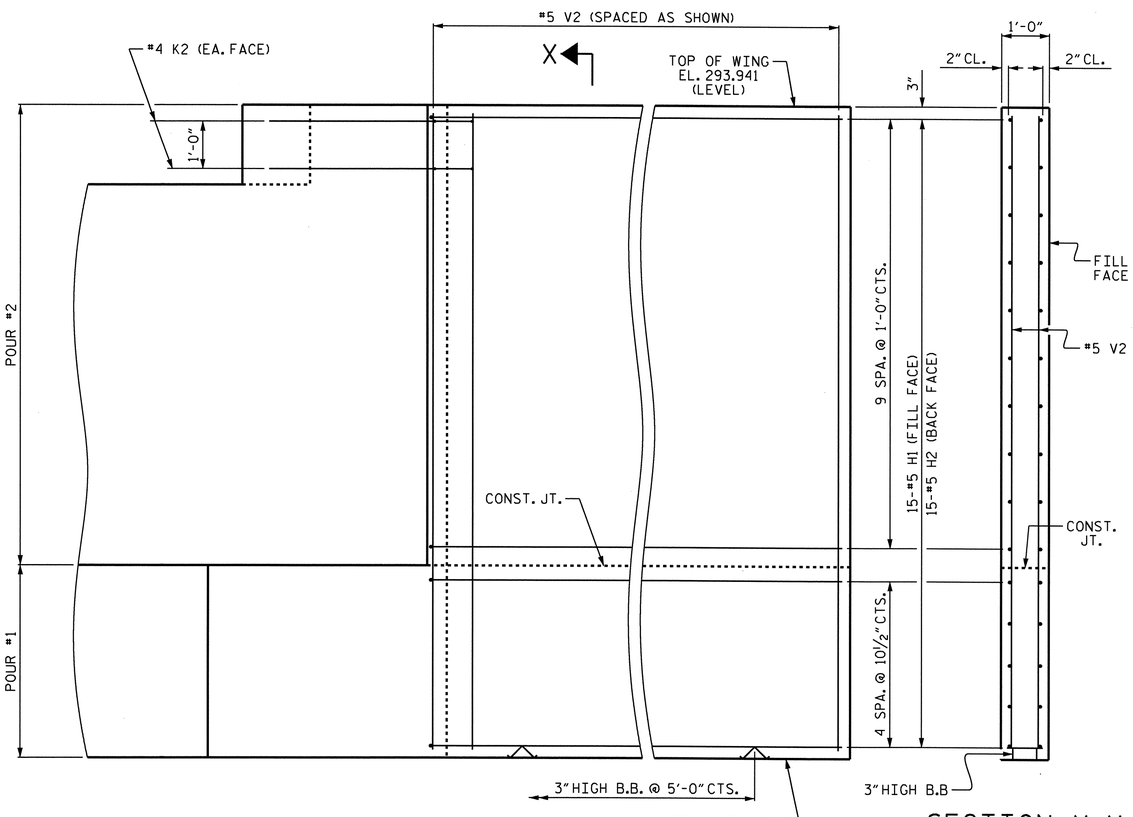

SECTION X-X

ELEVATION OF WING (W1)

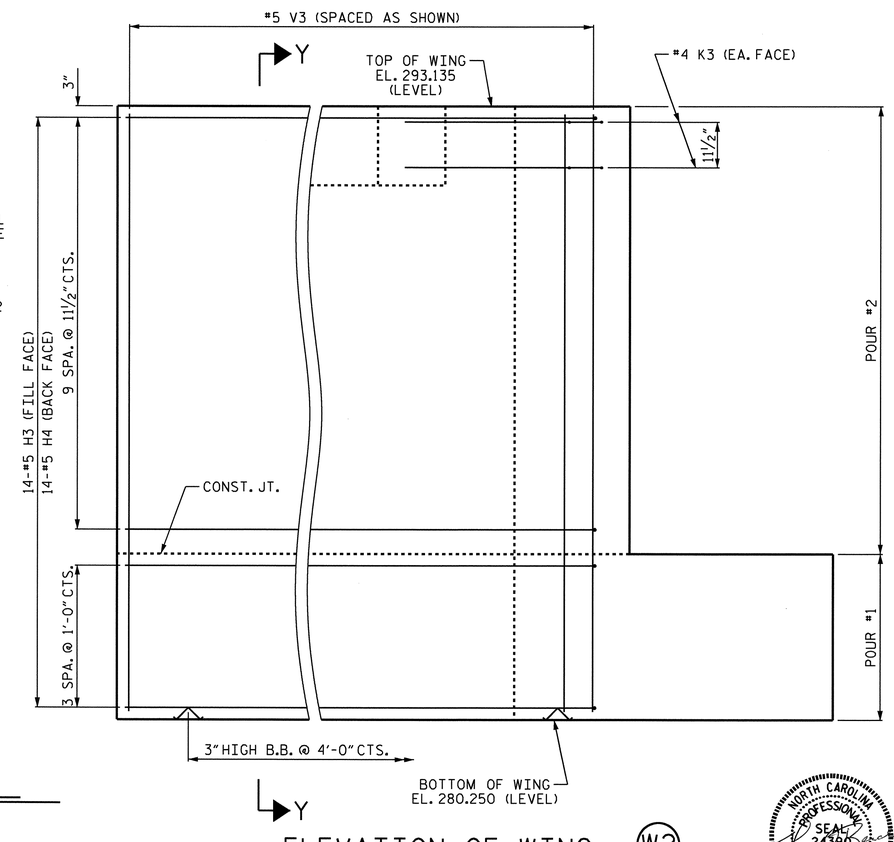

ELEVATION OF WING (W2)

NORTH CAROLINA PROFESSIONAL SEAL 24390 ENGINEER THEO. J. BEACH
11/23/10

PROJECT NO. R-2417AA
LEE COUNTY
STATION: 137+42.08 -L-

SHEET 2 OF 3

STATE OF NORTH CAROLINA
DEPARTMENT OF TRANSPORTATION
RALEIGH

SUBSTRUCTURE

END BENT No. 1
(SBL)

REVISIONS						SHEET NO.
NO.	BY:	DATE:	NO.	BY:	DATE:	S-155
1			3			TOTAL SHEETS
2			4			162

STR. #5

DRAWN BY : T. BANKOVICH DATE : 6-2010
CHECKED BY : T.N. CARROLL DATE : 8-2010

18-OCT-2010 14:18
R:\Structures\str5-L-overAWRR(RtLane)\Sub_draw\R-2417AA_str5_E*_1.dgn
sbwilliams

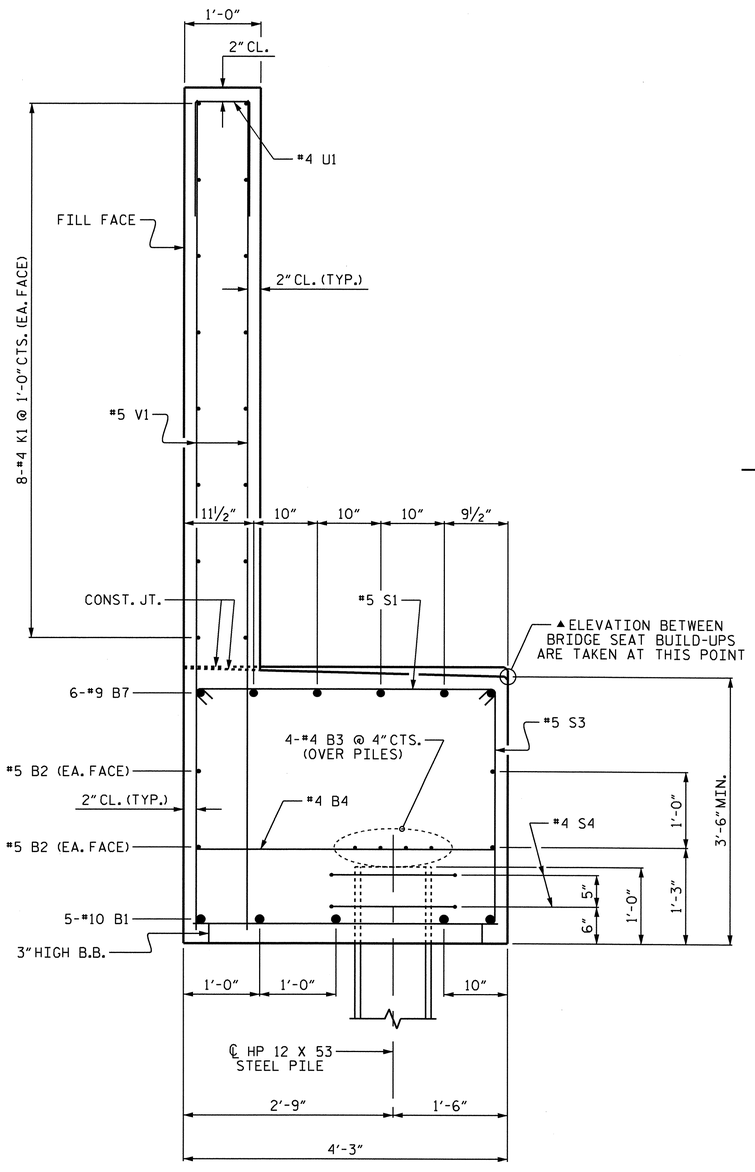

SECTION A-A

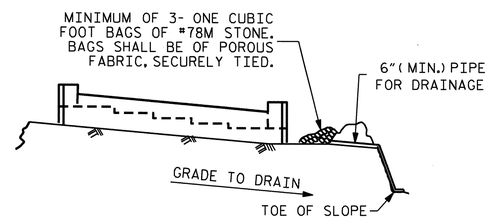

BAGGED STONE AND PIPE SHALL BE PLACED IMMEDIATELY AFTER COMPLETION OF END BENT EXCAVATION. PIPE MAY BE EITHER CONCRETE, CORRUGATED STEEL, CORRUGATED ALUMINUM ALLOY, OR CORRUGATED PLASTIC. PERFORATED PIPE WILL NOT BE ALLOWED.

BAGGED STONE SHALL REMAIN IN PLACE UNTIL THE ENGINEER DIRECTS THAT IT BE REMOVED. THE CONTRACTOR SHALL REMOVE AND DISPOSE OF SILT ACCUMULATIONS AT BAGGED STONE WHEN SO DIRECTED BY THE ENGINEER. BAGS SHALL BE REMOVED AND REPLACED WHENEVER THE ENGINEER DETERMINES THAT THEY HAVE DETERIORATED AND LOST THEIR EFFECTIVENESS.

NO SEPARATE PAYMENT WILL BE MADE FOR THIS WORK AND THE ENTIRE COST OF THIS WORK SHALL BE INCLUDED IN THE UNIT CONTRACT PRICE BID FOR THE SEVERAL PAY ITEMS.

TEMPORARY DRAINAGE AT END BENT

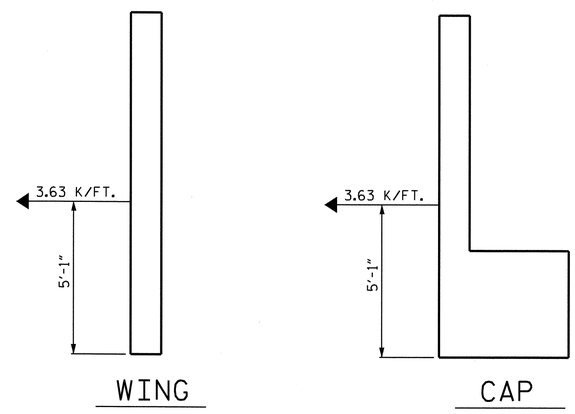

TIEBACK DETAILS

(DETAIL SHOWING TIEBACK RESTRAINT FOR END BENT No. 1)

BAR TYPES

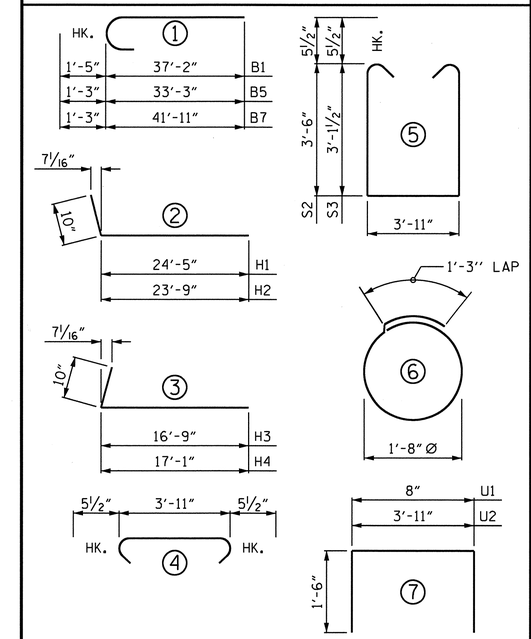

ALL BAR DIMENSIONS ARE OUT TO OUT

BILL OF MATERIAL

END BENT No. 1

BAR	NO.	SIZE	TYPE	LENGTH	WEIGHT
B1	10	#10	1	38'-7"	1660
B2	8	#5	STR	34'-9"	290
B3	12	#4	STR	23'-10"	191
B4	18	#4	STR	3'-11"	47
B5	6	#9	1	34'-6"	704
B6	2	#5	STR	27'-6"	57
B7	6	#9	1	43'-2"	881
B8	18	#4	STR	3'-8"	44
H1	15	#5	2	25'-3'	395
H2	15	#5	2	24'-7"	385
H3	14	#5	3	17'-7"	257
H4	14	#5	3	17'-11"	262
K1	48	#4	STR	23'-10"	764
K2	4	#4	STR	4'-10"	13
K3	4	#4	STR	4'-8"	12
S1	114	#5	4	4'-10"	575
S2	57	#5	5	11'-10"	704
S3	57	#5	5	11'-1"	659
S4	18	#4	6	6'-6"	78
U1	56	#4	7	3'-8"	137
U2	15	#4	7	6'-11"	69
V1	112	#5	STR	10'-10"	1266
V2	61	#5	STR	13'-4"	848
V3	45	#5	STR	12'-6"	587
REINFORCING STEEL					10,885 LBS.

CLASS A CONCRETE	
POUR #1 (CAP & LOWER WING)	46.0 C.Y.
POUR #2 (UPPER WING & BACKWALL)	33.7 C.Y.
TOTAL =	79.7 C.Y.

HP 12 X 53 STEEL PILES	
NO. = 9	450 LIN. FT.
PILE EXCAVATION IN SOIL	90 LIN. FT.
PILE EXCAVATION NOT IN SOIL	90 LIN. FT.

NOTES:

#5 V1 BARS IN BACKWALL SHALL BE PLACED 2" CLEAR FROM TOP OF BACKWALL.

STIRRUPS AND "U" BARS IN CAP MAY BE SHIFTED AS NECESSARY TO CLEAR ANCHOR BOLTS.

BACKWALL SHALL BE PLACED BEFORE APPLYING THE EPOXY PROTECTIVE COATING.

THE TOP SURFACE OF THE CAP EXCEPT THE BRIDGE SEAT BUILD-UPS SHALL BE SLOPED TRANSVERSELY FROM THE FILL FACE TO THE BACK FACE AT THE RATE OF 2%.

THE CONCRETE IN THE SHADED AREA OF THE WING SHALL BE POURED AFTER THE BARRIER RAIL ARE CAST IF SLIP FORMING IS USED.

EPOXY COAT THE END BENT CAP AFTER ADJUSTMENTS ARE MADE TO BEARINGS AND ANCHOR BOLTS ARE GROUTED.

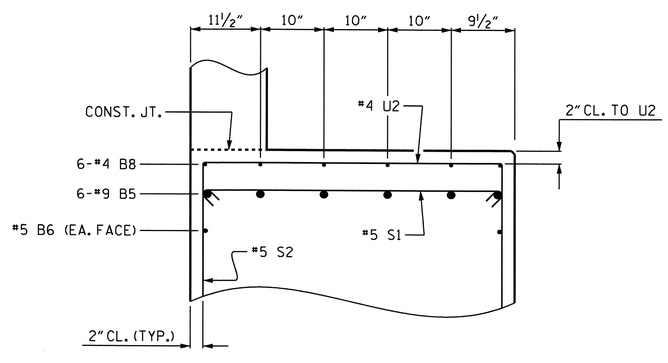

PARTIAL SECTION B-B

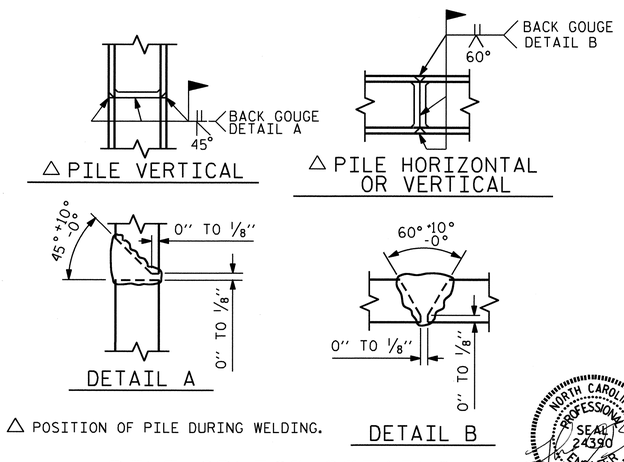

△ POSITION OF PILE DURING WELDING.

PILE SPLICE DETAILS

PROJECT NO. R-2417AA

LEE COUNTY

STATION: 137+42.08 -L-

SHEET 3 OF 3

STATE OF NORTH CAROLINA
DEPARTMENT OF TRANSPORTATION
RALEIGH

SUBSTRUCTURE

END BENT No. 1

(SBL)

NORTH CAROLINA PROFESSIONAL SEAL 24390 ENGINEER THEO J. BEACH
11/23/10

REVISIONS						SHEET NO.
NO.	BY:	DATE:	NO.	BY:	DATE:	S-156
1			3			TOTAL SHEETS
2			4			162

DRAWN BY : T. BANKOVICH DATE : 6-2010
CHECKED BY : T.N. CARROLL DATE : 6-2010

24-NOV-2010 09:49
R:\Structures\str5-L-overAWRR(RtLane)\Sub_draw\R-2417AA_str5_E*_1.dgn
tjbankovich

STR. #5

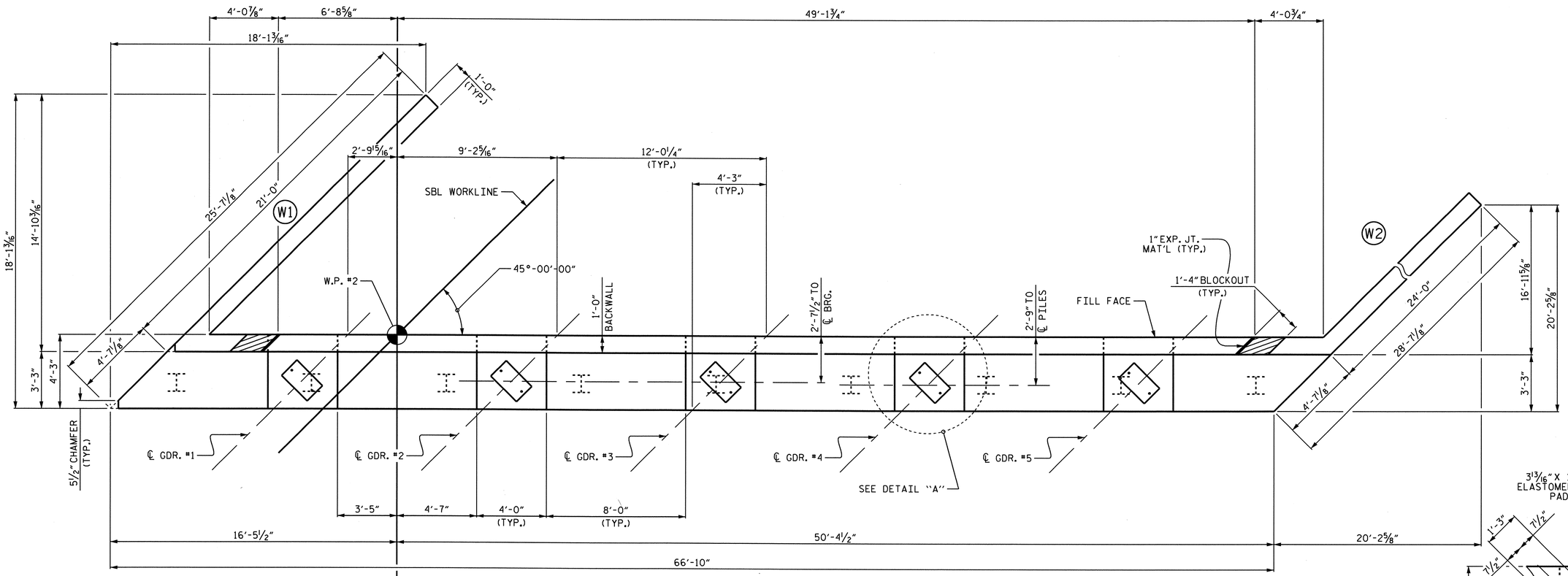

PLAN

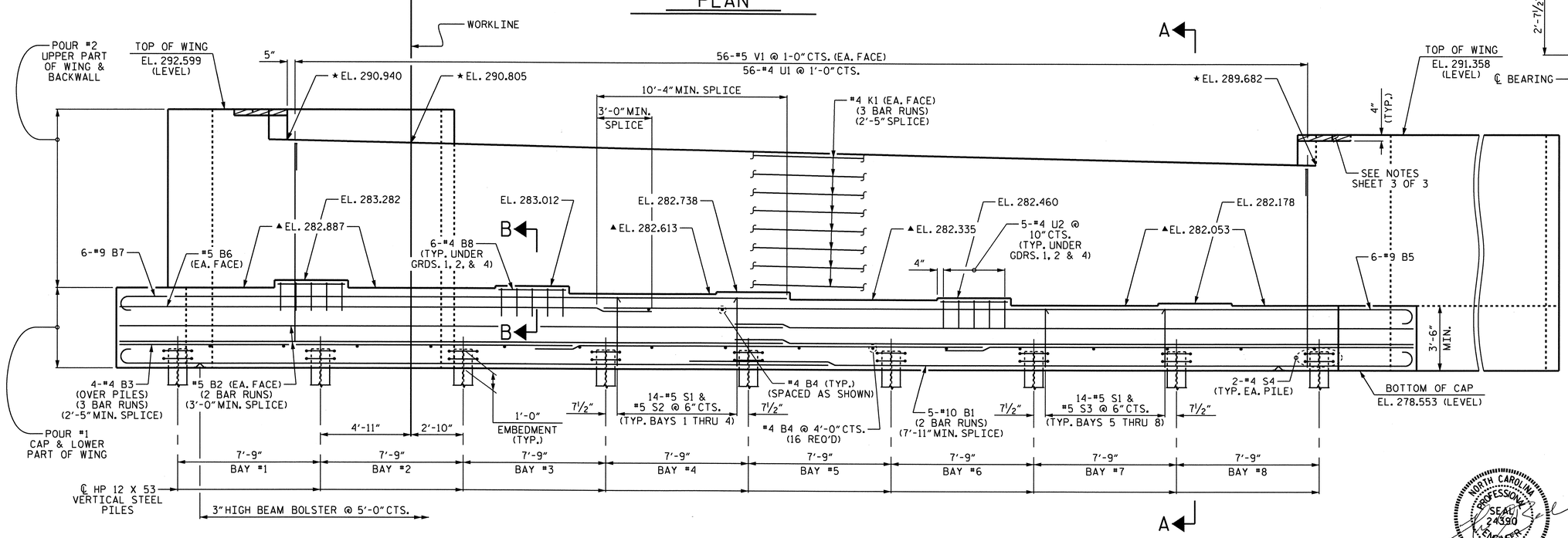

ELEVATION

▲FOR LOCATIONS OF ELEVATIONS BETWEEN BRIDGE SEAT BUILD-UPS SEE SECTION A-A, SHEET 3 OF 3.

★THIS ELEVATION TAKEN AT FILL FACE OF BACKWALL.

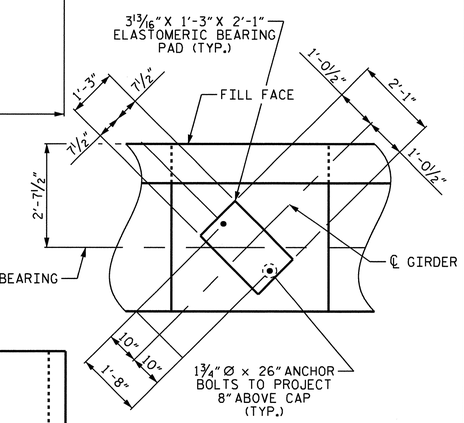

DETAIL "A"

(TYP. EA. GIRDER)

PROJECT NO. R-2417AA

LEE COUNTY

STATION: 137+42.08 -L-

SHEET 1 OF 3

STATE OF NORTH CAROLINA
DEPARTMENT OF TRANSPORTATION
RALEIGH

SUBSTRUCTURE

END BENT No. 2
(SBL)

REVISIONS						SHEET NO.
NO.	BY:	DATE:	NO.	BY:	DATE:	S-157
1			3			TOTAL SHEETS
2			4			162

NORTH CAROLINA PROFESSIONAL SEAL 24390 ENGINEER THEO J. BEACH
11/23/10

DRAWN BY : T. BANKOVICH DATE : 6-2010
CHECKED BY : T.N. CARROLL DATE : 8-2010

24-NOV-2010 09:50
R:\Structures\str5-L-overAWRR(RtLane)\Sub_draw\R-2417AA_str5_E*_2.dgn
tjbankovich

STR. #5

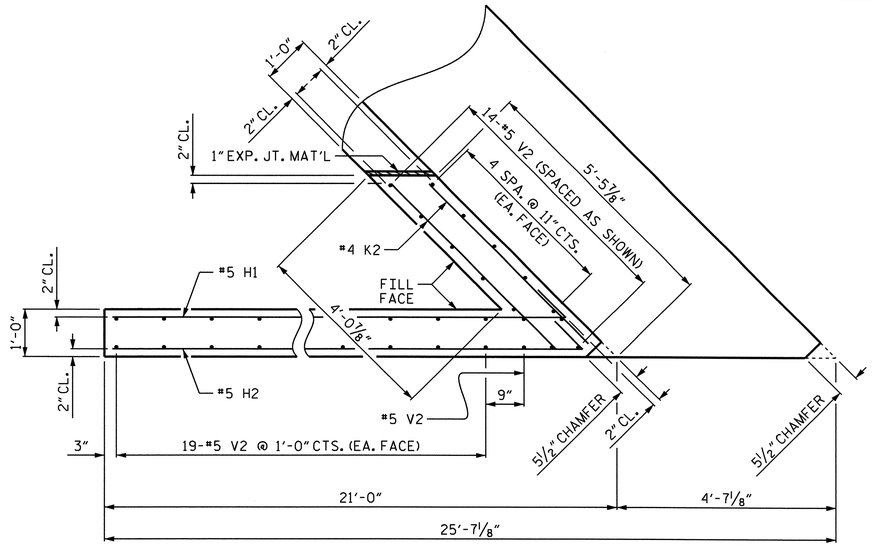

PLAN OF WING (W1)

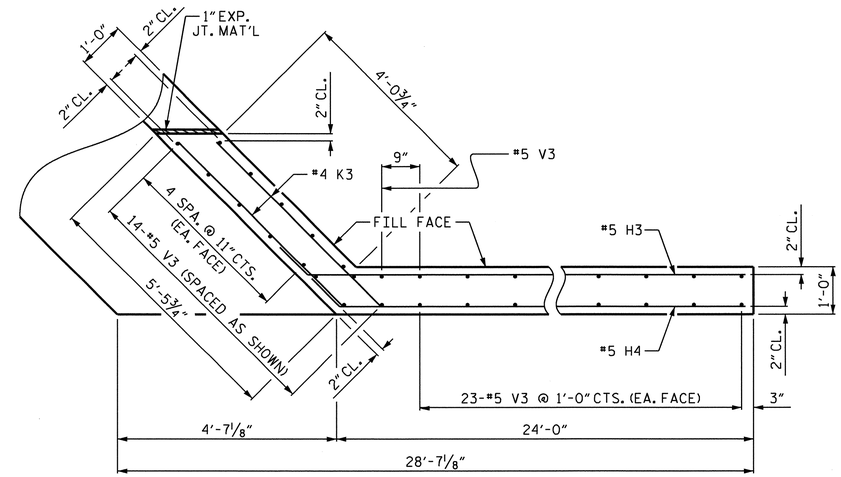

PLAN OF WING (W2)

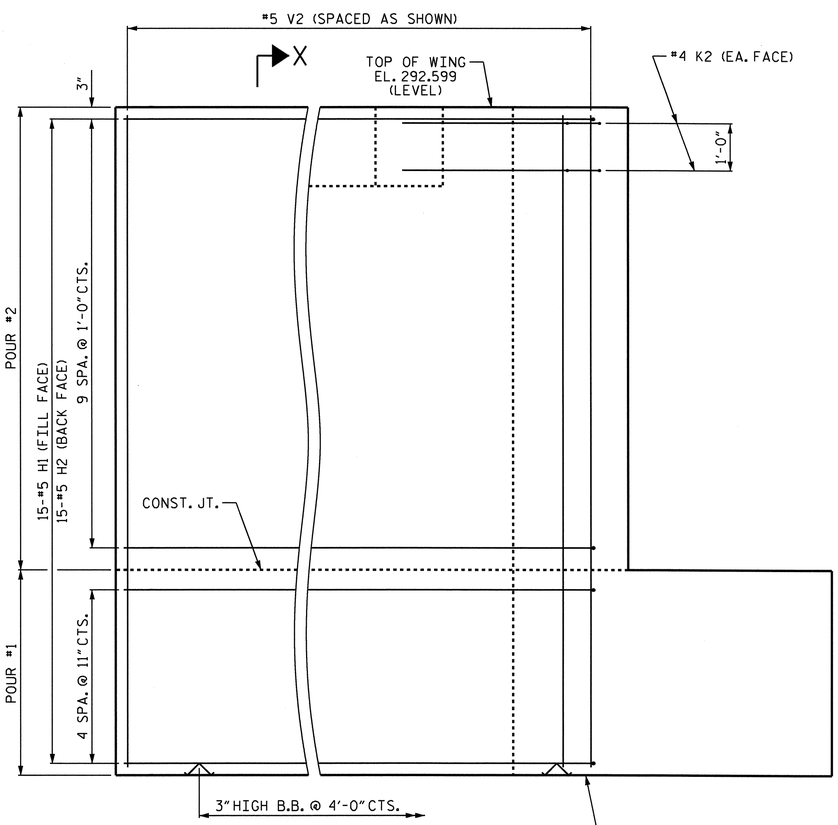

ELEVATION OF WING (W1)

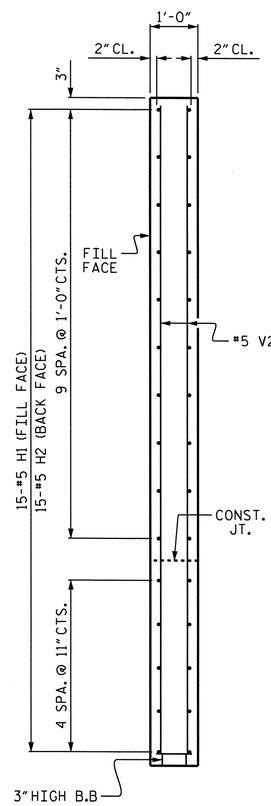

SECTION X-X

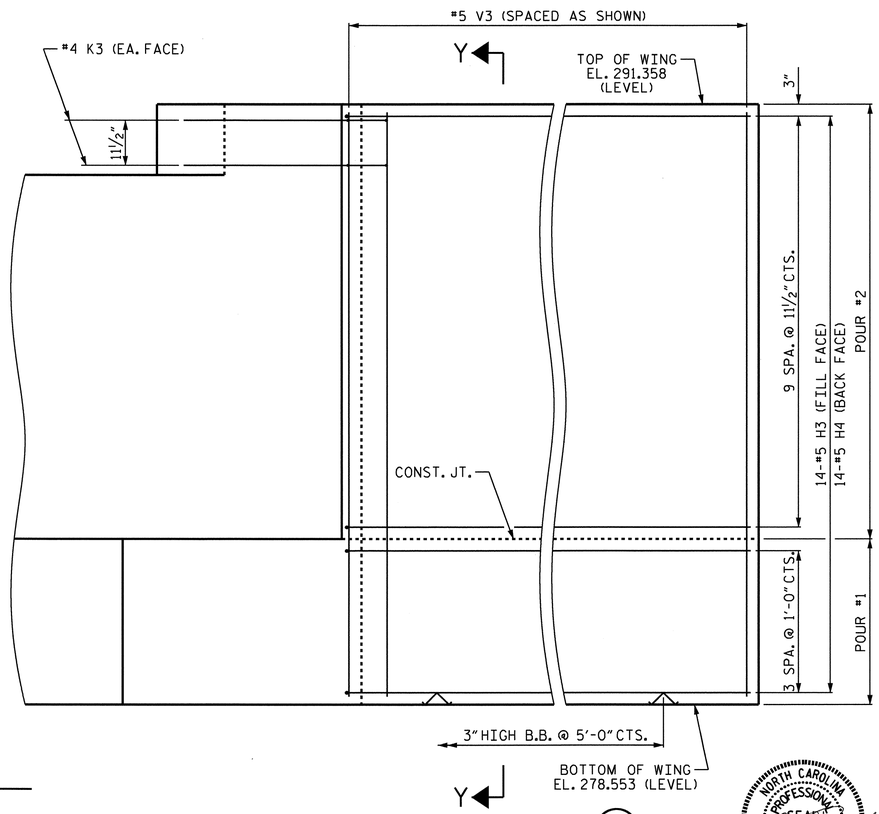

ELEVATION OF WING (W2)

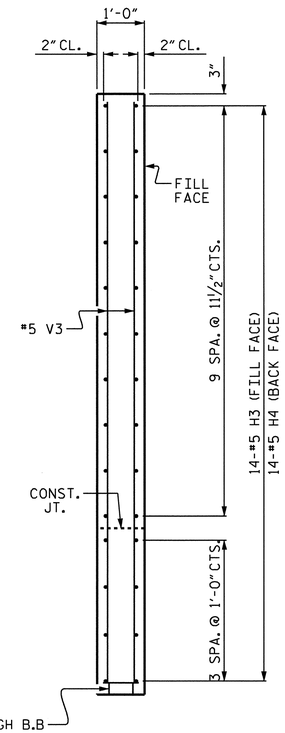

SECTION Y-Y

PROJECT NO. R-2417AA

LEE COUNTY

STATION: 137+42.08 -L-

SHEET 2 OF 3

STATE OF NORTH CAROLINA
DEPARTMENT OF TRANSPORTATION
RALEIGH

SUBSTRUCTURE

END BENT No. 2
(SBL)

NORTH CAROLINA PROFESSIONAL SEAL 24390 ENGINEER THEO J. BEACH
11/23/10

REVISIONS							
NO.	BY:	DATE:	NO.	BY:	DATE:	SHEET NO.	S-158
1			3			TOTAL SHEETS	162
2			4				

DRAWN BY : T. BANKOVICH DATE : 6-2010
CHECKED BY : T.N. CARROLL DATE : 8-2010

18-OCT-2010 14:11
R:\Structures\str5-L-overAWRR(RtLane)\Sub_draw\R-2417AA_str5_E*_2.dgn
sbwilliams

STR. #5

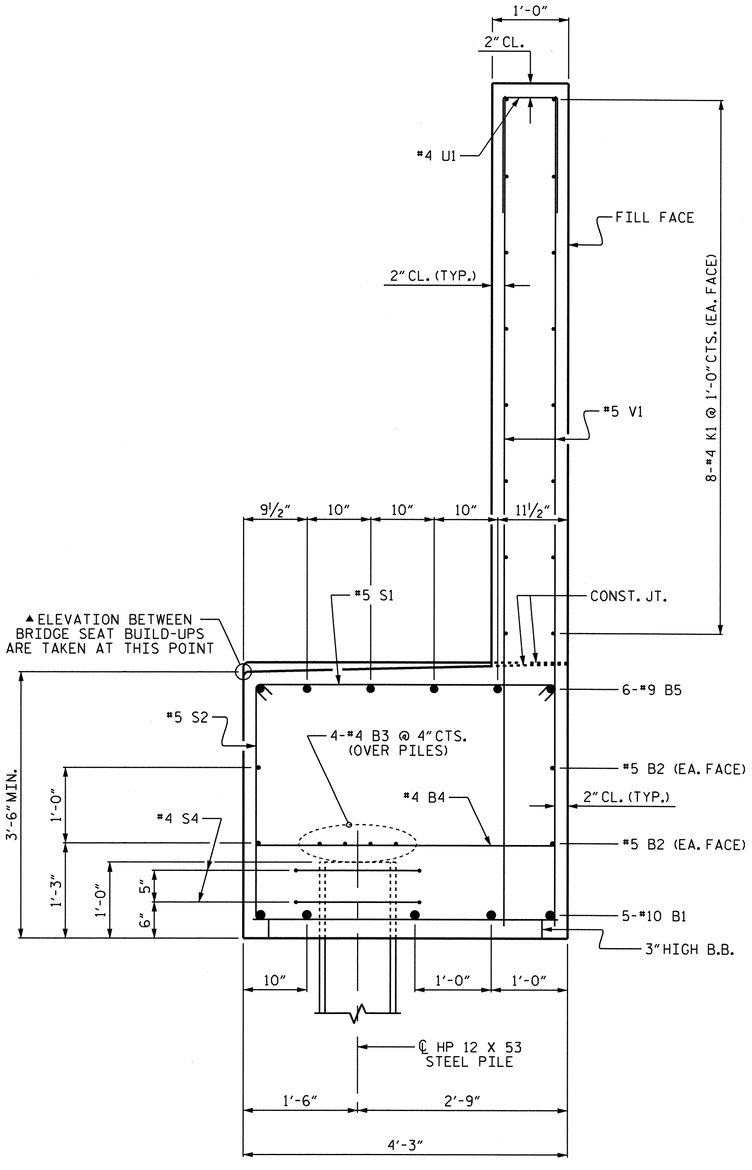

SECTION A-A

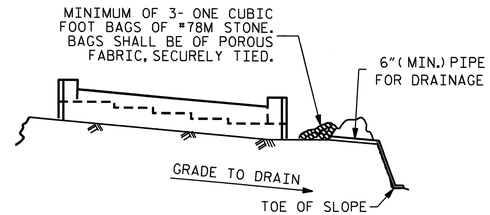

BAGGED STONE AND PIPE SHALL BE PLACED IMMEDIATELY AFTER COMPLETION OF END BENT EXCAVATION. PIPE MAY BE EITHER CONCRETE, CORRUGATED STEEL, CORRUGATED ALUMINUM ALLOY, OR CORRUGATED PLASTIC. PERFORATED PIPE WILL NOT BE ALLOWED.

BAGGED STONE SHALL REMAIN IN PLACE UNTIL THE ENGINEER DIRECTS THAT IT BE REMOVED. THE CONTRACTOR SHALL REMOVE AND DISPOSE OF SILT ACCUMULATIONS AT BAGGED STONE WHEN SO DIRECTED BY THE ENGINEER. BAGS SHALL BE REMOVED AND REPLACED WHENEVER THE ENGINEER DETERMINES THAT THEY HAVE DETERIORATED AND LOST THEIR EFFECTIVENESS.

NO SEPARATE PAYMENT WILL BE MADE FOR THIS WORK AND THE ENTIRE COST OF THIS WORK SHALL BE INCLUDED IN THE UNIT CONTRACT PRICE BID FOR THE SEVERAL PAY ITEMS.

TEMPORARY DRAINAGE AT END BENT

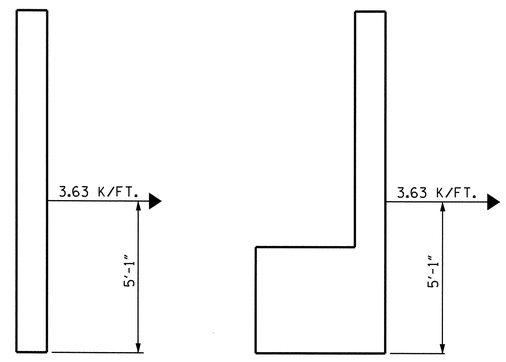

WING CAP

TIEBACK DETAILS

(DETAIL SHOWING TIEBACK RESTRAINT FOR END BENT No. 2)

BAR TYPES

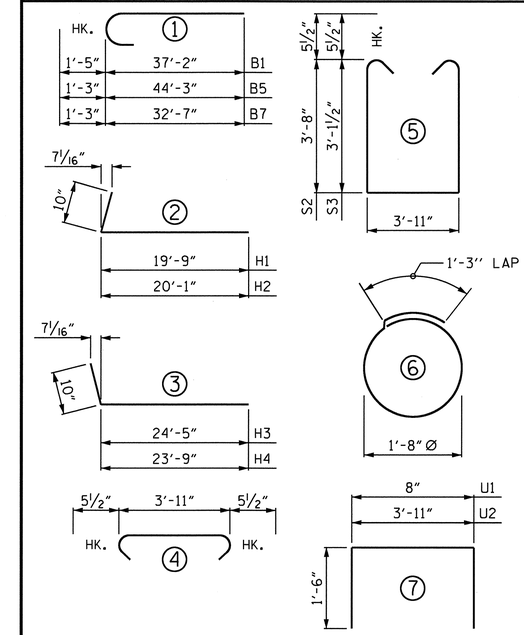

ALL BAR DIMENSIONS ARE OUT TO OUT

NOTES:

#5 V1 BARS IN BACKWALL SHALL BE PLACED 2" CLEAR FROM TOP OF BACKWALL.

STIRRUPS AND "U" BARS IN CAP MAY BE SHIFTED AS NECESSARY TO CLEAR ANCHOR BOLTS.

BACKWALL SHALL BE PLACED BEFORE APPLYING THE EPOXY PROTECTIVE COATING.

THE TOP SURFACE OF THE CAP EXCEPT THE BRIDGE SEAT BUILD-UPS SHALL BE SLOPED TRANSVERSELY FROM THE FILL FACE TO THE BACK FACE AT THE RATE OF 2%.

THE CONCRETE IN THE SHADED AREA OF THE WING SHALL BE POURED AFTER THE BARRIER RAIL ARE CAST IF SLIP FORMING IS USED.

BILL OF MATERIAL

END BENT No. 2

BAR	NO.	SIZE	TYPE	LENGTH	WEIGHT
B1	10	#10	1	38'-7"	1660
B2	8	#5	STR	34'-9"	290
B3	12	#4	STR	23'-10"	191
B4	18	#4	STR	3'-11"	47
B5	6	#9	1	45'-6"	928
B6	2	#5	STR	25'-3"	53
B7	6	#9	1	33'-10"	690
B8	18	#4	STR	3'-8"	44
H1	15	#5	2	20'-7"	322
H2	15	#5	2	20'-11"	327
H3	14	#5	3	25'-3"	369
H4	14	#5	3	24'-7"	359
K1	48	#4	STR	23'-10"	764
K2	4	#4	STR	4'-8"	12
K3	4	#4	STR	4'-10"	13
S1	114	#5	4	4'-10"	575
S2	57	#5	5	12'-2"	723
S3	57	#5	5	11'-1"	659
S4	18	#4	6	6'-6"	78
U1	56	#4	7	3'-8"	137
U2	15	#4	7	6'-11"	69
V1	112	#5	STR	10'-9"	1256
V2	53	#5	STR	13'-8"	755
V3	61	#5	STR	12'-5"	790
REINFORCING STEEL					11,111 LBS.

CLASS A CONCRETE	
POUR #1 (CAP & LOWER WING)	48.0 C.Y.
POUR #2 (UPPER WING & BACKWALL)	34.8 C.Y.
TOTAL =	82.8 C.Y.

HP 12 X 53 STEEL PILES	
NO. = 9	450 LIN. FT.
PILE EXCAVATION IN SOIL	90 LIN. FT.
PILE EXCAVATION NOT IN SOIL	90 LIN. FT.

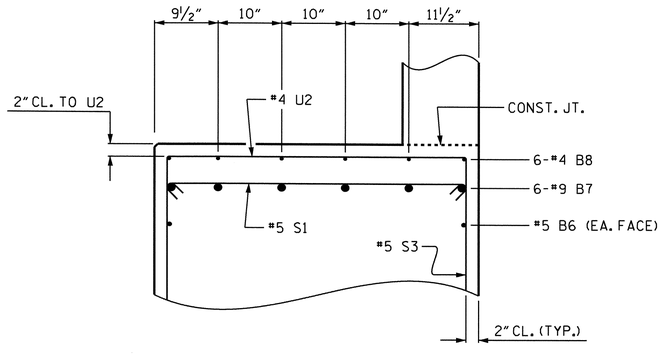

PARTIAL SECTION B-B

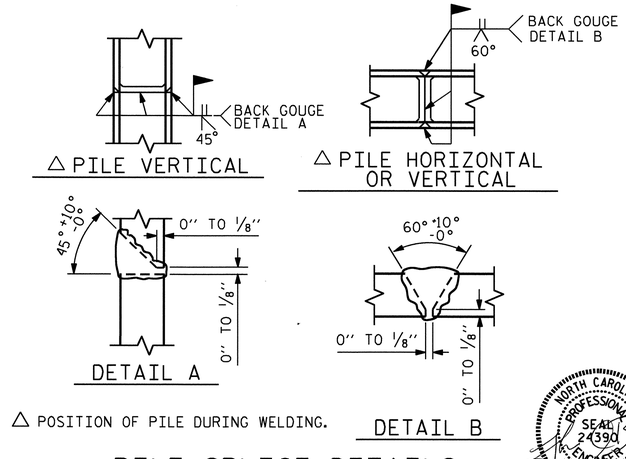

△ POSITION OF PILE DURING WELDING.

PILE SPLICE DETAILS

NORTH CAROLINA PROFESSIONAL SEAL 24390 ENGINEER THEO J. BEACH
11/23/10

PROJECT NO. R-2417AA
LEE COUNTY
STATION: 137+42.08 -L-

SHEET 3 OF 3

STATE OF NORTH CAROLINA
DEPARTMENT OF TRANSPORTATION
RALEIGH

SUBSTRUCTURE

END BENT No. 2
(SBL)

REVISIONS						SHEET NO.
NO.	BY:	DATE:	NO.	BY:	DATE:	S-159
1			3			TOTAL SHEETS
2			4			162

DRAWN BY : T. BANKOVICH DATE : 6-2010
CHECKED BY : T.N. CARROLL DATE : 8-2010

24-NOV-2010 09:50
R:\Structures\str5-L-overAWRR(RtLane)\Sub_draw\R-2417AA_str5_E*_2.dgn
tjbankovich

STR. #5

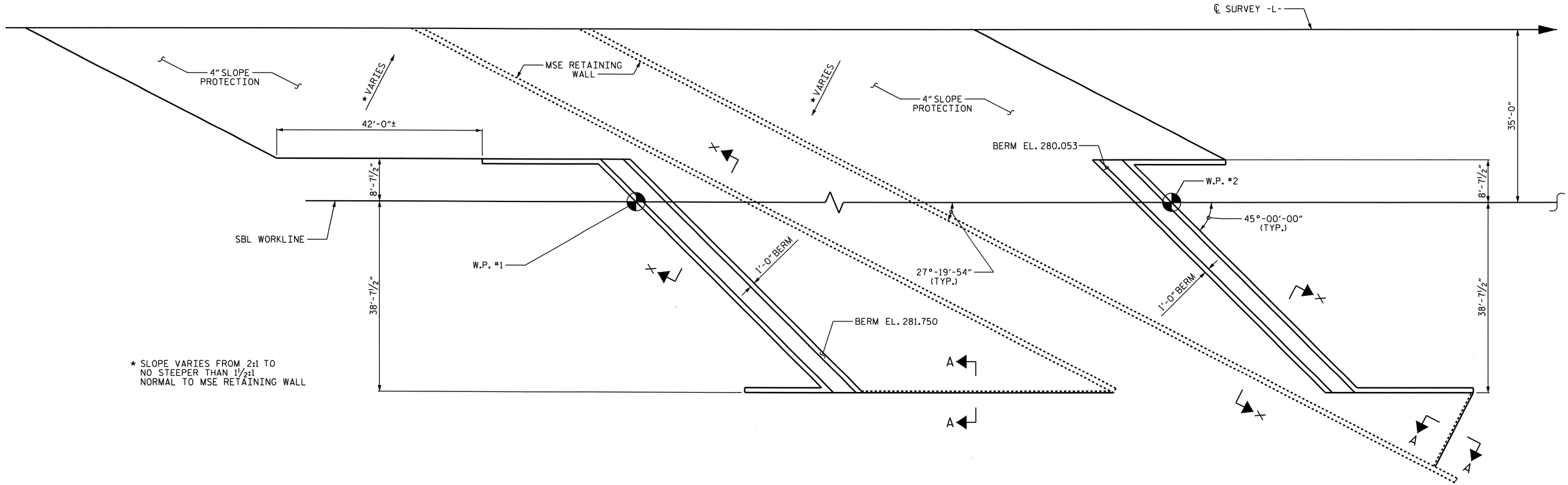

PLAN AT END BENT No. 1

PLAN AT END BENT No. 2

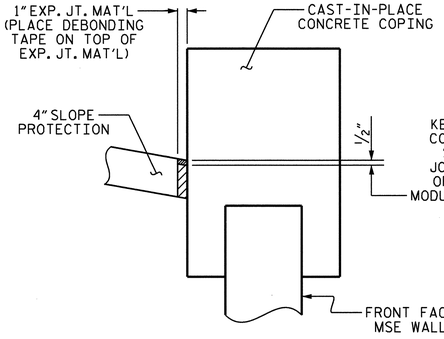

DETAIL "A"

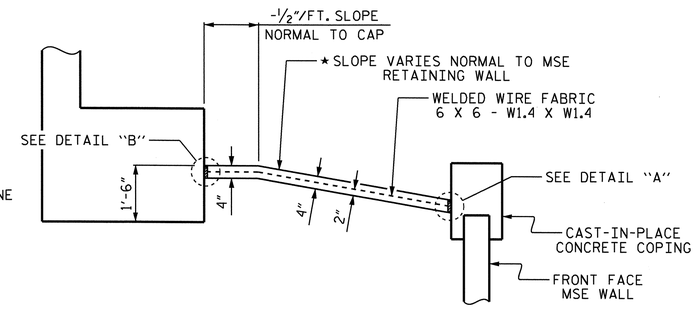

SECTION X-X

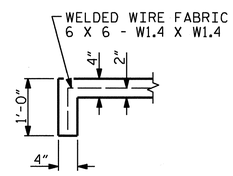

SECTION A-A

GENERAL NOTES:

SLOPE PROTECTION SHALL BE PLACED UNDER THE ENDS OF THE BRIDGE AS SHOWN IN THE DETAILS. MEASUREMENT AND PAYMENT SHALL BE AS PRESCRIBED IN SECTION 462 OF THE STANDARD SPECIFICATIONS.

SLOPE PROTECTION

SLOPE PROTECTION SHALL CONSIST OF 4" POURED-IN-PLACE CONCRETE PAVING AS SHOWN IN THE DETAILS ON THIS SHEET. CONCRETE SHALL BE CLASS "B". THE CONCRETE SURFACE SHALL BE FLOATED WITH A WOODEN FLOAT AND FINISHED. WELDED WIRE FABRIC REINFORCING SHALL BE 6 X 6 - W1.4 X W1.4, 60" WIDE. SLOPE PROTECTION SHALL BE POURED IN 5' STRIPS AS SHOWN IN THE "POURING DETAIL" WITH 2'-0" LONG #4 BARS PLACED ALONG THE SLOPE BETWEEN STRIPS AT 1'-6" MAXIMUM SPACING. SLOPE PROTECTION MAY BE POURED IN ALTERNATE 4' AND 5' STRIPS AS SHOWN IN THE "OPTIONAL POURING DETAIL" WITH ADJACENT RUNS OF WELDED WIRE FABRIC LAPPING AT LEAST 6". THE COST OF THE WELDED WIRE FABRIC AND #4 BARS, IF USED, SHALL BE INCLUDED IN THE CONTRACT UNIT PRICE BID PER SQUARE YARD FOR SLOPE PROTECTION.

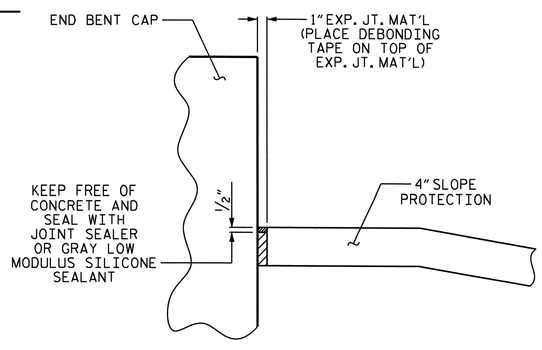

DETAIL "B"

BRIDGE @ STA.137+42.08 -L-	4 INCH SLOPE PROTECTION	* WELDED WIRE FABRIC 60 INCHES WIDE
	SQUARE YARDS	APPROX. L.F.
END BENT No. 1	860	1548
END BENT No. 2	930	1674

* QUANTITY SHOWN IS BASED ON 5'-0" POURS.

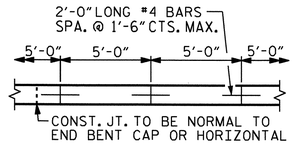

STRIP WIDTHS MAY VARY IN CURVED PORTION.

POURING DETAIL

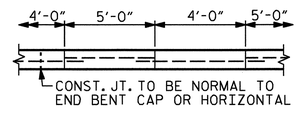

POUR A 4'-0" STRIP FIRST. STRIP WIDTHS MAY VARY IN CURVED PORTION.

OPTIONAL POURING DETAIL

PROJECT NO. R-2417AA

LEE COUNTY

STATION: 137+42.08 -L-

STATE OF NORTH CAROLINA
DEPARTMENT OF TRANSPORTATION
RALEIGH

SLOPE PROTECTION DETAILS

(SBL)

REVISIONS								SHEET NO.
NO.	BY:	DATE:	NO.	BY:	DATE:			S-160
1			3					TOTAL SHEETS
2			4					162

NORTH CAROLINA PROFESSIONAL SEAL 24390 ENGINEER THEO J. BEACH 11/27/10

DRAWN BY : T. BANKOVICH DATE : 10-2010
CHECKED BY : T.J. BEACH DATE : 10-2010

19-OCT-2010 14:53
R:\Structures\str5-L-overAWRR(RtLane)\Misc_draw\R-2417AA_str5_SP.dgn
tbeach

STR. #5

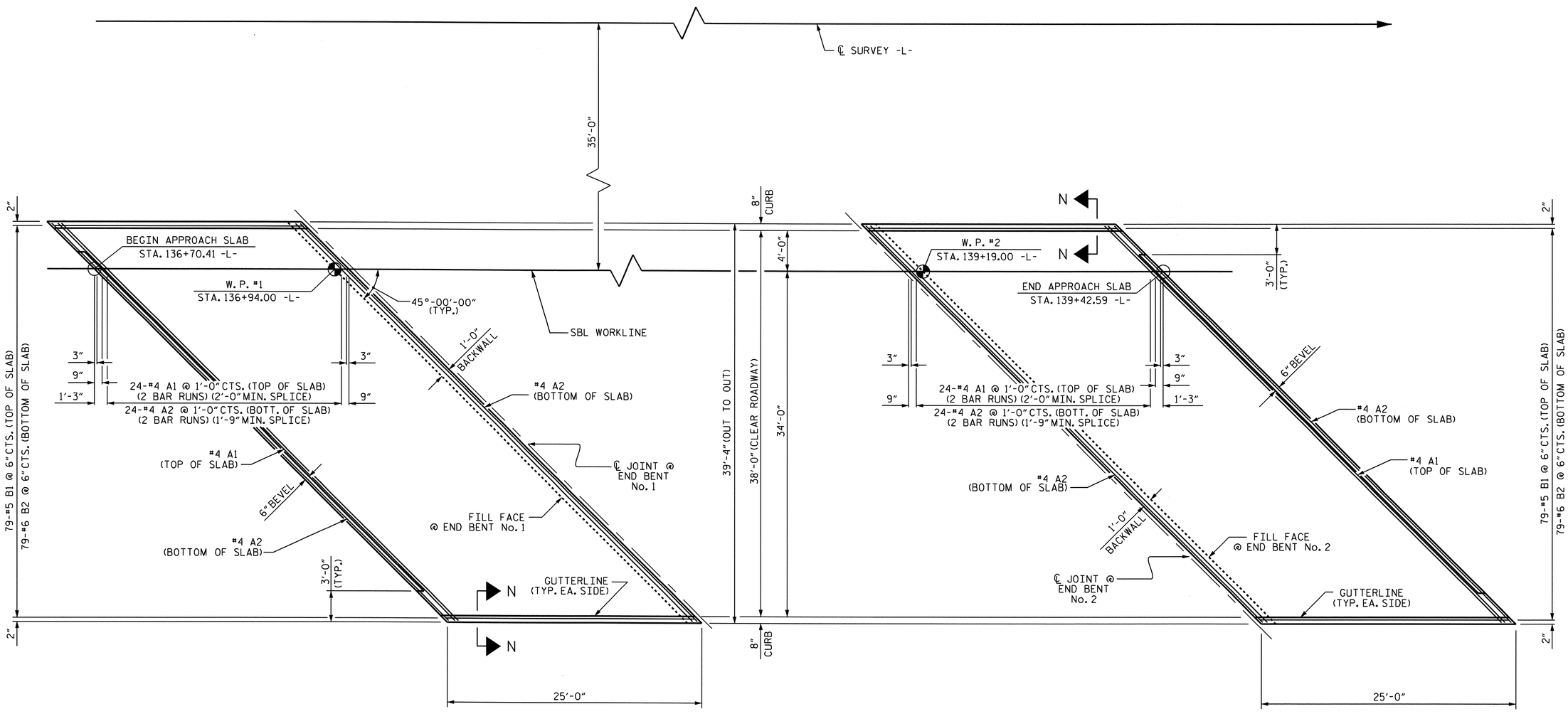

PLAN AT END BENT No. 1

PLAN AT END BENT No. 2

PLAN OF APPROACH SLABS

FOR SECTIONS N-N, SEE SHEET 2 OF 2

PROJECT NO. R-2417AA

LEE COUNTY

STATION: 137+42.08 -L-

SHEET 1 OF 2

STATE OF NORTH CAROLINA
DEPARTMENT OF TRANSPORTATION
RALEIGH

BRIDGE APPROACH SLAB FOR FLEXIBLE PAVEMENT

(SBL)

NORTH CAROLINA PROFESSIONAL SEAL 24390 ENGINEER THEO J. BEACH
11/23/10

REVISIONS							SHEET NO.
NO.	BY:	DATE:	NO.	BY:	DATE:		S-161
1			3				TOTAL SHEETS
2			4				162

DRAWN BY : A. V. ROYAL DATE : 04/10
CHECKED BY : T. BANKOVICH DATE : 04/10

18-OCT-2010 14:09
R:\Structures\Str5-L-overAWRR(RtLane)\Misc_draw\R2417AA_SD_AS.dgn
sbwilliams

STR. #5

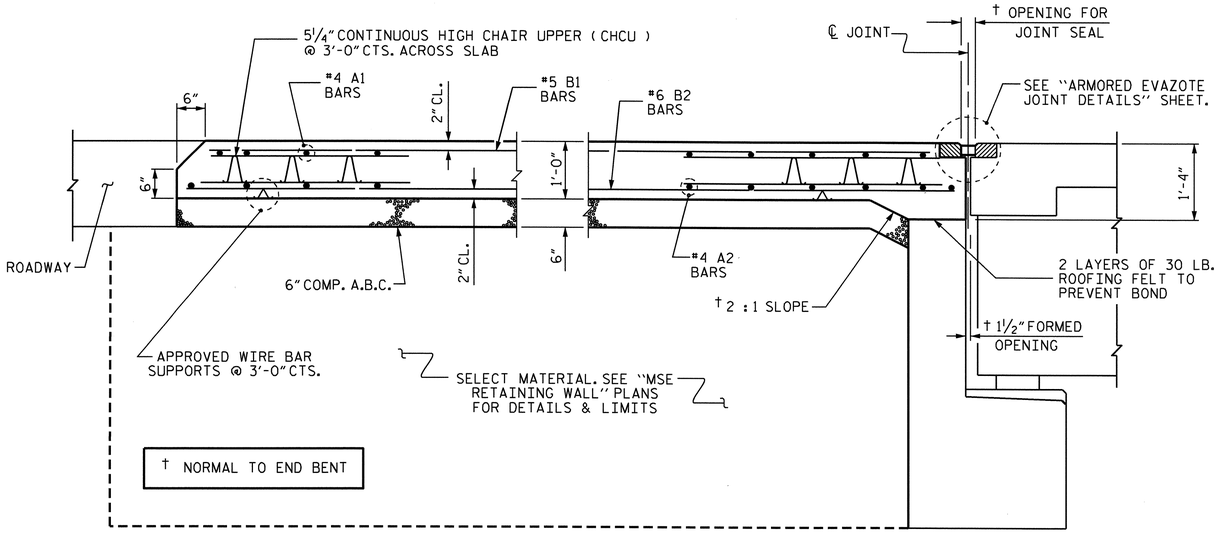

SECTION THRU SLAB

BACKWALL RESTRAINTS ON END BENT NOT SHOWN FOR CLARITY.

NOTES:

APPROACH SLAB SHALL NOT BE CONSTRUCTED PRIOR TO COMPLETION OF THE BRIDGE DECK.

AREA BETWEEN THE WINGWALL AND APPROACH SLAB SHALL BE GRADED TO DRAIN THE WATER AWAY FROM THE FILL FACE OF THE BRIDGE AND SHALL BE PAVED. SEE ROADWAY PLANS.

THE 6" COMP. A.B.C. SHALL BE FLUSH WITH THE ROADWAY END OF THE APPROACH SLAB AND SHALL EXTEND 1'-0" OUTSIDE EACH EDGE OF THE APPROACH SLAB.

THE CONTRACTOR MAY USE 4" TYPE B-25.0B ASPHALT CONCRETE BASE COURSE IN LIEU OF 6" COMP. A.B.C. IF THIS OPTION IS USED, THE BASE COURSE SHALL BE FLUSH WITH THE ROADWAY END OF THE APPROACH SLAB, AND THE WIDTH SHALL BE THE SAME AS THAT OF THE APPROACH SLAB.

THE CONTRACTOR MAY USE 5" CLASS "A" CONCRETE BASE IN LIEU OF 6" COMP. A.B.C. IF THIS OPTION IS USED, THE CONCRETE BASE SHALL BE FLUSH WITH THE ROADWAY END OF THE APPROACH SLAB, AND THE WIDTH SHALL BE THE SAME AS THAT OF THE APPROACH SLAB. THE CONCRETE SHALL BE FINISHED TO A SMOOTH SURFACE AND A LAYER OF 30 LB ROOFING FELT SHALL BE PLACED BETWEEN THE CONCRETE BASE AND THE APPROACH SLAB TO PREVENT BOND. THE APPROACH SLAB SHALL NOT BE CAST UNTIL THE CONCRETE BASE HAS REACHED AN AGE OF THREE CURING DAYS.

FOR EVAZOTE JOINT SEALS, SEE SPECIAL PROVISIONS.

THE NOMINAL UNCOMPRESSED SEAL WIDTH OF THE EVAZOTE JOINT SEAL SHALL BE 3 7/16".

FOR ELASTOMERIC CONCRETE, SEE SPECIAL PROVISIONS.

BILL OF MATERIAL

APPROACH SLAB AT EB No. 1

BAR	NO.	SIZE	TYPE	LENGTH	WEIGHT
* A1	50	#4	STR	28'-8"	957
A2	52	#4	STR	28'-7"	993
* B1	79	#5	STR	23'-3"	1916
B2	79	#6	STR	24'-7"	2917
REINFORCING STEEL				LBS.	3910
* EPOXY COATED REINFORCING STEEL				LBS.	2873
CLASS AA CONCRETE				C. Y.	37.3

APPROACH SLAB AT EB No. 2

BAR	NO.	SIZE	TYPE	LENGTH	WEIGHT
* A1	50	#4	STR	28'-8"	957
A2	52	#4	STR	28'-7"	993
* B1	79	#5	STR	23'-3"	1916
B2	79	#6	STR	24'-7"	2917
REINFORCING STEEL				LBS.	3910
* EPOXY COATED REINFORCING STEEL				LBS.	2873
CLASS AA CONCRETE				C. Y.	37.3

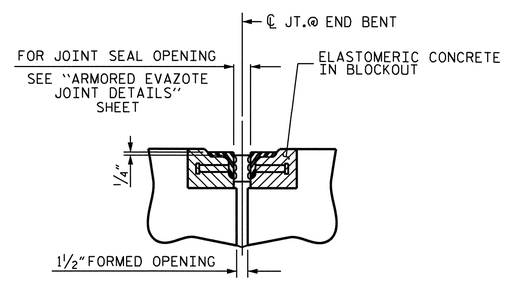

SECTION C-C

ARMORED EVAZOTE JOINT SEAL

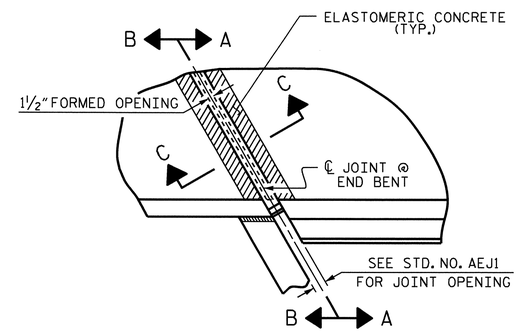

PLAN

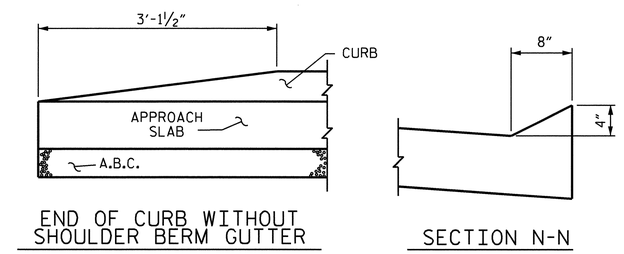

END OF CURB WITHOUT SHOULDER BERM GUTTER

SECTION N-N

CURB DETAILS

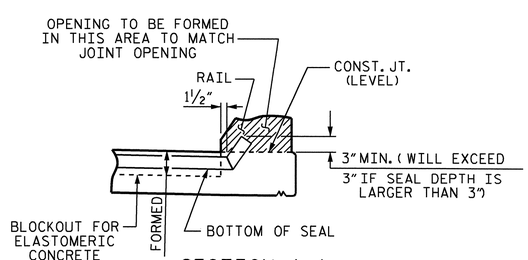

SECTION A-A

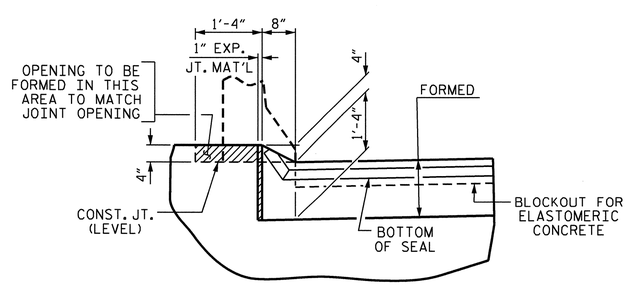

SECTION B-B

ARMORED EVAZOTE JOINT SEAL DETAILS @ END BENT

NOTE: EVAZOTE JOINT SEAL TO BE CUT, HEAT WELDED AND TURNED UP PARALLEL TO SLOPED FACE OF THE BARRIER RAIL. END BENT No. 1 SHOWN, END BENT No. 2 SIMILAR

PROJECT NO. R-2417AA

LEE COUNTY

STATION: 137+42.08 -L-

SHEET 2 OF 2

STATE OF NORTH CAROLINA
DEPARTMENT OF TRANSPORTATION
RALEIGH

BRIDGE APPROACH SLAB FOR FLEXIBLE PAVEMENT

(SBL)

NORTH CAROLINA PROFESSIONAL SEAL 24390 ENGINEER THEO J. BEACH 11/23/10

REVISIONS								SHEET NO.
NO.	BY:	DATE:	NO.	BY:	DATE:			S-162
1			3					TOTAL SHEETS
2			4					162

ASSEMBLED BY : A. V. ROYAL	DATE : 04/10		
CHECKED BY : T. BANKOVICH	DATE : 04/10		
DRAWN BY : EEM 3/95	REV. 7/10/01	LES/RDR	
CHECKED BY : VAP 3/95	REV. 5/7/03R	RWW/JTE	
	REV. 5/1/06R	KMM/GM	

18-OCT-2010 14:09
R:\Structures\str5-L-overAWRR(RtLane)\Misc_draw\R2417AA_SD_AS.dgn
sbwilliams

STR. #5

B.M.#8 R.R. SPIKE IN BASE OF 12" MAPLE TREE, 248.26' LEFT OF STA. 108+17.37 -L- ELEV. 256.97.

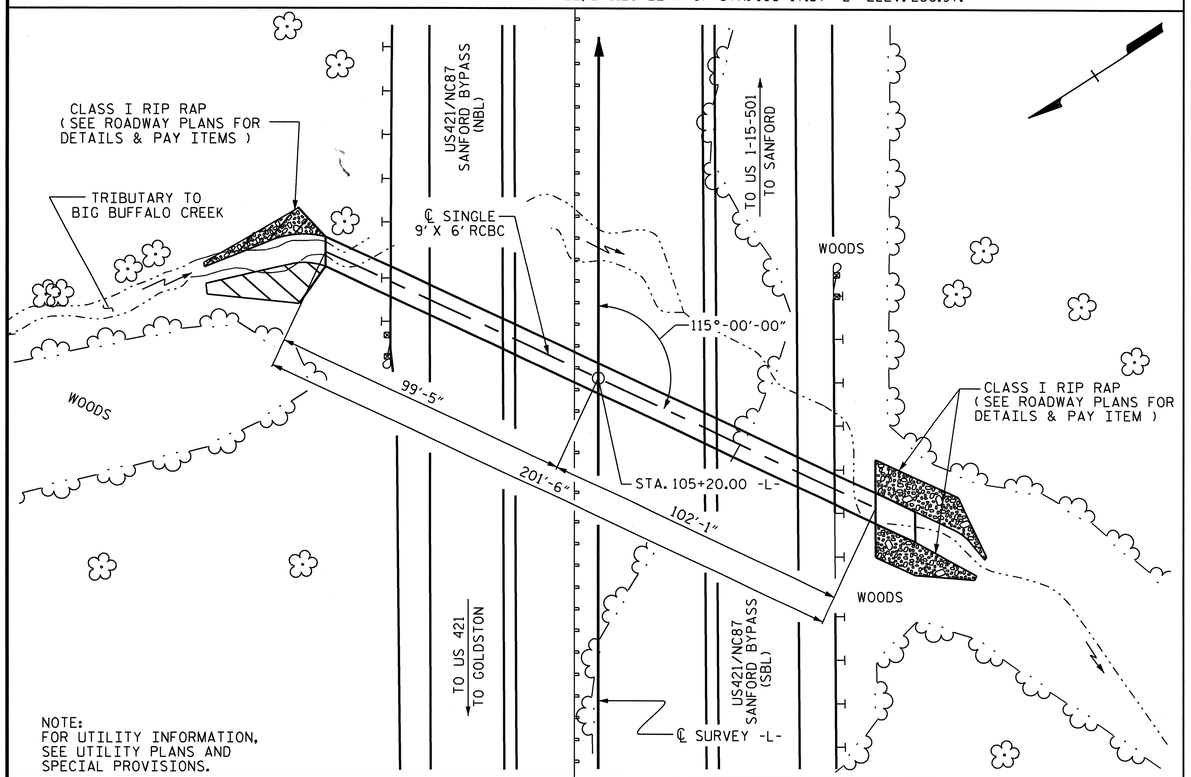

NOTE:
FOR UTILITY INFORMATION,
SEE UTILITY PLANS AND
SPECIAL PROVISIONS.

LOCATION SKETCH

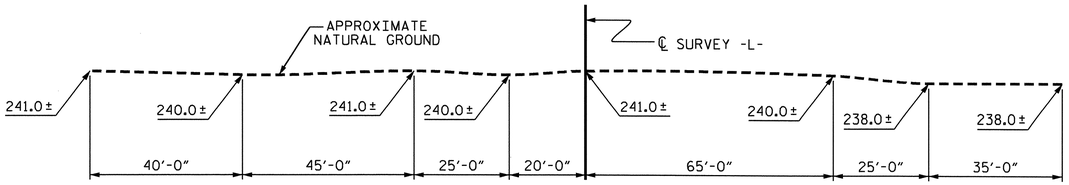

PROFILE ALONG ℄ CULVERT

REINFORCING STEEL BAR SCHEDULE

BAR	NO.	SIZE	TYPE	LENGTH	WEIGHT
A1	570	#5	1	4'-5"	2626
A2	602	#5	1	4'-5"	2773
A100	427	#5	STR	9'-11"	4417
A101	6	#5	STR	7'-4"	46
A102	6	#5	STR	5'-0"	31
A103	6	#5	STR	2'-7"	16
A200	455	#5	STR	9'-11"	4706
A201	6	#5	STR	7'-4"	46
A202	6	#5	STR	5'-0"	31
A203	6	#5	STR	2'-7"	16
B1	484	#4	STR	6'-11"	2236
B2	570	#5	STR	5'-4"	3171
C1	200	#4	STR	27'-0"	3607
C2	88	#4	STR	28'-5"	1670
D1	14	#6	STR	3'-0"	63
G1	4	#4	STR	11'-6"	31
K1	5	#4	2	3'-4"	11
S1	14	#8	STR	11'-6"	430
REINFORCING STEEL					25927 LBS.

SPLICE LENGTH CHART

BAR	SIZE	LENGTH
B1	#4	1'-9"
C1	#4	1'-11"
C2	#4	1'-11"

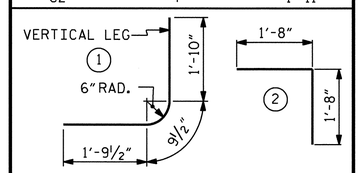

BAR TYPES

DIMENSIONS ARE OUT TO OUT

NOTES

ASSUMED LIVE LOAD ----------HS20-44 OR ALTERNATE LOADING.

DESIGN FILL ----------10.19 FT.

FOR OTHER DESIGN DATA AND NOTES SEE STANDARD NOTE SHEET.

3" Ø WEEP HOLES INDICATED TO BE IN ACCORDANCE WITH THE SPECIFICATIONS.

CONCRETE IN CULVERTS TO BE POURED IN THE FOLLOWING ORDER:

1. WING FOOTINGS, OUTLET APRON AND FLOOR SLAB INCLUDING 4" OF ALL VERTICAL WALLS.
2. THE REMAINING PORTIONS OF THE WALLS AND WINGS FULL HEIGHT FOLLOWED BY ROOF SLAB AND HEADWALLS.

THE RESIDENT ENGINEER SHALL CHECK THE LENGTH OF CULVERT BEFORE STAKING IT OUT TO MAKE CERTAIN THAT IT WILL PROPERLY TAKE CARE OF THE FILL.

DIMENSIONS FOR WING LAYOUT AS WELL AS ADDITIONAL REINFORCING STEEL EMBEDDED IN BARREL ARE SHOWN ON WING SHEETS.

TRANSVERSE CONSTRUCTION JOINTS SHALL BE USED IN THE BARREL, SPACED TO LIMIT THE POURS TO A MAXIMUM OF 50 FT. LOCATION OF JOINTS SHALL BE SUBJECT TO APPROVAL OF THE ENGINEER.

AT THE CONTRACTOR'S OPTION, HE MAY SPLICE THE VERTICAL REINFORCING STEEL IN THE INTERIOR FACE OF EXTERIOR WALL ABOVE LOWER WALL CONSTRUCTION JOINT. THE SPLICE LENGTH SHALL BE AS PROVIDED IN THE SPLICE LENGTH CHART SHOWN ON THE PLANS. EXTRA WEIGHT OF STEEL DUE TO SPLICES SHALL BE PAID FOR BY THE CONTRACTOR.

THE CONTRACTOR SHALL PROVIDE INDEPENDENT ASSURANCE SAMPLES OF REINFORCING STEEL AS FOLLOWS: FOR PROJECTS REQUIRING UP TO 400 TONS OF REINFORCING STEEL, ONE 30 INCH SAMPLE OF EACH SIZE BAR USED, AND FOR PROJECTS REQUIRING OVER 400 TONS OF REINFORCING STEEL, TWO 30 INCH SAMPLES OF EACH SIZE BAR USED. THE BARS FROM WHICH THE SAMPLES ARE TAKEN MUST THEN BE SPLICED WITH REPLACEMENT BARS OF THE SIZE AND LENGTH OF THE SAMPLES, PLUS A MINIMUM LAP SPLICE OF THIRTY BAR DIAMETERS.

AT THE CONTRACTOR'S OPTION THE VERTICAL CONSTRUCTION JOINT BETWEEN THE OUTLET WINGS AND THE BARREL MAY BE ELIMINATED AND THE C1 BARS IN THE BARREL WALLS MAY BE EXTENDED TO REPLACE THE "D" AND "H" BARS IN THE WINGS.

NO PRECAST REINFORCED BOX CULVERT OPTION WILL BE ALLOWED.

FOR CRANE SAFETY, SEE SPECIAL PROVISIONS.

FOR FALSEWORK AND FORMWORK, SEE SPECIAL PROVSIONS.

FOR SUBMITTAL OF WORKING DRAWINGS, SEE SPECIAL PROVISIONS.

FOR CULVERT DIVERSION DETAILS AND PAY ITEM, SEE EROSION CONTROL PLANS.

FOR CONSTRUCTION SEQUENCE, SEE EROSION CONTROL PLANS.

A 3 FOOT STRIP OF FILTER FABRIC SHALL BE ATTACHED TO THE FILL FACE OF THE WING COVERING THE ENTIRE LENGTH OF THE EXPANSION JOINT.

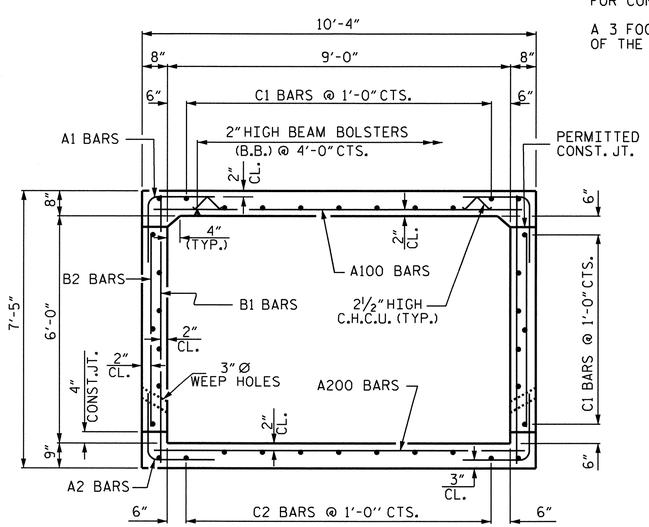

RIGHT ANGLE SECTION OF BARREL

THERE ARE 36 "C" BARS IN SECTION OF BARREL
"C" BARS ARE 8 BAR RUNS

TOTAL STRUCTURE QUANTITIES

CLASS A CONCRETE		
BARREL @ 0.843 CY/FT	169.9	C.Y.
INLET WINGS ETC.	8.4	C.Y.
OUTLET WINGS ETC.	7.4	C.Y.
TOTAL	185.7	C.Y.
REINFORCING STEEL		
BARREL	25,927	LBS.
INLET WINGS ETC.	465	LBS.
OUTLET WINGS ETC.	359	LBS.
TOTAL	26,751	LBS.
FOUNDATION CONDITIONING MAT'L	156	TONS
CULVERT EXCAVATION	LUMP SUM	

HYDROGRAPHIC DATA

DESIGN DISCHARGE	= 370 C.F.S.
FREQUENCY OF DESIGN FLOOD	= 50 YR.
DESIGN HIGH WATER ELEVATION	= 243.7
DRAINAGE AREA	= 130.0 AC.
BASIC DISCHARGE (Q100)	= 420 C.F.S.
BASIC HIGH WATER ELEVATION	= 244.2

OVERTOPPING FLOOD DATA

OVERTOPPING DISCHARGE	= 830 C.F.S.
FREQUENCY OF OVERTOPPING FLOOD	= 500+ YR.
OVERTOPPING FLOOD ELEVATION	= 251.5
OVERTOPPING LOCATION @ STA. 105+49.00 -L-	

GRADE DATA

GRADE POINT ELEVATION @ STA 105+20.00 -L-	= 251.52
BED ELEVATION @ STA 105+20.00 -L-	= 235.87
ROADWAY SLOPES	= 2:1

PROJECT NO. R-2417AA
LEE COUNTY
STATION: 105+20.00 -L-

SHEET 1 OF 4

STATE OF NORTH CAROLINA
DEPARTMENT OF TRANSPORTATION
RALEIGH

SINGLE 9 FT. X 6 FT. CONCRETE BOX CULVERT 115° SKEW

NORTH CAROLINA PROFESSIONAL SEAL 11268 ENGINEER BETSY S. COX
Betsy S. Cox 11-23-10

NORTH CAROLINA PROFESSIONAL SEAL 24380 ENGINEER THEO J. BEACH
11/23/10

REVISIONS						SHEET NO.
NO.	BY:	DATE:	NO.	BY:	DATE:	C-1
1			3			TOTAL SHEETS
2			4			14

ASSEMBLED BY : N. PIERCE	DATE : 9/05	SPECIAL	
CHECKED BY : J.M. BRITT	DATE : 10/05		
DRAWN BY : B.M. MEYERS	DATE : AUG. 1989	STANDARD	
CHECKED BY : A.R. BISSETTE	DATE : AUG. 1989		

REVISED 11-13-91 BY E.L.R. CHECKED BY G.R.P.
ADDED 8-22-89

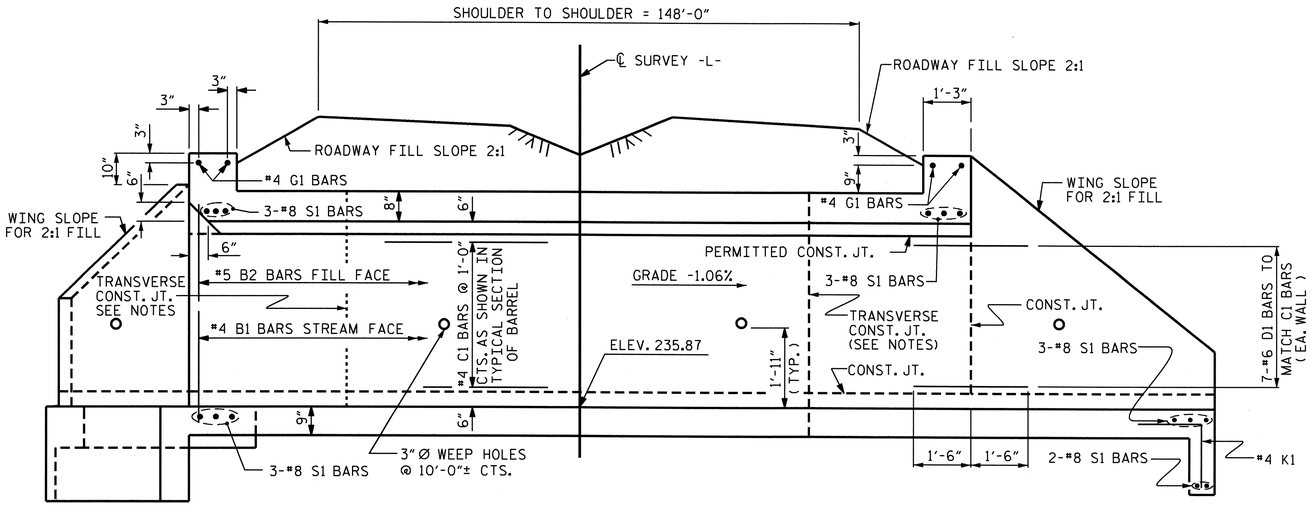

CULVERT SECTION NORMAL TO ROADWAY

NOTE:
#4 C1 & #4 C2 BARS ARE 8 BAR RUNS

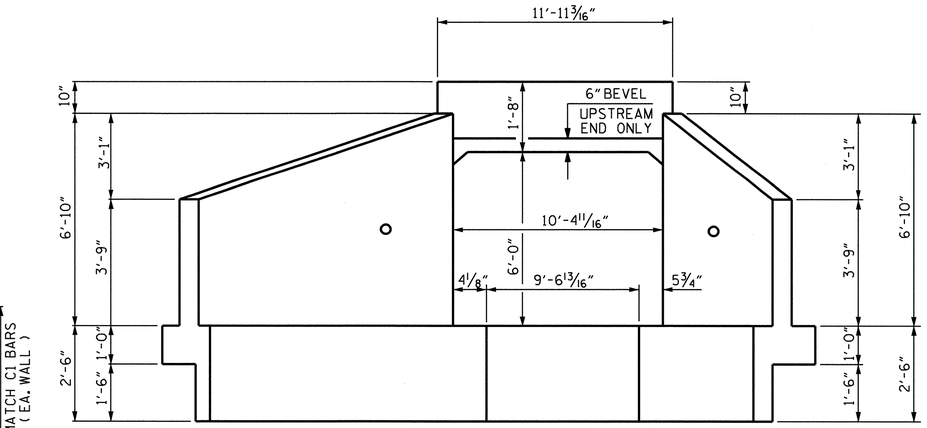

INLET END ELEVATION

NORMAL TO SKEW

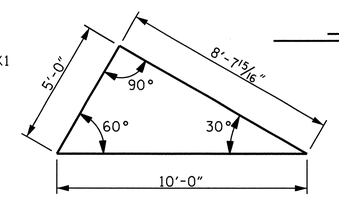

SKEW TRIANGLE

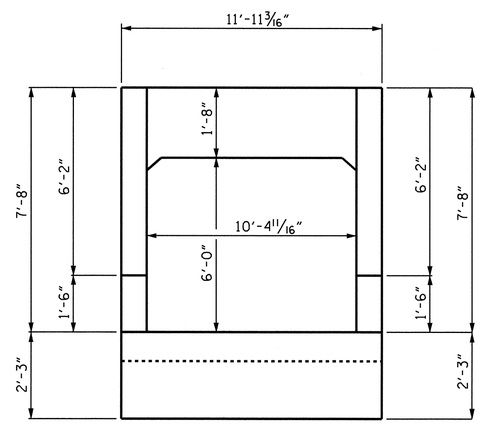

OUTLET END ELEVATION

NORMAL TO SKEW

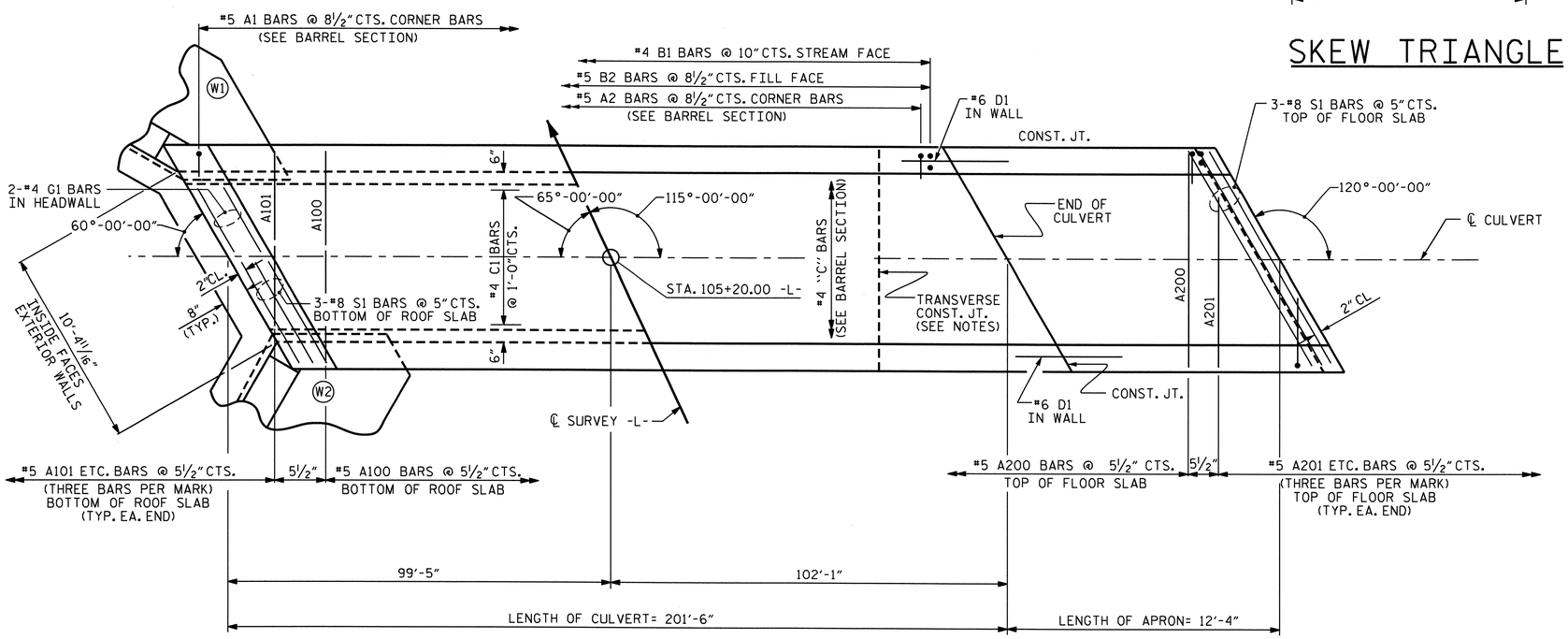

PART PLAN - ROOF SLAB

PART PLAN - FLOOR SLAB

PROJECT NO. R-2417AA
LEE COUNTY
STATION: 105+20.00 -L-

SHEET 2 OF 4

STATE OF NORTH CAROLINA
DEPARTMENT OF TRANSPORTATION
RALEIGH

BARREL STANDARD

SINGLE 9 FT. X 6 FT.
CONCRETE BOX CULVERT
115° SKEW

NORTH CAROLINA PROFESSIONAL SEAL 24390 ENGINEER THEO J. BEACH
11/23/10

REVISIONS						SHEET NO.
NO.	BY:	DATE:	NO.	BY:	DATE:	C-2
1			3			TOTAL SHEETS
2			4			14

ASSEMBLED BY : N. PIERCE	DATE : 9/05	SPECIAL	
CHECKED BY : J.M. BRITT	DATE : 11/05		
DRAWN BY : J.W. ROUSE	DATE : SEPT. 1989	STANDARD	
CHECKED BY : A.R. BISSETTE	DATE : AUG. 1989		

REVISED 8-28-92 BY E.L.R. CHECKED BY G.R.P.
REVISED 8-22-89 BY A.R.B. CHECKED BY C.R.K.
REDRAWN 8-22-89
REVISED 11-19-99 BY M.M. CHECKED BY R.W.W.

STR. #6

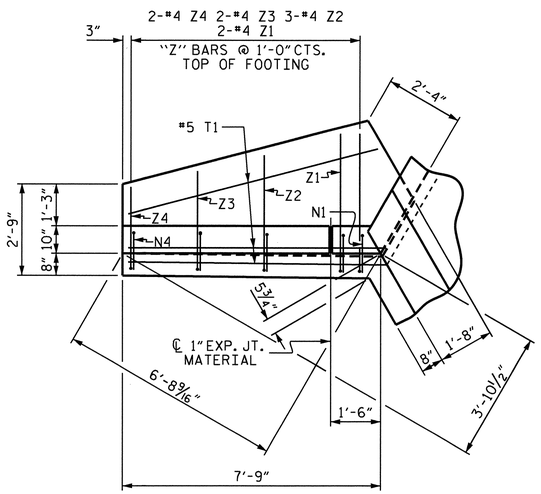

PLAN W2

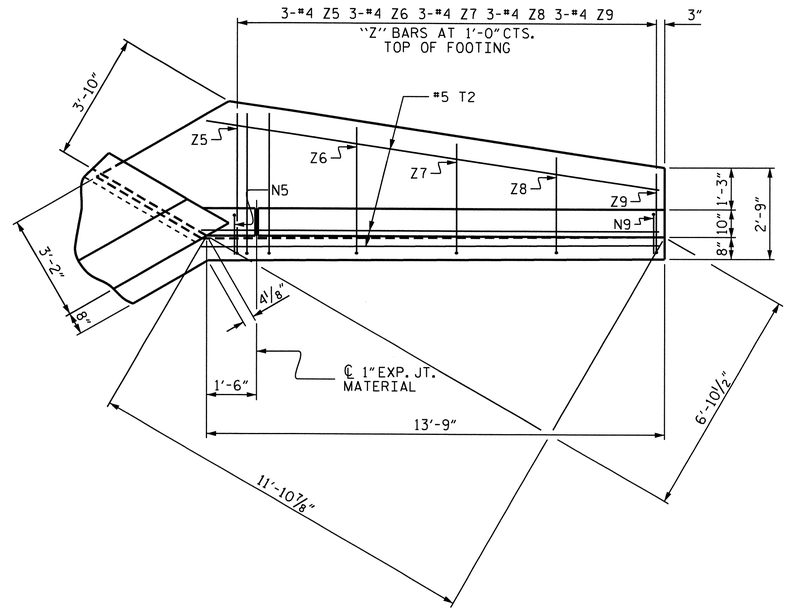

PLAN W1

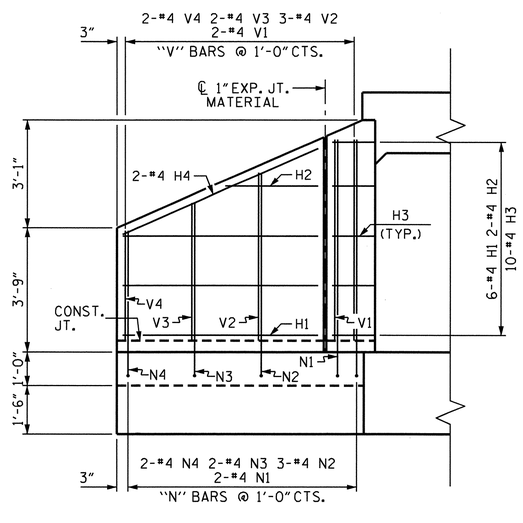

ELEVATION W2

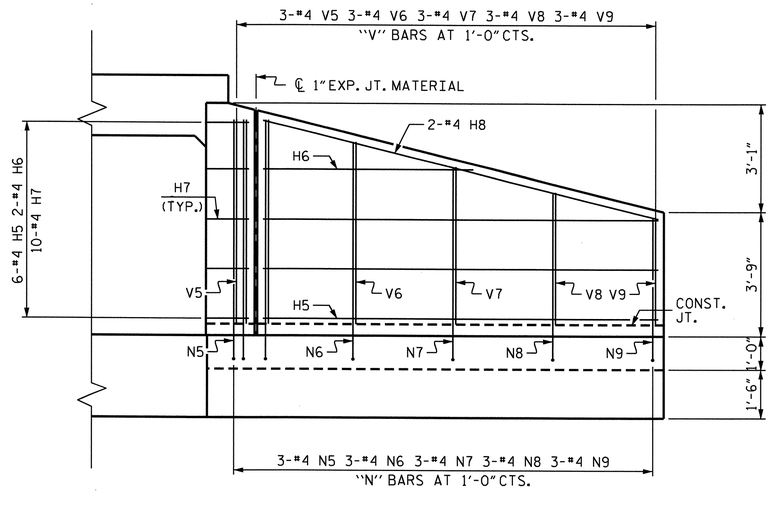

ELEVATION W1

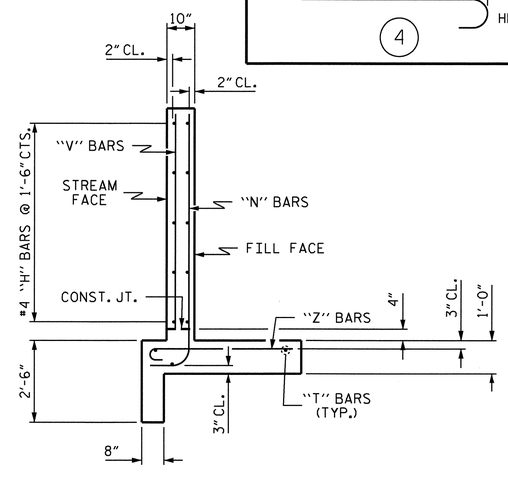

TYPICAL WING SECTION

BAR TYPES

ALL BAR DIMENSIONS ARE OUT TO OUT.

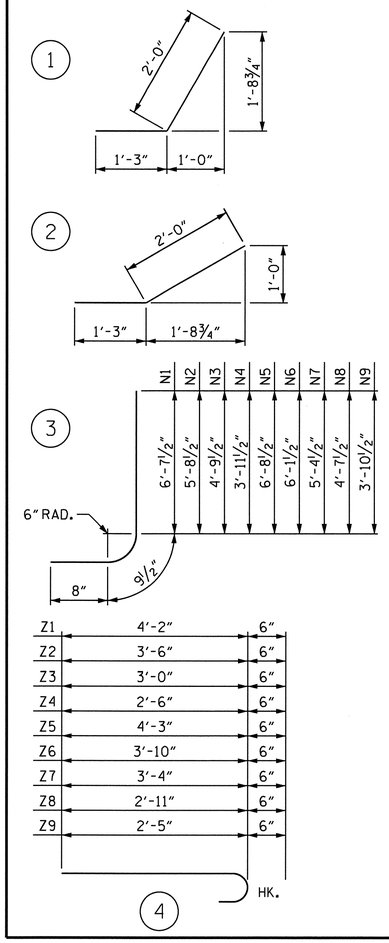

INLET WINGS BILL OF MATERIAL

BAR	NO.	SIZE	TYPE	LENGTH	WEIGHT
H1	6	#4	STR	5'-10"	23
H2	2	#4	STR	2'-9"	4
H3	10	#4	1	3'-3"	22
H4	2	#4	STR	6'-5"	9
H5	6	#4	STR	11'-10"	47
H6	2	#4	STR	6'-3"	8
H7	10	#4	2	3'-3"	22
H8	2	#4	STR	12'-2"	16
N1	2	#4	3	8'-1"	11
N2	3	#4	3	7'-2"	14
N3	2	#4	3	6'-3"	8
N4	2	#4	3	5'-5"	7
N5	3	#4	3	8'-2"	16
N6	3	#4	3	7'-7"	15
N7	3	#4	3	6'-10"	14
N8	3	#4	3	6'-1"	12
N9	3	#4	3	5'-4"	11
T1	3	#5	STR	7'-9"	24
T2	3	#5	STR	13'-9"	43
V1	2	#4	STR	6'-1"	8
V2	3	#4	STR	5'-1"	10
V3	2	#4	STR	4'-2"	6
V4	2	#4	STR	3'-4"	4
V5	3	#4	STR	6'-2"	12
V6	3	#4	STR	5'-6"	11
V7	3	#4	STR	4'-9"	10
V8	3	#4	STR	4'-0"	8
V9	3	#4	STR	3'-3"	7
Z1	2	#4	4	4'-8"	6
Z2	3	#4	4	4'-0"	8
Z3	2	#4	4	3'-6"	5
Z4	2	#4	4	3'-0"	4
Z5	3	#4	4	4'-9"	10
Z6	3	#4	4	4'-4"	9
Z7	3	#4	4	3'-10"	8
Z8	3	#4	4	3'-5"	7
Z9	3	#4	4	2'-11"	6

REINFORCING STEEL FOR 2 WINGS 465 LBS

CLASS A CONCRETE
- 2 WINGS 7.2 CY
- 1 HEADWALL 0.6 CY
- 1 END CURTAIN WALL 0.6 CY
- TOTAL 8.4 CY

PROJECT NO. R-2417AA
LEE COUNTY
STATION: 105+20.00 -L-

SHEET 3 OF 4

STATE OF NORTH CAROLINA
DEPARTMENT OF TRANSPORTATION
RALEIGH

INLET WINGS FOR CONCRETE BOX CULVERT

H = 6'-0" SLOPE = 2:1
120° SKEW

NORTH CAROLINA PROFESSIONAL SEAL 24390 ENGINEER THEO J. BEACH
11/23/10

ASSEMBLED BY :	N. PIERCE	DATE :	9/05
CHECKED BY :	J.M.BRITT	DATE :	11/05
DRAWN BY :	CCJ		11/99
CHECKED BY :	RWW		03/00

REVISIONS

NO.	BY:	DATE:	NO.	BY:	DATE:
1			3		
2			4		

SHEET NO. C-3
TOTAL SHEETS 14

STR. #6

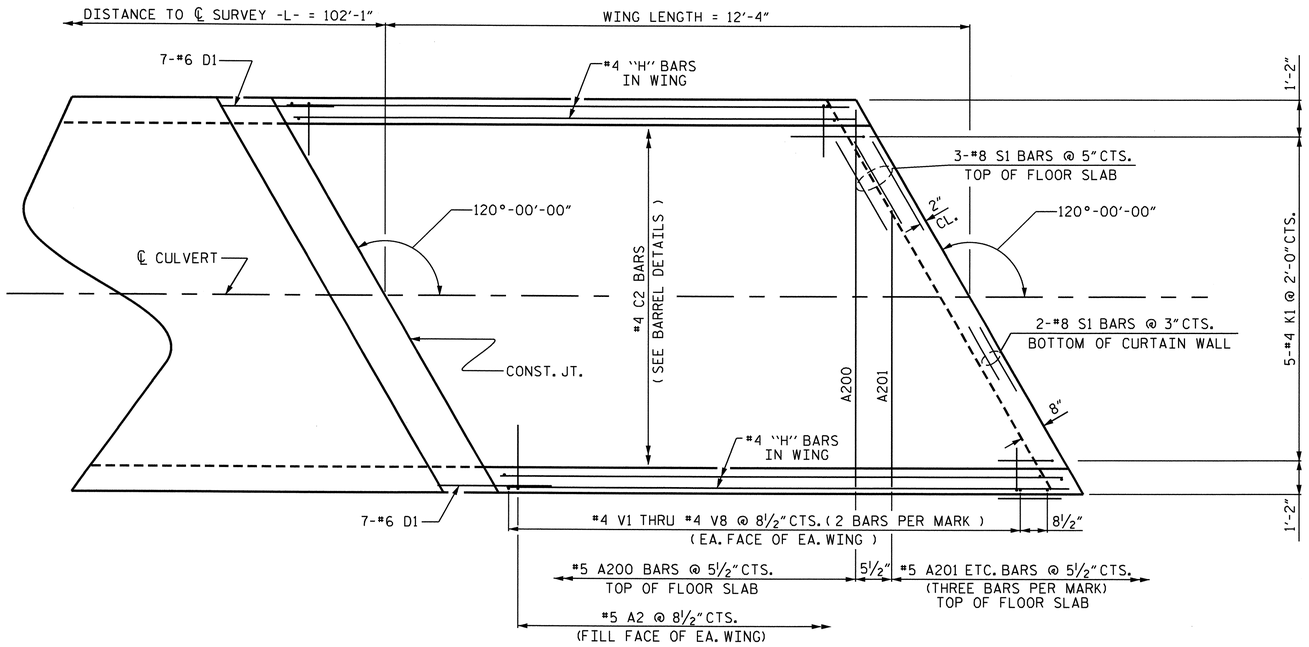

PLAN-OUTLET WINGS

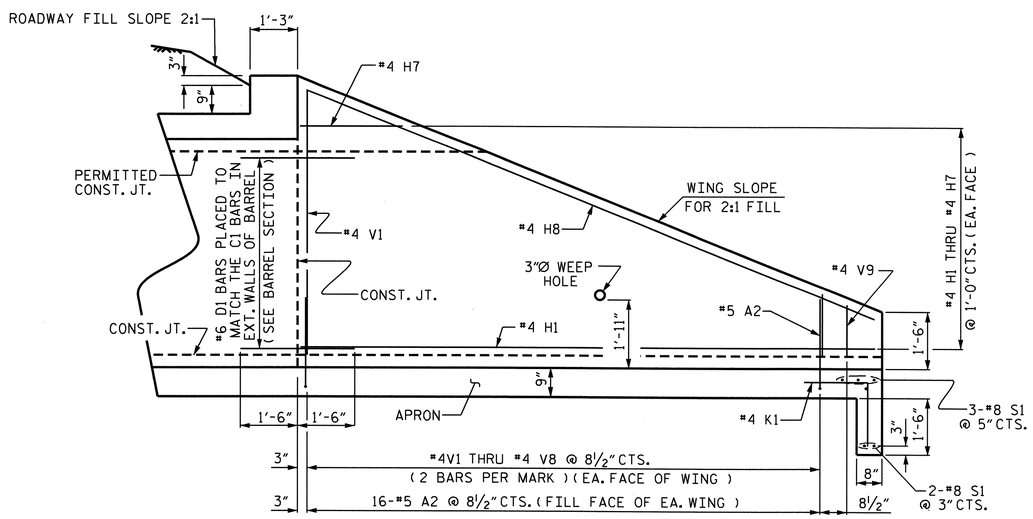

OUTLET WING SECTION

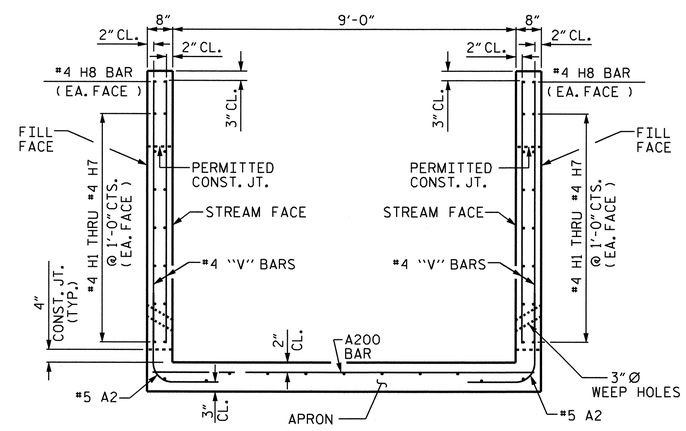

TYPICAL WING SECTION

BILL OF MATERIAL
OUTLET WINGS & APRON

BAR	NO.	SIZE	TYPE	LENGTH	WEIGHT
H1	4	#4	STR	12'-0"	32
H2	4	#4	STR	11'-9"	31
H3	4	#4	STR	9'-9"	26
H4	4	#4	STR	7'-9"	21
H5	4	#4	STR	5'-9"	15
H6	4	#4	STR	3'-9"	10
H7	4	#4	STR	1'-9"	5
H8	4	#4	STR	13'-4"	36
V1	8	#4	STR	6'-8"	36
V2	8	#4	STR	6'-0"	32
V3	8	#4	STR	5'-3"	28
V4	8	#4	STR	4'-7"	24
V5	8	#4	STR	3'-10"	20
V6	8	#4	STR	3'-2"	17
V7	8	#4	STR	2'-5"	13
V8	8	#4	STR	1'-4"	9
V9	4	#4	STR	1'-5"	4
REINFORCING STEEL					359 LBS.

CLASS A CONCRETE

2 WINGS	2.6 CY
1 APRON & CURTAIN WALL	4.2 CY
1 HEADWALL	0.6 CY
TOTAL	7.4 CY

NOTE:
QUANTITIES FOR THE FOLLOWING BARS ARE INCLUDED IN THE REINFORCING STEEL BAR SCHEDULE:
#5 A2
#5 A200 THRU A203
#4 C2
#6 D1
#4 K1
#8 S1

PROJECT NO. R-2417AA
LEE COUNTY
STATION: 105+20.00 -L-

SHEET 4 OF 4

STATE OF NORTH CAROLINA
DEPARTMENT OF TRANSPORTATION
RALEIGH

OUTLET WINGS FOR CONCRETE BOX CULVERT 120° SKEW

NORTH CAROLINA PROFESSIONAL SEAL 24390 ENGINEER THEO J. BEACH
11/23/10

REVISIONS						SHEET NO.
NO.	BY:	DATE:	NO.	BY:	DATE:	C-4
1			3			TOTAL SHEETS
2			4			14

DRAWN BY : N. PIERCE DATE : 9/05
CHECKED BY : J.M. BRITT DATE : 11/05

22-NOV-2010 14:11
R:\Structures\str6_culvert@105+20\R2417AA_sd_CU.dgn
tjbankovich

STR. #6

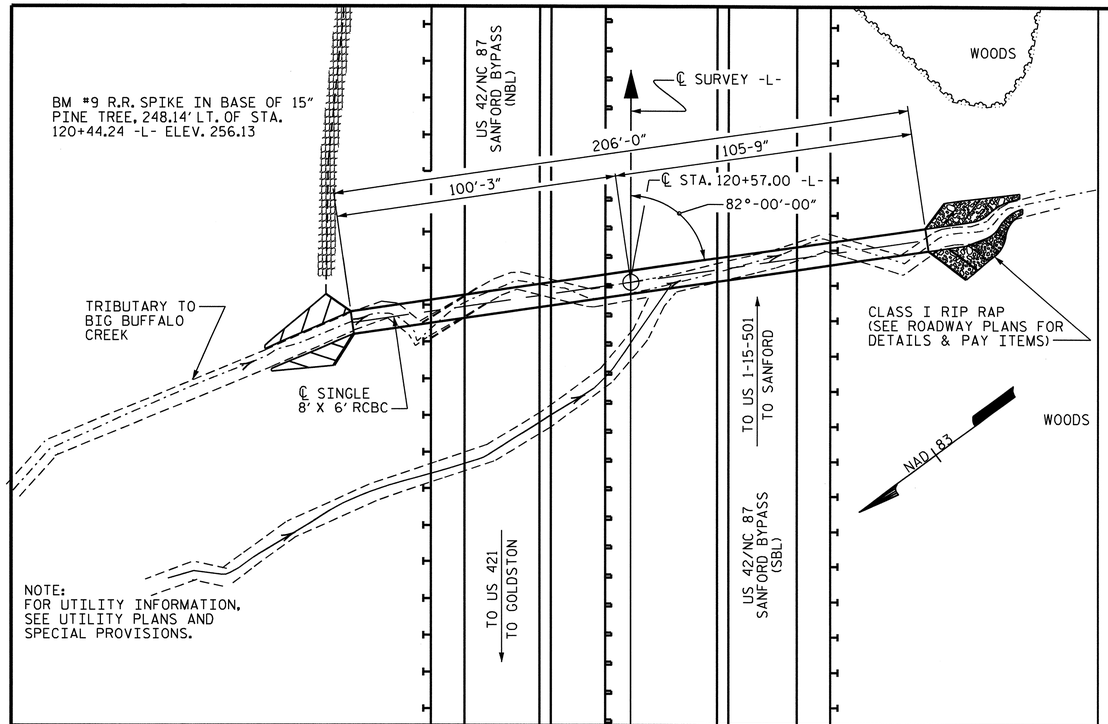

LOCATION SKETCH

REINFORCING STEEL BAR SCHEDULE

BAR	NO.	SIZE	TYPE	LENGTH	WEIGHT
A100	450	#5	STR	8'-11"	4185
A200	450	#5	STR	8'-11"	4185
A1	618	#5	1	4'-5"	2847
A2	618	#5	1	4'-6"	2901
B1	496	#4	STR	6'-11"	2292
B2	618	#5	STR	5'-4"	3438
C1	360	#4	STR	27'-7"	6633
G1	4	#4	STR	9'-0"	24
F1	42	#4	STR	6'-5"	180
REINFORCING STEEL				LBS.	26,685

SPLICE LENGTH CHART

BAR	SIZE	SPLICE LENGTH
B1	4	1'-9"
C1	4	1'-11"

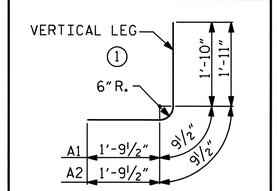

BAR TYPE
DIMENSIONS ARE OUT TO OUT

NOTES

ASSUMED LIVE LOAD ----------HS20-44 OR ALTERNATE LOADING.

DESIGN FILL----------15.91'.

FOR OTHER DESIGN DATA AND NOTES SEE STANDARD NOTE SHEET.

3" Ø WEEP HOLES INDICATED TO BE IN ACCORDANCE WITH THE SPECIFICATIONS.

CONCRETE IN CULVERTS TO BE POURED IN THE FOLLOWING ORDER:

1. WING FOOTINGS AND FLOOR SLAB INCLUDING 4" OF ALL VERTICAL WALLS.
2. THE REMAINING PORTIONS OF THE WALLS AND WINGS FULL HEIGHT FOLLOWED BY ROOF SLAB AND HEADWALLS.

AT THE CONTRACTORS OPTION, HE MAY SPLICE THE VERTICAL REINFORCING STEEL IN THE INTERIOR FACE OF EXTERIOR WALL ABOVE LOWER WALL CONSTRUCTION JOINT. THE SPLICE LENGTH SHALL BE AS PROVIDED IN THE SPLICE LENGTH CHART SHOWN ON THE PLANS. EXTRA WEIGHT OF STEEL DUE TO THE SPLICES SHALL BE PAID FOR BY THE CONTRACTOR.

THE CONTRACTOR SHALL PROVIDE INDEPENDENT ASSURANCE SAMPLES OF REINFORCING STEEL AS FOLLOWS: FOR PROJECTS REQUIRING UP TO 400 TONS OF REINFORCING STEEL, ONE 30 INCH SAMPLE OF EACH SIZE BAR USED, AND FOR PROJECTS REQUIRING OVER 400 TONS OF REINFORCING STEEL, TWO 30 INCH SAMPLES OF EACH SIZE BAR USED. THE BARS FROM WHICH THE SAMPLES ARE TAKEN MUST THEN BE SPLICED WITH REPLACEMENT BARS OF THE SIZE AND LENGTH OF THE SAMPLE, PLUS A MINIMUM LAP SPLICE OF THIRTY BAR DIAMETERS.

THE RESIDENT ENGINEER SHALL CHECK THE LENGTH OF CULVERT BEFORE STAKING IT OUT TO MAKE CERTAIN THAT IT WILL PROPERLY TAKE CARE OF THE FILL.

DIMENSIONS FOR WING LAYOUT AS WELL AS ADDITIONAL REINFORCING STEEL EMBEDDED IN BARREL ARE SHOWN ON WING SHEET.

TRANSVERSE CONSTRUCTION JOINTS SHALL BE USED IN THE BARREL, SPACED TO LIMIT THE POURS TO A MAXIMUM OF 50 FEET. LOCATION OF JOINTS SHALL BE SUBJECT TO APPROVAL TO THE ENGINEER.

FOR CULVERT DIVERSION DETAILS AND PAY ITEM, SEE EROSION CONTROL PLANS.

FOR CONSTRUCTION SEQUENCE, SEE EROSION CONTROL PLANS.

A 3 FOOT STRIP OF FILTER FABRIC SHALL BE ATTACHED TO THE FILL FACE OF THE WING COVERING THE ENTIRE LENGTH OF THE EXPANSION JOINT.

FOR SUBMITTAL OF WORKING DRAWINGS, SEE SPECIAL PROVISIONS.

FOR FALSEWORK AND FORMWORK, SEE SPECIAL PROVISIONS.

FOR CRANE SAFETY, SEE SPECIAL PROVISIONS.

NO PRECAST REINFORCED BOX CULVERT OPTION WILL BE ALLOWED.

HYDROGRAPHIC DATA

DESIGN DISCHARGE	= 340	CFS
FREQUENCY OF DESIGN FLOOD	= 50	YR
DESIGN HIGH WATER ELEVATION	= 250.6	
DRAINAGE AREA	= 110.0	AC
BASE DISCHARGE (Q100)	= 380	
BASE HIGH WATER ELEVATION	= 251.1	

OVERTOPPING FLOOD

OVERTOPPING DISCHARGE	= 710	CFS
FREQUENCY OVERTOPPING FLOOD	= 500+	YR
OVERTOPPING FLOOD ELEVATION	= 258.0	
OVERTOPPING LOCATION @ STA. 117+50.00 -L-		

GRADE DATA

GRADE POINT ELEV. @ STA. 120+57.00 -L- =264.11
BED ELEVATION @ STA. 120+57.00 -L- =242.750
ROADWAY SLOPE =2:1

TOTAL STRUCTURE QUANTITIES

CLASS A CONCRETE		
BARREL @ 0.805 CY/FT	165.8	C.Y.
WING ETC.	15.6	C.Y.
TOTAL	181.4	C.Y.
REINFORCING STEEL		
BARREL	26,685	LBS.
WINGS ETC.	793	LBS.
TOTAL	27,478	LBS.
FOUND. COND. MAT'L.	136	TONS
CULVERT EXCAVATION	LUMP SUM	

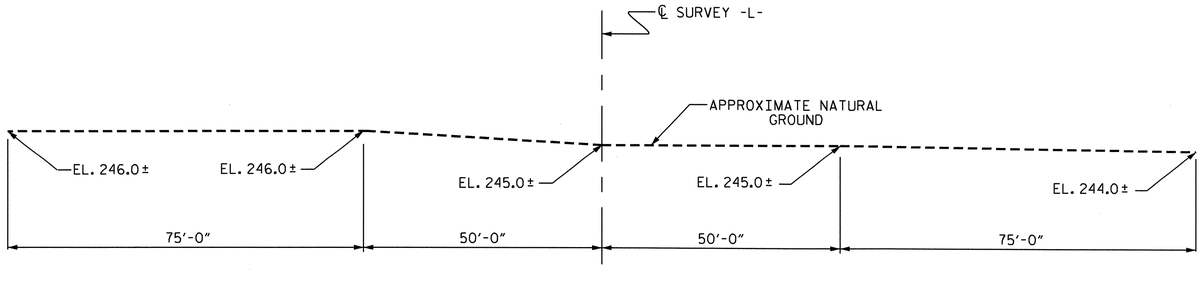

PROFILE ALONG ℄ CULVERT

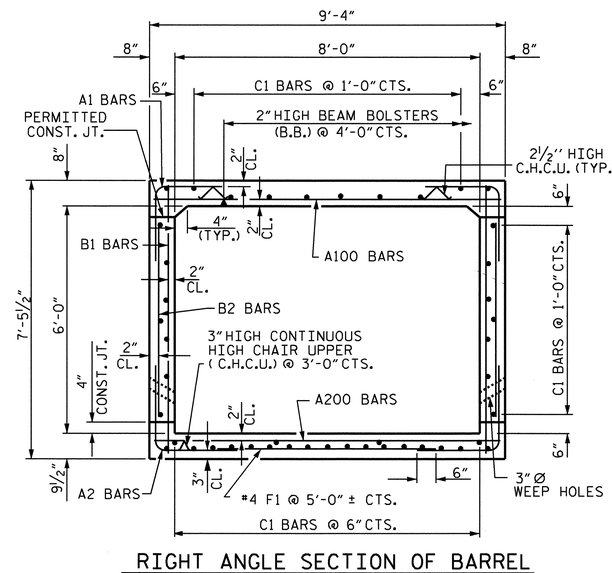

RIGHT ANGLE SECTION OF BARREL

THERE ARE 45 "C" BARS IN SECTION OF BARREL
C1 BARS ARE 10 BAR RUNS

PROJECT NO. R-2417AA
LEE COUNTY
STATION: 120+57.00 -L-

SHEET 1 OF 3

STATE OF NORTH CAROLINA
DEPARTMENT OF TRANSPORTATION
RALEIGH

SINGLE 8 FT. X 6 FT. CONCRETE BOX CULVERT 82° SKEW

AUGUST 1989

REVISIONS						SHEET NO.
NO.	BY:	DATE:	NO.	BY:	DATE:	C-5
1			3			TOTAL SHEETS
2			4			14

ASSEMBLED BY : R. G. EMERSON DATE : 01/06
CHECKED BY : A. V. ROYAL DATE : 02/06
SPECIAL

REVISED 11-13-91 BY E.L.R. CHECKED BY G.R.P.
ADDED 8-22-89

STR. #7

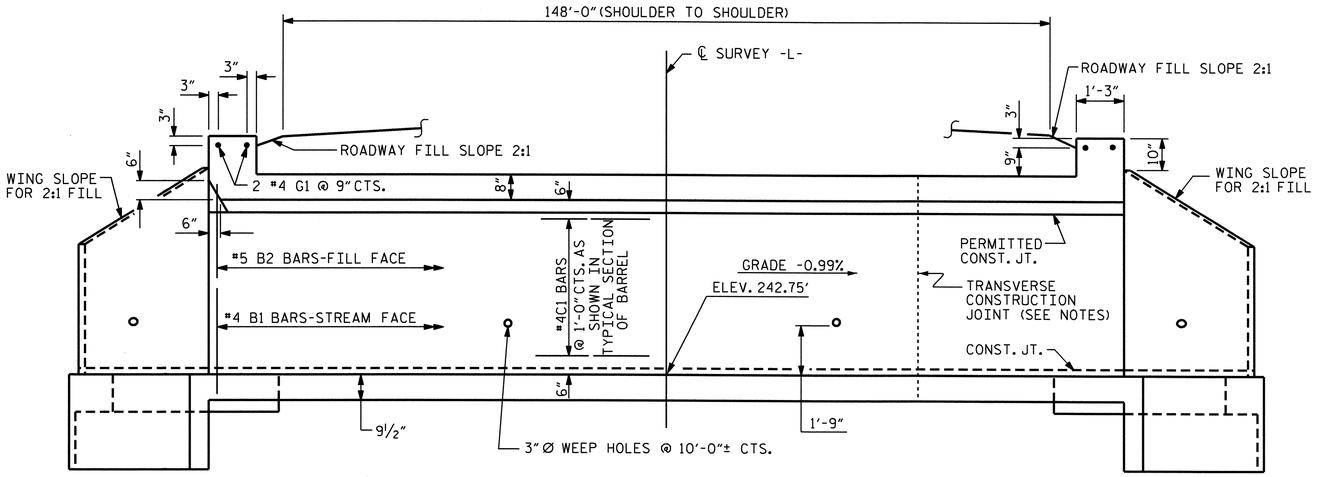

CULVERT SECTION NORMAL TO ROADWAY

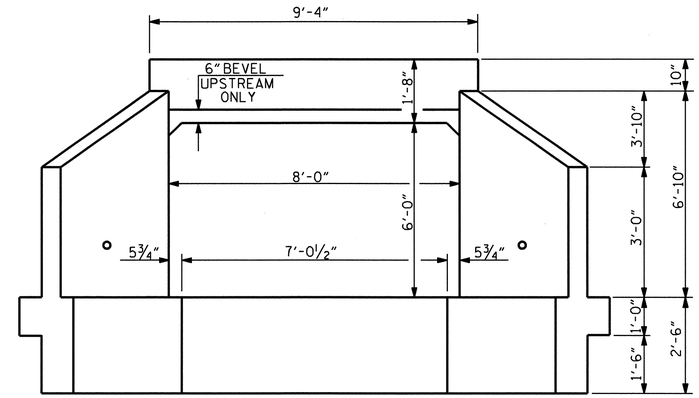

END ELEVATION

NOTE: C1 BARS ARE 8 BAR RUNS

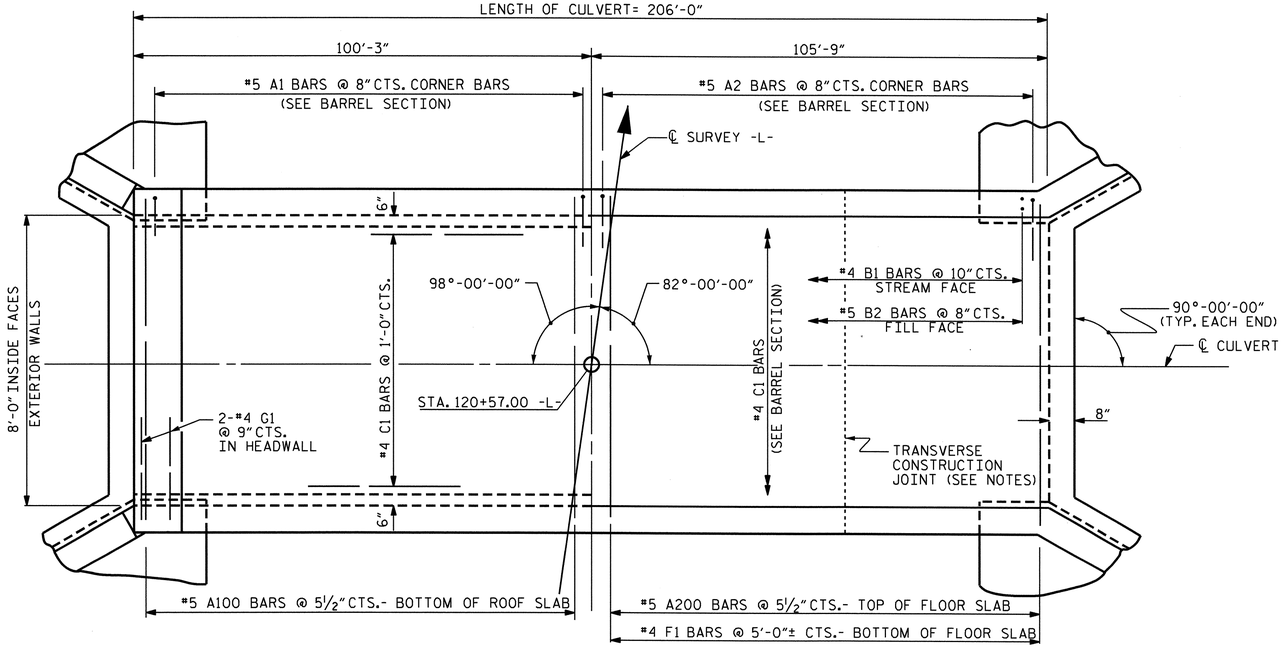

PART PLAN ROOF SLAB

PART PLAN FLOOR SLAB

PROJECT NO. R-2417AA
LEE COUNTY
STATION: 120+57.00 -L-

SHEET 2 OF 3

STATE OF NORTH CAROLINA
DEPARTMENT OF TRANSPORTATION
RALEIGH

BARREL STANDARD
SINGLE 8 FT. X 6 FT.
CONCRETE BOX CULVERT
82° SKEW

NORTH CAROLINA PROFESSIONAL SEAL 24390 ENGINEER THEO J. BEAO
11/23/10

REVISIONS						SHEET NO.
NO.	BY:	DATE:	NO.	BY:	DATE:	C-6
1			3			TOTAL SHEETS
2			4			14

ASSEMBLED BY : R. G. EMERSON DATE : 01/06		SPECIAL
CHECKED BY : A. V. ROYAL DATE : 02/06		
DRAWN BY : R. WRIGHT DATE : AUG. 1989		STANDARD
CHECKED BY : A.R. BISSETTE DATE : AUG. 1989		

REVISED 8-28-92 BY E.L.R. CHECKED BY C.R.P.
REVISED 8-22-99 BY A.R.B. CHECKED BY C.R.K.
REDRAWN 8-22-1989
REVISED 11-19-99 BY M.M. CHECKED BY R.W.W.

STR. #7

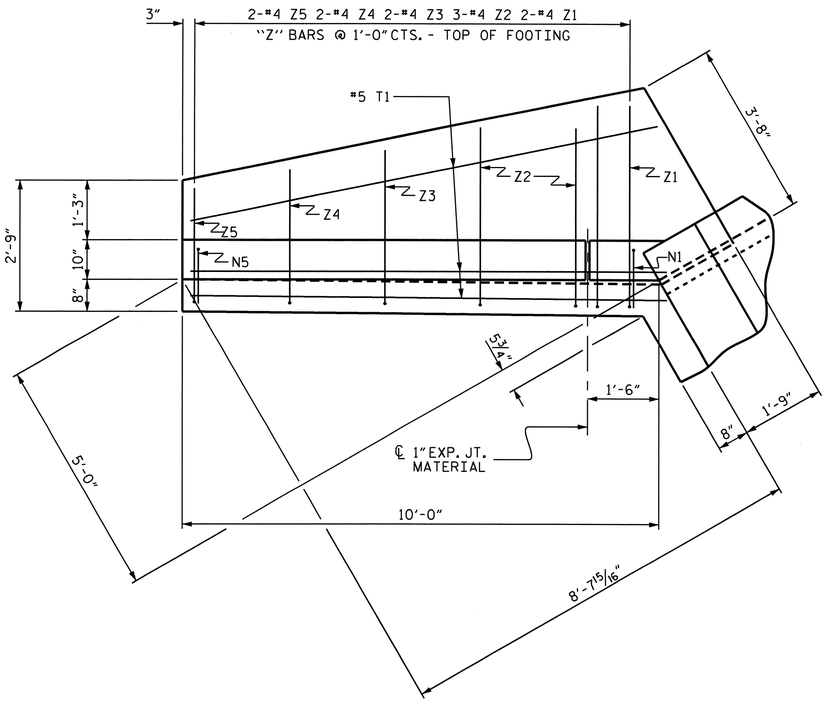

PLAN

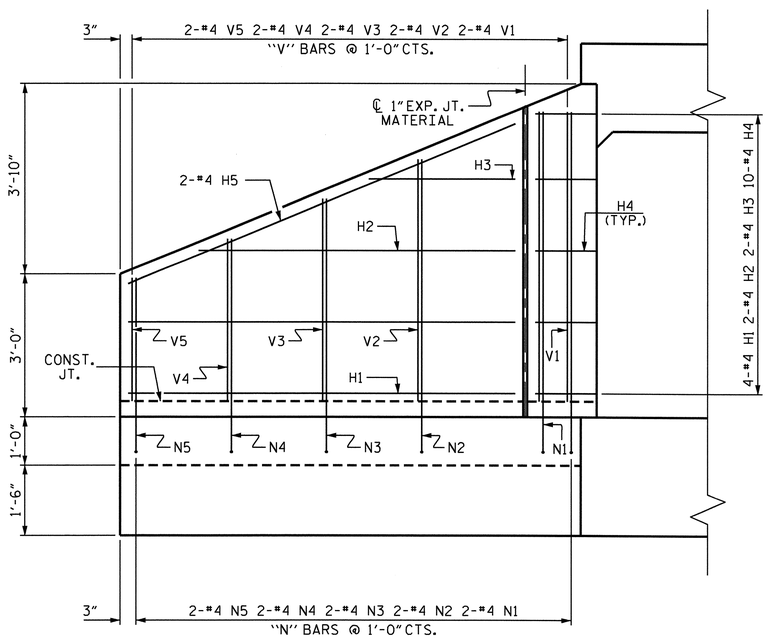

ELEVATION

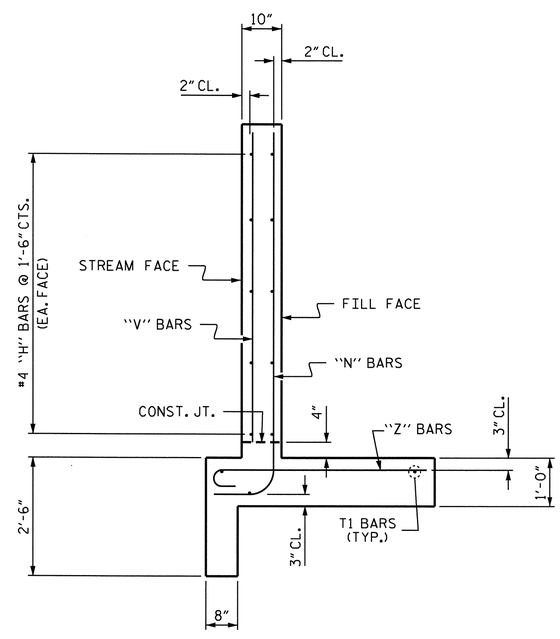

TYPICAL WING SECTION

BAR TYPES

ALL BAR DIMENSIONS ARE OUT TO OUT.

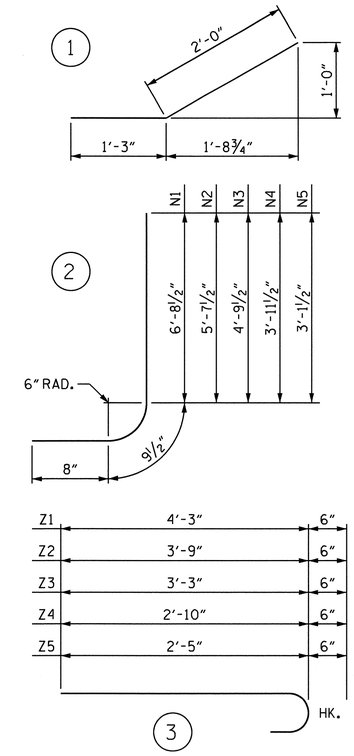

BILL OF MATERIAL

BAR	NO.	SIZE	TYPE	LENGTH	WEIGHT
H1	16	#4	STR	8'-1"	86
H2	8	#4	STR	6'-8"	36
H3	8	#4	STR	3'-1"	16
H4	40	#4	1	3'-3"	87
H5	8	#4	STR	8'-9"	47
N1	8	#4	2	8'-2"	44
N2	8	#4	2	7'-1"	38
N3	8	#4	2	6'-3"	33
N4	8	#4	2	5'-5"	29
N5	8	#4	2	4'-7"	24
T1	12	#5	STR	10'-0"	125
V1	8	#4	STR	6'-1"	33
V2	8	#4	STR	5'-1"	27
V3	8	#4	STR	4'-3"	23
V4	8	#4	STR	3'-5"	18
V5	8	#4	STR	2'-7"	14
Z1	8	#4	3	4'-9"	25
Z2	12	#4	3	4'-3"	34
Z3	8	#4	3	3'-9"	20
Z4	8	#4	3	3'-4"	18
Z5	8	#4	3	2'-11"	16

REINFORCING STEEL FOR 4 WINGS 793 LBS

CLASS A CONCRETE
- 4 WINGS 13.8 CY
- 2 HEADWALLS 0.9 CY
- 2 END CURTAIN WALLS 0.9 CY
- TOTAL 15.6 CY

PROJECT NO. R-2417AA
LEE COUNTY
STATION: 120+57.00-L-

SHEET 3 OF 3

STATE OF NORTH CAROLINA
DEPARTMENT OF TRANSPORTATION
RALEIGH

STANDARD WINGS FOR CONCRETE BOX CULVERT

H = 6'-0" SLOPE = 2:1
90° SKEW

NORTH CAROLINA PROFESSIONAL SEAL 24390 ENGINEER THEO J. BEACH 11/23/10

REVISIONS						SHEET NO.
NO.	BY:	DATE:	NO.	BY:	DATE:	C-7
1			3			TOTAL SHEETS
2			4			14

ASSEMBLED BY : R. G. EMERSON DATE : 01/06
CHECKED BY : A. V. ROYAL DATE : 02/06
DRAWN BY : CCJ 10/99
CHECKED BY : RWW 03/00

STR. #7

BENCHMARK #11: RR-SPIKE IN BASE OF 12" TWIN GUM TREE 381.68' RT. OF STA. 145+43.92 -L- ELEV. 248.70

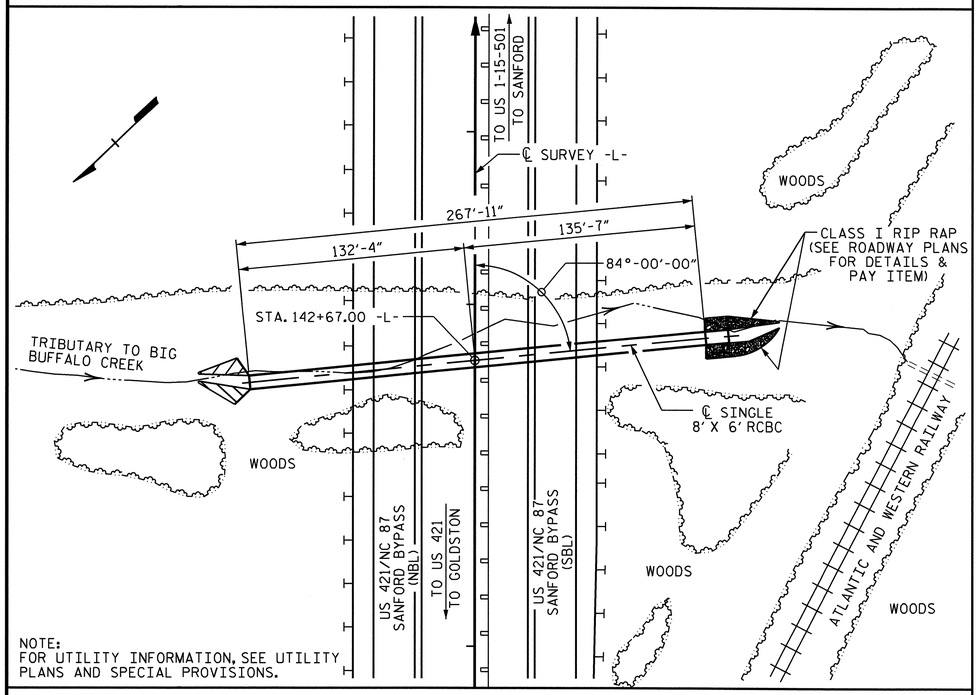

NOTE:
FOR UTILITY INFORMATION, SEE UTILITY PLANS AND SPECIAL PROVISIONS.

LOCATION SKETCH

TOTAL STRUCTURE QUANTITIES

CLASS A CONCRETE		
BARREL @ 1.078 CY/FT	288.8	C.Y.
INLET WINGS ETC.	7.7	C.Y.
OUTLET WINGS ETC.	9.2	C.Y.
TOTAL	305.7	C.Y.
REINFORCING STEEL		
BARREL	44,055	LBS.
INLET WINGS ETC.	396	LBS.
OUTLET WINGS ETC.	374	LBS.
TOTAL	44,825	LBS.
FOUNDATION CONDITIONING MAT'L	185	TONS
CULVERT EXCAVATION	LUMP SUM	

NOTES

ASSUMED LIVE LOAD ----------HS20-44 OR ALTERNATE LOADING.

DESIGN FILL---------- = 31.72 FT.

FOR OTHER DESIGN DATA AND NOTES SEE STANDARD NOTE SHEET.

3"Ø WEEP HOLES INDICATED TO BE IN ACCORDANCE WITH THE SPECIFICATIONS.

CONCRETE IN CULVERTS TO BE POURED IN THE FOLLOWING ORDER:

1. WING FOOTINGS, OUTLET APRON AND FLOOR SLAB INCLUDING 4" OF VERTICAL WALLS.
2. THE REMAINING PORTIONS OF THE WALLS AND WINGS FULL HEIGHT FOLLOWED BY ROOF SLAB AND HEADWALLS.

THE RESIDENT ENGINEER SHALL CHECK THE LENGTH OF CULVERT BEFORE STAKING IT OUT TO MAKE CERTAIN THAT IT WILL PROPERLY TAKE CARE OF THE FILL.

DIMENSIONS FOR WING LAYOUT AS WELL AS ADDITIONAL REINFORCING STEEL EMBEDDED IN BARREL ARE SHOWN ON WING SHEETS.

AT THE CONTRACTOR'S OPTION, HE MAY SPLICE THE VERTICAL REINFORCING STEEL IN THE INTERIOR FACE OF EXTERIOR WALL ABOVE LOWER WALL CONSTRUCTION JOINT. THE SPLICE LENGTH SHALL BE AS PROVIDED IN THE SPLICE LENGTH CHART SHOWN ON THE PLANS. EXTRA WEIGHT OF STEEL DUE TO THE SPLICES SHALL BE PAID FOR BY THE CONTRACTOR.

FOR FALSEWORK AND FORMWORK, SEE SPECIAL PROVISIONS.

FOR CULVERT DIVERSION DETAILS AND PAY ITEM, SEE EROSION CONTROL PLANS.

FOR CONSTRUCTION SEQUENCE, SEE EROSION CONTROL PLANS.

FOR SUBMITTAL OF WORKING DRAWINGS, SEE SPECIAL PROVISIONS.

NO PRECAST REINFORCED BOX CULVERT OPTION WILL BE ALLOWED.

A 3 FOOT STRIP OF FILTER FABRIC SHALL BE ATTACHED TO THE FILL FACE OF THE WING COVERING THE ENTIRE LENGTH OF THE EXPANSION JOINT.

THE CONTRACTOR SHALL PROVIDE INDEPENDENT ASSURANCE SAMPLES OF REINFORCING STEEL AS FOLLOWS: FOR PROJECTS REQUIRING UP TO 400 TONS OF REINFORCING STEEL, ONE 30 INCH SAMPLE OF EACH SIZE BAR USED, AND FOR PROJECTS REQUIRING OVER 400 TONS OF REINFORCING STEEL, TWO 30 INCH SAMPLES OF EACH SIZE BAR USED. THE BARS FROM WHICH THE SAMPLES ARE TAKEN MUST THEN BE SPLICED WITH REPLACEMENT BARS OF THE SIZE AND LENGTH OF THE SAMPLE, PLUS A MINIMUM LAP SPLICE OF THIRTY BAR DIAMETERS.

TRANSVERSE CONSTRUCTION JOINTS SHALL BE USED IN THE BARREL, SPACED TO LIMIT THE POURS TO A MAXIMUM OF 50 FT. LOCATION OF JOINTS SHALL BE SUBJECT TO APPROVAL OF THE ENGINEER.

AT THE CONTRACTOR'S OPTION THE VERTICAL CONSTRUCTION JOINT BETWEEN THE OUTLET WINGS AND THE BARREL MAY BE ELIMINATED AND THE C1 BARS IN THE BARREL WALLS MAY BE EXTENDED TO REPLACE THE "D" AND "H" BARS IN THE WINGS.

FOR CRANE SAFETY, SEE SPECIAL PROVISIONS.

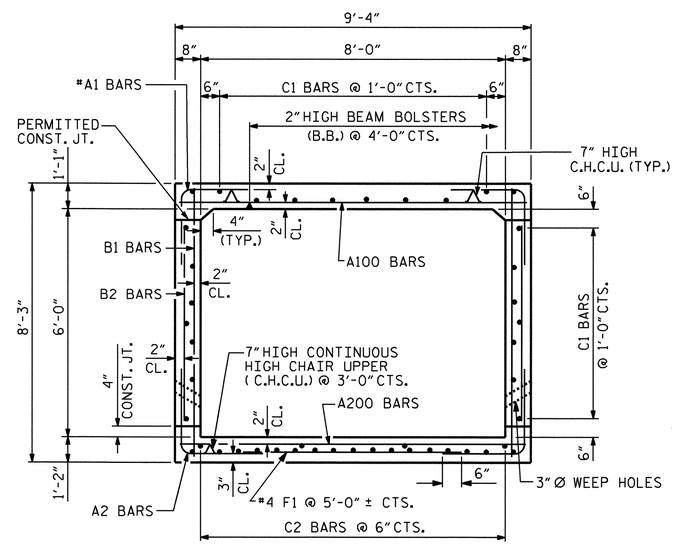

RIGHT ANGLE SECTION OF BARREL

THERE ARE 45 "C" BARS IN SECTION OF BARREL
"C" BARS ARE 10 BAR RUNS

HYDROGRAPHIC DATA

DESIGN DISCHARGE	300 CFS
FREQUENCY OF DESIGN FLOOD	50 YRS.
DESIGN HIGH WATER ELEVATION	255.8
DRAINAGE AREA	90.0 AC
BASIC DISCHARGE (Q100)	340 CFS
BASIC HIGH WATER ELEVATION	256.3

OVERTOPPING FLOOD DATA

OVERTOPPING DISCHARGE	590 CFS
FREQUENCY OF OVERTOPPING FLOOD	500+ YRS.
OVERTOPPING FLOOD ELEVATION	260.0
OVERTOPPING LOCATION @ STA. 136+00.00 -L-	

GRADE DATA

GRADE POINT ELEVATION @ STA. 142+67.00 -L-	285.81
BED ELEVATION @ STA. 142+67.00 -L-	248.25
ROADWAY SLOPES	2:1

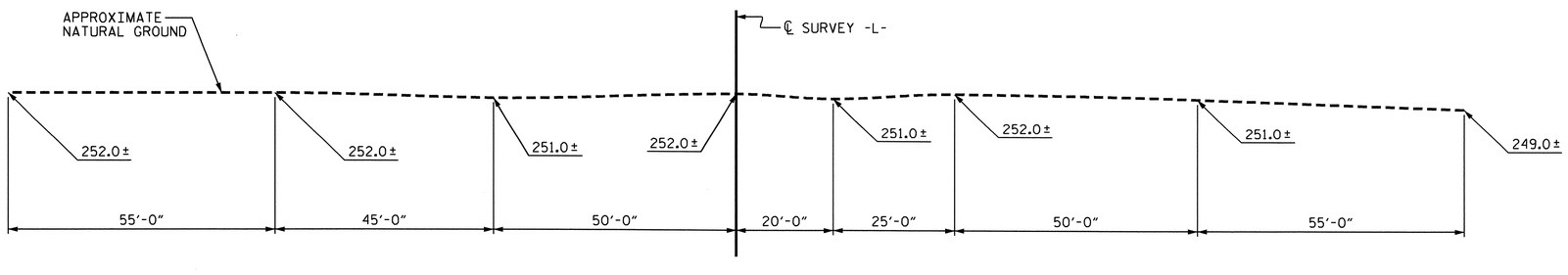

PROFILE ALONG ℄ CULVERT

PROJECT NO. R-2417AA
LEE COUNTY
STATION: 142+67.00 -L-

SHEET 1 OF 4

STATE OF NORTH CAROLINA
DEPARTMENT OF TRANSPORTATION
RALEIGH

SINGLE 8 FT. X 6 FT. CONCRETE BOX CULVERT 84° SKEW

NORTH CAROLINA PROFESSIONAL SEAL 24390 ENGINEER THEO J. BEACH 11/23/10

NORTH CAROLINA PROFESSIONAL SEAL 11268 ENGINEER BETSY S. COX 11-23-10

REVISIONS						SHEET NO.
NO.	BY:	DATE:	NO.	BY:	DATE:	C-8
1			3			TOTAL SHEETS
2			4			14

DRAWN BY : A. K. PATEL DATE : 10-10-05
CHECKED BY : J. M. BRITT DATE : 10-19-05

11-OCT-2010 12:03
R:\Structures\str8_culvert@142+67\R2417AA_sd_CU_08.dgn
sbwilliams

STR. #8

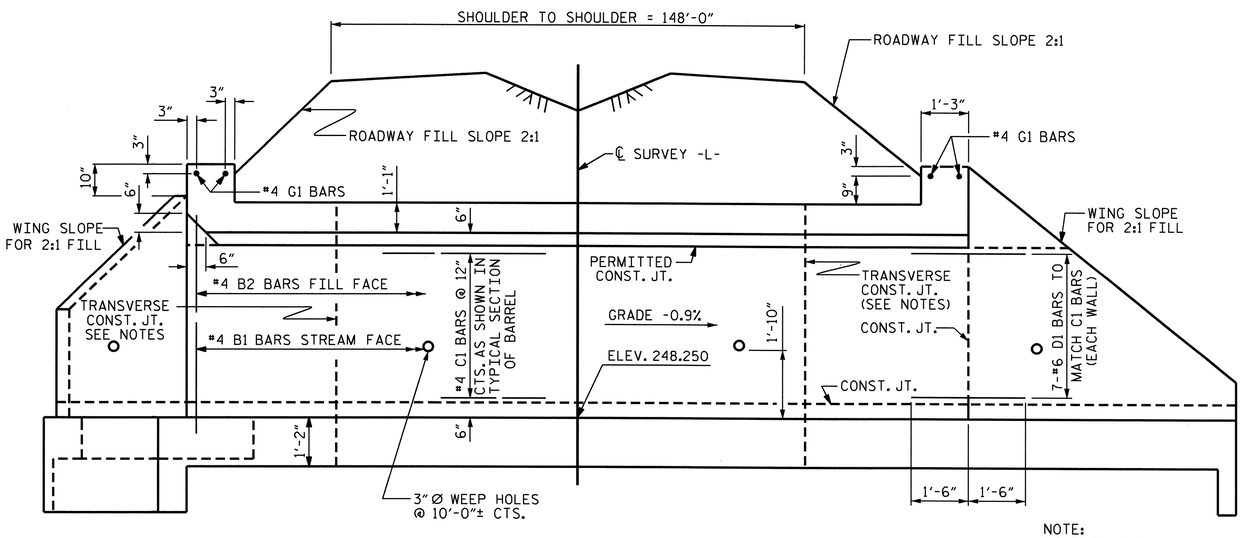

CULVERT SECTION NORMAL TO ROADWAY

NOTE:
#4 C1 & C2 BARS ARE 10 BAR RUNS

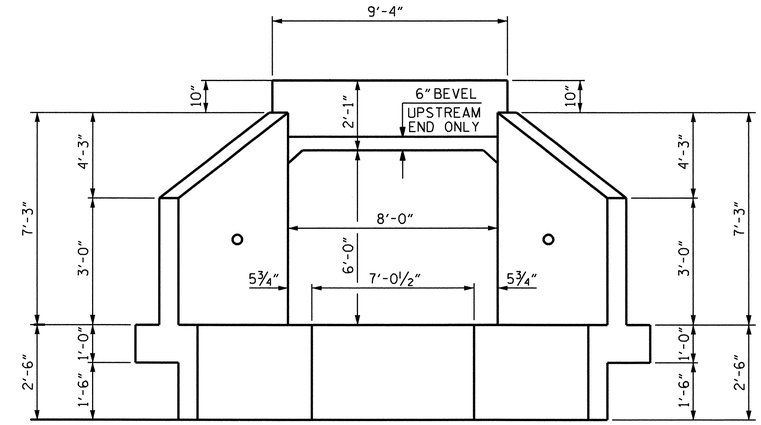

END ELEVATION -INLET

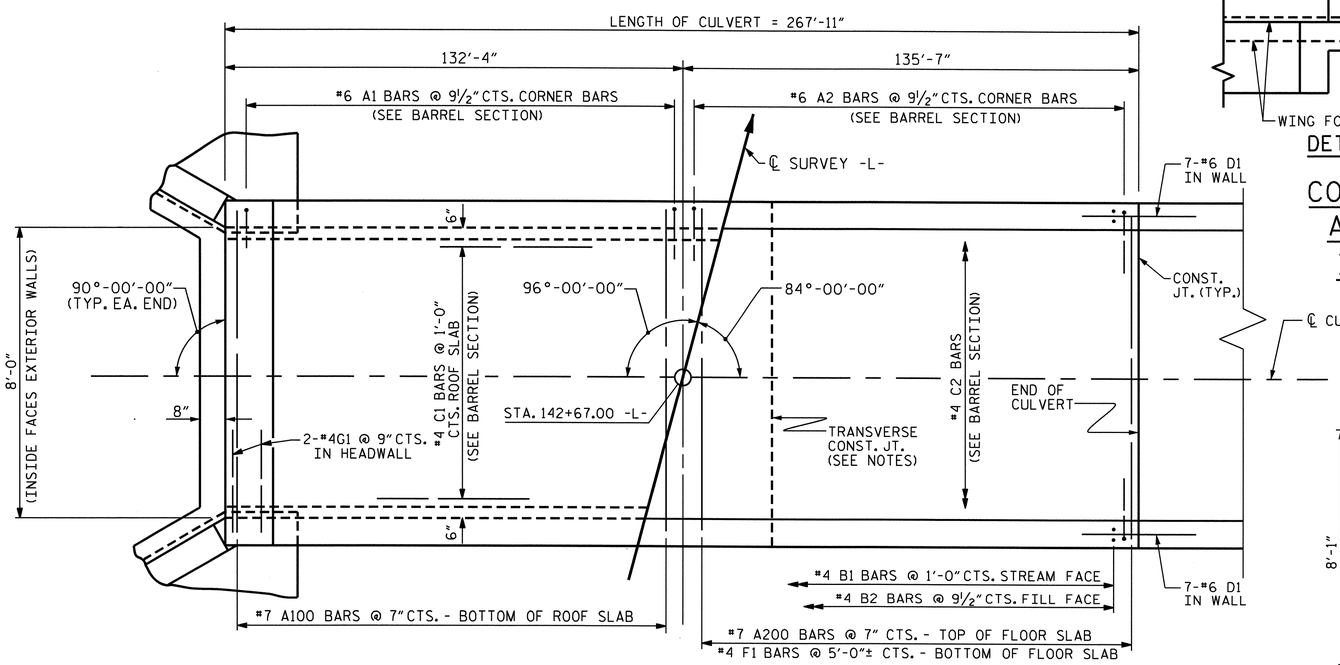

PART PLAN ROOF SLAB

PART PLAN FLOOR SLAB

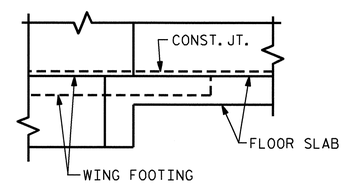

DETAIL

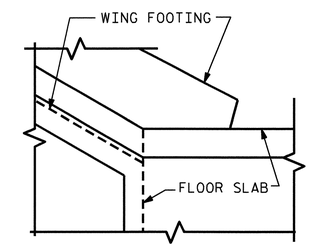

CONNECTION OF WING FOOTING AND FLOOR SLAB WHEN SLAB IS THICKER THAN FOOTING

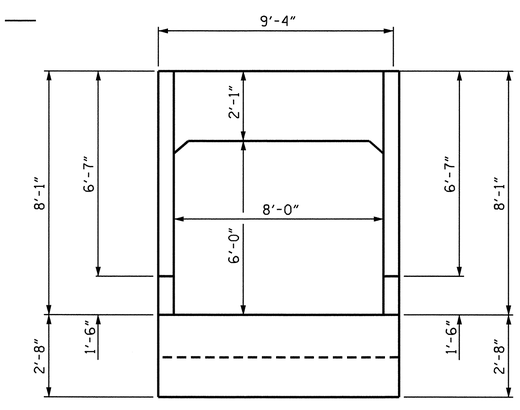

END ELEVATION -OUTLET

REINFORCING STEEL BAR SCHEDULE

BAR	NO.	SIZE	TYPE	LENGTH	WEIGHT
A1	678	#6	1	6'-0"	6110
A2	706	#6	1	6'-0"	6362
A100	460	#7	STR	8'-11"	8384
A200	483	#7	STR	8'-11"	8803
B1	536	#4	STR	7'-9"	2775
B2	678	#4	STR	5'-4"	2415
C1	240	#4	STR	28'-8"	4596
C2	210	#4	STR	29'-10"	4185
D1	14	#6	STR	3'-0"	63
F1	59	#4	STR	5'-3"	207
G1	4	#4	STR	9'-0"	24
K1	5	#4	2	3'-6"	12
S1	5	#8	STR	8'-11"	119

REINFORCING STEEL 44,055 LBS.

SPLICE LENGTHS CHART

BAR	SIZE	SPLICE LENGTH
B1	4	1'-9"
C1	4	1'-11"
C2	4	1'-11"

BAR TYPE

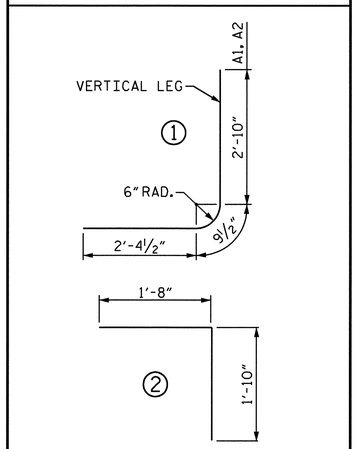

BAR DIMENSIONS ARE OUT TO OUT

PROJECT NO. R-2417AA
LEE COUNTY
STATION: 142+67.00 -L-

SHEET 2 OF 4

STATE OF NORTH CAROLINA
DEPARTMENT OF TRANSPORTATION
RALEIGH

BARREL STANDARD
SINGLE 8 FT. X 6 FT.
CONCRETE BOX CULVERT
84° SKEW

NORTH CAROLINA PROFESSIONAL SEAL 20390 ENGINEER THEO J. BEACH
11/23/10

REVISIONS							SHEET NO.
NO.	BY:	DATE:	NO.	BY:	DATE:		C-9
1			3				TOTAL SHEETS
2			4				14

ASSEMBLED BY : A. K. PATEL DATE : 10-10-05		SPECIAL
CHECKED BY : J. M. BRITT DATE : 10-19-05		
DRAWN BY : J.W. ROUSE DATE : SEPT. 1989		STANDARD
CHECKED BY : A.R. BISSETTE DATE : AUG. 1989		

REVISED 8-28-92 BY E.L.R. CHECKED BY G.R.P.
REVISED 8-22-89 BY A.R.B. CHECKED BY C.R.K.
REDRAWN 8-22-89
REVISED 11-19-99 BY M.M. CHECKED BY R.W.W.

STR. #8

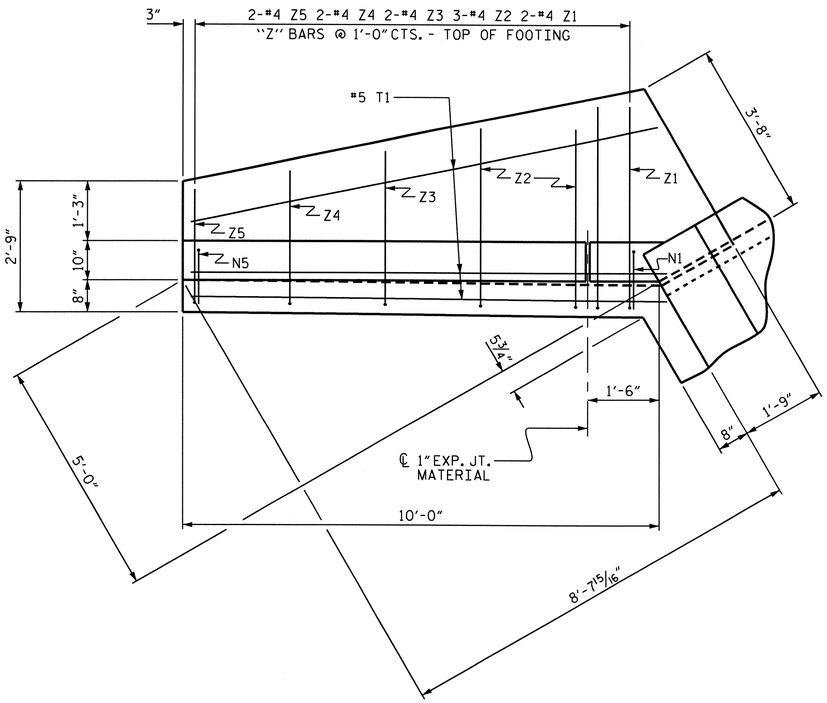

PLAN

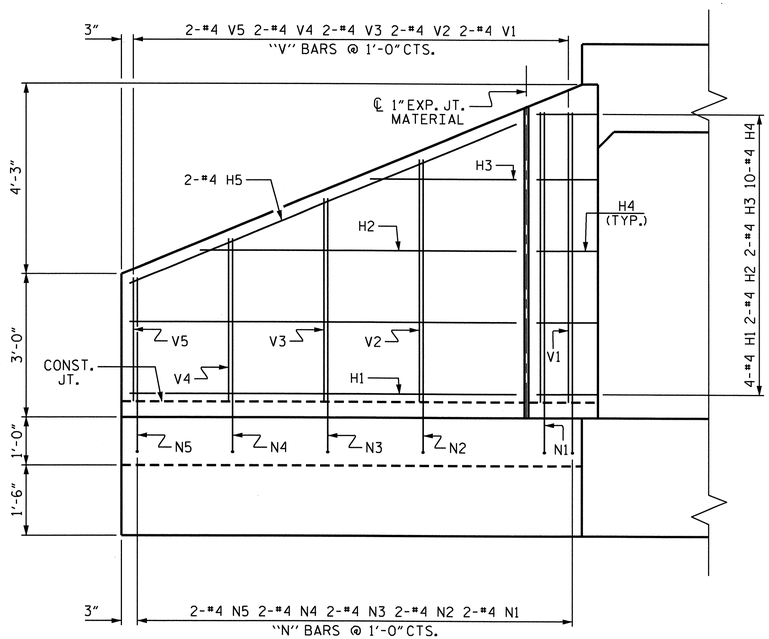

ELEVATION

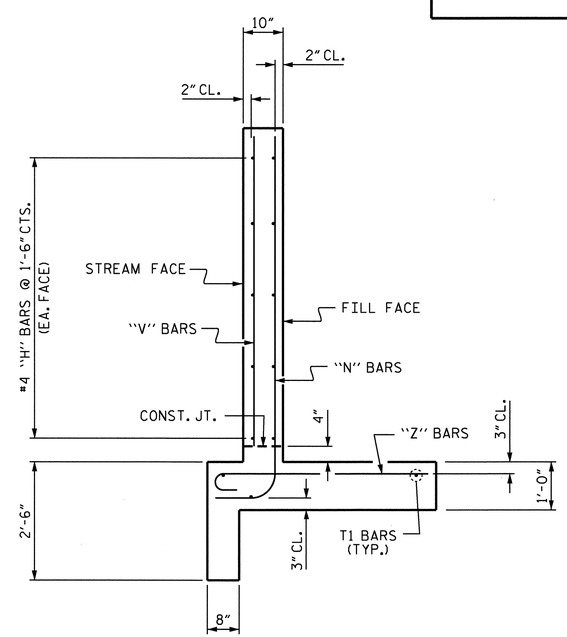

TYPICAL WING SECTION

BAR TYPES

ALL BAR DIMENSIONS ARE OUT TO OUT.

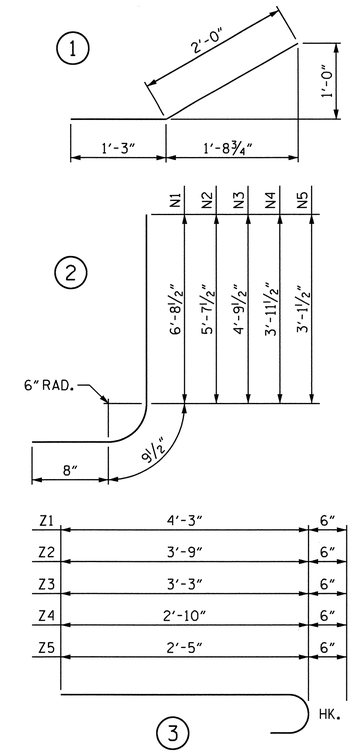

BILL OF MATERIAL

BAR	NO.	SIZE	TYPE	LENGTH	WEIGHT
H1	8	#4	STR	8'-1"	43
H2	4	#4	STR	6'-8"	18
H3	4	#4	STR	3'-1"	8
H4	20	#4	1	3'-3"	43
H5	4	#4	STR	8'-9"	23
N1	4	#4	2	8'-2"	22
N2	4	#4	2	7'-1"	19
N3	4	#4	2	6'-3"	17
N4	4	#4	2	5'-5"	14
N5	4	#4	2	4'-7"	12
T1	6	#5	STR	10'-0"	63
V1	4	#4	STR	6'-1"	16
V2	4	#4	STR	5'-1"	14
V3	4	#4	STR	4'-3"	11
V4	4	#4	STR	3'-5"	9
V5	4	#4	STR	2'-7"	7
Z1	4	#4	3	4'-9"	13
Z2	6	#4	3	4'-3"	17
Z3	4	#4	3	3'-9"	10
Z4	4	#4	3	3'-4"	9
Z5	4	#4	3	2'-11"	8

REINFORCING STEEL FOR 2 WINGS 396 LBS

CLASS A CONCRETE

2 WINGS	6.9	CY
1 HEADWALL	0.4	CY
1 END CURTAIN WALL	0.4	CY
TOTAL	7.7	CY

PROJECT NO. R-2417AA

LEE COUNTY

STATION: 142+67.00 -L-

SHEET 3 OF 4

STATE OF NORTH CAROLINA
DEPARTMENT OF TRANSPORTATION
RALEIGH

INLET WINGS FOR CONCRETE BOX CULVERT

H = 6'-0" SLOPE = 2:1

90° SKEW

NORTH CAROLINA PROFESSIONAL SEAL 24390 ENGINEER THEO J. BEACH
11/23/10

REVISIONS						SHEET NO.
NO.	BY:	DATE:	NO.	BY:	DATE:	C-10
1			3			TOTAL SHEETS
2			4			14

ASSEMBLED BY : A. K. PATEL DATE : 10-10-05
CHECKED BY : J. M. BRITT DATE : 10-19-05

DRAWN BY : CCJ 10/99
CHECKED BY : RWW 03/00

STR. #8

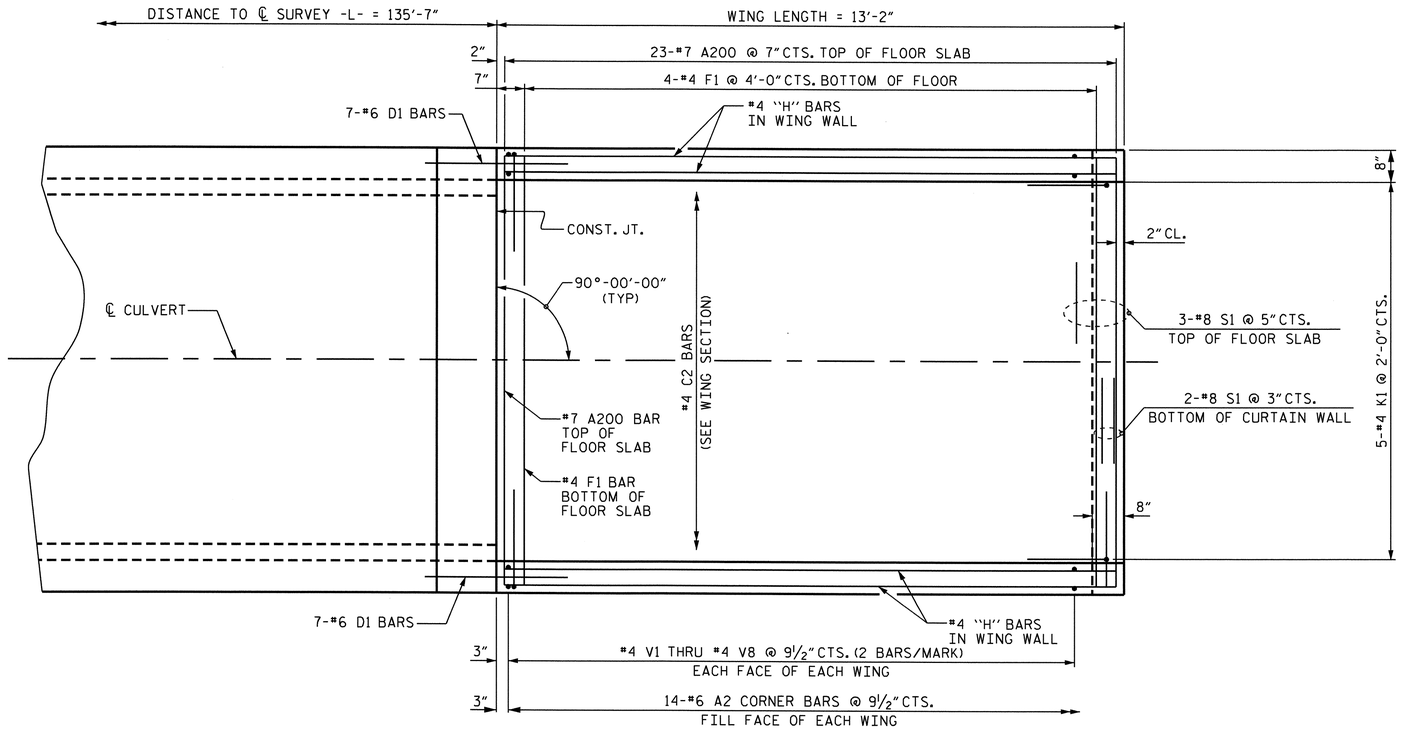

PLAN - OUTLET WINGS

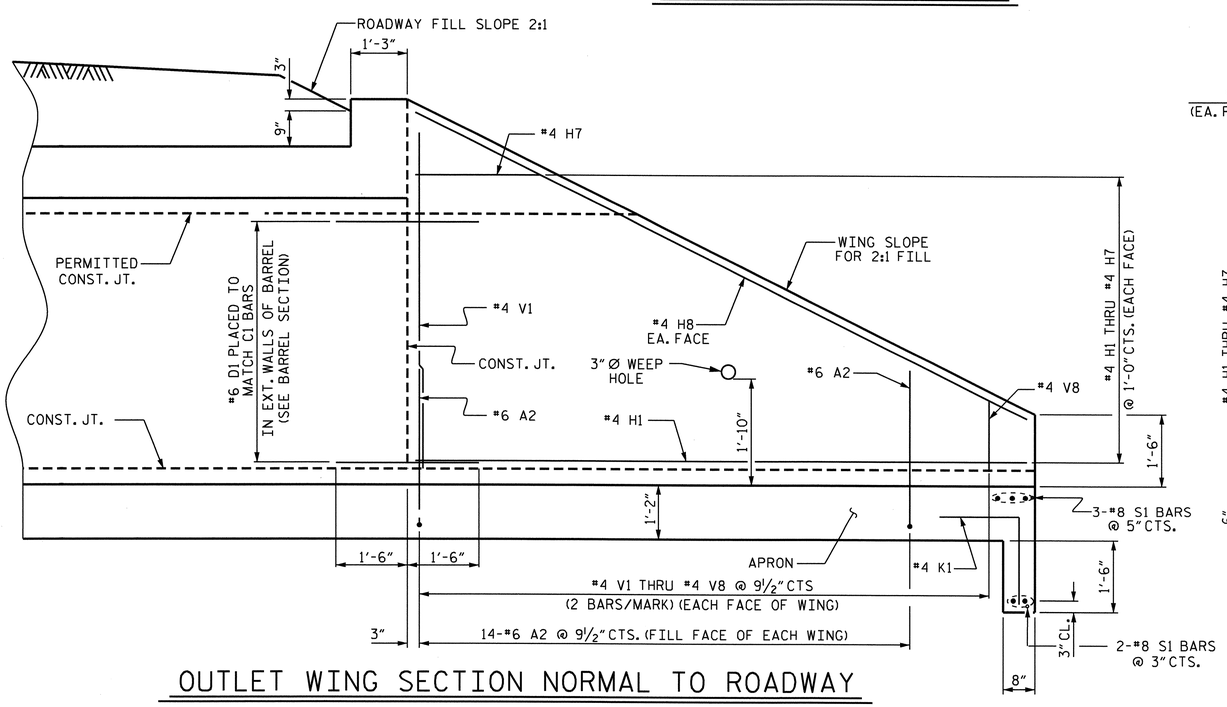

OUTLET WING SECTION NORMAL TO ROADWAY

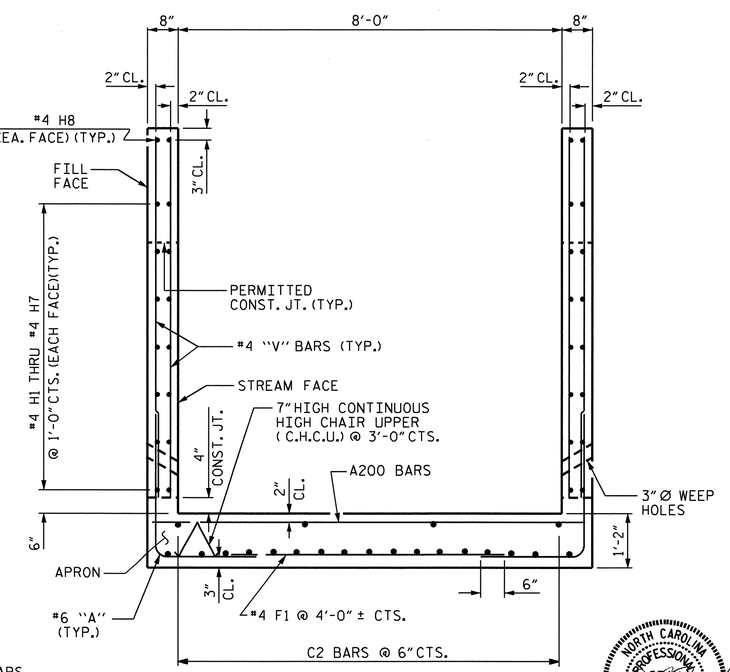

TYPICAL WING SECTION

BILL OF MATERIAL

BAR	NO.	SIZE	TYPE	LENGTH	WEIGHT
H1	4	#4	STR	12'-10"	34
H2	4	#4	STR	12'-7"	34
H3	4	#4	STR	10'-7"	28
H4	4	#4	STR	8'-7"	23
H5	4	#4	STR	6'-7"	18
H6	4	#4	STR	4'-7"	12
H7	4	#4	STR	2'-7"	7
H8	4	#4	STR	14'-4"	38
V1	8	#4	STR	7'-0"	37
V2	8	#4	STR	6'-3"	33
V3	8	#4	STR	5'-5"	29
V4	8	#4	STR	4'-8"	25
V5	8	#4	STR	3'-10"	20
V6	8	#4	STR	3'-1"	16
V7	8	#4	STR	2'-3"	12
V8	8	#4	STR	1'-6"	8

REINFORCING STEEL FOR 2 WINGS LBS. 374

CLASS A CONCRETE

2 WINGS	2.9	C.Y.
APRON & END CURTAIN WALL	5.9	C.Y.
1 HEAD WALL	0.4	C.Y.
TOTAL	9.2	C.Y.

NOTE:
QUANTITIES FOR THE FOLLOWING BARS ARE INCLUDED IN THE BARREL REINFORCING STEEL BAR SCHEDULE

#7 A200
#6 A2
#4 C2
#6 D1
#4 K1
#8 S1

PROJECT NO. R-2417AA
LEE COUNTY
STATION: 142+67.00 -L-

SHEET 4 OF 4

STATE OF NORTH CAROLINA
DEPARTMENT OF TRANSPORTATION
RALEIGH

OUTLET WINGS FOR CONCRETE BOX CULVERT

90° SKEW

NORTH CAROLINA PROFESSIONAL SEAL 24390 ENGINEER THEO. J. BEACH
11/23/10

REVISIONS						SHEET NO.
NO.	BY:	DATE:	NO.	BY:	DATE:	C-11
1			3			TOTAL SHEETS
2			4			14

DRAWN BY : A. K. PATEL DATE : 10-10-05
CHECKED BY : J. M. BRITT DATE : 10-19-05

11-OCT-2010 12:12
R:\Structures\str8_culvert@142+67\R2417AA_sd_CU_08.dgn
sbwilliams

STR. #8

BENCH MARK: #13, RR-SPIKE IN BASE OF 12" PINE TREE 254.45' RIGHT OF STA. 173+46.58-L- EL. 254.19'

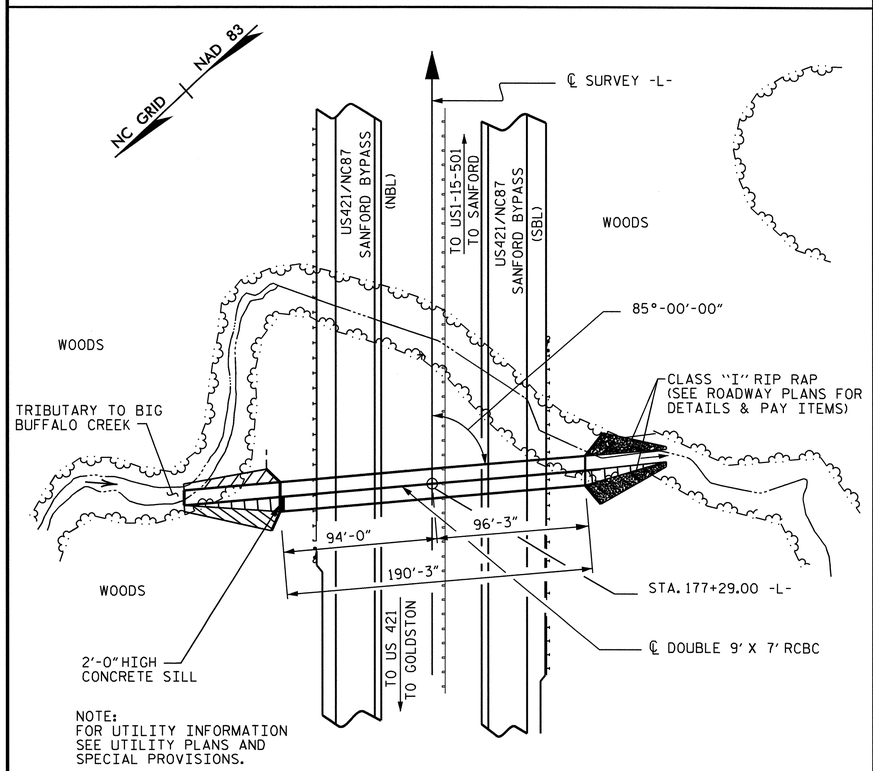

LOCATION SKETCH

TOTAL STRUCTURE QUANTITIES

CLASS A CONCRETE		
BARREL @ 2.039 CY/FT	387.9	C.Y.
SILL	0.7	C.Y.
WING ETC.	21.2	C.Y.
TOTAL	409.8	C.Y.
REINFORCING STEEL		
BARREL & SILL	52,352	LBS.
WINGS ETC.	1,151	LBS.
TOTAL	53,503	LBS.
CULVERT EXCAVATION	LUMP SUM	
FOUNDATION CONDITIONING MAT'L	269 TONS	

HYDROGRAPHIC DATA

DESIGN DISCHARGE	650 CFS
FREQUENCY OF DESIGN FLOOD	50 YRS.
DESIGN HIGH WATER ELEVATION	252.8
DRAINAGE AREA	330 ACRES
BASIC DISCHARGE (Q100)	740 CFS
BASIC HIGH WATER ELEVATION	253.2

OVERTOPPING FLOOD DATA

OVERTOPPING DISCHARGE	1700 CFS
FREQUENCY OF OVERTOPPING FLOOD	500+ YR.
OVERTOPPING FLOOD ELEVATION	261.0
OVERTOPPING OCCURS AT STA. 175+00 -L-	

GRADE DATA

GRADE POINT ELEVATION @ STA. 177+29.00 -L-	264.58
BED ELEVATION @ STA. 177+29.00 -L-	245.69
ROADWAY SLOPES	2:1

REINFORCING STEEL

BAR	NO.	SIZE	TYPE	LENGTH	WEIGHT
A100	352	#4	STR	19'-7"	4605
A200	269	#5	STR	19'-7"	5494
A300	352	#6	STR	19'-7"	10354
A400	352	#6	STR	19'-7"	10354
A1	704	#4	1	4'-5"	2077
A2	704	#4	1	4'-5"	2077
B1	382	#4	STR	8'-6"	2169
B2	704	#4	STR	6'-4"	2978
B3	382	#4	STR	8'-6"	2169
C1	511	#4	STR	29'-0"	9899
D1	3	#6	STR	2'-7"	12
G1	8	#5	STR	19'-8"	164
REINFORCING STEEL					52352 LBS.

SPLICE LENGTHS CHART

BAR	SIZE	SPLICE LENGTH
A200	#5	1'-9"
A400	#6	2'-4"
B1	#4	1'-9"
B3	#4	1'-9"
C1	#4	1'-11"

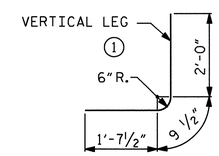

BAR TYPE

BAR DIMENSIONS ARE OUT TO OUT

NOTES

ASSUMED LIVE LOAD ----------HS20-44 OR ALTERNATE LOADING.

DESIGN FILL---------- 12.24'

FOR OTHER DESIGN DATA AND NOTES SEE STANDARD NOTE SHEET.

3" Ø WEEP HOLES INDICATED TO BE IN ACCORDANCE WITH THE SPECIFICATIONS.

CONCRETE IN CULVERTS TO BE POURED IN THE FOLLOWING ORDER:

1. WING FOOTINGS AND FLOOR SLAB INCLUDING 4" OF ALL VERTICAL WALLS.
2. THE REMAINING PORTIONS OF THE WALLS AND WINGS FULL HEIGHT FOLLOWED BY ROOF SLAB AND HEADWALLS.

THE RESIDENT ENGINEER SHALL CHECK THE LENGTH OF CULVERT BEFORE STAKING IT OUT TO MAKE CERTAIN THAT IT WILL PROPERLY TAKE CARE OF THE FILL.

DIMENSIONS FOR WING LAYOUT AS WELL AS ADDITIONAL REINFORCING STEEL EMBEDDED IN BARREL ARE SHOWN ON WING SHEET.

TRANSVERSE CONSTRUCTION JOINTS SHALL BE USED IN THE BARREL, SPACED TO LIMIT THE POURS TO A MAXIMUM OF 50 FT. LOCATION OF JOINTS SHALL BE SUBJECT TO APPROVAL OF THE ENGINEER.

AT THE CONTRACTOR'S OPTION, HE MAY SPLICE THE VERTICAL REINFORCING STEEL IN THE INTERIOR FACE OF EXTERIOR WALL AND BOTH FACES OF INTERIOR WALLS ABOVE LOWER WALL CONSTRUCTION JOINT. THE SPLICE LENGTH SHALL BE AS PROVIDED IN THE SPLICE LENGTH CHART SHOWN ON THE PLANS. EXTRA WEIGHT OF STEEL DUE TO THE SPLICES SHALL BE PAID FOR BY THE CONTRACTOR.

THE CONTRACTOR SHALL PROVIDE INDEPENDENT ASSURANCE SAMPLES OF REINFORCING STEEL AS FOLLOWS: FOR PROJECTS REQUIRING UP TO 400 TONS OF REINFORCING STEEL, ONE 30 INCH SAMPLE OF EACH SIZE BAR USED, AND FOR PROJECTS REQUIRING OVER 400 TONS OF REINFORCING STEEL, TWO 30 INCH SAMPLES OF EACH SIZE BAR USED. THE BARS FROM WHICH THE SAMPLES ARE TAKEN MUST THEN BE SPLICED WITH REPLACEMENT BARS OF THE SIZE AND LENGTH OF THE SAMPLE, PLUS A MINIMUM LAP SPLICE OF THIRTY BAR DIAMETERS.

NO PRECAST REINFORCED BOX CULVERT OPTION WILL BE ALLOWED.

FOR CRANE SAFETY, SEE SPECIAL PROVISIONS.

FOR FALSEWORK AND FORMWORK, SEE SPECIAL PROVISIONS.

FOR SUBMITTAL OF WORKING DRAWINGS, SEE SPECIAL PROVISIONS.

FOR CULVERT DIVERSION DETAILS AND PAY ITEM, SEE EROSION CONTROL PLANS

FOR CONSTRUCTION SEQUENCE, SEE EROSION CONTROL PLANS.

A 3 FOOT STRIP OF FILTER FABRIC SHALL BE ATTACHED TO THE FILL FACE OF THE WING COVERING THE ENTIRE LENGTH OF THE EXPANSION JOINT.

STEEL IN THE BOTTOM SLAB MAY BE SPLICED AT THE PERMITTED CONSTRUCTION JOINT AT THE CONTRACTOR'S OPTION. EXTRA WEIGHT OF STEEL DUE TO THE SPLICES WILL BE PAID FOR BY THE CONTRACTOR.

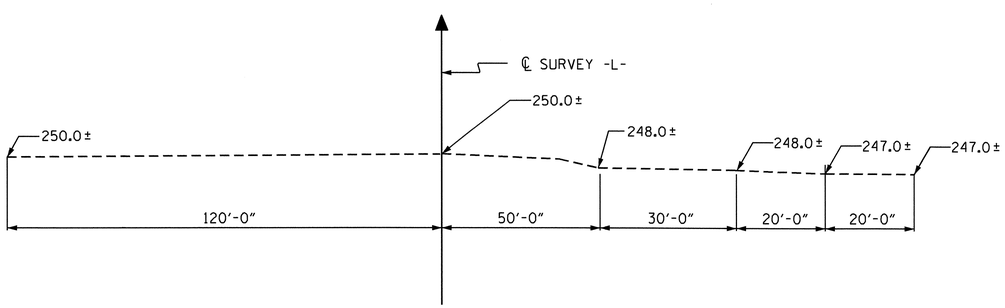

PROFILE ALONG ℄ CULVERT

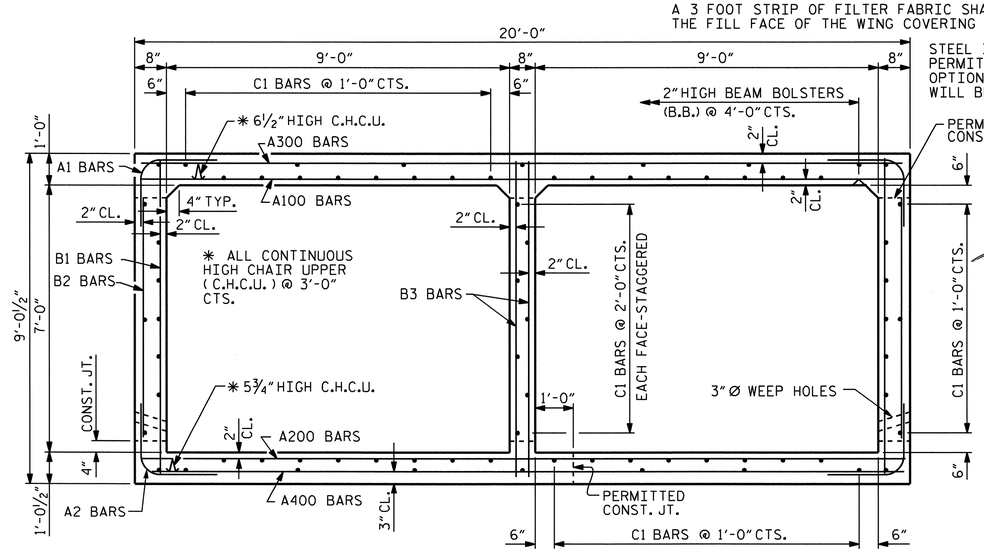

RIGHT ANGLE SECTION OF BARREL

THERE ARE 73 "C" BARS IN SECTION OF BARREL.
C1 BARS ARE 7 BAR RUNS.

NORTH CAROLINA PROFESSIONAL SEAL 24690 ENGINEER THEO J. BEACH 11/22/10

NORTH CAROLINA PROFESSIONAL SEAL 11268 ENGINEER BETSY S. COX 11/22/10

PROJECT NO. R-2417AA
LEE COUNTY
STATION: 177+29.00 -L-

SHEET 1 OF 3

STATE OF NORTH CAROLINA
DEPARTMENT OF TRANSPORTATION
RALEIGH

BARREL STANDARD

DOUBLE 9FT. X 7FT.
CONCRETE BOX CULVERT
85° SKEW

1971

REVISIONS							SHEET NO.
NO.	BY:	DATE:	NO.	BY:	DATE:		C-12
1			3				TOTAL SHEETS
2			4				14

ASSEMBLED BY : P.E. LACKEY DATE : 10/05	SPECIAL	
CHECKED BY : N. PIERCE DATE : 12/05		
DRAWN BY : R.W.WRIGHT DATE : OCT. 1989	STANDARD	
CHECKED BY : A.R.BISSETTE DATE : OCT. 1989		

ADDED 11-1-90

STR. #9

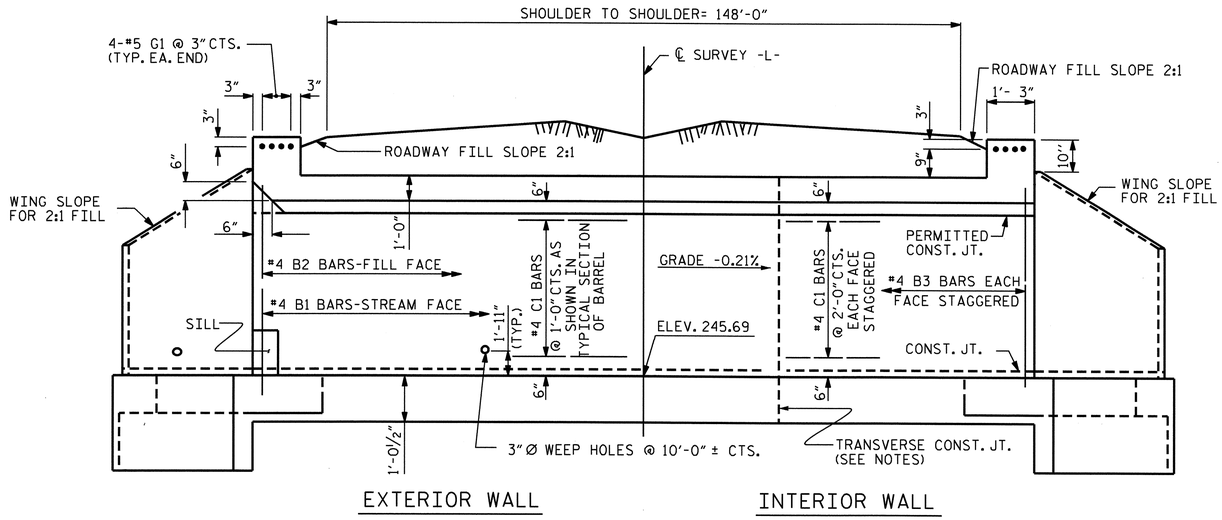

CULVERT SECTION NORMAL TO ROADWAY

NOTE: C1 BARS ARE 7 BAR RUNS

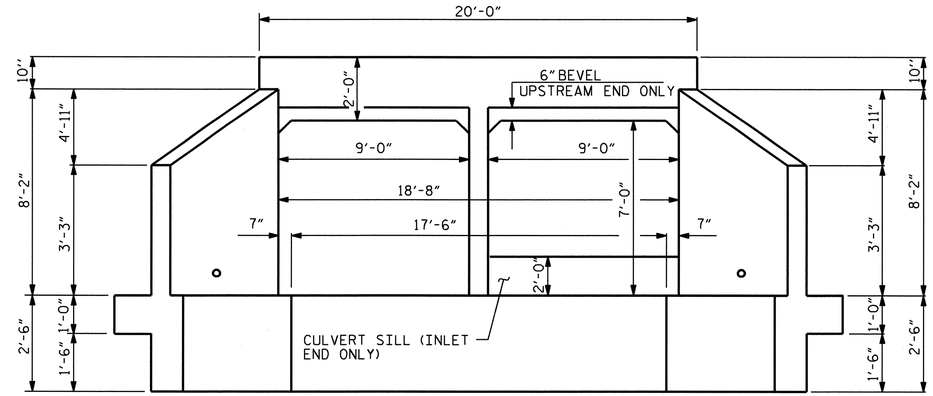

END ELEVATION

(INLET END SHOWN, OUTLET END SIMILAR)

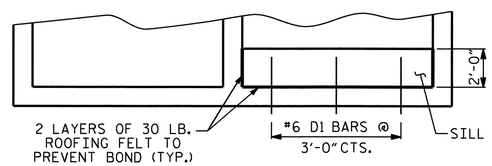

ELEVATION

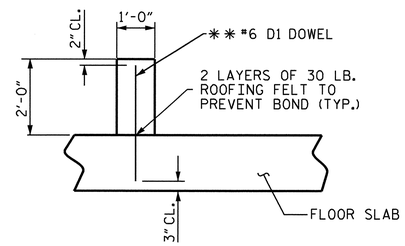

SECTION THROUGH SILL

** DOWELS MAY BE PUSHED INTO GREEN CONCRETE AFTER SLAB HAS BEEN FLOAT FINISHED

CULVERT SILL DETAILS

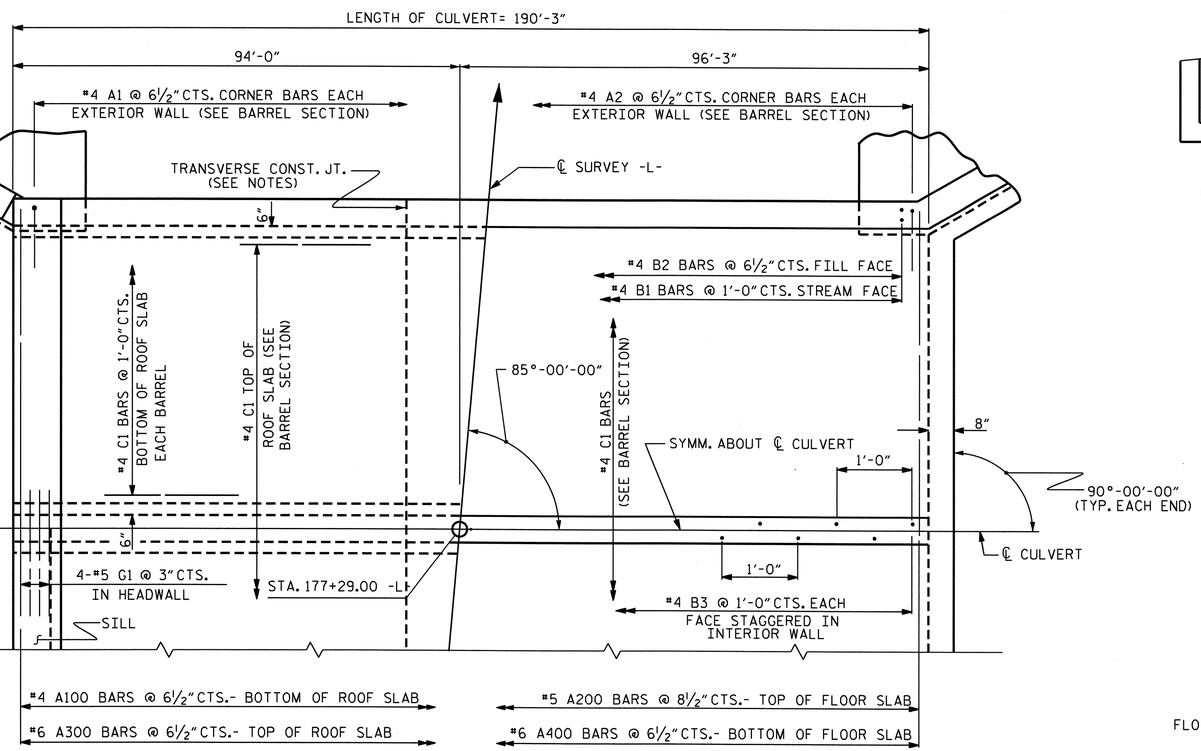

PART PLAN-ROOF SLAB

PART PLAN-FLOOR SLAB

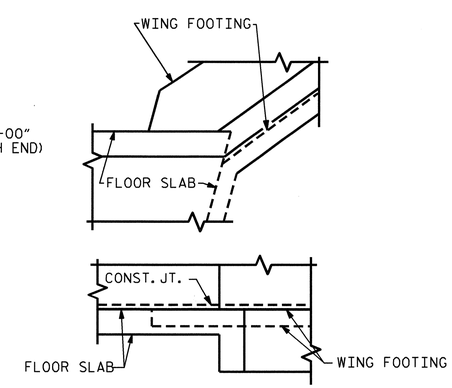

DETAIL

CONNECTION OF WING FOOTING AND FLOOR SLAB WHEN SLAB IS THICKER THAN FOOTING

PROJECT NO. R-2417AA

LEE COUNTY

STATION: 177+29.00 -L-

SHEET 2 OF 3

STATE OF NORTH CAROLINA
DEPARTMENT OF TRANSPORTATION
RALEIGH

BARREL STANDARD

DOUBLE 9FT. X 7FT. CONCRETE BOX CULVERT

85° SKEW

1971

NORTH CAROLINA PROFESSIONAL SEAL 24390 ENGINEER THEO J. BEACH 11/23/10

REVISIONS							SHEET NO.
NO.	BY:	DATE:	NO.	BY:	DATE:		C-13
1			3				TOTAL SHEETS
2			4				14

ASSEMBLED BY : P.E. LACKEY DATE : 10/05 CHECKED BY : N. PIERCE DATE : 12/05	SPECIAL	
DRAWN BY : W.BRYAN STALEY II DATE : SEPT. 21,1971 CHECKED BY : JOEL A. JOHNSON DATE : NOV. 12,1971	STANDARD	

REVISED 11-19-99 BY M.A.M. CHECKED BY R.W.W.
REDRAWN NOV.1990 BY TSS CHECKED BY ARB

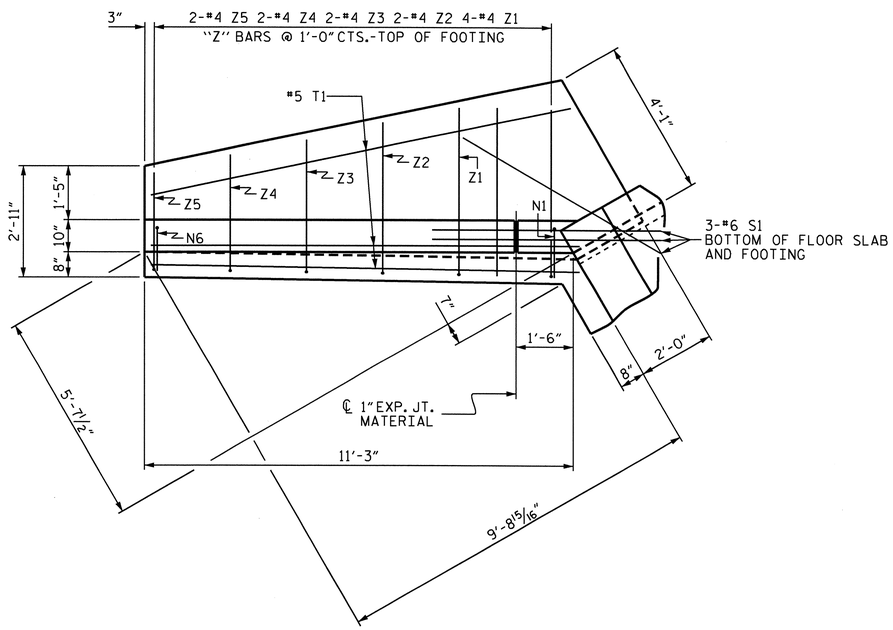

PLAN

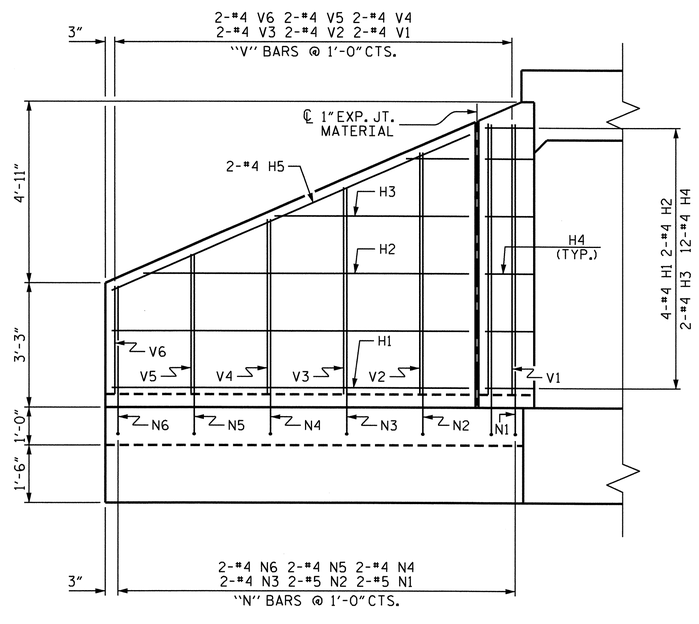

ELEVATION

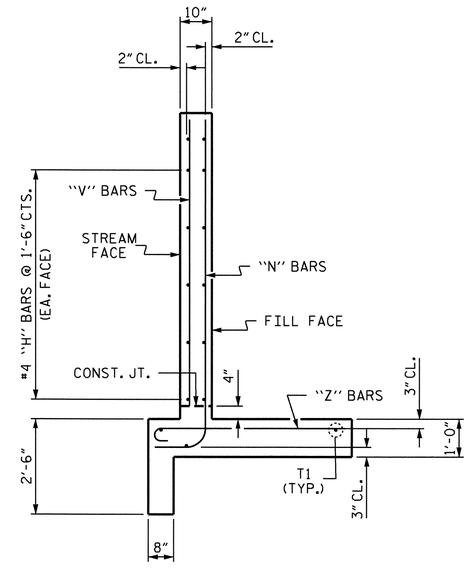

TYPICAL WING SECTION

BAR TYPES

ALL BAR DIMENSIONS ARE OUT TO OUT.

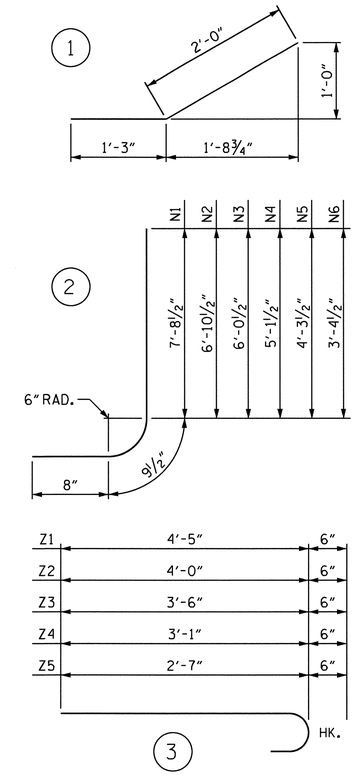

BILL OF MATERIAL

BAR	NO.	SIZE	TYPE	LENGTH	WEIGHT
H1	16	#4	STR	9'-4"	100
H2	8	#4	STR	8'-6"	45
H3	8	#4	STR	5'-1"	27
H4	48	#4	1	3'-3"	104
H5	8	#4	STR	10'-3"	55
N1	8	#5	2	9'-2"	76
N2	8	#5	2	8'-4"	70
N3	8	#4	2	7'-6"	40
N4	8	#4	2	6'-7"	35
N5	8	#4	2	5'-9"	31
N6	8	#4	2	4'-10"	26
S1	12	#6	STR	6'-0"	108
T1	12	#5	STR	11'-3"	141
V1	8	#4	STR	7'-1"	38
V2	8	#4	STR	6'-4"	34
V3	8	#4	STR	5'-5"	29
V4	8	#4	STR	4'-7"	24
V5	8	#4	STR	3'-8"	20
V6	8	#4	STR	2'-10"	15
Z1	16	#4	3	4'-11"	53
Z2	8	#4	3	4'-6"	24
Z3	8	#4	3	4'-0"	21
Z4	8	#4	3	3'-7"	19
Z5	8	#4	3	3'-1"	16

TOTAL REINFORCING STEEL
FOR 4 WINGS 1151 LBS

CLASS A CONCRETE
4 WINGS 17.1 CY
2 HEADWALLS 1.9 CY
2 END CURTAIN WALLS 2.2 CY
TOTAL 21.2 CY

PROJECT NO. R-2417AA
LEE COUNTY
STATION: 177+29.00 -L-

SHEET 3 OF 3

STATE OF NORTH CAROLINA
DEPARTMENT OF TRANSPORTATION
RALEIGH

STANDARD WINGS FOR CONCRETE BOX CULVERT

H = 7'-0" SLOPE = 2:1
90° SKEW

NORTH CAROLINA PROFESSIONAL SEAL 24590 ENGINEER THEO J. BEACH
11/23/10

ASSEMBLED BY : P.E. LACKEY	DATE : 10/05
CHECKED BY : N. PIERCE	DATE : 12/05
DRAWN BY : CCJ 10/99	
CHECKED BY : RWW 03/00	

REVISIONS						SHEET NO.
NO.	BY:	DATE:	NO.	BY:	DATE:	C-14
1			3			TOTAL SHEETS
2			4			14

STR. #9

GEOTECHNICAL ENGINEER	ENGINEER
NORTH CAROLINA PROFESSIONAL SEAL 027869 ENGINEER DAVID L. TEAGUE — David L. Teague 11/17/10 (SIGNATURE / DATE)	SIGNATURE / DATE

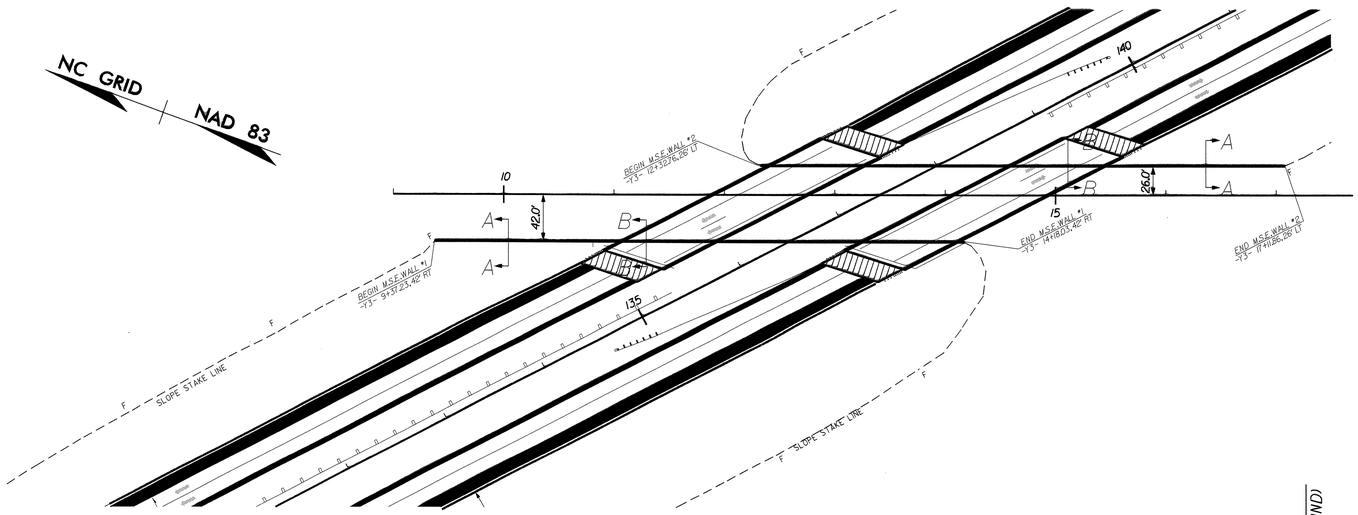

PLAN VIEW OF MSF WALLS

NOT TO SCALE

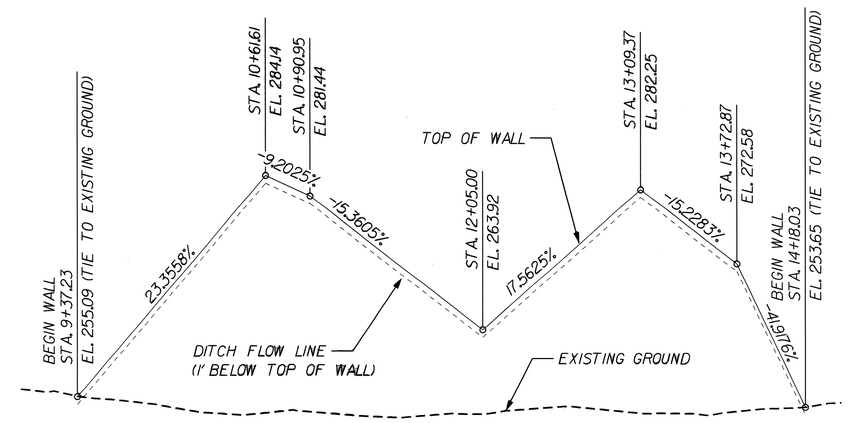

WALL ENVELOPE - MSE WALL #1

NOT TO SCALE

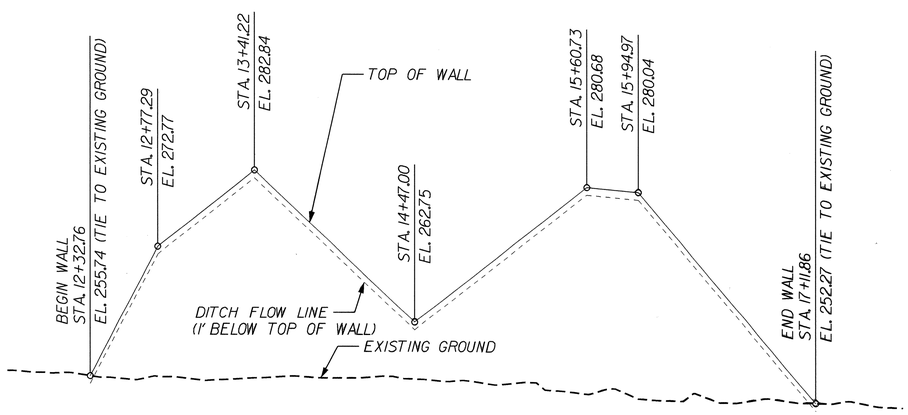

WALL ENVELOPE - MSE WALL #2

NOT TO SCALE

ESTIMATED QUANTITIES

MSE WALL #1 ..... 9,200 SQ.FT.

MSE WALL #2 ..... 8,100 SQ.FT.

PROJECT NO.: R-2417AA (34431.1.2)

LEE **COUNTY**

STATION: 9+37.23 -Y3- TO 17+11.86 -Y3-

SHEET / OF 4 12+32.76 -Y3- TO 17+11.86 -Y3-

PREPARED BY: D.TEAGUE	DATE: 11/10		
REVIEWED BY: E.WILLIAMS	DATE: 11/10		

GEOTECHNICAL ENGINEERING UNIT

☐ EASTERN REGIONAL OFFICE

☐ WESTERN REGIONAL OFFICE

☒ CONTRACT OFFICE

STATE OF NORTH CAROLINA
DEPARTMENT OF TRANSPORTATION
RALEIGH

MSE WALL #1 AND #2
PLAN VIEW AND
WALL ENVELOPES

REVISIONS							SHEET NO.
NO.	BY	DATE	NO.	BY	DATE		W-1
1			3				TOTAL SHEETS
2			4				4

GEOTECHNICAL ENGINEER	ENGINEER
NORTH CAROLINA PROFESSIONAL SEAL 027869 ENGINEER DAVID L. TEAGUE	
D.L. Teague 11/17/10	
SIGNATURE DATE	SIGNATURE DATE

NOTES:

FOR MECHANICALLY STABILIZED EARTH (MSE) RETAINING WALLS, SEE MECHANICALLY STABILIZED EARTH RETAINING WALLS PROVISION.

USE NO. 57 STONE (COARSE AGGREGATE) IN THE REINFORCED ZONE FOR RETAINING WALLS NO. 1 AND 2.

USE AN MSE WALL SYSTEM WITH PRECAST CONCRETE PANELS FOR RETAINING WALLS NO. 1 AND 2. THE PANELS SHOULD BE RECTANGULAR IN SHAPE. JOINTS BETWEEN PANELS SHOULD LINE UP IN THE VERTICAL DIRECTION. STAGGER JOINTS IN THE HORIZONTAL DIRECTION.

CAST-IN-PLACE REINFORCED CONCRETE COPING IS REQUIRED FOR RETAINING WALLS NO 1 AND 2.

A DRAIN IS REQUIRED FOR RETAINING WALLS NO. 1 AND 2.

BEFORE BEGINNING MSE WALL DESIGN FOR RETAINING WALLS NO. 1 AND 2, SURVEY WALL LOCATION AND SUBMIT A REVISED WALL PROFILE VIEW (WALL ENVELOPE) FOR REVIEW. DO NOT START WALL DESIGN OR CONSTRUCTION UNTIL THE REVISED WALL ENVELOPE IS ACCEPTED.

DESIGN RETAINING WALLS NO. 1 AND 2 FOR WALL HEIGHTS EQUAL TO THE DESIGN HEIGHT (DIFFERENCE BETWEEN GRADE ELEVATION AND BOTTOM OF WALL ELEAVATION) PLUS EMBEDMENT (DIFFERENCE BETWEEN BOTTOM OF WALL ELEVATION AND TOP OF LEVELING PAD ELEVATION).

DESIGN RETAINING WALLS NO. 1 AND 2 FOR THE FOLLOWING:
1) MINIMUM DESIGN LIFE = 100 YEARS
2) MAXIMUM FACTORED RESISTANCE = 6,000 PSF
3) AGGREGATE PARAMETERS:

STANDARD SIZE NO. (IN ACCORDANCE WITH SECTION 1005 OF THE STANDARD SPECIFICATIONS)	UNIT WEIGHT (γ) PCF	FRICTION ANGLE (ϕ) DEGREES	COHESION (c) PSF
57 (COARSE AGGREGATE)	110	38	0

6) IN-SITU ASSUMED MATERIAL PARAMETERS:

MATERIAL TYPE	UNIT WEIGHT (γ) PCF	FRICTION ANGLE (ϕ) DEGREES	COHESION (c) PSF
BACKFILL	120	30	0
FOUNDATION	120	30	0

DESIGN RETAINING WALLS NO. 1 AND 2 FOR A LIVE LOAD (TRAFFIC) SURCHARGE.

DESIGN REINFORCEMENT CONNECTED TO END BENT CAPS AND WING WALLS FOR THE LOADING SHOWN AND CAST THE REINFORCEMENT CONNECTION HARDWARE INTO THE CAP BACKWALL AND WING WALLS FOR END BENT NO. 1 AND 2 LOCATED AT STATION 135+30.00 -L- AND 136+94.00 -L- (END BENT 1), AND 137+78.59 -L- AND 139+19.00 -L- (END BENT 2). MAINTAIN A MINIMUM CLEARANCE OF 3" BETWEEN THE HARDWARE AND REINFORCING STEEL IN THE CAP.

EXISTING OR FUTURE OBSTRUCTIONS SUCH AS FOUNDATIONS, GUARDRAIL, FENCE OR HANDRAIL POSTS, PAVEMENTS, PIPES, INLETS OR UTILITIES WILL INTERFERE WITH REINFORCEMENT FOR RETAINING WALL NO. 1 AND 2.

FOUNDATIONS FOR END BENT NO. 1 LOCATED AT STATION 135+30.00 -L- AND 136+94.00 -L- WILL INTERFERE WITH REINFORCEMENT FOR RETAINING WALL NO. 1. SEE "FOUNDATION LAYOUT" SHEET FOR FOUNDATION LOCATIONS.

FOUNDATIONS FOR END BENT NO. 2 LOCATED AT STATION 137+78.59 -L- AND 139+19.00 -L- WILL INTERFERE WITH REINFORCEMENT FOR RETAINING WALL NO. 2. SEE "FOUNDATION LAYOUT" SHEET FOR FOUNDATION LOCATIONS.

DO NOT PLACE LEVELING PAD CONCRETE, AGGREGATE OR REINFORCEMENT FOR RETAINING WALL NO. 1 OR 2 UNTIL OBTAINING APPROVAL OF THE EXCAVATION DEPTH AND FOUNDATION MATERIAL.

UNDERCUT AS NECESSARY TO SATISFY REQUIRED BEARING CAPACITY. REPLACE REMOVED MATERIAL WITH #57 STONE AND COMPACT IN ACCORDANCE WITH THE MSE WALL SPECIAL PROVISION. COST OF UNDERCUT AND REPLACEMENT AGGREGATE WILL BE CONSIDERED INCIDENTAL TO THE COST OF THE WALL.

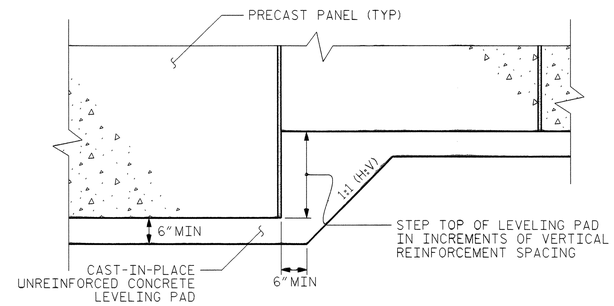

PRECAST CONCRETE PANELS

LEVELING PAD STEP DETAILS

PROJECT NO.: R-2417AA (34431.1.2)
LEE **COUNTY**
STATION: 9+37.23 -Y3- TO 17+11.86 -Y3-
SHEET 2 OF 4 12+32.76 -Y3- TO 17+11.86 -Y3-

GEOTECHNICAL ENGINEERING UNIT
☐ EASTERN REGIONAL OFFICE
☐ WESTERN REGIONAL OFFICE
☒ CONTRACT OFFICE
STATE OF NORTH CAROLINA DEPARTMENT OF TRANSPORTATION RALEIGH

MSE WALL #1 AND #2
NOTES AND STEP DETAIL

REVISIONS						SHEET NO.
NO.	BY	DATE	NO.	BY	DATE	W-2
1			3			TOTAL SHEETS
2			4			4

PREPARED BY: D.TEAGUE	DATE: 11/10
REVIEWED BY: E.WILLIAMS	DATE: 11/10

GEOTECHNICAL ENGINEER	ENGINEER
NORTH CAROLINA PROFESSIONAL SEAL 027869 ENGINEER DAVID L. TEAGUE	
SIGNATURE / DATE: 11/17/10	SIGNATURE / DATE

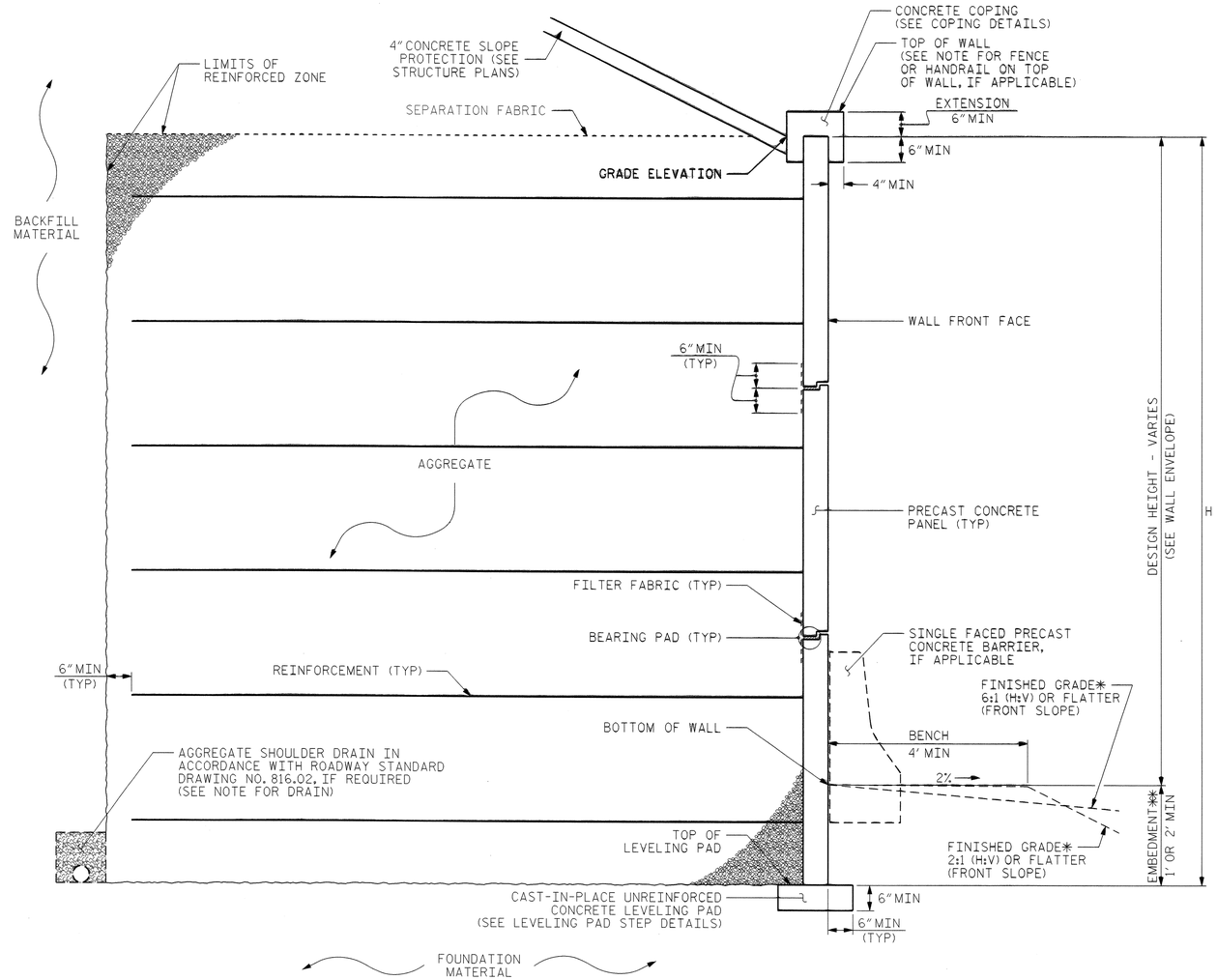

MSE WALL WITH PRECAST PANELS - TYPICAL SECTION A-A

*SEE ROADWAY PLANS FOR FINISHED GRADE AND DITCH DETAILS.
**SEE MSE RETAINING WALLS PROVISION FOR EMBEDMENT REQUIREMENTS.

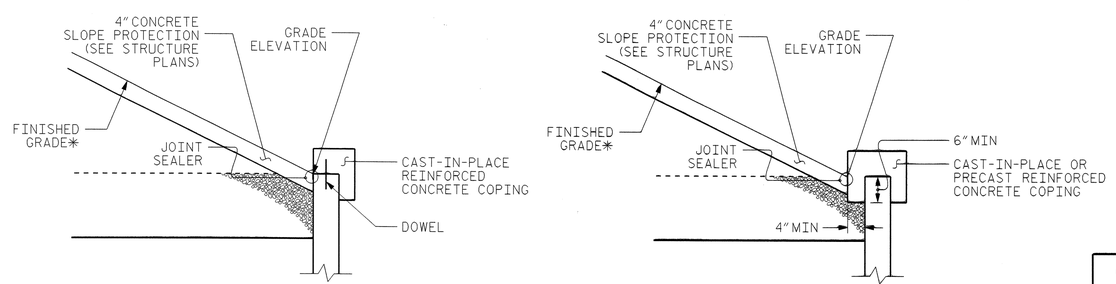

COPING DETAILS

AT THE CONTRACTOR'S OPTION, CONNECT COPING TO PANELS WITH DOWELS OR EXTEND COPING DOWN BACK OF PANELS.
*SEE ROADWAY PLANS FOR FINISHED GRADE AND DITCH DETAILS.

PROJECT NO.: R-2417AA (34431.1.2)
LEE **COUNTY**
STATION: 9+37.23 -Y3- TO 17+11.86 -Y3-
SHEET 3 OF 4 12+32.76 -Y3- TO 17+11.86 -Y3-

GEOTECHNICAL ENGINEERING UNIT
☐ EASTERN REGIONAL OFFICE
☐ WESTERN REGIONAL OFFICE
☒ CONTRACT OFFICE
STATE OF NORTH CAROLINA DEPARTMENT OF TRANSPORTATION RALEIGH

MSE WALL #1 AND #2
TYPICAL SECTION

REVISIONS						SHEET NO.
NO.	BY	DATE	NO.	BY	DATE	W-3
1			3			TOTAL SHEETS
2			4			4

PREPARED BY: D.TEAGUE	DATE: 11/10
REVIEWED BY: E.WILLIAMS	DATE: 11/10

GEOTECHNICAL ENGINEER	ENGINEER
NORTH CAROLINA PROFESSIONAL SEAL 027869 ENGINEER DAVID L. TEAGUE	
SIGNATURE / DATE 11/17/10	SIGNATURE / DATE

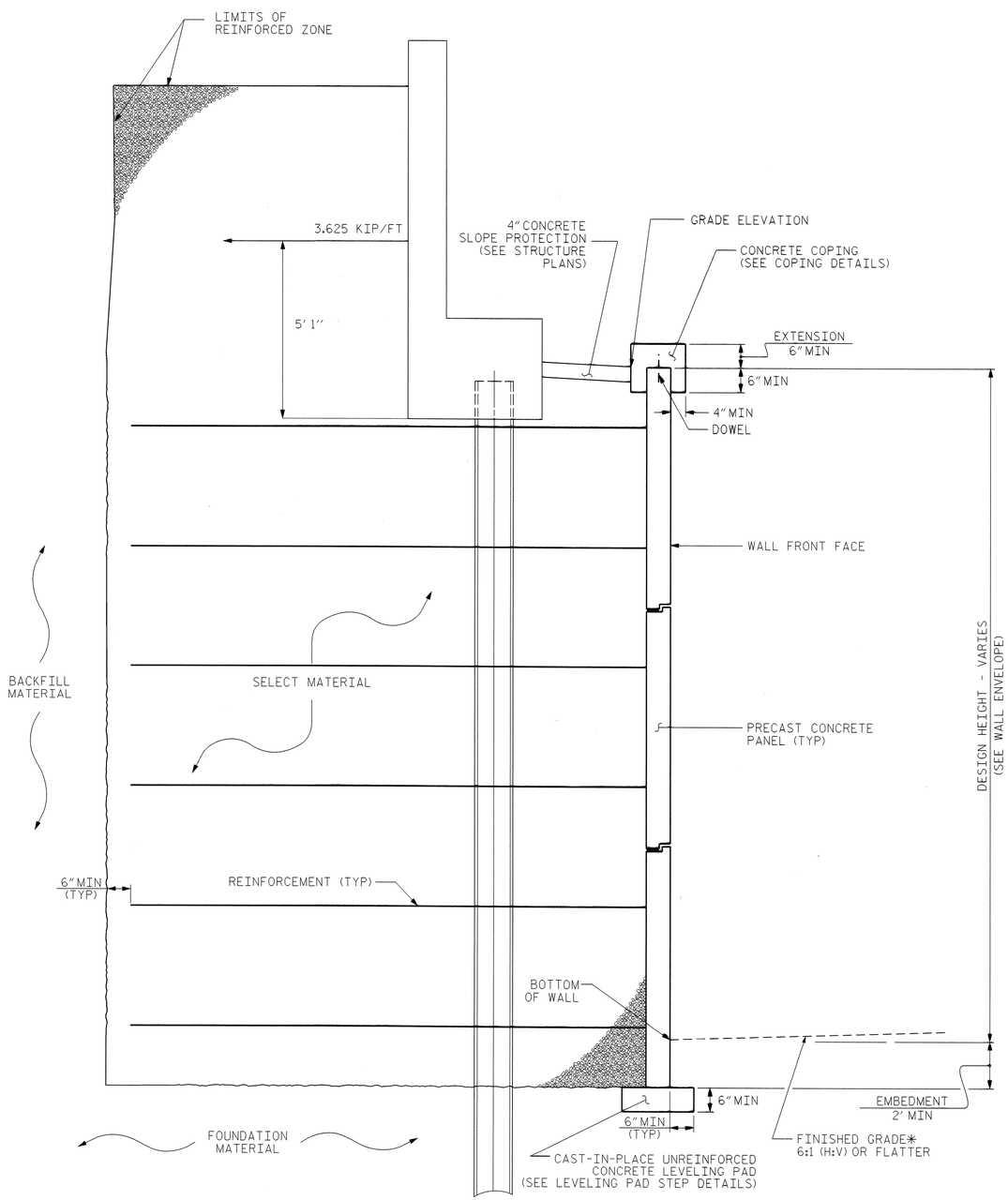

MSE WALL WITH PRECAST PANELS TYPICAL SECTION B-B

*SEE ROADWAY PLANS FOR FINISHED GRADE DETAILS.

PROJECT NO.: R-2417AA (34431.1.2)

LEE **COUNTY**

STATION: 9+37.23 -Y3- TO 17+11.86 -Y3-

12+32.76 -Y3- TO 17+11.86 -Y3-

SHEET 4 OF 4

GEOTECHNICAL ENGINEERING UNIT

☐ EASTERN REGIONAL OFFICE

☐ WESTERN REGIONAL OFFICE

☒ CONTRACT OFFICE

STATE OF NORTH CAROLINA DEPARTMENT OF TRANSPORTATION RALEIGH

MSE WALL #1 AND #2

TYPICAL SECTION THROUGH BRIDGE

REVISIONS							SHEET NO.
NO.	BY	DATE	NO.	BY	DATE		W-4
1			3				TOTAL SHEETS
2			4				4

PREPARED BY: D.TEAGUE	DATE: 11/10
REVIEWED BY: E.WILLIAMS	DATE: 11/10

STANDARD NOTES

DESIGN DATA:

SPECIFICATIONS	A.A.S.H.T.O. (CURRENT)
LIVE LOAD	SEE PLANS
IMPACT ALLOWANCE	SEE A.A.S.H.T.O.
STRESS IN EXTREME FIBER OF	
STRUCTURAL STEEL - AASHTO M270 GRADE 36	20,000 LBS. PER SQ. IN.
- AASHTO M270 GRADE 50W	27,000 LBS. PER SQ. IN.
- AASHTO M270 GRADE 50	27,000 LBS. PER SQ. IN.
REINFORCING STEEL IN TENSION	
GRADE 60	24,000 LBS. PER SQ. IN.
CONCRETE IN COMPRESSION	1,200 LBS. PER SQ. IN.
CONCRETE IN SHEAR	SEE A.A.S.H.T.O.
STRUCTURAL TIMBER - TREATED OR	
UNTREATED - EXTREME FIBER STRESS	1,800 LBS. PER SQ. IN.
COMPRESSION PERPENDICULAR TO GRAIN OF TIMBER	375 LBS. PER SQ. IN.
EQUIVALENT FLUID PRESSURE OF EARTH	30 LBS. PER CU. FT. (MINIMUM)

MATERIAL AND WORKMANSHIP:

EXCEPT AS MAY OTHERWISE BE SPECIFIED ON PLANS OR IN THE SPECIAL PROVISIONS, ALL MATERIAL AND WORKMANSHIP SHALL BE IN ACCORDANCE WITH THE 2006 "STANDARD SPECIFICATIONS FOR ROADS AND STRUCTURES" OF THE N. C. DEPARTMENT OF TRANSPORTATION.

STEEL SHEET PILING FOR PERMANENT OR TEMPORARY APPLICATIONS SHALL BE HOT ROLLED.

CONCRETE:

UNLESS OTHERWISE REQUIRED ON PLANS, CLASS A CONCRETE SHALL BE USED FOR ALL PORTIONS OF ALL STRUCTURES WITH THE EXCEPTION THAT: CLASS AA CONCRETE SHALL BE USED IN BRIDGE SUPERSTRUCTURES, ABUTMENT BACKWALLS, AND APPROACH SLABS; AND CLASS B CONCRETE SHALL BE USED FOR SLOPE PROTECTION AND RIP RAP.

CONCRETE CHAMFERS:

UNLESS OTHERWISE NOTED ON THE PLANS, ALL EXPOSED CORNERS ON STRUCTURES SHALL BE CHAMFERED 3/4" WITH THE FOLLOWING EXCEPTIONS: TOP CORNERS OF CURBS MAY BE ROUNDED TO 1-1/2" RADIUS WHICH IS BUILT INTO CURB FORMS; CORNERS OF TRANSVERSE FLOOR EXPANSION JOINTS SHALL BE ROUNDED WITH A 1/4" FINISHING TOOL UNLESS OTHERWISE REQUIRED ON PLANS; AND CORNERS OF EXPANSION JOINTS IN THE ROADWAY FACES AND TOPS OF CURBS AND SIDEWALKS SHALL BE ROUNDED TO A 1/4" RADIUS WITH A FINISHING STONE OR TOOL UNLESS OTHERWISE REQUIRED ON PLANS.

DOWELS:

DOWELS WHEN INDICATED ON PLANS AS FOR CULVERT EXTENSIONS, SHALL BE EMBEDDED AT LEAST 12" INTO THE OLD CONCRETE AND GROUTED INTO PLACE WITH 1:2 CEMENT MORTAR.

ALLOWANCE FOR DEAD LOAD DEFLECTION, SETTLEMENT, ETC. IN CASTING SUPERSTRUCTURES:

BRIDGES SHALL BE BUILT ON THE GRADE OR VERTICAL CURVE SHOWN ON PLANS. SLABS, CURBS AND PARAPETS SHALL CONFORM TO THE GRADE OR CURVE.

ALL DIMENSIONS WHICH ARE GIVEN IN SECTION AND ARE AFFECTED BY DEAD LOAD DEFLECTIONS ARE DIMENSIONS AT CENTER LINE OF BEARING UNLESS OTHERWISE NOTED ON PLANS. IN SETTING FORMS FOR STEEL BEAM BRIDGES AND PRESTRESSED CONCRETE GIRDER BRIDGES, ADJUSTMENTS SHALL BE MADE DUE TO THE DEAD LOAD DEFLECTIONS FOR THE ELEVATIONS SHOWN. WHERE BLOCKS ARE SHOWN OVER BEAMS FOR BUILDING UP TO THE SLAB, THE VERTICAL DIMENSIONS OF THE BLOCKS SHALL BE ADJUSTED BETWEEN BEARINGS TO COMPENSATE FOR DEAD LOAD DEFLECTIONS, VERTICAL CURVE ORDINATE, AND ACTUAL BEAM CAMBER. WHERE BOTTOM OF SLAB IS IN LINE WITH BOTTOM OF TOP FLANGES, DEPTH OF SLAB BETWEEN BEARINGS SHALL BE ADJUSTED TO COMPENSATE FOR DEAD LOAD DEFLECTION, VERTICAL CURVE ORDINATE, AND ACTUAL BEAM CAMBER.

IN SETTING FALSEWORK AND FORMS FOR REINFORCED CONCRETE SPANS, AN ALLOWANCE SHALL BE MADE FOR DEAD LOAD DEFLECTIONS, SETTLEMENT OF FALSEWORK, AND PERMANENT CAMBER WHICH SHALL BE PROVIDED FOR IN ADDITION TO THE ELEVATIONS SHOWN. AFTER REMOVAL OF THE FALSEWORK, THE FINISHED STRUCTURES SHALL CONFORM TO THE PROFILE AND ELEVATIONS SHOWN ON THE PLANS AND CONSTRUCTION ELEVATIONS FURNISHED BY THE ENGINEER.

DETAILED DRAWINGS FOR FALSEWORK OR FORMS FOR BRIDGE SUPERSTRUCTURE AND ANY STRUCTURE OR PARTS OF A STRUCTURE AS NOTED ON THE PLANS SHALL BE SUBMITTED TO THE ENGINEER FOR APPROVAL BEFORE CONSTRUCTION OF THE FALSEWORK OR FORMS IS STARTED.

REINFORCING STEEL:

ALL REINFORCING STEEL SHALL BE DEFORMED. DIMENSIONS RELATIVE TO PLACEMENT OF REINFORCING ARE TO CENTERS OF BARS UNLESS OTHERWISE INDICATED IN THE PLANS. DIMENSIONS ON BAR DETAILS ARE TO CENTERS OF BARS OR ARE OUT TO OUT AS INDICATED ON PLANS.

WIRE BAR SUPPORTS SHALL BE PROVIDED FOR REINFORCING STEEL WHERE INDICATED ON THE PLANS. WHEN BAR SUPPORT PIECES ARE PLACED IN CONTINUOUS LINES, THEY SHALL BE SO PLACED THAT THE ENDS OF THE SUPPORTING WIRES SHALL BE LAPPED TO LOCK LEGS ON ADJOINING PIECES.

STRUCTURAL STEEL:

AT THE CONTRACTOR'S OPTION, HE MAY SUBSTITUTE 7/8" Ø SHEAR STUDS FOR THE 3/4" Ø STUDS SPECIFIED ON THE PLANS. THIS SUBSTITUTION SHALL BE MADE AT THE RATE OF 3 - 7/8" Ø STUDS FOR 4 - 3/4" Ø STUDS, AND STUD SPACING CHANGES SHALL BE MADE AS NECESSARY TO PROVIDE THE SAME EQUIVALENT NUMBER OF 7/8" Ø STUDS ALONG THE BEAM AS SHOWN FOR 3/4" Ø STUDS BASED ON THE RATIO OF 3 - 7/8" Ø STUDS FOR 4 - 3/4" Ø STUDS. STUDS OF THE LENGTH SPECIFIED ON THE PLANS MUST BE PROVIDED. THE MAXIMUM SPACING SHALL BE 2'-0".

EXCEPT AT THE INTERIOR SUPPORTS OF CONTINUOUS BEAMS WHERE THE COVER PLATE IS IN CONTACT WITH BEARING PLATE, THE CONTRACTOR MAY, AT HIS OPTION, SUBSTITUTE FOR THE COVER PLATES DESIGNATED ON THE PLANS COVER PLATES OF THE EQUIVALENT AREA PROVIDED THESE PLATES ARE AT LEAST 5/16" IN THICKNESS AND DO NOT EXCEED A WIDTH EQUAL TO THE FLANGE WIDTH LESS 2" OR A THICKNESS EQUAL TO 2 TIMES THE FLANGE THICKNESS. THE SIZE OF FILLET WELDS SHALL CONFORM TO THE REQUIREMENTS OF THE CURRENT ANSI/AASHTO/AWS "BRIDGE WELDING CODE". ELECTROSLAG WELDING WILL NOT BE PERMITTED.

WITH THE SOLE EXCEPTION OF EDGES AT SURFACES WHICH BEAR ON OTHER SURFACES, ALL SHARP EDGES AND ENDS OF SHAPES AND PLATES SHALL BE SLIGHTLY ROUNDED BY SUITABLE MEANS TO A RADIUS OF APPROXIMATELY 1/16 INCH OR EQUIVALENT FLAT SURFACE AT A SUITABLE ANGLE PRIOR TO PAINTING, GALVANIZING, OR METALLIZING.

HANDRAILS AND POSTS:

METAL STANDARDS AND FACES OF THE CONCRETE END POSTS FOR THE METAL RAIL SHALL BE SET NORMAL TO THE GRADE OF THE CURB, UNLESS OTHERWISE SHOWN ON PLANS. THE METAL RAIL AND TOPS OF CONCRETE POSTS USED WITH THE ALUMINUM RAIL SHALL BE BUILT PARALLEL TO THE GRADE OF THE CURB.

METAL HANDRAILS SHALL BE IN ACCORDANCE WITH THE PLANS. RAILS SHALL BE AS MANUFACTURED FOR BRIDGE RAILING. CASTINGS SHALL BE OF A UNIFORM APPEARANCE. FINS AND OTHER DEFORMATIONS RESULTING FROM CASTING OR OTHERWISE SHALL BE REMOVED IN A MANNER SO THAT A UNIFORM COLORING OF THE COMPLETED CASTING SHALL BE OBTAINED. CASTINGS WITH DISCOLORATIONS OR OF NON-UNIFORM COLORING WILL NOT BE ACCEPTED. CERTIFIED MILL REPORTS ARE REQUIRED FOR METAL RAILS AND POSTS.

SPECIAL NOTES:

GENERALLY, IN CASE OF DISCREPANCY, THIS STANDARD SHEET OF NOTES SHALL GOVERN OVER THE SPECIFICATIONS, BUT THE REMAINDER OF THE PLANS SHALL GOVERN OVER NOTES HEREON, AND SPECIAL PROVISIONS SHALL GOVERN OVER ALL. SEE SPECIFICATIONS ARTICLE 105-4.

ENGLISH

JANUARY, 1990

STD. NO. SN