09/08/99

TIP PROJECT: R-2233AB

STATE OF NORTH CAROLINA
DIVISION OF HIGHWAYS

RUTHERFORD COUNTY

STATE	STATE PROJECT REFERENCE NO.	SHEET NO.	TOTAL SHEETS
N.C.	R-2233AB		

STATE PROJ. NO.	F. A. PROJ. NO.	DESCRIPTION
34400.1.1		PE
34400.2.3		R/W, UTILITY
34400.1.2.3		CONSTRUCTION

LOCATION: US 221 FROM SOUTH OF FLOYD'S CREEK TO NORTH OF US 74 BYPASS

TYPE OF WORK: GRADING, DRAINAGE, PAVING, STRUCTURES AND SIGNALS

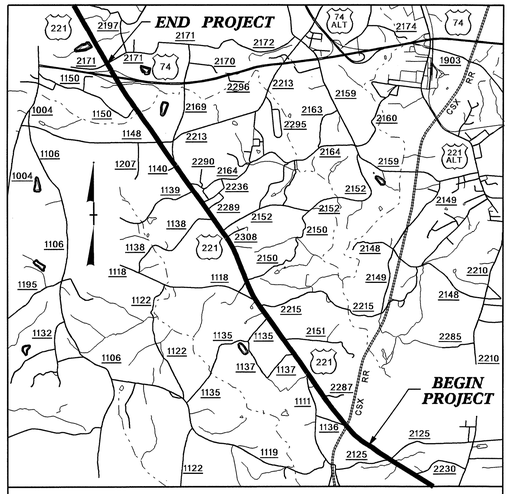

VICINITY MAP

STRUCTURES

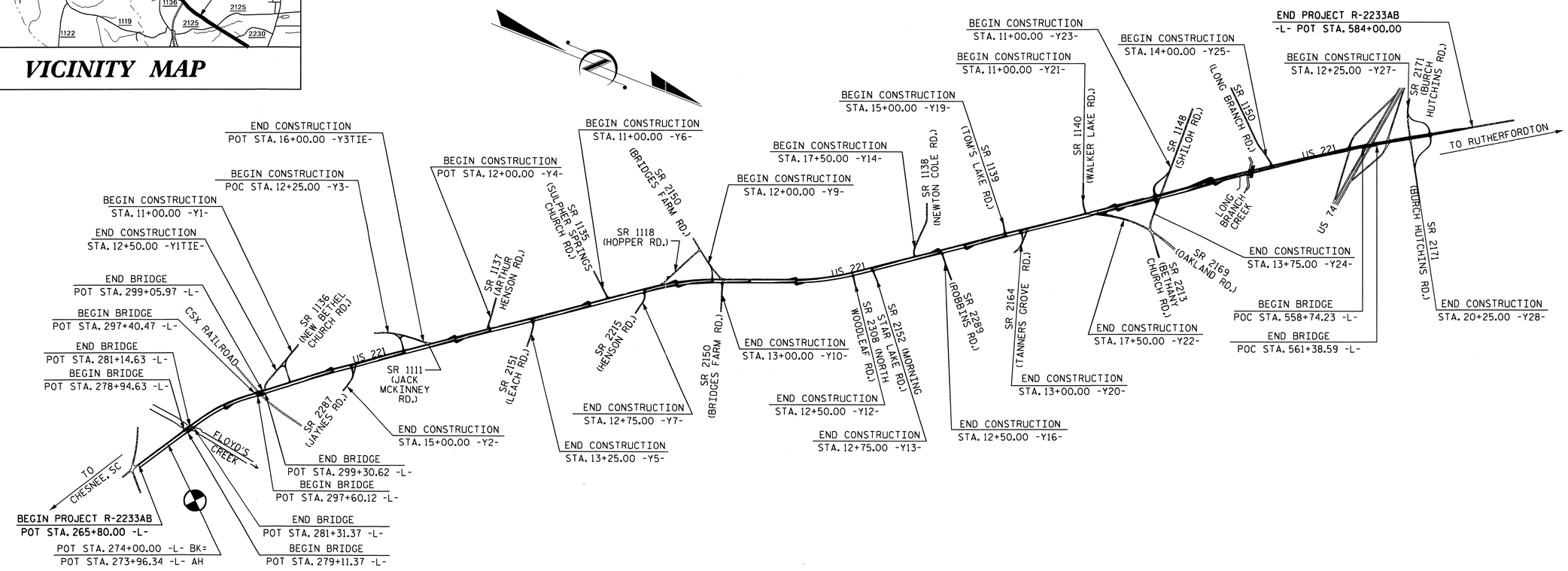

CONTRACT: C202265

STATE OF NORTH CAROLINA DEPARTMENT OF TRANSPORTATION

DESIGN DATA

ADT 2005 = 10,900
ADT 2030 = 19,000
DHV = 11 %
D = 55 %
* T = 12 %
* * V = 60 MPH
* TTST = 7% DUAL = 5%

FUNCTIONAL CLASSIFICATION
= ARTERIAL
STATEWIDE TIER

PROJECT LENGTH

LENGTH ROADWAY TIP PROJECT R-2233AB = 5.899 MILES

LENGTH STRUCTURE TIP PROJECT R-2233AB = 0.128 MILES

TOTAL LENGTH TIP PROJECT R-2233AB = 6.027 MILES

PLANS PREPARED IN THE OFFICE OF:
DIVISION OF HIGHWAYS

2006 STANDARD SPECIFICATIONS

LETTING DATE:
NOVEMBER 16, 2010

Q. H. NGUYEN, P.E.
PROJECT ENGINEER

MARC G. CHEEK, P.E.
PROJECT DESIGN ENGINEER

STRUCTURE DESIGN UNIT
1000 BIRCH RIDGE DRIVE
RALEIGH, N.C. 27610

DIVISION OF HIGHWAYS
STATE OF NORTH CAROLINA

P.E.
STATE DESIGN ENGINEER

DEPARTMENT OF TRANSPORTATION
FEDERAL HIGHWAY ADMINISTRATION

APPROVED
DIVISION ADMINISTRATOR *DATE*

04-AUG-2010 09:24
R:\Structures\Str*1\A...\Figures\Microstation\R-2233AB_S0-01_TSH.dgn
dahodge

TIP PROJECT: R-2233AB

CONTRACT: C202265

INDEX

STR No.	STATION	DESCRIPTION	SHEET NUMBERS
1	280+13.00 -L-	BRIDGE ON US 221 OVER FLOYD'S CREEK (LEFT LANE)	S-1 THRU S-32
2	280+13.00 -L-	BRIDGE ON US 221 OVER FLOYD'S CREEK (RIGHT LANE)	S-33 THRU S-64
3	298+34.21 -L-	BRIDGE ON US 221 OVER CSX RR (LEFT LANE)	S-65 THRU S-101
4	298+34.21 -L-	BRIDGE ON US 221 OVER CSX RR (RIGHT LANE)	S-102 THRU S-138
5	560+00.35 -L-	BRIDGE ON US 221 OVER US 74	S-139 THRU S-184
6	534+79.00 -L-	DOUBLE 9' X 8' BOX CULVERT	C-1 THRU C-11

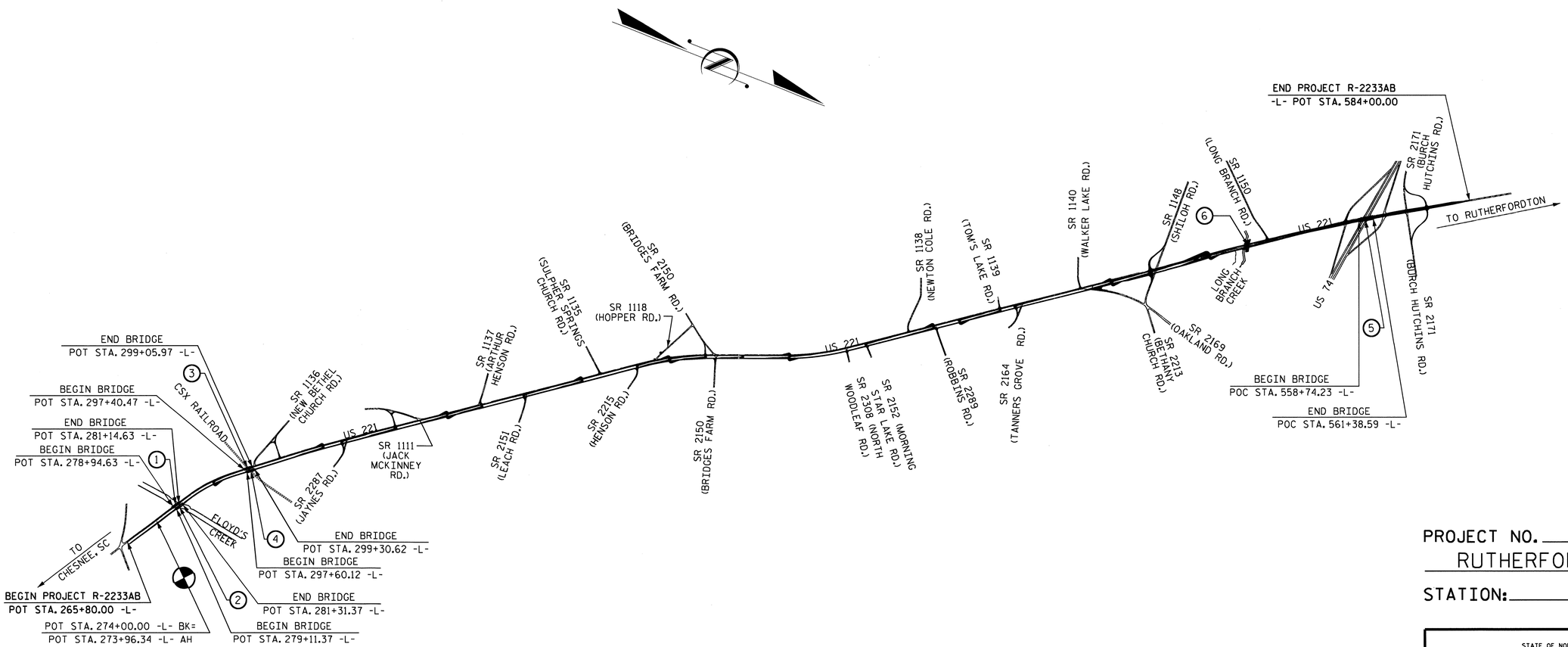

PROJECT NO. R-2233AB

RUTHERFORD COUNTY

STATION:

STATE OF NORTH CAROLINA
DEPARTMENT OF TRANSPORTATION
RALEIGH

STRUCTURE INDEX

NORTH CAROLINA PROFESSIONAL SEAL 20125 ENGINEER MARSHALL G. CHEEK, JR.
9-21-10

REVISIONS						SHEET NO.
NO.	BY:	DATE:	NO.	BY:	DATE:	TOTAL SHEETS
1			3			
2			4			

DRAWN BY : A.L. FIGUEROA DATE : 06-02-10
CHECKED BY : M.G. CHEEK DATE : 06-30-10

27-JUL-2010 14:06
R:\Structures\Str*1\A.L. Figueroa\Microstation\R-2233AB_SD-01_TSH.dgn
afigueroa

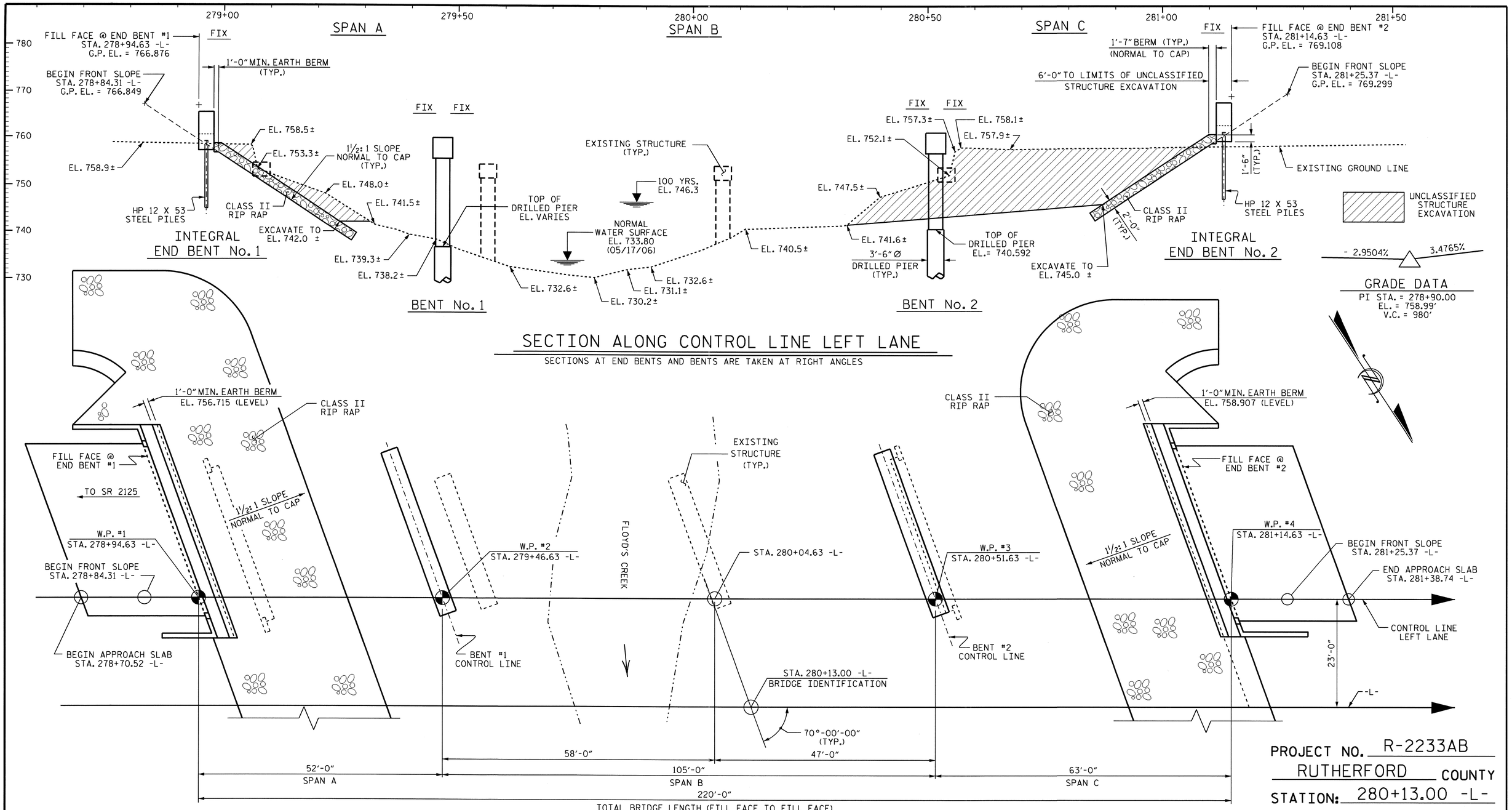

SECTION ALONG CONTROL LINE LEFT LANE

SECTIONS AT END BENTS AND BENTS ARE TAKEN AT RIGHT ANGLES

PLAN

(PILES AND COLUMNS NOT SHOWN FOR CLARITY)

PROJECT NO. R-2233AB

RUTHERFORD COUNTY

STATION: 280+13.00 -L-

SHEET 1 OF 3 REPLACES BRIDGE NO. 55

STATE OF NORTH CAROLINA
DEPARTMENT OF TRANSPORTATION
RALEIGH

GENERAL DRAWING
FOR BRIDGE OVER
FLOYD'S CREEK ON US 221
BETWEEN SR 2125 & SR 1136
LEFT LANE

NORTH CAROLINA PROFESSIONAL SEAL 13014 ENGINEER QUANG H. NGUYEN
Quang H. Nguyen 9-16-10

NORTH CAROLINA PROFESSIONAL SEAL 20125 ENGINEER MARSHALL G. CHEEK, JR.
9-16-10

REVISIONS						SHEET NO.
NO.	BY:	DATE:	NO.	BY:	DATE:	S-1
1			3			TOTAL SHEETS
2			4			184

STR. #1

DRAWN BY : A.L. FIGUEROA DATE : 03-16-10
CHECKED BY : M.G. CHEEK DATE : 3-17-10

15-SEP-2010 14:57
R:\Structures\FinalPlans\Str. #1\R-2233AB_SD_STR#1_02_GD.dgn
afigueroa

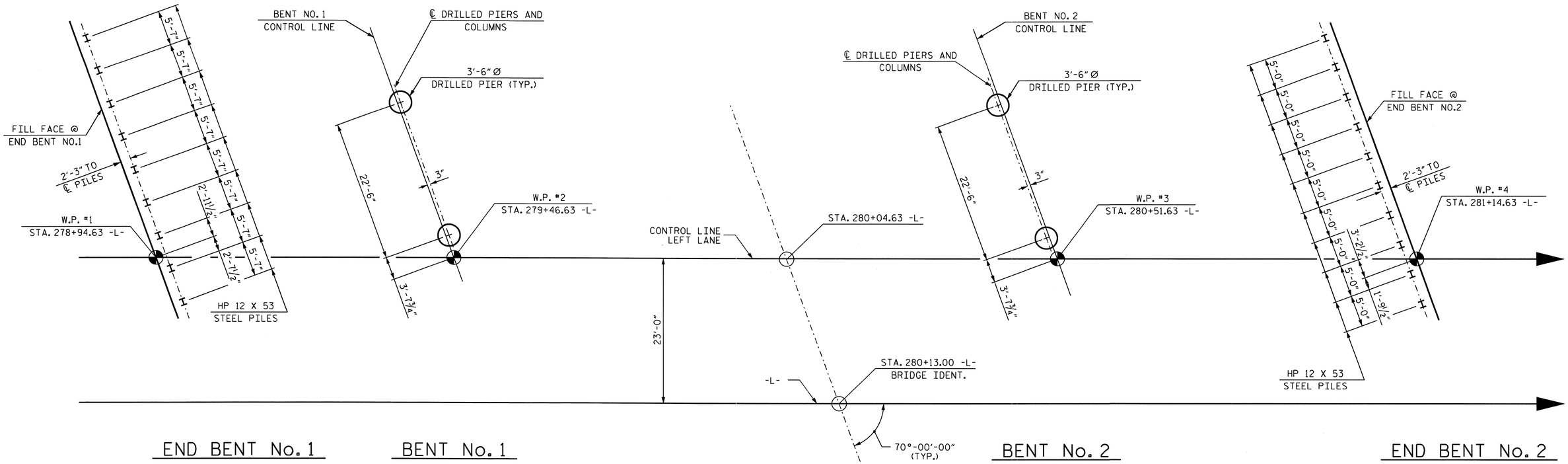

FOUNDATION LAYOUT

ALL END BENT PILES ARE HP 12 X 53

NOTES

FOR PILES, SEE SPECIAL PROVISIONS.

DRIVE PILES AT END BENT NO. 1 TO A REQUIRED BEARING CAPACITY OF 120 TONS PER PILE. THE REQUIRED BEARING CAPACITY IS EQUAL TO THE ALLOWABLE BEARING CAPACITY WITH A MINIMUM FACTOR OF SAFETY OF TWO.

THE ALLOWABLE BEARING CAPACITY FOR PILES AT END BENT NO. 1 IS 60 TONS PER PILE.

FOR DRILLED PIERS, SEE SPECIAL PROVISIONS.

DRILLED PIERS AT BENT NO. 1 ARE DESIGNED FOR BOTH SKIN FRICTION AND END BEARING. CHECK FIELD CONDITIONS FOR THE REQUIRED END BEARING CAPACITY OF 90 TONS PER SQ. FOOT (LT) & 150 TONS PER SQ. FOOT (RT).

DRILLED PIERS AT BENT NO. 1 ARE DESIGNED FOR AN APPLIED LOAD OF 446 TONS EACH AT THE TOP OF THE COLUMN.

PERMANENT STEEL CASING MAY BE REQUIRED FOR DRILLED PIERS AT BENT NO. 1. IF REQUIRED, DO NOT EXTEND CASING BELOW ELEVATION 732.0 WITHOUT PRIOR APPROVAL FROM THE ENGINEER. THE ENGINEER WILL DETERMINE THE NEED FOR PERMANENT STEEL CASING.

DRILLED PIERS AT BENT NO. 1 SHALL EXTEND TO AN ELEVATION NO HIGHER THAN 712.0 (LT), AND 719.0 (RT) AND SATISFY THE REQUIRED END BEARING CAPACITY.

THE SCOUR CRITICAL ELEVATIONS FOR BENT NO. 1 ARE ELEVATION 717.5 (LT), AND 725.5 (RT). SCOUR CRITICAL ELEVATIONS ARE USED TO MONITOR POSSIBLE SCOUR PROBLEMS DURING THE LIFE OF THE STRUCTURE.

DRILLED PIERS AT BENT NO. 2 ARE DESIGNED FOR BOTH SKIN FRICTION AND END BEARING. CHECK FIELD CONDITIONS FOR THE REQUIRED END BEARING CAPACITY OF 105 TONS PER SQ. FOOT.

DRILLED PIERS AT BENT NO. 2 ARE DESIGNED FOR AN APPLIED LOAD OF 462 TONS EACH AT THE TOP OF THE COLUMN.

PERMANENT STEEL CASING MAY BE REQUIRED FOR DRILLED PIERS AT BENT NO. 2. IF REQUIRED, DO NOT EXTEND CASING BELOW ELEVATION 738.5 WITHOUT PRIOR APPROVAL FROM THE ENGINEER. THE ENGINEER WILL DETERMINE THE NEED FOR PERMANENT STEEL CASING.

DRILLED PIERS AT BENT NO. 2 SHALL EXTEND TO AN ELEVATION NO HIGHER THAN 703.0 AND SATISFY THE REQUIRED END BEARING CAPACITY.

THE SCOUR CRITICAL ELEVATIONS FOR BENT NO. 2 IS ELEVATION 711.0. SCOUR CRITICAL ELEVATIONS ARE USED TO MONITOR POSSIBLE SCOUR PROBLEMS DURING THE LIFE OF THE STRUCTURE.

SPT TESTING MAY BE REQUIRED FOR DRILLED PIERS. THE ENGINEER WILL DETERMINE THE NEED FOR SPT TESTING.

SID INSPECTIONS MAY BE REQUIRED FOR DRILLED PIERS. THE ENGINEER WILL DETERMINE THE NEED FOR SID INSPECTIONS.

CSL TUBES ARE REQUIRED AND CSL TESTING MAY BE REQUIRED FOR THE DRILLED PIERS. THE ENGINEER WILL DETERMINE THE NEED FOR CSL TESTING. SEE CROSSHOLE SONIC LOGGING SPECIAL PROVISION.

DRIVE PILES AT END BENT NO. 2 TO A REQUIRED BEARING CAPACITY OF 120 TONS PER PILE. THE REQUIRED BEARING CAPACITY IS EQUAL TO THE ALLOWABLE BEARING CAPACITY WITH A MINIMUM FACTOR OF SAFETY OF TWO.

THE ALLOWABLE BEARING CAPACITY FOR PILES AT END BENT NO. 2 IS 60 TONS PER PILE.

PROJECT NO. R-2233AB
RUTHERFORD COUNTY
STATION: 280+13.00 -L-

SHEET 2 OF 3

STATE OF NORTH CAROLINA
DEPARTMENT OF TRANSPORTATION
RALEIGH

GENERAL DRAWING
FOR BRIDGE OVER
FLOYD'S CREEK ON US 221
BETWEEN SR 2125 & SR 1136

LEFT LANE

NORTH CAROLINA PROFESSIONAL SEAL 20125 ENGINEER
MARSHALL GIVEN CHEEK, JR.
9-16-10

REVISIONS						SHEET NO.
NO.	BY:	DATE:	NO.	BY:	DATE:	S-2
1			3			TOTAL SHEETS
2			4			184

STR. #1

DRAWN BY : A.L. FIGUEROA DATE : 05-05-10
CHECKED BY : M.G. CHEEK DATE : 06-15-10

16-SEP-2010 09:33
R:\Structures\Final Plans\Str. #1\R-2233AB_sd_STR#1_02B_FL.dgn
ddhodge

BM# 1: RAILROAD SPIKE SET IN BASE OF 12" OAK -BL- STA.39+10.00, 349' LEFT EL. 832.55

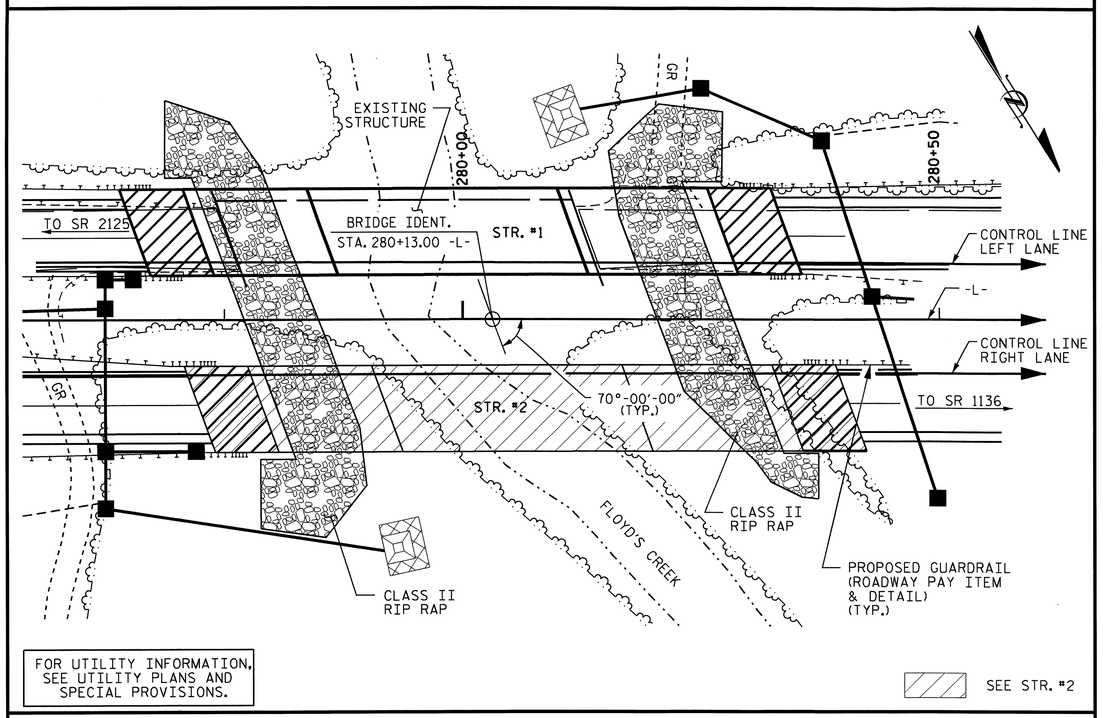

LOCATION SKETCH

NOTES

ASSUMED LIVE LOAD = HS20 OR ALTERNATE LOADING, EXCEPT THAT GIRDERS HAVE BEEN DESIGNED FOR HS25.

FOR OTHER DESIGN DATA AND GENERAL NOTES, SEE SHEET SN.

FOR EROSION CONTROL MEASURES, SEE EROSION CONTROL PLANS.

THIS BRIDGE HAS BEEN DESIGNED BY THE STRENGTH DESIGN METHOD AS SPECIFIED IN AASHTO STANDARD SPECIFICATIONS.

PRESTRESSED CONCRETE DECK PANELS MAY BE USED IN LIEU OF METAL STAY-IN-PLACE FORMS IN ACCORDANCE WITH ARTICLE 420-3 OF THE STANDARD SPECIFICATIONS.

REMOVABLE FORMS MAY BE USED IN LIEU OF METAL STAY-IN-PLACE FORMS IN ACCORDANCE WITH ARTICLE 420-3 OF THE STANDARD SPECIFICATIONS.

THE LOCATION OF THE CONSTRUCTION JOINT IN THE DRILLED PIERS IS BASED ON AN APPROXIMATE GROUND LINE ELEVATION. IF THE CONSTRUCTION JOINT IS ABOVE THE ACTUAL GROUND ELEVATION, THE CONTRACTOR SHALL PLACE THE CONSTRUCTION JOINT 1 FT. BELOW THE GROUND LINE.

AFTER SERVING AS A TEMPORARY STRUCTURE, THE EXISTING 3-SPAN STRUCTURE (3 @ 50'-0") CONSISTING OF REINFORCED CONCRETE DECK GIRDERS WITH A 6" ASPHALT WEARING SURFACE AND A SUBSTRUCTURE CONSISTING OF REINFORCED CONCRETE END BENTS AND REINFORCED CONCRETE POST AND BEAM BENTS WITH PILE FOOTINGS, AND LOCATED AT THE SITE OF THE PROPOSED STRUCTURE SHALL BE REMOVED AS DIRECTED BY THE ENGINEER. THE EXISTING BRIDGE IS PRESENTLY NOT POSTED FOR LOAD LIMIT. SHOULD THE STRUCTURAL INTEGRITY OF THE BRIDGE DETERIORATE A LOAD LIMIT MAY BE POSTED AND MAY BE REDUCED AS FOUND NECESSARY DURING THE LIFE OF THE PROJECT. FOR REMOVAL OF THE EXISTING STRUCTURE, SEE SPECIAL PROVISIONS.

REMOVAL OF THE EXISTING BRIDGE SHALL BE PERFORMED SO AS NOT TO ALLOW DEBRIS TO FALL INTO THE WATER. THE CONTRACTOR SHALL REMOVE THE BRIDGE AND SUBMIT PLANS FOR DEMOLITION IN ACCORDANCE WITH ARTICLE 402-2 OF THE STANDARD SPECIFICATIONS.

FOR PLACING LOAD ON STRUCTURE MEMBERS, SEE SPECIAL PROVISIONS.

THE MATERIAL SHOWN IN THE CROSS-HATCHED AREA (SEE SHEET 1 OF 3) SHALL BE EXCAVATED FROM 23 FEET RIGHT OF THE CONTROL LINE TO 40 FEET LEFT OF THE CONTROL LINE AS DIRECTED BY THE ENGINEER. THIS WORK WILL BE PAID FOR AT THE CONTRACT LUMP SUM PRICE FOR UNCLASSIFIED STRUCTURE EXCAVATION. SEE SECTION 412 OF THE STANDARD SPECIFICATIONS.

THE SUBSTRUCTURE OF THE EXISTING BRIDGE INDICATED ON THE PLANS IS FROM THE BEST INFORMATION AVAILABLE. SINCE THIS INFORMATION IS SHOWN FOR THE CONVENIENCE OF THE CONTRACTOR, THE CONTRACTOR SHALL HAVE NO CLAIM WHATSOEVER AGAINST THE DEPARTMENT OF TRANSPORTATION FOR ANY DELAYS OR ADDITIONAL COST INCURRED BASED ON DIFFERENCES BETWEEN THE EXISTING BRIDGE SUBSTRUCTURE SHOWN ON THE PLANS AND THE ACTUAL CONDITIONS AT THE PROJECT SITE.

THE CLASS AA CONCRETE IN THE BRIDGE DECK SHALL CONTAIN FLY ASH OR GROUND GRANULATED BLAST FURNACE SLAG AT THE SUBSTITUTION RATE SPECIFIED IN ARTICLE 1024-1 AND IN ACCORDANCE WITH ARTICLE 1024-5 AND 1024-6 OF THE STANDARD SPECIFICATIONS. NO PAYMENT WILL BE MADE FOR THIS SUBSTITUTION AS IT IS CONSIDERED INCIDENTAL TO THE COST OF THE REINFORCED CONCRETE DECK SLAB.

THIS STRUCTURE HAS BEEN DESIGNED IN ACCORDANCE WITH HEC 18, "EVALUATING SCOUR AT BRIDGES", MAY, 2001.

NEEDLE BEAMS WILL NOT BE ALLOWED UNLESS OTHERWISE CALLED FOR ON THE PLANS OR APPROVED BY THE ENGINEER.

FOR SUBMITTAL OF WORKING DRAWINGS, SEE SPECIAL PROVISIONS.

FOR FALSEWORK AND FORMWORK, SEE SPECIAL PROVISIONS.

FOR CRANE SAFETY, SEE SPECIAL PROVISIONS.

FOR PRESTRESSED CONCRETE MEMBERS, SEE SPECIAL PROVISIONS.

FOR GROUT FOR STRUCTURES, SEE SPECIAL PROVISIONS.

FOR CURING CONCRETE, SEE SPECIAL PROVISIONS.

FOR PILES, SEE SPECIAL PROVISIONS.

HYDRAULIC DATA

DESIGN DISCHARGE	=	4,500 CFS
FREQUENCY OF DESIGN FLOOD	=	50 YRS.
DESIGN HIGH WATER ELEVATION	=	745.3
DRAINAGE AREA	=	23.8 SQ. MI.
BASIC DISCHARGE (Q100)	=	5,400 CFS
BASIC HIGH WATER ELEVATION	=	746.3

OVERTOPPING FLOOD DATA

OVERTOPPING DISCHARGE	=	55,500 CFS
FREQUENCY OF OVERTOPPING FLOOD	=	500+ YRS.
OVERTOPPING FLOOD ELEVATION	=	765.6

TOTAL BILL OF MATERIAL

	REMOVAL OF EXISTING STRUCTURE	3'-6"Ø DRILLED PIERS IN SOIL	3'-6"Ø DRILLED PIERS NOT IN SOIL	PERMANENT STEEL CASING FOR 3'-6"Ø DRILLED PIERS	SID INSPECTION	SPT TESTING	CROSSHOLE SONIC LOGGING	UNCLASSIFIED STRUCTURE EXCAVATION	REINFORCED CONCRETE DECK SLAB
	LUMP SUM	LIN. FT.	LIN. FT.	LIN. FT.	EACH	EACH	EACH	LUMP SUM	SQ. FT.
SUPERSTRUCTURE	LUMP SUM								8,635
END BENT NO. 1								LUMP SUM	
BENT NO. 1		35.50	14.00	9.47					
BENT NO. 2		57.33	18.00	4.18					
END BENT NO. 2								LUMP SUM	
TOTAL	LUMP SUM	92.83	32.00	13.65	1	2	1	LUMP SUM	8,635

TOTAL BILL OF MATERIAL

	GROOVING BRIDGE FLOORS	CLASS A CONCRETE	BRIDGE APPROACH SLABS	REINFORCING STEEL	SPIRAL COLUMN REINFORCING STEEL	MODIFIED 63" PRESTRESSED CONCRETE GIRDERS		HP 12 X 53 STEEL PILES		CONCRETE BARRIER RAIL	RIP RAP CLASS II (2'-0" THICK)	FILTER FABRIC FOR DRAINAGE	ELASTOMERIC BEARINGS	EVAZOTE JOINT SEALS
	SQ. FT.	CU. YDS.	LUMP SUM	LBS.	LBS.	NO.	LIN. FT.	NO.	LIN. FT.	LIN. FT.	TONS	SQ. YDS.	LUMP SUM	LUMP SUM
SUPERSTRUCTURE	8,659		LUMP SUM			15	1075.00			440.00			LUMP SUM	LUMP SUM
END BENT NO. 1		38.7		5,126				9	270		334	371		
BENT NO. 1		41.9		9,882	1,875									
BENT NO. 2		40.2		10,837	2,279									
END BENT NO. 2		38.1		5,063				10	450		377	418		
TOTAL	8,659	158.9	LUMP SUM	30,908	4,154	15	1075.00	19	720	440.00	711	789	LUMP SUM	LUMP SUM

PROJECT NO. R-2233AB
RUTHERFORD COUNTY
STATION: 280+13.00 -L-

SHEET 3 OF 3

STATE OF NORTH CAROLINA
DEPARTMENT OF TRANSPORTATION
RALEIGH

GENERAL DRAWING
FOR BRIDGE OVER
FLOYD'S CREEK ON US 221
BETWEEN SR 2125 & SR 1136
LEFT LANE

NORTH CAROLINA PROFESSIONAL SEAL 20125 ENGINEER MARSHALL G. CHEEK, JR.
9-20-10

REVISIONS						SHEET NO.
NO.	BY:	DATE:	NO.	BY:	DATE:	S-3
1			3			TOTAL SHEETS
2			4			184

STR. #1

DRAWN BY : A.L. FIGUEROA DATE : 03-16-10
CHECKED BY : M.G. CHEEK DATE : 3-17-10

20-SEP-2010 08:53
R:\Structures\Final Plans\Str. #1\R-2233AB_SD_STR#1_02_GD.dgn
dahodge

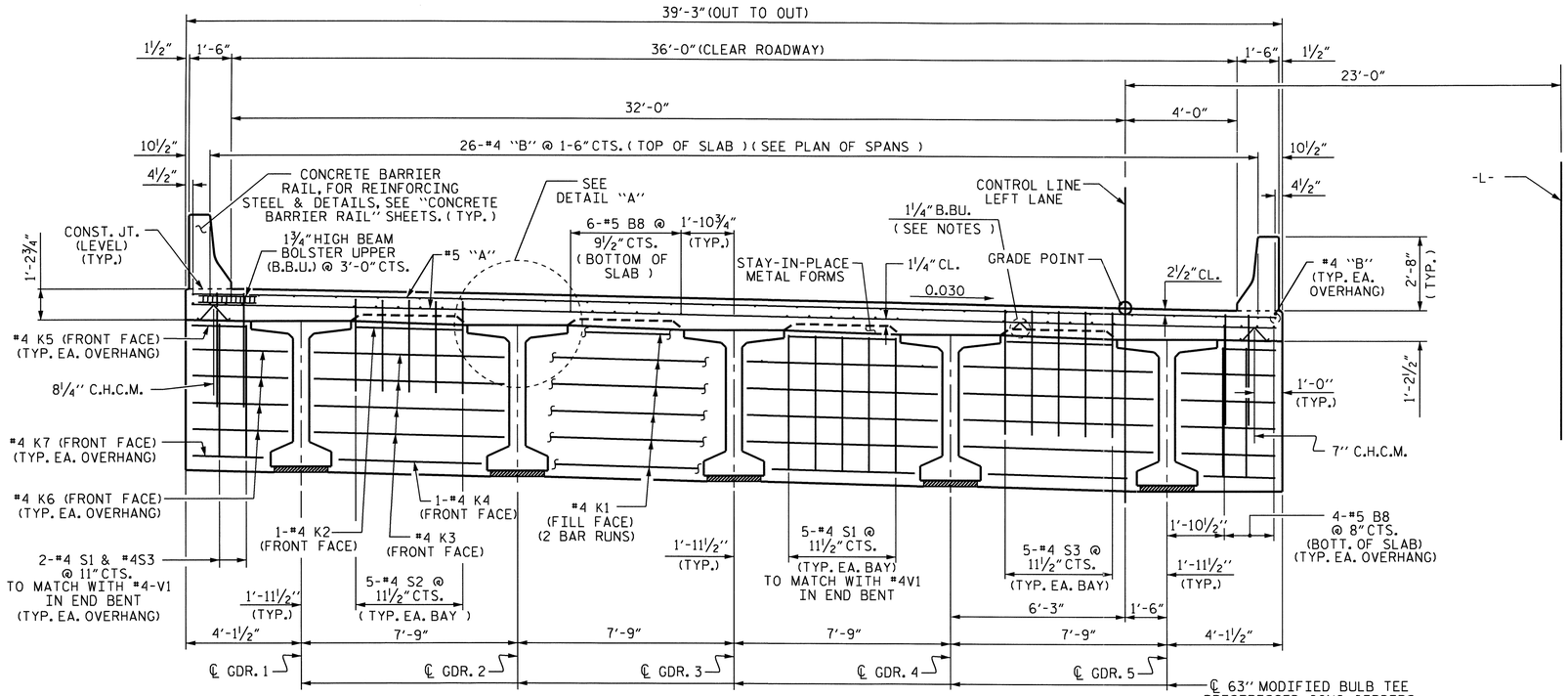

END ELEVATION

(END BENT #1 SHOWN, END BENT #2 SIMILAR)

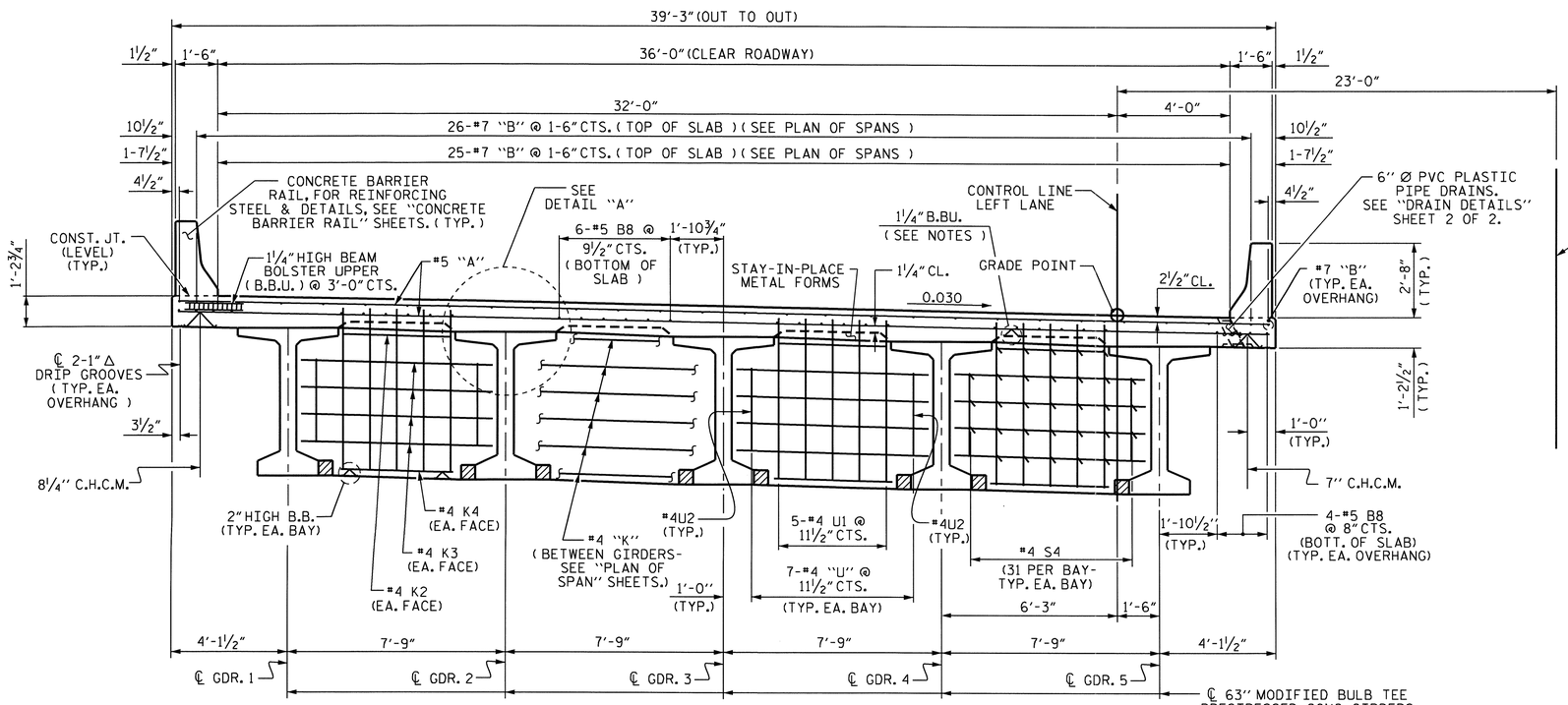

TYPICAL SECTION

(SHOWING BENT DIAPHRAGMS)

NOTES

PROVIDE 1¼" HIGH BEAM BOLSTERS UPPER AT 4'-0" CTS. ATOP THE METAL STAY-IN-PLACE FORMS TO SUPPORT THE BOTTOM MAT OF 'A' BARS. WHEN USING REMOVABLE FORMS, PROVIDE CONTINUOUS HIGH CHAIRS FOR METAL DECK (C.H.C.M.) @ 4'-0" CTS. WITH A HEIGHT TO SUPPORT THE BOTTOM MAT OF 'A' BARS A CLEAR DISTANCE OF 2½" ABOVE THE TOP OF THE REMOVABLE FORM.

LONGITUDINAL STEEL MAY BE SHIFTED SLIGHTLY, AS NECESSARY, TO AVOID INTERFERENCE WITH STIRRUPS IN PRESTRESSED CONCRETE GIRDERS.

PREVIOUSLY CAST CONCRETE IN A CONTINUOUS UNIT SHALL HAVE ATTAINED A MINIMUM COMPRESSIVE STRENGTH OF 3000 PSI BEFORE ADDITIONAL CONCRETE IS CAST IN THE UNIT.

BARRIER RAIL IN A CONTINUOUS UNIT SHALL NOT BE CAST UNTIL ALL SLAB CONCRETE IN THE UNIT HAS BEEN CAST AND HAS REACHED A MINIMUM COMPRESSIVE STRENGTH OF 3000 PSI.

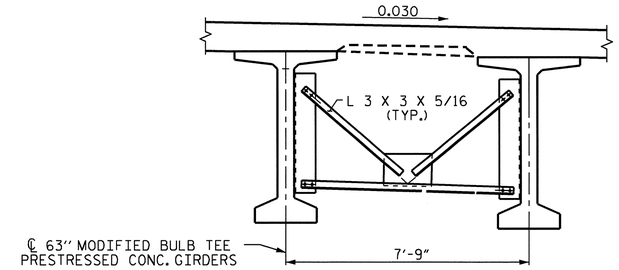

TYPICAL SECTION

SHOWING INTERMEDIATE DIAPHRAGMS
(FOR INTERMEDIATE STEEL DIAPHRAGMS DETAILS, SEE "INTERMEDIATE STEEL DIAPHRAGMS FOR 63" BULB TEE PRESTRESSED CONCRETE GIRDERS" SHEET 5 OF 5.)

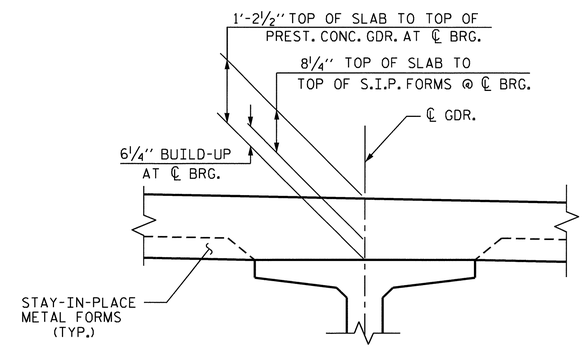

DETAIL "A"

PROJECT NO. R-2233AB
RUTHERFORD COUNTY
STATION: 280+13.00 -L-

SHEET 1 OF 2

STATE OF NORTH CAROLINA
DEPARTMENT OF TRANSPORTATION
RALEIGH

SUPERSTRUCTURE
TYPICAL SECTION
LEFT LANE

NORTH CAROLINA PROFESSIONAL SEAL 20125 ENGINEER MARSHALL G. CHEEK, JR.
9-15-10

REVISIONS						SHEET NO.
NO.	BY:	DATE:	NO.	BY:	DATE:	S-4
1			3			TOTAL SHEETS
2			4			184

STR. #1

DRAWN BY : V.X. NGUYEN DATE : 10-7-09
CHECKED BY : M.G. CHEEK DATE : 5-10

13-SEP-2010 16:12
R:\Structures\FinalPlans\Str. #1\R-2233AB_SD_STR#1_04_TS.dgn
afigueroa

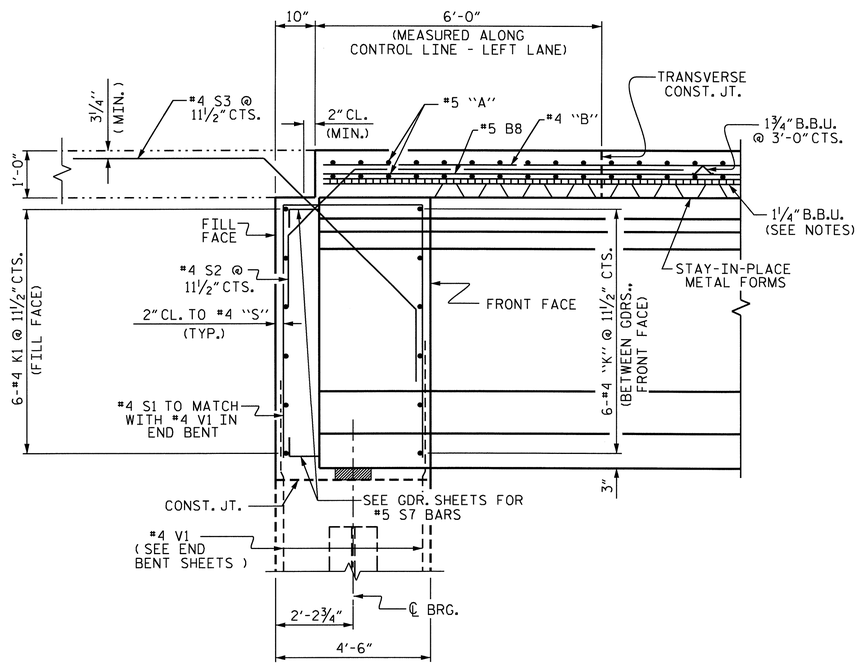

SECTION THRU END BENT

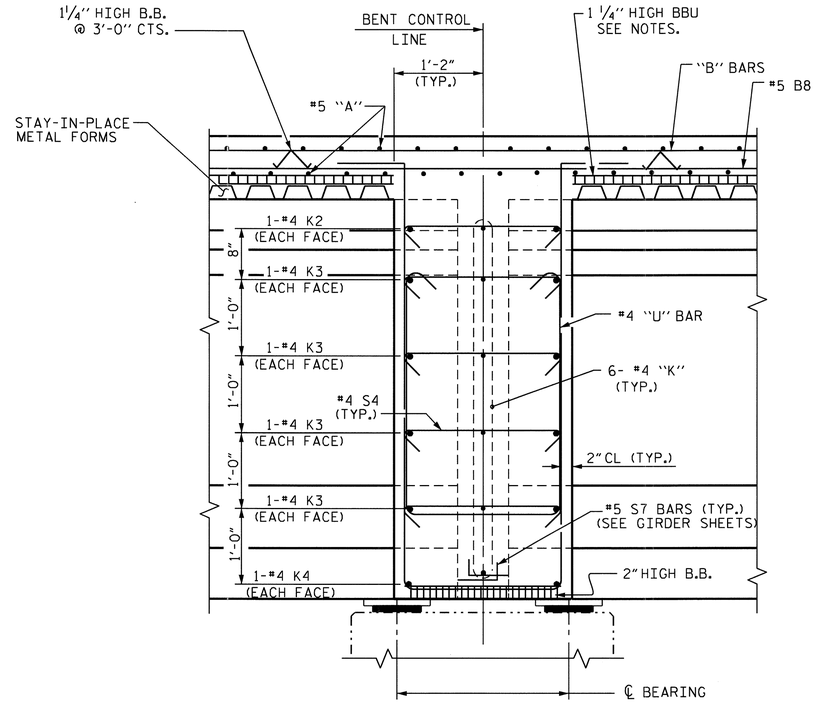

SECTION THRU CONTINUOUS BENT DIAPHRAGM

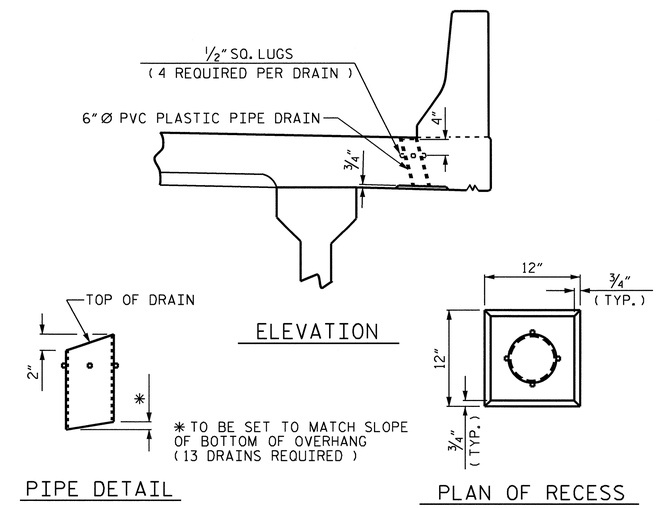

DRAIN DETAILS

TOP OF FLOOR DRAIN TO BE SET ⅜" BELOW SURFACE OF SLAB.

4-½" SQUARE LUGS TO BE GLUED TO THE PVC PLASTIC PIPE AT EQUAL SPACES AROUND THE PIPE DRAIN APPROXIMATELY 4" FROM THE TOP OF THE PIPE.

THE 6" Ø PVC PLASTIC PIPE AND FITTINGS SHALL BE SCHEDULE 40 AND CONFORM TO ASTM D1785.

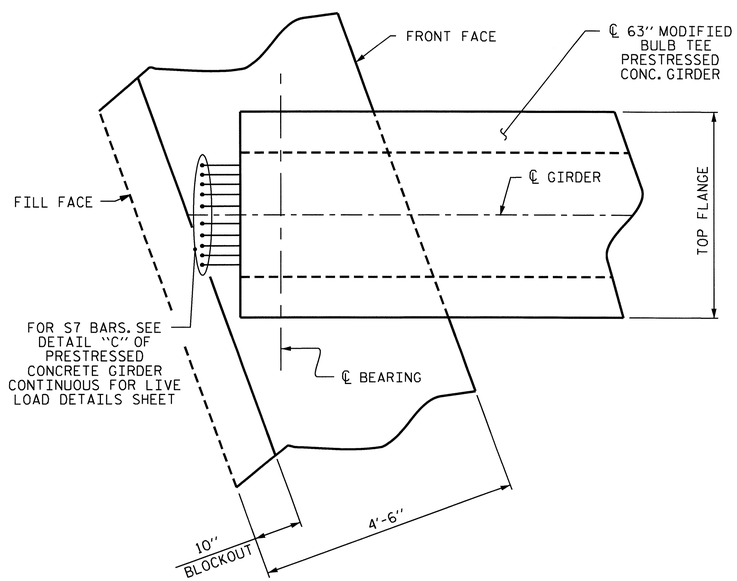

PLAN OF GIRDER @ INTEGRAL END BENT

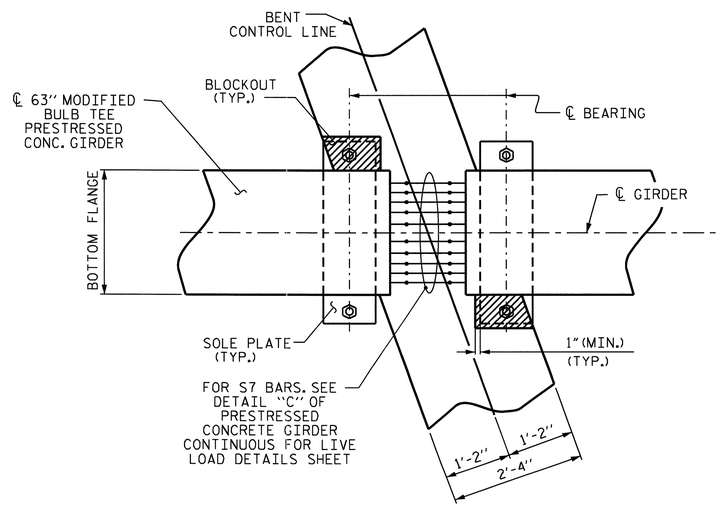

BENT DIAPHRAGM BLOCK-OUT DETAIL

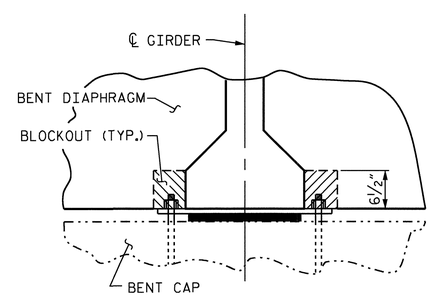

SECTION

PROJECT NO. R-2233AB
RUTHERFORD COUNTY
STATION: 280+13.00 -L-

SHEET 2 OF 2

STATE OF NORTH CAROLINA
DEPARTMENT OF TRANSPORTATION
RALEIGH

SUPERSTRUCTURE
TYPICAL SECTIONS
LEFT LANE

REVISIONS						SHEET NO.
NO.	BY:	DATE:	NO.	BY:	DATE:	S-5
1			3			TOTAL SHEETS
2			4			184

NORTH CAROLINA PROFESSIONAL SEAL 20125 ENGINEER MARSHALL G. CHEEK, JR. 9-15-10

DRAWN BY : V.X. NGUYEN DATE : 11-16-09
CHECKED BY : M.G. CHEEK DATE : 5-10

13-SEP-2010 16:12
R:\Structures\Final Plans\Str. #1\R-2233AB_SD_STR#1_04_TS.dgn
afigueroa

STR. 1

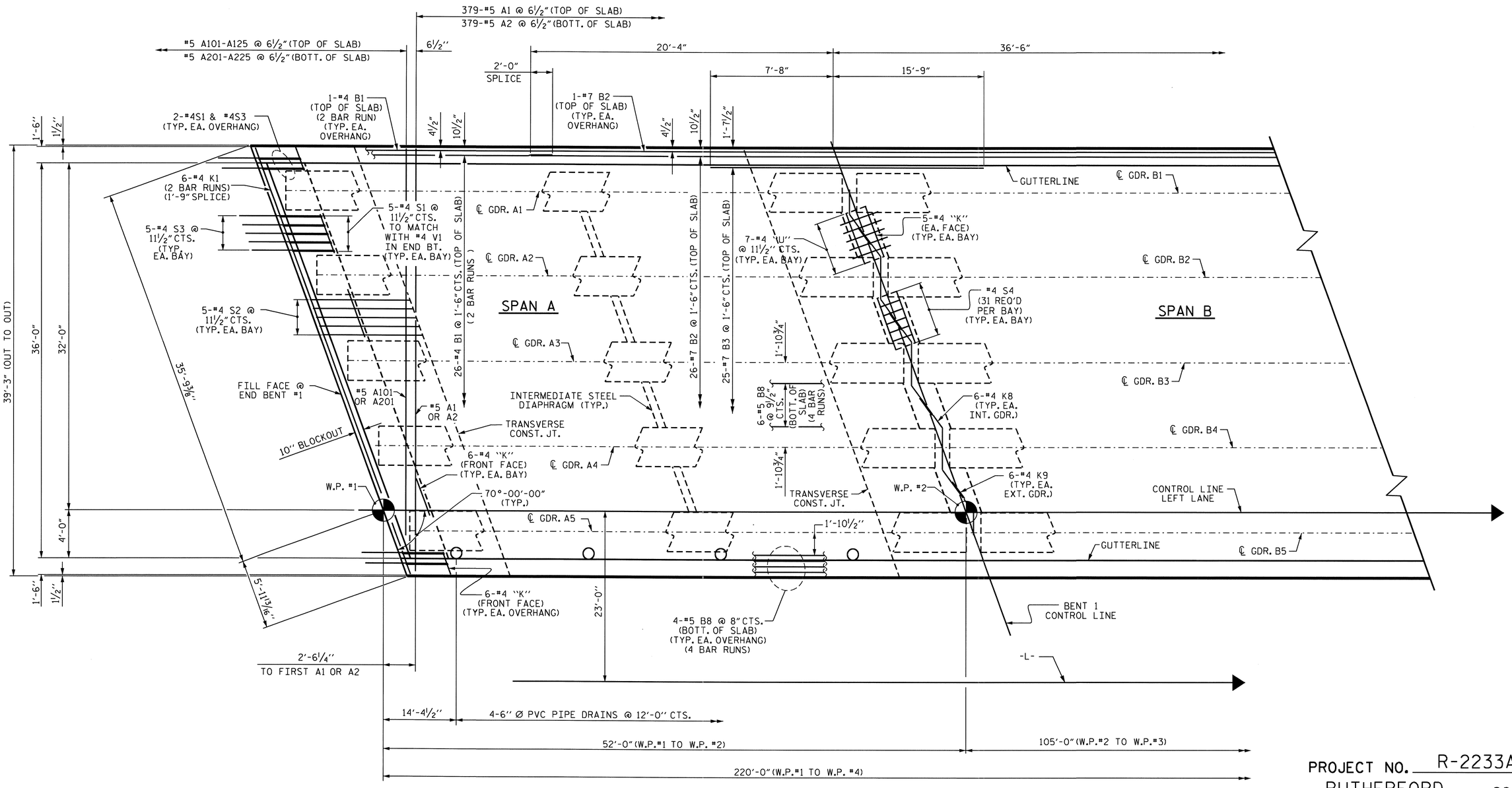

PLAN OF SPAN A

FOR INTERMEDIATE STEEL DIAPHRAGMS, SEE "INTERMEDIATE STEEL DIAPHRAGMS" SHEET.

PROJECT NO. R-2233AB
RUTHERFORD COUNTY
STATION: 280+13.00 -L-

SHEET 1 OF 3

STATE OF NORTH CAROLINA
DEPARTMENT OF TRANSPORTATION
RALEIGH

SUPERSTRUCTURE
PLAN OF SPAN A
LEFT LANE

NORTH CAROLINA PROFESSIONAL SEAL 20125 ENGINEER MARSHALL G. CHEEK, JR.
9-15-10

REVISIONS						SHEET NO.
NO.	BY:	DATE:	NO.	BY:	DATE:	S-6
1			3			TOTAL SHEETS
2			4			184

DRAWN BY : V.X. NGUYEN DATE : 10-14-09
CHECKED BY : M.G. CHEEK DATE : 5-10

13-SEP-2010 16:12
R:\Structures\Final Plans\Str. #1\R-2233AB_SD_STR#1_05_S*.dgn
afigueroa

STR. #1

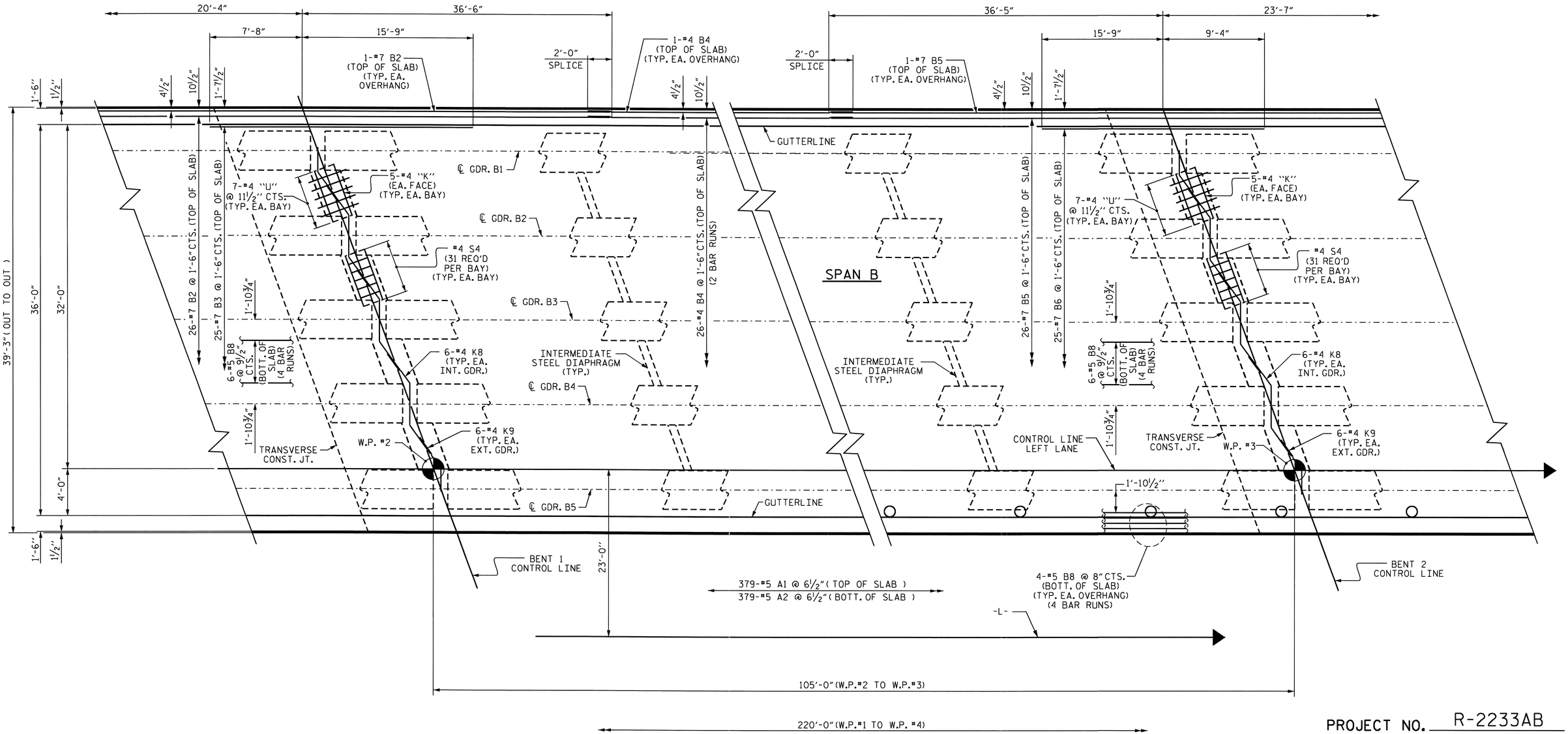

PLAN OF SPAN B

FOR INTERMEDIATE STEEL DIAPHRAGMS, SEE "INTERMEDIATE STEEL DIAPHRAGMS" SHEET.

PROJECT NO. R-2233AB
RUTHERFORD COUNTY
STATION: 280+13.00 -L-

SHEET 2 OF 3

STATE OF NORTH CAROLINA
DEPARTMENT OF TRANSPORTATION
RALEIGH

SUPERSTRUCTURE
PLAN OF SPAN B
LEFT LANE

NORTH CAROLINA PROFESSIONAL SEAL 20125 ENGINEER MARSHALL G. CHEEK, JR.
9-15-10

REVISIONS						SHEET NO.
NO.	BY:	DATE:	NO.	BY:	DATE:	S-7
1			3			TOTAL SHEETS
2			4			184

STR. #1

DRAWN BY : V.X. NGUYEN DATE : 10-14-09
CHECKED BY : M.G. CHEEK DATE : 5-10

13-SEP-2010 16:12
R:\Structures\FinalPlans\Str. #1\R-2233AB_SD_STR#1_05_S*.dgn
afigueroa

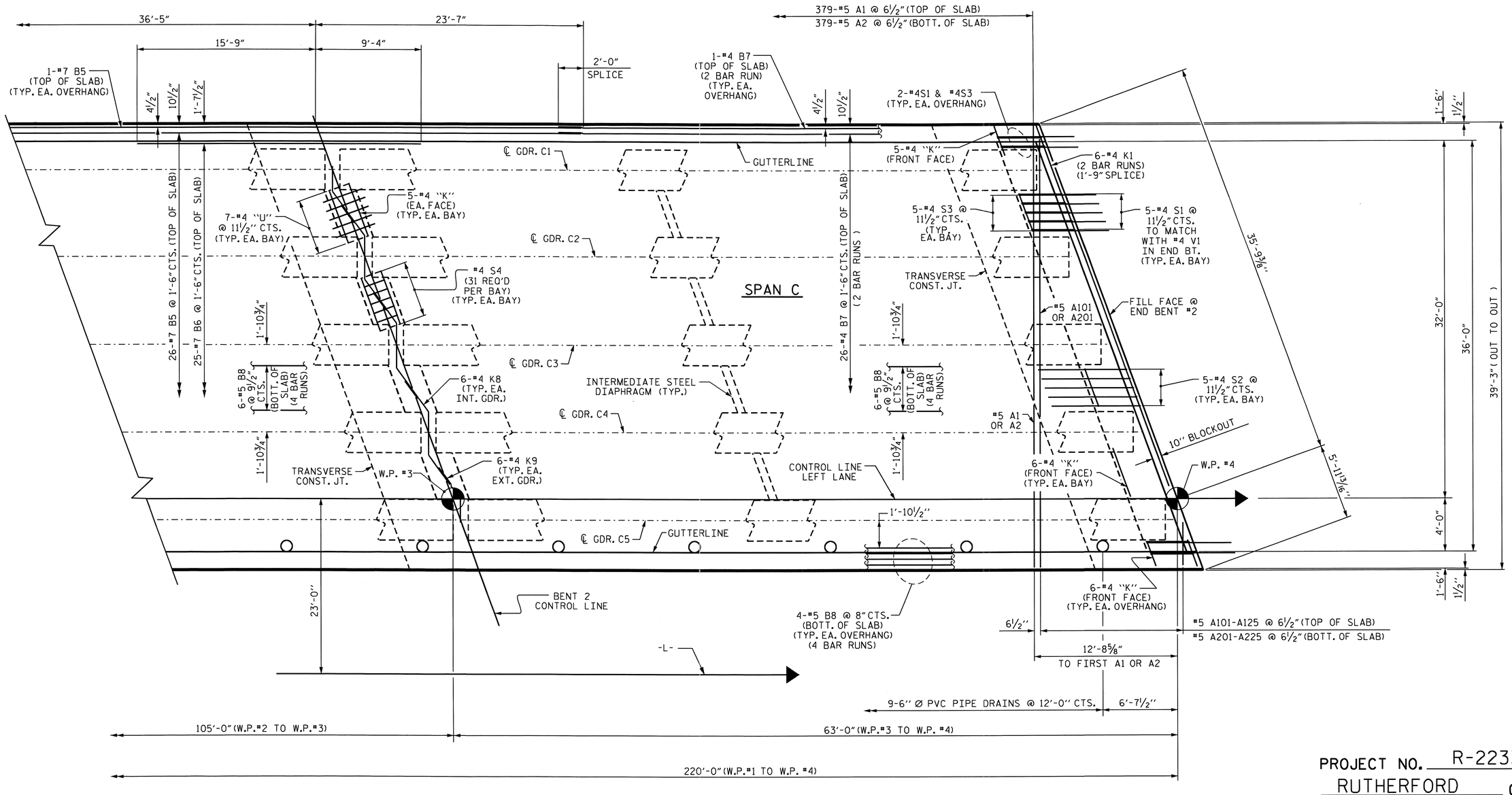

PROJECT NO. R-2233AB
RUTHERFORD COUNTY
STATION: 280+13.00 -L-

SHEET 3 OF 3

PLAN OF SPAN C

FOR INTERMEDIATE STEEL DIAPHRAGMS, SEE "INTERMEDIATE STEEL DIAPHRAGMS" SHEET.

STATE OF NORTH CAROLINA
DEPARTMENT OF TRANSPORTATION
RALEIGH

SUPERSTRUCTURE
PLAN OF SPAN C
LEFT LANE

NORTH CAROLINA PROFESSIONAL SEAL 20125 ENGINEER MARSHALL G. CHEEK, JR.
9-15-10

REVISIONS						SHEET NO.
NO.	BY:	DATE:	NO.	BY:	DATE:	S-8
1			3			TOTAL SHEETS
2			4			184

STR. #1

DRAWN BY : V.X. NGUYEN DATE : 10-14-09
CHECKED BY : M.G. CHEEK DATE : 5-10

13-SEP-2010 16:12
R:\Structures\FinalPlans\Str. #1\R-2233AB_SD_STR#1_05_S*.dgn
afigueroa

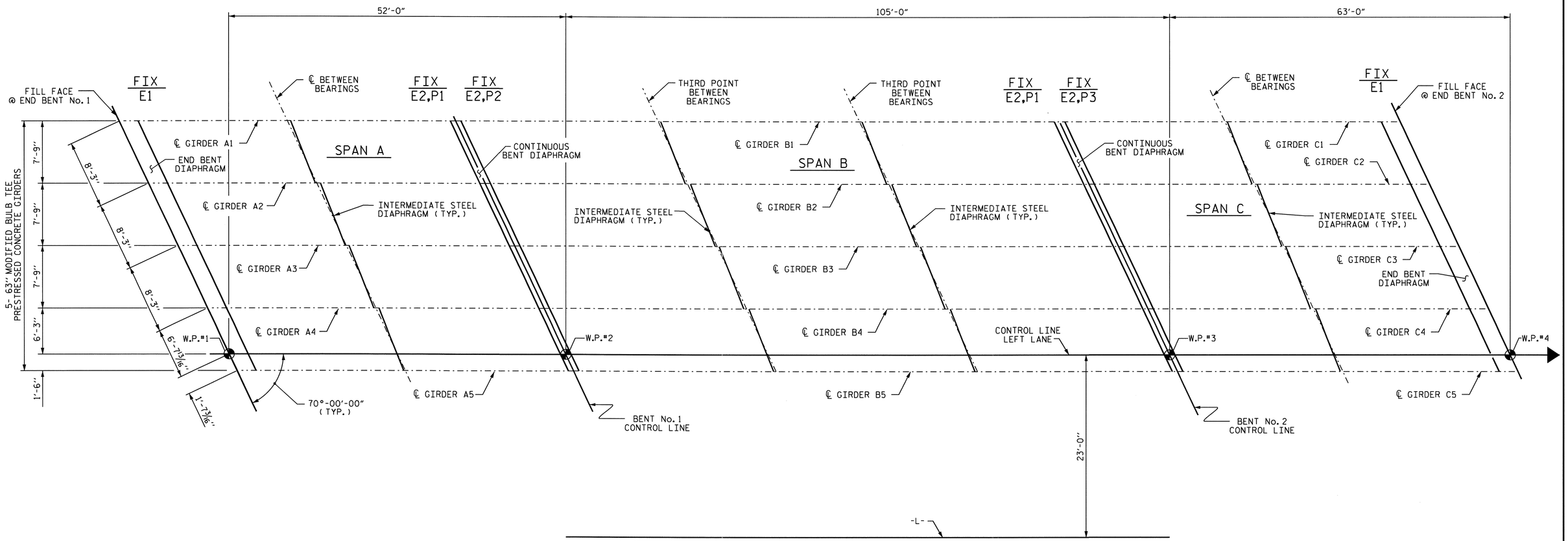

GIRDER LAYOUT

PROJECT NO. R-2233AB
RUTHERFORD COUNTY
STATION: 280+13.00 -L-

STATE OF NORTH CAROLINA
DEPARTMENT OF TRANSPORTATION
RALEIGH

SUPERSTRUCTURE

GIRDER LAYOUT
(SPANS A,B, & C)
LEFT LANE

NORTH CAROLINA PROFESSIONAL SEAL 20125 ENGINEER MARSHALL G. CHEEK, JR.
9-15-10

REVISIONS						SHEET NO.
NO.	BY:	DATE:	NO.	BY:	DATE:	S-9
1			3			TOTAL SHEETS
2			4			184

STR. #1

DRAWN BY : V.X. NGUYEN DATE : 11/18/09
CHECKED BY : M.G. CHEEK DATE : 5/10

14-SEP-2010 14:20
R:\Structures\Final Plans\Str. #1\R-2233AB_SD_STR#1_06_FP.dgn
afigueroa

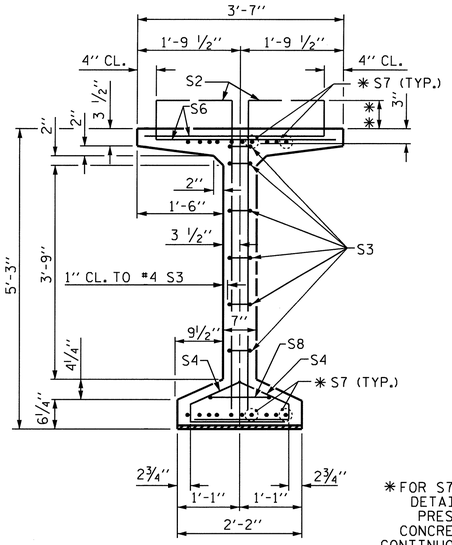

SECTION A-A

* FOR S7 BARS. SEE DETAIL "C" OF PRESTRESSED CONCRETE GIRDER CONTINUOUS FOR LIVE LOAD DETAILS SHEET

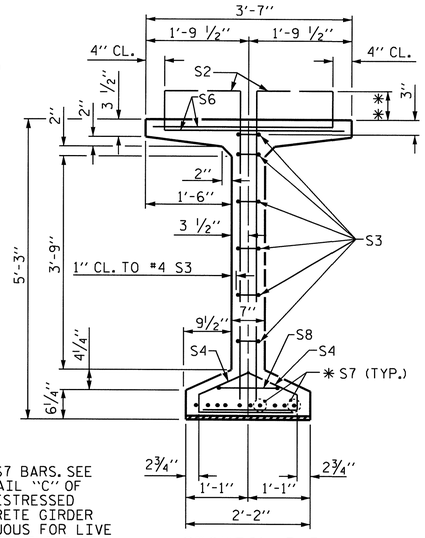

SECTION B-B

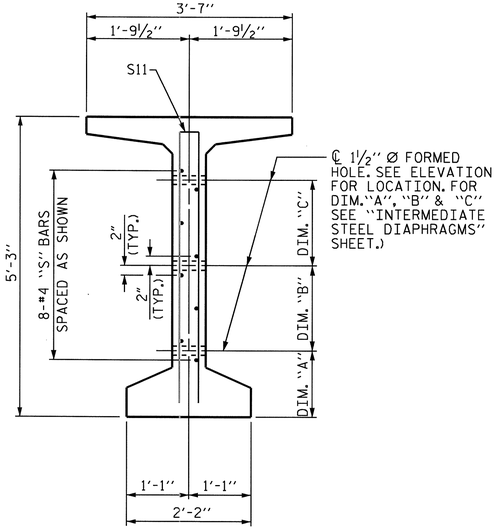

SECTION C-C

(S1, S6 AND S9 BARS NOT SHOWN)

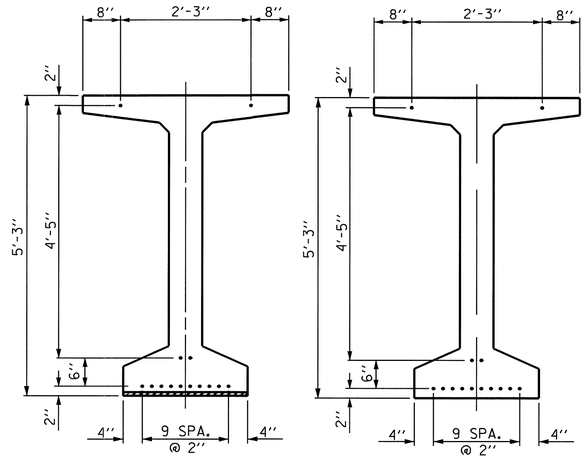

AT END OF GIRDER

AT ℄ OF GIRDER

0.6" Ø LOW RELAXATION STRAND LAYOUT

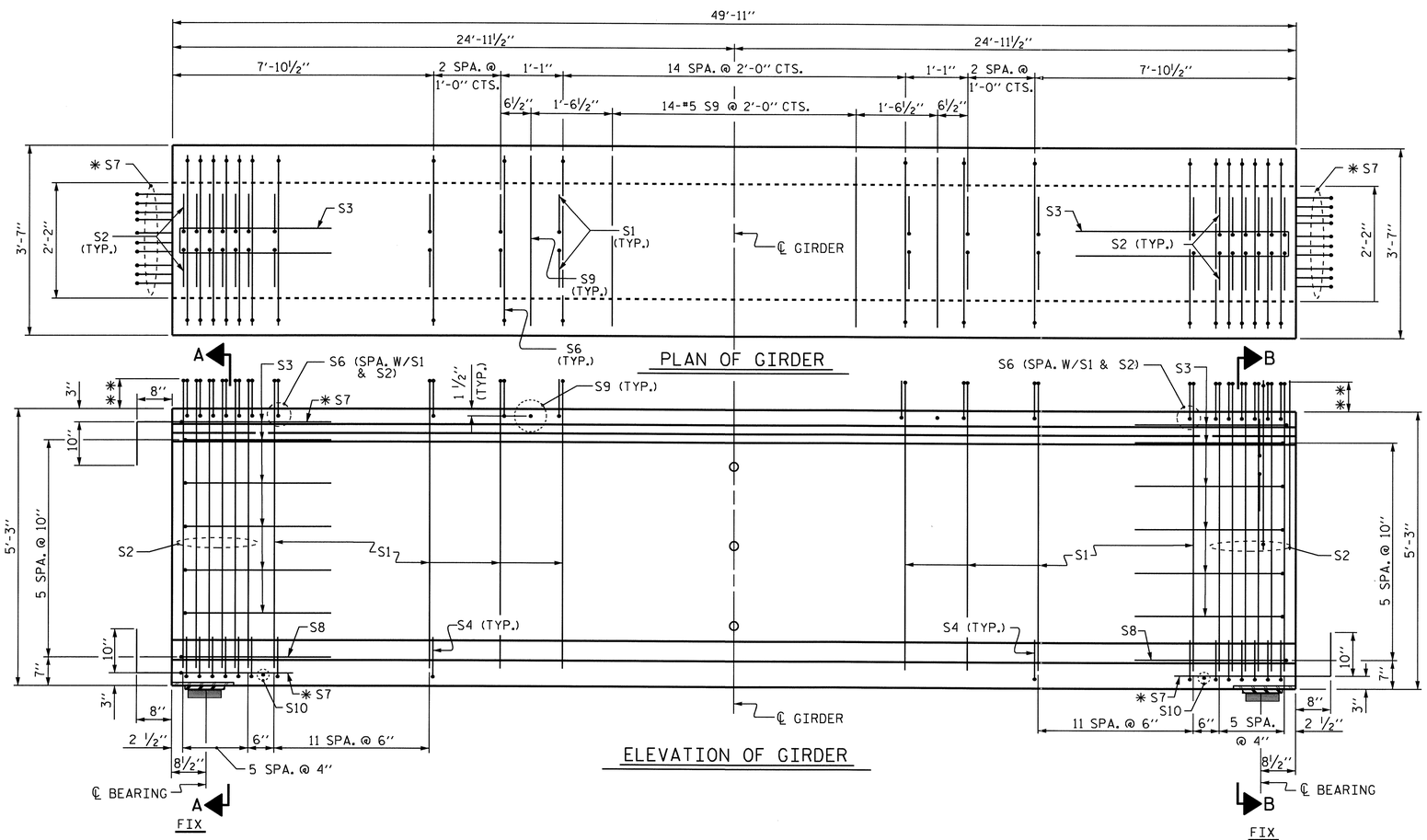

PLAN OF GIRDER

ELEVATION OF GIRDER

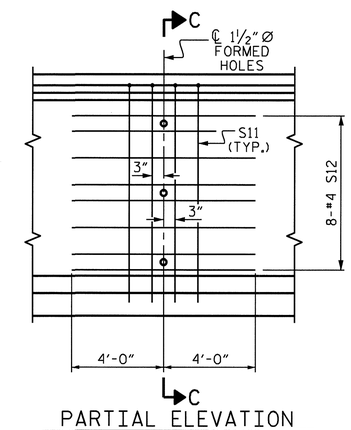

PARTIAL ELEVATION

SHOWING INTERMEDIATE STEEL DIAPHRAGM REINFORCING STEEL FOR GIRDER Nos. 1-5

** THE PROJECTION OF THE S1 & S2 BARS ABOVE THE TOP OF THE GIRDER VARIES FROM 9 3/4" AT THE ENDS OF THE GIRDER TO 9 1/4" AT THE CENTERLINE OF THE GIRDER.

0.6" Ø L. R. GRADE 270 STRANDS

AREA (SQUARE INCHES)	ULTIMATE STRENGTH (LBS. PER STRAND)	APPLIED PRESTRESS (LBS. PER STRAND)
0.217	58,600	43,950

REINFORCING STEEL FOR ONE GDR

BAR	NUMBER	SIZE	TYPE	LENGTH	WEIGHT
S1	86	#4	1	6'-5"	369
S2	24	#5	1	6'-5"	161
S3	12	#4	2	8'-5"	67
S4	72	#4	3	3'-0"	144
S6	110	#5	4	3'-8"	421
* S7	30	#5	STR	3'-8"	115
S8	2	#5	2	9'-0"	19
S9	16	#5	STR	3'-3"	54
S10	2	#3	STR	1'-10"	1
S11	4	#5	2	10'-2"	42
S12	8	#4	STR	8'-0"	43

* NOTE: S7 BARS SHALL BE BENT BEFORE SHIPMENT. HEAT BENDING SHALL NOT BE ALLOWED.

BAR TYPES

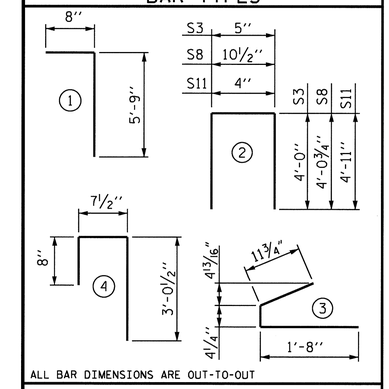

ALL BAR DIMENSIONS ARE OUT-TO-OUT

QUANTITIES FOR ONE GIRDER

	REINFORCING STEEL	5000 PSI CONCRETE	0.6" Ø L.R. STRANDS
	LB.	C.Y.	No.
	1436	9.9	14

GIRDERS REQUIRED

NUMBER	LENGTH	TOTAL LENGTH
5	49'-11"	249'-7"

PROJECT NO. R-2233AB

RUTHERFORD COUNTY

STATION: 280+13.00 -L-

SHEET 1 OF 5

STATE OF NORTH CAROLINA
DEPARTMENT OF TRANSPORTATION
RALEIGH

STANDARD
63" PRESTRESSED CONCRETE
MODIFIED BULB TEE
CONTINUOUS FOR LIVE LOAD
SPAN A
LEFT LANE

NORTH CAROLINA PROFESSIONAL SEAL 20125 ENGINEER MARSHALL G. CHEEK, JR.
9-15-10

REVISIONS						SHEET NO.
NO.	BY:	DATE:	NO.	BY:	DATE:	S-10
1			3			TOTAL SHEETS
2			4			184

STR. #1

STD. NO. PCG9

ASSEMBLED BY : V. X. NGUYEN	DATE : 4-29-10		
CHECKED BY : M.G. CHEEK	DATE : 5-10		
DRAWN BY : EEM 2/6/97	REV. 8/16/99	RWW/LES	
CHECKED BY : VAP 2/6/97	REV. 10/17/00	RWW/LES	
	REV. 5/1/06R	TLA/GM	

13-SEP-2010 16:12
R:\Structures\Final Plans\Str. #1\R-2233AB_SD_STR#1_07_G*.dgn
afigueroa

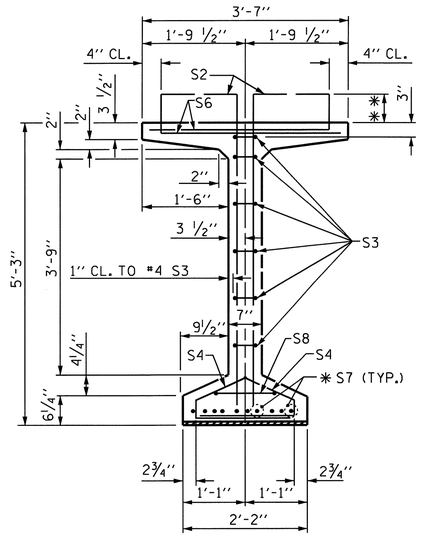

SECTION B-B

* FOR S7 BARS, SEE DETAIL "C" OF PRESTRESSED CONCRETE GIRDER CONTINUOUS FOR LIVE LOAD DETAILS SHEET

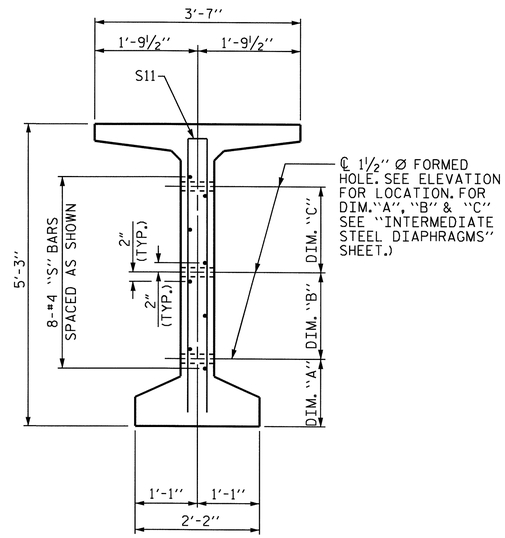

SECTION C-C

(S1, S6 AND S9 BARS NOT SHOWN)

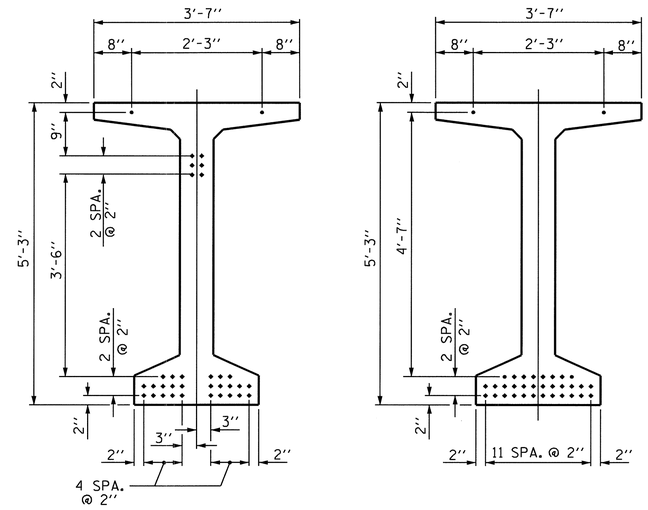

AT END OF GIRDER

AT ℄ OF GIRDER

0.6" Ø LOW RELAXATION STRAND LAYOUT

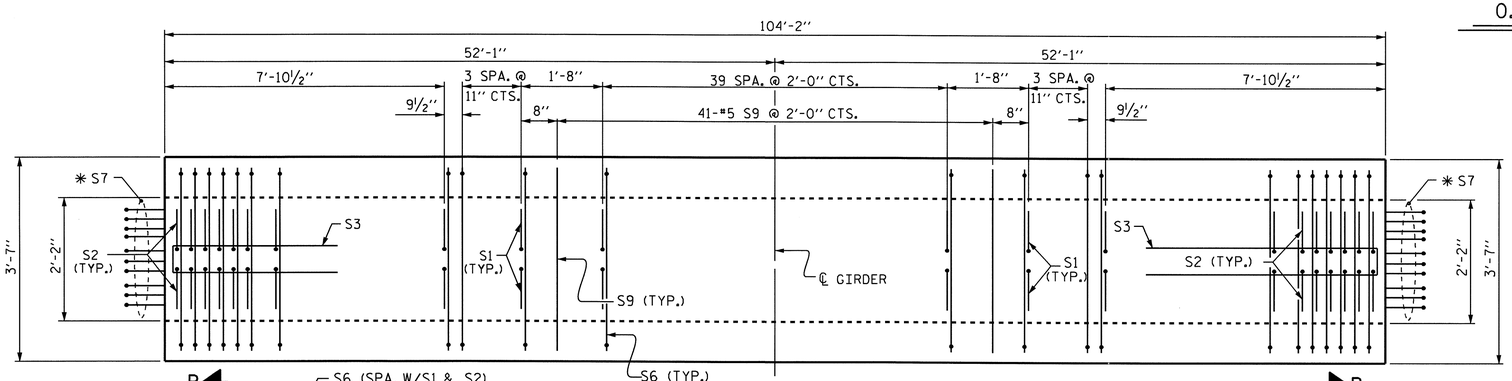

PLAN OF GIRDER

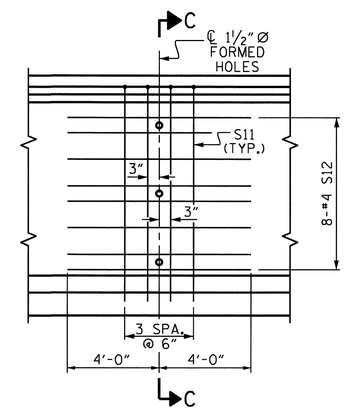

PARTIAL ELEVATION

SHOWING INTERMEDIATE STEEL DIAPHRAGM REINFORCING STEEL FOR GIRDER Nos. 1-5

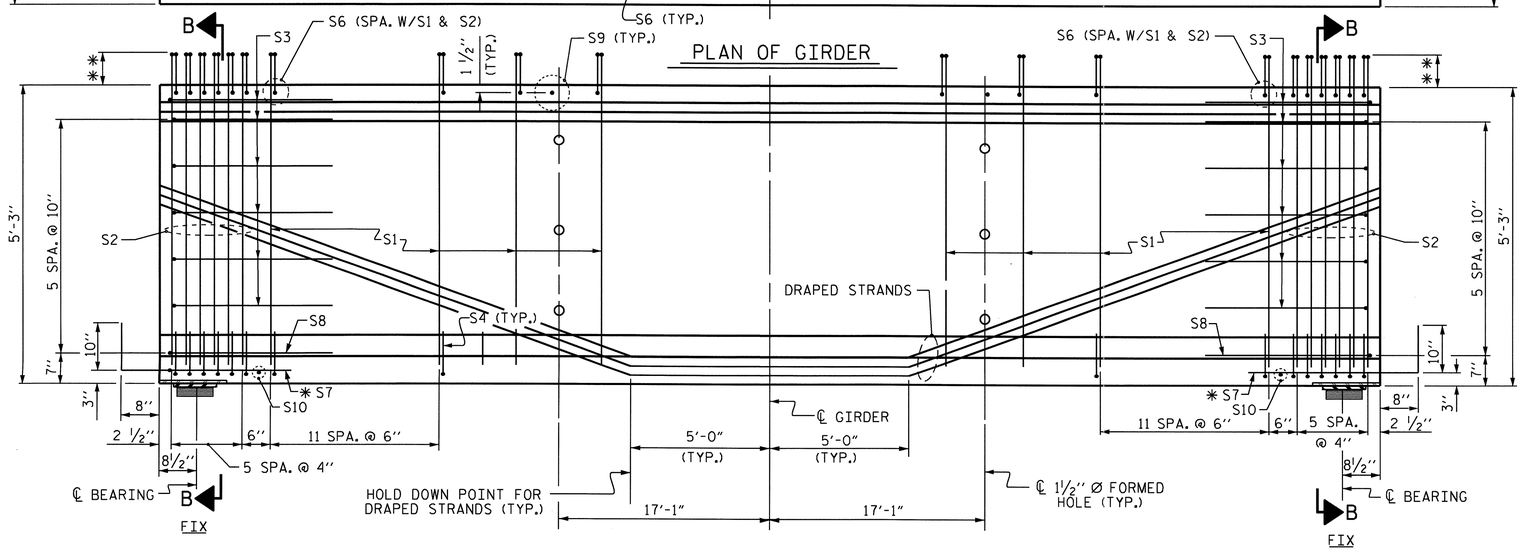

ELEVATION OF GIRDER

** THE PROJECTION OF THE S1 & S2 BARS ABOVE THE TOP OF THE GIRDER VARIES FROM 9 3/4" AT THE ENDS OF THE GIRDER TO 6 3/4" AT THE CENTERLINE OF THE GIRDER.

NOTE: THE UPLIFT FORCE DUE TO THE DRAPED STRANDS IS 21.4 KIPS.

0.6" Ø L. R. GRADE 270 STRANDS

AREA (SQUARE INCHES)	ULTIMATE STRENGTH (LBS. PER STRAND)	APPLIED PRESTRESS (LBS. PER STRAND)
0.217	58,600	43,950

REINFORCING STEEL FOR ONE GDR

BAR	NUMBER	SIZE	TYPE	LENGTH	WEIGHT
S1	144	#4	1	6'-5"	617
S2	24	#5	1	6'-5"	161
S3	12	#4	2	8'-5"	67
S4	72	#4	3	3'-0"	144
S6	168	#5	4	4'-4"	759
* S7	20	#5	STR	3'-8"	76
S8	2	#5	2	9'-0"	19
S9	41	#5	STR	3'-3"	139
S10	2	#3	STR	1'-10"	1
S11	8	#5	2	10'-2"	85
S12	16	#4	STR	8'-0"	86

* NOTE: S7 BARS SHALL BE BENT BEFORE SHIPMENT. HEAT BENDING SHALL NOT BE ALLOWED.

BAR TYPES

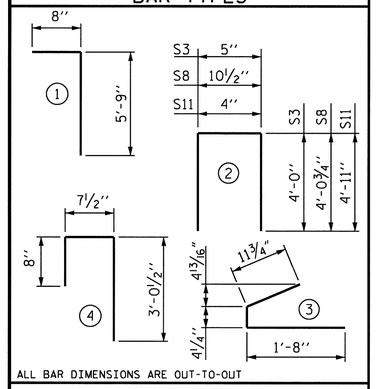

ALL BAR DIMENSIONS ARE OUT-TO-OUT

QUANTITIES FOR ONE GIRDER

	REINFORCING STEEL	8200 PSI CONCRETE	0.6" Ø L.R. STRANDS
	LB.	C.Y.	No.
	2154	20.6	34

GIRDERS REQUIRED

NUMBER	LENGTH	TOTAL LENGTH
5	104'-2"	520'-10"

PROJECT NO. R-2233AB

RUTHERFORD COUNTY

STATION: 280+13.00 -L-

SHEET 2 OF 5

STATE OF NORTH CAROLINA
DEPARTMENT OF TRANSPORTATION
RALEIGH

STANDARD

63" PRESTRESSED CONCRETE MODIFIED BULB TEE CONTINUOUS FOR LIVE LOAD SPAN B LEFT LANE

ASSEMBLED BY : V. X. NGUYEN	DATE : 4-29-10
CHECKED BY : M.G. CHEEK	DATE : 5-10

DRAWN BY : EEM 2/6/97	REV. 8/16/99	RWW/LES
CHECKED BY : VAP 2/6/97	REV. 10/17/00	RWW/LES
	REV. 5/1/06R	TLA/GM

REVISIONS

NO.	BY:	DATE:	NO.	BY:	DATE:
1			3		
2			4		

SHEET NO. S-11

TOTAL SHEETS 184

NORTH CAROLINA PROFESSIONAL SEAL 20125 ENGINEER MARSHALL G. CHEEK, JR.
9-15-10

STR. #1

STD. NO. PCG9

13-SEP-2010 16:12
R:\Structures\Final Plans\Str. #1\R-2233AB_SD_STR#1_07_G*.dgn
atfigueroa

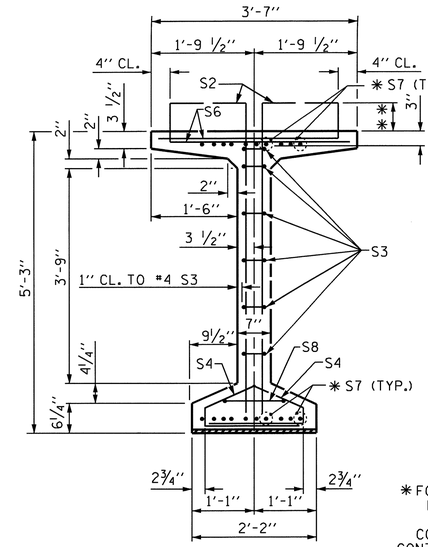

SECTION A-A

✱ FOR S7 BARS. SEE DETAIL "C" OF PRESTRESSED CONCRETE GIRDER CONTINUOUS FOR LIVE LOAD DETAILS SHEET

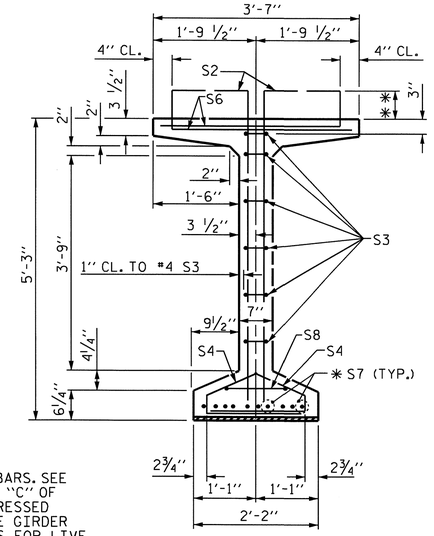

SECTION B-B

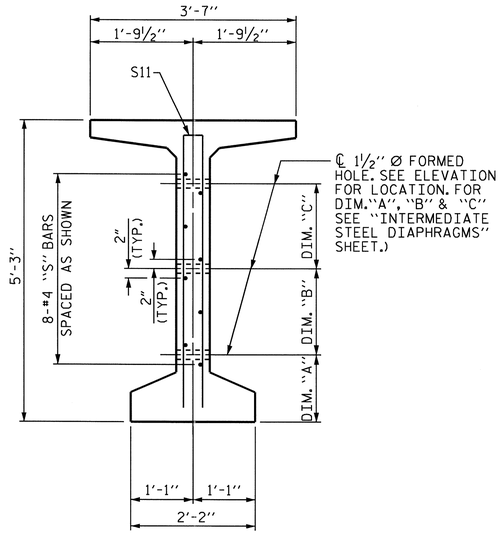

SECTION C-C

(S1, S6 AND S9 BARS NOT SHOWN)

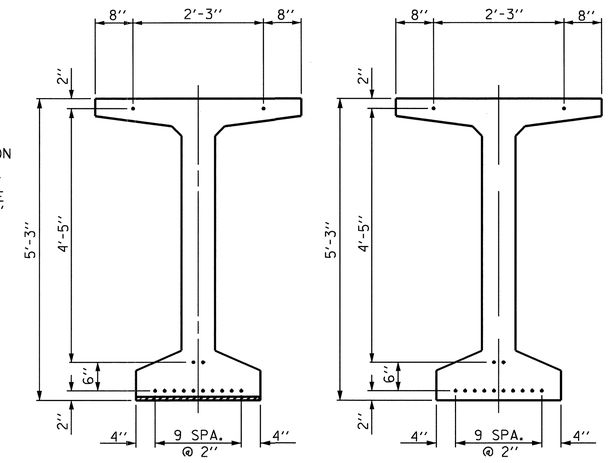

0.6" Ø LOW RELAXATION STRAND LAYOUT

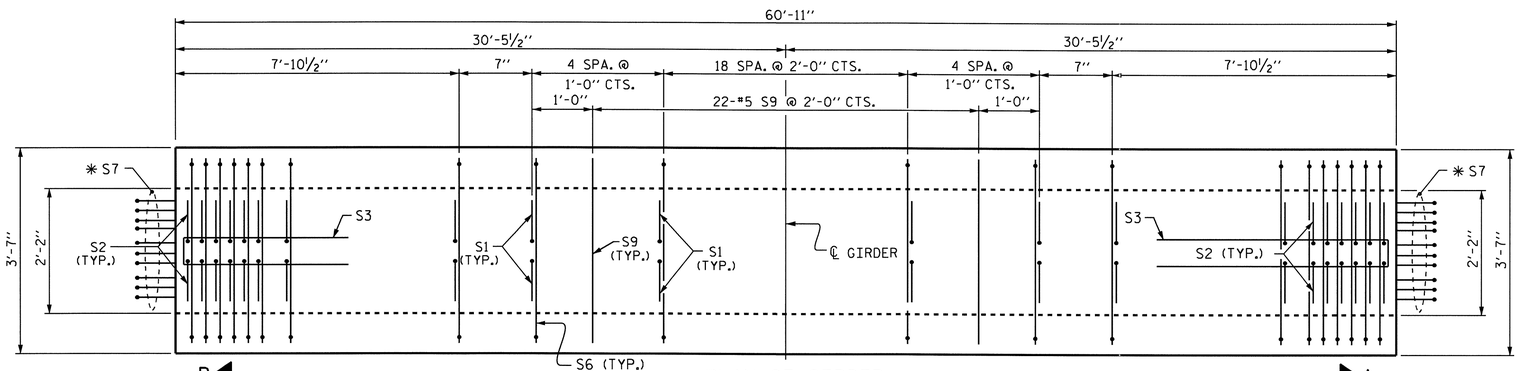

PLAN OF GIRDER

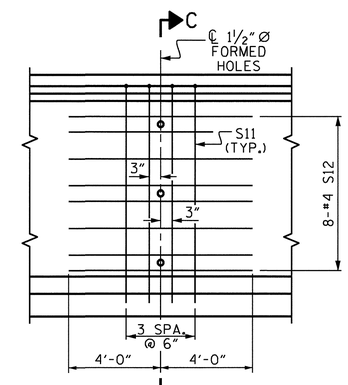

PARTIAL ELEVATION

SHOWING INTERMEDIATE STEEL DIAPHRAGM REINFORCING STEEL FOR GIRDER Nos. 1-5

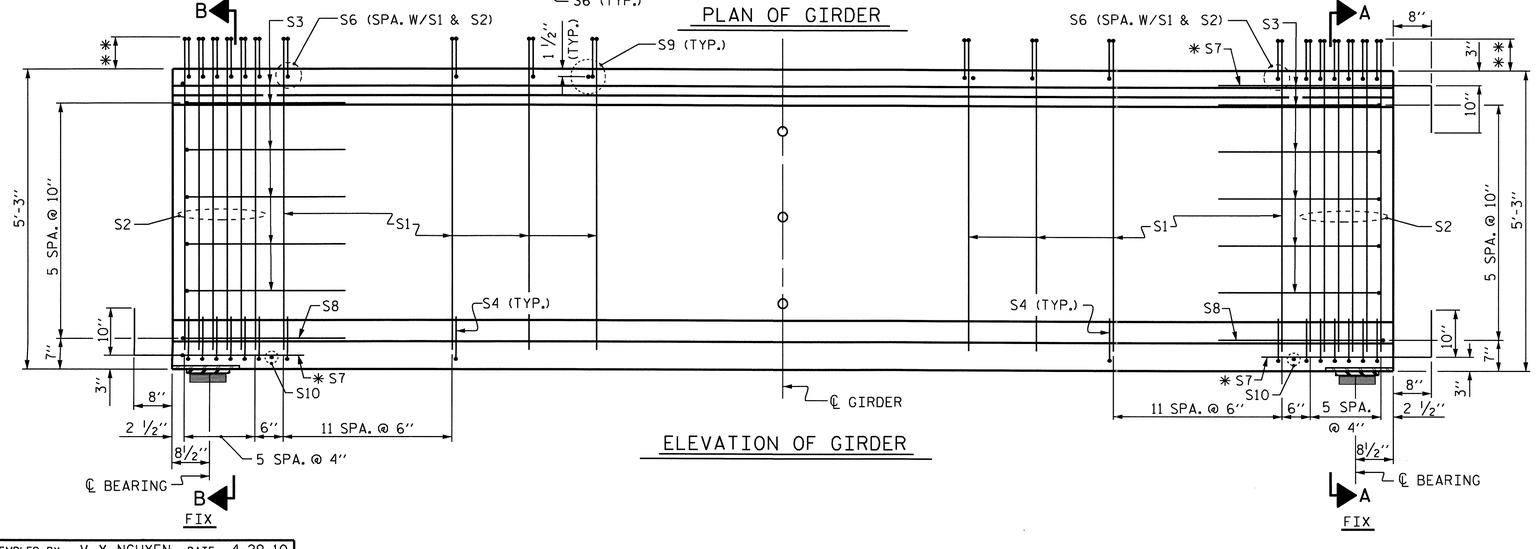

ELEVATION OF GIRDER

✱✱ THE PROJECTION OF THE S1 & S2 BARS ABOVE THE TOP OF THE GIRDER VARIES FROM 9 3/4" AT THE ENDS OF THE GIRDER TO 9 1/4" AT THE CENTERLINE OF THE GIRDER.

0.6" Ø L. R. GRADE 270 STRANDS

AREA (SQUARE INCHES)	ULTIMATE STRENGTH (LBS. PER STRAND)	APPLIED PRESTRESS (LBS. PER STRAND)
0.217	58,600	43,950

REINFORCING STEEL FOR ONE GDR

BAR	NUMBER	SIZE	TYPE	LENGTH	WEIGHT
S1	102	#4	1	6'-5"	437
S2	24	#5	1	6'-5"	161
S3	12	#4	2	8'-5"	67
S4	72	#4	3	3'-0"	144
S6	126	#5	4	4'-4"	569
✱ S7	30	#5	STR	3'-8"	115
S8	2	#5	2	9'-0"	19
S9	22	#5	STR	3'-3"	75
S10	2	#3	STR	1'-10"	1
S11	4	#5	2	10'-2"	42
S12	8	#4	STR	8'-0"	43

✱ NOTE: S7 BARS SHALL BE BENT BEFORE SHIPMENT. HEAT BENDING SHALL NOT BE ALLOWED.

BAR TYPES

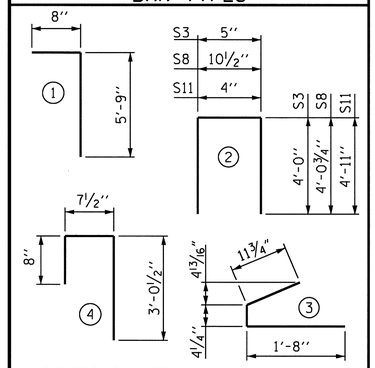

ALL BAR DIMENSIONS ARE OUT-TO-OUT

QUANTITIES FOR ONE GIRDER

	REINFORCING STEEL	5000 PSI CONCRETE	0.6" Ø L.R. STRANDS
	LB.	C.Y.	No.
	1673	12.1	14

GIRDERS REQUIRED

NUMBER	LENGTH	TOTAL LENGTH
5	60'-11"	304'-7"

PROJECT NO. R-2233AB

RUTHERFORD COUNTY

STATION: 280+13.00 -L-

SHEET 3 OF 5

STATE OF NORTH CAROLINA
DEPARTMENT OF TRANSPORTATION
RALEIGH

STANDARD
63" PRESTRESSED CONCRETE
MODIFIED BULB TEE
CONTINUOUS FOR LIVE LOAD
SPAN C
LEFT LANE

NORTH CAROLINA PROFESSIONAL SEAL 20125 ENGINEER MARSHALL G. CHEEK, JR.
9-15-10

REVISIONS						SHEET NO.
NO.	BY:	DATE:	NO.	BY:	DATE:	S-12
1			3			TOTAL SHEETS
2			4			184

STR. #1

STD. NO. PCG9

ASSEMBLED BY : V. X. NGUYEN	DATE : 4-29-10		
CHECKED BY : M.G. CHEEK	DATE : 5-10		
DRAWN BY : EEM 2/6/97	REV. 8/16/99	RWW/LES	
CHECKED BY : VAP 2/6/97	REV. 10/17/00	RWW/LES	
	REV. 5/1/06R	TLA/GM	

13-SEP-2010 16:12
R:\Structures\Final Plans\Str. #1\R-2233AB_SD_STR#1_07_G*.dgn
atfigueroa

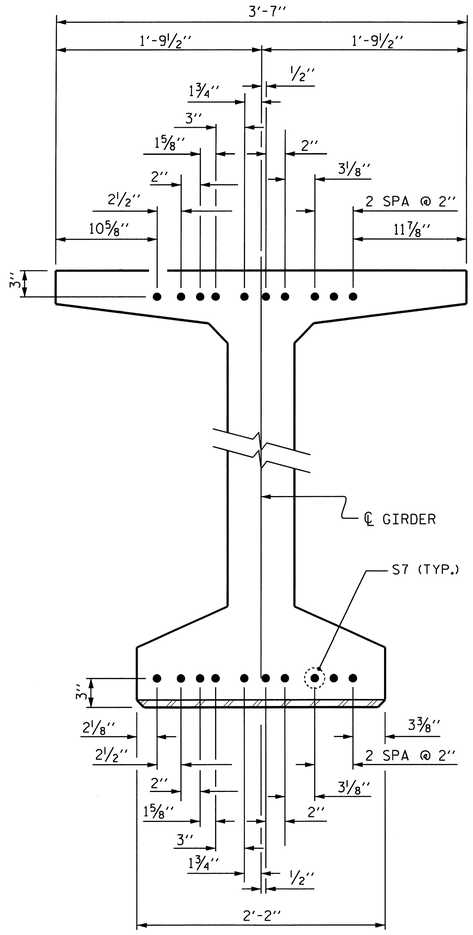

DETAIL "C"

(FOR 63" MODIFIED BULB TEES)

DEAD LOAD DEFLECTION TABLE FOR GIRDERS

0.6" Ø LOW RELAXATION		SPAN A GIRDERS #1 THRU #5										
TENTH POINTS		℄ BRG.	.1	.2	.3	.4	.5	.6	.7	.8	.9	℄ BRG.
CAMBER (GIRDER ALONE IN PLACE)	↑	0	0.017	0.032	0.043	0.051	0.053	0.051	0.043	0.032	0.017	0
* DEFLECTION DUE TO SUPERIMPOSED D.L.	↓	0	0.003	0.006	0.008	0.009	0.009	0.009	0.008	0.006	0.003	0
FINAL CAMBER	↑	0	3/16"	5/16"	7/16"	1/2"	1/2"	1/2"	7/16"	5/16"	3/16"	0

* INCLUDES FUTURE WEARING SURFACE
ALL VALUES ARE SHOWN IN FEET (DECIMAL FORM), EXCEPT "FINAL CAMBER", WHICH IS GIVEN IN INCHES (FRACTION FORM).

DEAD LOAD DEFLECTION TABLE FOR GIRDERS

0.6" Ø LOW RELAXATION		SPAN B GIRDERS #1 & #5										
TENTH POINTS		℄ BRG.	.1	.2	.3	.4	.5	.6	.7	.8	.9	℄ BRG.
CAMBER (GIRDER ALONE IN PLACE)	↑	0	0.125	0.237	0.324	0.380	0.399	0.380	0.324	0.237	0.125	0
* DEFLECTION DUE TO SUPERIMPOSED D.L.	↓	0	0.049	0.093	0.127	0.149	0.156	0.149	0.127	0.093	0.049	0
FINAL CAMBER	↑	0	15/16"	1¾"	2⅜"	2¾"	2 15/16"	2¾"	2⅜"	1¾"	15/16"	0

* INCLUDES FUTURE WEARING SURFACE
ALL VALUES ARE SHOWN IN FEET (DECIMAL FORM), EXCEPT "FINAL CAMBER", WHICH IS GIVEN IN INCHES (FRACTION FORM).

DEAD LOAD DEFLECTION TABLE FOR GIRDERS

0.6" Ø LOW RELAXATION		SPAN B GIRDERS #2, #3, & #4										
TENTH POINTS		℄ BRG.	.1	.2	.3	.4	.5	.6	.7	.8	.9	℄ BRG.
CAMBER (GIRDER ALONE IN PLACE)	↑	0	0.125	0.237	0.324	0.380	0.399	0.380	0.324	0.237	0.125	0
* DEFLECTION DUE TO SUPERIMPOSED D.L.	↓	0	0.045	0.085	0.116	0.136	0.143	0.136	0.116	0.085	0.045	0
FINAL CAMBER	↑	0	1"	1 13/16"	2½"	2 15/16"	3/16"	2 15/16"	2½"	1 13/16"	1"	0

* INCLUDES FUTURE WEARING SURFACE
ALL VALUES ARE SHOWN IN FEET (DECIMAL FORM), EXCEPT "FINAL CAMBER", WHICH IS GIVEN IN INCHES (FRACTION FORM).

DEAD LOAD DEFLECTION TABLE FOR GIRDERS

0.6" Ø LOW RELAXATION		SPAN C GIRDERS #1 THRU #5										
TENTH POINTS		℄ BRG.	.1	.2	.3	.4	.5	.6	.7	.8	.9	℄ BRG.
CAMBER (GIRDER ALONE IN PLACE)	↑	0	0.022	0.042	0.057	0.067	0.071	0.067	0.057	0.042	0.022	0
* DEFLECTION DUE TO SUPERIMPOSED D.L.	↓	0	0.007	0.012	0.017	0.020	0.021	0.020	0.017	0.012	0.007	0
FINAL CAMBER	↑	0	3/16"	3/8"	1/2"	9/16"	5/8"	9/16"	1/2"	3/8"	3/16"	0

* INCLUDES FUTURE WEARING SURFACE
ALL VALUES ARE SHOWN IN FEET (DECIMAL FORM), EXCEPT "FINAL CAMBER", WHICH IS GIVEN IN INCHES (FRACTION FORM).

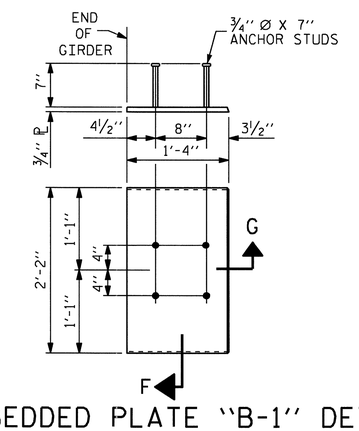

EMBEDDED PLATE "B-1" DETAILS FOR AASHTO 63" MODIFIED BULB TEES

(2 REQ'D PER GIRDER)

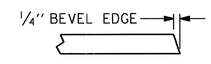

SECTION "G"

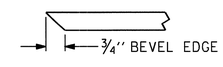

SECTION "F"

(SEE NOTES)

NOTES

ALL PRESTRESSING STRANDS SHALL BE 7-WIRE LOW-RELAXATION GRADE 270 STRANDS AND SHALL CONFORM TO AASHTO M203 EXCEPT FOR SAMPLING REQUIREMENTS WHICH SHALL BE IN ACCORDANCE WITH THE STANDARD SPECIFICATIONS.

ALL REINFORCING STEEL SHALL BE GRADE 60.

EMBEDDED PLATE "B-1" SHALL BE GALVANIZED IN ACCORDANCE WITH THE STANDARD SPECIFICATIONS. BEVEL EDGES OF PLATE "B-1" TO GIVE CLOSE FIT BUT NOT TIGHT FIT TO STEEL CASTING FORM.

ANCHOR STUDS SHALL CONFORM TO AASHTO M169 GRADES 1010 THROUGH 1020 OR APPROVED EQUAL, AND SHALL MEET THE TYPE "B" REQUIREMENTS OF SUBSECTION 7.3 OF THE ANSI/AASHTO/AWS D1.5 BRIDGE WELDING CODE.

AT ENDS OF GIRDERS TO BE EMBEDDED IN CONCRETE DIAPHRAGMS OR END WALLS, PRESTRESSING STRANDS MAY EXTEND A MAXIMUM OF 2" BEYOND THE GIRDER ENDS. OTHERWISE, PRESTRESSING STRANDS SHALL BE CUT FLUSH WITH THE GIRDER ENDS.

THE TRANSFER OF LOAD FROM THE ANCHORAGES TO THE GIRDER IN SPAN A OR C SHALL BE DONE WHEN CONCRETE HAS REACHED A COMPRESSIVE STRENGTH OF NOT LESS THAN 4000 PSI.

THE TRANSFER OF LOAD FROM THE ANCHORAGES TO THE GIRDER IN SPAN B SHALL BE DONE WHEN CONCRETE HAS REACHED A COMPRESSIVE STRENGTH OF NOT LESS THAN 6300 PSI.

DEPENDING ON THE TYPE OF SYSTEM USED TO SUPPORT THE DECK SLAB FORMS, PRESET ANCHORS MAY BE NECESSARY IN THE PRESTRESSED CONCRETE GIRDER.

THE TOP SURFACE OF THE GIRDER, EXCLUDING THE OUTSIDE 4", SHALL BE RAKED TO A DEPTH OF ¼".

WHEN DRAPED STRANDS ARE DETAILED, THE LONGITUDINAL LOCATION OF THE HOLD DOWN DEVICES SHALL BE WITHIN 6" OF THE LOCATION SHOWN AND THE CENTER OF GRAVITY OF THE GROUP OF DRAPED STRANDS SHALL BE LOCATED WITHIN ½" OF THE THEORETICAL LOCATION SHOWN.

A 2" x 2" CHAMFER IS ALLOWED AT THE INTERSECTION OF THE WEB AND THE BOTTOM FLANGE OF THE 63" AND 72" MODIFIED BULB TEES ONLY.

THE CONTRACTOR HAS THE OPTION TO PROVIDE, AT NO ADDITIONAL COST TO THE DEPARTMENT, 2 ADDITIONAL STRANDS AT THE TOP OF THE GIRDER TO FACILITATE TYING OF THE REINFORCING STEEL. THESE STRANDS SHALL BE PULLED TO A LOAD OF 4500 lbs.

FOR PRESTRESSED CONCRETE MEMBERS, SEE SPECIAL PROVISIONS.

PROJECT NO. R-2233AB
RUTHERFORD COUNTY
STATION: 280+13.00 -L-

SHEET 4 OF 5

STATE OF NORTH CAROLINA
DEPARTMENT OF TRANSPORTATION
RALEIGH

STANDARD
PRESTRESSED CONCRETE GIRDER CONTINUOUS FOR LIVE LOAD DETAILS
LEFT LANE

NORTH CAROLINA PROFESSIONAL SEAL 20125 ENGINEER MARSHALL G. CHEEK, JR.
9-15-10

REVISIONS						SHEET NO.
NO.	BY:	DATE:	NO.	BY:	DATE:	S-13
1			3			TOTAL SHEETS
2			4			184

ASSEMBLED BY : V.X. NGUYEN	DATE : 4-29-10		
CHECKED BY : M.G. CHEEK	DATE : 5-10		
DRAWN BY : ELR 11/91	REV. 10/17/00 RWW/LES		
CHECKED BY : GRP 11/91	REV. 7/10/01RR LES/RDR	REV. 5/1/06 TLA/GM	

13-SEP-2010 16:12
R:\Structures\Final Plans\Str. #1\R-2233AB_SD_STR#1_07_G*.dgn
afigueroa

STR #1

STD. NO. PCG11

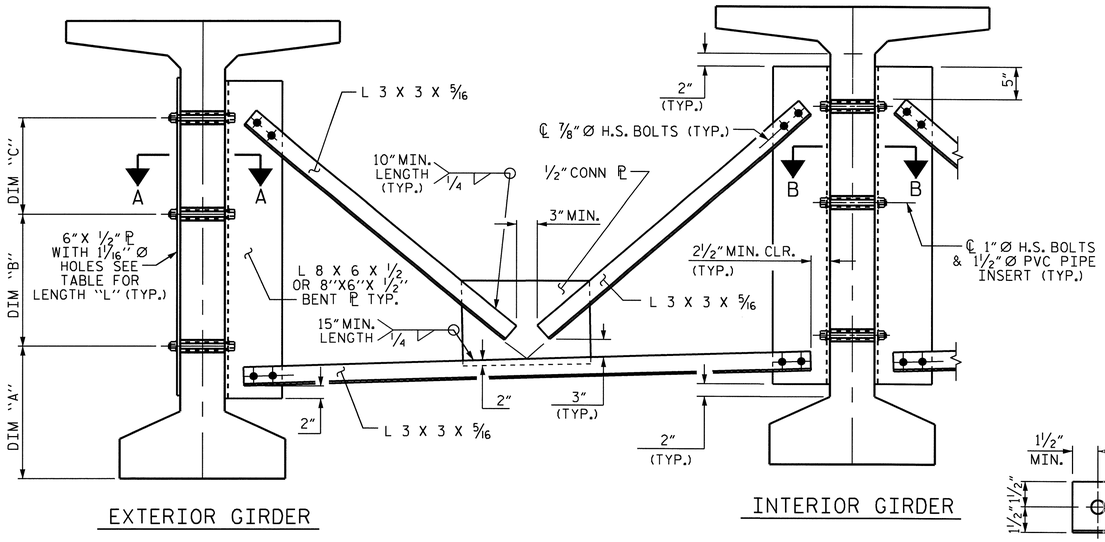

PART SECTION AT INTERMEDIATE DIAPHRAGM

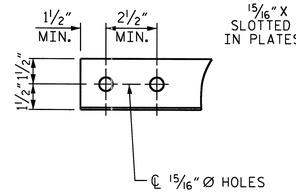

ANGLE END
(L 3 X 3 X 5/16)

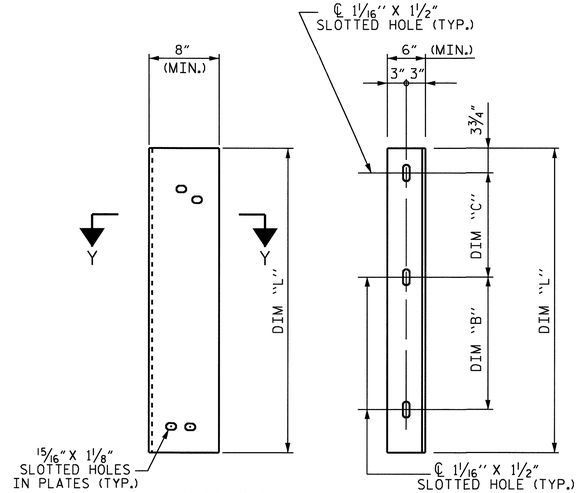

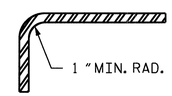

SECTION Y-Y

CONNECTOR PLATE DETAILS

STRUCTURAL STEEL NOTES

ALL INTERMEDIATE DIAPHRAGM STEEL, CONNECTOR PLATES AND PLATE WASHERS SHALL BE AASHTO M270 GRADE 50 OR APPROVED EQUAL.

TENSION ON THE AASHTO M164 BOLTS THROUGH THE ANGLE MEMBER SHALL BE CALIBRATED USING DIRECT TENSION INDICATOR WASHERS IN ACCORDANCE WITH THE STANDARD SPECIFICATIONS. FOR DIRECT TENSION INDICATORS, SEE SPECIAL PROVISION.

TENSION ON THE AASHTO M164 BOLTS THROUGH THE GIRDER WEB SHALL BE SNUG TIGHTENED FOLLOWED BY AN ADDITIONAL 1/4 TURN.

THE PLATES, BENT PLATES, ANGLES, AND PLATE WASHERS SHALL BE GALVANIZED OR METALLIZED IN ACCORDANCE WITH THE STANDARD SPECIFICATIONS. FOR THERMAL SPRAYED COATINGS (METALLIZATION), SEE SPECIAL PROVISIONS.

FOR METALLIZATION, APPLY AN 8 MIL THICK 99.99 PERCENT ZINC (W-Zn-1) THERMAL SPRAYED COATING WITH A 0.5 MIL THICK SEAL COAT TO ALL STEEL DIAPHRAGM SURFACES IN ACCORDANCE WITH THE THERMAL SPRAYED COATINGS SPECIAL PROVISIONS AND SECTION 442 OF THE STANDARD SPECIFICATIONS.

GALVANIZE THE HIGH STRENGTH BOLTS, NUTS, WASHERS AND DIRECT TENSION INDICATORS IN ACCORDANCE WITH THE STANDARD SPECIFICATIONS. FOR HIGH STRENGTH BOLTS, SEE SPECIAL PROVISIONS.

USE A MINIMUM 7/16" THICK PLATE WASHER WITH STANDARD HOLES UNDER EACH BOLT HEAD AND NUT. THE PLATE WASHERS SHALL HAVE SUFFICIENT SIZE TO COVER THE HOLES AFTER INSTALLATION. HARDENED WASHERS AND DIRECT TENSION INDICATORS ARE TO BE USED IN CONJUNCTION WITH THE PLATE WASHERS IN THE L 3 X 3 X 5/16 ANGLE MEMBER CONNECTION.

FOR BOLTS THROUGH THE GIRDER WEB, PROVIDE SUFFICIENT LENGTH OF ALL BOLTS TO ACCOMMODATE WASHERS AND THE THICKNESS OF CONNECTING MEMBER PLUS AT LEAST 1/4" PROJECTION BEYOND THE NUT.

INTERMEDIATE DIAPHRAGM ASSEMBLY SHALL COMPLY WITH SECTION 1072 OF THE STANDARD SPECIFICATIONS.

THE CONTRACTOR SHALL SUBMIT TWO SETS OF WORKING DRAWINGS FOR THE INTERMEDIATE DIAPHRAGM ASSEMBLY FOR REVIEW, COMMENTS AND ACCEPTANCE. AFTER REVIEW, COMMENTS, AND ACCEPTANCE, THE CONTRACTOR SHALL SUBMIT SEVEN SETS FOR DISTRIBUTION.

IN THE EXTERIOR BAYS, TEMPORARY STRUTS SHALL BE PLACED BETWEEN PRESTRESSED GIRDERS ADJACENT TO THE STEEL DIAPHRAGMS. STRUTS SHALL REMAIN IN PLACE 3 DAYS AFTER CONCRETE IS PLACED. ALL AASHTO M164 H.S. BOLTS SHALL BE FULLY TIGHTENED AFTER THE STRUTS HAVE BEEN REMOVED.

THE COST OF THE STEEL DIAPHRAGMS AND ASSEMBLIES SHALL BE INCLUDED IN THE UNIT PRICE BID FOR PRESTRESSED CONCRETE GIRDERS.

TABLE

GIRDER TYPE	DIM "A"	DIM "B"	DIM "C"	DIM "L"
63" BULB TEE	1'-8"	1'-2"	1'-3 3/4"	3'-5"

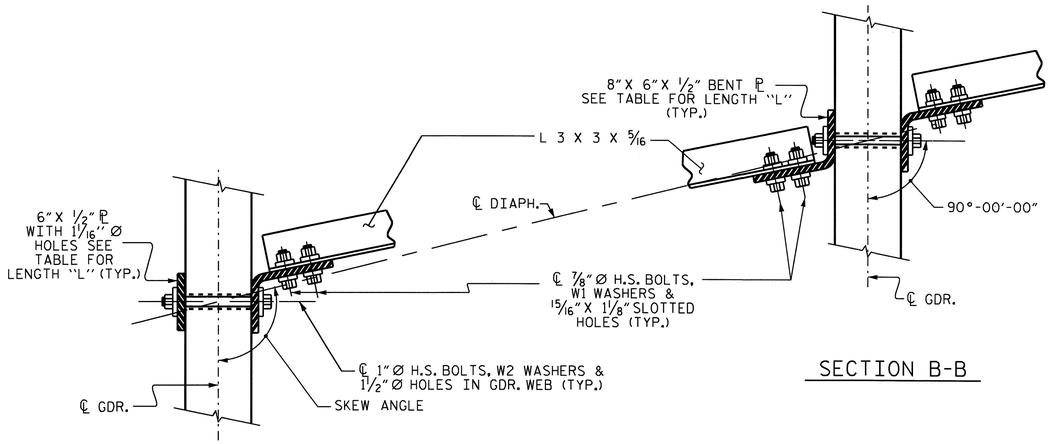

SECTION A-A

SECTION B-B

CONNECTION DETAILS

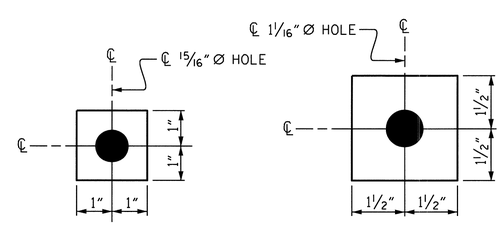

W1

ℙ 7/16" X 2" X 2"

USE WITH 7/8" Ø HVY. HEX NUTS & DIRECT TENSION INDICATOR WASHERS AT DIAPHRAGM ANGLE TO CONNECTOR PLATE CONNECTIONS

W2

ℙ 7/16" X 3" X 3"

USE WITH 1" Ø HVY. HEX NUTS AT CONNECTOR PLATE TO GIRDER CONNECTIONS

WASHER DETAILS

PROJECT NO. R-2233AB
RUTHERFORD COUNTY
STATION: 280+13.00 -L-

SHEET 5 OF 5

STATE OF NORTH CAROLINA
DEPARTMENT OF TRANSPORTATION
RALEIGH

STANDARD
INTERMEDIATE
STEEL DIAPHRAGMS
FOR 63" BULB TEE
PRESTRESSED CONCRETE
GIRDERS
LEFT LANE

NORTH CAROLINA PROFESSIONAL SEAL 20125 ENGINEER MARSHALL G. CHEEK, JR.
9-15-10

REVISIONS						SHEET NO.
NO.	BY:	DATE:	NO.	BY:	DATE:	S-14
1			3			TOTAL SHEETS
2			4			184

STR #1 STD. NO. PCG13

ASSEMBLED BY : V.X. NGUYEN	DATE : 4-22-10
CHECKED BY : M.G. CHEEK	DATE : 5-10
DRAWN BY : RWW 11/09	ADDED 11/23/09
CHECKED BY : GM 11/09	

13-SEP-2010 16:12
R:\Structures\FinalPlans\Str. #1\R-2233AB_SD_STR#1_07_G*.dgn
afigueroa

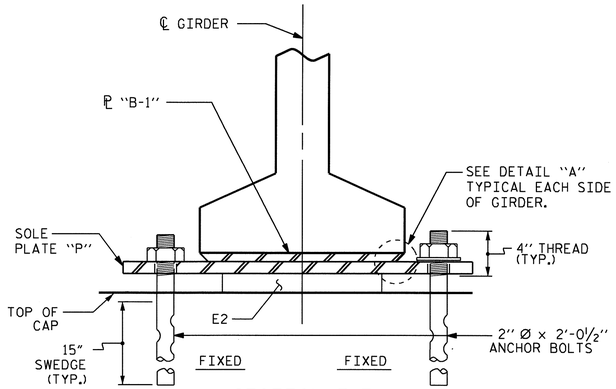

SECTION E-E

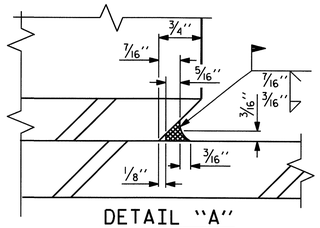

DETAIL "A"

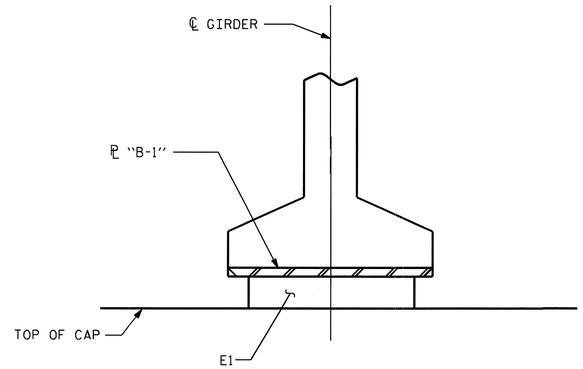

SECTION D-D

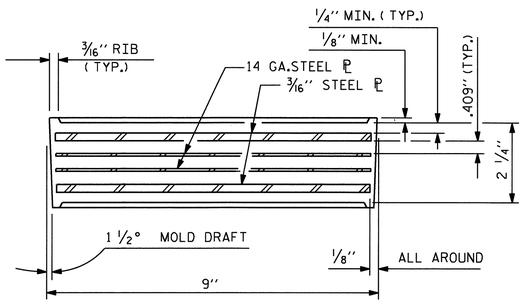

TYPICAL SECTION OF ELASTOMERIC BEARINGS

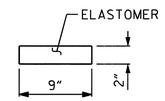

TYPICAL SECTION OF ELASTOMERIC BEARINGS

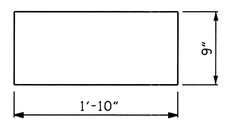

E1
(FIXED)
E1 (10 REQ'D)

PLAN VIEW OF ELASTOMERIC BEARING
(@ END BENTS)

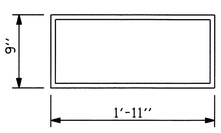

E2 (20 REQ'D)

PLAN VIEW OF ELASTOMERIC BEARING
(@ BENTS)

TYPE V

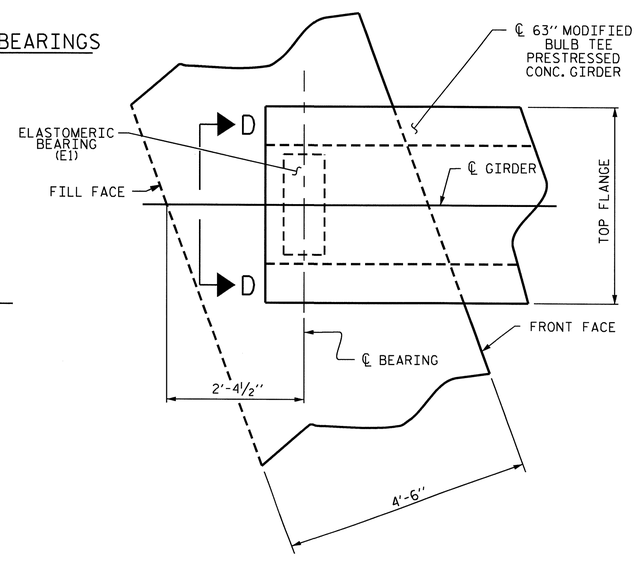

PLAN OF GIRDER @ INTEGRAL END BENT

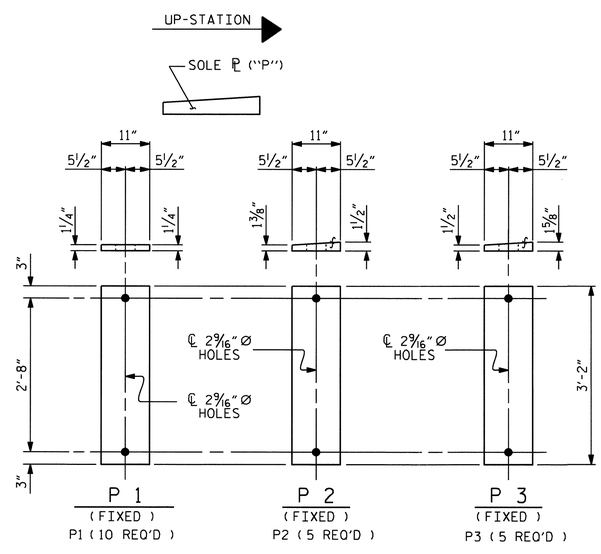

SOLE PLATE DETAILS ("P")

NOTES

AT ALL FIXED POINTS OF SUPPORT, NUTS FOR ANCHOR BOLTS ARE TO BE TIGHTENED FINGER TIGHT AND THEN BACKED OFF ½ TURN. THE THREAD OF THE NUT AND BOLT SHALL THEN BE BURRED WITH A SHARP POINTED TOOL.

STEEL SOLE PLATES, ANCHOR BOLTS, NUTS, AND WASHERS SHALL BE GALVANIZED IN ACCORDANCE WITH THE STANDARD SPECIFICATIONS.

PRIOR TO WELDING, GRIND THE GALVANIZED SURFACE OF THE PORTION OF THE EMBEDDED PLATE AND SOLE PLATE THAT ARE TO BE WELDED. AFTER WELDING, DAMAGED GALVANIZED SURFACES SHALL BE REPAIRED IN ACCORDANCE WITH THE STANDARD SPECIFICATIONS.

WHEN WELDING THE SOLE PLATE TO THE EMBEDDED PLATE IN THE GIRDER, USE TEMPERATURE INDICATING WAX PENS, OR OTHER SUITABLE MEANS, TO ENSURE THAT THE TEMPERATURE OF THE SOLE PLATE DOES NOT EXCEED 300°F. TEMPERATURES ABOVE THIS MAY DAMAGE THE ELASTOMER.

SOLE PLATE "P", BOLTS, NUTS, AND WASHERS SHALL BE INCLUDED IN THE PAY ITEM FOR PRESTRESSED CONCRETE GIRDERS.

ANCHOR BOLTS SHALL MEET THE REQUIREMENTS OF ASTM A449. NUTS SHALL MEET THE REQUIREMENTS OF AASHTO M291-DH OR AASHTO M292-2H. WASHERS SHALL MEET THE REQUIREMENTS OF AASHTO M293. NO SHOP DRAWINGS ARE REQUIRED FOR ANCHOR BOLTS, NUTS AND WASHERS. SHOP INSPECTION IS REQUIRED.

ALL SURFACES OF BEARING PLATES SHALL BE SMOOTH AND STRAIGHT.

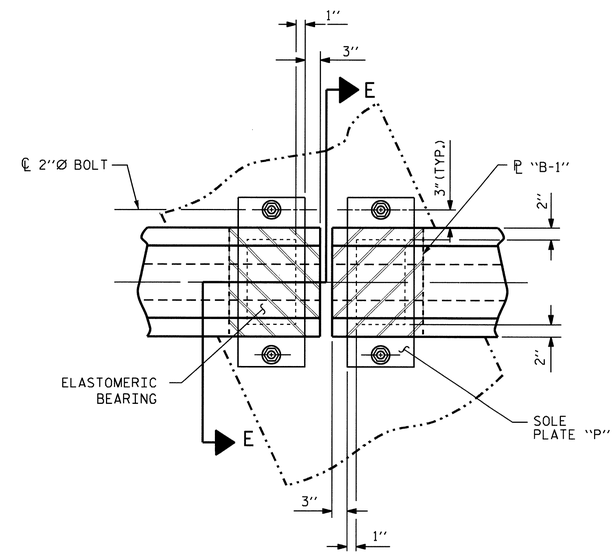

PLAN VIEW AT BENTS
(SHOWING CONTINUOUS BENT)

— LOAD RATINGS —	
	MAX.D.L.+ L.L.
TYPE V	180 K

PROJECT NO. R-2233AB
RUTHERFORD COUNTY
STATION: 280+13.00-L-

STATE OF NORTH CAROLINA
DEPARTMENT OF TRANSPORTATION
RALEIGH

STANDARD
ELASTOMERIC BEARING DETAILS
PRESTRESSED CONCRETE GIRDER SUPERSTRUCTURE
LEFT LANE

NORTH CAROLINA PROFESSIONAL SEAL 20125 ENGINEER MARSHALL G. CHEEK, JR.
9-15-10

REVISIONS						SHEET NO.
NO.	BY:	DATE:	NO.	BY:	DATE:	S-15
1			3			TOTAL SHEETS
2			4			184

ASSEMBLED BY : V.X. NGUYEN	DATE : 11-5-09		
CHECKED BY : M.G. CHEEK	DATE : 5-10		
DRAWN BY : EEM 2/97	REV. 8/16/99	RWW/LES	
CHECKED BY : VAP 2/97	REV. 10/17/00	RWW/LES	
	REV. 5/1/06	TLA/GM	

13-SEP-2010 16:12
R:\Structures\Final Plans\Str. #1\R-2233AB_SD_STR#1_08_BG.dgn
ofigueroa

STR. #1

STD. NO. EB4

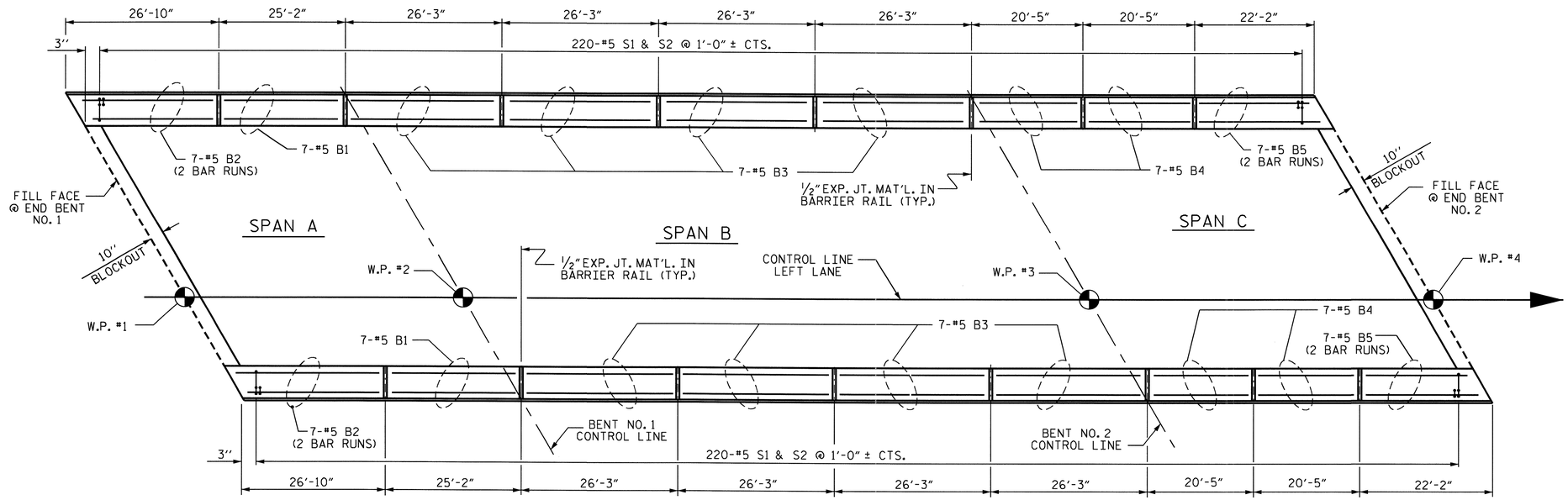

PLAN OF CONCRETE BARRIER RAIL

BAR TYPES

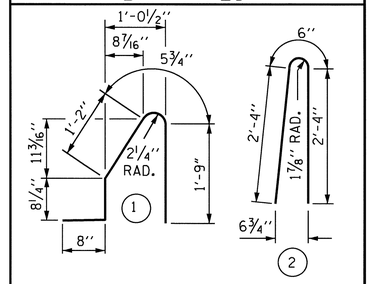

ALL BAR DIMENSIONS ARE OUT TO OUT

BILL OF MATERIAL

FOR CONCRETE BARRIER RAIL ONLY

BAR	NO.	SIZE	TYPE	LENGTH	WEIGHT
* S1	440	#5	1	4'-9"	2180
* S2	440	#5	2	5'-2"	2371
* B1	14	#5	STR	24'-9"	361
* B2	28	#5	STR	15'-3"	445
* B3	56	#5	STR	25'-10"	1509
* B4	28	#5	STR	20'-0"	584
* B5	28	#5	STR	12'-11"	377

* EPOXY COATED REINFORCING STEEL	7827 LBS.
CLASS AA CONCRETE	44.0 CU. YDS.
CONCRETE BARRIER RAIL	440.00 LIN. FT.

* THESE BARS ARE EPOXY COATED.

NOTES

THE BARRIER RAIL IN A CONTINUOUS UNIT SHALL NOT BE CAST UNTIL ALL SLAB CONCRETE IN THAT UNIT HAS BEEN CAST AND HAS REACHED A MINIMUM COMPRESSIVE STRENGTH OF 3,000 PSI.

ALL REINFORCING STEEL IN BARRIER RAILS SHALL BE EPOXY COATED.

VERTICAL GROOVED CONTRACTION JOINTS, 1/2" IN DEPTH, SHALL BE TOOLED IN ALL EXPOSED FACES OF THE BARRIER RAIL AND IN ACCORDANCE WITH ARTICLE 825-10(B) OF THE STANDARD SPECIFICATIONS. THE CONTRACTION JOINT SHALL BE LOCATED AT EACH THIRD POINT BETWEEN BARRIER RAIL EXPANSION JOINTS. ONLY ONE CONTRACTION JOINT IS REQUIRED AT MIDPOINT OF BARRIER RAIL SEGMENTS LESS THAN 20 FEET IN LENGTH AND NO CONTRACTION JOINTS ARE REQUIRED FOR THOSE SEGMENTS LESS THAN 10 FEET IN LENGTH.

THE #5 "S" BARS MAY BE SHIFTED AS NECESSARY IN ORDER TO MAINTAIN A 2" MINIMUM CLEARANCE TO THE 1/2" EXPANSION JOINT MATERIAL IN THE BARRIER RAIL.

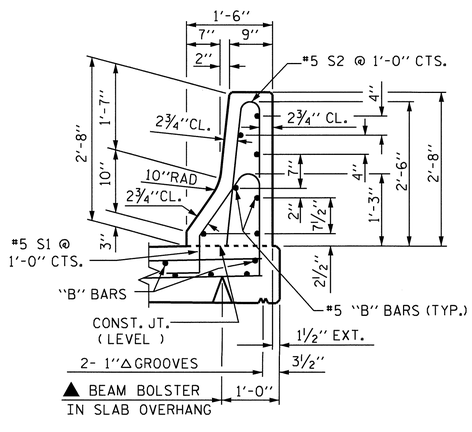

SECTION THRU RAIL

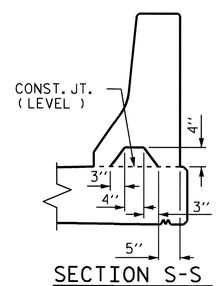

SECTION S-S

AT DAM IN OPEN JOINT
(THIS IS TO BE USED ONLY WHEN SLIP FORM IS USED)

▲ FOR BEAM BOLSTER HEIGHT, SEE "SUPERSTRUCTURE TYPICAL SECTIONS".

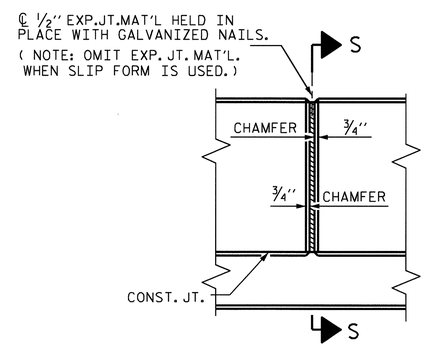

ELEVATION AT EXPANSION JOINTS

BARRIER RAIL DETAILS

PROJECT NO. R-2233AB
RUTHERFORD COUNTY
STATION: 280+13.00 -L-

SHEET 1 OF 2

STATE OF NORTH CAROLINA
DEPARTMENT OF TRANSPORTATION
RALEIGH

STANDARD
CONCRETE BARRIER RAIL LEFT LANE

NORTH CAROLINA PROFESSIONAL SEAL 20125 ENGINEER
MARSHALL G. CHEEK, JR.
9-15-10

REVISIONS						SHEET NO.
NO.	BY:	DATE:	NO.	BY:	DATE:	S-16
1			3			TOTAL SHEETS
2			4			184

STR #1

STD. NO. CBR1

ASSEMBLED BY : V.X. NGUYEN	DATE : 11-2-09		
CHECKED BY : M.G. CHEEK	DATE : 5-10		
DRAWN BY : ARB 5/87	REV. 10/17/00	RWW/LES	
CHECKED BY : SJD 9/87	REV. 5/7/03R	RWW/JTE	
	REV. 5/1/06	TLA/GM	

13-SEP-2010 16:12
R:\Structures\Final Plans\Str. #1\R-2233AB_SD_STR#1_09_BR.dgn
afigueroa

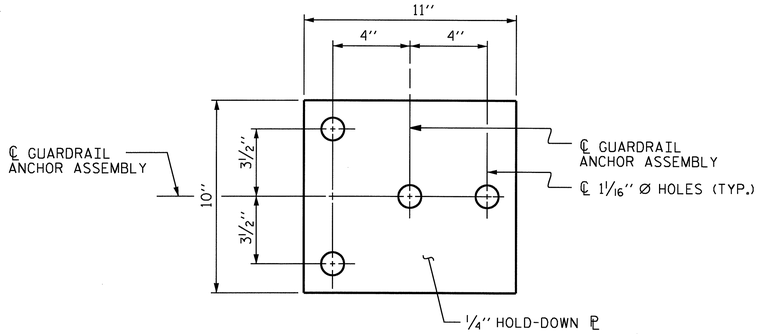

PLAN

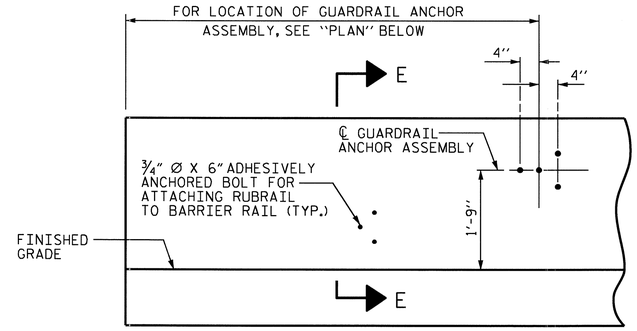

ELEVATION

FOR LOCATION OF RUBRAIL, SEE ROADWAY STD. 862.03

NOTES

THE GUARDRAIL ANCHOR ASSEMBLY SHALL CONSIST OF A 1/4'' HOLD DOWN PLATE AND 4 - 7/8'' Ø BOLTS WITH NUTS AND WASHERS, RUBRAIL, AND ADHESIVELY ANCHORED BOLTS.

THE HOLD-DOWN PLATE SHALL CONFORM TO AASHTO M270 GRADE 36. AFTER FABRICATION, THE HOLD-DOWN PLATE SHALL BE HOT-DIP GALVANIZED IN ACCORDANCE WITH AASHTO M111.

BOLTS SHALL CONFORM TO THE REQUIREMENTS OF ASTM A307 AND NUTS SHALL CONFORM TO THE REQUIREMENTS OF AASHTO M291. BOLTS, NUTS AND WASHERS SHALL BE GALVANIZED. (AT THE CONTRACTOR'S OPTION, STAINLESS STEEL BOLTS, NUTS AND WASHERS MAY BE USED AS AN ALTERNATE FOR THE 7/8'' Ø GALVANIZED BOLTS, NUTS AND WASHERS. THEY SHALL CONFORM TO OR EXCEED THE MECHANICAL REQUIREMENTS OF ASTM A307. THE USE OF THIS ALTERNATE SHALL BE APPROVED BY THE ENGINEER.)

THE GUARDRAIL ANCHOR ASSEMBLY IS REQUIRED AT ALL POINTS WHERE APPROACH GUARDRAIL IS TO BE ATTACHED TO THE END OF BARRIER RAIL. FOR POINTS OF ATTACHMENT, SEE SKETCH.

AFTER INSTALLATION, THE EXPOSED THREAD OF THE BOLT SHALL BE BURRED WITH A SHARP POINTED TOOL.

THE COST OF THE GUARDRAIL ANCHOR ASSEMBLY SHALL BE INCLUDED IN THE UNIT CONTRACT PRICE BID FOR CONCRETE BARRIER RAIL.

THE 1 1/4'' Ø HOLES SHALL BE FORMED OR DRILLED WITH A CORE BIT. IMPACT TOOLS WILL NOT BE PERMITTED. ANY CONCRETE DAMAGED BY THIS WORK SHALL BE REPAIRED TO THE SATISFACTION OF THE ENGINEER.

THE C6 X 8.2 RUBRAIL IS TO BE ADHESIVELY ANCHORED TO THE RAIL USING THREE 3/4" Ø X 6" BOLTS WITH WASHERS. LEVEL ONE FIELD TESTING IS REQUIRED, AND THE YIELD LOAD OF THE 3/4" Ø BOLT IS 12 KIPS. FOR ADHESIVELY ANCHORED ANCHOR BOLTS OR DOWELS, SEE SPECIAL PROVISIONS. SEE ROADWAY STANDARD 862.03 FOR DETAILS AND LOCATION OF THE RUBRAIL.

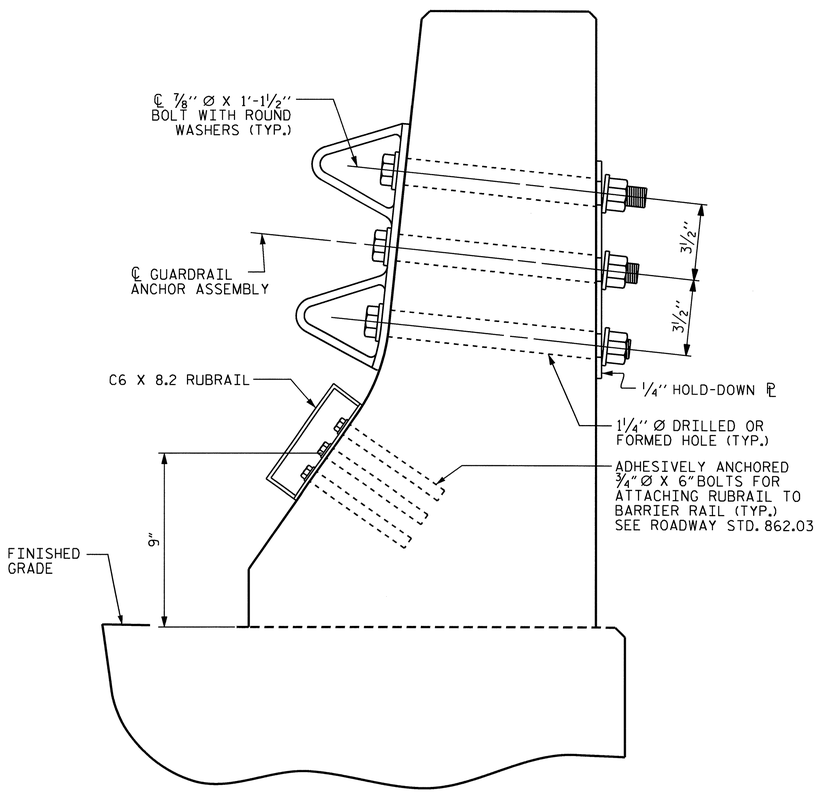

SECTION E-E

GUARDRAIL ANCHOR ASSEMBLY DETAILS

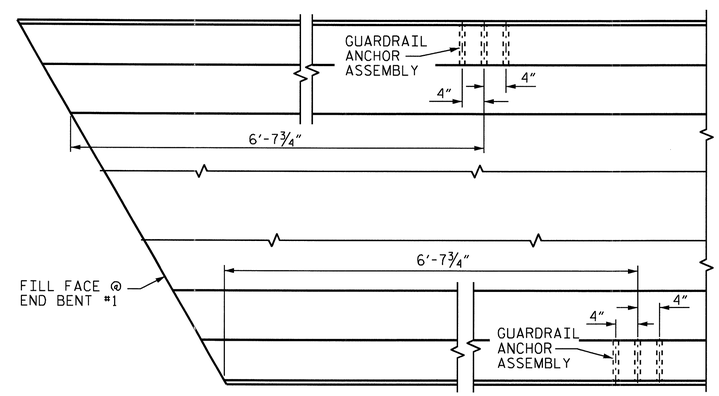

PLAN

LOCATION OF ANCHORS FOR GUARDRAIL

END BENT #1 SHOWN, END BENT #2 SIMILAR.

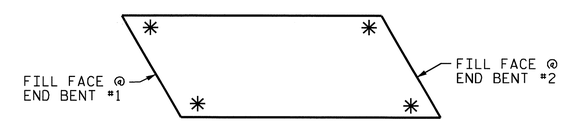

SKETCH SHOWING POINTS OF ATTACHMENTS

✳ DENOTES GUARDRAIL ANCHOR ASSEMBLY

PROJECT NO. R-2233AB
RUTHERFORD COUNTY
STATION: 280+13.00 -L-

SHEET 2 OF 2

STATE OF NORTH CAROLINA
DEPARTMENT OF TRANSPORTATION
RALEIGH

STANDARD
GUARDRAIL ANCHORAGE FOR BARRIER RAIL LEFT LANE

NORTH CAROLINA PROFESSIONAL SEAL 20125 ENGINEER MARSHALL G. CHEEK, JR.
9-15-10

REVISIONS						SHEET NO.
NO.	BY:	DATE:	NO.	BY:	DATE:	S-17
1			3			TOTAL SHEETS
2			4			184

ASSEMBLED BY : V.X. NGUYEN		DATE : 11-02-09	
CHECKED BY : M.G. CHEEK		DATE : 5-10	
DRAWN BY : TLA 5/06	ADDED 5/1/06R KMM/GM		
CHECKED BY : GM 5/06			

13-SEP-2010 16:12
R:\Structures\FinalPlans\Str. #1\R-2233AB_SD_STR#1_09_BR.dgn
afigueroa

STR. #1 STD. NO. GRA2

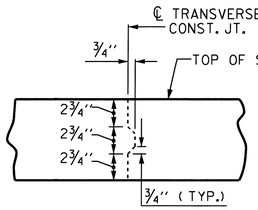

TRANSVERSE CONSTRUCTION JOINT DETAIL

NOTE: REINFORCING STEEL IN SLAB NOT SHOWN. LONGITUDINAL REINFORCING STEEL SHALL BE CONTINUOUS THRU JOINT

SUPERSTRUCTURE REINFORCING STEEL LENGTHS ARE BASED ON THE FOLLOWING MINIMUM SPLICE LENGTHS

BAR SIZE	SUPERSTRUCTURE EXCEPT APPROACH SLABS, PARAPET, AND BARRIER RAIL		APPROACH SLABS		PARAPET AND BARRIER RAIL
	EPOXY COATED	UNCOATED	EPOXY COATED	UNCOATED	
#4	2'-0"	1'-9"	2'-0"	1'-9"	2'-9"
#5	2'-6"	2'-2"	2'-6"	2'-2"	3'-5"
#6	3'-0"	2'-7"	3'-10"	2'-7"	4'-4"
#7	5'-3"	3'-6"			
#8	6'-10"	4'-7"			

REINFORCING BAR SCHEDULE SPANS A THRU C

BAR	NO.	SIZE	TYPE	LENGTH	WEIGHT
✱ A1	379	#5	STR	38'-11"	15,384
A2	379	#5	STR	38'-11"	15,384
✱ A101	2	#5	STR	38'-1"	79
✱ A102	2	#5	STR	36'-7"	76
✱ A103	2	#5	STR	35'-1"	73
✱ A104	2	#5	STR	33'-7"	70
✱ A105	2	#5	STR	32'-1"	67
✱ A106	2	#5	STR	30'-7"	64
✱ A107	2	#5	STR	29'-1"	61
✱ A108	2	#5	STR	27'-7"	58
✱ A109	2	#5	STR	26'-1"	54
✱ A110	2	#5	STR	24'-8"	51
✱ A111	2	#5	STR	23'-2"	48
✱ A112	2	#5	STR	21'-8"	45
✱ A113	2	#5	STR	20'-2"	42
✱ A114	2	#5	STR	18'-8"	39
✱ A115	2	#5	STR	17'-3"	36
✱ A116	2	#5	STR	15'-9"	33
✱ A117	2	#5	STR	14'-3"	30
✱ A118	2	#5	STR	12'-9"	27
✱ A119	2	#5	STR	11'-3"	23
✱ A120	2	#5	STR	9'-9"	20
✱ A121	2	#5	STR	8'-3"	17
✱ A122	2	#5	STR	6'-10"	14
✱ A123	2	#5	STR	5'-4"	11
✱ A124	2	#5	STR	3'-10"	8
✱ A125	2	#5	STR	2'-4"	5

BAR	NO.	SIZE	TYPE	LENGTH	WEIGHT
A201	2	#5	STR	38'-1"	79
A202	2	#5	STR	36'-7"	76
A203	2	#5	STR	35'-1"	73
A204	2	#5	STR	33'-7"	70
A205	2	#5	STR	32'-1"	67
A206	2	#5	STR	30'-7"	64
A207	2	#5	STR	29'-1"	61
A208	2	#5	STR	27'-7"	58
A209	2	#5	STR	26'-1"	54
A210	2	#5	STR	24'-8"	51
A211	2	#5	STR	23'-2"	48
A212	2	#5	STR	21'-8"	45
A213	2	#5	STR	20'-2"	42
A214	2	#5	STR	18'-8"	39
A215	2	#5	STR	17'-3"	36
A216	2	#5	STR	15'-9"	33
A217	2	#5	STR	14'-3"	30
A218	2	#5	STR	12'-9"	27
A219	2	#5	STR	11'-3"	23
A220	2	#5	STR	9'-9"	20
A221	2	#5	STR	8'-3"	17
A222	2	#5	STR	6'-10"	14
A223	2	#5	STR	5'-4"	11
A224	2	#5	STR	3'-10"	8
A225	2	#5	STR	2'-4"	5

BAR	NO.	SIZE	TYPE	LENGTH	WEIGHT
✱ B1	56	#4	STR	17'-4"	648
✱ B2	28	#7	STR	56'-10"	3253
✱ B3	25	#7	STR	23'-5"	1197
✱ B4	56	#4	STR	19'-1"	714
✱ B5	28	#7	STR	60'-0"	3434
✱ B6	25	#7	STR	25'-1"	1282
✱ B7	56	#4	STR	21'-3"	795
B8	128	#5	STR	56'-2"	7498
K1	24	#4	STR	21'-7"	346
K2	24	#4	STR	4'-0"	64
K3	96	#4	STR	7'-3"	465
K4	24	#4	STR	4'-6"	72
K5	4	#4	STR	2'-0"	5
K6	16	#4	STR	3'-6"	37
K7	4	#4	STR	2'-8"	7
K8	36	#4	5	10'-2"	244
K9	24	#4	6	5'-1"	81
S1	48	#4	2	14'-0"	449
✱ S2	40	#4	3	11'-8"	312
✱ S3	48	#4	3	10'-1"	323
S4	248	#4	1	2'-9"	456
U1	40	#4	4	16'-8"	445
U2	16	#4	7	10'-9"	115

REINFORCING STEEL = 26,719 LBS.
✱ EPOXY COATED REINF. STEEL = 28,393 LBS.

✱ THESE BARS ARE EPOXY COATED

BAR TYPES

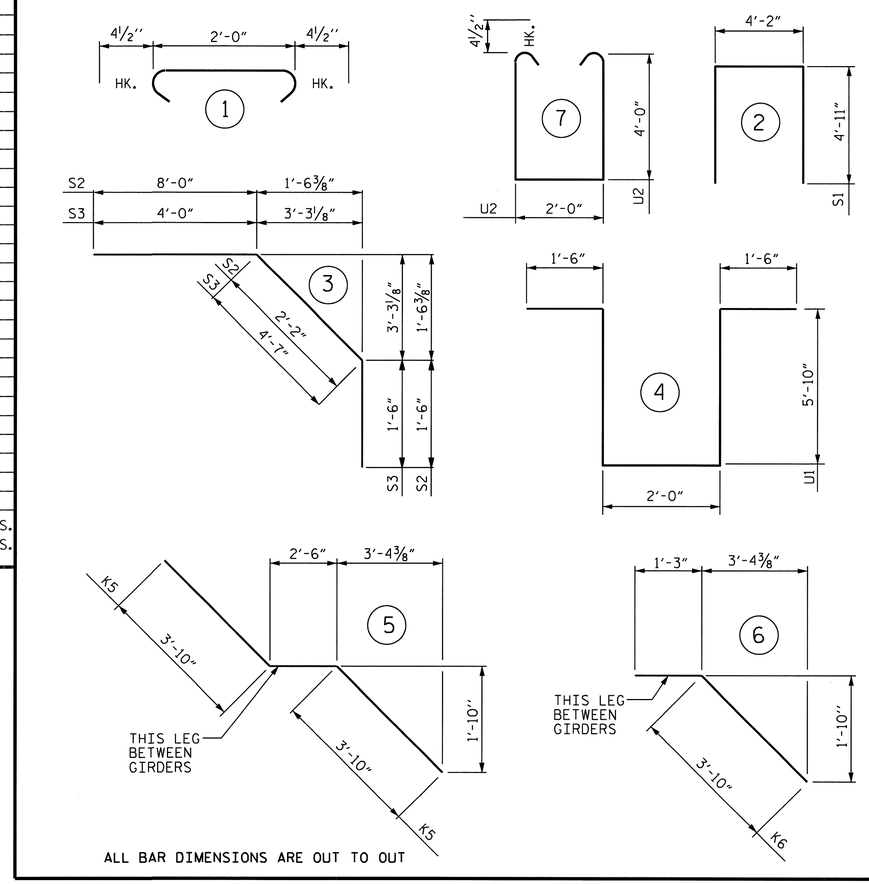

ALL BAR DIMENSIONS ARE OUT TO OUT

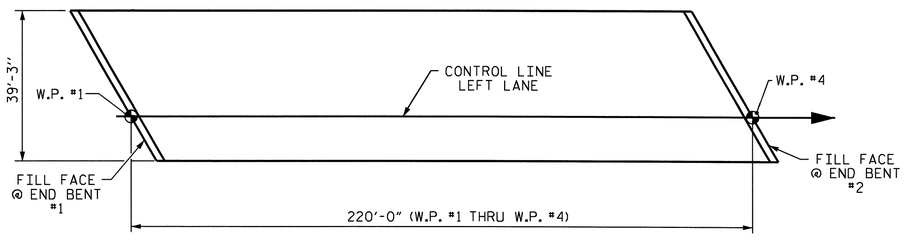

LAYOUT FOR COMPUTING AREA REINFORCED CONCRETE DECK SLAB (SQ. FT. = 8,635)

SUPERSTRUCTURE BILL OF MATERIAL

		CLASS AA CONCRETE	REINFORCING STEEL	EPOXY COATED REINFORCING STEEL
		(CU. YDS.)	(LBS.)	(LBS.)
SPAN A, B, AND C	POUR #1	63.3	26,719	28,393
	POUR #2	186.6		
	POUR #3	117.2		
	POUR #4	76.7		
TOTALS ✱✱		443.8	26,719	28,393

✱✱ QUANTITIES FOR BARRIER RAIL ARE NOT INCLUDED

GROOVING BRIDGE FLOORS

APPROACH SLABS	1,470 SQ.FT.
BRIDGE DECK	7,189 SQ.FT.
TOTAL	8,659 SQ.FT.

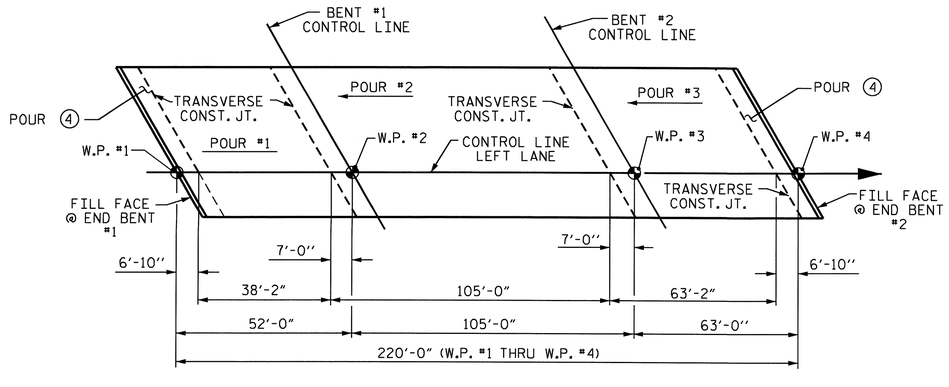

POURING SEQUENCE

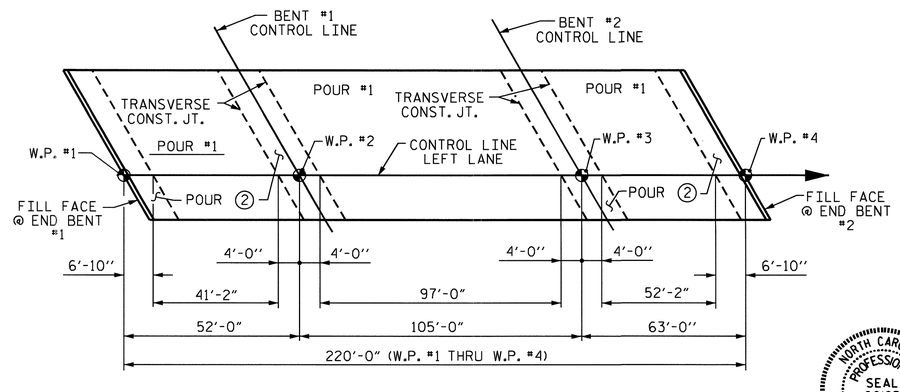

OPTIONAL POURING SEQUENCE

POUR (2) CANNOT BE STARTED UNTIL BOTH ADJACENT (1) POURS REACH A MINIMUM OF 3000 PSI.

NORTH CAROLINA PROFESSIONAL SEAL 20125 ENGINEER MARSHALL G. CHEEK, JR.
9-15-10

PROJECT NO. R-2233AB
RUTHERFORD COUNTY
STATION: 280+13.00 -L-

STATE OF NORTH CAROLINA
DEPARTMENT OF TRANSPORTATION
RALEIGH

SUPERSTRUCTURE
BILL OF MATERIAL
LEFT LANE

ASSEMBLED BY : V.X. NGUYEN	DATE : 11-12-09
CHECKED BY : M.G. CHEEK	DATE : 5-10
DRAWN BY : JMB 5/87	REV. 6/1/94 EEM/GRP
CHECKED BY : SJD 9/87	REV. 8/16/99 RWW/LES
	REV. 5/1/06 TLA/GM

REVISIONS						SHEET NO.
NO.	BY:	DATE:	NO.	BY:	DATE:	S-18
1			3			TOTAL SHEETS
2			4			184

STR #1

STD. NO. BOM2

13-SEP-2010 16:12
R:\Structures\Final Plans\Str. #1\R-2233AB_SD_STR#1_10_BM.dgn
afigueroa

NOTES

THE CONTRACTOR SHALL PROVIDE FOR INSTALLATION OF THE 4" DIAMETER DRAIN PIPE THROUGH THE WING WALL AS REQUIRED FOR REINFORCED BRIDGE APPROACH FILLS. SEE THE ROADWAY PLANS. REINFORCING STEEL IN THE WING WALL MAY BE SHIFTED AS NECESSARY TO CLEAR THE DRAIN PIPE.

THE CONCRETE IN THE SHADED AREA OF THE WING SHALL BE POURED AFTER THE BARRIER RAIL IS CAST IF SLIP FORMING IS USED.

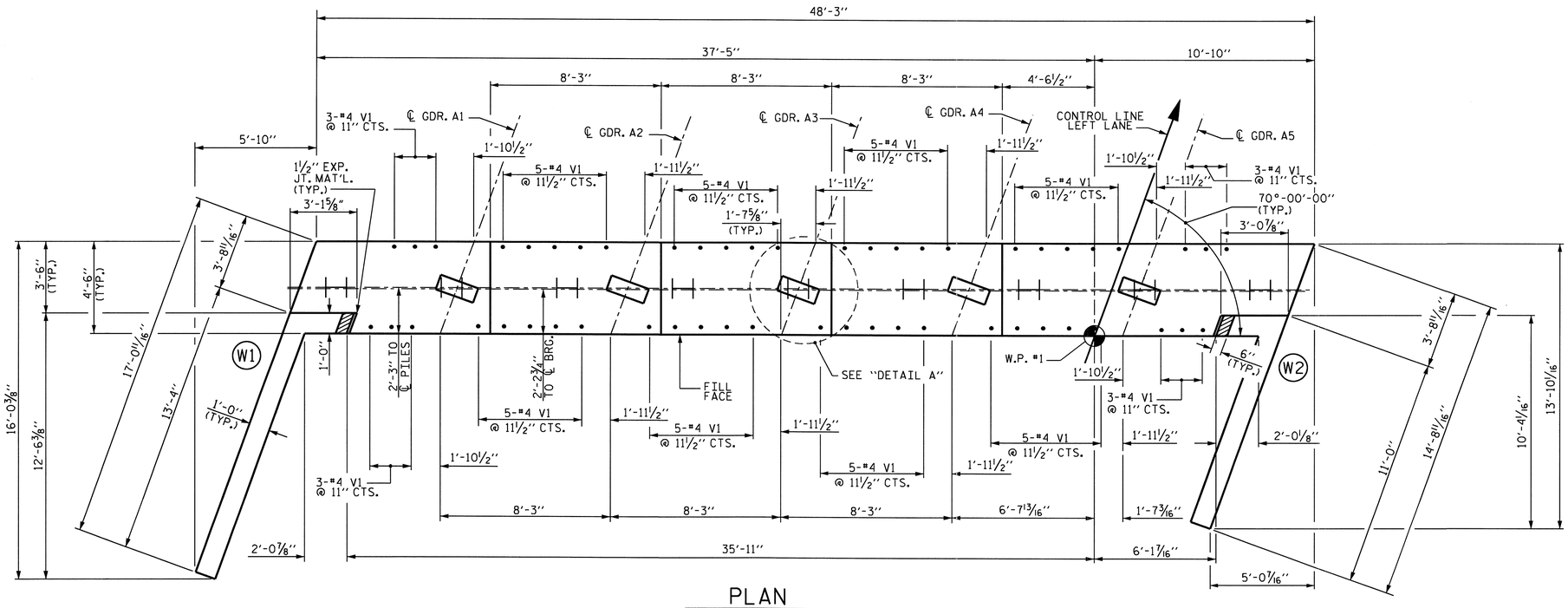

PLAN

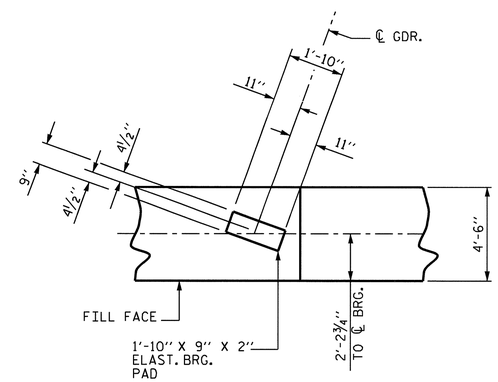

DETAIL A

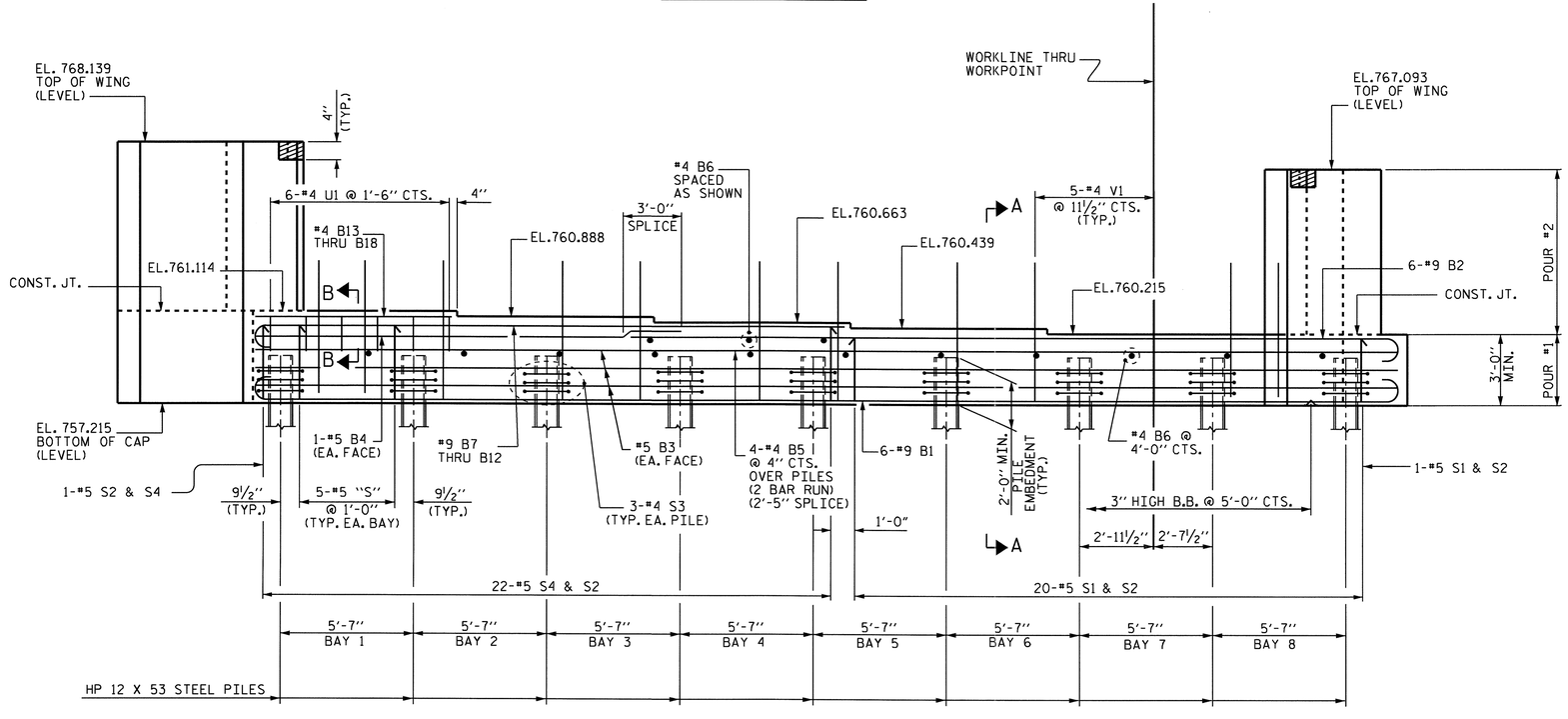

ELEVATION

PROJECT NO. R-2233AB

RUTHERFORD COUNTY

STATION: 280+13.00 -L-

SHEET 1 OF 3

STATE OF NORTH CAROLINA
DEPARTMENT OF TRANSPORTATION
RALEIGH

SUBSTRUCTURE
END BENT No. 1
LEFT LANE

NORTH CAROLINA PROFESSIONAL SEAL 20125 ENGINEER MARSHALL E. CHECK, JR.
9-15-10

REVISIONS						SHEET NO.
NO.	BY:	DATE:	NO.	BY:	DATE:	S-19
1			3			TOTAL SHEETS
2			4			184

NCDDS

STR. #1

DRAWN BY : M. POOLE DATE : 08/09
CHECKED BY : V.X. NGUYEN DATE : 08/10

08-SEP-2010 08:40
R:\Structures\Final Plans\Str. #1\R-2233AB_sd_STR#1_12_EB 1&2 .dgn
afigueroa

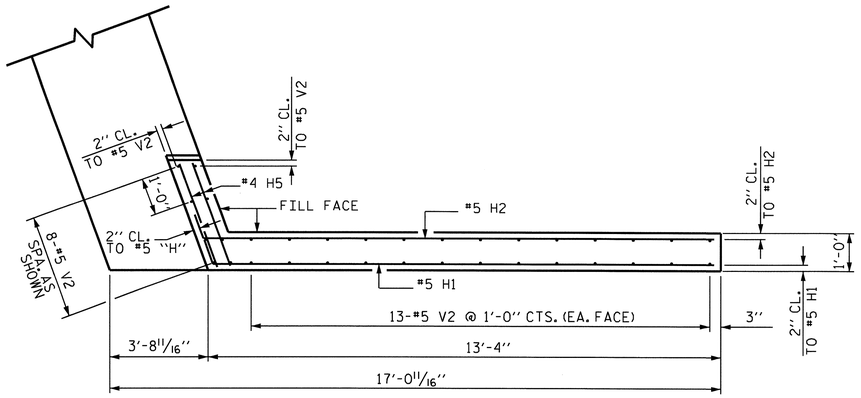

PLAN OF WING - W1

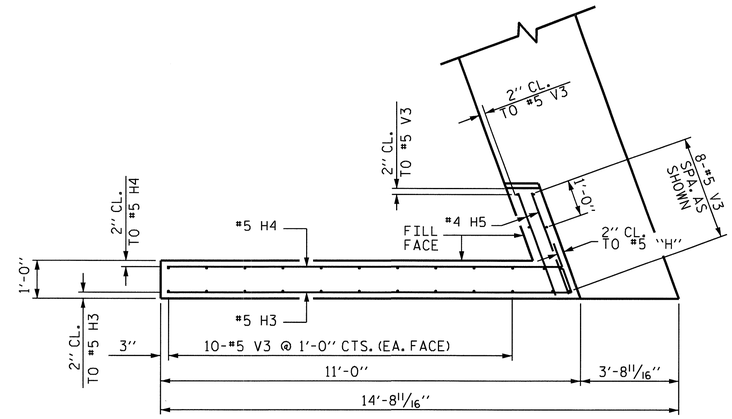

PLAN OF WING - W2

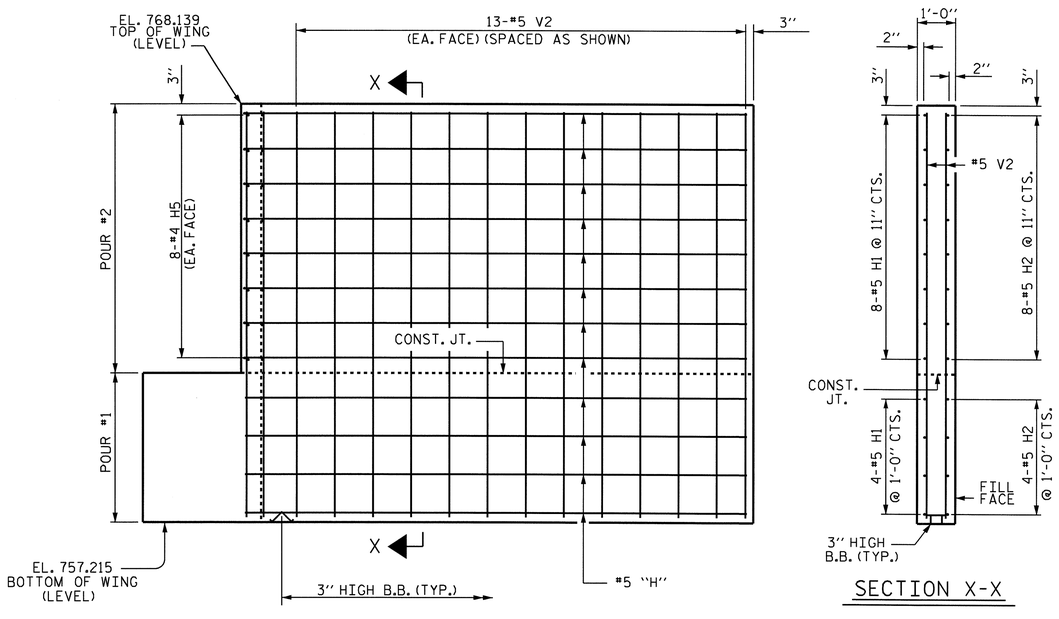

SECTION X-X

ELEVATION OF WING - W1

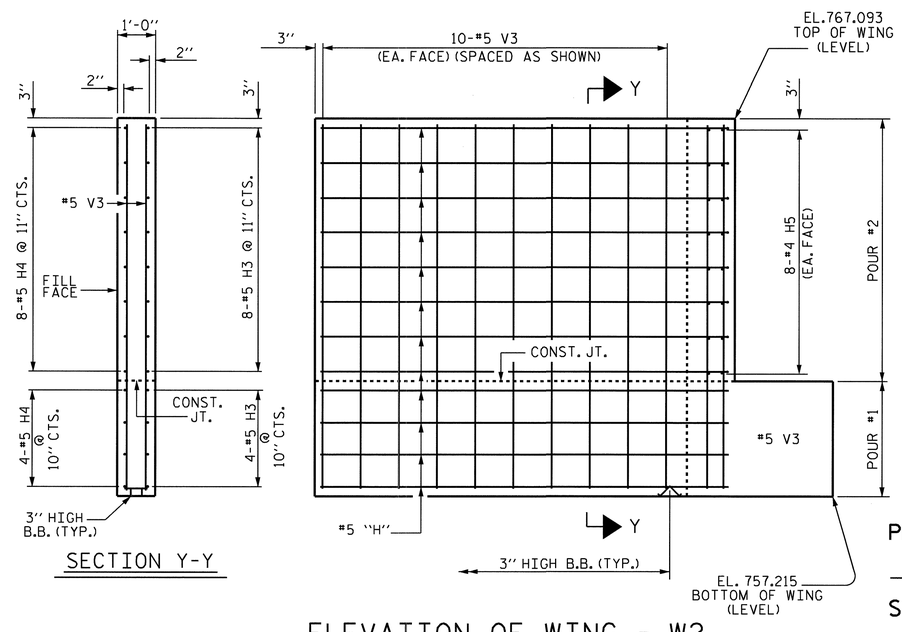

SECTION Y-Y

ELEVATION OF WING - W2

PROJECT NO. R-2233AB
RUTHERFORD COUNTY
STATION: 280+13.00 -L-

SHEET 2 OF 3

STATE OF NORTH CAROLINA
DEPARTMENT OF TRANSPORTATION
RALEIGH

SUBSTRUCTURE
END BENT No. 1
LEFT LANE

NORTH CAROLINA PROFESSIONAL SEAL 20125 ENGINEER MARSHALL B. CHECK, JR.
9-15-10

REVISIONS						SHEET NO.
NO.	BY:	DATE:	NO.	BY:	DATE:	S-20
1			3			TOTAL SHEETS
2			4			184

DRAWN BY : M. POOLE DATE : 08/09
CHECKED BY : V.X. NGUYEN DATE : 08/10

08-SEP-2010 08:40
R:\Structures\FinalPlans\Str. #1\R-2233AB_sd_STR#1_12_EB 1&2 .dgn
afigueroa

STR. #1

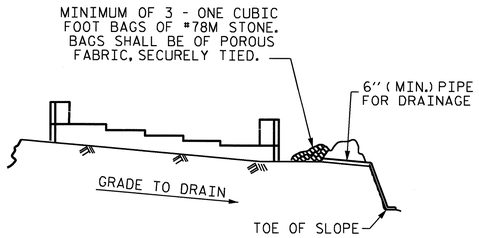

BAGGED STONE AND PIPE SHALL BE PLACED IMMEDIATELY AFTER COMPLETION OF END BENT EXCAVATION. PIPE MAY BE EITHER CONCRETE, CORRUGATED STEEL, CORRUGATED ALUMINUM ALLOY, OR CORRUGATED PLASTIC. PERFORATED PIPE WILL NOT BE ALLOWED.

BAGGED STONE SHALL REMAIN IN PLACE UNTIL THE ENGINEER DIRECTS THAT IT BE REMOVED. THE CONTRACTOR SHALL REMOVE AND DISPOSE OF SILT ACCUMULATIONS AT BAGGED STONE WHEN SO DIRECTED BY THE ENGINEER. BAGS SHALL BE REMOVED AND REPLACED WHENEVER THE ENGINEER DETERMINES THAT THEY HAVE DETERIORATED AND LOST THEIR EFFECTIVENESS.

NO SEPARATE PAYMENT WILL BE MADE FOR THIS WORK AND THE ENTIRE COST OF THIS WORK SHALL BE INCLUDED IN THE UNIT CONTRACT PRICE BID FOR THE SEVERAL PAY ITEMS.

TEMPORARY DRAINAGE AT END BENT

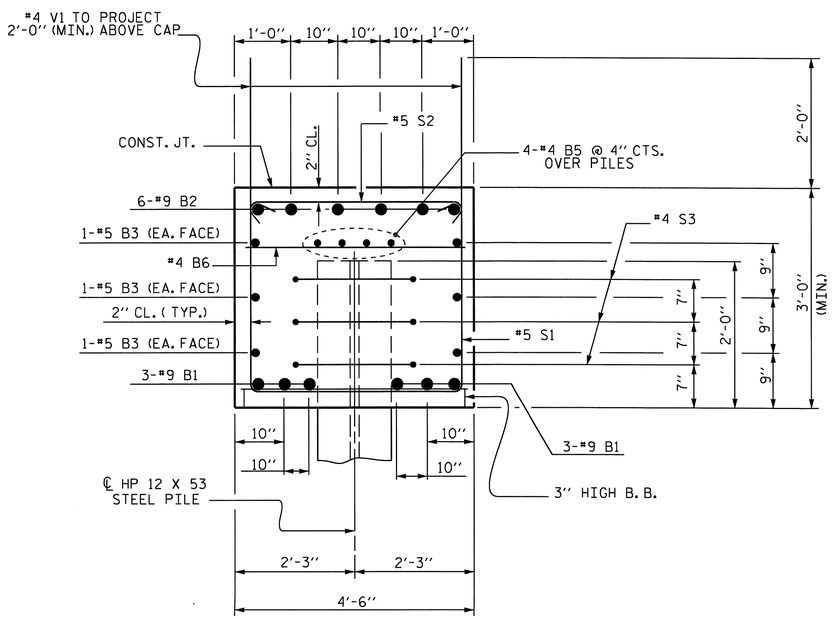

SECTION A-A

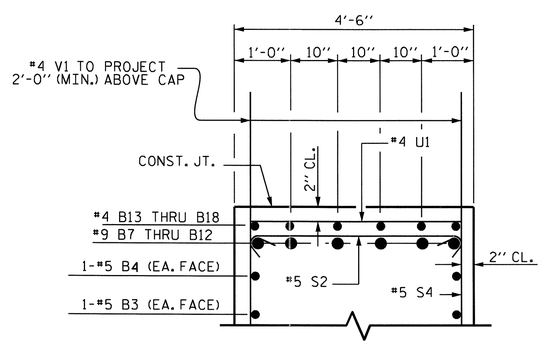

PARTIAL SECTION B-B

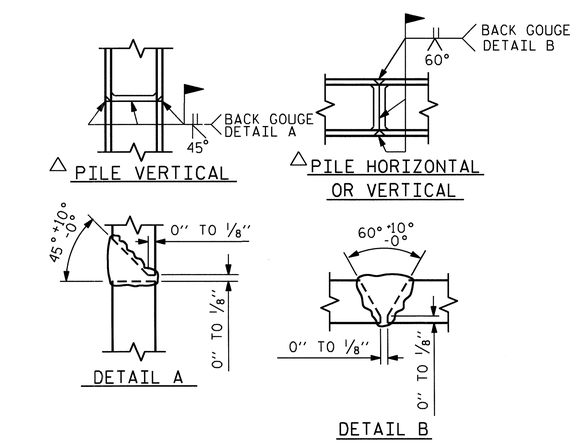

△ POSITION OF PILE DURING WELDING.

PILE SPLICE DETAILS

BAR TYPES

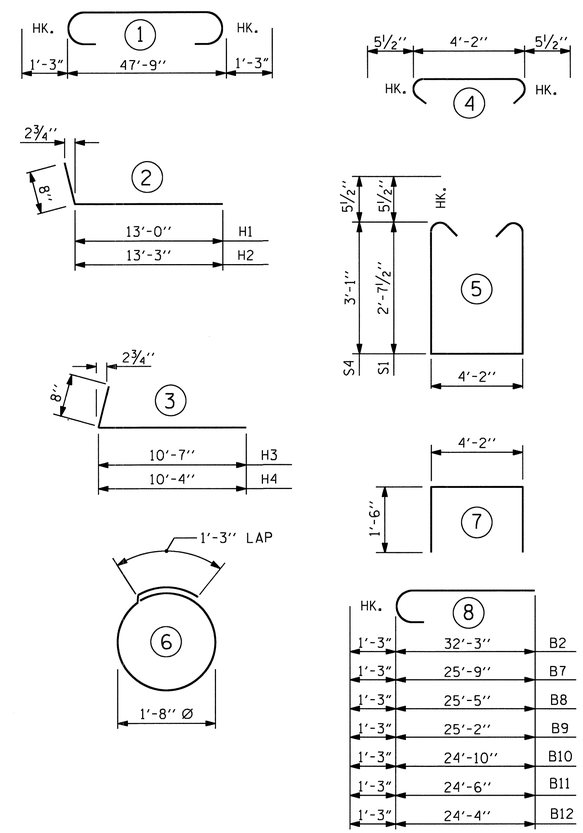

ALL BAR DIMENSIONS ARE OUT TO OUT.

BILL OF MATERIAL

END BENT NO. 1

BAR	NO.	SIZE	TYPE	LENGTH	WEIGHT
B1	6	#9	1	50'-3"	1025
B2	6	#9	8	33'-6"	683
B3	6	#5	STR	47'-11"	300
B4	2	#5	STR	18'-8"	39
B5	8	#4	STR	25'-2"	134
B6	14	#4	STR	4'-2"	39
B7	1	#9	8	27'-0"	92
B8	1	#9	8	26'-8"	91
B9	1	#9	8	26'-5"	90
B10	1	#9	8	26'-1"	89
B11	1	#9	8	25'-9"	88
B12	1	#9	8	25'-7"	87
B13	1	#4	STR	9'-4"	6
B14	1	#4	STR	9'-1"	6
B15	1	#4	STR	8'-9"	6
B16	1	#4	STR	8'-5"	6
B17	1	#4	STR	8'-1"	5
B18	1	#4	STR	7'-10"	5
H1	12	#5	2	13'-8"	171
H2	12	#5	2	13'-11"	174
H3	12	#5	3	11'-3"	141
H4	12	#5	3	11'-0"	138
H5	32	#4	STR	2'-9"	59
S1	20	#5	5	10'-4"	216
S2	42	#5	4	5'-1"	223
S3	27	#4	6	6'-6"	117
S4	22	#5	5	11'-3"	258
U1	6	#4	7	7'-2"	29
V1	52	#4	STR	4'-9"	165
V2	34	#5	STR	10'-5"	369
V3	28	#5	STR	9'-5"	275

REINFORCING STEEL = 5126 LBS.

CLASS A CONCRETE

POUR #1 : CAP & BOTT. OF WINGS = 30.5 CU. YDS.

POUR #2 : TOP OF WINGS = 8.2 CU. YDS.

TOTAL CLASS A CONCRETE = 38.7 CU. YDS.

HP 12 X 53 STEEL PILES

NO. 9 270 LIN. FT.

NORTH CAROLINA PROFESSIONAL SEAL 20125 ENGINEER MARSHALL B. PEEK, JR.
4-15-10

PROJECT NO. R-2233AB

RUTHERFORD COUNTY

STATION: 280+13.00 -L-

SHEET 3 OF 3

STATE OF NORTH CAROLINA
DEPARTMENT OF TRANSPORTATION
RALEIGH

SUBSTRUCTURE
END BENT NO. 1
LEFT LANE

REVISIONS						SHEET NO.
NO.	BY:	DATE:	NO.	BY:	DATE:	S-21
1			3			TOTAL SHEETS
2			4			184

DRAWN BY : M. POOLE DATE : 08-09
CHECKED BY : V.X. NGUYEN DATE : 08-10

08-SEP-2010 08:40
R:\Structures\FinalPlans\Str. #1\R-2233AB_sd_STR#1_12_EB 1&2 .dgn
afigueroa

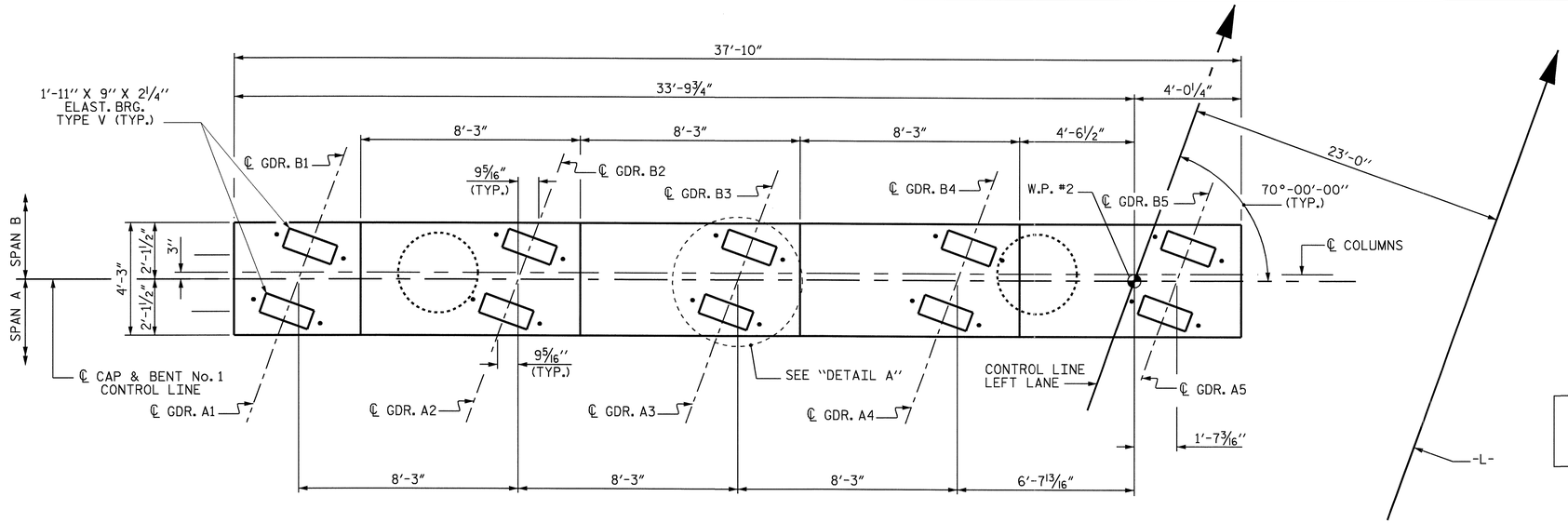

PLAN

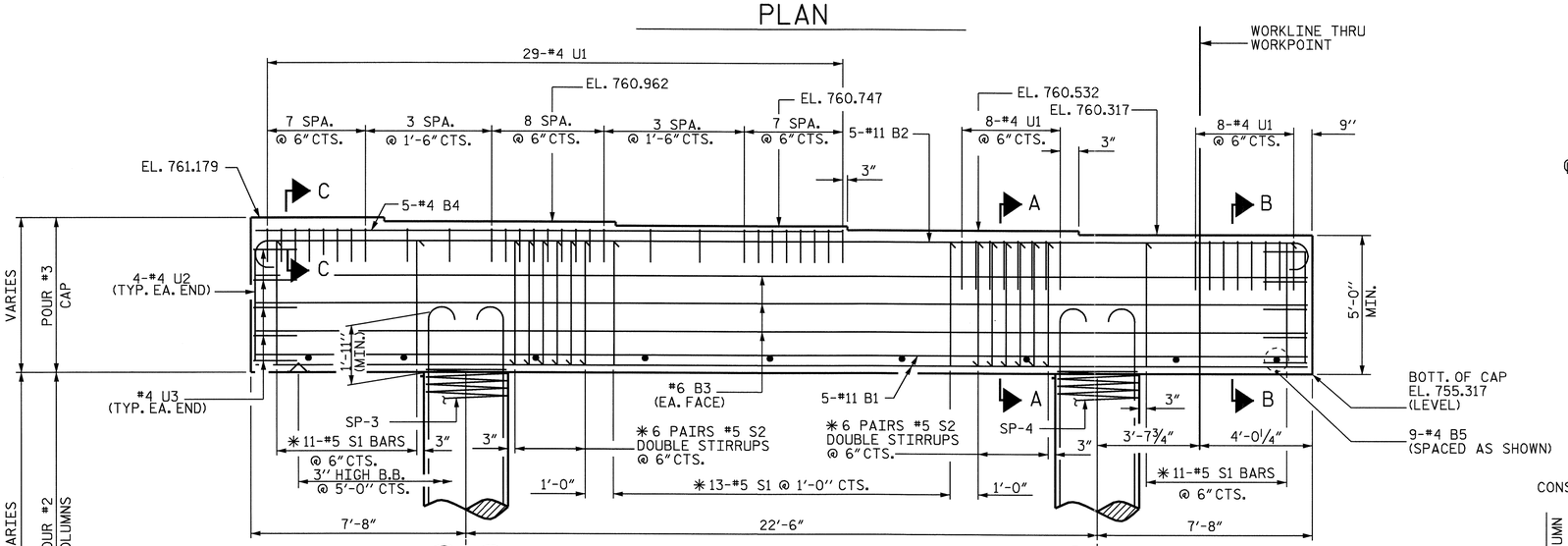

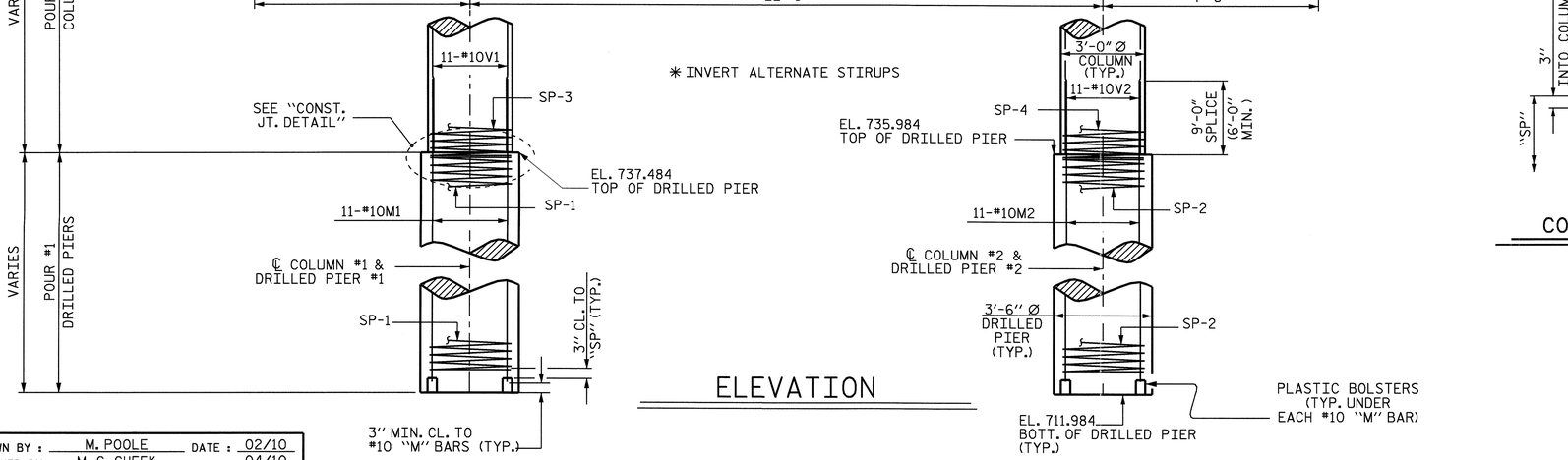

ELEVATION

NOTES

STIRRUPS IN CAP MAY BE SHIFTED AS NECESSARY TO CLEAR ANCHOR BOLTS.

HOOKS ON "V" BARS MAY BE TURNED AS NECESSARY FOR PLACING REINFORCING STEEL.

ALL STEEL IN THE DRILLED PIERS IS INCLUDED IN THE PAY ITEMS FOR "REINFORCING STEEL" AND "SPIRAL COLUMN REINFORCING STEEL".

THE CONTRACTOR'S ATTENTION IS CALLED TO THE FACT THAT THE LONGITUDINAL REINFORCEMENT FOR THE DRILLED PIERS IS DETAILED WITH 3 FEET OF EXTRA LENGTH.

SPLICING OF THE LONGITUDINAL BARS IN THE DRILLED PIERS WILL NOT BE PERMITTED.

FOR DRILLED PIERS, SEE SPECIAL PROVISIONS.

2" MINIMUM CONCRETE COVER FROM END OF CAP REQUIRED FOR ALL "U" BARS.

THE CONTRACTOR SHALL ALIGN THE "V" BARS AS SHOWN IN THE PLAN OF DRILLED PIERS AND COLUMNS.

THE CONTRACTOR'S ATTENTION IS CALLED TO THE FACT THAT THE CENTERLINE OF THE COLUMNS & DRILLED PIERS IS OFFSET 3" FROM THE BENT CONTROL LINE.

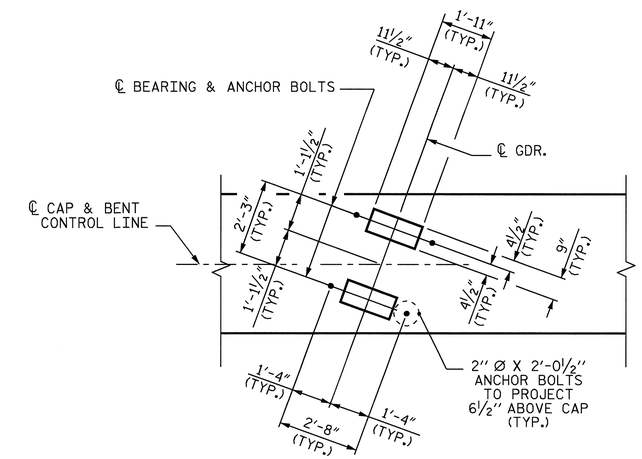

DETAIL A

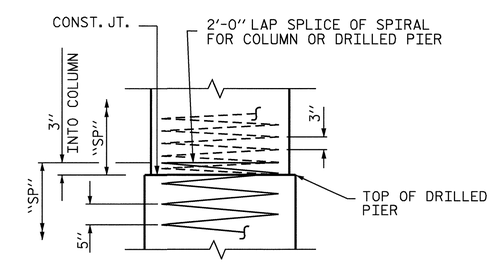

CONSTRUCTION JOINT DETAIL

PROJECT NO. R-2233AB
RUTHERFORD COUNTY
STATION: 280+13.00 -L-

SHEET 1 OF 2

STATE OF NORTH CAROLINA
DEPARTMENT OF TRANSPORTATION
RALEIGH

SUBSTRUCTURE
BENT No. 1
LEFT LANE

REVISIONS								SHEET NO.
NO.	BY:	DATE:	NO.	BY:	DATE:			S-22
1			3					TOTAL SHEETS
2			4					184

NORTH CAROLINA PROFESSIONAL SEAL 20125 ENGINEER MARSHALL G. CHEEK, JR.

DRAWN BY : M. POOLE DATE : 02/10
CHECKED BY : M. G. CHEEK DATE : 04/10

08-SEP-2010 10:32
R:\Structures\Final Plans\Str. #1\R-2233AB_SD_STR#1_13_B1&2.dgn
mpoole

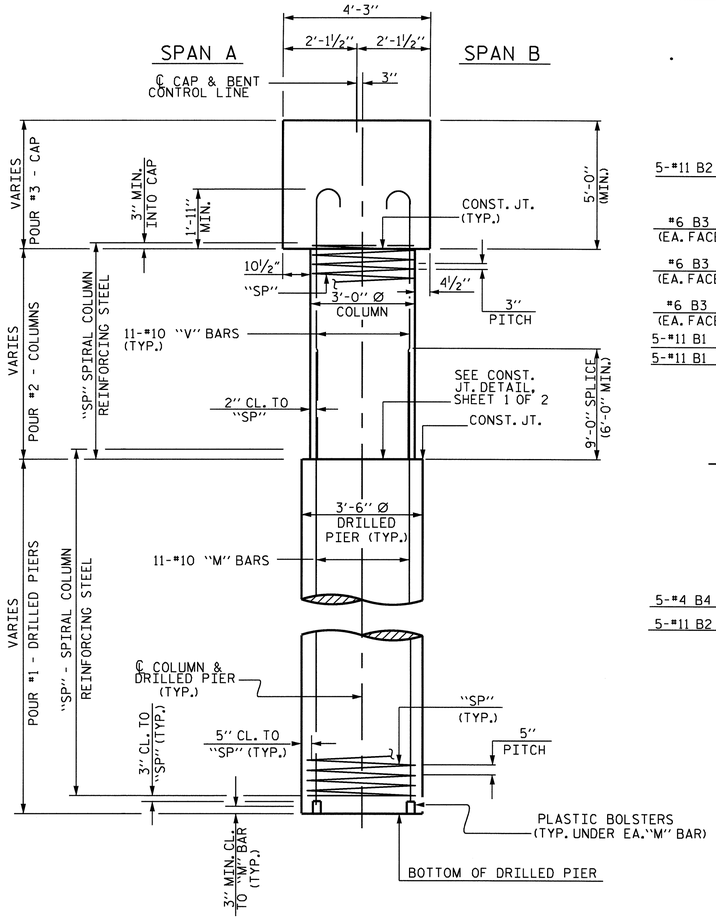

END ELEVATION

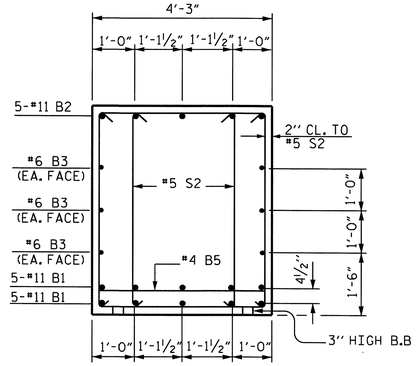

SECTION A-A

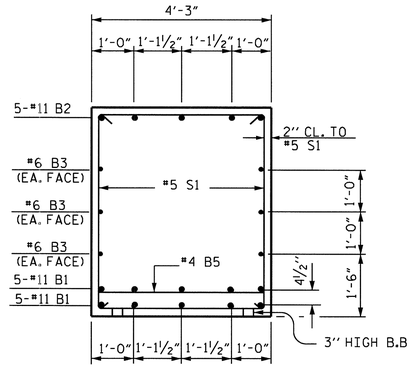

SECTION B-B

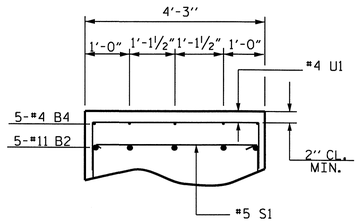

SECTION C-C

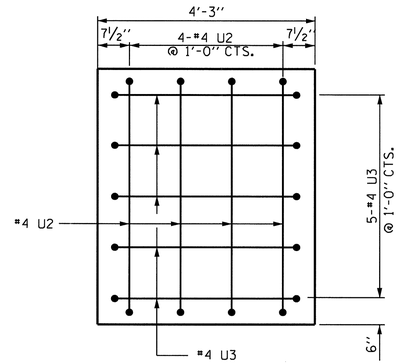

END VIEW

(TYPICAL EACH END)

BILL OF MATERIAL

BENT No. 1

BAR	NO.	SIZE	TYPE	LENGTH	WEIGHT
B1	10	11	STR	37'-6"	1992
B2	5	11	1	40'-6"	1076
B3	6	6	STR	37'-6"	338
B4	5	4	STR	20'-8"	69
B5	9	4	STR	3'-11"	24
M1	11	10	STR	34'-3"	1621
M2	11	10	STR	32'-9"	1550
S1	35	5	4	14'-1"	514
S2	24	5	4	13'-4"	334
U1	45	4	3	6'-11"	208
U2	8	4	3	6'-8"	36
U3	10	4	3	6'-9"	45
V1	11	10	2	21'-2"	1002
V2	11	10	2	22'-8"	1073
REINFORCING STEEL					9882 LBS

BAR	NO.	SIZE	TYPE	LENGTH	WEIGHT
SP-1	1	***	5	505'-10"	528
SP-2	1	***	5	477'-1"	498
SP-3	1	**	6	610'-7"	408
SP-4	1	**	6	660'-1"	441
SPIRAL COLUMN REINFORCING STEEL					1875 LBS

CLASS A CONCRETE BREAKDOWN

POUR #2 (COLUMNS)	9.8 C.Y.
POUR #3 (CAP)	32.1 C.Y.
TOTAL	41.9 C.Y.

DRILLED PIER QUANTITIES

DRILLED PIER CONCRETE BREAKDOWN

POUR #1 (DRILLED PIERS)	17.6 C.Y.
3'-6" Ø DRILLED PIERS IN SOIL	35.50 LIN. FT.
3'-6" Ø DRILLED PIERS NOT IN SOIL	14.00 LIN. FT.
PERMANENT STEEL CASING FOR 3'-6" Ø DRILLED PIERS	9.47 LIN. FT.
CSL TUBES	218.00 LIN. FT.

BAR TYPES

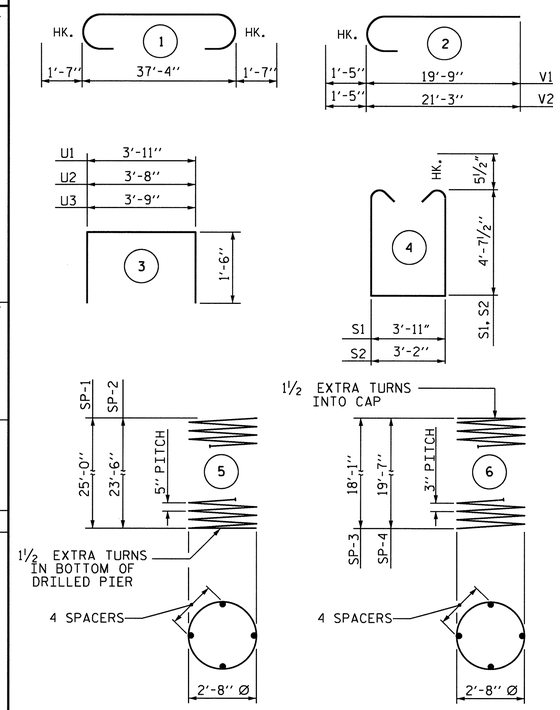

ALL BAR DIMENSIONS ARE OUT TO OUT.

*** THE SP-1 & SP-2 SPIRAL REINFORCING STEEL SHALL BE W31 OR D-31 COLD DRAWN WIRE OR #5 PLAIN OR DEFORMED BAR.

** THE SP-3 & SP-4 SPIRAL REINFORCING STEEL SHALL BE W20 OR D-20 COLD DRAWN WIRE OR #4 PLAIN OR DEFORMED BAR.

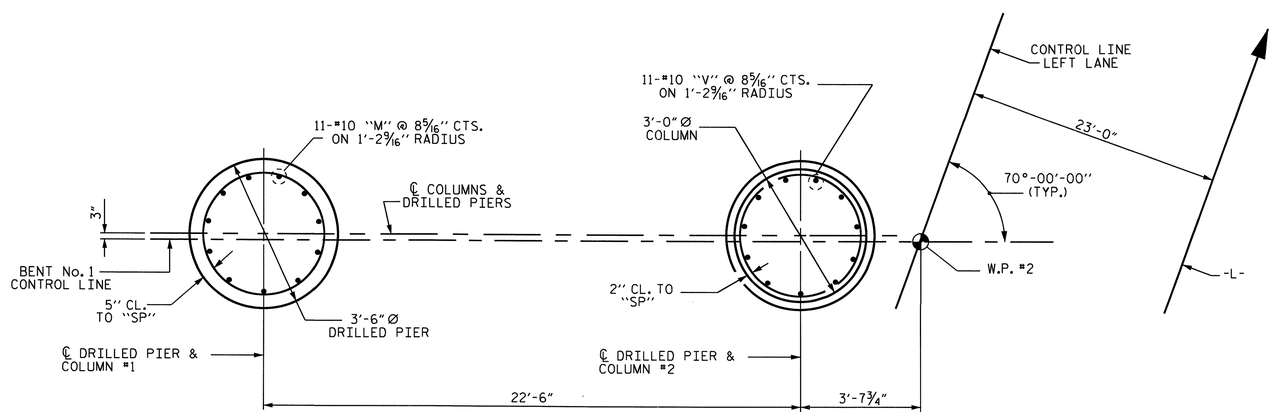

PARTIAL PLAN OF DRILLED PIER

PARTIAL PLAN OF COLUMN

PLAN OF DRILLED PIERS & COLUMNS

(DIMENSIONS & REINFORCING STEEL ARE TYPICAL FOR EACH COLUMN & DRILLED PIER)

PROJECT NO. R-2233AB
RUTHERFORD COUNTY
STATION: 280+13.00 -L-

SHEET 2 OF 2

STATE OF NORTH CAROLINA
DEPARTMENT OF TRANSPORTATION
RALEIGH

SUBSTRUCTURE
BENT No. 1
LEFT LANE

NORTH CAROLINA PROFESSIONAL SEAL 20125 ENGINEER MARSHALL G. CHEEK, JR.
9-15-10

REVISIONS						SHEET NO.
NO.	BY:	DATE:	NO.	BY:	DATE:	S-23
1			3			TOTAL SHEETS
2			4			184

DRAWN BY : M. POOLE DATE : 2/10
CHECKED BY : M. G. CHEEK DATE : 04/10

08-SEP-2010 08:40
R:\Structures\Final Plans\Str. #1\R-2233AB_SD_STR#1_13_B1&2.dgn
ofigueroa

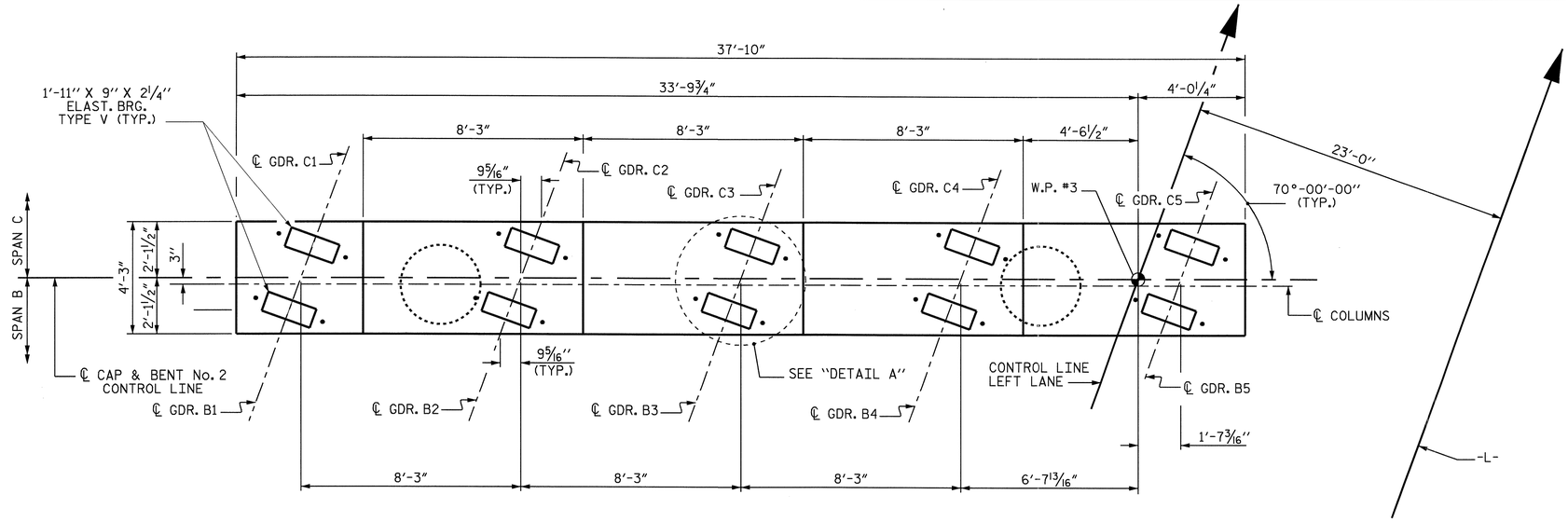

PLAN

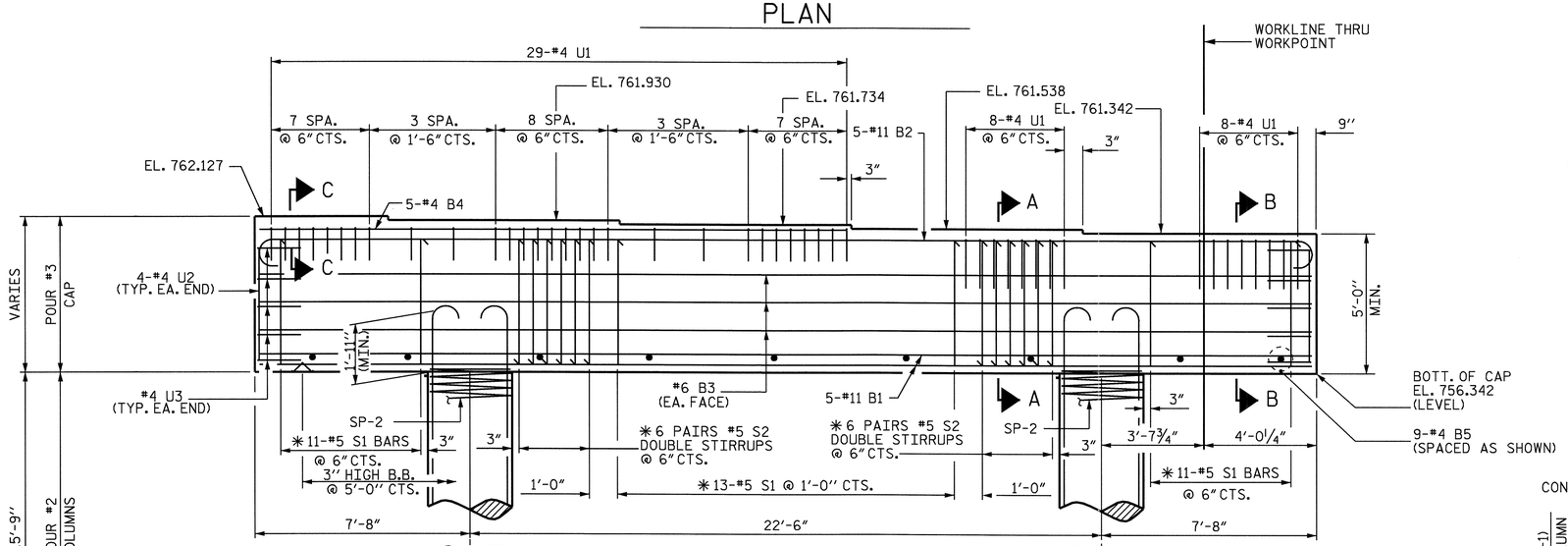

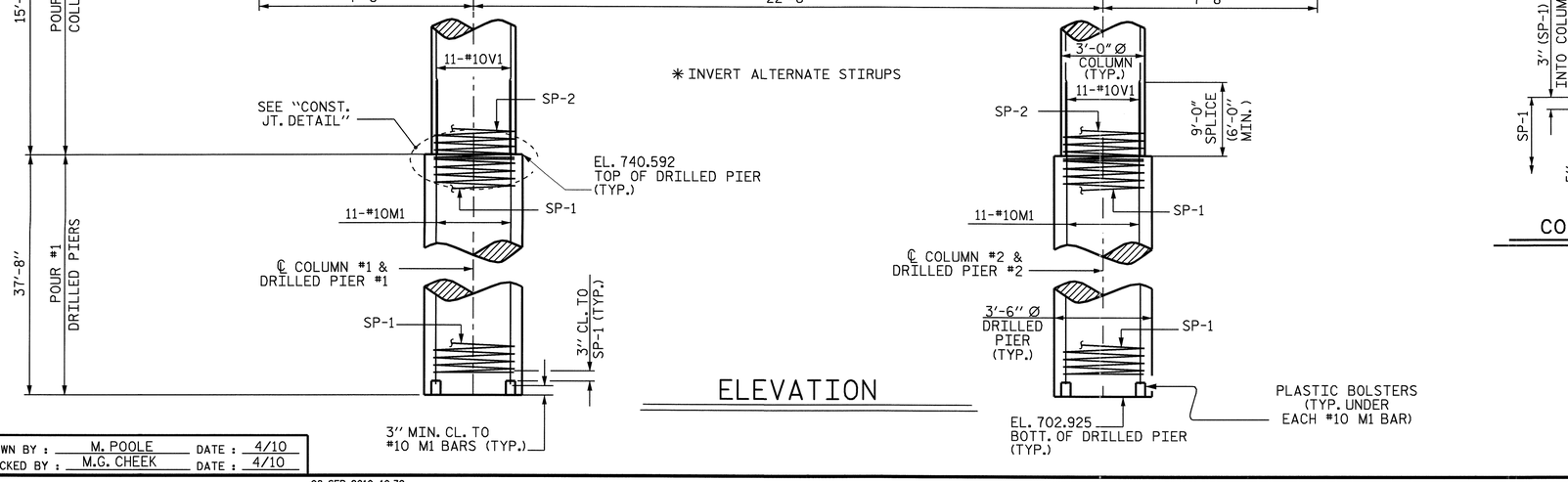

ELEVATION

NOTES

STIRRUPS IN CAP MAY BE SHIFTED AS NECESSARY TO CLEAR ANCHOR BOLTS.

HOOKS ON "V" BARS MAY BE TURNED AS NECESSARY FOR PLACING REINFORCING STEEL.

ALL STEEL IN THE DRILLED PIERS IS INCLUDED IN THE PAY ITEMS FOR "REINFORCING STEEL" AND "SPIRAL COLUMN REINFORCING STEEL".

THE CONTRACTOR'S ATTENTION IS CALLED TO THE FACT THAT THE LONGITUDINAL REINFORCEMENT FOR THE DRILLED PIERS IS DETAILED WITH 3 FEET OF EXTRA LENGTH.

SPLICING OF THE LONGITUDINAL BARS IN THE DRILLED PIERS WILL NOT BE PERMITTED.

FOR DRILLED PIERS, SEE SPECIAL PROVISIONS.

2" MINIMUM CONCRETE COVER FROM END OF CAP REQUIRED FOR ALL "U" BARS.

THE CONTRACTOR SHALL ALIGN THE "V" BARS AS SHOWN IN THE PLAN OF DRILLED PIERS AND COLUMNS.

THE CONTRACTOR'S ATTENTION IS CALLED TO THE FACT THAT THE CENTERLINE OF THE COLUMNS & DRILLED PIERS IS OFFSET 3" FROM THE BENT CONTROL LINE.

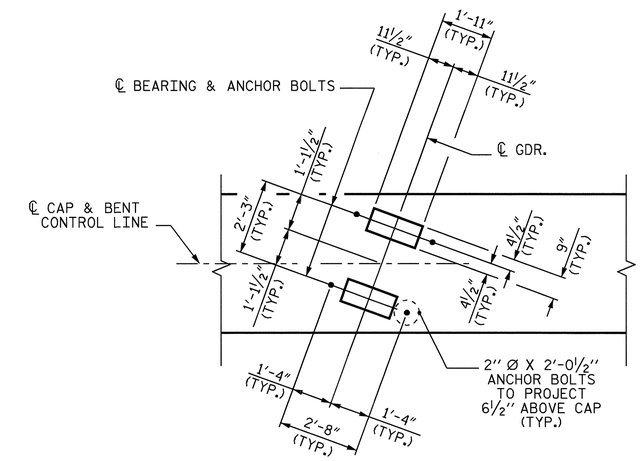

DETAIL A

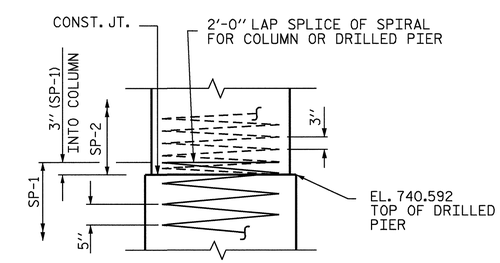

CONSTRUCTION JOINT DETAIL

PROJECT NO. R-2233AB

RUTHERFORD COUNTY

STATION: 280+13.00 -L-

SHEET 1 OF 2

STATE OF NORTH CAROLINA
DEPARTMENT OF TRANSPORTATION
RALEIGH

SUBSTRUCTURE
BENT No. 2
LEFT LANE

NORTH CAROLINA PROFESSIONAL SEAL 20125 ENGINEER MARSHALL G. CHEEK, JR.
9-15-10

REVISIONS								SHEET NO.
NO.	BY:	DATE:	NO.	BY:	DATE:			S-24
1			3					TOTAL SHEETS
2			4					184

DRAWN BY : M. POOLE DATE : 4/10
CHECKED BY : M.G. CHEEK DATE : 4/10

08-SEP-2010 10:32
R:\Structures\Final Plans\Str. #1\R-2233AB_SD_STR#1_13_B1&2.dgn
mpoole

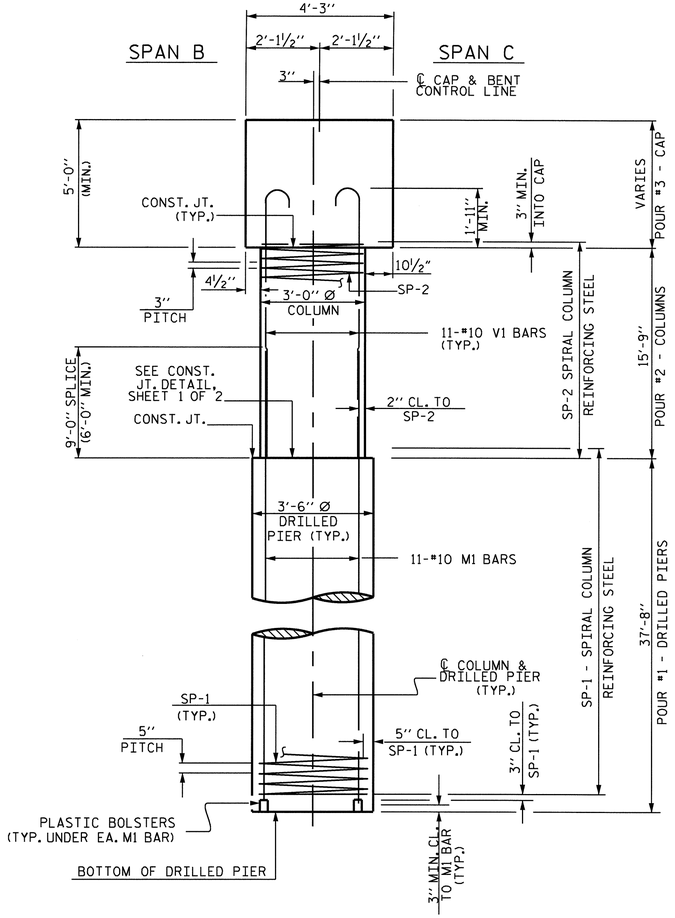

END ELEVATION

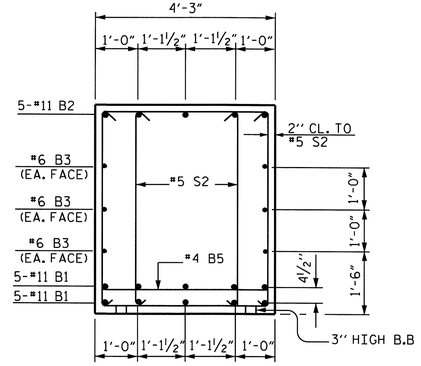

SECTION A-A

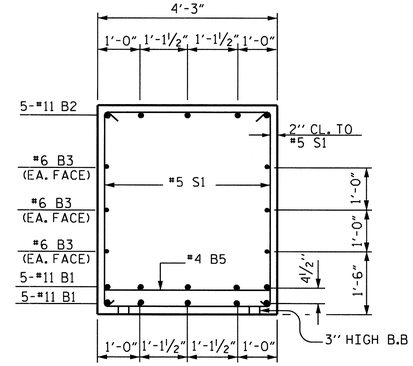

SECTION B-B

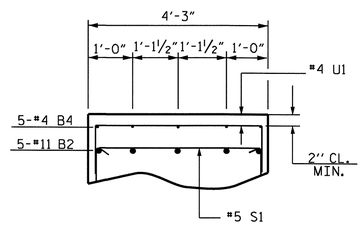

SECTION C-C

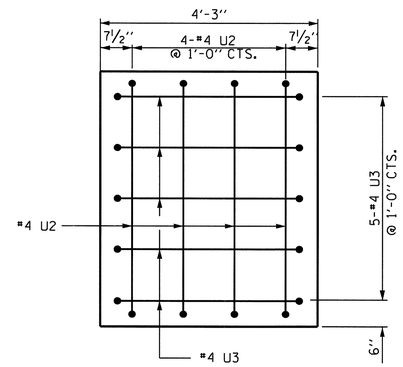

END VIEW

(TYPICAL EACH END)

BILL OF MATERIAL

BENT No. 2

BAR	NO.	SIZE	TYPE	LENGTH	WEIGHT
B1	10	11	STR	37'-6"	1992
B2	5	11	1	40'-6"	1076
B3	6	6	STR	37'-6"	338
B4	5	4	STR	20'-8"	69
B5	9	4	STR	3'-11"	24
M1	22	10	STR	46'-5"	4394
S1	35	5	4	14'-1"	514
S2	24	5	4	13'-4"	334
U1	45	4	3	6'-11"	208
U2	8	4	3	6'-8"	36
U3	10	4	3	6'-9"	45
V1	22	10	2	19'-1"	1807
REINFORCING STEEL					10837 LBS

BAR	NO.	SIZE	TYPE	LENGTH	WEIGHT
SP-1	2	***	5	746'-5"	1557
SP-2	2	**	6	540'-5"	722
SPIRAL COLUMN REINFORCING STEEL					2279 LBS

CLASS A CONCRETE BREAKDOWN

POUR #2 (COLUMNS)	8.3 C.Y.
POUR #3 (CAP)	31.9 C.Y.
TOTAL	40.2 C.Y.

DRILLED PIER QUANTITIES

DRILLED PIER CONCRETE BREAKDOWN

POUR #1 (DRILLED PIERS)	26.8 C.Y.
3'-6" Ø DRILLED PIERS IN SOIL	57.33 LIN. FT.
3'-6" Ø DRILLED PIERS NOT IN SOIL	18.00 LIN. FT.
PERMANENT STEEL CASING FOR 3'-6" Ø DRILLED PIERS	4.18 LIN. FT.
CSL TUBES	321.33 LIN. FT.

BAR TYPES

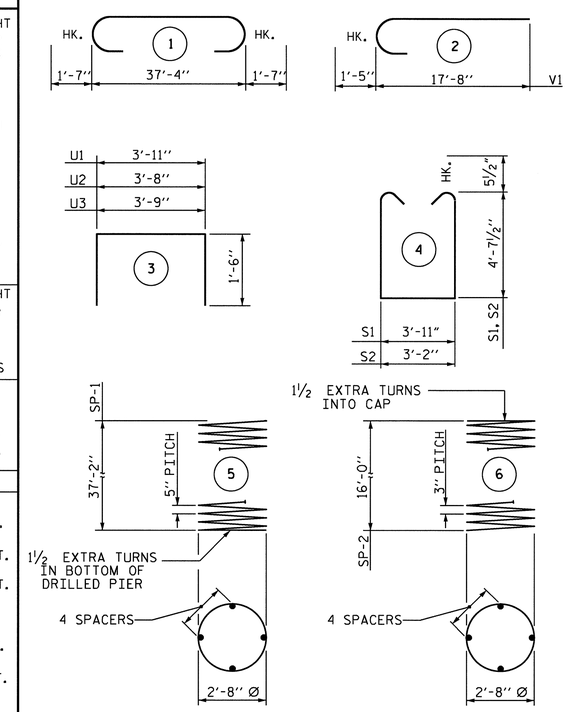

ALL BAR DIMENSIONS ARE OUT TO OUT.

*** THE SP-1 SPIRAL REINFORCING STEEL SHALL BE W31 OR D-31 COLD DRAWN WIRE OR #5 PLAIN OR DEFORMED BAR.

** THE SP-2 SPIRAL REINFORCING STEEL SHALL BE W20 OR D-20 COLD DRAWN WIRE OR #4 PLAIN OR DEFORMED BAR.

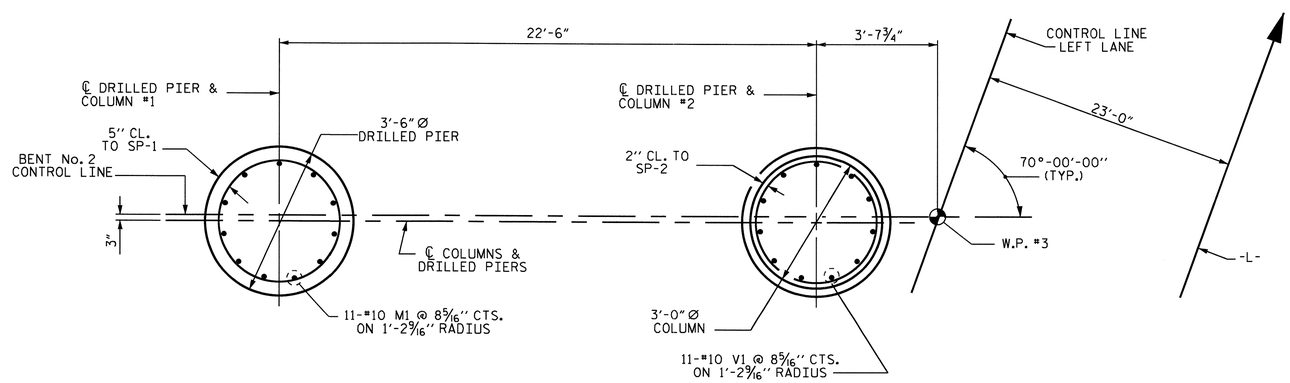

PARTIAL PLAN OF DRILLED PIER

PARTIAL PLAN OF COLUMN

PLAN OF DRILLED PIERS & COLUMNS

(DIMENSIONS & REINFORCING STEEL ARE TYPICAL FOR EACH COLUMN & DRILLED PIER)

PROJECT NO. R-2233AB
RUTHERFORD COUNTY
STATION: 280+13.00 -L-

SHEET 2 OF 2

STATE OF NORTH CAROLINA
DEPARTMENT OF TRANSPORTATION
RALEIGH

SUBSTRUCTURE
BENT No. 2
LEFT LANE

NORTH CAROLINA PROFESSIONAL SEAL 20125 ENGINEER WARSHAM G. CHEEK, JR.
9-15-10

REVISIONS						SHEET NO.
NO.	BY:	DATE:	NO.	BY:	DATE:	S-25
1			3			TOTAL SHEETS
2			4			184

DRAWN BY : M. POOLE DATE : 4/10
CHECKED BY : M.G. CHEEK DATE : 4/10

08-SEP-2010 08:40
R:\Structures\Final Plans\Str. #1\R-2233AB_SD_STR#1_13_B1&2.dgn
ofigueroa

STR. #1

NOTES

THE CONTRACTOR SHALL PROVIDE FOR INSTALLATION OF THE 4"DIAMETER DRAIN PIPE THROUGH THE WING WALL AS REQUIRED FOR REINFORCED BRIDGE APPROACH FILLS, SEE THE ROADWAY PLANS. REINFORCING STEEL IN THE WING WALL MAY BE SHIFTED AS NECESSARY TO CLEAR THE DRAIN PIPE.

THE CONCRETE IN THE SHADED AREA OF THE WING SHALL BE POURED AFTER THE BARRIER RAIL IS CAST IF SLIP FORMING IS USED.

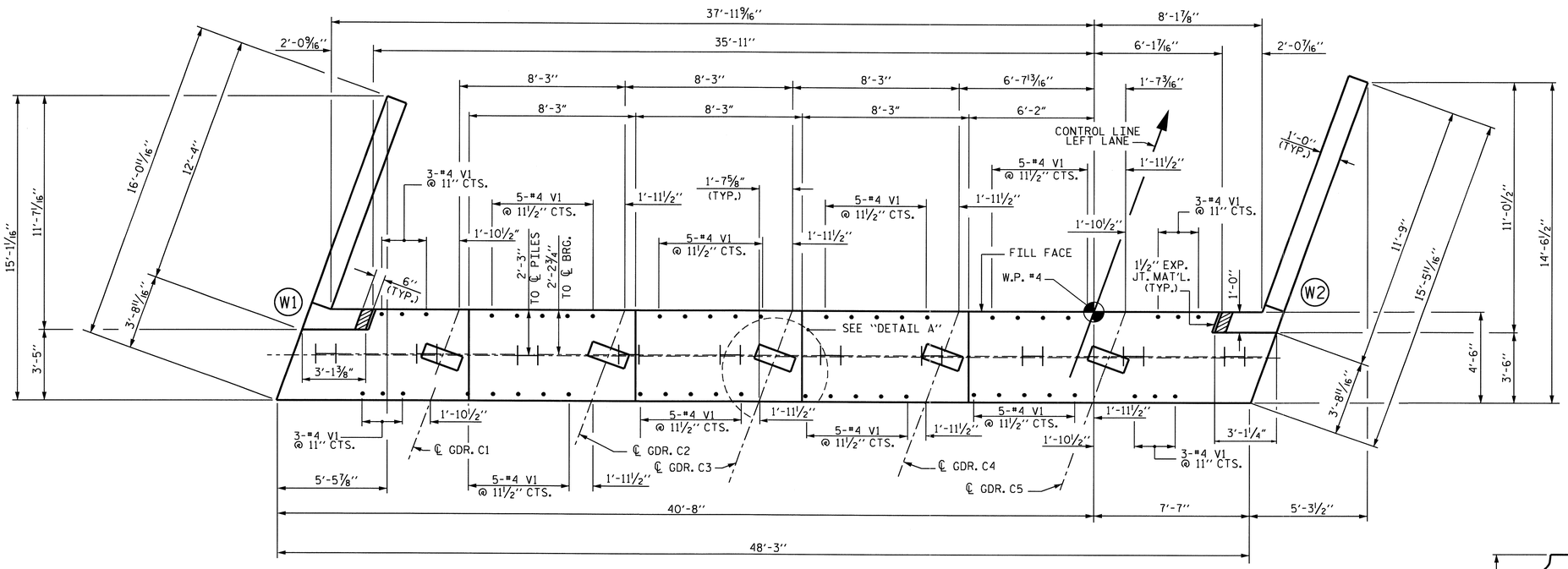

PLAN

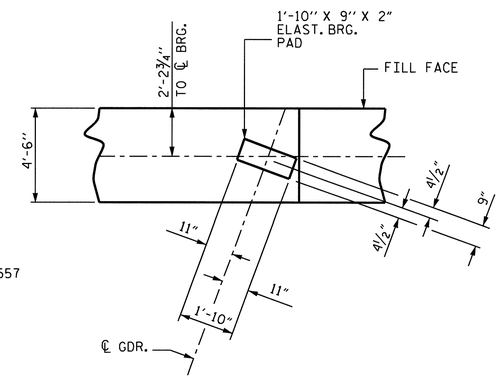

DETAIL A

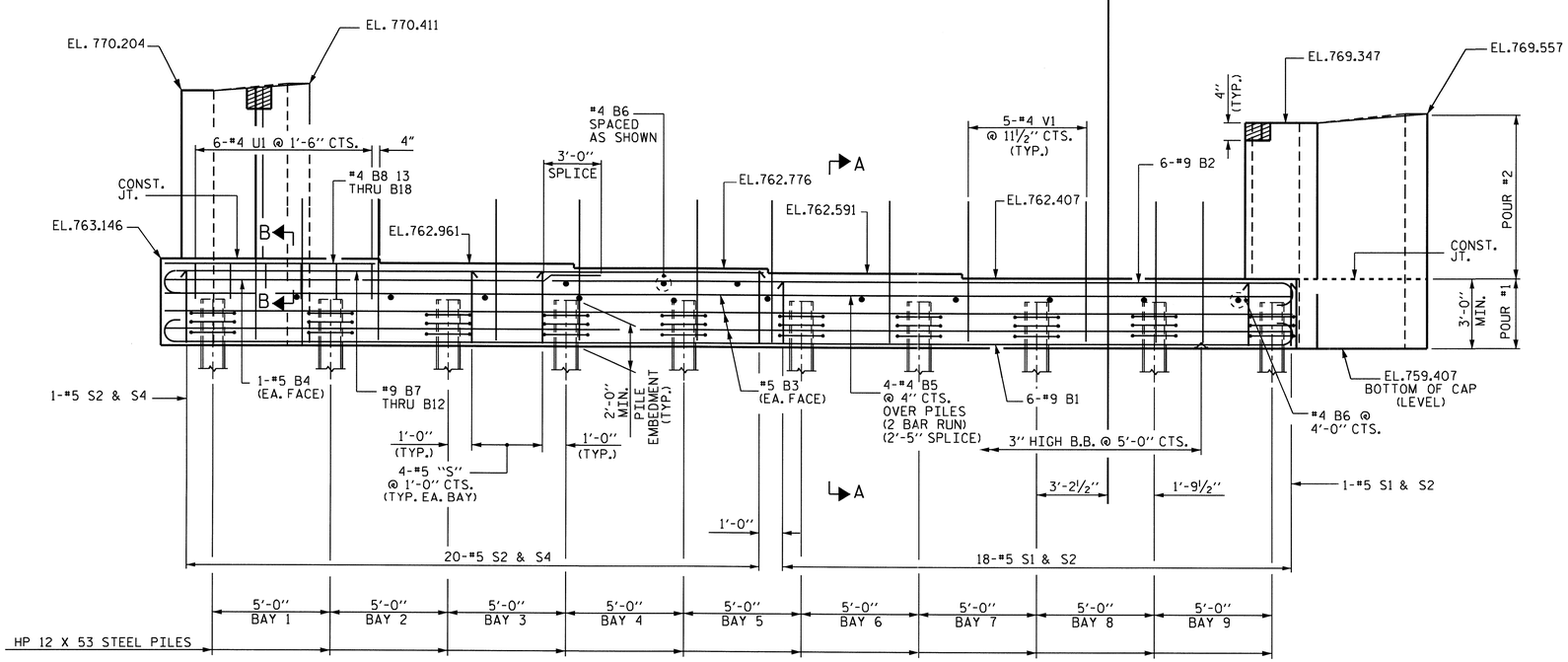

ELEVATION

PROJECT NO. R-2233AB
RUTHERFORD COUNTY
STATION: 280+13.00 -L-

SHEET 1 OF 3

STATE OF NORTH CAROLINA
DEPARTMENT OF TRANSPORTATION
RALEIGH

SUBSTRUCTURE
END BENT No. 2
LEFT LANE

NORTH CAROLINA PROFESSIONAL SEAL 20125 ENGINEER MARSHALL L. GREER, JR.
9-15-10

REVISIONS						SHEET NO.
NO.	BY:	DATE:	NO.	BY:	DATE:	S-26
1			3			TOTAL SHEETS
2			4			184

DRAWN BY : M. POOLE DATE : 08/09
CHECKED BY : V.X. NGUYEN DATE : 08/10

08-SEP-2010 10:16
R:\Structures\Final Plans\Str. #1\R-2233AB_sd_STR#1_12_EB 1&2 .dgn
afigueroa

NCDOS

STR. #1

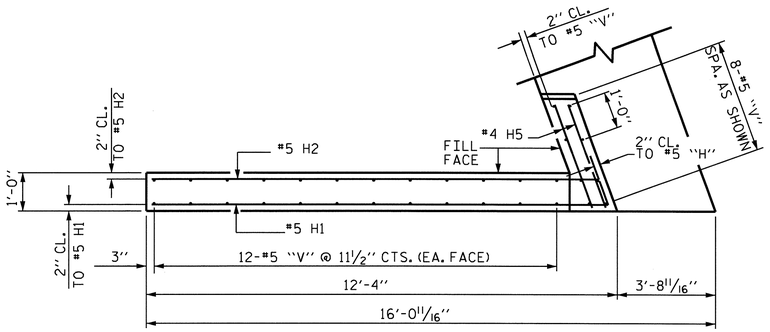

PLAN OF WING - W1

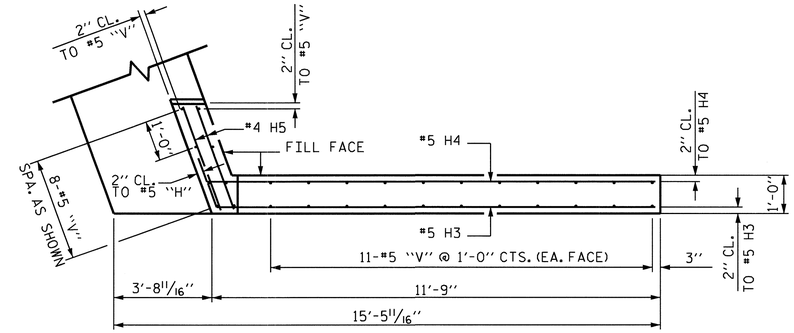

PLAN OF WING - W2

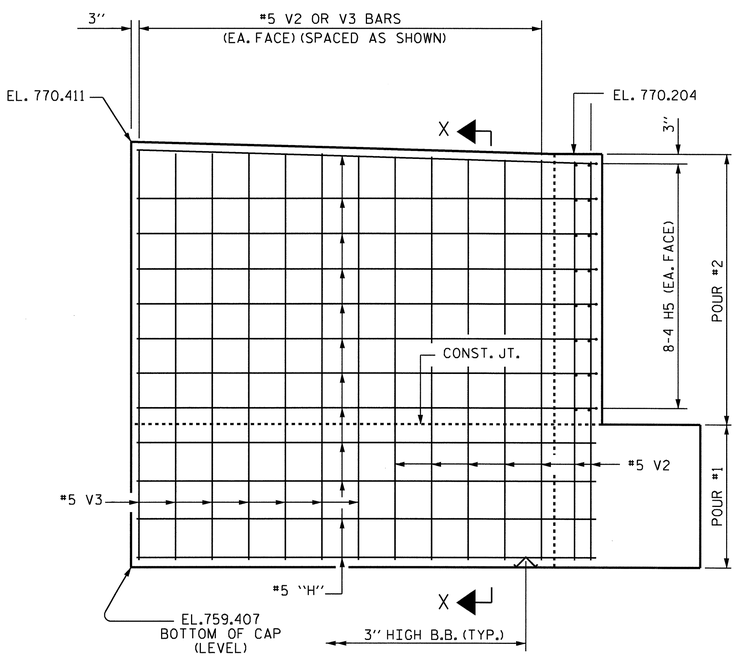

ELEVATION OF WING - W1

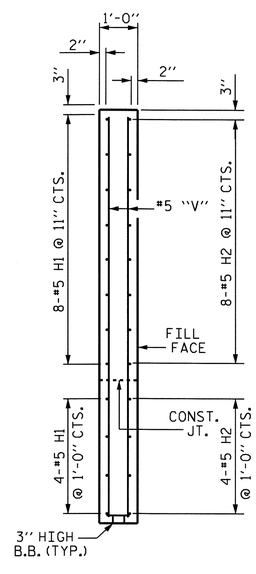

SECTION X-X

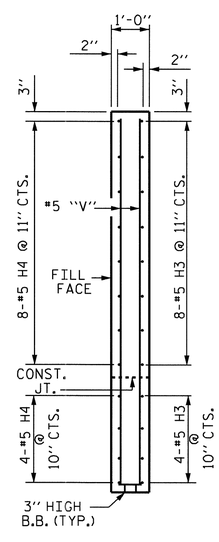

SECTION Y-Y

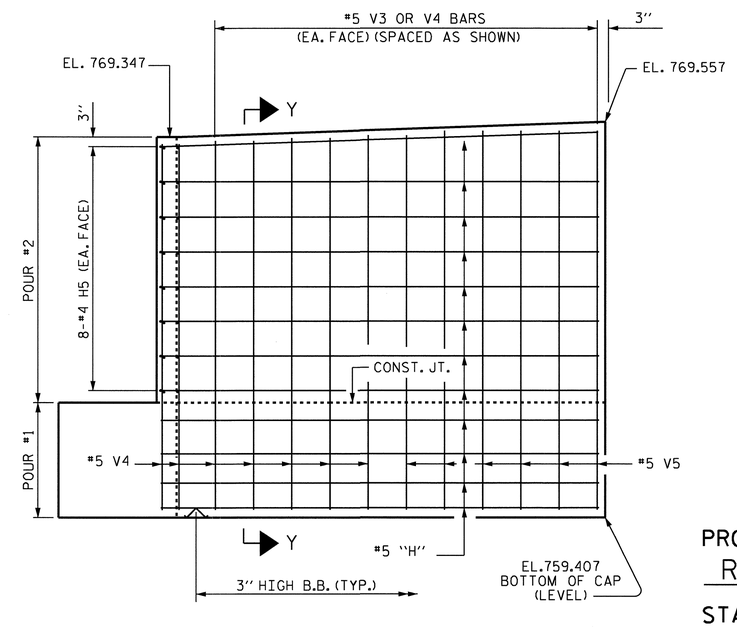

ELEVATION OF WING - W2

PROJECT NO. R-2233AB
RUTHERFORD COUNTY
STATION: 280+13.00 -L-

SHEET 2 OF 3

STATE OF NORTH CAROLINA
DEPARTMENT OF TRANSPORTATION
RALEIGH

SUBSTRUCTURE
END BENT No. 2
LEFT LANE

NORTH CAROLINA PROFESSIONAL SEAL 20125 ENGINEER MARSHALL L. GREEK, JR. 9-15-10

REVISIONS						SHEET NO.
NO.	BY:	DATE:	NO.	BY:	DATE:	S-27
1			3			TOTAL SHEETS
2			4			184

DRAWN BY : M. POOLE DATE : 08/09
CHECKED BY : V.X. NGUYEN DATE : 08/10

08-SEP-2010 08:40
R:\Structures\Final Plans\Str. #1\R-2233AB_sd_STR#1_12_EB 1&2 .dgn
ofigueroa

STR. #1

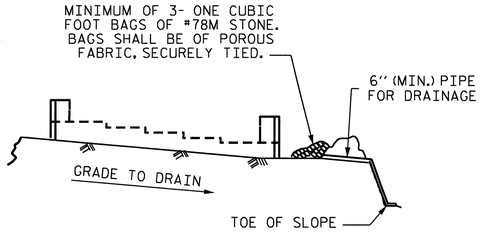

BAGGED STONE AND PIPE SHALL BE PLACED IMMEDIATELY AFTER COMPLETION OF END BENT EXCAVATION. PIPE MAY BE EITHER CONCRETE, CORRUGATED STEEL, CORRUGATED ALUMINUM ALLOY, OR CORRUGATED PLASTIC. PERFORATED PIPE WILL NOT BE ALLOWED.

BAGGED STONE SHALL REMAIN IN PLACE UNTIL THE ENGINEER DIRECTS THAT IT BE REMOVED. THE CONTRACTOR SHALL REMOVE AND DISPOSE OF SILT ACCUMULATIONS AT BAGGED STONE WHEN SO DIRECTED BY THE ENGINEER. BAGS SHALL BE REMOVED AND REPLACED WHENEVER THE ENGINEER DETERMINES THAT THEY HAVE DETERIORATED AND LOST THEIR EFFECTIVENESS.

NO SEPARATE PAYMENT WILL BE MADE FOR THIS WORK AND THE ENTIRE COST OF THIS WORK SHALL BE INCLUDED IN THE UNIT CONTRACT PRICE BID FOR THE SEVERAL PAY ITEMS.

TEMPORARY DRAINAGE AT END BENT

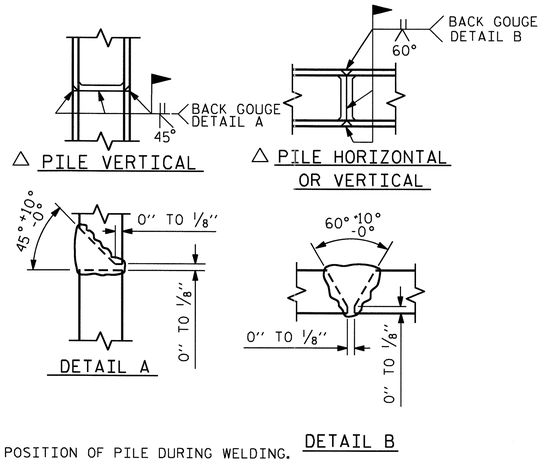

PILE SPLICE DETAILS

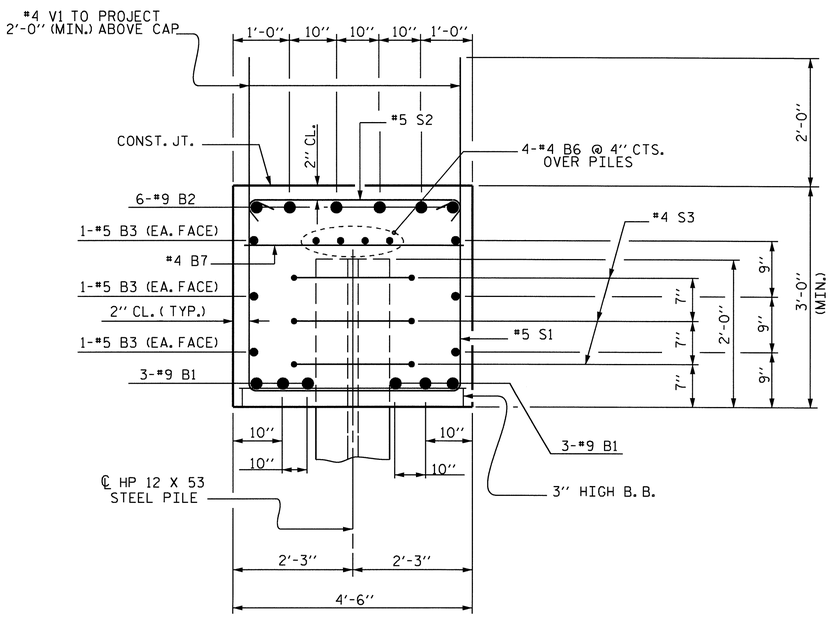

SECTION A-A

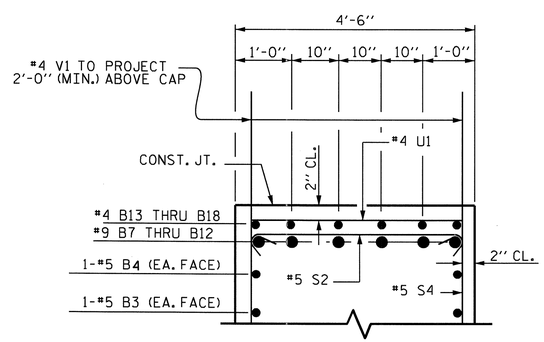

PARTIAL SECTION B-B

BAR TYPES

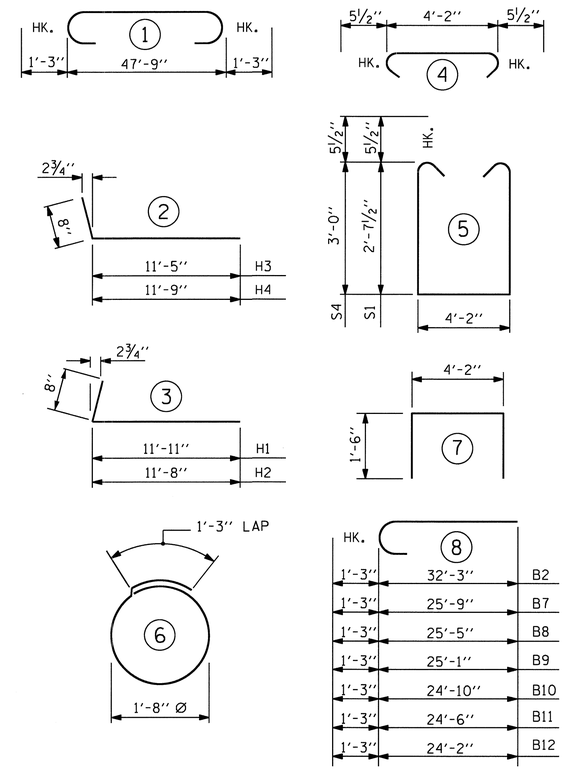

ALL BAR DIMENSIONS ARE OUT TO OUT.

BILL OF MATERIAL

END BENT NO. 2

BAR	NO.	SIZE	TYPE	LENGTH	WEIGHT
B1	6	#9	1	50'-3''	1025
B2	6	#9	8	33'-6''	683
B3	6	#5	STR	47'-11''	300
B4	2	#5	STR	18'-8''	39
B5	8	#4	STR	25'-2''	134
B6	14	#4	STR	4'-2''	39
B7	1	#9	8	27'-0''	92
B8	1	#9	8	26'-8''	91
B9	1	#9	8	26'-4''	90
B10	1	#9	8	26'-1''	89
B11	1	#9	8	25'-9''	88
B12	1	#9	8	25'-5''	86
B13	1	#4	STR	9'-3''	6
B14	1	#4	STR	8'-11''	6
B15	1	#4	STR	8'-7''	6
B16	1	#4	STR	8'-4''	6
B17	1	#4	STR	8'-0''	5
B18	1	#4	STR	7'-8''	5
H1	12	#5	2	12'-7''	157
H2	12	#5	2	12'-4''	154
H3	12	#5	3	12'-1''	151
H4	12	#5	3	12'-5''	155
H5	32	#4	STR	2'-9''	59
S1	18	#5	5	10'-4''	194
S2	38	#5	4	5'-1''	201
S3	30	#4	6	6'-6''	130
S4	20	#5	5	11'-1''	231
U1	6	#4	7	7'-2''	29
V1	52	#4	STR	4'-9''	165
V2	18	#5	STR	10'-5''	196
V3	14	#5	STR	10'-6''	153
V4	18	#5	STR	9'-6''	178
V5	12	#5	STR	9'-7''	120

REINFORCING STEEL = 5063 LBS.

CLASS A CONCRETE
POUR #1 : CAP & BOTT. OF WINGS = 29.8 CU. YDS.
POUR #2 : TOP OF WINGS = 8.3 CU. YDS.
TOTAL CLASS A CONCRETE = 38.1 CU. YDS.

HP 12 X 53 STEEL PILES NO. 10 — 450 LIN. FT.

PROJECT NO. R-2233AB
RUTHERFORD COUNTY
STATION: 280+13.00 -L-

SHEET 3 OF 3

STATE OF NORTH CAROLINA
DEPARTMENT OF TRANSPORTATION
RALEIGH

SUBSTRUCTURE
END BENT NO. 2
LEFT LANE

NORTH CAROLINA PROFESSIONAL SEAL 20125 ENGINEER MARSHALL LIGHT CHEEK, JR.
9-15-10

REVISIONS						SHEET NO.
NO.	BY:	DATE:	NO.	BY:	DATE:	S-28
1			3			TOTAL SHEETS
2			4			184

DRAWN BY : M. POOLE DATE : 08/09
CHECKED BY : V.X. NGUYEN DATE : 08/10

08-SEP-2010 08:40
R:\Structures\Final Plans\Str. #1\R-2233AB_sd_STR#1_12_EB 1&2 .dgn
afigueroa

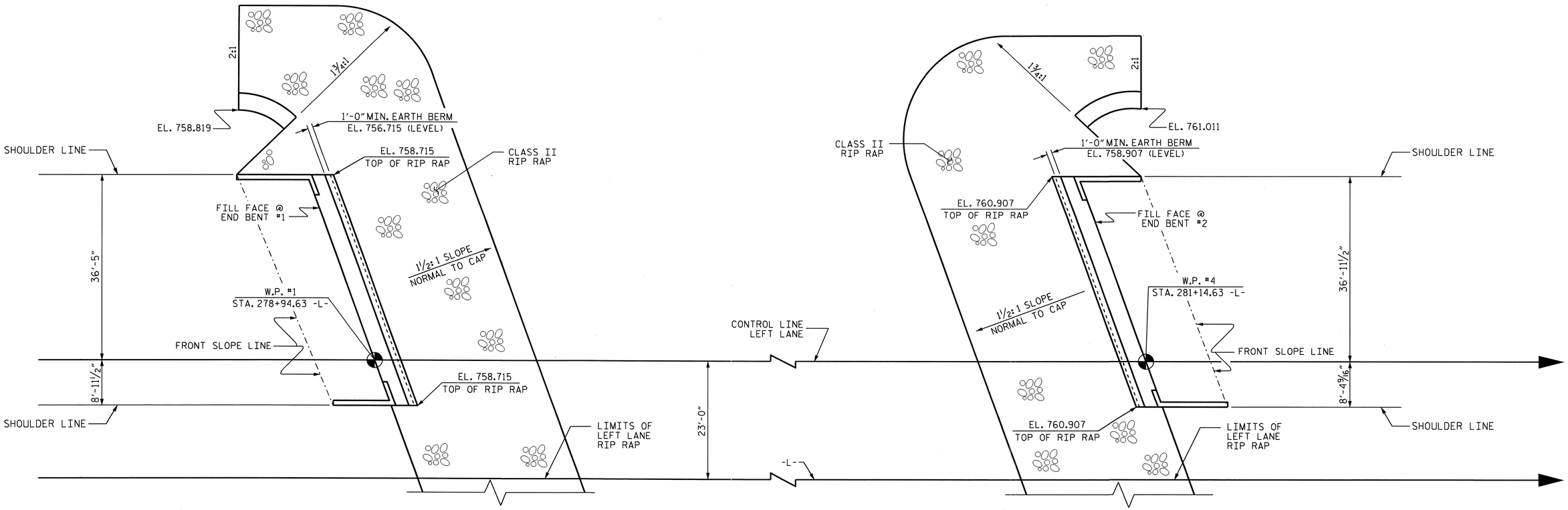

PLAN OF RIP RAP

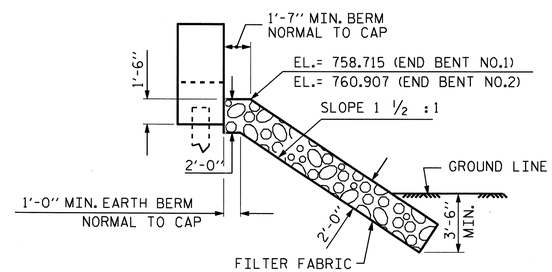

℄ SECTION
BERM RIP RAPPED

ESTIMATED QUANTITIES		
BRIDGE @ STA. 280+13.00 -L- (LEFT LANE)	RIP RAP CLASS II	FILTER FABRIC FOR DRAINAGE
	TONS	SQUARE YARDS
END BENT 1	334	371
END BENT 2	377	418

PROJECT NO. R-2233AB
RUTHERFORD COUNTY
STATION: 280+13.00 -L-

STATE OF NORTH CAROLINA
DEPARTMENT OF TRANSPORTATION
RALEIGH

STANDARD
RIP RAP DETAILS
LEFT LANE

NORTH CAROLINA PROFESSIONAL SEAL 20125 ENGINEER MARSHALL L. GREEK, JR.
9-15-10

REVISIONS						SHEET NO.
NO.	BY:	DATE:	NO.	BY:	DATE:	S-29
1			3			TOTAL SHEETS
2			4			184

DRAWN BY : A.L. FIGUEROA DATE : 03/17/10
CHECKED BY : W.D. CRUTCHER DATE : 03-24-10

DRAWN BY :	REK 1/84	REV. 8/16/99	RWW/LES
CHECKED BY :	RDU 1/84	REV. 10/17/00	RWW/LES
		REV. 5/1/06	TLA/GM

29-JUL-2010 11:53
R:\Structures\Str#1\A.L. Figueroa\Microstation\r-2233ab_sd_str#1_14_sp.dgn
afigueroa

STR#1

STD. NO. RR1

2'-0" SPLICE FOR A1 OR A3
1'-9" SPLICE FOR A2 OR A4

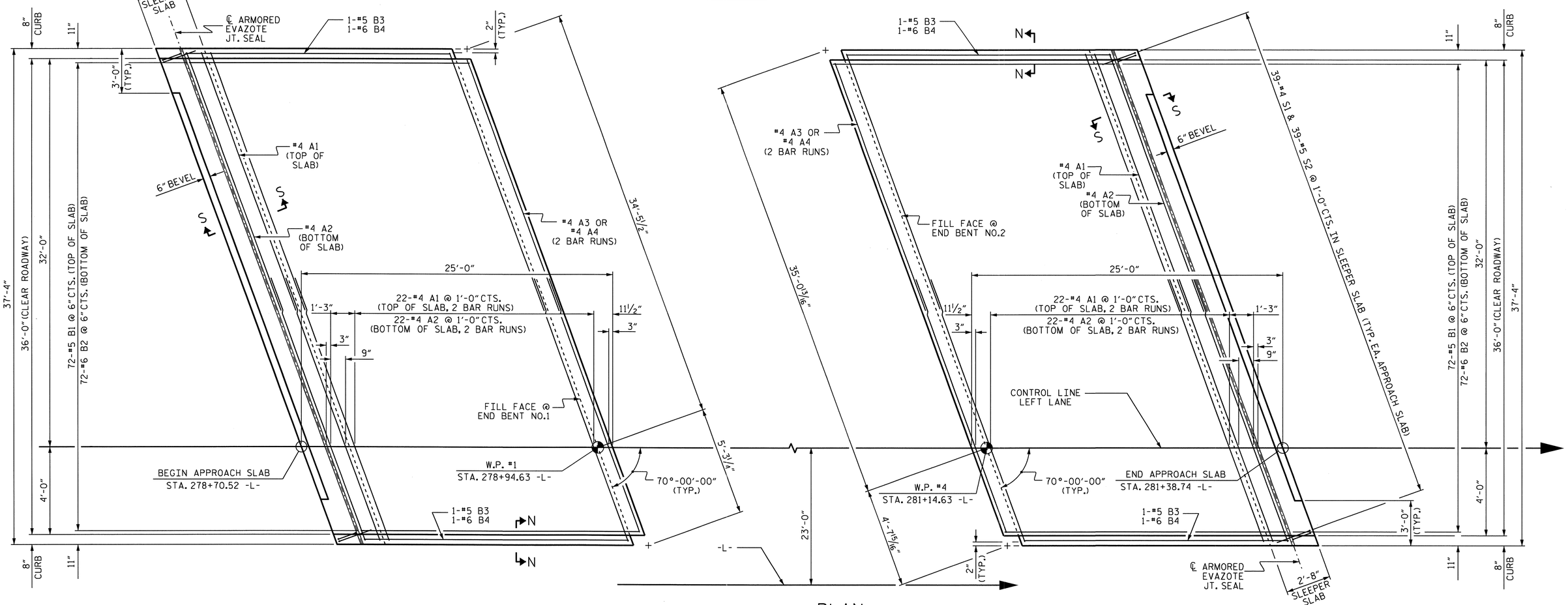

APPROACH SLAB @ END BENT NO. 1

PLAN

APPROACH SLAB @ END BENT NO. 2

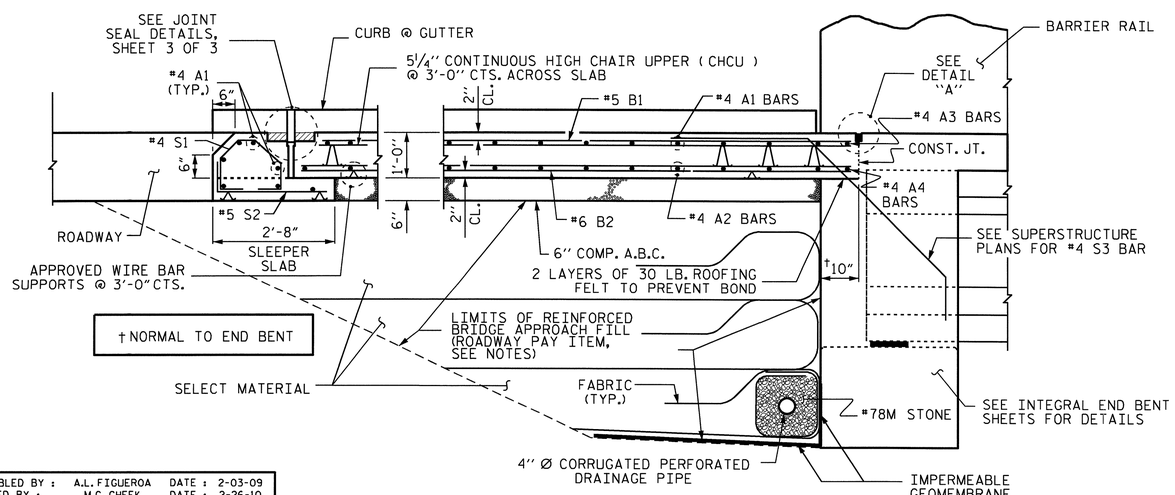

SECTION THRU SLAB

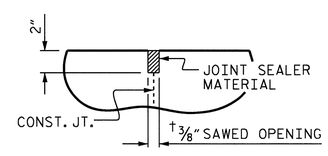

DETAIL "A"

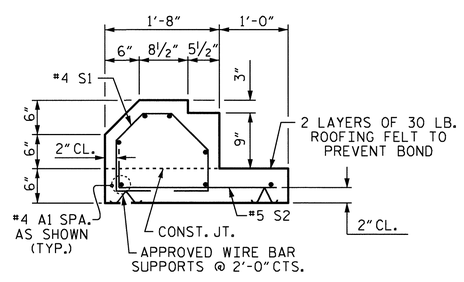

SECTION S-S
SHOWING SLEEPER SLAB

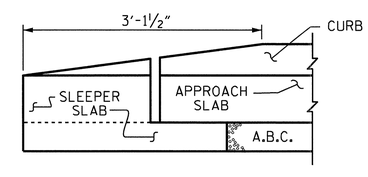

END OF CURB WITHOUT SHOULDER BERM GUTTER

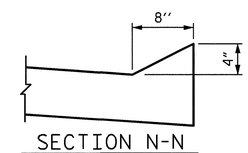

SECTION N-N

PROJECT NO. R-2233AB
RUTHERFORD COUNTY
STATION: 280+13.00 -L-

SHEET 1 OF 3

STATE OF NORTH CAROLINA
DEPARTMENT OF TRANSPORTATION
RALEIGH

BRIDGE APPROACH SLAB FOR INTEGRAL ABUTMENT

LEFT LANE

NORTH CAROLINA PROFESSIONAL SEAL 20125 ENGINEER MARSHALL W. CHEEK, JR.
9-15-10

REVISIONS						SHEET NO.
NO.	BY:	DATE:	NO.	BY:	DATE:	S-30
1			3			TOTAL SHEETS
2			4			184

ASSEMBLED BY : A.L. FIGUEROA	DATE : 2-03-09	
CHECKED BY : M.G. CHEEK	DATE : 2-26-10	
DRAWN BY : TLA 10/05	ADDED 5/1/06R KMM/GM	
CHECKED BY : GM 5/06		

07-SEP-2010 12:54
R:\Structures\Final Plans\Str. #1\R-2233AB_SD_STR#1_15_IAS.dgn
afigueroa

STR. #1 STD. NO. BAS11

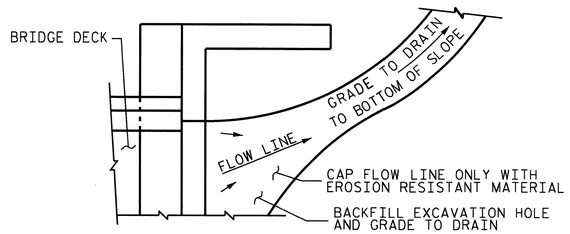

NOTE: IF THE APPROACH SLAB IS NOT CONSTRUCTED IMMEDIATELY AFTER THE BACKFILLING OF THE END BENT EXCAVATION, GRADE TO DRAIN TO THE BOTTOM OF THE SLOPE AND PROVIDE EROSION RESISTANT MATERIAL, SUCH AS FIBERGLASS ROVING OR AS DIRECTED BY THE ENGINEER TO PREVENT SOIL EROSION AND TO PROTECT THE AREA ADJACENT TO THE STRUCTURE. THE CONTRACTOR WILL BE REQUIRED TO REMOVE THESE MATERIALS PRIOR TO CONSTRUCTION OF THE APPROACH SLAB.

TEMPORARY DRAINAGE DETAIL

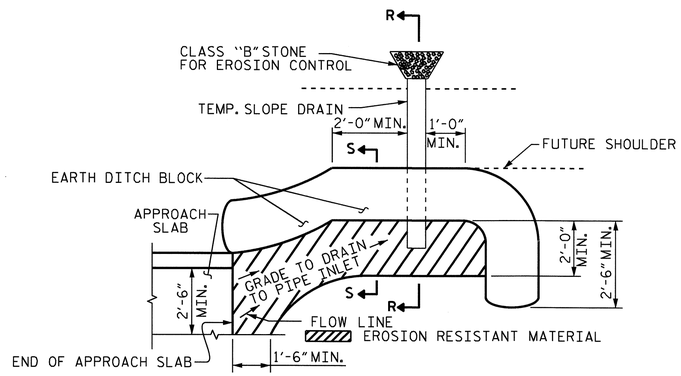

NOTE: IMMEDIATELY AFTER THE CONSTRUCTION OF THE APPROACH SLAB, THE CONTRACTOR SHALL PROVIDE TEMPORARY BERM AND SLOPE DRAIN. CONTRACTOR SHALL GRADE TO PIPE INLET AND PROVIDE EROSION RESISTANT MATERIAL AS SHOWN. THE EROSION RESISTANT MATERIAL SHALL BE EITHER 1) ASPHALT PLANT MIX, TYPE 1 OR TYPE 2, MIN. 2" DEPTH, 2) EROSION CONTROL MAT, OR 3) CONCRETE, AS DIRECTED BY THE ENGINEER. THE SLOPE DRAIN SHALL CONSIST OF A NON-PERFORATED TEMPORARY DRAINAGE PIPE, 12 INCHES DIAMETER.

PLAN VIEW

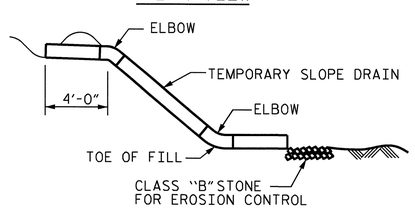

SECTION R-R

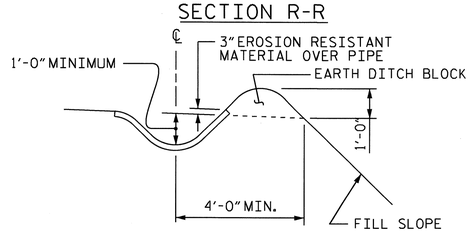

SECTION S-S

TEMPORARY BERM AND SLOPE DRAIN DETAILS

BILL OF MATERIAL

APPROACH SLAB AT EB NO.1

BAR	NO.	SIZE	TYPE	LENGTH	WEIGHT
✱ A1	60	#4	STR	20'-9"	832
A2	46	#4	STR	20'-7"	632
✱ A3	2	#4	STR	20'-1"	27
A4	2	#4	STR	19'-11"	27
✱ B1	72	#5	STR	22'-5"	1683
B2	72	#6	STR	22'-10"	2469
✱ B3	2	#5	STR	21'-6"	45
B4	2	#6	STR	22'-0"	66
✱ S1	39	#4	1	4'-1"	106
S2	39	#5	2	3'-0"	122

REINFORCING STEEL	LBS.	3316
✱ EPOXY COATED REINFORCING STEEL	LBS.	2693
CLASS AA CONCRETE		
POUR #1 SLEEPER SLAB		3.9 C.Y.
POUR #2 SLAB & CURB		32.2 C.Y.
TOTAL		36.1 C.Y.

APPROACH SLAB AT EB NO.2

BAR	NO.	SIZE	TYPE	LENGTH	WEIGHT
✱ A1	60	#4	STR	20'-9"	832
A2	46	#4	STR	20'-7"	632
✱ A3	2	#4	STR	20'-1"	27
A4	2	#4	STR	19'-11"	27
✱ B1	72	#5	STR	22'-5"	1683
B2	72	#6	STR	22'-10"	2469
✱ B3	2	#5	STR	21'-6"	45
B4	2	#6	STR	22'-0"	66
✱ S1	39	#4	1	4'-1"	106
S2	39	#5	2	3'-0"	122

REINFORCING STEEL	LBS.	3316
✱ EPOXY COATED REINFORCING STEEL	LBS.	2693
CLASS AA CONCRETE		
POUR #1 SLEEPER SLAB		3.9 C.Y.
POUR #2 SLAB & CURB		32.2 C.Y.
TOTAL		36.1 C.Y.

BAR TYPES

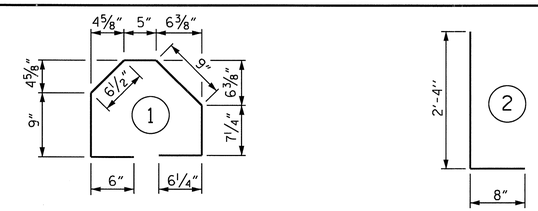

ALL BAR DIMENSIONS ARE OUT TO OUT

✱ THESE BARS ARE EPOXY COATED

NOTES

APPROACH SLAB SHALL NOT BE CONSTRUCTED PRIOR TO COMPLETION OF THE BRIDGE DECK.

FOR REINFORCED BRIDGE APPROACH FILL INCLUDING FABRIC, IMPERMEABLE GEOMEMBRANE, 4" Ø DRAINAGE PIPE, #78M STONE, AND SELECT MATERIAL, SEE ROADWAY PLANS.

TEMPORARY DRAINAGE AND TEMPORARY BERM AND SLOPE DRAINS WILL BE PAID FOR UNDER THE LUMP SUM PRICE FOR BRIDGE APPROACH SLABS.

AREA BETWEEN THE WINGWALL AND APPROACH SLAB SHALL BE GRADED TO DRAIN THE WATER AWAY FROM THE FILL FACE OF THE BRIDGE AND SHALL BE PAVED. SEE ROADWAY PLANS.

THE 6" COMP. A.B.C. SHALL BE FLUSH WITH THE SLEEPER SLAB AND SHALL EXTEND 1'-0" OUTSIDE OF EACH EDGE OF THE APPROACH SLAB.

THE CONTRACTOR MAY USE 4" TYPE B-25.0B ASPHALT CONCRETE BASE COURSE IN LIEU OF 6" COMP. A.B.C. IF THIS OPTION IS USED, THE BASE COURSE SHALL BE FLUSH WITH THE SLEEPER SLAB, AND THE WIDTH SHALL BE THE SAME AS THAT OF THE APPROACH SLAB.

THE CONTRACTOR MAY USE 5" CLASS "A" CONCRETE BASE IN LIEU OF 6" COMP. A.B.C. IF THIS OPTION IS USED, THE CONCRETE BASE SHALL BE FLUSH WITH THE SLEEPER SLAB, AND THE WIDTH SHALL BE THE SAME AS THAT OF THE APPROACH SLAB. THE CONCRETE SHALL BE FINISHED TO A SMOOTH SURFACE AND A LAYER OF 30 LB ROOFING FELT SHALL BE PLACED BETWEEN THE CONCRETE BASE AND THE APPROACH SLAB TO PREVENT BOND. THE APPROACH SLAB SHALL NOT BE CAST UNTIL THE CONCRETE BASE HAS REACHED AN AGE OF THREE CURING DAYS.

THE VERTICAL JOINT ON THE RIGHT AND LEFT SIDE OF THE APPROACH SLAB AT THE ENDS OF THE EVAZOTE JOINT SHALL BE FILLED WITH SILICONE OR OTHER APPROVED MATERIAL IN ORDER TO PREVENT BACKFILL FROM ENTERING THE JOINT OPENING.

THE JOINT OPENING AT THE APPROACH SLAB/DECK INTERFACE SHALL BE SAWED NO MORE THAN 12 HOURS AFTER THE APPROACH SLAB IS CAST. THE JOINT SHALL BE CLEANED OF ALL DEBRIS BEFORE THE SEALANT IS APPLIED. THE JOINT SEALER MATERIAL SHALL CONFORM TO THE REQUIREMENTS OF TYPE SL LOW MODULUS SILICONE SEALANT.

GROOVING BRIDGE FLOORS IS NOT REQUIRED ON THE TOP SURFACE OF THE SLEEPER SLAB. INSTEAD, APPLY A BROOMED TEXTURE IN ACCORDANCE WITH ARTICLE 442-3 OF THE STANDARD SPECIFICATIONS.

PROJECT NO. R-2233AB
RUTHERFORD COUNTY
STATION: 280+13.00 -L-

SHEET 2 OF 3

STATE OF NORTH CAROLINA
DEPARTMENT OF TRANSPORTATION
RALEIGH

STANDARD
BRIDGE APPROACH SLAB DETAILS
LEFT LANE

NORTH CAROLINA PROFESSIONAL SEAL 20125 ENGINEER MARSHALL G. CHEEK, JR.
1-9-10

ASSEMBLED BY :	A.L. FIGUEROA	DATE :	2-03-09
CHECKED BY :	M.G. CHEEK	DATE :	2-26-10

DRAWN BY :	FCJ	11/88	REV. 10/17/00	RWW/LES
CHECKED BY :	ARB	11/88	REV. 5/7/03	RWW/JTE
			REV. 5/1/06	TLA/GM

REVISIONS						SHEET NO.
NO.	BY:	DATE:	NO.	BY:	DATE:	S-31
1			3			TOTAL SHEETS
2			4			184

STR. #1 STD. NO. BAS11

27-JUL-2010 14:04
R:\Structures\Str#1\A.L. Figueroa\Microstation\R-2233AB_SD_STR#1_15_IAS.dgn
afigueroa

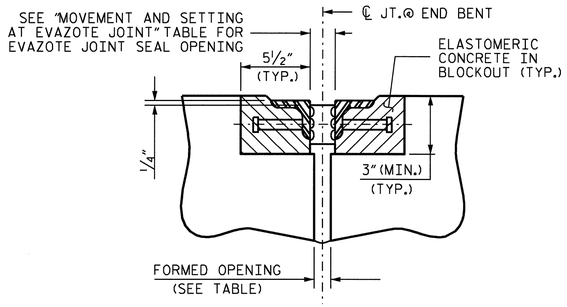

SECTION C-C
ARMORED EVAZOTE JOINT SEAL

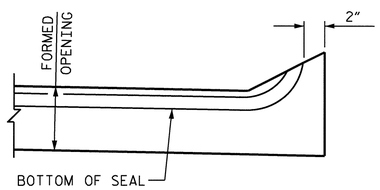

SECTION A-A

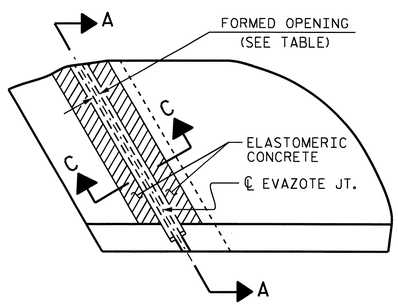

PLAN

JOINT SEAL DETAILS

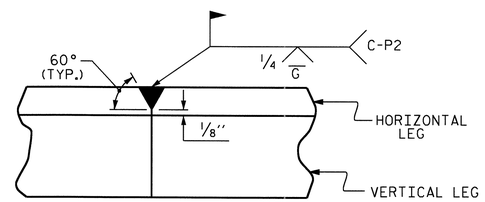

DETAIL- FIELD WELD SPLICE OF ANGLE

NOTES

ANGLES SHALL CONFORM TO AASHTO M270 GRADE 36 STEEL OR APPROVED EQUAL. ALL STUD ANCHORS SHALL CONFORM TO AASHTO M169 GRADES 1010 THRU 1020 OR APPROVED EQUAL.

STUD ANCHORS SHALL BE SHOP WELDED AND ALL HOLES SHALL BE SHOP DRILLED AS SHOWN ON THE PLANS. STUD ANCHORS SHALL BE ELECTRIC ARC END WELDED WITH COMPLETE FUSION.

UPON COMPLETION OF SHOP FABRICATION, THE ENTIRE ANCHOR ASSEMBLY SHALL BE METALLIZED. THE ½" Ø STUD ANCHORS AND ANCHOR TABS NEED NOT BE METALLIZED. SEE SPECIAL PROVISION FOR THERMAL SPRAYED COATINGS (METALLIZATION).

ANCHOR ASSEMBLY SHALL BE MADE CONTINUOUS THE LENGTH OF THE JOINT FROM GUTTER TO GUTTER. FOR FIELD SPLICES AT ALL CROWN BREAK POINTS, THE ENDS OF THE STEEL ANGLES SHALL BE CUT PARALLEL TO THE BRIDGE CENTERLINE. FINISHED FIELD WELDS SHALL BE GROUND SMOOTH AND COATED WITH A MINIMUM THICKNESS OF 4 DRY MILS OF ZINC-RICH PAINT IN ACCORDANCE WITH THE STANDARD SPECIFICATIONS.

ANCHOR ASSEMBLY SEGMENTS SHALL NOT BE LESS THAN 12 FEET NO MORE THAN 20 FEET IN LENGTH. SHORTER SEGMENTS MAY BE USED AT THE EDGE OF ROADWAY OR AT POINTS OF STAGED CONSTRUCTION.

THE ANCHOR ASSEMBLY SHALL BE SECURED AND LEVELED AS SHOWN IN THE "ARMORED JOINT ANCHOR ASSEMBLY DETAILS". NO SUBMITTALS ARE REQUIRED FOR ⅜" Ø EXPANSION ANCHORS, NUTS OR WASHERS. THE CONTRACTOR MAY SUBMIT FOR APPROVAL AN ALTERNATE METHOD OF ALIGNING AND LEVELING THE ANGLES. THE ALTERNATE METHOD SHALL NOT INCLUDE ANY WELDING TO THE OUTSIDE FACE OF THE ANGLES.

AFTER THE ELASTOMERIC CONCRETE HAS BEEN CAST ON BOTH SIDES OF THE JOINT, REMOVE ANY EXCESS CONCRETE THAT COMES THROUGH THE WEEP HOLES AND THOROUGHLY CLEAN THE ANGLES. ANY DAMAGED STEEL SHALL BE COATED WITH A MINIMUM OF 4 MILS OF ZINC-RICH PAINT IN ACCORDANCE WITH THE STANDARD SPECIFICATIONS.

SEE SPECIAL PROVISIONS FOR EVAZOTE JOINT SEALS.

THE NOMINAL UNCOMPRESSED SEAL WIDTH OF THE EVAZOTE JOINT SEAL SHALL BE 2½".

SEE SPECIAL PROVISIONS FOR ELASTOMERIC CONCRETE.

MOVEMENT AND SETTING AT EVAZOTE JOINT

END BENT NO.	SKEW ANGLE	NOMINAL UNCOMPRESSED SEAL WIDTH	TOTAL MOVEMENT (ALONG ℄ RDWY)	PERPENDICULAR JOINT OPENING AT 45° F	PERPENDICULAR JOINT OPENING AT 60° F	PERPENDICULAR JOINT OPENING AT 90° F	FORMED OPENING
1	70°	2½"	1⅛"	2 3/16"	2"	1⅝"	1"
2	70°	2½"	1⅛"	2 3/16"	2"	1⅝"	1"

TOTAL MOVEMENT IS CALCULATED ALONG THE CENTERLINE OF ROADWAY.
JOINT OPENINGS ARE MEASURED PERPENDICULAR TO THE JOINT.

ELASTOMERIC CONCRETE

END BENT NO.	ELASTOMERIC CONCRETE * (CU. FT.)	TOTAL LENGTH OF ANGLE (FT)
1	8.8	76.621
2	8.8	76.621
TOTAL	17.6	153.242

* BASED ON THE MINIMUM BLOCKOUT SHOWN.

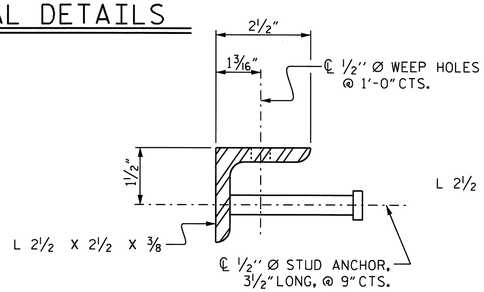

SECTION VIEW OF STUD

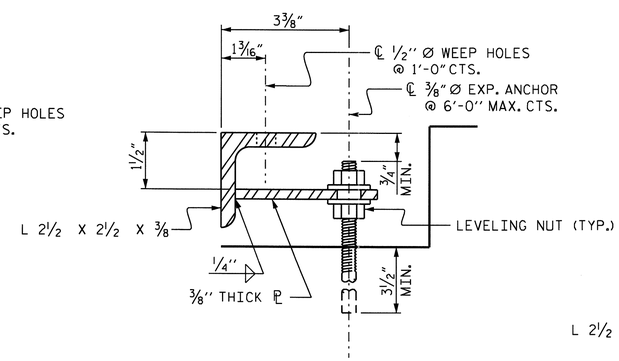

SECTION VIEW OF TAB

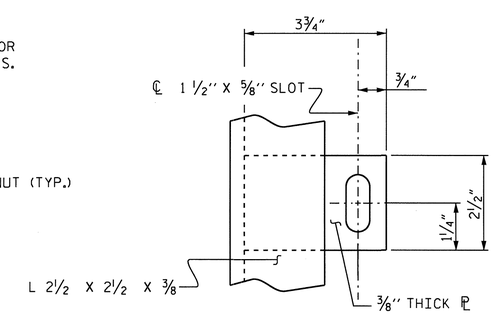

PLAN VIEW OF TAB

ARMORED JOINT ANCHOR ASSEMBLY DETAILS

PROJECT NO. R-2233AB
RUTHERFORD COUNTY
STATION: 280+13.00 -L-

SHEET 3 OF 3

STATE OF NORTH CAROLINA
DEPARTMENT OF TRANSPORTATION
RALEIGH

BRIDGE APPROACH SLAB DETAILS
LEFT LANE

NORTH CAROLINA PROFESSIONAL SEAL 20125 ENGINEER
MARSHALL G. CHEEK, JR.
9-15-10

REVISIONS						SHEET NO.
NO.	BY:	DATE:	NO.	BY:	DATE:	S-32
1			3			TOTAL SHEETS
2			4			184

STR. #1

ASSEMBLED BY :	A.L. FIGUEROA	DATE :	2-03-09
CHECKED BY :	M.G. CHEEK	DATE :	2-26-10

07-SEP-2010 12:54
R:\Structures\FinalPlans\Str. #1\R-2233AB_SD_STR#1_15_IAS.dgn
afigueroa

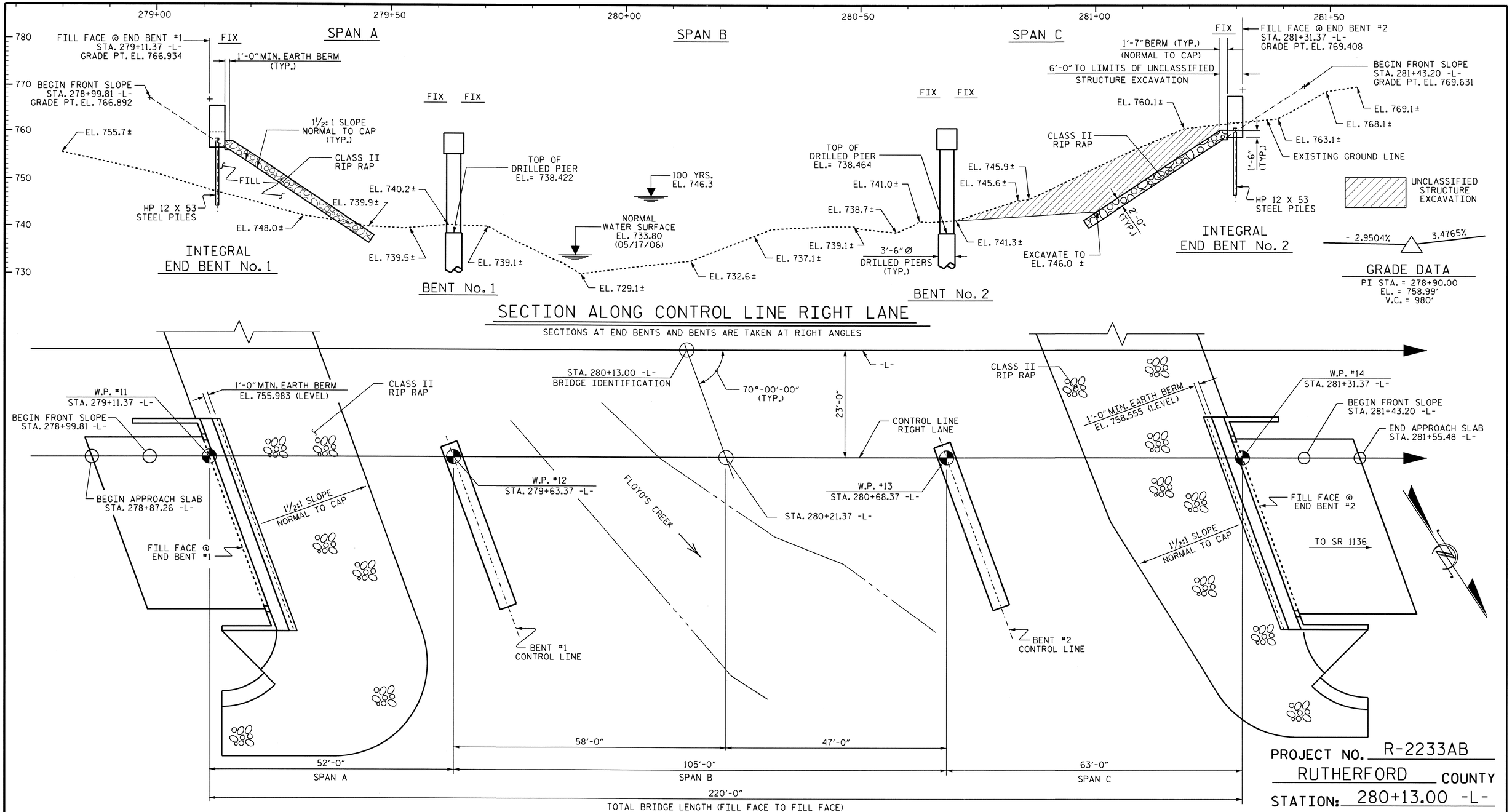

PLAN

(PILES AND COLUMNS NOT SHOWN FOR CLARITY)

PROJECT NO. R-2233AB

RUTHERFORD COUNTY

STATION: 280+13.00 -L-

SHEET 1 OF 3

STATE OF NORTH CAROLINA
DEPARTMENT OF TRANSPORTATION
RALEIGH

GENERAL DRAWING

FOR BRIDGE OVER FLOYD'S CREEK ON US 221 BETWEEN SR 2125 & SR 1136 RIGHT LANE

REVISIONS						SHEET NO.
NO.	BY:	DATE:	NO.	BY:	DATE:	S-33
1			3			TOTAL SHEETS
2			4			184

NORTH CAROLINA PROFESSIONAL SEAL 13014 ENGINEER QUANG H. NGUYEN
Quang H. Nguyen 9-16-10

NORTH CAROLINA PROFESSIONAL SEAL 20125 ENGINEER MARSHALL G. CHEEK, JR.
9-16-10

DRAWN BY : A.L. FIGUEROA DATE : 5-18-07
CHECKED BY : M.G. CHEEK DATE : 3-17-10

15-SEP-2010 14:57
R:\Structures\Final Plans\Str. #2\R-2233AB_SD_STR#2_02_GD.dgn
afigueroa

STR. #2

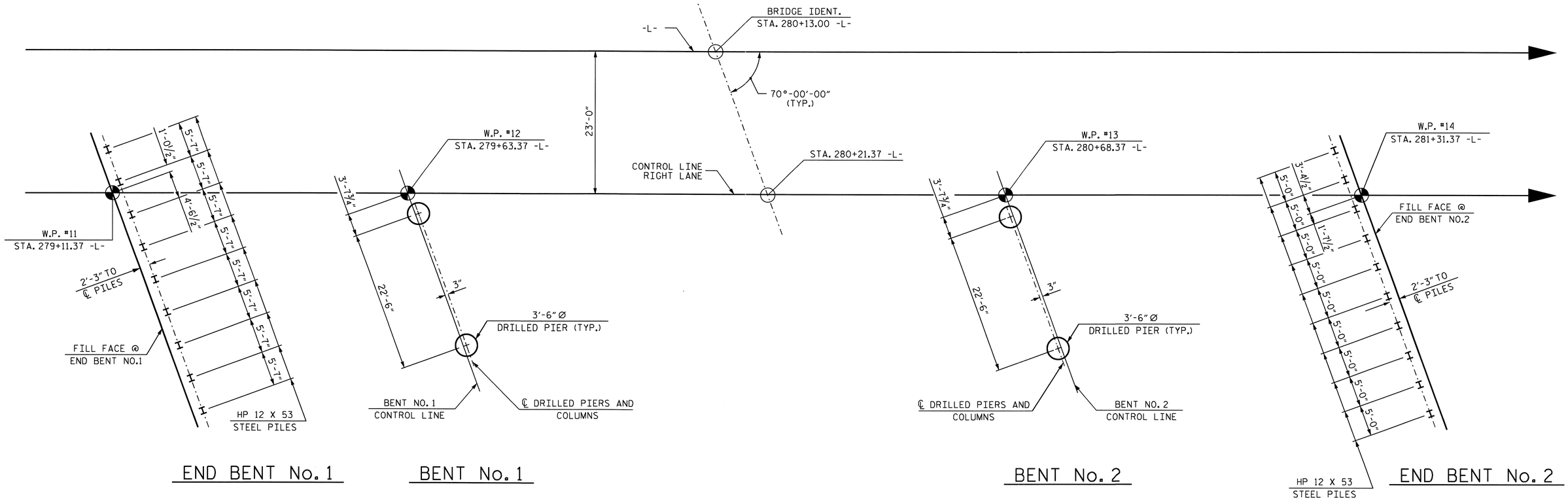

FOUNDATION LAYOUT

ALL END BENT PILES ARE HP 12 X 53

NOTES

FOR PILES, SEE SPECIAL PROVISIONS.

DRIVE PILES AT END BENT NO. 1 TO A REQUIRED BEARING CAPACITY OF 120 TONS PER PILE. THE REQUIRED BEARING CAPACITY IS EQUAL TO THE ALLOWABLE BEARING CAPACITY WITH A MINIMUM FACTOR OF SAFETY OF TWO.

THE ALLOWABLE BEARING CAPACITY FOR PILES AT END BENT NO.1 IS 60 TONS PER PILE.

FOR DRILLED PIERS, SEE SPECIAL PROVISIONS.

DRILLED PIERS AT BENT NO. 1 ARE DESIGNED FOR BOTH SKIN FRICTION AND END BEARING. CHECK FIELD CONDITIONS FOR THE REQUIRED END BEARING CAPACITY OF 65 TONS PER SQ. FOOT (LT), AND 95 TONS PER SQ. FOOT (RT).

DRILLED PIERS AT BENT NO. 1 ARE DESIGNED FOR AN APPLIED LOAD OF 446 TONS EACH AT THE TOP OF THE COLUMN.

PERMANENT STEEL CASING MAY BE REQUIRED FOR DRILLED PIERS AT BENT NO. 1. IF REQUIRED, DO NOT EXTEND CASING BELOW ELEVATION 735.0 WITHOUT PRIOR APPROVAL FROM THE ENGINEER. THE ENGINEER WILL DETERMINE THE NEED FOR PERMANENT STEEL CASING.

DRILLED PIERS AT BENT NO. 1 SHALL EXTEND TO AN ELEVATION NO HIGHER THAN 717.0 (LT), AND 721.0 (RT) AND SATISFY THE REQUIRED END BEARING CAPACITY.

THE SCOUR CRITICAL ELEVATIONS FOR BENT NO. 1 ARE ELEVATION 723.0 (LT), AND 730.0 (RT). SCOUR CRITICAL ELEVATIONS ARE USED TO MONITOR POSSIBLE SCOUR PROBLEMS DURING THE LIFE OF THE STRUCTURE.

DRILLED PIERS AT BENT NO.2 ARE DESIGNED FOR BOTH SKIN FRICTION AND END BEARING. CHECK FIELD CONDITIONS FOR THE REQUIRED END BEARING CAPACITY OF 155 TONS PER SQ. FOOT.

DRILLED PIERS AT BENT NO. 2 ARE DESIGNED FOR AN APPLIED LOAD OF 462 TONS EACH AT THE TOP OF THE COLUMN.

PERMANENT STEEL CASING MAY BE REQUIRED FOR DRILLED PIERS AT BENT NO. 2. IF REQUIRED, DO NOT EXTEND CASING BELOW ELEVATION 736.5 WITHOUT PRIOR APPROVAL FROM THE ENGINEER. THE ENGINEER WILL DETERMINE THE NEED FOR PERMANENT STEEL CASING.

DRILLED PIERS AT BENT NO. 2 SHALL EXTEND TO AN ELEVATION NO HIGHER THAN 713.0 AND SATISFY THE REQUIRED END BEARING CAPACITY.

THE SCOUR CRITICAL ELEVATIONS FOR BENT NO. 2 ARE ELEVATION 719.5 (LT), AND 720.5 (RT). SCOUR CRITICAL ELEVATIONS ARE USED TO MONITOR POSSIBLE SCOUR PROBLEMS DURING THE LIFE OF THE STRUCTURE.

SPT TESTING MAY BE REQUIRED FOR DRILLED PIERS. THE ENGINEER WILL DETERMINE THE NEED FOR SPT TESTING.

SID INSPECTIONS MAY BE REQUIRED FOR DRILLED PIERS. THE ENGINEER WILL DETERMINE THE NEED FOR SID INSPECTIONS.

CSL TUBES ARE REQUIRED AND CSL TESTING MAY BE REQUIRED FOR THE DRILLED PIERS. THE ENGINEER WILL DETERMINE THE NEED FOR CSL TESTING. SEE CROSSHOLE SONIC LOGGING SPECIAL PROVISION.

DRIVE PILES AT END BENT NO. 2 TO A REQUIRED BEARING CAPACITY OF 120 TONS PER PILE. THE REQUIRED BEARING CAPACITY IS EQUAL TO THE ALLOWABLE BEARING CAPACITY WITH A MINIMUM FACTOR OF SAFETY OF TWO.

THE ALLOWABLE BEARING CAPACITY FOR PILES AT END BENT NO. 2 IS 60 TONS PER PILE.

PROJECT NO. R-2233AB
RUTHERFORD COUNTY
STATION: 280+13.00 -L-

SHEET 2 OF 3

STATE OF NORTH CAROLINA
DEPARTMENT OF TRANSPORTATION
RALEIGH

GENERAL DRAWING
FOR BRIDGE OVER
FLOYD'S CREEK ON US 221
BETWEEN SR 2125 & SR 1136

RIGHT LANE

NORTH CAROLINA PROFESSIONAL SEAL 20125 ENGINEER MARSHALL G. CHEEK, JR.
9-15-10

REVISIONS						SHEET NO.
NO.	BY:	DATE:	NO.	BY:	DATE:	S-34
1			3			TOTAL SHEETS
2			4			184

STR. #2

DRAWN BY : A.L. FIGUEROA DATE : 05-05-10
CHECKED BY : M.G. CHEEK DATE : 06-15-10

07-SEP-2010 12:53
R:\Structures\Final Plans\Str. #2\R-2233AB_sd_STR#2_02B_FL.dgn
afigueroa

BM# 1 : RAILROAD SPIKE SET IN BASE OF 12" OAK -BL- STA.39+10.00, 349' LEFT EL. 832.55

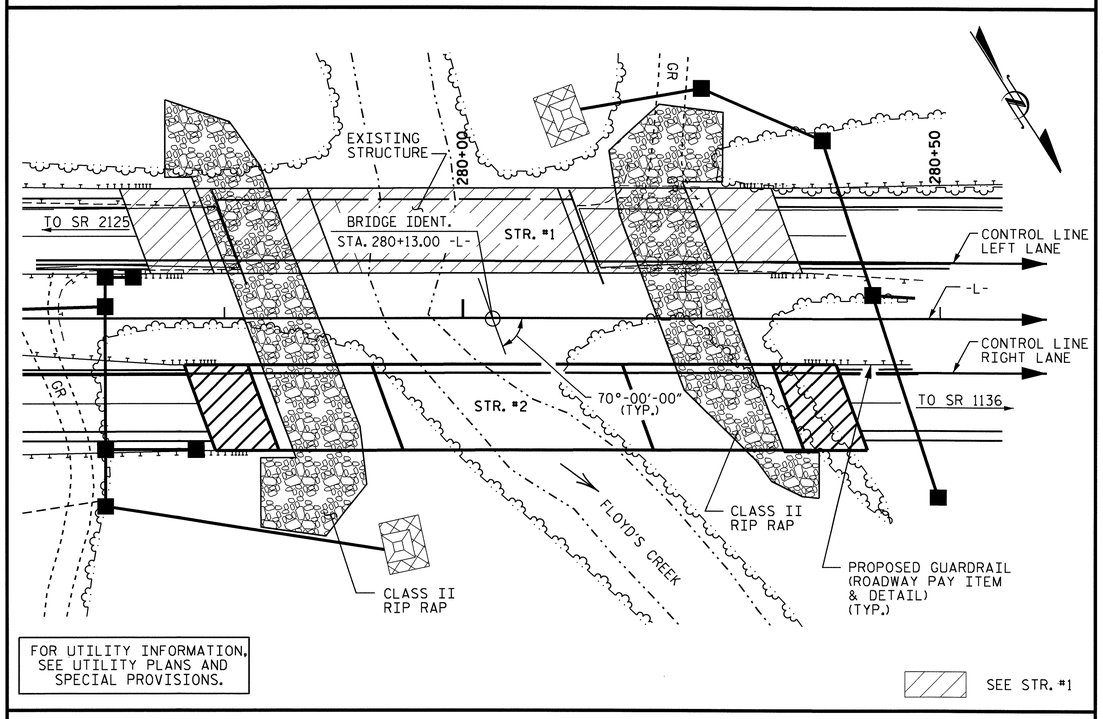

LOCATION SKETCH

NOTES

ASSUMED LIVE LOAD = HS20 OR ALTERNATE LOADING, EXCEPT THAT GIRDERS HAVE BEEN DESIGNED FOR HS25.

FOR OTHER DESIGN DATA AND GENERAL NOTES, SEE SHEET SN.

FOR EROSION CONTROL MEASURES, SEE EROSION CONTROL PLANS.

THIS BRIDGE HAS BEEN DESIGNED BY THE STRENGTH DESIGN METHOD AS SPECIFIED IN AASHTO STANDARD SPECIFICATIONS.

PRESTRESSED CONCRETE DECK PANELS MAY BE USED IN LIEU OF METAL STAY-IN-PLACE FORMS IN ACCORDANCE WITH ARTICLE 420-3 OF THE STANDARD SPECIFICATIONS.

REMOVABLE FORMS MAY BE USED IN LIEU OF METAL STAY-IN-PLACE FORMS IN ACCORDANCE WITH ARTICLE 420-3 OF THE STANDARD SPECIFICATIONS.

THE LOCATION OF THE CONSTRUCTION JOINT IN THE DRILLED PIERS IS BASED ON AN APPROXIMATE GROUND LINE ELEVATION. IF THE CONSTRUCTION JOINT IS ABOVE THE ACTUAL GROUND ELEVATION, THE CONTRACTOR SHALL PLACE THE CONSTRUCTION JOINT 1 FT. BELOW THE GROUND LINE.

THE MATERIAL SHOWN IN THE CROSS-HATCHED AREA (SEE SHEET 1 OF 3) SHALL BE EXCAVATED FROM A DISTANCE 23 FEET LEFT OF THE CONTROL LINE TO 40 FEET RIGHT OF THE CONTROL LINE AS DIRECTED BY THE ENGINEER. THIS WORK WILL BE PAID FOR AT THE CONTRACT LUMP SUM PRICE FOR UNCLASSIFIED STRUCTURE EXCAVATION. SEE SECTION 412 OF THE STANDARD SPECIFICATIONS.

THE CLASS AA CONCRETE IN THE BRIDGE DECK SHALL CONTAIN FLY ASH OR GROUND GRANULATED BLAST FURNACE SLAG AT THE SUBSTITUTION RATE SPECIFIED IN ARTICLE 1024-1 AND IN ACCORDANCE WITH ARTICLE 1024-5 AND 1024-6 OF THE STANDARD SPECIFICATIONS. NO PAYMENT WILL BE MADE FOR THIS SUBSTITUTION AS IT IS CONSIDERED INCIDENTAL TO THE COST OF THE REINFORCED CONCRETE DECK SLAB.

THIS STRUCTURE HAS BEEN DESIGNED IN ACCORDANCE WITH HEC 18, "EVALUATING SCOUR AT BRIDGES", MAY, 2001.

NEEDLE BEAMS WILL NOT BE ALLOWED UNLESS OTHERWISE CALLED FOR ON THE PLANS OR APPROVED BY THE ENGINEER.

FOR PLACING LOAD ON STRUCTURE MEMBERS, SEE SPECIAL PROVISIONS.

FOR SUBMITTAL OF WORKING DRAWINGS, SEE SPECIAL PROVISIONS.

FOR FALSEWORK AND FORMWORK, SEE SPECIAL PROVISIONS.

FOR CRANE SAFETY, SEE SPECIAL PROVISIONS.

FOR PRESTRESSED CONCRETE MEMBERS, SEE SPECIAL PROVISIONS.

FOR GROUT FOR STRUCTURES, SEE SPECIAL PROVISIONS.

FOR CURING CONCRETE, SEE SPECIAL PROVISIONS.

FOR PILES, SEE SPECIAL PROVISIONS.

HYDRAULIC DATA

DESIGN DISCHARGE	=	4,500 CFS
FREQUENCY OF DESIGN FLOOD	=	50 YRS.
DESIGN HIGH WATER ELEVATION	=	745.3
DRAINAGE AREA	=	23.8 SQ. MI.
BASIC DISCHARGE (0100)	=	5,400 CFS
BASIC HIGH WATER ELEVATION	=	746.3

OVERTOPPING FLOOD DATA

OVERTOPPING DISCHARGE	=	55,500 CFS
FREQUENCY OF OVERTOPPING FLOOD	=	500+ YRS.
OVERTOPPING FLOOD ELEVATION	=	765.6

TOTAL BILL OF MATERIAL

	3'-6" Ø DRILLED PIERS IN SOIL	3'-6" Ø DRILLED PIERS NOT IN SOIL	PERMANENT STEEL CASING FOR 3'-6" Ø DRILLED PIERS	SID INSPECTION	SPT TESTING	CROSSHOLE SONIC LOGGING	UNCLASSIFIED STRUCTURE EXCAVATION	REINFORCED CONCRETE DECK SLAB	GROOVING BRIDGE FLOORS
	LIN. FT.	LIN. FT.	LIN. FT.	EACH	EACH	EACH	LUMP SUM	SQ. FT.	SQ. FT.
SUPERSTRUCTURE								8,635	8,659
END BENT NO. 1							LUMP SUM		
BENT NO. 1	20.00	19.00	6.84						
BENT NO. 2	37.00	14.00	3.93						
END BENT NO. 2							LUMP SUM		
TOTAL	57.00	33.00	10.77	2	2	1	LUMP SUM	8,635	8,659

TOTAL BILL OF MATERIAL

	CLASS A CONCRETE	BRIDGE APPROACH SLABS	REINFORCING STEEL	SPIRAL COLUMN REINFORCING STEEL	MODIFIED 63" PRESTRESSED CONCRETE GIRDERS		HP 12 X 53 STEEL PILES		CONCRETE BARRIER RAIL	RIP RAP CLASS II (2'-0" THICK)	FILTER FABRIC FOR DRAINAGE	ELASTOMERIC BEARINGS	EVAZOTE JOINT SEALS
	CU. YDS.	LUMP SUM	LBS.	LBS.	NO.	LIN. FT.	NO.	LIN. FT.	LIN. FT.	TONS	SQ. YDS.	LUMP SUM	LUMP SUM
SUPERSTRUCTURE		LUMP SUM			15	1075.00			440.00			LUMP SUM	LUMP SUM
END BENT NO. 1	38.2		5,120				9	225		353	392		
BENT NO. 1	40.6		9,164	1,555									
BENT NO. 2	41.0		9,842	1,851									
END BENT NO. 2	38.7		5,034				10	450		311	345		
TOTAL	158.5	LUMP SUM	29,160	3,406	15	1075.00	19	675	440.00	664	737	LUMP SUM	LUMP SUM

PROJECT NO. R-2233AB
RUTHERFORD COUNTY
STATION: 280+13.00 -L-

SHEET 3 OF 3

STATE OF NORTH CAROLINA
DEPARTMENT OF TRANSPORTATION
RALEIGH

GENERAL DRAWING
FOR BRIDGE OVER
FLOYD'S CREEK ON US 221
BETWEEN SR 2125 & SR 1136
RIGHT LANE

NORTH CAROLINA PROFESSIONAL SEAL 20125 ENGINEER MARSHALL G. CHEEK, JR.
9-20-10

REVISIONS						SHEET NO.
NO.	BY:	DATE:	NO.	BY:	DATE:	S-35
1			3			TOTAL SHEETS
2			4			184

STR. #2

DRAWN BY : A.L. FIGUEROA DATE : 3-16-10
CHECKED BY : M.G. CHEEK DATE : 3-17-10

20-SEP-2010 08:54
R:\Structures\Final Plans\Str. #2\R-2233AB_SD_STR#2_02_GD.dgn
dohodge

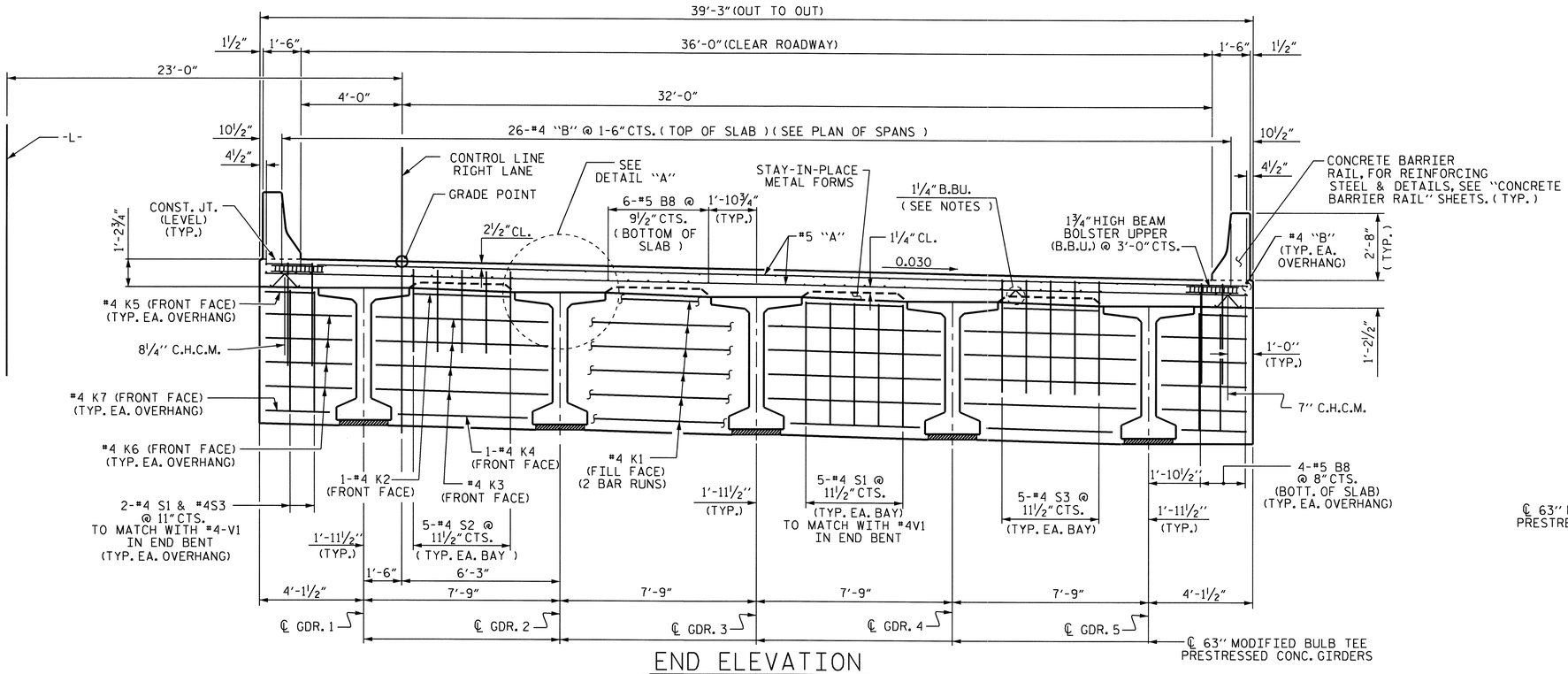

END ELEVATION

(END BENT #1 SHOWN, END BENT #2 SIMILAR)

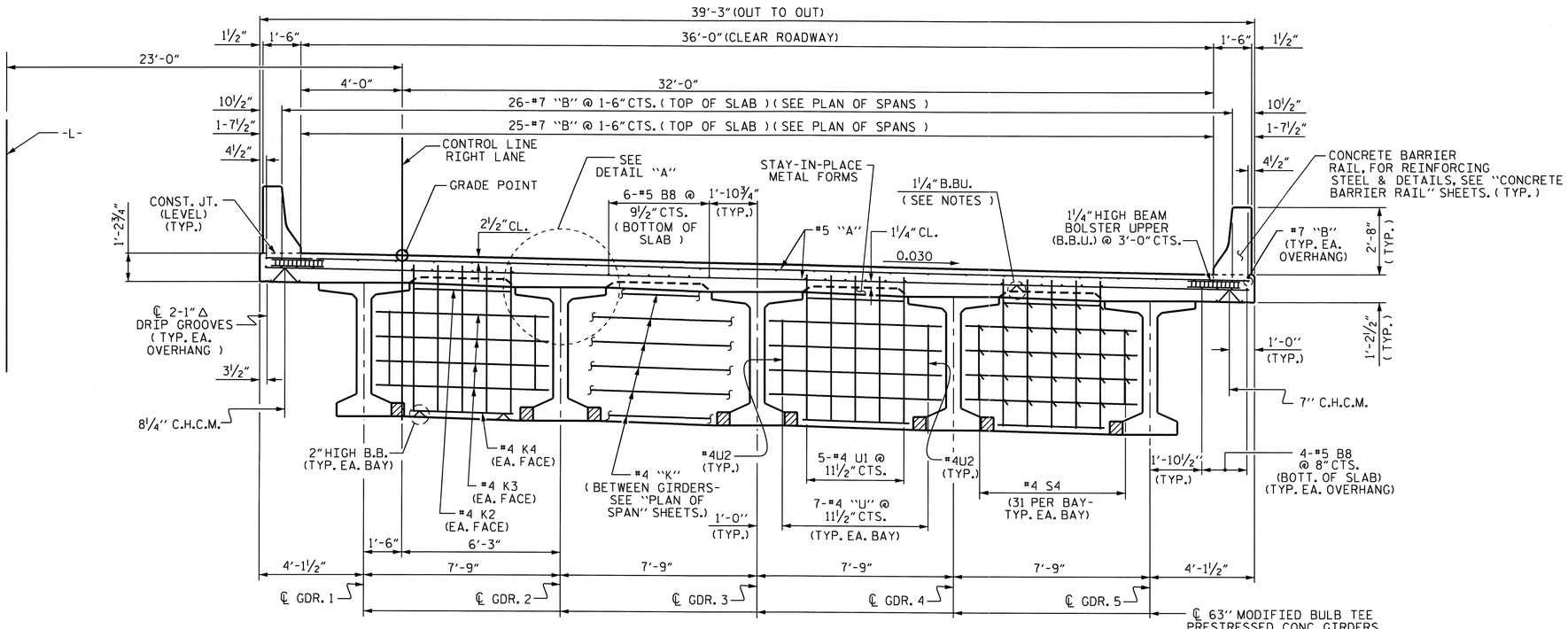

TYPICAL SECTION

(SHOWING BENT DIAPHRAGMS)

NOTES

PROVIDE 1¼" HIGH BEAM BOLSTERS UPPER AT 4'-0" CTS. ATOP THE METAL STAY-IN-PLACE FORMS TO SUPPORT THE BOTTOM MAT OF 'A' BARS. WHEN USING REMOVABLE FORMS, PROVIDE CONTINUOUS HIGH CHAIRS FOR METAL DECK (C.H.C.M.) @ 4'-0" CTS. WITH A HEIGHT TO SUPPORT THE BOTTOM MAT OF 'A' BARS A CLEAR DISTANCE OF 2½" ABOVE THE TOP OF THE REMOVABLE FORM.

LONGITUDINAL STEEL MAY BE SHIFTED SLIGHTLY, AS NECESSARY, TO AVOID INTERFERENCE WITH STIRRUPS IN PRESTRESSED CONCRETE GIRDERS.

PREVIOUSLY CAST CONCRETE IN A CONTINUOUS UNIT SHALL HAVE ATTAINED A MINIMUM COMPRESSIVE STRENGTH OF 3000 PSI BEFORE ADDITIONAL CONCRETE IS CAST IN THE UNIT.

BARRIER RAIL IN A CONTINUOUS UNIT SHALL NOT BE CAST UNTIL ALL SLAB CONCRETE IN THE UNIT HAS BEEN CAST AND HAS REACHED A MINIMUM COMPRESSIVE STRENGTH OF 3000 PSI.

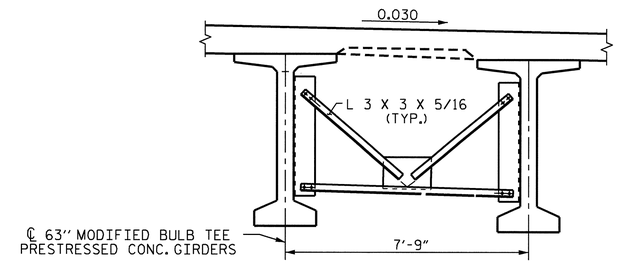

TYPICAL SECTION

SHOWING INTERMEDIATE DIAPHRAGMS
(FOR INTERMEDIATE STEEL DIAPHRAGMS DETAILS, SEE "INTERMEDIATE STEEL DIAPHRAGMS FOR 63" BULB TEE PRESTRESSED CONCRETE GIRDERS" SHEET 5 OF 5.)

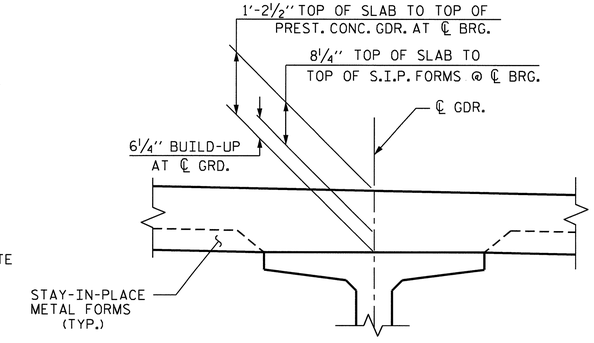

DETAIL "A"

PROJECT NO. R-2233AB
RUTHERFORD COUNTY
STATION: 280+13.00 -L-

SHEET 1 OF 2

STATE OF NORTH CAROLINA
DEPARTMENT OF TRANSPORTATION
RALEIGH

SUPERSTRUCTURE
TYPICAL SECTION
RIGHT LANE

NORTH CAROLINA PROFESSIONAL SEAL 20125 ENGINEER MARSHALL G. CHEEK, JR.
4-15-10

REVISIONS						SHEET NO.
NO.	BY:	DATE:	NO.	BY:	DATE:	S-36
1			3			TOTAL SHEETS
2			4			184

STR. #2

DRAWN BY : V.X. NGUYEN DATE : 7-12-10
CHECKED BY : M.G. CHEEK DATE : 7-10

13-SEP-2010 16:11
R:\Structures\FinalPlans\Str. #2\R-2233AB_SD_STR#2_04_TS.dgn
afiguerao

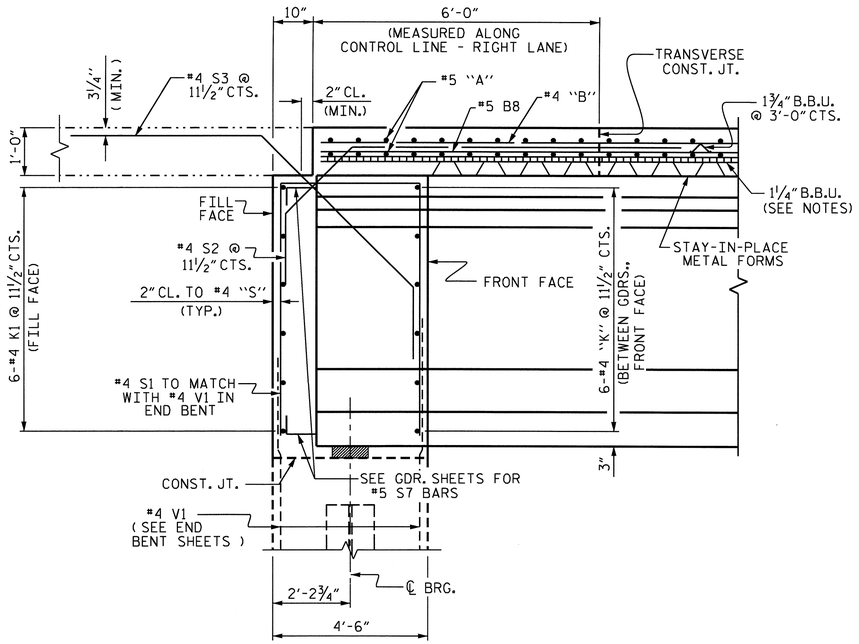

SECTION THRU END BENT

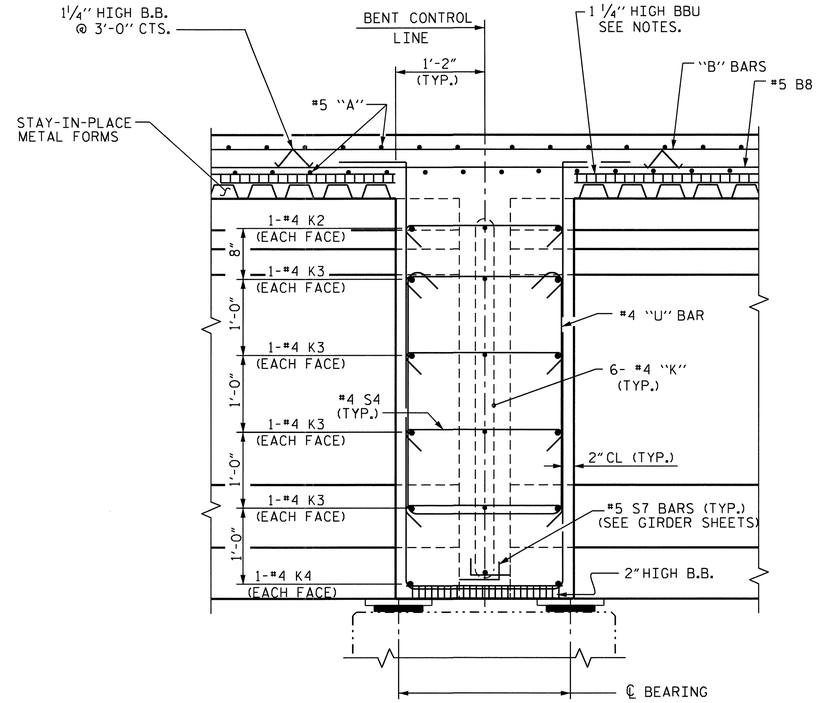

SECTION THRU CONTINUOUS BENT DIAPHRAGM

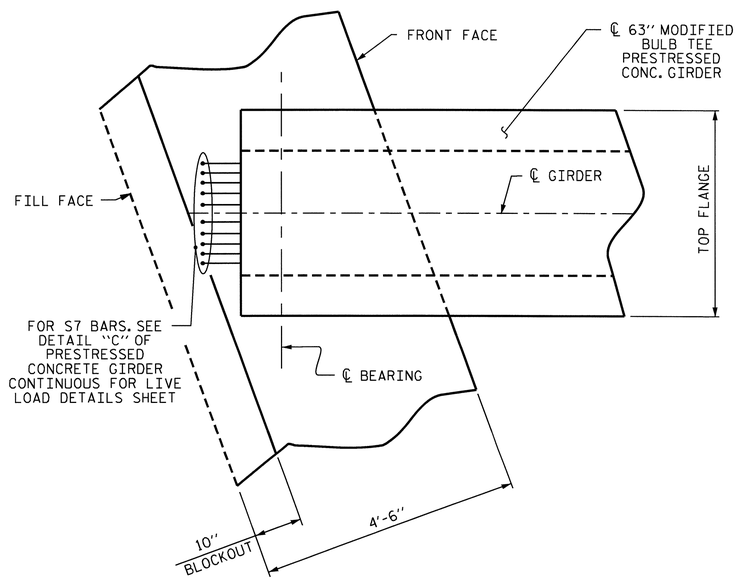

PLAN OF GIRDER @ INTEGRAL END BENT

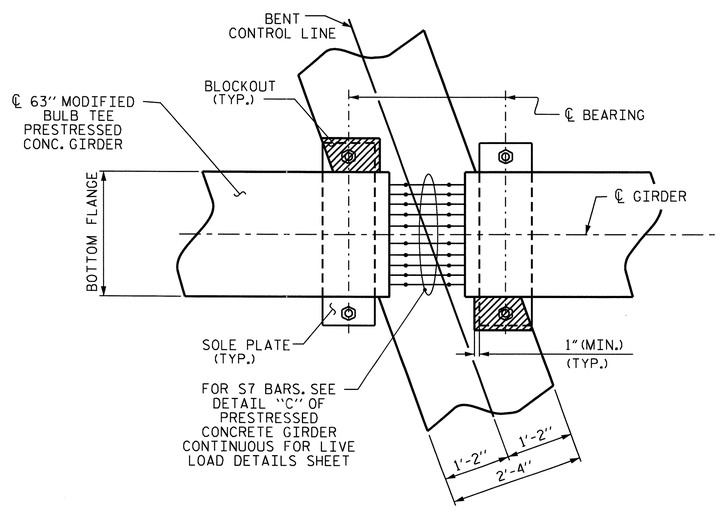

BENT DIAPHRAGM BLOCK-OUT DETAIL

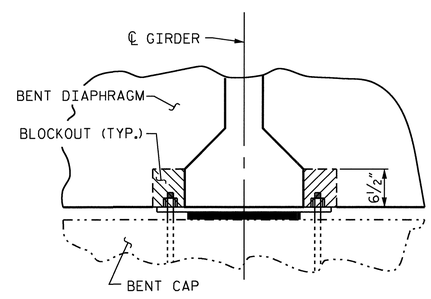

SECTION

PROJECT NO. R-2233AB
RUTHERFORD COUNTY
STATION: 280+13.00 -L-

SHEET 2 OF 2

STATE OF NORTH CAROLINA
DEPARTMENT OF TRANSPORTATION
RALEIGH

SUPERSTRUCTURE
TYPICAL SECTIONS
RIGHT LANE

REVISIONS						SHEET NO.
NO.	BY:	DATE:	NO.	BY:	DATE:	S-37
1			3			TOTAL SHEETS
2			4			184

NORTH CAROLINA PROFESSIONAL SEAL 20125 ENGINEER MARSHALL G. CHEEK, JR.
9-15-10

DRAWN BY : V.X. NGUYEN DATE : 7-12-10
CHECKED BY : M.G. CHEEK DATE : 7-10

13-SEP-2010 16:11
R:\Structures\Final Plans\Str. #2\R-2233AB_SD_STR#2_04_TS.dgn
afigueroa

STR. 2

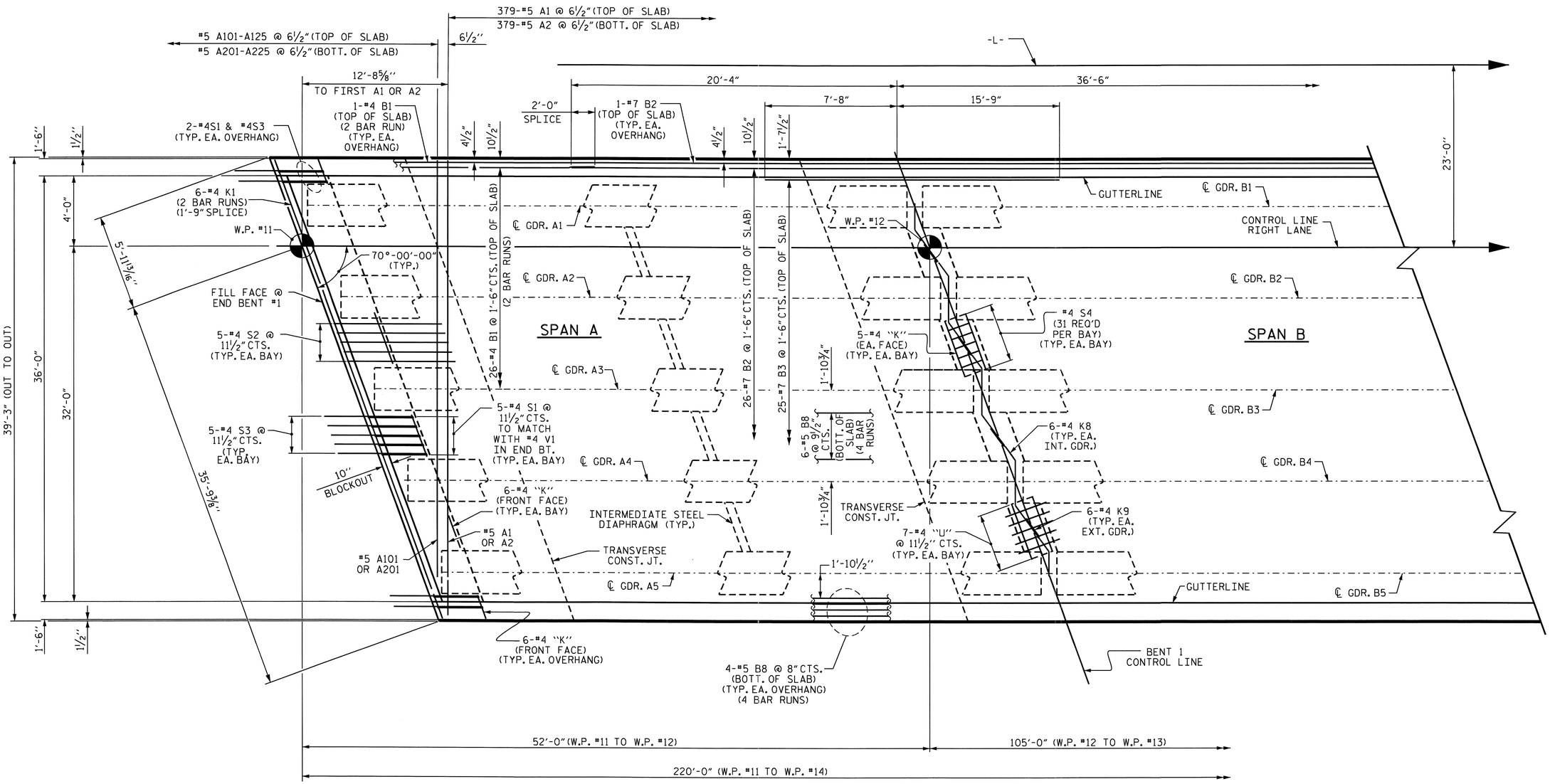

PLAN OF SPAN A

FOR INTERMEDIATE STEEL DIAPHRAGMS, SEE "INTERMEDIATE STEEL DIAPHRAGMS" SHEET.

PROJECT NO. R-2233AB
RUTHERFORD COUNTY
STATION: 280+13.00 -L-

SHEET 1 OF 3

STATE OF NORTH CAROLINA
DEPARTMENT OF TRANSPORTATION
RALEIGH

SUPERSTRUCTURE
PLAN OF SPAN A
RIGHT LANE

NORTH CAROLINA PROFESSIONAL SEAL 20125 ENGINEER MARSHALL G. CHEEK, JR.
9-15-10

REVISIONS						SHEET NO.
NO.	BY:	DATE:	NO.	BY:	DATE:	S-38
1			3			TOTAL SHEETS
2			4			184

STR. #2

DRAWN BY : V.X. NGUYEN DATE : 07-12-10
CHECKED BY : M.G. CHEEK DATE : 7-10

13-SEP-2010 16:11
R:\Structures\Final Plans\Str. #2\R-2233AB_SD_STR#2_05_S#.dgn
afigueroa

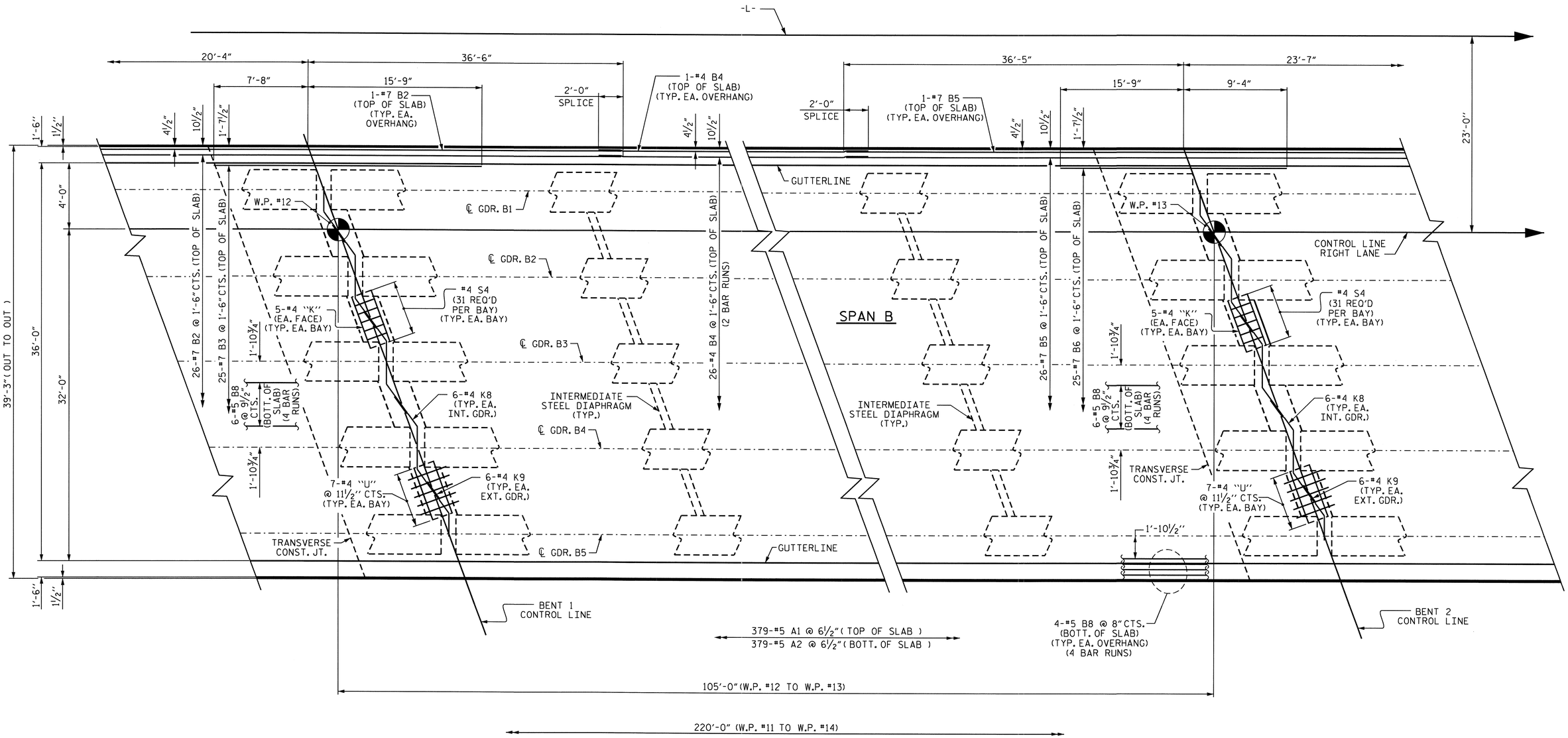

PLAN OF SPAN B

FOR INTERMEDIATE STEEL DIAPHRAGMS, SEE "INTERMEDIATE STEEL DIAPHRAGMS" SHEET.

PROJECT NO. R-2233AB
RUTHERFORD COUNTY
STATION: 280+13.00 -L-

SHEET 2 OF 3

STATE OF NORTH CAROLINA
DEPARTMENT OF TRANSPORTATION
RALEIGH

SUPERSTRUCTURE
PLAN OF SPAN B
RIGHT LANE

NORTH CAROLINA PROFESSIONAL SEAL 20125 ENGINEER MARSHALL G. CHEEK, JR.
9-15-10

REVISIONS						SHEET NO.
NO.	BY:	DATE:	NO.	BY:	DATE:	S-39
1			3			TOTAL SHEETS
2			4			184

STR. #2

DRAWN BY : V.X. NGUYEN DATE : 07-12-10
CHECKED BY : M.G. CHEEK DATE : 7-10

13-SEP-2010 16:11
R:\Structures\FinalPlans\Str. #2\R-2233AB_SD_STR#2_05_S#.dgn
afigueroa

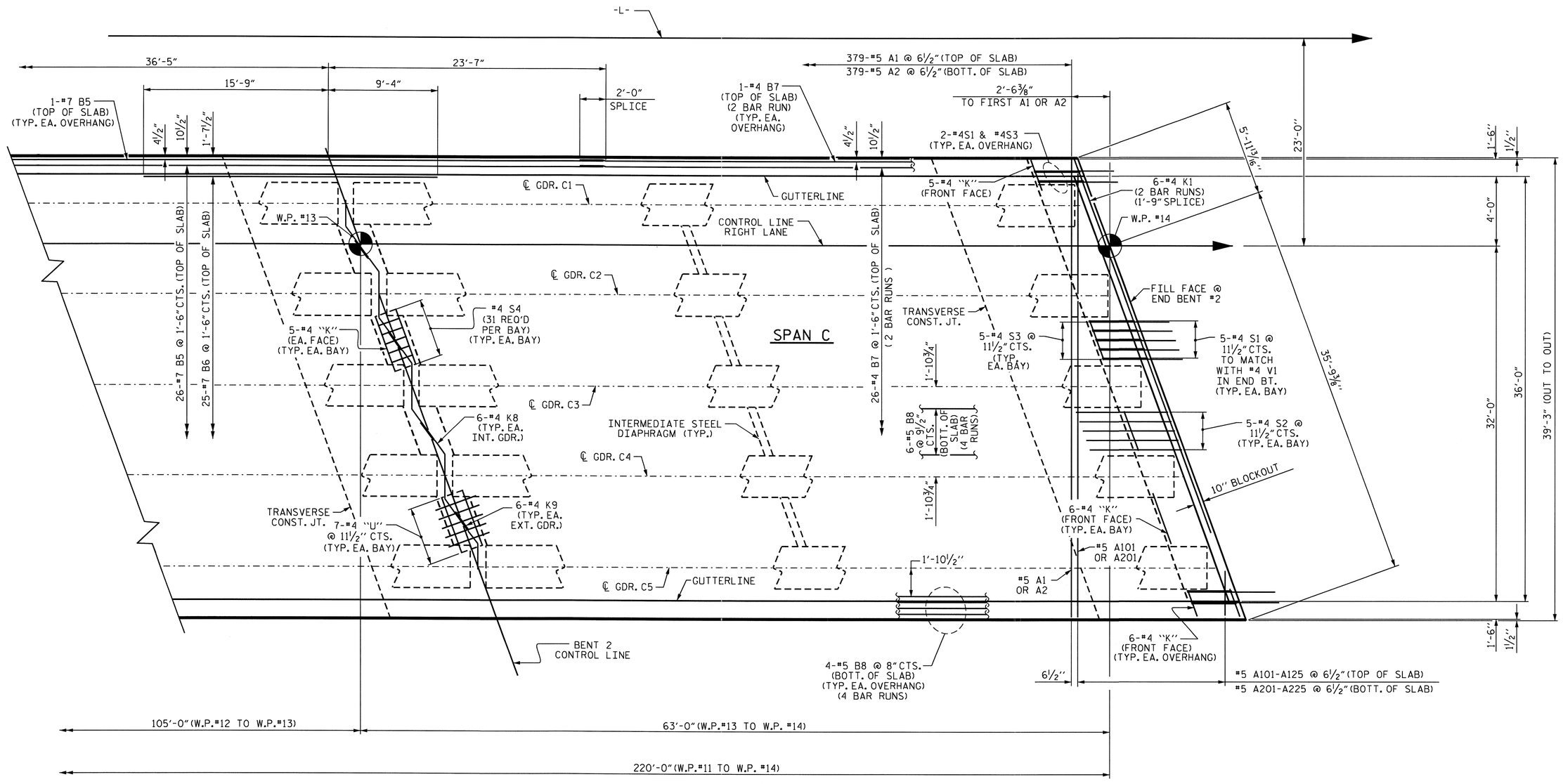

PLAN OF SPAN C

FOR INTERMEDIATE STEEL DIAPHRAGMS, SEE "INTERMEDIATE STEEL DIAPHRAGMS" SHEET.

PROJECT NO. R-2233AB
RUTHERFORD COUNTY
STATION: 280+13.00 -L-

SHEET 3 OF 3

STATE OF NORTH CAROLINA
DEPARTMENT OF TRANSPORTATION
RALEIGH

SUPERSTRUCTURE
PLAN OF SPAN C
RIGHT LANE

NORTH CAROLINA PROFESSIONAL SEAL 20125 ENGINEER MARSHALL G. CHEEK, JR.
9-15-10

REVISIONS						SHEET NO.
NO.	BY:	DATE:	NO.	BY:	DATE:	S-40
1			3			TOTAL SHEETS
2			4			184

STR. #2

DRAWN BY : V.X. NGUYEN DATE : 07-12-10
CHECKED BY : M.G. CHEEK DATE : 7-10

13-SEP-2010 16:11
R:\Structures\Final Plans\Str. #2\R-2233AB_SD_STR#2_05_S#.dgn
afigueroa

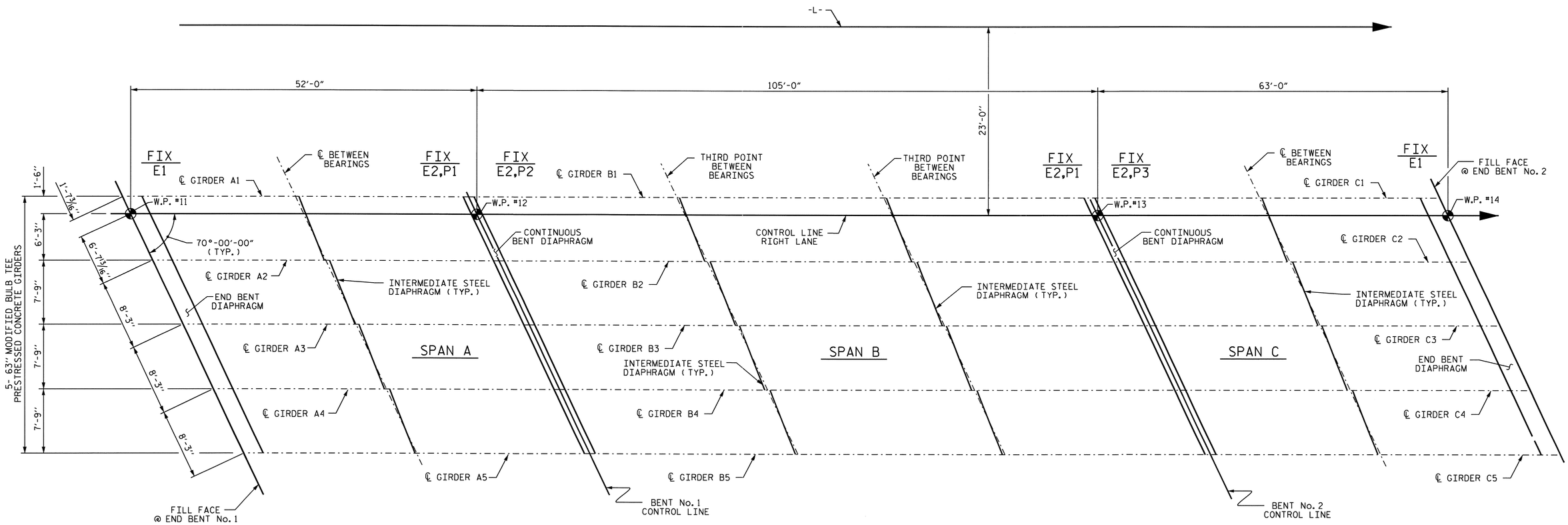

GIRDER LAYOUT

PROJECT NO. R-2233AB
RUTHERFORD COUNTY
STATION: 280+13.00 -L-

STATE OF NORTH CAROLINA
DEPARTMENT OF TRANSPORTATION
RALEIGH

SUPERSTRUCTURE

GIRDER LAYOUT
(SPANS A,B, & C)
RIGHT LANE

NORTH CAROLINA PROFESSIONAL SEAL 20125 ENGINEER MARSHALL G. CHEEK, JR.
9-15-10

REVISIONS						SHEET NO.
NO.	BY:	DATE:	NO.	BY:	DATE:	S-41
1			3			TOTAL SHEETS
2			4			184

STR. #2

DRAWN BY : V.X. NGUYEN DATE : 7/13/10
CHECKED BY : M.G. CHEEK DATE : 7/10

14-SEP-2010 14:20
R:\Structures\Final Plans\Str. #2\R-2233AB_SD_STR#2_06_FP.dgn
atfigueroa

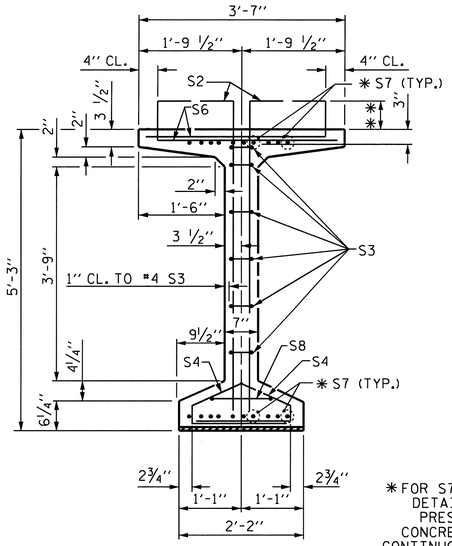

SECTION A-A

✱ FOR S7 BARS. SEE DETAIL "C" OF PRESTRESSED CONCRETE GIRDER CONTINUOUS FOR LIVE LOAD DETAILS SHEET

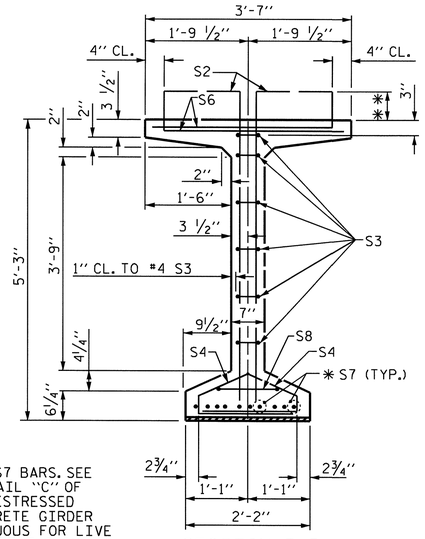

SECTION B-B

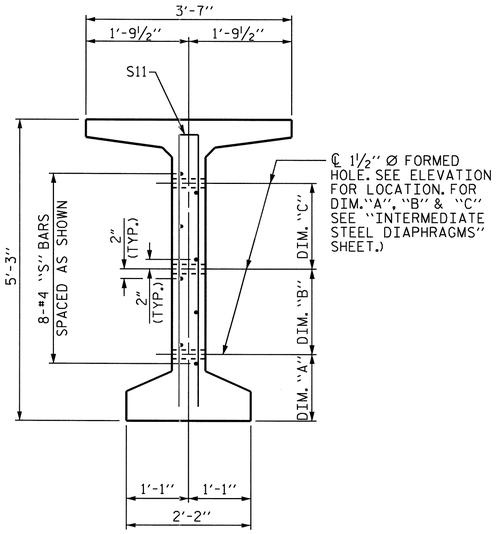

SECTION C-C

(S1, S6 AND S9 BARS NOT SHOWN)

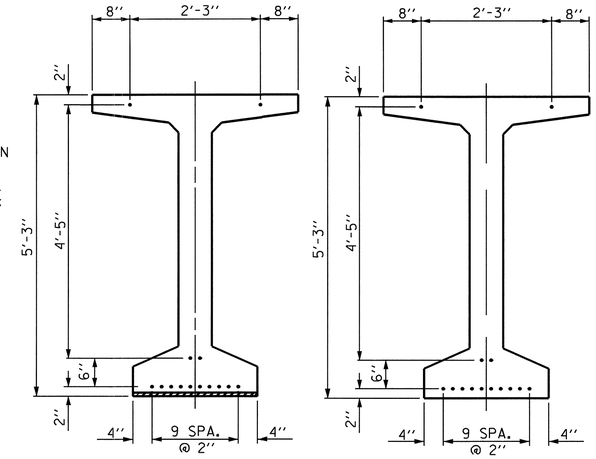

0.6" Ø LOW RELAXATION STRAND LAYOUT

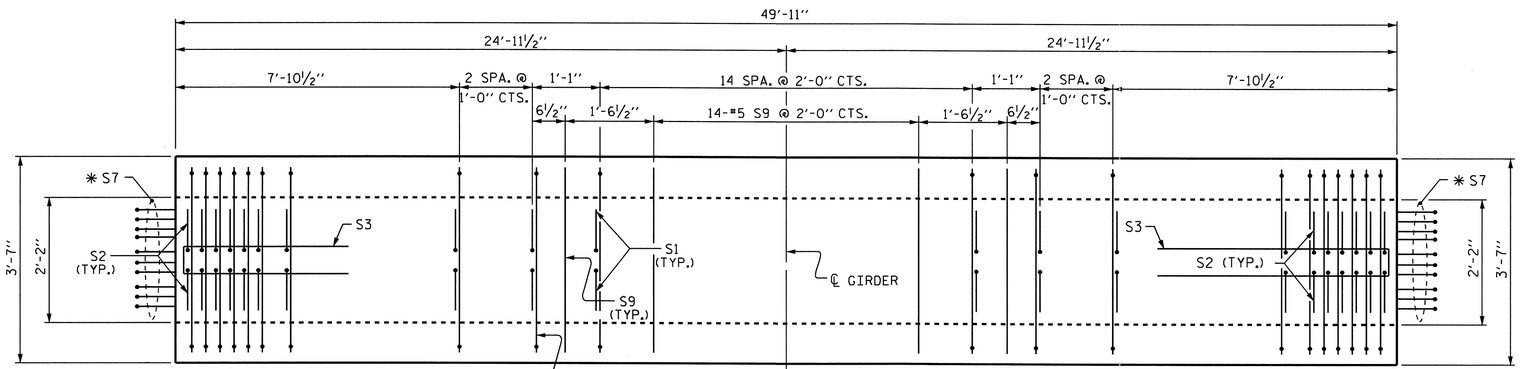

PLAN OF GIRDER

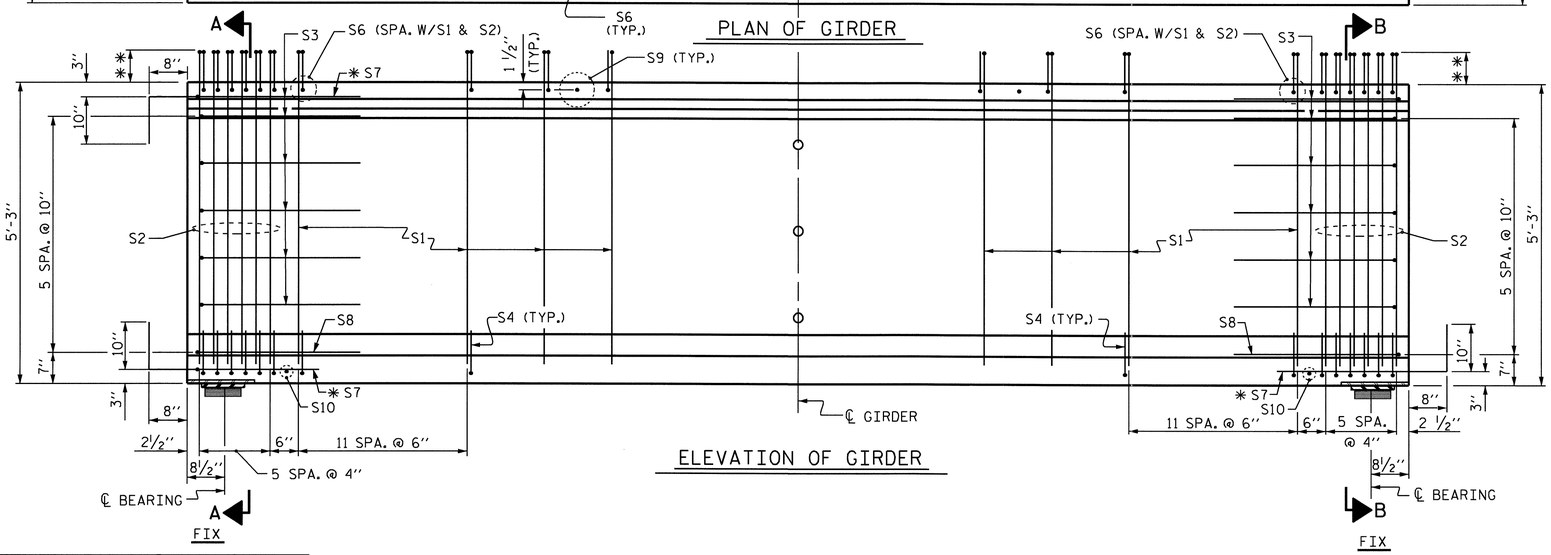

ELEVATION OF GIRDER

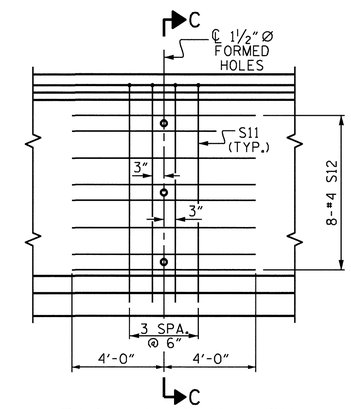

PARTIAL ELEVATION

SHOWING INTERMEDIATE STEEL DIAPHRAGM REINFORCING STEEL FOR GIRDER Nos. 1-5

✱✱ THE PROJECTION OF THE S1 & S2 BARS ABOVE THE TOP OF THE GIRDER VARIES FROM 9 3/4" AT THE ENDS OF THE GIRDER TO 9 1/4" AT THE CENTERLINE OF THE GIRDER.

0.6" Ø L. R. GRADE 270 STRANDS

AREA (SQUARE INCHES)	ULTIMATE STRENGTH (LBS. PER STRAND)	APPLIED PRESTRESS (LBS. PER STRAND)
0.217	58,600	43,950

REINFORCING STEEL FOR ONE GDR

BAR	NUMBER	SIZE	TYPE	LENGTH	WEIGHT
S1	86	#4	1	6'-5"	369
S2	24	#5	1	6'-5"	161
S3	12	#4	2	8'-5"	67
S4	72	#4	3	3'-0"	144
S6	110	#5	4	3'-8"	421
✱ S7	30	#5	STR	3'-8"	115
S8	2	#5	2	9'-0"	19
S9	16	#5	STR	3'-3"	54
S10	2	#3	STR	1'-10"	1
S11	4	#5	2	10'-2"	42
S12	8	#4	STR	8'-0"	43

✱ NOTE: S7 BARS SHALL BE BENT BEFORE SHIPMENT. HEAT BENDING SHALL NOT BE ALLOWED.

BAR TYPES

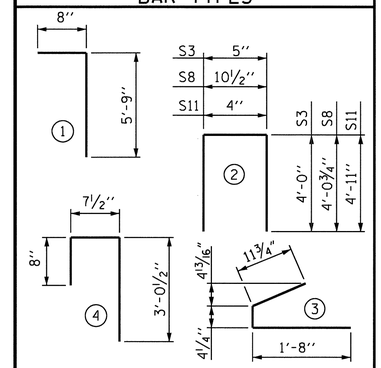

ALL BAR DIMENSIONS ARE OUT-TO-OUT

QUANTITIES FOR ONE GIRDER

	REINFORCING STEEL	5000 PSI CONCRETE	0.6" Ø L.R. STRANDS
	LB.	C.Y.	No.
	1436	9.9	14

GIRDERS REQUIRED

NUMBER	LENGTH	TOTAL LENGTH
5	49'-11"	249'-7"

PROJECT NO. R-2233AB

RUTHERFORD COUNTY

STATION: 280+13.00 -L-

SHEET 1 OF 5

STATE OF NORTH CAROLINA
DEPARTMENT OF TRANSPORTATION
RALEIGH

STANDARD
63" PRESTRESSED CONCRETE
MODIFIED BULB TEE
CONTINUOUS FOR LIVE LOAD
SPAN A
RIGHT LANE

NORTH CAROLINA PROFESSIONAL SEAL 20125 ENGINEER MARSHALL G. CHEEK, JR.
9-15-10

REVISIONS						SHEET NO.
NO.	BY:	DATE:	NO.	BY:	DATE:	S-42
1			3			TOTAL SHEETS
2			4			184

STR. #2

STD. NO. PCG9

ASSEMBLED BY : V. X. NGUYEN	DATE : 7-13-10		
CHECKED BY : M.G. CHEEK	DATE : 7-10		
DRAWN BY : EEM 2/6/97	REV. 8/16/99	RWW/LES	
CHECKED BY : VAP 2/6/97	REV. 10/17/00	RWW/LES	
	REV. 5/1/06R	TLA/GM	

13-SEP-2010 16:11
R:\Structures\Final Plans\Str. #2\R-2233AB_SD_STR#2_07_G#.dgn
aflgueroa

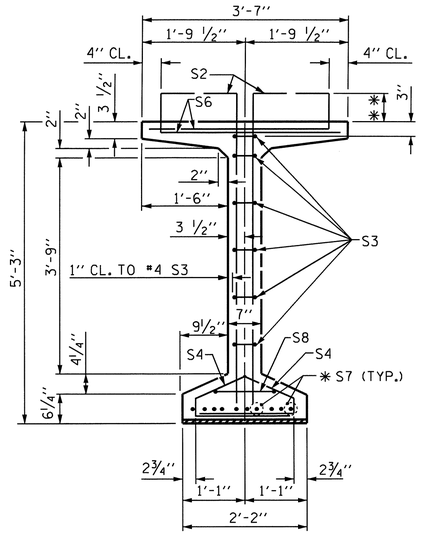

SECTION B-B

* FOR S7 BARS. SEE DETAIL "C" OF PRESTRESSED CONCRETE GIRDER CONTINUOUS FOR LIVE LOAD DETAILS SHEET

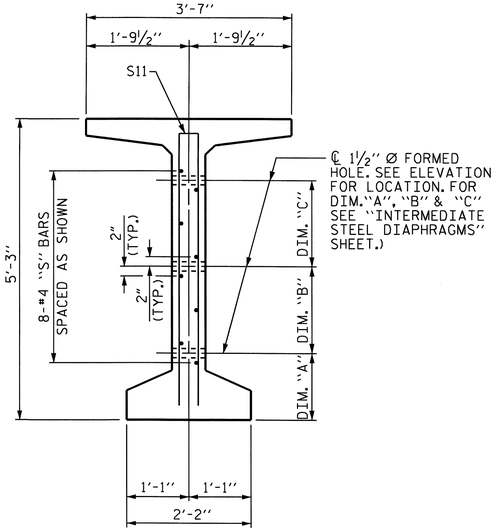

SECTION C-C

(S1, S6 AND S9 BARS NOT SHOWN)

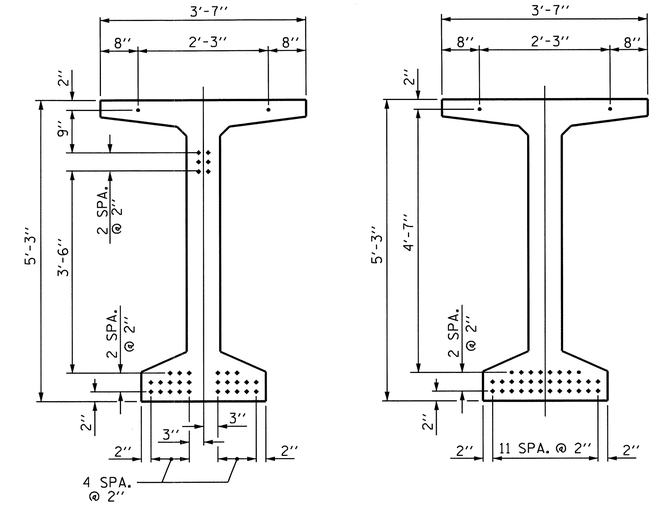

AT END OF GIRDER

AT ℄ OF GIRDER

0.6" Ø LOW RELAXATION STRAND LAYOUT

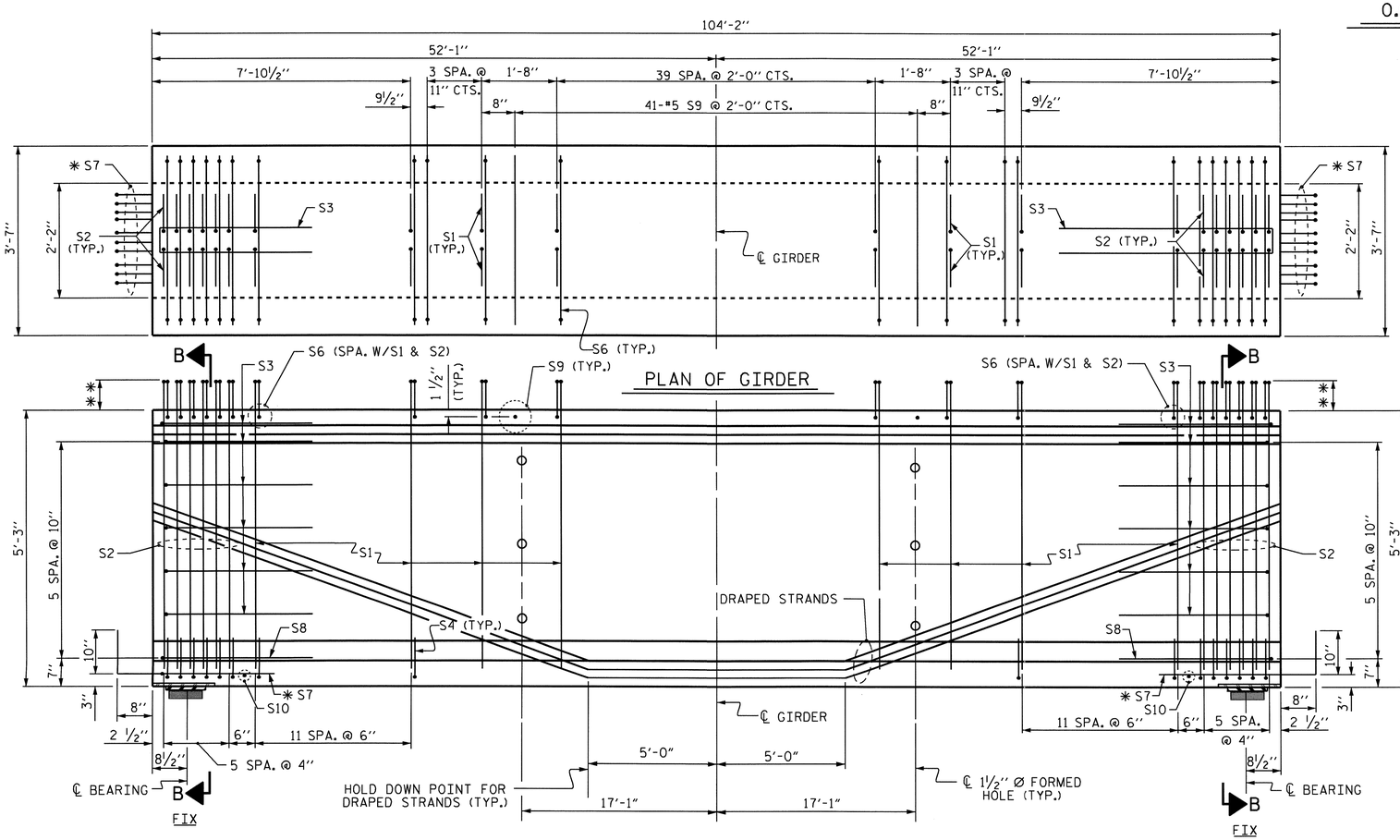

PLAN OF GIRDER

ELEVATION OF GIRDER

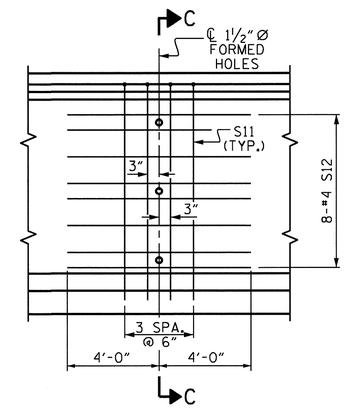

PARTIAL ELEVATION

SHOWING INTERMEDIATE STEEL DIAPHRAGM REINFORCING STEEL FOR GIRDER Nos. 1-5

** THE PROJECTION OF THE S1 & S2 BARS ABOVE THE TOP OF THE GIRDER VARIES FROM 9 3/4" AT THE ENDS OF THE GIRDER TO 6 3/4" AT THE CENTERLINE OF THE GIRDER.

NOTE: THE UPLIFT FORCE DUE TO THE DRAPED STRANDS IS 21.4 kips.

0.6" Ø L. R. GRADE 270 STRANDS

AREA (SQUARE INCHES)	ULTIMATE STRENGTH (LBS. PER STRAND)	APPLIED PRESTRESS (LBS. PER STRAND)
0.217	58,600	43,950

REINFORCING STEEL FOR ONE GDR

BAR	NUMBER	SIZE	TYPE	LENGTH	WEIGHT
S1	144	#4	1	6'-5"	617
S2	24	#5	1	6'-5"	161
S3	12	#4	2	8'-5"	67
S4	72	#4	3	3'-0"	144
S6	168	#5	4	4'-4"	759
* S7	20	#5	STR	3'-8"	76
S8	2	#5	2	9'-0"	19
S9	41	#5	STR	3'-3"	139
S10	2	#3	STR	1'-10"	1
S11	8	#5	2	10'-2"	85
S12	16	#4	STR	8'-0"	86

* NOTE: S7 BARS SHALL BE BENT BEFORE SHIPMENT. HEAT BENDING SHALL NOT BE ALLOWED.

BAR TYPES

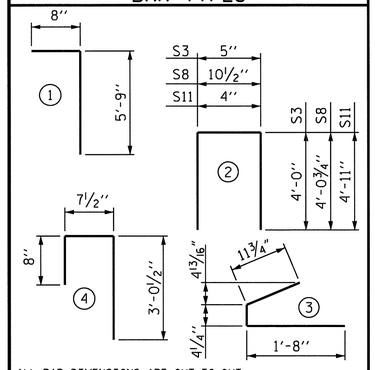

ALL BAR DIMENSIONS ARE OUT-TO-OUT

QUANTITIES FOR ONE GIRDER

	REINFORCING STEEL	8200 PSI CONCRETE	0.6" Ø L.R. STRANDS
	LB.	C.Y.	No.
	2154	20.6	34

GIRDERS REQUIRED

NUMBER	LENGTH	TOTAL LENGTH
5	104'-2"	520'-10"

PROJECT NO. R-2233AB

RUTHERFORD COUNTY

STATION: 280+13.00 -L-

SHEET 2 OF 5

STATE OF NORTH CAROLINA
DEPARTMENT OF TRANSPORTATION
RALEIGH

STANDARD

63" PRESTRESSED CONCRETE MODIFIED BULB TEE CONTINUOUS FOR LIVE LOAD SPAN B RIGHT LANE

NORTH CAROLINA PROFESSIONAL SEAL 20125 ENGINEER MARSHALL G. CHEEK, JR.
9-15-10

REVISIONS						SHEET NO.
NO.	BY:	DATE:	NO.	BY:	DATE:	S-43
1			3			TOTAL SHEETS
2			4			184

ASSEMBLED BY : V. X. NGUYEN	DATE : 7-13-10		
CHECKED BY : M.G. CHEEK	DATE : 7-10		
DRAWN BY : EEM 2/6/97	REV. 8/16/99	RWW/LES	
CHECKED BY : VAP 2/6/97	REV. 10/17/00	RWW/LES	
	REV. 5/1/06R	TLA/GM	

13-SEP-2010 16:11
R:\Structures\Final Plans\Str. #2\R-2233AB_SD_STR#2_07_G#.dgn
afigueroa

STR. #2

STD. NO. PCG9

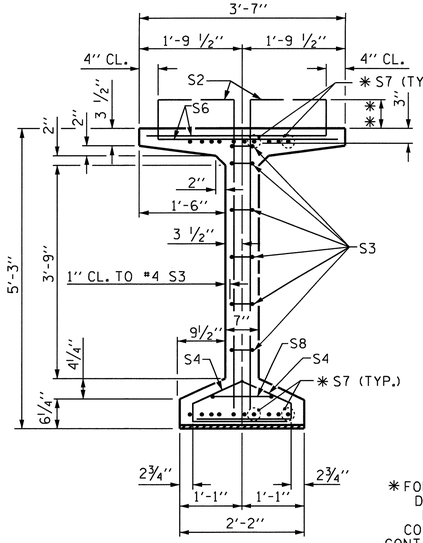

SECTION A-A

✱ FOR S7 BARS. SEE DETAIL "C" OF PRESTRESSED CONCRETE GIRDER CONTINUOUS FOR LIVE LOAD DETAILS SHEET

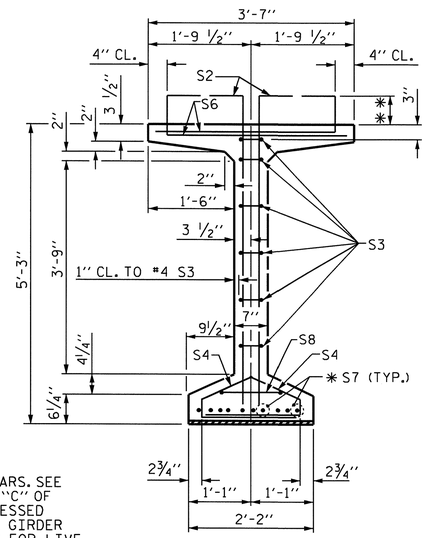

SECTION B-B

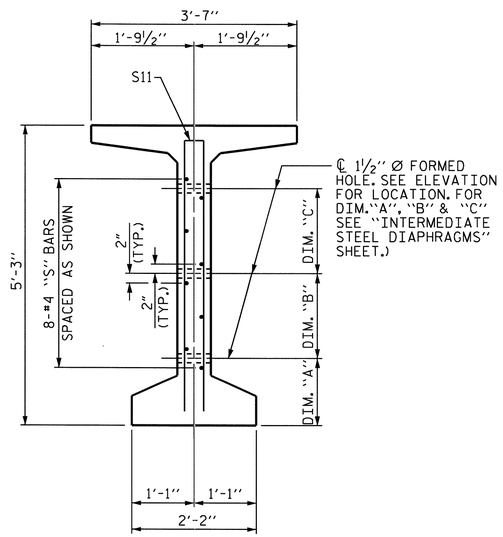

SECTION C-C

(S1, S6 AND S9 BARS NOT SHOWN)

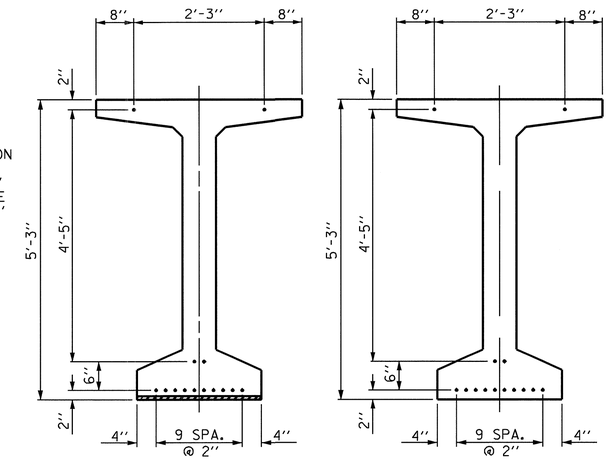

AT END OF GIRDER

AT ℄ OF GIRDER

0.6" Ø LOW RELAXATION STRAND LAYOUT

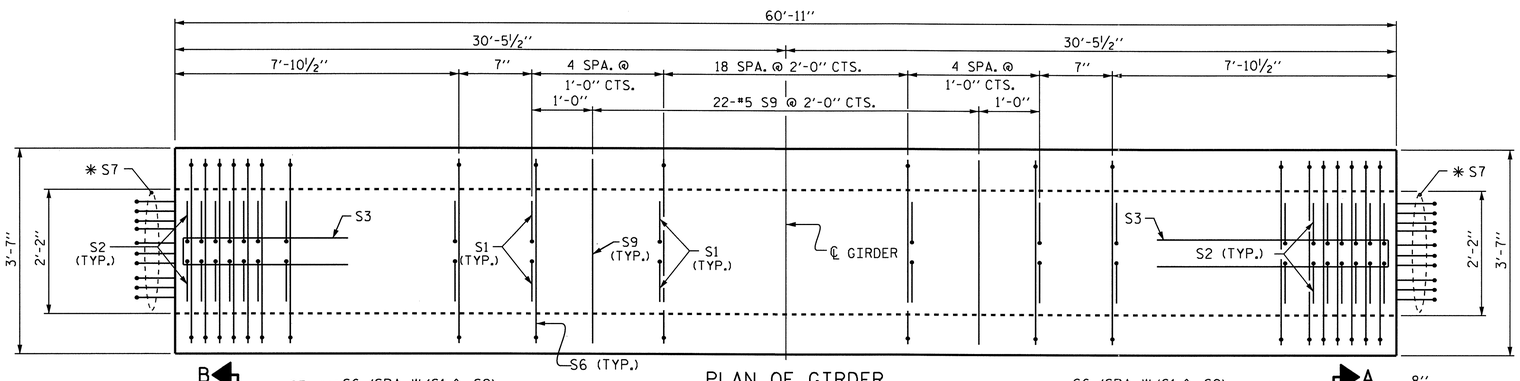

PLAN OF GIRDER

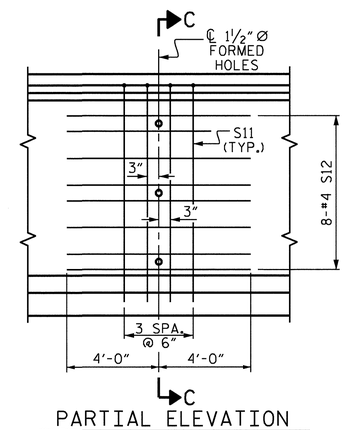

PARTIAL ELEVATION

SHOWING INTERMEDIATE STEEL DIAPHRAGM REINFORCING STEEL FOR GIRDER Nos. 1-5

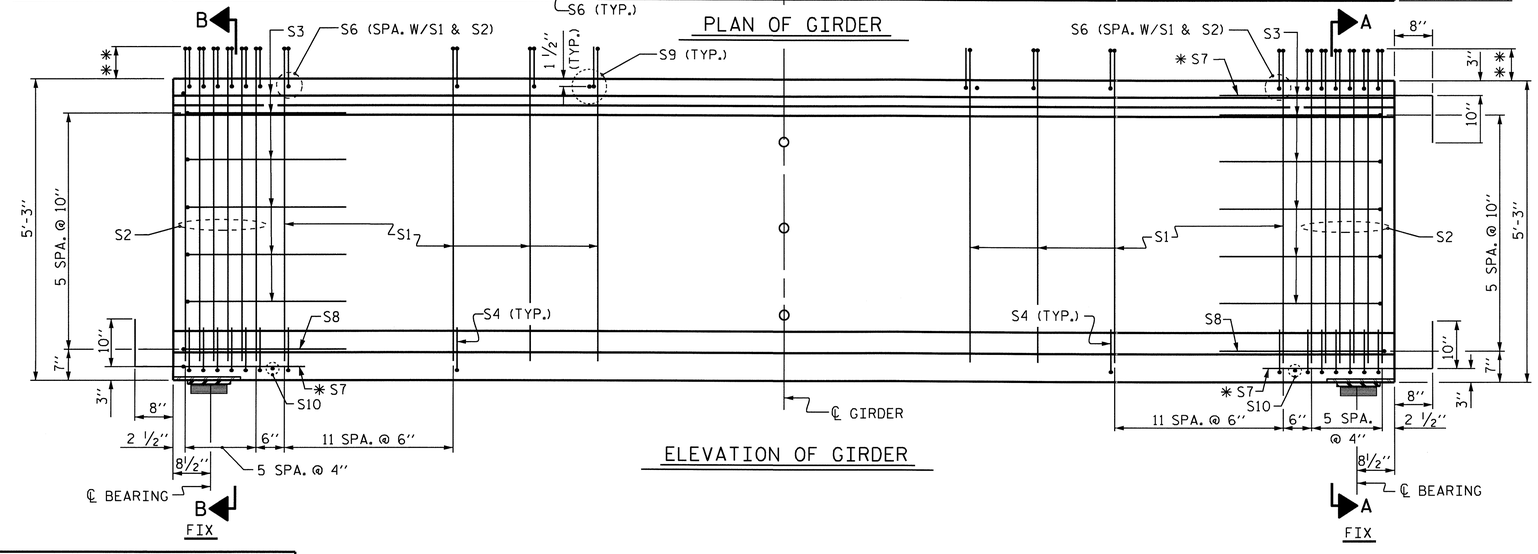

ELEVATION OF GIRDER

✱✱ THE PROJECTION OF THE S1 & S2 BARS ABOVE THE TOP OF THE GIRDER VARIES FROM 9 3/4" AT THE ENDS OF THE GIRDER TO 9 1/4" AT THE CENTERLINE OF THE GIRDER.

0.6" Ø L. R. GRADE 270 STRANDS

AREA (SQUARE INCHES)	ULTIMATE STRENGTH (LBS. PER STRAND)	APPLIED PRESTRESS (LBS. PER STRAND)
0.217	58,600	43,950

REINFORCING STEEL FOR ONE GDR

BAR	NUMBER	SIZE	TYPE	LENGTH	WEIGHT
S1	102	#4	1	6'-5"	437
S2	24	#5	1	6'-5"	161
S3	12	#4	2	8'-5"	67
S4	72	#4	3	3'-0"	144
S6	126	#5	4	4'-4"	569
✱ S7	30	#5	STR	3'-8"	115
S8	2	#5	2	9'-0"	19
S9	22	#5	STR	3'-3"	75
S10	2	#3	STR	1'-10"	1
S11	4	#5	2	10'-2"	42
S12	8	#4	STR	8'-0"	43

✱ NOTE: S7 BARS SHALL BE BENT BEFORE SHIPMENT. HEAT BENDING SHALL NOT BE ALLOWED.

BAR TYPES

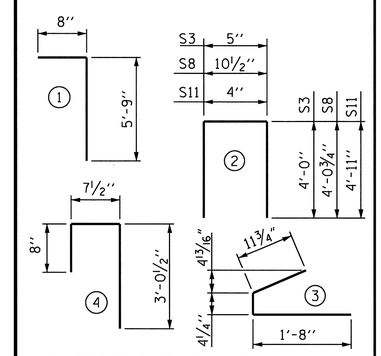

ALL BAR DIMENSIONS ARE OUT-TO-OUT

QUANTITIES FOR ONE GIRDER

	REINFORCING STEEL	5000 PSI CONCRETE	0.6" Ø L.R. STRANDS
	LB.	C.Y.	No.
	1673	12.1	14

GIRDERS REQUIRED

NUMBER	LENGTH	TOTAL LENGTH
5	60'-11"	304'-7"

PROJECT NO. R-2233AB

RUTHERFORD COUNTY

STATION: 280+13.00 -L-

SHEET 3 OF 5

STATE OF NORTH CAROLINA
DEPARTMENT OF TRANSPORTATION
RALEIGH

STANDARD
63" PRESTRESSED CONCRETE
MODIFIED BULB TEE
CONTINUOUS FOR LIVE LOAD
SPAN C
RIGHT LANE

NORTH CAROLINA PROFESSIONAL SEAL 20125 ENGINEER MARSHALL G. CHEEK, JR.
9-13-16

REVISIONS						SHEET NO.
NO.	BY:	DATE:	NO.	BY:	DATE:	S-44
1			3			TOTAL SHEETS
2			4			184

STR. #2

STD. NO. PCG9

ASSEMBLED BY : V. X. NGUYEN		DATE : 7-13-10	
CHECKED BY : M.G. CHEEK		DATE : 7-10	
DRAWN BY : EEM 2/6/97	REV. 8/16/99	RWW/LES	
CHECKED BY : VAP 2/6/97	REV. 10/17/00	RWW/LES	
	REV. 5/1/06R	TLA/GM	

13-SEP-2010 16:11
R:\Structures\Final Plans\Str. #2\R-2233AB_SD_STR#2_07_G#.dgn
afigueroa

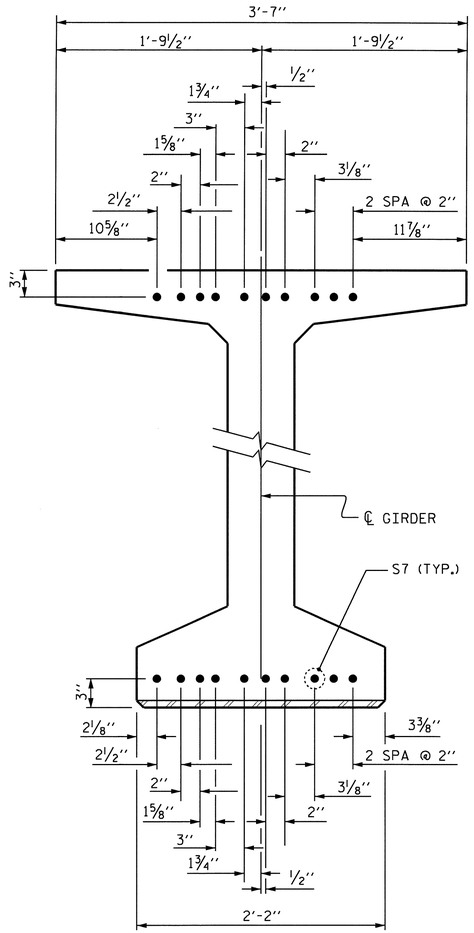

DETAIL "C"

(FOR 63" MODIFIED BULB TEES)

DEAD LOAD DEFLECTION TABLE FOR GIRDERS

0.6" Ø LOW RELAXATION		SPAN A GIRDERS #1 THRU #5										
TENTH POINTS		℄ BRG.	.1	.2	.3	.4	.5	.6	.7	.8	.9	℄ BRG.
CAMBER (GIRDER ALONE IN PLACE)	↑	0	0.017	0.032	0.043	0.051	0.053	0.051	0.043	0.032	0.017	0
* DEFLECTION DUE TO SUPERIMPOSED D.L.	↓	0	0.003	0.006	0.008	0.009	0.009	0.009	0.008	0.006	0.003	0
FINAL CAMBER	↑	0	3/16"	5/16"	7/16"	1/2"	1/2"	1/2"	7/16"	5/16"	3/16"	0

* INCLUDES FUTURE WEARING SURFACE
ALL VALUES ARE SHOWN IN FEET (DECIMAL FORM), EXCEPT "FINAL CAMBER", WHICH IS GIVEN IN INCHES (FRACTION FORM).

DEAD LOAD DEFLECTION TABLE FOR GIRDERS

0.6" Ø LOW RELAXATION		SPAN B GIRDERS #1 & #5										
TENTH POINTS		℄ BRG.	.1	.2	.3	.4	.5	.6	.7	.8	.9	℄ BRG.
CAMBER (GIRDER ALONE IN PLACE)	↑	0	0.125	0.237	0.324	0.380	0.399	0.380	0.324	0.237	0.125	0
* DEFLECTION DUE TO SUPERIMPOSED D.L.	↓	0	0.049	0.093	0.127	0.149	0.156	0.149	0.127	0.093	0.049	0
FINAL CAMBER	↑	0	15/16"	1¾"	2⅜"	2¾"	2 15/16"	2¾"	2⅜"	1¾"	15/16"	0

* INCLUDES FUTURE WEARING SURFACE
ALL VALUES ARE SHOWN IN FEET (DECIMAL FORM), EXCEPT "FINAL CAMBER", WHICH IS GIVEN IN INCHES (FRACTION FORM).

DEAD LOAD DEFLECTION TABLE FOR GIRDERS

0.6" Ø LOW RELAXATION		SPAN B GIRDERS #2, #3, & #4										
TENTH POINTS		℄ BRG.	.1	.2	.3	.4	.5	.6	.7	.8	.9	℄ BRG.
CAMBER (GIRDER ALONE IN PLACE)	↑	0	0.125	0.237	0.324	0.380	0.399	0.380	0.324	0.237	0.125	0
* DEFLECTION DUE TO SUPERIMPOSED D.L.	↓	0	0.045	0.085	0.116	0.136	0.143	0.136	0.116	0.085	0.045	0
FINAL CAMBER	↑	0	1"	1 13/16"	2½"	2 15/16"	3 1/16"	2 15/16"	2½"	1 13/16"	1"	0

* INCLUDES FUTURE WEARING SURFACE
ALL VALUES ARE SHOWN IN FEET (DECIMAL FORM), EXCEPT "FINAL CAMBER", WHICH IS GIVEN IN INCHES (FRACTION FORM).

DEAD LOAD DEFLECTION TABLE FOR GIRDERS

0.6" Ø LOW RELAXATION		SPAN C GIRDERS #1 THRU #5										
TENTH POINTS		℄ BRG.	.1	.2	.3	.4	.5	.6	.7	.8	.9	℄ BRG.
CAMBER (GIRDER ALONE IN PLACE)	↑	0	0.022	0.042	0.057	0.067	0.071	0.067	0.057	0.042	0.022	0
* DEFLECTION DUE TO SUPERIMPOSED D.L.	↓	0	0.007	0.012	0.017	0.020	0.021	0.020	0.017	0.012	0.007	0
FINAL CAMBER	↑	0	3/16"	3/8"	1/2"	9/16"	5/8"	9/16"	1/2"	3/8"	3/16"	0

* INCLUDES FUTURE WEARING SURFACE
ALL VALUES ARE SHOWN IN FEET (DECIMAL FORM), EXCEPT "FINAL CAMBER", WHICH IS GIVEN IN INCHES (FRACTION FORM).

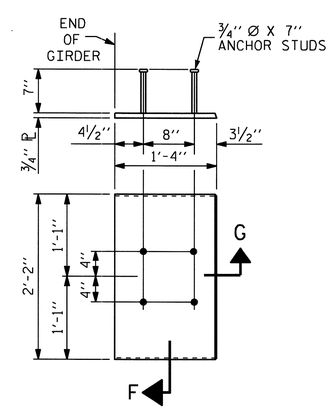

EMBEDDED PLATE "B-1" DETAILS FOR AASHTO 63" MODIFIED BULB TEES

(2 REQ'D PER GIRDER)

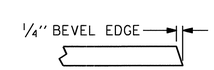

SECTION "G"

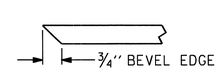

SECTION "F"

(SEE NOTES)

NOTES

ALL PRESTRESSING STRANDS SHALL BE 7-WIRE LOW-RELAXATION GRADE 270 STRANDS AND SHALL CONFORM TO AASHTO M203 EXCEPT FOR SAMPLING REQUIREMENTS WHICH SHALL BE IN ACCORDANCE WITH THE STANDARD SPECIFICATIONS.

ALL REINFORCING STEEL SHALL BE GRADE 60.

EMBEDDED PLATE "B-1" SHALL BE GALVANIZED IN ACCORDANCE WITH THE STANDARD SPECIFICATIONS. BEVEL EDGES OF PLATE "B-1" TO GIVE CLOSE FIT BUT NOT TIGHT FIT TO STEEL CASTING FORM.

ANCHOR STUDS SHALL CONFORM TO AASHTO M169 GRADES 1010 THROUGH 1020 OR APPROVED EQUAL, AND SHALL MEET THE TYPE "B" REQUIREMENTS OF SUBSECTION 7.3 OF THE ANSI/AASHTO/AWS D1.5 BRIDGE WELDING CODE.

AT ENDS OF GIRDERS TO BE EMBEDDED IN CONCRETE DIAPHRAGMS OR END WALLS, PRESTRESSING STRANDS MAY EXTEND A MAXIMUM OF 2" BEYOND THE GIRDER ENDS. OTHERWISE, PRESTRESSING STRANDS SHALL BE CUT FLUSH WITH THE GIRDER ENDS.

THE TRANSFER OF LOAD FROM THE ANCHORAGES TO THE GIRDER IN SPAN A OR C SHALL BE DONE WHEN CONCRETE HAS REACHED A COMPRESSIVE STRENGTH OF NOT LESS THAN 4000 PSI.

THE TRANSFER OF LOAD FROM THE ANCHORAGES TO THE GIRDER IN SPAN B SHALL BE DONE WHEN CONCRETE HAS REACHED A COMPRESSIVE STRENGTH OF NOT LESS THAN 6300 PSI.

DEPENDING ON THE TYPE OF SYSTEM USED TO SUPPORT THE DECK SLAB FORMS, PRESET ANCHORS MAY BE NECESSARY IN THE PRESTRESSED CONCRETE GIRDER.

THE TOP SURFACE OF THE GIRDER, EXCLUDING THE OUTSIDE 4", SHALL BE RAKED TO A DEPTH OF ¼".

WHEN DRAPED STRANDS ARE DETAILED, THE LONGITUDINAL LOCATION OF THE HOLD DOWN DEVICES SHALL BE WITHIN 6" OF THE LOCATION SHOWN AND THE CENTER OF GRAVITY OF THE GROUP OF DRAPED STRANDS SHALL BE LOCATED WITHIN ½" OF THE THEORETICAL LOCATION SHOWN.

A 2" x 2" CHAMFER IS ALLOWED AT THE INTERSECTION OF THE WEB AND THE BOTTOM FLANGE OF THE 63" AND 72" MODIFIED BULB TEES ONLY.

THE CONTRACTOR HAS THE OPTION TO PROVIDE, AT NO ADDITIONAL COST TO THE DEPARTMENT, 2 ADDITIONAL STRANDS AT THE TOP OF THE GIRDER TO FACILITATE TYING OF THE REINFORCING STEEL. THESE STRANDS SHALL BE PULLED TO A LOAD OF 4500 lbs.

FOR PRESTRESSED CONCRETE MEMBERS, SEE SPECIAL PROVISIONS.

PROJECT NO. R-2233AB
RUTHERFORD COUNTY
STATION: 280+13.00 -L-

SHEET 4 OF 5

STATE OF NORTH CAROLINA
DEPARTMENT OF TRANSPORTATION
RALEIGH

STANDARD
PRESTRESSED CONCRETE GIRDER CONTINUOUS FOR LIVE LOAD DETAILS
RIGHT LANE

NORTH CAROLINA PROFESSIONAL SEAL 20125 ENGINEER MARSHALL G. CHEEK, JR.
9-15-10

REVISIONS						SHEET NO.
NO.	BY:	DATE:	NO.	BY:	DATE:	S-45
1			3			TOTAL SHEETS
2			4			184

STR #2

STD. NO. PCG11

ASSEMBLED BY : V.X. NGUYEN	DATE : 7-13-10		
CHECKED BY : M.G. CHEEK	DATE : 7-10		
DRAWN BY : ELR 11/91	REV. 10/17/00 RWW/LES		
CHECKED BY : GRP 11/91	REV. 7/10/01RR LES/RDR		
	REV. 5/1/06 TLA/GM		

13-SEP-2010 16:11
R:\Structures\Final Plans\Str. #2\R-2233AB_SD_STR#2_07_G#.dgn
afigueroa

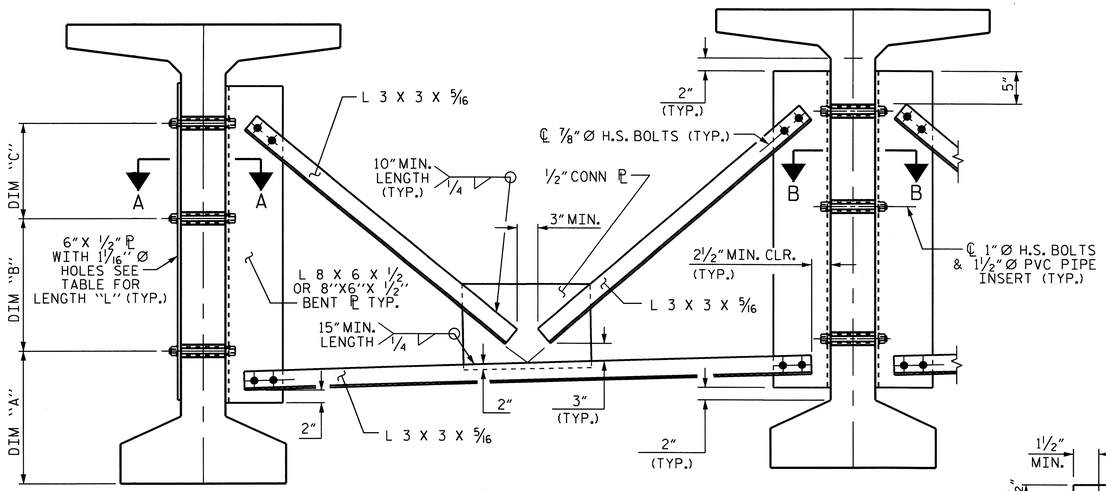

EXTERIOR GIRDER

INTERIOR GIRDER

PART SECTION AT INTERMEDIATE DIAPHRAGM

(63" BULB TEE GIRDER SHOWN)

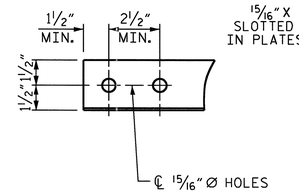

ANGLE END

(L 3 X 3 X 5/16)

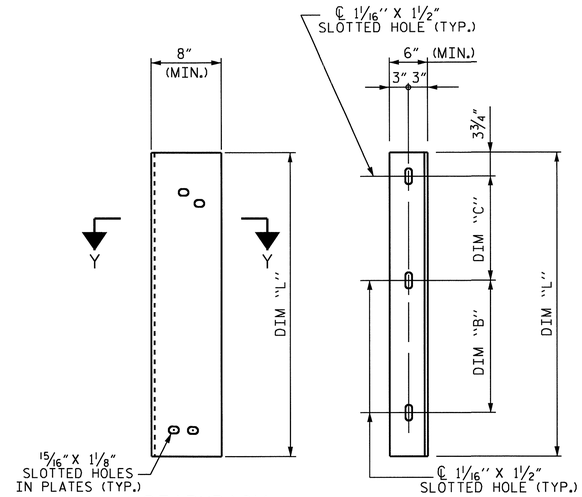

DIAPHRAGM FACE

WEB FACE

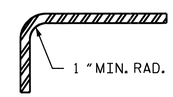

SECTION Y-Y

CONNECTOR PLATE DETAILS

STRUCTURAL STEEL NOTES

ALL INTERMEDIATE DIAPHRAGM STEEL, CONNECTOR PLATES AND PLATE WASHERS SHALL BE AASHTO M270 GRADE 50 OR APPROVED EQUAL.

TENSION ON THE AASHTO M164 BOLTS THROUGH THE ANGLE MEMBER SHALL BE CALIBRATED USING DIRECT TENSION INDICATOR WASHERS IN ACCORDANCE WITH THE STANDARD SPECIFICATIONS. FOR DIRECT TENSION INDICATORS, SEE SPECIAL PROVISION.

TENSION ON THE AASHTO M164 BOLTS THROUGH THE GIRDER WEB SHALL BE SNUG TIGHTENED FOLLOWED BY AN ADDITIONAL 1/4 TURN.

THE PLATES, BENT PLATES, ANGLES, AND PLATE WASHERS SHALL BE GALVANIZED OR METALLIZED IN ACCORDANCE WITH THE STANDARD SPECIFICATIONS. FOR THERMAL SPRAYED COATINGS (METALLIZATION), SEE SPECIAL PROVISIONS.

FOR METALLIZATION, APPLY AN 8 MIL THICK 99.99 PERCENT ZINC (W-Zn-1) THERMAL SPRAYED COATING WITH A 0.5 MIL THICK SEAL COAT TO ALL STEEL DIAPHRAGM SURFACES IN ACCORDANCE WITH THE THERMAL SPRAYED COATINGS SPECIAL PROVISIONS AND SECTION 442 OF THE STANDARD SPECIFICATIONS.

GALVANIZE THE HIGH STRENGTH BOLTS, NUTS, WASHERS AND DIRECT TENSION INDICATORS IN ACCORDANCE WITH THE STANDARD SPECIFICATIONS. FOR HIGH STRENGTH BOLTS, SEE SPECIAL PROVISIONS.

USE A MINIMUM 7/16" THICK PLATE WASHER WITH STANDARD HOLES UNDER EACH BOLT HEAD AND NUT. THE PLATE WASHERS SHALL HAVE SUFFICIENT SIZE TO COVER THE HOLES AFTER INSTALLATION. HARDENED WASHERS AND DIRECT TENSION INDICATORS ARE TO BE USED IN CONJUNCTION WITH THE PLATE WASHERS IN THE L 3 X 3 X 5/16 ANGLE MEMBER CONNECTION.

FOR BOLTS THROUGH THE GIRDER WEB, PROVIDE SUFFICIENT LENGTH OF ALL BOLTS TO ACCOMMODATE WASHERS AND THE THICKNESS OF CONNECTING MEMBER PLUS AT LEAST 1/4" PROJECTION BEYOND THE NUT.

INTERMEDIATE DIAPHRAGM ASSEMBLY SHALL COMPLY WITH SECTION 1072 OF THE STANDARD SPECIFICATIONS.

THE CONTRACTOR SHALL SUBMIT TWO SETS OF WORKING DRAWINGS FOR THE INTERMEDIATE DIAPHRAGM ASSEMBLY FOR REVIEW, COMMENTS AND ACCEPTANCE. AFTER REVIEW, COMMENTS, AND ACCEPTANCE, THE CONTRACTOR SHALL SUBMIT SEVEN SETS FOR DISTRIBUTION.

IN THE EXTERIOR BAYS, TEMPORARY STRUTS SHALL BE PLACED BETWEEN PRESTRESSED GIRDERS ADJACENT TO THE STEEL DIAPHRAGMS. STRUTS SHALL REMAIN IN PLACE 3 DAYS AFTER CONCRETE IS PLACED. ALL AASHTO M164 H.S. BOLTS SHALL BE FULLY TIGHTENED AFTER THE STRUTS HAVE BEEN REMOVED.

THE COST OF THE STEEL DIAPHRAGMS AND ASSEMBLIES SHALL BE INCLUDED IN THE UNIT PRICE BID FOR PRESTRESSED CONCRETE GIRDERS.

TABLE

GIRDER TYPE	DIM "A"	DIM "B"	DIM "C"	DIM "L"
63" BULB TEE	1'-8"	1'-2"	1'-3 3/4"	3'-5"

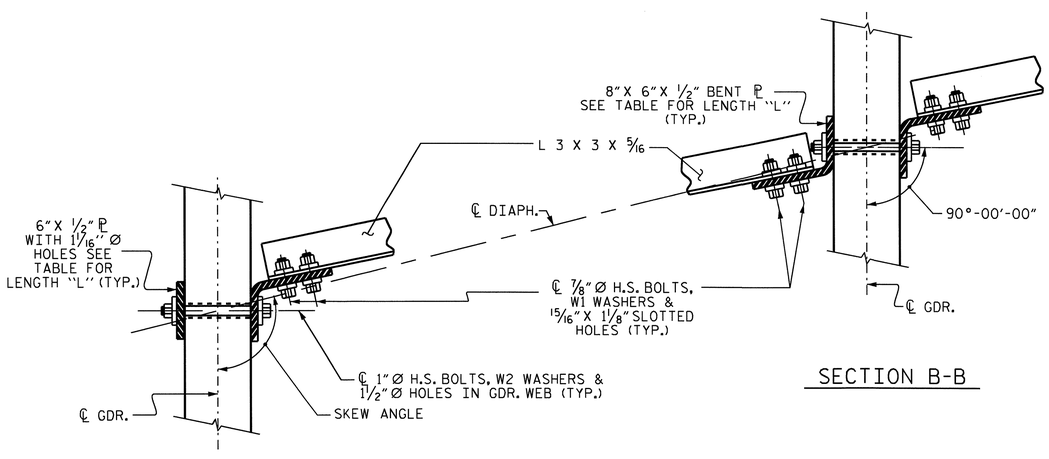

SECTION B-B

SECTION A-A

CONNECTION DETAILS

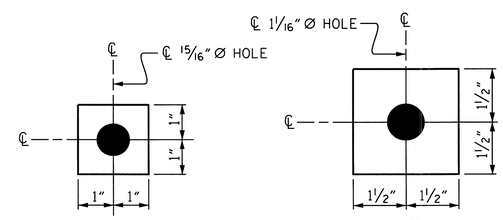

W1

ℙ 7/16" X 2" X 2"

USE WITH 7/8"Ø HVY. HEX NUTS & DIRECT TENSION INDICATOR WASHERS AT DIAPHRAGM ANGLE TO CONNECTOR PLATE CONNECTIONS

W2

ℙ 7/16" X 3" X 3"

USE WITH 1"Ø HVY. HEX NUTS AT CONNECTOR PLATE TO GIRDER CONNECTIONS

WASHER DETAILS

PROJECT NO. R-2233AB

RUTHERFORD COUNTY

STATION: 280+13.00 -L-

SHEET 5 OF 5

STATE OF NORTH CAROLINA
DEPARTMENT OF TRANSPORTATION
RALEIGH

STANDARD
INTERMEDIATE
STEEL DIAPHRAGMS
FOR 63" BULB TEE
PRESTRESSED CONCRETE
GIRDERS
RIGHT LANE

NORTH CAROLINA PROFESSIONAL SEAL 20125 ENGINEER MARSHALL G. CHEEK, JR.
9-15-10

REVISIONS						SHEET NO.
NO.	BY:	DATE:	NO.	BY:	DATE:	S-46
1			3			TOTAL SHEETS
2			4			184

STR #2

STD. NO. PCG13

ASSEMBLED BY : V.X. NGUYEN		DATE : 7-13-10	
CHECKED BY : M.G. CHEEK		DATE : 7-10	
DRAWN BY : RWW 11/09	ADDED 11/23/09		
CHECKED BY : GM 11/09			

13-SEP-2010 16:11
R:\Structures\Final Plans\Str. #2\R-2233AB_SD_STR#2_07_G*.dgn
afigueroa

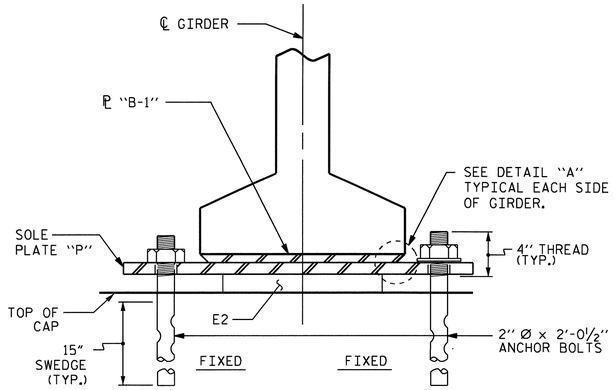

SECTION E-E

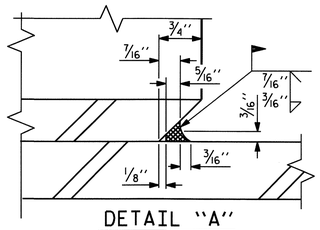

DETAIL "A"

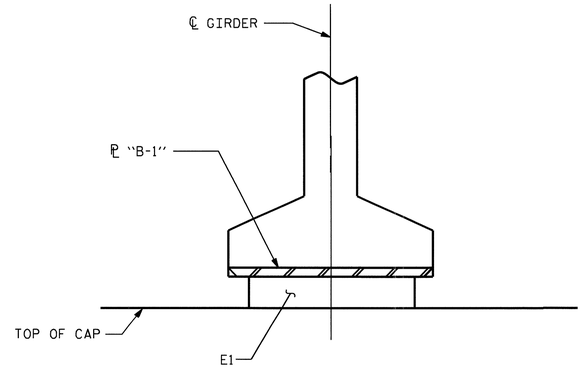

SECTION D-D

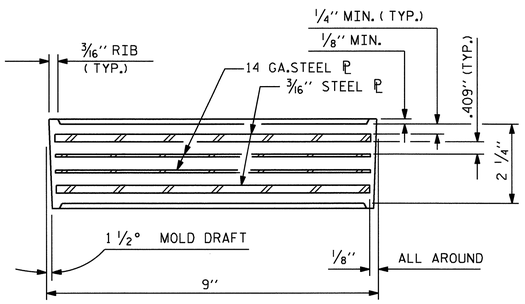

TYPICAL SECTION OF ELASTOMERIC BEARINGS

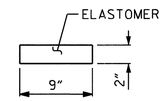

TYPICAL SECTION OF ELASTOMERIC BEARINGS

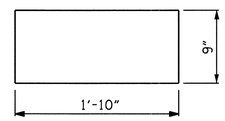

E1
(FIXED)
E1 (10 REQ'D)

PLAN VIEW OF ELASTOMERIC BEARING
(@ END BENTS)

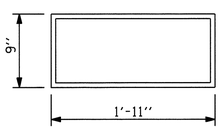

E2 (20 REQ'D)

PLAN VIEW OF ELASTOMERIC BEARING
(@ BENTS)

TYPE V

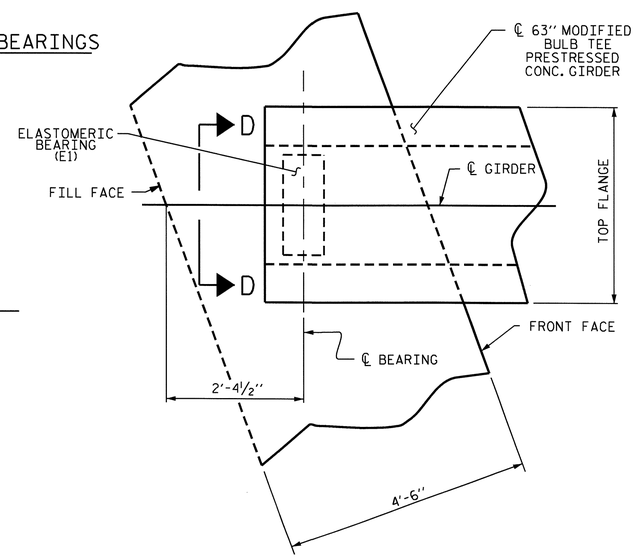

PLAN OF GIRDER @ INTEGRAL END BENT

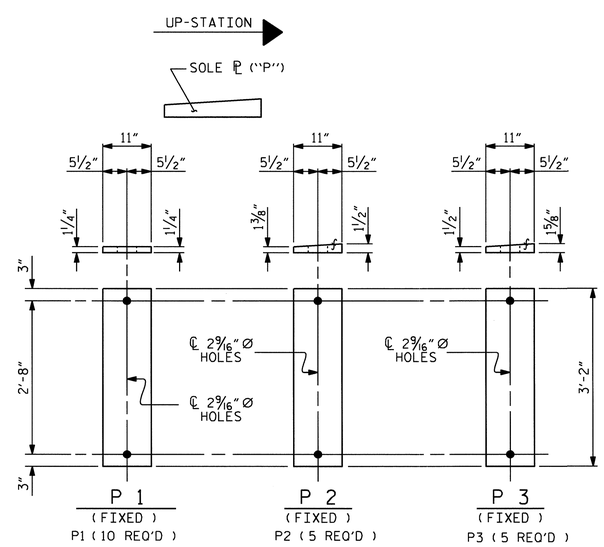

SOLE PLATE DETAILS ("P")

NOTES

AT ALL FIXED POINTS OF SUPPORT, NUTS FOR ANCHOR BOLTS ARE TO BE TIGHTENED FINGER TIGHT AND THEN BACKED OFF ½ TURN. THE THREAD OF THE NUT AND BOLT SHALL THEN BE BURRED WITH A SHARP POINTED TOOL.

STEEL SOLE PLATES, ANCHOR BOLTS, NUTS, AND WASHERS SHALL BE GALVANIZED IN ACCORDANCE WITH THE STANDARD SPECIFICATIONS.

PRIOR TO WELDING, GRIND THE GALVANIZED SURFACE OF THE PORTION OF THE EMBEDDED PLATE AND SOLE PLATE THAT ARE TO BE WELDED. AFTER WELDING, DAMAGED GALVANIZED SURFACES SHALL BE REPAIRED IN ACCORDANCE WITH THE STANDARD SPECIFICATIONS.

WHEN WELDING THE SOLE PLATE TO THE EMBEDDED PLATE IN THE GIRDER, USE TEMPERATURE INDICATING WAX PENS, OR OTHER SUITABLE MEANS, TO ENSURE THAT THE TEMPERATURE OF THE SOLE PLATE DOES NOT EXCEED 300°F. TEMPERATURES ABOVE THIS MAY DAMAGE THE ELASTOMER.

SOLE PLATE "P", BOLTS, NUTS, AND WASHERS SHALL BE INCLUDED IN THE PAY ITEM FOR PRESTRESSED CONCRETE GIRDERS.

ANCHOR BOLTS SHALL MEET THE REQUIREMENTS OF ASTM A449. NUTS SHALL MEET THE REQUIREMENTS OF AASHTO M291-DH OR AASHTO M292-2H. WASHERS SHALL MEET THE REQUIREMENTS OF AASHTO M293. NO SHOP DRAWINGS ARE REQUIRED FOR ANCHOR BOLTS, NUTS AND WASHERS. SHOP INSPECTION IS REQUIRED.

ALL SURFACES OF BEARING PLATES SHALL BE SMOOTH AND STRAIGHT.

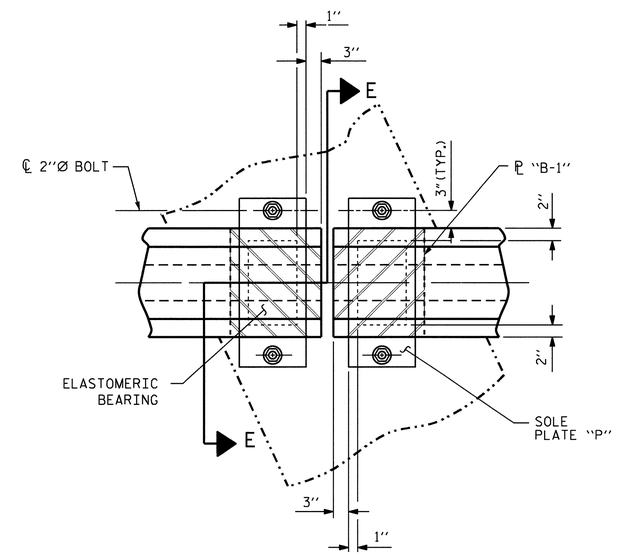

PLAN VIEW AT BENTS
(SHOWING CONTINUOUS BENT)

— LOAD RATINGS —	
	MAX.D.L.+ L.L.
TYPE V	180 K

PROJECT NO. R-2233AB
RUTHERFORD COUNTY
STATION: 280+13.00-L-

STATE OF NORTH CAROLINA
DEPARTMENT OF TRANSPORTATION
RALEIGH

STANDARD
ELASTOMERIC BEARING DETAILS
PRESTRESSED CONCRETE GIRDER SUPERSTRUCTURE
RIGHT LANE

NORTH CAROLINA PROFESSIONAL SEAL 20125 ENGINEER MARSHALL G. CHEEK
9-15-10

REVISIONS						SHEET NO.
NO.	BY:	DATE:	NO.	BY:	DATE:	S-47
1			3			TOTAL SHEETS
2			4			184

ASSEMBLED BY : V.X. NGUYEN		DATE : 11-5-09	
CHECKED BY : M.G. CHEEK		DATE : 5-10	
DRAWN BY : EEM 2/97	REV. 8/16/99	RWW/LES	
CHECKED BY : VAP 2/97	REV. 10/17/00	RWW/LES	
	REV. 5/1/06	TLA/GM	

13-SEP-2010 16:11
R:\Structures\Final Plans\Str. #2\R-2233AB_SD_STR#2_08_BG.dgn
afigueroa

STR. #2

STD. NO. EB4

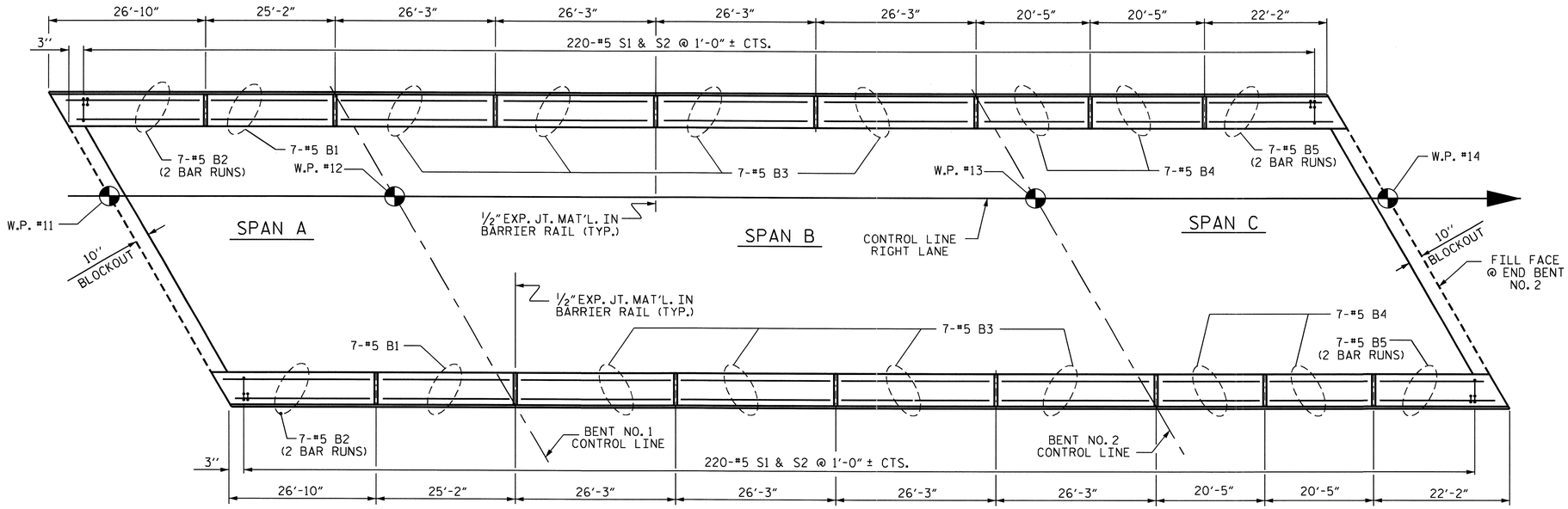

PLAN OF CONCRETE BARRIER RAIL

BAR TYPES

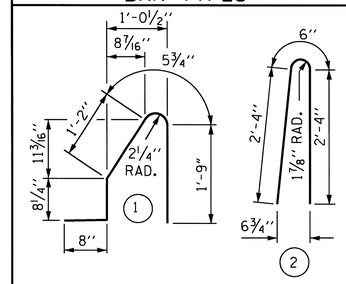

ALL BAR DIMENSIONS ARE OUT TO OUT

BILL OF MATERIAL

FOR CONCRETE BARRIER RAIL ONLY

BAR	NO.	SIZE	TYPE	LENGTH	WEIGHT
* S1	440	#5	1	4'-9"	2180
* S2	440	#5	2	5'-2"	2371
* B1	14	#5	STR	24'-9"	361
* B2	28	#5	STR	15'-3"	445
* B3	56	#5	STR	25'-10"	1509
* B4	28	#5	STR	20'-0"	584
* B5	28	#5	STR	12'-11"	377

* EPOXY COATED REINFORCING STEEL	7827 LBS.
CLASS AA CONCRETE	44.0 CU. YDS.
CONCRETE BARRIER RAIL	440.00 LIN. FT.

* THESE BARS ARE EPOXY COATED.

NOTES

THE BARRIER RAIL IN A CONTINUOUS UNIT SHALL NOT BE CAST UNTIL ALL SLAB CONCRETE IN THAT UNIT HAS BEEN CAST AND HAS REACHED A MINIMUM COMPRESSIVE STRENGTH OF 3,000 PSI.

ALL REINFORCING STEEL IN BARRIER RAILS SHALL BE EPOXY COATED.

VERTICAL GROOVED CONTRACTION JOINTS, 1/2" IN DEPTH, SHALL BE TOOLED IN ALL EXPOSED FACES OF THE BARRIER RAIL AND IN ACCORDANCE WITH ARTICLE 825-10(B) OF THE STANDARD SPECIFICATIONS. THE CONTRACTION JOINT SHALL BE LOCATED AT EACH THIRD POINT BETWEEN BARRIER RAIL EXPANSION JOINTS. ONLY ONE CONTRACTION JOINT IS REQUIRED AT MIDPOINT OF BARRIER RAIL SEGMENTS LESS THAN 20 FEET IN LENGTH AND NO CONTRACTION JOINTS ARE REQUIRED FOR THOSE SEGMENTS LESS THAN 10 FEET IN LENGTH.

THE #5 "S" BARS MAY BE SHIFTED AS NECESSARY IN ORDER TO MAINTAIN A 2" MINIMUM CLEARANCE TO THE 1/2" EXPANSION JOINT MATERIAL IN THE BARRIER RAIL.

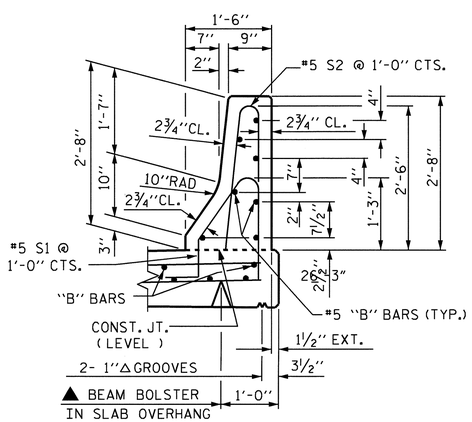

SECTION THRU RAIL

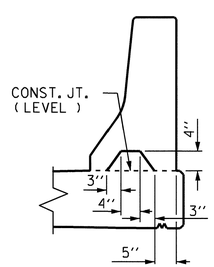

SECTION S-S

AT DAM IN OPEN JOINT
(THIS IS TO BE USED ONLY
WHEN SLIP FORM IS USED)

▲ FOR BEAM BOLSTER HEIGHT SEE, "SUPERSTRUCTURE TYPICAL SECTION".

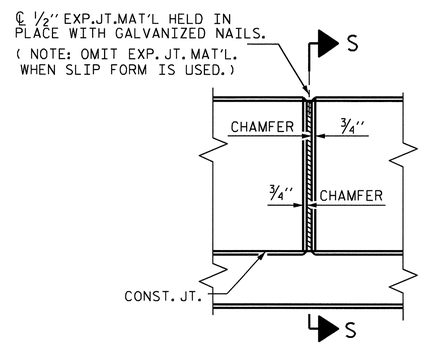

ELEVATION AT EXPANSION JOINTS

BARRIER RAIL DETAILS

PROJECT NO. R-2233AB
RUTHERFORD COUNTY
STATION: 280+13.00 -L-

SHEET 1 OF 2

STATE OF NORTH CAROLINA
DEPARTMENT OF TRANSPORTATION
RALEIGH

STANDARD
CONCRETE
BARRIER RAIL
RIGHT LANE

NORTH CAROLINA PROFESSIONAL SEAL 20125 ENGINEER MARSHALL G. CHEEK, JR.
9-15-10

REVISIONS						SHEET NO.
NO.	BY:	DATE:	NO.	BY:	DATE:	S-48
1			3			TOTAL SHEETS
2			4			184

STR #2

STD. NO. CBR1

ASSEMBLED BY : V.X. NGUYEN	DATE : 7-13-10		
CHECKED BY : M.G. CHEEK	DATE : 7-10		
DRAWN BY : ARB 5/87	REV. 10/17/00	RWW/LES	
CHECKED BY : SJD 9/87	REV. 5/17/03R	RWW/JTE	
	REV. 5/1/06	TLA/GM	

13-SEP-2010 16:11
R:\Structures\Final Plans\Str. #2\R-2233AB_SD_STR#2_09_BR.dgn
afigueroa

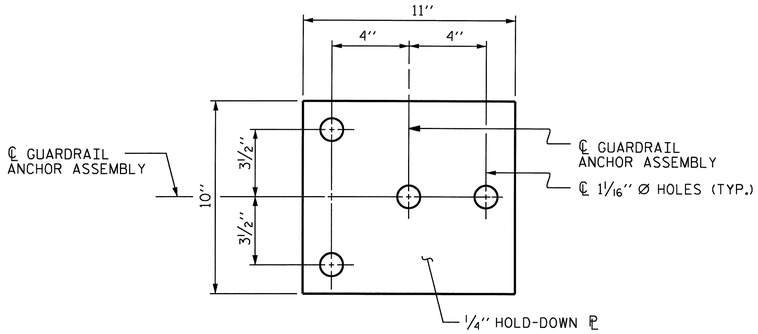

PLAN

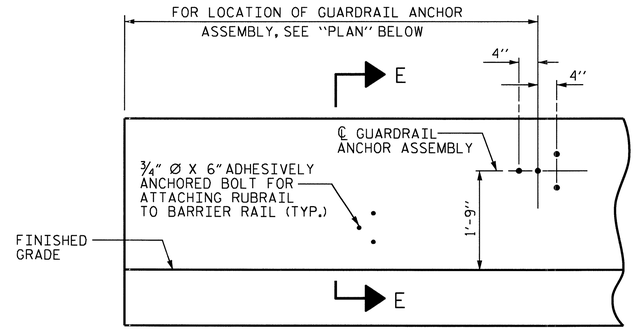

ELEVATION

FOR LOCATION OF RUBRAIL, SEE ROADWAY STD. 862.03

NOTES

THE GUARDRAIL ANCHOR ASSEMBLY SHALL CONSIST OF A 1/4'' HOLD DOWN PLATE AND 4 - 7/8'' Ø BOLTS WITH NUTS AND WASHERS, RUBRAIL, AND ADHESIVELY ANCHORED BOLTS.

THE HOLD-DOWN PLATE SHALL CONFORM TO AASHTO M270 GRADE 36. AFTER FABRICATION, THE HOLD-DOWN PLATE SHALL BE HOT-DIP GALVANIZED IN ACCORDANCE WITH AASHTO M111.

BOLTS SHALL CONFORM TO THE REQUIREMENTS OF ASTM A307 AND NUTS SHALL CONFORM TO THE REQUIREMENTS OF AASHTO M291. BOLTS, NUTS AND WASHERS SHALL BE GALVANIZED. (AT THE CONTRACTOR'S OPTION, STAINLESS STEEL BOLTS, NUTS AND WASHERS MAY BE USED AS AN ALTERNATE FOR THE 7/8'' Ø GALVANIZED BOLTS, NUTS AND WASHERS. THEY SHALL CONFORM TO OR EXCEED THE MECHANICAL REQUIREMENTS OF ASTM A307. THE USE OF THIS ALTERNATE SHALL BE APPROVED BY THE ENGINEER.)

THE GUARDRAIL ANCHOR ASSEMBLY IS REQUIRED AT ALL POINTS WHERE APPROACH GUARDRAIL IS TO BE ATTACHED TO THE END OF BARRIER RAIL. FOR POINTS OF ATTACHMENT, SEE SKETCH.

AFTER INSTALLATION, THE EXPOSED THREAD OF THE BOLT SHALL BE BURRED WITH A SHARP POINTED TOOL.

THE COST OF THE GUARDRAIL ANCHOR ASSEMBLY SHALL BE INCLUDED IN THE UNIT CONTRACT PRICE BID FOR CONCRETE BARRIER RAIL.

THE 1 1/4'' Ø HOLES SHALL BE FORMED OR DRILLED WITH A CORE BIT. IMPACT TOOLS WILL NOT BE PERMITTED. ANY CONCRETE DAMAGED BY THIS WORK SHALL BE REPAIRED TO THE SATISFACTION OF THE ENGINEER.

THE C6 X 8.2 RUBRAIL IS TO BE ADHESIVELY ANCHORED TO THE RAIL USING THREE 3/4" Ø X 6" BOLTS WITH WASHERS. LEVEL ONE FIELD TESTING IS REQUIRED, AND THE YIELD LOAD OF THE 3/4" Ø BOLT IS 12 KIPS. FOR ADHESIVELY ANCHORED ANCHOR BOLTS OR DOWELS, SEE SPECIAL PROVISIONS. SEE ROADWAY STANDARD 862.03 FOR DETAILS AND LOCATION OF THE RUBRAIL.

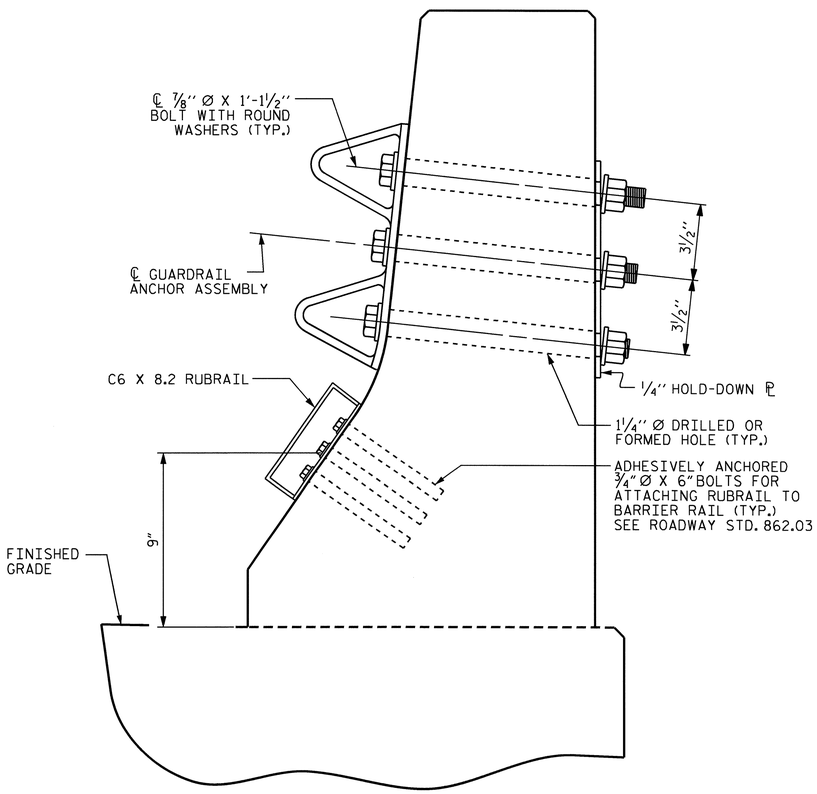

SECTION E-E

GUARDRAIL ANCHOR ASSEMBLY DETAILS

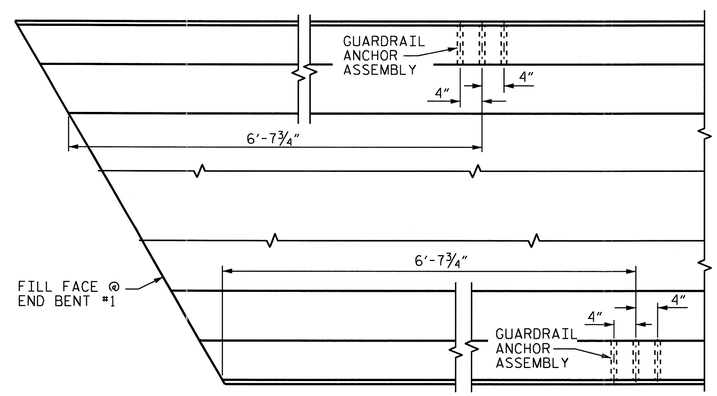

PLAN

LOCATION OF ANCHORS FOR GUARDRAIL

END BENT #1 SHOWN, END BENT #2 SIMILAR.

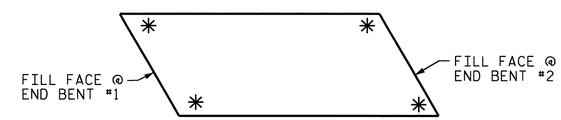

SKETCH SHOWING POINTS OF ATTACHMENTS

✳ DENOTES GUARDRAIL ANCHOR ASSEMBLY

PROJECT NO. R-2233AB
RUTHERFORD COUNTY
STATION: 280+13.00 -L-

SHEET 2 OF 2

STATE OF NORTH CAROLINA
DEPARTMENT OF TRANSPORTATION
RALEIGH

STANDARD
GUARDRAIL ANCHORAGE FOR BARRIER RAIL RIGHT LANE

NORTH CAROLINA PROFESSIONAL SEAL 20125 ENGINEER MARSHALL G. CHEEK, JR.
9-15-10

REVISIONS						SHEET NO.
NO.	BY:	DATE:	NO.	BY:	DATE:	S-49
1			3			TOTAL SHEETS
2			4			184

STR. #2 STD. NO. GRA2

ASSEMBLED BY : V.X. NGUYEN		DATE : 7-13-10	
CHECKED BY : M.G. CHEEK		DATE : 7-10	
DRAWN BY : TLA 5/06	ADDED 5/1/06R KMM/GM		
CHECKED BY : GM 5/06			

13-SEP-2010 16:11
R:\Structures\FinalPlans\Str. #2\R-2233AB_SD_STR#2_09_BR.dgn
afigueroa

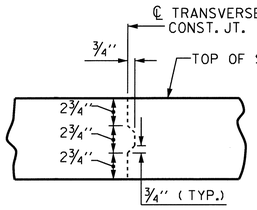

TRANSVERSE CONSTRUCTION JOINT DETAIL

NOTE: REINFORCING STEEL IN SLAB NOT SHOWN. LONGITUDINAL REINFORCING STEEL SHALL BE CONTINUOUS THRU JOINT

SUPERSTRUCTURE REINFORCING STEEL LENGTHS ARE BASED ON THE FOLLOWING MINIMUM SPLICE LENGTHS

BAR SIZE	SUPERSTRUCTURE EXCEPT APPROACH SLABS, PARAPET, AND BARRIER RAIL		APPROACH SLABS		PARAPET AND BARRIER RAIL
	EPOXY COATED	UNCOATED	EPOXY COATED	UNCOATED	
#4	2'-0"	1'-9"	2'-0"	1'-9"	2'-9"
#5	2'-6"	2'-2"	2'-6"	2'-2"	3'-5"
#6	3'-0"	2'-7"	3'-10"	2'-7"	4'-4"
#7	5'-3"	3'-6"			
#8	6'-10"	4'-7"			

REINFORCING BAR SCHEDULE SPANS A THRU C

BAR	NO.	SIZE	TYPE	LENGTH	WEIGHT
* A1	379	#5	STR	38'-11"	15,384
A2	379	#5	STR	38'-11"	15,384
* A101	2	#5	STR	38'-1"	79
* A102	2	#5	STR	36'-7"	76
* A103	2	#5	STR	35'-1"	73
* A104	2	#5	STR	33'-7"	70
* A105	2	#5	STR	32'-1"	67
* A106	2	#5	STR	30'-7"	64
* A107	2	#5	STR	29'-1"	61
* A108	2	#5	STR	27'-7"	58
* A109	2	#5	STR	26'-1"	54
* A110	2	#5	STR	24'-8"	51
* A111	2	#5	STR	23'-2"	48
* A112	2	#5	STR	21'-8"	45
* A113	2	#5	STR	20'-2"	42
* A114	2	#5	STR	18'-8"	39
* A115	2	#5	STR	17'-3"	36
* A116	2	#5	STR	15'-9"	33
* A117	2	#5	STR	14'-3"	30
* A118	2	#5	STR	12'-9"	27
* A119	2	#5	STR	11'-3"	23
* A120	2	#5	STR	9'-9"	20
* A121	2	#5	STR	8'-3"	17
* A122	2	#5	STR	6'-10"	14
* A123	2	#5	STR	5'-4"	11
* A124	2	#5	STR	3'-10"	8
* A125	2	#5	STR	2'-4"	5

BAR	NO.	SIZE	TYPE	LENGTH	WEIGHT
A201	2	#5	STR	38'-1"	79
A202	2	#5	STR	36'-7"	76
A203	2	#5	STR	35'-1"	73
A204	2	#5	STR	33'-7"	70
A205	2	#5	STR	32'-1"	67
A206	2	#5	STR	30'-7"	64
A207	2	#5	STR	29'-1"	61
A208	2	#5	STR	27'-7"	58
A209	2	#5	STR	26'-1"	54
A210	2	#5	STR	24'-8"	51
A211	2	#5	STR	23'-2"	48
A212	2	#5	STR	21'-8"	45
A213	2	#5	STR	20'-2"	42
A214	2	#5	STR	18'-8"	39
A215	2	#5	STR	17'-3"	36
A216	2	#5	STR	15'-9"	33
A217	2	#5	STR	14'-3"	30
A218	2	#5	STR	12'-9"	27
A219	2	#5	STR	11'-3"	23
A220	2	#5	STR	9'-9"	20
A221	2	#5	STR	8'-3"	17
A222	2	#5	STR	6'-10"	14
A223	2	#5	STR	5'-4"	11
A224	2	#5	STR	3'-10"	8
A225	2	#5	STR	2'-4"	5

BAR	NO.	SIZE	TYPE	LENGTH	WEIGHT
* B1	56	#4	STR	17'-4"	648
* B2	28	#7	STR	56'-10"	3253
* B3	25	#7	STR	23'-5"	1197
* B4	56	#4	STR	19'-1"	714
* B5	28	#7	STR	60'-0"	3434
* B6	25	#7	STR	25'-1"	1282
* B7	56	#4	STR	21'-3"	795
B8	128	#5	STR	56'-2"	7498
K1	24	#4	STR	21'-7"	346
K2	24	#4	STR	4'-0"	64
K3	96	#4	STR	7'-3"	465
K4	24	#4	STR	4'-6"	72
K5	4	#4	STR	2'-0"	5
K6	16	#4	STR	3'-6"	37
K7	4	#4	STR	2'-8"	7
K8	36	#4	5	10'-2"	244
K9	24	#4	6	5'-1"	81
S1	48	#4	2	14'-0"	449
* S2	40	#4	3	11'-8"	312
* S3	48	#4	3	10'-1"	323
S4	248	#4	1	2'-9"	456
U1	40	#4	4	16'-8"	445
U2	16	#4	7	10'-9"	115

REINFORCING STEEL = 26,719 LBS.
* EPOXY COATED REINF. STEEL = 28,393 LBS.

* THESE BARS ARE EPOXY COATED

BAR TYPES

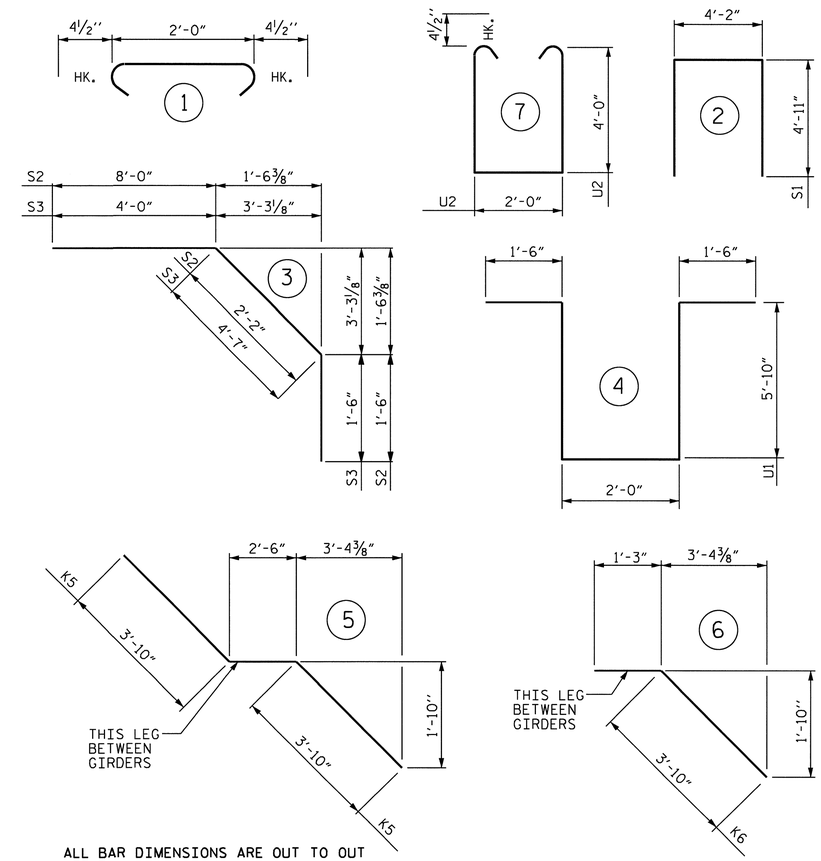

ALL BAR DIMENSIONS ARE OUT TO OUT

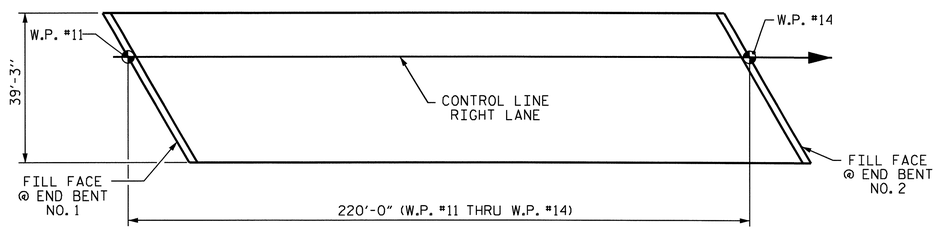

LAYOUT FOR COMPUTING AREA REINFORCED CONCRETE DECK SLAB (SQ. FT. = 8,635)

SUPERSTRUCTURE BILL OF MATERIAL

		CLASS AA CONCRETE	REINFORCING STEEL	EPOXY COATED REINFORCING STEEL
		(CU. YDS.)	(LBS.)	(LBS.)
SPAN A, B, AND C	POUR #1	63.3	27,719	28,393
	POUR #2	186.6		
	POUR #3	117.2		
	POUR #4	76.7		
TOTALS **		443.8	27,719	28,393

** QUANTITIES FOR BARRIER RAIL ARE NOT INCLUDED

GROOVING BRIDGE FLOORS

APPROACH SLABS	1,470 SQ.FT.
BRIDGE DECK	7,189 SQ.FT.
TOTAL	8,659 SQ.FT.

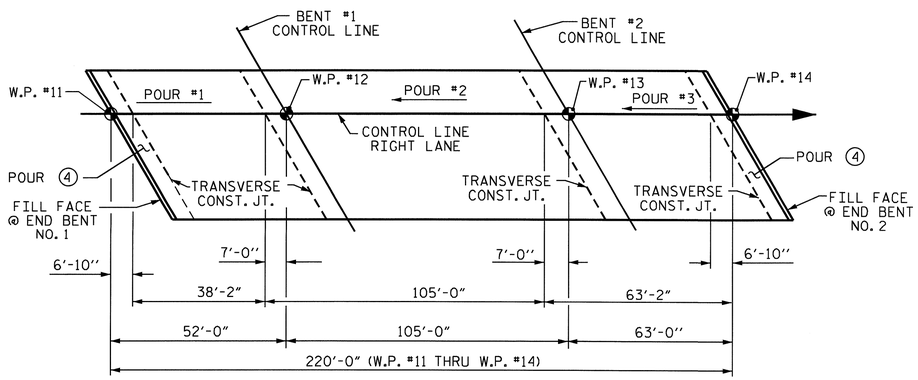

POURING SEQUENCE

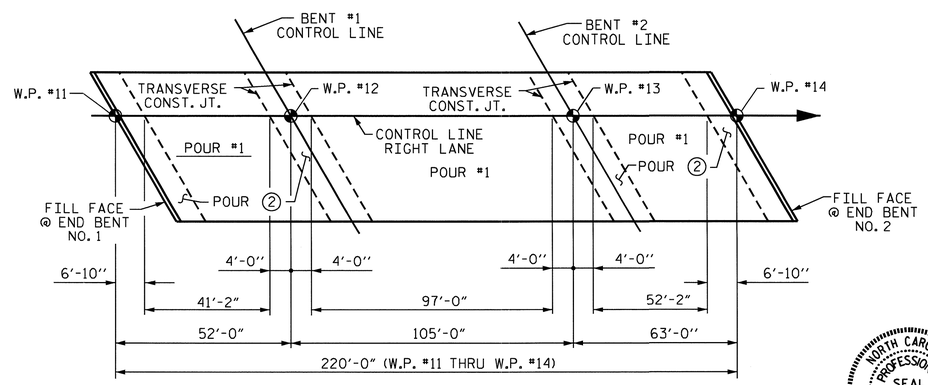

OPTIONAL POURING SEQUENCE

POUR (2) CANNOT BE STARTED UNTIL BOTH ADJACENT (1) POURS REACH A MINIMUM OF 3000 PSI.

NORTH CAROLINA PROFESSIONAL SEAL 20125 ENGINEER MARSHALL G. CHEEK, JR.
9-15-10

PROJECT NO. R-2233AB
RUTHERFORD COUNTY
STATION: 280+13.00 -L-

STATE OF NORTH CAROLINA
DEPARTMENT OF TRANSPORTATION
RALEIGH

SUPERSTRUCTURE
BILL OF MATERIAL
RIGHT LANE

ASSEMBLED BY : V.X. NGUYEN	DATE : 7-13-10
CHECKED BY : M.G. CHEEK	DATE : 7-10

DRAWN BY : JMB 5/87	REV. 6/1/94 EEM/GRP
CHECKED BY : SJD 9/87	REV. 8/16/99 RWW/LES
	REV. 5/1/06 TLA/GM

REVISIONS

NO.	BY:	DATE:	NO.	BY:	DATE:
1			3		
2			4		

SHEET NO. S-50
TOTAL SHEETS 184

STR #2 STD. NO. BOM2

13-SEP-2010 16:11
R:\Structures\Final Plans\Str. #2\R-2233AB_SD_STR#2_10_BM.dgn
afigueroa

NOTES

THE CONTRACTOR SHALL PROVIDE FOR INSTALLATION OF THE 4"DIAMETER DRAIN PIPE THROUGH THE WING WALL AS REQUIRED FOR REINFORCED BRIDGE APPROACH FILLS. SEE THE ROADWAY PLANS. REINFORCING STEEL IN THE WING WALL MAY BE SHIFTED AS NECESSARY TO CLEAR THE DRAIN PIPE.

THE CONCRETE IN THE SHADED AREA OF THE WING SHALL BE POURED AFTER THE BARRIER RAIL IS CAST IF SLIP FORMING IS USED.

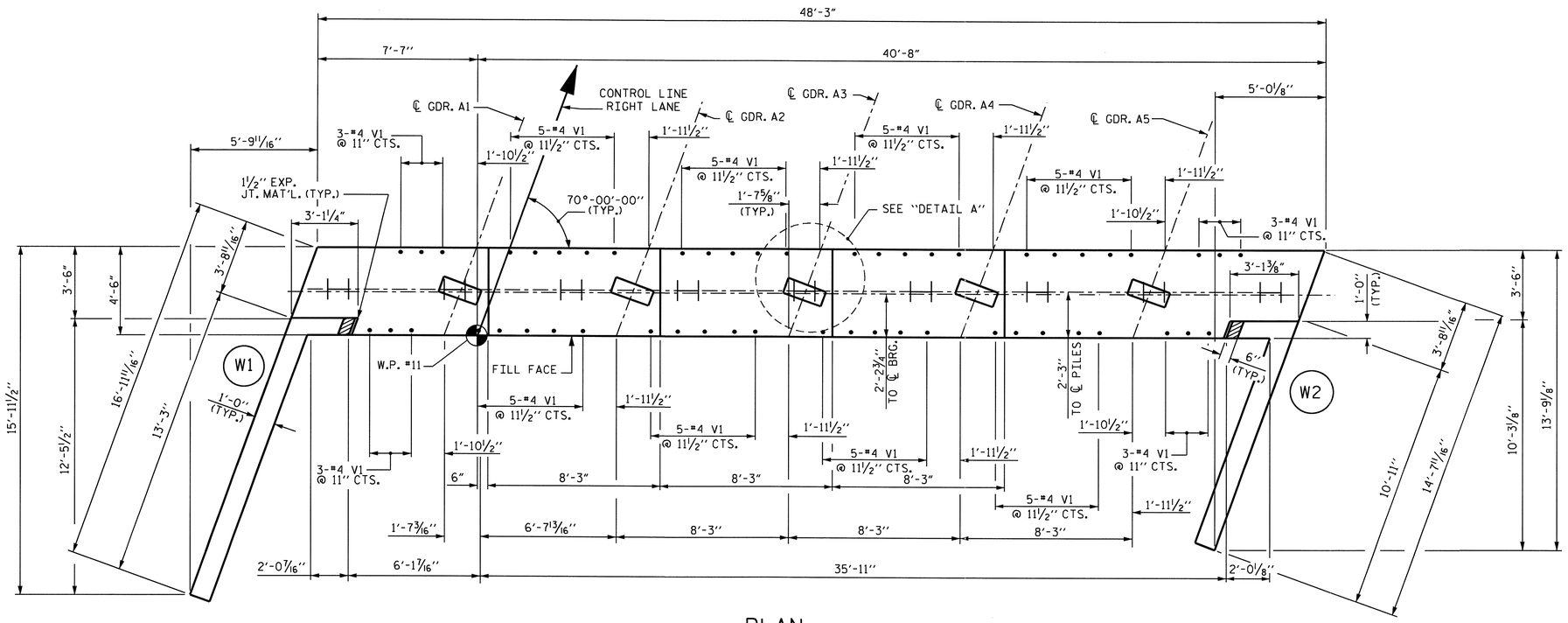

PLAN

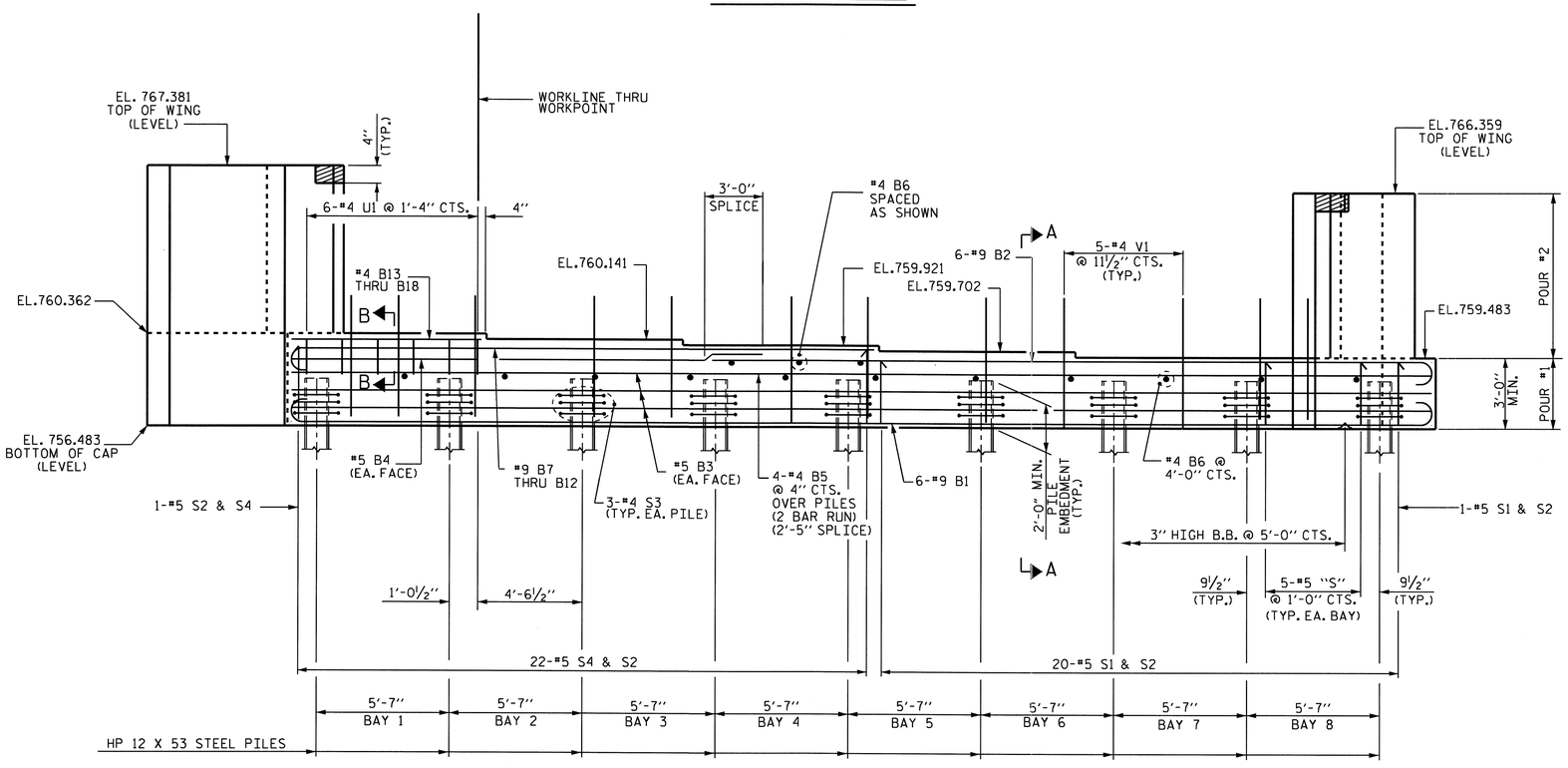

ELEVATION

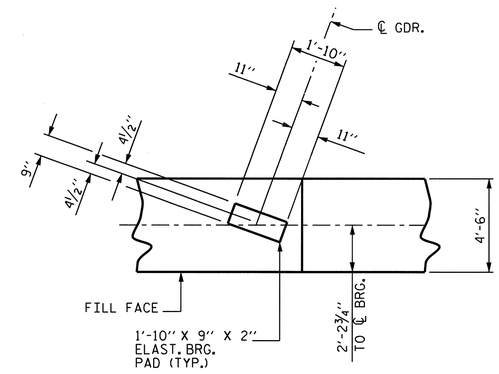

DETAIL A

PROJECT NO. R-2233AB
RUTHERFORD COUNTY
STATION: 280+13.00 -L-

SHEET 1 OF 3

STATE OF NORTH CAROLINA
DEPARTMENT OF TRANSPORTATION
RALEIGH

SUBSTRUCTURE
END BENT No. 1
RIGHT LANE

NORTH CAROLINA PROFESSIONAL SEAL 20125 ENGINEER MARSHALL G. CHEEK, JR.
9-15-10

REVISIONS						SHEET NO.
NO.	BY:	DATE:	NO.	BY:	DATE:	S-51
1			3			TOTAL SHEETS
2			4			184

DRAWN BY : M. POOLE DATE : 08/09
CHECKED BY : M. G. CHEEK DATE : 08/10

08-SEP-2010 08:40
R:\Structures\Final Plans\Str. #2\R-2233AB_sd_STR#2_12_EB 1&2 .dgn
afigueroa

NCBDS

STR. #2

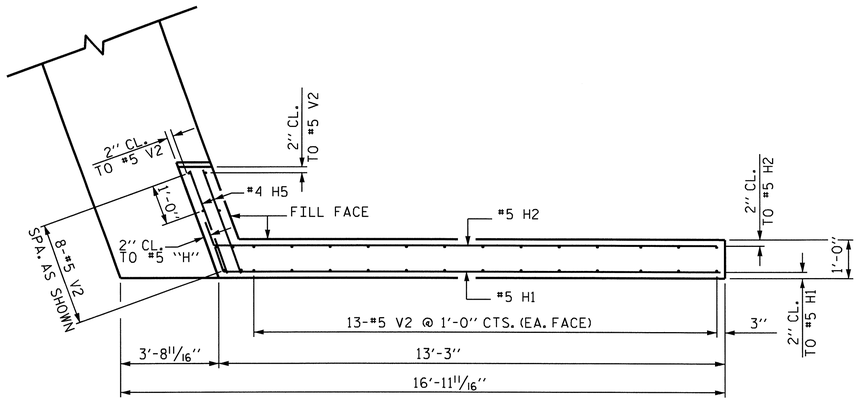

PLAN OF WING - W1

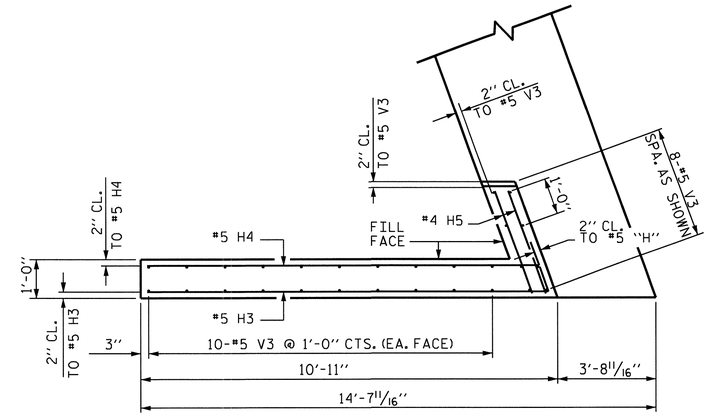

PLAN OF WING - W2

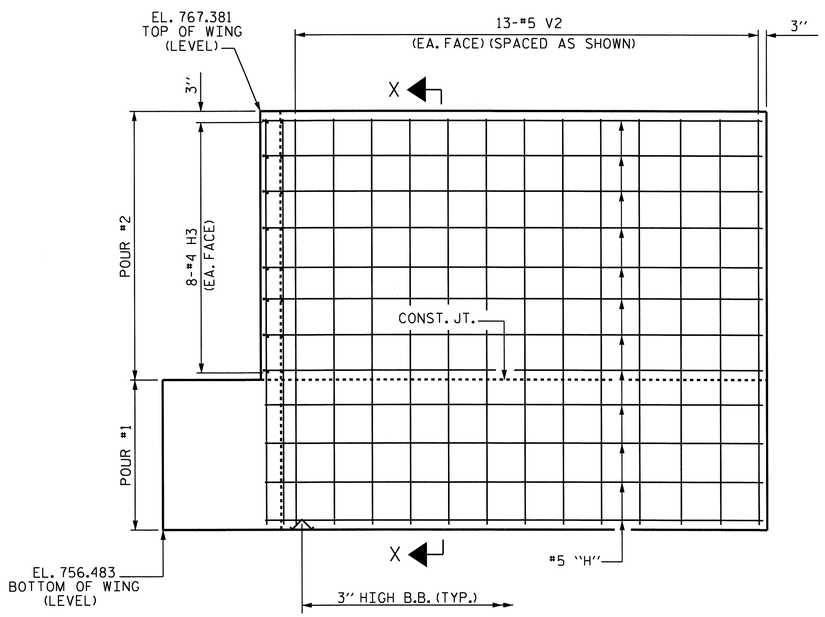

ELEVATION OF WING - W1

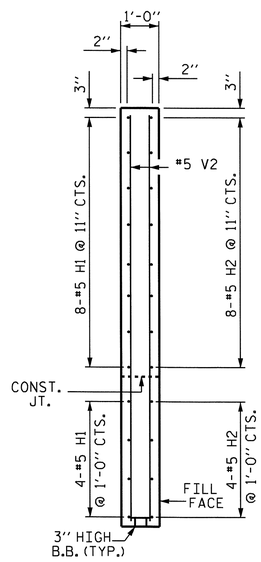

SECTION X-X

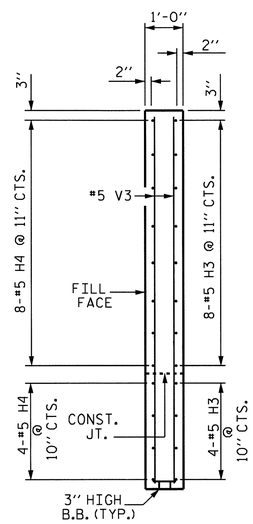

SECTION Y-Y

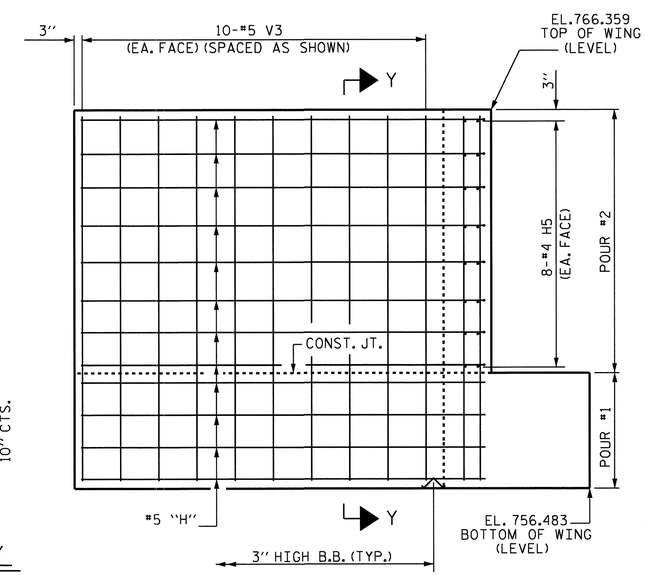

ELEVATION OF WING - W2

PROJECT NO. R-2233AB

RUTHERFORD COUNTY

STATION: 280+13.00 -L-

SHEET 2 OF 3

STATE OF NORTH CAROLINA
DEPARTMENT OF TRANSPORTATION
RALEIGH

SUBSTRUCTURE
END BENT No. 1
RIGHT LANE

NORTH CAROLINA PROFESSIONAL SEAL 20125 ENGINEER MARSHALL G. CHEEK, JR.
9-15-10

REVISIONS						SHEET NO.
NO.	BY:	DATE:	NO.	BY:	DATE:	S-52
1			3			TOTAL SHEETS
2			4			184

DRAWN BY : M. POOLE DATE : 08/09
CHECKED BY : M. G. CHEEK DATE : 08/10

08-SEP-2010 08:40
R:\Structures\Final Plans\Str. #2\R-2233AB_sd_STR#2_12_EB 1&2 .dgn
afigueroa

STR. #2

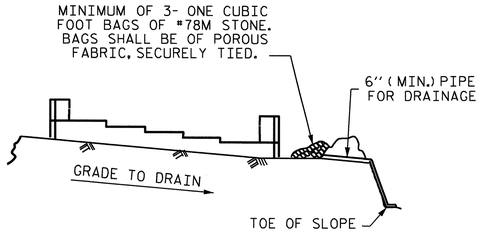

BAGGED STONE AND PIPE SHALL BE PLACED IMMEDIATELY AFTER COMPLETION OF END BENT EXCAVATION. PIPE MAY BE EITHER CONCRETE, CORRUGATED STEEL, CORRUGATED ALUMINUM ALLOY, OR CORRUGATED PLASTIC. PERFORATED PIPE WILL NOT BE ALLOWED.

BAGGED STONE SHALL REMAIN IN PLACE UNTIL THE ENGINEER DIRECTS THAT IT BE REMOVED. THE CONTRACTOR SHALL REMOVE AND DISPOSE OF SILT ACCUMULATIONS AT BAGGED STONE WHEN SO DIRECTED BY THE ENGINEER. BAGS SHALL BE REMOVED AND REPLACED WHENEVER THE ENGINEER DETERMINES THAT THEY HAVE DETERIORATED AND LOST THEIR EFFECTIVENESS.

NO SEPARATE PAYMENT WILL BE MADE FOR THIS WORK AND THE ENTIRE COST OF THIS WORK SHALL BE INCLUDED IN THE UNIT CONTRACT PRICE BID FOR THE SEVERAL PAY ITEMS.

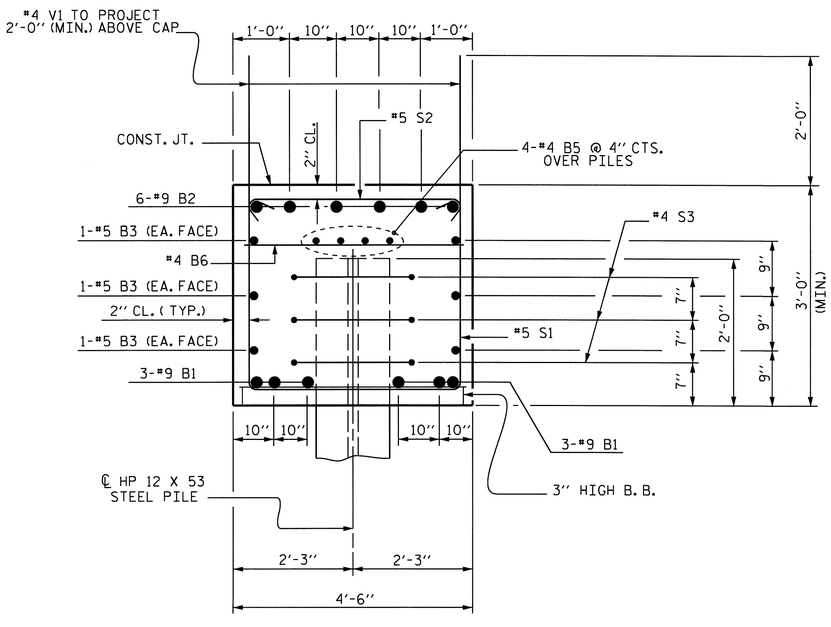

SECTION A-A

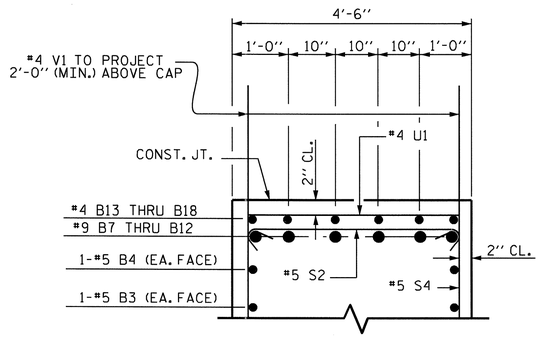

PARTIAL SECTION B-B

BAR TYPES

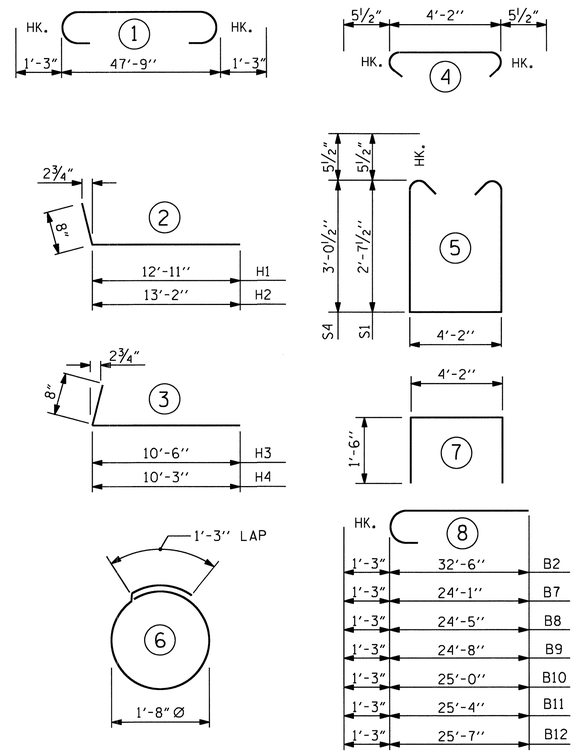

ALL BAR DIMENSIONS ARE OUT TO OUT.

BILL OF MATERIAL

END BENT NO. 1

BAR	NO.	SIZE	TYPE	LENGTH	WEIGHT
B1	6	#9	1	50'-3''	1025
B2	6	#9	8	33'-9''	689
B3	6	#5	STR	47'-11''	300
B4	2	#5	STR	18'-6''	39
B5	8	#4	STR	25'-2''	134
B6	14	#4	STR	4'-2''	39
B7	1	#9	8	25'-4''	86
B8	1	#9	8	25'-8''	87
B9	1	#9	8	25'-11''	88
B10	1	#9	8	26'-3''	89
B11	1	#9	8	26'-7''	90
B12	1	#9	8	26'-10''	91
B13	1	#4	STR	7'-9''	5
B14	1	#4	STR	8'-1''	5
B15	1	#4	STR	8'-4''	6
B16	1	#4	STR	8'-8''	6
B17	1	#4	STR	9'-0''	6
B18	1	#4	STR	9'-3''	6
H1	12	#5	2	13'-7''	170
H2	12	#5	2	13'-10''	173
H3	12	#5	3	11'-2''	140
H4	12	#5	3	10'-11''	137
H5	32	#4	STR	2'-9''	59
S1	20	#5	5	10'-4''	216
S2	42	#5	4	5'-1''	223
S3	27	#4	6	6'-6''	117
S4	22	#5	5	11'-2''	256
U1	6	#4	7	7'-2''	29
V1	52	#4	STR	4'-9''	165
V2	34	#5	STR	10'-5''	369
V3	28	#5	STR	9'-5''	275

REINFORCING STEEL = 5120 LBS.

CLASS A CONCRETE
POUR #1 : CAP & BOTT. OF WING = 30.0 CU. YDS.
POUR #2 : TOP OF WING = 8.2 CU. YDS.
TOTAL CLASS A CONCRETE = 38.2 CU. YDS.

HP 12 X 53 STEEL PILES
NO. 9 LIN. FT. 225

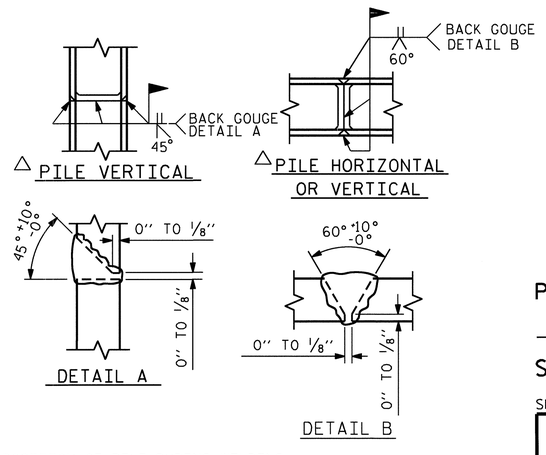

△ POSITION OF PILE DURING WELDING.

PILE SPLICE DETAILS

PROJECT NO. R-2233AB
RUTHERFORD COUNTY
STATION: 280+13.00 -L-

SHEET 3 OF 3

STATE OF NORTH CAROLINA
DEPARTMENT OF TRANSPORTATION
RALEIGH

SUBSTRUCTURE
END BENT NO. 1
RIGHT LANE

NORTH CAROLINA PROFESSIONAL SEAL 20125 ENGINEER MARSHALL G. CHEEK, JR.
9-15-10

REVISIONS						SHEET NO.
NO.	BY:	DATE:	NO.	BY:	DATE:	S-53
1			3			TOTAL SHEETS
2			4			184

DRAWN BY : M. POOLE DATE : 08-09
CHECKED BY : M. G. CHEEK DATE : 08-10

08-SEP-2010 08:40
R:\Structures\Final Plans\Str. #2\R-2233AB_sd_STR#2_12_EB 1&2 .dgn
afigueroa

STR. #2

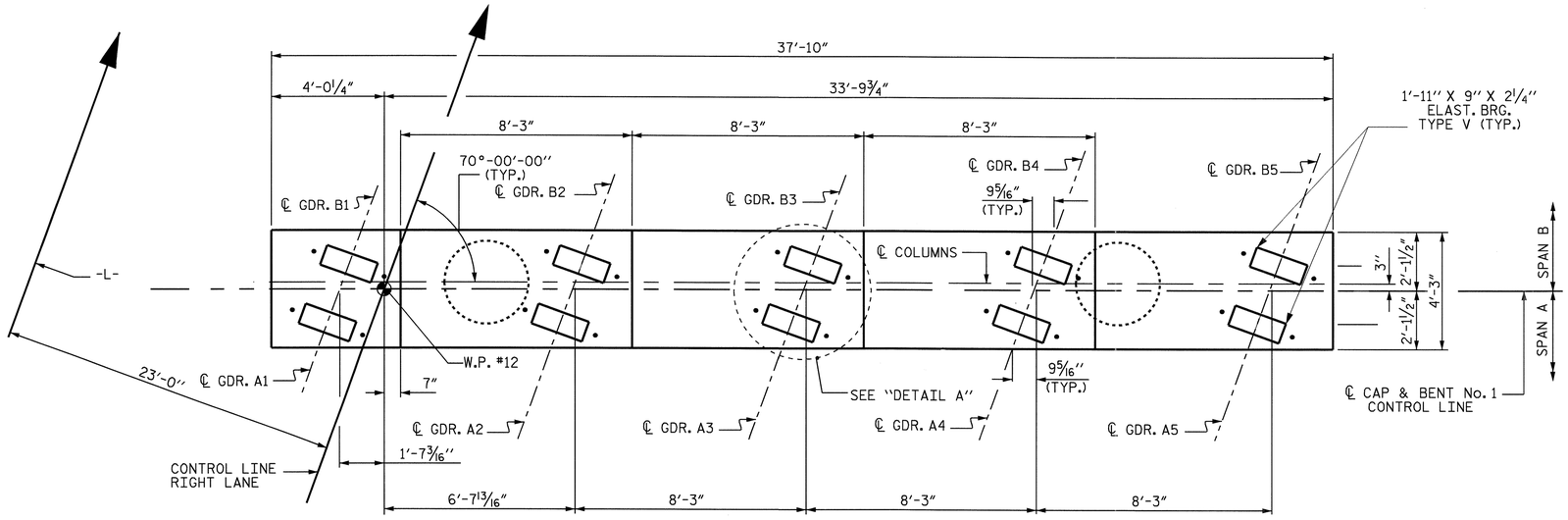

PLAN

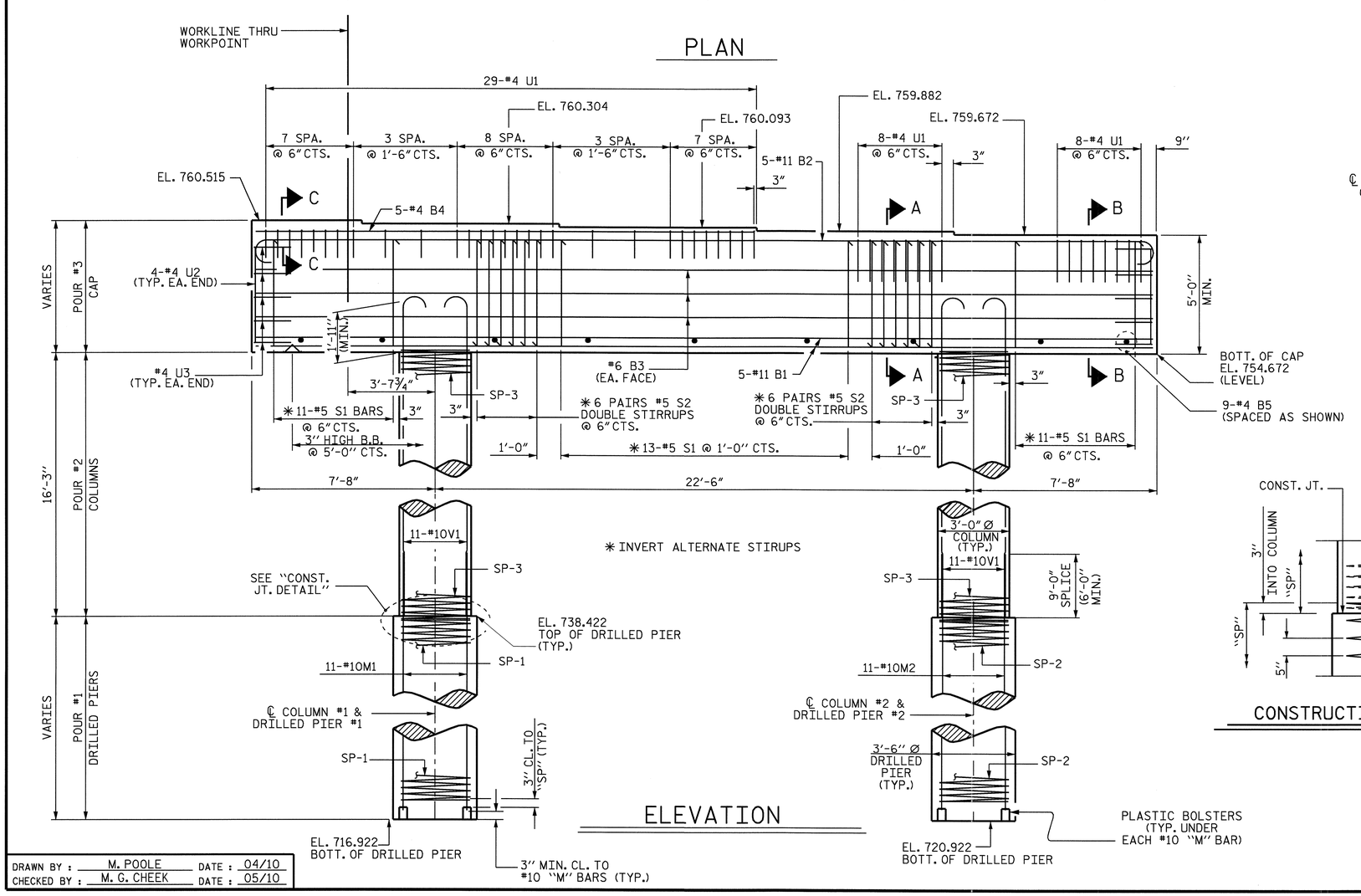

ELEVATION

NOTES

STIRRUPS IN CAP MAY BE SHIFTED AS NECESSARY TO CLEAR ANCHOR BOLTS.

HOOKS ON "V" BARS MAY BE TURNED AS NECESSARY FOR PLACING REINFORCING STEEL.

ALL STEEL IN THE DRILLED PIERS IS INCLUDED IN THE PAY ITEMS FOR "REINFORCING STEEL" AND "SPIRAL COLUMN REINFORCING STEEL".

THE CONTRACTOR'S ATTENTION IS CALLED TO THE FACT THAT THE LONGITUDINAL REINFORCEMENT FOR THE DRILLED PIERS IS DETAILED WITH 3 FEET OF EXTRA LENGTH.

SPLICING OF THE LONGITUDINAL BARS IN THE DRILLED PIERS WILL NOT BE PERMITTED.

FOR DRILLED PIERS, SEE SPECIAL PROVISIONS.

2" MINIMUM CONCRETE COVER FROM END OF CAP REQUIRED FOR ALL "U" BARS.

THE CONTRACTOR SHALL ALIGN THE "V" BARS AS SHOWN IN THE PLAN OF DRILLED PIERS AND COLUMNS.

THE CONTRACTOR'S ATTENTION IS CALLED TO THE FACT THAT THE CENTERLINE OF THE COLUMNS & DRILLED PIERS IS OFFSET 3" FROM THE BENT CONTROL LINE.

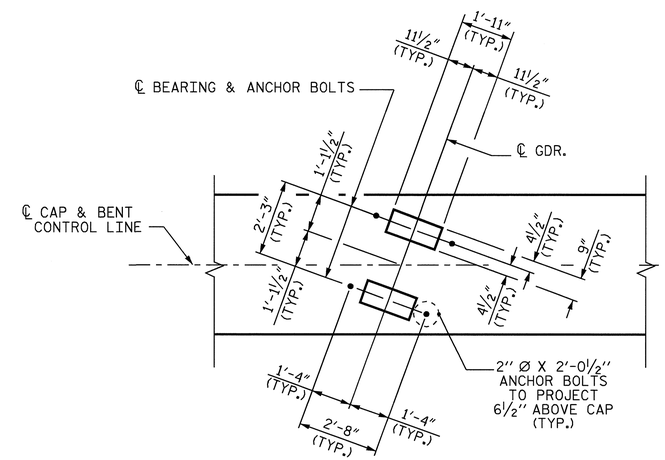

DETAIL A

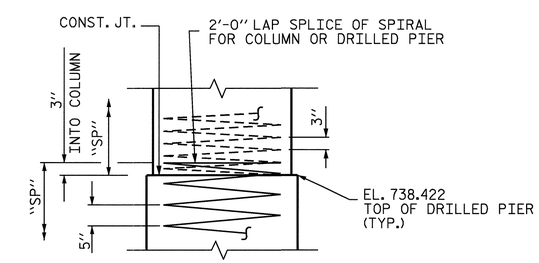

CONSTRUCTION JOINT DETAIL

PROJECT NO. R-2233AB

RUTHERFORD COUNTY

STATION: 280+13.00 -L-

SHEET 1 OF 2

STATE OF NORTH CAROLINA
DEPARTMENT OF TRANSPORTATION
RALEIGH

SUBSTRUCTURE
BENT No. 1
RIGHT LANE

NORTH CAROLINA PROFESSIONAL SEAL 20125 ENGINEER MARSHALL G. CHEEK, JR.

9-15-10

REVISIONS								SHEET NO.
NO.	BY:	DATE:	NO.	BY:	DATE:			S-54
1			3					TOTAL SHEETS
2			4					184

DRAWN BY : M. POOLE DATE : 04/10
CHECKED BY : M. G. CHEEK DATE : 05/10

STR.#2

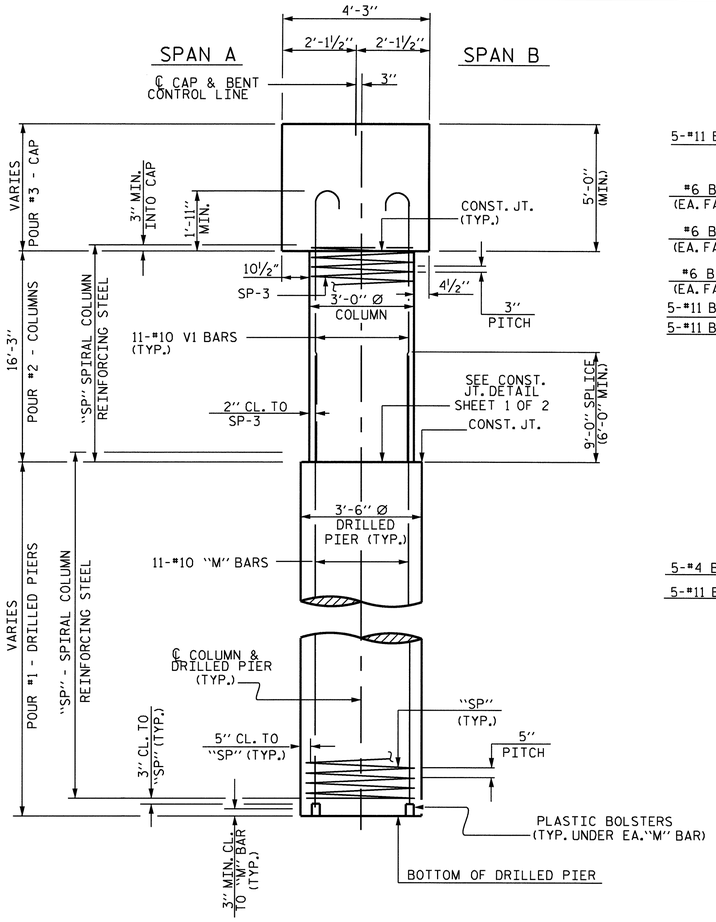

END ELEVATION

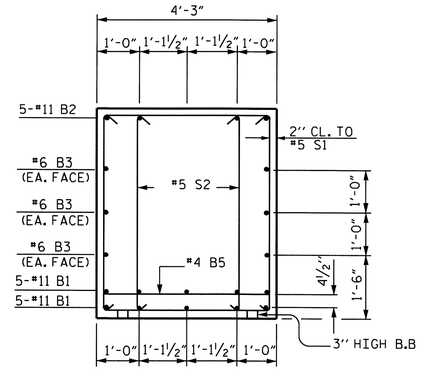

SECTION A-A

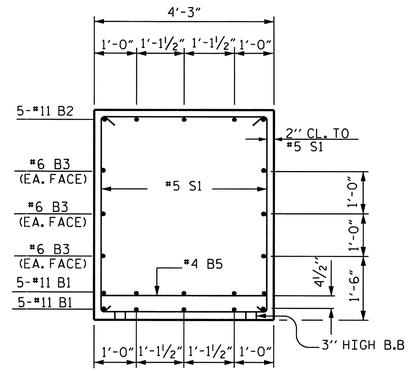

SECTION B-B

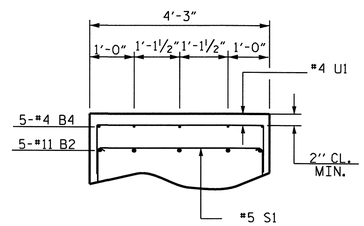

SECTION C-C

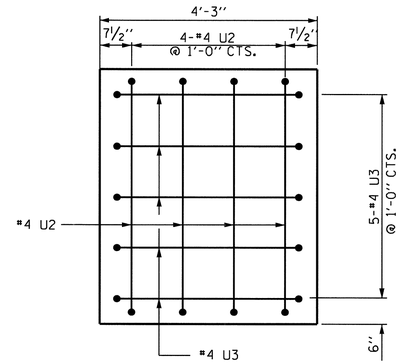

END VIEW

(TYPICAL EACH END)

BILL OF MATERIAL

BENT No. 1

BAR	NO.	SIZE	TYPE	LENGTH	WEIGHT
B1	10	11	STR	37'-6"	1992
B2	5	11	1	40'-6"	1076
B3	6	6	STR	37'-6"	338
B4	5	4	STR	20'-8"	69
B5	9	4	STR	3'-11"	24
M1	11	10	STR	30'-3"	1432
M2	11	10	STR	26'-3"	1242
S1	35	5	4	14'-1"	514
S2	24	5	4	13'-4"	334
U1	45	4	3	6'-11"	208
U2	8	4	3	6'-8"	36
U3	10	4	3	6'-9"	45
V1	22	10	2	19'-7"	1854
REINFORCING STEEL					9164 LBS

BAR	NO.	SIZE	TYPE	LENGTH	WEIGHT
SP-1	1	***	5	427'-9"	446
SP-2	1	***	5	349'-7"	365
SP-3	2	**	6	556'-11"	744
SPIRAL COLUMN REINFORCING STEEL					1555 LBS

CLASS A CONCRETE BREAKDOWN

POUR #2 (COLUMNS)	8.6 C.Y.
POUR #3 (CAP)	32.0 C.Y.
TOTAL	40.6 C.Y.

DRILLED PIER QUANTITIES

DRILLED PIER CONCRETE BREAKDOWN

POUR #1 (DRILLED PIERS)	13.9 C.Y.
3'-6" Ø DRILLED PIERS IN SOIL	20.00 LIN. FT.
3'-6" Ø DRILLED PIERS NOT IN SOIL	19.00 LIN. FT.
PERMANENT STEEL CASING FOR 3'-6" Ø DRILLED PIERS	6.84 LIN. FT.
CSL TUBES	176.00 LIN. FT.

BAR TYPES

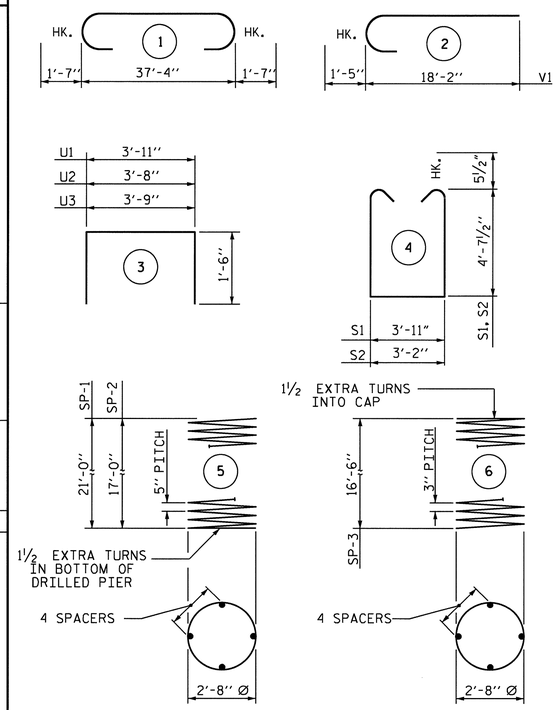

ALL BAR DIMENSIONS ARE OUT TO OUT.

*** THE SP-1 & SP-2 SPIRAL REINFORCING STEEL SHALL BE W31 OR D-31 COLD DRAWN WIRE OR #5 PLAIN OR DEFORMED BAR.

** THE SP-3 SPIRAL REINFORCING STEEL SHALL BE W20 OR D-20 COLD DRAWN WIRE OR #4 PLAIN OR DEFORMED BAR.

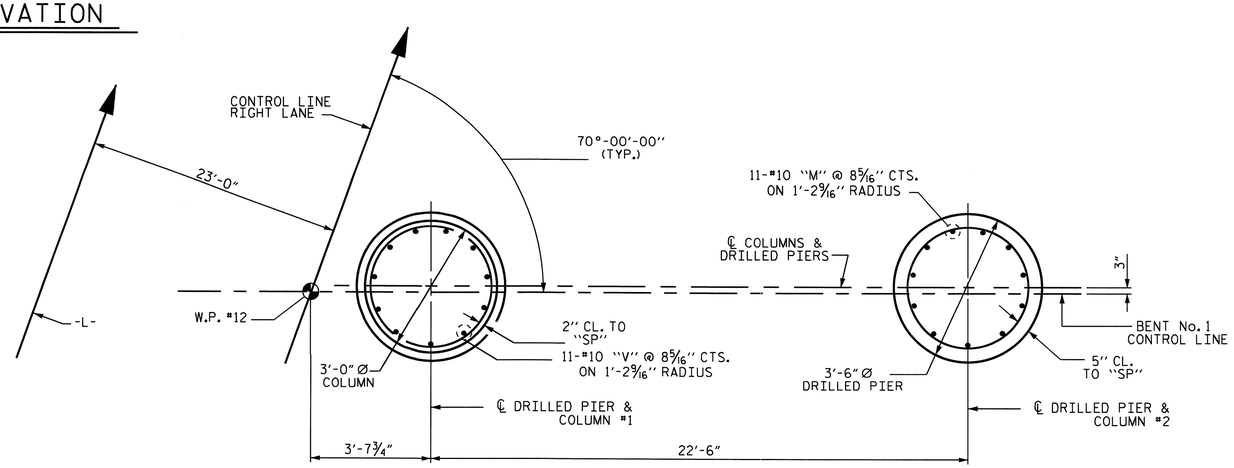

PARTIAL PLAN OF COLUMN

PARTIAL PLAN OF DRILLED PIER

PLAN OF DRILLED PIERS & COLUMNS

(DIMENSIONS & REINFORCING STEEL ARE TYPICAL FOR EACH COLUMN & DRILLED PIER)

PROJECT NO. R-2233AB
RUTHERFORD COUNTY
STATION: 280+13.00 -L-

SHEET 2 OF 2

STATE OF NORTH CAROLINA
DEPARTMENT OF TRANSPORTATION
RALEIGH

SUBSTRUCTURE
BENT No. 1
RIGHT LANE

NORTH CAROLINA PROFESSIONAL SEAL 20125 ENGINEER WARSHALL G. CHEEK, JR.
9-15-10

REVISIONS						SHEET NO.
NO.	BY:	DATE:	NO.	BY:	DATE:	S-55
1			3			TOTAL SHEETS
2			4			184

DRAWN BY : M. POOLE DATE : 04/10
CHECKED BY : M. G. CHEEK DATE : 05/10

08-SEP-2010 08:40
R:\Structures\Final Plans\Str. #2\R-2233AB_SD_STR#2_13_B1&2.dgn
afigueroa

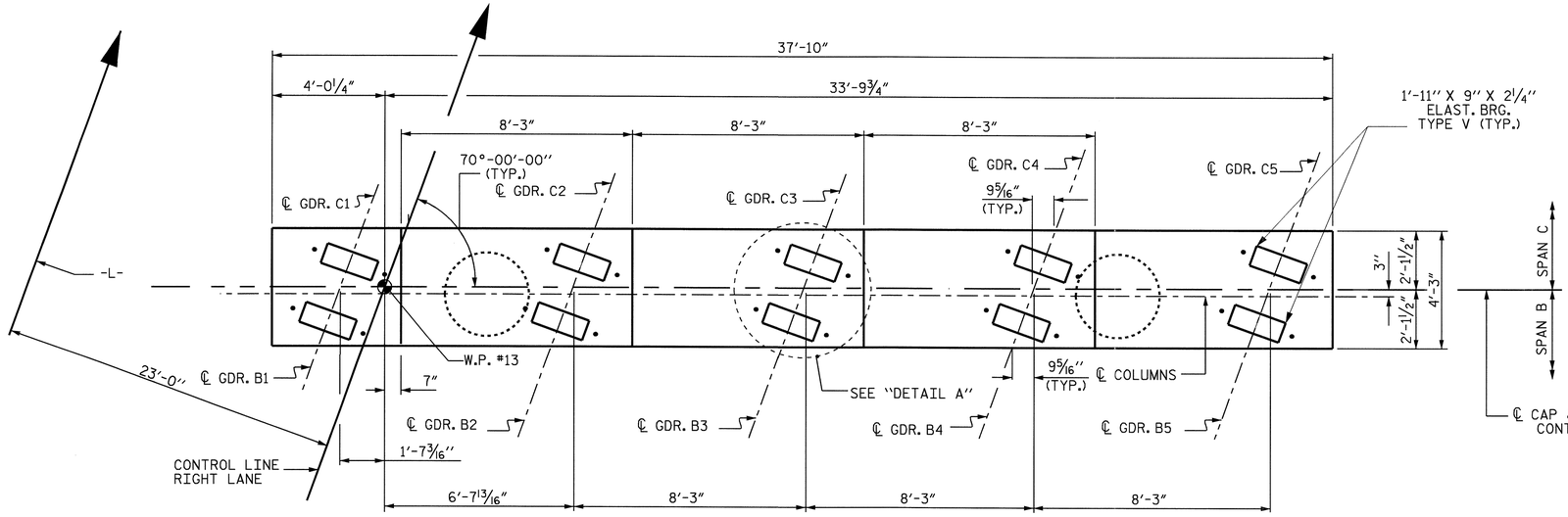

PLAN

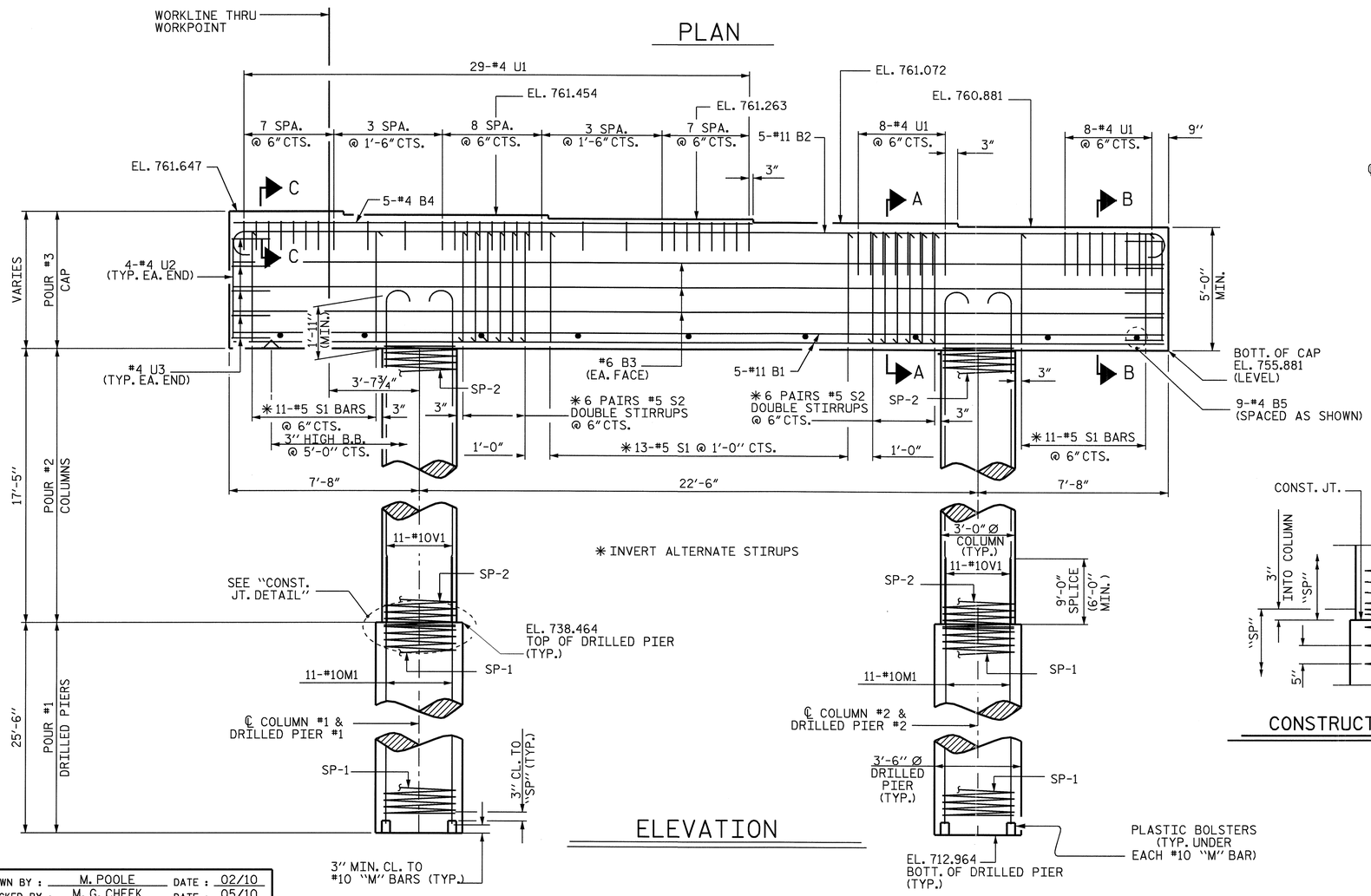

ELEVATION

NOTES

STIRRUPS IN CAP MAY BE SHIFTED AS NECESSARY TO CLEAR ANCHOR BOLTS.

HOOKS ON "V" BARS MAY BE TURNED AS NECESSARY FOR PLACING REINFORCING STEEL.

ALL STEEL IN THE DRILLED PIERS IS INCLUDED IN THE PAY ITEMS FOR "REINFORCING STEEL" AND "SPIRAL COLUMN REINFORCING STEEL".

THE CONTRACTOR'S ATTENTION IS CALLED TO THE FACT THAT THE LONGITUDINAL REINFORCEMENT FOR THE DRILLED PIERS IS DETAILED WITH 3 FEET OF EXTRA LENGTH.

SPLICING OF THE LONGITUDINAL BARS IN THE DRILLED PIERS WILL NOT BE PERMITTED.

FOR DRILLED PIERS, SEE SPECIAL PROVISIONS.

2" MINIMUM CONCRETE COVER FROM END OF CAP REQUIRED FOR ALL "U" BARS.

THE CONTRACTOR SHALL ALIGN THE "V" BARS AS SHOWN IN THE PLAN OF DRILLED PIERS AND COLUMNS.

THE CONTRACTOR'S ATTENTION IS CALLED TO THE FACT THAT THE CENTERLINE OF THE COLUMNS & DRILLED PIERS IS OFFSET 3" FROM THE BENT CONTROL LINE.

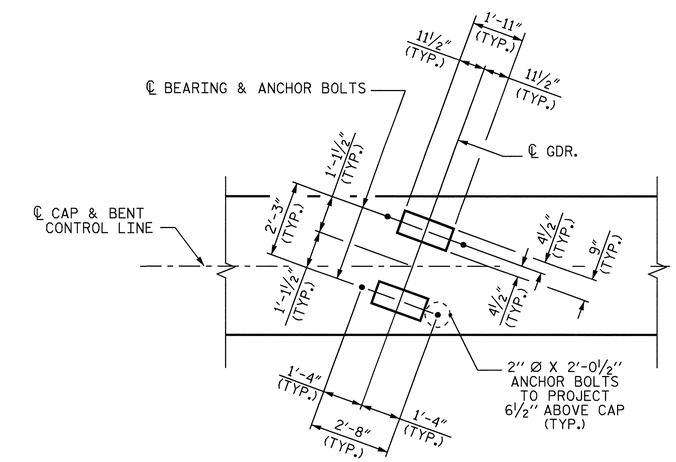

DETAIL A

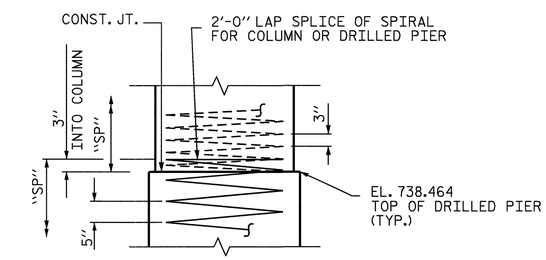

CONSTRUCTION JOINT DETAIL

PROJECT NO. R-2233AB
RUTHERFORD COUNTY
STATION: 280+13.00 -L-

SHEET 1 OF 2

STATE OF NORTH CAROLINA
DEPARTMENT OF TRANSPORTATION
RALEIGH

SUBSTRUCTURE
BENT No. 2
RIGHT LANE

NORTH CAROLINA PROFESSIONAL SEAL 20125 ENGINEER MARSHALL G. CHEEK, JR.
9-15-10

REVISIONS							SHEET NO.
NO.	BY:	DATE:	NO.	BY:	DATE:		S-56
1			3				TOTAL SHEETS
2			4				184

DRAWN BY : M. POOLE DATE : 02/10
CHECKED BY : M. G. CHEEK DATE : 05/10

STR.#2

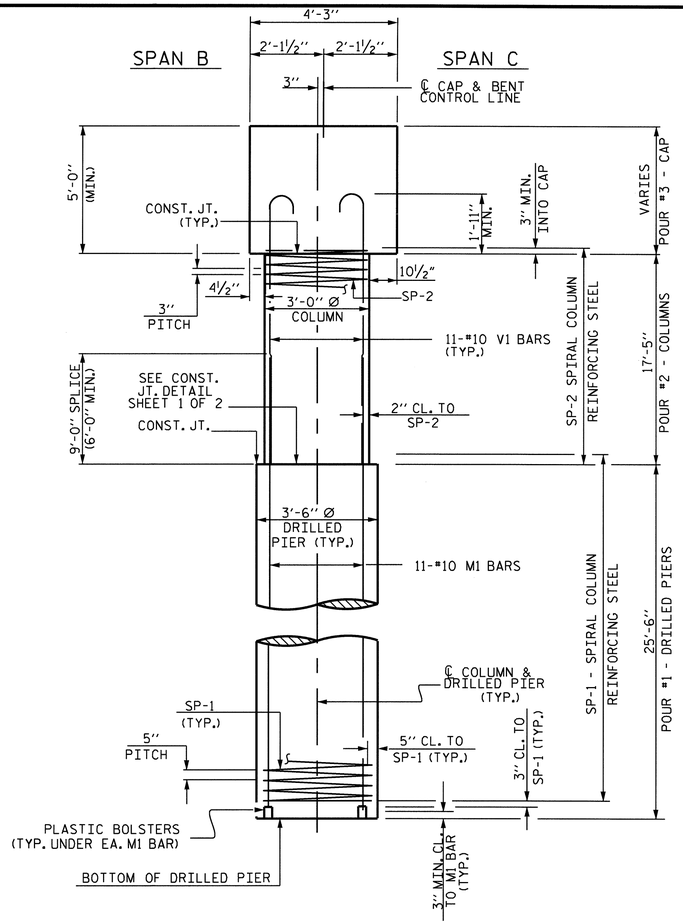

END ELEVATION

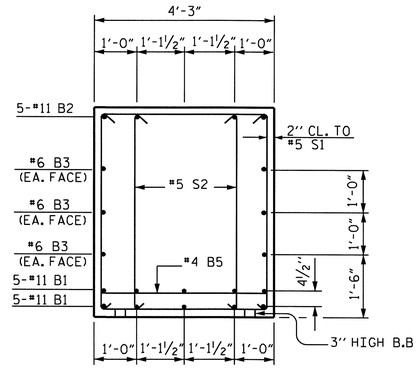

SECTION A-A

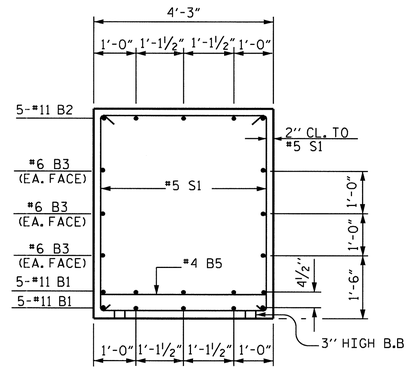

SECTION B-B

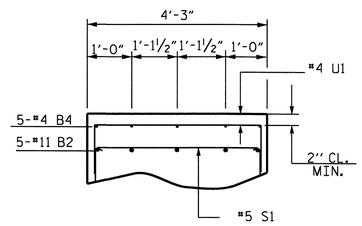

SECTION C-C

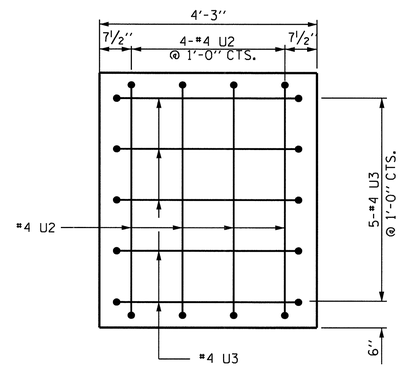

END VIEW

(TYPICAL EACH END)

BILL OF MATERIAL

BENT No. 2

BAR	NO.	SIZE	TYPE	LENGTH	WEIGHT
B1	10	11	STR	37'-6"	1992
B2	5	11	1	40'-6"	1076
B3	6	6	STR	37'-6"	338
B4	5	4	STR	20'-8"	69
B5	9	4	STR	3'-11"	24
M1	22	10	STR	34'-3"	3242
S1	35	5	4	14'-1"	514
S2	24	5	4	13'-4"	334
U1	45	4	3	6'-11"	208
U2	8	4	3	6'-8"	36
U3	10	4	3	6'-9"	45
V1	22	10	2	20'-9"	1964
REINFORCING STEEL					9842 LBS

BAR	NO.	SIZE	TYPE	LENGTH	WEIGHT
SP-1	2	***	5	505'-10"	1055
SP-2	2	**	6	596'-2"	796
SPIRAL COLUMN REINFORCING STEEL					1851 LBS

CLASS A CONCRETE BREAKDOWN

POUR #2 (COLUMNS)	9.2 C.Y.
POUR #3 (CAP)	31.8 C.Y.
TOTAL	41.0 C.Y.

DRILLED PIER QUANTITIES

DRILLED PIER CONCRETE BREAKDOWN

POUR #1 (DRILLED PIERS)	18.2 C.Y.
3'-6" Ø DRILLED PIERS IN SOIL	37.00 LIN. FT.
3'-6" Ø DRILLED PIERS NOT IN SOIL	14.00 LIN. FT.
PERMANENT STEEL CASING FOR 3'-6" Ø DRILLED PIERS	3.93 LIN. FT.
CSL TUBES	224.00 LIN. FT.

BAR TYPES

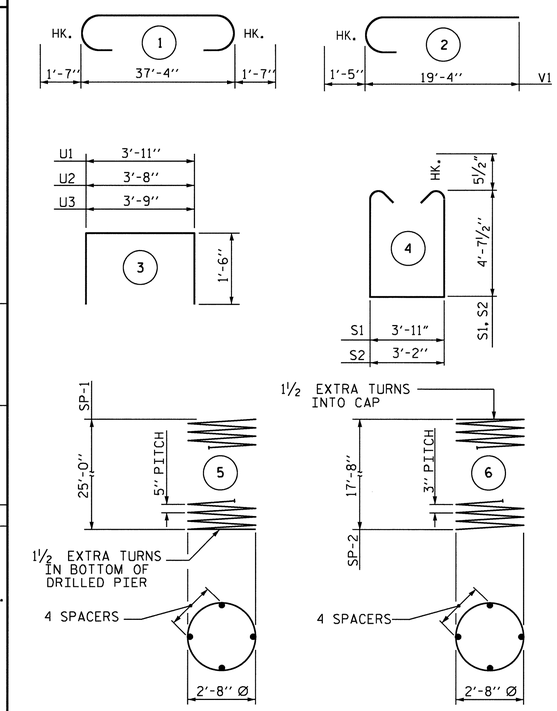

ALL BAR DIMENSIONS ARE OUT TO OUT.

*** THE SP-1 SPIRAL REINFORCING STEEL SHALL BE W31 OR D-31 COLD DRAWN WIRE OR #5 PLAIN OR DEFORMED BAR.

** THE SP-2 SPIRAL REINFORCING STEEL SHALL BE W20 OR D-20 COLD DRAWN WIRE OR #4 PLAIN OR DEFORMED BAR.

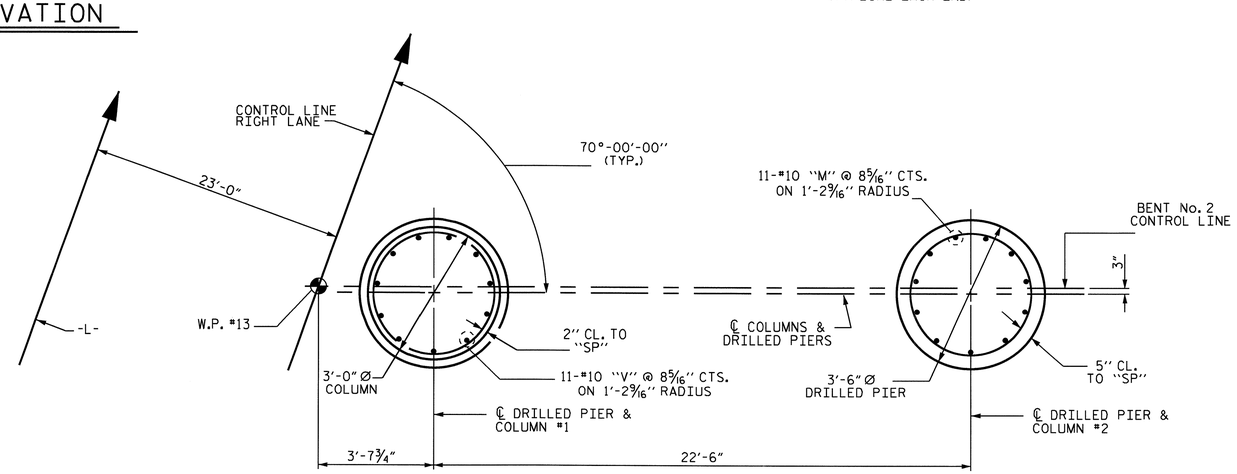

PARTIAL PLAN OF COLUMN

PARTIAL PLAN OF DRILLED PIER

PLAN OF DRILLED PIERS & COLUMNS

(DIMENSIONS & REINFORCING STEEL ARE TYPICAL FOR EACH COLUMN & DRILLED PIER)

PROJECT NO. R-2233AB
RUTHERFORD COUNTY
STATION: 280+13.00 -L-

SHEET 2 OF 2

STATE OF NORTH CAROLINA
DEPARTMENT OF TRANSPORTATION
RALEIGH

SUBSTRUCTURE
BENT No. 2
RIGHT LANE

NORTH CAROLINA PROFESSIONAL SEAL 20125 ENGINEER MARSHALL G. CHEEK, JR.
9-15-10

REVISIONS						SHEET NO.
NO.	BY:	DATE:	NO.	BY:	DATE:	S-57
1			3			TOTAL SHEETS
2			4			184

DRAWN BY : M. POOLE DATE : 4/10
CHECKED BY : M. G. CHEEK DATE : 05/10

08-SEP-2010 08:40
R:\Structures\Final Plans\Str. #2\R-2233AB_SD_STR#2_13_B1&2.dgn
afigueroa

NOTES

THE CONTRACTOR SHALL PROVIDE FOR INSTALLATION OF THE 4" DIAMETER DRAIN PIPE THROUGH THE WING WALL AS REQUIRED FOR REINFORCED BRIDGE APPROACH FILLS. SEE THE ROADWAY PLANS. REINFORCING STEEL IN THE WING WALL MAY BE SHIFTED AS NECESSARY TO CLEAR THE DRAIN PIPE.

THE CONCRETE IN THE SHADED AREA OF THE WING SHALL BE POURED AFTER THE BARRIER RAIL IS CAST IF SLIP FORMING IS USED.

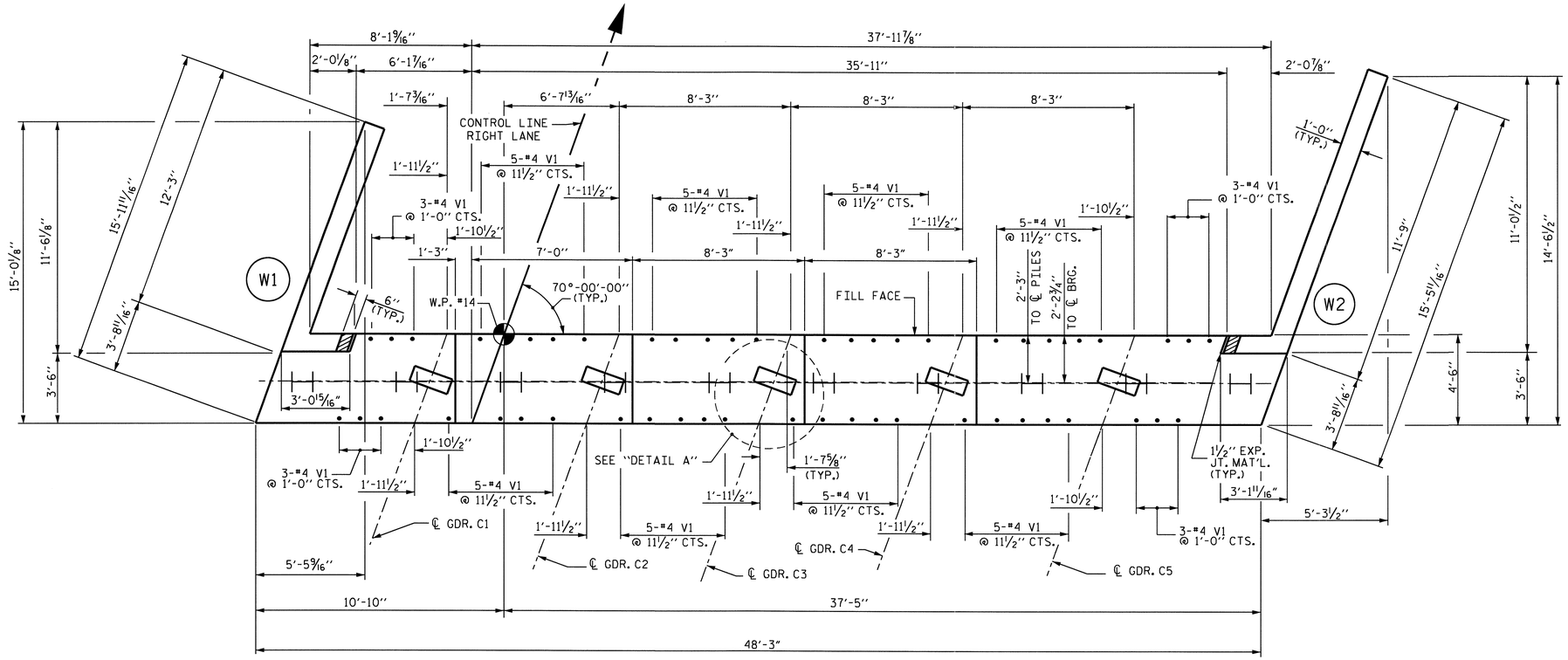

PLAN

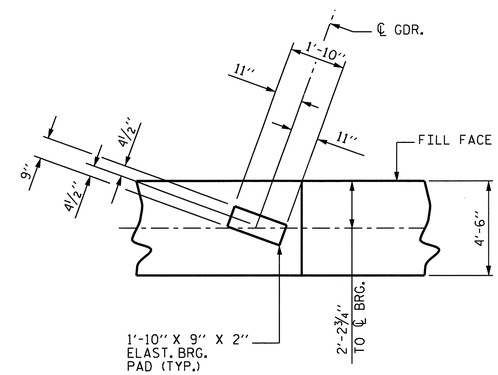

DETAIL A

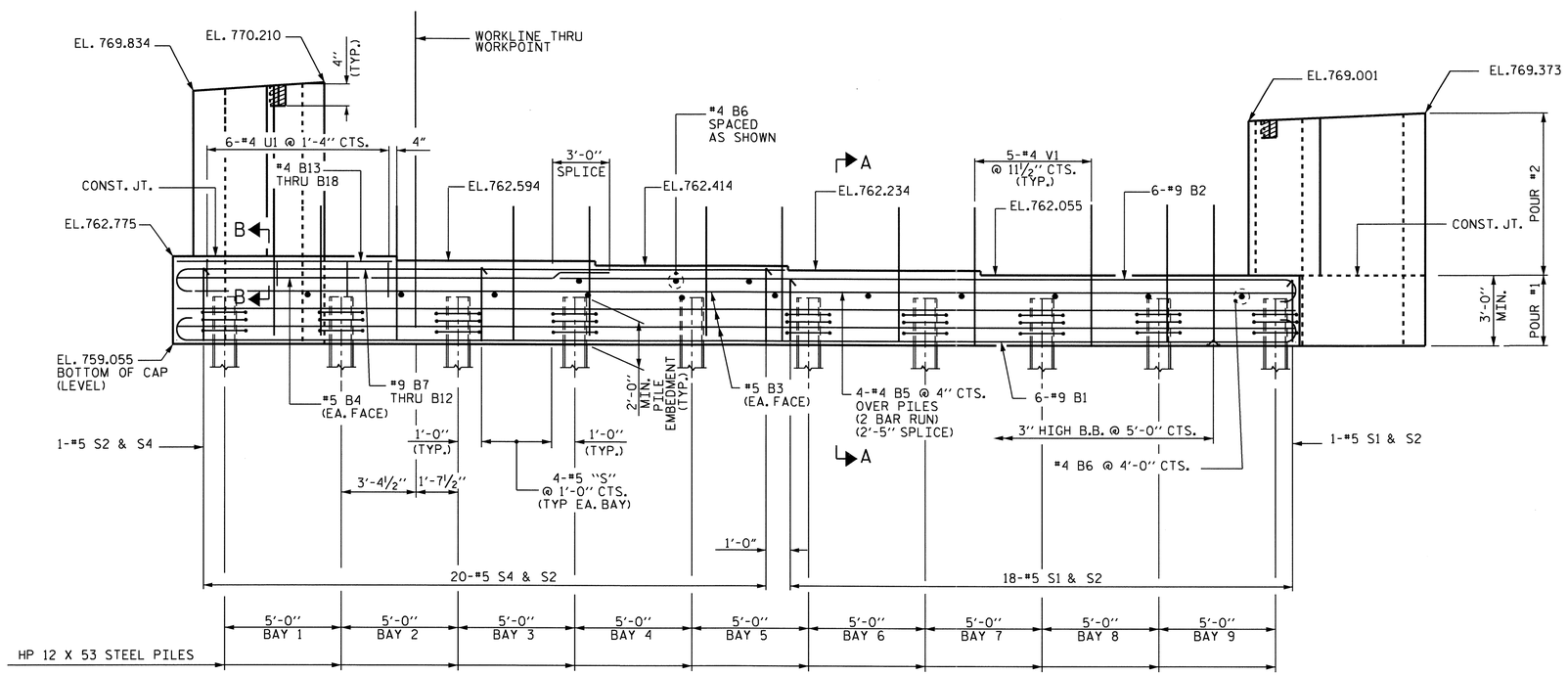

ELEVATION

PROJECT NO. R-2233AB

RUTHERFORD COUNTY

STATION: 280+13.00 -L-

SHEET 1 OF 3

STATE OF NORTH CAROLINA
DEPARTMENT OF TRANSPORTATION
RALEIGH

SUBSTRUCTURE
END BENT No. 2
RIGHT LANE

NORTH CAROLINA PROFESSIONAL SEAL 20125 ENGINEER MARSHALL G. CHEEK, JR. 9-15-10

REVISIONS							SHEET NO.
NO.	BY:	DATE:	NO.	BY:	DATE:		S-58
1			3				TOTAL SHEETS
2			4				184

DRAWN BY : M. POOLE DATE : 08/09
CHECKED BY : M. G. CHEEK DATE : 08/10

08-SEP-2010 08:40
R:\Structures\Final Plans\Str. #2\R-2233AB_sd_STR#2_12_EB 1&2 .dgn
afigueroa

NC005

STR. 2

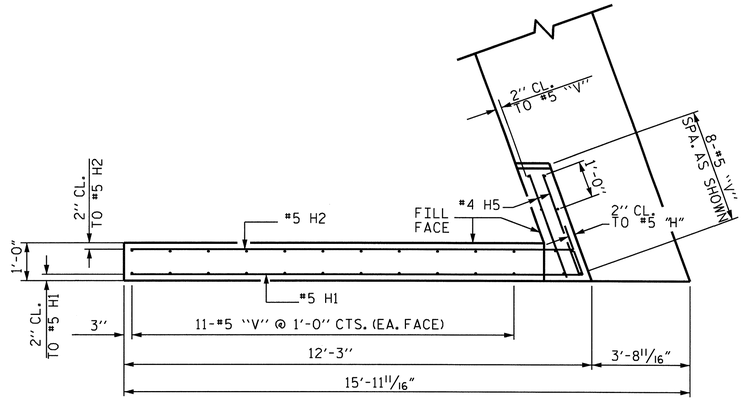

PLAN OF WING - W1

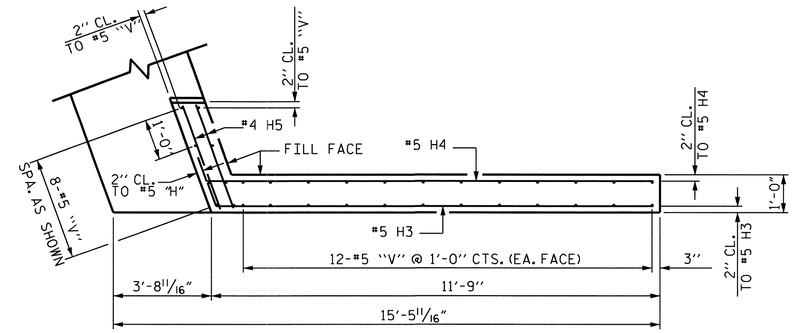

PLAN OF WING - W2

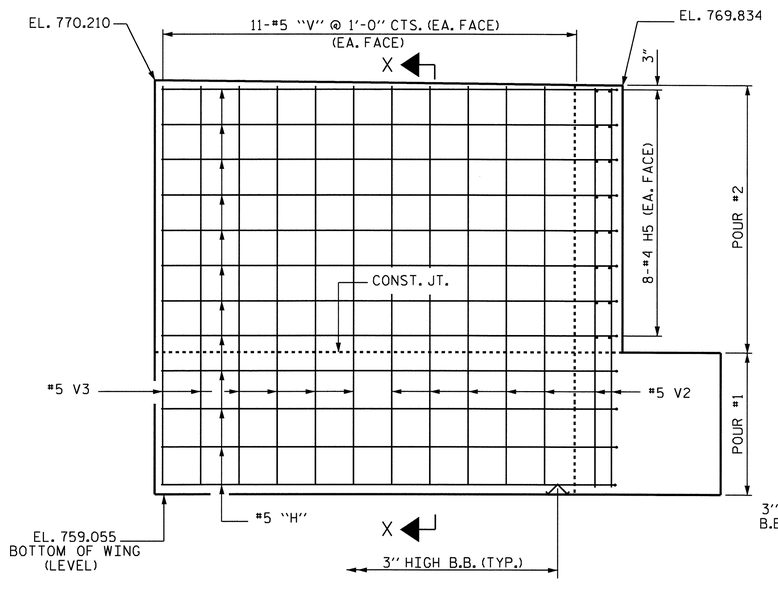

ELEVATION OF WING - W1

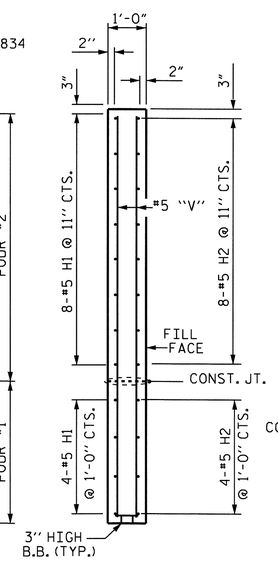

SECTION X-X

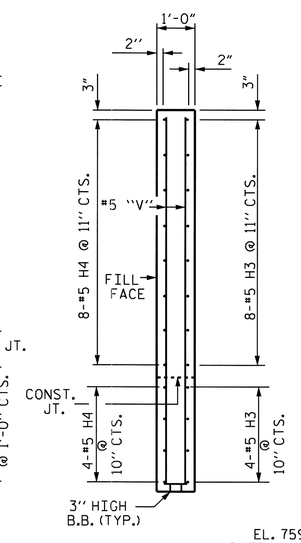

SECTION Y-Y

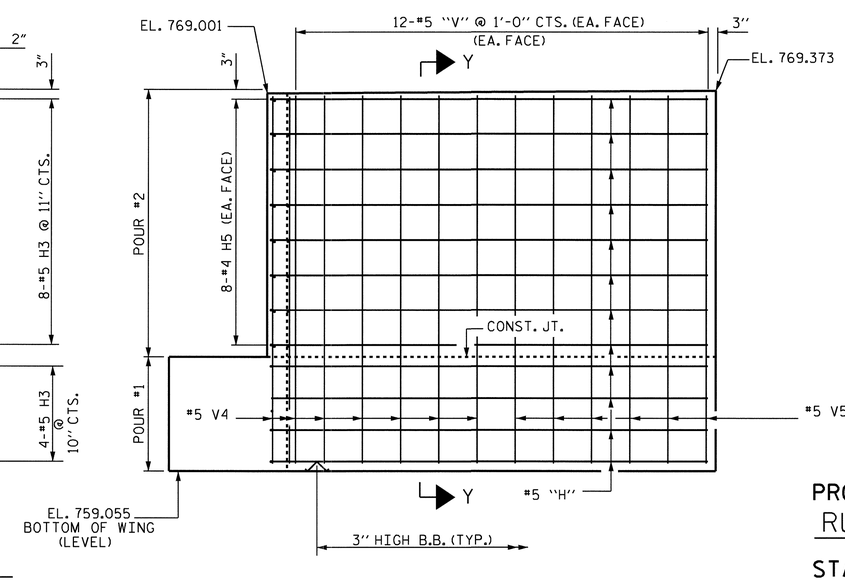

ELEVATION OF WING - W2

PROJECT NO. R-2233AB
RUTHERFORD COUNTY
STATION: 280+13.00 -L-

SHEET 2 OF 3

STATE OF NORTH CAROLINA
DEPARTMENT OF TRANSPORTATION
RALEIGH

SUBSTRUCTURE
END BENT No. 2
RIGHT LANE

NORTH CAROLINA PROFESSIONAL SEAL 20125 ENGINEER MARSHALL G. CHEEK, JR.
9-15-10

REVISIONS						SHEET NO.
NO.	BY:	DATE:	NO.	BY:	DATE:	S-59
1			3			TOTAL SHEETS
2			4			184

DRAWN BY : M. POOLE DATE : 08/09
CHECKED BY : M. G. CHEEK DATE : 08/10

08-SEP-2010 08:40
R:\Structures\Final Plans\Str. #2\R-2233AB_sd_STR#2_12_EB 1&2 .dgn
afigueroa

STR. #2

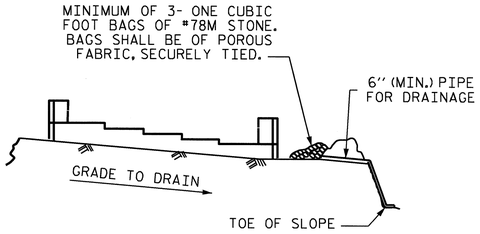

BAGGED STONE AND PIPE SHALL BE PLACED IMMEDIATELY AFTER COMPLETION OF END BENT EXCAVATION. PIPE MAY BE EITHER CONCRETE, CORRUGATED STEEL, CORRUGATED ALUMINUM ALLOY, OR CORRUGATED PLASTIC. PERFORATED PIPE WILL NOT BE ALLOWED.

BAGGED STONE SHALL REMAIN IN PLACE UNTIL THE ENGINEER DIRECTS THAT IT BE REMOVED. THE CONTRACTOR SHALL REMOVE AND DISPOSE OF SILT ACCUMULATIONS AT BAGGED STONE WHEN SO DIRECTED BY THE ENGINEER. BAGS SHALL BE REMOVED AND REPLACED WHENEVER THE ENGINEER DETERMINES THAT THEY HAVE DETERIORATED AND LOST THEIR EFFECTIVENESS.

NO SEPARATE PAYMENT WILL BE MADE FOR THIS WORK AND THE ENTIRE COST OF THIS WORK SHALL BE INCLUDED IN THE UNIT CONTRACT PRICE BID FOR THE SEVERAL PAY ITEMS.

TEMPORARY DRAINAGE AT END BENT

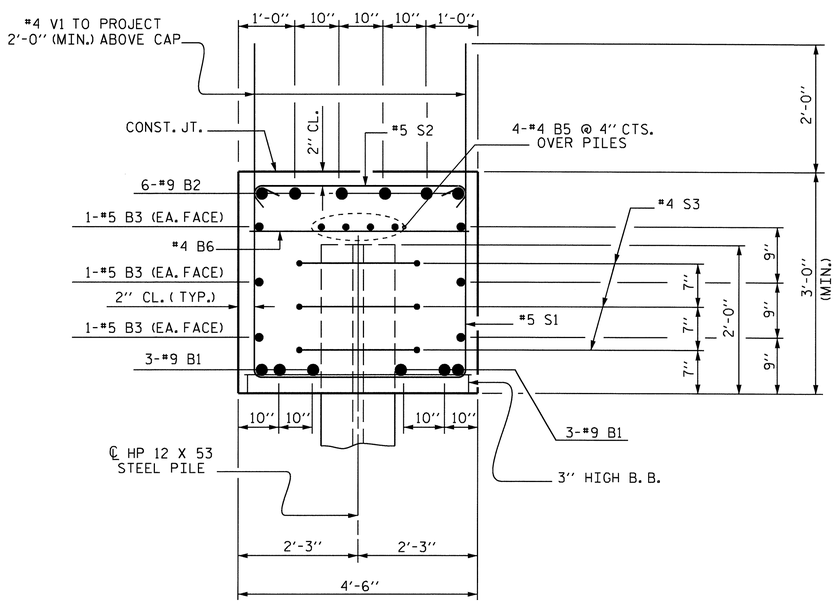

SECTION A-A

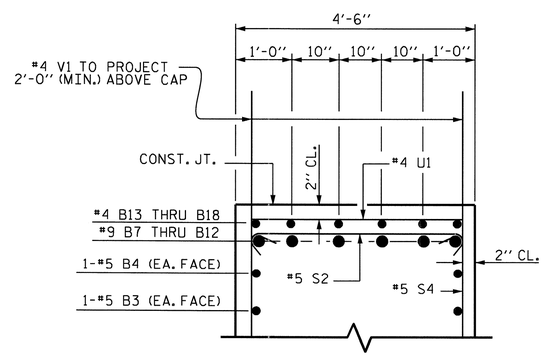

PARTIAL SECTION B-B

BAR TYPES

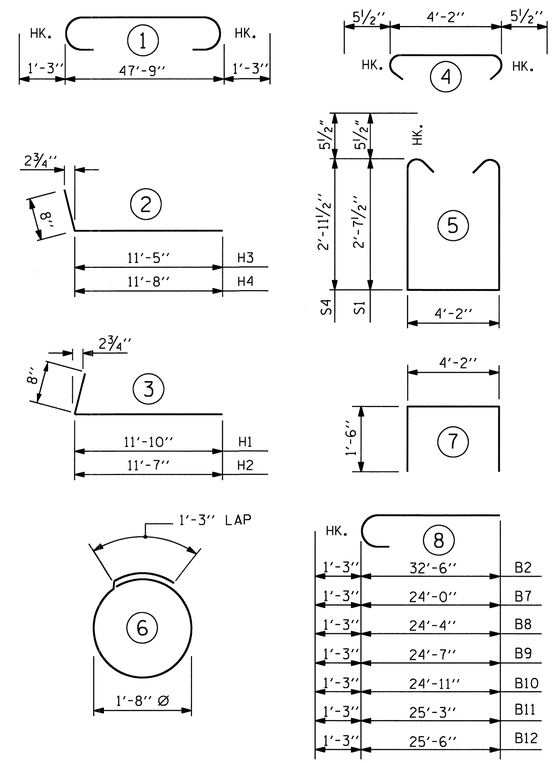

ALL BAR DIMENSIONS ARE OUT TO OUT.

BILL OF MATERIAL

END BENT NO. 2

BAR	NO.	SIZE	TYPE	LENGTH	WEIGHT
B1	6	#9	1	50'-3''	1025
B2	6	#9	8	33'-9''	689
B3	6	#5	STR	47'-11''	300
B4	2	#5	STR	18'-6''	39
B5	8	#4	STR	25'-2''	134
B6	14	#4	STR	4'-2''	39
B7	1	#9	8	25'-3''	86
B8	1	#9	8	25'-7''	87
B9	1	#9	8	25'-10''	88
B10	1	#9	8	26'-2''	89
B11	1	#9	8	26'-6''	90
B12	1	#9	8	26'-9''	91
B13	1	#4	STR	7'-7''	5
B14	1	#4	STR	7'-11''	5
B15	1	#4	STR	8'-3''	5
B16	1	#4	STR	8'-6''	6
B17	1	#4	STR	8'-10''	6
B18	1	#4	STR	9'-1''	6
H1	12	#5	3	12'-6''	156
H2	12	#5	3	12'-3''	153
H3	12	#5	2	12'-1''	151
H4	12	#5	2	12'-4''	154
H5	32	#4	STR	2'-9''	59
S1	18	#5	5	10'-4''	194
S2	38	#5	4	5'-1''	201
S3	30	#4	6	6'-6''	130
S4	20	#5	5	11'-0''	229
U1	6	#4	7	7'-2''	29
V1	52	#4	STR	4'-9''	165
V2	18	#5	STR	10'-4''	194
V3	12	#5	STR	10'-6''	131
V4	18	#5	STR	9'-6''	178
V5	12	#5	STR	9'-7''	120

REINFORCING STEEL = 5034 LBS.

CLASS A CONCRETE
POUR #1 : CAP & BOTT. OF WING = 30.4 CU. YDS.
POUR #2 : TOP OF WING = 8.3 CU. YDS.
TOTAL CLASS A CONCRETE = 38.7 CU. YDS.

HP 12 X 53 STEEL PILES NO. 10 — 450 LIN. FT.

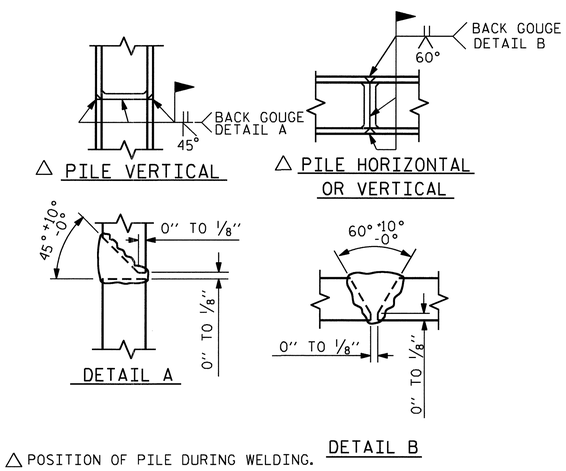

△ POSITION OF PILE DURING WELDING.

PILE SPLICE DETAILS

PROJECT NO. R-2233AB
RUTHERFORD COUNTY
STATION: 280+13.00 -L-

SHEET 3 OF 3

STATE OF NORTH CAROLINA
DEPARTMENT OF TRANSPORTATION
RALEIGH

SUBSTRUCTURE
END BENT NO. 2
RIGHT LANE

NORTH CAROLINA PROFESSIONAL SEAL 20125 ENGINEER MARSHALL G. CHEEK, JR. 9-15-10

REVISIONS								SHEET NO.
NO.	BY:	DATE:	NO.	BY:	DATE:			S-60
1			3					TOTAL SHEETS
2			4					184

DRAWN BY : M. POOLE DATE : 08-09
CHECKED BY : M. G. CHEEK DATE : 08-10

08-SEP-2010 08:40
R:\Structures\Final Plans\Str. #2\R-2233AB_sd_STR#2_12_EB 1&2 .dgn
afigueroa

STR. 2

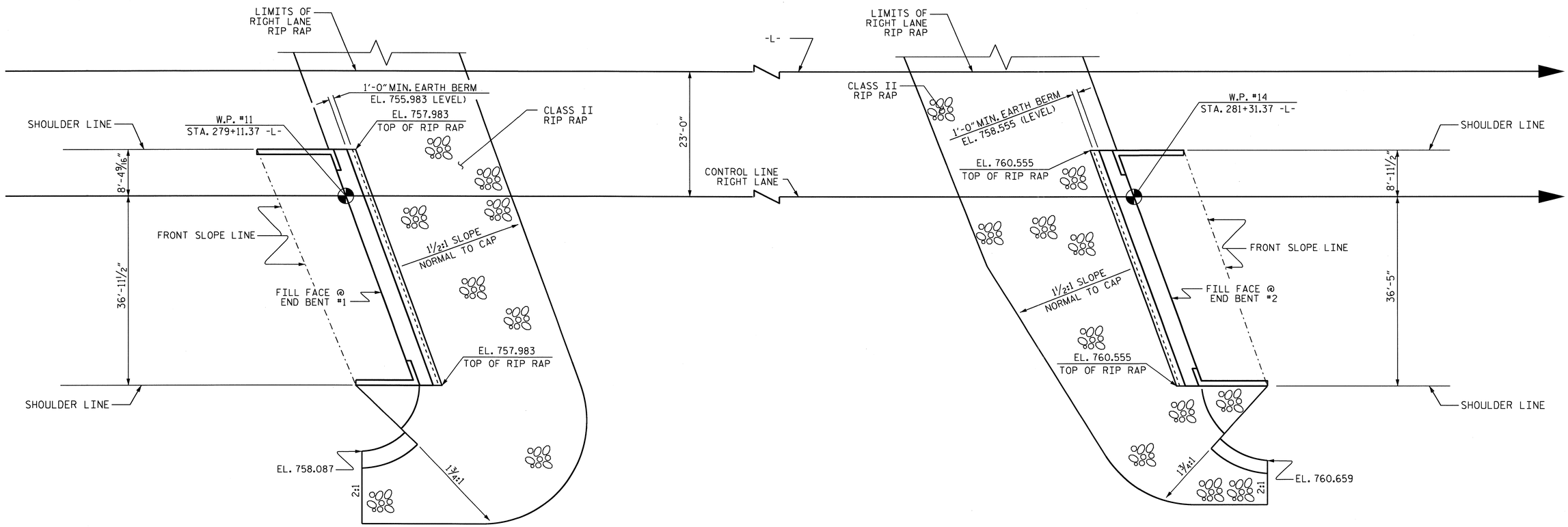

PLAN OF RIP RAP

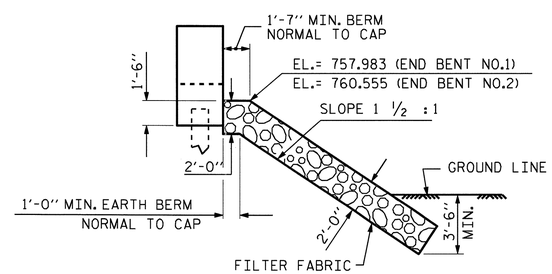

℄ SECTION
BERM RIP RAPPED

ESTIMATED QUANTITIES		
BRIDGE @ STA. 280+13.00 -L- (RIGHT LANE)	RIP RAP CLASS II	FILTER FABRIC FOR DRAINAGE
	TONS	SQUARE YARDS
END BENT 1	353	392
END BENT 2	311	345

PROJECT NO. R-2233AB
RUTHERFORD COUNTY
STATION: 280+13.00 -L-

STATE OF NORTH CAROLINA
DEPARTMENT OF TRANSPORTATION
RALEIGH

STANDARD
RIP RAP DETAILS
(RIGHT LANE)

NORTH CAROLINA PROFESSIONAL SEAL 20125 ENGINEER MARSHALL LEE GREEK, JR.
9-15-10

REVISIONS						SHEET NO.
NO.	BY:	DATE:	NO.	BY:	DATE:	S-61
1			3			TOTAL SHEETS
2			4			184

DRAWN BY : A.L. FIGUEROA DATE : 03/17/10
CHECKED BY : W.D. CRUTCHER DATE : 03-24-10

DRAWN BY : REK 1/84	REV. 8/16/99	RWW/LES
CHECKED BY : RDU 1/84	REV. 10/17/00	RWW/LES
	REV. 5/1/06	TLA/GM

29-JUL-2010 11:53
R:\Structures\Str*2\A.L. Figueroa\Microstation\r-2233ab_sd_str*2_14_sp.dgn
afigueroa

STR*2

STD. NO. RR1

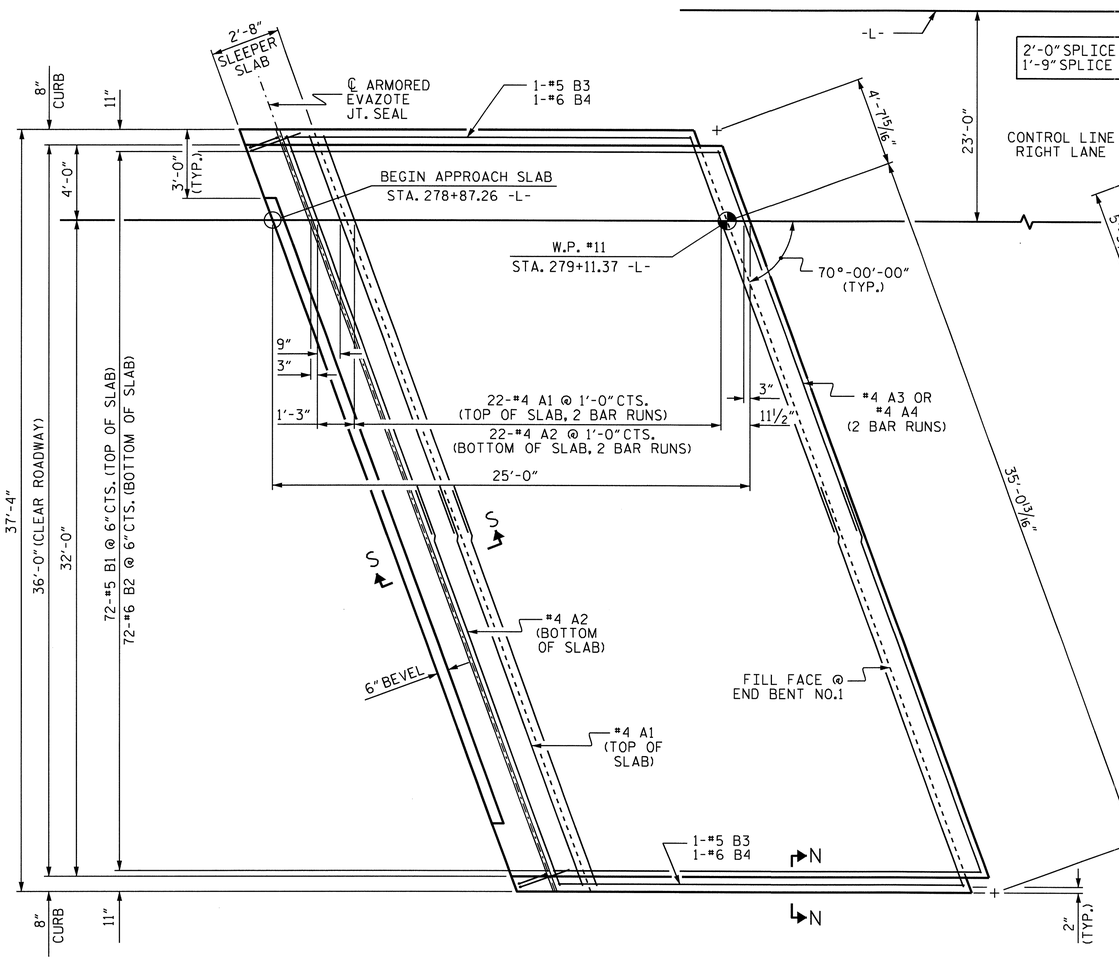

APPROACH SLAB @ END BENT NO. 1

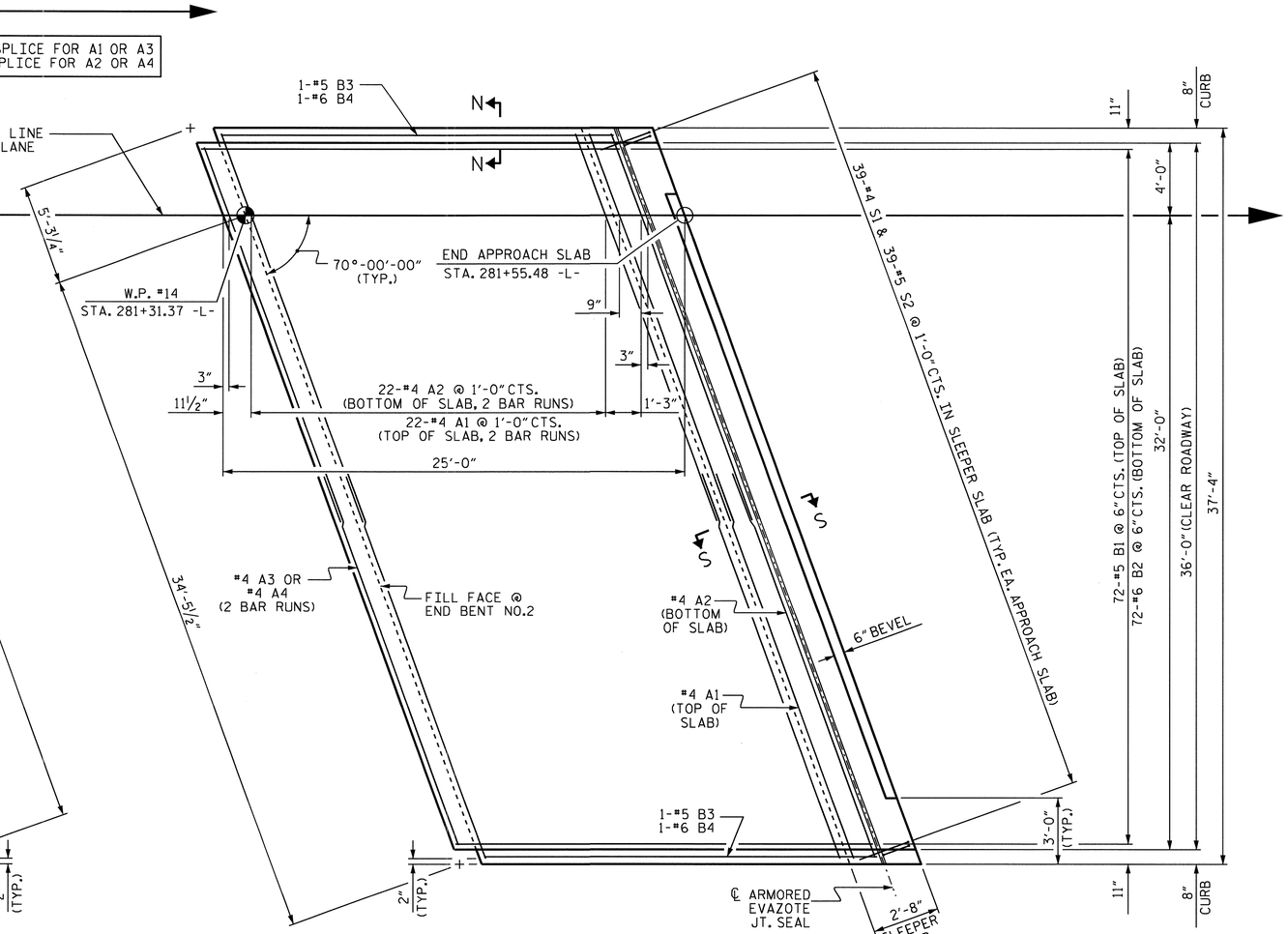

PLAN

APPROACH SLAB @ END BENT NO. 2

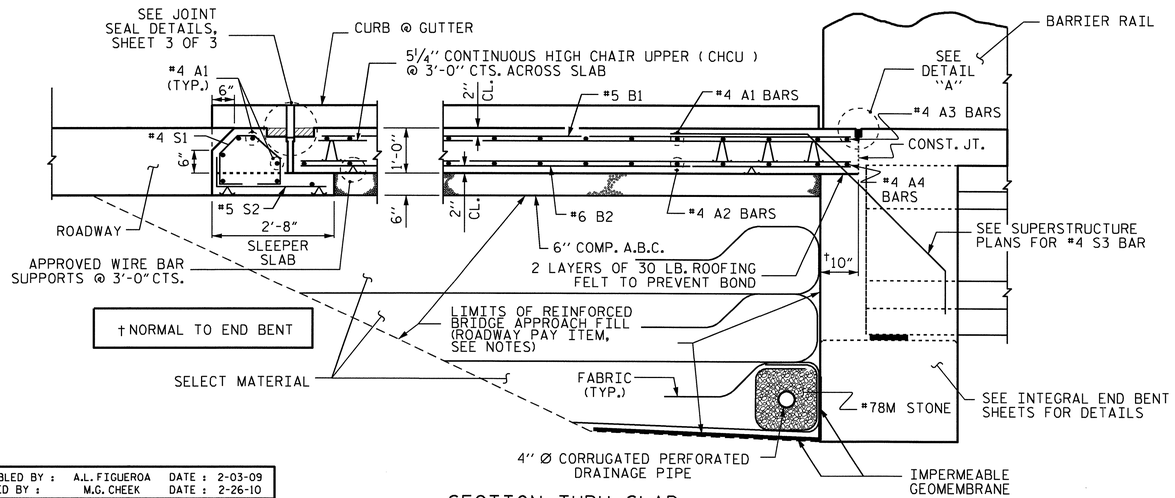

† NORMAL TO END BENT

SECTION THRU SLAB

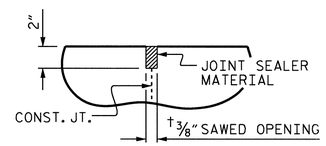

DETAIL "A"

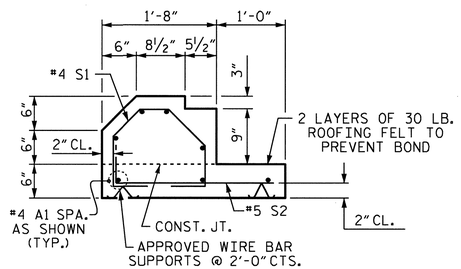

SECTION S-S

SHOWING SLEEPER SLAB

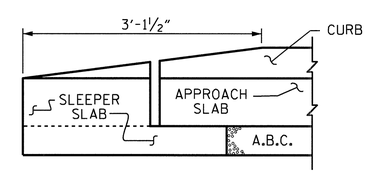

END OF CURB WITHOUT SHOULDER BERM GUTTER

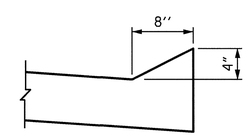

SECTION N-N

PROJECT NO. R-2233AB
RUTHERFORD COUNTY
STATION: 280+13.00 -L-

SHEET 1 OF 3

STATE OF NORTH CAROLINA
DEPARTMENT OF TRANSPORTATION
RALEIGH

BRIDGE APPROACH SLAB FOR INTEGRAL ABUTMENT

RIGHT LANE

NORTH CAROLINA PROFESSIONAL SEAL 20125 ENGINEER MARSHALL G. CHEEK, JR. 4-15-10

ASSEMBLED BY : A.L. FIGUEROA	DATE : 2-03-09
CHECKED BY : M.G. CHEEK	DATE : 2-26-10
DRAWN BY : TLA 10/05	ADDED 5/1/06R KMM/GM
CHECKED BY : GM 5/06	

REVISIONS						SHEET NO.
NO.	BY:	DATE:	NO.	BY:	DATE:	S-62
1			3			TOTAL SHEETS
2			4			184

07-SEP-2010 12:53
R:\Structures\Final Plans\Str. #2\R-2233AB_SD_STR#2_15_IAS.dgn
afigueroa

STR. #2 STD. NO. BAS11

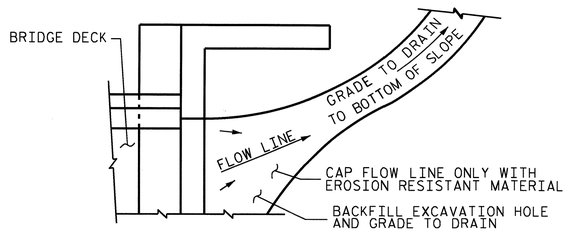

NOTE: IF THE APPROACH SLAB IS NOT CONSTRUCTED IMMEDIATELY AFTER THE BACKFILLING OF THE END BENT EXCAVATION, GRADE TO DRAIN TO THE BOTTOM OF THE SLOPE AND PROVIDE EROSION RESISTANT MATERIAL, SUCH AS FIBERGLASS ROVING OR AS DIRECTED BY THE ENGINEER TO PREVENT SOIL EROSION AND TO PROTECT THE AREA ADJACENT TO THE STRUCTURE. THE CONTRACTOR WILL BE REQUIRED TO REMOVE THESE MATERIALS PRIOR TO CONSTRUCTION OF THE APPROACH SLAB.

TEMPORARY DRAINAGE DETAIL

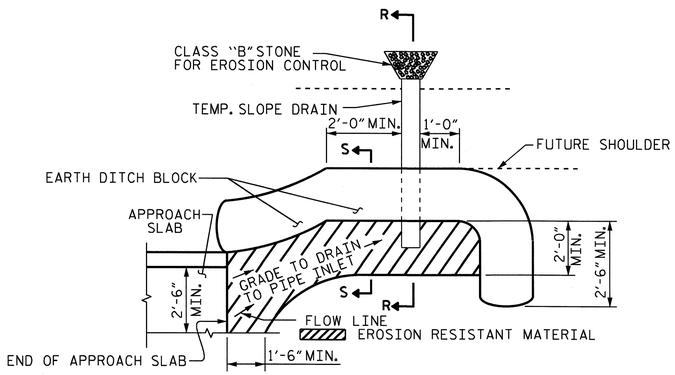

NOTE: IMMEDIATELY AFTER THE CONSTRUCTION OF THE APPROACH SLAB, THE CONTRACTOR SHALL PROVIDE TEMPORARY BERM AND SLOPE DRAIN. CONTRACTOR SHALL GRADE TO PIPE INLET AND PROVIDE EROSION RESISTANT MATERIAL AS SHOWN. THE EROSION RESISTANT MATERIAL SHALL BE EITHER 1) ASPHALT PLANT MIX, TYPE 1 OR TYPE 2, MIN. 2" DEPTH, 2) EROSION CONTROL MAT, OR 3) CONCRETE, AS DIRECTED BY THE ENGINEER. THE SLOPE DRAIN SHALL CONSIST OF A NON-PERFORATED TEMPORARY DRAINAGE PIPE, 12 INCHES DIAMETER.

PLAN VIEW

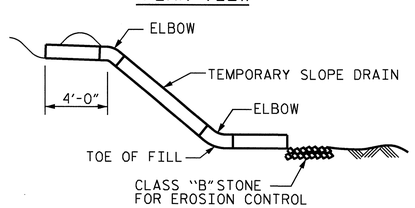

SECTION R-R

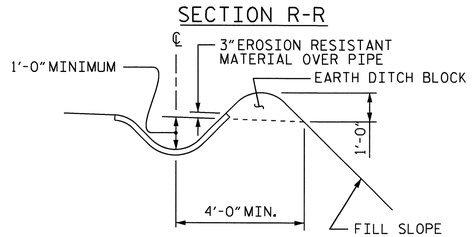

SECTION S-S

TEMPORARY BERM AND SLOPE DRAIN DETAILS

BILL OF MATERIAL

APPROACH SLAB AT EB NO.1

BAR	NO.	SIZE	TYPE	LENGTH	WEIGHT
✱ A1	60	#4	STR	20'-9"	832
A2	46	#4	STR	20'-7"	632
✱ A3	2	#4	STR	20'-1"	27
A4	2	#4	STR	19'-11"	27
✱ B1	72	#5	STR	22'-5"	1683
B2	72	#6	STR	22'-10"	2469
✱ B3	2	#5	STR	21'-6"	45
B4	2	#6	STR	22'-0"	66
✱ S1	39	#4	1	4'-1"	106
S2	39	#5	2	3'-0"	122

REINFORCING STEEL	LBS.	3316
✱ EPOXY COATED REINFORCING STEEL	LBS.	2693
CLASS AA CONCRETE		
POUR #1 SLEEPER SLAB		3.9 C.Y.
POUR #2 SLAB & CURB		32.2 C.Y.
TOTAL		36.1 C.Y.

APPROACH SLAB AT EB NO.2

BAR	NO.	SIZE	TYPE	LENGTH	WEIGHT
✱ A1	60	#4	STR	20'-9"	832
A2	46	#4	STR	20'-7"	632
✱ A3	2	#4	STR	20'-1"	27
A4	2	#4	STR	19'-11"	27
✱ B1	72	#5	STR	22'-5"	1683
B2	72	#6	STR	22'-10"	2469
✱ B3	2	#5	STR	21'-6"	45
B4	2	#6	STR	22'-0"	66
✱ S1	39	#4	1	4'-1"	106
S2	39	#5	2	3'-0"	122

REINFORCING STEEL	LBS.	3316
✱ EPOXY COATED REINFORCING STEEL	LBS.	2693
CLASS AA CONCRETE		
POUR #1 SLEEPER SLAB		3.9 C.Y.
POUR #2 SLAB & CURB		32.2 C.Y.
TOTAL		36.1 C.Y.

BAR TYPES

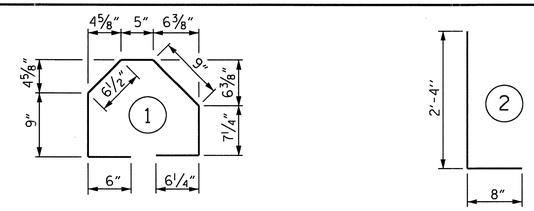

ALL BAR DIMENSIONS ARE OUT TO OUT

✱ THESE BARS ARE EPOXY COATED

NOTES

APPROACH SLAB SHALL NOT BE CONSTRUCTED PRIOR TO COMPLETION OF THE BRIDGE DECK.

FOR REINFORCED BRIDGE APPROACH FILL INCLUDING FABRIC, IMPERMEABLE GEOMEMBRANE, 4" Ø DRAINAGE PIPE, #78M STONE, AND SELECT MATERIAL, SEE ROADWAY PLANS.

TEMPORARY DRAINAGE AND TEMPORARY BERM AND SLOPE DRAINS WILL BE PAID FOR UNDER THE LUMP SUM PRICE FOR BRIDGE APPROACH SLABS.

AREA BETWEEN THE WINGWALL AND APPROACH SLAB SHALL BE GRADED TO DRAIN THE WATER AWAY FROM THE FILL FACE OF THE BRIDGE AND SHALL BE PAVED. SEE ROADWAY PLANS.

THE 6" COMP. A.B.C. SHALL BE FLUSH WITH THE SLEEPER SLAB AND SHALL EXTEND 1'-0" OUTSIDE OF EACH EDGE OF THE APPROACH SLAB.

THE CONTRACTOR MAY USE 4" TYPE B-25.0B ASPHALT CONCRETE BASE COURSE IN LIEU OF 6" COMP. A.B.C. IF THIS OPTION IS USED, THE BASE COURSE SHALL BE FLUSH WITH THE SLEEPER SLAB, AND THE WIDTH SHALL BE THE SAME AS THAT OF THE APPROACH SLAB.

THE CONTRACTOR MAY USE 5" CLASS "A" CONCRETE BASE IN LIEU OF 6" COMP. A.B.C. IF THIS OPTION IS USED, THE CONCRETE BASE SHALL BE FLUSH WITH THE SLEEPER SLAB, AND THE WIDTH SHALL BE THE SAME AS THAT OF THE APPROACH SLAB. THE CONCRETE SHALL BE FINISHED TO A SMOOTH SURFACE AND A LAYER OF 30 LB ROOFING FELT SHALL BE PLACED BETWEEN THE CONCRETE BASE AND THE APPROACH SLAB TO PREVENT BOND. THE APPROACH SLAB SHALL NOT BE CAST UNTIL THE CONCRETE BASE HAS REACHED AN AGE OF THREE CURING DAYS.

THE VERTICAL JOINT ON THE LEFT AND RIGHT SIDE OF THE APPROACH SLAB AT THE ENDS OF THE EVAZOTE JOINT SHALL BE FILLED WITH SILICONE OR OTHER APPROVED MATERIAL IN ORDER TO PREVENT BACKFILL FROM ENTERING THE JOINT OPENING.

THE JOINT OPENING AT THE APPROACH SLAB/DECK INTERFACE SHALL BE SAWED NO MORE THAN 12 HOURS AFTER THE APPROACH SLAB IS CAST. THE JOINT SHALL BE CLEANED OF ALL DEBRIS BEFORE THE SEALANT IS APPLIED. THE JOINT SEALER MATERIAL SHALL CONFORM TO THE REQUIREMENTS OF TYPE SL LOW MODULUS SILICONE SEALANT.

GROOVING BRIDGE FLOORS IS NOT REQUIRED ON THE TOP SURFACE OF THE SLEEPER SLAB. INSTEAD, APPLY A BROOMED TEXTURE IN ACCORDANCE WITH ARTICLE 442-3 OF THE STANDARD SPECIFICATIONS.

PROJECT NO. R-2233AB
RUTHERFORD COUNTY
STATION: 280+13.00 -L-

SHEET 2 OF 3

STATE OF NORTH CAROLINA
DEPARTMENT OF TRANSPORTATION
RALEIGH

STANDARD
BRIDGE APPROACH SLAB DETAILS
RIGHT LANE

NORTH CAROLINA PROFESSIONAL SEAL 20125 ENGINEER MARSHALL G. CHEEK, JR.
9-15-10

REVISIONS								SHEET NO.
NO.	BY:	DATE:	NO.	BY:	DATE:			S-63
1			3					TOTAL SHEETS
2			4					184

STR. #2 STD. NO. BAS11

ASSEMBLED BY : A.L. FIGUEROA		DATE :	2-03-09
CHECKED BY : M.G. CHEEK		DATE :	2-26-10
DRAWN BY : FCJ 11/88	REV. 10/17/00		RWW/LES
CHECKED BY : ARB 11/88	REV. 5/7/03		RWW/JTE
	REV. 5/1/06		TLA/GM

27-JUL-2010 14:03
R:\Structures\Str#2\A.L. Figueroa\Microstation\R-2233AB_SD_STR#2_15_IAS.dgn
afigueroa

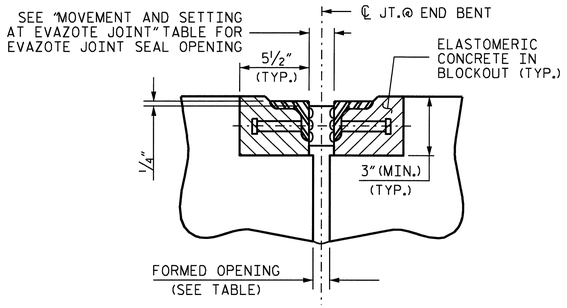

SECTION C-C
ARMORED EVAZOTE JOINT SEAL

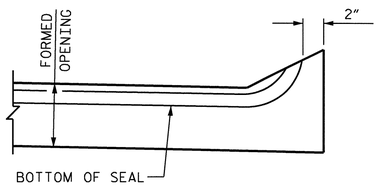

SECTION A-A

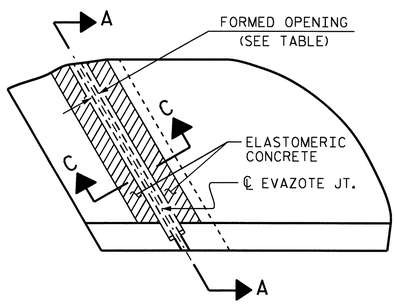

PLAN

JOINT SEAL DETAILS

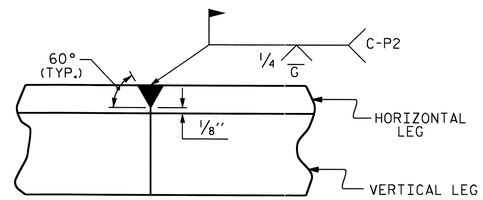

DETAIL- FIELD WELD SPLICE OF ANGLE

NOTES

ANGLES SHALL CONFORM TO AASHTO M270 GRADE 36 STEEL OR APPROVED EQUAL. ALL STUD ANCHORS SHALL CONFORM TO AASHTO M169 GRADES 1010 THRU 1020 OR APPROVED EQUAL.

STUD ANCHORS SHALL BE SHOP WELDED AND ALL HOLES SHALL BE SHOP DRILLED AS SHOWN ON THE PLANS. STUD ANCHORS SHALL BE ELECTRIC ARC END WELDED WITH COMPLETE FUSION.

UPON COMPLETION OF SHOP FABRICATION, THE ENTIRE ANCHOR ASSEMBLY SHALL BE METALLIZED. THE ½" Ø STUD ANCHORS AND ANCHOR TABS NEED NOT BE METALLIZED. SEE SPECIAL PROVISION FOR THERMAL SPRAYED COATINGS (METALLIZATION).

ANCHOR ASSEMBLY SHALL BE MADE CONTINUOUS THE LENGTH OF THE JOINT FROM GUTTER TO GUTTER. FOR FIELD SPLICES AT ALL CROWN BREAK POINTS, THE ENDS OF THE STEEL ANGLES SHALL BE CUT PARALLEL TO THE BRIDGE CENTERLINE. FINISHED FIELD WELDS SHALL BE GROUND SMOOTH AND COATED WITH A MINIMUM THICKNESS OF 4 DRY MILS OF ZINC-RICH PAINT IN ACCORDANCE WITH THE STANDARD SPECIFICATIONS.

ANCHOR ASSEMBLY SEGMENTS SHALL NOT BE LESS THAN 12 FEET NO MORE THAN 20 FEET IN LENGTH. SHORTER SEGMENTS MAY BE USED AT THE EDGE OF ROADWAY OR AT POINTS OF STAGED CONSTRUCTION.

THE ANCHOR ASSEMBLY SHALL BE SECURED AND LEVELED AS SHOWN IN THE "ARMORED JOINT ANCHOR ASSEMBLY DETAILS". NO SUBMITTALS ARE REQUIRED FOR ⅜" Ø EXPANSION ANCHORS, NUTS OR WASHERS. THE CONTRACTOR MAY SUBMIT FOR APPROVAL AN ALTERNATE METHOD OF ALIGNING AND LEVELING THE ANGLES. THE ALTERNATE METHOD SHALL NOT INCLUDE ANY WELDING TO THE OUTSIDE FACE OF THE ANGLES.

AFTER THE ELASTOMERIC CONCRETE HAS BEEN CAST ON BOTH SIDES OF THE JOINT, REMOVE ANY EXCESS CONCRETE THAT COMES THROUGH THE WEEP HOLES AND THOROUGHLY CLEAN THE ANGLES. ANY DAMAGED STEEL SHALL BE COATED WITH A MINIMUM OF 4 MILS OF ZINC-RICH PAINT IN ACCORDANCE WITH THE STANDARD SPECIFICATIONS.

SEE SPECIAL PROVISIONS FOR EVAZOTE JOINT SEALS.

THE NOMINAL UNCOMPRESSED SEAL WIDTH OF THE EVAZOTE JOINT SEAL SHALL BE 2½".

SEE SPECIAL PROVISIONS FOR ELASTOMERIC CONCRETE.

MOVEMENT AND SETTING AT EVAZOTE JOINT

END BENT NO.	SKEW ANGLE	NOMINAL UNCOMPRESSED SEAL WIDTH	TOTAL MOVEMENT (ALONG ℄ RDWY)	PERPENDICULAR JOINT OPENING AT 45° F	PERPENDICULAR JOINT OPENING AT 60° F	PERPENDICULAR JOINT OPENING AT 90° F	FORMED OPENING
1	70°	2½"	1⅛"	2 3/16"	2"	1⅝"	1"
2	70°	2½"	1⅛"	2 3/16"	2"	1⅝"	1"

TOTAL MOVEMENT IS CALCULATED ALONG THE CENTERLINE OF ROADWAY.
JOINT OPENINGS ARE MEASURED PERPENDICULAR TO THE JOINT.

ELASTOMERIC CONCRETE

END BENT NO.	ELASTOMERIC CONCRETE * (CU. FT.)	TOTAL LENGTH OF ANGLE (FT)
1	8.8	76.621
2	8.8	76.621
TOTAL	17.6	153.242

* BASED ON THE MINIMUM BLOCKOUT SHOWN.

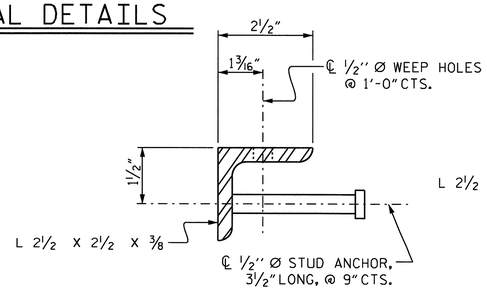

SECTION VIEW OF STUD

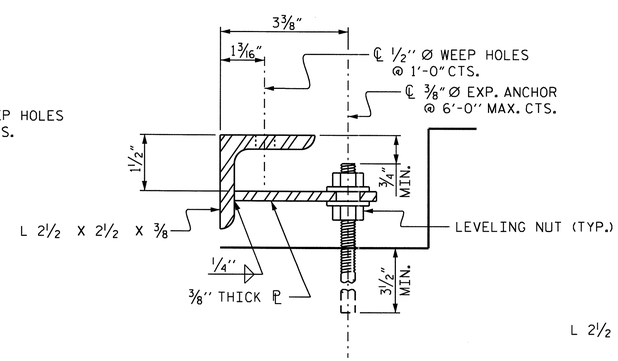

SECTION VIEW OF TAB

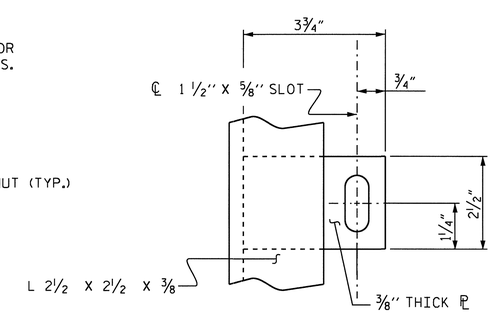

PLAN VIEW OF TAB

ARMORED JOINT ANCHOR ASSEMBLY DETAILS

PROJECT NO. R-2233AB
RUTHERFORD COUNTY
STATION: 280+13.00 -L-

SHEET 3 OF 3

STATE OF NORTH CAROLINA
DEPARTMENT OF TRANSPORTATION
RALEIGH

BRIDGE APPROACH SLAB DETAILS
RIGHT LANE

NORTH CAROLINA PROFESSIONAL SEAL 20125 ENGINEER M.G. CHEEK
9-15-10

REVISIONS						SHEET NO.
NO.	BY:	DATE:	NO.	BY:	DATE:	S-64
1			3			TOTAL SHEETS
2			4			184

STR. #2

ASSEMBLED BY : A.L. FIGUEROA DATE : 2-03-09
CHECKED BY : M.G. CHEEK DATE : 2-26-10

07-SEP-2010 12:53
R:\Structures\Final Plans\Str. #2\R-2233AB_SD_STR#2_15_IAS.dgn
afigueroa

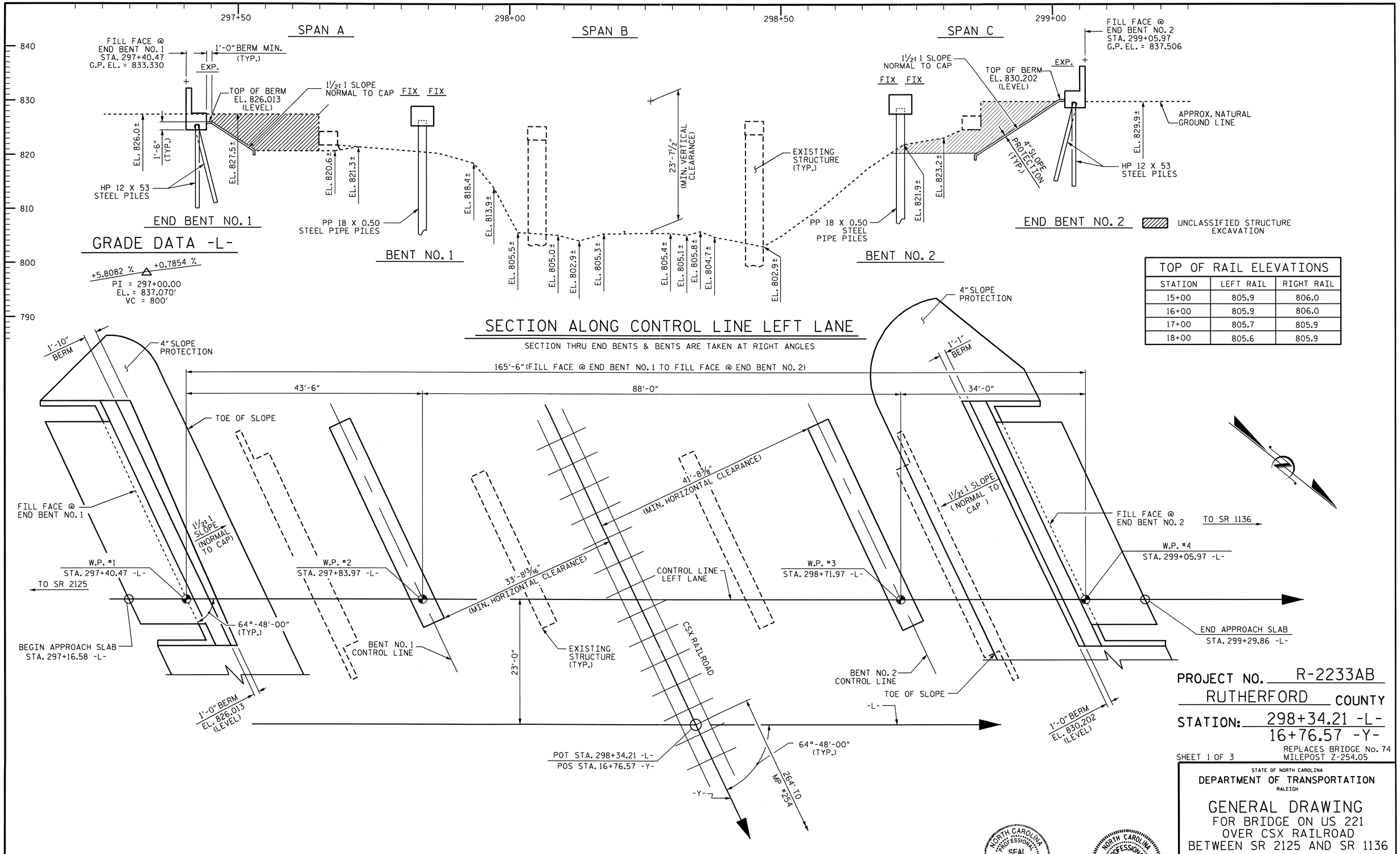

TOP OF RAIL ELEVATIONS		
STATION	LEFT RAIL	RIGHT RAIL
15+00	805.9	806.0
16+00	805.9	806.0
17+00	805.7	805.9
18+00	805.6	805.9

PROJECT NO. R-2233AB
RUTHERFORD COUNTY
STATION: 298+34.21 -L-
16+76.57 -Y-

REPLACES BRIDGE No. 74
MILEPOST Z-254.05

SHEET 1 OF 3

STATE OF NORTH CAROLINA
DEPARTMENT OF TRANSPORTATION
RALEIGH

GENERAL DRAWING
FOR BRIDGE ON US 221
OVER CSX RAILROAD
BETWEEN SR 2125 AND SR 1136
LEFT LANE

NORTH CAROLINA PROFESSIONAL SEAL 19014 ENGINEER QUANG H. NGUYEN
Quang H. Nguyen 9-16-10

NORTH CAROLINA PROFESSIONAL SEAL 20125 ENGINEER MARSHALL G. CHEEK, JR.
9-15-10

REVISIONS						SHEET NO.
NO.	BY:	DATE:	NO.	BY:	DATE:	S-65
1			3			TOTAL SHEETS
2			4			184

DRAWN BY : V.X. NGUYEN/ALF DATE : 5-24-10
CHECKED BY : M.G. CHEEK DATE : 6-24-10

14-SEP-2010 07:47
R:\Structures\Final Plans\Str. #3\R-2233AB_SD_STR#3_02_GD.dgn
afigueroa

STR. #3

NCDOS

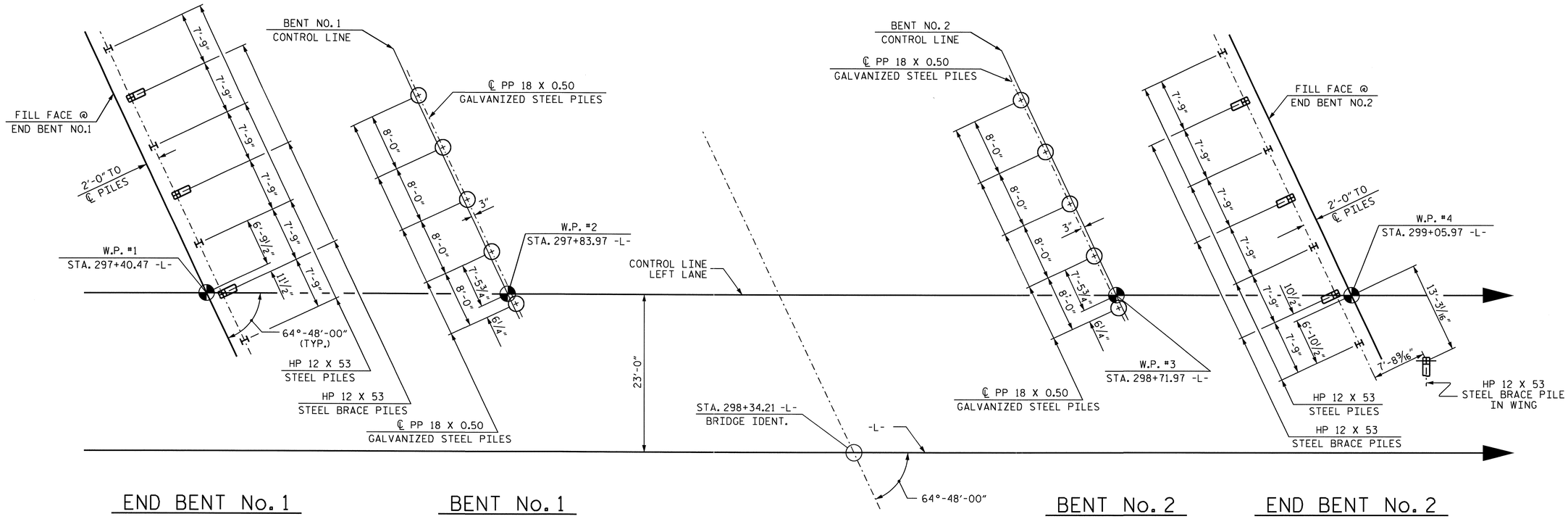

FOUNDATION LAYOUT

ALL END BENT PILES ARE HP 12 X 53.
DIMENSIONS LOCATING PILES ARE SHOWN TO THE PILE CENTERLINE AT THE BOTTOM OF THE CAP.
END BENT BRACE PILES ARE BATTERED AT 3:12.

NOTES

FOR PILES, SEE SPECIAL PROVISIONS.

DRIVE PILES AT END BENT NO. 1 AND END BENT NO. 2 TO A REQUIRED BEARING CAPACITY OF 120 TONS PER PILE. THE REQUIRED BEARING CAPACITY IS EQUAL TO THE ALLOWABLE BEARING CAPACITY WITH A MINIMUM FACTOR OF SAFETY OF TWO.

THE ALLOWABLE BEARING CAPACITY FOR PILES AT END BENT NO. 1 AND END BENT NO. 2 IS 60 TONS PER PILE.

PILES AT BENT NO. 1 SHALL EXTEND TO AN ELEVATION NO HIGHER THAN 786.0 FEET.

PILES AT BENT NO. 2 SHALL EXTEND TO AN ELEVATION NO HIGHER THAN 791.0 FEET.

DRIVE PILES AT BENT NO. 1 AND BENT NO. 2 TO A REQUIRED BEARING CAPACITY OF 350 TONS PER PILE. THE REQUIRED BEARING CAPACITY IS EQUAL TO THE ALLOWABLE BEARING CAPACITY WITH A MINIMUM FACTOR OF SAFETY OF TWO.

THE ALLOWABLE BEARING CAPACITY FOR PILES AT BENT NO. 1 AND BENT NO. 2 IS 175 TONS PER PILE.

TESTING PILES WITH THE PILE DRIVING ANALYZER (PDA) DURING DRIVING, RESTRIKING OR REDRIVING MAY BE REQUIRED. THE ENGINEER WILL DETERMINE THE NEED FOR PDA TESTING. FOR PILE DRIVING ANALYZER, SEE SPECIAL PROVISIONS.

PROJECT NO. R-2233AB
RUTHERFORD COUNTY
STATION: 298+34.21 -L-

SHEET 2 OF 3

STATE OF NORTH CAROLINA
DEPARTMENT OF TRANSPORTATION
RALEIGH

GENERAL DRAWING
FOR BRIDGE ON US 221
OVER CSX RAILROAD
BETWEEN SR 2125 AND SR 1136
LEFT LANE

NORTH CAROLINA PROFESSIONAL SEAL 20125 ENGINEER MARSHALL G. CHEEK, JR.
9-15-10

REVISIONS						SHEET NO.
NO.	BY:	DATE:	NO.	BY:	DATE:	S-66
1			3			TOTAL SHEETS
2			4			184

STR. #3

DRAWN BY : A.L. FIGUEROA DATE : 07-28-10
CHECKED BY : M.G. CHEEK DATE : 08-15-10

13-SEP-2010 16:18
R:\Structures\Final Plans\Str. #3\R-2233AB_SD_STR#3_02B_FL.dgn
afigueroa

BM #1: RAILROAD SPIKE SET IN BASE OF 12" OAK, STATION 297+09.27 -L- (398.86' LT.), ELEV.= 832.55'

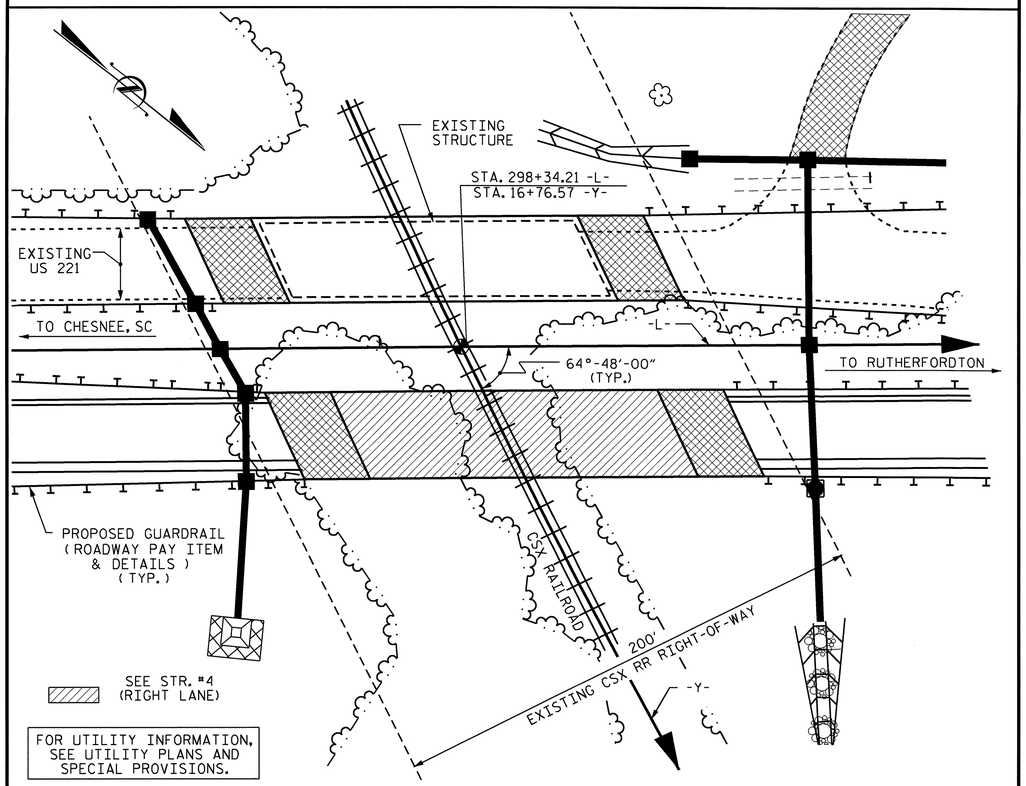

LOCATION SKETCH

NOTES

ASSUMED LIVE LOAD = HS 20 OR ALTERNATE LOADING, EXCEPT THAT PRESTRESSED GIRDERS HAVE BEEN DESIGNED FOR HS25.

FOR OTHER DESIGN DATA AND GENERAL NOTES, SEE SHEET SN.

FOR EROSION CONTROL MEASURES, SEE EROSION CONTROL PLANS.

THIS BRIDGE HAS BEEN DESIGNED BY THE STRENGTH DESIGN METHOD AS SPECIFIED IN AASHTO STANDARD SPECIFICATIONS.

PRESTRESSED CONCRETE DECK PANELS MAY BE USED IN LIEU OF METAL STAY-IN-PLACE FORMS IN ACCORDANCE WITH ARTICLE 420-3 OF THE STANDARD SPECIFICATIONS.

REMOVABLE FORMS MAY BE USED IN LIEU OF METAL STAY-IN-PLACE FORMS IN ACCORDANCE WITH ARTICLE 420-3 OF THE STANDARD SPECIFICATIONS.

THE EXISTING 3-SPAN STRUCTURE (3 @ 40'-0") CONSISTING OF 4 LINES OF REINFORCED CONCRETE DECK GIRDERS WITH A 5" ASPHALT WEARING SURFACE AND ON A SUBSTRUCTURE CONSISTING OF REINFORCED CONCRETE END BENTS AND REINFORCED CONCRETE POST AND BEAM BENTS AND LOCATED AT THE SITE OF THE PROPOSED STRUCTURE SHALL BE REMOVED. FOR REMOVAL OF THE EXISTING STRUCTURE, SEE SPECIAL PROVISIONS.

THE MATERIAL SHOWN IN THE CROSS-HATCHED AREA (SEE SHEET 1 OF 3) SHALL BE EXCAVATED FOR A DISTANCE OF 30 FEET EACH SIDE OF THE PROPOSED STRUCTURE. THIS WORK WILL BE MEASURED AND PAID FOR AT THE CONTRACT LUMP SUM PRICE FOR UNCLASSIFIED STRUCTURE EXCAVATION.

THE SUBSTRUCTURE OF THE EXISTING BRIDGE INDICATED ON THE PLANS IS FROM THE BEST INFORMATION AVAILABLE. SINCE THIS INFORMATION IS SHOWN FOR THE CONVENIENCE OF THE CONTRACTOR, THE CONTRACTOR SHALL HAVE NO CLAIM WHATSOEVER AGAINST THE DEPARTMENT OF TRANSPORTATION FOR ANY DELAYS OR ADDITIONAL COST INCURRED BASED ON DIFFERENCES BETWEEN THE EXISTING BRIDGE SUBSTRUCTURE SHOWN ON THE PLANS AND THE ACTUAL CONDITIONS AT THE PROJECT SITE.

FOR INTERIOR BENTS, ONLY PARTIAL GALVANIZING OF THE PILES IS REQUIRED. SEE INTERIOR BENT SHEETS FOR DETAILS.

FOR PLACING LOAD ON STRUCTURE MEMBERS, SEE SPECIAL PROVISIONS.

THE CLASS AA CONCRETE IN THE BRIDGE DECK SHALL CONTAIN FLY ASH OR GROUND GRANULATED BLAST FURNACE SLAG AT THE SUBSTITUTION RATE SPECIFIED IN ARTICLE 1024-1 AND IN ACCORDANCE WITH ARTICLES 1024-5 AND 1024-6 OF THE STANDARD SPECIFICATIONS. NO PAYMENT WILL BE MADE FOR THIS SUBSTITUTION AS IT IS CONSIDERED INCIDENTAL TO THE COST OF THE REINFORCED CONCRETE DECK SLAB.

THIS STRUCTURE HAS BEEN DESIGNED IN ACCORDANCE WITH HEC 18, "EVALUATING SCOUR AT BRIDGES", MAY, 2001.

THE RAILROAD TRACK TOP OF RAIL ELEVATIONS SHOWN ON THE PLANS ARE FROM THE BEST INFORMATION AVAILABLE. PRIOR TO BEGINNING BRIDGE CONSTRUCTION VERIFY THE TOP OF RAIL ELEVATIONS AND REPORT ANY VARIATIONS TO THE ENGINEER. ANY PLAN REVISIONS NECESSARY TO ACHIEVE THE REQUIRED MINIMUM VERTICAL CLEARANCE WILL BE PROVIDED BY THE DEPARTMENT.

FOR SUBMITTAL OF WORKING DRAWINGS, SEE SPECIAL PROVISIONS.

FOR FALSEWORK AND FORMWORK, SEE SPECIAL PROVISIONS.

FOR PRESTRESSED CONCRETE MEMBERS, SEE SPECIAL PROVISIONS.

NEEDLE BEAMS WILL NOT BE ALLOWED UNLESS OTHERWISE CALLED FOR ON THE PLANS OR APPROVED BY THE ENGINEER.

FOR GROUT FOR STRUCTURES, SEE SPECIAL PROVISIONS.

FOR CRANE SAFETY, SEE SPECIAL PROVISIONS.

FOR CURING CONCRETE, SEE SPECIAL PROVISIONS.

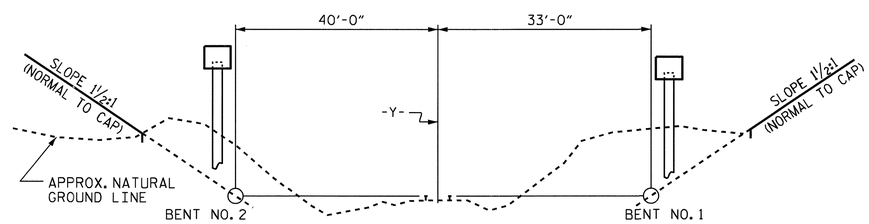

MINIMUM CLEARANCE-RAILROAD (LOOKING STATION AHEAD ALONG RAILROAD)

SPAN LENGTHS BASED ON THIS SECTION

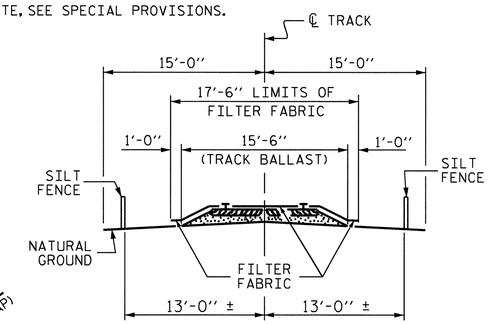

RAILROAD EROSION CONTROL DETAIL

NOTES: RAILROAD EROSION CONTROL MEASURES SHALL BE INSTALLED PRIOR TO PERFORMING ANY WORK IN THE RAILROAD RIGHT-OF-WAY.

ADDITIONAL EROSION CONTROL MEASURES FOR PROTECTION OF RAILROAD DITCHES MAY BE REQUIRED AS DIRECTED BY THE ENGINEER.

NO SEPARATE PAYMENT WILL BE MADE FOR RAILROAD EROSION CONTROL MEASURES.

LIMITS OF SILT FENCE AND FILTER FABRIC PARALLEL TO RAILROAD SHALL EXTEND A MINIMUM OF 25'-0" OUTSIDE EDGE OF SUPERSTRUCTURE OR TOE OF SLOPE ON CONSTRUCTION. A GREATER LENGTH OF SILT FENCE OR FILTER FABRIC MAY BE REQUIRED IF SO DIRECTED BY THE ENGINEER.

FILTER FABRIC TO BE NAILED TO TIMBER RAIL TIES WITH PRIME SOURCE "GRIP CAP" OR EQUIVALENT.

FILTER FABRIC ON SHOULDER TO BE SECURED AS DIRECTED BY THE ENGINEER AND RAILROAD.

TOTAL BILL OF MATERIAL

	REMOVAL OF EXISTING STRUCTURE	PDA TESTING	PDA ASSISTANCE	UNCLASSIFIED STRUCTURE EXCAVATION	REINFORCED CONCRETE DECK SLAB	GROOVING BRIDGE FLOORS	CLASS A CONCRETE	BRIDGE APPROACH SLABS	REINFORCING STEEL	54" PRESTRESSED CONCRETE GIRDERS		HP 12 X 53 STEEL PILES		PP 18 X 0.50 GALVANIZED STEEL PILES		CONCRETE BARRIER RAIL	72" CHAIN LINK FENCE	4" SLOPE PROTECTION	ELASTOMERIC BEARINGS	EVAZOTE JOINT SEALS
	LUMP SUM	EACH	EACH	LUMP SUM	SQ. FT.	SQ. FT.	CU. YDS.	LUMP SUM	LBS.	NO.	LIN. FT.	NO.	LIN. FT.	NO.	LIN. FT.	LIN. FT.	LIN. FT.	SQ. YDS.	LUMP SUM	LUMP SUM
SUPERSTRUCTURE	LUMP SUM				6,406	6,901		LUMP SUM		15	799.58					326.40	320.00		LUMP SUM	LUMP SUM
END BENT NO. 1				LUMP SUM			36.2		5,113			7	665					195		
BENT NO. 1							20.7		3,037					5	500					
BENT NO. 2							20.7		3,037					5	325					
END BENT NO. 2				LUMP SUM			36.5		5,172			8	480					265		
TOTAL	LUMP SUM	2	2	LUMP SUM	6,406	6,901	114.1	LUMP SUM	16,359	15	799.58	15	1,145	10	825	326.40	320.00	460	LUMP SUM	LUMP SUM

PROJECT NO. R-2233AB
RUTHERFORD COUNTY
STATION: 298+34.21 -L-

SHEET 3 OF 3

STATE OF NORTH CAROLINA
DEPARTMENT OF TRANSPORTATION
RALEIGH

GENERAL DRAWING
FOR BRIDGE ON US 221
OVER CSX RAILROAD
BETWEEN SR 2125 AND SR 1136
LEFT LANE

NORTH CAROLINA PROFESSIONAL SEAL 20125 ENGINEER
MARSHALL G. CHEEK, JR.
9-23-10

REVISIONS						SHEET NO.
NO.	BY:	DATE:	NO.	BY:	DATE:	S-67
1			3			TOTAL SHEETS
2			4			184

DRAWN BY : V.X. NGUYEN/ALF DATE : 5-24-10
CHECKED BY : M.G. CHEEK DATE : 6-24-10

23-SEP-2010 09:07
R:\Structures\Final Plans\Str. #3\R-2233AB_SD_STR#3_02_GD.dgn
dahodge

STR. #3 NC005

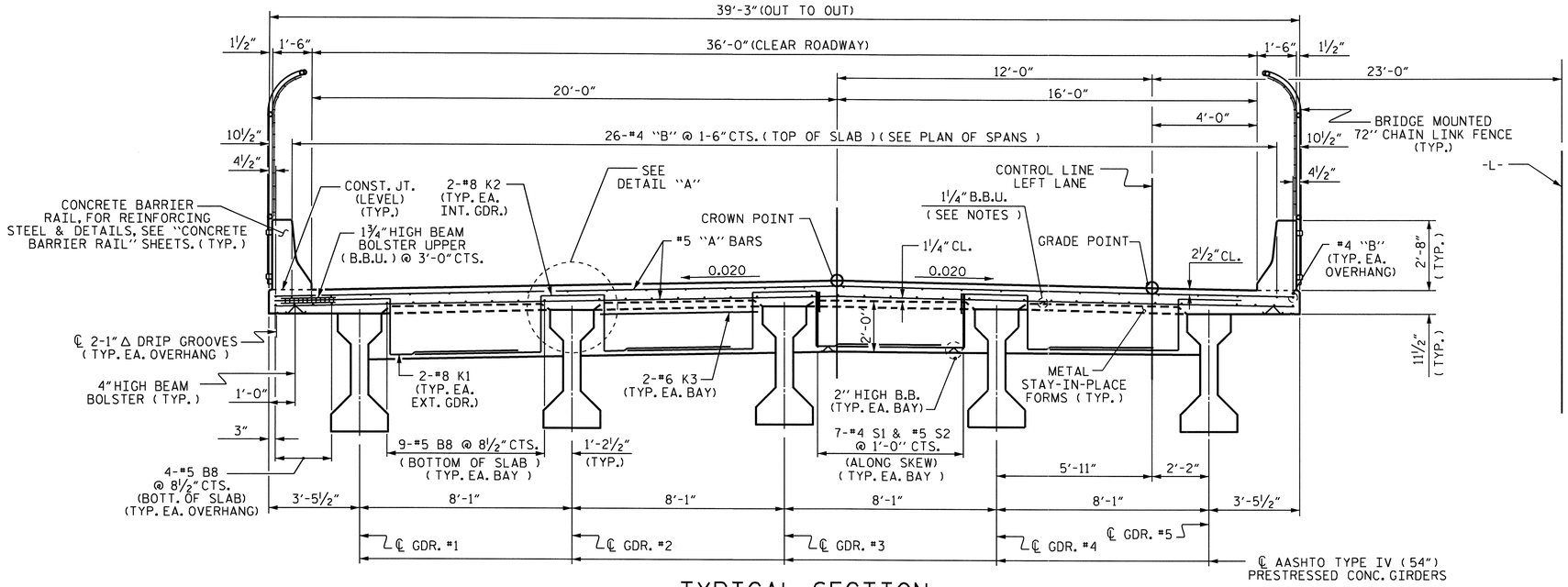

TYPICAL SECTION

(SHOWING END BENT DIAPHRAGMS)

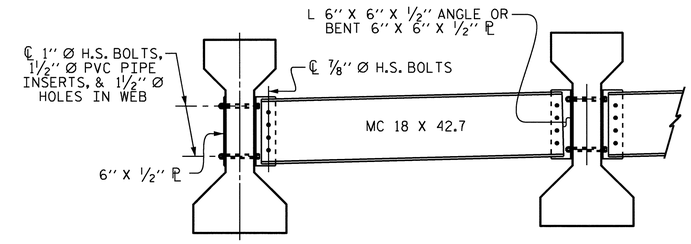

PART TYPICAL SECTION

(SHOWING INTERMEDIATE DIAPHRAGMS)
(FOR DETAILS, SEE "INTERMEDIATE STEEL DIAPHRAGMS FOR TYPE IV PRESTRESSED CONCRETE GIRDERS" SHEET 6 OF 6

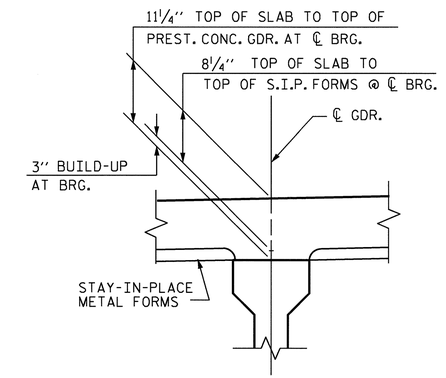

DETAIL "A"

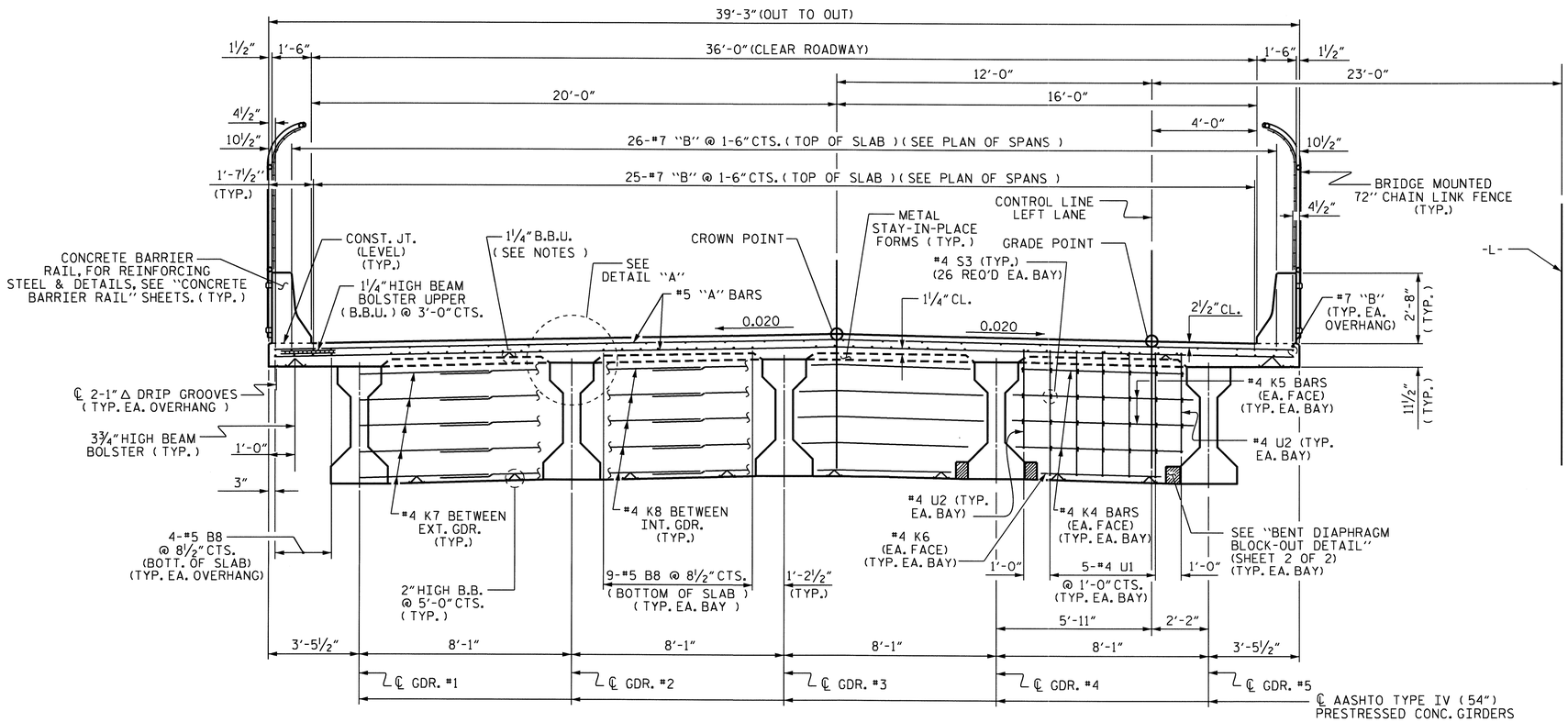

TYPICAL SECTION

(SHOWING BENT DIAPHRAGMS)

PROJECT NO. R-2233AB
RUTHERFORD COUNTY
STATION: 298+34.21 -L-

SHEET 1 OF 2

STATE OF NORTH CAROLINA
DEPARTMENT OF TRANSPORTATION
RALEIGH

SUPERSTRUCTURE
TYPICAL SECTIONS
LEFT LANE

NORTH CAROLINA PROFESSIONAL SEAL 20125 ENGINEER MARSHALL A. CREEK, JR.
9-15-10

REVISIONS						SHEET NO.
NO.	BY:	DATE:	NO.	BY:	DATE:	S-68
1			3			TOTAL SHEETS
2			4			184

DRAWN BY : V.X. NGUYEN DATE : 2/26/09
CHECKED BY : A. SORSENGINH DATE : 5/09

14-SEP-2010 12:01
R:\Structures\Final Plans\Str. #3\R-2233AB_sd_STR#3_04_TS.dgn
afigueroa

STR. #3

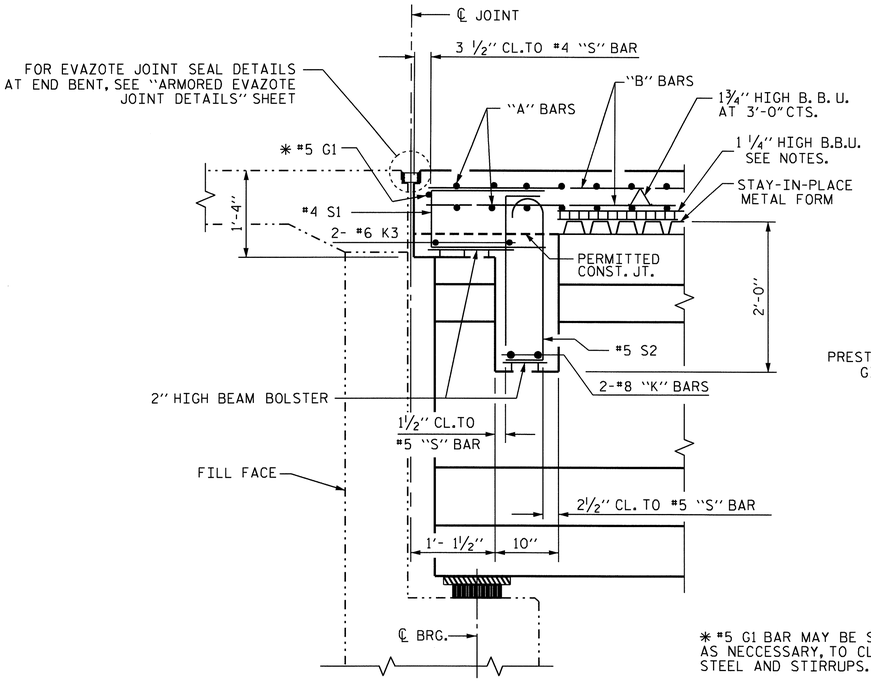

* #5 G1 BAR MAY BE SHIFTED SLIGHTLY. AS NECCESSARY, TO CLEAR REINFORCING STEEL AND STIRRUPS.

SECTION THRU END BENT DIAPHRAGM

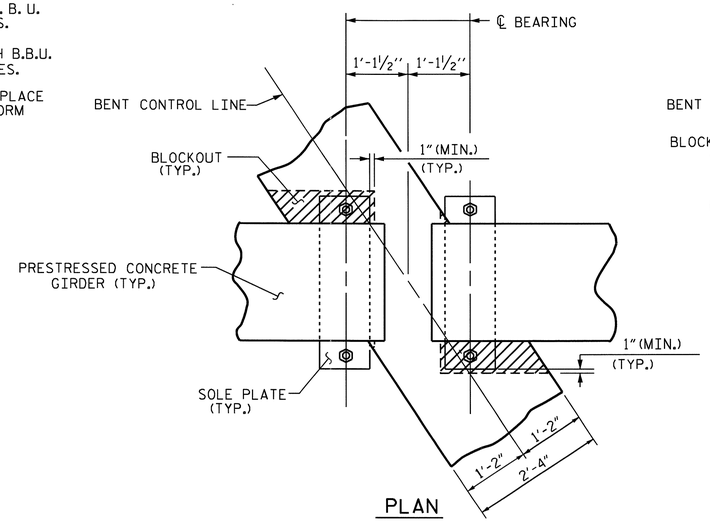

PLAN

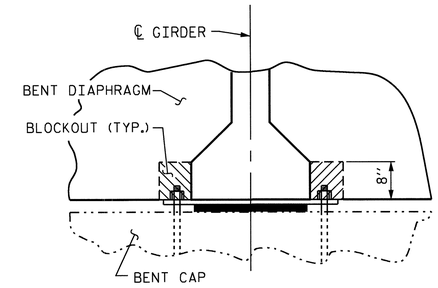

SECTION

BENT DIAPHRAGM BLOCK-OUT DETAIL

NOTES

PROVIDE 1 1/4" HIGH BEAM BOLSTERS UPPER AT 4'-0" CTS. ATOP THE METAL STAY-IN-PLACE FORMS TO SUPPORT THE BOTTOM MAT OF 'A' BARS. WHEN USING REMOVABLE FORMS, PROVIDE CONTINUOUS HIGH CHAIRS FOR METAL DECK (C.H.C.M.) @ 4'-0" CTS. WITH A HEIGHT TO SUPPORT THE BOTTOM MAT OF 'A' BARS A CLEAR DISTANCE OF 2 1/2" ABOVE THE TOP OF THE REMOVABLE FORM.

LONGITUDINAL STEEL MAY BE SHIFTED SLIGHTLY, AS NECESSARY, TO AVOID INTERFERENCE WITH STIRRUPS IN PRESTRESSED CONCRETE GIRDERS.

PREVIOUSLY CAST CONCRETE IN A CONTINUOUS UNIT SHALL HAVE ATTAINED A MINIMUM COMPRESSIVE STRENGTH OF 3,000 PSI BEFORE ADDITIONAL CONCRETE IS CAST IN THE UNIT.

BARRIER RAIL IN A CONTINUOUS UNIT SHALL NOT BE CAST UNTIL ALL SLAB CONCRETE IN THE UNIT HAS BEEN CAST AND HAS REACHED A MINIMUM COMPRESSIVE STRENGTH OF 3,000 PSI.

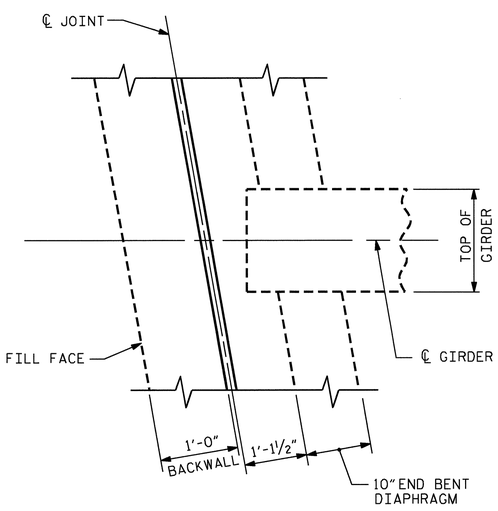

END BENT DIAPHRAGM

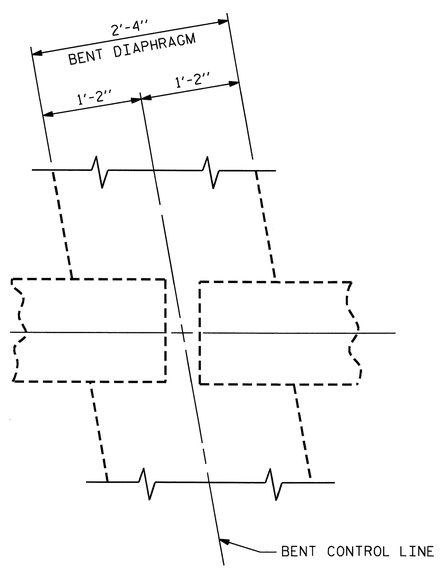

BENT DIAPHRAGM

PLAN

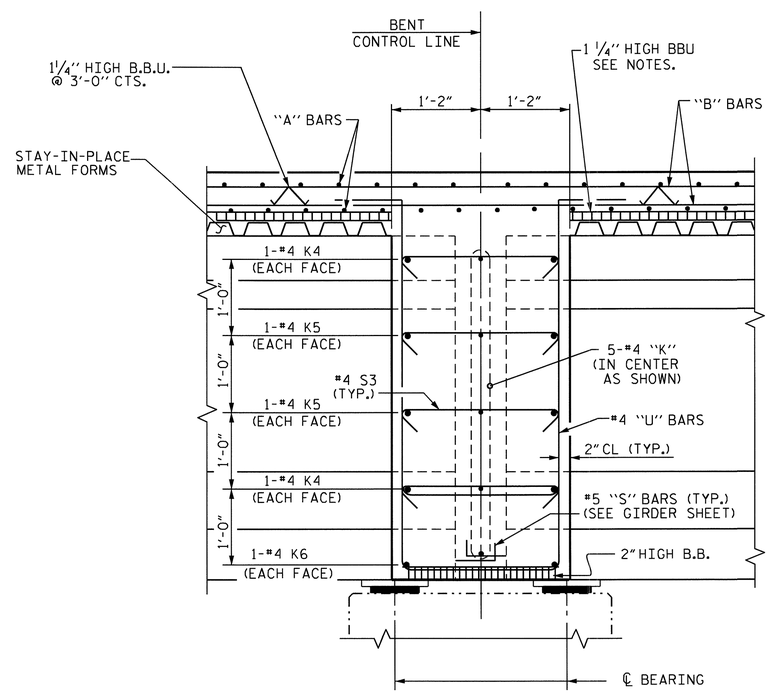

SECTION THRU BENT DIAPHRAGM

PROJECT NO. R-2233AB
RUTHERFORD COUNTY
STATION: 298+34.21 -L-

SHEET 2 OF 2

STATE OF NORTH CAROLINA
DEPARTMENT OF TRANSPORTATION
RALEIGH

SUPERSTRUCTURE

TYPICAL SECTION DETAILS

LEFT LANE

REVISIONS						SHEET NO.
NO.	BY:	DATE:	NO.	BY:	DATE:	S-69
1			3			TOTAL SHEETS
2			4			184

NORTH CAROLINA PROFESSIONAL SEAL 20125 ENGINEER MARSHALL L. CREEK, JR.
4-15-10

DRAWN BY : V.X. NGUYEN DATE : 3/11/09
CHECKED BY : A. SORSENGINH DATE : 5/09

14-SEP-2010 12:00
R:\Structures\Final Plans\Str. #3\R-2233AB_sd_STR#3_04_TS.dgn
afigueroa

STR. #3

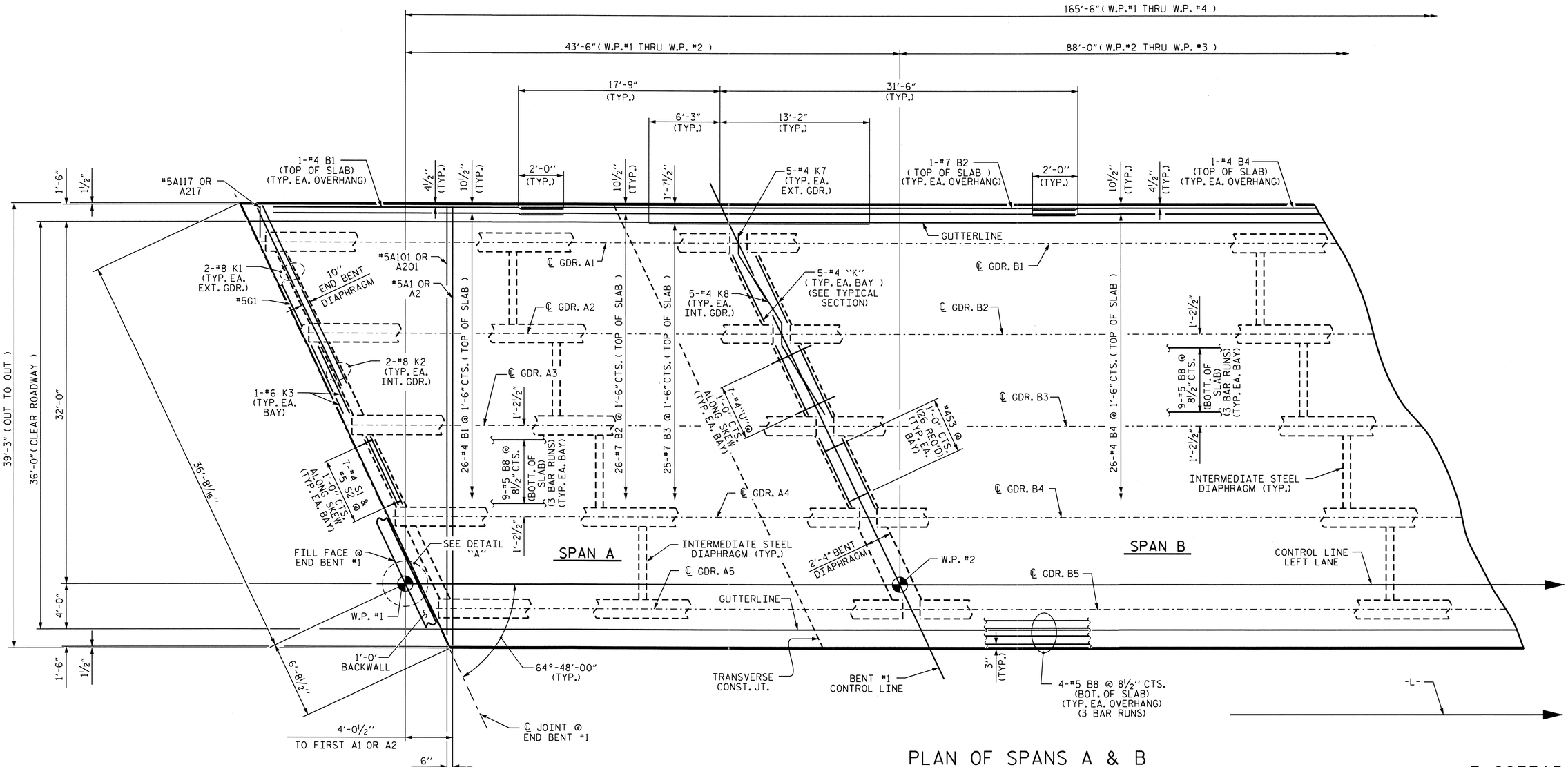

PLAN OF SPANS A & B

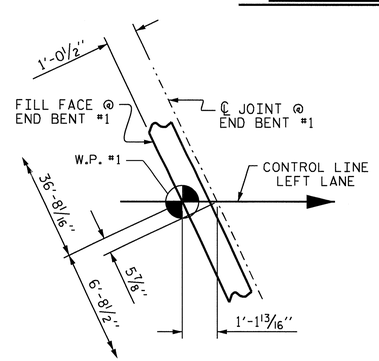

DETAIL "A"

PROJECT NO. R-2233AB
RUTHERFORD COUNTY
STATION: 298+34.21 -L-

SHEET 1 OF 2

STATE OF NORTH CAROLINA
DEPARTMENT OF TRANSPORTATION
RALEIGH

SUPERSTRUCTURE
PLAN OF SPANS A & B
LEFT LANE

NORTH CAROLINA PROFESSIONAL SEAL 20125 ENGINEER MARSHALL W. CHEEK, JR.
9-15-10

REVISIONS						SHEET NO.
NO.	BY:	DATE:	NO.	BY:	DATE:	S-70
1			3			TOTAL SHEETS
2			4			184

STR. #3

DRAWN BY : V.X. NGUYEN DATE : 3-10-09
CHECKED BY : A. SORSENGINH DATE : 7-09

23-JUL-2010 08:34
R:\Structures\Str#3\vnguyen\R-2233AB_sd_S#.dgn
vnguyen

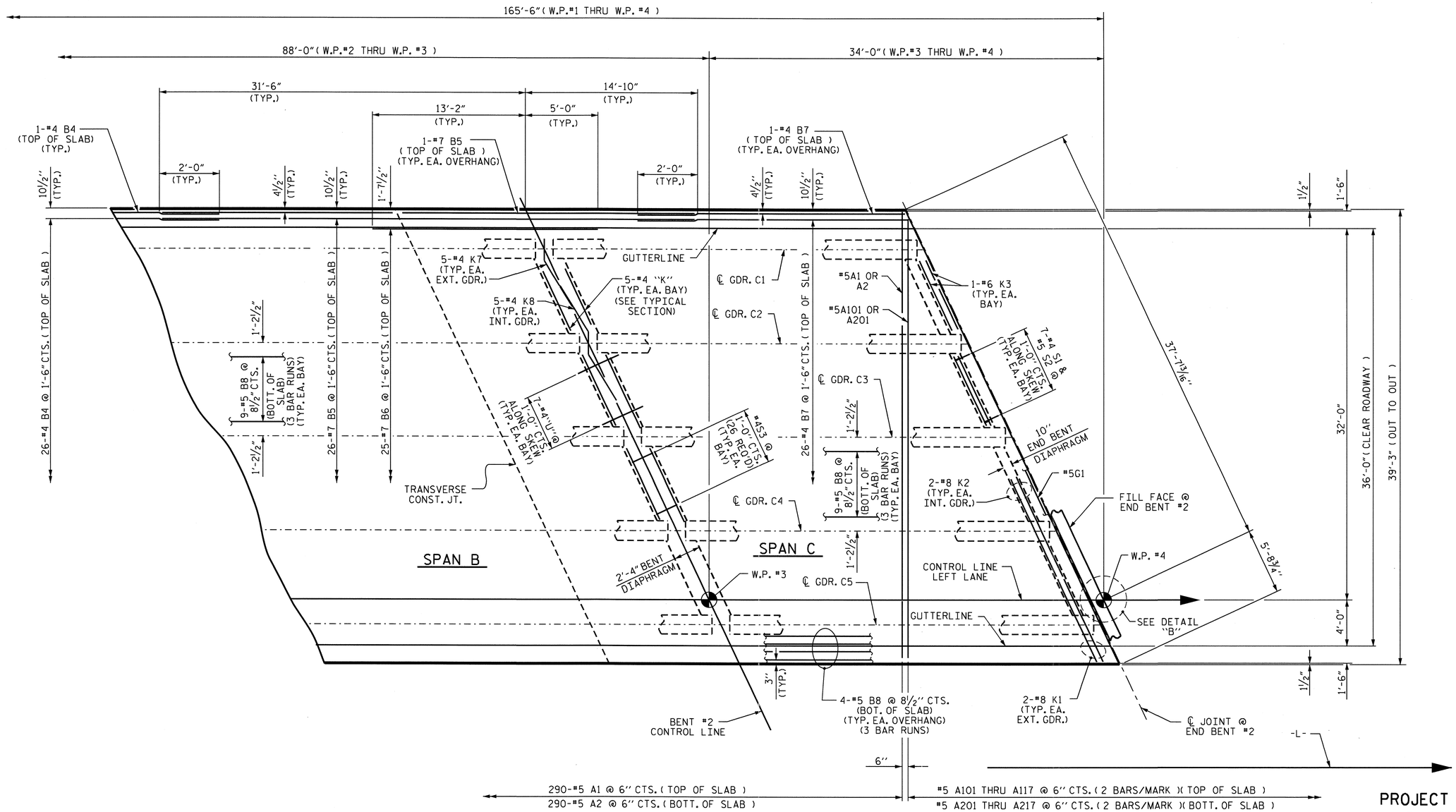

PLAN OF SPANS B & C

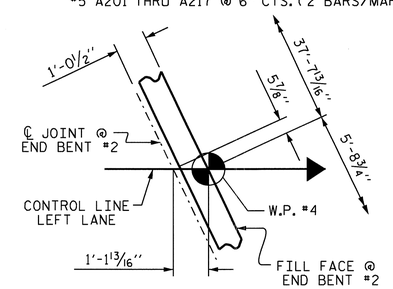

DETAIL "B"

PROJECT NO. R-2233AB

RUTHERFORD COUNTY

STATION: 298+34.21 -L-

SHEET 2 OF 2

STATE OF NORTH CAROLINA
DEPARTMENT OF TRANSPORTATION
RALEIGH

SUPERSTRUCTURE
PLAN OF SPANS B & C
LEFT LANE

NORTH CAROLINA PROFESSIONAL SEAL 20125 ENGINEER MARSHALL G. CHEEK, JR.
9-15-10

REVISIONS						SHEET NO.
NO.	BY:	DATE:	NO.	BY:	DATE:	S-71
1			3			TOTAL SHEETS
2			4			184

STR. #3

DRAWN BY : V.X. NGUYEN DATE : 3-10-09
CHECKED BY : A. SORSENGINH DATE : 7-09

23-JUL-2010 08:35
R:\Structures\Str#3\vnguyen\R-2233AB_sd_S*.dgn
vnguyen

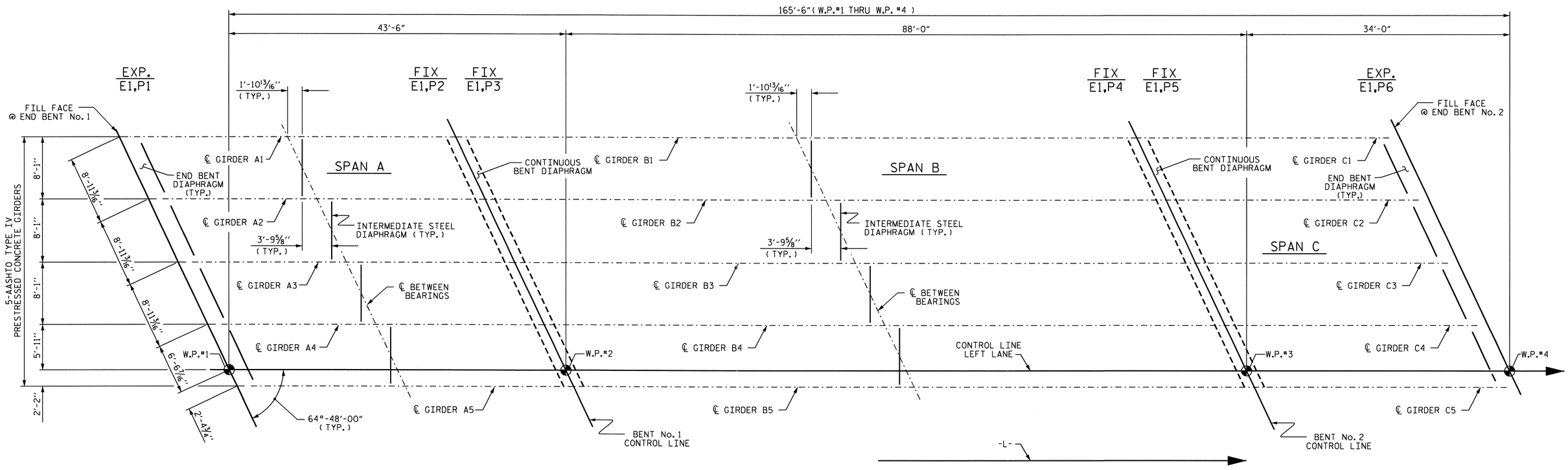

FRAMING PLAN

PROJECT NO. R-2233AB
RUTHERFORD COUNTY
STATION: 298+34.21 -L-

STATE OF NORTH CAROLINA
DEPARTMENT OF TRANSPORTATION
RALEIGH

SUPERSTRUCTURE

FRAMING PLAN
(SPANS A, B, & C)

LEFT LANE

NORTH CAROLINA PROFESSIONAL SEAL 20125 ENGINEER MARSHALL G. CHEEK, JR.
9-21-10

REVISIONS						SHEET NO.
NO.	BY:	DATE:	NO.	BY:	DATE:	S-72
1			3			TOTAL SHEETS
2			4			184

DRAWN BY : V.X. NGUYEN DATE : 3/11/09
CHECKED BY : A. SORSENGINH DATE : 5/09

14-SEP-2010 15:22
R:\Structures\Final Plans\Str. #3\R-2233AB_SD_STR#3_06_FP.dgn
afigueroa

STR. #3

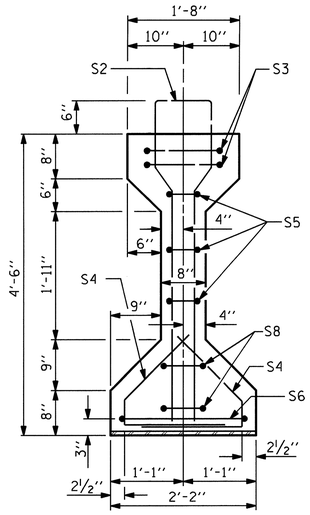

SECTION A-A

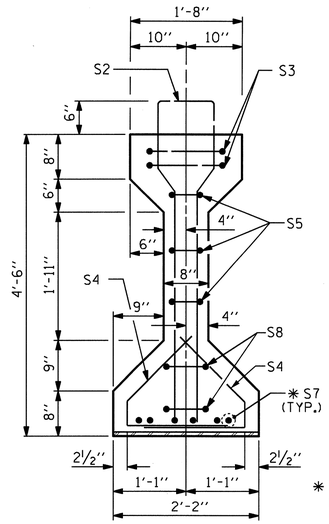

SECTION B-B

✱ FOR S7 BARS, SEE DETAIL "A", SHEET 4 OF 6.

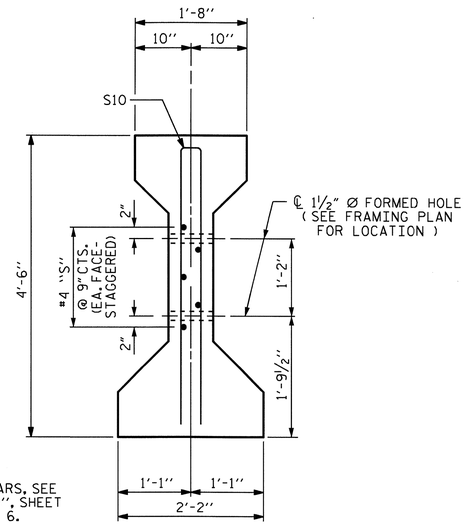

SECTION C-C

(S1 BARS NOT SHOWN)

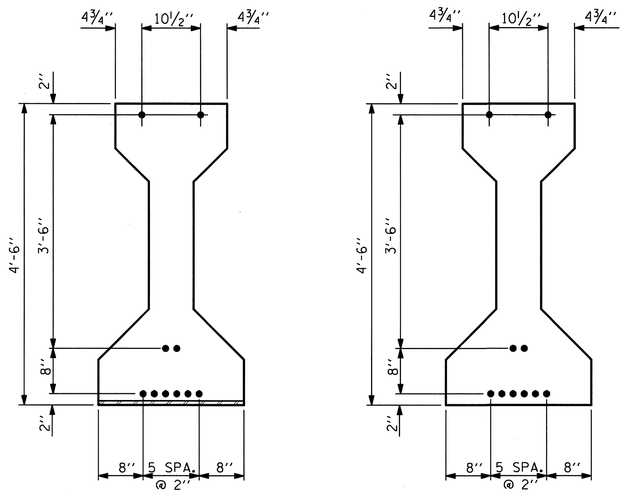

0.6" Ø LOW RELAXATION STRAND LAYOUT

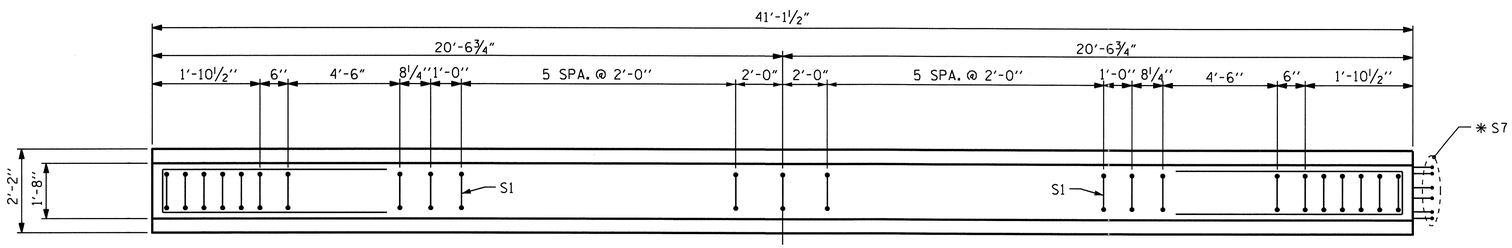

PLAN OF GIRDER

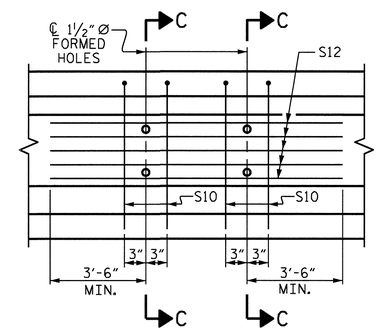

PARTIAL ELEVATION

SHOWING INTERMEDIATE DIAPHRAGM REINFORCING STEEL FOR GIRDER Nos. 2, 3, & 4

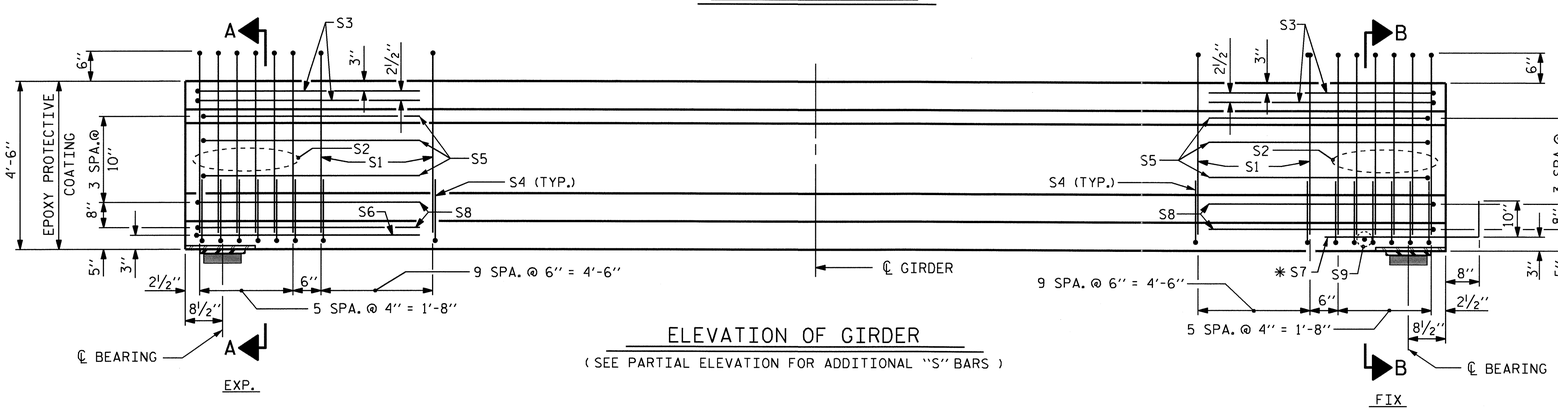

ELEVATION OF GIRDER

(SEE PARTIAL ELEVATION FOR ADDITIONAL "S" BARS)

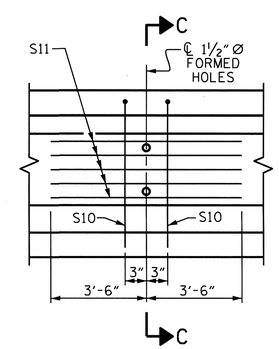

PARTIAL ELEVATION

SHOWING INTERMEDIATE DIAPHRAGM REINFORCING STEEL FOR GIRDER Nos. 1 & 5

0.6" Ø L. R. GRADE 270 STRANDS

AREA (SQUARE INCHES)	ULTIMATE STRENGTH (LBS. PER STRAND)	APPLIED PRESTRESS (LBS. PER STRAND)
0.217	58,600	43,950

REINFORCING STEEL FOR ONE GIRDER

	BAR	NUMBER	SIZE	TYPE	LENGTH	WEIGHT
	S1	35	#4	1	10'-8"	249
	S2	12	#6	1	10'-8"	192
	S3	4	#4	2	9'-1"	24
	S4	64	#4	3	3'-5"	146
	S5	6	#4	2	8'-5"	34
	S6	1	#4	2	9'-11"	7
	✱ S7	6	#5	STR	3'-8"	23
	S8	4	#4	2	8'-7"	23
	S9	1	#3	STR	1'-10"	1
EXTERIOR GDR.	S10	2	#5	2	8'-8"	18
INTERIOR GDR.	S10	4	#5	2	8'-8"	36
EXTERIOR GDR.	S11	5	#4	STR	7'-0"	23
INTERIOR GDR.	S12	5	#4	STR	10'-10"	36

✱ NOTE: S7 BARS SHALL BE BENT BEFORE SHIPMENT. HEAT BENDING SHALL NOT BE ALLOWED.

BAR TYPES

ALL BAR DIMENSIONS ARE OUT-TO-OUT

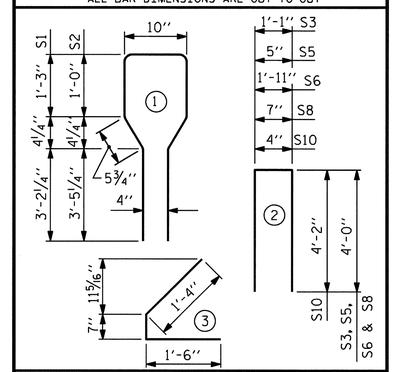

QUANTITIES FOR ONE GIRDER

	REINFORCING STEEL LB.	5000 PSI CONCRETE C.Y.	0.6" Ø L.R. STRANDS No.
EXTERIOR GIRDER	740	8.3	10
INTERIOR GIRDER	771	8.3	10

GIRDERS REQUIRED

NUMBER	LENGTH	TOTAL LENGTH
5	41'-1½"	205'-7½"

PROJECT NO. R-2233AB

RUTHERFORD COUNTY

STATION: 298+34.21 -L-

SHEET 1 OF 6

STATE OF NORTH CAROLINA
DEPARTMENT OF TRANSPORTATION
RALEIGH

STANDARD
AASHTO TYPE IV
PRESTRESSED CONCRETE GIRDER
CONTINUOUS FOR LIVE LOAD
SPAN A
LEFT LANE

NORTH CAROLINA PROFESSIONAL SEAL 20125 ENGINEER MARSHALL B. BRECK, JR. 9-15-10

REVISIONS						SHEET NO.
NO.	BY:	DATE:	NO.	BY:	DATE:	S-73
1			3			TOTAL SHEETS
2			4			184

ASSEMBLED BY : V.X. NGUYEN DATE : 4/7/09
CHECKED BY : A. SORSENGINH DATE : 5/09

DRAWN BY : ELR 8/91
CHECKED BY : GRP 8/91

REV.	7/17/98	RWW/LES
REV.	10/17/00R	RWW/LES
REV.	5/1/06	TLA/GM

23-JUL-2010 08:36
R:\Structures\Str#3\vnguyen\R-2233AB_sd_G*.dgn
vnguyen

STR. #3

STD. NO. PCG6

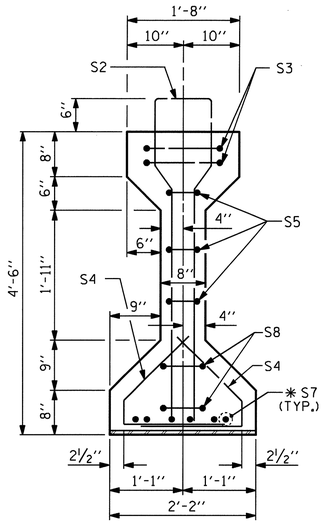

SECTION B-B

* FOR S7 BARS, SEE DETAIL "A", SHEET 4 OF 6.

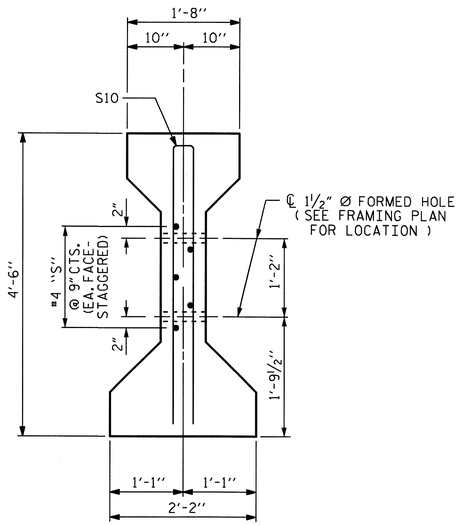

SECTION C-C

(S1 BARS NOT SHOWN)

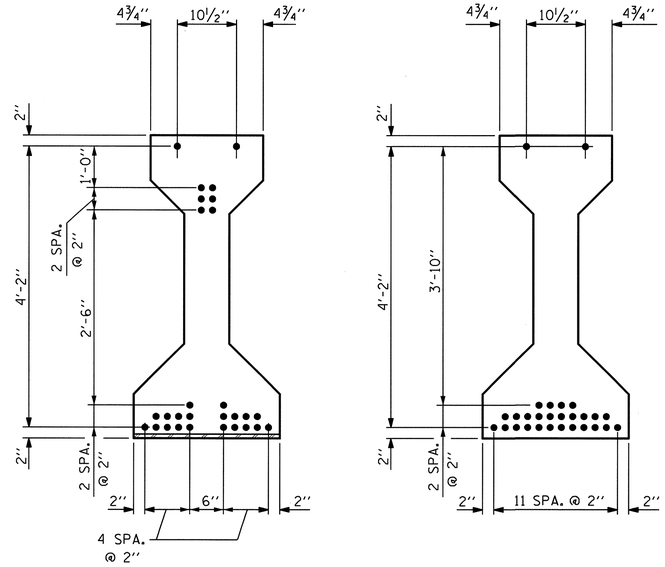

AT END OF GIRDER

AT ℄ OF GIRDER

0.6" Ø LOW RELAXATION STRAND LAYOUT

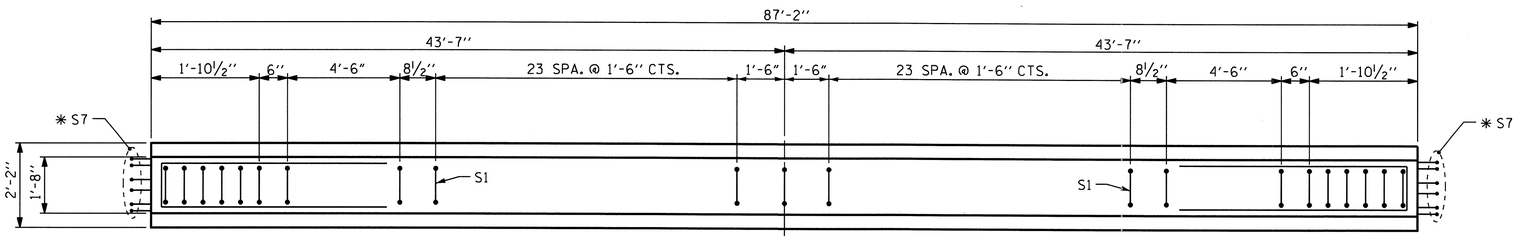

PLAN OF GIRDER

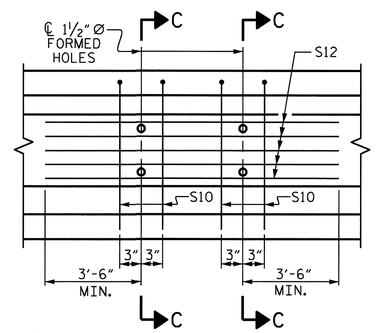

PARTIAL ELEVATION

SHOWING INTERMEDIATE DIAPHRAGM REINFORCING STEEL FOR GIRDER Nos. 2, 3, & 4

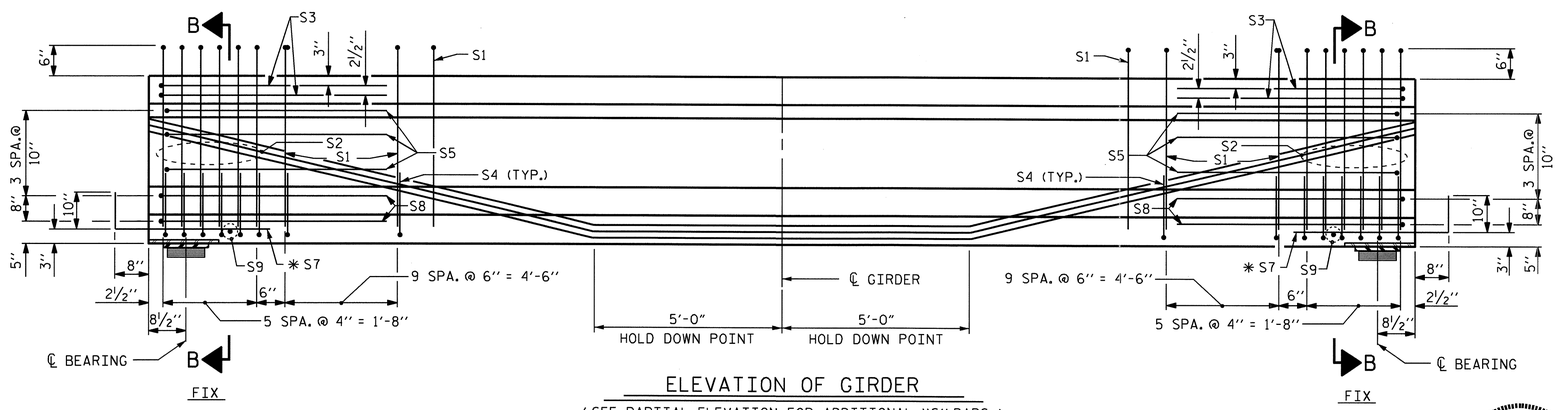

ELEVATION OF GIRDER

(SEE PARTIAL ELEVATION FOR ADDITIONAL "S" BARS)

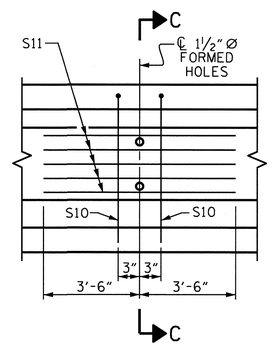

PARTIAL ELEVATION

SHOWING INTERMEDIATE DIAPHRAGM REINFORCING STEEL FOR GIRDER Nos. 1 & 5

0.6" Ø L. R. GRADE 270 STRANDS

AREA (SQUARE INCHES)	ULTIMATE STRENGTH (LBS. PER STRAND)	APPLIED PRESTRESS (LBS. PER STRAND)
0.217	58,600	43,950

REINFORCING STEEL FOR ONE GIRDER

	BAR	NUMBER	SIZE	TYPE	LENGTH	WEIGHT
	S1	69	#4	1	10'-8"	492
	S2	12	#6	1	10'-8"	192
	S3	4	#4	2	9'-1"	24
	S4	64	#4	3	3'-5"	146
	S5	6	#4	2	8'-5"	34
	* S7	12	#5	STR	3'-8"	46
	S8	4	#4	2	8'-7"	23
	S9	2	#3	STR	1'-10"	1
EXTERIOR GDR.	S10	2	#5	2	8'-8"	18
INTERIOR GDR.	S10	4	#5	2	8'-8"	36
EXTERIOR GDR.	S11	5	#4	STR	7'-0"	23
INTERIOR GDR.	S12	5	#4	STR	10'-10"	36

* NOTE: S7 BARS SHALL BE BENT BEFORE SHIPMENT. HEAT BENDING SHALL NOT BE ALLOWED.

BAR TYPES

ALL BAR DIMENSIONS ARE OUT-TO-OUT

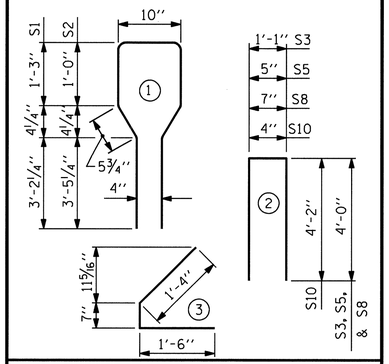

QUANTITIES FOR ONE GIRDER

	REINFORCING STEEL LB.	5700 PSI CONCRETE C.Y.	0.6" Ø L.R. STRANDS No.
EXTERIOR GIRDER	999	17.7	28
INTERIOR GIRDER	1030	17.7	28

GIRDERS REQUIRED

NUMBER	LENGTH	TOTAL LENGTH
5	87'-2"	435'-10"

PROJECT NO. R-2233AB

RUTHERFORD COUNTY

STATION: 298+34.21 -L-

SHEET 2 OF 6

STATE OF NORTH CAROLINA
DEPARTMENT OF TRANSPORTATION
RALEIGH

STANDARD
AASHTO TYPE IV
PRESTRESSED CONCRETE GIRDER
CONTINUOUS FOR LIVE LOAD
SPAN B
LEFT LANE

REVISIONS						SHEET NO.
NO.	BY:	DATE:	NO.	BY:	DATE:	S-74
1			3			TOTAL SHEETS
2			4			184

STR. #3

STD. NO. PCG6

ASSEMBLED BY : V.X. NGUYEN	DATE : 4/7/09	
CHECKED BY : A. SORSENGINH	DATE : 5/09	
DRAWN BY : ELR 8/91	REV. 7/17/98	RWW/LES
CHECKED BY : GRP 8/91	REV. 10/17/00R	RWW/LES
	REV. 5/1/06	TLA/GM

NORTH CAROLINA PROFESSIONAL SEAL 20125 ENGINEER MARSHALL E. CHELCK, JR.
9-15-10

23-JUL-2010 08:37
R:\Structures\Str#3\vnguyen\R-2233AB_sd_G*.dgn
vnguyen

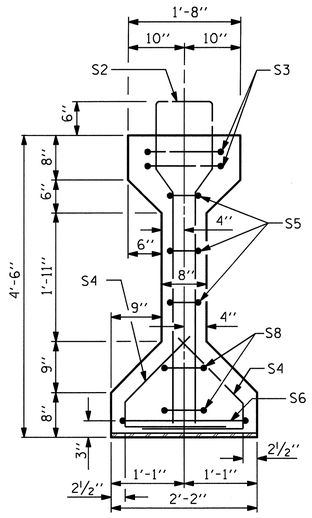

SECTION A-A

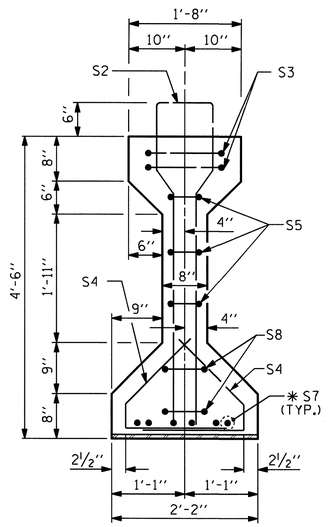

SECTION B-B

✱ FOR S7 BARS, SEE DETAIL "A", SHEET 4 OF 6.

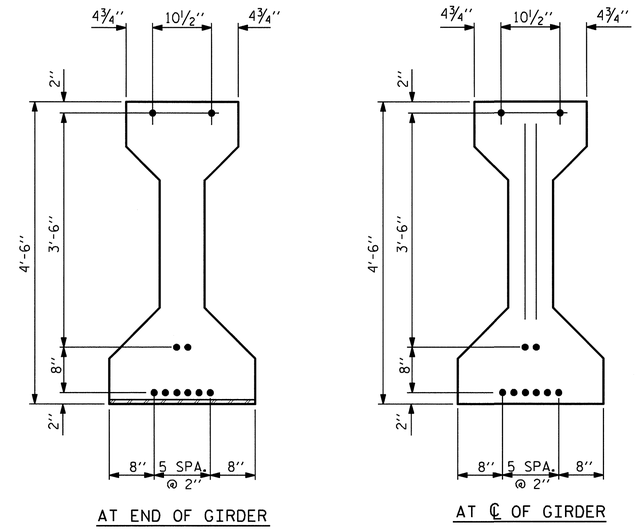

0.6" Ø LOW RELAXATION STRAND LAYOUT

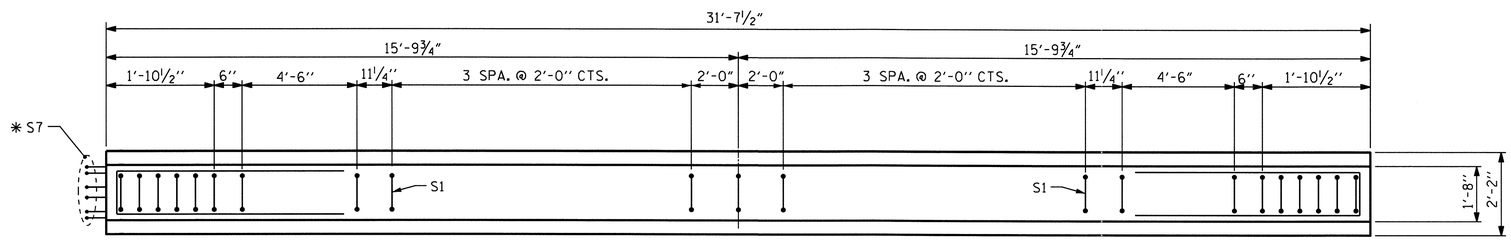

PLAN OF GIRDER

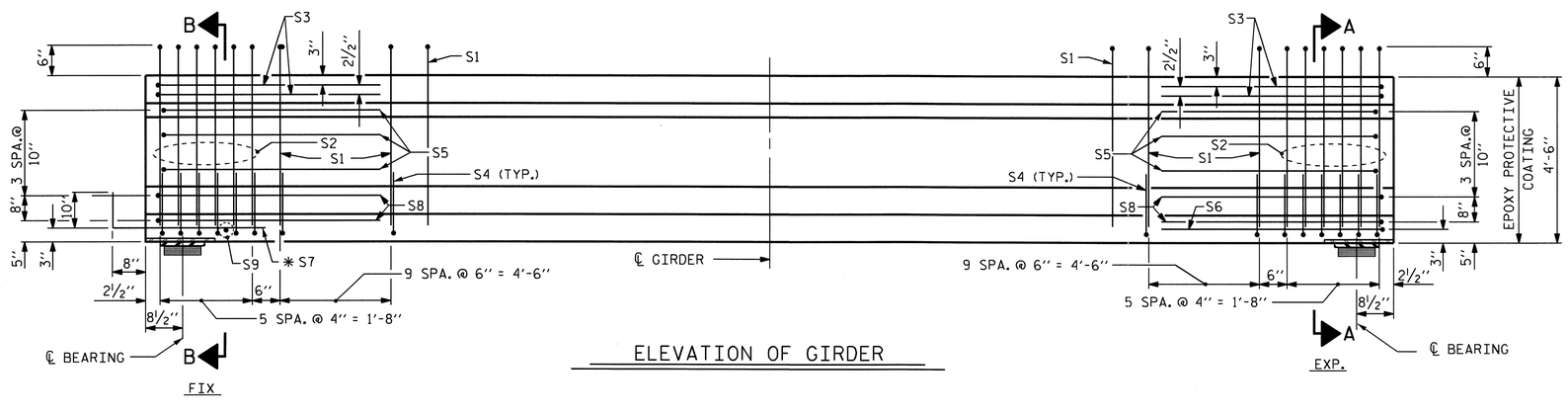

ELEVATION OF GIRDER

0.6" Ø L. R. GRADE 270 STRANDS

AREA (SQUARE INCHES)	ULTIMATE STRENGTH (LBS. PER STRAND)	APPLIED PRESTRESS (LBS. PER STRAND)
0.217	58,600	43,950

REINFORCING STEEL FOR ONE GIRDER

BAR	NUMBER	SIZE	TYPE	LENGTH	WEIGHT
S1	29	#4	1	10'-8"	207
S2	12	#6	1	10'-8"	192
S3	4	#4	2	9'-1"	24
S4	64	#4	3	3'-5"	146
S5	6	#4	2	8'-5"	34
S6	1	#4	2	9'-11"	7
✱ S7	6	#5	STR	3'-8"	23
S8	4	#4	2	8'-7"	23
S9	1	#3	STR	1'-10"	1

✱ NOTE: S7 BARS SHALL BE BENT BEFORE SHIPMENT. HEAT BENDING SHALL NOT BE ALLOWED.

BAR TYPES

ALL BAR DIMENSIONS ARE OUT-TO-OUT

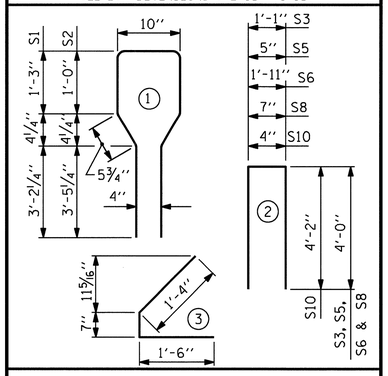

QUANTITIES FOR ONE GIRDER

	REINFORCING STEEL	5000 PSI CONCRETE	0.6" Ø L.R. STRANDS
	LB.	C.Y.	No.
	657	6.4	10

GIRDERS REQUIRED

NUMBER	LENGTH	TOTAL LENGTH
5	31'-7½"	158'-1½"

PROJECT NO. R-2233AB

RUTHERFORD COUNTY

STATION: 298+34.21 -L-

SHEET 3 OF 6

STATE OF NORTH CAROLINA
DEPARTMENT OF TRANSPORTATION
RALEIGH

STANDARD
AASHTO TYPE IV
PRESTRESSED CONCRETE GIRDER
CONTINUOUS FOR LIVE LOAD
SPAN C
LEFT LANE

NORTH CAROLINA PROFESSIONAL SEAL 20125 ENGINEER MARSHALL L. GLOVER, JR.
9-15-10

REVISIONS						SHEET NO.
NO.	BY:	DATE:	NO.	BY:	DATE:	S-75
1			3			TOTAL SHEETS
2			4			184

ASSEMBLED BY : V.X. NGUYEN DATE : 4/7/09
CHECKED BY : A. SORSENGINH DATE : 5/09

DRAWN BY : ELR 8/91
CHECKED BY : GRP 8/91

REV.	7/17/98	RWW/LES
REV.	10/17/00R	RWW/LES
REV.	5/1/06	TLA/GM

23-JUL-2010 08:37
R:\Structures\Str#3\vnguyen\R-2233AB_sd_G*.dgn
vnguyen

STR. #3

STD. NO. PCG6

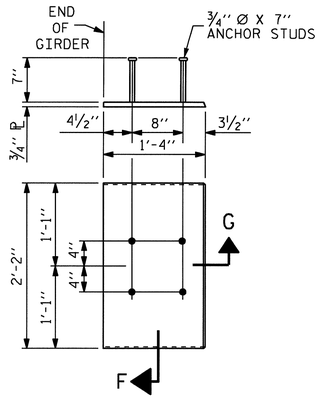

EMBEDDED PLATE "B-1" DETAILS FOR AASHTO TYPE IV GIRDER

(2 REQ'D PER GIRDER)

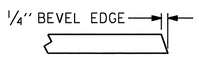

SECTION "G"

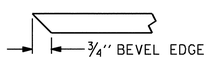

SECTION "F"

(SEE NOTES)

CHART A

GIRDER	DIM. A	DIM. B	DIM. C	DIM. D
GDR. A1	22'-5 9/16"	0	18'-7 15/16""	41'-1 1/2"
GDR. A2	18'-7 15/16"	3'-9 5/8"	18'-7 15/16""	41'-1 1/2"
GDR. A3	18'-7 15/16"	3'-9 5/8"	18'-7 15/16""	41'-1 1/2"
GDR. A4	18'-7 15/16"	3'-9 5/8"	18'-7 15/16""	41'-1 1/2"
GDR. A5	18'-7 15/16"	0	22'-5 9/16"	41'-1 1/2"
GDR. B1	45'-5 13/16"	0	41'-8 3/16"	87'-2"
GDR. B2	41'-8 3/16"	3'-9 5/8"	41'-8 3/16"	87'-2"
GDR. B3	41'-8 3/16"	3'-9 5/8"	41'-8 3/16"	87'-2"
GDR. B4	41'-8 3/16"	3'-9 5/8"	41'-8 3/16"	87'-2"
GDR. B5	41'-8 3/16"	0	45'-5 13/16"	87'-2"

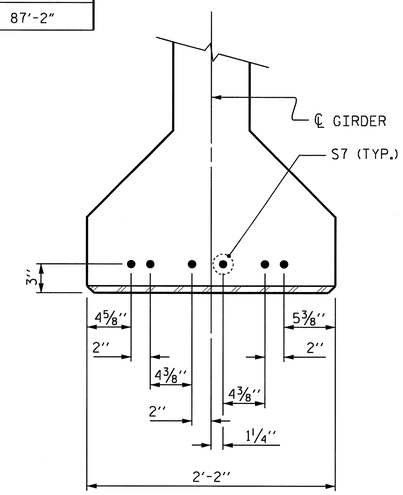

DETAIL "A"

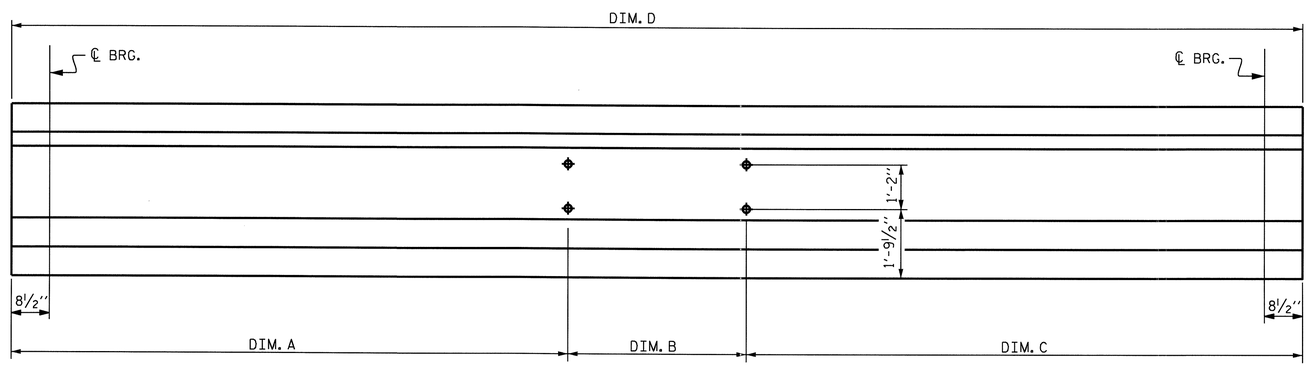

LOCATION OF BOLT HOLES IN GIRDERS

FOR DIMENSIONS, SEE CHART A

NOTES

ALL PRESTRESSING STRANDS SHALL BE 7-WIRE LOW-RELAXATION GRADE 270 STRANDS AND SHALL CONFORM TO AASHTO M203 EXCEPT FOR SAMPLING REQUIREMENTS WHICH SHALL BE IN ACCORDANCE WITH THE STANDARD SPECIFICATIONS.

ALL REINFORCING STEEL SHALL BE GRADE 60.

APPLY EPOXY PROTECTIVE COATING TO END OF GIRDER SURFACES INDICATED IN ELEVATION VIEW.

EMBEDDED PLATE "B-1" SHALL BE GALVANIZED IN ACCORDANCE WITH THE STANDARD SPECIFICATIONS. BEVEL EDGES OF PLATE "B-1" TO GIVE CLOSE FIT BUT NOT TIGHT FIT TO STEEL CASTING FORM.

ANCHOR STUDS SHALL CONFORM TO AASHTO M169 GRADES 1010 THROUGH 1020 OR APPROVED EQUAL, AND SHALL MEET THE TYPE "B" REQUIREMENTS OF SUBSECTION 7.3 OF THE ANSI/AASHTO/AWS D1.5 BRIDGE WELDING CODE.

AT ENDS OF GIRDERS TO BE EMBEDDED IN CONCRETE DIAPHRAGMS OR END WALLS, PRESTRESSING STRANDS MAY EXTEND A MAXIMUM OF 2" BEYOND THE GIRDER ENDS. OTHERWISE, PRESTRESSING STRANDS SHALL BE CUT FLUSH WITH THE GIRDER ENDS.

THE TRANSFER OF LOAD FROM THE ANCHORAGES TO THE GIRDER (SPANS A & C) SHALL BE DONE WHEN CONCRETE HAS REACHED A COMPRESSIVE STRENGTH OF NOT LESS THAN 4000 PSI.

THE TRANSFER OF LOAD FROM THE ANCHORAGES TO THE GIRDER (SPANS B) SHALL BE DONE WHEN CONCRETE HAS REACHED A COMPRESSIVE STRENGTH OF NOT LESS THAN 4500 PSI.

DEPENDING ON THE TYPE OF SYSTEM USED TO SUPPORT THE DECK SLAB FORMS, PRESET ANCHORS MAY BE NECESSARY IN THE PRESTRESSED CONCRETE GIRDER.

THE TOP SURFACE OF THE GIRDER, EXCLUDING THE OUTSIDE 4", SHALL BE RAKED TO A DEPTH OF 1/4".

WHEN DRAPED STRANDS ARE DETAILED, THE LONGITUDINAL LOCATION OF THE HOLD DOWN DEVICES SHALL BE WITHIN 6" OF THE LOCATION SHOWN AND THE CENTER OF GRAVITY OF THE GROUP OF DRAPED STRANDS SHALL BE LOCATED WITHIN 1/2" OF THE THEORETICAL LOCATION SHOWN.

FOR PRESTRESSED CONCRETE MEMBERS, SEE SPECIAL PROVISIONS.

PROJECT NO. R-2233AB
RUTHERFORD COUNTY
STATION: 298+34.21 -L-

SHEET 4 OF 6

STATE OF NORTH CAROLINA
DEPARTMENT OF TRANSPORTATION
RALEIGH

STANDARD

PRESTRESSED CONCRETE GIRDER CONTINUOUS FOR LIVE LOAD DETAILS

LEFT LANE

NORTH CAROLINA PROFESSIONAL SEAL 20125 ENGINEER MARSHALL G. CHECK, JR.
9-15-10

REVISIONS						SHEET NO.
NO.	BY:	DATE:	NO.	BY:	DATE:	S-76
1			3			TOTAL SHEETS
2			4			184

ASSEMBLED BY : V.X. NGUYEN	DATE : 4-17-09		
CHECKED BY : A. SORSENGINH	DATE : 5-09		
DRAWN BY : ELR 11/91	REV. 10/17/00 RWW/LES		
CHECKED BY : GRP 11/91	REV. 7/10/01RR LES/RDR		
	REV. 5/1/06 TLA/GM		

14-SEP-2010 12:00
R:\Structures\Final Plans\Str. #3\R-2233AB_SD_STR#3_07_G#.dgn
afigueroa

STR. #3

STD. NO. PCG11

DEAD LOAD DEFLECTION TABLE FOR GIRDERS

		SPAN A										
0.6" LOW RELAXATION		GIRDERS 1 THRU 5										
TENTH POINTS		℄ BRG.	0.1	0.2	0.3	0.4	0.5	0.6	0.7	0.8	0.9	℄ BRG.
CAMBER (GIRDER ALONE IN PLACE)	↑	0.0	0.006	0.011	0.015	0.017	0.018	0.017	0.015	0.011	0.006	0.0
✱ DEFLECTION DUE TO SUPERIMPOSED D.L.	↓	0.0	0.002	0.003	0.004	0.005	0.005	0.005	0.004	0.003	0.002	0.0
FINAL CAMBER	↑	0	1/16"	1/8"	1/8"	1/8"	3/16"	1/8"	1/8"	1/8"	1/16"	0

✱ INCLUDES FUTURE WEARING SURFACE
ALL VALUES ARE SHOWN IN FEET (DECIMAL FORM), EXCEPT " FINAL CAMBER ", WHICH IS GIVEN IN INCHES (FRACTION FORM).

DEAD LOAD DEFLECTION TABLE FOR GIRDERS

		SPAN C										
0.6" LOW RELAXATION		GIRDERS 1 THRU 5										
TENTH POINTS		℄ BRG.	0.1	0.2	0.3	0.4	0.5	0.6	0.7	0.8	0.9	℄ BRG.
CAMBER (GIRDER ALONE IN PLACE)	↑	0.0	0.004	0.008	0.010	0.012	0.013	0.012	0.010	0.008	0.004	0.0
✱ DEFLECTION DUE TO SUPERIMPOSED D.L.	↓	0.0	0.001	0.001	0.001	0.002	0.002	0.002	0.001	0.001	0.001	0.0
FINAL CAMBER	↑	0	1/16"	1/16"	1/8"	1/8"	1/8"	1/8"	1/8"	1/16"	1/16"	0

✱ INCLUDES FUTURE WEARING SURFACE
ALL VALUES ARE SHOWN IN FEET (DECIMAL FORM), EXCEPT " FINAL CAMBER ", WHICH IS GIVEN IN INCHES (FRACTION FORM).

DEAD LOAD DEFLECTION TABLE FOR GIRDERS

		SPAN B										
0.6" LOW RELAXATION		GIRDERS 1 & 5										
TENTH POINTS		℄ BRG.	0.1	0.2	0.3	0.4	0.5	0.6	0.7	0.8	0.9	℄ BRG.
CAMBER (GIRDER ALONE IN PLACE)	↑	0.0	0.083	0.156	0.214	0.250	0.263	0.250	0.214	0.156	0.083	0.0
✱ DEFLECTION DUE TO SUPERIMPOSED D.L.	↓	0.0	0.033	0.063	0.087	0.101	0.106	0.101	0.087	0.063	0.033	0.0
FINAL CAMBER	↑	0	9/16"	1 1/8"	1 1/2"	1 13/16"	1 7/8"	1 13/16"	1 1/2"	1 1/8"	9/16"	0

✱ INCLUDES FUTURE WEARING SURFACE
ALL VALUES ARE SHOWN IN FEET (DECIMAL FORM), EXCEPT " FINAL CAMBER ", WHICH IS GIVEN IN INCHES (FRACTION FORM).

DEAD LOAD DEFLECTION TABLE FOR GIRDERS

		SPAN B										
0.6" LOW RELAXATION		GIRDER 2										
TENTH POINTS		℄ BRG.	0.1	0.2	0.3	0.4	0.5	0.6	0.7	0.8	0.9	℄ BRG.
CAMBER (GIRDER ALONE IN PLACE)	↑	0.0	0.083	0.156	0.214	0.250	0.263	0.250	0.214	0.156	0.083	0.0
✱ DEFLECTION DUE TO SUPERIMPOSED D.L.	↓	0.0	0.035	0.066	0.090	0.106	0.111	0.106	0.090	0.066	0.035	0.0
FINAL CAMBER	↑	0	9/16"	1 1/16"	1 1/2"	1 3/4"	1 13/16"	1 3/4"	1 1/2"	1 1/16"	9/16"	0

✱ INCLUDES FUTURE WEARING SURFACE
ALL VALUES ARE SHOWN IN FEET (DECIMAL FORM), EXCEPT " FINAL CAMBER ", WHICH IS GIVEN IN INCHES (FRACTION FORM).

DEAD LOAD DEFLECTION TABLE FOR GIRDERS

		SPAN B										
0.6" LOW RELAXATION		GIRDERS 3 & 4										
TENTH POINTS		℄ BRG.	0.1	0.2	0.3	0.4	0.5	0.6	0.7	0.8	0.9	℄ BRG.
CAMBER (GIRDER ALONE IN PLACE)	↑	0.0	0.083	0.156	0.214	0.250	0.263	0.250	0.214	0.156	0.083	0.0
✱ DEFLECTION DUE TO SUPERIMPOSED D.L.	↓	0.0	0.037	0.069	0.095	0.111	0.117	0.111	0.095	0.069	0.037	0.0
FINAL CAMBER	↑	0	9/16"	1 1/16"	1 7/16"	1 11/16"	1 3/4"	1 11/16"	1 7/16"	1 1/16"	9/16"	0

✱ INCLUDES FUTURE WEARING SURFACE
ALL VALUES ARE SHOWN IN FEET (DECIMAL FORM), EXCEPT " FINAL CAMBER ", WHICH IS GIVEN IN INCHES (FRACTION FORM).

PROJECT NO. R-2233AB
RUTHERFORD COUNTY
STATION: 298+34.21 -L-

SHEET 5 OF 6

STATE OF NORTH CAROLINA
DEPARTMENT OF TRANSPORTATION
RALEIGH

SUPERSTRUCTURE

DEAD LOAD DEFLECTION TABLES

LEFT LANE

NORTH CAROLINA PROFESSIONAL SEAL 20125 ENGINEER
MARSHALL A. CHEEK, JR.
9-15-10

REVISIONS						SHEET NO.
NO.	BY:	DATE:	NO.	BY:	DATE:	S-77
1			3			TOTAL SHEETS
2			4			184

STR. #3

DRAWN BY : V.X. NGUYEN DATE : 4-17-09
CHECKED BY : A. SORSENGINH DATE : 5-09

23-JUL-2010 08:52
R:\Structures\Str#3\vnguyen\R-2233AB_sd_G*.dgn
vnguyen

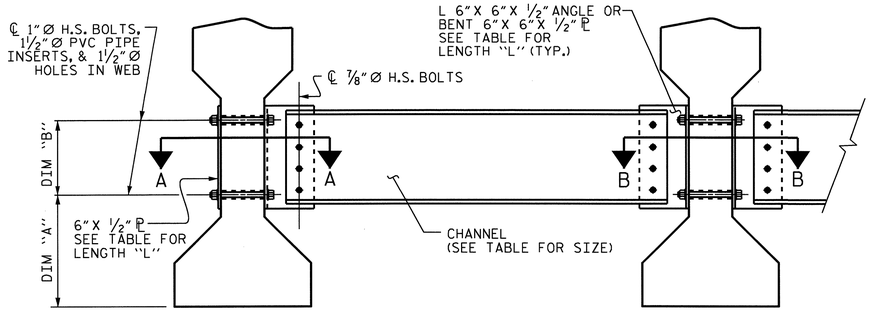

EXTERIOR GIRDER

INTERIOR GIRDER

PART SECTION AT INTERMEDIATE DIAPHRAGM

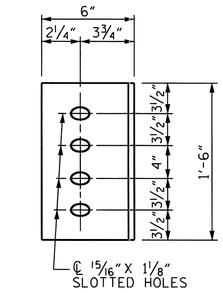

DIAPHRAGM FACE

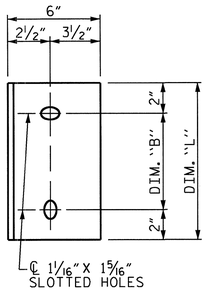

WEB FACE

CONNECTOR PLATE DETAILS

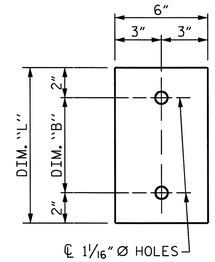

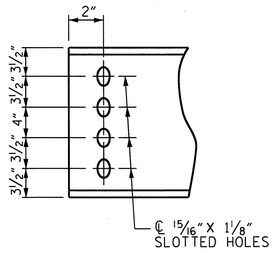

PLATE DETAILS CHANNEL END

(TYPE III OR TYPE IV GDR.)

STRUCTURAL STEEL NOTES

ALL INTERMEDIATE DIAPHRAGM STEEL, CONNECTOR PLATES AND PLATE WASHERS SHALL BE AASHTO M270 GRADE 50 OR APPROVED EQUAL.

TENSION ON THE AASHTO M164 BOLTS THROUGH THE CHANNEL MEMBER SHALL BE CALIBRATED USING DIRECT TENSION INDICATOR WASHERS IN ACCORDANCE WITH ARTICLE 440-8 OF THE STANDARD SPECIFICATIONS. FOR DIRECT TENSION INDICATORS, SEE SPECIAL PROVISIONS.

TENSION ON THE AASHTO M164 BOLTS THROUGH THE GIRDER WEB SHALL BE SNUG TIGHTENED FOLLOWED BY AN ADDITIONAL ¼ TURN.

THE CHANNELS, ANGLES, WASHERS, PLATE WASHERS, AND DIRECT TENSION INDICATORS SHALL BE GALVANIZED OR METALLIZED IN ACCORDANCE WITH THE STANDARD SPECIFICATIONS. FOR THERMAL SPRAYED COATINGS (METALLIZATION), SEE SPECIAL PROVISIONS.

FOR METALLIZATION, APPLY AN 8 MIL THICK 99.99 PERCENT ZINC (W-Zn-1) THERMAL SPRAYED COATING WITH A 0.5 MIL THICK SEAL COAT TO ALL STEEL DIAPHRAGM SURFACES IN ACCORDANCE WITH THE THERMAL SPRAYED COATINGS SPECIAL PROVISIONS AND SECTION 442 OF THE STANDARD SPECIFICATIONS.

GALVANIZE THE HIGH STRENGTH BOLTS, NUTS, AND WASHERS IN ACCORDANCE WITH THE STANDARD SPECIFICATIONS. FOR HIGH STRENGTH BOLTS, SEE SPECIAL PROVISIONS.

USE A MINIMUM 7/16" THICK PLATE WASHER WITH STANDARD HOLES UNDER EACH BOLT HEAD AND NUT. THE PLATE WASHERS SHALL HAVE SUFFICIENT SIZE TO COVER THE HOLES AFTER INSTALLATION. DIRECT TENSION INDICATORS ARE TO BE USED IN CONJUNCTION WITH THE PLATE WASHERS.

PROVIDE SUFFICIENT LENGTH OF ALL BOLTS TO ACCOMMODATE WASHERS, DIRECT TENSION INDICATORS, THE THICKNESS OF CONNECTING MEMBER PLUS AT LEAST ¼" PROJECTION BEYOND THE NUT.

INTERMEDIATE DIAPHRAGM ASSEMBLY SHALL COMPLY WITH SECTION 1072 OF THE STANDARD SPECIFICATIONS.

CONTRACTOR SHALL SUBMIT TWO SETS OF WORKING DRAWINGS FOR THE INTERMEDIATE DIAPHRAGM ASSEMBLY FOR REVIEW, COMMENTS AND ACCEPTANCE. AFTER REVIEW, COMMENTS, AND ACCEPTANCE, SUBMIT SEVEN SETS FOR DISTRIBUTION.

IN THE EXTERIOR BAYS, TEMPORARY STRUTS SHALL BE PLACED BETWEEN PRESTRESSED GIRDERS ADJACENT TO THE STEEL DIAPHRAGMS. STRUTS SHALL REMAIN IN PLACE 3 DAYS AFTER CONCRETE IS PLACED. ALL AASHTO M164 H.S. BOLTS SHALL BE FULLY TIGHTENED AFTER THE STRUTS HAVE BEEN REMOVED.

THE COST OF THE STEEL DIAPHRAGMS AND ASSEMBLIES SHALL BE INCLUDED IN THE UNIT PRICE BID FOR PRESTRESSED CONCRETE GIRDERS.

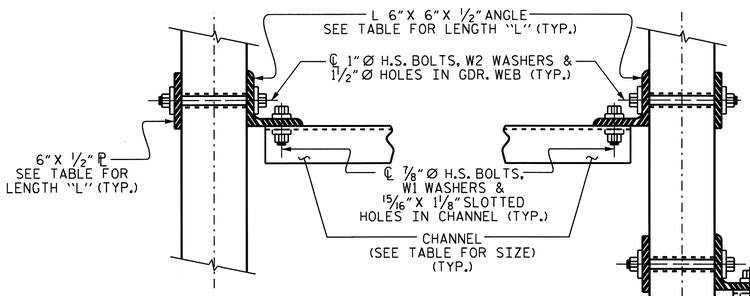

SECTION A-A

SECTION B-B

CONNECTION DETAILS

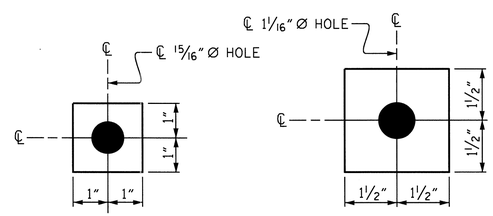

W1

℄ 7/16" X 2" X 2"

USE WITH ⅞" Ø HVY. HEX NUTS & DIRECT TENSION INDICATOR WASHERS AT DIAPHRAGM CHANNEL TO CONNECTOR PLATE CONNECTIONS

W2

℄ 7/16" X 3" X 3"

USE WITH 1" Ø HVY. HEX NUTS AT CONNECTOR PLATE TO GIRDER CONNECTIONS

WASHER DETAILS

TABLE

GIRDER TYPE	CHANNEL SIZE	DIM "A"	DIM "B"	DIM "L"
IV	MC 18 × 42.7	1'-9½"	1'-2"	1'-6"

PROJECT NO. R-2233AB

RUTHERFORD COUNTY

STATION: 298+34.21 -L-

SHEET 6 OF 6

STATE OF NORTH CAROLINA
DEPARTMENT OF TRANSPORTATION
RALEIGH

STANDARD
INTERMEDIATE
STEEL DIAPHRAGMS
FOR TYPE IV
PRESTRESSED CONCRETE
GIRDERS
LEFT LANE

NORTH CAROLINA PROFESSIONAL SEAL 20125 ENGINEER MARSHALL L. GREEK, JR.
9-15-10

REVISIONS						SHEET NO.
NO.	BY:	DATE:	NO.	BY:	DATE:	S-78
1			3			TOTAL SHEETS
2			4			184

STR. #3 STD. NO. PCG12

ASSEMBLED BY : V.X. NGUYEN DATE : 4-16-09	
CHECKED BY : A. SORSENGINH DATE : 5-09	
DRAWN BY : TLA 6/05	ADDED 10/21/05
CHECKED BY : VC 6/05	REV. 5/1/06R KMM/GM

23-JUL-2010 08:53
R:\Structures\Str*3\vnguyen\R-2233AB_sd_G*.dgn
vnguyen

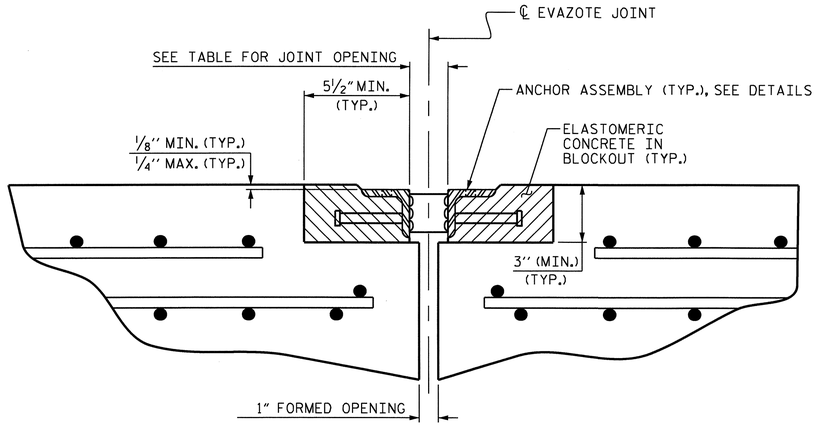

ARMORED JOINT DETAILS

SECTION NORMAL TO JOINT AT END BENT

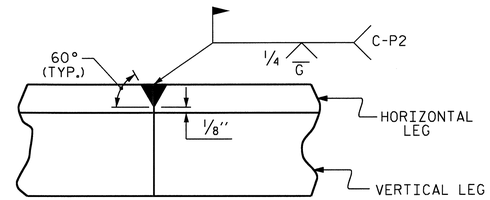

DETAIL- FIELD WELD SPLICE OF ANGLE

NOTES

ANGLES SHALL CONFORM TO AASHTO M270 GRADE 36 STEEL OR APPROVED EQUAL. ALL STUD ANCHORS SHALL CONFORM TO AASHTO M169 GRADES 1010 THRU 1020 OR APPROVED EQUAL.

STUD ANCHORS SHALL BE SHOP WELDED AND ALL HOLES SHALL BE SHOP DRILLED AS SHOWN ON THE PLANS. STUD ANCHORS SHALL BE ELECTRIC ARC END WELDED WITH COMPLETE FUSION.

UPON COMPLETION OF SHOP FABRICATION, THE ENTIRE ANCHOR ASSEMBLY SHALL BE METALLIZED. THE ½" Ø STUD ANCHORS AND ANCHOR TABS NEED NOT BE METALLIZED. SEE SPECIAL PROVISION FOR THERMAL SPRAYED COATINGS (METALLIZATION).

ANCHOR ASSEMBLY SHALL BE MADE CONTINUOUS THE LENGTH OF THE JOINT FROM GUTTER TO GUTTER. FOR FIELD SPLICES AT ALL CROWN BREAK POINTS, THE ENDS OF THE STEEL ANGLES SHALL BE CUT PARALLEL TO THE BRIDGE CENTERLINE. FINISHED FIELD WELDS SHALL BE GROUND SMOOTH AND COATED WITH A MINIMUM THICKNESS OF 4 DRY MILS OF ZINC-RICH PAINT IN ACCORDANCE WITH THE STANDARD SPECIFICATIONS.

ANCHOR ASSEMBLY SEGMENTS SHALL NOT BE LESS THAN 12 FEET NOR MORE THAN 20 FEET IN LENGTH. SHORTER SEGMENTS MAY BE USED AT THE EDGE OF ROADWAY OR AT POINTS OF STAGED CONSTRUCTION.

THE ANCHOR ASSEMBLY SHALL BE SECURED AND LEVELED AS SHOWN IN THE "ARMORED JOINT ANCHOR ASSEMBLY DETAILS". NO SUBMITTALS ARE REQUIRED FOR ⅜" Ø EXPANSION ANCHORS, NUTS OR WASHERS. THE CONTRACTOR MAY SUBMIT FOR APPROVAL AN ALTERNATE METHOD OF ALIGNING AND LEVELING THE ANGLES. THE ALTERNATE METHOD SHALL NOT INCLUDE ANY WELDING TO THE OUTSIDE FACE OF THE ANGLES.

AFTER THE ELASTOMERIC CONCRETE HAS BEEN CAST ON BOTH SIDES OF THE JOINT, REMOVE ANY EXCESS CONCRETE THAT COMES THROUGH THE WEEP HOLES AND THOROUGHLY CLEAN THE ANGLES. ANY DAMAGED STEEL SHALL BE COATED WITH A MINIMUM OF 4 MILS OF ZINC-RICH PAINT IN ACCORDANCE WITH THE STANDARD SPECIFICATIONS.

SEE SPECIAL PROVISIONS FOR EVAZOTE JOINT SEALS.

SEE SPECIAL PROVISIONS FOR ELASTOMERIC CONCRETE.

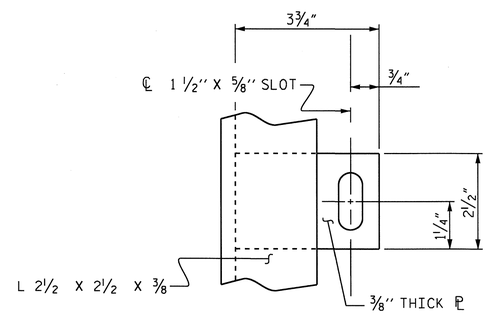

PLAN VIEW OF TAB

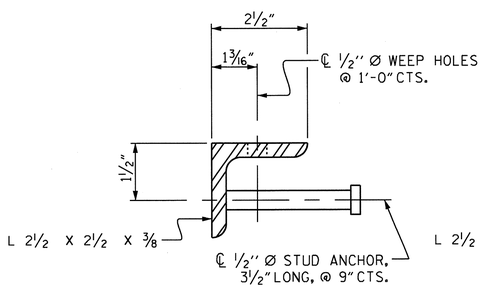

SECTION VIEW OF STUD

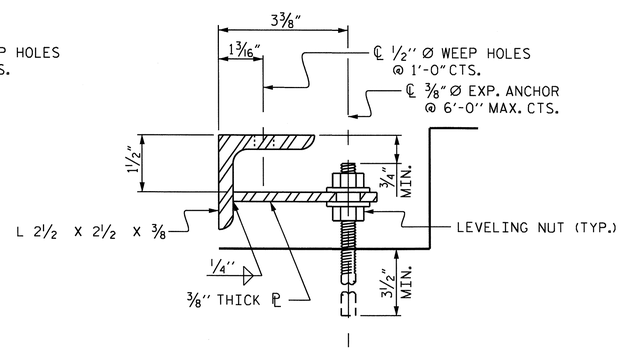

SECTION VIEW OF TAB

ARMORED JOINT ANCHOR ASSEMBLY DETAILS

MOVEMENT AND SETTING AT EVAZOTE JOINT						
END BENT NO.	SKEW ANGLE	NOMINAL UNCOMPRESSED SEAL WIDTH	TOTAL MOVEMENT (ALONG ℄ RDWY)	PERPENDICULAR JOINT OPENING AT 45° F	PERPENDICULAR JOINT OPENING AT 60° F	PERPENDICULAR JOINT OPENING AT 90° F
1	64°-48'-00"	2½"	⅝"	2⅛"	2"	1¾"
2	64°-48'-00"	2½"	9⁄16"	2⅛"	2"	1 13⁄16"

TOTAL MOVEMENT IS CALCULATED ALONG THE CENTERLINE OF ROADWAY.
JOINT OPENINGS ARE MEASURED PERPENDICULAR TO THE JOINT.

BILL OF MATERIAL		
END BENT NO.	ELASTOMERIC CONCRETE * (CU. FT.)	TOTAL LENGTH OF ANGLE (FT)
1	9.1	79'-6⅞"
2	9.1	79'-6⅞"

* BASED ON THE MINIMUM BLOCKOUT SHOWN.

PROJECT NO. R-2233AB
RUTHERFORD COUNTY
STATION: 298+34.21 -L-

STATE OF NORTH CAROLINA
DEPARTMENT OF TRANSPORTATION
RALEIGH

STANDARD

ARMORED EVAZOTE JOINT DETAILS
LEFT LANE

NORTH CAROLINA PROFESSIONAL SEAL 20125 ENGINEER MARSHALL C. GREEN, JR.
9-15-10

REVISIONS						SHEET NO.
NO.	BY:	DATE:	NO.	BY:	DATE:	S-79
1			3			TOTAL SHEETS
2			4			184

STR. #3

ASSEMBLED BY : V.X. NGUYEN	DATE : 4-21-09		
CHECKED BY : A. SORSENGINH	DATE : 5-09		
DRAWN BY : EEM 1/96	REV. 7/10/01 LES/RDR		
CHECKED BY : RGW 1/96	REV. 5/7/03RR RWW/JTE		
	REV. 5/1/06 TLA/GM		

23-JUL-2010 08:58
R:\Structures\Str*3\vnguyen\R-2233AB_SD_JS.dgn
vnguyen

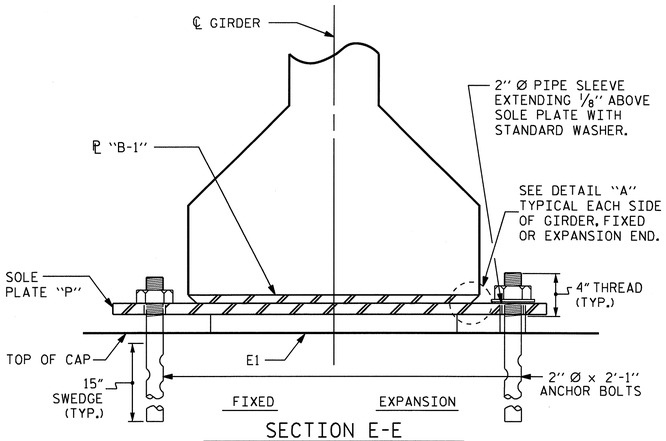

SECTION E-E

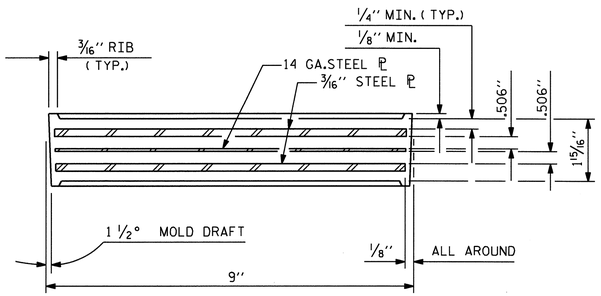

TYPICAL SECTION OF ELASTOMERIC BEARINGS

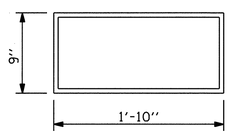

E1 (30 REQ'D)

PLAN VIEW OF ELASTOMERIC BEARING

TYPE IV

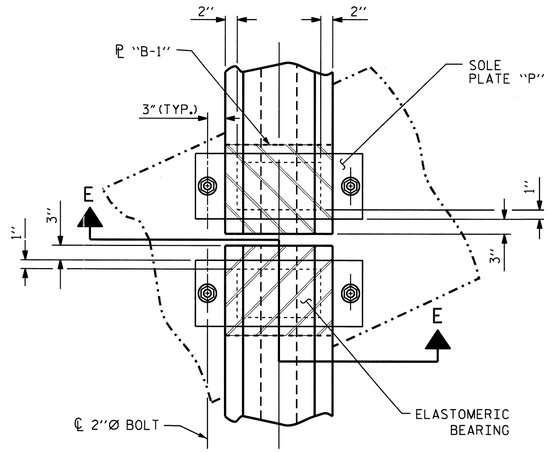

TYPICAL HALF-PLAN

(SHOWING CONTINUOUS BENT)

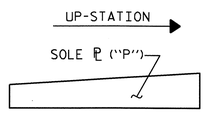

SOLE ℗ PLACEMENT DETAIL

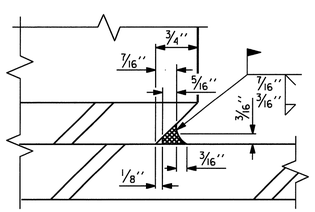

DETAIL "A"

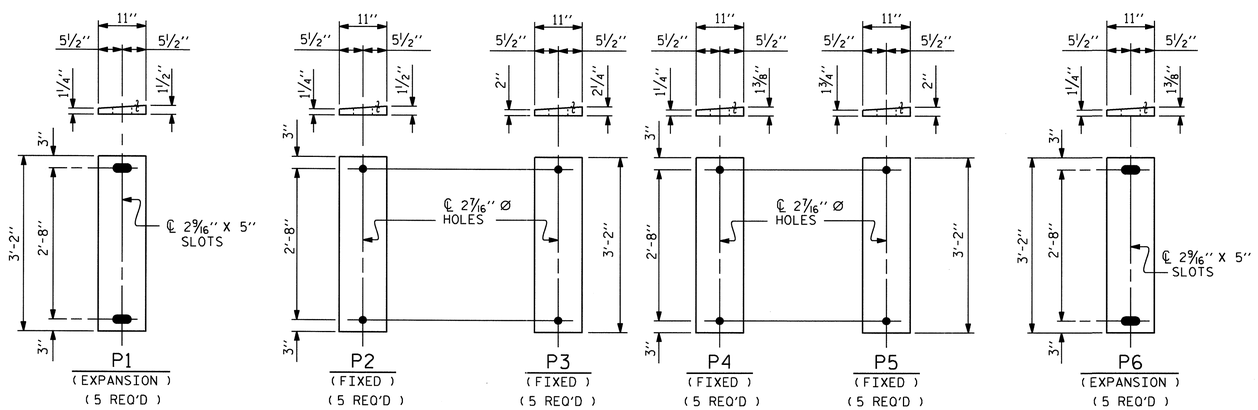

SOLE PLATE DETAILS ("P")

NOTES

AT ALL FIXED POINTS OF SUPPORT, NUTS FOR ANCHOR BOLTS ARE TO BE TIGHTENED FINGER TIGHT AND THEN BACKED OFF 1/2 TURN. THE THREAD OF THE NUT AND BOLT SHALL THEN BE BURRED WITH A SHARP POINTED TOOL.

THE 2" Ø PIPE SLEEVE SHALL BE CUT FROM SCHEDULE 40 PVC PLASTIC PIPE. THE PVC PLASTIC PIPE SHALL MEET THE REQUIREMENTS OF ASTM D1785.

STEEL SOLE PLATES, ANCHOR BOLTS, NUTS, AND WASHERS SHALL BE GALVANIZED IN ACCORDANCE WITH THE STANDARD SPECIFICATIONS.

PRIOR TO WELDING, GRIND THE GALVANIZED SURFACE OF THE PORTION OF THE EMBEDDED PLATE AND SOLE PLATE THAT ARE TO BE WELDED. AFTER WELDING, DAMAGED GALVANIZED SURFACES SHALL BE REPAIRED IN ACCORDANCE WITH THE STANDARD SPECIFICATIONS.

WHEN WELDING THE SOLE PLATE TO THE EMBEDDED PLATE IN THE GIRDER, USE TEMPERATURE INDICATING WAX PENS, OR OTHER SUITABLE MEANS, TO ENSURE THAT THE TEMPERATURE OF THE SOLE PLATE DOES NOT EXCEED 300°F. TEMPERATURES ABOVE THIS MAY DAMAGE THE ELASTOMER.

SOLE PLATE "P", BOLTS, NUTS, WASHERS, AND PIPE SLEEVE SHALL BE INCLUDED IN THE PAY ITEM FOR PRESTRESSED CONCRETE GIRDERS.

ANCHOR BOLTS SHALL MEET THE REQUIREMENTS OF ASTM A449. NUTS SHALL MEET THE REQUIREMENTS OF AASHTO M291-DH OR AASHTO M292-2H. WASHERS SHALL MEET THE REQUIREMENTS OF AASHTO M293. SHOP DRAWINGS ARE NOT REQUIRED FOR ANCHOR BOLT, NUTS AND WASHERS. SHOP INSPECTION IS REQUIRED.

ALL SURFACES OF BEARING PLATES SHALL BE SMOOTH AND STRAIGHT.

— LOAD RATINGS —	
	MAX.D.L.+L.L.
54"PCG -TYPE IV	137 K

PROJECT NO. R-2233AB

RUTHERFORD COUNTY

STATION: 298+34.21 -L-

STATE OF NORTH CAROLINA
DEPARTMENT OF TRANSPORTATION
RALEIGH

STANDARD
ELASTOMERIC BEARING
DETAILS
PRESTRESSED CONCRETE GIRDER
SUPERSTRUCTURE
LEFT LANE

NORTH CAROLINA PROFESSIONAL SEAL 20125 ENGINEER MARSHALL H. CREEK, JR.
9-15-10

REVISIONS							
NO.	BY:	DATE:	NO.	BY:	DATE:	SHEET NO.	S-80
1			3			TOTAL SHEETS	184
2			4				

ASSEMBLED BY : V.X. NGUYEN	DATE : 4-27-09		
CHECKED BY : A. SORSENGINH	DATE : 5-09		
DRAWN BY : WJH 8/89	REV. 10/17/00	RWW/LES	
CHECKED BY : CRK 8/89	REV. 7/10/01	RWW/LES	
	REV. 5/1/06	TLA/GM	

23-JUL-2010 08:56
R:\Structures\Str*3\vnguyen\R-2233AB_SD_BG.dgn
vnguyen

STR. #3

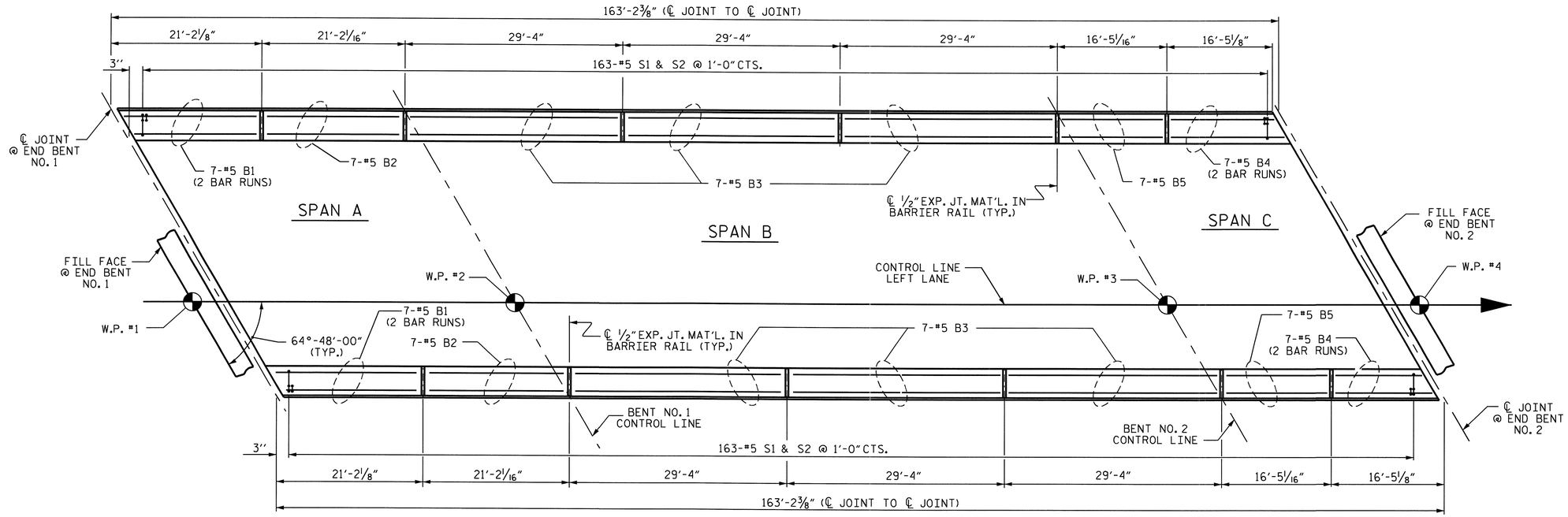

PLAN OF CONCRETE BARRIER RAIL

BAR TYPES

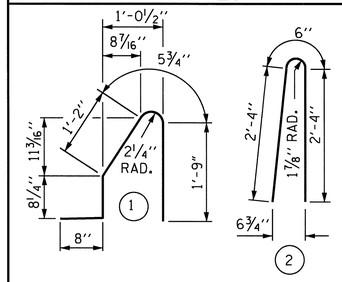

ALL BAR DIMENSIONS ARE OUT TO OUT

BILL OF MATERIAL

FOR CONCRETE BARRIER RAIL ONLY

BAR	NO.	SIZE	TYPE	LENGTH	WEIGHT
✳ S1	326	#5	1	4'-9"	1615
✳ S2	326	#5	2	5'-2"	1757
✳ B1	28	#5	STR	12'-5"	363
✳ B2	14	#5	STR	20'-9"	303
✳ B3	42	#5	STR	28'-11"	1267
✳ B4	28	#5	STR	10'-2"	297
✳ B5	14	#5	STR	16'-0"	234

✳ EPOXY COATED REINFORCING STEEL	5836 LBS.
CLASS AA CONCRETE	32.7 CU. YDS.
CONCRETE BARRIER RAIL	326.40 LIN. FT.

✳ THESE BARS ARE EPOXY COATED.

NOTES

THE BARRIER RAIL IN A CONTINUOUS UNIT SHALL NOT BE CAST UNTIL ALL SLAB CONCRETE IN THAT UNIT HAS BEEN CAST AND HAS REACHED A MINIMUM COMPRESSIVE STRENGTH OF 3,000 PSI.

ALL REINFORCING STEEL IN BARRIER RAILS SHALL BE EPOXY COATED.

VERTICAL GROOVED CONTRACTION JOINTS, ½" IN DEPTH, SHALL BE TOOLED IN ALL EXPOSED FACES OF THE BARRIER RAIL AND IN ACCORDANCE WITH ARTICLE 825-10(B) OF THE STANDARD SPECIFICATIONS. THE CONTRACTION JOINTS SHALL BE LOCATED AT EACH THIRD POINT BETWEEN BARRIER RAIL EXPANSION JOINTS. ONLY ONE CONTRACTION JOINT IS REQUIRED AT MIDPOINT OF BARRIER RAIL SEGMENTS LESS THAN 20 FEET IN LENGTH AND NO CONTRACTION JOINTS ARE REQUIRED FOR THOSE SEGMENTS LESS THAN 10 FEET IN LENGTH.

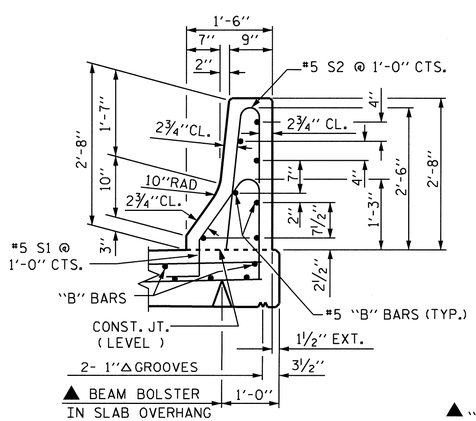

SECTION THRU RAIL

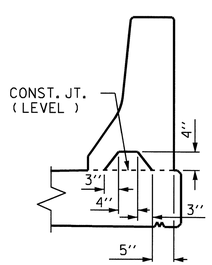

SECTION S-S

AT DAM IN OPEN JOINT
(THIS IS TO BE USED ONLY WHEN SLIP FORM IS USED)

▲ FOR BEAM BOLSTER HEIGHT SEE, "SUPERSTRUCTURE TYPICAL SECTIONS".

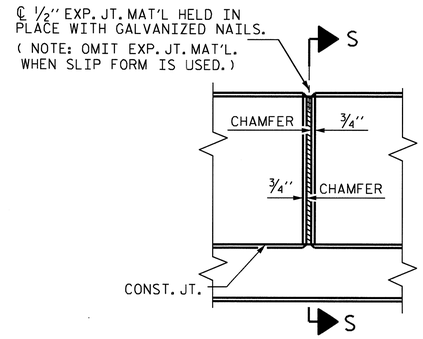

ELEVATION AT EXPANSION JOINTS

BARRIER RAIL DETAILS

PROJECT NO. R-2233AB
RUTHERFORD COUNTY
STATION: 298+34.21 -L-

STATE OF NORTH CAROLINA
DEPARTMENT OF TRANSPORTATION
RALEIGH

STANDARD
CONCRETE BARRIER RAIL LEFT LANE

NORTH CAROLINA PROFESSIONAL SEAL 20125 ENGINEER MARSHALL G. FOREK, JR.
9-15-10

ASSEMBLED BY : V.X. NGUYEN	DATE : 4-23-09		
CHECKED BY : A. SORSENGINH	DATE : 05-08		
DRAWN BY : ARB 5/87	REV. 10/17/00	RWW/LES	
CHECKED BY : SJD 9/87	REV. 5/7/03R	RWW/JTE	
	REV. 5/1/06	TLA/GM	

REVISIONS						SHEET NO.
NO.	BY:	DATE:	NO.	BY:	DATE:	S-81
1			3			TOTAL SHEETS
2			4			184

STR #3

STD. NO. CBR1

14-SEP-2010 11:59
R:\Structures\Final Plans\Str. #3\R-2233AB_SD_STR#3_09_BR.dgn
dfigueroa

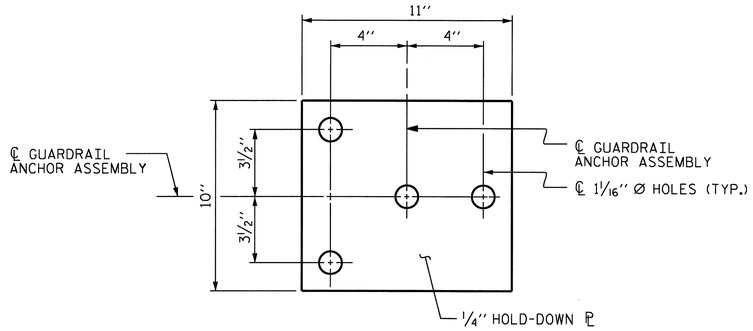

PLAN

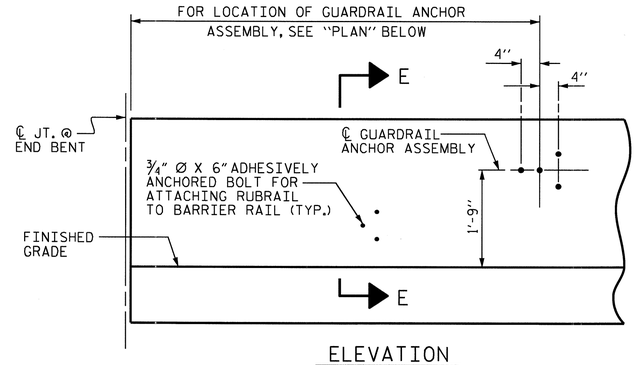

ELEVATION

FOR LOCATION OF RUBRAIL, SEE ROADWAY STD. 862.03

NOTES

THE GUARDRAIL ANCHOR ASSEMBLY SHALL CONSIST OF A 1/4'' HOLD DOWN PLATE AND 4 - 7/8'' Ø BOLTS WITH NUTS AND WASHERS, RUBRAIL, AND ADHESIVELY ANCHORED BOLTS.

THE HOLD-DOWN PLATE SHALL CONFORM TO AASHTO M270 GRADE 36. AFTER FABRICATION, THE HOLD-DOWN PLATE SHALL BE HOT-DIP GALVANIZED IN ACCORDANCE WITH AASHTO M111.

BOLTS SHALL CONFORM TO THE REQUIREMENTS OF ASTM A307 AND NUTS SHALL CONFORM TO THE REQUIREMENTS OF AASHTO M291. BOLTS, NUTS AND WASHERS SHALL BE GALVANIZED. (AT THE CONTRACTOR'S OPTION, STAINLESS STEEL BOLTS, NUTS AND WASHERS MAY BE USED AS AN ALTERNATE FOR THE 7/8'' Ø GALVANIZED BOLTS, NUTS AND WASHERS. THEY SHALL CONFORM TO OR EXCEED THE MECHANICAL REQUIREMENTS OF ASTM A307. THE USE OF THIS ALTERNATE SHALL BE APPROVED BY THE ENGINEER.)

THE GUARDRAIL ANCHOR ASSEMBLY IS REQUIRED AT ALL POINTS WHERE APPROACH GUARDRAIL IS TO BE ATTACHED TO THE END OF BARRIER RAIL. FOR POINTS OF ATTACHMENT, SEE SKETCH.

AFTER INSTALLATION, THE EXPOSED THREAD OF THE BOLT SHALL BE BURRED WITH A SHARP POINTED TOOL.

THE COST OF THE GUARDRAIL ANCHOR ASSEMBLY SHALL BE INCLUDED IN THE UNIT CONTRACT PRICE BID FOR CONCRETE BARRIER RAIL.

THE 1 1/4'' Ø HOLES SHALL BE FORMED OR DRILLED WITH A CORE BIT. IMPACT TOOLS WILL NOT BE PERMITTED. ANY CONCRETE DAMAGED BY THIS WORK SHALL BE REPAIRED TO THE SATISFACTION OF THE ENGINEER.

THE C6 X 8.2 RUBRAIL IS TO BE ADHESIVELY ANCHORED TO THE RAIL USING THREE 3/4" Ø X 6" BOLTS WITH WASHERS. LEVEL ONE FIELD TESTING IS REQUIRED, AND THE YIELD LOAD OF THE 3/4" Ø BOLT IS 12 KIPS. FOR ADHESIVELY ANCHORED ANCHOR BOLTS OR DOWELS, SEE SPECIAL PROVISIONS. SEE ROADWAY STANDARD 862.03 FOR DETAILS AND LOCATION OF THE RUBRAIL.

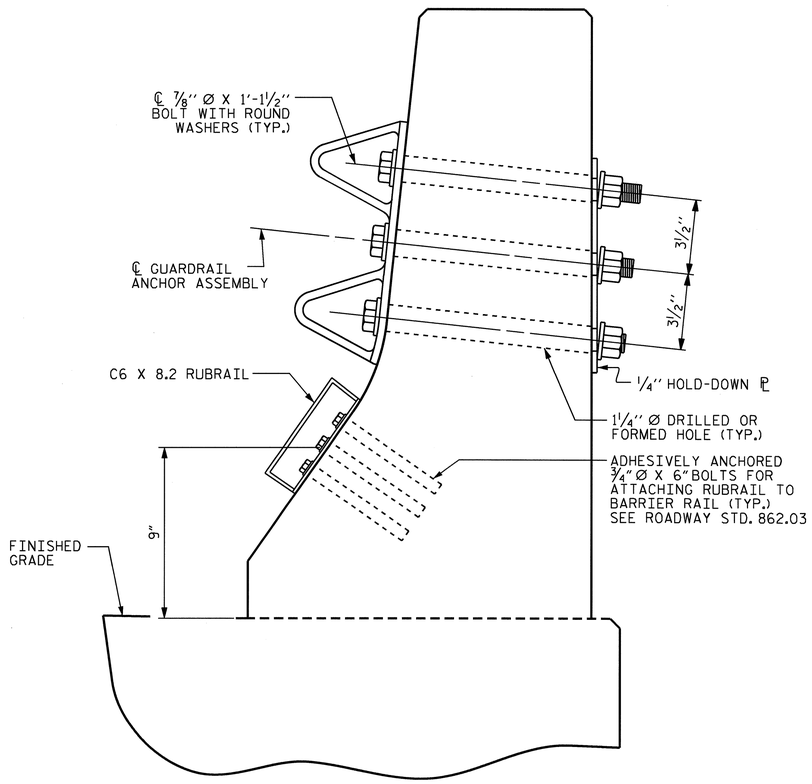

SECTION E-E

GUARDRAIL ANCHOR ASSEMBLY DETAILS

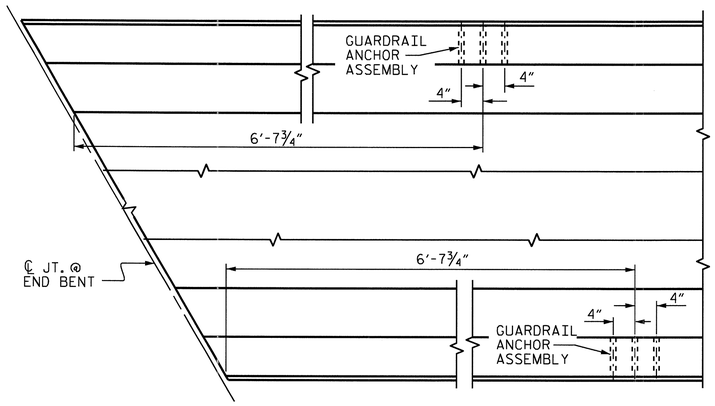

PLAN

LOCATION OF ANCHORS FOR GUARDRAIL

END BENT #1 SHOWN, END BENT #2 SIMILAR.

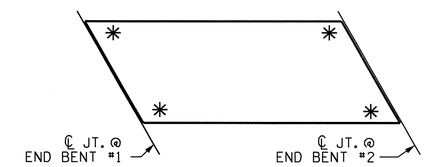

SKETCH SHOWING POINTS OF ATTACHMENTS

✳ DENOTES GUARDRAIL ANCHOR ASSEMBLY

PROJECT NO. R-2233AB
RUTHERFORD COUNTY
STATION: 298+34.21 -L-

STATE OF NORTH CAROLINA
DEPARTMENT OF TRANSPORTATION
RALEIGH

STANDARD
GUARDRAIL ANCHORAGE FOR BARRIER RAIL LEFT LANE

NORTH CAROLINA PROFESSIONAL SEAL 20125 ENGINEER MARSHALL G. SHEEK, JR.
9-15-10

REVISIONS						SHEET NO.
NO.	BY:	DATE:	NO.	BY:	DATE:	S-82
1			3			TOTAL SHEETS
2			4			184

STR #3

STD. NO. GRA2

ASSEMBLED BY : V.X. NGUYEN DATE : 4-21-09	
CHECKED BY : A. SORSENGINH DATE : 5-09	
DRAWN BY : TLA 5/06	ADDED 5/1/06R KMM/GM
CHECKED BY : GM 5/06	

23-JUL-2010 09:00
R:\Structures\Str*3\vnguyen\R-2233AB_sd_BR.dgn
vnguyen

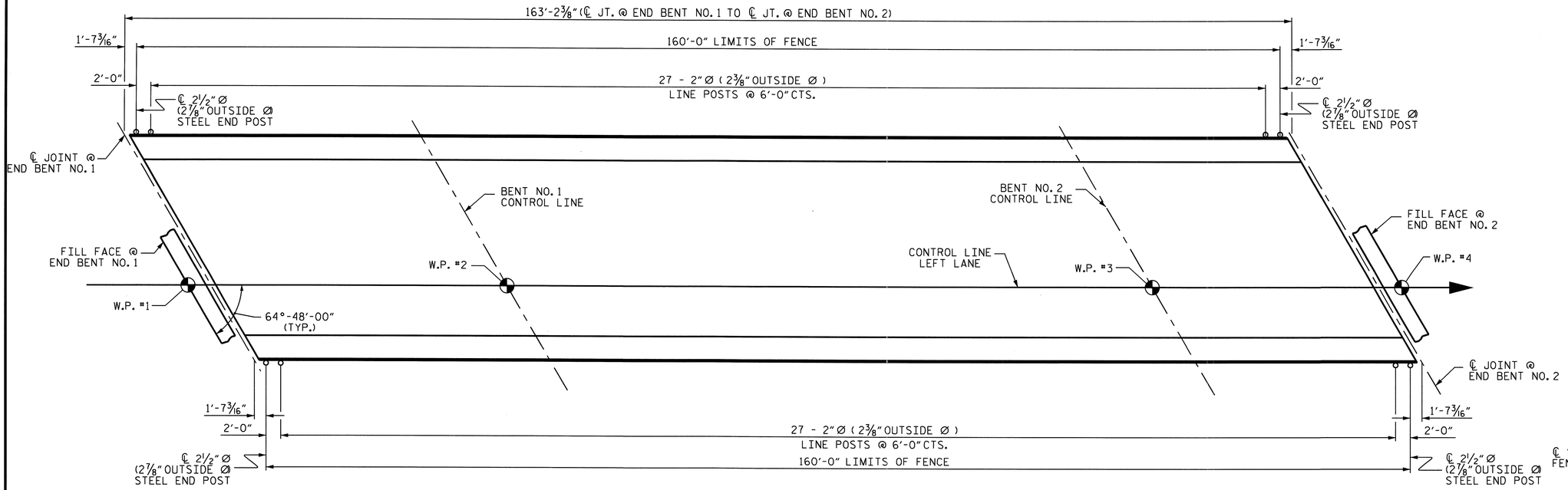

PLAN OF FENCE POST SPACING

PAY LENGTH 320.00 FEET

NOTES:

FOR 72" CHAIN LINK FENCE, SEE SPECIAL PROVISIONS.

MATERIAL FOR ANCHOR BOLTS SHALL BE TYPE 304 STAINLESS STEEL WITH A MINIMUM 9000 PSI ULTIMATE STRENGTH. NUTS AND WASHERS SHALL BE TYPE 304 STAINLESS STEEL. ANCHOR BOLTS SHALL BE EMBEDDED AS PER ADHESIVE BONDING SYSTEM MANUFACTURER SPECIFICATIONS. NUTS SHALL BE AMERICAN STANDARD FINISHED HEXAGON THICK NUTS, CLASS 2B THREADS.

FOR SETTING ANCHOR BOLTS, THE CONTRACTOR SHALL USE AN ADHESIVE BONDING SYSTEM. SEE SPECIAL PROVISIONS FOR ADHESIVELY ANCHORED ANCHOR BOLTS OR DOWELS. LEVEL ONE FIELD TESTING OF BONDING SYSTEM IS REQUIRED AND THE YIELD LOAD OF THE ¾" Ø BOLTS IS 12.0 KIPS.

ALL FENCE MATERIAL SHALL MEET THE REQUIREMENTS OF SECTION 1050 OF THE STANDARD SPECIFICATIONS. GALVANIZE ALL STEEL PARTS AND HARDWARE IN ACCORDANCE WITH ARTICLE 1076 OF THE STANDARD SPECIFICATIONS.

FENCE POST LOCATIONS SHALL BE SHIFTED, AS NECESSARY, TO MAINTAIN 12" MINIMUM DISTANCE FROM ANCHOR BOLT TO JOINTS IN BARRIER RAIL.

DIMENSIONS TAKEN ALONG OUTSIDE FACE OF BARRIER RAIL.

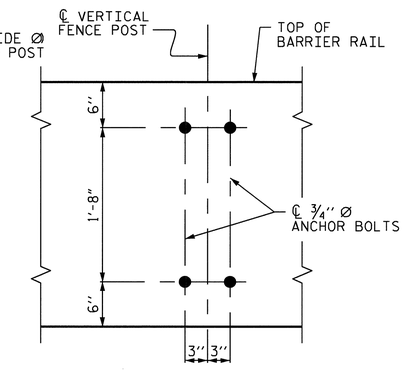

BOLT SETTING DETAIL

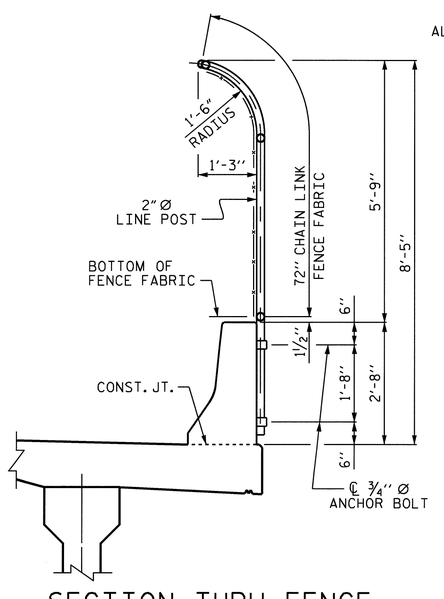

SECTION THRU FENCE

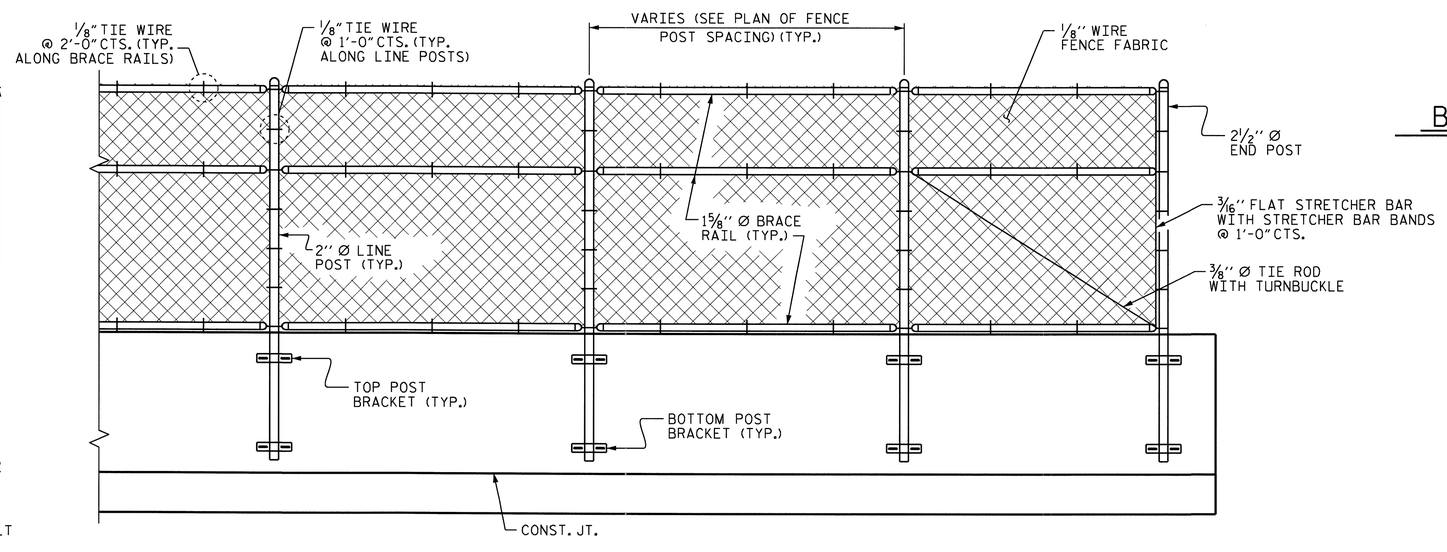

PARTIAL ELEVATION

PROJECT NO. R-2233AB

RUTHERFORD COUNTY

STATION: 298+34.21 -L-

STATE OF NORTH CAROLINA
DEPARTMENT OF TRANSPORTATION
RALEIGH

SUPERSTRUCTURE

BRIDGE MOUNTED
72" CHAIN LINK FENCE

LEFT LANE

NORTH CAROLINA PROFESSIONAL SEAL 20125 ENGINEER MARSHALL LYNCH CHEEK, JR.
9-15-10

REVISIONS						SHEET NO.
NO.	BY:	DATE:	NO.	BY:	DATE:	S-83
1			3			TOTAL SHEETS
2			4			184

STR #3

DRAWN BY : V.X. NGUYEN/ALF DATE : 03-01-10
CHECKED BY : M.G. CHEEK DATE : 07-06-10

14-SEP-2010 11:59
R:\Structures\Final Plans\Str. #3\R-2233AB_SD_STR#3_09_BR.dgn
afigueroa

SUPERSTRUCTURE REINFORCING STEEL LENGTHS ARE BASED ON THE FOLLOWING MINIMUM SPLICE LENGTHS					
BAR SIZE	SUPERSTRUCTURE EXCEPT APPROACH SLABS, PARAPET, AND BARRIER RAIL		APPROACH SLABS		PARAPET AND BARRIER RAIL
	EPOXY COATED	UNCOATED	EPOXY COATED	UNCOATED	
#4	2'-0"	1'-9"	2'-0"	1'-9"	2'-9"
#5	2'-6"	2'-2"	2'-6"	2'-2"	3'-5"
#6	3'-0"	2'-7"	3'-10"	2'-7"	4'-4"
#7	5'-3"	3'-6"			
#8	6'-10"	4'-7"			

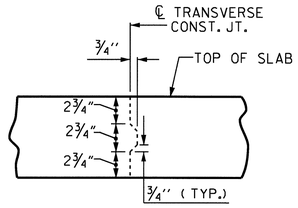

TRANSVERSE CONSTRUCTION JOINT DETAIL

NOTE: REINFORCING STEEL IN SLAB NOT SHOWN. LONGITUDINAL REINFORCING STEEL SHALL BE CONTINUOUS THRU JOINT

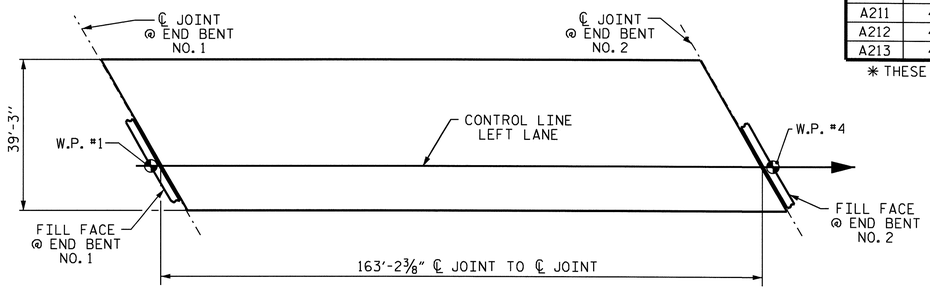

LAYOUT FOR COMPUTING AREA REINFORCED CONCRETE DECK SLAB (SQ. FT. = 6,406)

REINFORCING BAR SCHEDULE SPANS A THRU C

BAR	NO.	SIZE	TYPE	LENGTH	WEIGHT	BAR	NO.	SIZE	TYPE	LENGTH	WEIGHT
* A1	290	#5	STR	38'-11"	11,771	A214	4	#5	STR	9'-4"	39
A2	290	#5	STR	38'-11"	11,771	A215	4	#5	STR	7'-2"	30
						A216	4	#5	STR	5'-1"	21
* A101	4	#5	STR	36'-11"	154	A217	4	#5	STR	2'-11"	12
* A102	4	#5	STR	34'-10"	145						
* A103	4	#5	STR	32'-8"	136						
* A104	4	#5	STR	30'-7"	128	* B1	28	#4	STR	26'-5"	494
* A105	4	#5	STR	28'-5"	119	* B2	28	#7	STR	49'-3"	2819
* A106	4	#5	STR	26'-4"	110	* B3	25	#7	STR	19'-5"	992
* A107	4	#5	STR	24'-2"	101	* B4	28	#4	STR	29'-0"	542
* A108	4	#5	STR	22'-1"	92	* B5	28	#7	STR	46'-4"	2652
* A109	4	#5	STR	19'-11"	83	* B6	25	#7	STR	18'-2"	928
* A110	4	#5	STR	17'-10"	74	* B7	28	#4	STR	20'-0"	374
* A111	4	#5	STR	15'-8"	65	B8	132	#5	STR	55'-9"	7675
* A112	4	#5	STR	13'-7"	57						
* A113	4	#5	STR	11'-5"	48	* G1	2	#5	STR	43'-0"	90
* A114	4	#5	STR	9'-4"	39						
* A115	4	#5	STR	7'-2"	30	* K1	8	#8	1	13'-8"	292
* A116	4	#5	STR	5'-1"	21	* K2	12	#8	2	20'-1"	643
* A117	4	#5	STR	2'-11"	12	* K3	16	#6	STR	6'-8"	160
						K4	32	#4	STR	6'-8"	143
						K5	32	#4	STR	7'-10"	167
A201	4	#5	STR	36'-11"	154	K6	16	#4	STR	5'-0"	53
A202	4	#5	STR	34'-10"	145	K7	20	#4	3	5'-6"	73
A203	4	#5	STR	32'-8"	136	K8	30	#4	4	11'-0"	220
A204	4	#5	STR	30'-7"	128						
A205	4	#5	STR	28'-5"	119	* S1	56	#4	6	3'-8"	137
A206	4	#5	STR	26'-4"	110	* S2	56	#5	5	5'-11"	346
A207	4	#5	STR	24'-2"	101	S3	208	#4	7	2'-9"	382
A208	4	#5	STR	22'-1"	92						
A209	4	#5	STR	19'-11"	83	U1	40	#4	2	14'-8"	392
A210	4	#5	STR	17'-10"	74	U2	16	#4	2	12'-8"	135
A211	4	#5	STR	15'-8"	65						
A212	4	#5	STR	13'-7"	57	REINFORCING STEEL = 22,425 LBS.					
A213	4	#5	STR	11'-5"	48	* EPOXY COATED REINF. STEEL = 23,654 LBS.					

* THESE BARS ARE EPOXY COATED

BAR TYPES

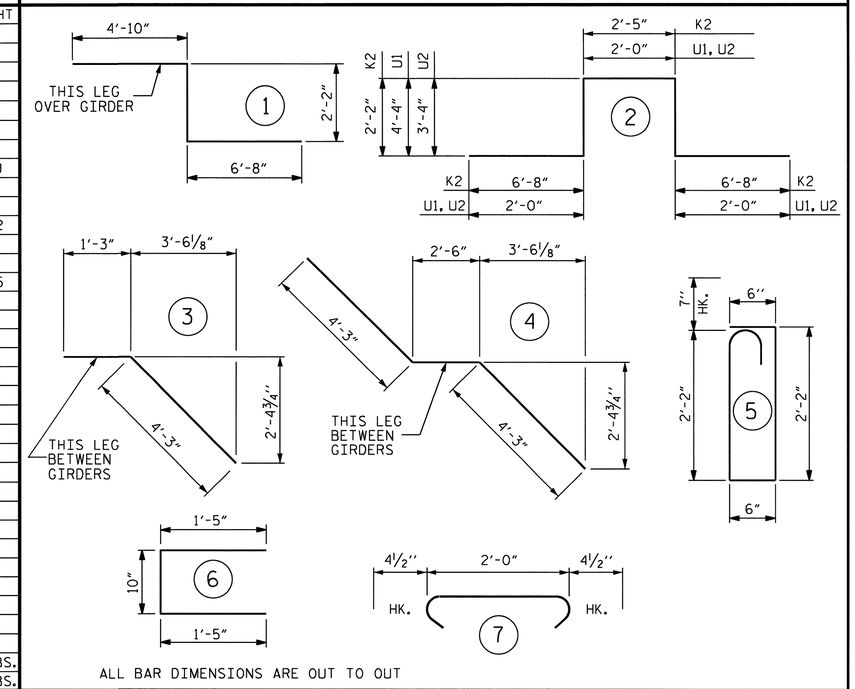

ALL BAR DIMENSIONS ARE OUT TO OUT

SUPERSTRUCTURE BILL OF MATERIAL

	CLASS AA CONCRETE		REINFORCING STEEL	EPOXY COATED REINFORCING STEEL
		(CU. YDS.)	(LBS.)	(LBS.)
SPAN A, B, AND C	POUR #1	44.2	22,385	23,614
	POUR #2	120.9		
	POUR #3	66.7		
TOTALS **		231.8	22,385	23,614

** QUANTITIES FOR BARRIER RAIL ARE NOT INCLUDED

GROOVING BRIDGE FLOORS	
APPROACH SLABS	1550 SQ.FT.
BRIDGE DECK	5351 SQ.FT.
TOTAL	6901 SQ.FT.

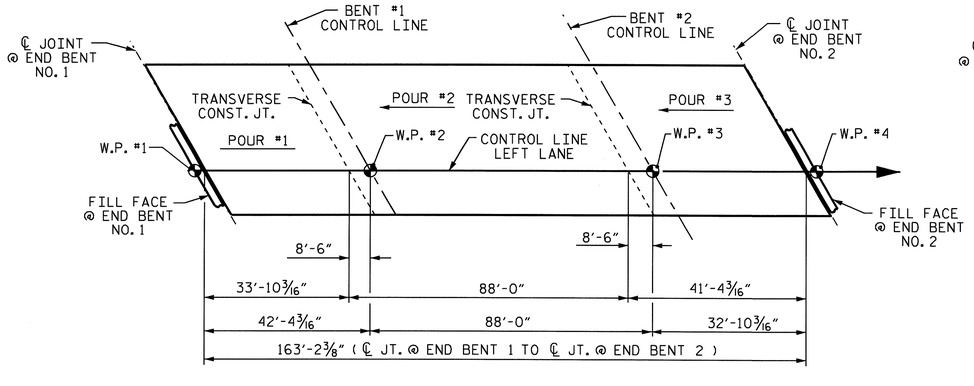

POUR SEQUENCE

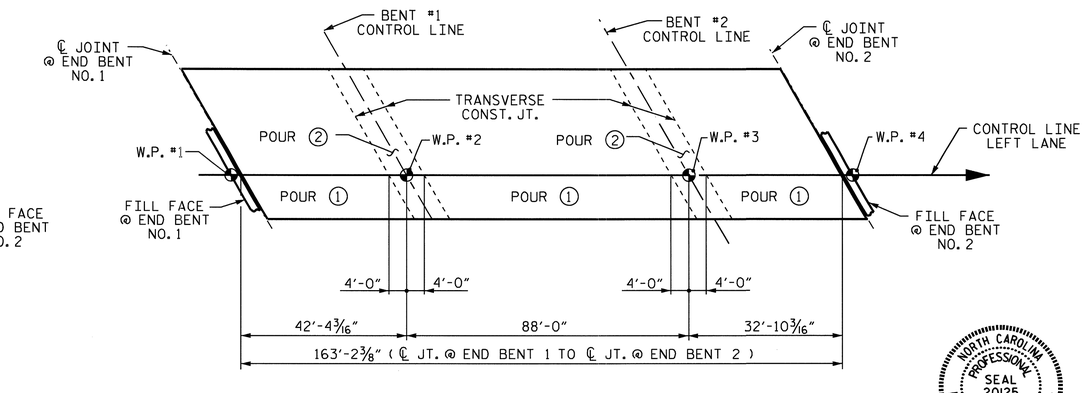

OPTIONAL POURING SEQUENCE

POUR (2) CANNOT BE STARTED UNTIL BOTH ADJACENT (1) POURS REACH A MINIMUM OF 3000 PSI.

PROJECT NO. R-2233AB
RUTHERFORD COUNTY
STATION: 298+34.21 -L-

STATE OF NORTH CAROLINA
DEPARTMENT OF TRANSPORTATION
RALEIGH

SUPERSTRUCTURE
BILL OF MATERIAL
LEFT LANE

NORTH CAROLINA PROFESSIONAL SEAL 20125 ENGINEER MARSHALL KEJEK JR.
9-15-10

ASSEMBLED BY : V.X. NGUYEN DATE : 4-27-09		
CHECKED BY : A. SORSENGINH DATE : 5-09		
DRAWN BY : JMB 5/87	REV. 6/1/94	EEM/GRP
CHECKED BY : SJD 9/87	REV. 8/16/99	RWW/LES
	REV. 5/1/06	TLA/GM

REVISIONS						SHEET NO.
NO.	BY:	DATE:	NO.	BY:	DATE:	S-84
1			3			TOTAL SHEETS
2			4			184

STR #3

STD. NO. BOM2

14-SEP-2010 11:59
R:\Structures\Final Plans\Str. #3\R-2233AB_SD_STR#3_10_BM.dgn
aflgueroa

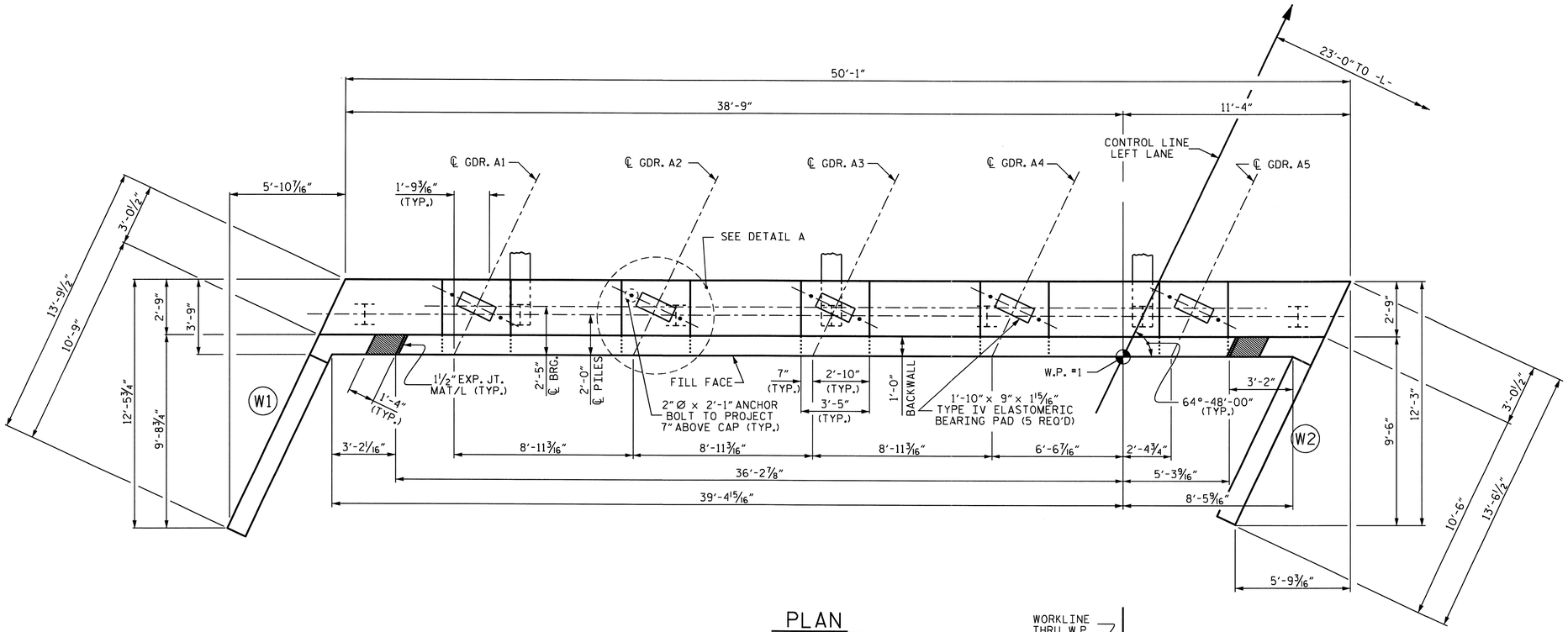

PLAN

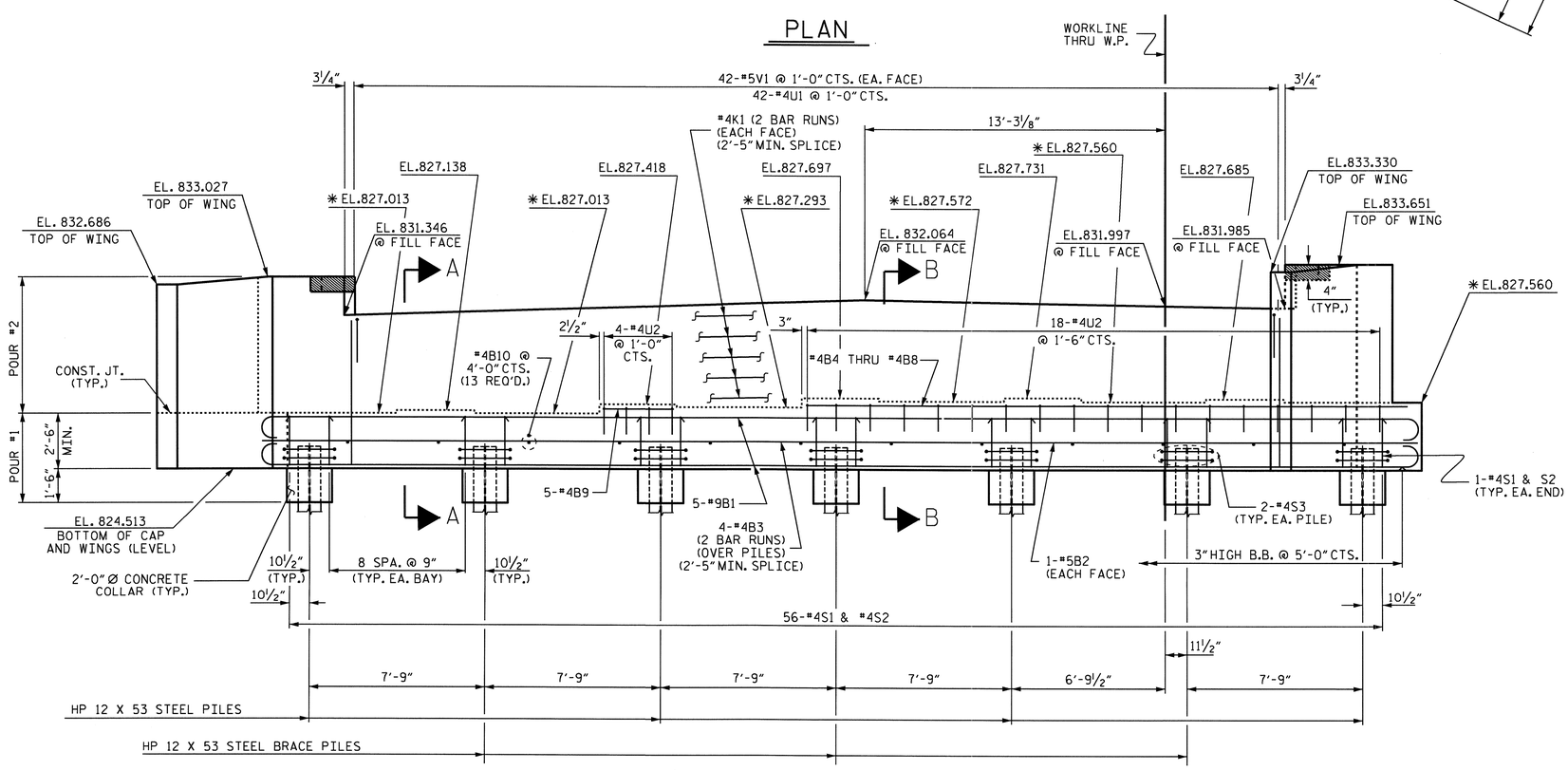

ELEVATION

✱ FOR LOCATION OF ELEVATIONS BETWEEN BRIDGE SEAT BUILDUPS, SEE SECTION VIEWS, SHEET 3 OF 3.

NOTES

STIRRUPS IN CAP MAY BE SHIFTED AS NECESSARY TO CLEAR ANCHOR BOLTS.

FOR SECTIONS A-A AND B-B, SEE SHEET 3 OF 3.

FOR PILE SPLICE DETAILS, SEE SHEET 3 OF 3.

FOR TEMPORARY DRAINAGE AT END BENTS, SEE SHEET 3 OF 3.

BACKWALL SHALL BE PLACED BEFORE APPLYING THE EPOXY PROTECTIVE COATING.

THE TOP SURFACE AREA OF THE END BENT CAP SHALL BE CURED IN ACCORDANCE WITH THE STANDARD SPECIFICATIONS EXCEPT THAT THE MEMBRANE CURING COMPOUND METHOD SHALL NOT BE USED.

THE TOP SURFACE OF THE END BENT CAP EXCEPT THE BRIDGE SEAT BUILDUPS SHALL BE SLOPED TRANSVERSELY FROM THE FILL FACE TO THE BACK FACE AT THE RATE OF 2%.

THE CONTRACTOR SHALL PROVIDE FOR INSTALLATION OF THE 4" DIAMETER DRAIN PIPE THROUGH THE WING WALL AS REQUIRED FOR REINFORCED BRIDGE APPROACH FILLS, SEE THE ROADWAY PLANS. REINFORCING STEEL IN THE WING WALL MAY BE SHIFTED AS NECESSARY TO CLEAR THE DRAIN PIPE.

THE CONCRETE IN THE SHADED AREA OF THE WING SHALL BE POURED AFTER THE BARRIER RAIL IS CAST IF SLIP FORMING IS USED.

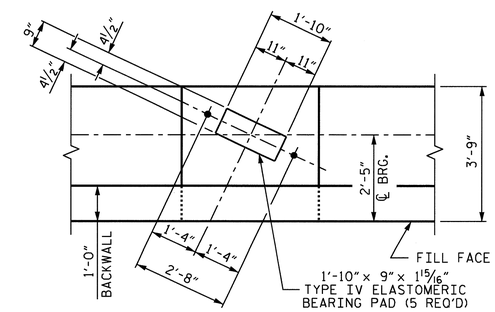

DETAIL A

PROJECT NO. R-2233AB

RUTHERFORD COUNTY

STATION: 298+34.21 -L-

SHEET 1 OF 3

STATE OF NORTH CAROLINA
DEPARTMENT OF TRANSPORTATION
RALEIGH

SUBSTRUCTURE

END BENT NO. 1
LEFT LANE

NORTH CAROLINA PROFESSIONAL SEAL 20125 ENGINEER MARSHALL L. PICKERING, JR.
9-15-10

REVISIONS						SHEET NO.
NO.	BY:	DATE:	NO.	BY:	DATE:	S-85
1			3			TOTAL SHEETS
2			4			184

DRAWN BY : L.L.M./A.L.F. DATE : 04-15-09
CHECKED BY : A. SORSENGINH DATE : 04-29-09

09-SEP-2010 12:43
R:\Structures\FinalPlans\Str. #3\R-2233AB_SD_STR#3_12_EB.dgn
afigueroa

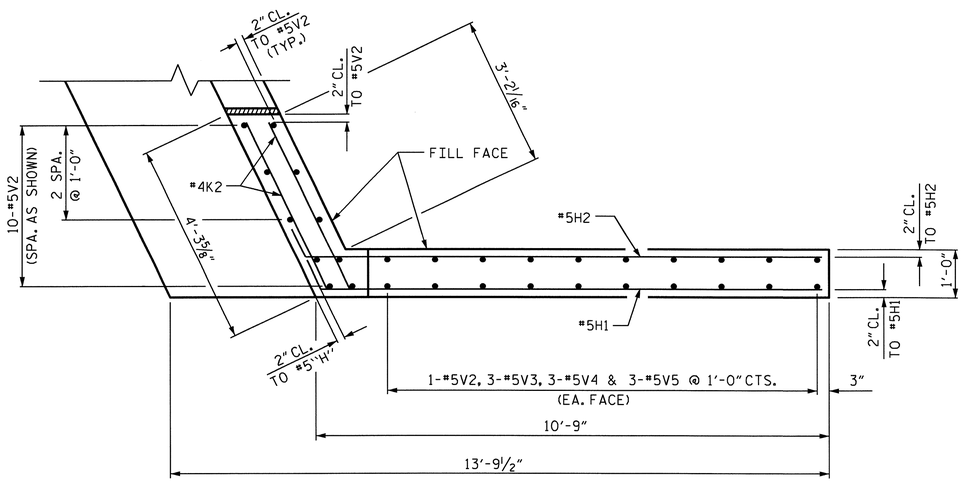

PLAN OF WING - W1

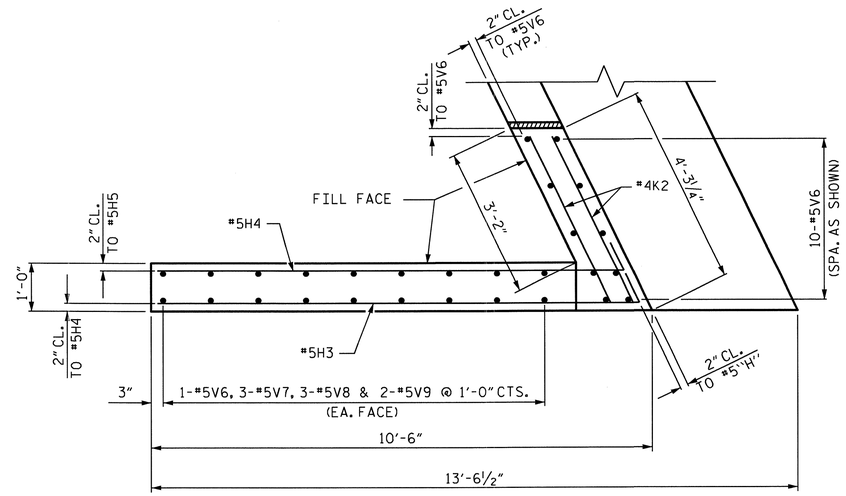

PLAN OF WING - W2

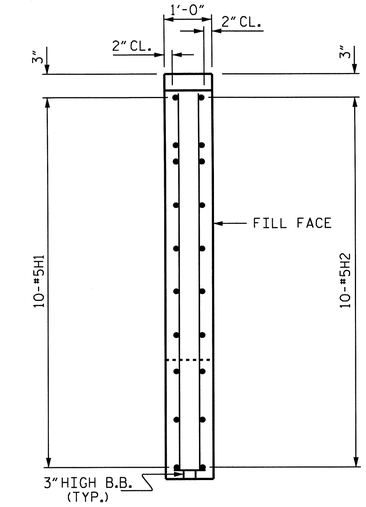

SECTION X-X

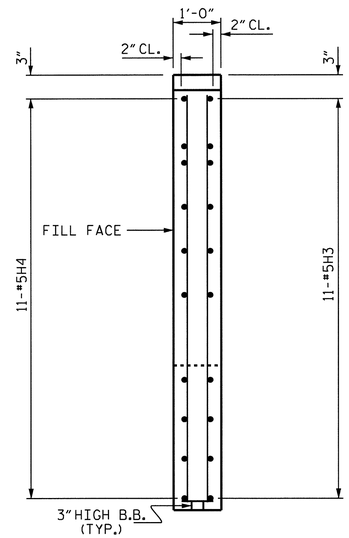

SECTION Y-Y

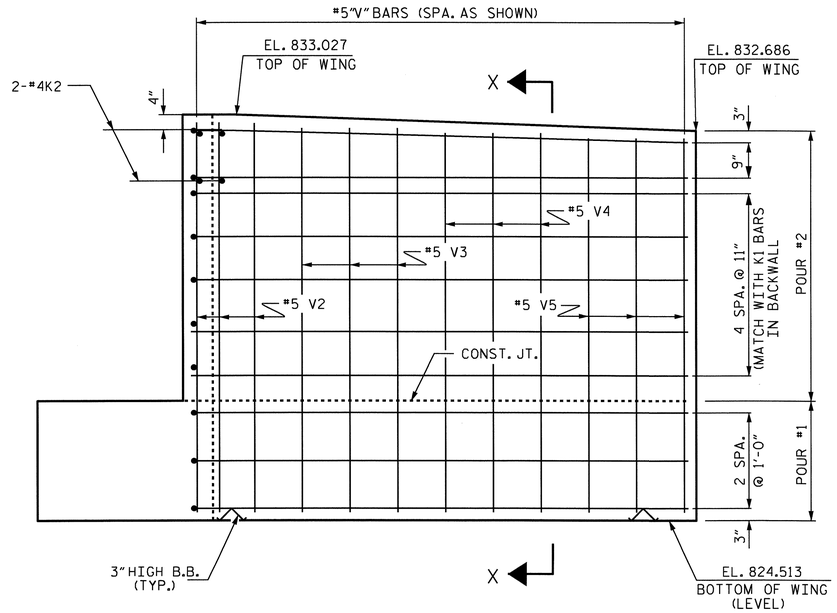

ELEVATION OF WING - W1

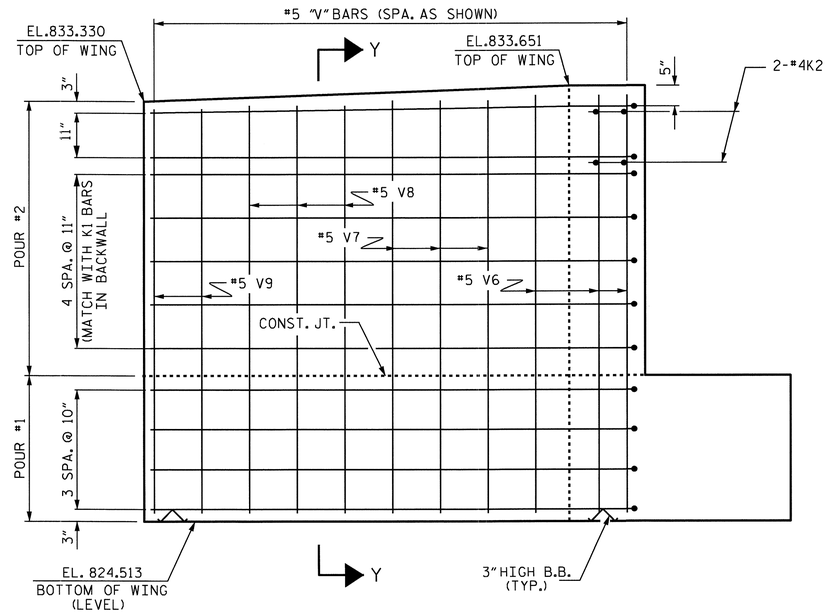

ELEVATION OF WING - W2

PROJECT NO. R-2233AB
RUTHERFORD COUNTY
STATION: 298+34.21 -L-

SHEET 2 OF 3

STATE OF NORTH CAROLINA
DEPARTMENT OF TRANSPORTATION
RALEIGH

SUBSTRUCTURE

END BENT NO. 1
LEFT LANE

NORTH CAROLINA PROFESSIONAL SEAL 20125 ENGINEER MARSHALL L. GILCHRIST, JR.
9-15-10

REVISIONS						SHEET NO.
NO.	BY:	DATE:	NO.	BY:	DATE:	S-86
1			3			TOTAL SHEETS
2			4			184

DRAWN BY : L.L.M./A.L.F. DATE : 04-15-09
CHECKED BY : A. SORSENGINH DATE : 04-29-09

09-SEP-2010 12:43
R:\Structures\Final Plans\Str. #3\R-2233AB_SD_STR#3_12_EB.dgn
aflguero0

STR #3

NCBDS

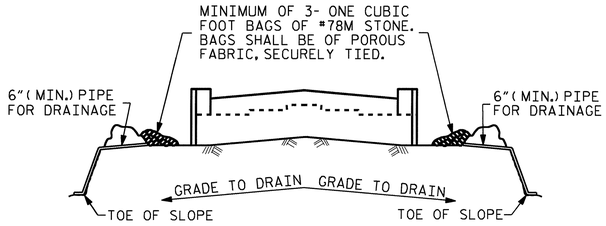

BAGGED STONE AND PIPE SHALL BE PLACED IMMEDIATELY AFTER COMPLETION OF END BENT EXCAVATION. PIPE MAY BE EITHER CONCRETE, CORRUGATED STEEL, CORRUGATED ALUMINUM ALLOY, OR CORRUGATED PLASTIC. PERFORATED PIPE WILL NOT BE ALLOWED.

BAGGED STONE SHALL REMAIN IN PLACE UNTIL THE ENGINEER DIRECTS THAT IT BE REMOVED. THE CONTRACTOR SHALL REMOVE AND DISPOSE OF SILT ACCUMULATIONS AT BAGGED STONE WHEN SO DIRECTED BY THE ENGINEER. BAGS SHALL BE REMOVED AND REPLACED WHENEVER THE ENGINEER DETERMINES THAT THEY HAVE DETERIORATED AND LOST THEIR EFFECTIVENESS.

NO SEPARATE PAYMENT WILL BE MADE FOR THIS WORK AND THE ENTIRE COST OF THIS WORK SHALL BE INCLUDED IN THE UNIT CONTRACT PRICE BID FOR THE SEVERAL PAY ITEMS.

TEMPORARY DRAINAGE AT END BENT

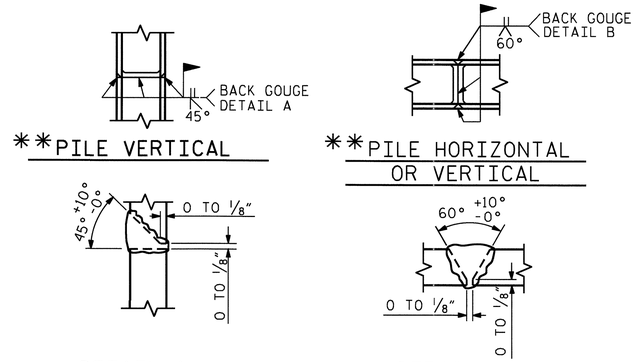

**POSITION OF PILE DURING WELDING.

PILE SPLICE DETAILS

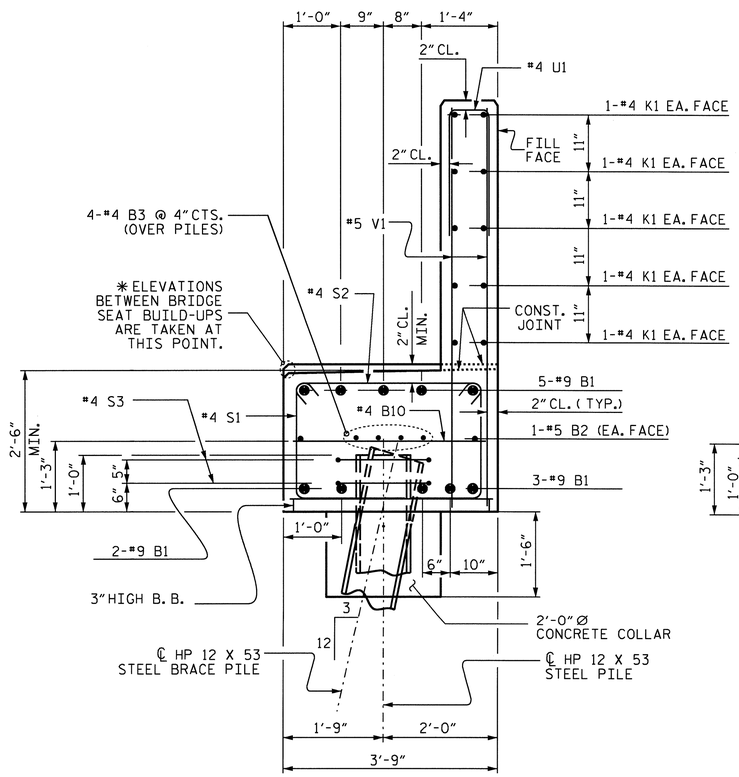

SECTION A-A

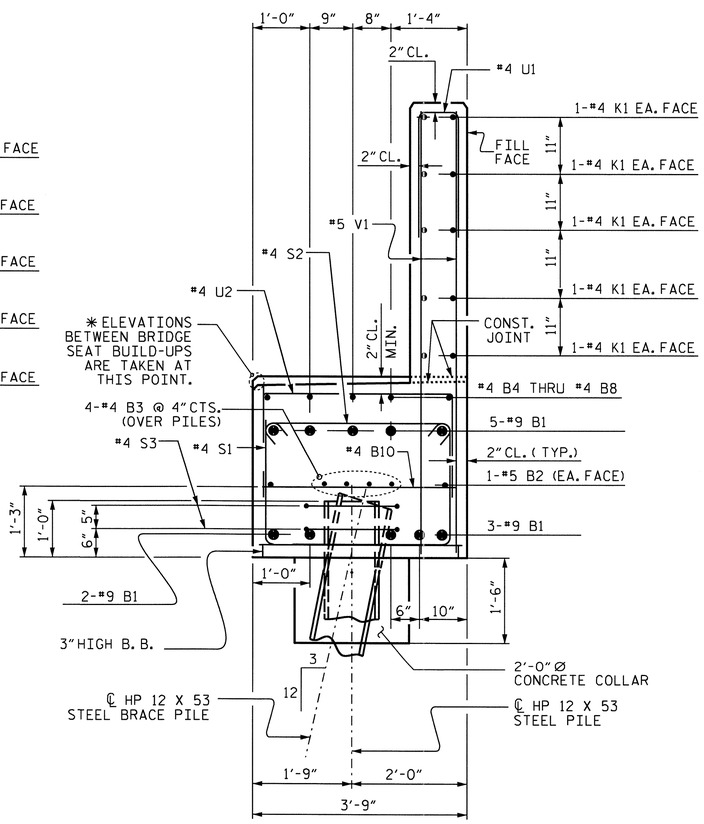

SECTION B-B

BAR TYPES

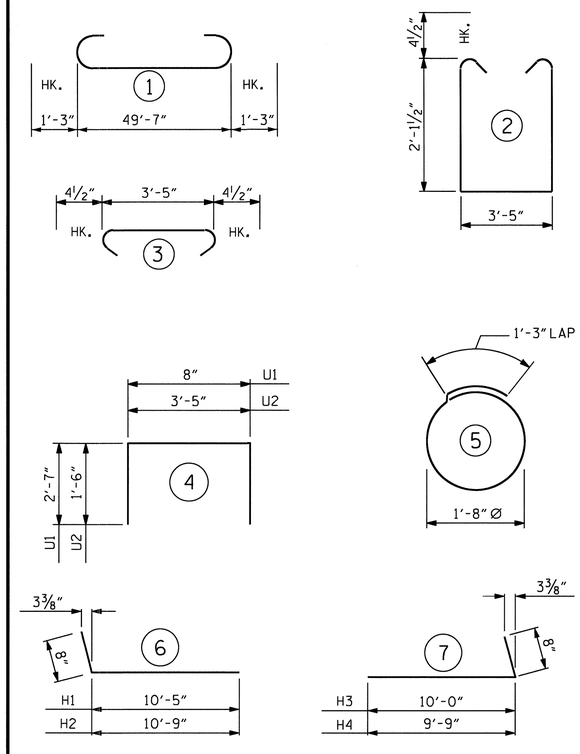

ALL BAR DIMENSIONS ARE OUT TO OUT.

BILL OF MATERIAL
END BENT NO. 1

BAR	NO.	SIZE	TYPE	LENGTH	WEIGHT
B1	10	#9	1	52'-1"	1771
B2	2	#5	STR	49'-9"	104
B3	8	#4	STR	26'-1"	139
B4	1	#4	STR	25'-4"	17
B5	1	#4	STR	25'-10"	17
B6	1	#4	STR	26'-2"	17
B7	1	#4	STR	26'-6"	18
B8	1	#4	STR	26'-10"	18
B9	5	#4	STR	3'-1"	10
B10	13	#4	STR	3'-5"	30
H1	10	#5	6	11'-1"	116
H2	10	#5	6	11'-5"	119
H3	11	#5	7	10'-8"	122
H4	11	#5	7	10'-5"	120
K1	20	#4	STR	26'-1"	348
K2	8	#4	STR	3'-11"	21
S1	56	#5	2	8'-5"	492
S2	56	#5	3	4'-2"	243
S3	14	#4	5	6'-6"	61
U1	42	#4	4	5'-10"	164
U2	22	#4	4	6'-5"	94
V1	84	#5	STR	6'-6"	569
V2	12	#5	STR	8'-2"	102
V3	6	#5	STR	8'-0"	50
V4	6	#5	STR	7'-11"	50
V5	6	#5	STR	7'-9"	48
V6	12	#5	STR	8'-9"	110
V7	6	#5	STR	8'-8"	54
V8	6	#5	STR	8'-7"	54
V9	4	#5	STR	8'-5"	35

REINFORCING STEEL = 5,113 LBS.

CLASS A CONCRETE BREAKDOWN

POUR #1
CAP, CONCRETE COLLARS, LOWER PART OF WINGS — 23.3 C.Y.

POUR #2
BACKWALL & UPPER PART OF WINGS — 12.9 C.Y.

CLASS A CONCRETE TOTAL — 36.2 C.Y.

HP 12 X 53 STEEL PILES

NO. 7 — 665 LIN. FT.

PROJECT NO. R-2233AB
RUTHERFORD COUNTY
STATION: 298+34.21 -L-

SHEET 3 OF 3

STATE OF NORTH CAROLINA
DEPARTMENT OF TRANSPORTATION
RALEIGH

SUBSTRUCTURE
END BENT NO. 1
LEFT LANE

NORTH CAROLINA PROFESSIONAL SEAL 20125 ENGINEER MARSHALL 91 GREEN JR.
9-15-10

REVISIONS						SHEET NO.
NO.	BY:	DATE:	NO.	BY:	DATE:	S-87
1			3			TOTAL SHEETS
2			4			184

DRAWN BY : L.L.M./A.L.F. DATE : 04-15-09
CHECKED BY : A. SORSENGINH DATE : 04-29-09

09-SEP-2010 12:43
R:\Structures\Final Plans\Str. #3\R-2233AB_SD_STR#3_12_EB.dgn
afigueroa

NOTES

STIRRUPS IN CAP MAY BE SHIFTED AS NECESSARY TO CLEAR ANCHOR BOLTS.

"U" BARS IN END OF CAP MAY BE SHIFTED SLIGHTLY AS NECESSARY TO CLEAR "B" BARS.

FOR PIPE PILE SPLICE DETAILS, SEE 18" STEEL PIPE PILE SHEET.

GALVANIZE THE TOP 26 FEET OF EACH INTERIOR BENT PILE IN ACCORDANCE WITH SECTION 1076 OF THE STANDARD SPECIFICATIONS.

FILL PIPE PILES WITH CLASS A CONCRETE FROM ELEVATION 800 TO THE BOTTOM OF THE 5'-0" (MIN.) CONCRETE PLUG.

THE CONTRACTOR'S ATTENTION IS CALLED TO THE FACT THAT THE CENTERLINE OF THE COLUMNS & DRILLED PIERS IS OFFSET 3" FROM THE BENT CONTROL LINE.

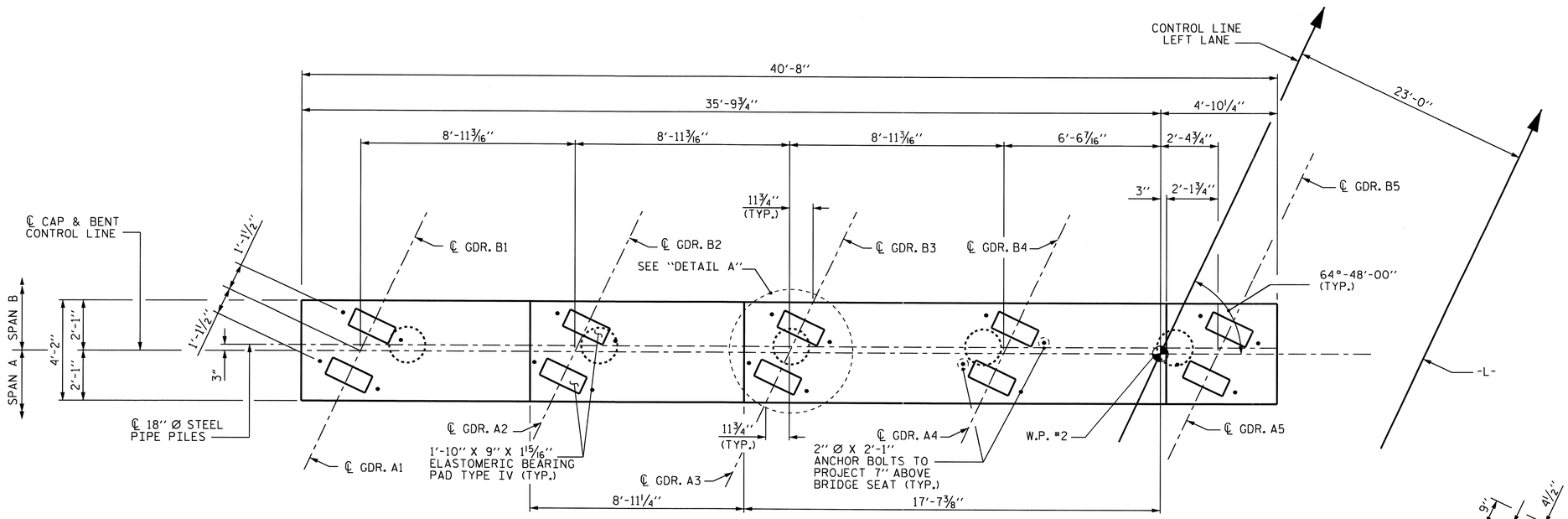

PLAN

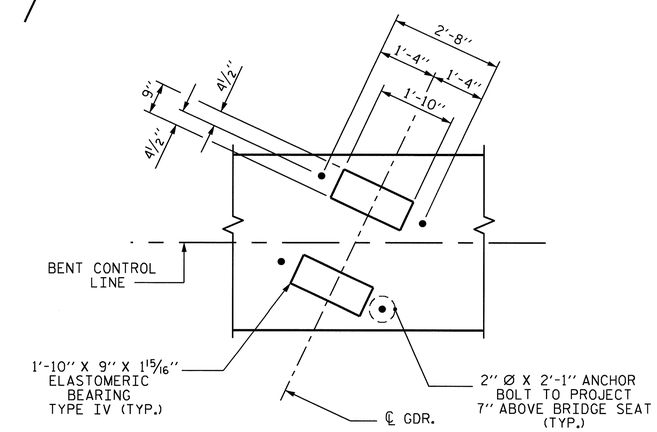

DETAIL A

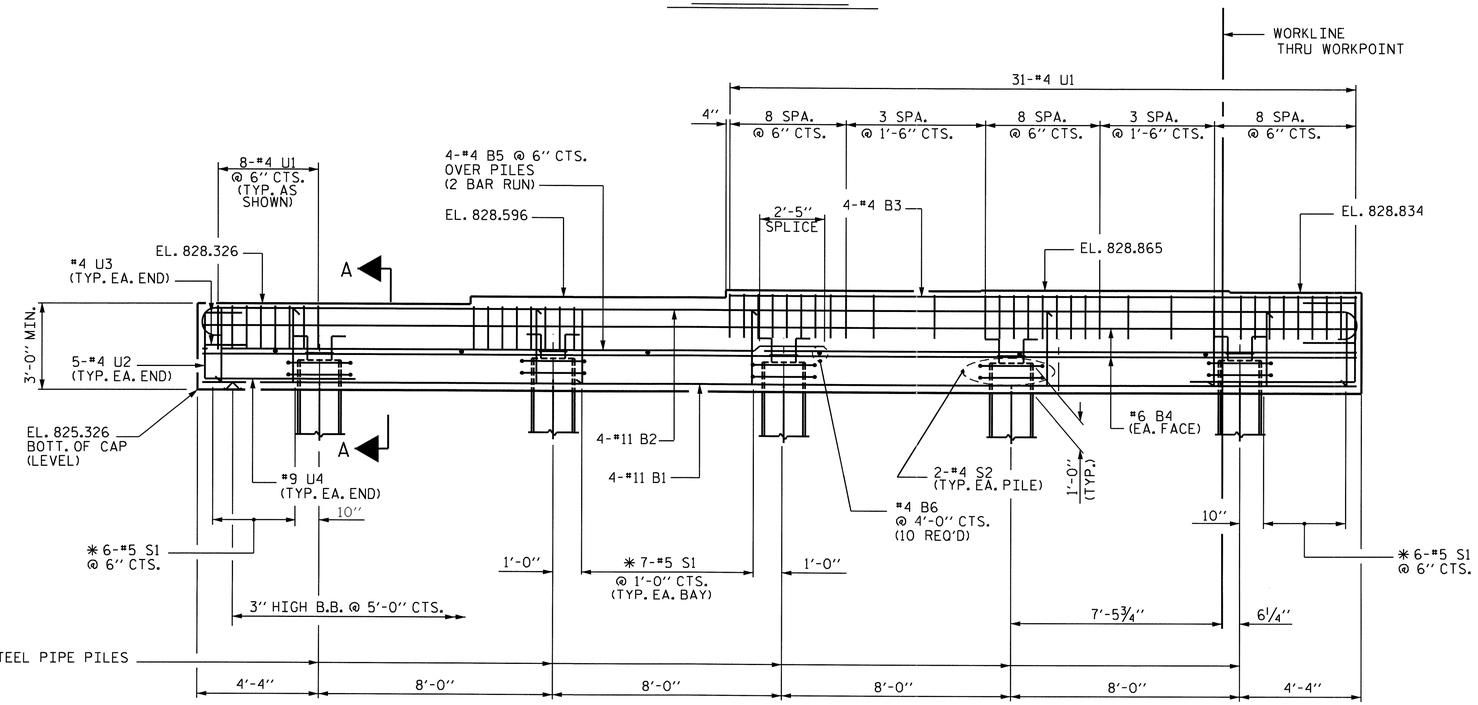

ELEVATION

FOR STEEL PIPE PILE REINF. STEEL & CONCRETE QUANTITIES, SEE "18" STEEL PIPE PILE" STANDARD.

✱ INVERT ALTERNATE STIRRUPS

PROJECT NO. R-2233AB
RUTHERFORD COUNTY
STATION: 298+34.21 -L-

SHEET 1 OF 2

STATE OF NORTH CAROLINA
DEPARTMENT OF TRANSPORTATION
RALEIGH

SUBSTRUCTURE
BENT No. 1
LEFT LANE

NORTH CAROLINA PROFESSIONAL SEAL 20125 ENGINEER MARSHALL G. CHEEK, JR.
9-15-10

REVISIONS						SHEET NO.
NO.	BY:	DATE:	NO.	BY:	DATE:	S-88
1			3			TOTAL SHEETS
2			4			184

DRAWN BY : M. POOLE DATE : 01/10
CHECKED BY : M. G. CHEEK DATE : 02/10

14-SEP-2010 11:54
R:\Structures\Final Plans\Str. #3\R-2233AB_SD_STR#3_13_B1.dgn
aflgueroa

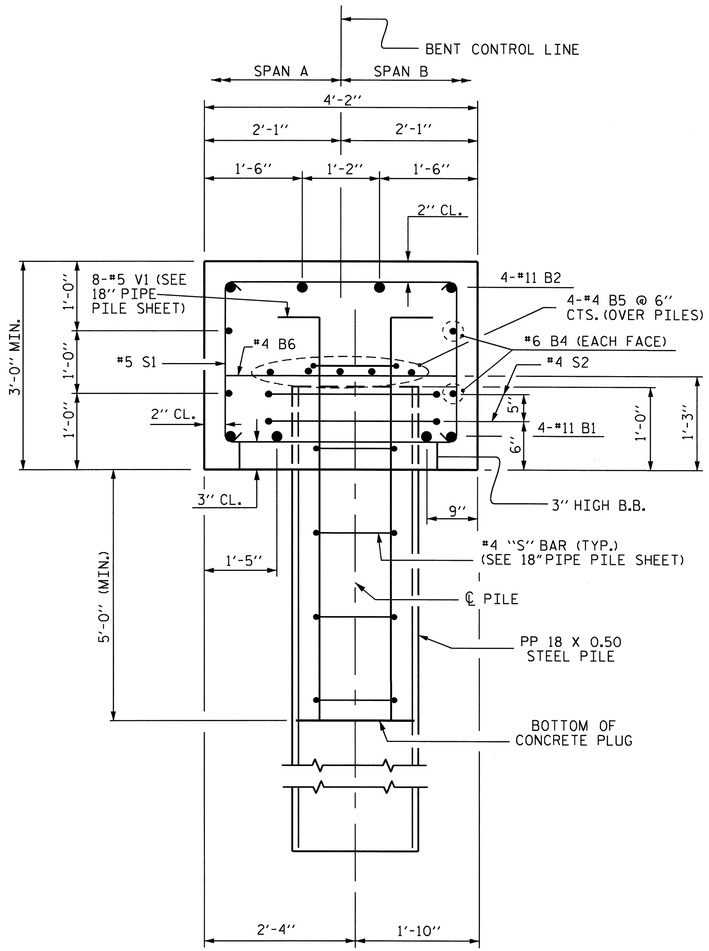

SECTION A-A

THRU CAP & 18" Ø STEEL PIPE PILE

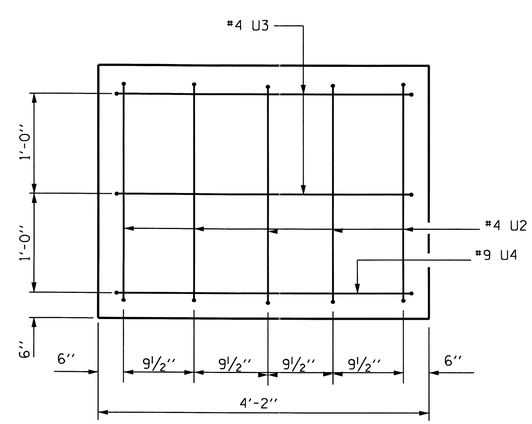

END VIEW

BAR TYPES

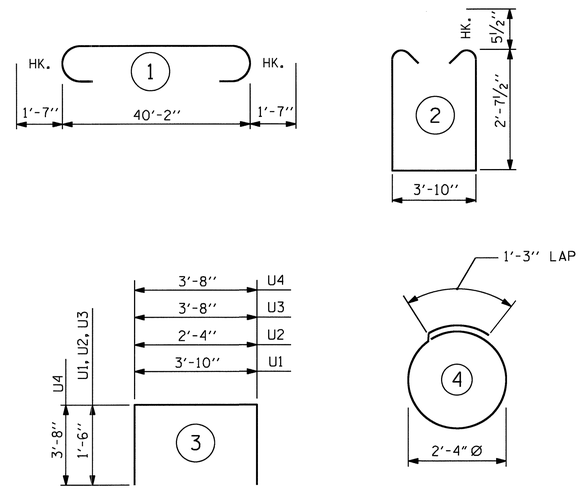

ALL BAR DIMENSIONS ARE OUT TO OUT.

BILL OF MATERIAL

BENT No. 1

BAR	NO.	SIZE	TYPE	LENGTH	WEIGHT
B1	4	11	STR	40'-4"	857
B2	4	11	1	43'-4"	921
B3	4	4	STR	22'-1"	59
B4	4	6	STR	40'-4"	242
B5	8	4	STR	21'-5"	114
B6	10	4	STR	3'-10"	26
S1	40	5	2	10'-0"	417
S2	10	4	4	8'-7"	57
U1	47	4	3	6'-10"	215
U2	10	4	3	5'-4"	36
U3	4	4	3	6'-8"	18
U4	2	9	3	11'-0"	75

REINFORCING STEEL LBS. 3037

CLASS "A" CONCRETE
POUR 1 CAP 20.7 C.Y.

** TOTAL 20.7 C.Y.

PP 18" X 0.5 GALVANIZED STEEL PILES
NO. 5 500 LIN. FT.

** CONCRETE DISPLACED BY THE FILLED 18" Ø STEEL PIPE PILES HAS BEEN DEDUCTED.

PROJECT NO. R-2233AB
RUTHERFORD COUNTY
STATION: 298+34.21 -L-

SHEET 2 OF 2

STATE OF NORTH CAROLINA
DEPARTMENT OF TRANSPORTATION
RALEIGH

SUBSTRUCTURE
BENT No. 1
LEFT LANE

NORTH CAROLINA PROFESSIONAL SEAL 20125 ENGINEER MARSHALL G. CHEEK, JR.
9-15-10

REVISIONS						SHEET NO.
NO.	BY:	DATE:	NO.	BY:	DATE:	S-89
1			3			TOTAL SHEETS
2			4			184

DRAWN BY : M. POOLE DATE : 01/10
CHECKED BY : M. G. CHEEK DATE : 02/10

14-SEP-2010 11:54
R:\Structures\Final Plans\Str. #3\R-2233AB_SD_STR#3_13_B1.dgn
afigueroa

NOTES

STIRRUPS IN CAP MAY BE SHIFTED AS NECESSARY TO CLEAR ANCHOR BOLTS.

"U" BARS IN END OF CAP MAY BE SHIFTED SLIGHTLY AS NECESSARY TO CLEAR "B" BARS.

FOR PIPE PILE SPLICE DETAILS, SEE 18" STEEL PIPE PILE SHEET.

GALVANIZE THE TOP 28 FEET OF EACH INTERIOR BENT PILE IN ACCORDANCE WITH SECTION 1076 OF THE STANDARD SPECIFICATIONS.

FILL PIPE PILES WITH CLASS A CONCRETE FROM ELEVATION 800 TO THE BOTTOM OF THE 5'-0" (MIN.) CONCRETE PLUG.

THE CONTRACTOR'S ATTENTION IS CALLED TO THE FACT THAT THE CENTERLINE OF THE COLUMNS & DRILLED PIERS IS OFFSET 3" FROM THE BENT CONTROL LINE.

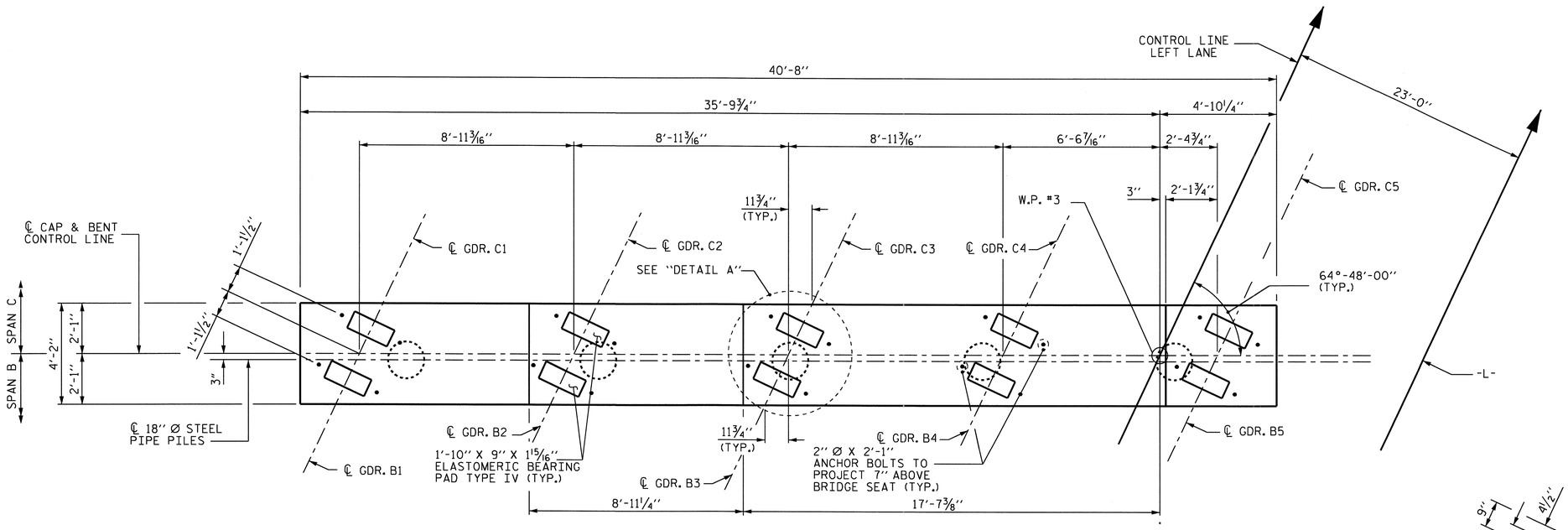

PLAN

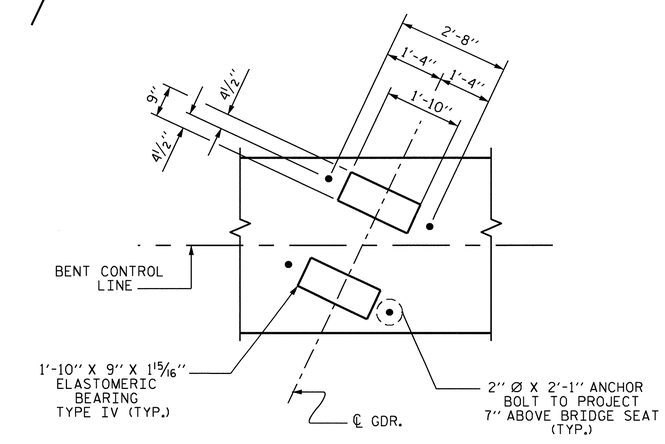

DETAIL A

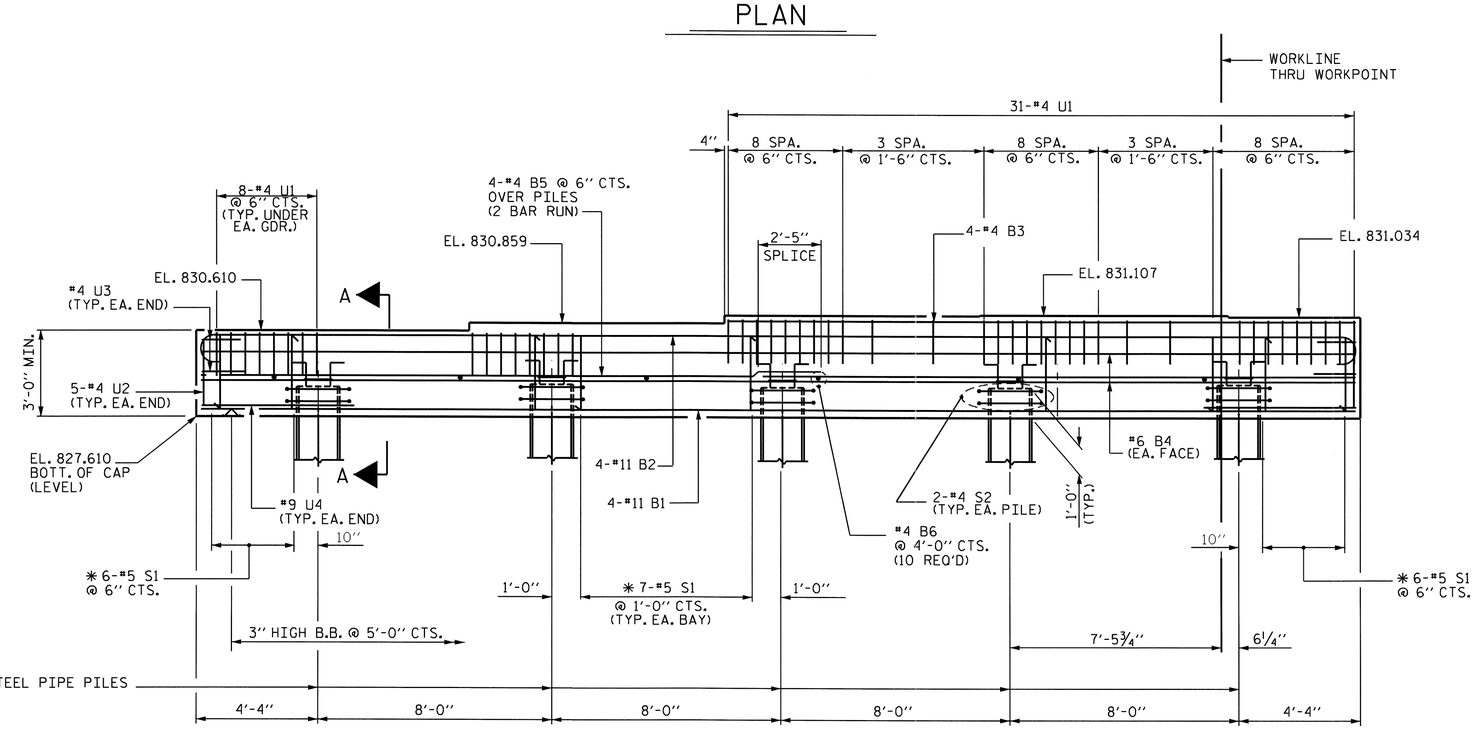

ELEVATION

FOR STEEL PIPE PILE REINF. STEEL & CONCRETE QUANTITIES, SEE "18" STEEL PIPE PILE" STANDARD.

✱ INVERT ALTERNATE STIRRUPS

PROJECT NO. R-2233AB

RUTHERFORD COUNTY

STATION: 298+34.21 -L-

SHEET 1 OF 2

STATE OF NORTH CAROLINA
DEPARTMENT OF TRANSPORTATION
RALEIGH

SUBSTRUCTURE
BENT No. 2
LEFT LANE

NORTH CAROLINA PROFESSIONAL SEAL 20125 ENGINEER MARSHALL G. CHEEK, JR.
9-15-10

REVISIONS						SHEET NO.
NO.	BY:	DATE:	NO.	BY:	DATE:	S-90
1			3			TOTAL SHEETS
2			4			184

DRAWN BY : M. POOLE DATE : 01/10
CHECKED BY : M. G. CHEEK DATE : 02/10

14-SEP-2010 11:54
R:\Structures\Final Plans\Str. #3\R-2233AB_SD_STR#3_13_B2.dgn
afigueroa

STR. #3

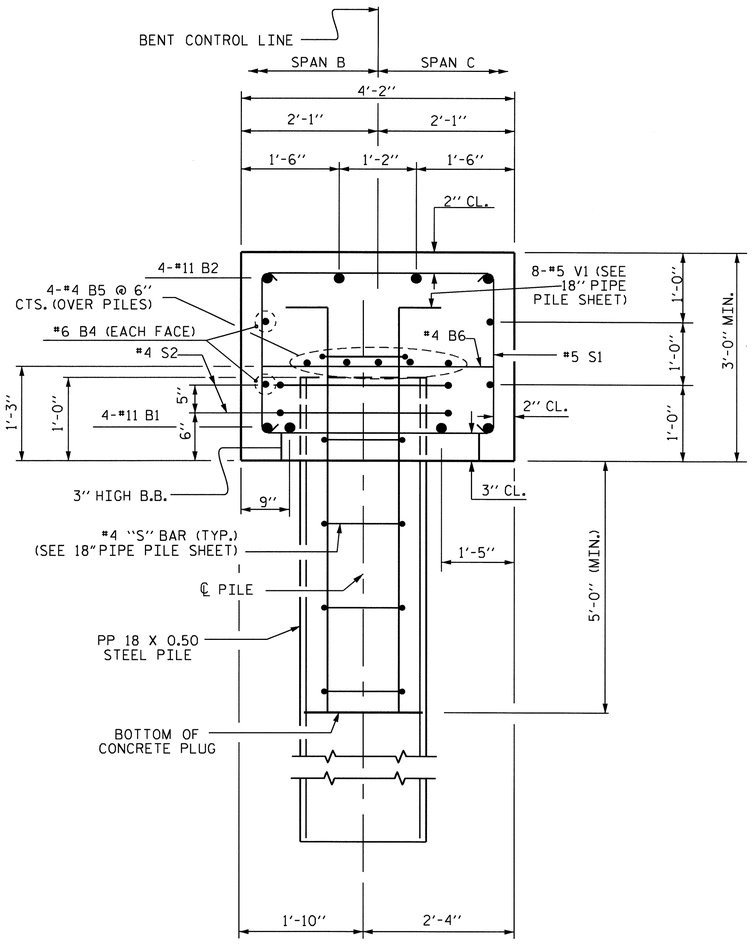

SECTION A-A

THRU CAP & 18" Ø STEEL PIPE PILE

BAR TYPES

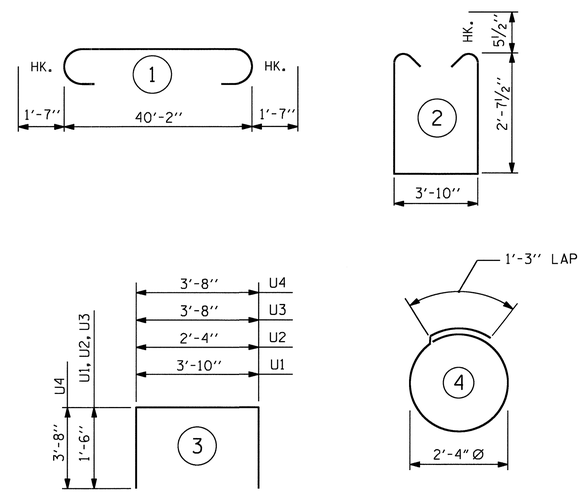

ALL BAR DIMENSIONS ARE OUT TO OUT.

BILL OF MATERIAL

BENT No. 2

BAR	NO.	SIZE	TYPE	LENGTH	WEIGHT
B1	4	11	STR	40'-4"	857
B2	4	11	1	43'-4"	921
B3	4	4	STR	22'-1"	59
B4	4	6	STR	40'-4"	242
B5	8	4	STR	21'-5"	114
B6	10	4	STR	3'-10"	26
S1	40	5	2	10'-0"	417
S2	10	4	4	8'-7"	57
U1	47	4	3	6'-10"	215
U2	10	4	3	5'-4"	36
U3	4	4	3	6'-8"	18
U4	2	9	3	11'-0"	75

REINFORCING STEEL LBS. 3037

CLASS "A" CONCRETE
POUR 1 CAP 20.7 C.Y.

** TOTAL 20.7 C.Y.

PP 18" X 0.5 GALVANIZED STEEL PILES
NO. 5 325 LIN. FT.

** CONCRETE DISPLACED BY THE FILLED 18" Ø STEEL PIPE PILES HAS BEEN DEDUCTED.

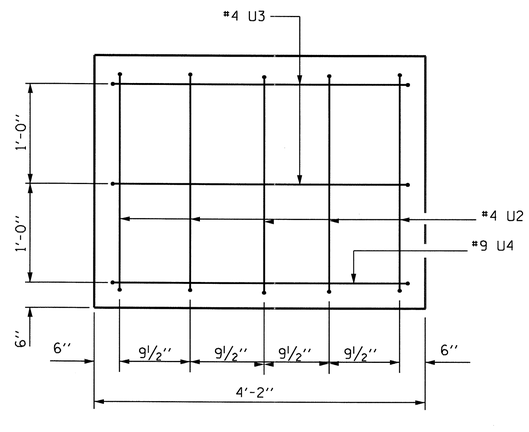

END VIEW

PROJECT NO. R-2233AB
RUTHERFORD COUNTY
STATION: 298+34.21 -L-

SHEET 2 OF 2

STATE OF NORTH CAROLINA
DEPARTMENT OF TRANSPORTATION
RALEIGH

SUBSTRUCTURE
BENT No. 2
LEFT LANE

NORTH CAROLINA PROFESSIONAL SEAL 20125 ENGINEER MARSHALL G. CHEEK, JR.
9-15-10

REVISIONS						SHEET NO.
NO.	BY:	DATE:	NO.	BY:	DATE:	S-91
1			3			TOTAL SHEETS
2			4			184

DRAWN BY : M. POOLE DATE : 01/10
CHECKED BY : M. G. CHEEK DATE : 02/10

14-SEP-2010 13:47
R:\Structures\Final Plans\Str. #3\R-2233AB_SD_STR#3_13_B2.dgn
afigueroa

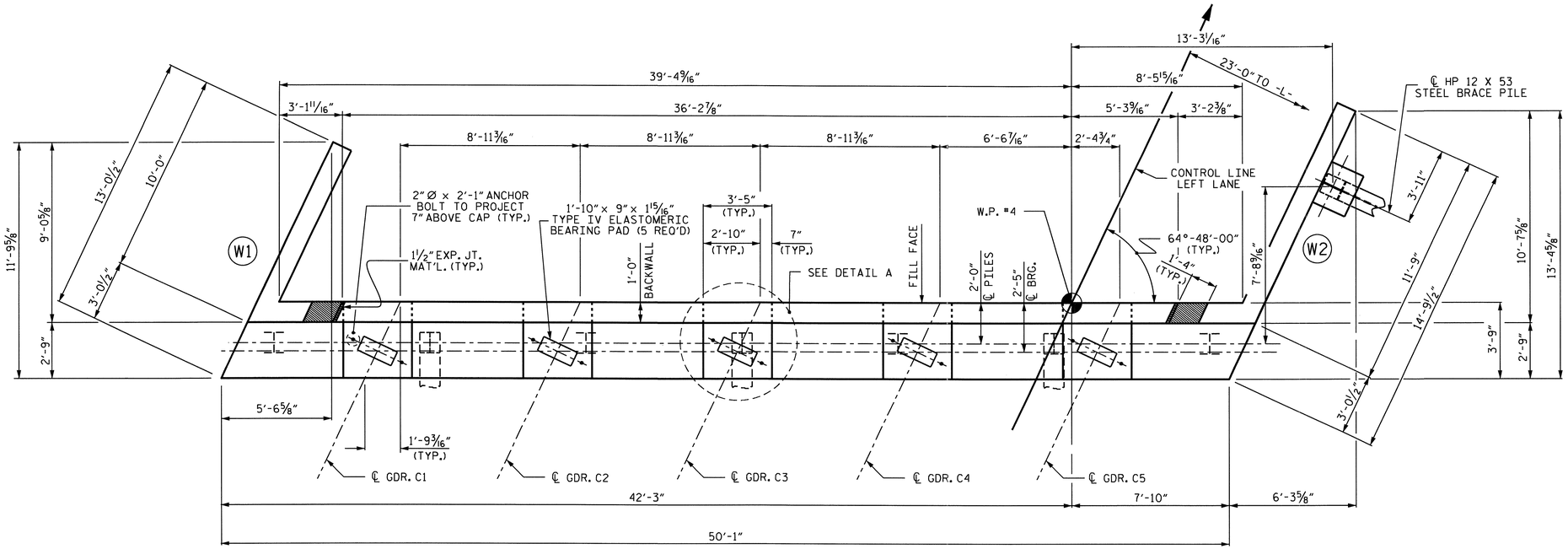

PLAN

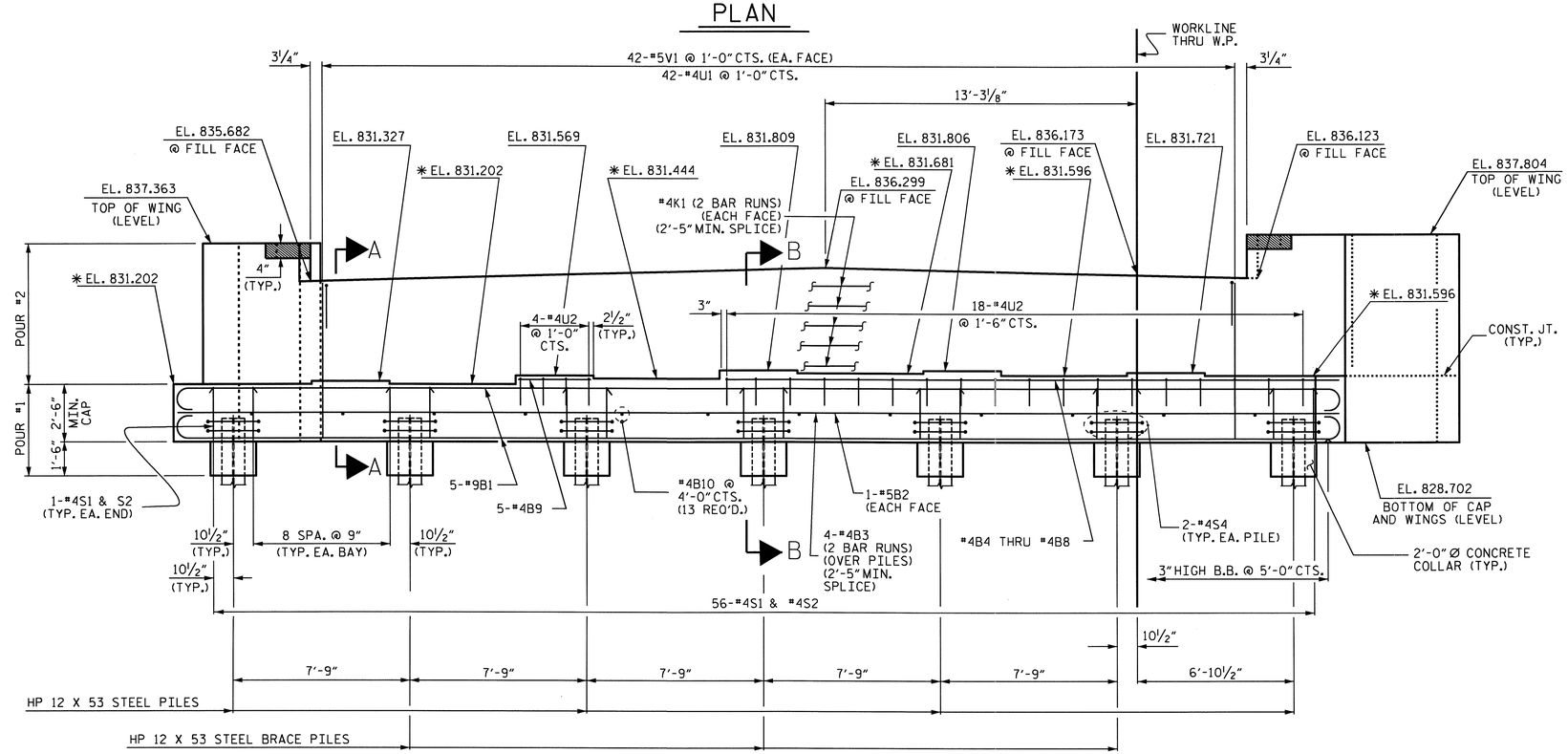

ELEVATION

WING BRACE PILES NOT SHOWN FOR CLARITY

✱ FOR LOCATION OF ELEVATIONS BETWEEN BRIDGE SEAT BUILDUPS, SEE SECTION VIEWS, SHEET 3 OF 3.

NOTES

STIRRUPS IN CAP MAY BE SHIFTED AS NECESSARY TO CLEAR ANCHOR BOLTS.

FOR SECTIONS A-A AND B-B, SEE SHEET 3 OF 3.

FOR PILE SPLICE DETAILS, SEE SHEET 3 OF 3.

FOR TEMPORARY DRAINAGE AT END BENTS, SEE SHEET 3 OF 3.

BACKWALL SHALL BE PLACED BEFORE APPLYING THE EPOXY PROTECTIVE COATING.

THE TOP SURFACE AREA OF THE END BENT CAP SHALL BE CURED IN ACCORDANCE WITH THE STANDARD SPECIFICATIONS EXCEPT THAT THE MEMBRANE CURING COMPOUND METHOD SHALL NOT BE USED.

THE TOP SURFACE OF THE END BENT CAP EXCEPT THE BRIDGE SEAT BUILDUPS SHALL BE SLOPED TRANSVERSELY FROM THE FILL FACE TO THE BACK FACE AT THE RATE OF 2%.

THE CONTRACTOR SHALL PROVIDE FOR INSTALLATION OF THE 4" DIAMETER DRAIN PIPE THROUGH THE WING WALL AS REQUIRED FOR REINFORCED BRIDGE APPROACH FILLS, SEE THE ROADWAY PLANS. REINFORCING STEEL IN THE WING WALL MAY BE SHIFTED AS NECESSARY TO CLEAR THE DRAIN PIPE.

THE CONCRETE IN THE SHADED AREA OF THE WING SHALL BE POURED AFTER THE BARRIER RAIL IS CAST IF SLIP FORMING IS USED.

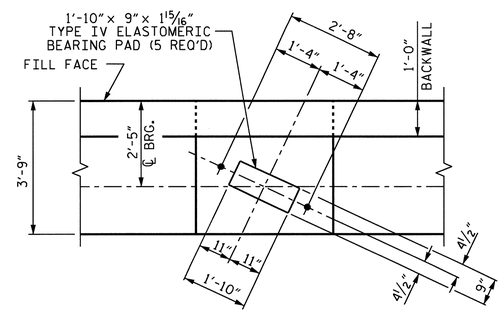

DETAIL A

PROJECT NO. R-2233AB

RUTHERFORD COUNTY

STATION: 298+34.21 -L-

SHEET 1 OF 3

STATE OF NORTH CAROLINA
DEPARTMENT OF TRANSPORTATION
RALEIGH

SUBSTRUCTURE

END BENT NO. 2
LEFT LANE

NORTH CAROLINA PROFESSIONAL SEAL 20125 ENGINEER MARSHALL L. CHEEK, JR. 9-15-10

REVISIONS						SHEET NO.
NO.	BY:	DATE:	NO.	BY:	DATE:	S-92
1			3			TOTAL SHEETS
2			4			184

DRAWN BY : L.L.M./A.L.F. DATE : 04-15-09
CHECKED BY : A. SORSENGINH DATE : 04-29-09

13-SEP-2010 16:18
R:\Structures\Final Plans\Str. #3\R-2233AB_SD_STR#3_12_EB.dgn
afigueroa

STR #3

NC005

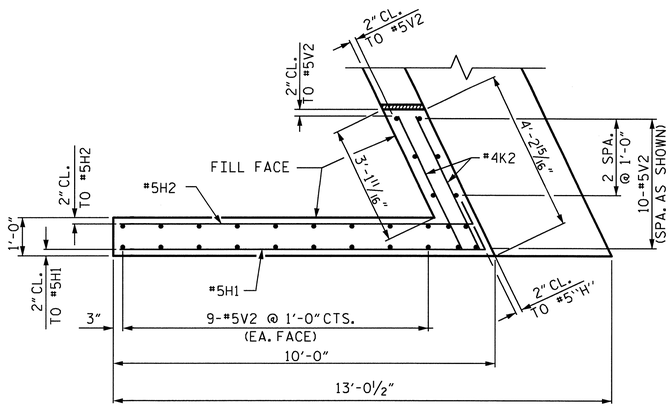

PLAN OF WING - W1

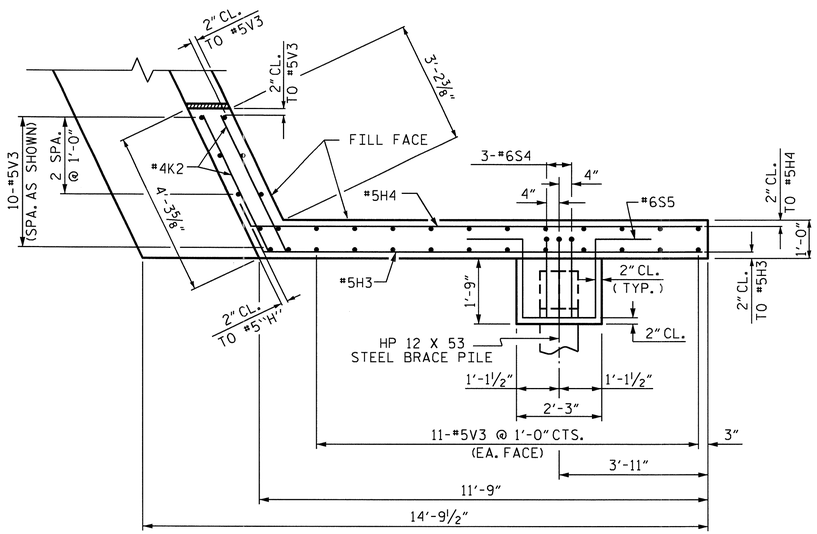

PLAN OF WING - W2

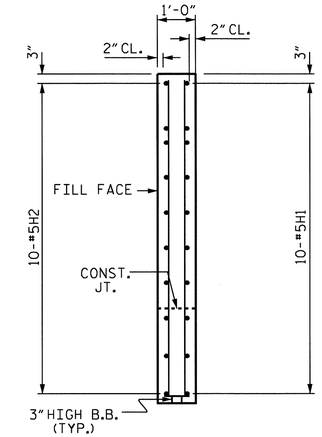

SECTION X-X

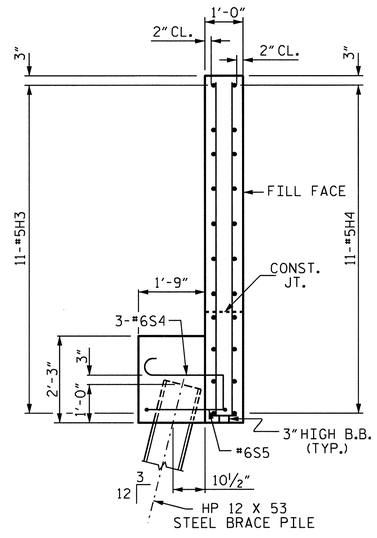

SECTION Y-Y

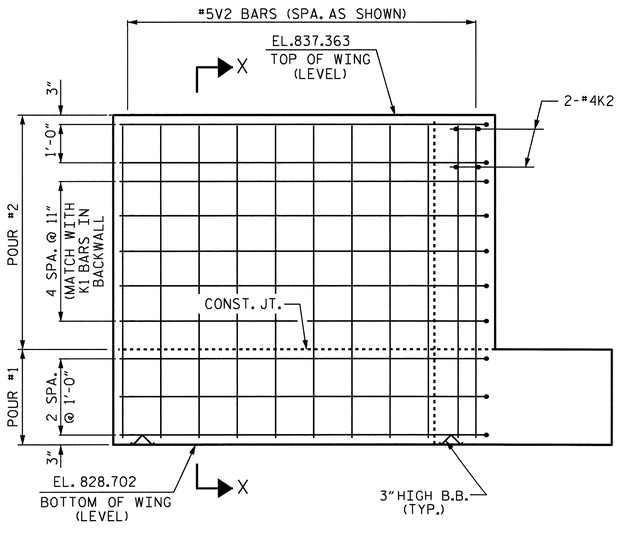

ELEVATION OF WING - W1

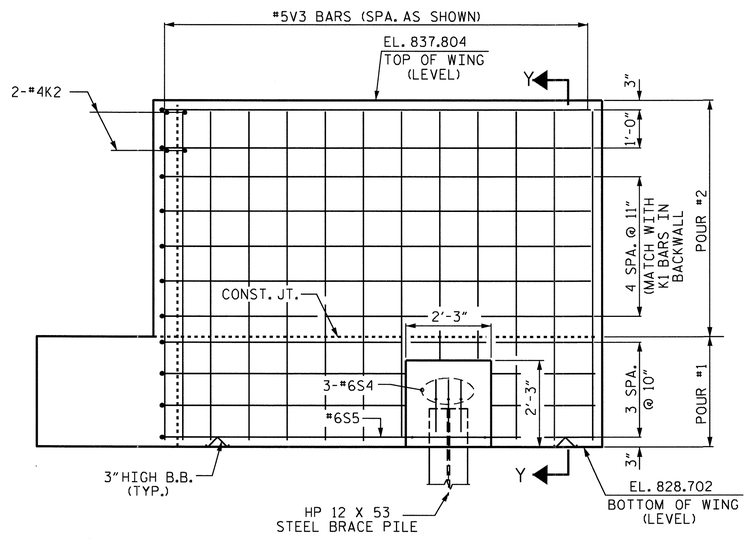

ELEVATION OF WING - W2

PROJECT NO. R-2233AB
RUTHERFORD COUNTY
STATION: 298+34.21 -L-

SHEET 2 OF 3

STATE OF NORTH CAROLINA
DEPARTMENT OF TRANSPORTATION
RALEIGH

SUBSTRUCTURE

END BENT NO. 2
LEFT LANE

NORTH CAROLINA PROFESSIONAL SEAL 20125 ENGINEER
MARSHALL E. CHEEK, JR.
9-15-10

REVISIONS						SHEET NO.
NO.	BY:	DATE:	NO.	BY:	DATE:	S-93
1			3			TOTAL SHEETS
2			4			184

DRAWN BY : L.L.M./A.L.F. DATE : 04-15-09
CHECKED BY : A. SORSENGINH DATE : 04-29-09

09-SEP-2010 12:43
R:\Structures\Final Plans\Str. *3\R-2233AB_SD_STR*3_12_EB.dgn
afigueroa

STR #3 NCBDS

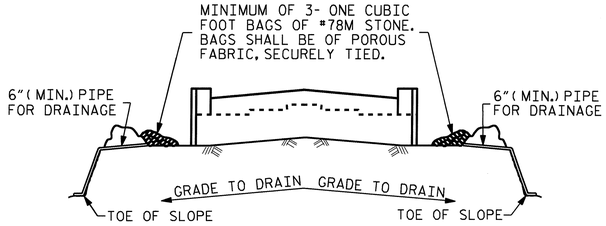

BAGGED STONE AND PIPE SHALL BE PLACED IMMEDIATELY AFTER COMPLETION OF END BENT EXCAVATION. PIPE MAY BE EITHER CONCRETE, CORRUGATED STEEL, CORRUGATED ALUMINUM ALLOY, OR CORRUGATED PLASTIC. PERFORATED PIPE WILL NOT BE ALLOWED.

BAGGED STONE SHALL REMAIN IN PLACE UNTIL THE ENGINEER DIRECTS THAT IT BE REMOVED. THE CONTRACTOR SHALL REMOVE AND DISPOSE OF SILT ACCUMULATIONS AT BAGGED STONE WHEN SO DIRECTED BY THE ENGINEER. BAGS SHALL BE REMOVED AND REPLACED WHENEVER THE ENGINEER DETERMINES THAT THEY HAVE DETERIORATED AND LOST THEIR EFFECTIVENESS.

NO SEPARATE PAYMENT WILL BE MADE FOR THIS WORK AND THE ENTIRE COST OF THIS WORK SHALL BE INCLUDED IN THE UNIT CONTRACT PRICE BID FOR THE SEVERAL PAY ITEMS.

TEMPORARY DRAINAGE AT END BENT

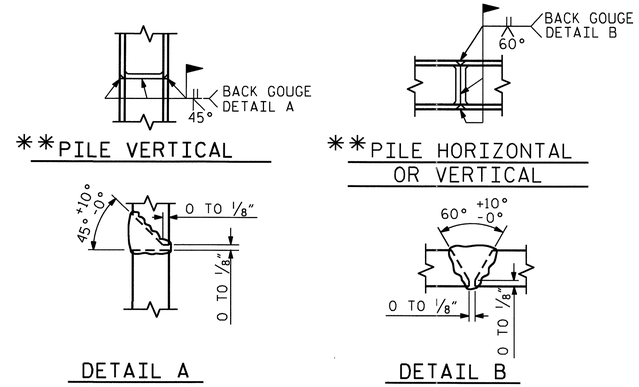

**POSITION OF PILE DURING WELDING.

PILE SPLICE DETAILS

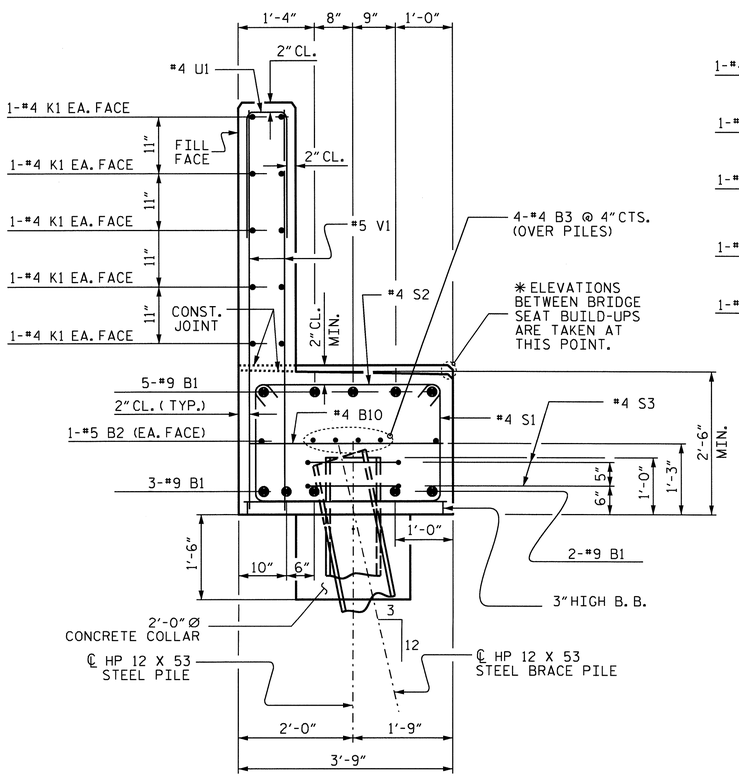

SECTION A-A

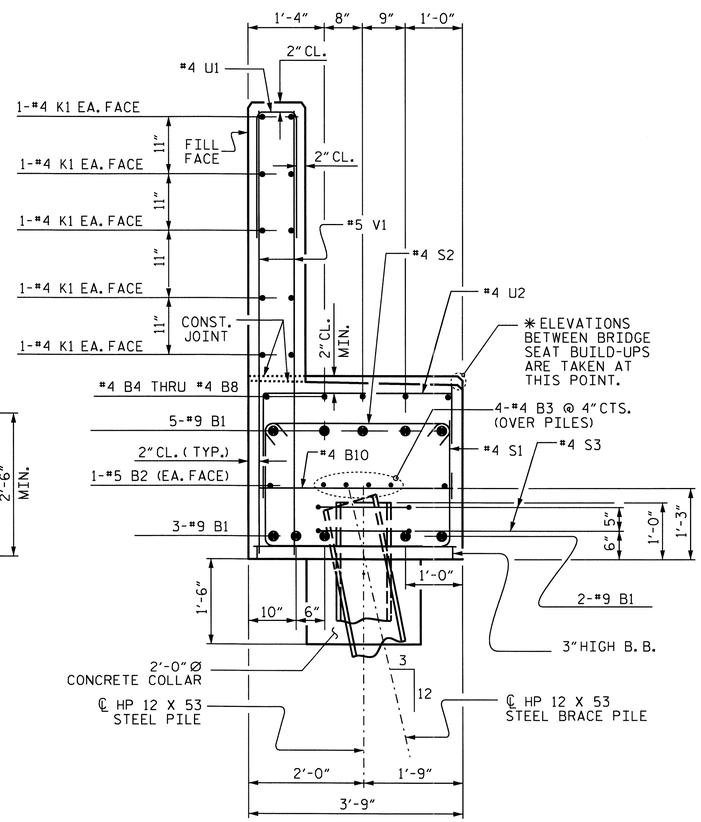

SECTION B-B

BAR TYPES

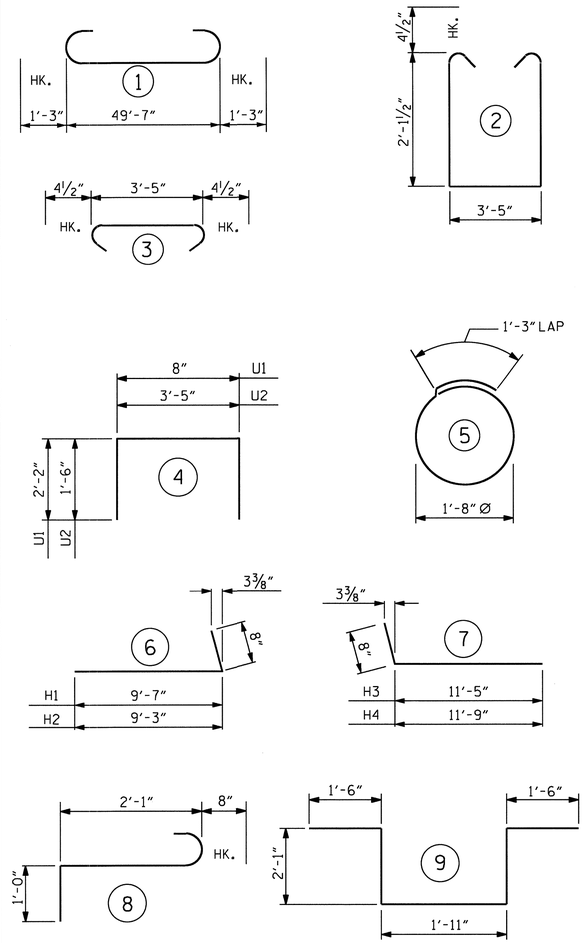

ALL BAR DIMENSIONS ARE OUT TO OUT.

BILL OF MATERIAL

END BENT NO. 2

BAR	NO.	SIZE	TYPE	LENGTH	WEIGHT
B1	10	#9	1	52'-1"	1771
B2	2	#5	STR	49'-9"	104
B3	8	#4	STR	26'-1"	139
B4	1	#4	STR	27'-4"	18
B5	1	#4	STR	26'-10"	18
B6	1	#4	STR	26'-6"	18
B7	1	#4	STR	26'-2"	17
B8	1	#4	STR	25'-10"	17
B9	5	#4	STR	3'-1"	10
B10	13	#4	STR	3'-5"	30
H1	10	#5	6	10'-3"	107
H2	10	#5	6	9'-11"	103
H3	11	#5	7	12'-1"	139
H4	11	#5	7	12'-5"	142
K1	20	#4	STR	26'-1"	348
K2	8	#4	STR	3'-10"	20
S1	56	#5	2	8'-5"	492
S2	56	#5	3	4'-2"	243
S3	14	#4	5	6'-6"	61
S4	3	#6	8	3'-9"	17
S5	1	#6	9	9'-1"	14
U1	42	#4	4	5'-0"	140
U2	22	#4	4	6'-5"	94
V1	84	#5	STR	6'-7"	577
V2	28	#5	STR	8'-3"	241
V3	32	#5	STR	8'-9"	292

REINFORCING STEEL = 5,172 LBS.

CLASS A CONCRETE BREAKDOWN

POUR #1 CAP, CONCRETE COLLARS, LOWER PART OF WINGS & BRACE PILE BLOCKS	23.1 C.Y.
POUR #2 BACKWALL & UPPER PART OF WINGS	13.4 C.Y.
CLASS A CONCRETE TOTAL	36.5 C.Y.

HP 12 X 53 STEEL PILES

NO. 8 480 LIN. FT.

PROJECT NO. R-2233AB

RUTHERFORD COUNTY

STATION: 298+34.21 -L-

SHEET 3 OF 3

STATE OF NORTH CAROLINA
DEPARTMENT OF TRANSPORTATION
RALEIGH

SUBSTRUCTURE

END BENT NO. 2
LEFT LANE

NORTH CAROLINA PROFESSIONAL SEAL 20125 ENGINEER MARSHALL W. CREECH, JR.
9-15-10

REVISIONS						SHEET NO.
NO.	BY:	DATE:	NO.	BY:	DATE:	S-94
1			3			TOTAL SHEETS
2			4			184

DRAWN BY : L.L.M./A.L.F. DATE : 04-15-09
CHECKED BY : A. SORSENGINH DATE : 04-29-09

09-SEP-2010 12:43
R:\Structures\Final Plans\Str. #3\R-2233AB_SD_STR#3_12_EB.dgn
afigueroa

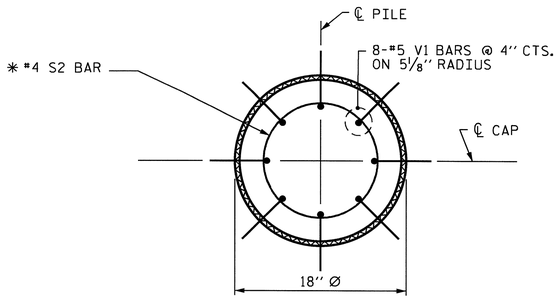

PLAN

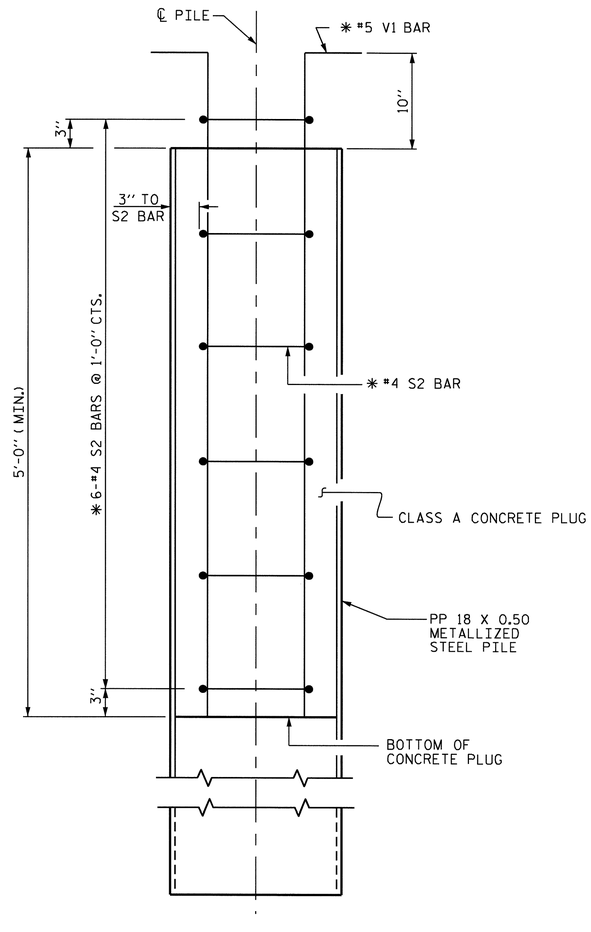

ELEVATION

PP 18 X 0.50 GALVANIZED STEEL PILE

(OPEN END)

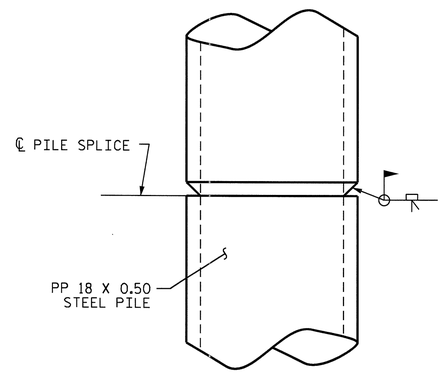

PIPE PILE SPLICE DETAIL

NOTES

PIPE PILES SHALL BE IN ACCORDANCE WITH SECTION 1084 OF THE STANDARD SPECIFICATIONS.

GALVANIZE STEEL PIPE PILES IN ACCORDANCE WITH SECTION 1076 OF THE STANDARD SPECIFICATIONS UNLESS METALLIZING IS REQUIRED. GALVANIZING OR METALLIZING PIPE PILE PLATES IS NOT REQUIRED.

PIPE PILE PLATES, IF REQUIRED, SHALL BE IN ACCORDANCE WITH SECTION 450 OF THE STANDARD SPECIFICATIONS.

REMOVE AND REPLACE OR REPAIR TO THE SATISFACTION OF THE ENGINEER PILES THAT ARE DAMAGED, DEFORMED OR COLLAPSED DURING INSTALLATION OR DRIVING.

PILE SPLICES SHALL BE IN ACCORDANCE WITH THE STANDARD SPECIFICATIONS AND AWS D1.1.

FOR CLOSED END PIPE PILES, REMOVE ALL SOIL AND WATER FROM INSIDE THE PILES JUST PRIOR TO PLACING REINFORCING STEEL AND CONCRETE FOR THE CONCRETE PLUG.

FOR OPEN END PIPE PILES, REMOVE ENOUGH SOIL AND WATER FROM INSIDE THE PILES TO CONSTRUCT THE CONCRETE PLUG WITHOUT FOULING THE CONCRETE.

FORM THE CONCRETE PLUG SUCH THAT THE REINFORCING STEEL OR CONCRETE DOES NOT MOVE AND THE CLEARANCE FROM THE REINFORCING STEEL TO THE INSIDE OF THE PILE IS MAINTAINED AFTER CONCRETE PLACEMENT. DO NOT PLACE CONCRETE IN THE BENT CAP UNTIL THE CONCRETE PLUG HAS ATTAINED A MINIMUM COMPRESSIVE STRENGTH OF 1500 PSI.

THE REINFORCING STEEL, CLASS A CONCRETE, AND GALVANIZING ARE CONSIDERED INCIDENTAL TO THE CONTRACT UNIT PRICE BID PER LINEAR FOOT FOR PP 18 X 0.50 GALVANIZED STEEL PILES.

BILL OF MATERIAL FOR ONE PP 18 X 0.50 STEEL PILE

BAR	NO.	SIZE	TYPE	LENGTH	WEIGHT
S2	6	#4	1	4'-5''	18
V1	8	#5	2	6'-8''	56
REINFORCING STEEL =					74 LBS.
CLASS A CONCRETE					
5'-0'' MINIMUM PLUG					0.3 CY

BAR TYPES

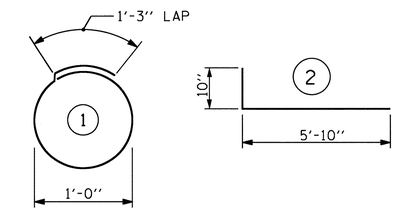

ALL BAR DIMENSIONS ARE OUT TO OUT.

PROJECT NO. R-2233AB
RUTHERFORD COUNTY
STATION: 298+34.21 -L-

STATE OF NORTH CAROLINA
DEPARTMENT OF TRANSPORTATION
RALEIGH

STANDARD
18'' STEEL PIPE PILE
LEFT LANE

NORTH CAROLINA PROFESSIONAL SEAL 20125 ENGINEER MARSHALL L. CHEEK, JR.
9-15-10

REVISIONS						SHEET NO.
NO.	BY:	DATE:	NO.	BY:	DATE:	S-95
1			3			TOTAL SHEETS
2			4			184

ASSEMBLED BY : M. POOLE		DATE : 01/10	
CHECKED BY : M. G. CHEEK		DATE : 02/10	
DRAWN BY : RWW 1/01	REV. 5/7/03	RWW/JTE	
CHECKED BY : LES 1/01	REV. 10/1/05	LBG/TLA	
	REV. 5/1/06	TLA/GM	

14-SEP-2010 11:54
R:\Structures\Final Plans\Str. #3\R-2233AB_SD_STR#3_13C_PP.dgn
afigueroa

STR. #3 STD. NO. SPP3

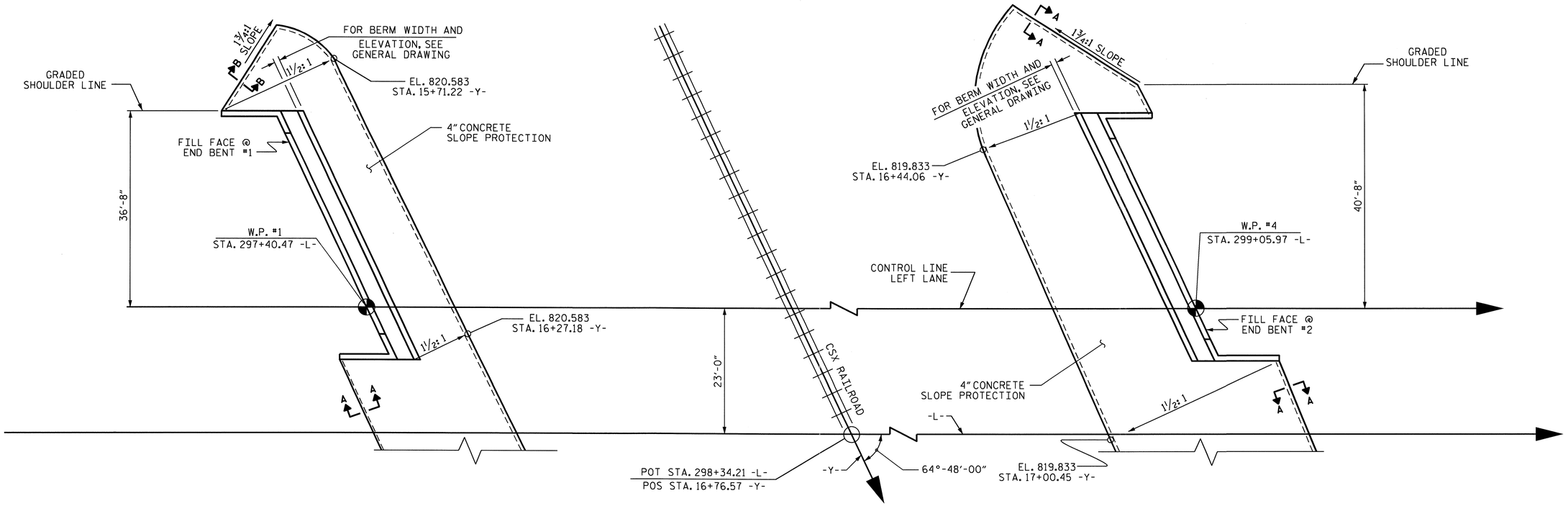

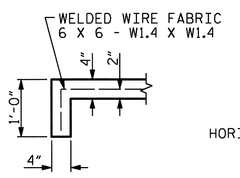

SECTION A-A

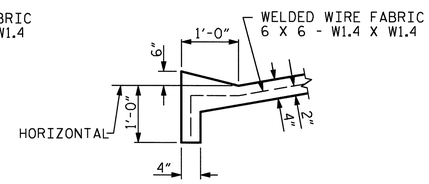

SECTION B-B

ESTIMATED QUANTITIES		
BRIDGE @ STA. 298+34.21 -L- (LEFT LANE)	4 INCH SLOPE PROTECTION	* WELDED WIRE FABRIC 60 INCHES WIDE
	SQUARE YARDS	APPROX. L.F.
END BENT 1	195	390
END BENT 2	265	530

* QUANTITY SHOWN IS BASED ON 5' POURS.

GENERAL NOTES

SLOPE PROTECTION SHALL BE PLACED UNDER THE ENDS OF THE BRIDGE AS SHOWN IN THE DETAILS. STRAIGHT EDGING WILL NOT BE REQUIRED UNLESS, IN THE OPINION OF THE ENGINEER, VISUAL INSPECTION INDICATES A NEED FOR IT. METHOD OF MEASUREMENT AND PAYMENT SHALL BE AS PRESCRIBED IN SECTION 462 OF THE STANDARD SPECIFICATIONS. FOR BERM WIDTH, SEE GENERAL DRAWING.

SLOPE PROTECTION SHALL CONSIST OF 4" POURED-IN-PLACE CONCRETE PAVING AS SHOWN IN THE DETAILS ON THIS SHEET. CONCRETE SHALL BE CLASS "B". THE CONCRETE SURFACE SHALL BE FLOATED WITH A WOODEN FLOAT AND FINISHED. WELDED WIRE FABRIC REINFORCING SHALL BE 6 X 6 - W1.4 X W1.4, 60" WIDE. SLOPE PROTECTION SHALL BE POURED IN 5' STRIPS AS SHOWN IN THE "POURING DETAIL" WITH 2'-0" LONG #4 BARS PLACED ALONG THE SLOPE BETWEEN STRIPS AT 1'-6" MAXIMUM SPACING. SLOPE PROTECTION MAY BE POURED IN ALTERNATE 4' AND 5' STRIPS AS SHOWN IN THE "OPTIONAL POURING DETAIL" WITH ADJACENT RUNS OF WELDED WIRE FABRIC LAPPING AT LEAST 6". THE COST OF THE WELDED WIRE FABRIC AND #4 BARS, IF USED, SHALL BE INCLUDED IN THE CONTRACT UNIT PRICE BID PER SQUARE YARD FOR SLOPE PROTECTION.

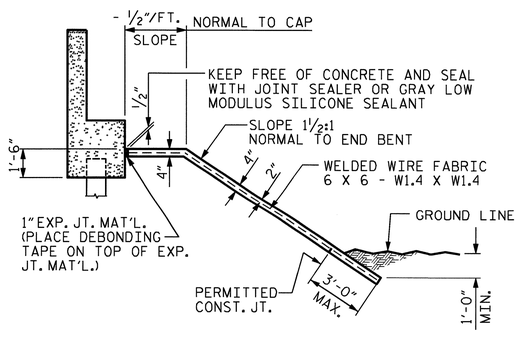

SECTION ALONG ℄ ROADWAY WHEN DITCH IS NOT PROVIDED

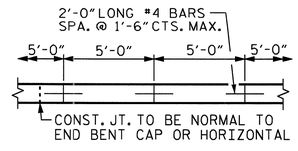

STRIP WIDTHS MAY VARY IN CURVED PORTION.

POURING DETAIL

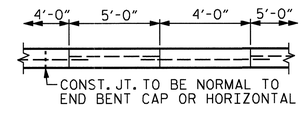

POUR A 4'-0" STRIP FIRST. STRIP WIDTHS MAY VARY IN CURVED PORTION.

OPTIONAL POURING DETAIL

PROJECT NO. R-2233AB
RUTHERFORD COUNTY
STATION: 298+34.21 -L-

STATE OF NORTH CAROLINA
DEPARTMENT OF TRANSPORTATION
RALEIGH

STANDARD
SLOPE PROTECTION DETAILS
LEFT LANE

REVISIONS								SHEET NO.
NO.	BY:	DATE:	NO.	BY:	DATE:			S-96
1			3					TOTAL SHEETS
2			4					184

NORTH CAROLINA PROFESSIONAL SEAL 20125 ENGINEER MARSHALL A. DACK, JR.
9-15-10

ASSEMBLED BY : A.L. FIGUEROA		DATE : 03-23-10	
CHECKED BY : D. HODGE		DATE : 06-29-10	
DRAWN BY : ELR 5/92	REV. 7/10/01	LES/RDR	
CHECKED BY : GRP 6/92	REV. 5/7/03	RWW/JTE	
	REV. 5/1/06	TLA/GM	

14-SEP-2010 08:16
R:\Structures\FinalPlans\Str. #3\R-2233ab_SD_STR#3_14_SP.dgn
afigueroa

STR#3

STD. NO. SP1

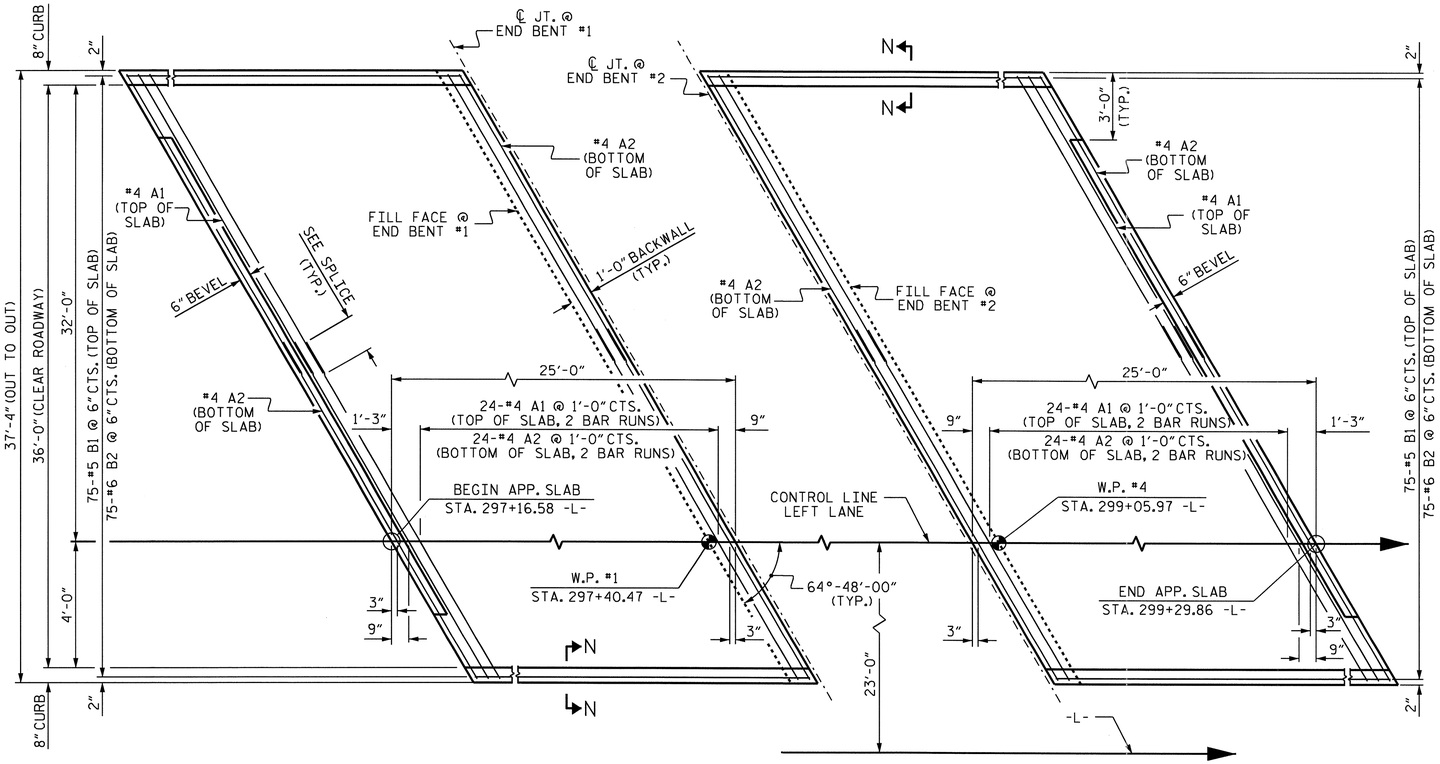

PLAN @ END BENT #1

PLAN @ END BENT #2

DIMENSIONS SHOWN ARE TYPICAL FOR BOTH APPROACH SLABS

NOTES

APPROACH SLAB SHALL NOT BE CONSTRUCTED PRIOR TO COMPLETION OF THE BRIDGE DECK.

FOR REINFORCED BRIDGE APPROACH FILL INCLUDING FABRIC, IMPERMEABLE GEOMEMBRANE, 4" Ø DRAINAGE PIPE, #78M STONE, AND SELECT MATERIAL, SEE ROADWAY PLANS.

AREA BETWEEN THE WINGWALL AND APPROACH SLAB SHALL BE GRADED TO DRAIN THE WATER AWAY FROM THE FILL FACE OF THE BRIDGE AND SHALL BE PAVED. SEE ROADWAY PLANS.

THE 6" COMP. A.B.C. SHALL BE FLUSH WITH THE ROADWAY END OF THE APPROACH SLAB AND SHALL EXTEND 1'-0" OUTSIDE EACH EDGE OF THE APPROACH SLAB.

THE CONTRACTOR MAY USE 4" TYPE B-25.0B ASPHALT CONCRETE BASE COURSE IN LIEU OF 6" COMP. A.B.C. IF THIS OPTION IS USED, THE BASE COURSE SHALL BE FLUSH WITH THE ROADWAY END OF THE APPROACH SLAB, AND THE WIDTH SHALL BE THE SAME AS THAT OF THE APPROACH SLAB.

THE CONTRACTOR MAY USE 5" CLASS "A" CONCRETE BASE IN LIEU OF 6" COMP. A.B.C. IF THIS OPTION IS USED, THE CONCRETE BASE SHALL BE FLUSH WITH THE ROADWAY END OF THE APPROACH SLAB, AND THE WIDTH SHALL BE THE SAME AS THAT OF THE APPROACH SLAB. THE CONCRETE SHALL BE FINISHED TO A SMOOTH SURFACE AND A LAYER OF 30 LB ROOFING FELT SHALL BE PLACED BETWEEN THE CONCRETE BASE AND THE APPROACH SLAB TO PREVENT BOND. THE APPROACH SLAB SHALL NOT BE CAST UNTIL THE CONCRETE BASE HAS REACHED AN AGE OF THREE CURING DAYS.

WITH EVAZOTE JOINT SEAL

FOR EVAZOTE JOINT SEALS, SEE SPECIAL PROVISIONS.

THE NOMINAL UNCOMPRESSED SEAL WIDTH OF THE EVAZOTE JOINT SEAL SHALL BE 2½".

FOR ELASTOMERIC CONCRETE, SEE SPECIAL PROVISIONS.

BILL OF MATERIAL

APPROACH SLAB AT EB #1

BAR	NO.	SIZE	TYPE	LENGTH	WEIGHT
* A1	50	#4	STR	21'-6"	718
A2	52	#4	STR	21'-4"	741
* B1	75	#5	STR	23'-8"	1851
B2	75	#6	STR	24'-8"	2779
REINFORCING STEEL				LBS.	3520
* EPOXY COATED REINFORCING STEEL				LBS.	2569
CLASS AA CONCRETE				C. Y.	35.1

APPROACH SLAB AT EB #2

BAR	NO.	SIZE	TYPE	LENGTH	WEIGHT
* A1	50	#4	STR	21'-6"	718
A2	52	#4	STR	21'-4"	741
* B1	75	#5	STR	23'-8"	1851
B2	75	#6	STR	24'-8"	2779
REINFORCING STEEL				LBS.	3520
* EPOXY COATED REINFORCING STEEL				LBS.	2569
CLASS AA CONCRETE				C. Y.	35.1

2'-0" SPLICE FOR A1
1'-9" SPLICE FOR A2

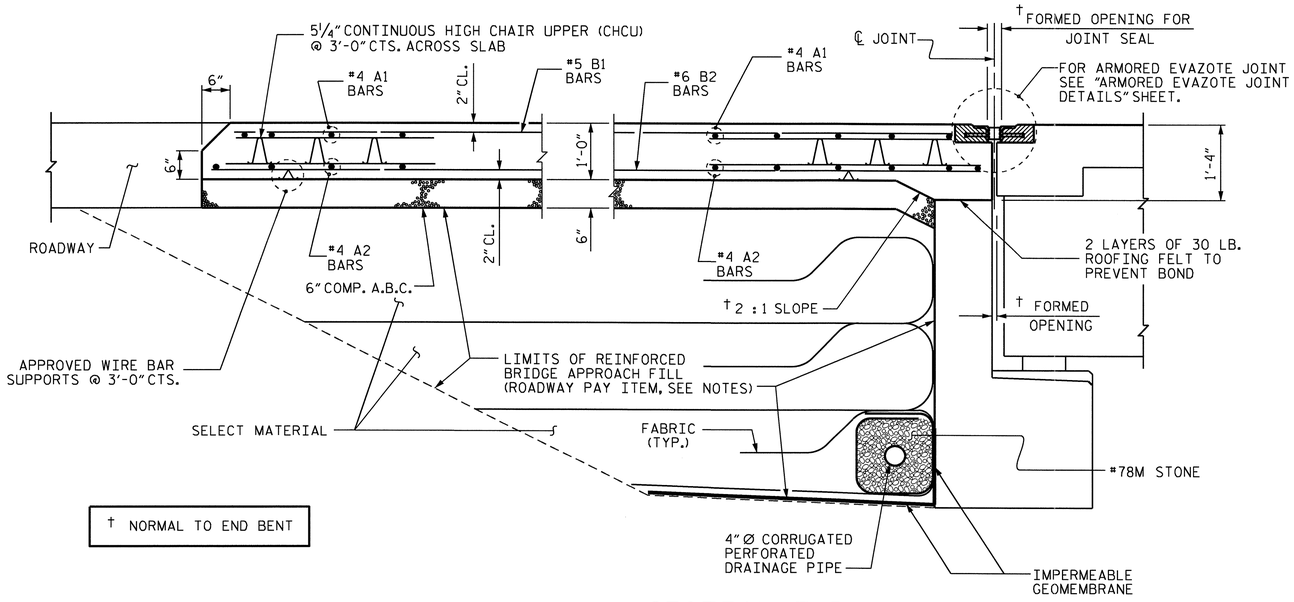

† NORMAL TO END BENT

SECTION THRU SLAB

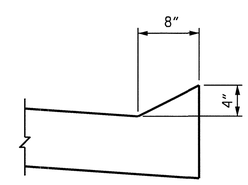

SECTION N-N

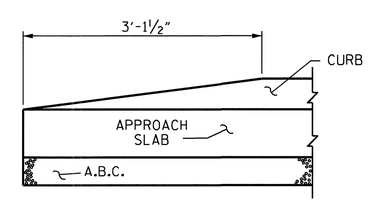

END OF CURB WITHOUT SHOULDER BERM GUTTER

CURB DETAILS

PROJECT NO. R-2233AB
RUTHERFORD COUNTY
STATION: 298+34.21 -L-

SHEET 1 OF 2

STATE OF NORTH CAROLINA
DEPARTMENT OF TRANSPORTATION
RALEIGH

BRIDGE APPROACH SLAB FOR FLEXIBLE PAVEMENT

LEFT LANE

NORTH CAROLINA PROFESSIONAL SEAL 20125 ENGINEER
9-15-10

ASSEMBLED BY : A. SORSENGINH	DATE : 2/11/10
CHECKED BY : M. POOLE	DATE : 2/24/10
DRAWN BY : EEM 3/95	REV. 7/10/01 LES/RDR
CHECKED BY : VAP 3/95	REV. 5/7/03R RWW/JTE
	REV. 5/1/06R KMM/GM

REVISIONS

NO.	BY:	DATE:	NO.	BY:	DATE:
1			3		
2			4		

SHEET NO. S-97
TOTAL SHEETS 184

08-SEP-2010 15:12
R:\Structures\Final Plans\Str. #3\R-2233AB_SD_AS.dgn
afigueroa

STR. #3 STD. NO. BAS4

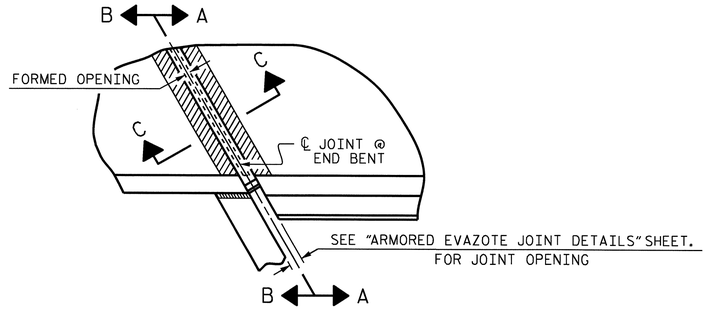

PLAN

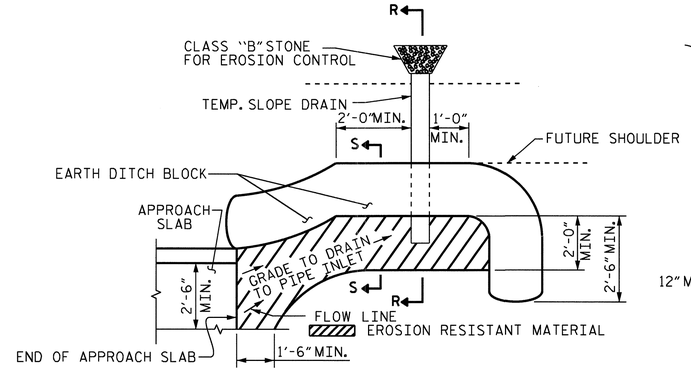

NOTE: IMMEDIATELY AFTER THE CONSTRUCTION OF THE APPROACH SLAB, THE CONTRACTOR SHALL PROVIDE TEMPORARY BERM AND SLOPE DRAIN. CONTRACTOR SHALL GRADE TO PIPE INLET AND PROVIDE EROSION RESISTANT MATERIAL AS SHOWN. THE EROSION RESISTANT MATERIAL SHALL BE EITHER 1) ASPHALT PLANT MIX, TYPE 1 OR TYPE 2, MIN. 2" DEPTH, 2) EROSION CONTROL MAT, OR 3) CONCRETE, AS DIRECTED BY THE ENGINEER. THE SLOPE DRAIN SHALL CONSIST OF A NON-PERFORATED TEMPORARY DRAINAGE PIPE, 12 INCHES IN DIAMETER.

PLAN VIEW

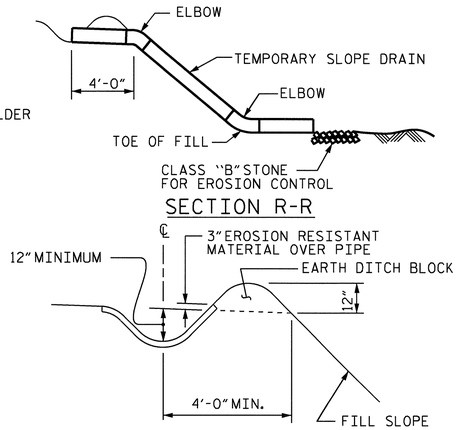

SECTION S-S

TEMPORARY BERM AND SLOPE DRAIN DETAILS

(TO BE USED WHEN SHOULDER BERM GUTTER IS REQUIRED)

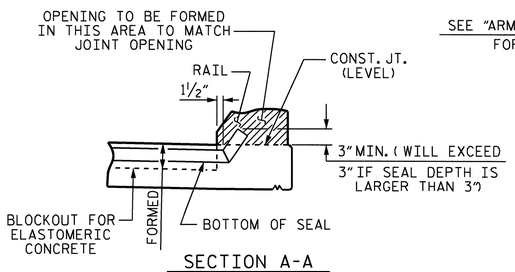

SECTION A-A

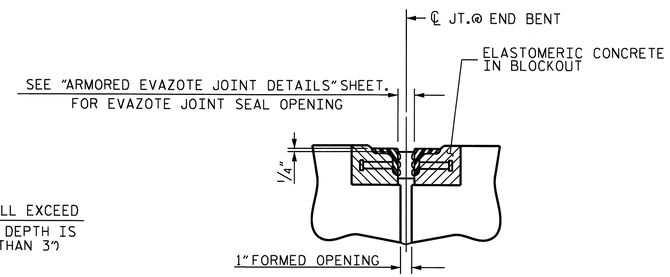

SECTION C-C

ARMORED EVAZOTE JOINT SEAL

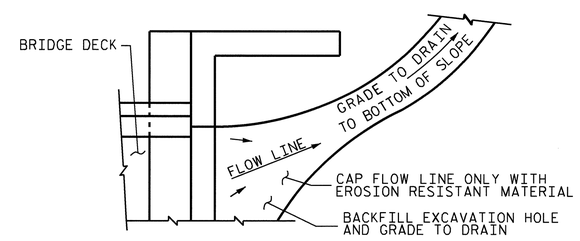

NOTE: IF THE APPROACH SLAB IS NOT CONSTRUCTED IMMEDIATELY AFTER THE BACKFILLING OF THE END BENT EXCAVATION, GRADE TO DRAIN TO THE BOTTOM OF THE SLOPE AND PROVIDE EROSION RESISTANT MATERIAL, SUCH AS FIBERGLASS ROVING OR AS DIRECTED BY THE ENGINEER TO PREVENT SOIL EROSION AND TO PROTECT THE AREA ADJACENT TO THE STRUCTURE. THE CONTRACTOR WILL BE REQUIRED TO REMOVE THESE MATERIALS PRIOR TO CONSTRUCTION OF THE APPROACH SLAB.

TEMPORARY DRAINAGE DETAIL

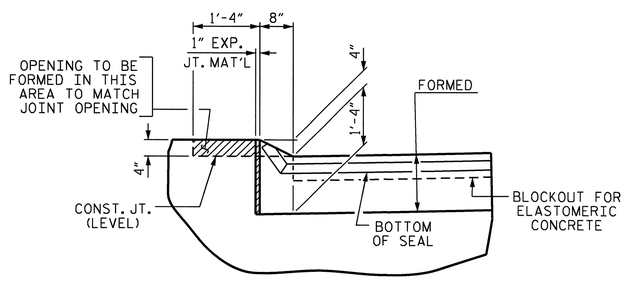

SECTION B-B

JOINT SEAL DETAILS @ END BENT

EVAZOTE JOINT SEAL TO BE CUT, HEAT WELDED AND TURNED UP PARALLEL TO SLOPED FACE OF THE BARRIER RAIL.

PROJECT NO. R-2233AB
RUTHERFORD COUNTY
STATION: 298+34.21 -L-

SHEET 2 OF 2

STATE OF NORTH CAROLINA
DEPARTMENT OF TRANSPORTATION
RALEIGH

BRIDGE APPROACH SLAB DETAILS

LEFT LANE

NORTH CAROLINA PROFESSIONAL SEAL 20125 ENGINEER MARSHALL L. GARRETT, JR.
9-15-10

REVISIONS						SHEET NO.
NO.	BY:	DATE:	NO.	BY:	DATE:	S-98
1			3			TOTAL SHEETS
2			4			184

ASSEMBLED BY :	A. SORSENGINH	DATE :	2/12/10
CHECKED BY :	M. POOLE	DATE :	2/24/10
DRAWN BY : FCJ	11/88	REV. 10/17/00	RWW/LES
CHECKED BY : ARB	11/88	REV. 5/7/03	RWW/JTE
		REV. 5/1/06R	MAA/KMM

14-SEP-2010 13:47
R:\Structures\Final Plans\Str. #3\R-2233AB_SD_STR#3_15_AS.dgn
aflgueroa

STR. #3 STD. NO. BAS10

OVERHANG BRACKET CALCULATION INSTRUCTIONS

AASHTO SHAPES - TYPES III, IV, V, AND VI

1. RECORD KNOWN INFORMATION ON "BRIDGE OVERHANG BRACKET SUMMARY" ON SHEET 2
2. CALCULATE THE MAXIMUM SCREED LOAD PER BRACKET (SLPB) WITH AN ESTIMATED R = 1.5. SLPB = R X W. ROUND VALUE UP TO NEAREST SLPB VALUE INDICATED ON APPROPRIATE TABLE 1-1, 1-2, 1-3, OR 1-4.
3. WITH THE ESTIMATED SLPB, OVERHANG SLAB THICKNESS, "K" VALUE, AND 45° HANGER SAFE WORKING LOAD (SWL), ENTER THE APPROPRIATE TABLE 1-1, 1-2, 1-3, OR 1-4 (BASED ON OVERHANG DIMENSION) AND DETERMINE THE BRACKET SPACING, S.
4. CALCULATE S/D1 AND S/D2, ROUNDING UP TO NEAREST VALUE IN TABLE 2. ENTER TABLE 2 AND DETERMINE R VALUE.
5. CALCULATE REVISED SLPB. ROUND VALUE UP TO NEAREST SLPB VALUE INDICATED ON APPROPRIATE TABLE 1-1, 1-2, 1-3, OR 1-4.
6. WITH THE REVISED SLPB, OVERHANG SLAB THICKNESS, "K" VALUE AND 45 HANGER SAFE WORKING LOAD (SWL), ENTER THE APPROPRIATE TABLE 1-1, 1-2, 1-3 OR 1-4 (BASED ON OVERHANG DIMENSION) AND DETERMINE REVISED BRACKET SPACING, S.
7. CONTINUE ITERATIONS OF STEPS 4-6 UNTIL THE REVISED BRACKET SPACING, S, IS THE SAME AS THE PREVIOUS S VALUE.
8. CHECK LUMBER JOIST SPACING: WITH BRACKET SPACING VALUE, S, ROUND THIS VALUE UP TO THE NEAREST VALUE OF ALLOWABLE SPAN LENGTH OF JOIST OF TABLE 3, USING THIS VALUE, ALONG WITH THE AVERAGE OVERHANG SLAB THICKNESS AND THE LUMBER JOIST SIZE, DETERMINE JOIST SPACING FROM TABLE 3. IF NECESSARY, ADJUST LUMBER JOIST SIZE AND/OR JOIST SPACING TO MEET ALLOWABLE SPAN LENGTH OF JOIST.
9. CONVERSELY, IF THE DESIRED JOIST SPACING IS KNOWN, USE THIS ALONG WITH THE AVERAGE OVERHANG SLAB THICKNESS AND THE LUMBER JOIST SIZE TO DETERMINE IF ALLOWABLE SPAN LENGTH OF JOIST IS GREATER THAN THE BRACKET SPACING, S. IF NECESSARY, ADJUST LUMBER JOIST SIZE TO MEET REQUIREMENTS OF ALLOWABLE SPAN LENGTH OF JOIST AND JOIST SPACING.
10. RECORD REMAINING INFORMATION ON "BRIDGE OVERHANG BRACKET SUMMARY" FORM.
11. SUBMIT FORM AND CALCULATIONS FOR REVIEW AND APPROVAL.

TABLE 1-1

(FOR USE ON **UP TO 2'-0" OVERHANG Ⓛ** & 54" HORIZONTAL LEG LENGTH OF THE OVERHANG BRACKET)

AVG. SLAB THICKNESS Ⓣ (in)	BRACKET Ⓚ DIMENSION (in)	SCREED LOAD PER BRACKET									45° HANGER SWL (lbs)
		2500 lbs.	2250 lbs.	2000 lbs.	1750 lbs.	1500 lbs.	1250 lbs.	1000 lbs.	750 lbs.	0 lbs.	
		BRACKET SPACING									
10	30				2'-1"	2'-7"	3'-2"	3'-8"	4'-2"	5'-9"	4000
		3'-6"	4'-0"	4'-5"	4'-9"	5'-1"	5'-3"	5'-5"	5'-7"	6'-7"	6000
	40				2'-1"	2'-7"	3'-2"	3'-8"	4'-2"	5'-9"	4000
		3'-6"	4'-0"	4'-5"	4'-9"	5'-1"	5'-3"	5'-5"	5'-7"	6'-7"	6000
	50				2'-1"	2'-7"	3'-2"	3'-8"	4'-2"	5'-9"	4000
		3'-6"	4'-0"	4'-5"	4'-9"	5'-1"	5'-3"	5'-5"	5'-7"	6'-7"	6000
12	30					2'-4"	2'-10"	3'-4"	3'-9"	5'-2"	4000
		3'-2"	3'-7"	4'-1"	4'-7"	5'-0"	5'-2"	5'-4"	5'-7"	6'-5"	6000
	40					2'-4"	2'-10"	3'-4"	3'-9"	5'-2"	4000
		3'-2"	3'-7"	4'-1"	4'-7"	5'-0"	5'-2"	5'-4"	5'-7"	6'-5"	6000
	50					2'-4"	2'-10"	3'-4"	3'-9"	5'-2"	4000
		3'-2"	3'-7"	4'-1"	4'-7"	5'-0"	5'-2"	5'-4"	5'-7"	6'-5"	6000
14	30					2'-2"	2'-7"	3'-0"	3'-5"	4'-9"	4000
		2'-10"	3'-4"	3'-9"	4'-2"	4'-7"	5'-0"	5'-4"	5'-7"	6'-4"	6000
	40					2'-2"	2'-7"	3'-0"	3'-5"	4'-9"	4000
		2'-10"	3'-4"	3'-9"	4'-2"	4'-7"	5'-0"	5'-4"	5'-7"	6'-4"	6000
	50					2'-2"	2'-7"	3'-0"	3'-5"	4'-9"	4000
		2'-10"	3'-4"	3'-9"	4'-2"	4'-7"	5'-0"	5'-4"	5'-7"	6'-4"	6000
16	30					2'-0"	2'-4"	2'-9"	3'-2"	4'-4"	4000
		2'-8"	3'-0"	3'-5"	3'-10"	4'-3"	4'-7"	5'-0"	5'-5"	6'-3"	6000
	40					2'-0"	2'-4"	2'-9"	3'-2"	4'-4"	4000
		2'-8"	3'-0"	3'-5"	3'-10"	4'-3"	4'-7"	5'-0"	5'-5"	6'-3"	6000
	50					2'-0"	2'-4"	2'-9"	3'-2"	4'-4"	4000
		2'-8"	3'-0"	3'-5"	3'-10"	4'-3"	4'-7"	5'-0"	5'-5"	6'-3"	6000

TABLE 1-2

(FOR USE ON **OVER 2'-0" TO 2'-6" OVERHANG Ⓛ** & 54" HORIZONTAL LEG LENGTH OF THE OVERHANG BRACKET)

AVG. SLAB THICKNESS Ⓣ (in)	BRACKET Ⓚ DIMENSION (in)	SCREED LOAD PER BRACKET									45° HANGER SWL (lbs)
		2500 lbs.	2250 lbs.	2000 lbs.	1750 lbs.	1500 lbs.	1250 lbs.	1000 lbs.	750 lbs.	0 lbs.	
		BRACKET SPACING									
10	30					2'-4"	2'-9"	3'-3"	3'-8"	5'-1"	4000
		3'-1"	3'-6"	4'-0"	4'-5"	4'-11"	5'-3"	5'-5"	5'-7"	6'-7"	6000
	40					2'-4"	2'-9"	3'-3"	3'-8"	5'-1"	4000
		3'-1"	3'-6"	4'-0"	4'-5"	4'-11"	5'-3"	5'-5"	5'-7"	6'-7"	6000
	50					2'-4"	2'-9"	3'-3"	3'-8"	5'-1"	4000
		3'-1"	3'-6"	4'-0"	4'-5"	4'-11"	5'-3"	5'-5"	5'-7"	6'-7"	6000
12	30					2'-1"	2'-6"	2'-11"	3'-4"	4'-6"	4000
		2'-9"	3'-2"	3'-7"	4'-0"	4'-5"	4'-10"	5'-3"	5'-7"	6'-5"	6000
	40					2'-1"	2'-6"	2'-11"	3'-4"	4'-6"	4000
		2'-9"	3'-2"	3'-7"	4'-0"	4'-5"	4'-10"	5'-3"	5'-7"	6'-5"	6000
	50					2'-1"	2'-6"	2'-11"	3'-4"	4'-6"	4000
		2'-9"	3'-2"	3'-7"	4'-0"	4'-5"	4'-10"	5'-3"	5'-7"	6'-5"	6000
14	30						2'-3"	2'-7"	3'-0"	4'-1"	4000
		2'-6"	2'-10"	3'-3"	3'-7"	4'-0"	4'-4"	4'-9"	5'-1"	6'-3"	6000
	40						2'-3"	2'-7"	3'-0"	4'-1"	4000
		2'-6"	2'-10"	3'-3"	3'-7"	4'-0"	4'-4"	4'-9"	5'-1"	6'-3"	6000
	50						2'-3"	2'-7"	3'-0"	4'-1"	4000
		2'-6"	2'-10"	3'-3"	3'-7"	4'-0"	4'-4"	4'-9"	5'-1"	6'-3"	6000
16	30						2'-1"	2'-5"	2'-9"	3'-9"	4000
		2'-3"	2'-7"	2'-11"	3'-4"	3'-8"	4'-0"	4'-4"	4'-8"	5'-8"	6000
	40						2'-1"	2'-5"	2'-9"	3'-9"	4000
		2'-3"	2'-7"	2'-11"	3'-4"	3'-8"	4'-0"	4'-4"	4'-8"	5'-8"	6000
	50						2'-1"	2'-5"	2'-9"	3'-9"	4000
		2'-3"	2'-7"	2'-11"	3'-4"	3'-8"	4'-0"	4'-4"	4'-8"	5'-8"	6000

TABLE 1-3

(FOR USE ON **OVER 2'-6" TO 3'-0" OVERHANG Ⓛ** & 54" HORIZONTAL LEG LENGTH OF THE OVERHANG BRACKET)

AVG. SLAB THICKNESS Ⓣ (in)	BRACKET Ⓚ DIMENSION (in)	SCREED LOAD PER BRACKET									45° HANGER SWL (lbs)
		2500 lbs.	2250 lbs.	2000 lbs.	1750 lbs.	1500 lbs.	1250 lbs.	1000 lbs.	750 lbs.	0 lbs.	
		BRACKET SPACING									
10	30					2'-1"	2'-6"	2'-11"	3'-4"	4'-6"	4000
						4'-5"	4'-10"	5'-3"	5'-7"	6'-7"	6000
	40					2'-1"	2'-6"	2'-11"	3'-4"	4'-6"	4000
		2'-9"	3'-2"	3'-7"	4'-0"	4'-5"	4'-10"	5'-3"	5'-7"	6'-7"	6000
	50					2'-1"	2'-6"	2'-11"	3'-4"	4'-6"	4000
		2'-9"	3'-2"	3'-7"	4'-0"	4'-5"	4'-10"	5'-3"	5'-7"	6'-7"	6000
12	30						2'-2"	2'-7"	2'-11"	4'-0"	4000
						3'-11"	4'-3"	4'-8"	5'-0"	6'-1"	6000
	40						2'-2"	2'-7"	2'-11"	4'-0"	4000
		2'-5"	2'-10"	3'-2"	3'-6"	3'-11"	4'-3"	4'-8"	5'-0"	6'-1"	6000
	50						2'-2"	2'-7"	2'-11"	4'-0"	4000
		2'-5"	2'-10"	3'-2"	3'-6"	3'-11"	4'-3"	4'-8"	5'-0"	6'-1"	6000
14	30						2'-0"	2'-4"	2'-8"	3'-8"	4000
					3'-2"	3'-6"	3'-10"	4'-2"	4'-6"	5'-6"	6000
	40						2'-0"	2'-4"	2'-8"	3'-8"	4000
		2'-2"	2'-6"	2'-10"	3'-2"	3'-6"	3'-10"	4'-2"	4'-6"	5'-6"	6000
	50						2'-0"	2'-4"	2'-8"	3'-8"	4000
		2'-2"	2'-6"	2'-10"	3'-2"	3'-6"	3'-10"	4'-2"	4'-6"	5'-6"	6000
16	30							2'-1"	2'-5"	3'-4"	4000
					2'-11"	3'-2"	3'-6"	3'-10"	4'-1"	5'-0"	6000
	40							2'-1"	2'-5"	3'-4"	4000
		2'-0"	2'-4"	2'-7"	2'-11"	3'-2"	3'-6"	3'-10"	4'-1"	5'-0"	6000
	50							2'-1"	2'-5"	3'-4"	4000
		2'-0"	2'-4"	2'-7"	2'-11"	3'-2"	3'-6"	3'-10"	4'-1"	5'-0"	6000

TABLE 1-4

(FOR USE ON **OVER 3'-0" TO 3'-6" OVERHANG Ⓛ** & 54" HORIZONTAL LEG LENGTH OF THE OVERHANG BRACKET)

AVG. SLAB THICKNESS Ⓣ (in)	BRACKET Ⓚ DIMENSION (in)	SCREED LOAD PER BRACKET									45° HANGER SWL (lbs)
		2500 lbs.	2250 lbs.	2000 lbs.	1750 lbs.	1500 lbs.	1250 lbs.	1000 lbs.	750 lbs.	0 lbs.	
		BRACKET SPACING									
10	30						2'-1"	2'-5"	2'-9"	3'-10"	4000
						2'-3"	2'-11"	3'-7"	4'-3"	5'-9"	6000
	40						2'-1"	2'-5"	2'-9"	3'-10"	4000
				2'-4"	3'-0"	3'-7"	4'-1"	4'-5"	4'-9"	5'-9"	6000
	50						2'-1"	2'-5"	2'-9"	3'-10"	4000
		2'-4"	2'-8"	3'-0"	3'-4"	3'-8"	4'-1"	4'-5"	4'-9"	5'-9"	6000
12	30							2'-2"	2'-6"	3'-5"	4000
						2'-1"	2'-8"	3'-4"	3'-11"	5'-2"	6000
	40							2'-2"	2'-6"	3'-5"	4000
				2'-2"	2'-9"	3'-4"	3'-7"	3'-11"	4'-3"	5'-2"	6000
	50							2'-2"	2'-6"	3'-5"	4000
		2'-1"	2'-4"	2'-8"	3'-0"	3'-4"	3'-7"	3'-11"	4'-3"	5'-2"	6000
14	30								2'-3"	3'-1"	4000
						2'-0"	2'-6"	3'-1"	3'-8"	4'-8"	6000
	40								2'-3"	3'-1"	4000
				2'-0"	2'-7"	3'-0"	3'-3"	3'-6"	3'-10"	4'-8"	6000
	50								2'-3"	3'-1"	4000
			2'-2"	2'-5"	2'-8"	3'-0"	3'-3"	3'-6"	3'-10"	4'-8"	6000
16	30								2'-0"	2'-9"	4000
							2'-4"	2'-10"	3'-5"	4'-3"	6000
	40								2'-0"	2'-9"	4000
					2'-5"	2'-8"	2'-11"	3'-3"	3'-6"	4'-3"	6000
	50								2'-0"	2'-9"	4000
				2'-2"	2'-5"	2'-8"	2'-11"	3'-3"	3'-6"	4'-3"	6000

DEFINITIONS

SLPB = SCREED LOAD PER BRACKET (R × W)
R = SCREED LOAD FACTOR, OBTAINED FROM TABLE 2
W = WHEEL LOAD
S = BRACKET SPACING
T = AVERAGE SLAB THICKNESS
SWL = SAFE WORKING LOAD
K = DIMENSION DEFINED ON "BRIDGE OVERHANG BRACKET SUMMARY" ON SHEET 2
L = OVERHANG MEASURED FROM EDGE OF TOP FLANGE TO EDGE OF SUPERSTRUCTURE

NORTH CAROLINA PROFESSIONAL SEAL 18788 ENGINEER CHANG-CHUAN VICTOR CHAO

Chang-Chuan V. Chao
12-18-2009

PROJECT NO. R-2233AB
RUTHERFORD COUNTY
STATION: 298+34.21 -L-

SHEET 1 OF 3

STATE OF NORTH CAROLINA
DEPARTMENT OF TRANSPORTATION
RALEIGH

STANDARD OVERHANG FALSEWORK

AASHTO TYPES
III, IV, V, AND VI

LEFT LANE

REVISIONS						SHEET NO.
NO.	BY:	DATE:	NO.	BY:	DATE:	S-99
1			3			TOTAL SHEETS
2			4			184

ASSEMBLED BY:	DATE:
CHECKED BY:	DATE:
DRAWN BY: R. WRIGHT 06/04	REV.
CHECKED BY: C. V. CHAO 06/04	

18-DEC-2009 09:22
d:\wdlr\victor\overhangfalsework\tiebar&strut\r-2233ab_type_iv\r2233ab*3overhangesheets.dgn
vchao

BRIDGE OVERHANG BRACKET SUMMARY

TOTAL SCREED WEIGHT = _____ LBS.
NUMBER OF SCREED WHEELS = _____
SCREED WHEEL LOAD (W) = _____ LBS.
SCREED LOAD PER BRACKET = _____ LBS.

PROJECT No. : _____
COUNTY : _____
STATION : _____
DESCRIPTION : _____

DATE : _____
DESIGN BY : _____
CHECK BY : _____

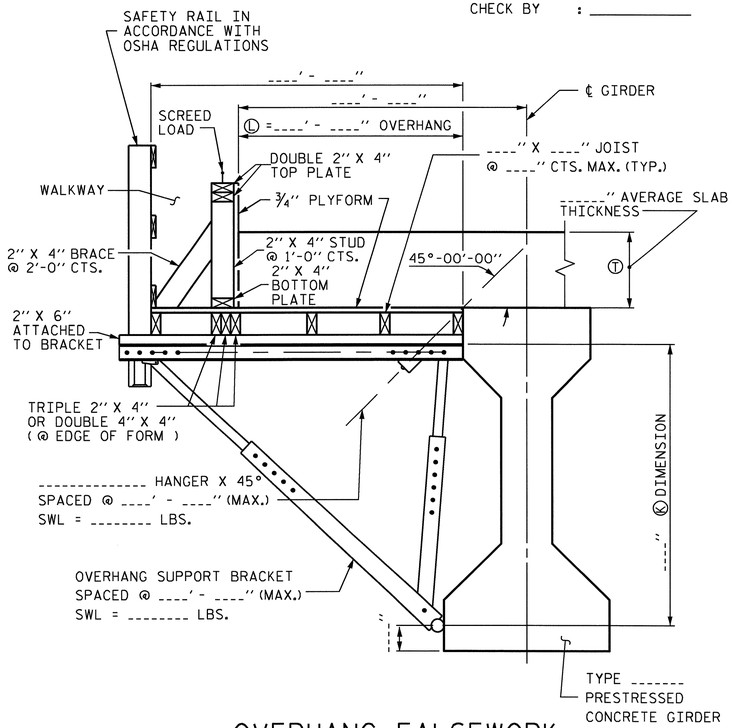

OVERHANG FALSEWORK

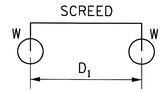

4-WHEEL MACHINE

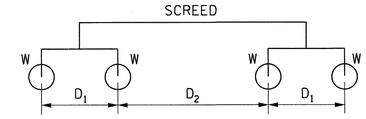

8-WHEEL MACHINE

4 WHEEL MACHINE	
S/D1	R
<= 1.0	1.00
1.1	1.09
1.2	1.17
1.3	1.23
1.4	1.29
1.5	1.33
1.6	1.38
1.7	1.41
1.8	1.44
1.9	1.47
2.0	1.50
2.2	1.55
2.4	1.58
2.6	1.62
2.8	1.64
3.0	1.67
3.5	1.71
4.0	1.75

TABLE 2: SCREED LOAD FACTOR "R"

		THE SCREED LOAD FACTOR R (FOR 8 WHEEL MACHINE)																	
		S/D_2																	
		<= 1.0	1.1	1.2	1.3	1.4	1.5	1.6	1.7	1.8	1.9	2.0	2.2	2.4	2.6	2.8	3.0	3.5	4.0
S/D_1	<= 1.0	1.00	1.09	1.17	1.23	1.29	1.33	1.38	1.41	1.44	1.47	1.50	1.55	1.58	1.62	1.64	1.67	1.71	1.75
	1.1	1.09	1.18	1.26	1.32	1.38	1.42	1.47	1.50	1.54	1.56	1.59	1.64	1.67	1.71	1.73	1.76	1.81	1.84
	1.2	1.17	1.26	1.33	1.40	1.45	1.50	1.54	1.58	1.61	1.64	1.67	1.71	1.75	1.78	1.81	1.83	1.88	1.92
	1.3	1.23	1.32	1.40	1.46	1.52	1.56	1.61	1.64	1.68	1.70	1.73	1.78	1.81	1.85	1.87	1.90	1.95	1.98
	1.4	1.29	1.38	1.45	1.52	1.57	1.62	1.66	1.70	1.73	1.76	1.79	1.83	1.87	1.90	1.93	1.95	2.00	2.07
	1.5	1.33	1.42	1.50	1.56	1.62	1.67	1.71	1.75	1.78	1.81	1.83	1.88	1.92	1.95	1.98	2.00	2.10	2.17
	1.6	1.38	1.47	1.54	1.61	1.66	1.71	1.75	1.79	1.82	1.85	1.88	1.92	1.96	1.99	2.04	2.08	2.18	2.25
	1.7	1.41	1.50	1.58	1.64	1.70	1.75	1.79	1.82	1.86	1.89	1.91	1.96	2.00	2.05	2.11	2.16	2.25	2.32
	1.8	1.44	1.54	1.61	1.68	1.73	1.78	1.82	1.86	1.89	1.92	1.94	1.99	2.06	2.12	2.17	2.22	2.32	2.39
	1.9	1.47	1.56	1.64	1.70	1.76	1.81	1.85	1.89	1.92	1.95	1.97	2.04	2.11	2.18	2.23	2.28	2.38	2.45
	2.0	1.50	1.59	1.67	1.73	1.79	1.83	1.88	1.91	1.94	1.97	2.00	2.09	2.17	2.23	2.29	2.33	2.43	2.50
	2.2	1.55	1.64	1.71	1.78	1.83	1.88	1.92	1.96	1.99	2.04	2.09	2.18	2.26	2.32	2.38	2.42	2.52	2.59
	2.4	1.58	1.67	1.75	1.81	1.87	1.92	1.96	2.00	2.06	2.11	2.17	2.26	2.33	2.40	2.45	2.50	2.60	2.67
	2.6	1.62	1.71	1.78	1.85	1.90	1.95	1.99	2.05	2.12	2.18	2.23	2.32	2.40	2.46	2.52	2.56	2.66	2.73
	2.8	1.64	1.73	1.81	1.87	1.93	1.98	2.04	2.11	2.17	2.23	2.29	2.38	2.45	2.52	2.57	2.62	2.71	2.79
	3.0	1.67	1.76	1.83	1.90	1.95	2.00	2.08	2.16	2.22	2.28	2.33	2.42	2.50	2.56	2.62	2.67	2.76	2.83
	3.5	1.71	1.81	1.88	1.95	2.00	2.10	2.18	2.25	2.32	2.38	2.43	2.52	2.60	2.66	2.71	2.76	2.86	2.93
	4.0	1.75	1.84	1.92	1.98	2.07	2.17	2.25	2.32	2.39	2.45	2.50	2.59	2.67	2.73	2.79	2.83	2.93	3.00

TABLE 3: ALLOWABLE SPAN LENGTH OF JOISTS AND JOIST SPACINGS

AVG. SLAB THICKNESS Ⓣ (IN)	LUMBER JOIST SIZE (IN X IN)	JOIST SPACINGS			
		15 IN	12 IN	10 IN	8 IN
		THE ALLOWABLE SPAN LENGTH OF JOISTS			
10	2 X 4	———	4' - 6"	4' - 9"	5' - 0"
	4 X 4	5' - 9"	6' - 3"	6' - 6"	6' - 7"
12	2 X 4	———	4' - 3"	4' - 9"	5' - 0"
	4 X 4	5' - 3"	6' - 0"	6' - 3"	6' - 5"
14	2 X 4	———	4' - 0"	4' - 6"	5' - 0"
	4 X 4	———	5' - 6"	6' - 0"	6' - 4"
16	2 X 4	———	4' - 0"	4' - 3"	4' - 9"
	4 X 4	———	5' - 3"	5' - 9"	6' - 3"

NOTES

DESIGN INCLUDES CONSTRUCTION LIVE LOAD 20 PSF ON THE AREA SUPPORTED AND 75 PLF AT THE OUTSIDE DECK OF OVERHANGS.

REQUIRED MINIMUM DIAGONAL LEG CAPACITY: 3600 LB WORKING LOAD

THE CONTRACTOR HAS THE OPTION OF SUBMITTING HIS OWN DESIGN FOR OVERHANG FALSEWORK IN ACCORDANCE WITH THE SPECIAL PROVISIONS.

SUBMITTALS UTILIZING THE INSTRUCTIONS AND PROCEDURES DESCRIBED ON SHEET 1 OF 3 SHALL BE IN ACCORDANCE WITH THE APPLICABLE SECTIONS OF THE SPECIFICATIONS AND SPECIAL PROVISIONS, EXCEPT THAT CALCULATIONS FOR OVERHANG FALSEWORK NEED NOT BE SEALED BY A REGISTERED ENGINEER.

FOR OVERHANG FALSEWORK BRACING DESIGN, SEE SHEET 3 OF 3.

PROJECT NO. R-2233AB
RUTHERFORD COUNTY
STATION: 298+34.21 -L-

SHEET 2 OF 3

STATE OF NORTH CAROLINA
DEPARTMENT OF TRANSPORTATION
RALEIGH

STANDARD OVERHANG FALSEWORK

AASHTO TYPES
III, IV, V, AND VI

LEFT LANE

NORTH CAROLINA PROFESSIONAL SEAL 18788 ENGINEER CHANG-CHUAN VICTOR CHAO
Chang-Chuan V. Chao
12-18-2009

ASSEMBLED BY:	DATE:
CHECKED BY:	DATE:
DRAWN BY: R. WRIGHT 06/04	REV.
CHECKED BY: C. V. CHAO 06/04	

REVISIONS						SHEET NO.
NO.	BY:	DATE:	NO.	BY:	DATE:	S-100
1			3			TOTAL SHEETS
2			4			184

18-DEC-2009 09:22
d:\wdir\victor\overhangfalsework\tiebar&strut\r-2233ab_type_iv\r2233ab*3overhangesheets.dgn
vchao

STR. #3 OF2

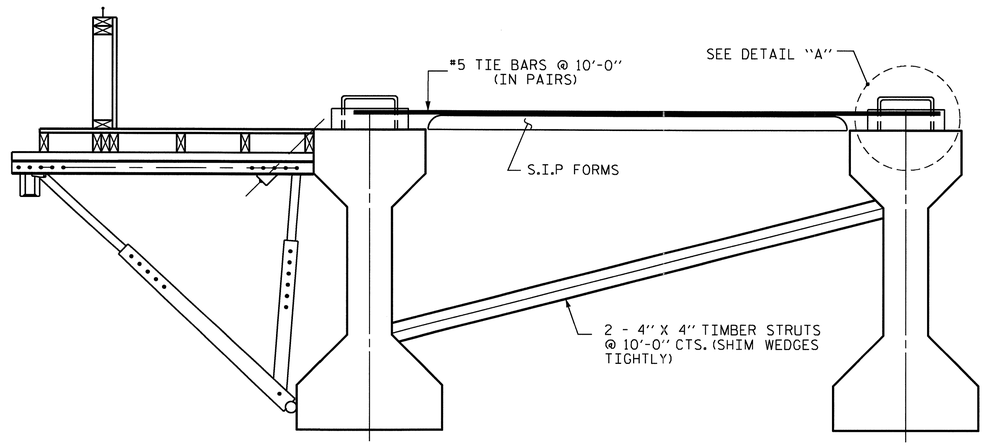

EXTERIOR GIRDER

INTERIOR GIRDER

DETAIL OF REQUIRED OVERHANG FALSEWORK BRACING SYSTEM

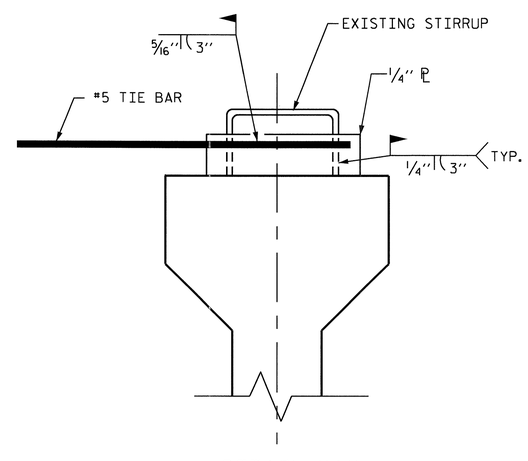

DETAIL "A"

NOTES:

EACH #5 TIE BAR SHALL BE WELDED TO ONE STIRRUP LOOP AS SHOWN IN DETAIL "A". #5 TIE BARS SHALL BE WELDED TO TWO ADJACENT STIRRUPS OF THE EXTERIOR GIRDER AND THE ADJACENT INTERIOR GIRDER BETWEEN PERMANENT DIAPHRAGMS. WELD STEEL PLATES IN BETWEEN THE TIE BARS AND THE STIRRUP LOOP. WELDING TWO TIE BARS TO THE SAME STIRRUP LOOP SHALL NOT BE PERMITTED.

MAXIMUM SPACING BETWEEN THE BRACING (TIE BARS-TIMBER STRUT) IS 10'-0" CTS. #5 TIE BARS SHALL BE LOCATED OVER A TIMBER STRUT.

INSTALL TIE BARS AND TIMBER STRUTS PRIOR TO PLACEMENT OF CONCRETE OR SCREED WEIGHT ONTO THE OVERHANG FALSEWORK.

PROJECT NO. R-2233AB
RUTHERFORD COUNTY
STATION: 298+34.21 -L-

SHEET 3 OF 3

STATE OF NORTH CAROLINA
DEPARTMENT OF TRANSPORTATION
RALEIGH

STANDARD OVERHANG FALSEWORK

AASHTO TYPES
III, IV, V, AND VI

LEFT LANE

NORTH CAROLINA PROFESSIONAL SEAL 18788 ENGINEER CHUNG-CHUAN VICTOR CHAO

Chung-Chuan V. Chao
12-18-2009

REVISIONS						SHEET NO.
NO.	BY:	DATE:	NO.	BY:	DATE:	S-101
1			3			TOTAL SHEETS
2			4			184

DRAWN BY: R. WRIGHT 06/04 DATE : _____
CHECKED BY: C. V. CHAO 06/04 DATE : _____

18-DEC-2009 09:23
d:\wdir\victor\overhangfalsework\tiebar&strut\r-2233ab_type_iv\r2233ab*3overhangesheets.dgn
vchao

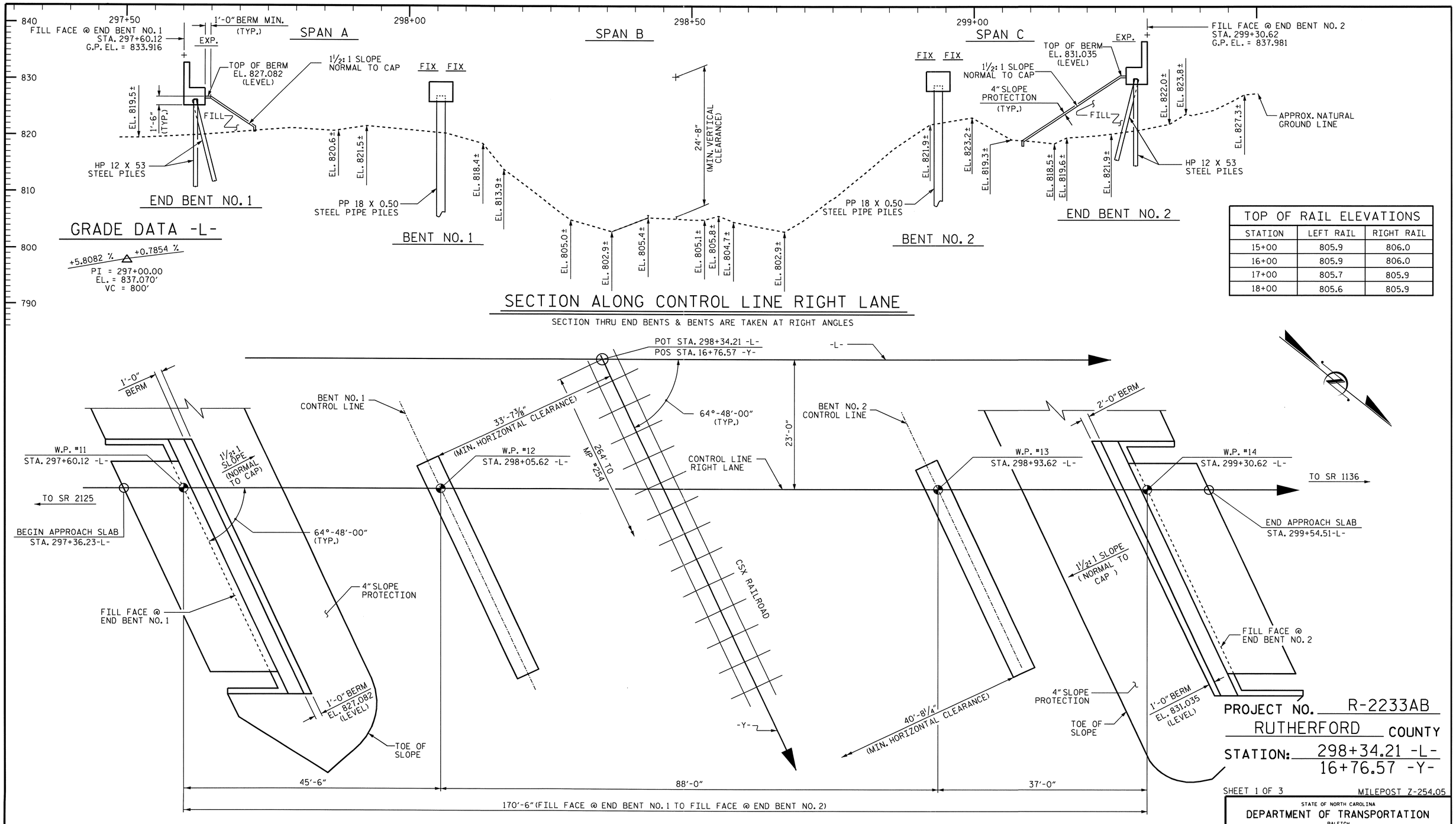

TOP OF RAIL ELEVATIONS		
STATION	LEFT RAIL	RIGHT RAIL
15+00	805.9	806.0
16+00	805.9	806.0
17+00	805.7	805.9
18+00	805.6	805.9

PLAN

PILES ARE NOT SHOWN IN PLAN VIEW

PROJECT NO. R-2233AB

RUTHERFORD COUNTY

STATION: 298+34.21 -L-
16+76.57 -Y-

SHEET 1 OF 3

MILEPOST Z-254.05

STATE OF NORTH CAROLINA
DEPARTMENT OF TRANSPORTATION
RALEIGH

GENERAL DRAWING
FOR BRIDGE ON US 221
OVER CSX RAILROAD
BETWEEN SR 2125 AND SR 1136
RIGHT LANE

NORTH CAROLINA PROFESSIONAL SEAL 30014 ENGINEER QUANG H. NGUYEN
Quang H. Nguyen 9-16-10

NORTH CAROLINA PROFESSIONAL SEAL 20125 ENGINEER MARSHALL G. CHEEK, JR.
9-15-10

REVISIONS						SHEET NO.
NO.	BY:	DATE:	NO.	BY:	DATE:	S-102
1			3			TOTAL SHEETS
2			4			184

DRAWN BY : V.X. NGUYEN/ALF DATE : 5-21-10
CHECKED BY : M.G. CHEEK DATE : 6-24-10

14-SEP-2010 13:19
R:\Structures\Final Plans\Str. #4\R-2233AB_sd_STR#4_02_GD.dgn
afigueroa

STR. #4

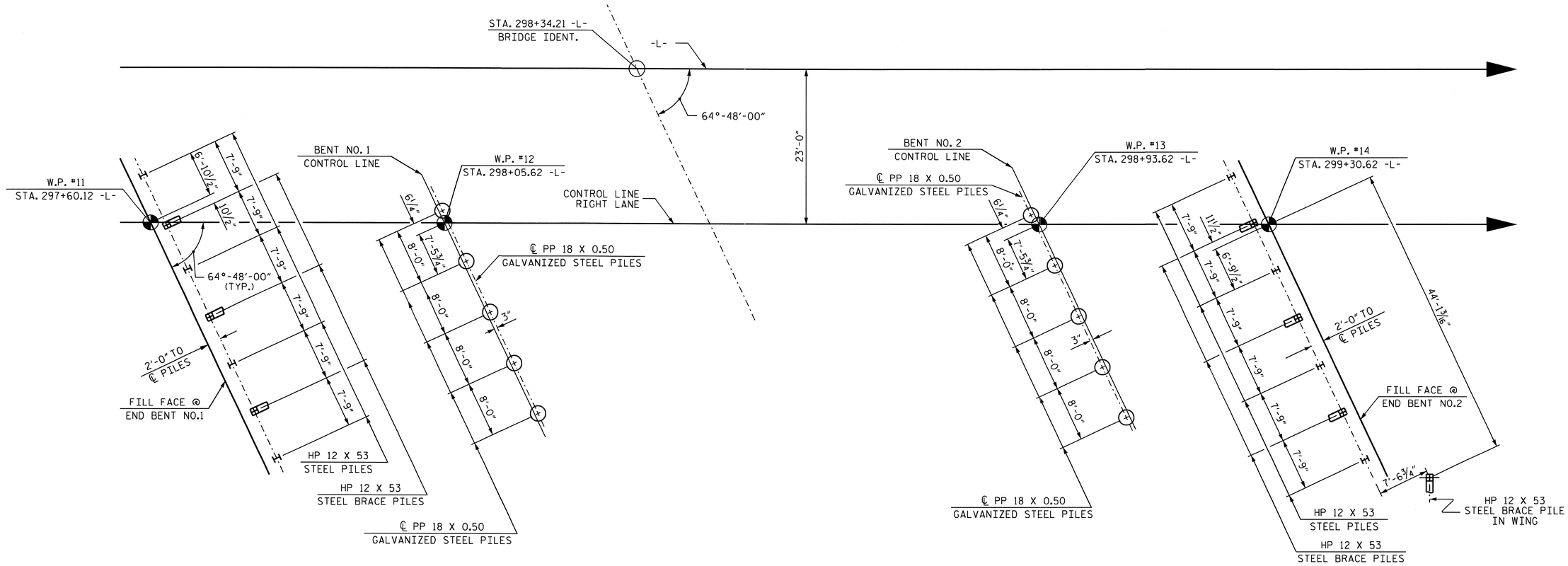

FOUNDATION LAYOUT

ALL END BENT PILES ARE HP 12 X 53.
DIMENSIONS LOCATING PILES ARE SHOWN TO THE PILE CENTERLINE AT THE BOTTOM OF THE CAP.
END BENT BRACE PILES ARE BATTERED AT 3:12.

NOTES

FOR PILES, SEE SPECIAL PROVISIONS.

DRIVE PILES AT END BENT NO. 1 AND END BENT NO. 2 TO A REQUIRED BEARING CAPACITY OF 120 TONS PER PILE. THE REQUIRED BEARING CAPACITY IS EQUAL TO THE ALLOWABLE BEARING CAPACITY WITH A MINIMUM FACTOR OF SAFETY OF TWO.

THE ALLOWABLE BEARING CAPACITY FOR PILES AT END BENT NO. 1 AND END BENT NO. 2 IS 60 TONS PER PILE.

PILES AT BENT NO. 1 SHALL EXTEND TO AN ELEVATION NO HIGHER THAN 786.0 FEET.

PILES AT BENT NO. 2 SHALL EXTEND TO AN ELEVATION NO HIGHER THAN 791.0 FEET.

DRIVE PILES AT BENT NO. 1 AND BENT NO. 2 TO A REQUIRED BEARING CAPACITY OF 350 TONS PER PILE. THE REQUIRED BEARING CAPACITY IS EQUAL TO THE ALLOWABLE BEARING CAPACITY WITH A MINIMUM FACTOR OF SAFETY OF TWO.

THE ALLOWABLE BEARING CAPACITY FOR PILES AT BENT NO. 1 AND BENT NO. 2 IS 175 TONS PER PILE.

TESTING PILES WITH THE PILE DRIVING ANALYZER (PDA) DURING DRIVING, RESTRIKING OR REDRIVING MAY BE REQUIRED. THE ENGINEER WILL DETERMINE THE NEED FOR PDA TESTING. FOR PILE DRIVING ANALYZER, SEE PILES SPECIAL PROVISIONS.

PROJECT NO. R-2233AB
RUTHERFORD COUNTY
STATION: 298+34.21 -L-

SHEET 2 OF 3

STATE OF NORTH CAROLINA
DEPARTMENT OF TRANSPORTATION
RALEIGH

GENERAL DRAWING
FOR BRIDGE ON US 221
OVER CSX RAILROAD
BETWEEN SR 2125 AND SR 1136
RIGHT LANE

NORTH CAROLINA PROFESSIONAL SEAL 20125 ENGINEER MARSHALL G. CHEEK, JR.
9-15-10

REVISIONS							SHEET NO.
NO.	BY:	DATE:	NO.	BY:	DATE:		S-103
1			3				TOTAL SHEETS
2			4				184

STR. #4

DRAWN BY : A.L. FIGUEROA DATE : 07-28-10
CHECKED BY : M.G. CHEEK DATE : 08-15-10

14-SEP-2010 08:38
R:\Structures\Final Plans\Str. #4\R-2233AB_sd_str#4_02B_FL.dgn
afigueroa

BM #1: RAILROAD SPIKE SET IN BASE OF 12" OAK, STATION 297+09.27 -L- (398.86' LT.), ELEV.= 832.55'

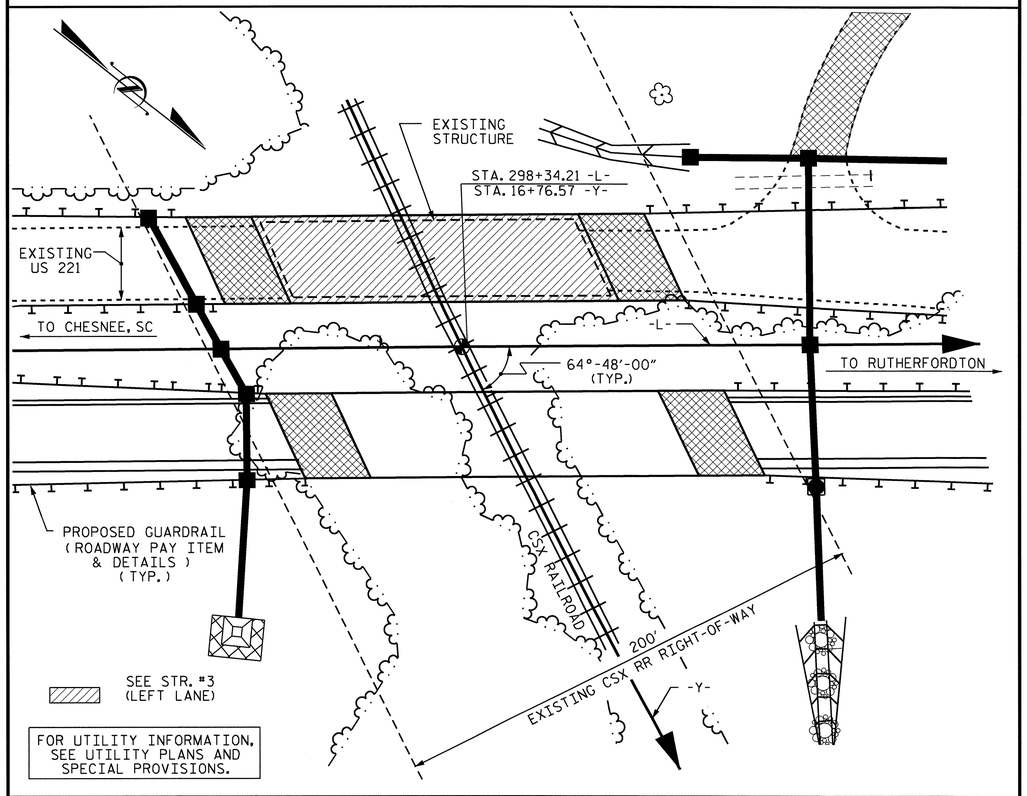

LOCATION SKETCH

NOTES

ASSUMED LIVE LOAD = HS 20 OR ALTERNATE LOADING, EXCEPT THAT PRESTRESSED GIRDERS HAVE BEEN DESIGNED FOR HS25.

FOR OTHER DESIGN DATA AND GENERAL NOTES, SEE SHEET SN.

FOR EROSION CONTROL MEASURES, SEE EROSION CONTROL PLANS.

THIS BRIDGE HAS BEEN DESIGNED BY THE STRENGTH DESIGN METHOD AS SPECIFIED IN AASHTO STANDARD SPECIFICATIONS.

PRESTRESSED CONCRETE DECK PANELS MAY BE USED IN LIEU OF METAL STAY-IN-PLACE FORMS IN ACCORDANCE WITH ARTICLE 420-3 OF THE STANDARD SPECIFICATIONS.

REMOVABLE FORMS MAY BE USED IN LIEU OF METAL STAY-IN-PLACE FORMS IN ACCORDANCE WITH ARTICLE 420-3 OF THE STANDARD SPECIFICATIONS.

THE CLASS AA CONCRETE IN THE BRIDGE DECK SHALL CONTAIN FLY ASH OR GROUND GRANULATED BLAST FURNACE SLAG AT THE SUBSTITUTION RATE SPECIFIED IN ARTICLE 1024-1 AND IN ACCORDANCE WITH ARTICLES 1024-5 AND 1024-6 OF THE STANDARD SPECIFICATIONS. NO PAYMENT WILL BE MADE FOR THIS SUBSTITUTION AS IT IS CONSIDERED INCIDENTAL TO THE COST OF THE REINFORCED CONCRETE DECK SLAB.

FOR INTERIOR BENTS, ONLY PARTIAL GALVANIZING OF THE PILES IS REQUIRED. SEE INTERIOR BENT SHEETS FOR DETAILS.

FOR PLACING LOAD ON STRUCTURE MEMBERS, SEE SPECIAL PROVISIONS.

THIS STRUCTURE HAS BEEN DESIGNED IN ACCORDANCE WITH HEC 18, "EVALUATING SCOUR AT BRIDGES", MAY, 2001.

THE RAILROAD TRACK TOP OF RAIL ELEVATIONS SHOWN ON THE PLANS ARE FROM THE BEST INFORMATION AVAILABLE. PRIOR TO BEGINNING BRIDGE CONSTRUCTION, VERIFY THE TOP OF RAIL ELEVATIONS AND REPORT ANY VARIATIONS TO THE ENGINEER. ANY PLAN REVISIONS NECESSARY TO ACHIEVE THE REQUIRED MINIMUM VERTICAL CLEARANCE WILL BE PROVIDED BY THE DEPARTMENT.

FOR SUBMITTAL OF WORKING DRAWINGS, SEE SPECIAL PROVISIONS.

FOR FALSEWORK AND FORMWORK, SEE SPECIAL PROVISIONS.

FOR PRESTRESSED CONCRETE MEMBERS, SEE SPECIAL PROVISIONS.

NEEDLE BEAMS WILL NOT BE ALLOWED UNLESS OTHERWISE CALLED FOR ON THE PLANS OR APPROVED BY THE ENGINEER.

FOR GROUT FOR STRUCTURES, SEE SPECIAL PROVISIONS.

FOR CRANE SAFETY, SEE SPECIAL PROVISIONS.

FOR CURING CONCRETE, SEE SPECIAL PROVISIONS.

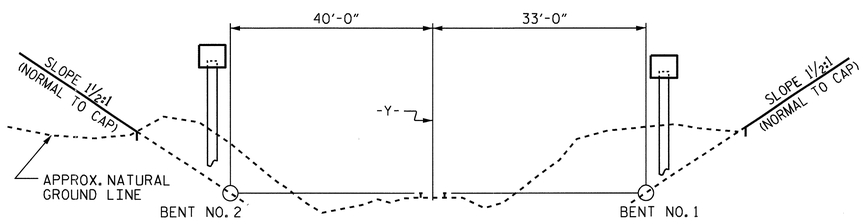

MINIMUM CLEARANCE-RAILROAD
(LOOKING STATION AHEAD ALONG RAILROAD)

SPAN LENGTHS BASED ON THIS SECTION

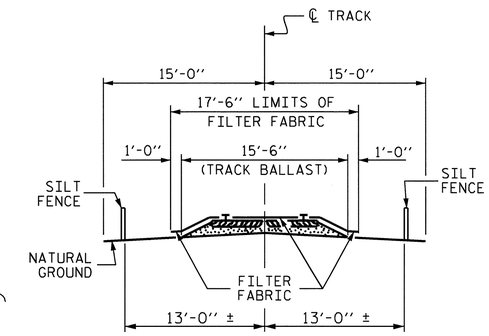

RAILROAD EROSION CONTROL DETAIL

NOTES: RAILROAD EROSION CONTROL MEASURES SHALL BE INSTALLED PRIOR TO PERFORMING ANY WORK IN THE RAILROAD RIGHT-OF-WAY.

ADDITIONAL EROSION CONTROL MEASURES FOR PROTECTION OF RAILROAD DITCHES MAY BE REQUIRED AS DIRECTED BY THE ENGINEER.

NO SEPARATE PAYMENT WILL BE MADE FOR RAILROAD EROSION CONTROL MEASURES.

LIMITS OF SILT FENCE AND FILTER FABRIC PARALLEL TO RAILROAD SHALL EXTEND A MINIMUM OF 25'-0" OUTSIDE EDGE OF SUPERSTRUCTURE OR TOE OF SLOPE ON CONSTRUCTION. A GREATER LENGTH OF SILT FENCE OR FILTER FABRIC MAY BE REQUIRED IF SO DIRECTED BY THE ENGINEER.

FILTER FABRIC TO BE NAILED TO TIMBER RAIL TIES WITH PRIME SOURCE "GRIP CAP" OR EQUIVALENT.

FILTER FABRIC ON SHOULDER TO BE SECURED AS DIRECTED BY THE ENGINEER AND RAILROAD.

TOTAL BILL OF MATERIAL

	PDA TESTING	PDA ASSISTANCE	REINFORCED CONCRETE DECK SLAB	GROOVING BRIDGE FLOORS	CLASS A CONCRETE	BRIDGE APPROACH SLABS	REINFORCING STEEL	54" PRESTRESSED CONCRETE GIRDERS		HP 12 X 53 STEEL PILES		PP 18 X 0.50 GALVANIZED STEEL PILES		CONCRETE BARRIER RAIL	72" CHAIN LINK FENCE	4" SLOPE PROTECTION	ELASTOMERIC BEARINGS	EVAZOTE JOINT SEALS
	EACH	EACH	SQ. FT.	SQ. FT.	CU. YDS.	LUMP SUM	LBS.	NO.	LIN. FT.	NO.	LIN. FT.	NO.	LIN. FT.	LIN. FT.	LIN. FT.	SQ. YDS.	LUMP SUM	LUMP SUM
SUPERSTRUCTURE			6,602	7,055		LUMP SUM		15	824.58					336.40	330.00		LUMP SUM	LUMP SUM
END BENT NO. 1					35.5		5,083			7	700					190		
BENT NO. 1					20.7		3,061					5	500					
BENT NO. 2					20.7		3,061					5	375					
END BENT NO. 2					35.6		5,152			8	520					350		
TOTAL	2	2	6,602	7,055	112.5	LUMP SUM	16,357	15	824.58	15	1,220	10	875	336.40	330.00	540	LUMP SUM	LUMP SUM

PROJECT NO. R-2233AB
RUTHERFORD COUNTY
STATION: 298+34.21 -L-

SHEET 3 OF 3

STATE OF NORTH CAROLINA
DEPARTMENT OF TRANSPORTATION
RALEIGH

GENERAL DRAWING
FOR BRIDGE ON US 221
OVER CSX RAILROAD
BETWEEN SR 2125 AND SR 1136
RIGHT LANE

NORTH CAROLINA PROFESSIONAL SEAL 20125 ENGINEER MARSHALL L. HICKS, JR. 9-23-10

REVISIONS						SHEET NO.
NO.	BY:	DATE:	NO.	BY:	DATE:	S-104
1			3			TOTAL SHEETS
2			4			184

DRAWN BY : V.X. NGUYEN/ALF DATE : 5-21-10
CHECKED BY : M.G. CHEEK DATE : 6-24-10

23-SEP-2010 09:13
R:\Structures\Final Plans\Str. #4\R-2233AB_sd_STR#4_02_GD.dgn
dahodge

STR. #4 NC005

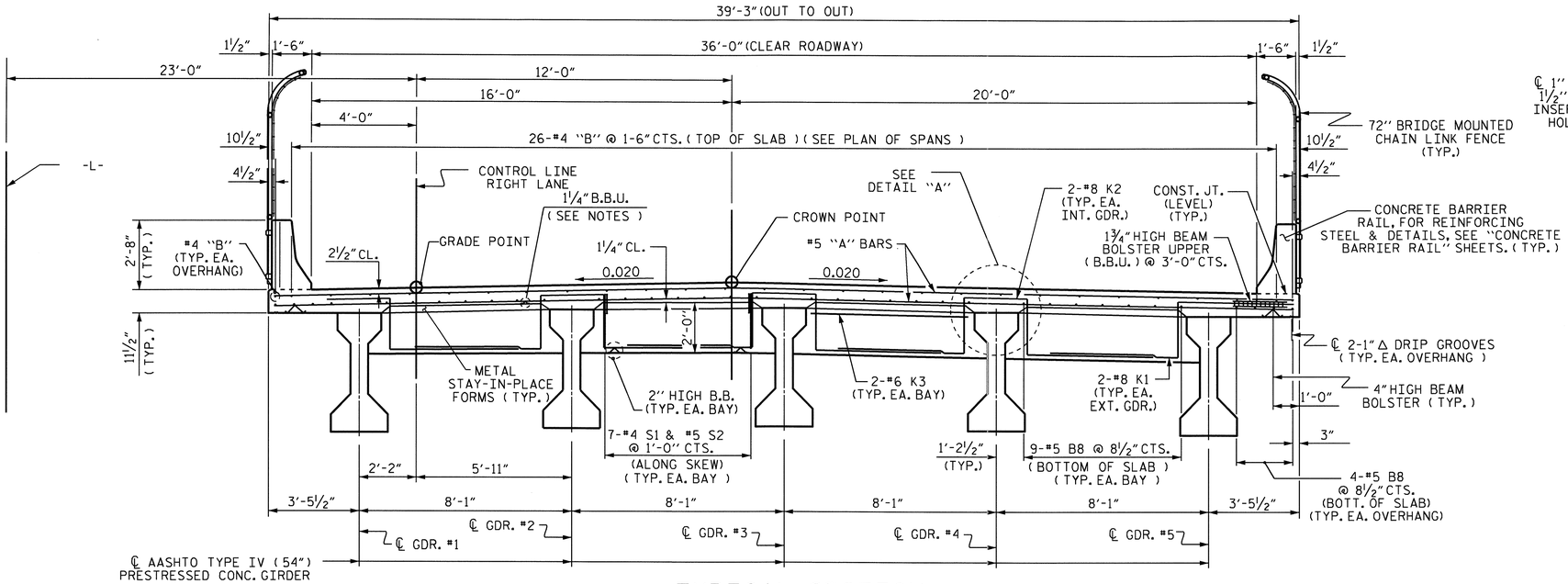

TYPICAL SECTION

(SHOWING END BENT DIAPHRAGMS)

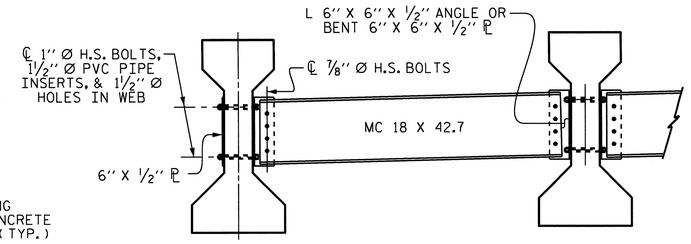

PART TYPICAL SECTION

(SHOWING INTERMEDIATE DIAPHRAGMS)
(FOR DETAILS, SEE "INTERMEDIATE STEEL DIAPHRAGMS FOR TYPE IV PRESTRESSED CONCRETE GIRDERS" SHEET.

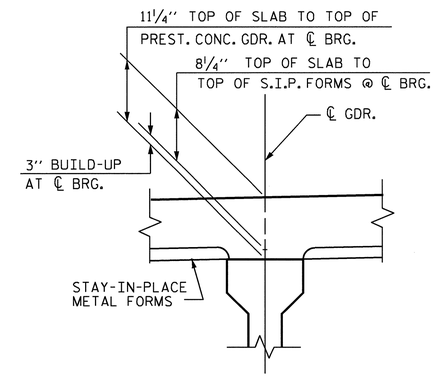

DETAIL "A"

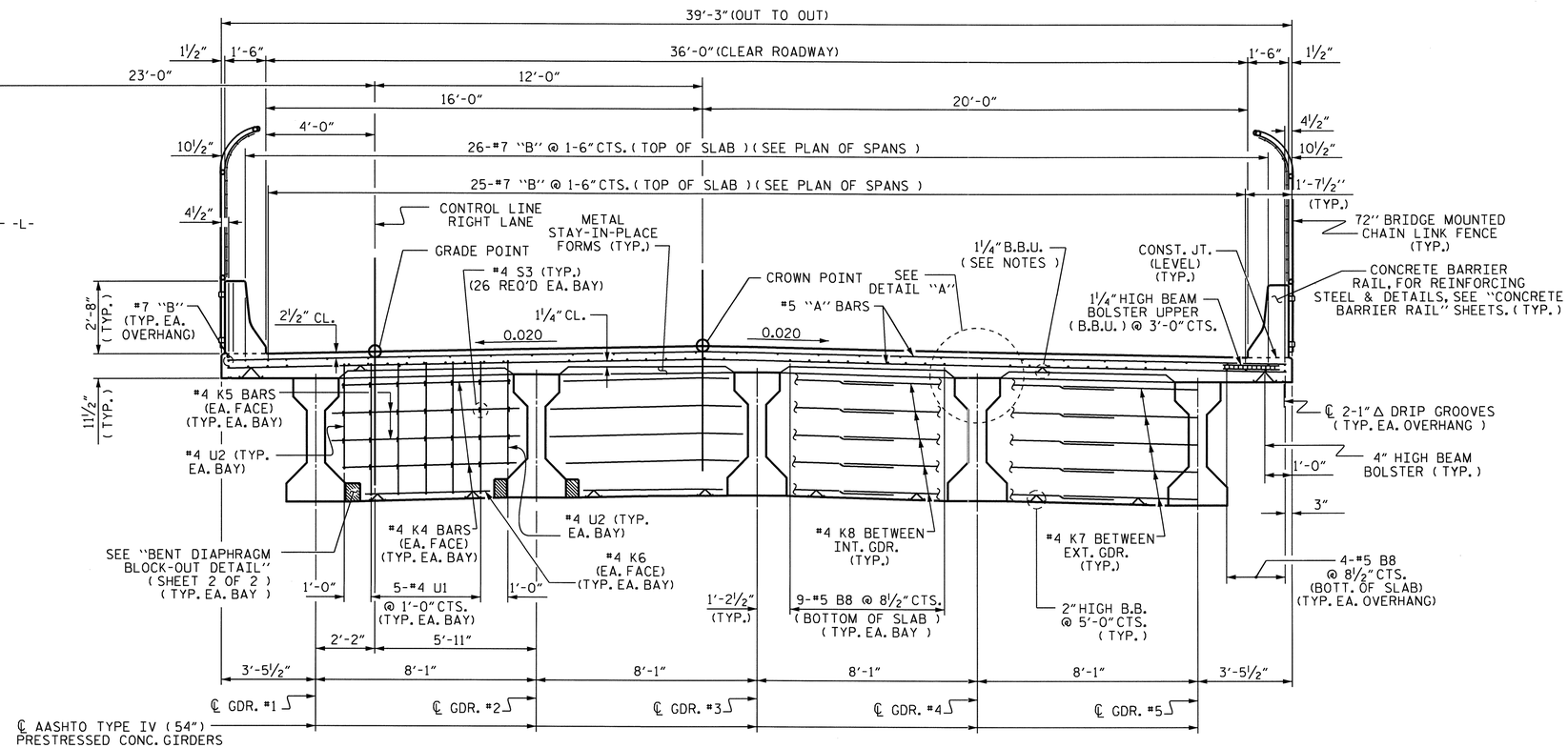

TYPICAL SECTION

(SHOWING BENT DIAPHRAGMS)

PROJECT NO. R-2233AB
RUTHERFORD COUNTY
STATION: 298+34.21 -L-

SHEET 1 OF 2

STATE OF NORTH CAROLINA
DEPARTMENT OF TRANSPORTATION
RALEIGH

SUPERSTRUCTURE
TYPICAL SECTIONS
RIGHT LANE

NORTH CAROLINA PROFESSIONAL SEAL 20125 ENGINEER MARSHALL G. CHEEK, JR.
9-16-10

REVISIONS						SHEET NO.
NO.	BY:	DATE:	NO.	BY:	DATE:	S-105
1			3			TOTAL SHEETS
2			4			184

DRAWN BY : V.X. NGUYEN DATE : 8/12/09
CHECKED BY : M.G. CHEEK DATE : 2/10

14-SEP-2010 11:50
R:\Structures\Final Plans\Str. #4\R-2233AB_SD_STR#4_04_TS.dgn
afigueroa

STR. #4

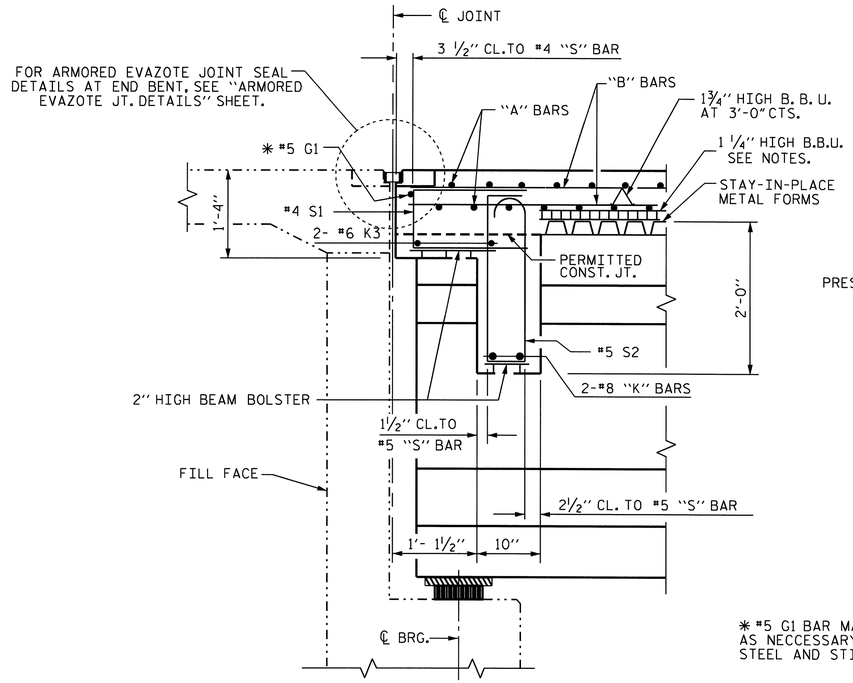

SECTION THRU END BENT DIAPHRAGM

* #5 G1 BAR MAY BE SHIFTED SLIGHTLY, AS NECCESSARY, TO CLEAR REINFORCING STEEL AND STIRRUPS.

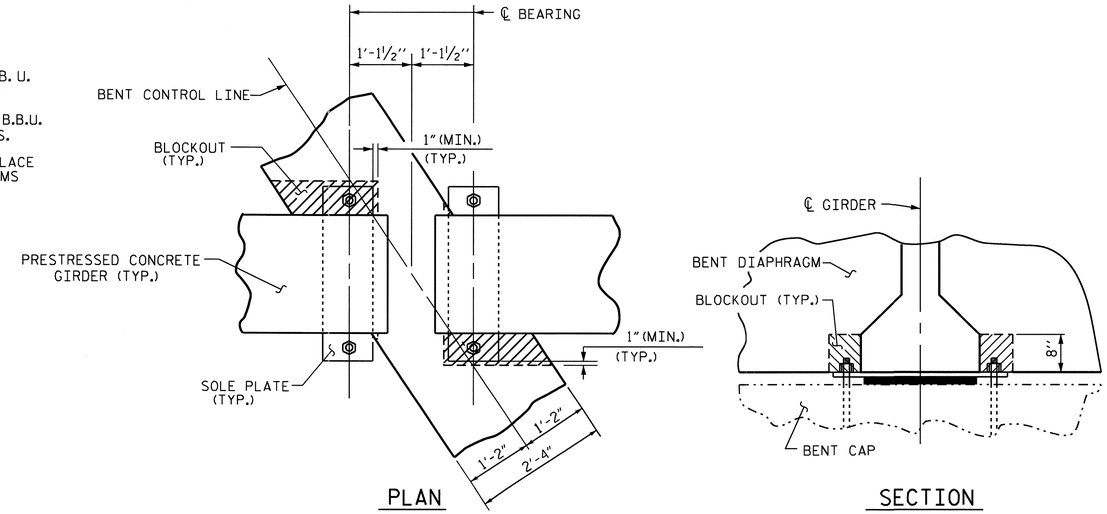

BENT DIAPHRAGM BLOCK-OUT DETAIL

NOTES

PROVIDE 1 1/4" HIGH BEAM BOLSTERS UPPER AT 4'-0" CTS. ATOP THE METAL STAY-IN-PLACE FORMS TO SUPPORT THE BOTTOM MAT OF 'A' BARS. WHEN USING REMOVABLE FORMS, PROVIDE CONTINUOUS HIGH CHAIRS FOR METAL DECK (C.H.C.M.) @ 4'-0" CTS. WITH A HEIGHT TO SUPPORT THE BOTTOM MAT OF 'A' BARS A CLEAR DISTANCE OF 2 1/2" ABOVE THE TOP OF THE REMOVABLE FORM.

LONGITUDINAL STEEL MAY BE SHIFTED SLIGHTLY, AS NECESSARY, TO AVOID INTERFERENCE WITH STIRRUPS IN PRESTRESSED CONCRETE GIRDERS.

PREVIOUSLY CAST CONCRETE IN A CONTINUOUS UNIT SHALL HAVE ATTAINED A MINIMUM COMPRESSIVE STRENGTH OF 3,000 PSI BEFORE ADDITIONAL CONCRETE IS CAST IN THE UNIT.

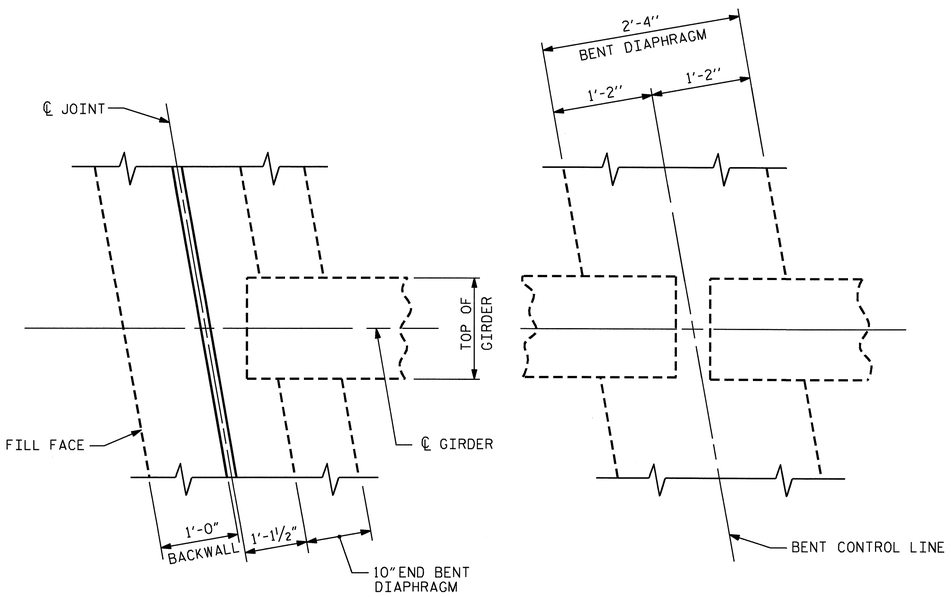

END BENT DIAPHRAGM

BENT DIAPHRAGM

PLAN

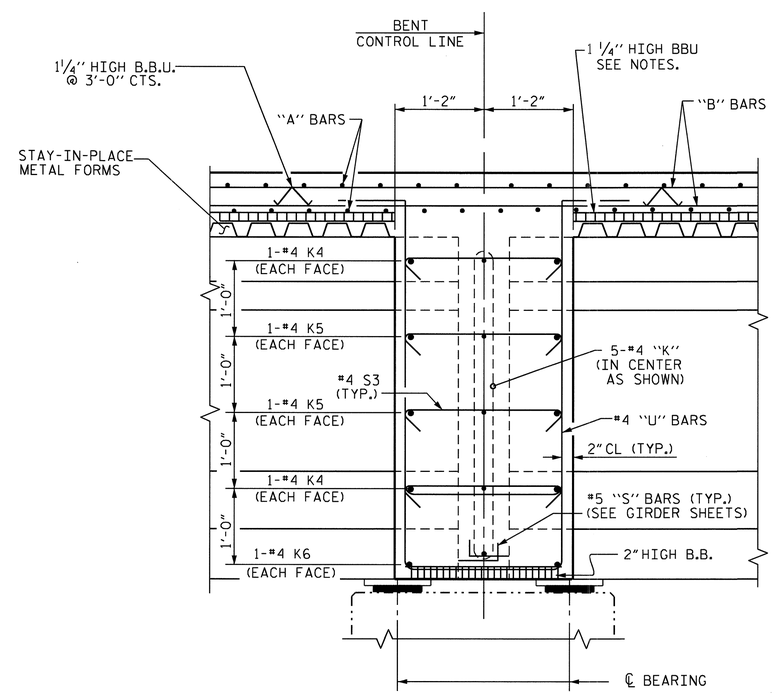

SECTION THRU BENT DIAPHRAGM

PROJECT NO. R-2233AB
RUTHERFORD COUNTY
STATION: 298+34.21 -L-

SHEET 2 OF 2

STATE OF NORTH CAROLINA
DEPARTMENT OF TRANSPORTATION
RALEIGH

SUPERSTRUCTURE
TYPICAL SECTION DETAILS
RIGHT LANE

REVISIONS						SHEET NO.
NO.	BY:	DATE:	NO.	BY:	DATE:	S-106
1			3			TOTAL SHEETS
2			4			184

NORTH CAROLINA PROFESSIONAL SEAL 20125 ENGINEER MARSHALL G. CHEEK, JR. 9-16-10

DRAWN BY : V.X. NGUYEN DATE : 3/11/09
CHECKED BY : M. G. CHEEK DATE : 2/10

14-SEP-2010 11:50
R:\Structures\Final Plans\Str. #4\R-2233AB_SD_STR#4_04_TS.dgn
afigueroa

STR. #4

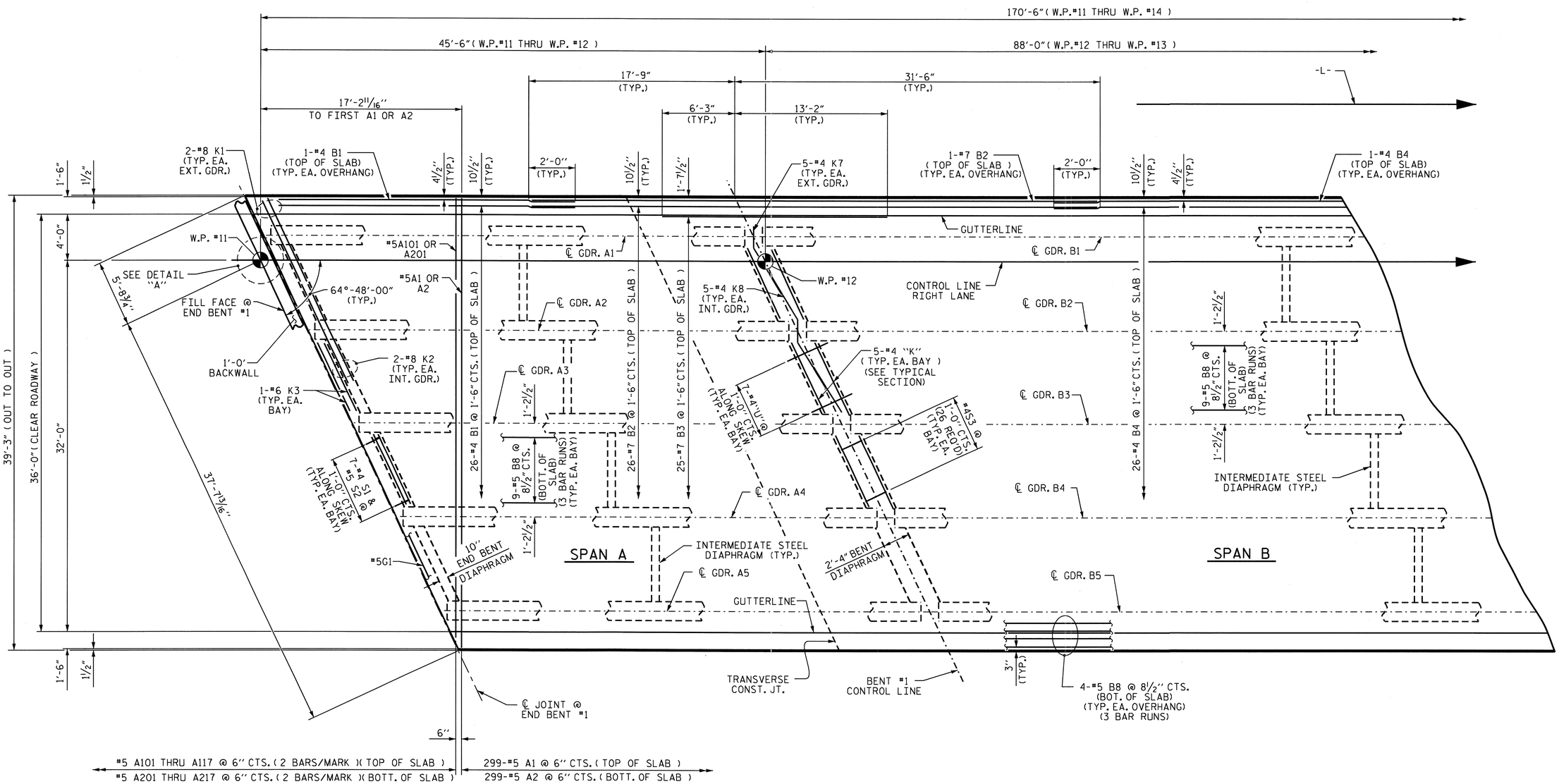

PLAN OF SPANS A & B

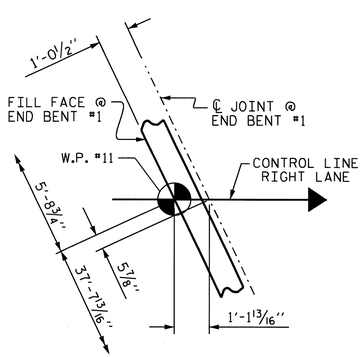

DETAIL "A"

PROJECT NO. R-2233AB
RUTHERFORD COUNTY
STATION: 298+34.21 -L-

SHEET 1 OF 2

STATE OF NORTH CAROLINA
DEPARTMENT OF TRANSPORTATION
RALEIGH

SUPERSTRUCTURE

PLAN OF SPANS A & B
RIGHT LANE

NORTH CAROLINA PROFESSIONAL SEAL 20125 ENGINEER MARSHALL G. CHEEK, JR.
9-16-10

REVISIONS						SHEET NO.
NO.	BY:	DATE:	NO.	BY:	DATE:	S-107
1			3			TOTAL SHEETS
2			4			184

DRAWN BY : V.X. NGUYEN DATE : 3-10-09
CHECKED BY : M.G. CHEEK DATE : 1-10

27-JUL-2010 08:16
R:\Structures\Str#4\vnguyen\R-2233AB_SD_S*.dgn
vnguyen

STR. #4

170'-6" (W.P. #11 THRU W.P. #14)

88'-0" (W.P. #12 THRU W.P. #13)

37'-0" (W.P. #13 THRU W.P. #14)

31'-6" (TYP.)

14'-10" (TYP.)

13'-2" (TYP.)

5'-0" (TYP.)

-L-

1-#4 B4 (TOP OF SLAB) (TYP.)

1-#7 B5 (TOP OF SLAB) (TYP. EA. OVERHANG)

5-#4 K7 (TYP. EA. EXT. GDR.)

1-#4 B7 (TOP OF SLAB) (TYP. EA. OVERHANG)

2'-0" (TYP.)

10½" (TYP.)

4½" (TYP.)

1'-7½"

6'-8½"

SEE DETAIL "B"

1½"

1'-6"

GUTTERLINE

64°-48'-00" (TYP.)

W.P. #14

℄ GDR. C1

4'-0"

CONTROL LINE RIGHT LANE

#5A1 OR A2

#5A101 OR A201

FILL FACE @ END BENT #2

5-#4 K8 (TYP. EA. INT. GDR.)

W.P. #13

℄ GDR. C2

26-#4 B4 @ 1'-6" CTS. (TOP OF SLAB)

26-#7 B5 @ 1'-6" CTS. (TOP OF SLAB)

25-#7 B6 @ 1'-6" CTS. (TOP OF SLAB)

26-#4 B7 @ 1'-6" CTS. (TOP OF SLAB)

1'-2½"

9-#5 B8 @ 8½" CTS. (BOTT. OF SLAB) (3 BAR RUNS) (TYP. EA. BAY)

5-#4 "K" (TYP. EA. BAY) (SEE TYPICAL SECTION)

7-#4 "U" @ 1'-0" CTS. SKEW ALONG (TYP. EA. BAY)

#4S3 @ 1'-0" CTS. (36 REQ'D) (TYP. EA. BAY)

7-#4 S1 & #5 S2 @ 1'-0" CTS. SKEW ALONG (TYP. EA. BAY)

℄ GDR. C3

36'-8 1/16"

32'-0"

36'-0" (CLEAR ROADWAY)

39'-3" (OUT TO OUT)

10" END BENT DIAPHRAGM

#5G1

2-#8 K2 (TYP. EA. INT. GDR.)

TRANSVERSE CONST. JT.

℄ GDR. C4

9-#5 B8 @ 8½" CTS. (BOTT. OF SLAB) (3 BAR RUNS) (TYP. EA. BAY)

SPAN B

SPAN C

2'-4" BENT DIAPHRAGM

℄ GDR. C5

1-#6 K3 (TYP. EA. BAY)

GUTTERLINE

3" (TYP.)

4-#5 B8 @ 8½" CTS. (BOT. OF SLAB) (TYP. EA. OVERHANG) (3 BAR RUNS)

2-#8 K1 (TYP. EA. EXT. GDR.)

BENT #2 CONTROL LINE

℄ JOINT @ END BENT #2

6"

299-#5 A1 @ 6" CTS. (TOP OF SLAB)

299-#5 A2 @ 6" CTS. (BOTT. OF SLAB)

#5 A101 THRU A117 @ 6" CTS. (2 BARS/MARK)(TOP OF SLAB)

#5 A201 THRU A217 @ 6" CTS. (2 BARS/MARK)(BOTT. OF SLAB)

PLAN OF SPANS B & C

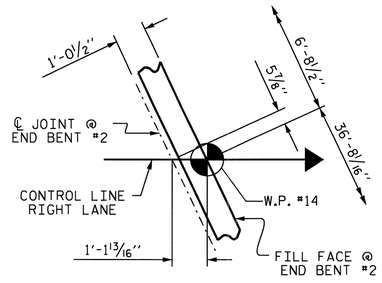

DETAIL "B"

PROJECT NO. R-2233AB

RUTHERFORD COUNTY

STATION: 298+34.21 -L-

SHEET 2 OF 2

STATE OF NORTH CAROLINA
DEPARTMENT OF TRANSPORTATION
RALEIGH

SUPERSTRUCTURE

PLAN OF SPANS B & C

RIGHT LANE

NORTH CAROLINA PROFESSIONAL SEAL 20125 ENGINEER MARSHALL G. CHEEK, JR. 9-16-10

REVISIONS							
NO.	BY:	DATE:	NO.	BY:	DATE:		
1			3				
2			4				

SHEET NO. S-108

TOTAL SHEETS 184

STR. #4

DRAWN BY : V.X. NGUYEN DATE : 3-10-09

CHECKED BY : M.G. CHEEK DATE : 1-10

27-JUL-2010 08:17
R:\Structures\Str#4\vnguyen\R-2233AB_SD_S#.dgn
vnguyen

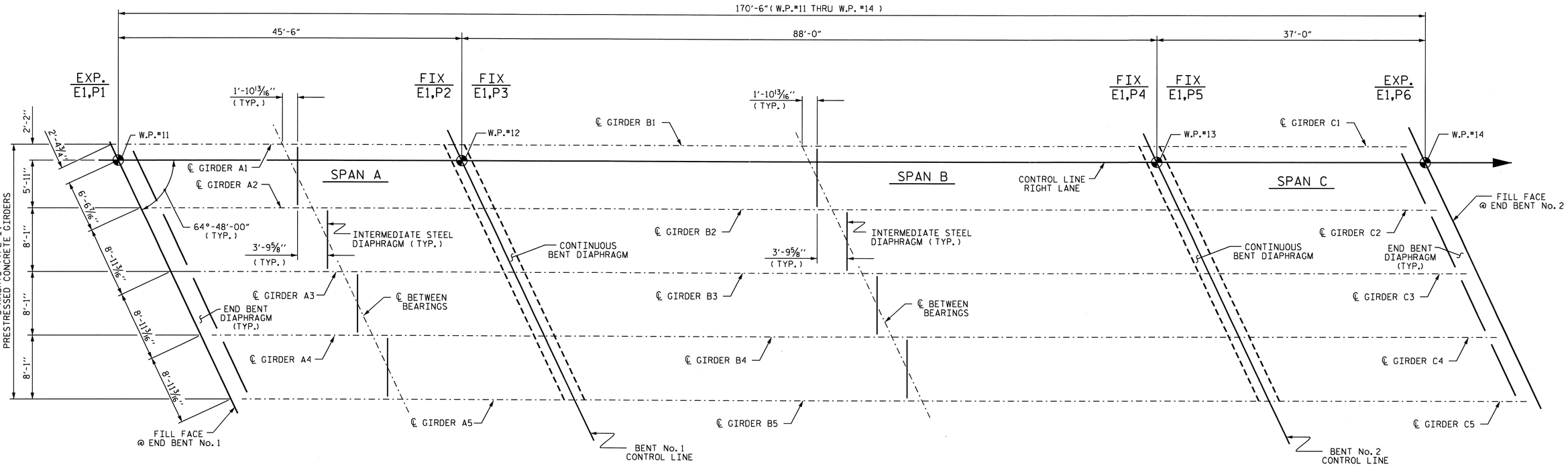

FRAMING PLAN

PROJECT NO. R-2233AB
RUTHERFORD COUNTY
STATION: 298+34.21 -L-

STATE OF NORTH CAROLINA
DEPARTMENT OF TRANSPORTATION
RALEIGH

SUPERSTRUCTURE

FRAMING PLAN
(SPANS A, B, & C)

RIGHT LANE

NORTH CAROLINA PROFESSIONAL SEAL 20125 ENGINEER MARSHALL G. CHEEK, JR.
9-16-10

REVISIONS						SHEET NO.
NO.	BY:	DATE:	NO.	BY:	DATE:	S-109
1			3			TOTAL SHEETS
2			4			184

STR. #4

DRAWN BY : V.X. NGUYEN DATE : 8/12/09
CHECKED BY : M. G. CHEEK DATE : 1-10

27-JUL-2010 09:05
R:\Structures\Str#4\vnguyen\R-2233AB_SD_FP.dgn
vnguyen

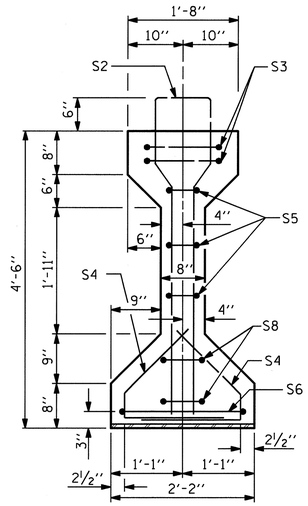

SECTION A-A

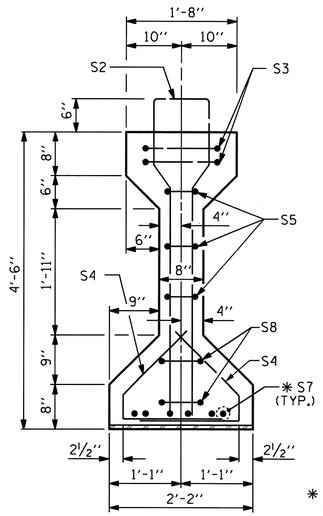

SECTION B-B

✱ FOR S7 BARS, SEE DETAIL "A", SHEET 4 OF 6.

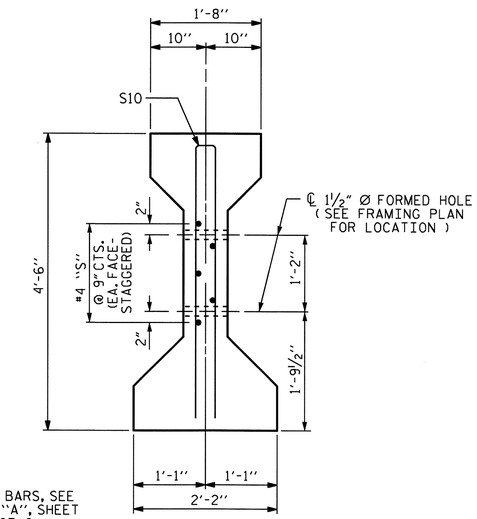

SECTION C-C

(S1 BARS NOT SHOWN)

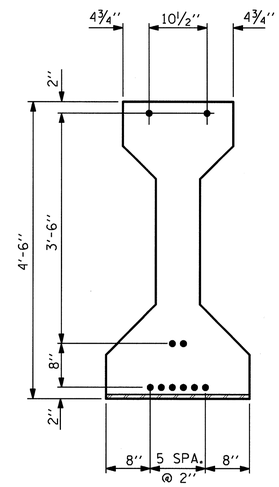

AT END OF GIRDER

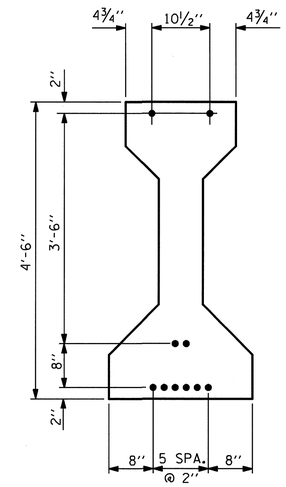

AT ℄ OF GIRDER

0.6" Ø LOW RELAXATION STRAND LAYOUT

0.6" Ø L. R. GRADE 270 STRANDS

AREA (SQUARE INCHES)	ULTIMATE STRENGTH (LBS. PER STRAND)	APPLIED PRESTRESS (LBS. PER STRAND)
0.217	58,600	43,950

REINFORCING STEEL FOR ONE GIRDER

	BAR	NUMBER	SIZE	TYPE	LENGTH	WEIGHT
	S1	37	#4	1	10'-8"	264
	S2	12	#6	1	10'-8"	192
	S3	4	#4	2	9'-1"	24
	S4	64	#4	3	3'-5"	146
	S5	6	#4	2	8'-5"	34
	S6	1	#4	2	9'-11"	7
	✱ S7	6	#5	STR	3'-8"	23
	S8	4	#4	2	8'-7"	23
	S9	1	#3	STR	1'-10"	1
EXTERIOR GDR.	S10	2	#5	2	8'-8"	18
INTERIOR GDR.	S10	4	#5	2	8'-8"	36
EXTERIOR GDR.	S11	5	#4	STR	7'-0"	23
INTERIOR GDR.	S12	5	#4	STR	10'-10"	36

✱ NOTE: S7 BARS SHALL BE BENT BEFORE SHIPMENT. HEAT BENDING SHALL NOT BE ALLOWED.

BAR TYPES

ALL BAR DIMENSIONS ARE OUT-TO-OUT

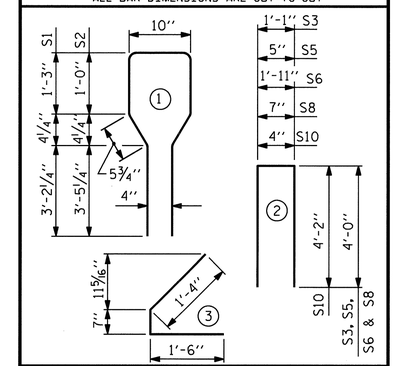

QUANTITIES FOR ONE GIRDER

	REINFORCING STEEL LB.	5000 PSI CONCRETE C.Y.	0.6" Ø L.R. STRANDS No.
EXTERIOR GIRDER	755	8.8	10
INTERIOR GIRDER	786	8.8	10

GIRDERS REQUIRED

NUMBER	LENGTH	TOTAL LENGTH
5	43'-1½"	215'-7½"

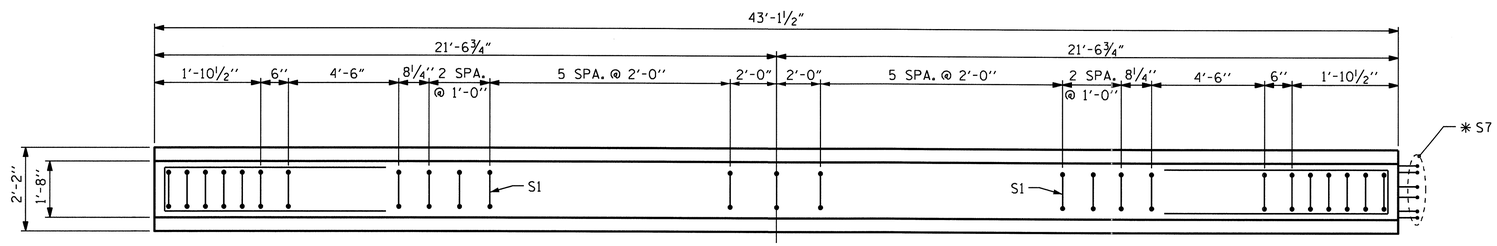

PLAN OF GIRDER

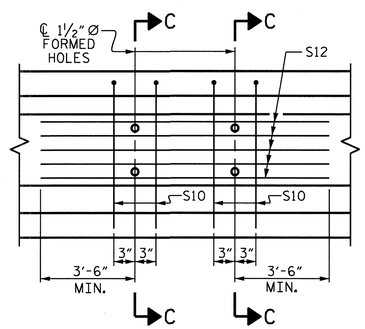

PARTIAL ELEVATION

SHOWING INTERMEDIATE DIAPHRAGM REINFORCING STEEL FOR GIRDER Nos. 2, 3, & 4

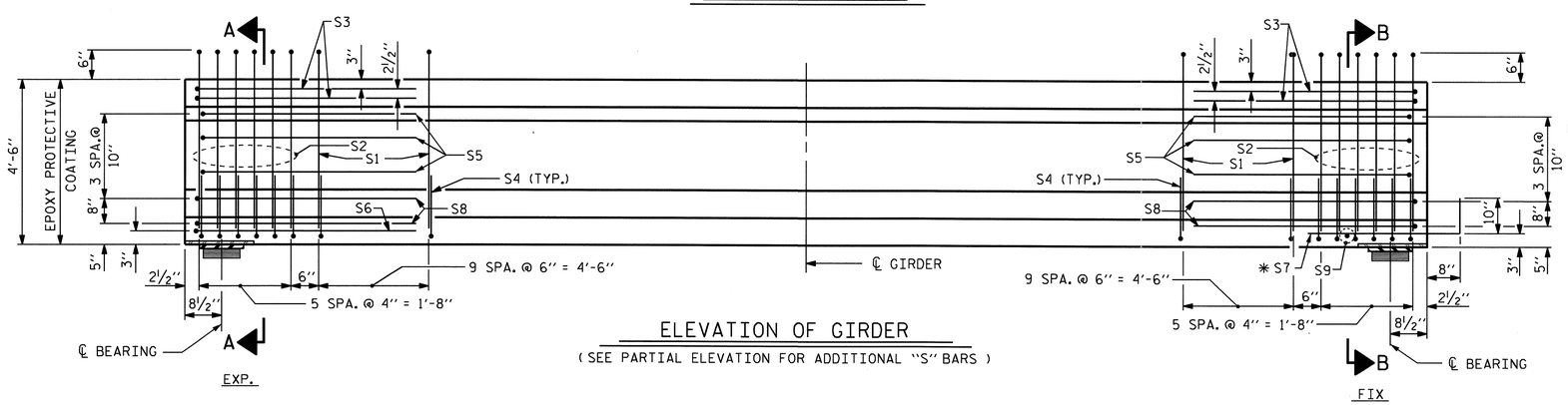

ELEVATION OF GIRDER

(SEE PARTIAL ELEVATION FOR ADDITIONAL "S" BARS)

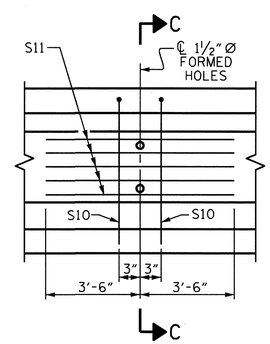

PARTIAL ELEVATION

SHOWING INTERMEDIATE DIAPHRAGM REINFORCING STEEL FOR GIRDER Nos. 1 & 5

NORTH CAROLINA PROFESSIONAL SEAL 20125 ENGINEER MARSHALL G. CHEEK, JR.
4-16-10

PROJECT NO. R-2233AB

RUTHERFORD COUNTY

STATION: 298+34.21 -L-

SHEET 1 OF 6

STATE OF NORTH CAROLINA
DEPARTMENT OF TRANSPORTATION
RALEIGH

STANDARD
AASHTO TYPE IV
PRESTRESSED CONCRETE GIRDER
CONTINUOUS FOR LIVE LOAD
SPAN A
RIGHT LANE

REVISIONS						SHEET NO.
NO.	BY:	DATE:	NO.	BY:	DATE:	S-110
1			3			TOTAL SHEETS
2			4			184

STR. #4

STD. NO. PCG6

ASSEMBLED BY : V.X. NGUYEN	DATE : 8/12/09		
CHECKED BY : M.G. CHEEK	DATE : 1/10		
DRAWN BY : ELR 8/91	REV. 7/17/98	RWW/LES	
CHECKED BY : GRP 8/91	REV. 10/17/00R	RWW/LES	
	REV. 5/1/06	TLA/GM	

30-JUL-2010 10:43
R:\Structures\Str#4\vnguyen\R-2233AB_SD_G#.dgn
vnguyen

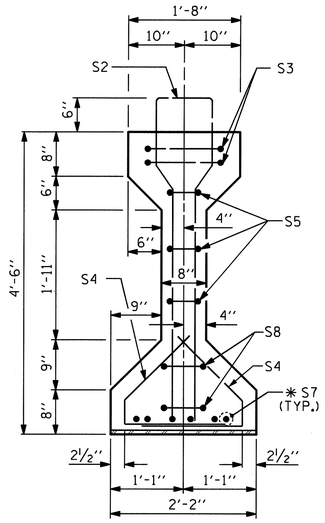

SECTION B-B

* FOR S7 BARS, SEE DETAIL "A", SHEET 4 OF 6.

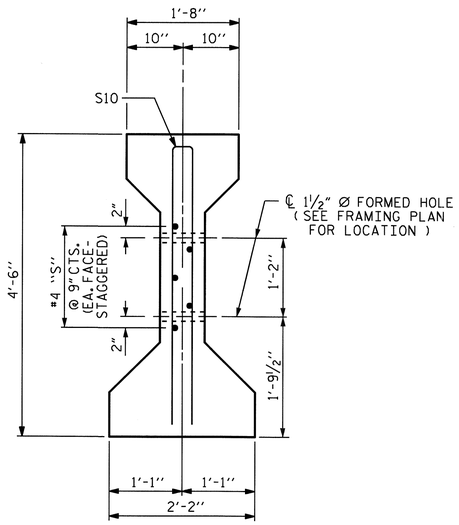

SECTION C-C

(S1 BARS NOT SHOWN)

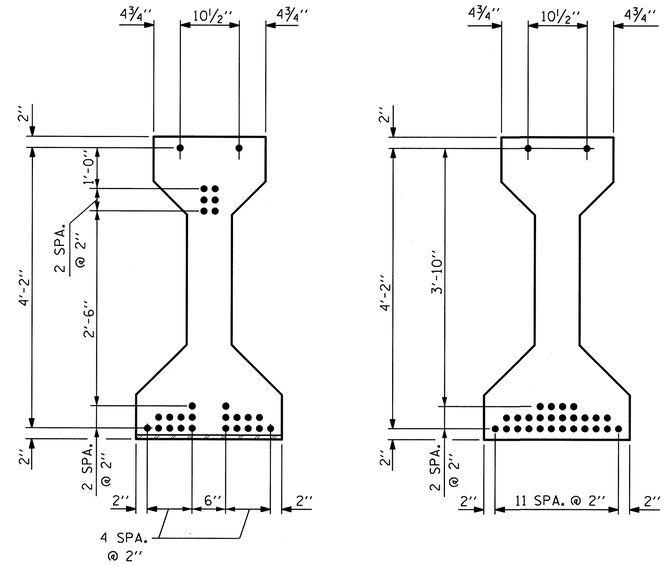

AT END OF GIRDER

AT ℄ OF GIRDER

0.6" Ø LOW RELAXATION STRAND LAYOUT

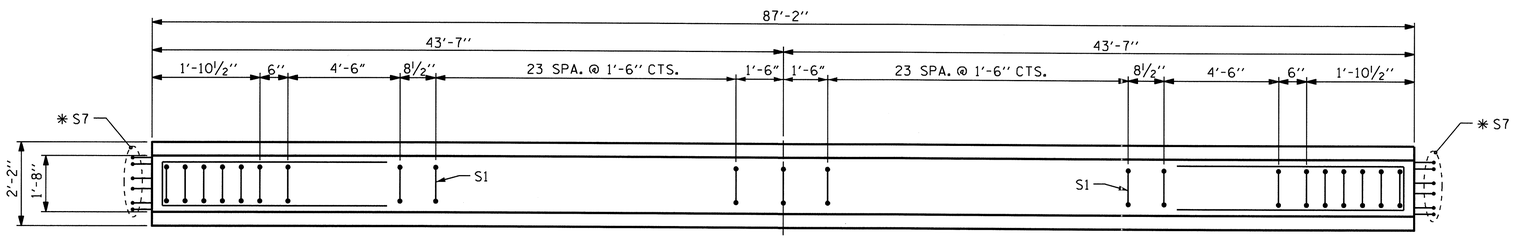

PLAN OF GIRDER

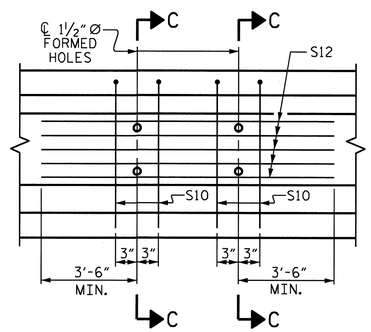

PARTIAL ELEVATION

SHOWING INTERMEDIATE DIAPHRAGM REINFORCING STEEL FOR GIRDER Nos. 2, 3, & 4

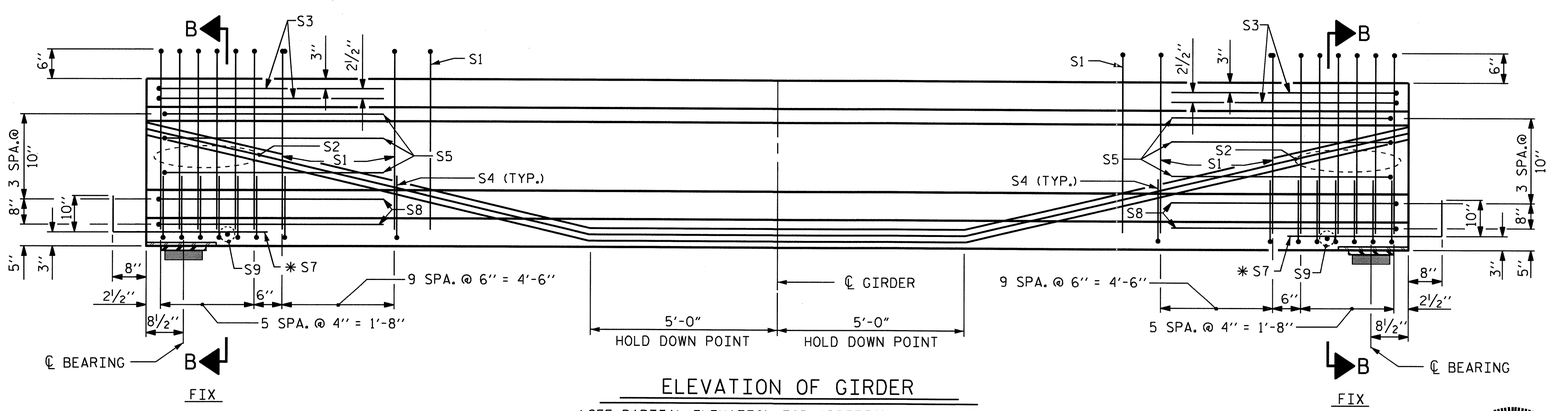

ELEVATION OF GIRDER

(SEE PARTIAL ELEVATION FOR ADDITIONAL "S" BARS)

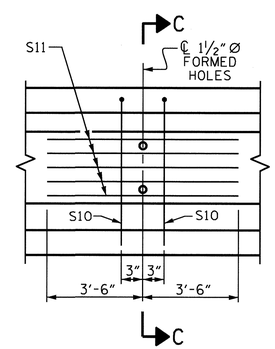

PARTIAL ELEVATION

SHOWING INTERMEDIATE DIAPHRAGM REINFORCING STEEL FOR GIRDER Nos. 1 & 5

0.6" Ø L. R. GRADE 270 STRANDS

AREA (SQUARE INCHES)	ULTIMATE STRENGTH (LBS. PER STRAND)	APPLIED PRESTRESS (LBS. PER STRAND)
0.217	58,600	43,950

REINFORCING STEEL FOR ONE GIRDER

	BAR	NUMBER	SIZE	TYPE	LENGTH	WEIGHT
	S1	69	#4	1	10'-8"	492
	S2	12	#6	1	10'-8"	192
	S3	4	#4	2	9'-1"	24
	S4	64	#4	3	3'-5"	146
	S5	6	#4	2	8'-5"	34
	* S7	12	#5	STR	3'-8"	46
	S8	4	#4	2	8'-7"	23
	S9	2	#3	STR	1'-10"	1
EXTERIOR GDR.	S10	2	#5	2	8'-8"	18
INTERIOR GDR.	S10	4	#5	2	8'-8"	36
EXTERIOR GDR.	S11	5	#4	STR	7'-0"	23
INTERIOR GDR.	S12	5	#4	STR	10'-10"	36

* NOTE: S7 BARS SHALL BE BENT BEFORE SHIPMENT. HEAT BENDING SHALL NOT BE ALLOWED.

BAR TYPES

ALL BAR DIMENSIONS ARE OUT-TO-OUT

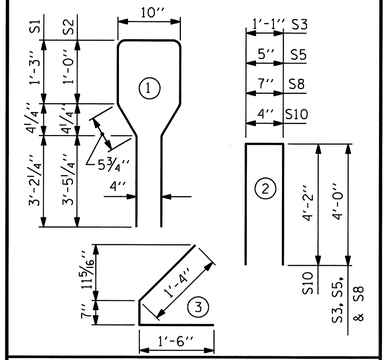

QUANTITIES FOR ONE GIRDER

	REINFORCING STEEL LB.	5700 PSI CONCRETE C.Y.	0.6" Ø L.R. STRANDS No.
EXTERIOR GIRDER	999	17.7	28
INTERIOR GIRDER	1030	17.7	28

GIRDERS REQUIRED

NUMBER	LENGTH	TOTAL LENGTH
5	87'-2"	435'-10"

PROJECT NO. R-2233AB

RUTHERFORD COUNTY

STATION: 298+34.21 -L-

SHEET 2 OF 6

STATE OF NORTH CAROLINA
DEPARTMENT OF TRANSPORTATION
RALEIGH

STANDARD
AASHTO TYPE IV
PRESTRESSED CONCRETE GIRDER
CONTINUOUS FOR LIVE LOAD
SPAN B
RIGHT LANE

REVISIONS						SHEET NO.
NO.	BY:	DATE:	NO.	BY:	DATE:	S-111
1			3			TOTAL SHEETS
2			4			18 4

STR. #4

STD. NO. PCG6

ASSEMBLED BY : V.X. NGUYEN	DATE : 4/7/09		
CHECKED BY : M.G. CHEEK	DATE : 1/10		
DRAWN BY : ELR 8/91	REV. 7/17/98	RWW/LES	
CHECKED BY : GRP 8/91	REV. 10/17/00R	RWW/LES	
	REV. 5/1/06	TLA/GM	

NORTH CAROLINA PROFESSIONAL SEAL 20125 ENGINEER
MARSHALL G. CHEEK, JR.
4-16-10

30-JUL-2010 10:43
R:\Structures\Str#4\vnguyen\R-2233AB_SD_G*.dgn
vnguyen

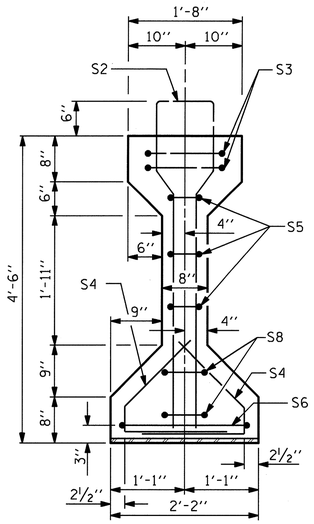

SECTION A-A

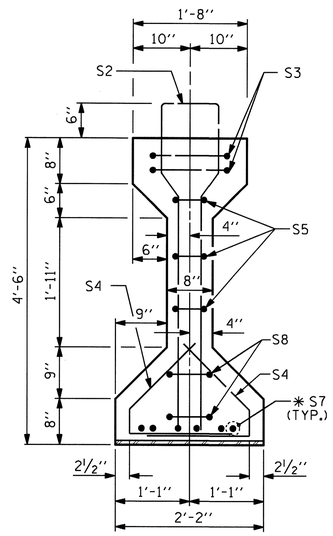

SECTION B-B

* FOR S7 BARS, SEE DETAIL "A" SHEET 4 OF 6.

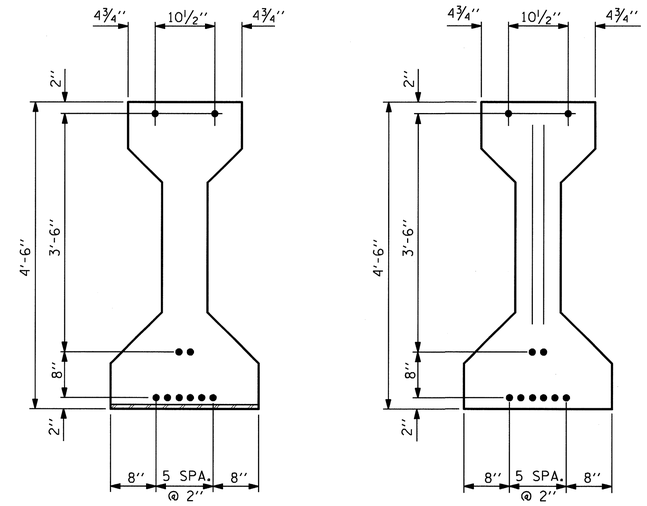

AT END OF GIRDER

AT ℄ OF GIRDER

0.6" Ø LOW RELAXATION STRAND LAYOUT

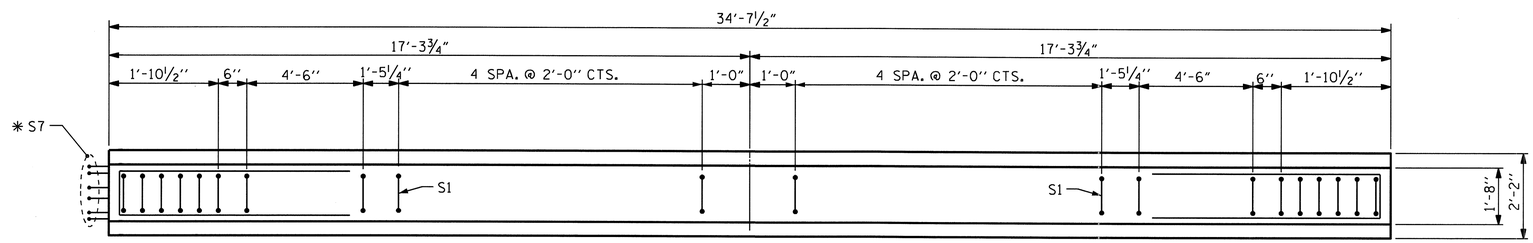

PLAN OF GIRDER

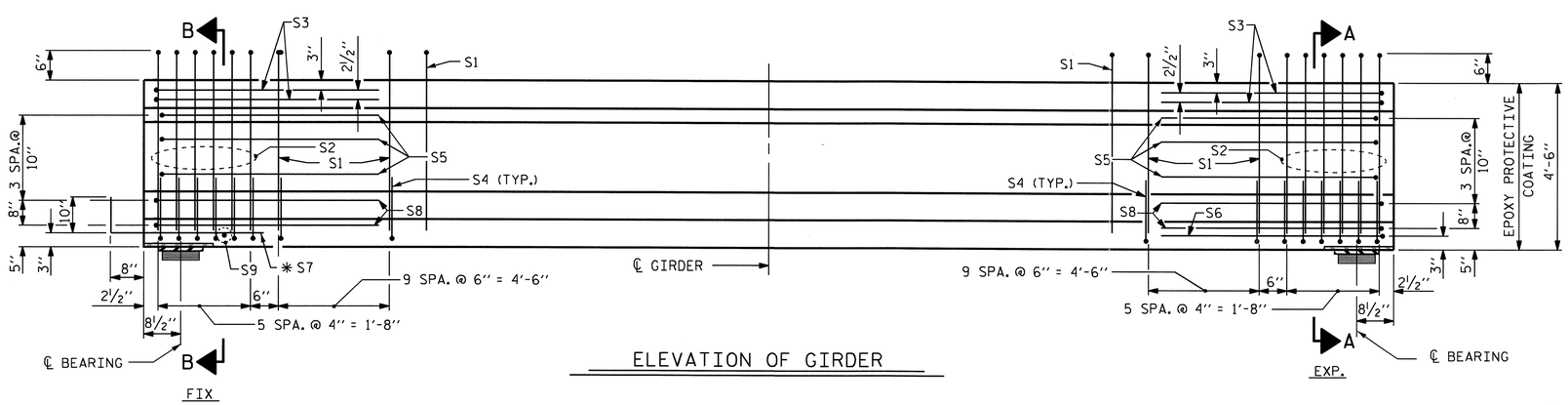

ELEVATION OF GIRDER

0.6" Ø L. R. GRADE 270 STRANDS

AREA (SQUARE INCHES)	ULTIMATE STRENGTH (LBS. PER STRAND)	APPLIED PRESTRESS (LBS. PER STRAND)
0.217	58,600	43,950

REINFORCING STEEL FOR ONE GIRDER

BAR	NUMBER	SIZE	TYPE	LENGTH	WEIGHT
S1	30	#4	1	10'-8"	214
S2	12	#6	1	10'-8"	192
S3	4	#4	2	9'-1"	24
S4	64	#4	3	3'-5"	146
S5	6	#4	2	8'-5"	34
S6	1	#4	2	9'-11"	7
* S7	6	#5	STR	3'-8"	23
S8	4	#4	2	8'-7"	23
S9	1	#3	STR	1'-10"	1

* NOTE: S7 BARS SHALL BE BENT BEFORE SHIPMENT. HEAT BENDING SHALL NOT BE ALLOWED.

BAR TYPES

ALL BAR DIMENSIONS ARE OUT-TO-OUT

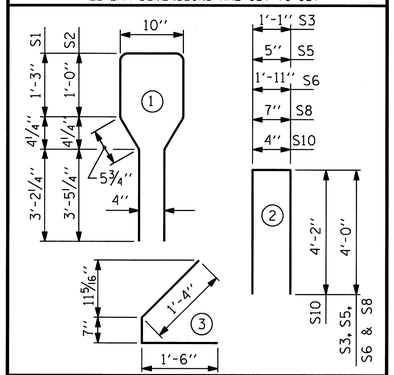

QUANTITIES FOR ONE GIRDER

	REINFORCING STEEL LB.	5000 PSI CONCRETE C.Y.	0.6" Ø L.R. STRANDS No.
	664	7.0	10

GIRDERS REQUIRED

NUMBER	LENGTH	TOTAL LENGTH
5	34'-7½"	173'-1½"

PROJECT NO. R-2233AB

RUTHERFORD COUNTY

STATION: 298+34.21 -L-

SHEET 3 OF 6

STATE OF NORTH CAROLINA
DEPARTMENT OF TRANSPORTATION
RALEIGH

STANDARD
AASHTO TYPE IV
PRESTRESSED CONCRETE GIRDER
CONTINUOUS FOR LIVE LOAD
SPAN C
RIGHT LANE

NORTH CAROLINA PROFESSIONAL SEAL 20125 ENGINEER MARSHALL G. CHEEK, JR.
9-6-10

REVISIONS						SHEET NO.
NO.	BY:	DATE:	NO.	BY:	DATE:	S-112
1			3			TOTAL SHEETS
2			4			184

ASSEMBLED BY : V.X. NGUYEN	DATE : 4/7/09		
CHECKED BY : M.G. CHEEK	DATE : 1/10		
DRAWN BY : ELR 8/91	REV. 7/17/98	RWW/LES	
CHECKED BY : GRP 8/91	REV. 10/17/00R	RWW/LES	
	REV. 5/1/06	TLA/GM	

30-JUL-2010 10:51
R:\Structures\Str#4\vnguyen\R-2233AB_SD_G*.dgn
vnguyen

STR. #4

STD. NO. PCG6

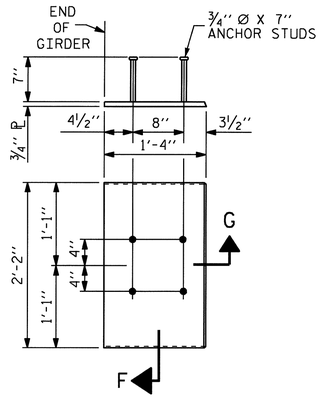

EMBEDDED PLATE "B-1" DETAILS FOR AASHTO TYPE IV GIRDER

(2 REQ'D PER GIRDER)

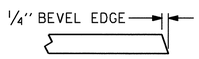

SECTION "G"

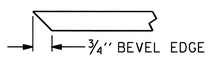

SECTION "F"

(SEE NOTES)

CHART A

GIRDER	DIM. A	DIM. B	DIM. C	DIM. D
GDR. A1	23'-5 9/16"	0	19'-7 15/16""	43'-1 1/2"
GDR. A2	19'-7 15/16"	3'-9 5/8"	19'-7 15/16""	43'-1 1/2"
GDR. A3	19'-7 15/16"	3'-9 5/8"	19'-7 15/16""	43'-1 1/2"
GDR. A4	19'-7 15/16"	3'-9 5/8"	19'-7 15/16""	43'-1 1/2"
GDR. A5	19'-7 15/16"	0	23'-5 9/16"	43'-1 1/2"
GDR. B1	45'-5 13/16"	0	41'-8 3/16"	87'-2"
GDR. B2	41'-8 3/16"	3'-9 5/8"	41'-8 3/16"	87'-2"
GDR. B3	41'-8 3/16"	3'-9 5/8"	41'-8 3/16"	87'-2"
GDR. B4	41'-8 3/16"	3'-9 5/8"	41'-8 3/16"	87'-2"
GDR. B5	41'-8 3/16"	0	45'-5 13/16"	87'-2"

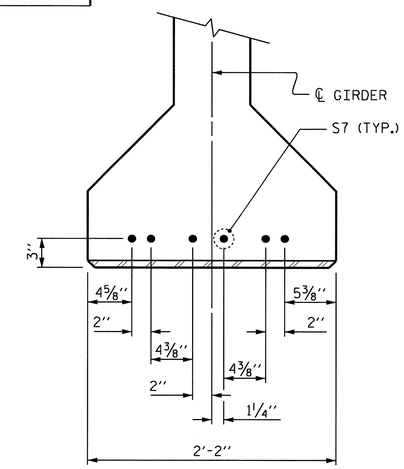

DETAIL "A"

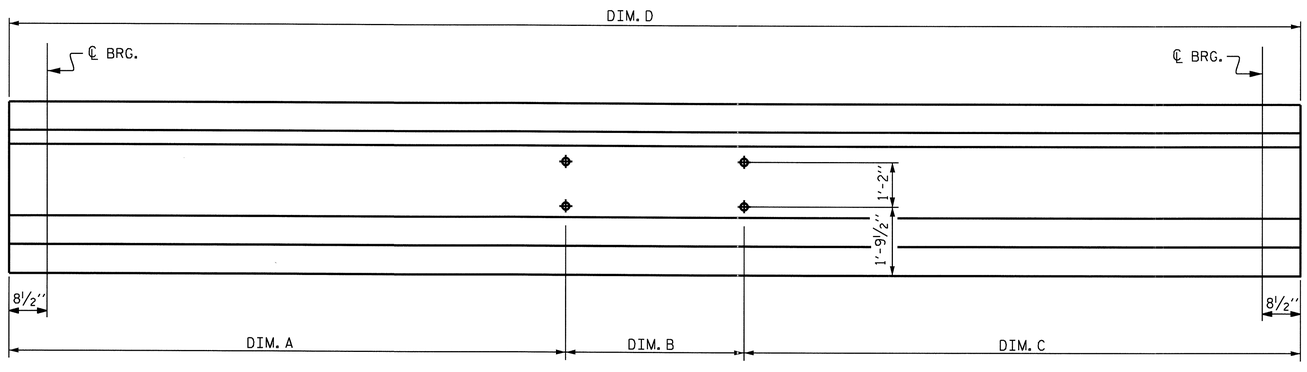

LOCATION OF BOLT HOLES IN GIRDERS

FOR DIMENSIONS SEE CHART A

NOTES

ALL PRESTRESSING STRANDS SHALL BE 7-WIRE LOW-RELAXATION GRADE 270 STRANDS AND SHALL CONFORM TO AASHTO M203 EXCEPT FOR SAMPLING REQUIREMENTS WHICH SHALL BE IN ACCORDANCE WITH THE STANDARD SPECIFICATIONS.

ALL REINFORCING STEEL SHALL BE GRADE 60.

APPLY EPOXY PROTECTIVE COATING TO END OF GIRDER SURFACES INDICATED IN ELEVATION VIEW.

EMBEDDED PLATE "B-1" SHALL BE GALVANIZED IN ACCORDANCE WITH THE STANDARD SPECIFICATIONS. BEVEL EDGES OF PLATE "B-1" TO GIVE CLOSE FIT BUT NOT TIGHT FIT TO STEEL CASTING FORM.

ANCHOR STUDS SHALL CONFORM TO AASHTO M169 GRADES 1010 THROUGH 1020 OR APPROVED EQUAL, AND SHALL MEET THE TYPE "B" REQUIREMENTS OF SUBSECTION 7.3 OF THE ANSI/AASHTO/AWS D1.5 BRIDGE WELDING CODE.

AT ENDS OF GIRDERS TO BE EMBEDDED IN CONCRETE DIAPHRAGMS OR END WALLS, PRESTRESSING STRANDS MAY EXTEND A MAXIMUM OF 2" BEYOND THE GIRDER ENDS. OTHERWISE, PRESTRESSING STRANDS SHALL BE CUT FLUSH WITH THE GIRDER ENDS.

THE TRANSFER OF LOAD FROM THE ANCHORAGES TO THE GIRDER (SPANS A & C) SHALL BE DONE WHEN CONCRETE HAS REACHED A COMPRESSIVE STRENGTH OF NOT LESS THAN 4000 PSI.

THE TRANSFER OF LOAD FROM THE ANCHORAGES TO THE GIRDER (SPAN B) SHALL BE DONE WHEN CONCRETE HAS REACHED A COMPRESSIVE STRENGTH OF NOT LESS THAN 4500 PSI.

DEPENDING ON THE TYPE OF SYSTEM USED TO SUPPORT THE DECK SLAB FORMS, PRESET ANCHORS MAY BE NECESSARY IN THE PRESTRESSED CONCRETE GIRDER.

THE TOP SURFACE OF THE GIRDER, EXCLUDING THE OUTSIDE 4", SHALL BE RAKED TO A DEPTH OF 1/4".

WHEN DRAPED STRANDS ARE DETAILED, THE LONGITUDINAL LOCATION OF THE HOLD DOWN DEVICES SHALL BE WITHIN 6" OF THE LOCATION SHOWN AND THE CENTER OF GRAVITY OF THE GROUP OF DRAPED STRANDS SHALL BE LOCATED WITHIN 1/2" OF THE THEORETICAL LOCATION SHOWN.

FOR PRESTRESSED CONCRETE MEMBERS, SEE SPECIAL PROVISIONS.

PROJECT NO. R-2233AB
RUTHERFORD COUNTY
STATION: 298+34.21 -L-

SHEET 4 OF 6

STATE OF NORTH CAROLINA
DEPARTMENT OF TRANSPORTATION
RALEIGH

STANDARD

PRESTRESSED CONCRETE GIRDER CONTINUOUS FOR LIVE LOAD DETAILS

RIGHT LANE

NORTH CAROLINA PROFESSIONAL SEAL 20125 ENGINEER MARSHALL G. CHEEK, JR.
9-14-10

REVISIONS						SHEET NO.
NO.	BY:	DATE:	NO.	BY:	DATE:	S-113
1			3			TOTAL SHEETS
2			4			184

ASSEMBLED BY : V.X. NGUYEN	DATE : 8-13-09		
CHECKED BY : M.G. CHEEK	DATE : 1/10		
DRAWN BY : ELR 11/91	REV. 10/17/00 RWW/LES		
CHECKED BY : GRP 11/91	REV. 7/10/01RR LES/RDR		
	REV. 5/1/06 TLA/GM		

14-SEP-2010 11:49
R:\Structures\Final Plans\Str. #4\R-2233AB_SD_STR#4_07_G#.dgn
aflgueroa

STR. #4

STD. NO. PCG11

DEAD LOAD DEFLECTION TABLE FOR GIRDERS

0.6" LOW RELAXATION		SPAN A										
		GIRDERS 1 THRU 5										
TENTH POINTS		℄ BRG.	0.1	0.2	0.3	0.4	0.5	0.6	0.7	0.8	0.9	℄ BRG.
CAMBER (GIRDER ALONE IN PLACE)	↑	0.0	0.006	0.011	0.015	0.018	0.019	0.018	0.015	0.011	0.006	0.0
✱ DEFLECTION DUE TO SUPERIMPOSED D.L.	↓	0.0	0.002	0.004	0.006	0.007	0.007	0.007	0.006	0.004	0.002	0.0
FINAL CAMBER	↑	0	1/16"	1/16"	1/8"	1/8"	1/8"	1/8"	1/8"	1/16"	1/16"	0

✱ INCLUDES FUTURE WEARING SURFACE
ALL VALUES ARE SHOWN IN FEET (DECIMAL FORM), EXCEPT " FINAL CAMBER ", WHICH IS GIVEN IN INCHES (FRACTION FORM).

DEAD LOAD DEFLECTION TABLE FOR GIRDERS

0.6" LOW RELAXATION		SPAN C										
		GIRDERS 1 THRU 5										
TENTH POINTS		℄ BRG.	0.1	0.2	0.3	0.4	0.5	0.6	0.7	0.8	0.9	℄ BRG.
CAMBER (GIRDER ALONE IN PLACE)	↑	0.0	0.005	0.009	0.017	0.014	0.014	0.014	0.017	0.009	0.005	0.0
✱ DEFLECTION DUE TO SUPERIMPOSED D.L.	↓	0.0	0.001	0.002	0.002	0.002	0.003	0.002	0.002	0.002	0.001	0.0
FINAL CAMBER	↑	0	1/16"	1/16"	1/8"	1/8"	1/8"	1/8"	1/8"	1/16"	1/16"	0

✱ INCLUDES FUTURE WEARING SURFACE
ALL VALUES ARE SHOWN IN FEET (DECIMAL FORM), EXCEPT " FINAL CAMBER ", WHICH IS GIVEN IN INCHES (FRACTION FORM).

DEAD LOAD DEFLECTION TABLE FOR GIRDERS

0.6" LOW RELAXATION		SPAN B										
		GIRDERS 1 & 5										
TENTH POINTS		℄ BRG.	0.1	0.2	0.3	0.4	0.5	0.6	0.7	0.8	0.9	℄ BRG.
CAMBER (GIRDER ALONE IN PLACE)	↑	0.0	0.083	0.156	0.214	0.250	0.263	0.250	0.214	0.156	0.083	0.0
✱ DEFLECTION DUE TO SUPERIMPOSED D.L.	↓	0.0	0.033	0.063	0.087	0.101	0.106	0.101	0.087	0.063	0.033	0.0
FINAL CAMBER	↑	0	9/16"	1 1/8"	1 1/2"	1 13/16"	1 7/8"	1 13/16"	1 1/2"	1 1/8"	9/16"	0

✱ INCLUDES FUTURE WEARING SURFACE
ALL VALUES ARE SHOWN IN FEET (DECIMAL FORM), EXCEPT " FINAL CAMBER ", WHICH IS GIVEN IN INCHES (FRACTION FORM).

DEAD LOAD DEFLECTION TABLE FOR GIRDERS

0.6" LOW RELAXATION		SPAN B										
		GIRDERS 2										
TENTH POINTS		℄ BRG.	0.1	0.2	0.3	0.4	0.5	0.6	0.7	0.8	0.9	℄ BRG.
CAMBER (GIRDER ALONE IN PLACE)	↑	0.0	0.083	0.156	0.214	0.250	0.263	0.250	0.214	0.156	0.083	0.0
✱ DEFLECTION DUE TO SUPERIMPOSED D.L.	↓	0.0	0.035	0.066	0.090	0.106	0.111	0.106	0.090	0.066	0.035	0.0
FINAL CAMBER	↑	0	9/16"	1 1/16"	1 1/2"	1 3/4"	1 13/16"	1 3/4"	1 1/2"	1 1/16"	9/16"	0

✱ INCLUDES FUTURE WEARING SURFACE
ALL VALUES ARE SHOWN IN FEET (DECIMAL FORM), EXCEPT " FINAL CAMBER ", WHICH IS GIVEN IN INCHES (FRACTION FORM).

DEAD LOAD DEFLECTION TABLE FOR GIRDERS

0.6" LOW RELAXATION		SPAN B										
		GIRDERS 3 & 4										
TENTH POINTS		℄ BRG.	0.1	0.2	0.3	0.4	0.5	0.6	0.7	0.8	0.9	℄ BRG.
CAMBER (GIRDER ALONE IN PLACE)	↑	0.0	0.083	0.156	0.214	0.250	0.263	0.250	0.214	0.156	0.083	0.0
✱ DEFLECTION DUE TO SUPERIMPOSED D.L.	↓	0.0	0.037	0.069	0.095	0.111	0.117	0.111	0.095	0.069	0.037	0.0
FINAL CAMBER	↑	0	9/16"	1 1/16"	1 7/16"	1 11/16"	1 3/4"	1 11/16"	1 7/16"	1 1/16"	9/16"	0

✱ INCLUDES FUTURE WEARING SURFACE
ALL VALUES ARE SHOWN IN FEET (DECIMAL FORM), EXCEPT " FINAL CAMBER ", WHICH IS GIVEN IN INCHES (FRACTION FORM).

PROJECT NO. R-2233AB
RUTHERFORD COUNTY
STATION: 298+34.21 -L-

SHEET 5 OF 6

STATE OF NORTH CAROLINA
DEPARTMENT OF TRANSPORTATION
RALEIGH

SUPERSTRUCTURE

DEAD LOAD DEFLECTION TABLES

RIGHT LANE

NORTH CAROLINA PROFESSIONAL SEAL 20125 ENGINEER MARSHALL G. CHEEK, JR.
9-16-10

REVISIONS						SHEET NO.
NO.	BY:	DATE:	NO.	BY:	DATE:	S-114
1			3			TOTAL SHEETS
2			4			184

STR. #4

DRAWN BY : V.X. NGUYEN DATE : 8-13-09
CHECKED BY : M.G. CHEEK DATE : 1/10

30-JUL-2010 10:44
R:\Structures\Str*4\vnguyen\R-2233AB_SD_G*.dgn
vnguyen

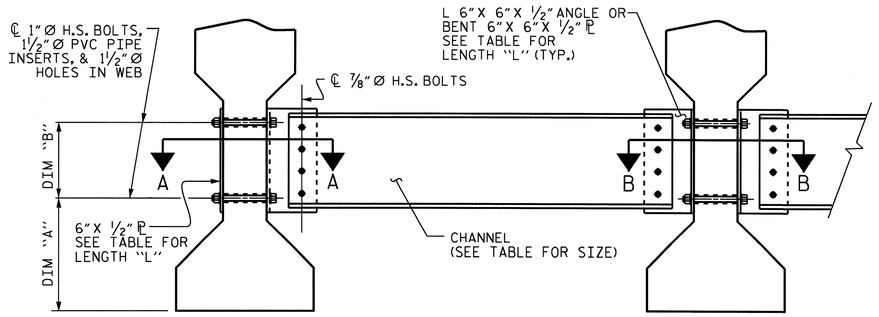

EXTERIOR GIRDER

INTERIOR GIRDER

PART SECTION AT INTERMEDIATE DIAPHRAGM

DIAPHRAGM FACE

WEB FACE

CONNECTOR PLATE DETAILS

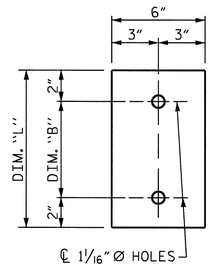

PLATE DETAILS

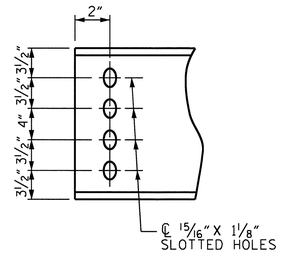

CHANNEL END

(TYPE III OR TYPE IV GDR.)

STRUCTURAL STEEL NOTES

ALL INTERMEDIATE DIAPHRAGM STEEL, CONNECTOR PLATES AND PLATE WASHERS SHALL BE AASHTO M270 GRADE 50 OR APPROVED EQUAL.

TENSION ON THE AASHTO M164 BOLTS THROUGH THE CHANNEL MEMBER SHALL BE CALIBRATED USING DIRECT TENSION INDICATOR WASHERS IN ACCORDANCE WITH ARTICLE 440-8 OF THE STANDARD SPECIFICATIONS. FOR DIRECT TENSION INDICATORS, SEE SPECIAL PROVISIONS.

TENSION ON THE AASHTO M164 BOLTS THROUGH THE GIRDER WEB SHALL BE SNUG TIGHTENED FOLLOWED BY AN ADDITIONAL ¼ TURN.

THE CHANNELS, ANGLES, WASHERS, PLATE WASHERS, AND DIRECT TENSION INDICATORS SHALL BE GALVANIZED OR METALLIZED IN ACCORDANCE WITH THE STANDARD SPECIFICATIONS. FOR THERMAL SPRAYED COATINGS (METALLIZATION), SEE SPECIAL PROVISIONS.

FOR METALLIZATION, APPLY AN 8 MIL THICK 99.99 PERCENT ZINC (W-Zn-1) THERMAL SPRAYED COATING WITH A 0.5 MIL THICK SEAL COAT TO ALL STEEL DIAPHRAGM SURFACES IN ACCORDANCE WITH THE THERMAL SPRAYED COATINGS SPECIAL PROVISIONS AND SECTION 442 OF THE STANDARD SPECIFICATIONS.

GALVANIZE THE HIGH STRENGTH BOLTS, NUTS, AND WASHERS IN ACCORDANCE WITH THE STANDARD SPECIFICATIONS. FOR HIGH STRENGTH BOLTS, SEE SPECIAL PROVISIONS.

USE A MINIMUM 7/16" THICK PLATE WASHER WITH STANDARD HOLES UNDER EACH BOLT HEAD AND NUT. THE PLATE WASHERS SHALL HAVE SUFFICIENT SIZE TO COVER THE HOLES AFTER INSTALLATION. DIRECT TENSION INDICATORS ARE TO BE USED IN CONJUNCTION WITH THE PLATE WASHERS.

PROVIDE SUFFICIENT LENGTH OF ALL BOLTS TO ACCOMMODATE WASHERS, DIRECT TENSION INDICATORS, THE THICKNESS OF CONNECTING MEMBER PLUS AT LEAST ¼" PROJECTION BEYOND THE NUT.

INTERMEDIATE DIAPHRAGM ASSEMBLY SHALL COMPLY WITH SECTION 1072 OF THE STANDARD SPECIFICATIONS.

THE CONTRACTOR SHALL SUBMIT TWO SETS OF WORKING DRAWINGS FOR THE INTERMEDIATE DIAPHRAGM ASSEMBLY FOR REVIEW, COMMENTS AND ACCEPTANCE. AFTER REVIEW, COMMENTS, AND ACCEPTANCE, THE CONTRACTOR SHALL SUBMIT SEVEN SETS FOR DISTRIBUTION.

IN THE EXTERIOR BAYS, TEMPORARY STRUTS SHALL BE PLACED BETWEEN PRESTRESSED GIRDERS ADJACENT TO THE STEEL DIAPHRAGMS. STRUTS SHALL REMAIN IN PLACE 3 DAYS AFTER CONCRETE IS PLACED. ALL AASHTO M164 H.S. BOLTS SHALL BE FULLY TIGHTENED AFTER THE STRUTS HAVE BEEN REMOVED.

THE COST OF THE STEEL DIAPHRAGMS AND ASSEMBLIES SHALL BE INCLUDED IN THE UNIT PRICE BID FOR PRESTRESSED CONCRETE GIRDERS.

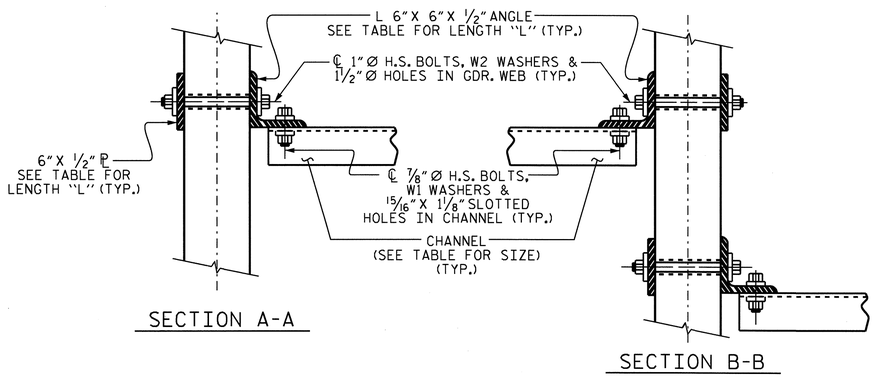

SECTION A-A

SECTION B-B

CONNECTION DETAILS

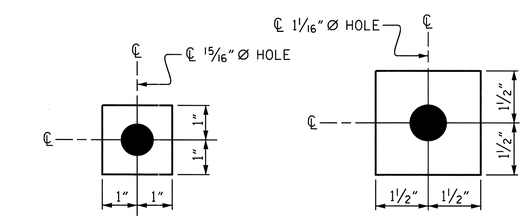

W1

ℙ 7/16" X 2" X 2"

USE WITH ⅞"Ø HVY. HEX NUTS & DIRECT TENSION INDICATOR WASHERS AT DIAPHRAGM CHANNEL TO CONNECTOR PLATE CONNECTIONS

W2

ℙ 7/16" X 3" X 3"

USE WITH 1"Ø HVY. HEX NUTS AT CONNECTOR PLATE TO GIRDER CONNECTIONS

WASHER DETAILS

TABLE

GIRDER TYPE	CHANNEL SIZE	DIM "A"	DIM "B"	DIM "L"
IV	MC 18 x 42.7	1'-9½"	1'-2"	1'-6"

PROJECT NO. R-2233AB

RUTHERFORD COUNTY

STATION: 298+34.21 -L-

SHEET 6 OF 6

STATE OF NORTH CAROLINA
DEPARTMENT OF TRANSPORTATION
RALEIGH

STANDARD
INTERMEDIATE
STEEL DIAPHRAGMS
FOR TYPE IV
PRESTRESSED CONCRETE
GIRDERS
RIGHT LANE

NORTH CAROLINA PROFESSIONAL SEAL 20125 ENGINEER MARSHALL G. CHEEK, JR. 4-16-10

REVISIONS						SHEET NO.
NO.	BY:	DATE:	NO.	BY:	DATE:	S-115
1			3			TOTAL SHEETS
2			4			184

STR. #4 STD. NO. PCG12

ASSEMBLED BY : V.X. NGUYEN	DATE : 4-16-09		
CHECKED BY : M.G. CHEEK	DATE : 1/10		
DRAWN BY : TLA 6/05	ADDED 10/21/05		
CHECKED BY : VC 6/05	REV. 5/1/06R	KMM/GM	

30-JUL-2010 10:44
R:\Structures\Str#4\vnguyen\R-2233AB_SD_G*.dgn
vnguyen

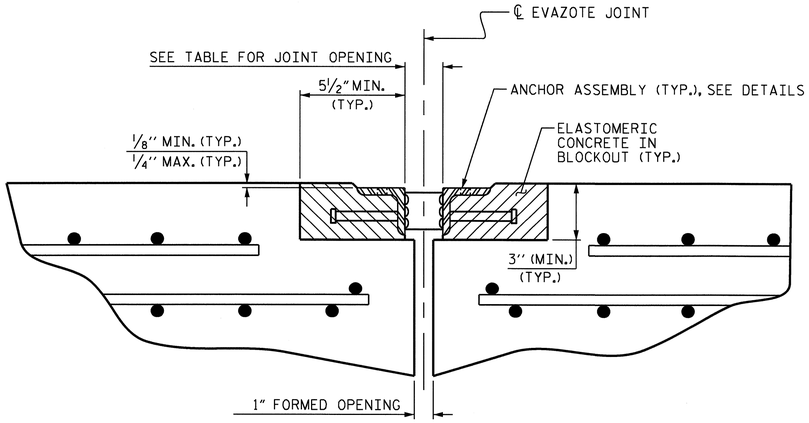

ARMORED JOINT DETAILS

SECTION NORMAL TO JOINT AT END BENT

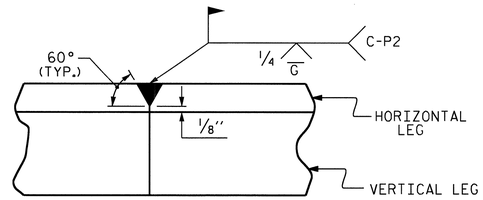

DETAIL- FIELD WELD SPLICE OF ANGLE

NOTES

ANGLES SHALL CONFORM TO AASHTO M270 GRADE 36 STEEL OR APPROVED EQUAL. ALL STUD ANCHORS SHALL CONFORM TO AASHTO M169 GRADES 1010 THRU 1020 OR APPROVED EQUAL.

STUD ANCHORS SHALL BE SHOP WELDED AND ALL HOLES SHALL BE SHOP DRILLED AS SHOWN ON THE PLANS. STUD ANCHORS SHALL BE ELECTRIC ARC END WELDED WITH COMPLETE FUSION.

UPON COMPLETION OF SHOP FABRICATION, THE ENTIRE ANCHOR ASSEMBLY SHALL BE METALLIZED. THE ½" Ø STUD ANCHORS AND ANCHOR TABS NEED NOT BE METALLIZED. SEE SPECIAL PROVISION FOR THERMAL SPRAYED COATINGS (METALLIZATION).

ANCHOR ASSEMBLY SHALL BE MADE CONTINUOUS THE LENGTH OF THE JOINT FROM GUTTER TO GUTTER. FOR FIELD SPLICES AT ALL CROWN BREAK POINTS, THE ENDS OF THE STEEL ANGLES SHALL BE CUT PARALLEL TO THE BRIDGE CENTERLINE. FINISHED FIELD WELDS SHALL BE GROUND SMOOTH AND COATED WITH A MINIMUM THICKNESS OF 4 DRY MILS OF ZINC-RICH PAINT IN ACCORDANCE WITH THE STANDARD SPECIFICATIONS.

ANCHOR ASSEMBLY SEGMENTS SHALL NOT BE LESS THAN 12 FEET NOR MORE THAN 20 FEET IN LENGTH. SHORTER SEGMENTS MAY BE USED AT THE EDGE OF ROADWAY OR AT POINTS OF STAGED CONSTRUCTION.

THE ANCHOR ASSEMBLY SHALL BE SECURED AND LEVELED AS SHOWN IN THE "ARMORED JOINT ANCHOR ASSEMBLY DETAILS". NO SUBMITTALS ARE REQUIRED FOR ⅜" Ø EXPANSION ANCHORS, NUTS OR WASHERS. THE CONTRACTOR MAY SUBMIT FOR APPROVAL AN ALTERNATE METHOD OF ALIGNING AND LEVELING THE ANGLES. THE ALTERNATE METHOD SHALL NOT INCLUDE ANY WELDING TO THE OUTSIDE FACE OF THE ANGLES.

AFTER THE ELASTOMERIC CONCRETE HAS BEEN CAST ON BOTH SIDES OF THE JOINT, REMOVE ANY EXCESS CONCRETE THAT COMES THROUGH THE WEEP HOLES AND THOROUGHLY CLEAN THE ANGLES. ANY DAMAGED STEEL SHALL BE COATED WITH A MINIMUM OF 4 MILS OF ZINC-RICH PAINT IN ACCORDANCE WITH THE STANDARD SPECIFICATIONS.

SEE SPECIAL PROVISIONS FOR EVAZOTE JOINT SEALS.

SEE SPECIAL PROVISIONS FOR ELASTOMERIC CONCRETE.

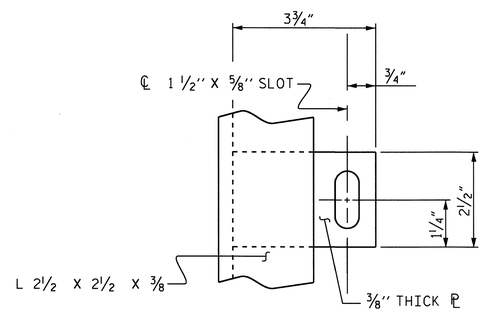

PLAN VIEW OF TAB

MOVEMENT AND SETTING AT EVAZOTE JOINT						
END BENT NO.	SKEW ANGLE	NOMINAL UNCOMPRESSED SEAL WIDTH	TOTAL MOVEMENT (ALONG ℄ RDWY)	PERPENDICULAR JOINT OPENING AT 45° F	PERPENDICULAR JOINT OPENING AT 60° F	PERPENDICULAR JOINT OPENING AT 90° F
1	64°-48'-00"	2½"	⅝"	2⅛"	2"	1¾"
2	64°-48'-00"	2½"	9/16"	2⅛"	2"	1 13/16"

TOTAL MOVEMENT IS CALCULATED ALONG THE CENTERLINE OF ROADWAY.
JOINT OPENINGS ARE MEASURED PERPENDICULAR TO THE JOINT.

BILL OF MATERIAL		
END BENT NO.	ELASTOMERIC CONCRETE ✱ (CU. FT.)	TOTAL LENGTH OF ANGLE (FT)
1	9.1	79'-6⅞"
2	9.1	79'-6⅞"

✱ BASED ON THE MINIMUM BLOCKOUT SHOWN.

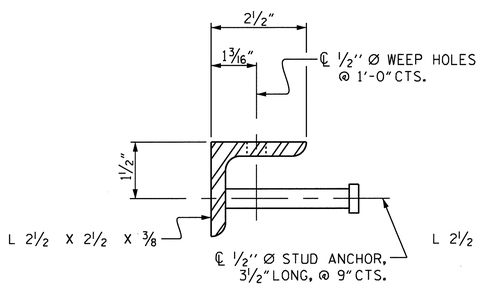

SECTION VIEW OF STUD

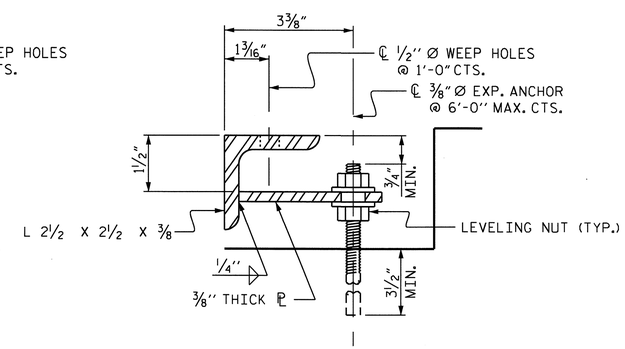

SECTION VIEW OF TAB

ARMORED JOINT ANCHOR ASSEMBLY DETAILS

PROJECT NO. R-2233AB
RUTHERFORD COUNTY
STATION: 298+34.21 -L-

STATE OF NORTH CAROLINA
DEPARTMENT OF TRANSPORTATION
RALEIGH

STANDARD
ARMORED EVAZOTE JOINT DETAILS
RIGHT LANE

NORTH CAROLINA PROFESSIONAL SEAL 20125 ENGINEER MARSHALL G. CHEEK, JR.
9-16-10

REVISIONS						
NO.	BY:	DATE:	NO.	BY:	DATE:	
1			3			
2			4			

SHEET NO. S-116
TOTAL SHEETS 184

STR. #4

ASSEMBLED BY : V.X. NGUYEN	DATE : 8-12-09		
CHECKED BY : M.G. CHEEK	DATE : 02-10		
DRAWN BY : EEM 1/96	REV. 7/10/01 LES/RDR		
CHECKED BY : RGW 1/96	REV. 5/7/03RR RWW/JTE		
	REV. 5/1/06 TLA/GM		

30-JUL-2010 10:44
R:\Structures\Str#4\vnguyen\R-2233AB_SD_JS.dgn
vnguyen

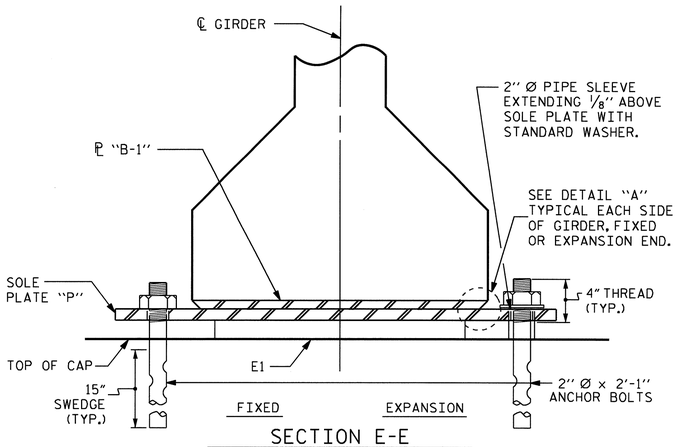

SECTION E-E

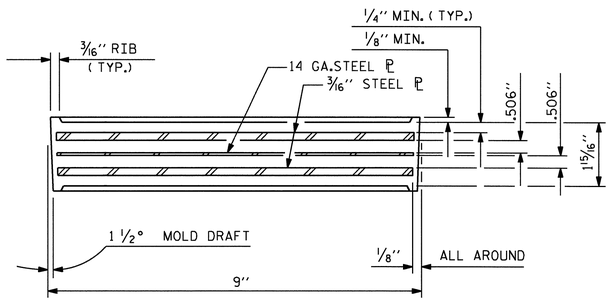

TYPICAL SECTION OF ELASTOMERIC BEARINGS

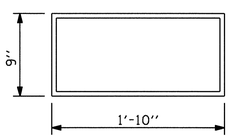

E1 (30 REQ'D)

PLAN VIEW OF ELASTOMERIC BEARING

TYPE IV

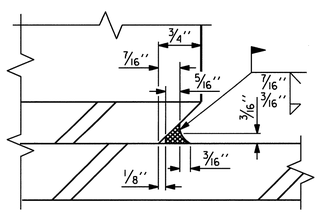

DETAIL "A"

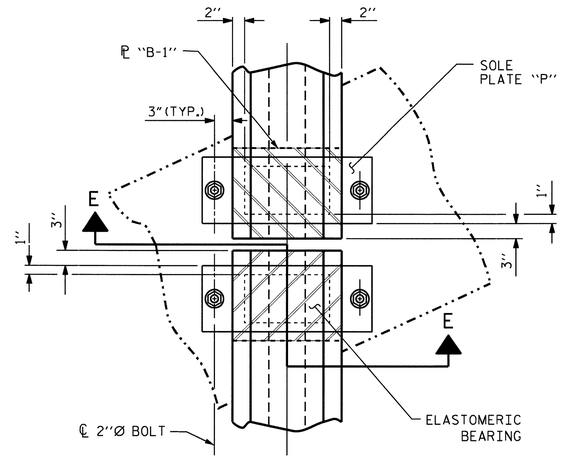

TYPICAL HALF-PLAN

(SHOWING CONTINUOUS BENT)

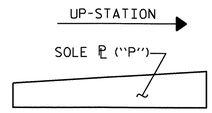

SOLE ℗ PLACEMENT DETAIL

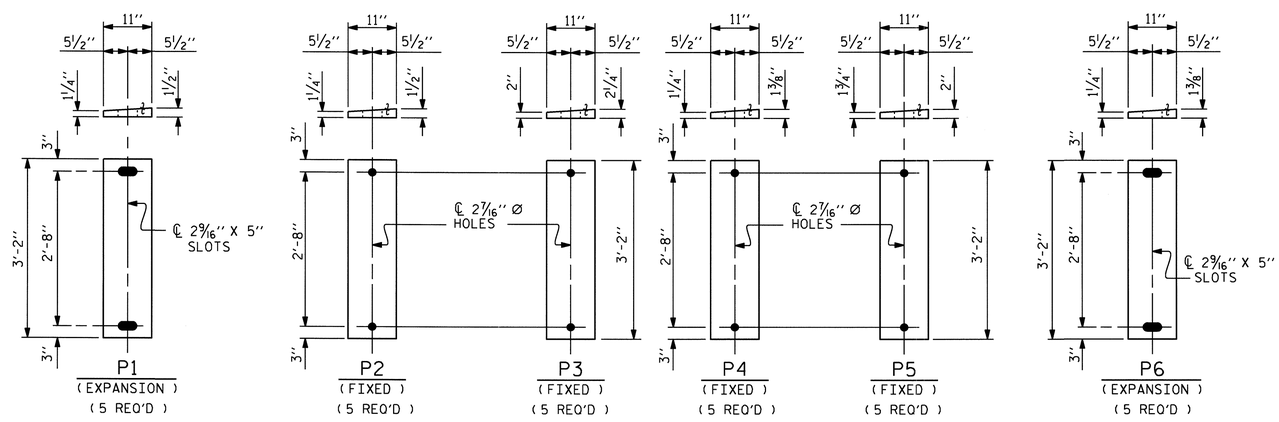

SOLE PLATE DETAILS ("P")

NOTES

AT ALL FIXED POINTS OF SUPPORT, NUTS FOR ANCHOR BOLTS ARE TO BE TIGHTENED FINGER TIGHT AND THEN BACKED OFF 1/2 TURN. THE THREAD OF THE NUT AND BOLT SHALL THEN BE BURRED WITH A SHARP POINTED TOOL.

THE 2" Ø PIPE SLEEVE SHALL BE CUT FROM SCHEDULE 40 PVC PLASTIC PIPE. THE PVC PLASTIC PIPE SHALL MEET THE REQUIREMENTS OF ASTM D1785.

STEEL SOLE PLATES, ANCHOR BOLTS, NUTS, AND WASHERS SHALL BE GALVANIZED IN ACCORDANCE WITH THE STANDARD SPECIFICATIONS.

PRIOR TO WELDING, GRIND THE GALVANIZED SURFACE OF THE PORTION OF THE EMBEDDED PLATE AND SOLE PLATE THAT ARE TO BE WELDED. AFTER WELDING, DAMAGED GALVANIZED SURFACES SHALL BE REPAIRED IN ACCORDANCE WITH THE STANDARD SPECIFICATIONS.

WHEN WELDING THE SOLE PLATE TO THE EMBEDDED PLATE IN THE GIRDER, USE TEMPERATURE INDICATING WAX PENS, OR OTHER SUITABLE MEANS, TO ENSURE THAT THE TEMPERATURE OF THE SOLE PLATE DOES NOT EXCEED 300°F. TEMPERATURES ABOVE THIS MAY DAMAGE THE ELASTOMER.

SOLE PLATE "P", BOLTS, NUTS, WASHERS, AND PIPE SLEEVE SHALL BE INCLUDED IN THE PAY ITEM FOR PRESTRESSED CONCRETE GIRDERS.

ANCHOR BOLTS SHALL MEET THE REQUIREMENTS OF ASTM A449. NUTS SHALL MEET THE REQUIREMENTS OF AASHTO M291-DH OR AASHTO M292-2H. WASHERS SHALL MEET THE REQUIREMENTS OF AASHTO M293. SHOP DRAWINGS ARE NOT REQUIRED FOR ANCHOR BOLT, NUTS AND WASHERS. SHOP INSPECTION IS REQUIRED.

ALL SURFACES OF BEARING PLATES SHALL BE SMOOTH AND STRAIGHT.

LOAD RATINGS	
	MAX.D.L.+L.L.
54" PCG -TYPE IV	137 K

PROJECT NO. R-2233AB
RUTHERFORD COUNTY
STATION: 298+34.21 -L-

STATE OF NORTH CAROLINA
DEPARTMENT OF TRANSPORTATION
RALEIGH

STANDARD
ELASTOMERIC BEARING DETAILS
PRESTRESSED CONCRETE GIRDER SUPERSTRUCTURE
RIGHT LANE

ASSEMBLED BY : V.X. NGUYEN	DATE : 4-27-09		
CHECKED BY : M.C. CHEEK	DATE : 2-10		
DRAWN BY : WJH 8/89	REV. 10/17/00	RWW/LES	
CHECKED BY : CRK 8/89	REV. 7/10/01	RWW/LES	
	REV. 5/1/06	TLA/GM	

REVISIONS						SHEET NO.
NO.	BY:	DATE:	NO.	BY:	DATE:	S-117
1			3			TOTAL SHEETS
2			4			184

NORTH CAROLINA PROFESSIONAL SEAL 20125 ENGINEER MARSHALL L. CHEEK, JR. 9-16-10

STR. #4

14-SEP-2010 11:49
R:\Structures\Final Plans\Str. #4\R-2233AB_SD_STR#4_08_BG.dgn
atfigueroa

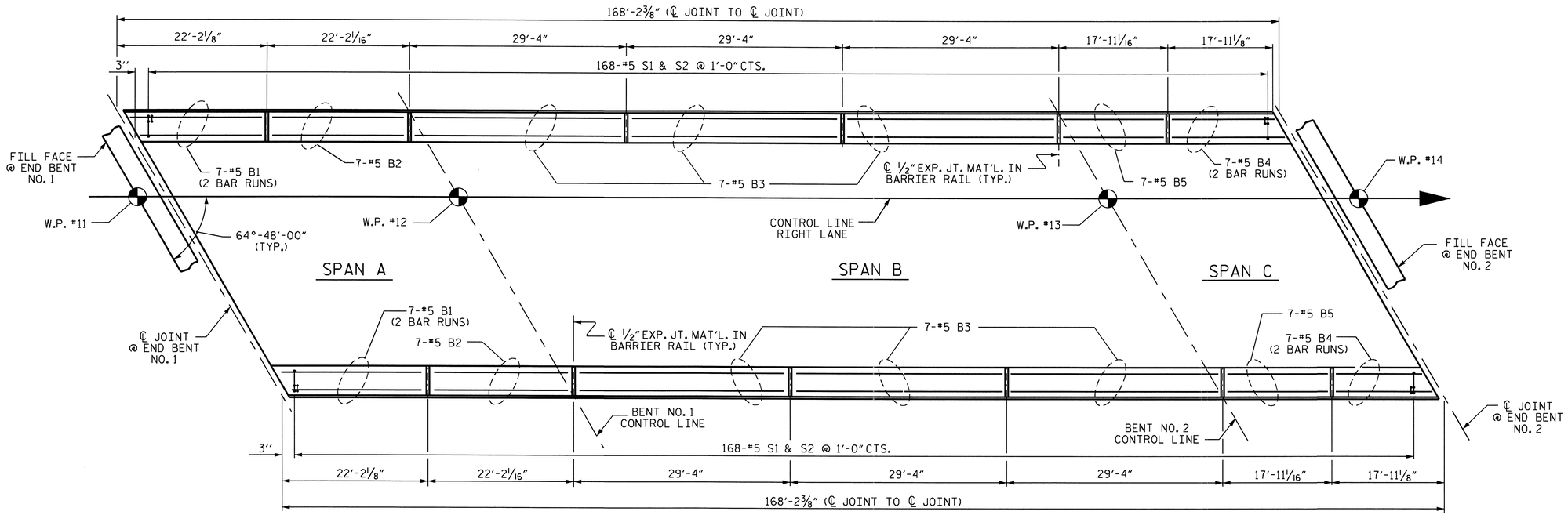

PLAN OF CONCRETE BARRIER RAIL

BAR TYPES

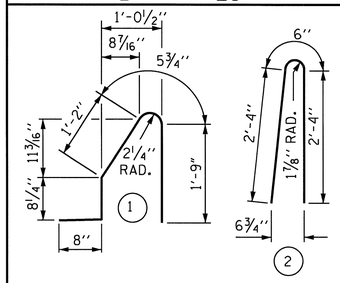

ALL BAR DIMENSIONS ARE OUT TO OUT

BILL OF MATERIAL

FOR CONCRETE BARRIER RAIL ONLY

BAR	NO.	SIZE	TYPE	LENGTH	WEIGHT
* S1	336	#5	1	4'-9"	1665
* S2	336	#5	2	5'-2"	1811
* B1	28	#5	STR	13'-2"	385
* B2	14	#5	STR	21'-9"	318
* B3	42	#5	STR	28'-11"	1267
* B4	28	#5	STR	11'-1"	324
* B5	14	#5	STR	17'-6"	256

* EPOXY COATED REINFORCING STEEL	6026 LBS.
CLASS AA CONCRETE	33.7 CU. YDS.
CONCRETE BARRIER RAIL	336.40 LIN. FT.

* THESE BARS ARE EPOXY COATED.

NOTES

THE BARRIER RAIL IN A CONTINUOUS UNIT SHALL NOT BE CAST UNTIL ALL SLAB CONCRETE IN THAT UNIT HAS BEEN CAST AND HAS REACHED A MINIMUM COMPRESSIVE STRENGTH OF 3,000 PSI.

ALL REINFORCING STEEL IN BARRIER RAILS SHALL BE EPOXY COATED.

VERTICAL GROOVED CONTRACTION JOINTS, ½" IN DEPTH, SHALL BE TOOLED IN ALL EXPOSED FACES OF THE BARRIER RAIL AND IN ACCORDANCE WITH ARTICLE 825-10(B) OF THE STANDARD SPECIFICATIONS. THE CONTRACTION JOINTS SHALL BE LOCATED AT EACH THIRD POINT BETWEEN BARRIER RAIL EXPANSION JOINTS. ONLY ONE CONTRACTION JOINT IS REQUIRED AT MIDPOINT OF BARRIER RAIL SEGMENTS LESS THAN 20 FEET IN LENGTH AND NO CONTRACTION JOINTS ARE REQUIRED FOR THOSE SEGMENTS LESS THAN 10 FEET IN LENGTH.

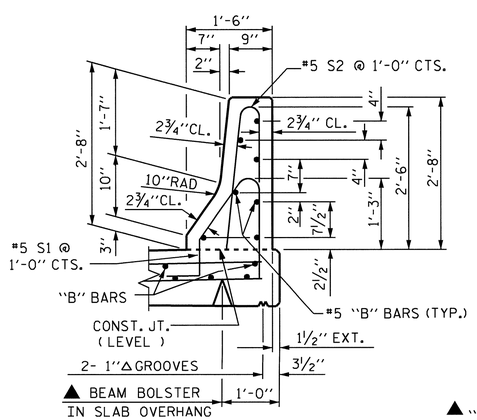

SECTION THRU RAIL

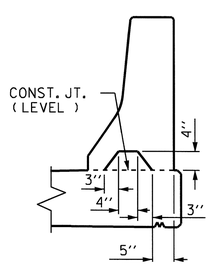

SECTION S-S

AT DAM IN OPEN JOINT (THIS IS TO BE USED ONLY WHEN SLIP FORM IS USED)

▲ FOR BEAM BOLSTER HEIGHT SEE, "SUPERSTRUCTURE TYPICAL SECTIONS".

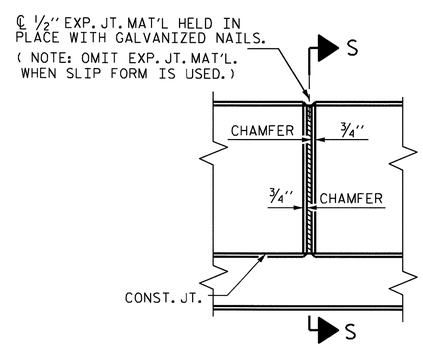

ELEVATION AT EXPANSION JOINTS

BARRIER RAIL DETAILS

PROJECT NO. R-2233AB

RUTHERFORD COUNTY

STATION: 298+34.21 -L-

STATE OF NORTH CAROLINA
DEPARTMENT OF TRANSPORTATION
RALEIGH

STANDARD

CONCRETE BARRIER RAIL

RIGHT LANE

NORTH CAROLINA PROFESSIONAL SEAL 20125 ENGINEER MARSHALL G. CHEEK, JR.
8-16-10

ASSEMBLED BY :	V.X. NGUYEN	DATE :	4-23-09
CHECKED BY :	M.G. CHEEK	DATE :	01-10

DRAWN BY :	ARB	5/87	REV. 10/17/00	RWW/LES
CHECKED BY :	SJD	9/87	REV. 5/7/03R	RWW/JTE
			REV. 5/1/06	TLA/GM

REVISIONS

NO.	BY:	DATE:	NO.	BY:	DATE:
1			3		
2			4		

SHEET NO. S-118

TOTAL SHEETS 184

STR #4

STD. NO. CBR1

14-SEP-2010 11:49
R:\Structures\Final Plans\Str. #4\R-2233AB_SD_STR#4_09_BR.dgn
atfigueroa

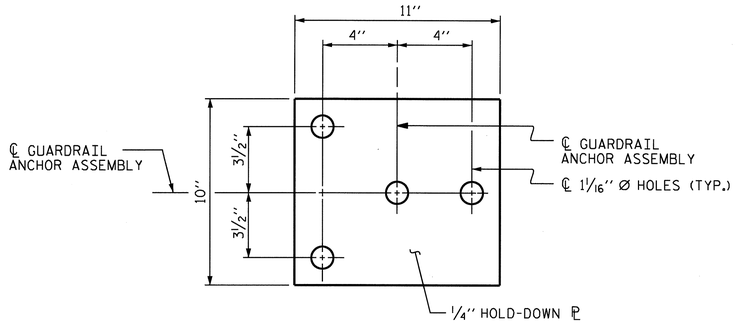

PLAN

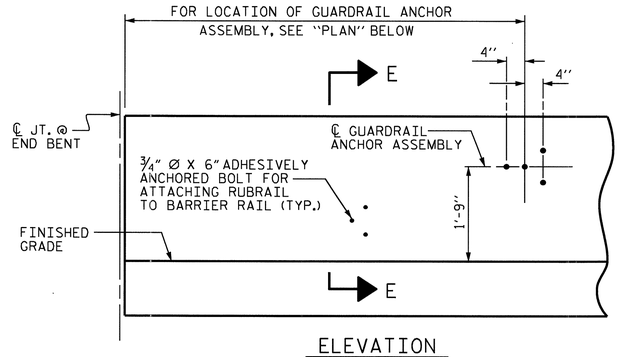

ELEVATION

FOR LOCATION OF RUBRAIL, SEE ROADWAY STD. 862.03

NOTES

THE GUARDRAIL ANCHOR ASSEMBLY SHALL CONSIST OF A 1/4'' HOLD DOWN PLATE AND 4 - 7/8'' Ø BOLTS WITH NUTS AND WASHERS, RUBRAIL, AND ADHESIVELY ANCHORED BOLTS.

THE HOLD-DOWN PLATE SHALL CONFORM TO AASHTO M270 GRADE 36. AFTER FABRICATION, THE HOLD-DOWN PLATE SHALL BE HOT-DIP GALVANIZED IN ACCORDANCE WITH AASHTO M111.

BOLTS SHALL CONFORM TO THE REQUIREMENTS OF ASTM A307 AND NUTS SHALL CONFORM TO THE REQUIREMENTS OF AASHTO M291. BOLTS, NUTS AND WASHERS SHALL BE GALVANIZED. (AT THE CONTRACTOR'S OPTION, STAINLESS STEEL BOLTS, NUTS AND WASHERS MAY BE USED AS AN ALTERNATE FOR THE 7/8'' Ø GALVANIZED BOLTS, NUTS AND WASHERS. THEY SHALL CONFORM TO OR EXCEED THE MECHANICAL REQUIREMENTS OF ASTM A307. THE USE OF THIS ALTERNATE SHALL BE APPROVED BY THE ENGINEER.)

THE GUARDRAIL ANCHOR ASSEMBLY IS REQUIRED AT ALL POINTS WHERE APPROACH GUARDRAIL IS TO BE ATTACHED TO THE END OF BARRIER RAIL. FOR POINTS OF ATTACHMENT, SEE SKETCH.

AFTER INSTALLATION, THE EXPOSED THREAD OF THE BOLT SHALL BE BURRED WITH A SHARP POINTED TOOL.

THE COST OF THE GUARDRAIL ANCHOR ASSEMBLY SHALL BE INCLUDED IN THE UNIT CONTRACT PRICE BID FOR CONCRETE BARRIER RAIL.

THE 1 1/4'' Ø HOLES SHALL BE FORMED OR DRILLED WITH A CORE BIT. IMPACT TOOLS WILL NOT BE PERMITTED. ANY CONCRETE DAMAGED BY THIS WORK SHALL BE REPAIRED TO THE SATISFACTION OF THE ENGINEER.

THE C6 X 8.2 RUBRAIL IS TO BE ADHESIVELY ANCHORED TO THE RAIL USING THREE 3/4"Ø X 6" BOLTS WITH WASHERS. LEVEL ONE FIELD TESTING IS REQUIRED, AND THE YIELD LOAD OF THE 3/4"Ø BOLT IS 12 KIPS. FOR ADHESIVELY ANCHORED ANCHOR BOLTS OR DOWELS, SEE SPECIAL PROVISIONS. SEE ROADWAY STANDARD 862.03 FOR DETAILS AND LOCATION OF THE RUBRAIL.

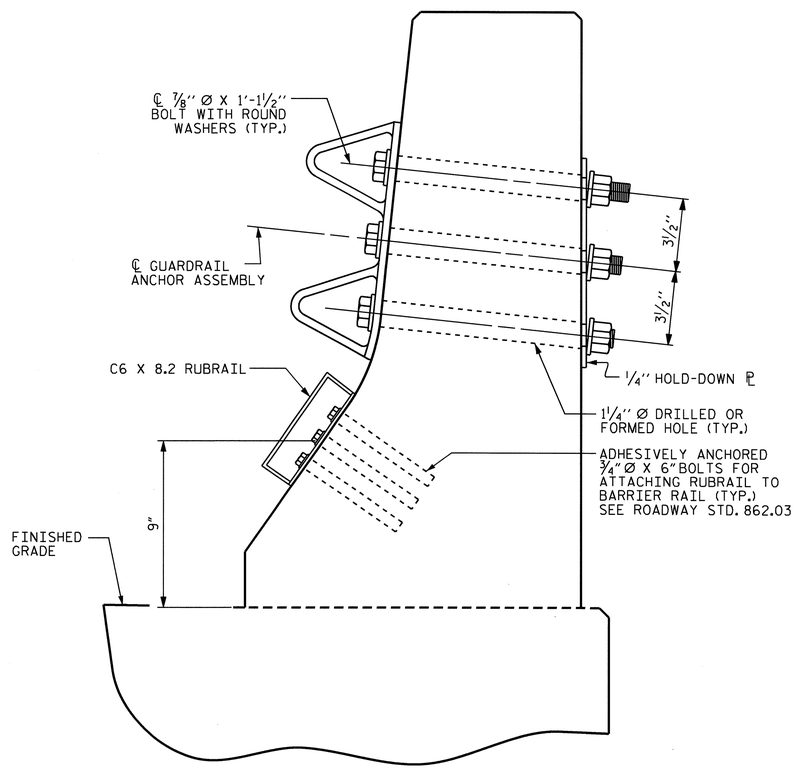

SECTION E-E

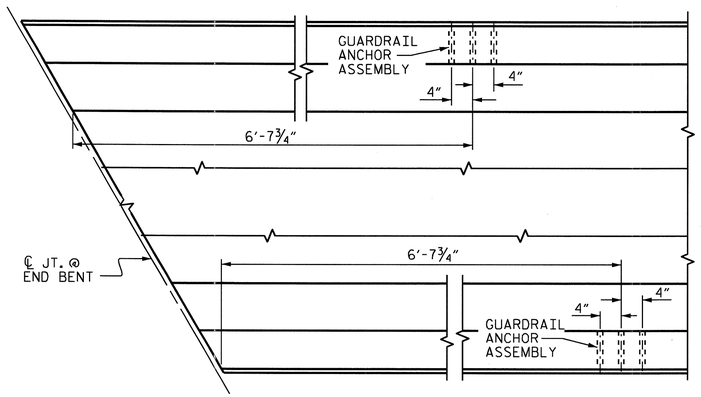

PLAN

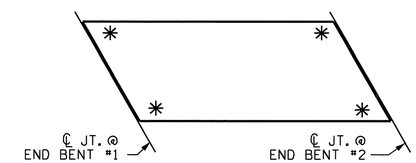

SKETCH SHOWING POINTS OF ATTACHMENTS

✳ DENOTES GUARDRAIL ANCHOR ASSEMBLY

GUARDRAIL ANCHOR ASSEMBLY DETAILS

LOCATION OF ANCHORS FOR GUARDRAIL

END BENT #1 SHOWN, END BENT #2 SIMILAR.

PROJECT NO. R-2233AB
RUTHERFORD COUNTY
STATION: 298+34.21 -L-

STATE OF NORTH CAROLINA
DEPARTMENT OF TRANSPORTATION
RALEIGH

STANDARD

GUARDRAIL ANCHORAGE FOR BARRIER RAIL RIGHT LANE

NORTH CAROLINA PROFESSIONAL SEAL 20125 ENGINEER
MARSHALL G. CHEEK, Jr.
9-16-10

REVISIONS						SHEET NO.
NO.	BY:	DATE:	NO.	BY:	DATE:	S-119
1			3			TOTAL SHEETS
2			4			184

ASSEMBLED BY : V.X. NGUYEN DATE : 4-21-09	
CHECKED BY : M.G. CHEEK DATE : 01-10	
DRAWN BY : TLA 5/06	ADDED 5/1/06R KMM/GM
CHECKED BY : GM 5/06	

30-JUL-2010 11:18
R:\Structures\Str*4\vnguyen\R-2233AB_SD_BR.dgn
vnguyen

STR. #4

STD. NO. GRA2

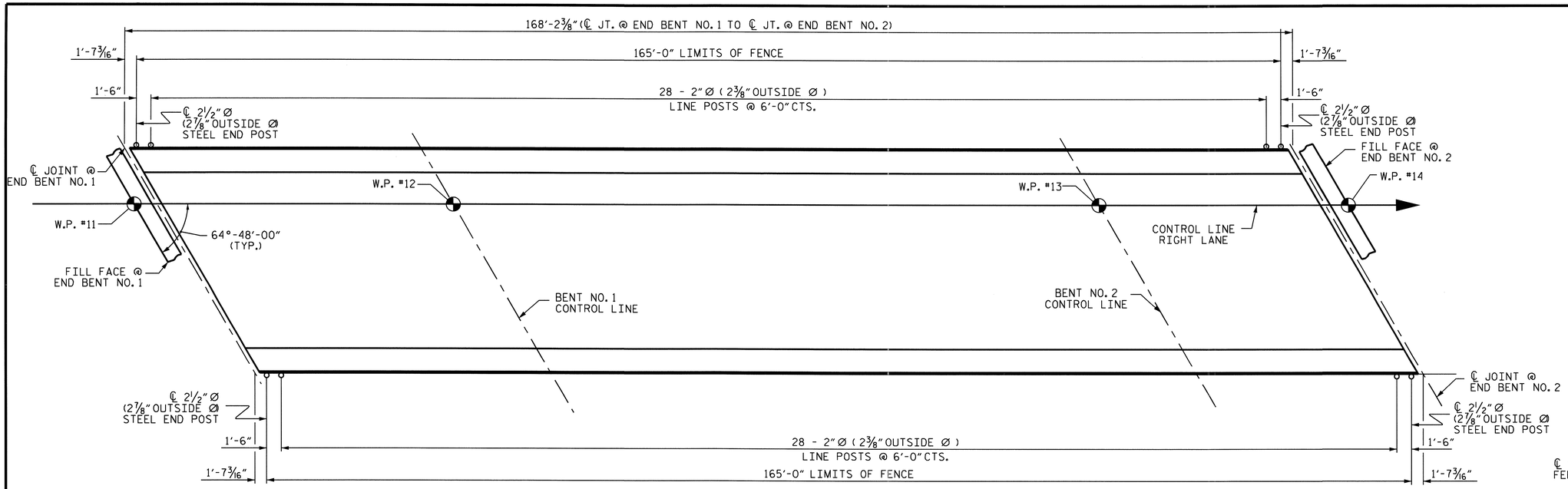

PLAN OF FENCE POST SPACING

PAY LENGTH 330.00 FEET

NOTES:

FOR 72" CHAIN LINK FENCE, SEE SPECIAL PROVISIONS.

MATERIAL FOR ANCHOR BOLTS SHALL BE TYPE 304 STAINLESS STEEL WITH A MINIMUM 9000 PSI ULTIMATE STRENGTH. NUTS AND WASHERS SHALL BE TYPE 304 STAINLESS STEEL. ANCHOR BOLTS SHALL BE EMBEDDED AS PER ADHESIVE BONDING SYSTEM MANUFACTURER SPECIFICATIONS. NUTS SHALL BE AMERICAN STANDARD FINISHED HEXAGON THICK NUTS, CLASS 2B THREADS.

FOR SETTING ANCHOR BOLTS, THE CONTRACTOR SHALL USE AN ADHESIVE BONDING SYSTEM. SEE SPECIAL PROVISIONS FOR ADHESIVELY ANCHORED ANCHOR BOLTS OR DOWELS. LEVEL ONE FIELD TESTING OF BONDING SYSTEM IS REQUIRED AND THE YIELD LOAD OF THE 3/4" Ø BOLTS IS 12.0 KIPS.

ALL FENCE MATERIAL SHALL MEET THE REQUIREMENTS OF SECTION 1050 OF THE STANDARD SPECIFICATIONS. GALVANIZE ALL STEEL PARTS AND HARDWARE IN ACCORDANCE WITH ARTICLE 1076 OF THE STANDARD SPECIFICATIONS.

FENCE POST LOCATIONS SHALL BE SHIFTED, AS NECESSARY, TO MAINTAIN 12" MINIMUM DISTANCE FROM ANCHOR BOLT TO JOINTS IN BARRIER RAIL.

DIMENSIONS TAKEN ALONG OUTSIDE FACE OF BARRIER RAIL.

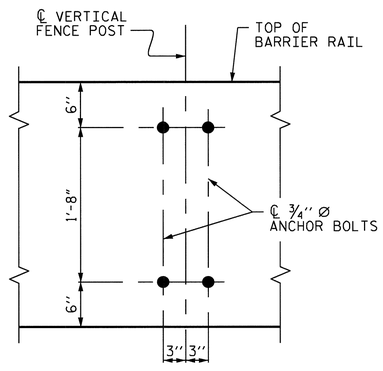

BOLT SETTING DETAIL

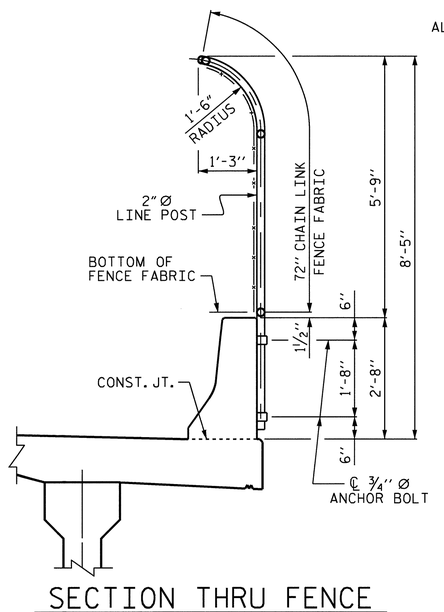

SECTION THRU FENCE

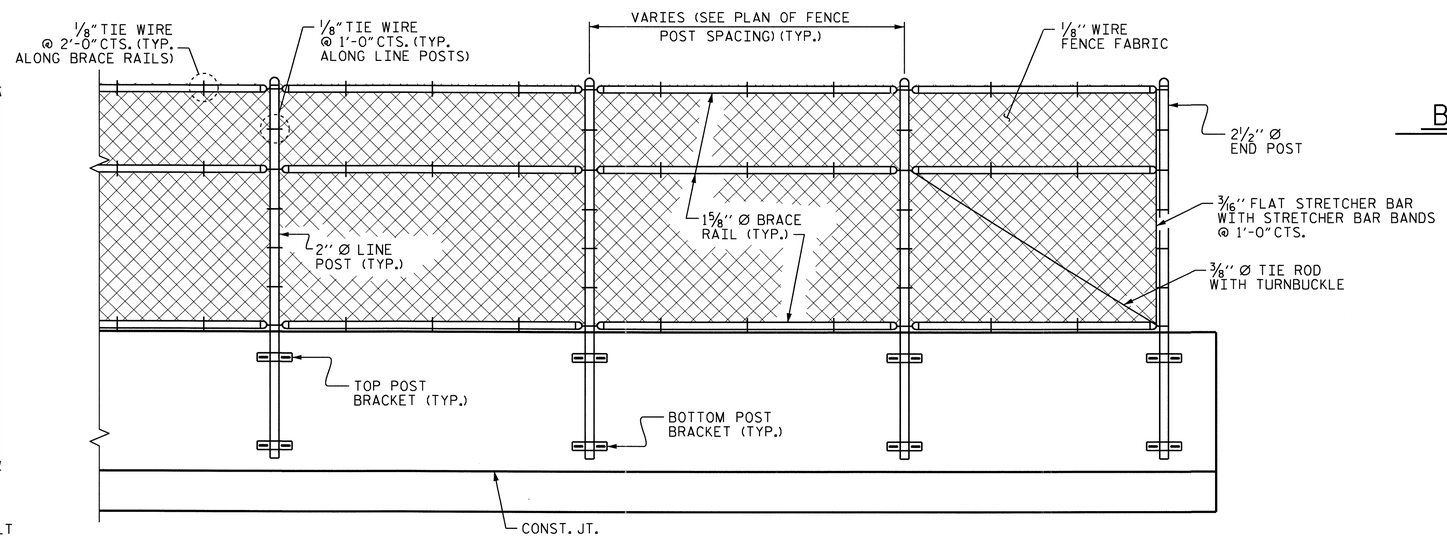

PARTIAL ELEVATION

PROJECT NO. R-2233AB
RUTHERFORD COUNTY
STATION: 298+34.21 -L-

STATE OF NORTH CAROLINA
DEPARTMENT OF TRANSPORTATION
RALEIGH

SUPERSTRUCTURE

BRIDGE MOUNTED
72" CHAIN LINK FENCE

RIGHT LANE

NORTH CAROLINA PROFESSIONAL SEAL 20125 ENGINEER MARSHALL G. CHEEK, JR.
9-16-10

REVISIONS						SHEET NO.
NO.	BY:	DATE:	NO.	BY:	DATE:	S-120
1			3			TOTAL SHEETS
2			4			184

STR #4

DRAWN BY : V.X. NGUYEN/ALF DATE : 03-01-10
CHECKED BY : M.G. CHEEK DATE : 07-06-10

14-SEP-2010 11:49
R:\Structures\Final Plans\Str. #4\R-2233AB_SD_STR#4_09_BR.dgn
afigueroa

SUPERSTRUCTURE REINFORCING STEEL LENGTHS ARE BASED ON THE FOLLOWING MINIMUM SPLICE LENGTHS

BAR SIZE	SUPERSTRUCTURE EXCEPT APPROACH SLABS, PARAPET, AND BARRIER RAIL		APPROACH SLABS		PARAPET AND BARRIER RAIL
	EPOXY COATED	UNCOATED	EPOXY COATED	UNCOATED	
#4	2'-0"	1'-9"	2'-0"	1'-9"	2'-9"
#5	2'-6"	2'-2"	2'-6"	2'-2"	3'-5"
#6	3'-0"	2'-7"	3'-10"	2'-7"	4'-4"
#7	5'-3"	3'-6"			
#8	6'-10"	4'-7"			

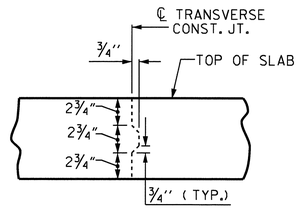

TRANSVERSE CONSTRUCTION JOINT DETAIL

NOTE: REINFORCING STEEL IN SLAB NOT SHOWN. LONGITUDINAL REINFORCING STEEL SHALL BE CONTINUOUS THRU JOINT

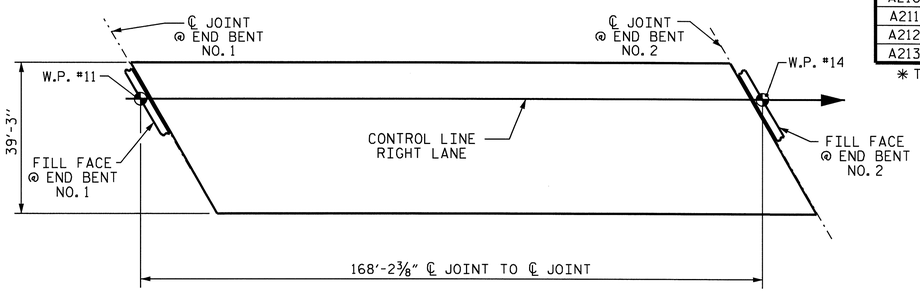

LAYOUT FOR COMPUTING AREA REINFORCED CONCRETE DECK SLAB (SQ. FT. = 6,602)

REINFORCING BAR SCHEDULE SPANS A THRU C

BAR	NO.	SIZE	TYPE	LENGTH	WEIGHT	BAR	NO.	SIZE	TYPE	LENGTH	WEIGHT
* A1	299	#5	STR	38'-11"	12,136	A214	4	#5	STR	9'-10"	41
A2	299	#5	STR	38'-11"	12,136	A215	4	#5	STR	7'-8"	32
						A216	4	#5	STR	5'-7"	23
* A101	4	#5	STR	37'-5"	156	A217	4	#5	STR	3'-5"	14
* A102	4	#5	STR	35'-4"	147						
* A103	4	#5	STR	33'-2"	138						
* A104	4	#5	STR	31'-1"	130	* B1	28	#4	STR	28'-5"	532
* A105	4	#5	STR	28'-11"	121	* B2	28	#7	STR	49'-3"	2819
* A106	4	#5	STR	26'-10"	112	* B3	25	#7	STR	19'-5"	992
* A107	4	#5	STR	24'-8"	103	* B4	28	#4	STR	29'-0"	542
* A108	4	#5	STR	22'-7"	94	* B5	28	#7	STR	46'-4"	2652
* A109	4	#5	STR	20'-5"	85	* B6	25	#7	STR	18'-2"	928
* A110	4	#5	STR	18'-4"	76	* B7	28	#4	STR	22'-11"	429
* A111	4	#5	STR	16'-2"	67	B8	132	#5	STR	57'-5"	7905
* A112	4	#5	STR	14'-1"	59						
* A113	4	#5	STR	11'-11"	50	* G1	2	#5	STR	43'-0"	90
* A114	4	#5	STR	9'-10"	41						
* A115	4	#5	STR	7'-8"	32	* K1	8	#8	1	13'-8"	292
* A116	4	#5	STR	5'-7"	23	* K2	12	#8	2	20'-1"	643
* A117	4	#5	STR	3'-5"	14	* K3	16	#6	STR	6'-8"	160
						K4	32	#4	STR	6'-8"	143
						K5	32	#4	STR	7'-10"	167
A201	4	#5	STR	37'-5"	156	K6	16	#4	STR	5'-0"	53
A202	4	#5	STR	35'-4"	147	K7	20	#4	3	5'-6"	73
A203	4	#5	STR	33'-2"	138	K8	30	#4	4	11'-0"	220
A204	4	#5	STR	31'-1"	130						
A205	4	#5	STR	28'-11"	121	* S1	56	#4	6	3'-8"	137
A206	4	#5	STR	26'-10"	112	* S2	56	#5	5	5'-11"	346
A207	4	#5	STR	24'-8"	103	S3	208	#4	7	2'-9"	382
A208	4	#5	STR	22'-7"	94						
A209	4	#5	STR	20'-5"	85	U1	40	#4	2	14'-8"	392
A210	4	#5	STR	18'-4"	76	U2	16	#4	2	12'-8"	135
A211	4	#5	STR	16'-2"	67						
A212	4	#5	STR	14'-1"	59	REINFORCING STEEL = 23,056 LBS.					
A213	4	#5	STR	11'-11"	50	* EPOXY COATED REINF. STEEL = 24,148 LBS.					

* THESE BARS ARE EPOXY COATED

BAR TYPES

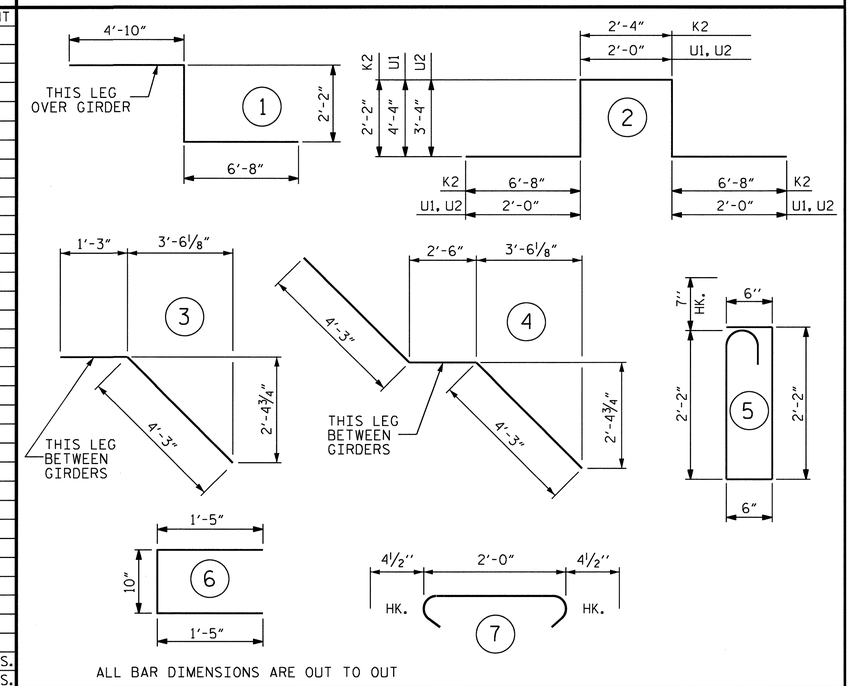

ALL BAR DIMENSIONS ARE OUT TO OUT

SUPERSTRUCTURE BILL OF MATERIAL

		CLASS AA CONCRETE	REINFORCING STEEL	EPOXY COATED REINFORCING STEEL
		(CU. YDS.)	(LBS.)	(LBS.)
SPAN A, B, AND C	POUR #1	47.2	23,056	24,148
	POUR #2	120.7		
	POUR #3	68.8		
TOTALS **		236.7	23,056	24,148

** QUANTITIES FOR BARRIER RAIL ARE NOT INCLUDED

GROOVING BRIDGE FLOORS	
APPROACH SLABS	1550 SQ.FT.
BRIDGE DECK	5505 SQ.FT.
TOTAL	7055 SQ.FT.

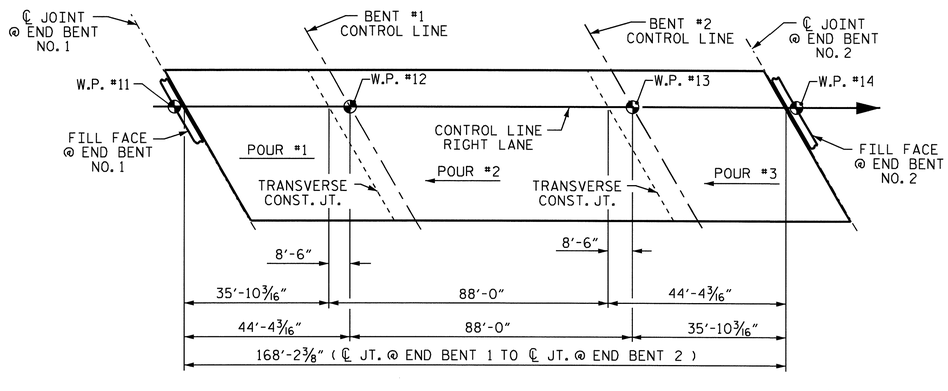

POUR SEQUENCE

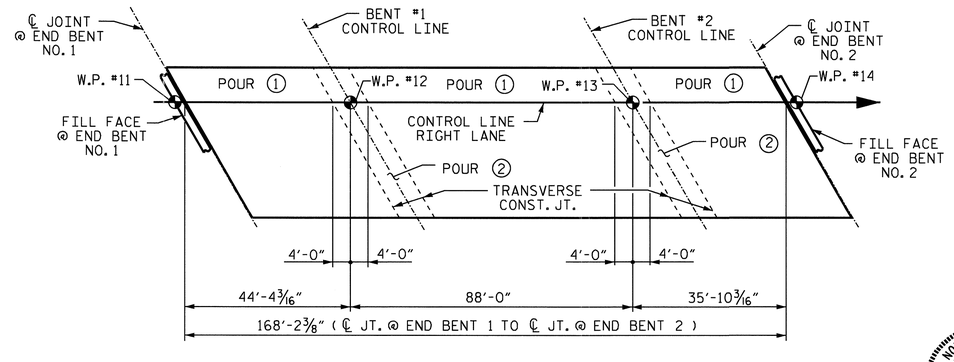

OPTIONAL POURING SEQUENCE

POUR (2) CANNOT BE STARTED UNTIL BOTH ADJACENT (1) POURS REACH A MINIMUM OF 3000 PSI.

PROJECT NO. R-2233AB
RUTHERFORD COUNTY
STATION: 298+34.21 -L-

STATE OF NORTH CAROLINA
DEPARTMENT OF TRANSPORTATION
RALEIGH

SUPERSTRUCTURE
BILL OF MATERIAL
RIGHT LANE

NORTH CAROLINA PROFESSIONAL SEAL 20125 ENGINEER MARSHALL G. CHEEK, JR. 9-16-10

ASSEMBLED BY : V.X. NGUYEN	DATE : 8-17-09
CHECKED BY : M.G. CHEEK	DATE : 2-10
DRAWN BY : JMB 5/87	REV. 6/1/94 EEM/GRP
CHECKED BY : SJD 9/87	REV. 8/16/99 RWW/LES
	REV. 5/1/06 TLA/GM

REVISIONS						SHEET NO.
NO.	BY:	DATE:	NO.	BY:	DATE:	S-121
1			3			TOTAL SHEETS
2			4			184

STR #4

STD. NO. BOM2

14-SEP-2010 13:46
R:\Structures\Final Plans\Str. #4\R-2233AB_SD_STR#4_10_BM.dgn
dfigueroa

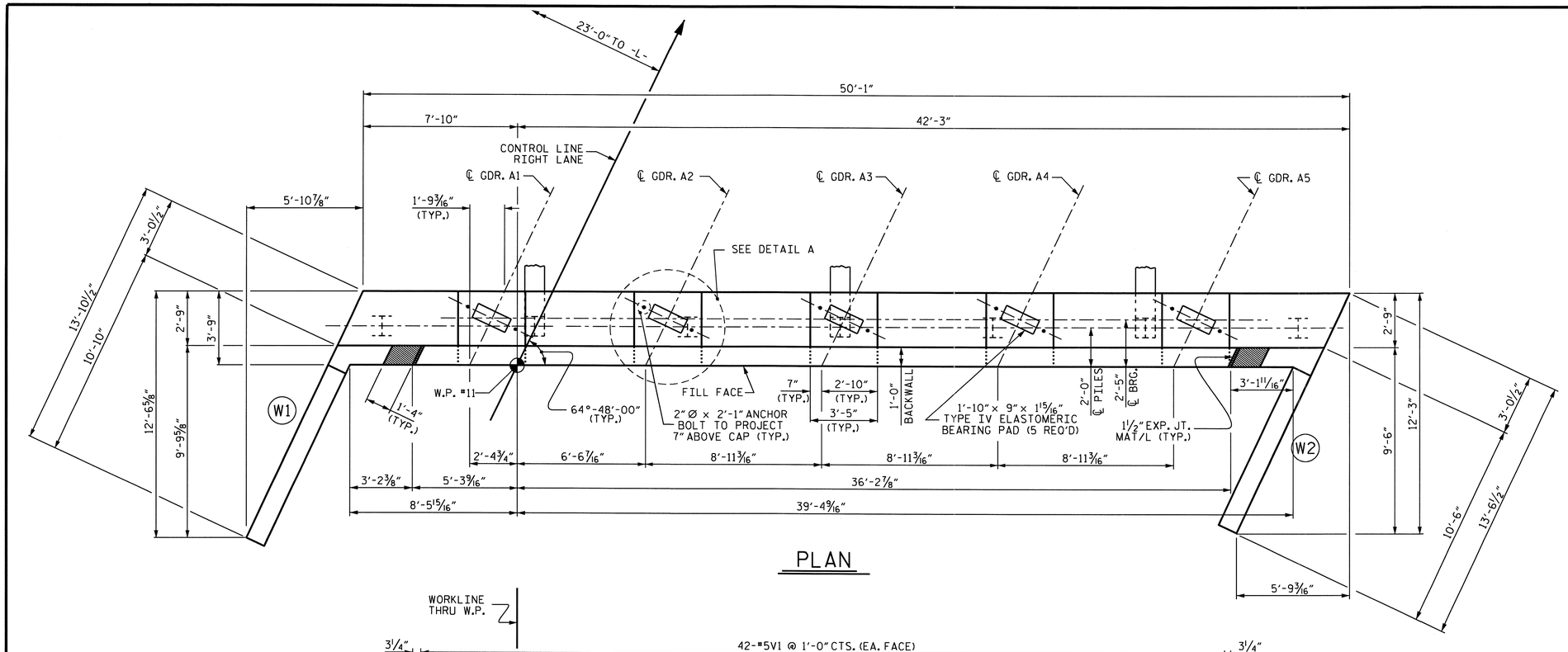

PLAN

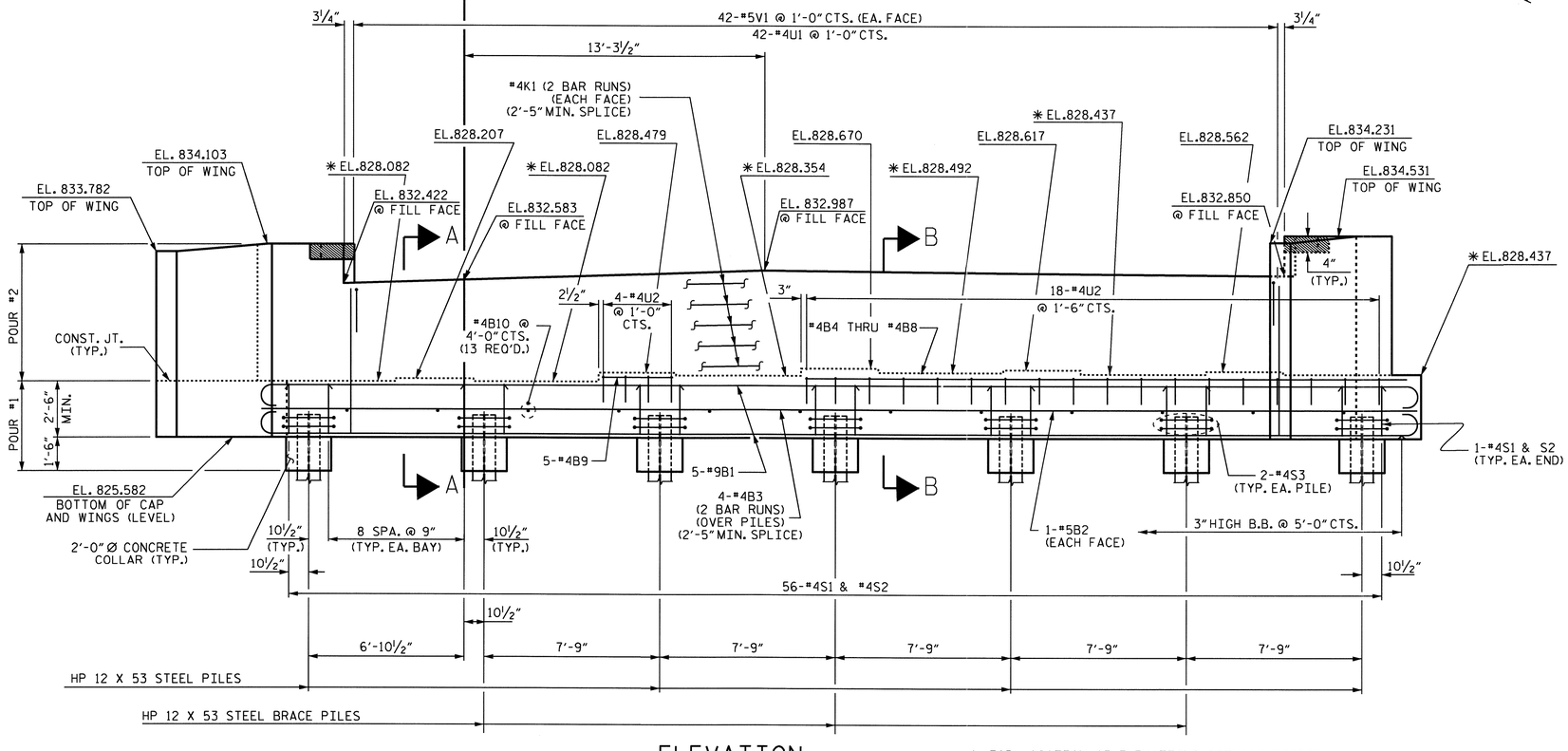

ELEVATION

✱ FOR LOCATION OF ELEVATIONS BETWEEN BRIDGE SEAT BUILDUPS, SEE SECTION VIEWS, SHEET 3 OF 3.

NOTES

STIRRUPS IN CAP MAY BE SHIFTED AS NECESSARY TO CLEAR ANCHOR BOLTS.

FOR SECTIONS A-A AND B-B, SEE SHEET 3 OF 3.

FOR PILE SPLICE DETAILS, SEE SHEET 3 OF 3.

FOR TEMPORARY DRAINAGE AT END BENTS, SEE SHEET 3 OF 3.

BACKWALL SHALL BE PLACED BEFORE APPLYING THE EPOXY PROTECTIVE COATING.

THE TOP SURFACE AREA OF THE END BENT CAP SHALL BE CURED IN ACCORDANCE WITH THE STANDARD SPECIFICATIONS EXCEPT THAT THE MEMBRANE CURING COMPOUND METHOD SHALL NOT BE USED.

THE TOP SURFACE OF THE END BENT CAP EXCEPT THE BRIDGE SEAT BUILDUPS SHALL BE SLOPED TRANSVERSELY FROM THE FILL FACE TO THE BACK FACE AT THE RATE OF 2%.

THE CONTRACTOR SHALL PROVIDE FOR INSTALLATION OF THE 4" DIAMETER DRAIN PIPE THROUGH THE WING WALL AS REQUIRED FOR REINFORCED BRIDGE APPROACH FILLS. SEE THE ROADWAY PLANS. REINFORCING STEEL IN THE WING WALL MAY BE SHIFTED AS NECESSARY TO CLEAR THE DRAIN PIPE.

THE CONCRETE IN THE SHADED AREA OF THE WING SHALL BE POURED AFTER THE BARRIER RAIL IS CAST IF SLIP FORMING IS USED.

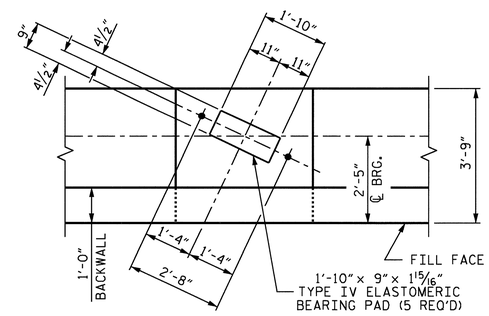

DETAIL A

PROJECT NO. R-2233AB
RUTHERFORD COUNTY
STATION: 298+34.21 -L-

SHEET 1 OF 3

STATE OF NORTH CAROLINA
DEPARTMENT OF TRANSPORTATION
RALEIGH

SUBSTRUCTURE

END BENT NO. 1
RIGHT LANE

NORTH CAROLINA PROFESSIONAL SEAL 20125 ENGINEER MARSHALL L. GREER, JR.
4-16-10

REVISIONS						SHEET NO.
NO.	BY:	DATE:	NO.	BY:	DATE:	S-122
1			3			TOTAL SHEETS
2			4			184

DRAWN BY : L.L.M./A.L.F. DATE : 04-15-09
CHECKED BY : A. SORSENGINH DATE : 04-29-09

13-SEP-2010 16:24
R:\Structures\Final Plans\Str. #4\R-2233AB_SD_STR#4_12_EB.dgn
afigueroa

STR#4

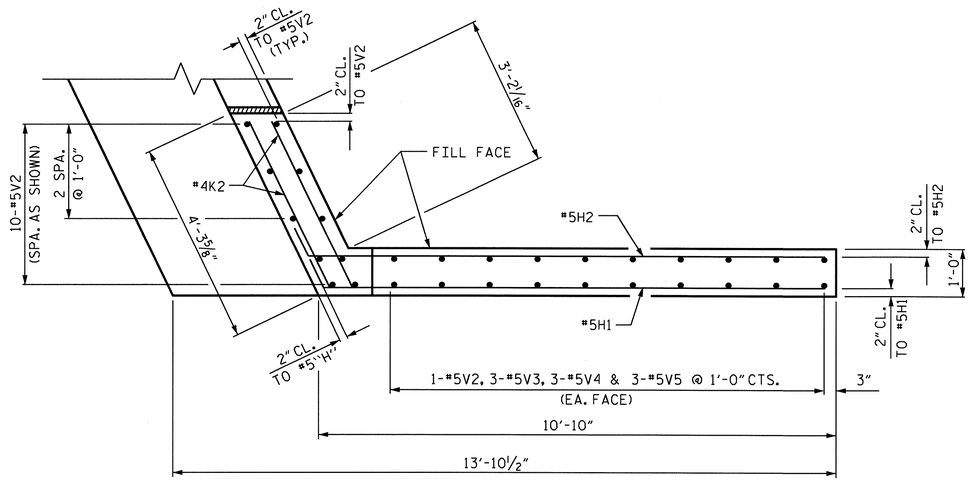

PLAN OF WING - W1

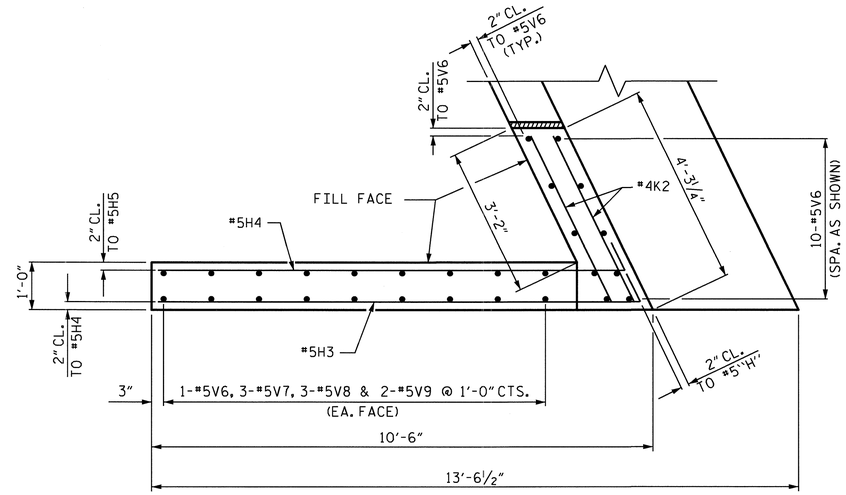

PLAN OF WING - W2

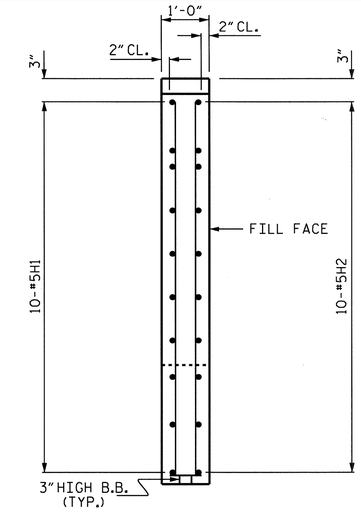

SECTION X-X

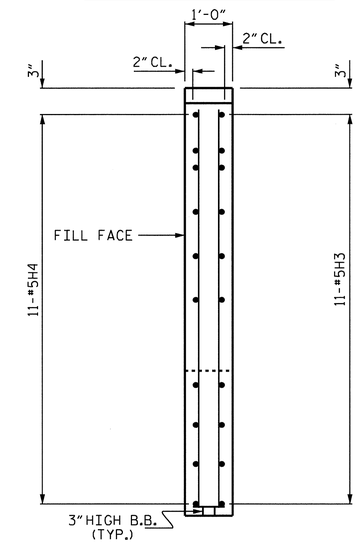

SECTION Y-Y

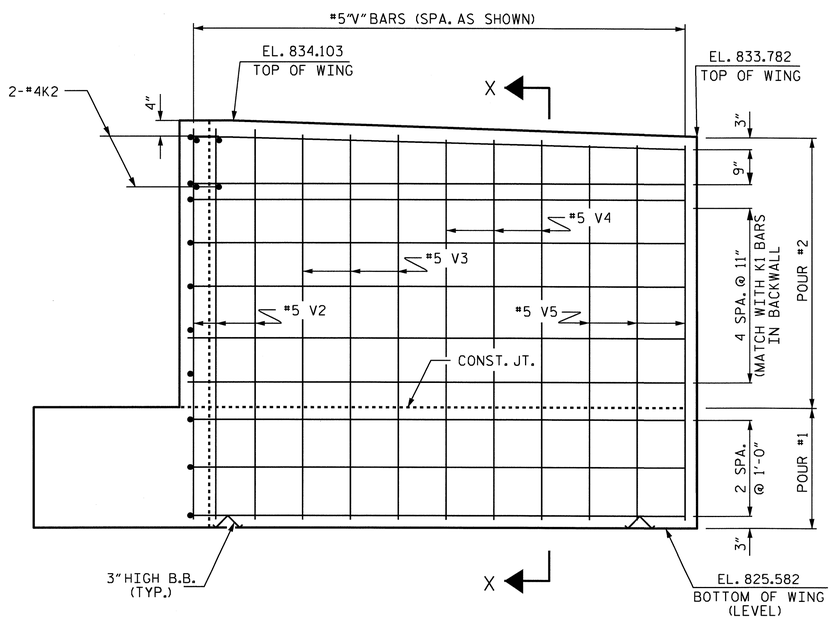

ELEVATION OF WING - W1

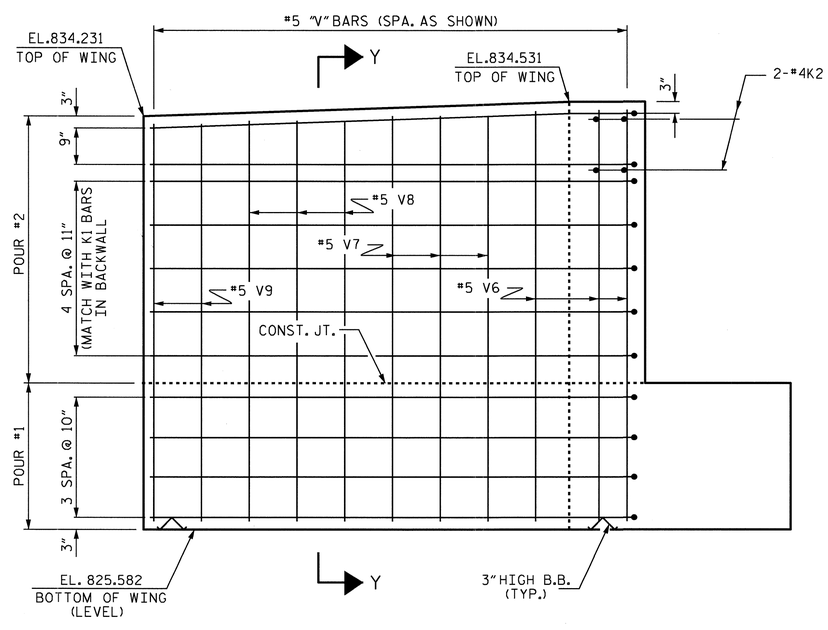

ELEVATION OF WING - W2

PROJECT NO. R-2233AB
RUTHERFORD COUNTY
STATION: 298+34.21 -L-

SHEET 2 OF 3

STATE OF NORTH CAROLINA
DEPARTMENT OF TRANSPORTATION
RALEIGH

SUBSTRUCTURE
END BENT NO. 1
RIGHT LANE

NORTH CAROLINA PROFESSIONAL SEAL 20125 ENGINEER MARSHALL G. CREEK, JR.
9-16-10

REVISIONS						SHEET NO.
NO.	BY:	DATE:	NO.	BY:	DATE:	S-123
1			3			TOTAL SHEETS
2			4			184

DRAWN BY : L.L.M./A.L.F. DATE : 04-15-09
CHECKED BY : A. SORSENGINH DATE : 04-29-09

14-JUL-2010 10:32
R:\Structures\Str#4\A.L. Figueroa\Microstation\R-2233AB_SD_STR#4_12_EB.dgn
afigueroa

STR#4

NCBDS

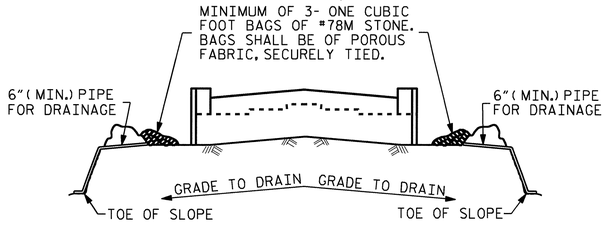

BAGGED STONE AND PIPE SHALL BE PLACED IMMEDIATELY AFTER COMPLETION OF END BENT EXCAVATION. PIPE MAY BE EITHER CONCRETE, CORRUGATED STEEL, CORRUGATED ALUMINUM ALLOY, OR CORRUGATED PLASTIC. PERFORATED PIPE WILL NOT BE ALLOWED.

BAGGED STONE SHALL REMAIN IN PLACE UNTIL THE ENGINEER DIRECTS THAT IT BE REMOVED. THE CONTRACTOR SHALL REMOVE AND DISPOSE OF SILT ACCUMULATIONS AT BAGGED STONE WHEN SO DIRECTED BY THE ENGINEER. BAGS SHALL BE REMOVED AND REPLACED WHENEVER THE ENGINEER DETERMINES THAT THEY HAVE DETERIORATED AND LOST THEIR EFFECTIVENESS.

NO SEPARATE PAYMENT WILL BE MADE FOR THIS WORK AND THE ENTIRE COST OF THIS WORK SHALL BE INCLUDED IN THE UNIT CONTRACT PRICE BID FOR THE SEVERAL PAY ITEMS.

TEMPORARY DRAINAGE AT END BENT

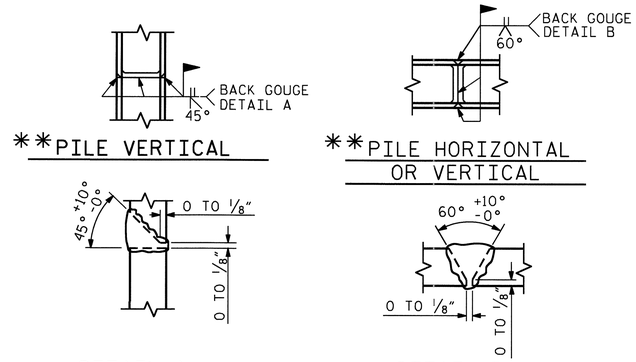

** POSITION OF PILE DURING WELDING.

PILE SPLICE DETAILS

BAR TYPES

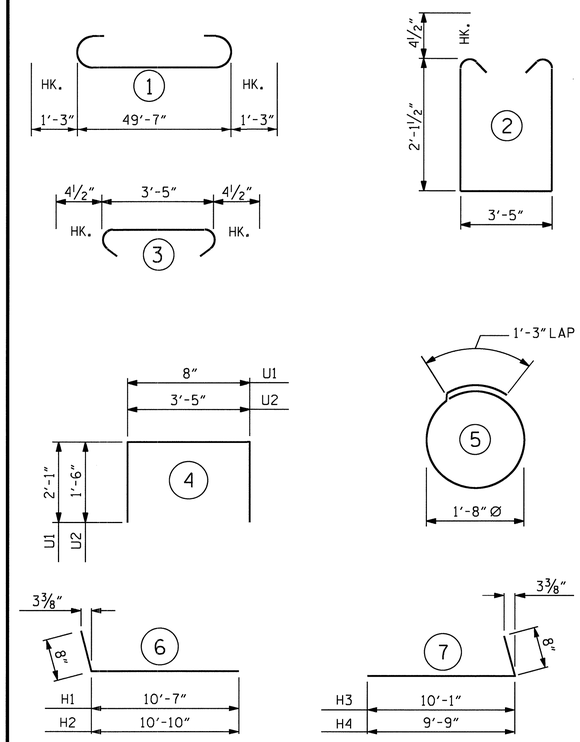

ALL BAR DIMENSIONS ARE OUT TO OUT.

BILL OF MATERIAL
END BENT NO. 1

BAR	NO.	SIZE	TYPE	LENGTH	WEIGHT
B1	10	#9	1	52'-1"	1771
B2	2	#5	STR	49'-9"	104
B3	8	#4	STR	26'-1"	139
B4	1	#4	STR	25'-4"	17
B5	1	#4	STR	25'-10"	17
B6	1	#4	STR	26'-2"	17
B7	1	#4	STR	26'-6"	18
B8	1	#4	STR	26'-10"	18
B9	5	#4	STR	3'-1"	10
B10	13	#4	STR	3'-5"	30
H1	10	#5	6	11'-3"	117
H2	10	#5	6	11'-6"	120
H3	11	#5	7	10'-9"	123
H4	11	#5	7	10'-5"	120
K1	20	#4	STR	26'-1"	348
K2	8	#4	STR	3'-11"	21
S1	56	#5	2	8'-5"	492
S2	56	#5	3	4'-2"	243
S3	14	#4	5	6'-6"	61
U1	42	#4	4	4'-10"	136
U2	22	#4	4	6'-5"	94
V1	84	#5	STR	6'-6"	569
V2	12	#5	STR	8'-2"	102
V3	6	#5	STR	8'-0"	50
V4	6	#5	STR	7'-11"	50
V5	6	#5	STR	7'-10"	49
V6	12	#5	STR	8'-7"	107
V7	6	#5	STR	8'-6"	53
V8	6	#5	STR	8'-5"	53
V9	4	#5	STR	8'-3"	34

REINFORCING STEEL = 5,083 LBS.

CLASS A CONCRETE BREAKDOWN

POUR #1
CAP, CONCRETE COLLARS, LOWER PART OF WINGS 22.6 C.Y.

POUR #2
BACKWALL & UPPER PART OF WINGS 12.9 C.Y.

CLASS A CONCRETE TOTAL 35.5 C.Y.

HP 12 X 53 STEEL PILES

NO. 7 700 LIN. FT.

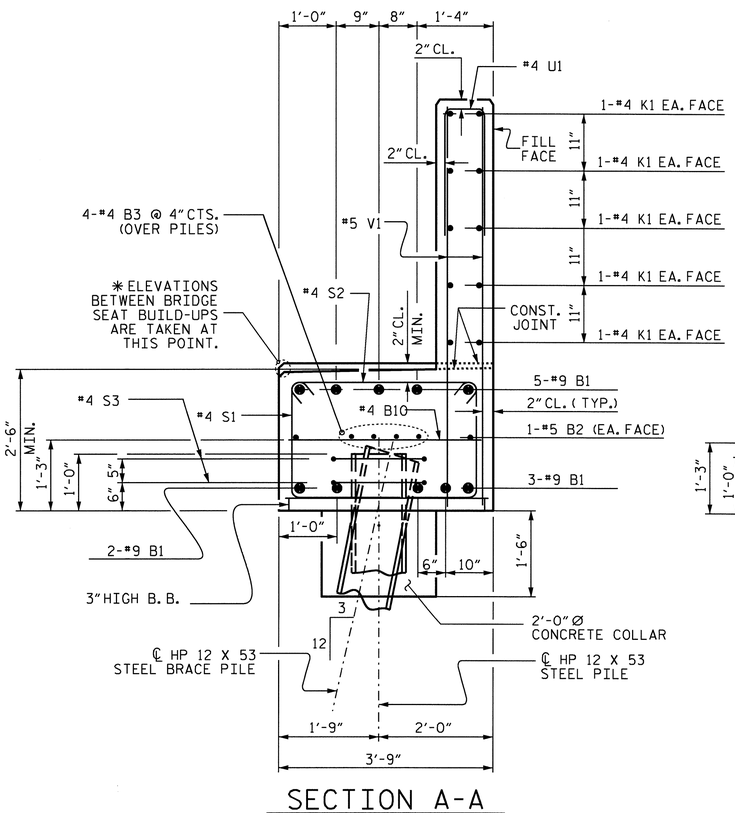

SECTION A-A

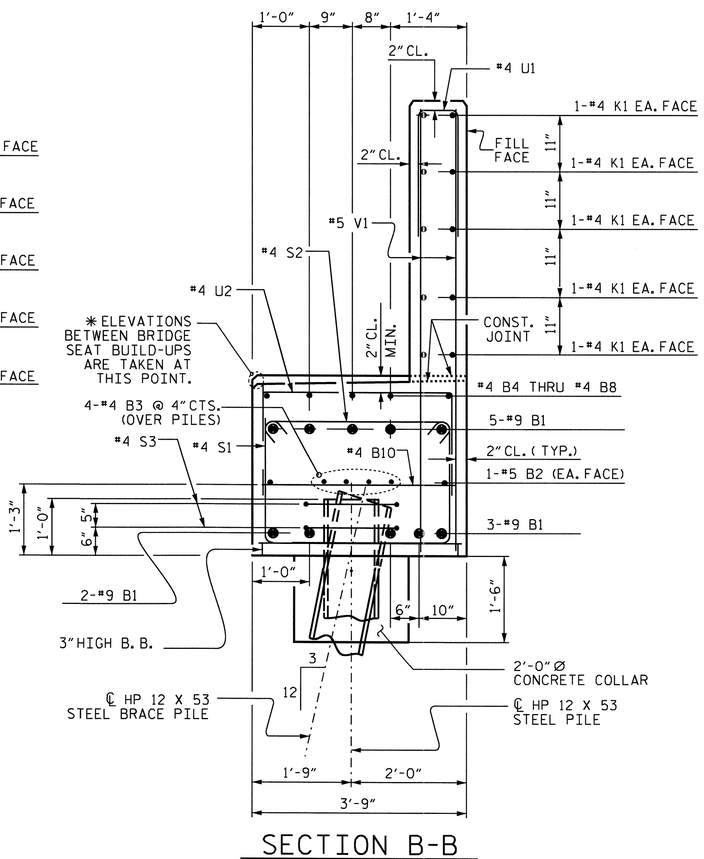

SECTION B-B

PROJECT NO. R-2233AB
RUTHERFORD COUNTY
STATION: 298+34.21 -L-

SHEET 3 OF 3

STATE OF NORTH CAROLINA
DEPARTMENT OF TRANSPORTATION
RALEIGH

SUBSTRUCTURE
END BENT NO. 1
RIGHT LANE

NORTH CAROLINA PROFESSIONAL SEAL 20125 ENGINEER MARSHALL C. GREER, JR.
9-16-10

REVISIONS						SHEET NO.
NO.	BY:	DATE:	NO.	BY:	DATE:	S-124
1			3			TOTAL SHEETS
2			4			184

DRAWN BY : L.L.M./A.L.F. DATE : 04-15-09
CHECKED BY : A. SORSENGINH DATE : 04-29-09

09-SEP-2010 12:42
R:\Structures\Final Plans\Str. #4\R-2233AB_SD_STR#4_12_EB.dgn
afigueroa

NOTES

STIRRUPS IN CAP MAY BE SHIFTED AS NECESSARY TO CLEAR ANCHOR BOLTS.

"U" BARS IN END OF CAP MAY BE SHIFTED SLIGHTLY AS NECESSARY TO CLEAR "B" BARS.

FOR PIPE PILE SPLICE DETAILS, SEE 18" STEEL PIPE PILE SHEET.

GALVANIZE THE TOP 27 FEET OF EACH INTERIOR BENT PILE IN ACCORDANCE WITH SECTION 1076 OF THE STANDARD SPECIFICATIONS.

FILL PIPE PILES WITH CLASS A CONCRETE FROM ELEVATION 800 TO THE BOTTOM OF THE 5'-0" (MIN.) CONCRETE PLUG.

THE CONTRACTOR'S ATTENTION IS CALLED TO THE FACT THAT THE CENTERLINE OF THE COLUMNS & DRILLED PIERS IS OFFSET 3" FROM THE BENT CONTROL LINE.

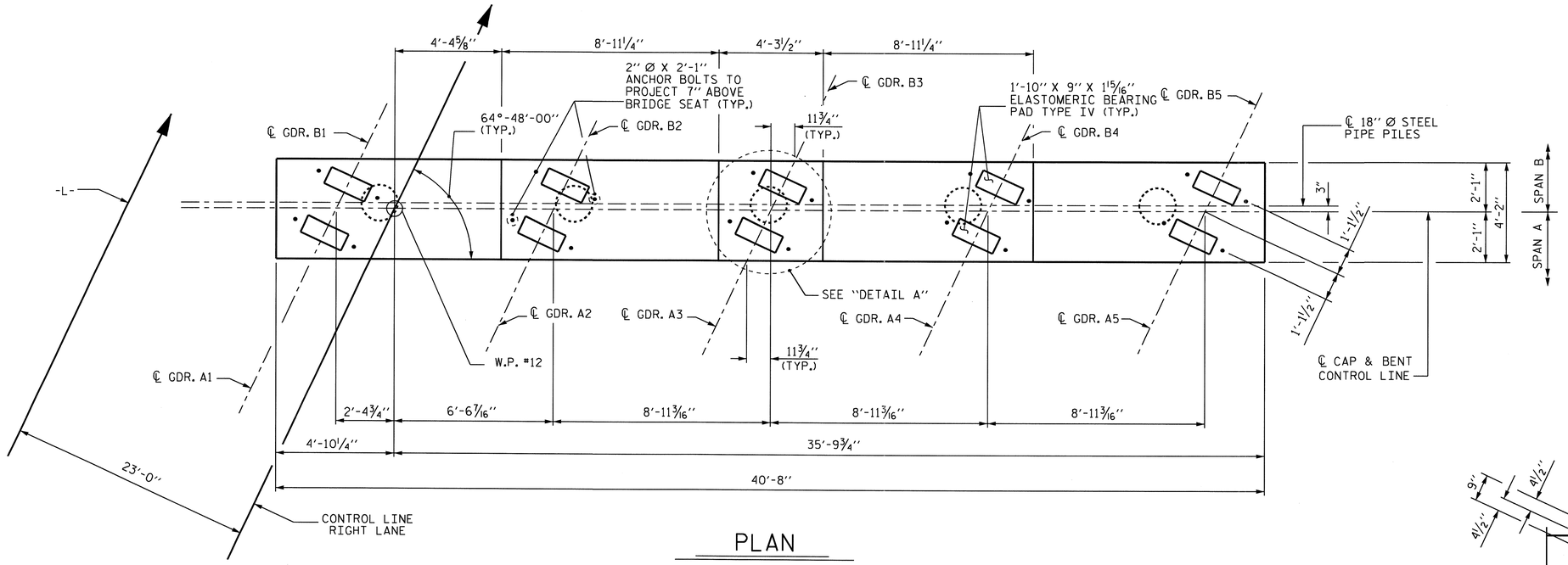

PLAN

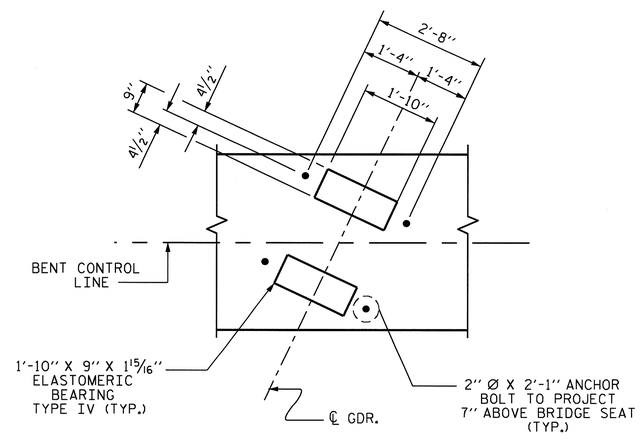

DETAIL A

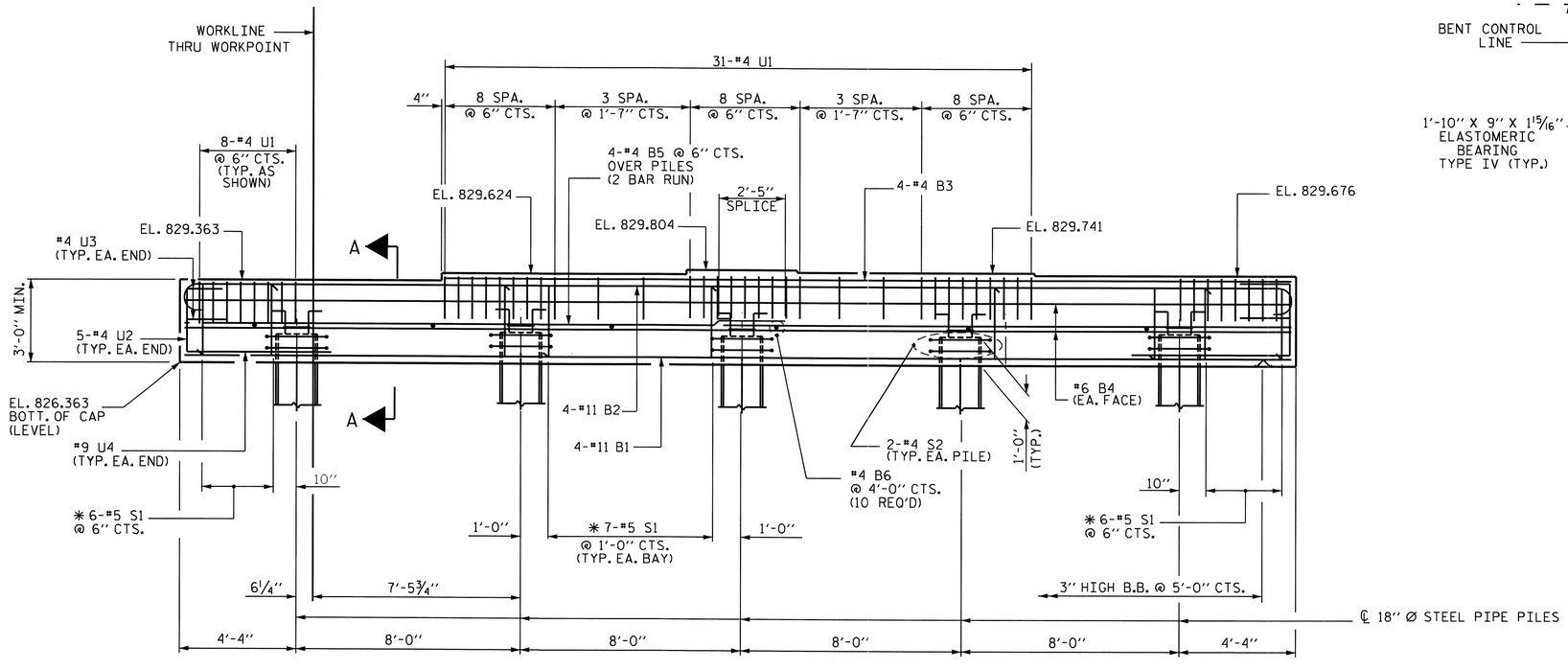

ELEVATION

FOR STEEL PIPE PILE REINF. STEEL & CONCRETE QUANTITIES, SEE "18" STEEL PIPE PILE" STANDARD.

✱ INVERT ALTERNATE STIRRUPS

PROJECT NO. R-2233AB

RUTHERFORD COUNTY

STATION: 298+34.21 -L-

SHEET 1 OF 2

STATE OF NORTH CAROLINA
DEPARTMENT OF TRANSPORTATION
RALEIGH

SUBSTRUCTURE
BENT No. 1
RIGHT LANE

NORTH CAROLINA PROFESSIONAL SEAL 20125 ENGINEER MARSHALL G. CHEEK, JR.
9-16-10

REVISIONS						SHEET NO.
NO.	BY:	DATE:	NO.	BY:	DATE:	S-125
1			3			TOTAL SHEETS
2			4			184

DRAWN BY : M. POOLE DATE : 01/10
CHECKED BY : M. G. CHEEK DATE : 02/10

14-SEP-2010 11:52
R:\Structures\FinalPlans\Str. #4\R-2233AB_SD_STR#4_13_B1.dgn
afigueroa

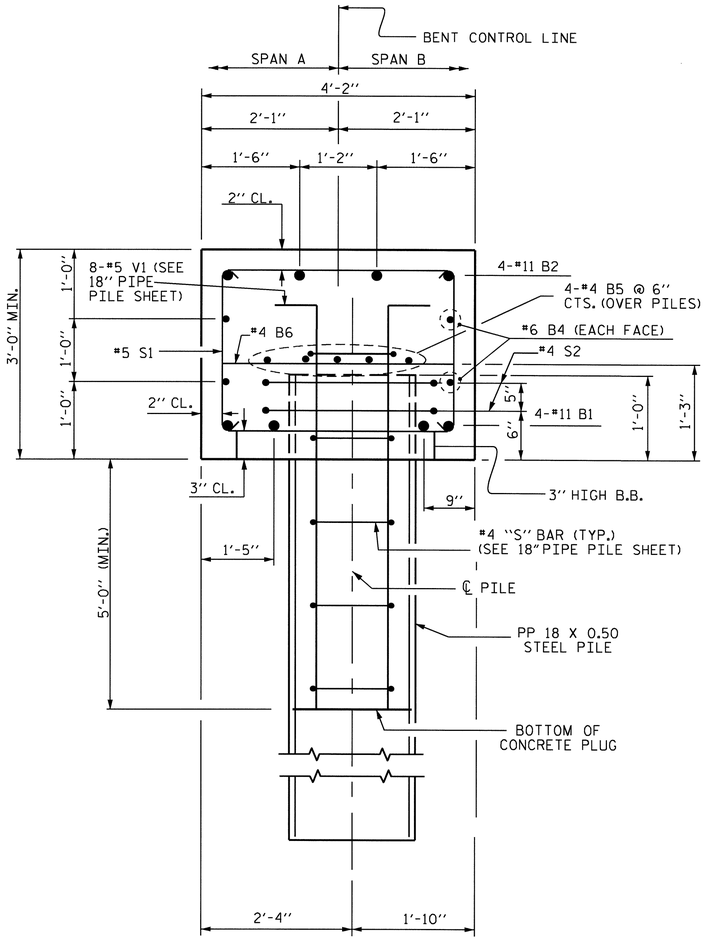

SECTION A-A

THRU CAP & 18" Ø STEEL PIPE PILE

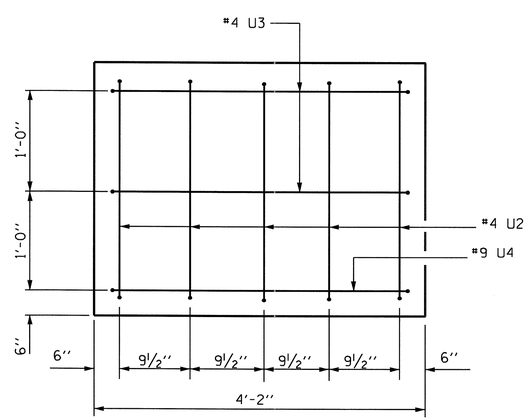

END VIEW

BAR TYPES

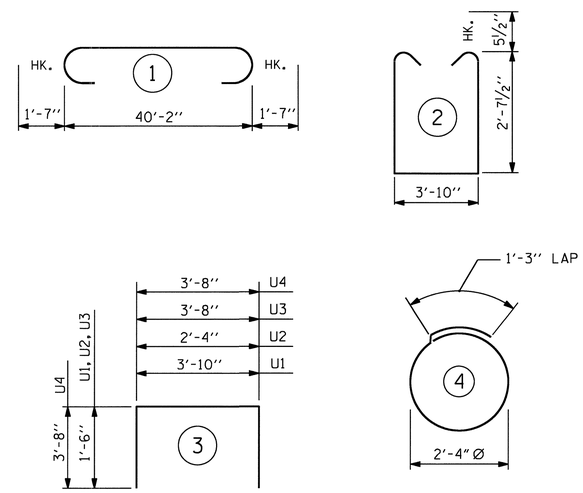

ALL BAR DIMENSIONS ARE OUT TO OUT.

BILL OF MATERIAL

BENT No. 1

BAR	NO.	SIZE	TYPE	LENGTH	WEIGHT
B1	4	11	STR	40'-4"	857
B2	4	11	1	43'-4"	921
B3	4	4	STR	31'-0"	83
B4	4	6	STR	40'-4"	242
B5	8	4	STR	21'-5"	114
B6	10	4	STR	3'-10"	26
S1	40	5	2	10'-0"	417
S2	10	4	4	8'-7"	57
U1	47	4	3	6'-10"	215
U2	10	4	3	5'-4"	36
U3	4	4	3	6'-8"	18
U4	2	9	3	11'-0"	75

REINFORCING STEEL LBS. 3061

CLASS "A" CONCRETE
POUR 1 CAP 20.7 C.Y.
** TOTAL 20.7 C.Y.

PP 18" X 0.5 GALVANIZED STEEL PILES
NO. 5 500 LIN. FT.

** CONCRETE DISPLACED BY THE FILLED 18" Ø STEEL PIPE PILES HAS BEEN DEDUCTED.

PROJECT NO. R-2233AB
RUTHERFORD COUNTY
STATION: 298+34.21 -L-

SHEET 2 OF 2

STATE OF NORTH CAROLINA
DEPARTMENT OF TRANSPORTATION
RALEIGH

SUBSTRUCTURE
BENT No. 1
RIGHT LANE

NORTH CAROLINA PROFESSIONAL SEAL 20125 ENGINEER MARSHALL G. CHEEK, JR.
9-16-10

REVISIONS						SHEET NO.
NO.	BY:	DATE:	NO.	BY:	DATE:	S-126
1			3			TOTAL SHEETS
2			4			184

DRAWN BY : M. POOLE DATE : 01/10
CHECKED BY : M. G. CHEEK DATE : 02/10

14-SEP-2010 11:52
R:\Structures\Final Plans\Str. #4\R-2233AB_SD_STR#4_13_B1.dgn
afigueroa

NOTES

STIRRUPS IN CAP MAY BE SHIFTED AS NECESSARY TO CLEAR ANCHOR BOLTS.

"U" BARS IN END OF CAP MAY BE SHIFTED SLIGHTLY AS NECESSARY TO CLEAR "B" BARS.

FOR PIPE PILE SPLICE DETAILS, SEE 18" STEEL PIPE PILE SHEET.

GALVANIZE THE TOP 29 FEET OF EACH INTERIOR BENT PILE IN ACCORDANCE WITH SECTION 1076 OF THE STANDARD SPECIFICATIONS.

FILL PIPE PILES WITH CLASS A CONCRETE FROM ELEVATION 800 TO THE BOTTOM OF THE 5'-0" (MIN.) CONCRETE PLUG.

THE CONTRACTOR'S ATTENTION IS CALLED TO THE FACT THAT THE CENTERLINE OF THE COLUMNS & DRILLED PIERS IS OFFSET 3" FROM THE BENT CONTROL LINE.

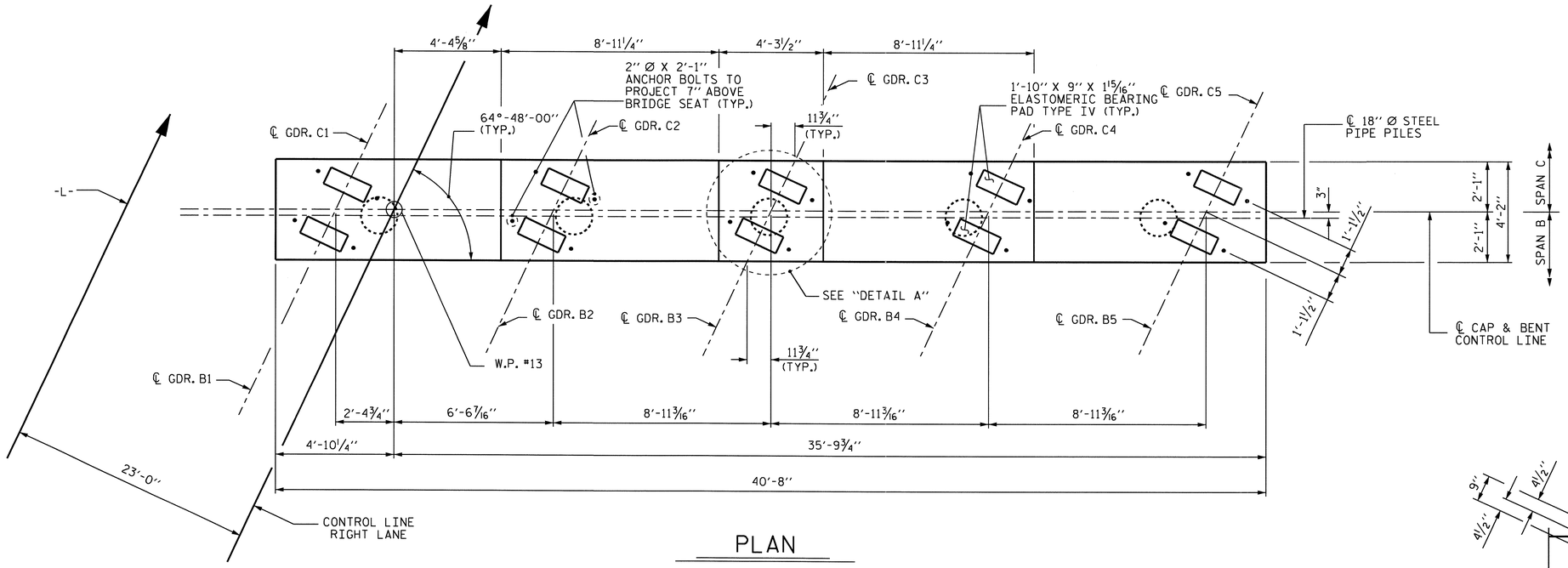

PLAN

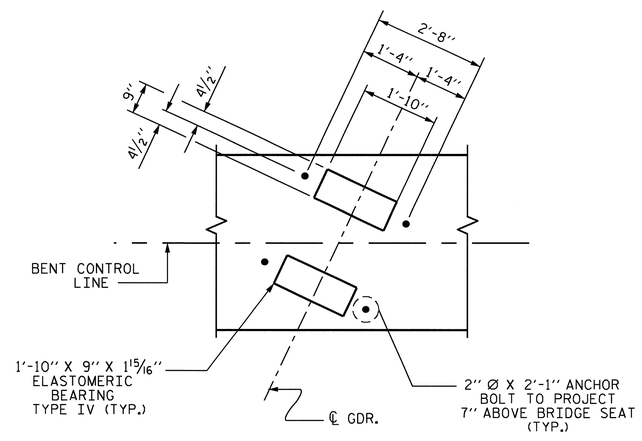

DETAIL A

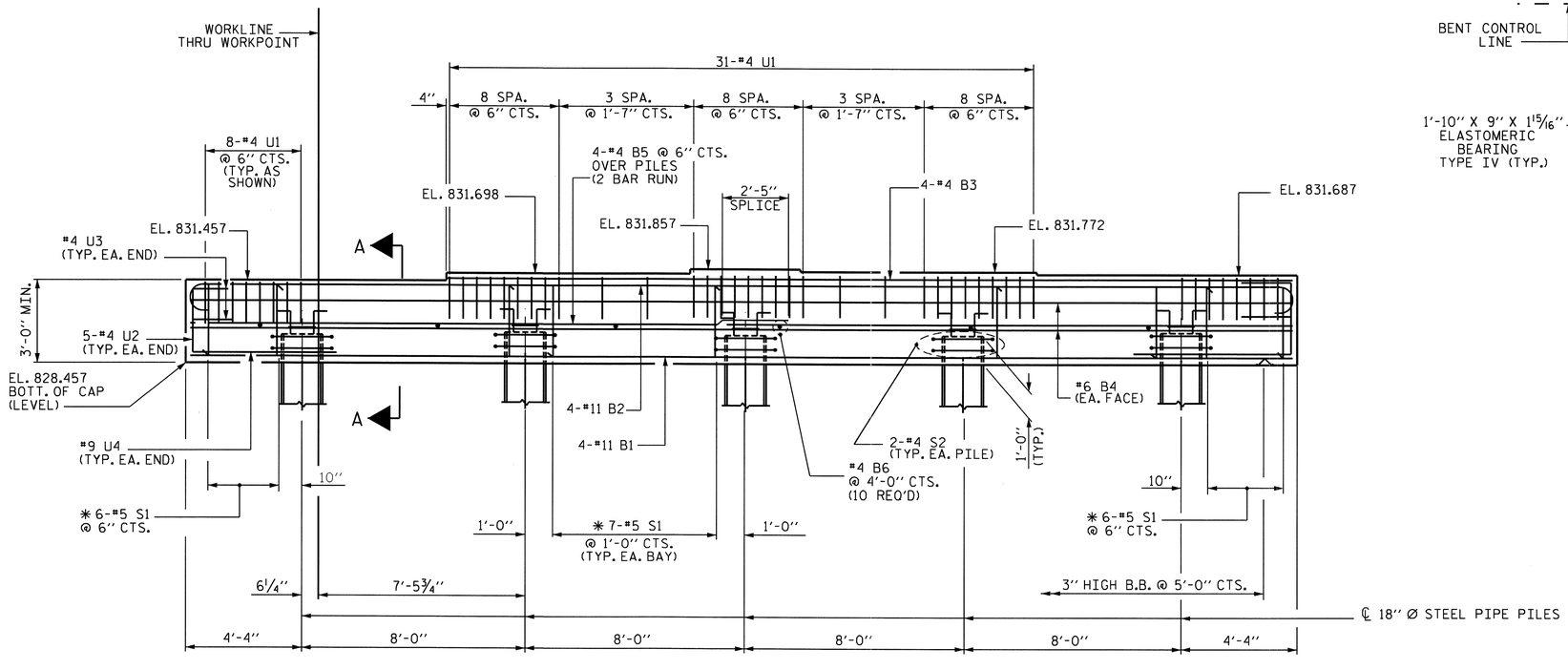

ELEVATION

FOR STEEL PIPE PILE REINF. STEEL & CONCRETE QUANTITIES, SEE "18" STEEL PIPE PILE" STANDARD.

✱ INVERT ALTERNATE STIRRUPS

PROJECT NO. R-2233AB

RUTHERFORD COUNTY

STATION: 298+34.21 -L-

SHEET 1 OF 2

STATE OF NORTH CAROLINA
DEPARTMENT OF TRANSPORTATION
RALEIGH

SUBSTRUCTURE
BENT No. 2
RIGHT LANE

NORTH CAROLINA PROFESSIONAL SEAL 20125 ENGINEER MARSHALL G. CHEEK, JR. 9-16-10

REVISIONS							SHEET NO.
NO.	BY:	DATE:	NO.	BY:	DATE:		S-127
1			3				TOTAL SHEETS
2			4				184

DRAWN BY : M. POOLE DATE : 01/10
CHECKED BY : M. G. CHEEK DATE : 02/10

14-SEP-2010 11:52
R:\Structures\Final Plans\Str. #4\R-2233AB_SD_STR#4_13_B2.dgn
afigueroa

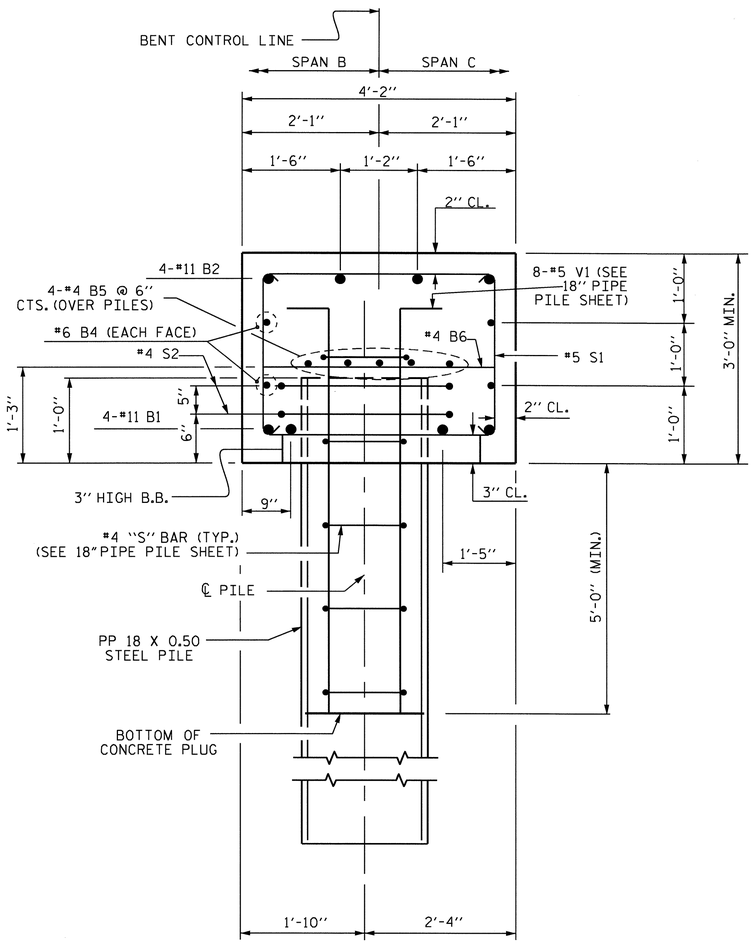

SECTION A-A

THRU CAP & 18" Ø STEEL PIPE PILE

BAR TYPES

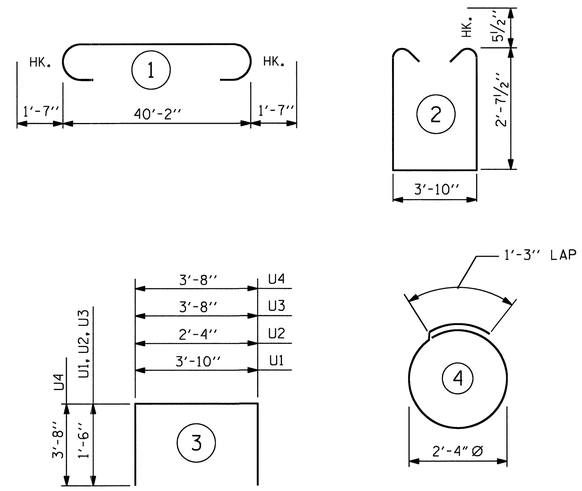

ALL BAR DIMENSIONS ARE OUT TO OUT.

BILL OF MATERIAL

BENT No. 2

BAR	NO.	SIZE	TYPE	LENGTH	WEIGHT
B1	4	11	STR	40'-4"	857
B2	4	11	1	43'-4"	921
B3	4	4	STR	31'-0"	83
B4	4	6	STR	40'-4"	242
B5	8	4	STR	21'-5"	114
B6	10	4	STR	3'-10"	26
S1	40	5	2	10'-0"	417
S2	10	4	4	8'-7"	57
U1	47	4	3	6'-10"	215
U2	10	4	3	5'-4"	36
U3	4	4	3	6'-8"	18
U4	2	9	3	11'-0"	75

REINFORCING STEEL LBS. 3061

CLASS "A" CONCRETE
POUR 1 CAP 20.7 C.Y.
** TOTAL 20.7 C.Y.

PP 18" X 0.5 GALVANIZED STEEL PILES
NO. 5 375 LIN. FT.

** CONCRETE DISPLACED BY THE FILLED 18" Ø STEEL PIPE PILES HAS BEEN DEDUCTED.

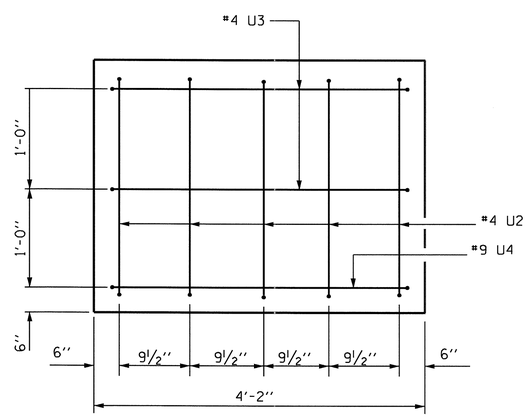

END VIEW

PROJECT NO. R-2233AB
RUTHERFORD COUNTY
STATION: 298+34.21 -L-

SHEET 2 OF 2

STATE OF NORTH CAROLINA
DEPARTMENT OF TRANSPORTATION
RALEIGH

SUBSTRUCTURE
BENT No. 2
RIGHT LANE

NORTH CAROLINA PROFESSIONAL SEAL 20125 ENGINEER MARSHALL G. CHEEK, JR.
9-14-10

REVISIONS						SHEET NO.
NO.	BY:	DATE:	NO.	BY:	DATE:	S-128
1			3			TOTAL SHEETS
2			4			184

DRAWN BY : M. POOLE DATE : 01/10
CHECKED BY : M. G. CHEEK DATE : 02/10

14-SEP-2010 11:52
R:\Structures\Final Plans\Str. #4\R-2233AB_SD_STR#4_13_B2.dgn
afigueroa

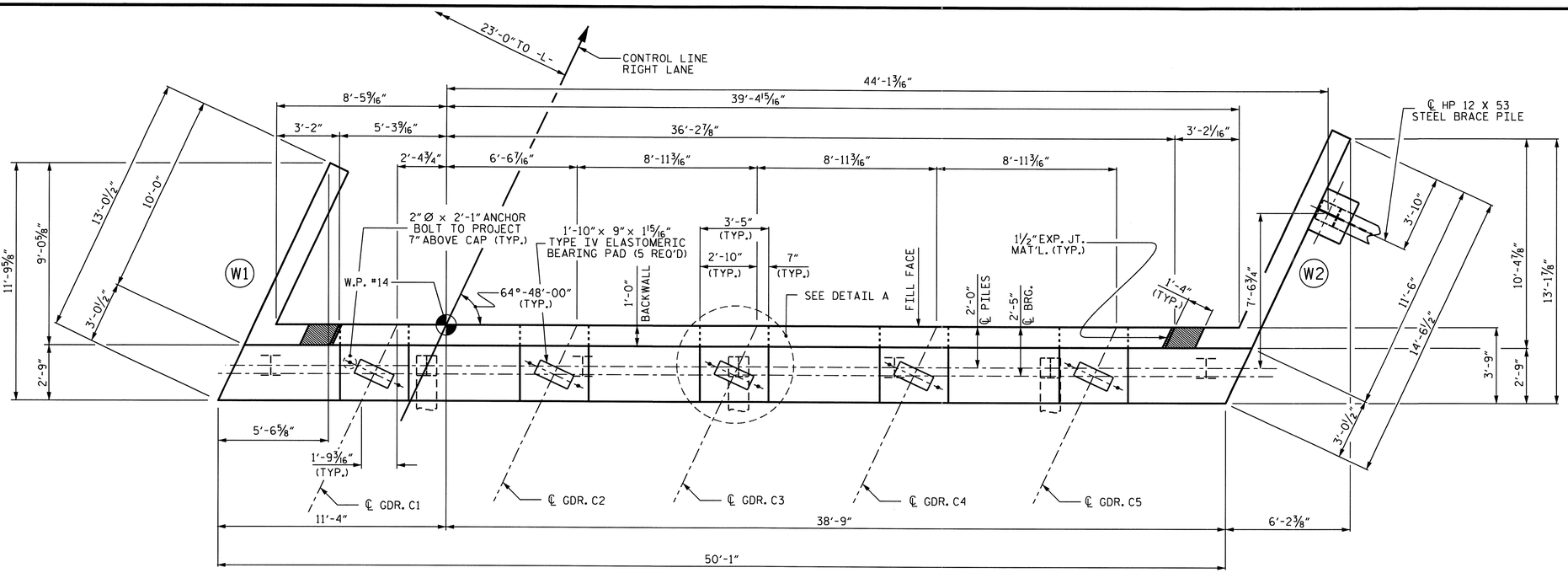

PLAN

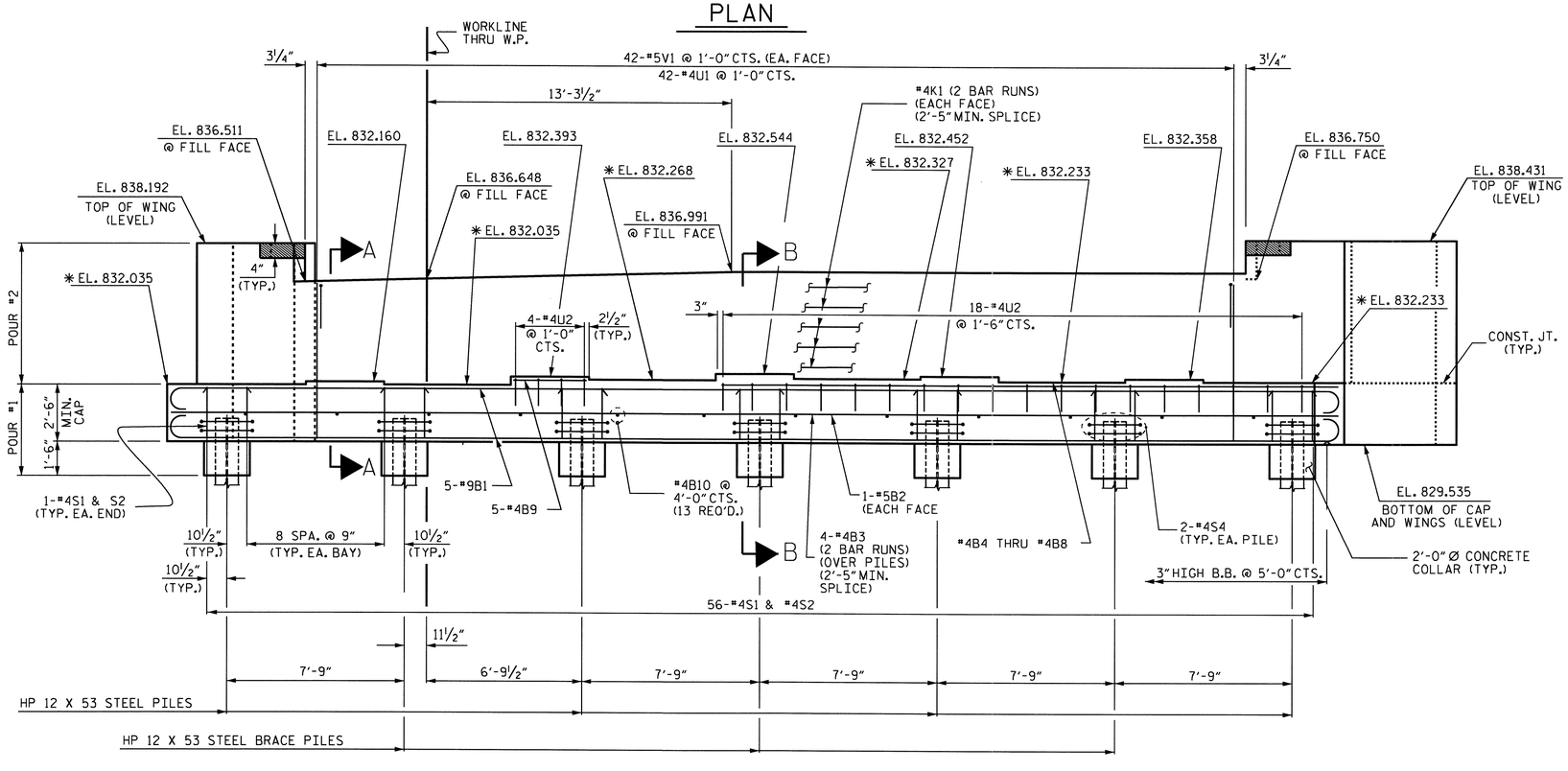

ELEVATION

WING BRACE PILES NOT SHOWN FOR CLARITY

* FOR LOCATION OF ELEVATIONS BETWEEN BRIDGE SEAT BUILDUPS, SEE SECTION VIEWS, SHEET 3 OF 3.

NOTES

STIRRUPS IN CAP MAY BE SHIFTED AS NECESSARY TO CLEAR ANCHOR BOLTS.

FOR SECTIONS A-A AND B-B, SEE SHEET 3 OF 3.

FOR PILE SPLICE DETAILS, SEE SHEET 3 OF 3.

FOR TEMPORARY DRAINAGE AT END BENTS, SEE SHEET 3 OF 3.

BACKWALL SHALL BE PLACED BEFORE APPLYING THE EPOXY PROTECTIVE COATING.

THE TOP SURFACE AREA OF THE END BENT CAP SHALL BE CURED IN ACCORDANCE WITH THE STANDARD SPECIFICATIONS EXCEPT THAT THE MEMBRANE CURING COMPOUND METHOD SHALL NOT BE USED.

THE TOP SURFACE OF THE END BENT CAP EXCEPT THE BRIDGE SEAT BUILDUPS SHALL BE SLOPED TRANSVERSELY FROM THE FILL FACE TO THE BACK FACE AT THE RATE OF 2%.

THE CONTRACTOR SHALL PROVIDE FOR INSTALLATION OF THE 4" DIAMETER DRAIN PIPE THROUGH THE WING WALL AS REQUIRED FOR REINFORCED BRIDGE APPROACH FILLS, SEE THE ROADWAY PLANS. REINFORCING STEEL IN THE WING WALL MAY BE SHIFTED AS NECESSARY TO CLEAR THE DRAIN PIPE.

THE CONCRETE IN THE SHADED AREA OF THE WING SHALL BE POURED AFTER THE BARRIER RAIL IS CAST IF SLIP FORMING IS USED.

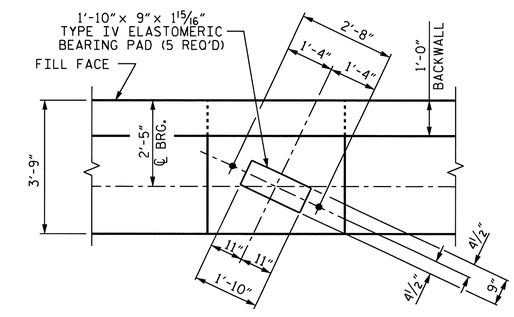

DETAIL A

PROJECT NO. R-2233AB

RUTHERFORD COUNTY

STATION: 298+34.21 -L-

SHEET 1 OF 3

STATE OF NORTH CAROLINA
DEPARTMENT OF TRANSPORTATION
RALEIGH

SUBSTRUCTURE

END BENT NO. 2
RIGHT LANE

NORTH CAROLINA PROFESSIONAL SEAL 20125 ENGINEER MARSHALL L. OKEEF, JR. 9-16-10

REVISIONS						SHEET NO.
NO.	BY:	DATE:	NO.	BY:	DATE:	S-129
1			3			TOTAL SHEETS
2			4			184

DRAWN BY : L.L.M./A.L.F. DATE : 04-15-09
CHECKED BY : A. SORSENGINH DATE : 04-29-09

13-SEP-2010 16:17
R:\Structures\Final Plans\Str. #4\R-2233AB_SD_STR#4_12_EB.dgn
afigueroa

STR#4

NCDDS

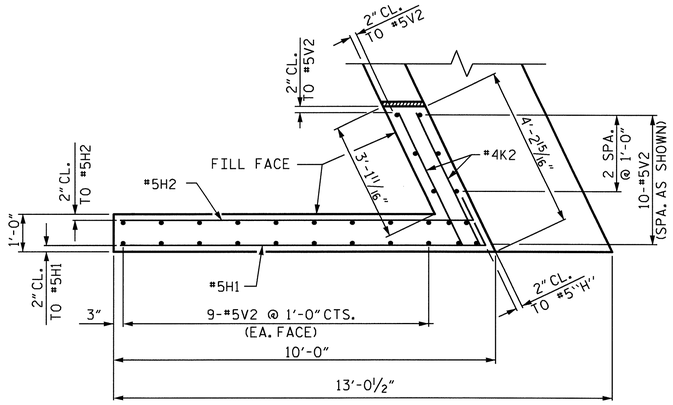

PLAN OF WING - W1

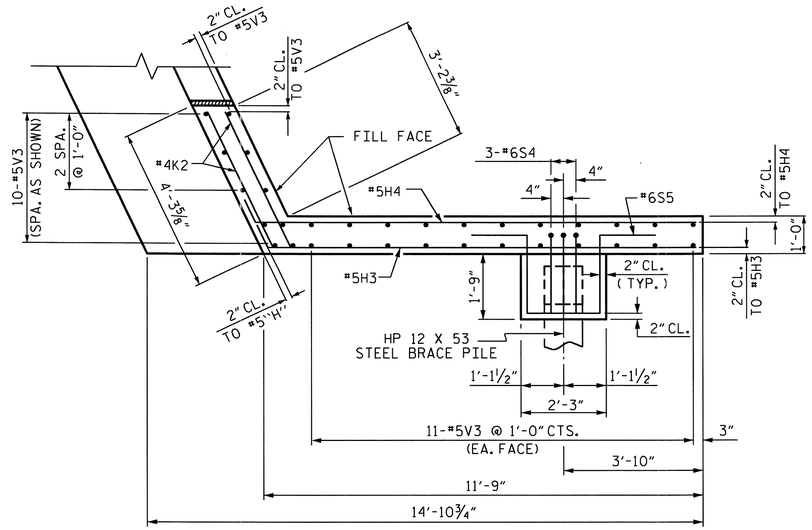

PLAN OF WING - W2

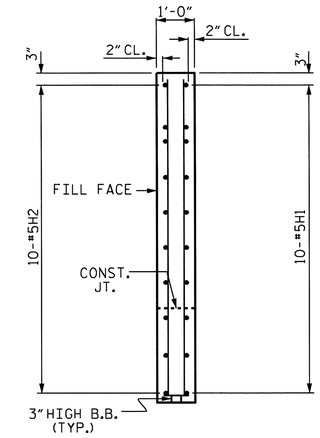

SECTION X-X

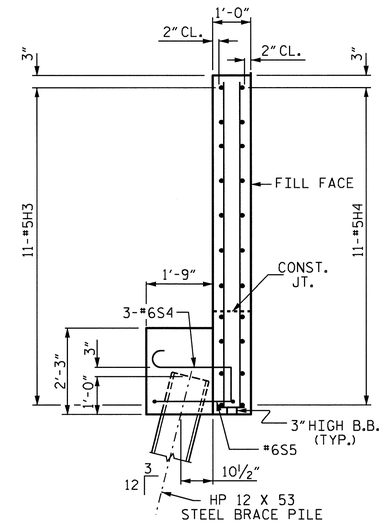

SECTION Y-Y

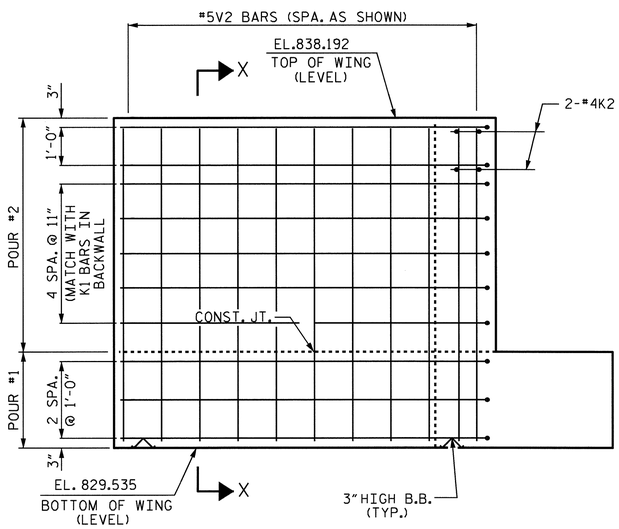

ELEVATION OF WING - W2

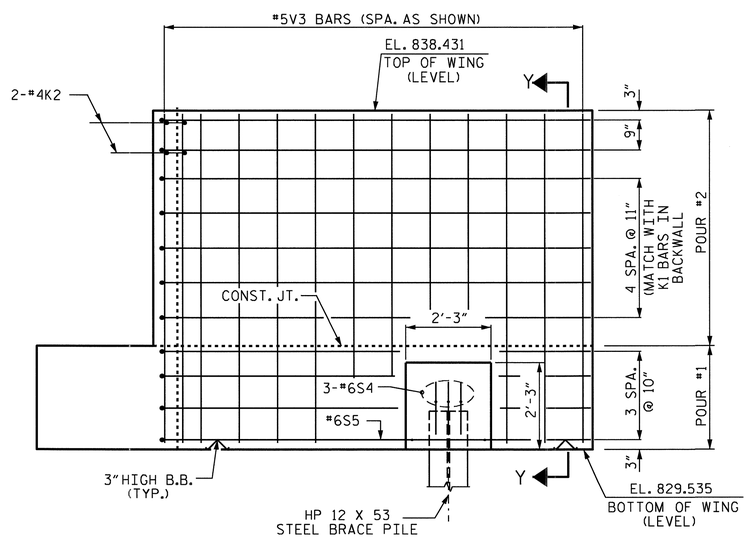

ELEVATION OF WING - W2

PROJECT NO. R-2233AB

RUTHERFORD COUNTY

STATION: 298+34.21 -L-

SHEET 2 OF 3

STATE OF NORTH CAROLINA
DEPARTMENT OF TRANSPORTATION
RALEIGH

SUBSTRUCTURE

END BENT NO. 2

RIGHT LANE

NORTH CAROLINA PROFESSIONAL SEAL 20125 ENGINEER MARSHALL L. GLICK, JR.
4-16-10

REVISIONS						SHEET NO.
NO.	BY:	DATE:	NO.	BY:	DATE:	S-130
1			3			TOTAL SHEETS
2			4			184

DRAWN BY : L.L.M./A.L.F. DATE : 04-15-09
CHECKED BY : A. SORSENGINH DATE : 04-29-09

13-SEP-2010 16:16
R:\Structures\Final Plans\Str. #4\R-2233AB_SD_STR#4_12_EB.dgn
afigueroa

STR#4 NC0DS

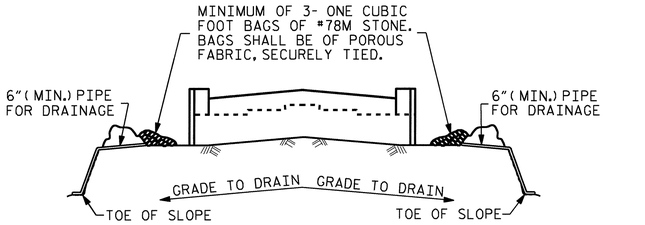

BAGGED STONE AND PIPE SHALL BE PLACED IMMEDIATELY AFTER COMPLETION OF END BENT EXCAVATION. PIPE MAY BE EITHER CONCRETE, CORRUGATED STEEL, CORRUGATED ALUMINUM ALLOY, OR CORRUGATED PLASTIC. PERFORATED PIPE WILL NOT BE ALLOWED.

BAGGED STONE SHALL REMAIN IN PLACE UNTIL THE ENGINEER DIRECTS THAT IT BE REMOVED. THE CONTRACTOR SHALL REMOVE AND DISPOSE OF SILT ACCUMULATIONS AT BAGGED STONE WHEN SO DIRECTED BY THE ENGINEER. BAGS SHALL BE REMOVED AND REPLACED WHENEVER THE ENGINEER DETERMINES THAT THEY HAVE DETERIORATED AND LOST THEIR EFFECTIVENESS.

NO SEPARATE PAYMENT WILL BE MADE FOR THIS WORK AND THE ENTIRE COST OF THIS WORK SHALL BE INCLUDED IN THE UNIT CONTRACT PRICE BID FOR THE SEVERAL PAY ITEMS.

TEMPORARY DRAINAGE AT END BENT

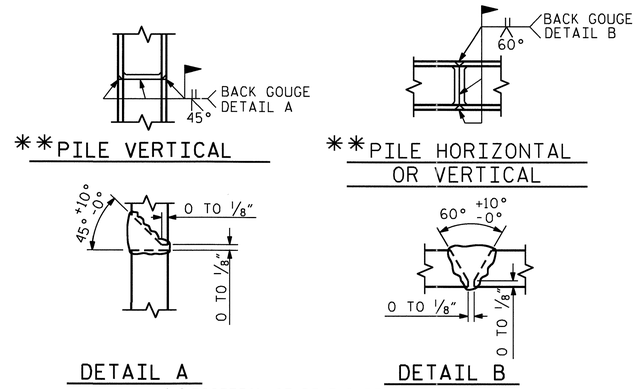

**POSITION OF PILE DURING WELDING.

PILE SPLICE DETAILS

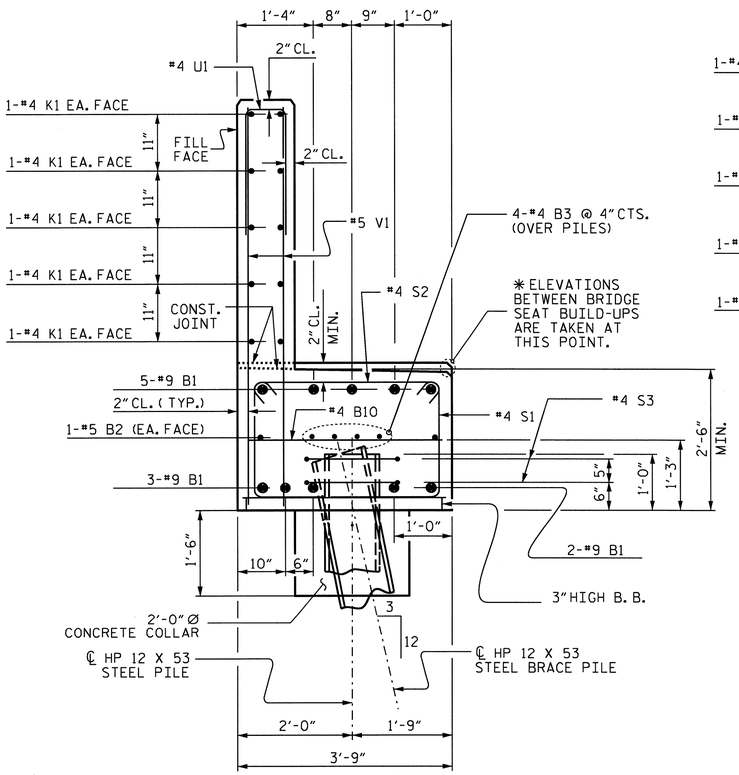

SECTION A-A

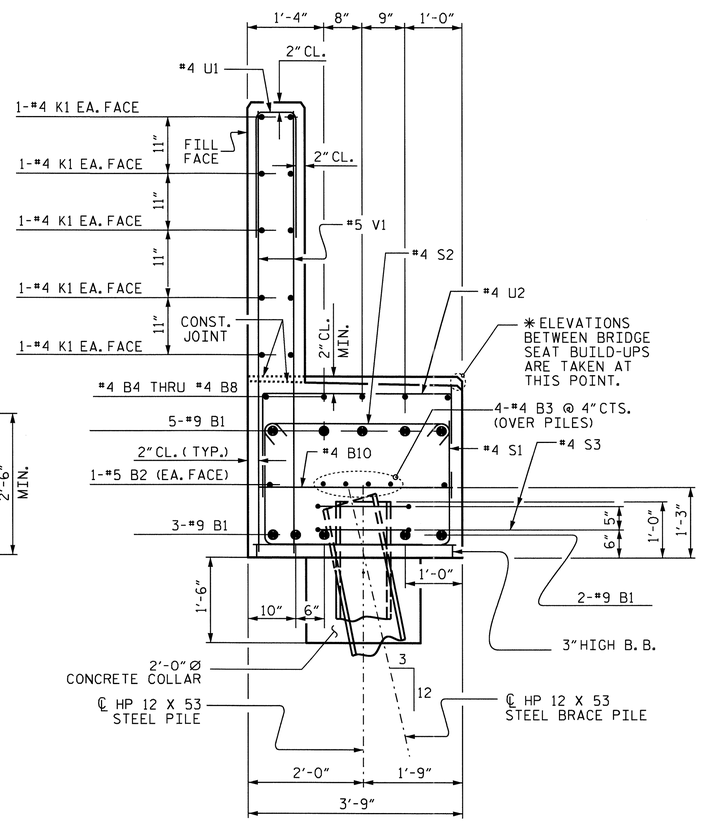

SECTION B-B

BAR TYPES

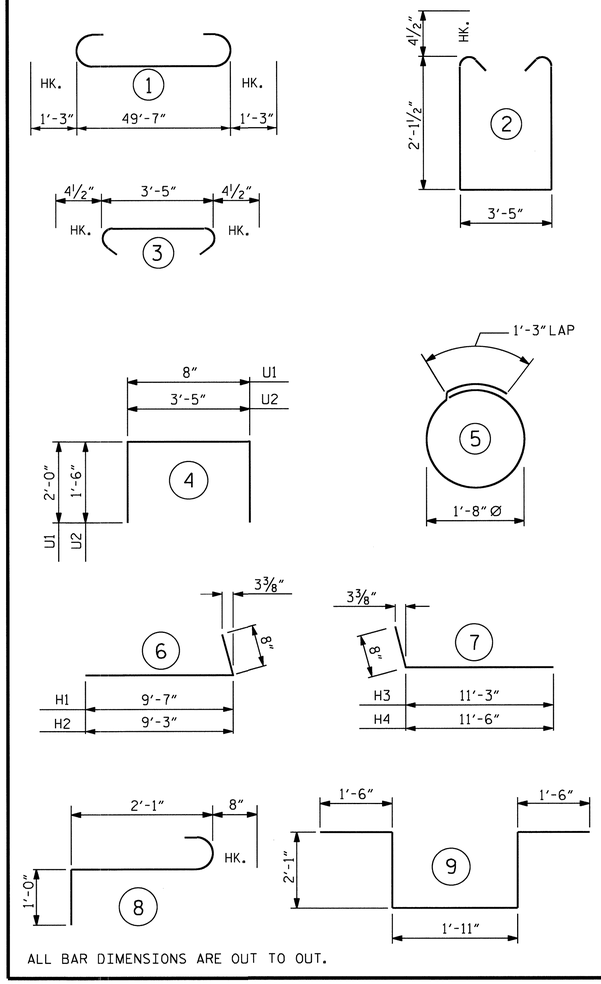

ALL BAR DIMENSIONS ARE OUT TO OUT.

BILL OF MATERIAL
END BENT NO. 2

BAR	NO.	SIZE	TYPE	LENGTH	WEIGHT
B1	10	#9	1	52'-1"	1771
B2	2	#5	STR	49'-9"	104
B3	8	#4	STR	26'-1"	139
B4	1	#4	STR	27'-4"	18
B5	1	#4	STR	26'-10"	18
B6	1	#4	STR	26'-6"	18
B7	1	#4	STR	26'-2"	17
B8	1	#4	STR	25'-10"	17
B9	5	#4	STR	3'-1"	10
B10	13	#4	STR	3'-5"	30
H1	10	#5	6	10'-3"	107
H2	10	#5	6	9'-11"	103
H3	11	#5	7	11'-11"	137
H4	11	#5	7	12'-2"	140
K1	20	#4	STR	26'-1"	348
K2	8	#4	STR	3'-11"	21
S1	56	#5	2	8'-5"	492
S2	56	#5	3	4'-2"	243
S3	14	#4	5	6'-6"	61
S4	3	#6	8	3'-9"	17
S5	1	#6	9	9'-1"	14
U1	42	#4	4	4'-8"	131
U2	22	#4	4	6'-5"	94
V1	84	#5	STR	6'-7"	577
V2	28	#5	STR	8'-3"	241
V3	32	#5	STR	8'-6"	284

REINFORCING STEEL = 5,152 LBS.

CLASS A CONCRETE BREAKDOWN

POUR #1	
CAP, CONCRETE COLLARS, LOWER PART OF WINGS & BRACE PILE BLOCKS	22.3 C.Y.
POUR #2	
BACKWALL & UPPER PART OF WINGS	13.3 C.Y.
CLASS A CONCRETE TOTAL	35.6 C.Y.

HP 12 X 53 STEEL PILES

NO. 8 520 LIN. FT.

PROJECT NO. R-2233AB
RUTHERFORD COUNTY
STATION: 298+34.21 -L-

SHEET 3 OF 3

STATE OF NORTH CAROLINA
DEPARTMENT OF TRANSPORTATION
RALEIGH

SUBSTRUCTURE
END BENT NO. 2
RIGHT LANE

NORTH CAROLINA PROFESSIONAL SEAL 20125 ENGINEER MARSHALL G. CHEEK, JR.
9-16-10

REVISIONS						SHEET NO.
NO.	BY:	DATE:	NO.	BY:	DATE:	S-131
1			3			TOTAL SHEETS
2			4			184

DRAWN BY : L.L.M./A.L.F. DATE : 04-15-09
CHECKED BY : A. SORSENGINH DATE : 04-29-09

09-SEP-2010 12:41
R:\Structures\Final Plans\Str. #4\R-2233AB_SD_STR#4_12_EB.dgn
afigueroa

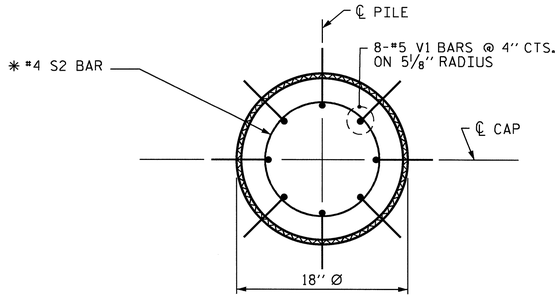

PLAN

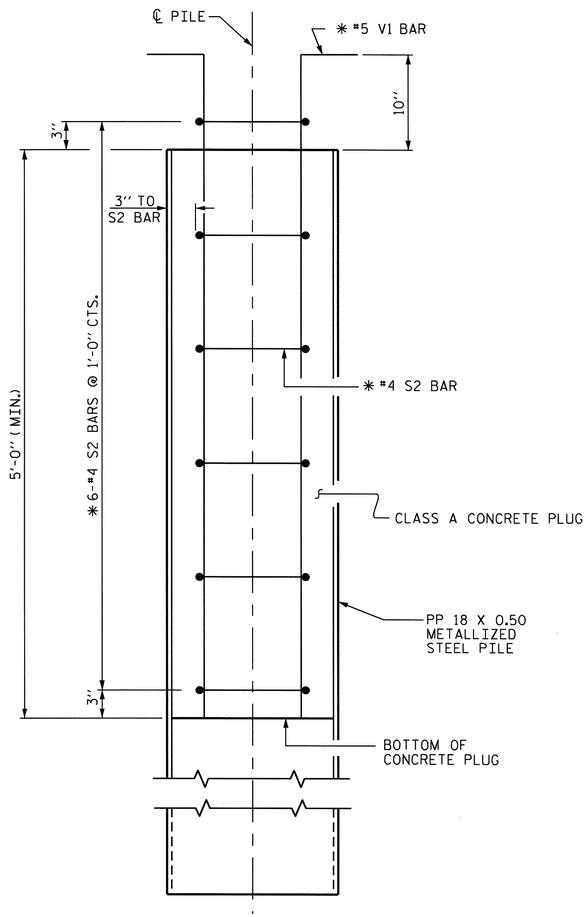

ELEVATION

PP 18 X 0.50 GALVANIZED STEEL PILE

(OPEN END)

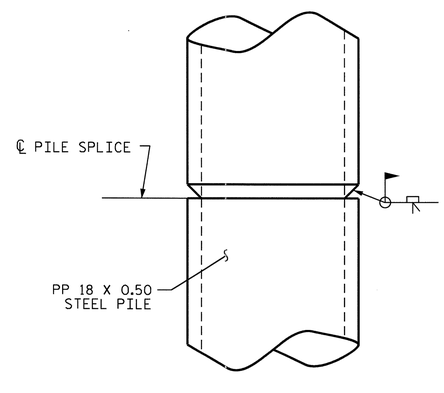

PIPE PILE SPLICE DETAIL

NOTES

PIPE PILES SHALL BE IN ACCORDANCE WITH SECTION 1084 OF THE STANDARD SPECIFICATIONS.

GALVANIZE STEEL PIPE PILES IN ACCORDANCE WITH SECTION 1076 OF THE STANDARD SPECIFICATIONS UNLESS METALLIZING IS REQUIRED. GALVANIZING OR METALLIZING PIPE PILE PLATES IS NOT REQUIRED.

PIPE PILE PLATES, IF REQUIRED, SHALL BE IN ACCORDANCE WITH SECTION 450 OF THE STANDARD SPECIFICATIONS.

REMOVE AND REPLACE OR REPAIR TO THE SATISFACTION OF THE ENGINEER PILES THAT ARE DAMAGED, DEFORMED OR COLLAPSED DURING INSTALLATION OR DRIVING.

PILE SPLICES SHALL BE IN ACCORDANCE WITH THE STANDARD SPECIFICATIONS AND AWS D1.1.

FOR CLOSED END PIPE PILES, REMOVE ALL SOIL AND WATER FROM INSIDE THE PILES JUST PRIOR TO PLACING REINFORCING STEEL AND CONCRETE FOR THE CONCRETE PLUG.

FOR OPEN END PIPE PILES, REMOVE ENOUGH SOIL AND WATER FROM INSIDE THE PILES TO CONSTRUCT THE CONCRETE PLUG WITHOUT FOULING THE CONCRETE.

FORM THE CONCRETE PLUG SUCH THAT THE REINFORCING STEEL OR CONCRETE DOES NOT MOVE AND THE CLEARANCE FROM THE REINFORCING STEEL TO THE INSIDE OF THE PILE IS MAINTAINED AFTER CONCRETE PLACEMENT. DO NOT PLACE CONCRETE IN THE BENT CAP UNTIL THE CONCRETE PLUG HAS ATTAINED A MINIMUM COMPRESSIVE STRENGTH OF 1500 PSI.

THE REINFORCING STEEL, CLASS A CONCRETE, AND GALVANIZING ARE CONSIDERED INCIDENTAL TO THE CONTRACT UNIT PRICE BID PER LINEAR FOOT FOR PP 18 X 0.50 GALVANIZED STEEL PILES.

BILL OF MATERIAL FOR ONE PP 18 X 0.50 STEEL PILE

BAR	NO.	SIZE	TYPE	LENGTH	WEIGHT
S2	6	#4	1	4'-5''	18
V1	8	#5	2	6'-8''	56
REINFORCING STEEL =					74 LBS.
CLASS A CONCRETE					
5'-0'' MINIMUM PLUG					0.3 CY

BAR TYPES

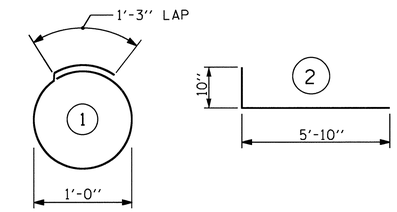

ALL BAR DIMENSIONS ARE OUT TO OUT.

PROJECT NO. R-2233AB
RUTHERFORD COUNTY
STATION: 298+34.21 -L-

STATE OF NORTH CAROLINA
DEPARTMENT OF TRANSPORTATION
RALEIGH

STANDARD
18'' STEEL PIPE PILE
RIGHT LANE

NORTH CAROLINA PROFESSIONAL SEAL 20125 ENGINEER MARSHALL G. CHEEK, JR. 4-16-10

REVISIONS						SHEET NO.
NO.	BY:	DATE:	NO.	BY:	DATE:	S-132
1			3			TOTAL SHEETS
2			4			184

ASSEMBLED BY : M. POOLE		DATE :	01/10
CHECKED BY : M. C. CHEEK		DATE :	08/10
DRAWN BY : RWW 1/01	REV. 5/7/03	RWW/JTE	
CHECKED BY : LES 1/01	REV. 10/1/05	LBG/TLA	
	REV. 5/1/06	TLA/GM	

14-SEP-2010 12:15
R:\Structures\Final Plans\Str. #4\R-2233AB_SD_STR#4_13C_PP.dgn
afigueroa

STR. #4 STD. NO. SPP3

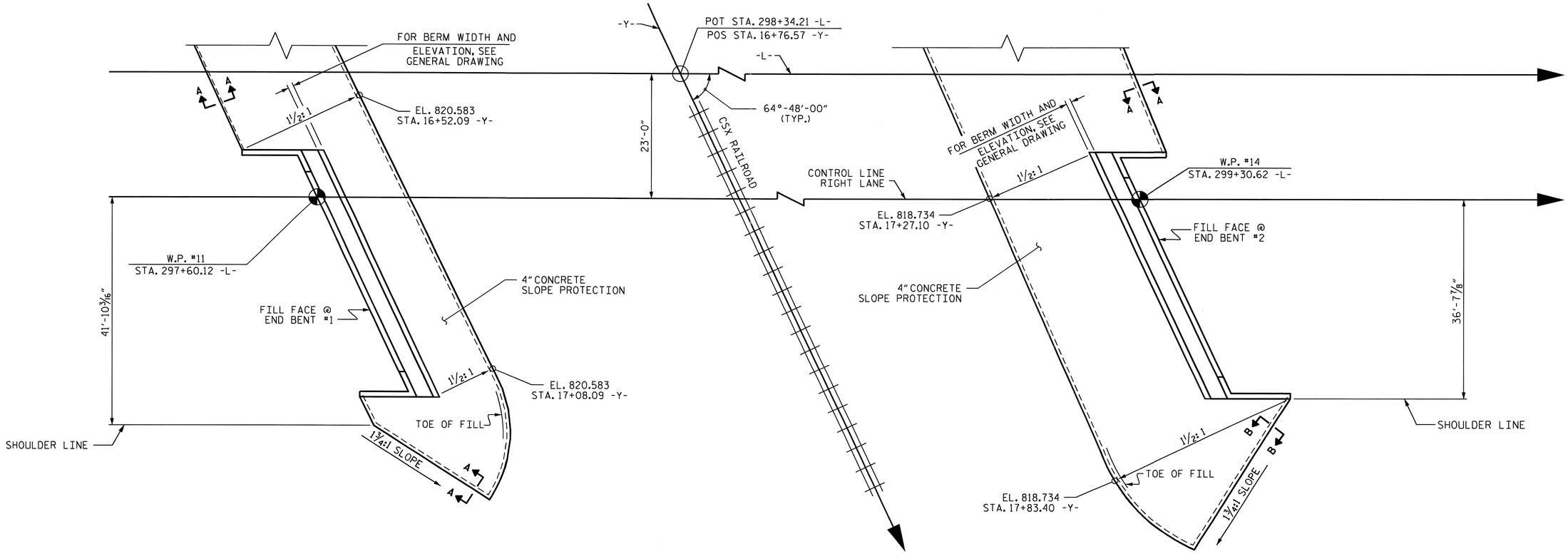

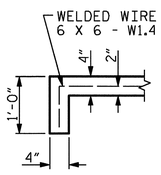

SECTION A-A

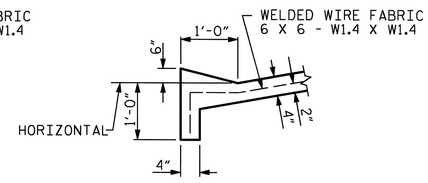

SECTION B-B

ESTIMATED QUANTITIES

BRIDGE @ STA. 298+34.21 -L- (RIGHT LANE)	4 INCH SLOPE PROTECTION	* WELDED WIRE FABRIC 60 INCHES WIDE
	SQUARE YARDS	APPROX. L.F.
END BENT 1	190	380
END BENT 2	350	700

* QUANTITY SHOWN IS BASED ON 5' POURS.

GENERAL NOTES

SLOPE PROTECTION SHALL BE PLACED UNDER THE ENDS OF THE BRIDGE AS SHOWN IN THE DETAILS. STRAIGHT EDGING WILL NOT BE REQUIRED UNLESS, IN THE OPINION OF THE ENGINEER, VISUAL INSPECTION INDICATES A NEED FOR IT. METHOD OF MEASUREMENT AND PAYMENT SHALL BE AS PRESCRIBED IN SECTION 462 OF THE STANDARD SPECIFICATIONS. FOR BERM WIDTH, SEE GENERAL DRAWING.

SLOPE PROTECTION SHALL CONSIST OF 4" POURED-IN-PLACE CONCRETE PAVING AS SHOWN IN THE DETAILS ON THIS SHEET. CONCRETE SHALL BE CLASS "B". THE CONCRETE SURFACE SHALL BE FLOATED WITH A WOODEN FLOAT AND FINISHED. WELDED WIRE FABRIC REINFORCING SHALL BE 6 X 6 - W1.4 X W1.4, 60" WIDE. SLOPE PROTECTION SHALL BE POURED IN 5' STRIPS AS SHOWN IN THE "POURING DETAIL" WITH 2'-0" LONG #4 BARS PLACED ALONG THE SLOPE BETWEEN STRIPS AT 1'-6" MAXIMUM SPACING. SLOPE PROTECTION MAY BE POURED IN ALTERNATE 4' AND 5' STRIPS AS SHOWN IN THE "OPTIONAL POURING DETAIL" WITH ADJACENT RUNS OF WELDED WIRE FABRIC LAPPING AT LEAST 6". THE COST OF THE WELDED WIRE FABRIC AND #4 BARS, IF USED, SHALL BE INCLUDED IN THE CONTRACT UNIT PRICE BID PER SQUARE YARD FOR SLOPE PROTECTION.

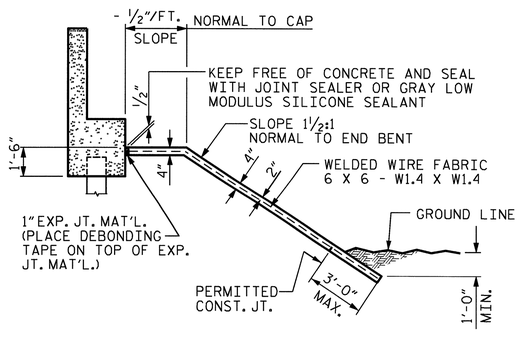

SECTION ALONG ℄ ROADWAY WHEN DITCH IS NOT PROVIDED

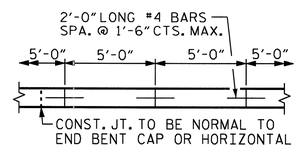

STRIP WIDTHS MAY VARY IN CURVED PORTION.

POURING DETAIL

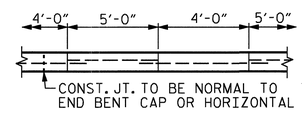

POUR A 4'-0" STRIP FIRST. STRIP WIDTHS MAY VARY IN CURVED PORTION.

OPTIONAL POURING DETAIL

PROJECT NO. R-2233AB
RUTHERFORD COUNTY
STATION: 298+34.21 -L-

STATE OF NORTH CAROLINA
DEPARTMENT OF TRANSPORTATION
RALEIGH

STANDARD
SLOPE PROTECTION DETAILS
RIGHT LANE

REVISIONS						SHEET NO.
NO.	BY:	DATE:	NO.	BY:	DATE:	S-133
1			3			TOTAL SHEETS
2			4			184

STR#4

STD. NO. SP1

ASSEMBLED BY : A.L. FIGUEROA		DATE : 03/23/10	
CHECKED BY : D. HODGE		DATE : 06-29-10	
DRAWN BY : ELR 5/92	REV. 7/10/01	LES/RDR	
CHECKED BY : GRP 6/92	REV. 5/7/03	RWW/JTE	
	REV. 5/1/06	TLA/GM	

14-SEP-2010 08:15
R:\Structures\Final Plans\Str. #4\R-2233AB_SD_STR#4_14_SP.dgn
afigueroa

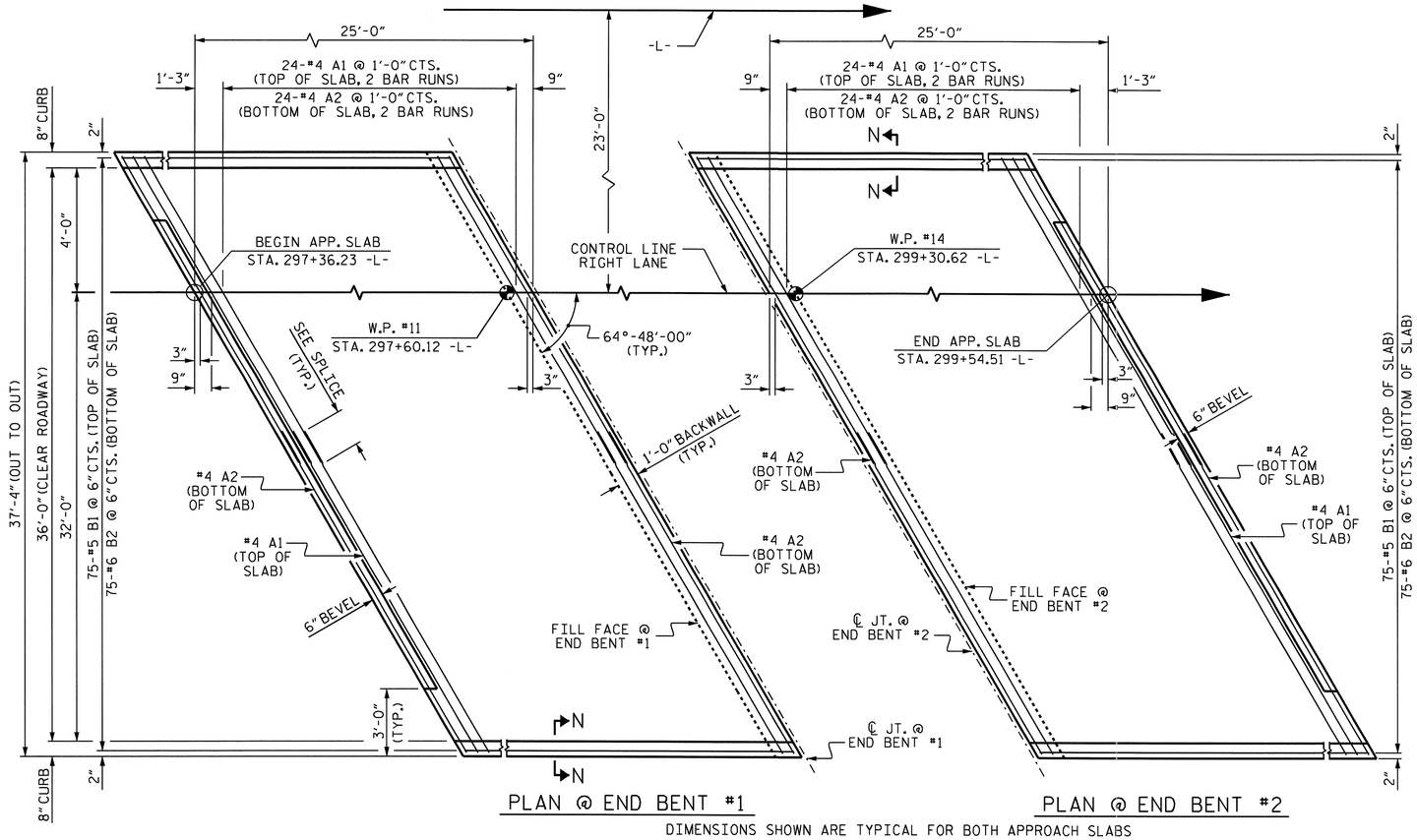

DIMENSIONS SHOWN ARE TYPICAL FOR BOTH APPROACH SLABS

NOTES

APPROACH SLAB SHALL NOT BE CONSTRUCTED PRIOR TO COMPLETION OF THE BRIDGE DECK.

FOR REINFORCED BRIDGE APPROACH FILL INCLUDING FABRIC, IMPERMEABLE GEOMEMBRANE, 4" Ø DRAINAGE PIPE, #78M STONE, AND SELECT MATERIAL, SEE ROADWAY PLANS.

AREA BETWEEN THE WINGWALL AND APPROACH SLAB SHALL BE GRADED TO DRAIN THE WATER AWAY FROM THE FILL FACE OF THE BRIDGE AND SHALL BE PAVED. SEE ROADWAY PLANS.

THE 6" COMP. A.B.C. SHALL BE FLUSH WITH THE ROADWAY END OF THE APPROACH SLAB AND SHALL EXTEND 1'-0" OUTSIDE EACH EDGE OF THE APPROACH SLAB.

THE CONTRACTOR MAY USE 4" TYPE B-25.0B ASPHALT CONCRETE BASE COURSE IN LIEU OF 6" COMP. A.B.C. IF THIS OPTION IS USED, THE BASE COURSE SHALL BE FLUSH WITH THE ROADWAY END OF THE APPROACH SLAB, AND THE WIDTH SHALL BE THE SAME AS THAT OF THE APPROACH SLAB.

THE CONTRACTOR MAY USE 5" CLASS "A" CONCRETE BASE IN LIEU OF 6" COMP. A.B.C. IF THIS OPTION IS USED, THE CONCRETE BASE SHALL BE FLUSH WITH THE ROADWAY END OF THE APPROACH SLAB, AND THE WIDTH SHALL BE THE SAME AS THAT OF THE APPROACH SLAB. THE CONCRETE SHALL BE FINISHED TO A SMOOTH SURFACE AND A LAYER OF 30 LB ROOFING FELT SHALL BE PLACED BETWEEN THE CONCRETE BASE AND THE APPROACH SLAB TO PREVENT BOND. THE APPROACH SLAB SHALL NOT BE CAST UNTIL THE CONCRETE BASE HAS REACHED AN AGE OF THREE CURING DAYS.

WITH EVAZOTE JOINT SEAL

FOR EVAZOTE JOINT SEALS, SEE SPECIAL PROVISIONS.

THE NOMINAL UNCOMPRESSED SEAL WIDTH OF THE EVAZOTE JOINT SEAL SHALL BE 2½".

FOR ELASTOMERIC CONCRETE, SEE SPECIAL PROVISIONS.

BILL OF MATERIAL

APPROACH SLAB AT EB #1

BAR	NO.	SIZE	TYPE	LENGTH	WEIGHT
* A1	50	#4	STR	21'-6"	718
A2	52	#4	STR	21'-4"	741
* B1	75	#5	STR	23'-8"	1851
B2	75	#6	STR	24'-8"	2779
REINFORCING STEEL				LBS.	3520
* EPOXY COATED REINFORCING STEEL				LBS.	2569
CLASS AA CONCRETE				C. Y.	35.1

APPROACH SLAB AT EB #2

BAR	NO.	SIZE	TYPE	LENGTH	WEIGHT
* A1	50	#4	STR	21'-6"	718
A2	52	#4	STR	21'-4"	741
* B1	75	#5	STR	23'-8"	1851
B2	75	#6	STR	24'-8"	2779
REINFORCING STEEL				LBS.	3520
* EPOXY COATED REINFORCING STEEL				LBS.	2569
CLASS AA CONCRETE				C. Y.	35.1

2'-0" SPLICE FOR A1
1'-9" SPLICE FOR A2

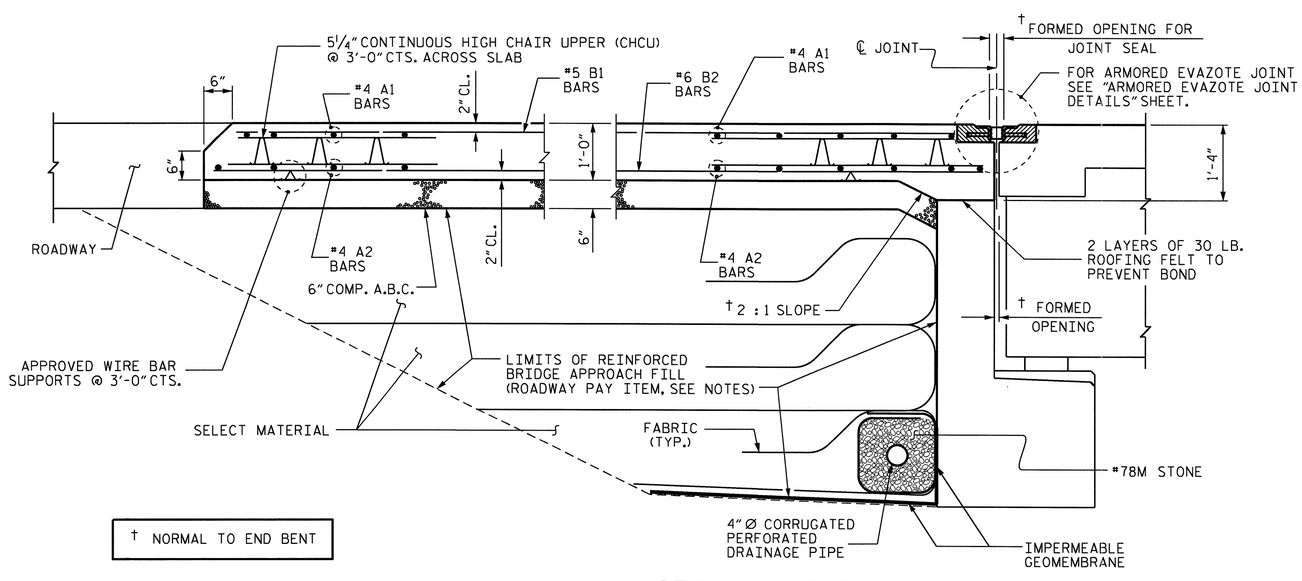

† NORMAL TO END BENT

SECTION THRU SLAB

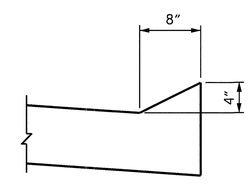

SECTION N-N

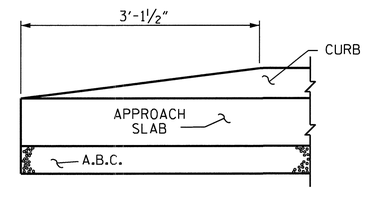

END OF CURB WITHOUT SHOULDER BERM GUTTER

CURB DETAILS

PROJECT NO. R-2233AB
RUTHERFORD COUNTY
STATION: 298+34.21 -L-

SHEET 1 OF 2

STATE OF NORTH CAROLINA
DEPARTMENT OF TRANSPORTATION
RALEIGH

BRIDGE APPROACH SLAB FOR FLEXIBLE PAVEMENT

RIGHT LANE

NORTH CAROLINA PROFESSIONAL SEAL 20125 ENGINEER
MARSHALL B. CHEEK, JR.
9-16-10

REVISIONS						SHEET NO.
NO.	BY:	DATE:	NO.	BY:	DATE:	S-134
1			3			TOTAL SHEETS
2			4			184

STR. #4

STD. NO. BAS4

ASSEMBLED BY : A. SORSENGINH		DATE : 2/11/10	
CHECKED BY : M. POOLE		DATE : 2/24/10	
DRAWN BY : EEM 3/95	REV. 7/10/01	LES/RDR	
CHECKED BY : VAP 3/95	REV. 5/7/03R	RWW/JTE	
	REV. 5/1/06R	KMM/GM	

08-SEP-2010 15:13
R:\Structures\Final Plans\Str. #4\R-2233AB_SD_AS.dgn
afigueroa

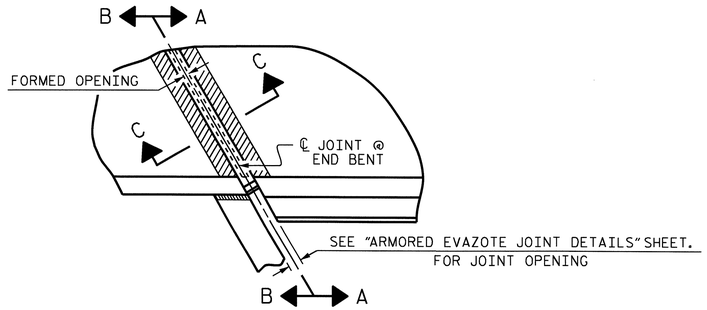

PLAN

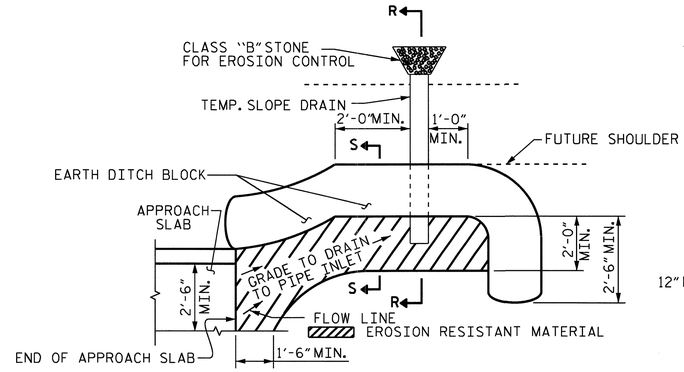

NOTE: IMMEDIATELY AFTER THE CONSTRUCTION OF THE APPROACH SLAB, THE CONTRACTOR SHALL PROVIDE TEMPORARY BERM AND SLOPE DRAIN. CONTRACTOR SHALL GRADE TO PIPE INLET AND PROVIDE EROSION RESISTANT MATERIAL AS SHOWN. THE EROSION RESISTANT MATERIAL SHALL BE EITHER 1) ASPHALT PLANT MIX, TYPE 1 OR TYPE 2, MIN. 2" DEPTH, 2) EROSION CONTROL MAT, OR 3) CONCRETE, AS DIRECTED BY THE ENGINEER. THE SLOPE DRAIN SHALL CONSIST OF A NON-PERFORATED TEMPORARY DRAINAGE PIPE, 12 INCHES IN DIAMETER.

PLAN VIEW

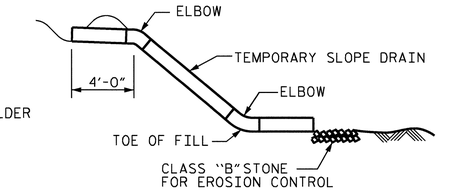

SECTION R-R

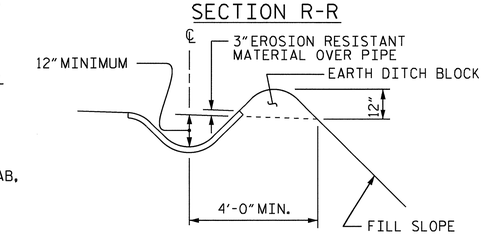

SECTION S-S

TEMPORARY BERM AND SLOPE DRAIN DETAILS

(TO BE USED WHEN SHOULDER BERM GUTTER IS REQUIRED)

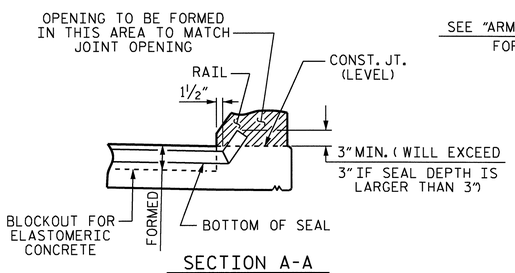

SECTION A-A

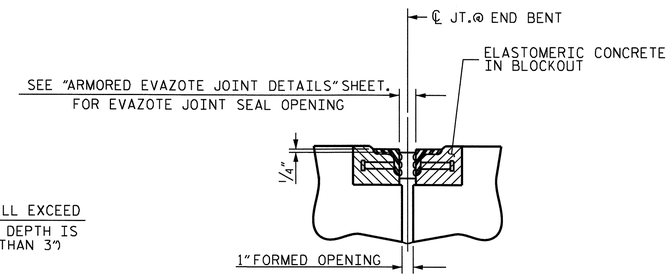

SECTION C-C

ARMORED EVAZOTE JOINT SEAL

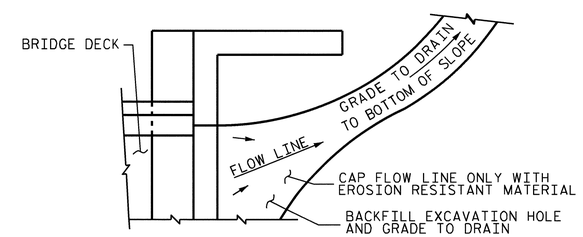

NOTE: IF THE APPROACH SLAB IS NOT CONSTRUCTED IMMEDIATELY AFTER THE BACKFILLING OF THE END BENT EXCAVATION, GRADE TO DRAIN TO THE BOTTOM OF THE SLOPE AND PROVIDE EROSION RESISTANT MATERIAL, SUCH AS FIBERGLASS ROVING OR AS DIRECTED BY THE ENGINEER TO PREVENT SOIL EROSION AND TO PROTECT THE AREA ADJACENT TO THE STRUCTURE. THE CONTRACTOR WILL BE REQUIRED TO REMOVE THESE MATERIALS PRIOR TO CONSTRUCTION OF THE APPROACH SLAB.

TEMPORARY DRAINAGE DETAIL

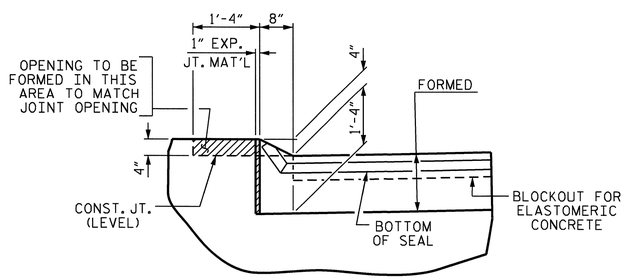

SECTION B-B

JOINT SEAL DETAILS @ END BENT

EVAZOTE JOINT SEAL TO BE CUT, HEAT WELDED AND TURNED UP PARALLEL TO SLOPED FACE OF THE BARRIER RAIL.

PROJECT NO. R-2233AB

RUTHERFORD COUNTY

STATION: 298+34.21 -L-

SHEET 2 OF 2

STATE OF NORTH CAROLINA
DEPARTMENT OF TRANSPORTATION
RALEIGH

BRIDGE APPROACH SLAB DETAILS

RIGHT LANE

REVISIONS						SHEET NO.
NO.	BY:	DATE:	NO.	BY:	DATE:	S-135
1			3			TOTAL SHEETS
2			4			184

NORTH CAROLINA PROFESSIONAL SEAL 20125 ENGINEER
MARSHALL & CHECK, P.A.
9-16-10

ASSEMBLED BY :	A. SORSENGINH	DATE :	2/12/10
CHECKED BY :	M. POOLE	DATE :	2/24/10

DRAWN BY :	FCJ	11/88	REV. 10/17/00	RWW/LES
CHECKED BY :	ARB	11/88	REV. 5/7/03	RWW/JTE
			REV. 5/1/06R	MAA/KMM

14-SEP-2010 13:46
R:\Structures\Final Plans\Str. #4\R-2233AB_SD_STR#4_15_AS.dgn
afigueroa

STR. #4

STD. NO. BAS10

OVERHANG BRACKET CALCULATION INSTRUCTIONS

AASHTO SHAPES - TYPES III, IV, V, AND VI

1. RECORD KNOWN INFORMATION ON "BRIDGE OVERHANG BRACKET SUMMARY" ON SHEET 2
2. CALCULATE THE MAXIMUM SCREED LOAD PER BRACKET (SLPB) WITH AN ESTIMATED R = 1.5. SLPB = R X W. ROUND VALUE UP TO NEAREST SLPB VALUE INDICATED ON APPROPRIATE TABLE 1-1, 1-2, 1-3, OR 1-4.
3. WITH THE ESTIMATED SLPB, OVERHANG SLAB THICKNESS, "K" VALUE, AND 45° HANGER SAFE WORKING LOAD (SWL), ENTER THE APPROPRIATE TABLE 1-1, 1-2, 1-3, OR 1-4 (BASED ON OVERHANG DIMENSION) AND DETERMINE THE BRACKET SPACING, S.
4. CALCULATE S/D1 AND S/D2, ROUNDING UP TO NEAREST VALUE IN TABLE 2. ENTER TABLE 2 AND DETERMINE R VALUE.
5. CALCULATE REVISED SLPB. ROUND VALUE UP TO NEAREST SLPB VALUE INDICATED ON APPROPRIATE TABLE 1-1, 1-2, 1-3, OR 1-4.
6. WITH THE REVISED SLPB, OVERHANG SLAB THICKNESS, "K" VALUE AND 45 HANGER SAFE WORKING LOAD (SWL), ENTER THE APPROPRIATE TABLE 1-1, 1-2, 1-3 OR 1-4 (BASED ON OVERHANG DIMENSION) AND DETERMINE REVISED BRACKET SPACING, S.
7. CONTINUE ITERATIONS OF STEPS 4-6 UNTIL THE REVISED BRACKET SPACING, S, IS THE SAME AS THE PREVIOUS S VALUE.
8. CHECK LUMBER JOIST SPACING: WITH BRACKET SPACING VALUE, S, ROUND THIS VALUE UP TO THE NEAREST VALUE OF ALLOWABLE SPAN LENGTH OF JOIST OF TABLE 3. USING THIS VALUE, ALONG WITH THE AVERAGE OVERHANG SLAB THICKNESS AND THE LUMBER JOIST SIZE, DETERMINE JOIST SPACING FROM TABLE 3. IF NECESSARY, ADJUST LUMBER JOIST SIZE AND/OR JOIST SPACING TO MEET ALLOWABLE SPAN LENGTH OF JOIST.
9. CONVERSELY, IF THE DESIRED JOIST SPACING IS KNOWN, USE THIS ALONG WITH THE AVERAGE OVERHANG SLAB THICKNESS AND THE LUMBER JOIST SIZE TO DETERMINE IF ALLOWABLE SPAN LENGTH OF JOIST IS GREATER THAN THE BRACKET SPACING, S. IF NECESSARY, ADJUST LUMBER JOIST SIZE TO MEET REQUIREMENTS OF ALLOWABLE SPAN LENGTH OF JOIST AND JOIST SPACING.
10. RECORD REMAINING INFORMATION ON "BRIDGE OVERHANG BRACKET SUMMARY" FORM.
11. SUBMIT FORM AND CALCULATIONS FOR REVIEW AND APPROVAL.

TABLE 1-1

(FOR USE ON **UP TO 2'-0" OVERHANG (L)** & 54" HORIZONTAL LEG LENGTH OF THE OVERHANG BRACKET)

AVG. SLAB THICKNESS (T) (in)	BRACKET (K) DIMENSION (in)	SCREED LOAD PER BRACKET									45° HANGER SWL (lbs)
		2500 lbs.	2250 lbs.	2000 lbs.	1750 lbs.	1500 lbs.	1250 lbs.	1000 lbs.	750 lbs.	0 lbs.	
		BRACKET SPACING									
10	30				2'-1"	2'-7"	3'-2"	3'-8"	4'-2"	5'-9"	4000
		3'-6"	4'-0"	4'-5"	4'-9"	5'-1"	5'-3"	5'-5"	5'-7"	6'-7"	6000
	40				2'-1"	2'-7"	3'-2"	3'-8"	4'-2"	5'-9"	4000
		3'-6"	4'-0"	4'-5"	4'-9"	5'-1"	5'-3"	5'-5"	5'-7"	6'-7"	6000
	50				2'-1"	2'-7"	3'-2"	3'-8"	4'-2"	5'-9"	4000
		3'-6"	4'-0"	4'-5"	4'-9"	5'-1"	5'-3"	5'-5"	5'-7"	6'-7"	6000
12	30					2'-4"	2'-10"	3'-4"	3'-9"	5'-2"	4000
		3'-2"	3'-7"	4'-1"	4'-7"	5'-0"	5'-2"	5'-4"	5'-7"	6'-5"	6000
	40					2'-4"	2'-10"	3'-4"	3'-9"	5'-2"	4000
		3'-2"	3'-7"	4'-1"	4'-7"	5'-0"	5'-2"	5'-4"	5'-7"	6'-5"	6000
	50					2'-4"	2'-10"	3'-4"	3'-9"	5'-2"	4000
		3'-2"	3'-7"	4'-1"	4'-7"	5'-0"	5'-2"	5'-4"	5'-7"	6'-5"	6000
14	30					2'-2"	2'-7"	3'-0"	3'-5"	4'-9"	4000
		2'-10"	3'-4"	3'-9"	4'-2"	4'-7"	5'-0"	5'-4"	5'-7"	6'-4"	6000
	40					2'-2"	2'-7"	3'-0"	3'-5"	4'-9"	4000
		2'-10"	3'-4"	3'-9"	4'-2"	4'-7"	5'-0"	5'-4"	5'-7"	6'-4"	6000
	50					2'-2"	2'-7"	3'-0"	3'-5"	4'-9"	4000
		2'-10"	3'-4"	3'-9"	4'-2"	4'-7"	5'-0"	5'-4"	5'-7"	6'-4"	6000
16	30					2'-0"	2'-4"	2'-9"	3'-2"	4'-4"	4000
		2'-8"	3'-0"	3'-5"	3'-10"	4'-3"	4'-7"	5'-0"	5'-5"	6'-3"	6000
	40					2'-0"	2'-4"	2'-9"	3'-2"	4'-4"	4000
		2'-8"	3'-0"	3'-5"	3'-10"	4'-3"	4'-7"	5'-0"	5'-5"	6'-3"	6000
	50					2'-0"	2'-4"	2'-9"	3'-2"	4'-4"	4000
		2'-8"	3'-0"	3'-5"	3'-10"	4'-3"	4'-7"	5'-0"	5'-5"	6'-3"	6000

TABLE 1-2

(FOR USE ON **OVER 2'-0" TO 2'-6" OVERHANG (L)** & 54" HORIZONTAL LEG LENGTH OF THE OVERHANG BRACKET)

AVG. SLAB THICKNESS (T) (in)	BRACKET (K) DIMENSION (in)	SCREED LOAD PER BRACKET									45° HANGER SWL (lbs)
		2500 lbs.	2250 lbs.	2000 lbs.	1750 lbs.	1500 lbs.	1250 lbs.	1000 lbs.	750 lbs.	0 lbs.	
		BRACKET SPACING									
10	30					2'-4"	2'-9"	3'-3"	3'-8"	5'-1"	4000
		3'-1"	3'-6"	4'-0"	4'-5"	4'-11"	5'-3"	5'-5"	5'-7"	6'-7"	6000
	40					2'-4"	2'-9"	3'-3"	3'-8"	5'-1"	4000
		3'-1"	3'-6"	4'-0"	4'-5"	4'-11"	5'-3"	5'-5"	5'-7"	6'-7"	6000
	50					2'-4"	2'-9"	3'-3"	3'-8"	5'-1"	4000
		3'-1"	3'-6"	4'-0"	4'-5"	4'-11"	5'-3"	5'-5"	5'-7"	6'-7"	6000
12	30					2'-1"	2'-6"	2'-11"	3'-4"	4'-6"	4000
		2'-9"	3'-2"	3'-7"	4'-0"	4'-5"	4'-10"	5'-3"	5'-7"	6'-5"	6000
	40					2'-1"	2'-6"	2'-11"	3'-4"	4'-6"	4000
		2'-9"	3'-2"	3'-7"	4'-0"	4'-5"	4'-10"	5'-3"	5'-7"	6'-5"	6000
	50					2'-1"	2'-6"	2'-11"	3'-4"	4'-6"	4000
		2'-9"	3'-2"	3'-7"	4'-0"	4'-5"	4'-10"	5'-3"	5'-7"	6'-5"	6000
14	30						2'-3"	2'-7"	3'-0"	4'-1"	4000
		2'-6"	2'-10"	3'-3"	3'-7"	4'-0"	4'-4"	4'-9"	5'-1"	6'-3"	6000
	40						2'-3"	2'-7"	3'-0"	4'-1"	4000
		2'-6"	2'-10"	3'-3"	3'-7"	4'-0"	4'-4"	4'-9"	5'-1"	6'-3"	6000
	50						2'-3"	2'-7"	3'-0"	4'-1"	4000
		2'-6"	2'-10"	3'-3"	3'-7"	4'-0"	4'-4"	4'-9"	5'-1"	6'-3"	6000
16	30						2'-1"	2'-5"	2'-9"	3'-9"	4000
		2'-3"	2'-7"	2'-11"	3'-4"	3'-8"	4'-0"	4'-4"	4'-8"	5'-8"	6000
	40						2'-1"	2'-5"	2'-9"	3'-9"	4000
		2'-3"	2'-7"	2'-11"	3'-4"	3'-8"	4'-0"	4'-4"	4'-8"	5'-8"	6000
	50						2'-1"	2'-5"	2'-9"	3'-9"	4000
		2'-3"	2'-7"	2'-11"	3'-4"	3'-8"	4'-0"	4'-4"	4'-8"	5'-8"	6000

TABLE 1-3

(FOR USE ON **OVER 2'-6" TO 3'-0" OVERHANG (L)** & 54" HORIZONTAL LEG LENGTH OF THE OVERHANG BRACKET)

AVG. SLAB THICKNESS (T) (in)	BRACKET (K) DIMENSION (in)	SCREED LOAD PER BRACKET									45° HANGER SWL (lbs)
		2500 lbs.	2250 lbs.	2000 lbs.	1750 lbs.	1500 lbs.	1250 lbs.	1000 lbs.	750 lbs.	0 lbs.	
		BRACKET SPACING									
10	30					2'-1"	2'-6"	2'-11"	3'-4"	4'-6"	4000
						4'-5"	4'-10"	5'-3"	5'-7"	6'-7"	6000
	40					2'-1"	2'-6"	2'-11"	3'-4"	4'-6"	4000
		2'-9"	3'-2"	3'-7"	4'-0"	4'-5"	4'-10"	5'-3"	5'-7"	6'-7"	6000
	50					2'-1"	2'-6"	2'-11"	3'-4"	4'-6"	4000
		2'-9"	3'-2"	3'-7"	4'-0"	4'-5"	4'-10"	5'-3"	5'-7"	6'-7"	6000
12	30						2'-2"	2'-7"	2'-11"	4'-0"	4000
						3'-11"	4'-3"	4'-8"	5'-0"	6'-1"	6000
	40						2'-2"	2'-7"	2'-11"	4'-0"	4000
		2'-5"	2'-10"	3'-2"	3'-6"	3'-11"	4'-3"	4'-8"	5'-0"	6'-1"	6000
	50						2'-2"	2'-7"	2'-11"	4'-0"	4000
		2'-5"	2'-10"	3'-2"	3'-6"	3'-11"	4'-3"	4'-8"	5'-0"	6'-1"	6000
14	30						2'-0"	2'-4"	2'-8"	3'-8"	4000
					3'-2"	3'-6"	3'-10"	4'-2"	4'-6"	5'-6"	6000
	40						2'-0"	2'-4"	2'-8"	3'-8"	4000
		2'-2"	2'-6"	2'-10"	3'-2"	3'-6"	3'-10"	4'-2"	4'-6"	5'-6"	6000
	50						2'-0"	2'-4"	2'-8"	3'-8"	4000
		2'-2"	2'-6"	2'-10"	3'-2"	3'-6"	3'-10"	4'-2"	4'-6"	5'-6"	6000
16	30							2'-1"	2'-5"	3'-4"	4000
					2'-11"	3'-2"	3'-6"	3'-10"	4'-1"	5'-0"	6000
	40							2'-1"	2'-5"	3'-4"	4000
		2'-0"	2'-4"	2'-7"	2'-11"	3'-2"	3'-6"	3'-10"	4'-1"	5'-0"	6000
	50							2'-1"	2'-5"	3'-4"	4000
		2'-0"	2'-4"	2'-7"	2'-11"	3'-2"	3'-6"	3'-10"	4'-1"	5'-0"	6000

TABLE 1-4

(FOR USE ON **OVER 3'-0" TO 3'-6" OVERHANG (L)** & 54" HORIZONTAL LEG LENGTH OF THE OVERHANG BRACKET)

AVG. SLAB THICKNESS (T) (in)	BRACKET (K) DIMENSION (in)	SCREED LOAD PER BRACKET									45° HANGER SWL (lbs)
		2500 lbs.	2250 lbs.	2000 lbs.	1750 lbs.	1500 lbs.	1250 lbs.	1000 lbs.	750 lbs.	0 lbs.	
		BRACKET SPACING									
10	30						2'-1"	2'-5"	2'-9"	3'-10"	4000
						2'-3"	2'-11"	3'-7"	4'-3"	5'-9"	6000
	40						2'-1"	2'-5"	2'-9"	3'-10"	4000
				2'-4"	3'-0"	3'-7"	4'-1"	4'-5"	4'-9"	5'-9"	6000
	50						2'-1"	2'-5"	2'-9"	3'-10"	4000
		2'-4"	2'-8"	3'-0"	3'-4"	3'-8"	4'-1"	4'-5"	4'-9"	5'-9"	6000
12	30							2'-2"	2'-6"	3'-5"	4000
						2'-1"	2'-8"	3'-4"	3'-11"	5'-2"	6000
	40							2'-2"	2'-6"	3'-5"	4000
				2'-2"	2'-9"	3'-4"	3'-7"	3'-11"	4'-3"	5'-2"	6000
	50							2'-2"	2'-6"	3'-5"	4000
		2'-1"	2'-4"	2'-8"	3'-0"	3'-4"	3'-7"	3'-11"	4'-3"	5'-2"	6000
14	30								2'-3"	3'-1"	4000
						2'-0"	2'-6"	3'-1"	3'-8"	4'-8"	6000
	40								2'-3"	3'-1"	4000
				2'-0"	2'-7"	3'-0"	3'-3"	3'-6"	3'-10"	4'-8"	6000
	50								2'-3"	3'-1"	4000
			2'-2"	2'-5"	2'-8"	3'-0"	3'-3"	3'-6"	3'-10"	4'-8"	6000
16	30								2'-0"	2'-9"	4000
							2'-4"	2'-10"	3'-5"	4'-3"	6000
	40								2'-0"	2'-9"	4000
					2'-5"	2'-8"	2'-11"	3'-3"	3'-6"	4'-3"	6000
	50								2'-0"	2'-9"	4000
				2'-2"	2'-5"	2'-8"	2'-11"	3'-3"	3'-6"	4'-3"	6000

DEFINITIONS

SLPB = SCREED LOAD PER BRACKET (R x W)
R = SCREED LOAD FACTOR, OBTAINED FROM TABLE 2
W = WHEEL LOAD
S = BRACKET SPACING
T = AVERAGE SLAB THICKNESS
SWL = SAFE WORKING LOAD
K = DIMENSION DEFINED ON "BRIDGE OVERHANG BRACKET SUMMARY" ON SHEET 2
L = OVERHANG MEASURED FROM EDGE OF TOP FLANGE TO EDGE OF SUPERSTRUCTURE

NORTH CAROLINA PROFESSIONAL SEAL 18788 ENGINEER CHANG-CHUAN VICTOR CHAO
Chang-Chuan V. Chao
12-18-2009

PROJECT NO. R-2233AB
RUTHERFORD COUNTY
STATION: 298+34.21 -L-

SHEET 1 OF 3

STATE OF NORTH CAROLINA
DEPARTMENT OF TRANSPORTATION
RALEIGH

STANDARD OVERHANG FALSEWORK

AASHTO TYPES
III, IV, V, AND VI

RIGHT LANE

REVISIONS						SHEET NO.
NO.	BY:	DATE:	NO.	BY:	DATE:	S-136
1			3			TOTAL SHEETS
2			4			184

ASSEMBLED BY:	DATE:
CHECKED BY:	DATE:
DRAWN BY: R. WRIGHT 06/04	REV.
CHECKED BY: C. V. CHAO 06/04	

18-DEC-2009 09:31
d:\wdir\victor\overhangfalsework\tiebar&strut\r-2233ab_type_iv\r2233ab*4overhangesheets.dgn
vchao

BRIDGE OVERHANG BRACKET SUMMARY

TOTAL SCREED WEIGHT = _____ LBS.
NUMBER OF SCREED WHEELS = _____
SCREED WHEEL LOAD (W) = _____ LBS.
SCREED LOAD PER BRACKET = _____ LBS.

PROJECT No. : _____
COUNTY : _____
STATION : _____
DESCRIPTION : _____

DATE : _____
DESIGN BY : _____
CHECK BY : _____

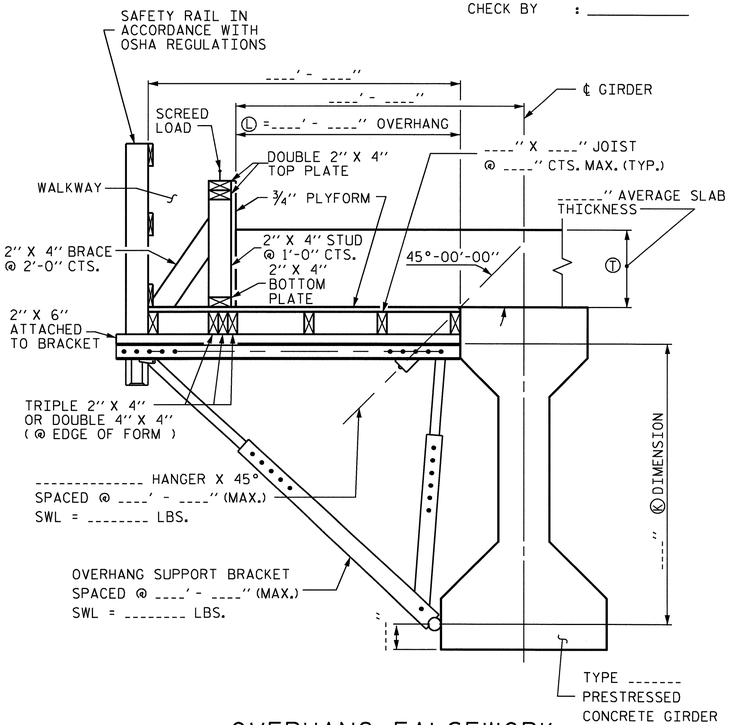

OVERHANG FALSEWORK

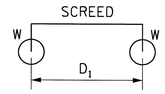

4-WHEEL MACHINE

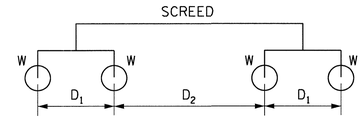

8-WHEEL MACHINE

4 WHEEL MACHINE	
S/D1	R
<= 1.0	1.00
1.1	1.09
1.2	1.17
1.3	1.23
1.4	1.29
1.5	1.33
1.6	1.38
1.7	1.41
1.8	1.44
1.9	1.47
2.0	1.50
2.2	1.55
2.4	1.58
2.6	1.62
2.8	1.64
3.0	1.67
3.5	1.71
4.0	1.75

TABLE 2: SCREED LOAD FACTOR "R"

		THE SCREED LOAD FACTOR R (FOR 8 WHEEL MACHINE)																	
		S/D_2																	
		<= 1.0	1.1	1.2	1.3	1.4	1.5	1.6	1.7	1.8	1.9	2.0	2.2	2.4	2.6	2.8	3.0	3.5	4.0
S/D_1	<= 1.0	1.00	1.09	1.17	1.23	1.29	1.33	1.38	1.41	1.44	1.47	1.50	1.55	1.58	1.62	1.64	1.67	1.71	1.75
	1.1	1.09	1.18	1.26	1.32	1.38	1.42	1.47	1.50	1.54	1.56	1.59	1.64	1.67	1.71	1.73	1.76	1.81	1.84
	1.2	1.17	1.26	1.33	1.40	1.45	1.50	1.54	1.58	1.61	1.64	1.67	1.71	1.75	1.78	1.81	1.83	1.88	1.92
	1.3	1.23	1.32	1.40	1.46	1.52	1.56	1.61	1.64	1.68	1.70	1.73	1.78	1.81	1.85	1.87	1.90	1.95	1.98
	1.4	1.29	1.38	1.45	1.52	1.57	1.62	1.66	1.70	1.73	1.76	1.79	1.83	1.87	1.90	1.93	1.95	2.00	2.07
	1.5	1.33	1.42	1.50	1.56	1.62	1.67	1.71	1.75	1.78	1.81	1.83	1.88	1.92	1.95	1.98	2.00	2.10	2.17
	1.6	1.38	1.47	1.54	1.61	1.66	1.71	1.75	1.79	1.82	1.85	1.88	1.92	1.96	1.99	2.04	2.08	2.18	2.25
	1.7	1.41	1.50	1.58	1.64	1.70	1.75	1.79	1.82	1.86	1.89	1.91	1.96	2.00	2.05	2.11	2.16	2.25	2.32
	1.8	1.44	1.54	1.61	1.68	1.73	1.78	1.82	1.86	1.89	1.92	1.94	1.99	2.06	2.12	2.17	2.22	2.32	2.39
	1.9	1.47	1.56	1.64	1.70	1.76	1.81	1.85	1.89	1.92	1.95	1.97	2.04	2.11	2.18	2.23	2.28	2.38	2.45
	2.0	1.50	1.59	1.67	1.73	1.79	1.83	1.88	1.91	1.94	1.97	2.00	2.09	2.17	2.23	2.29	2.33	2.43	2.50
	2.2	1.55	1.64	1.71	1.78	1.83	1.88	1.92	1.96	1.99	2.04	2.09	2.18	2.26	2.32	2.38	2.42	2.52	2.59
	2.4	1.58	1.67	1.75	1.81	1.87	1.92	1.96	2.00	2.06	2.11	2.17	2.26	2.33	2.40	2.45	2.50	2.60	2.67
	2.6	1.62	1.71	1.78	1.85	1.90	1.95	1.99	2.05	2.12	2.18	2.23	2.32	2.40	2.46	2.52	2.56	2.66	2.73
	2.8	1.64	1.73	1.81	1.87	1.93	1.98	2.04	2.11	2.17	2.23	2.29	2.38	2.45	2.52	2.57	2.62	2.71	2.79
	3.0	1.67	1.76	1.83	1.90	1.95	2.00	2.08	2.16	2.22	2.28	2.33	2.42	2.50	2.56	2.62	2.67	2.76	2.83
	3.5	1.71	1.81	1.88	1.95	2.00	2.10	2.18	2.25	2.32	2.38	2.43	2.52	2.60	2.66	2.71	2.76	2.86	2.93
	4.0	1.75	1.84	1.92	1.98	2.07	2.17	2.25	2.32	2.39	2.45	2.50	2.59	2.67	2.73	2.79	2.83	2.93	3.00

TABLE 3: ALLOWABLE SPAN LENGTH OF JOISTS AND JOIST SPACINGS

AVG. SLAB THICKNESS Ⓣ (IN)	LUMBER JOIST SIZE (IN X IN)	JOIST SPACINGS			
		15 IN	12 IN	10 IN	8 IN
		THE ALLOWABLE SPAN LENGTH OF JOISTS			
10	2 X 4	———	4' - 6"	4' - 9"	5' - 0"
	4 X 4	5' - 9"	6' - 3"	6' - 6"	6' - 7"
12	2 X 4	———	4' - 3"	4' - 9"	5' - 0"
	4 X 4	5' - 3"	6' - 0"	6' - 3"	6' - 5"
14	2 X 4	———	4' - 0"	4' - 6"	5' - 0"
	4 X 4	———	5' - 6"	6' - 0"	6' - 4"
16	2 X 4	———	4' - 0"	4' - 3"	4' - 9"
	4 X 4	———	5' - 3"	5' - 9"	6' - 3"

NOTES

DESIGN INCLUDES CONSTRUCTION LIVE LOAD 20 PSF ON THE AREA SUPPORTED AND 75 PLF AT THE OUTSIDE DECK OF OVERHANGS.

REQUIRED MINIMUM DIAGONAL LEG CAPACITY: 3600 LB WORKING LOAD

THE CONTRACTOR HAS THE OPTION OF SUBMITTING HIS OWN DESIGN FOR OVERHANG FALSEWORK IN ACCORDANCE WITH THE SPECIAL PROVISIONS.

SUBMITTALS UTILIZING THE INSTRUCTIONS AND PROCEDURES DESCRIBED ON SHEET 1 OF 3 SHALL BE IN ACCORDANCE WITH THE APPLICABLE SECTIONS OF THE SPECIFICATIONS AND SPECIAL PROVISIONS, EXCEPT THAT CALCULATIONS FOR OVERHANG FALSEWORK NEED NOT BE SEALED BY A REGISTERED ENGINEER.

FOR OVERHANG FALSEWORK BRACING DESIGN, SEE SHEET 3 OF 3.

PROJECT NO. R-2233AB
RUTHERFORD COUNTY
STATION: 298+34.21 -L-

SHEET 2 OF 3

STATE OF NORTH CAROLINA
DEPARTMENT OF TRANSPORTATION
RALEIGH

STANDARD OVERHANG FALSEWORK

AASHTO TYPES
III, IV, V, AND VI

RIGHT LANE

NORTH CAROLINA PROFESSIONAL SEAL 18788 ENGINEER CHANG-CHUAN VICTOR CHAO

Chang-Chuan V. Chao
12-18-2009

REVISIONS						SHEET NO.
NO.	BY:	DATE:	NO.	BY:	DATE:	S-137
1			3			TOTAL SHEETS
2			4			184

ASSEMBLED BY:	DATE:
CHECKED BY:	DATE:
DRAWN BY: R. WRIGHT 06/04	REV.
CHECKED BY: C. V. CHAO 06/04	

18-DEC-2009 09:31
d:\wdir\victor\overhangfalsework\tiebar&strut\r-2233ab_type_iv\r2233ab*4overhangesheets.dgn
vchao

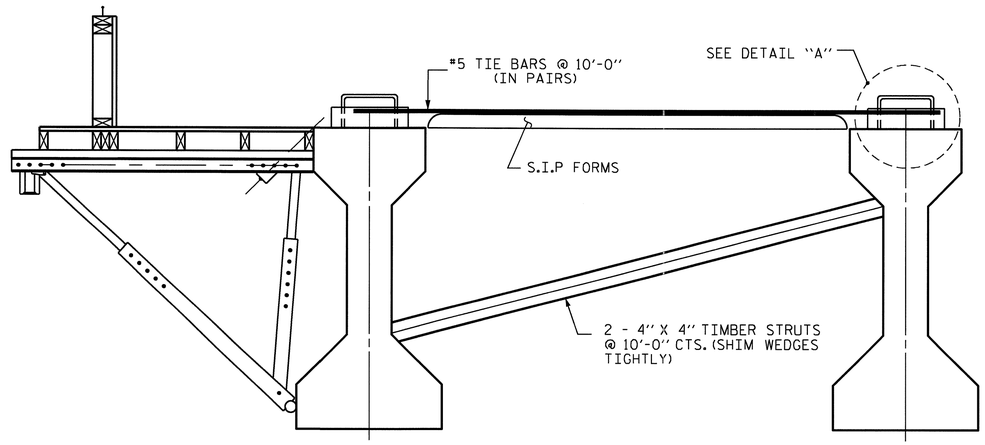

EXTERIOR GIRDER

INTERIOR GIRDER

DETAIL OF REQUIRED OVERHANG FALSEWORK BRACING SYSTEM

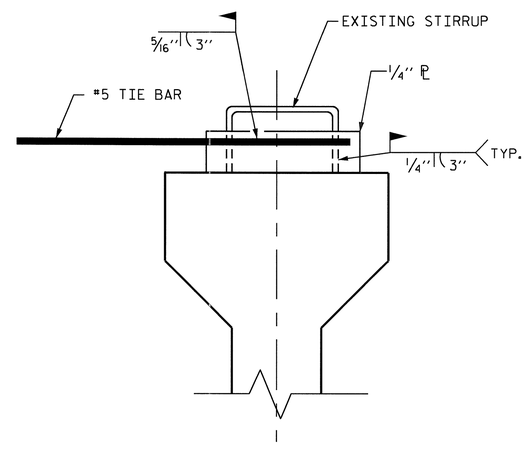

DETAIL "A"

NOTES:

EACH #5 TIE BAR SHALL BE WELDED TO ONE STIRRUP LOOP AS SHOWN IN DETAIL "A". #5 TIE BARS SHALL BE WELDED TO TWO ADJACENT STIRRUPS OF THE EXTERIOR GIRDER AND THE ADJACENT INTERIOR GIRDER BETWEEN PERMANENT DIAPHRAGMS. WELD STEEL PLATES IN BETWEEN THE TIE BARS AND THE STIRRUP LOOP. WELDING TWO TIE BARS TO THE SAME STIRRUP LOOP SHALL NOT BE PERMITTED.

MAXIMUM SPACING BETWEEN THE BRACING (TIE BARS-TIMBER STRUT) IS 10'-0" CTS. #5 TIE BARS SHALL BE LOCATED OVER A TIMBER STRUT.

INSTALL TIE BARS AND TIMBER STRUTS PRIOR TO PLACEMENT OF CONCRETE OR SCREED WEIGHT ONTO THE OVERHANG FALSEWORK.

PROJECT NO. R-2233AB
RUTHERFORD COUNTY
STATION: 298+34.21 -L-

SHEET 3 OF 3

STATE OF NORTH CAROLINA
DEPARTMENT OF TRANSPORTATION
RALEIGH

STANDARD OVERHANG FALSEWORK

AASHTO TYPES
III, IV, V, AND VI

RIGHT LANE

NORTH CAROLINA PROFESSIONAL SEAL 18788 ENGINEER CHANG-CHUAN VICTOR CHAO

Chang-Chuan V. Chao
12-18-2009

REVISIONS						SHEET NO.
NO.	BY:	DATE:	NO.	BY:	DATE:	S-138
1			3			TOTAL SHEETS
2			4			184

DRAWN BY: R. WRIGHT 06/04 DATE : _____
CHECKED BY: C. V. CHAO 06/04 DATE : _____

18-DEC-2009 09:32
ds\wdir\victor\overhangfalsework\tiebar&strut\r-2233ab_type_iv\r2233ab*4overhangesheets.dgn
vchao

STR. #4 OF3

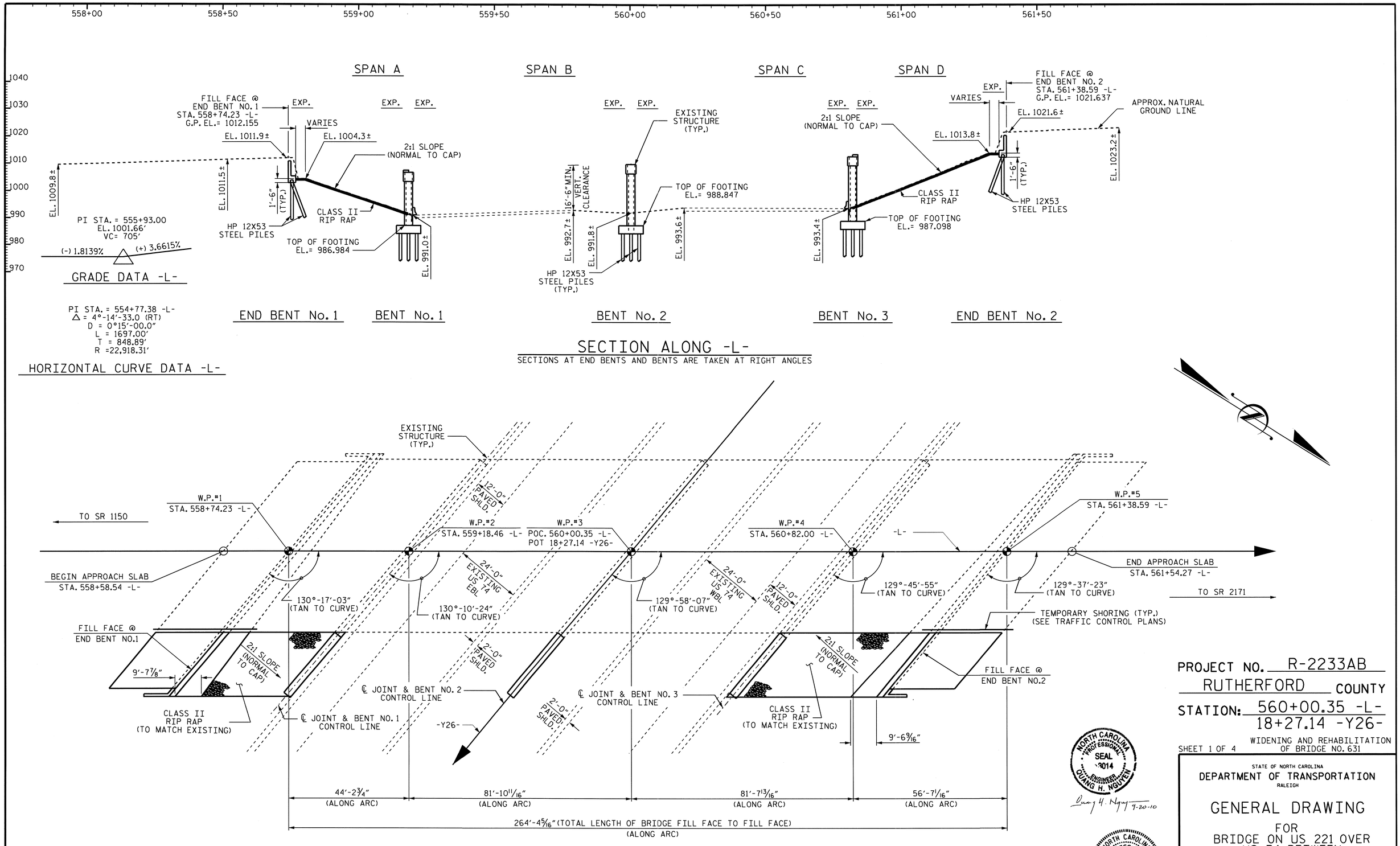

PROJECT NO. R-2233AB
RUTHERFORD COUNTY
STATION: 560+00.35 -L-
18+27.14 -Y26-
WIDENING AND REHABILITATION OF BRIDGE NO. 631

SHEET 1 OF 4

STATE OF NORTH CAROLINA
DEPARTMENT OF TRANSPORTATION
RALEIGH

GENERAL DRAWING
FOR
BRIDGE ON US 221 OVER
US 74 BETWEEN
SR 1150 AND SR 2171

NORTH CAROLINA PROFESSIONAL SEAL 3014 ENGINEER QUANG H. NGUYEN
Quang H. Nguyen 9-20-10

NORTH CAROLINA PROFESSIONAL SEAL 20125 ENGINEER MARSHALL G. CHEEK, JR.
9-20-10

REVISIONS						SHEET NO.
NO.	BY:	DATE:	NO.	BY:	DATE:	S-139
1			3			TOTAL SHEETS
2			4			184

STR. #5

DRAWN BY : A.L. FIGUEROA DATE : 7-27-10
CHECKED BY : M.G. CHEEK DATE : 7-28-10

16-SEP-2010 11:36
R:\Structures\Final Plans\Str. #5\R-2233AB_SD_STR#5_02_GD.dgn
dahodge

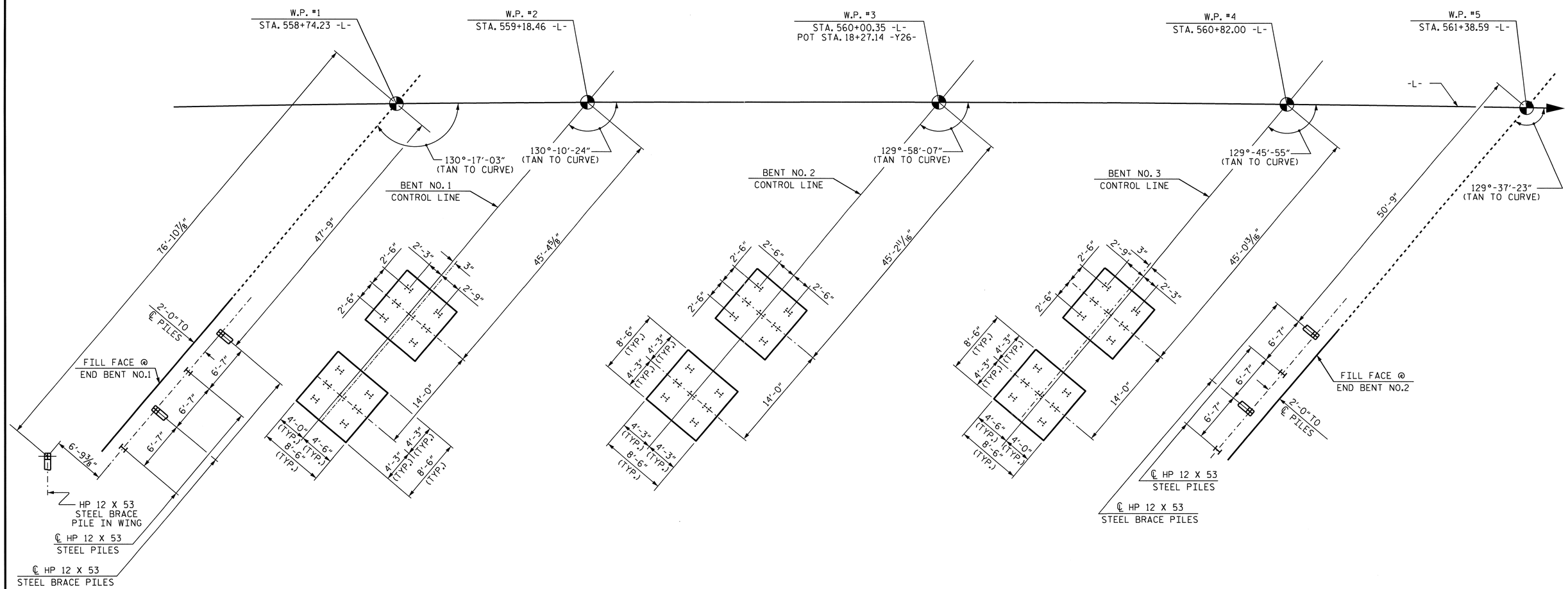

FOUNDATION LAYOUT

ALL PILES ARE HP 12 X 53.
DIMENSIONS LOCATING PILES ARE SHOWN TO THE PILE CENTERLINE AT THE BOTTOM OF THE CAP AND FOOTING.
END BENT BRACE PILES ARE BATTERED AT 3:12.

NOTES

FOR PILES, SEE SPECIAL PROVISIONS.

DRIVE PILES AT END BENT NO. 1 AND END BENT NO. 2 TO A REQUIRED BEARING CAPACITY OF 120 TONS PER PILE. THE REQUIRED BEARING CAPACITY IS EQUAL TO THE ALLOWABLE BEARING CAPACITY WITH A MINIMUM FACTOR OF SAFETY OF TWO.

THE ALLOWABLE BEARING CAPACITY FOR PILES AT END BENT NO. 1 AND END BENT NO. 2 IS 60 TONS PER PILE.

DRIVE PILES AT BENT NO. 1, BENT NO. 2, AND BENT NO. 3 TO A REQUIRED BEARING CAPACITY OF 120 TONS PER PILE. THE REQUIRED BEARING CAPACITY IS EQUAL TO THE ALLOWABLE BEARING CAPACITY WITH A MINIMUM FACTOR OF SAFETY OF TWO.

THE ALLOWABLE BEARING CAPACITY FOR PILES AT BENT NO. 1 BENT NO. 2, AND BENT NO. 3 IS 60 TONS PER PILE.

PROJECT NO. R-2233AB
RUTHERFORD COUNTY
STATION: 560+00.35 -L-

SHEET 2 OF 4

STATE OF NORTH CAROLINA
DEPARTMENT OF TRANSPORTATION
RALEIGH

GENERAL DRAWING
FOR
BRIDGE ON US 221 OVER
US 74 BETWEEN
SR 1150 AND SR 2171

NORTH CAROLINA PROFESSIONAL SEAL 20125 ENGINEER MARSHALL M. CHEEK, JR.
9-20-10

REVISIONS						SHEET NO.
NO.	BY:	DATE:	NO.	BY:	DATE:	S-140
1			3			TOTAL SHEETS
2			4			184

STR. #5

DRAWN BY : A.L. FIGUEROA DATE : 08-04-10
CHECKED BY : M. G. CHEEK DATE : 08-13-10

20-SEP-2010 13:50
R:\Structures\Final Plans\Str. #5\R-2233AB_SD_STR#5_02B_FL.dgn
dahodge

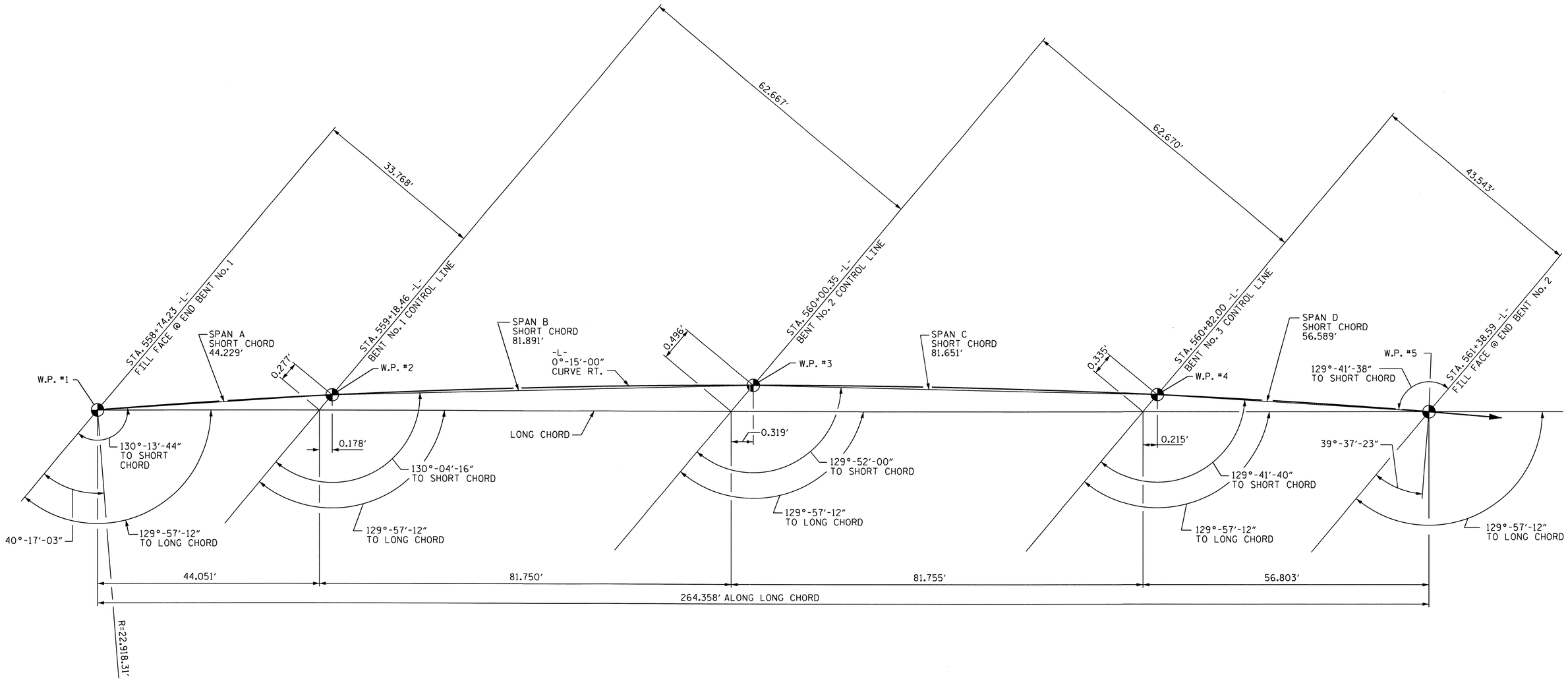

LONG CHORD LAYOUT

PROJECT NO. R-2233AB
RUTHERFORD COUNTY
STATION: 560+00.35 -L-

SHEET 3 OF 4

STATE OF NORTH CAROLINA
DEPARTMENT OF TRANSPORTATION
RALEIGH

GENERAL DRAWING
FOR
BRIDGE ON US 221 OVER
US 74 BETWEEN
SR 1150 AND SR 2171

NORTH CAROLINA PROFESSIONAL SEAL 20125 ENGINEER MARSHALL G. CHEEK, JR.
9-16-10

REVISIONS						SHEET NO.
NO.	BY:	DATE:	NO.	BY:	DATE:	S-141
1			3			TOTAL SHEETS
2			4			184

STR. #5

DRAWN BY : D. HODGE DATE : 8/10
CHECKED BY : M.G. CHEEK DATE : 8/10

14-SEP-2010 14:19
R:\Structures\Final Plans\Str. #5\R-2233AB_SD_STR#5_02C_LC.dgn
afigueroa

BENCHMARK #15: RR SPIKE IN THE BASE OF 12"Ø PINE TREE , 518.87 LEFT OF STA. 559+07.02 -L-, ELEV. 999.07.

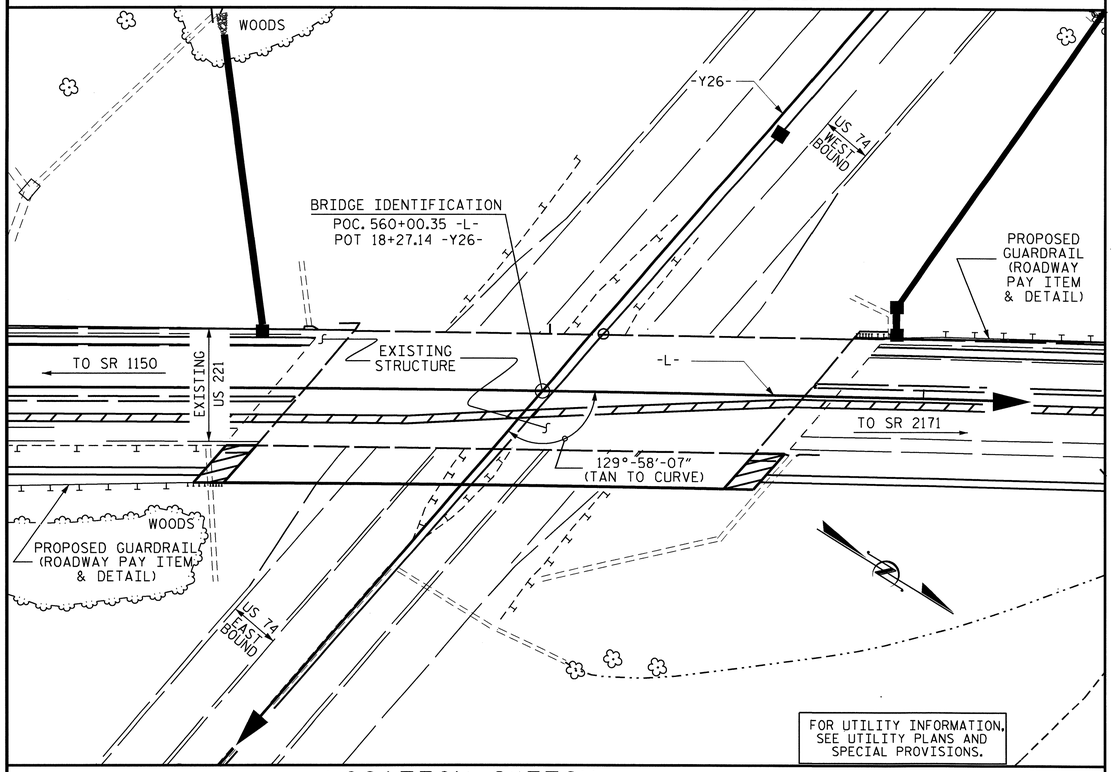

LOCATION SKETCH

NOTES

ASSUMED LIVE LOAD = HS 20 OR ALTERNATE LOADING, EXCEPT THAT PRESTRESSED GIRDERS HAVE BEEN DESIGNED FOR HS25.

FOR OTHER DESIGN DATA AND GENERAL NOTES, SEE SHEET SN.

PRESTRESSED CONCRETE DECK PANELS MAY BE USED IN LIEU OF METAL STAY-IN-PLACE FORMS IN ACCORDANCE WITH ARTICLE 420-3 OF THE STANDARD SPECIFICATIONS.

REMOVABLE FORMS MAY BE USED IN LIEU OF METAL STAY-IN-PLACE FORMS IN ACCORDANCE WITH ARTICLE 420-3 OF THE STANDARD SPECIFICATIONS.

FOR MAINTENANCE AND PROTECTION OF TRAFFIC BENEATH PROPOSED STRUCTURE, SEE SPECIAL PROVISIONS.

THE SUBSTRUCTURE OF THE EXISTING BRIDGE INDICATED ON THE PLANS IS FROM THE BEST INFORMATION AVAILABLE. SINCE THIS INFORMATION IS SHOWN FOR THE CONVENIENCE OF THE CONTRACTOR, THE CONTRACTOR SHALL HAVE NO CLAIM WHATSOEVER AGAINST THE DEPARTMENT OF TRANSPORTATION FOR ANY DELAYS OR ADDITIONAL COST INCURRED BASED ON DIFFERENCES BETWEEN THE EXISTING BRIDGE SUBSTRUCTURE SHOWN ON THE PLANS AND THE ACTUAL CONDITIONS AT THE PROJECT SITE.

THE CLASS AA CONCRETE IN THE BRIDGE DECK SHALL CONTAIN FLY ASH OR GROUND GRANULATED BLAST FURNACE SLAG AT THE SUBSTITUTION RATE SPECIFIED IN ARTICLE 1024-1 AND IN ACCORDANCE WITH ARTICLES 1024-5 AND 1024-6 OF THE STANDARD SPECIFICATIONS. NO PAYMENT WILL BE MADE FOR THIS SUBSTITUTION AS IT IS CONSIDERED INCIDENTAL TO THE COST OF THE REINFORCED CONCRETE DECK SLAB.

TEMPORARY SHORING WILL BE REQUIRED IN THE AREAS INDICATED IN THE PLAN VIEW (SHEET 1 OF 4).

FOR LIMITS OF TEMPORARY SHORING FOR MAINTENANCE OF TRAFFIC, SEE TRAFFIC CONTROL PLANS. FOR PAY ITEM FOR TEMPORARY SHORING FOR MAINTENANCE OF TRAFFIC, SEE ROADWAY PLANS.

STEEL SHEET PILING REQUIRED FOR SHORING SHALL BE HOT ROLLED.

NEEDLE BEAMS WILL NOT BE ALLOWED UNLESS OTHERWISE CALLED FOR ON THE PLANS OR APPROVED BY THE ENGINEER.

FOR SUBMITTAL OF WORKING DRAWINGS, SEE SPECIAL PROVISIONS.

FOR FALSEWORK AND FORMWORK, SEE SPECIAL PROVISIONS.

FOR CRANE SAFETY, SEE SPECIAL PROVISIONS.

FOR PRESTRESSED CONCRETE MEMBERS, SEE SPECIAL PROVISIONS.

THIS BRIDGE HAS BEEN DESIGNED BY THE STRENGTH DESIGN METHOD AS SPECIFIED IN AASHTO STANDARD SPECIFICATIONS.

FOR GROUT FOR STRUCTURES, SEE SPECIAL PROVISIONS.

FOR CURING CONCRETE, SEE SPECIAL PROVISIONS.

FOR FORMS FOR CONCRETE BRIDGE DECKS, SEE SPECIAL PROVISIONS.

FOR PLACING LOAD ON STRUCTURE MEMBERS, SEE SPECIAL PROVISIONS.

BERM AND SLOPE PROTECTION MAY BE ADJUSTED SLIGHTLY AS REQUIRED IN ORDER TO MATCH THE EXISTING SITE CONDITIONS. THE CONTRACTOR SHALL PROVIDE AS SMOOTH A TRANSITION AS POSSIBLE BETWEEN EXISTING AND PROPOSED SLOPE AS DIRECTED BY THE ENGINEER.

TOTAL BILL OF MATERIAL

	FOUNDATION EXCAVATION	REMOVAL OF EXISTING STRUCTURE	REINFORCED CONCRETE DECK SLAB	GROOVING BRIDGE FLOORS	CLASS A CONCRETE	BRIDGE APPROACH SLABS	REINFORCING STEEL	SPIRAL COLUMN REINFORCING STEEL	45" PRESTRESSED CONCRETE GIRDERS		54" PRESTRESSED CONCRETE GIRDERS		HP 12 X 53 STEEL PILES		CONCRETE BARRIER RAIL	RIP RAP CLASS II	FILTER FABRIC FOR DRAINAGE	ELASTOMERIC BEARINGS	EVAZOTE JOINT SEALS	EXPANSION JOINT SEALS
	LUMP SUM	LUMP SUM	SQ. FT.	SQ. FT.	CU. YDS.	LUMP SUM	LBS.	LBS.	NO.	LIN. FT.	NO.	LIN. FT.	NO.	LIN. FT.	LIN. FT.	TONS	SQ. YDS.	LUMP SUM	LUMP SUM	LUMP SUM
SUPERSTRUCTURE		LUMP SUM	5,927	5,608		LUMP SUM			6	287.57	6	489.22			262.05			LUMP SUM	LUMP SUM	LUMP SUM
END BENT NO. 1					19.8		2,680						5	325		36	120			
BENT NO. 1	LUMP SUM				37.4		5,669	733					14	700						
BENT NO. 2	LUMP SUM				37.4		5,613	772					14	770						
BENT NO. 3	LUMP SUM				40.4		6,122	981					14	490						
END BENT NO. 2					18.4		2,521						4	280		42	140			
TOTAL	LUMP SUM	LUMP SUM	5,927	5,608	153.4	LUMP SUM	22,605	2,486	6	287.57	6	489.22	51	2,565	262.05	78	260	LUMP SUM	LUMP SUM	LUMP SUM

PROJECT NO. R-2233AB
RUTHERFORD COUNTY
STATION: 560+00.35 -L-

SHEET 4 OF 4

STATE OF NORTH CAROLINA
DEPARTMENT OF TRANSPORTATION
RALEIGH

GENERAL DRAWING
FOR
BRIDGE ON US 221 OVER
US 74 BETWEEN
SR 1150 AND SR 2171

NORTH CAROLINA PROFESSIONAL SEAL 20125 ENGINEER MARSHALL M. CHEEK, JR.
9-20-10

REVISIONS						SHEET NO.
NO.	BY:	DATE:	NO.	BY:	DATE:	S-142
1			3			TOTAL SHEETS
2			4			184

STR. #5

DRAWN BY : A.L. FIGUEROA DATE : 7-27-10
CHECKED BY : M.G. CHEEK DATE : 7-28-10

20-SEP-2010 08:49
R:\Structures\Final Plans\Str. #5\R-2233AB_SD_STR#5_02_GD.dgn
dahodge

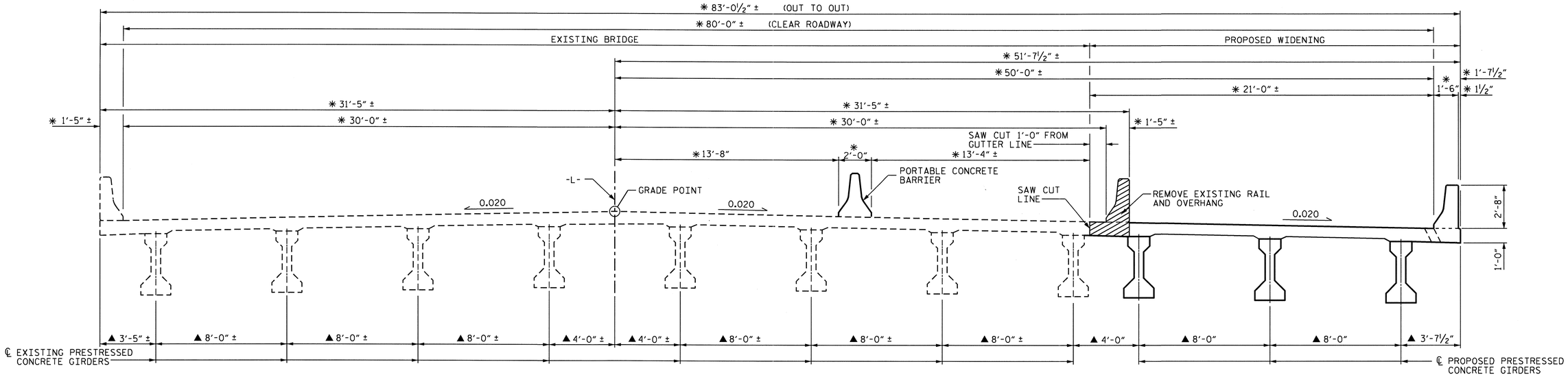

EXISTING BRIDGE

PROPOSED BRIDGE

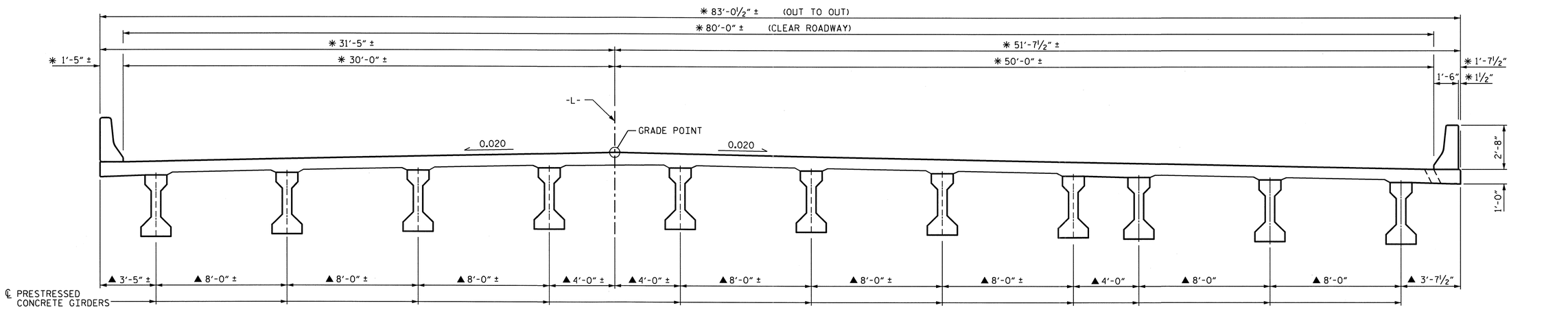

COMPLETED BRIDGE

PROJECT NO. R-2233AB
RUTHERFORD COUNTY
STATION: 560+00.35 -L-

✱ RADIAL DIMENSION

▲ THEORETICAL DIMENSIONS SHOWN ARE RADIAL THROUGH WORK POINTS.

NOTES

FOR TRAFFIC PHASING, SEE TRAFFIC CONTROL PLANS.

THE PORTABLE CONCRETE BARRIER IS A TRAFFIC CONTROL PAY ITEM.

STATE OF NORTH CAROLINA
DEPARTMENT OF TRANSPORTATION
RALEIGH

CONSTRUCTION SEQUENCE

NORTH CAROLINA PROFESSIONAL SEAL 20125 ENGINEER MARSHALL G. CHEEK, JR.
9-16-10

REVISIONS						SHEET NO.
NO.	BY:	DATE:	NO.	BY:	DATE:	S-143
1			3			TOTAL SHEETS
2			4			184

DRAWN BY : D. HODGE DATE : 5/10
CHECKED BY : M.G. CHEEK DATE : 7/10

14-JUL-2010 11:35
R:\Structures\Str*5\dhodge\R-2233AB_SD_CS.dgn
dahodge

STR. #5

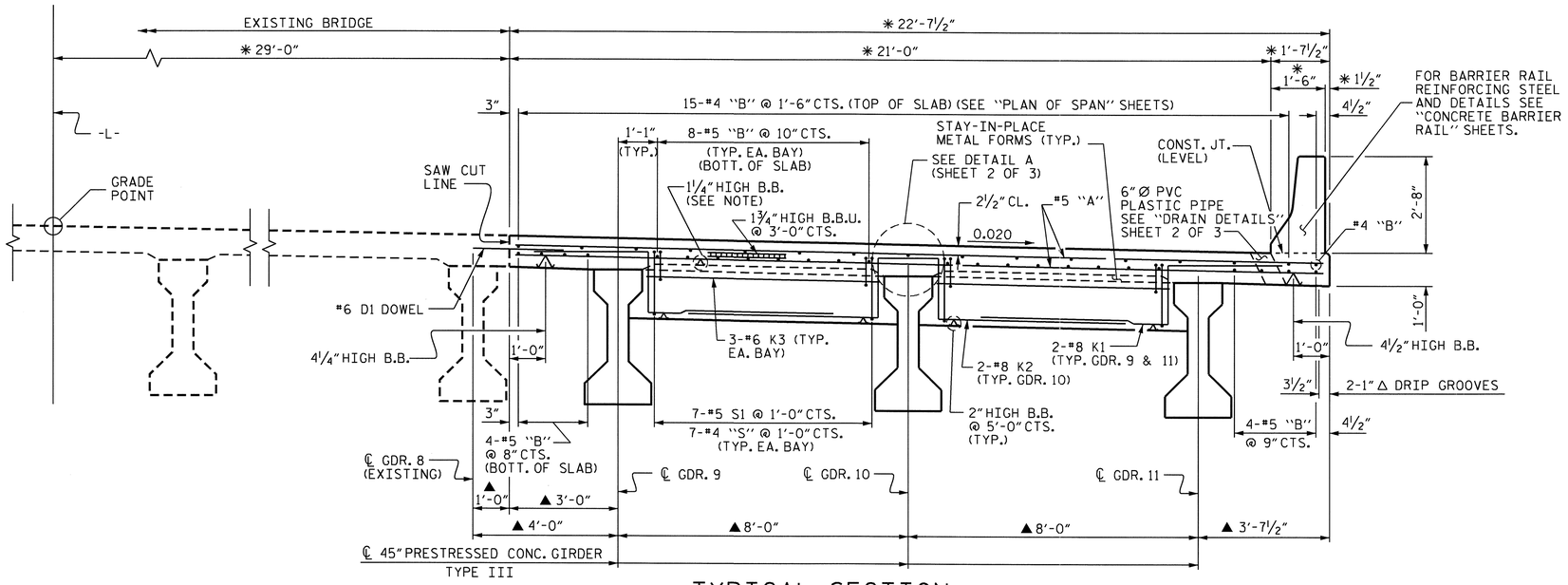

TYPICAL SECTION

(SHOWING END BENT AND BENT DIAPHRAGMS)

✱ RADIAL DIMENSION

▲ THEORETICAL DIMENSIONS SHOWN ARE RADIAL THROUGH WORK POINTS.

NOTES

PROVIDE 1 1/4" HIGH BEAM BOLSTERS UPPER AT 4'-0" CTS. ATOP THE METAL STAY-IN-PLACE FORMS TO SUPPORT THE BOTTOM MAT OF 'A' BARS. WHEN USING REMOVABLE FORMS, PROVIDE CONTINUOUS HIGH CHAIRS FOR METAL DECK (C.H.C.M.) @ 4'-0" CTS. WITH A HEIGHT TO SUPPORT THE BOTTOM MAT OF 'A' BARS A CLEAR DISTANCE OF 2 1/2" ABOVE THE TOP OF THE REMOVABLE FORM.

LONGITUDINAL STEEL MAY BE SHIFTED SLIGHTLY, AS NECESSARY, TO AVOID INTERFERENCE WITH STIRRUPS IN PRESTRESSED CONCRETE GIRDERS.

BARRIER RAIL IN EACH SPAN SHALL NOT BE CAST UNTIL ALL SLAB CONCRETE IN THAT SPAN HAS BEEN CAST AND HAS REACHED A MINIMUM COMPRESSIVE STRENGTH OF 3,000 PSI.

DOWELS SHALL BE PLACED IN THE SAME HORIZONTAL PLANE AS THE TOP SLAB REINFORCING STEEL.

A FULL DEPTH SAW CUT SHALL BE MADE AND EXISTING CONCRETE REMOVED IN ACCORDANCE WITH PLAN DETAILS.

CONCRETE IN BENT AND END BENT DIAPHRAGMS MAY BE CLASS A IN LIEU OF CLASS AA. PAYMENT SHALL BE MADE UNDER THE UNIT CONTRACT PRICE FOR REINFORCED CONCRETE DECK SLAB.

SEE TRAFFIC CONTROL PLANS FOR LOCATION AND PAY LIMITS OF THE ANCHORED PORTABLE CONCRETE BARRIER.

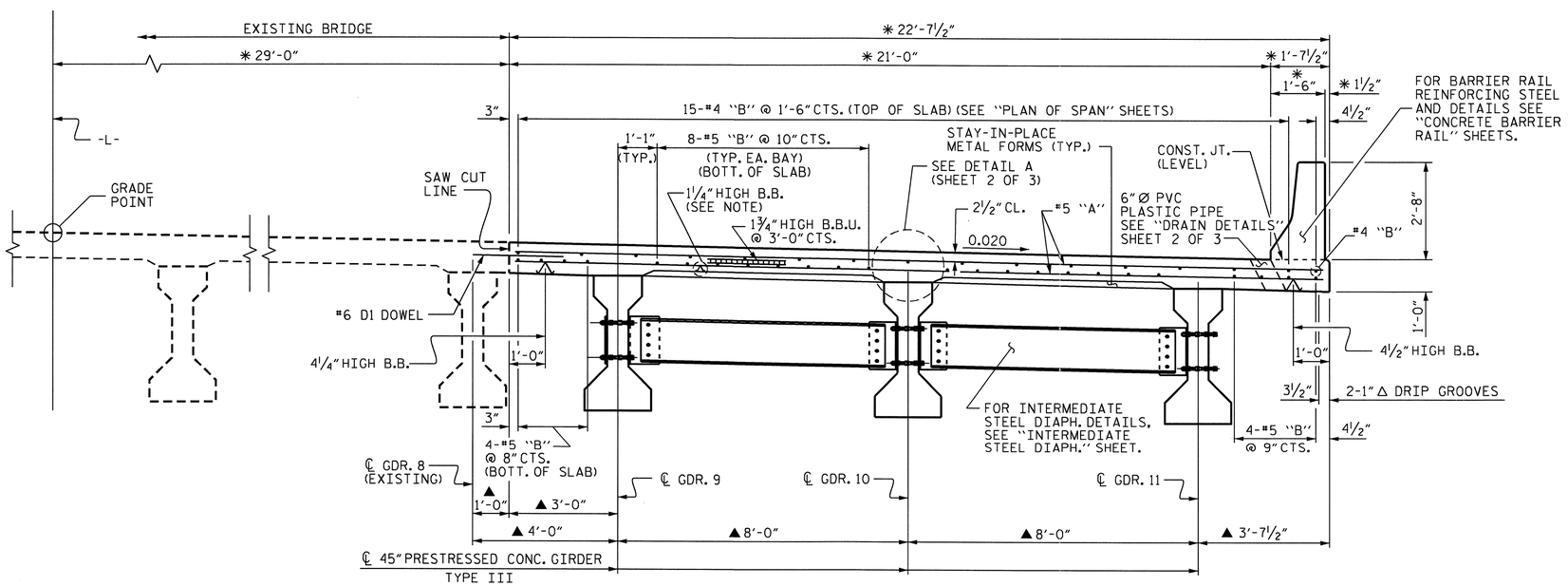

TYPICAL SECTION

(SHOWING INTERMEDIATE STEEL DIAPHRAGMS)

PROJECT NO. R-2233AB
RUTHERFORD COUNTY
STATION: 560+00.35 -L-

SHEET 1 OF 3

STATE OF NORTH CAROLINA
DEPARTMENT OF TRANSPORTATION
RALEIGH

SUPERSTRUCTURE

TYPICAL SECTIONS

(SPANS A & D)

NORTH CAROLINA PROFESSIONAL SEAL 20125 ENGINEER MARSHALL G. CHEEK, JR.
9-16-10

REVISIONS						SHEET NO.
NO.	BY:	DATE:	NO.	BY:	DATE:	S-144
1			3			TOTAL SHEETS
2			4			184

DRAWN BY : D. HODGE DATE : 8/09
CHECKED BY : M.G. CHEEK DATE : 5/10

06-AUG-2010 13:24
R:\Structures\Str#5\dhodge\R-2233AB_SD_TS.dgn
dahodge

STR. #5

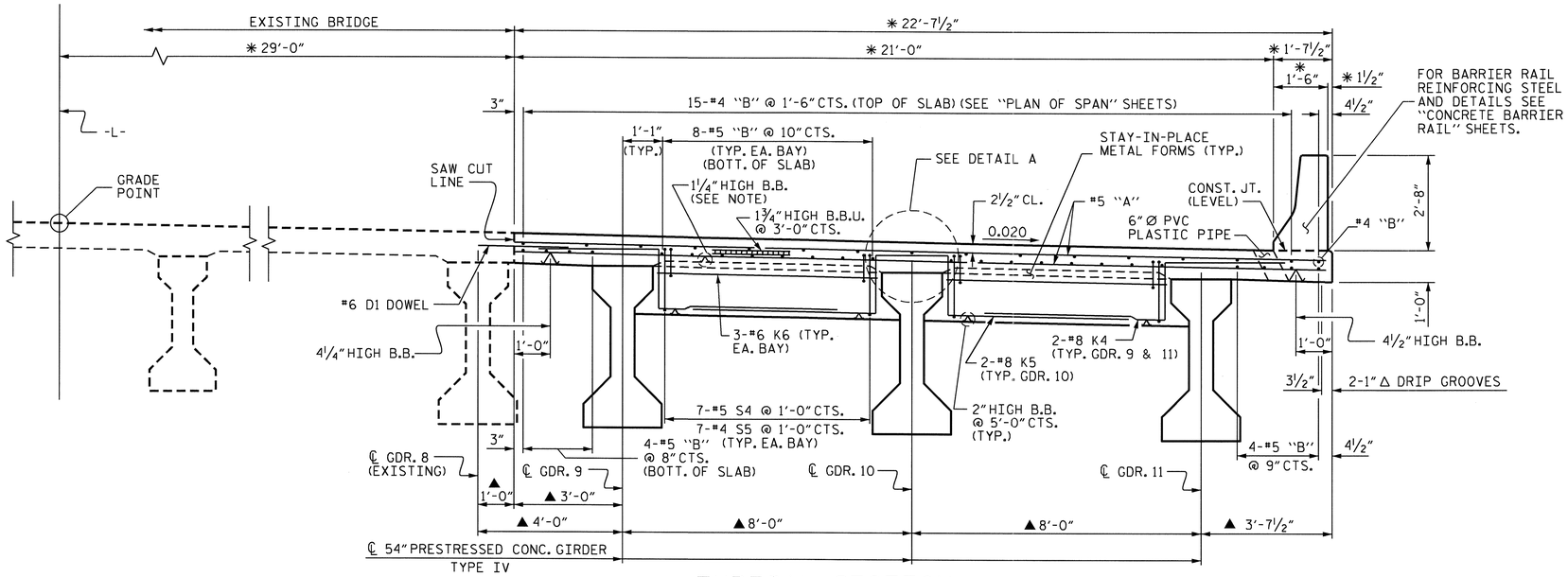

TYPICAL SECTION

(SHOWING BENT DIAPHRAGMS)

✱ RADIAL DIMENSION

▲ THEORETICAL DIMENSIONS SHOWN ARE RADIAL THROUGH WORK POINTS.

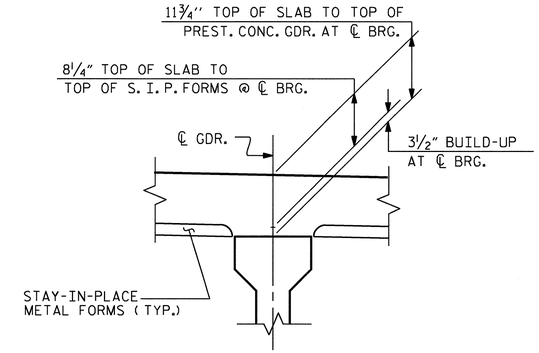

DETAIL "A"

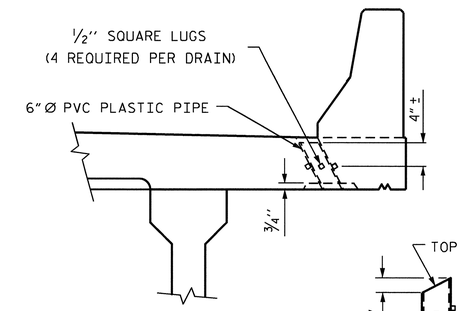

ELEVATION

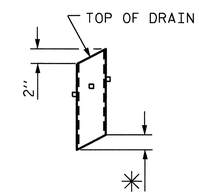

✱ TO BE SET TO MATCH SLOPE OF BOTTOM OF OVERHANG

PIPE DETAIL

(11 DRAINS REQUIRED)

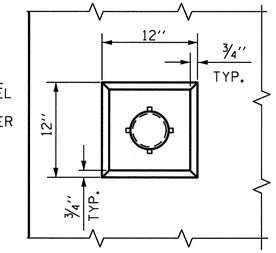

PLAN OF RECESS

DRAIN DETAILS

TOP OF FLOOR DRAINS TO BE SET ⅜" BELOW SURFACE OF SLAB.

4 - ½" SQUARE LUGS TO BE GLUED TO THE P.V.C. PLASTIC PIPE AT EQUAL SPACES AROUND THE PIPE DRAIN APPROXIMATELY 4" FROM THE TOP OF THE PIPE.

THE 6" Ø PVC PLASTIC PIPE AND FITTINGS SHALL BE SCHEDULE 40 AND CONFORM TO ASTM D1785.

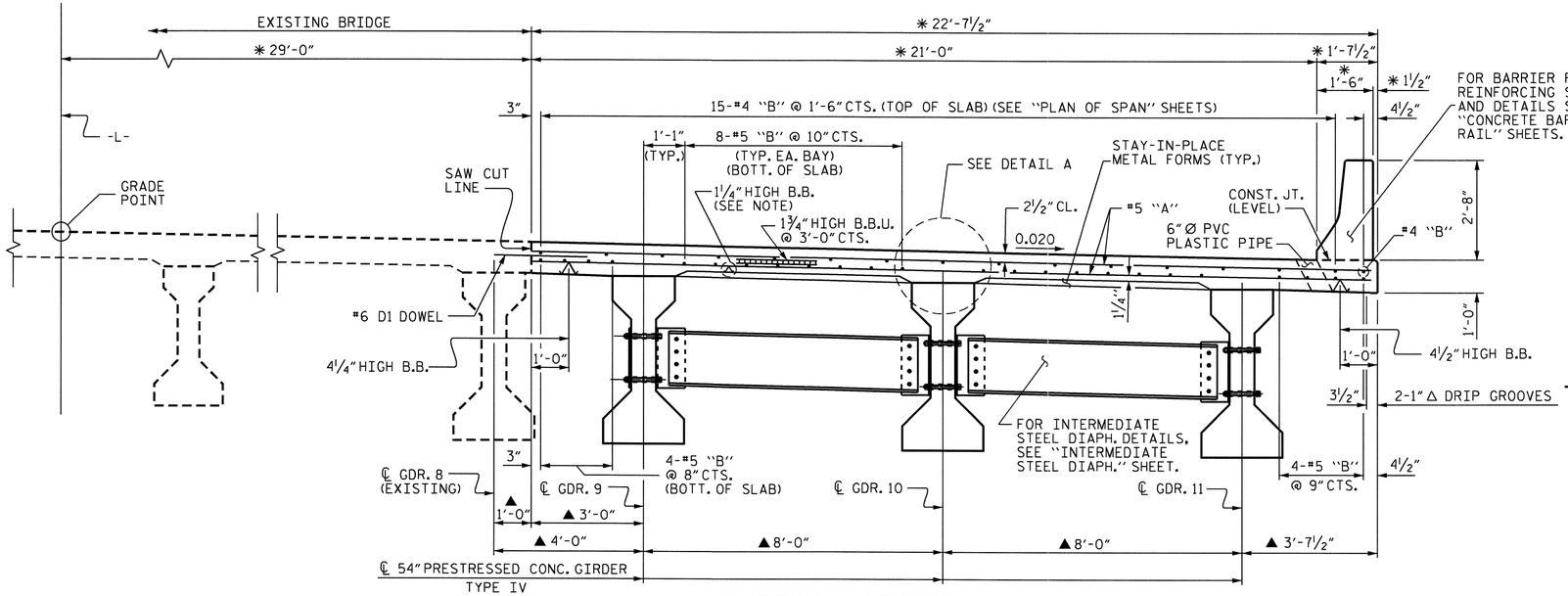

TYPICAL SECTION

(SHOWING INTERMEDIATE DIAPHRAGMS)

PROJECT NO. R-2233AB

RUTHERFORD COUNTY

STATION: 560+00.35 -L-

SHEET 2 OF 3

STATE OF NORTH CAROLINA
DEPARTMENT OF TRANSPORTATION
RALEIGH

SUPERSTRUCTURE

TYPICAL SECTIONS

(SPANS B & C)

NORTH CAROLINA PROFESSIONAL SEAL 20125 ENGINEER MARSHALL G. CHEEK, JR.
9-16-10

REVISIONS						SHEET NO.
NO.	BY:	DATE:	NO.	BY:	DATE:	S-145
1			3			TOTAL SHEETS
2			4			184

STR. #5

DRAWN BY : D. HODGE DATE : 8/09
CHECKED BY : M.G. CHEEK DATE : 5/10

06-AUG-2010 13:24
R:\Structures\Str#5\dhodge\R-2233AB_SD_TS.dgn
dahodge

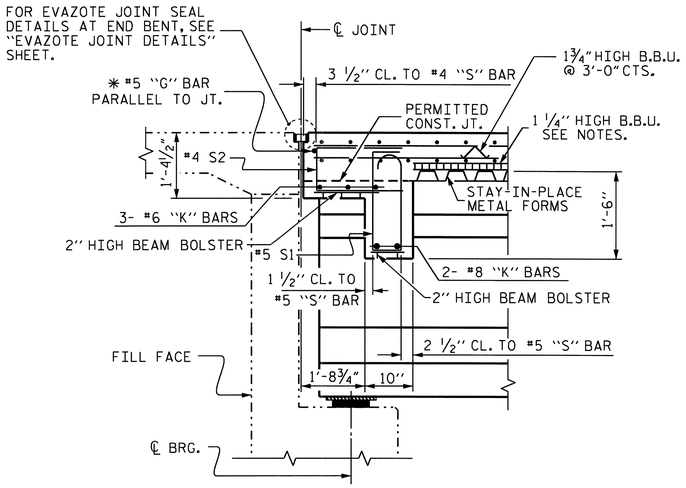

SECTION THRU END BENT DIAPHRAGM

✱ #5G BAR MAY BE SHIFTED SLIGHTLY, AS NECESSARY, TO CLEAR REINFORCING STEEL AND STIRRUPS.

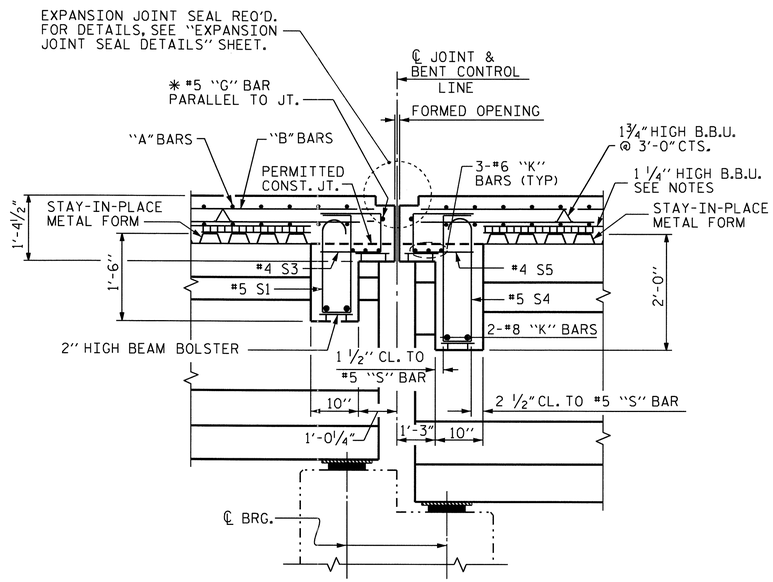

SECTION THRU BENT DIAPHRAGM AT BENT #1 AND #3

✱ #5G BAR MAY BE SHIFTED SLIGHTLY, AS NECESSARY, TO CLEAR REINFORCING STEEL AND STIRRUPS.

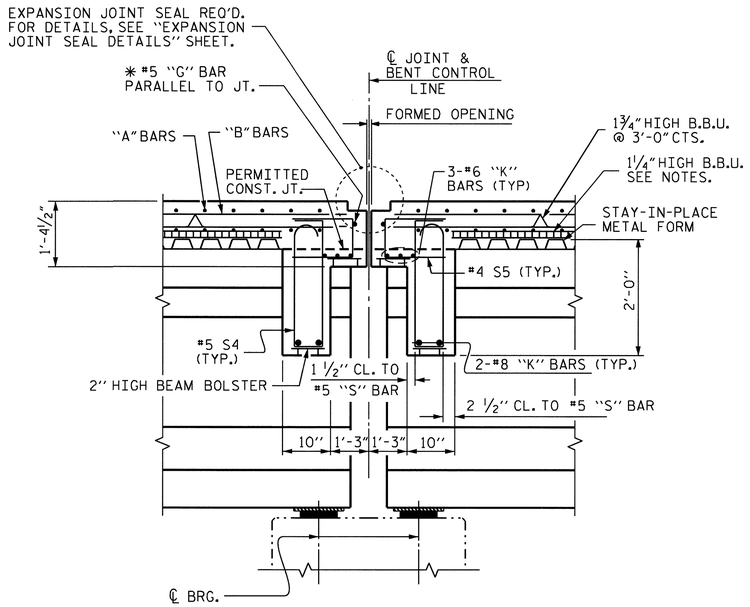

SECTION THRU BENT DIAPHRAGM AT BENT #2

✱ #5G BAR MAY BE SHIFTED SLIGHTLY, AS NECESSARY, TO CLEAR REINFORCING STEEL AND STIRRUPS.

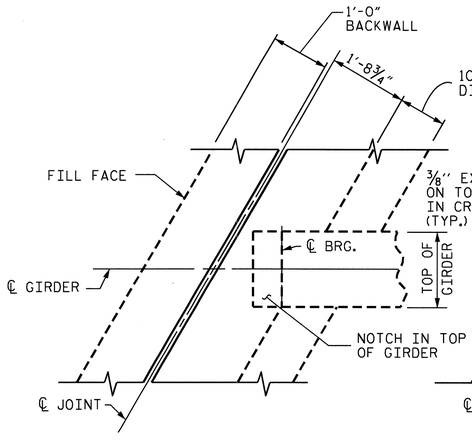

END BENT #1 DIAPHRAGM

(END BENT #2 SIMILAR BY ROTATION)

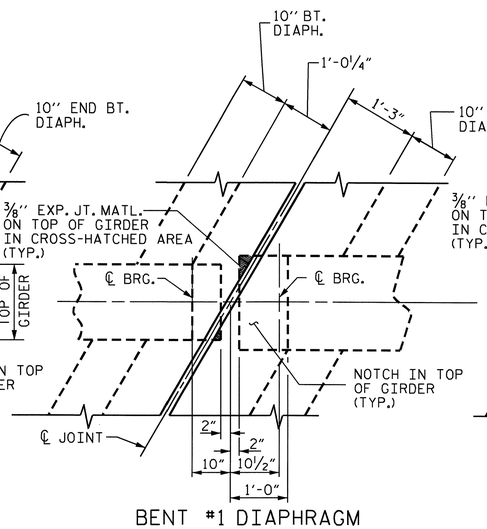

BENT #1 DIAPHRAGM

(BENT #3 SIMILAR BY ROTATION)

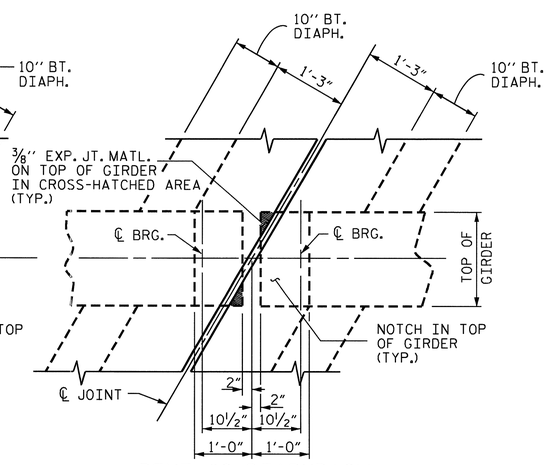

BENT #2 DIAPHRAGM

PLAN

PROJECT NO. R-2233AB

RUTHERFORD COUNTY

STATION: 560+00.35 -L-

SHEET 3 OF 3

STATE OF NORTH CAROLINA
DEPARTMENT OF TRANSPORTATION
RALEIGH

SUPERSTRUCTURE

TYPICAL SECTIONS

REVISIONS								SHEET NO.
NO.	BY:	DATE:	NO.	BY:	DATE:			S-146
1			3					TOTAL SHEETS
2			4					184

NORTH CAROLINA PROFESSIONAL SEAL 20125 ENGINEER MARSHAL G. CHEEK, JR.

9-16-10

STR. #5

DRAWN BY : D. HODGE DATE : 8/09
CHECKED BY : M.G. CHEEK DATE : 5/10

16-SEP-2010 08:28
R:\Structures\Final Plans\Str. #5\R-2233AB_SD_STR#5_04_TS.dgn
dahodge

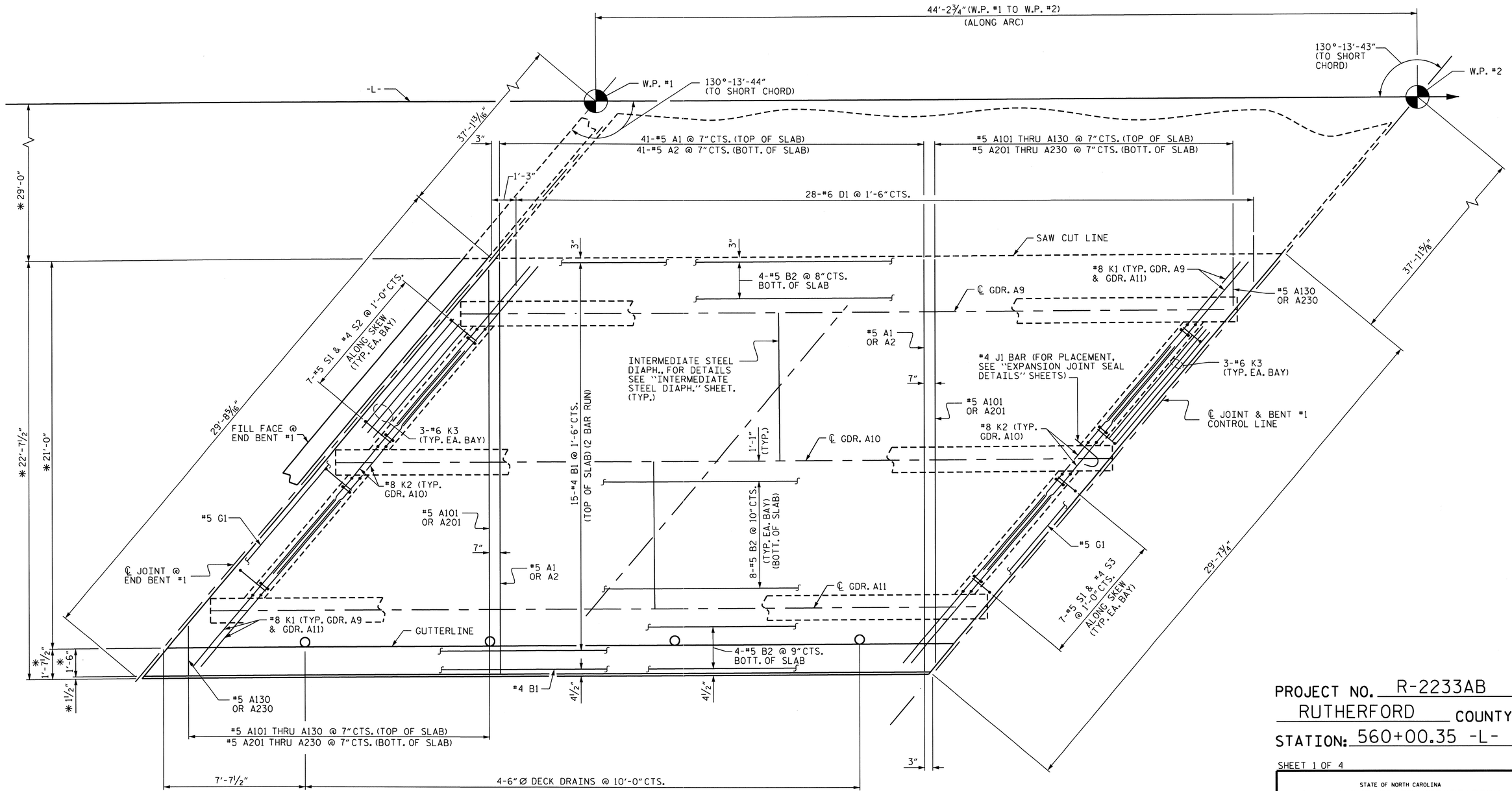

✱ RADIAL DIMENSIONS

PLAN OF SPAN A

NOTE: ARC OFFSETS FOR OUTSIDE EDGE OF SUPERSTRUCTURE ARE NEGLIGIBLE, AND THEREFORE ARE NOT SHOWN.

PROJECT NO. R-2233AB
RUTHERFORD COUNTY
STATION: 560+00.35 -L-

SHEET 1 OF 4

STATE OF NORTH CAROLINA
DEPARTMENT OF TRANSPORTATION
RALEIGH

SUPERSTRUCTURE
PLAN OF SPAN A

NORTH CAROLINA PROFESSIONAL SEAL 20125 ENGINEER MARSHALL G. CHEEK, JR.

REVISIONS						SHEET NO.
NO.	BY:	DATE:	NO.	BY:	DATE:	S-147
1			3			TOTAL SHEETS
2			4			184

DRAWN BY : D. HODGE DATE : 8/09
CHECKED BY : M.G. CHEEK DATE : 5/10

06-AUG-2010 14:43
R:\Structures\Str#5\dhodge\R-2233AB_SD_S*.dgn
dahodge

STR. #5

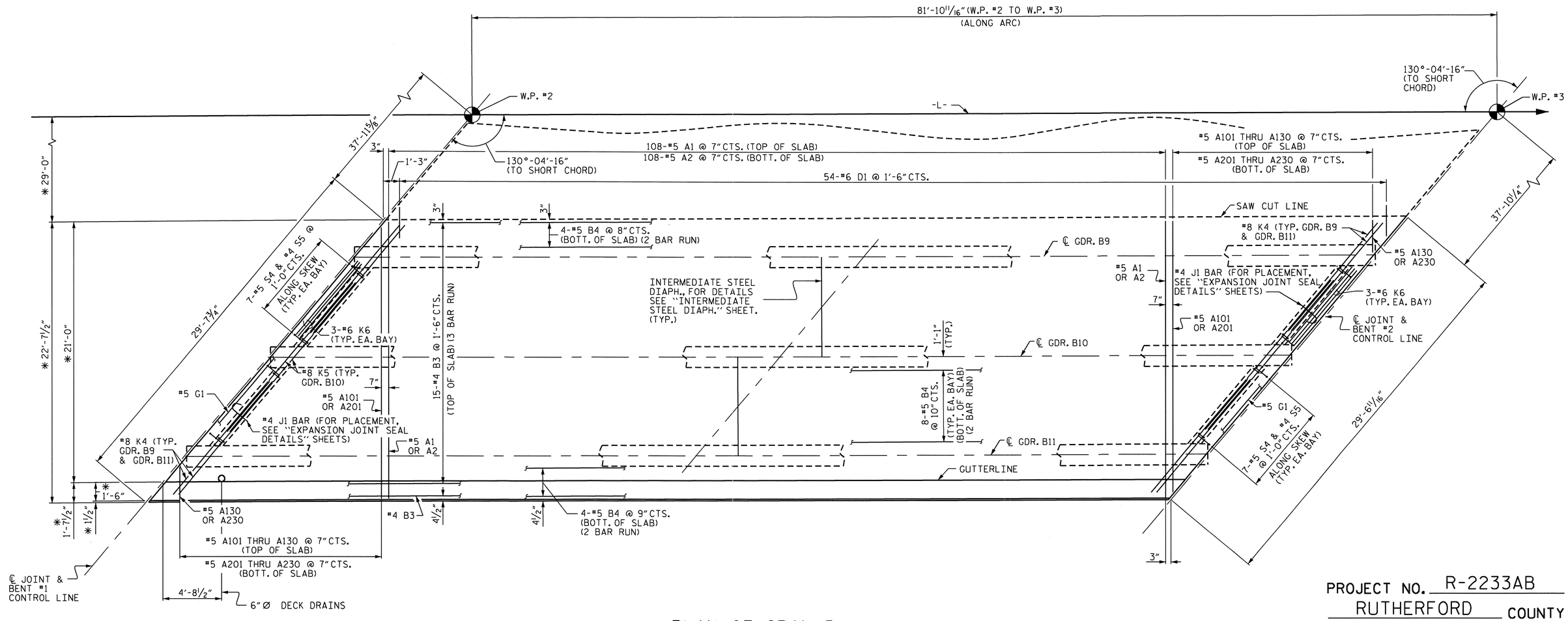

PLAN OF SPAN B

NOTE: ARC OFFSETS FOR OUTSIDE EDGE OF SUPERSTRUCTURE ARE NEGLIGIBLE, AND THEREFORE ARE NOT SHOWN.

* RADIAL DIMENSIONS

PROJECT NO. R-2233AB
RUTHERFORD COUNTY
STATION: 560+00.35 -L-

SHEET 2 OF 4

STATE OF NORTH CAROLINA
DEPARTMENT OF TRANSPORTATION
RALEIGH

SUPERSTRUCTURE
PLAN OF SPAN B

NORTH CAROLINA PROFESSIONAL SEAL 20125 ENGINEER MARSHALL G. CHEEK, JR.
9-16-10

REVISIONS						SHEET NO.
NO.	BY:	DATE:	NO.	BY:	DATE:	S-148
1			3			TOTAL SHEETS
2			4			184

DRAWN BY : D. HODGE DATE : 8/09
CHECKED BY : M.G. CHEEK DATE : 5/10

06-AUG-2010 14:43
R:\Structures\Str*5\dhodge\R-2233AB_SD_S*.dgn
dahodge

STR. #5

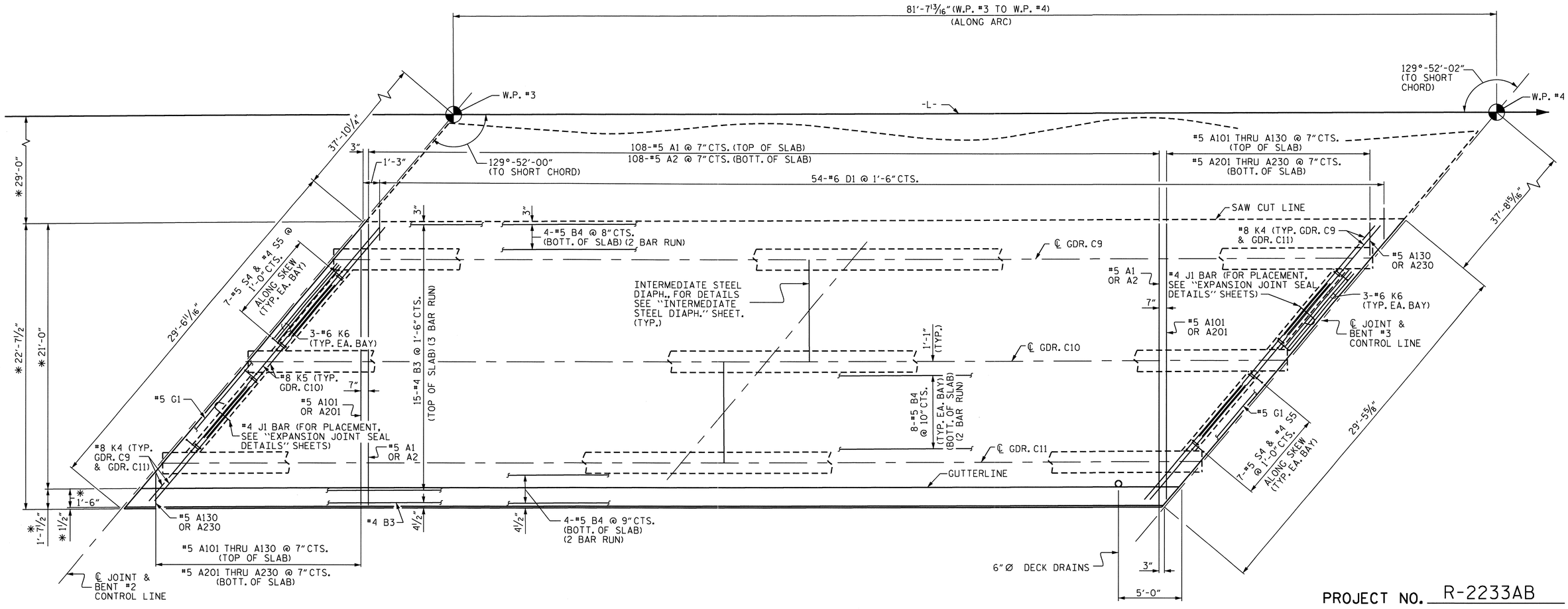

PLAN OF SPAN C

NOTE: ARC OFFSETS FOR OUTSIDE EDGE OF SUPERSTRUCTURE ARE NEGLIGIBLE, AND THEREFORE ARE NOT SHOWN.

* RADIAL DIMENSIONS

PROJECT NO. R-2233AB
RUTHERFORD COUNTY
STATION: 560+00.35 -L-

SHEET 3 OF 4

STATE OF NORTH CAROLINA
DEPARTMENT OF TRANSPORTATION
RALEIGH

SUPERSTRUCTURE
PLAN OF SPAN C

NORTH CAROLINA PROFESSIONAL SEAL 20125 ENGINEER MARSHALL G. CHEEK, JR.

REVISIONS						SHEET NO.
NO.	BY:	DATE:	NO.	BY:	DATE:	S-149
1			3			TOTAL SHEETS
2			4			184

DRAWN BY : D. HODGE DATE : 8/09
CHECKED BY : M.G. CHEEK DATE : 5/10

06-AUG-2010 14:42
R:\Structures\Str*5\dhodge\R-2233AB_SD_S*.dgn
dahodge

STR. #5

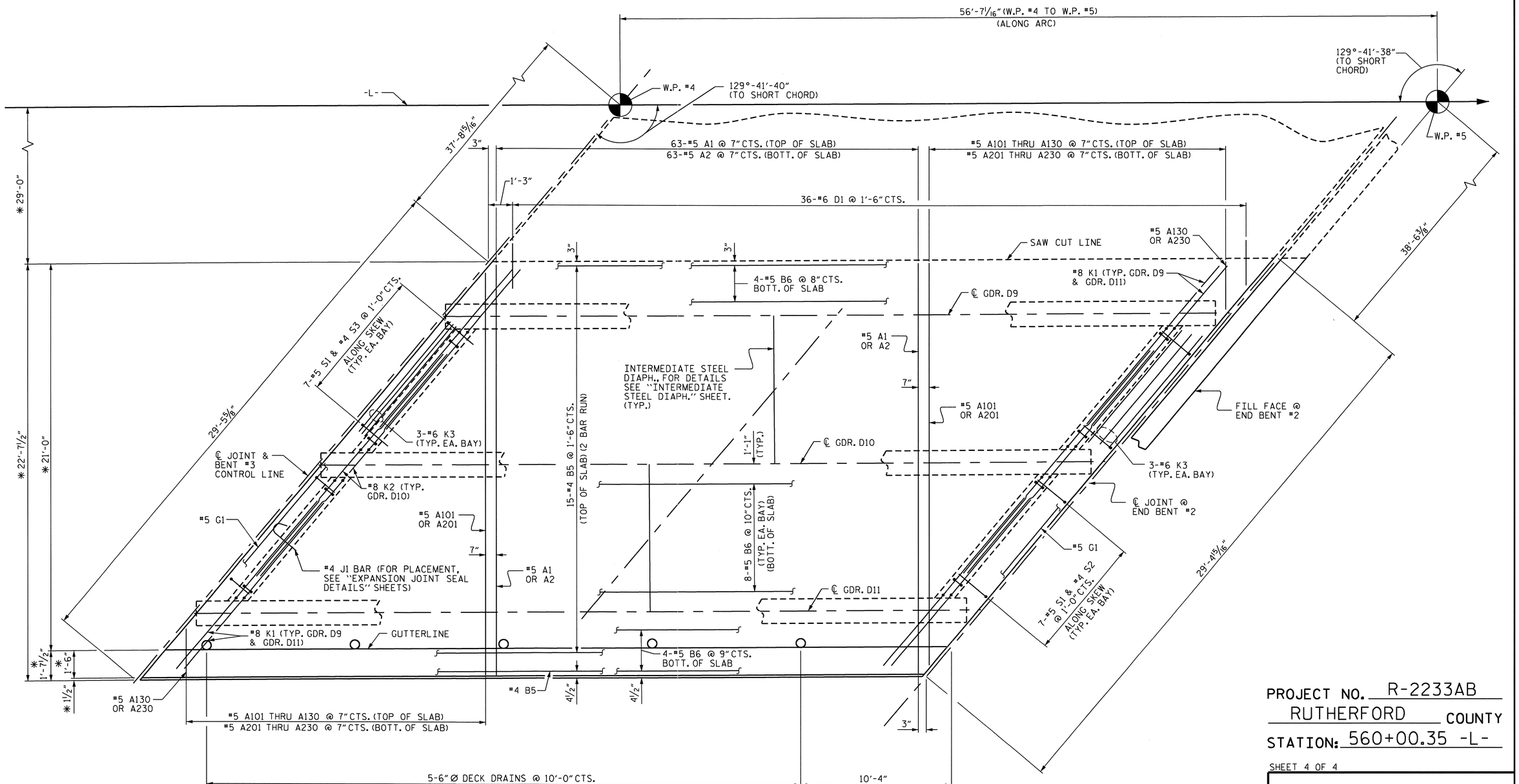

✱ RADIAL DIMENSIONS

PLAN OF SPAN D

NOTE: ARC OFFSETS FOR OUTSIDE EDGE OF SUPERSTRUCTURE ARE NEGLIGIBLE, AND THEREFORE ARE NOT SHOWN.

PROJECT NO. R-2233AB
RUTHERFORD COUNTY
STATION: 560+00.35 -L-

SHEET 4 OF 4

STATE OF NORTH CAROLINA
DEPARTMENT OF TRANSPORTATION
RALEIGH

SUPERSTRUCTURE
PLAN OF SPAN D

NORTH CAROLINA PROFESSIONAL SEAL 20125 ENGINEER MARSHALL G. CHEEK, JR.
9-16-10

REVISIONS						SHEET NO.
NO.	BY:	DATE:	NO.	BY:	DATE:	S-150
1			3			TOTAL SHEETS
2			4			184

DRAWN BY : D. HODGE DATE : 8/09
CHECKED BY : M.G. CHEEK DATE : 5/10

06-AUG-2010 14:42
R:\Structures\Str#5\dhodge\R-2233AB_SD_S*.dgn
dahodge

STR. #5

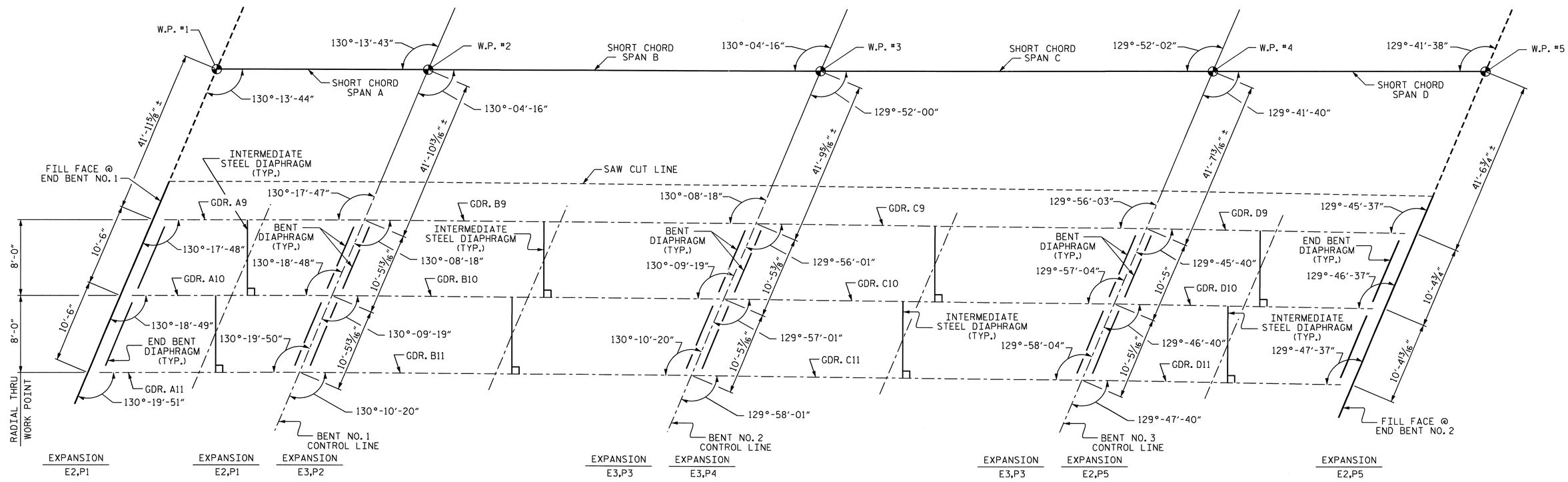

GIRDER LAYOUT

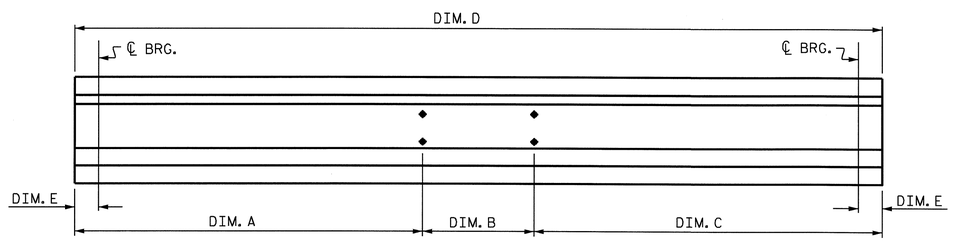

LOCATION OF BOLT HOLES IN GIRDERS

(FOR DIMENSIONS, SEE CHART A)

CHART A

GIRDER	DIM. A	DIM. B	DIM. C	DIM. D	DIM. E
GDR. A9	17′-5″	0	24′-3 3/4″	41′-8 3/4″	8″
GDR. A10	17′-6 1/2″	6′-8″	17′-6 1/4″	41′-8 3/4″	8″
GDR. A11	24′-3 3/4″	0	17′-5″	41′-8 3/4″	8″
GDR. B9	37′-5 1/8″	0	44′-2 3/4″	81′-7 7/8″	8 1/2″
GDR. B10	37′-5 7/8″	6′-8″	37′-6″	81′-7 7/8″	8 1/2″
GDR. B11	44′-2 7/8″	0	37′-5″	81′-7 7/8″	8 1/2″
GDR. C9	37′-4″	0	44′-1″	81′-5″	8 1/2″
GDR. C10	37′-4 1/2″	6′-8″	37′-4 1/2″	81′-5″	8 1/2″
GDR. C11	44′-1″	0	37′-4″	81′-5″	8 1/2″
GDR. D9	23′-9 1/2″	0	30′-4″	54′-1 1/2″	8″
GDR. D10	23′-9 1/4″	6′-8″	23′-8 1/4″	54′-1 1/2″	8″
GDR. D11	30′-5 1/4″	0	23′-8 1/4″	54′-1 1/2″	8″

PROJECT NO. R-2233AB
RUTHERFORD COUNTY
STATION: 560+00.35 -L-

STATE OF NORTH CAROLINA
DEPARTMENT OF TRANSPORTATION
RALEIGH

SUPERSTRUCTURE
GIRDER LAYOUT

NORTH CAROLINA PROFESSIONAL SEAL 20125 ENGINEER MARSHALL G. CHEEK, JR.
09/16/10

REVISIONS						SHEET NO.
NO.	BY:	DATE:	NO.	BY:	DATE:	S-151
1			3			TOTAL SHEETS
2			4			184

STR. #5

DRAWN BY : D. HODGE DATE : 2/10
CHECKED BY : M.G. CHEEK DATE : 5/10

14-SEP-2010 13:19
R:\Structures\Final Plans\Str. #5\R-2233AB_SD_STR#5_06_FP.dgn
afigueroa

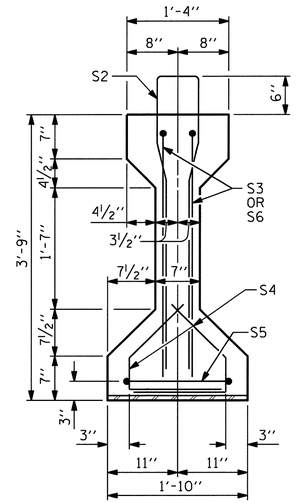

SECTION A-A

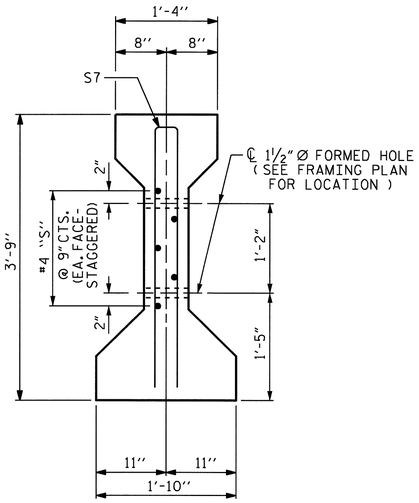

SECTION C-C

(S1 BARS NOT SHOWN)

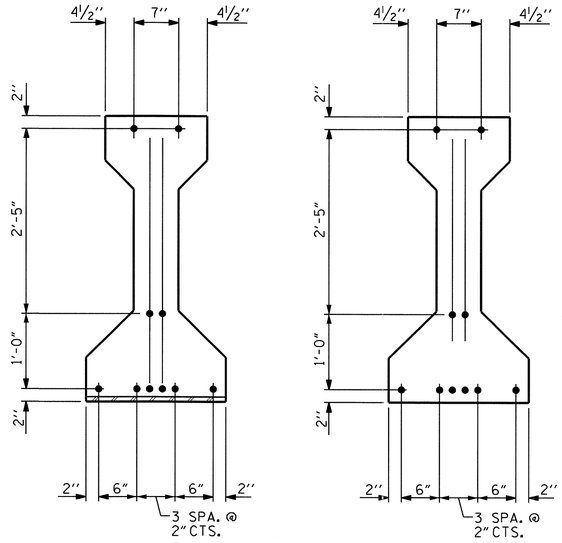

AT END OF GIRDER

AT ℄ OF GIRDER

0.6" Ø LOW RELAXATION STRAND LAYOUT

NOTES

ALL PRESTRESSING STRANDS SHALL BE 7-WIRE LOW-RELAXATION GRADE 270 STRANDS AND SHALL CONFORM TO AASHTO M203 EXCEPT FOR SAMPLING REQUIREMENTS WHICH SHALL BE IN ACCORDANCE WITH THE STANDARD SPECIFICATIONS.

APPLY EPOXY PROTECTIVE COATING TO END OF GIRDER SURFACES.

EMBEDDED PLATE "B-1" SHALL BE GALVANIZED IN ACCORDANCE WITH THE SPECIFICATIONS.

BEVEL EDGES OF PLATE "B-1" TO GIVE CLOSE FIT BUT NOT TIGHT FIT TO STEEL CASTING FORM.

ANCHOR STUDS SHALL CONFORM TO AASHTO M169 GRADES 1010 THROUGH 1020 OR APPROVED EQUAL, AND SHALL MEET THE TYPE "B" REQUIREMENTS OF SUBSECTION 7.3 OF THE ANSI/AASHTO/AWS D1.5 BRIDGE WELDING CODE.

ALL PRESTRESSED STRANDS SHALL BE CUT FLUSH WITH THE GIRDER ENDS.

THE TRANSFER OF LOAD FROM THE ANCHORAGES TO THE GIRDER SHALL BE DONE WHEN CONCRETE HAS REACHED A COMPRESSIVE STRENGTH OF NOT LESS THAN 4000 PSI.

DEPENDING ON THE TYPE OF SYSTEM USED TO SUPPORT THE DECK SLAB FORMS, PRESET ANCHORS MAY BE NECESSARY IN THE PRESTRESSED CONCRETE GIRDER.

THE TOP SURFACE OF THE GIRDER SHALL BE RAKED TO A DEPTH OF ¼" EXCEPT IN THE AREA BETWEEN THE STIRRUP AND THE EDGE OF THE GIRDER.

FOR PRESTRESSED CONCRETE MEMBERS, SEE SPECIAL PROVISIONS.

0.6" Ø L. R. GRADE 270 STRANDS

AREA (SQUARE INCHES)	ULTIMATE STRENGTH (LBS. PER STRAND)	APPLIED PRESTRESS (LBS. PER STRAND)
0.217	58,600	43,950

REINFORCING STEEL FOR ONE GIRDER

	BAR	NUMBER	SIZE	TYPE	LENGTH	WEIGHT
	S1	33	#4	1	8'-6"	187
	S2	8	#6	1	8'-6"	102
	S3	4	#6	2	4'-8"	28
	S4	56	#4	3	2'-9"	103
	S5	2	#4	4	9'-6"	13
	S6	4	#6	2	4'-6"	27
EXTERIOR GDR.	S7	2	#5	4	7'-2"	15
INTERIOR GDR.	S7	4	#5	4	7'-2"	30
EXTERIOR GDR.	S8	5	#4	STR	7'-0"	23
INTERIOR GDR.	S9	5	#4	STR	13'-8"	46

BAR TYPES

ALL BAR DIMENSIONS ARE OUT-TO-OUT

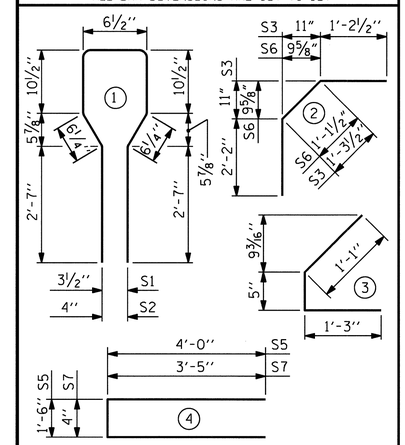

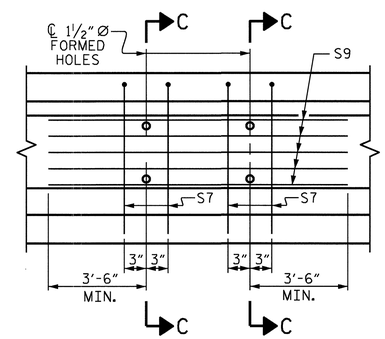

PARTIAL ELEVATION

SHOWING INTERMEDIATE DIAPHRAGM REINFORCING STEEL FOR GIRDER No. 10

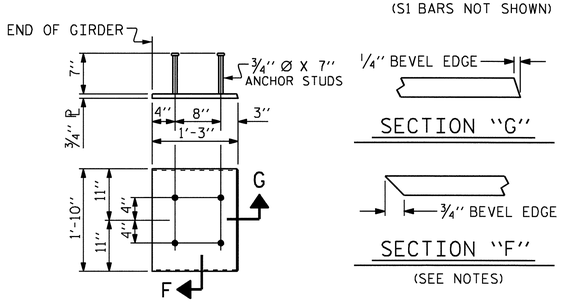

EMBEDDED PLATE "B-1" DETAILS

TWO EMBEDDED PLATES "B-1" ARE REQUIRED FOR EACH GIRDER.

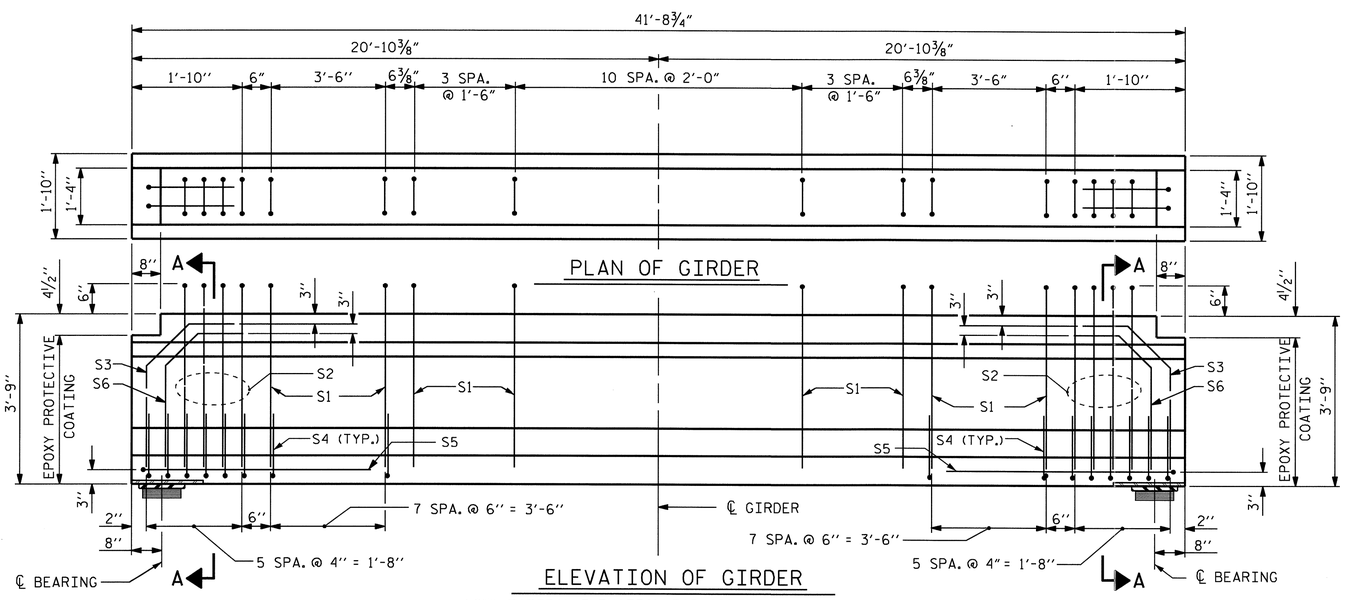

ELEVATION OF GIRDER

(SEE PARTIAL ELEVATION FOR ADDITIONAL "S" BARS)

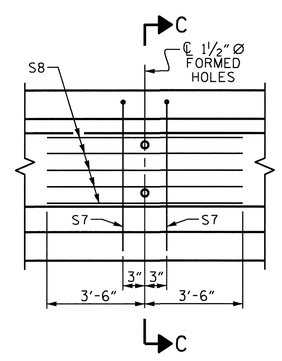

PARTIAL ELEVATION

SHOWING INTERMEDIATE DIAPHRAGM REINFORCING STEEL FOR GIRDER Nos. 9 & 11

QUANTITIES FOR ONE GIRDER

	REINFORCING STEEL LB.	5000 PSI CONCRETE C.Y.	0.6" Ø L. R. STRANDS No.
EXTERIOR GIRDER	498	6.0	10
INTERIOR GIRDER	536	6.0	10

GIRDERS REQUIRED

NUMBER	LENGTH	TOTAL LENGTH
3	41'-8¾"	125.19

PROJECT NO. R-2233AB

RUTHERFORD COUNTY

STATION: 560+00.35 -L-

STATE OF NORTH CAROLINA
DEPARTMENT OF TRANSPORTATION
RALEIGH

STANDARD

AASHTO TYPE III
PRESTRESSED CONCRETE GIRDER
SPAN A

NORTH CAROLINA PROFESSIONAL SEAL 20125 ENGINEER

REVISIONS								SHEET NO.
NO.	BY:	DATE:	NO.	BY:	DATE:			S-152
1			3					TOTAL SHEETS
2			4					184

ASSEMBLED BY : D. HODGE		DATE : 2/10	
CHECKED BY : M.G. CHEEK		DATE : 5/10	
DRAWN BY : JMB 12/87	REV. 7/17/98 RWW/LES		
CHECKED BY : ARB 12/87	REV. 8/16/99RR RWW/LES		
	REV. 5/1/06R TLA/GM		

16-SEP-2010 08:38
R:\Structures\Final Plans\Str. #5\R-2233AB_SD_STR#5_07_G*.dgn
dahodge

STR. #5

STD. NO. PCG2

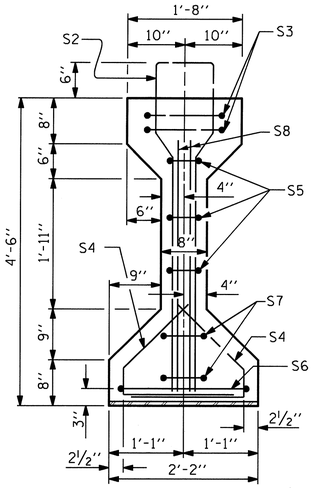

SECTION A-A

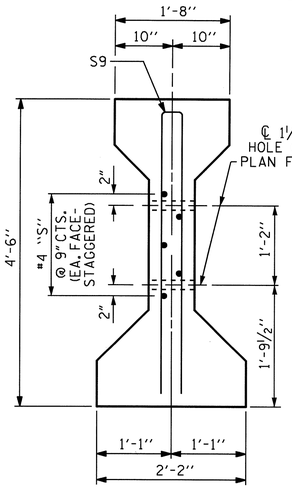

SECTION C-C

(S1 BARS NOT SHOWN)

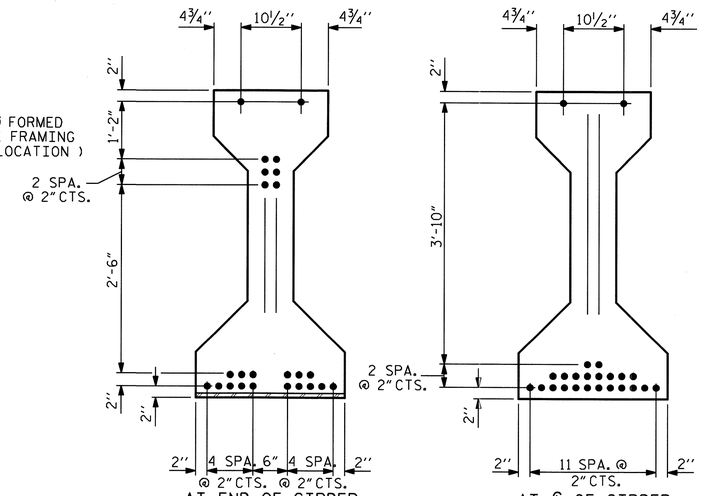

0.6" Ø LOW RELAXATION STRAND LAYOUT

NOTES

ALL PRESTRESSING STRANDS SHALL BE 7-WIRE LOW-RELAXATION GRADE 270 STRANDS AND SHALL CONFORM TO AASHTO M203 EXCEPT FOR SAMPLING REQUIREMENTS WHICH SHALL BE IN ACCORDANCE WITH THE STANDARD SPECIFICATIONS.

APPLY EPOXY PROTECTIVE COATING TO END OF GIRDER SURFACES.

EMBEDDED PLATE "B-1" SHALL BE GALVANIZED IN ACCORDANCE WITH THE SPECIFICATIONS.

BEVEL EDGES OF PLATE "B-1" TO GIVE CLOSE FIT BUT NOT TIGHT FIT TO STEEL CASTING FORM.

ANCHOR STUDS SHALL CONFORM TO AASHTO M169 GRADES 1010 THROUGH 1020 OR APPROVED EQUAL, AND SHALL MEET THE TYPE "B" REQUIREMENTS OF SUBSECTION 7.3 OF THE ANSI/AASHTO/AWS D1.5 BRIDGE WELDING CODE.

ALL PRESTRESSED STRANDS SHALL BE CUT FLUSH WITH THE GIRDER ENDS.

THE TRANSFER OF LOAD FROM THE ANCHORAGES TO THE GIRDER SHALL BE DONE WHEN CONCRETE HAS REACHED A COMPRESSIVE STRENGTH OF NOT LESS THAN 4000 PSI.

DEPENDING ON THE TYPE OF SYSTEM USED TO SUPPORT THE DECK SLAB FORMS, PRESET ANCHORS MAY BE NECESSARY IN THE PRESTRESSED CONCRETE GIRDER.

THE TOP SURFACE OF THE GIRDER SHALL BE RAKED TO A DEPTH OF ¼" EXCEPT IN THE AREA BETWEEN THE STIRRUP AND THE EDGE OF THE GIRDER.

WHEN DRAPED STRANDS ARE DETAILED, THE LONGITUDINAL LOCATION OF THE HOLD DOWN DEVICES SHALL BE WITHIN 6" OF THE LOCATION SHOWN AND THE CENTER OF GRAVITY OF THE GROUP OF DRAPED STRANDS SHALL BE LOCATED WITHIN ½" OF THE THEORETICAL LOCATION SHOWN.

FOR PRESTRESSED CONCRETE MEMBERS, SEE SPECIAL PROVISIONS.

0.6" Ø L. R. GRADE 270 STRANDS

AREA (SQUARE INCHES)	ULTIMATE STRENGTH (LBS. PER STRAND)	APPLIED PRESTRESS (LBS. PER STRAND)
0.217	58,600	43,950

REINFORCING STEEL FOR ONE GIRDER

BAR	NUMBER	SIZE	TYPE	LENGTH	WEIGHT
S1	59	#4	1	10'-8"	420
S2	12	#6	1	10'-8"	192
S3	4	#4	2	9'-1"	24
S4	64	#4	3	3'-5"	146
S5	6	#4	2	8'-5"	34
S6	2	#4	2	9'-11"	13
S7	4	#4	2	8'-7"	23
S8	12	#6	STR	3'-8"	66
S9 (EXTERIOR GDR.)	2	#5	2	8'-8"	18
S9 (INTERIOR GDR.)	4	#5	2	8'-8"	36
S10 (EXTERIOR GDR.)	5	#4	STR	7'-0"	23
S11 (INTERIOR GDR.)	5	#4	STR	13'-8"	46

BAR TYPES

ALL BAR DIMENSIONS ARE OUT-TO-OUT

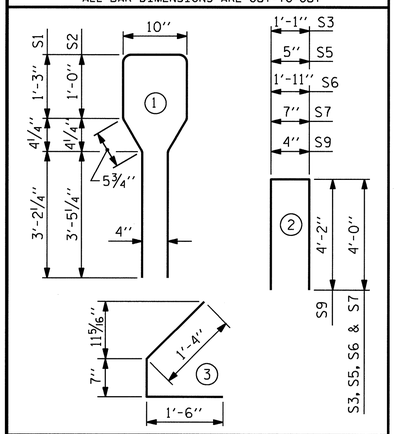

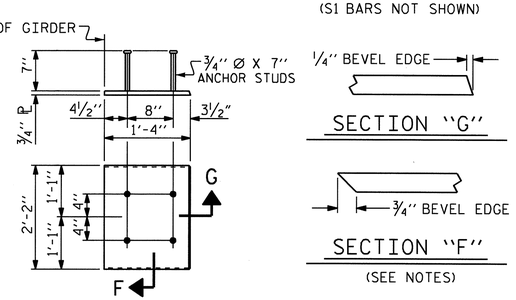

SECTION "G"

SECTION "F"

(SEE NOTES)

EMBEDDED PLATE "B-1" DETAILS

TWO EMBEDDED PLATES "B-1" ARE REQUIRED FOR EACH GIRDER.

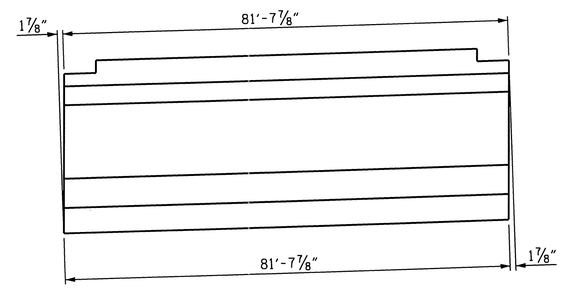

END BEVEL ON GIRDER DETAIL

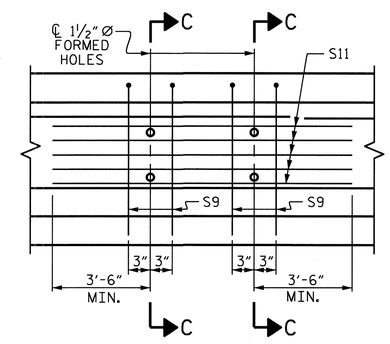

PARTIAL ELEVATION

SHOWING INTERMEDIATE DIAPHRAGM REINFORCING STEEL FOR GIRDER No. 10

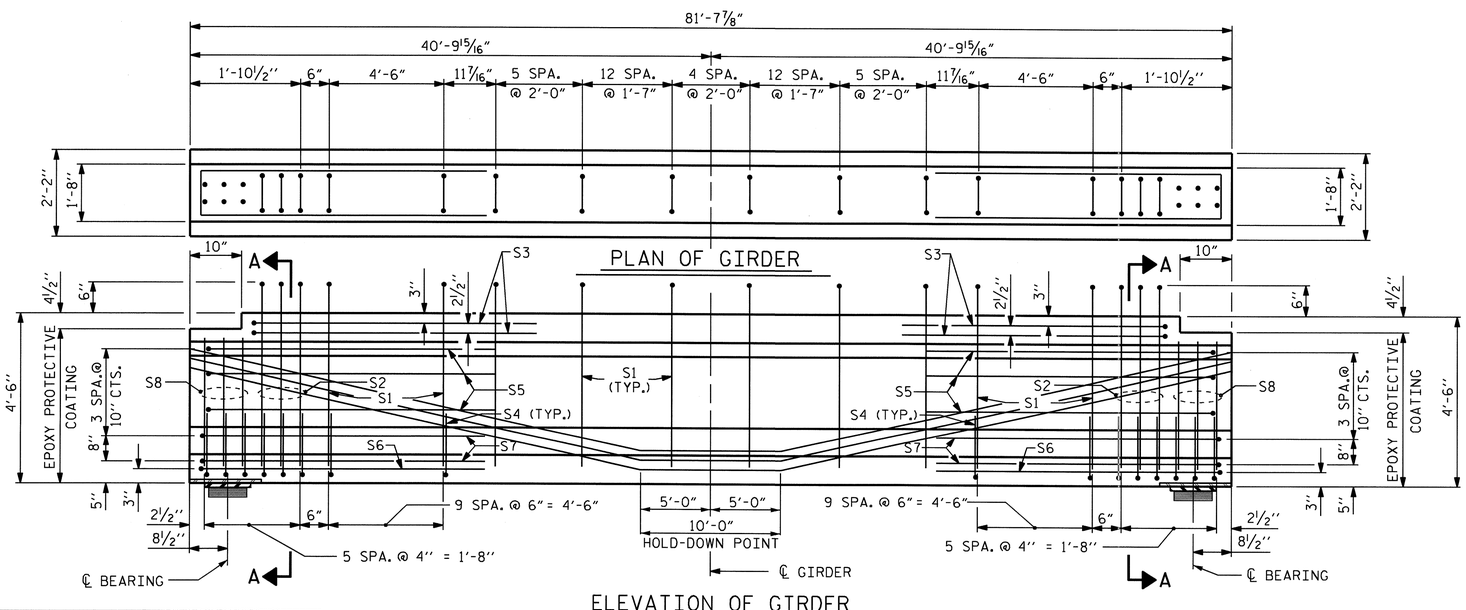

ELEVATION OF GIRDER

(SEE PARTIAL ELEVATION FOR ADDITIONAL "S" BARS)

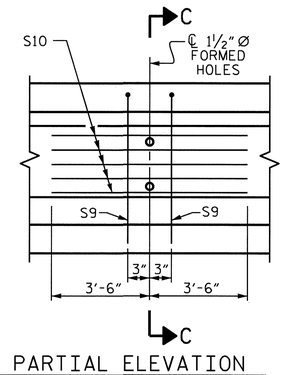

PARTIAL ELEVATION

SHOWING INTERMEDIATE DIAPHRAGM REINFORCING STEEL FOR GIRDER Nos. 9 & 11

QUANTITIES FOR ONE GIRDER

	REINFORCING STEEL LB.	5000 PSI CONCRETE C.Y.	0.6" Ø L.R. STRANDS No.
EXTERIOR GIRDER	959	16.6	24
INTERIOR GIRDER	1000	16.6	24

GIRDERS REQUIRED

NUMBER	LENGTH	TOTAL LENGTH
3	81'-7⅞"	244.97

PROJECT NO. R-2233AB

RUTHERFORD COUNTY

STATION: 560+00.35 -L-

STATE OF NORTH CAROLINA
DEPARTMENT OF TRANSPORTATION
RALEIGH

STANDARD
AASHTO TYPE IV
PRESTRESSED CONCRETE GIRDER
SPAN B

NORTH CAROLINA PROFESSIONAL SEAL 20125 ENGINEER
MARSHALL L. CHEEK, JR.
4-12-10

REVISIONS						SHEET NO.
NO.	BY:	DATE:	NO.	BY:	DATE:	S-153
1			3			TOTAL SHEETS
2			4			184

STR. #5

STD. NO. PCG3

ASSEMBLED BY : D. HODGE		DATE : 2/10	
CHECKED BY : M.G. CHEEK		DATE : 5/10	
DRAWN BY : JMB 12/87	REV. 7/17/98	RWW/LES	
CHECKED BY : ARB 12/87	REV. 8/16/99RR	RWW/LES	
	REV. 5/1/06R	TLA/GM	

14-JUL-2010 11:45
R:\Structures\Str#5\dhodge\R-2233AB_SD_G#.dgn
dohodge

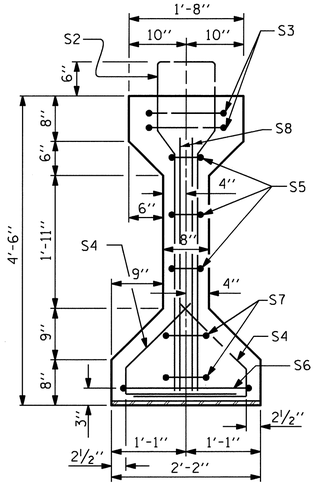

SECTION A-A

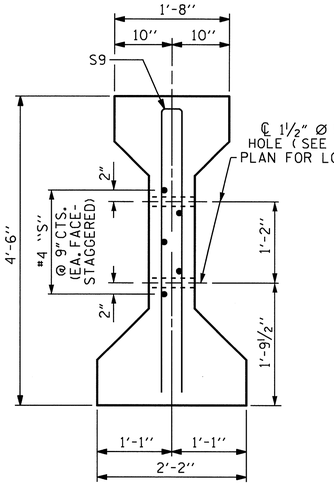

SECTION C-C

(S1 BARS NOT SHOWN)

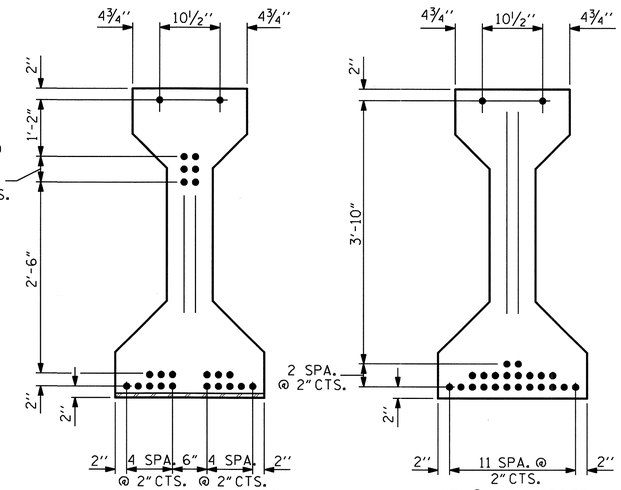

0.6" Ø LOW RELAXATION STRAND LAYOUT

NOTES

ALL PRESTRESSING STRANDS SHALL BE 7-WIRE LOW-RELAXATION GRADE 270 STRANDS AND SHALL CONFORM TO AASHTO M203 EXCEPT FOR SAMPLING REQUIREMENTS WHICH SHALL BE IN ACCORDANCE WITH THE STANDARD SPECIFICATIONS.

APPLY EPOXY PROTECTIVE COATING TO END OF GIRDER SURFACES.

EMBEDDED PLATE "B-1" SHALL BE GALVANIZED IN ACCORDANCE WITH THE SPECIFICATIONS.

BEVEL EDGES OF PLATE "B-1" TO GIVE CLOSE FIT BUT NOT TIGHT FIT TO STEEL CASTING FORM.

ANCHOR STUDS SHALL CONFORM TO AASHTO M169 GRADES 1010 THROUGH 1020 OR APPROVED EQUAL, AND SHALL MEET THE TYPE "B" REQUIREMENTS OF SUBSECTION 7.3 OF THE ANSI/AASHTO/AWS D1.5 BRIDGE WELDING CODE.

ALL PRESTRESSED STRANDS SHALL BE CUT FLUSH WITH THE GIRDER ENDS.

THE TRANSFER OF LOAD FROM THE ANCHORAGES TO THE GIRDER SHALL BE DONE WHEN CONCRETE HAS REACHED A COMPRESSIVE STRENGTH OF NOT LESS THAN 4000 PSI.

DEPENDING ON THE TYPE OF SYSTEM USED TO SUPPORT THE DECK SLAB FORMS, PRESET ANCHORS MAY BE NECESSARY IN THE PRESTRESSED CONCRETE GIRDER.

THE TOP SURFACE OF THE GIRDER SHALL BE RAKED TO A DEPTH OF 1/4" EXCEPT IN THE AREA BETWEEN THE STIRRUP AND THE EDGE OF THE GIRDER.

WHEN DRAPED STRANDS ARE DETAILED, THE LONGITUDINAL LOCATION OF THE HOLD DOWN DEVICES SHALL BE WITHIN 6" OF THE LOCATION SHOWN AND THE CENTER OF GRAVITY OF THE GROUP OF DRAPED STRANDS SHALL BE LOCATED WITHIN 1/2" OF THE THEORETICAL LOCATION SHOWN.

FOR PRESTRESSED CONCRETE MEMBERS, SEE SPECIAL PROVISIONS.

0.6" Ø L. R. GRADE 270 STRANDS

AREA (SQUARE INCHES)	ULTIMATE STRENGTH (LBS. PER STRAND)	APPLIED PRESTRESS (LBS. PER STRAND)
0.217	58,600	43,950

REINFORCING STEEL FOR ONE GIRDER

BAR	NUMBER	SIZE	TYPE	LENGTH	WEIGHT
S1	57	#4	1	10'-8"	406
S2	12	#6	1	10'-8"	192
S3	4	#4	2	9'-1"	24
S4	64	#4	3	3'-5"	146
S5	6	#4	2	8'-5"	34
S6	2	#4	2	9'-11"	13
S7	4	#4	2	8'-7"	23
S8	12	#6	STR	3'-8"	66
S9	2	#5	2	8'-8"	18
S9	4	#5	2	8'-8"	36
S10	5	#4	STR	7'-0"	23
S11	5	#4	STR	13'-8"	46

EXTERIOR GDR.
INTERIOR GDR.
EXTERIOR GDR.
INTERIOR GDR.

BAR TYPES

ALL BAR DIMENSIONS ARE OUT-TO-OUT

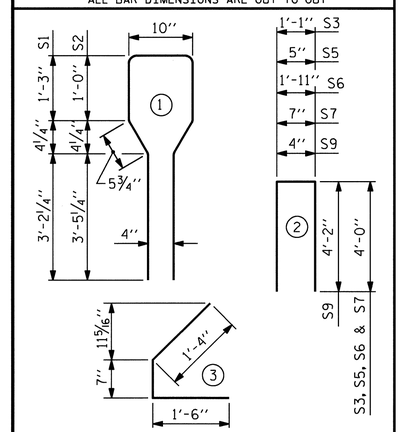

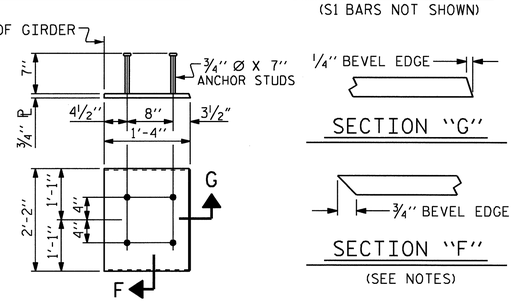

EMBEDDED PLATE "B-1" DETAILS

TWO EMBEDDED PLATES "B-1" ARE REQUIRED FOR EACH GIRDER.

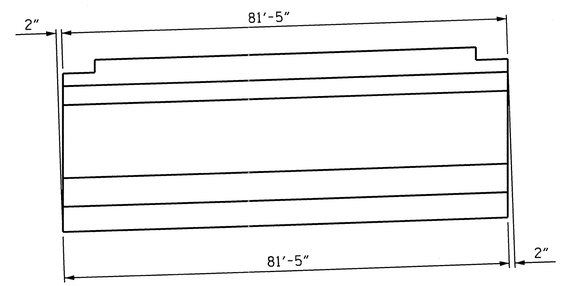

END BEVEL ON GIRDER DETAIL

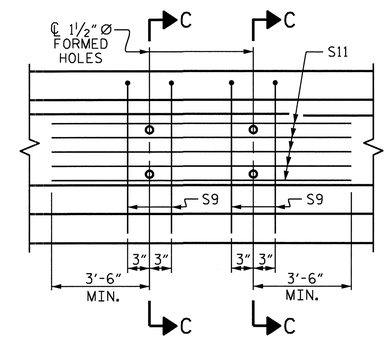

PARTIAL ELEVATION

SHOWING INTERMEDIATE DIAPHRAGM REINFORCING STEEL FOR GIRDER No. 10

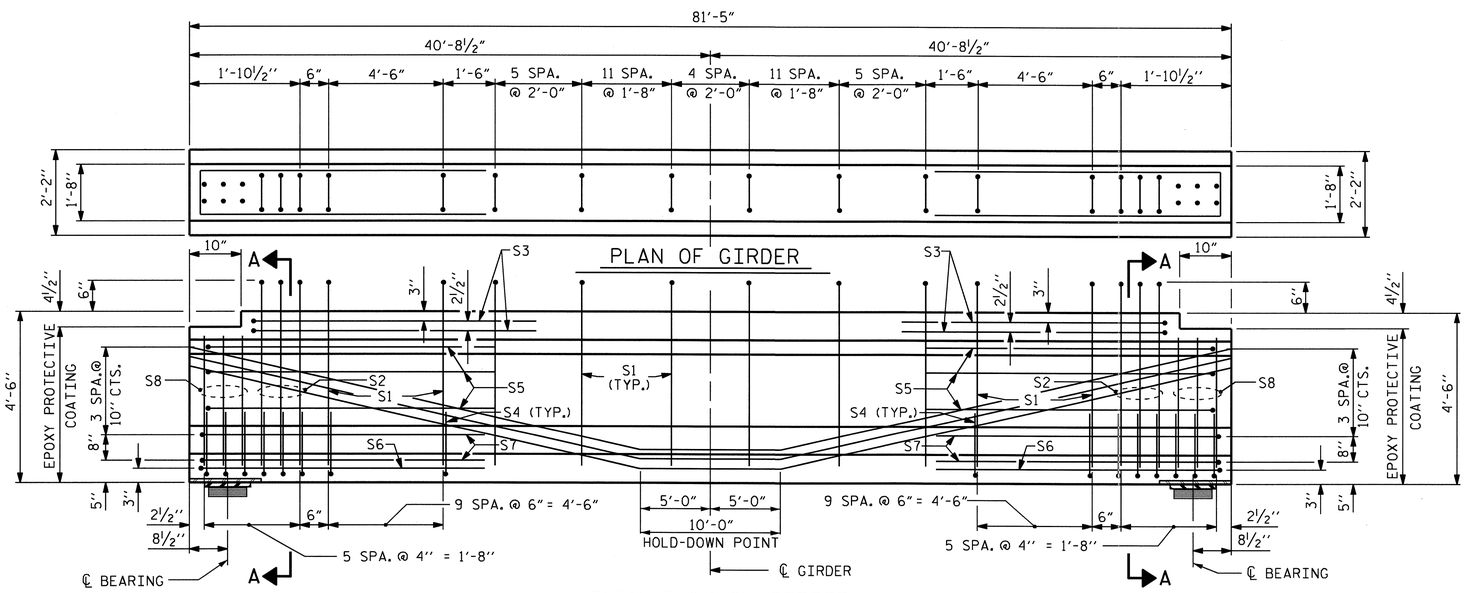

ELEVATION OF GIRDER

(SEE PARTIAL ELEVATION FOR ADDITIONAL "S" BARS)

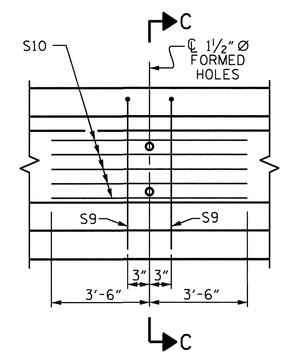

PARTIAL ELEVATION

SHOWING INTERMEDIATE DIAPHRAGM REINFORCING STEEL FOR GIRDER Nos. 9 & 11

QUANTITIES FOR ONE GIRDER

	REINFORCING STEEL LB.	5000 PSI CONCRETE C.Y.	0.6" Ø L. R. STRANDS No.
EXTERIOR GIRDER	945	16.5	24
INTERIOR GIRDER	986	16.5	24

GIRDERS REQUIRED

NUMBER	LENGTH	TOTAL LENGTH
3	81'-5"	244.25

PROJECT NO. R-2233AB

RUTHERFORD COUNTY

STATION: 560+00.35 -L-

STATE OF NORTH CAROLINA
DEPARTMENT OF TRANSPORTATION
RALEIGH

STANDARD

AASHTO TYPE IV
PRESTRESSED CONCRETE GIRDER
SPAN C

NORTH CAROLINA PROFESSIONAL SEAL 20125 ENGINEER MARSHALL B. HOBBS, JR.
9-16-10

REVISIONS						SHEET NO.
NO.	BY:	DATE:	NO.	BY:	DATE:	S-154
1			3			TOTAL SHEETS
2			4			184

STR. #5

STD. NO. PCG3

ASSEMBLED BY : D. HODGE DATE : 2/10
CHECKED BY : M.G. CHEEK DATE : 5/10

DRAWN BY : JMB 12/87
CHECKED BY : ARB 12/87

REV. 7/17/98 RWW/LES
REV. 8/16/99RR RWW/LES
REV. 5/1/06R TLA/GM

14-JUL-2010 11:46
R:\Structures\Str#5\dhodge\R-2233AB_SD_G*.dgn
dahodge

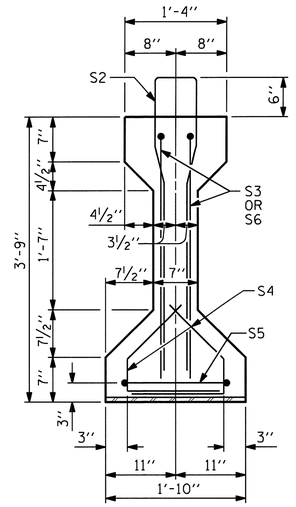

SECTION A-A

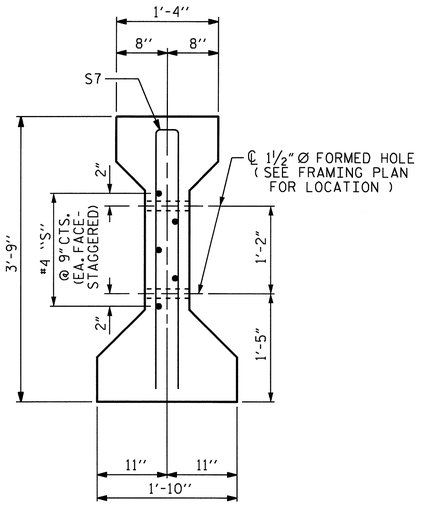

SECTION C-C

(S1 BARS NOT SHOWN)

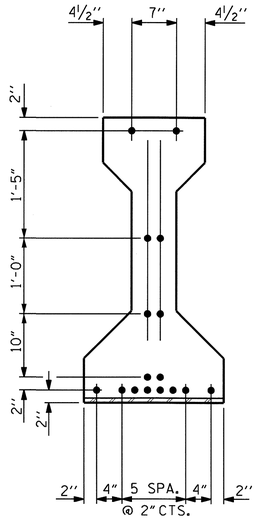

AT END OF GIRDER

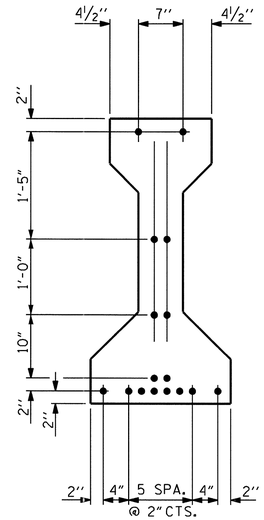

AT ℄ OF GIRDER

0.6" Ø LOW RELAXATION STRAND LAYOUT

NOTES

ALL PRESTRESSING STRANDS SHALL BE 7-WIRE LOW-RELAXATION GRADE 270 STRANDS AND SHALL CONFORM TO AASHTO M203 EXCEPT FOR SAMPLING REQUIREMENTS WHICH SHALL BE IN ACCORDANCE WITH THE STANDARD SPECIFICATIONS.

APPLY EPOXY PROTECTIVE COATING TO END OF GIRDER SURFACES.

EMBEDDED PLATE "B-1" SHALL BE GALVANIZED IN ACCORDANCE WITH THE SPECIFICATIONS.

BEVEL EDGES OF PLATE "B-1" TO GIVE CLOSE FIT BUT NOT TIGHT FIT TO STEEL CASTING FORM.

ANCHOR STUDS SHALL CONFORM TO AASHTO M169 GRADES 1010 THROUGH 1020 OR APPROVED EQUAL, AND SHALL MEET THE TYPE "B" REQUIREMENTS OF SUBSECTION 7.3 OF THE ANSI/AASHTO/AWS D1.5 BRIDGE WELDING CODE.

ALL PRESTRESSED STRANDS SHALL BE CUT FLUSH WITH THE GIRDER ENDS.

THE TRANSFER OF LOAD FROM THE ANCHORAGES TO THE GIRDER SHALL BE DONE WHEN CONCRETE HAS REACHED A COMPRESSIVE STRENGTH OF NOT LESS THAN 4000 PSI.

DEPENDING ON THE TYPE OF SYSTEM USED TO SUPPORT THE DECK SLAB FORMS, PRESET ANCHORS MAY BE NECESSARY IN THE PRESTRESSED CONCRETE GIRDER.

THE TOP SURFACE OF THE GIRDER SHALL BE RAKED TO A DEPTH OF ¼" EXCEPT IN THE AREA BETWEEN THE STIRRUP AND THE EDGE OF THE GIRDER.

FOR PRESTRESSED CONCRETE MEMBERS, SEE SPECIAL PROVISIONS.

0.6" Ø L. R. GRADE 270 STRANDS

AREA (SQUARE INCHES)	ULTIMATE STRENGTH (LBS. PER STRAND)	APPLIED PRESTRESS (LBS. PER STRAND)
0.217	58,600	43,950

REINFORCING STEEL FOR ONE GIRDER

	BAR	NUMBER	SIZE	TYPE	LENGTH	WEIGHT
	S1	45	#4	1	8'-6"	256
	S2	8	#6	1	8'-6"	102
	S3	4	#6	2	4'-8"	28
	S4	56	#4	3	2'-9"	103
	S5	2	#4	4	9'-6"	13
	S6	4	#6	2	4'-6"	27
EXTERIOR GDR.	S7	2	#5	4	7'-2"	15
INTERIOR GDR.	S7	4	#5	4	7'-2"	30
EXTERIOR GDR.	S8	5	#4	STR	7'-0"	23
INTERIOR GDR.	S9	5	#4	STR	13'-8"	46

BAR TYPES

ALL BAR DIMENSIONS ARE OUT-TO-OUT

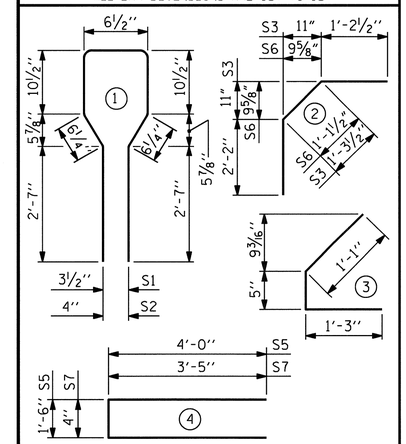

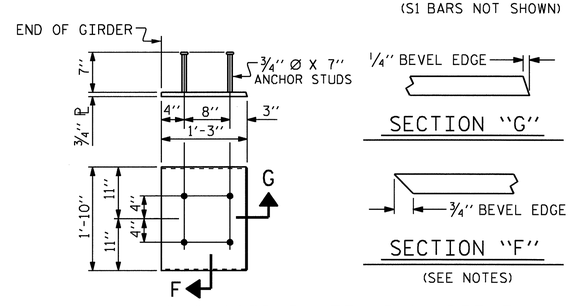

EMBEDDED PLATE "B-1" DETAILS

TWO EMBEDDED PLATES "B-1" ARE REQUIRED FOR EACH GIRDER.

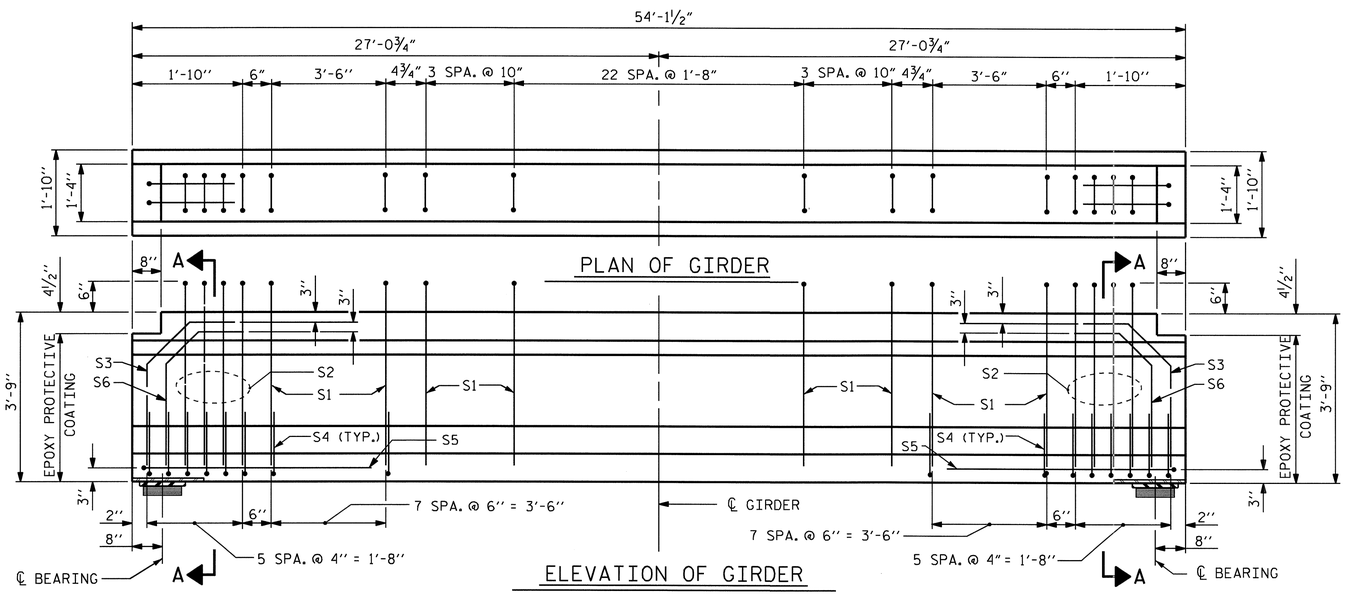

ELEVATION OF GIRDER

(SEE PARTIAL ELEVATION FOR ADDITIONAL "S" BARS)

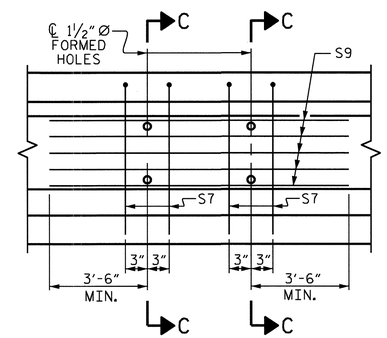

PARTIAL ELEVATION

SHOWING INTERMEDIATE DIAPHRAGM REINFORCING STEEL FOR GIRDER No. 10

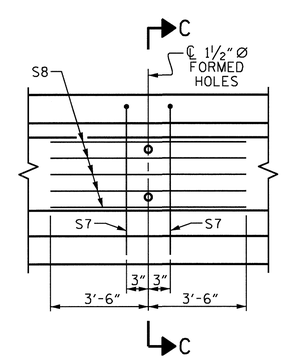

PARTIAL ELEVATION

SHOWING INTERMEDIATE DIAPHRAGM REINFORCING STEEL FOR GIRDER Nos. 9 & 11

QUANTITIES FOR ONE GIRDER

	REINFORCING STEEL LB.	5000 PSI CONCRETE C.Y.	0.6" Ø L. R. STRANDS No.
EXTERIOR GIRDER	567	7.8	16
INTERIOR GIRDER	605	7.8	16

GIRDERS REQUIRED

NUMBER	LENGTH	TOTAL LENGTH
3	54'-1½"	162.38

PROJECT NO. R-2233AB

RUTHERFORD COUNTY

STATION: 560+00.35 -L-

STATE OF NORTH CAROLINA
DEPARTMENT OF TRANSPORTATION
RALEIGH

STANDARD
AASHTO TYPE III
PRESTRESSED CONCRETE GIRDER
SPAN D

NORTH CAROLINA PROFESSIONAL SEAL 20125 ENGINEER MARSHALL G. CHECK, JR. 9-16-10

REVISIONS						SHEET NO.
NO.	BY:	DATE:	NO.	BY:	DATE:	S-155
1			3			TOTAL SHEETS
2			4			184

STR. #5

STD. NO. PCG2

ASSEMBLED BY : D. HODGE		DATE : 2/10	
CHECKED BY : M.G. CHEEK		DATE : 5/10	
DRAWN BY : JMB 12/87	REV. 7/17/98 RWW/LES		
CHECKED BY : ARB 12/87	REV. 8/16/99RR RWW/LES		
	REV. 5/1/06R TLA/GM		

16-SEP-2010 08:42
R:\Structures\Final Plans\Str. #5\R-2233AB_SD_STR#5_07_G#.dgn
dahodge

DEAD LOAD DEFLECTION TABLE FOR GIRDERS

0.6"Ø LOW RELAXATION	SPAN A - GIRDER #9 THRU #11										
TENTH POINTS	℄ BRG.	.10	.20	.30	.40	.50	.60	.70	.80	.90	℄ BRG.
CAMBER (GIRDER ALONE IN PLACE) ↑	0	.008	.015	.021	.024	.025	.024	.021	.015	.008	0
✱ DEFLECTION DUE TO SUPERIMPOSED D.L. ↓	0	.004	.007	.010	.011	.012	.011	.010	.007	.004	0
FINAL CAMBER ↑	0	1/16"	1/8"	1/8"	1/8"	1/8"	1/8"	1/8"	1/8"	1/16"	0

✱ INCLUDES SLAB, BUILDUPS & STAY-IN-PLACE FORMS.
ALL VALUES ARE SHOWN IN FEET (DECIMAL FORM), EXCEPT " FINAL CAMBER ", WHICH IS GIVEN IN INCHES (FRACTION FORM).

DEAD LOAD DEFLECTION TABLE FOR GIRDERS

0.6"Ø LOW RELAXATION	SPAN B - GIRDER #9										
TENTH POINTS	℄ BRG.	.10	.20	.30	.40	.50	.60	.70	.80	.90	℄ BRG.
CAMBER (GIRDER ALONE IN PLACE) ↑	0	.062	.118	.161	.189	.198	.189	.161	.118	.062	0
✱ DEFLECTION DUE TO SUPERIMPOSED D.L. ↓	0	.023	.043	.059	.069	.073	.069	.059	.043	.023	0
FINAL CAMBER ↑	0	7/16"	7/8"	1 1/4"	1 7/16"	1 1/2"	1 7/16"	1 1/4"	7/8"	7/16"	0

✱ INCLUDES SLAB, BUILDUPS & STAY-IN-PLACE FORMS.
ALL VALUES ARE SHOWN IN FEET (DECIMAL FORM), EXCEPT " FINAL CAMBER ", WHICH IS GIVEN IN INCHES (FRACTION FORM).

DEAD LOAD DEFLECTION TABLE FOR GIRDERS

0.6"Ø LOW RELAXATION	SPAN B - GIRDER #10 & #11										
TENTH POINTS	℄ BRG.	.10	.20	.30	.40	.50	.60	.70	.80	.90	℄ BRG.
CAMBER (GIRDER ALONE IN PLACE) ↑	0	.062	.118	.161	.189	.198	.189	.161	.118	.062	0
✱ DEFLECTION DUE TO SUPERIMPOSED D.L. ↓	0	.028	.052	.072	.084	.088	.084	.072	.052	.028	0
FINAL CAMBER ↑	0	7/16"	13/16"	1 1/16"	1 1/4"	1 5/16"	1 1/4"	1 1/16"	13/16"	7/16"	0

✱ INCLUDES SLAB, BUILDUPS & STAY-IN-PLACE FORMS.
ALL VALUES ARE SHOWN IN FEET (DECIMAL FORM), EXCEPT " FINAL CAMBER ", WHICH IS GIVEN IN INCHES (FRACTION FORM).

DEAD LOAD DEFLECTION TABLE FOR GIRDERS

0.6"Ø LOW RELAXATION	SPAN C - GIRDER #9										
TENTH POINTS	℄ BRG.	.10	.20	.30	.40	.50	.60	.70	.80	.90	℄ BRG.
CAMBER (GIRDER ALONE IN PLACE) ↑	0	.062	.118	.161	.189	.198	.189	.161	.118	.062	0
✱ DEFLECTION DUE TO SUPERIMPOSED D.L. ↓	0	.022	.042	.058	.067	.071	.067	.058	.042	.022	0
FINAL CAMBER ↑	0	1/2"	15/16"	1 1/4"	1 7/16"	1 1/2"	1 7/16"	1 1/4"	15/16"	1/2"	0

✱ INCLUDES SLAB, BUILDUPS & STAY-IN-PLACE FORMS.
ALL VALUES ARE SHOWN IN FEET (DECIMAL FORM), EXCEPT " FINAL CAMBER ", WHICH IS GIVEN IN INCHES (FRACTION FORM).

DEAD LOAD DEFLECTION TABLE FOR GIRDERS

0.6"Ø LOW RELAXATION	SPAN C - GIRDER #10 & #11										
TENTH POINTS	℄ BRG.	.10	.20	.30	.40	.50	.60	.70	.80	.90	℄ BRG.
CAMBER (GIRDER ALONE IN PLACE) ↑	0	.062	.118	.161	.189	.198	.189	.161	.118	.062	0
✱ DEFLECTION DUE TO SUPERIMPOSED D.L. ↓	0	.027	.051	.069	.081	.085	.081	.069	.051	.027	0
FINAL CAMBER ↑	0	7/16"	13/16"	1 1/8"	1 5/16"	1 3/8"	1 5/16"	1 1/8"	13/16"	7/16"	0

✱ INCLUDES SLAB, BUILDUPS & STAY-IN-PLACE FORMS.
ALL VALUES ARE SHOWN IN FEET (DECIMAL FORM), EXCEPT " FINAL CAMBER ", WHICH IS GIVEN IN INCHES (FRACTION FORM).

DEAD LOAD DEFLECTION TABLE FOR GIRDERS

0.6"Ø LOW RELAXATION	SPAN D - GIRDER #9 THRU #11										
TENTH POINTS	℄ BRG.	.10	.20	.30	.40	.50	.60	.70	.80	.90	℄ BRG.
CAMBER (GIRDER ALONE IN PLACE) ↑	0	.023	.044	.060	.071	.074	.071	.060	.044	.023	0
✱ DEFLECTION DUE TO SUPERIMPOSED D.L. ↓	0	.011	.020	.028	.032	.034	.032	.028	.020	.011	0
FINAL CAMBER ↑	0	1/8"	5/16"	3/8"	7/16"	1/2"	7/16"	3/8"	5/16"	1/8"	0

✱ INCLUDES SLAB, BUILDUPS & STAY-IN-PLACE FORMS.
ALL VALUES ARE SHOWN IN FEET (DECIMAL FORM), EXCEPT " FINAL CAMBER ", WHICH IS GIVEN IN INCHES (FRACTION FORM).

PROJECT NO. R-2233AB
RUTHERFORD COUNTY
STATION: 560+00.35 -L-

STATE OF NORTH CAROLINA
DEPARTMENT OF TRANSPORTATION
RALEIGH

DEAD LOAD DEFLECTIONS

NORTH CAROLINA PROFESSIONAL SEAL 20125 ENGINEER
MARSHALL A. CHEEK, JR.
2-16-10

REVISIONS						SHEET NO.
NO.	BY:	DATE:	NO.	BY:	DATE:	S-156
1			3			TOTAL SHEETS
2			4			184

STR. #5

DRAWN BY : D. HODGE DATE : 2/10
CHECKED BY : M.G. CHEEK DATE : 5/10

16-SEP-2010 09:31
R:\Structures\Final Plans\Str. #5\R-2233AB_SD_STR#5_07_G*.dgn
dahodge

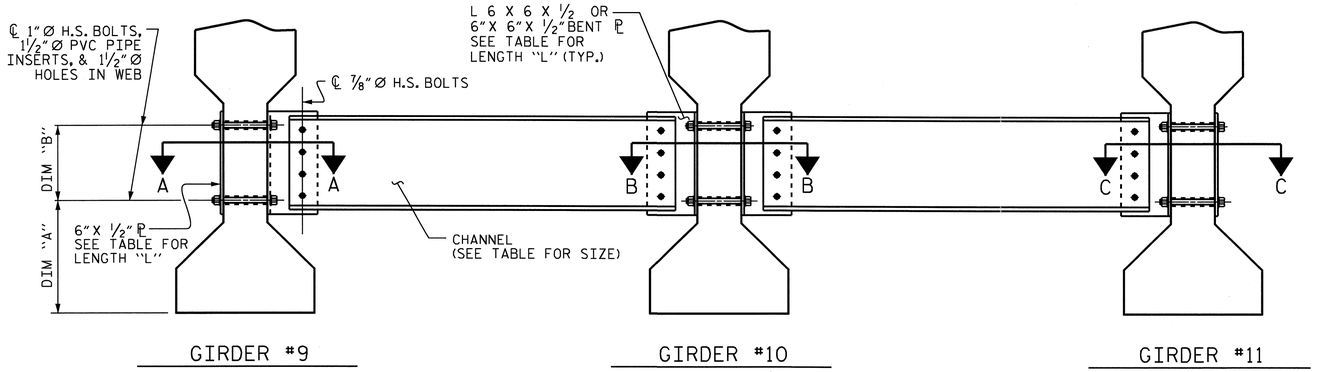

PART SECTION AT INTERMEDIATE DIAPHRAGM

(TYPE III OR TYPE IV GIRDER SHOWN)

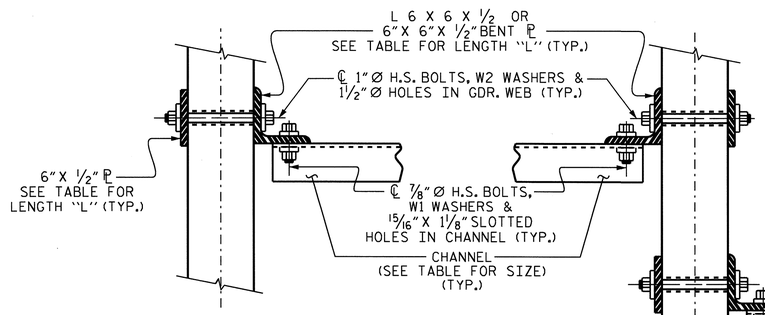

SECTION A-A

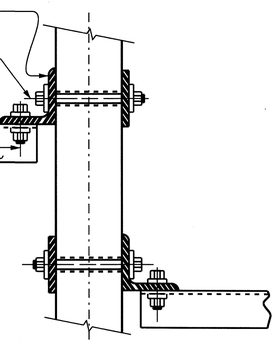

SECTION B-B

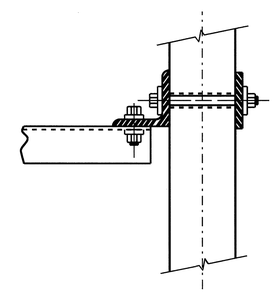

SECTION C-C

CONNECTION DETAILS

(FOR SKEW < 70° OR SKEW > 110°)

STRUCTURAL STEEL NOTES

ALL INTERMEDIATE DIAPHRAGM STEEL, CONNECTOR PLATES AND PLATE WASHERS SHALL BE AASHTO M270 GRADE 50 OR APPROVED EQUAL.

TENSION ON THE AASHTO M164 BOLTS THROUGH THE CHANNEL MEMBER SHALL BE CALIBRATED USING DIRECT TENSION INDICATOR WASHERS IN ACCORDANCE WITH THE STANDARD SPECIFICATIONS. FOR DIRECT TENSION INDICATORS, SEE SPECIAL PROVISIONS.

TENSION ON THE AASHTO M164 BOLTS THROUGH THE GIRDER WEB SHALL BE SNUG TIGHTENED FOLLOWED BY AN ADDITIONAL ¼ TURN.

THE PLATES, BENT PLATES, CHANNELS, ANGLES, AND PLATE WASHERS SHALL BE GALVANIZED OR METALLIZED IN ACCORDANCE WITH THE STANDARD SPECIFICATIONS. FOR THERMAL SPRAYED COATINGS (METALLIZATION), SEE SPECIAL PROVISIONS.

FOR METALLIZATION, APPLY AN 8 MIL THICK 99.99 PERCENT ZINC (W-Zn-1) THERMAL SPRAYED COATING WITH A 0.5 MIL THICK SEAL COAT TO ALL STEEL DIAPHRAGM SURFACES IN ACCORDANCE WITH THE THERMAL SPRAYED COATINGS SPECIAL PROVISIONS AND SECTION 442 OF THE STANDARD SPECIFICATIONS.

GALVANIZE THE HIGH STRENGTH BOLTS, NUTS, WASHERS AND DIRECT TENSION INDICATORS IN ACCORDANCE WITH THE STANDARD SPECIFICATIONS. FOR HIGH STRENGTH BOLTS, SEE SPECIAL PROVISIONS.

USE A MINIMUM 7/16" THICK PLATE WASHER WITH STANDARD HOLES UNDER EACH BOLT HEAD AND NUT. THE PLATE WASHERS SHALL HAVE SUFFICIENT SIZE TO COVER THE HOLES AFTER INSTALLATION. HARDENED WASHERS AND DIRECT TENSION INDICATORS ARE TO BE USED IN CONJUNCTION WITH THE PLATE WASHERS IN THE CHANNEL MEMBER CONNECTION.

FOR BOLTS THROUGH THE GIRDER WEB, PROVIDE SUFFICIENT LENGTH OF ALL BOLTS TO ACCOMMODATE WASHERS AND THE THICKNESS OF CONNECTING MEMBER PLUS AT LEAST ¼" PROJECTION BEYOND THE NUT.

INTERMEDIATE DIAPHRAGM ASSEMBLY SHALL COMPLY WITH SECTION 1072 OF THE STANDARD SPECIFICATIONS.

CONTRACTOR SHALL SUBMIT TWO SETS OF WORKING DRAWINGS FOR THE INTERMEDIATE DIAPHRAGM ASSEMBLY FOR REVIEW, COMMENTS AND ACCEPTANCE. AFTER REVIEW, COMMENTS, AND ACCEPTANCE, SUBMIT SEVEN SETS FOR DISTRIBUTION.

IN THE EXTERIOR BAYS, TEMPORARY STRUTS SHALL BE PLACED BETWEEN PRESTRESSED GIRDERS ADJACENT TO THE STEEL DIAPHRAGMS. STRUTS SHALL REMAIN IN PLACE 3 DAYS AFTER CONCRETE IS PLACED. ALL AASHTO M164 H.S. BOLTS SHALL BE FULLY TIGHTENED AFTER THE STRUTS HAVE BEEN REMOVED.

THE COST OF THE STEEL DIAPHRAGMS AND ASSEMBLIES SHALL BE INCLUDED IN THE UNIT PRICE BID FOR PRESTRESSED CONCRETE GIRDERS.

TABLE

GIRDER TYPE	CHANNEL SIZE	DIM "A"	DIM "B"	DIM "L"
III	MC 18 × 42.7	1'-5"	1'-2"	1'-6"
IV	MC 18 × 42.7	1'-9½"	1'-2"	1'-6"

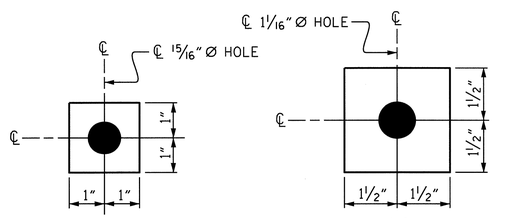

W1

ℙ 7/16" X 2" X 2"

USE WITH ⅞"Ø HVY. HEX NUTS & DIRECT TENSION INDICATOR WASHERS AT DIAPHRAGM CHANNEL TO CONNECTOR PLATE CONNECTIONS

W2

ℙ 7/16" X 3" X 3"

USE WITH 1"Ø HVY. HEX NUTS AT CONNECTOR PLATE TO GIRDER CONNECTIONS

WASHER DETAILS

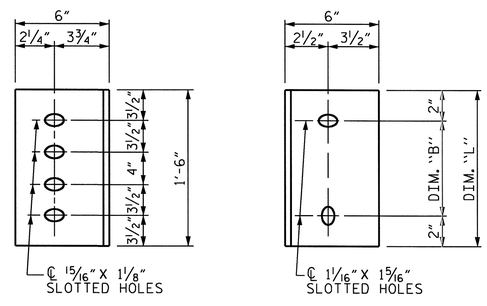

DIAPHRAGM FACE

(TYPE III OR TYPE IV GDR.)

WEB FACE

CONNECTOR PLATE DETAILS

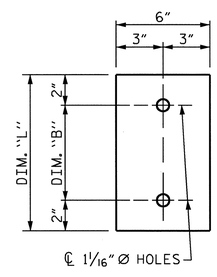

PLATE DETAILS

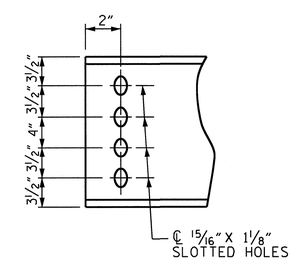

CHANNEL END

(TYPE III OR TYPE IV GDR.)

PROJECT NO. R-2233AB

RUTHERFORD COUNTY

STATION: 560+00.35 -L-

STATE OF NORTH CAROLINA
DEPARTMENT OF TRANSPORTATION
RALEIGH

STANDARD

INTERMEDIATE STEEL DIAPHRAGMS FOR TYPE II, III, & IV PRESTRESSED CONCRETE GIRDERS

NORTH CAROLINA PROFESSIONAL SEAL 20125 ENGINEER MARSHALL G. CHEEK, JR. 9-20-10

REVISIONS						SHEET NO.
NO.	BY:	DATE:	NO.	BY:	DATE:	S-157
1			3			TOTAL SHEETS
2			4			184

ASSEMBLED BY : D. HODGE		DATE : 2/10	
CHECKED BY : M.G. CHEEK		DATE : 5/10	
DRAWN BY : TLA 6/05	ADDED 10/21/05		
CHECKED BY : VC 6/05	REV. 5/1/06RR KMM/GM		

14-JUL-2010 11:46
R:\Structures\Str#5\dhodge\R-2233AB_SD_G*.dgn
dahodge

STR. #5

STD. NO. PCG12

NOTES

SEE SPECIAL PROVISIONS FOR EVAZOTE JOINT SEALS.

SEE SPECIAL PROVISIONS FOR ELASTOMERIC CONCRETE.

THE REMOVAL AND REPLACEMENT OF THE EXISTING COMPRESSION JOINT SEALS AT THE END BENTS WITH EVAZOTE JOINT SEALS SHALL BE INCLUDED IN THE LUMP SUM PRICE BID FOR EVAZOTE JOINT SEALS. FOR SAWING THE ELASTOMERIC CONCRETE BLOCKOUT IN THE EXISTING DECK, SEE EVAZOTE JOINT SEAL SPECIAL PROVISIONS.

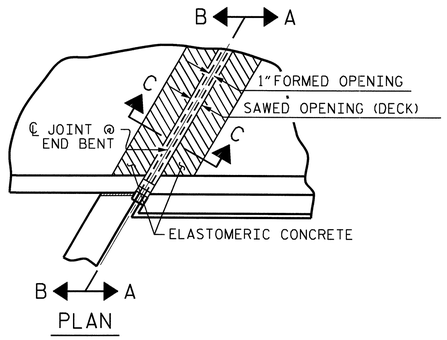

PLAN

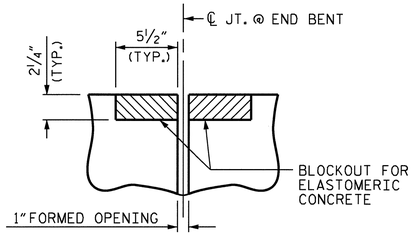

SECTION C-C
EVAZOTE JOINT SEAL
(PRE-SAWED ELASTOMERIC
CONCRETE DIMENSIONS)

MOVEMENT AND SETTING AT EVAZOTE JOINT						
END BENT NO.	SKEW ANGLE	NOMINAL UNCOMPRESSED SEAL WIDTH	TOTAL MOVEMENT (ALONG ℄ RDWY)	PERPENDICULAR JOINT OPENING AT 45° F	PERPENDICULAR JOINT OPENING AT 60° F	PERPENDICULAR JOINT OPENING AT 90° F
1	130°-13'-44"	2½"	¼"	2 1/16"	2"	1 15/16"
2	129°-41'-40"	2½"	5/16"	2 1/16"	2"	1⅞"

TOTAL MOVEMENT IS CALCULATED ALONG THE CENTERLINE OF ROADWAY.
JOINT OPENINGS ARE MEASURED PERPENDICULAR TO THE JOINT.

BILL OF MATERIAL	
END BENT NO.	ELASTOMERIC CONCRETE * (CU. FT.)
1	18.0
2	17.9
TOTAL	35.9

* BASED ON THE MINIMUM BLOCKOUT SHOWN.

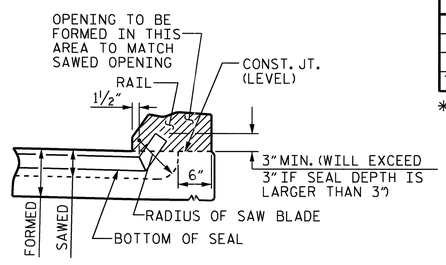

SECTION A-A

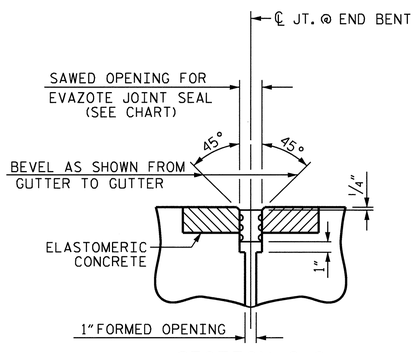

SECTION C-C
EVAZOTE JOINT SEAL
(EXPANSION)

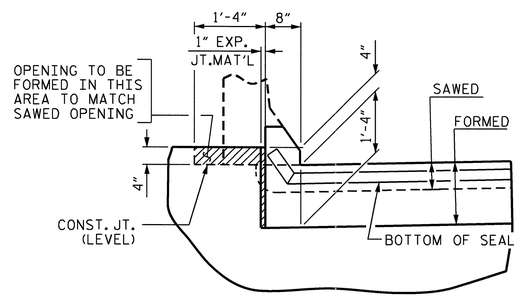

SECTION B-B

JOINT SEAL DETAILS @ END BENT

EVAZOTE JOINT SEAL TO BE CUT, HEAT WELDED AND TURNED UP PARALLEL TO SLOPED FACE OF THE BARRIER RAIL.

THE JOINT SHALL BE SAWED PRIOR TO THE CASTING OF THE BARRIER RAIL.

PROJECT NO. R-2233AB
RUTHERFORD COUNTY
STATION: 560+00.35 -L-

SHEET 1 OF 3

STATE OF NORTH CAROLINA
DEPARTMENT OF TRANSPORTATION
RALEIGH

EVAZOTE
JOINT DETAILS

NORTH CAROLINA PROFESSIONAL SEAL 20125 ENGINEER MATTHEW G. CHEEK, JR.
9-20-10

REVISIONS						SHEET NO.
NO.	BY:	DATE:	NO.	BY:	DATE:	S-158
1			3			TOTAL SHEETS
2			4			184

DRAWN BY :	D. HODGE	DATE :	6/10
CHECKED BY :	M.G. CHEEK	DATE :	7/10

14-SEP-2010 13:19
R:\Structures\Final Plans\Str. #5\R-2233AB_SD_STR#5_07B_JS.dgn
afigueroa

STR #5

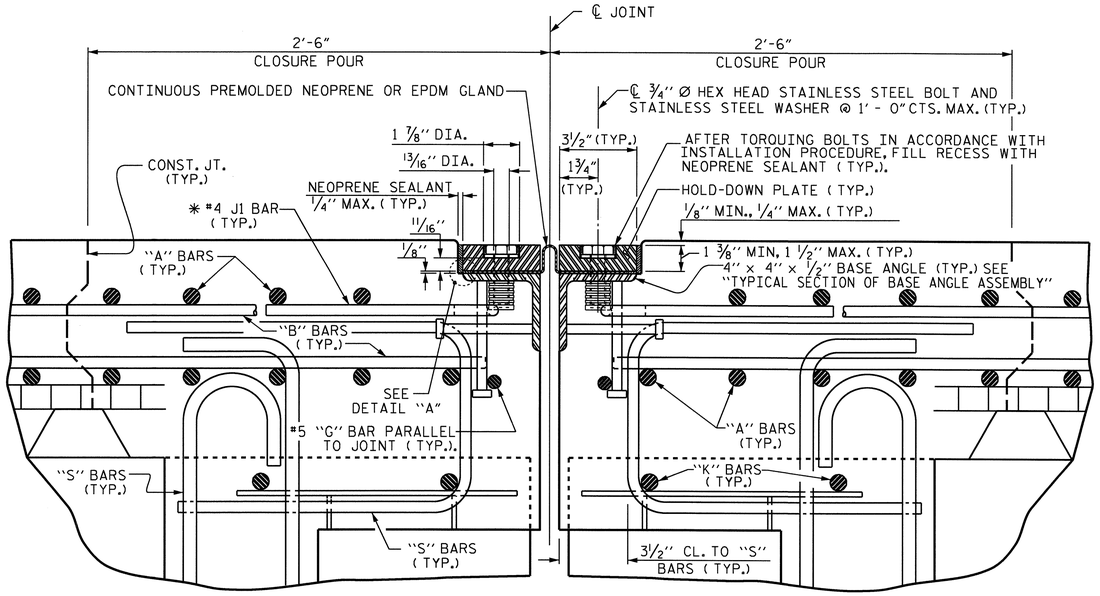

EXPANSION JOINT DETAILS

SECTION NORMAL TO JOINT -- PRESTRESSED GIRDER SUPERSTRUCTURE

✱ THE QUANTITY OF #4 J1 BARS ON THE BILL OF MATERIAL IS BASED ON 1'-0" CENTERS. J1 BARS SHALL BE PLACED AT EACH VERTICAL STUD ANCHOR BOLT. IN THE EVENT THAT THE NUMBER OF VERTICAL STUD ANCHORS EXCEEDS THE NUMBER OF J1 BARS SPECIFIED, ADDITIONAL J1 BARS WILL NOT BE REQUIRED.

NOTE TO CONTRACTOR: THE EXISTING HOLD-DOWN PLATES SHALL BE REMOVED AND CLEANED OR REPLACED AT THE DIRECTION OF THE ENGINEER. THE EXISTING GLAND SHALL BE REPLACED WITH A NEW NEOPRENE OR EPDM GLAND WHICH SHALL BE CONTINUOUS ACROSS THE LENGTH OF THE JOINT. THE INSTALLATION PROCEDURE SHALL FOLLOW STEPS #3, 4, 5 & 6.

INSTALLATION PROCEDURE

1. A TEMPLATE OR OTHER SUITABLE DEVICE SHALL BE USED TO FORM THE TOP OF THE EXPANSION JOINT SEAL BLOCKOUT TO THE PROPER DEPTH AND WIDTH. THE TEMPLATE SHALL BE 3⅝" TO 3¾" WIDE AND OF SUCH THICKNESS AS TO PROVIDE FOR CORRECT FINAL ELEVATION OF TOP OF HOLD-DOWN PLATES. THE TEMPLATE SHALL BE ATTACHED TO THE BASE ANGLE ASSEMBLY WITH THE ¾" Ø HEX HEAD BOLTS PROVIDED FOR THE HOLD-DOWN PLATES. A 1" Ø HOLE SHALL BE PROVIDED IN THE TEMPLATE CENTERED OVER EACH WEEP HOLE IN THE 4" X 4" X ½" BASE ANGLE. OTHER METHODS OF INSURING DRAINAGE THROUGH WEEP HOLES MAY BE EMPLOYED SUBJECT TO ENGINEER'S APPROVAL.
2. AFTER THE CONCRETE HAS BEEN CAST ON BOTH SIDES OF THE JOINT, REMOVE THE TEMPLATE. THOROUGHLY CLEAN THE BOLT HOLES AND THE ANGLE PLATE. REMOVE ANY EXCESS CONCRETE THAT COMES OUT OF THE WEEP HOLES. ANY DAMAGED STEEL SHALL BE COATED WITH A MINIMUM THICKNESS OF 4 DRY MILS OF ZINC-RICH PAINT IN ACCORDANCE WITH THE STANDARD SPECIFICATIONS.
3. LAY THE GLAND ON THE BASE ANGLE AND FIELD MARK THE GLAND FOR THE BOLT HOLES. HOLES IN THE GLAND SHALL BE PUNCHED ⅞" IN DIAMETER WITH A HAND PUNCH.
4. IN ORDER TO CHECK FOR PROPER ALIGNMENT, PLACE THE GLAND AND HOLD-DOWN PLATES ON THE BASE ANGLE. DO NOT APPLY NEOPRENE SEALANT. BOLT THE HOLD-DOWN PLATES TO THE BASE ANGLE BUT DO NOT TIGHTEN. THE ENGINEER SHALL INSPECT THE JOINT SEAL DEVICE FOR PROPER ALIGNMENT.
5. AFTER INSPECTION, REMOVE THE HOLD-DOWN PLATES AND GLAND. APPLY NEOPRENE SEALANT TO THE BASE ANGLE IN ACCORDANCE WITH THE "INSTALLATION SKETCH". PLACE GLAND AND HOLD-DOWN PLATES ON THE BASE ANGLE. BOLT THE HOLD-DOWN PLATES TO THE BASE ANGLE ASSEMBLY AND TORQUE THE BOLTS TO 88 FT-LBS WITH A TORQUE WRENCH. THE TORQUE WRENCH SHALL BE CALIBRATED IN ACCORDANCE WITH SECTION 440-10 (D) OF THE STANDARD SPECIFICATIONS. CHECK THE TORQUE AFTER THREE (3) HOURS AND, IF NECESSARY, RETIGHTEN TO 88 FT-LBS. A FINAL CHECK SHALL BE MADE AT SEVEN (7) DAYS. TORQUE SHALL NOT BE LESS THAN 80 FT-LBS AFTER SEVEN (7) DAYS.
6. AFTER PROPER TOROUING, CLEAN THE BOLT HOLE RECESSES AND THE RECESS BETWEEN THE JOINT SEAL DEVICE AND CONCRETE, COMPLETELY FILL THESE RECESSES WITH NEOPRENE SEALANT.

GENERAL NOTES

1. FOR EXPANSION JOINT SEALS, SEE SPECIAL PROVISIONS.
2. ALL PLATES AND ANGLES SHALL CONFORM TO AASHTO M270 GRADE 36 STEEL OR APPROVED EQUAL. ALL HOLD-DOWN BOLTS SHALL CONFORM TO ASTM F593 ALLOY 304 STAINLESS STEEL AND WASHERS SHALL CONFORM TO ASTM F844 EXCEPT THEY SHALL BE MADE FROM ALLOY 304 STAINLESS STEEL. ALL STUD ANCHORS SHALL CONFORM TO AASHTO M169, GRADES 1010 THRU 1020 OR APPROVED EQUAL. ALL CONCRETE INSERTS SHALL BE CLOSED END AND SHALL CONFORM TO AASHTO M169, GRADE 12L14. TENSILE CAPACITY SHALL BE 3000 LBS. MIN.
3. A PREMOLDED CORRUGATED OR NON-CORRUGATED GLAND SHALL BE USED FOR JOINTS SKEWED BETWEEN 50° THRU 130°. FOR JOINTS SKEWED LESS THAN 50° OR MORE THAN 130°, ONLY A CORRUGATED GLAND SHALL BE USED.
4. CLOSED END FERRULES AND STUD ANCHORS SHALL BE SHOP WELDED AND ALL HOLES SHALL BE SHOP DRILLED AS SHOWN ON PLANS. STUD ANCHORS SHALL BE ELECTRIC ARC END WELDED WITH COMPLETE FUSION.
5. SURFACES COMING IN CONTACT WITH NEOPRENE SHALL BE GROUND SMOOTH PRIOR TO METALLIZING.
6. UPON COMPLETION OF SHOP FABRICATION, THE HOLD DOWN PLATE AND BASE ANGLE ASSEMBLY, AS SHOWN IN THE "TYPICAL SECTION OF BASE ANGLE ASSEMBLY", SHALL BE METALLIZED. SEE SPECIAL PROVISION FOR THERMAL SPRAYED COATINGS (METALLIZATION).
7. BASE ANGLE ASSEMBLY SHALL BE CONTINUOUS FOR THE LENGTH OF THE JOINT. AT CROWN BREAKS, THE ENDS OF THE BASE ANGLE ASSEMBLY SHALL BE CUT PARALLEL TO THE BRIDGE CENTERLINE FOR SKEWS LESS THAN 80° AND GREATER THAN 100°. FINISHED WELD SHALL BE GROUND SMOOTH AND COATED WITH A MINIMUM THICKNESS OF 4 DRY MILS OF ZINC-RICH PAINT IN ACCORDANCE WITH THE STANDARD SPECIFICATIONS.
8. FIELD SPLICES OF HOLD-DOWN PLATES SHALL BE KEPT TO A MINIMUM. CONTRACTOR SHALL FURNISH DETAILED PLANS SHOWING PROPOSED SPLICE LOCATIONS FOR APPROVAL. HOLD-DOWN PLATES SHALL NOT EXCEED 20' LENGTHS UNLESS APPROVED BY THE ENGINEER.
9. NO ALTERNATE JOINT DETAILS SHALL BE PERMITTED IN LIEU OF THOSE SHOWN ON THESE PLANS.
10. THE CONTRACTOR MAY, AT HIS OPTION, USE ADHESIVELY ANCHORED ANCHOR BOLTS IN PLACE OF CONCRETE INSERTS FOR COVER PLATES. THE YIELD LOAD OF THE ¾" Ø BOLT IS 10 KIPS. FIELD TESTING OF THE ADHESIVE BONDING SYSTEM IS NOT REQUIRED.

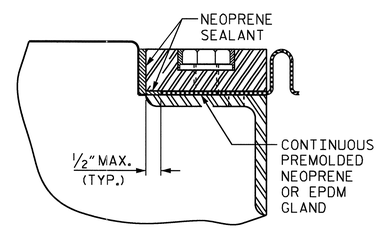

DETAIL "A"

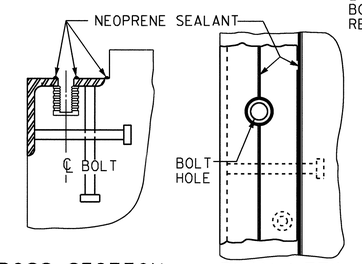

INSTALLATION SKETCH

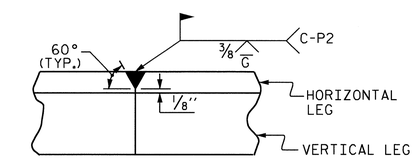

DETAIL- FIELD WELD SPLICE OF BASE ANGLE

MOVEMENT AND SETTING AT JOINT					
BENT NO.	SKEW ANGLE	TOTAL MOVEMENT (ALONG ℄ RDWY)	PERPENDICULAR JOINT OPENING AT 30° F	PERPENDICULAR JOINT OPENING AT 60° F	PERPENDICULAR JOINT OPENING AT 90° F
1	130°-10'-24"	⅜"	1¼"	1⅛"	1"
2	129°-58'-07"	½"	1 5/16"	1 3/16"	1 1/16"
3	129°-45'-55"	½"	1 5/16"	1 3/16"	1 1/16"

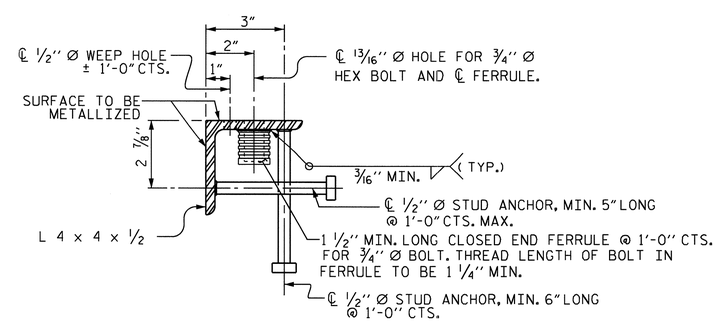

TYPICAL SECTION OF BASE ANGLE ASSEMBLY

PROJECT NO. R-2233AB
RUTHERFORD COUNTY
STATION: 560+00.35 -L-

SHEET 2 OF 3

STATE OF NORTH CAROLINA
DEPARTMENT OF TRANSPORTATION
RALEIGH

EXPANSION JOINT SEAL DETAILS

REVISIONS						SHEET NO.
NO.	BY:	DATE:	NO.	BY:	DATE:	S-159
1			3			TOTAL SHEETS
2			4			184

NORTH CAROLINA PROFESSIONAL SEAL 20125 ENGINEER MARSHALL L. CHEEK, JR. 7-21-10

DRAWN BY : D. HODGE DATE : 4/10
CHECKED BY : M.G. CHEEK DATE : 5/10

21-SEP-2010 08:34
R:\Structures\Final Plans\Str. #5\R-2233AB_SD_STR#5_07B_JS.dgn
dahodge

STR. #5

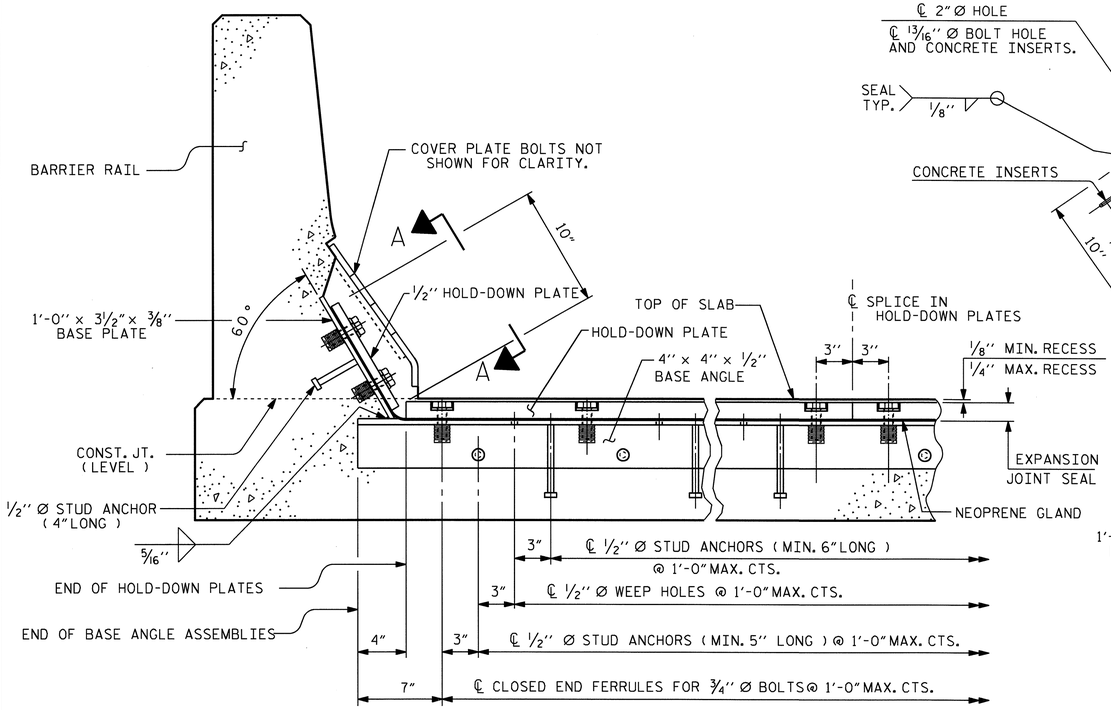

SECTION THRU RAIL NORMAL TO JOINT

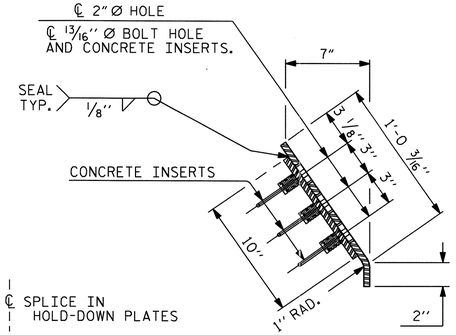

END VIEW

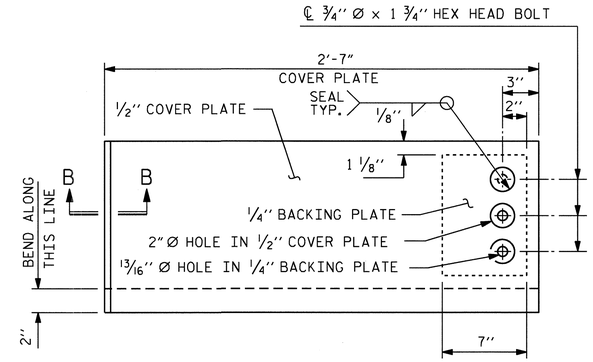

TYPE II - ELEVATION VIEW

COVER PLATE DETAILS

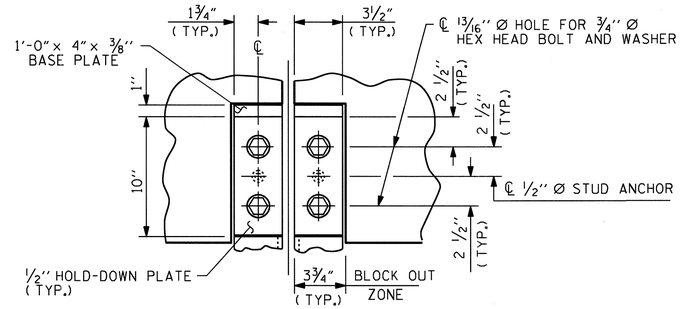

SECTION A - A

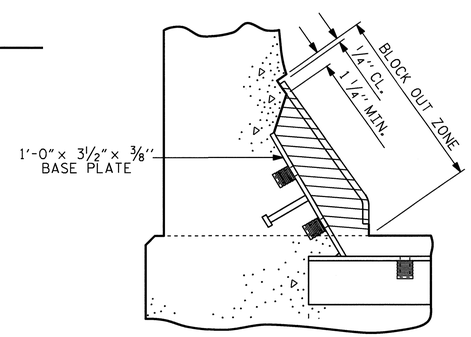

BLOCK OUT DETAIL

SEE "SECTION A - A" FOR OTHER DETAILS.

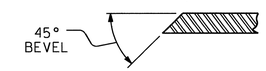

SECTION B - B

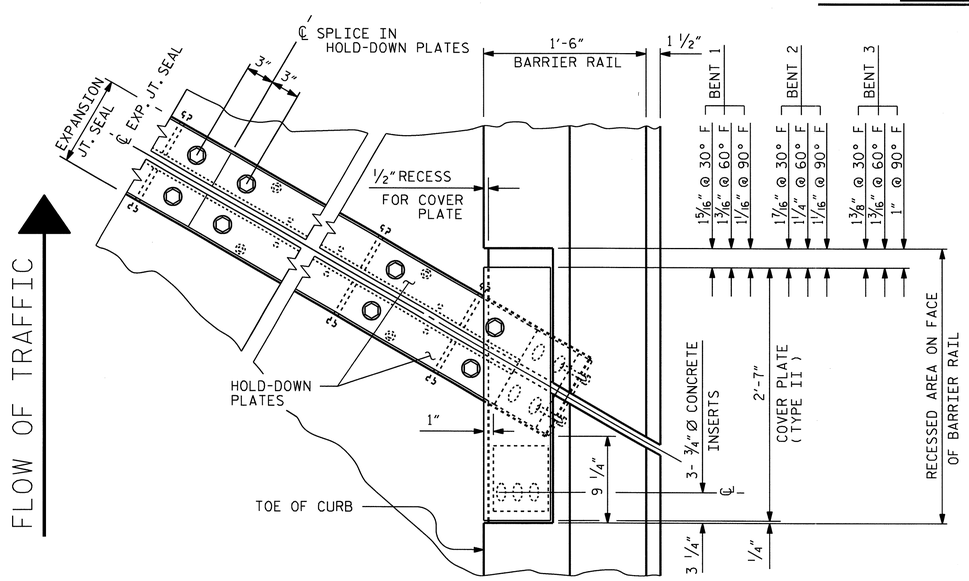

PLAN OF EXPANSION JOINT SEAL - RIGHT SIDE

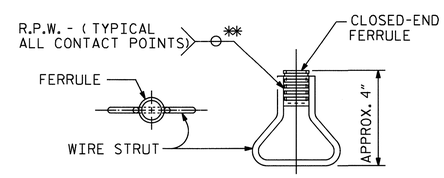

PLAN ELEVATION

CONCRETE INSERT

** EACH WELDED ATTACHMENT OF WIRE TO FERRULE SHALL DEVELOP THE TENSILE STRENGTH OF THE WIRE.

PROJECT NO. R-2233AB
RUTHERFORD COUNTY
STATION: 560+00.35 -L-

SHEET 3 OF 3

STATE OF NORTH CAROLINA
DEPARTMENT OF TRANSPORTATION
RALEIGH

EXPANSION JOINT SEAL DETAILS FOR BARRIER RAIL

NORTH CAROLINA PROFESSIONAL SEAL 20125 ENGINEER MARSHALL G. CHEEK, JR. 4-20-10

REVISIONS								SHEET NO.
NO.	BY:	DATE:	NO.	BY:	DATE:			S-160
1			3					TOTAL SHEETS
2			4					184

STR. #5

DRAWN BY : D. HODGE DATE : 4/10
CHECKED BY : M.G. CHEEK DATE : 5/10

27-JUL-2010 09:15
R:\Structures\Str#5\dhodge\R-2233AB_SD_JS.dgn
dahodge

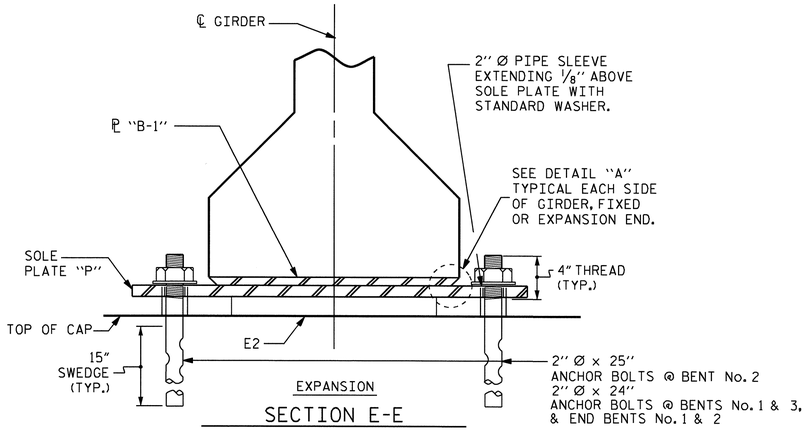

EXPANSION

SECTION E-E

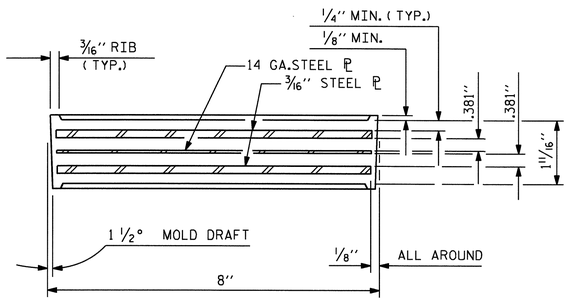

TYPICAL SECTION OF ELASTOMERIC BEARINGS

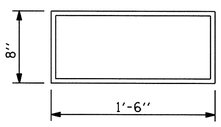

E2 (12 REQ'D)

PLAN VIEW OF ELASTOMERIC BEARING

TYPE III

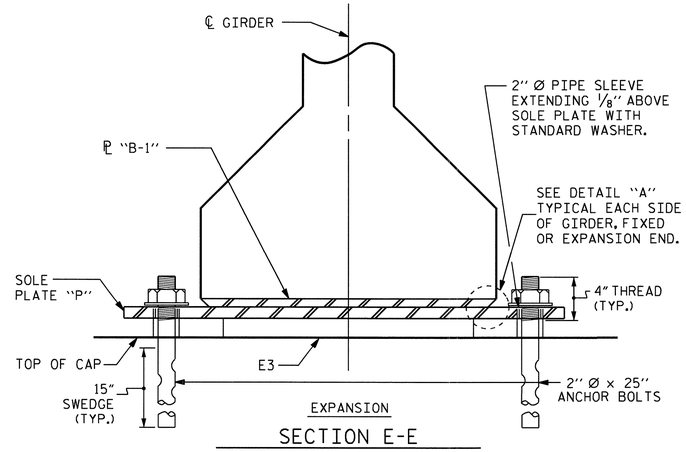

EXPANSION

SECTION E-E

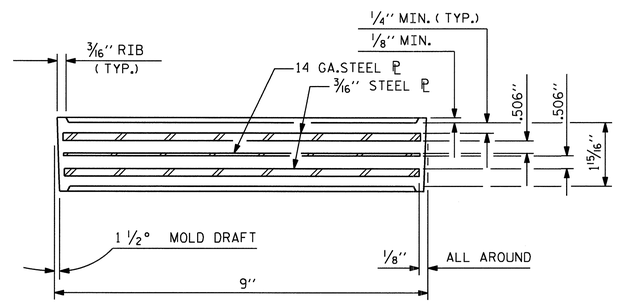

TYPICAL SECTION OF ELASTOMERIC BEARINGS

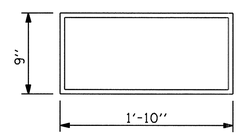

E3 (12 REQ'D)

PLAN VIEW OF ELASTOMERIC BEARING

TYPE IV

(60 DUROMETER)

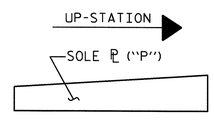

SOLE ℗ PLACEMENT DETAIL

NOTES

AT ALL FIXED POINTS OF SUPPORT, NUTS FOR ANCHOR BOLTS ARE TO BE TIGHTENED FINGER TIGHT AND THEN BACKED OFF 1/2 TURN. THE THREAD OF THE NUT AND BOLT SHALL THEN BE BURRED WITH A SHARP POINTED TOOL.

THE 2" Ø PIPE SLEEVE SHALL BE CUT FROM SCHEDULE 40 PVC PLASTIC PIPE. THE PVC PLASTIC PIPE SHALL MEET THE REQUIREMENTS OF ASTM D1785.

STEEL SOLE PLATES, ANCHOR BOLTS, NUTS, AND WASHERS SHALL BE GALVANIZED IN ACCORDANCE WITH THE STANDARD SPECIFICATIONS.

PRIOR TO WELDING, GRIND THE GALVANIZED SURFACE OF THE PORTION OF THE EMBEDDED PLATE AND SOLE PLATE THAT ARE TO BE WELDED. AFTER WELDING, DAMAGED GALVANIZED SURFACES SHALL BE REPAIRED IN ACCORDANCE WITH THE STANDARD SPECIFICATIONS.

WHEN WELDING THE SOLE PLATE TO THE EMBEDDED PLATE IN THE GIRDER, USE TEMPERATURE INDICATING WAX PENS, OR OTHER SUITABLE MEANS, TO ENSURE THAT THE TEMPERATURE OF THE SOLE PLATE DOES NOT EXCEED 300°F. TEMPERATURES ABOVE THIS MAY DAMAGE THE ELASTOMER.

SOLE PLATE "P", BOLTS, NUTS, WASHERS, AND PIPE SLEEVE SHALL BE INCLUDED IN THE PAY ITEM FOR PRESTRESSED CONCRETE GIRDERS.

ANCHOR BOLTS SHALL MEET THE REQUIREMENTS OF ASTM A449. NUTS SHALL MEET THE REQUIREMENTS OF AASHTO M291-DH OR AASHTO M292-2H. WASHERS SHALL MEET THE REQUIREMENTS OF AASHTO M293. SHOP DRAWINGS ARE NOT REQUIRED FOR ANCHOR BOLT, NUTS AND WASHERS. SHOP INSPECTION IS REQUIRED.

ALL SURFACES OF BEARING PLATES SHALL BE SMOOTH AND STRAIGHT.

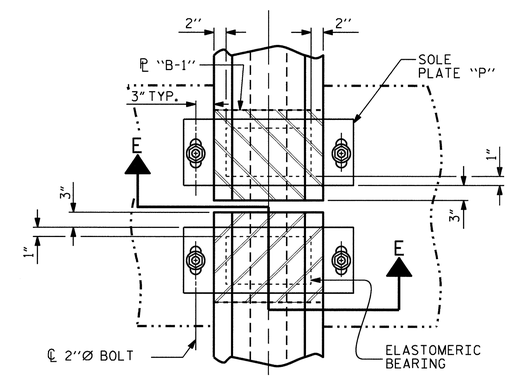

TYPICAL PLAN

(SHOWING SIMPLE SPAN BENT)

LOAD RATINGS	
	MAX.D.L.+L.L.
45"PCG -TYPE III	115 K
54"PCG -TYPE IV	163 K

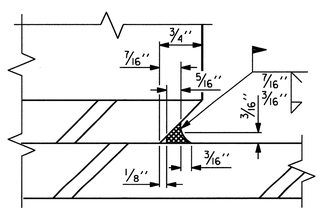

DETAIL "A"

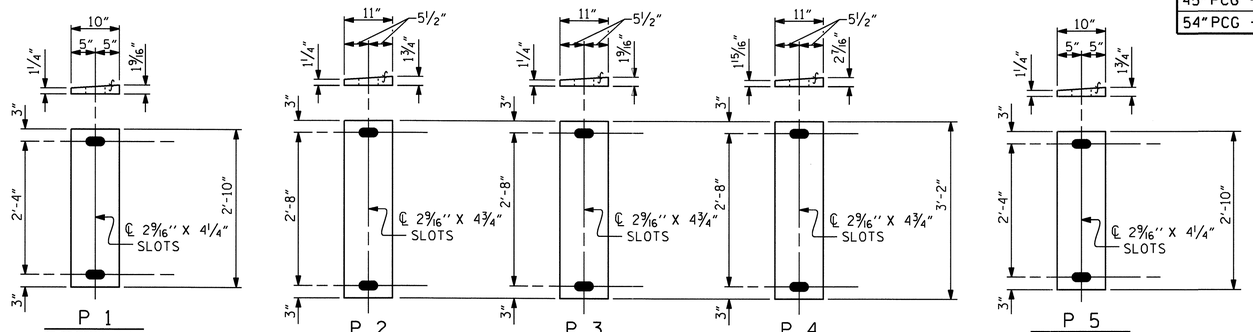

P 1 (EXPANSION) P1 (6 REQ'D)

P 2 (EXPANSION) P2 (3 REQ'D)

P 3 (EXPANSION) P3 (6 REQ'D)

P 4 (EXPANSION) P4 (3 REQ'D)

P 5 (EXPANSION) P5 (6 REQ'D)

SOLE PLATE DETAILS ("P")

PROJECT NO. R-2233AB

RUTHERFORD COUNTY

STATION: 560+00.35 -L-

STATE OF NORTH CAROLINA
DEPARTMENT OF TRANSPORTATION
RALEIGH

STANDARD

ELASTOMERIC BEARING DETAILS

PRESTRESSED CONCRETE GIRDER SUPERSTRUCTURE

ASSEMBLED BY : D. HODGE	DATE : 2/10
CHECKED BY : M.C. CHEEK	DATE : 5/10
DRAWN BY : WJH 8/89	REV. 10/17/00 RWW/LES
CHECKED BY : CRK 8/89	REV. 7/10/01 RWW/LES
	REV. 5/1/06 TLA/GM

REVISIONS							SHEET NO.
NO.	BY:	DATE:	NO.	BY:	DATE:		S-161
1			3				TOTAL SHEETS
2			4				184

NORTH CAROLINA PROFESSIONAL SEAL 20125 ENGINEER MARSHALL C. CHEEK, JR.

STR. #5

STD. NO. EB3

06-AUG-2010 13:59
R:\Structures\Str#5\dhodge\R-2233AB_SD_BG.dgn
dahodge

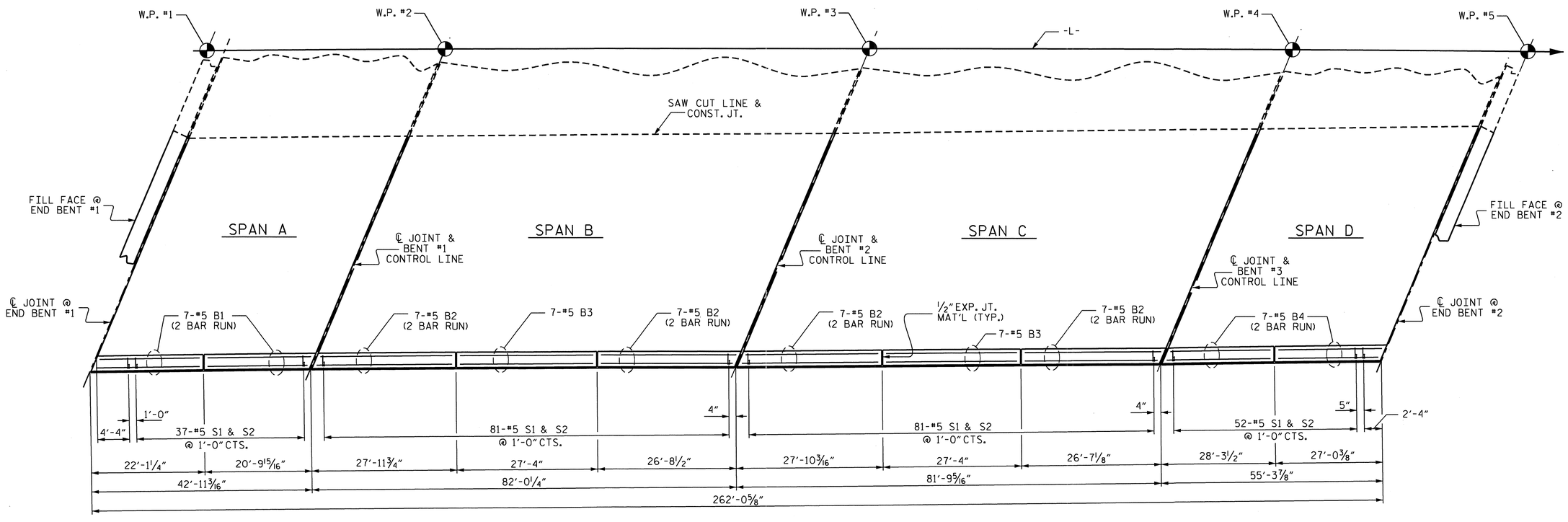

PLAN

PROJECT NO. R-2233AB
RUTHERFORD COUNTY
STATION: 560+00.35 -L-

SHEET 1 OF 2

STATE OF NORTH CAROLINA
DEPARTMENT OF TRANSPORTATION
RALEIGH

CONCRETE BARRIER RAIL

NORTH CAROLINA PROFESSIONAL SEAL 20125 ENGINEER MARSHALL G. CHEEK, JR.
8-30-10

REVISIONS						SHEET NO.
NO.	BY:	DATE:	NO.	BY:	DATE:	S-162
1			3			TOTAL SHEETS
2			4			184

STR. #5

DRAWN BY : D. HODGE DATE : 3/10
CHECKED BY : M.G. CHEEK DATE : 5/10

14-JUL-2010 11:49
R:\Structures\Str#5\dhodge\R-2233AB_SD_BR.dgn
dahodge

NOTES

THE BARRIER RAIL IN EACH SPAN SHALL NOT BE CAST UNTIL ALL SLAB CONCRETE IN THAT SPAN HAS BEEN CAST AND HAS REACHED A MINIMUM COMPRESSIVE STRENGTH OF 3,000 PSI.

WHEN EVAZOTE JOINT SEAL IS REQUIRED, THE JOINT IN THE DECK SHALL BE SAWED PRIOR TO THE CASTING OF BARRIER RAIL.

ALL REINFORCING STEEL IN BARRIER RAILS SHALL BE EPOXY COATED.

THE #5 S3 AND #5 S4 BARS SHALL BE INSTALLED, USING AN ADHESIVE ANCHORING SYSTEM, AFTER SAWING THE JOINT. THE YIELD LOAD FOR THE #5 S3 AND #5 S4 BARS IS 18.6 KIPS. FIELD TESTING FOR THE ADHESIVE BONDING SYSTEM IS NOT REQUIRED.

VERTICAL GROOVED CONTRACTION JOINTS, 1/2" IN DEPTH, SHALL BE TOOLED IN ALL EXPOSED FACES OF THE BARRIER RAIL AND IN ACCORDANCE WITH ARTICLE 825-10(B) OF THE STANDARD SPECIFICATIONS. THE CONTRACTION JOINT SHALL BE LOCATED AT EACH THIRD POINT BETWEEN BARRIER RAIL EXPANSION JOINTS. ONLY ONE CONTRACTION JOINT IS REQUIRED AT MIDPOINT OF BARRIER RAIL SEGMENTS LESS THAN 20 FEET IN LENGTH AND NO CONTRACTION JOINTS ARE REQUIRED FOR THOSE SEGMENTS LESS THAN 10 FEET IN LENGTH.

BAR TYPES

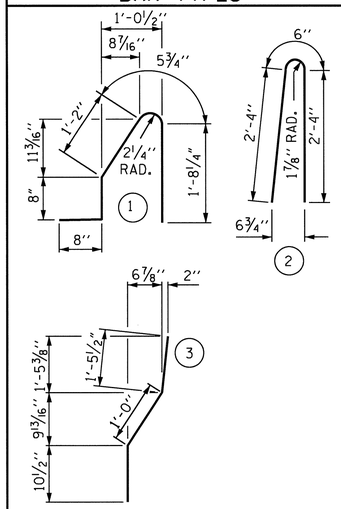

ALL BAR DIMENSIONS ARE OUT TO OUT

BILL OF MATERIAL

FOR CONCRETE BARRIER RAIL ONLY

BAR	NO.	SIZE	TYPE	LENGTH	WEIGHT
* S1	253	#5	1	4'-8"	1231
* S2	253	#5	2	5'-2"	1363
* S3	6	#5	3	3'-4"	21
* S4	6	#5	STR	3'-2"	20
* B1	28	#5	STR	12'-6"	365
* B2	56	#5	STR	15'-5"	900
* B3	14	#5	STR	26'-11"	393
* B4	28	#5	STR	15'-7"	455

* EPOXY COATED REINFORCING STEEL	4,748 LBS.
CLASS AA CONCRETE	26.2 CU. YDS.
CONCRETE BARRIER RAIL	262.05 LIN. FT.

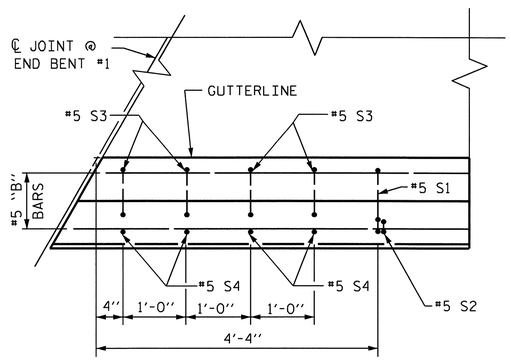

PLAN

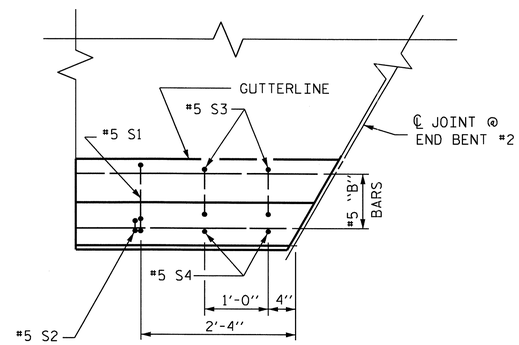

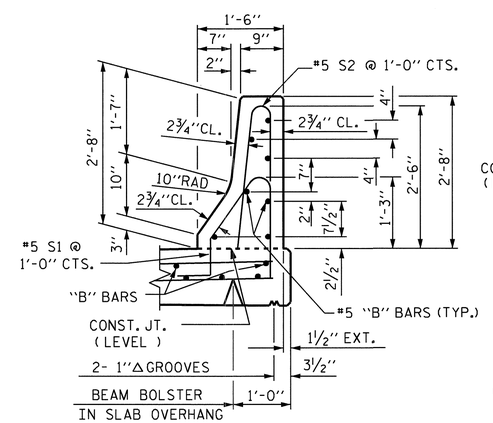

SECTION THRU RAIL

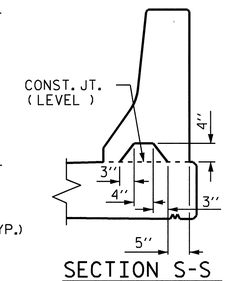

SECTION S-S

AT DAM IN OPEN JOINT
(THIS IS TO BE USED ONLY WHEN SLIP FORM IS USED)

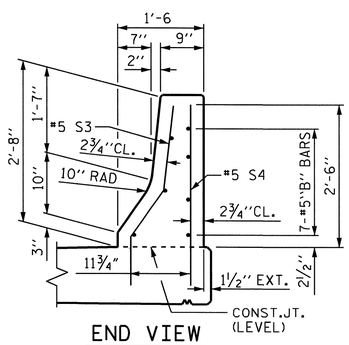

END VIEW

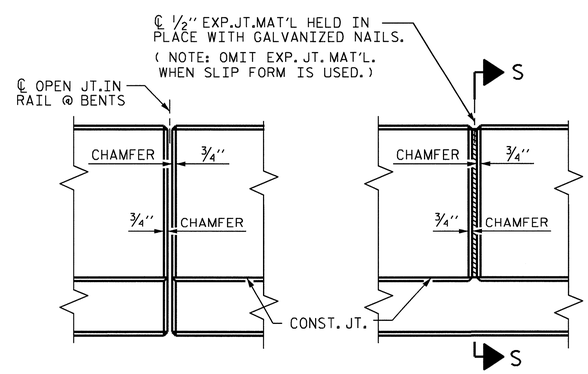

ELEVATION AT EXPANSION JOINTS

END OF RAIL DETAILS

FOR ADHESIVE ANCHORING AT SAWED JOINTS

BARRIER RAIL DETAILS

PROJECT NO. R-2233AB

RUTHERFORD COUNTY

STATION: 560+00.35 -L-

SHEET 2 OF 2

STATE OF NORTH CAROLINA
DEPARTMENT OF TRANSPORTATION
RALEIGH

STANDARD

CONCRETE BARRIER RAIL

NORTH CAROLINA PROFESSIONAL SEAL 20125 ENGINEER MARSHALL G. CHEEK, JR.
9-20-10

ASSEMBLED BY : D. HODGE	DATE : 3/10		
CHECKED BY : M.G. CHEEK	DATE : 5/10		
DRAWN BY : ARB 5/87	REV. 10/17/00	RWW/LES	
CHECKED BY : SJD 9/87	REV. 5/7/03R	RWW/JTE	
	REV. 5/1/06	TLA/GM	

REVISIONS

NO.	BY:	DATE:	NO.	BY:	DATE:
1			3		
2			4		

SHEET NO. S-163

TOTAL SHEETS 184

STR #5

STD. NO. CBR1

15-SEP-2010 14:56
R:\Structures\FinalPlans\Str. #5\R-2233AB_SD_STR#5_09_BR.dgn
afigueroa

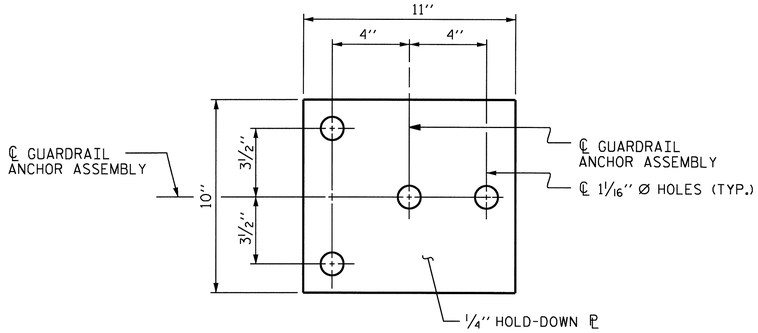

PLAN

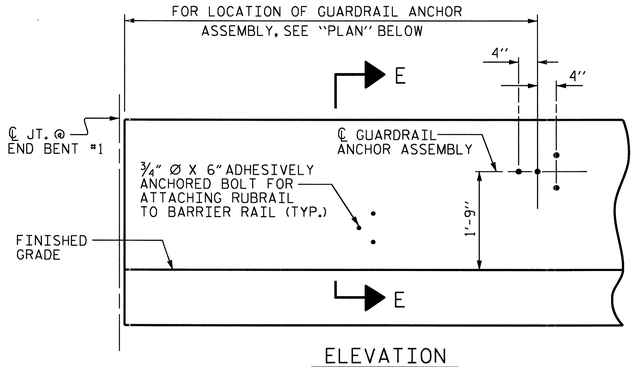

ELEVATION

FOR LOCATION OF RUBRAIL, SEE ROADWAY STD. 862.03

NOTES

THE GUARDRAIL ANCHOR ASSEMBLY SHALL CONSIST OF A 1/4'' HOLD DOWN PLATE AND 4 - 7/8'' Ø BOLTS WITH NUTS AND WASHERS, RUBRAIL, AND ADHESIVELY ANCHORED BOLTS.

THE HOLD-DOWN PLATE SHALL CONFORM TO AASHTO M270 GRADE 36. AFTER FABRICATION, THE HOLD-DOWN PLATE SHALL BE HOT-DIP GALVANIZED IN ACCORDANCE WITH AASHTO M111.

BOLTS SHALL CONFORM TO THE REQUIREMENTS OF ASTM A307 AND NUTS SHALL CONFORM TO THE REQUIREMENTS OF AASHTO M291. BOLTS, NUTS AND WASHERS SHALL BE GALVANIZED. (AT THE CONTRACTOR'S OPTION, STAINLESS STEEL BOLTS, NUTS AND WASHERS MAY BE USED AS AN ALTERNATE FOR THE 7/8'' Ø GALVANIZED BOLTS, NUTS AND WASHERS. THEY SHALL CONFORM TO OR EXCEED THE MECHANICAL REQUIREMENTS OF ASTM A307. THE USE OF THIS ALTERNATE SHALL BE APPROVED BY THE ENGINEER.)

THE GUARDRAIL ANCHOR ASSEMBLY IS REQUIRED AT ALL POINTS WHERE APPROACH GUARDRAIL IS TO BE ATTACHED TO THE END OF BARRIER RAIL. FOR POINTS OF ATTACHMENT, SEE SKETCH.

AFTER INSTALLATION, THE EXPOSED THREAD OF THE BOLT SHALL BE BURRED WITH A SHARP POINTED TOOL.

THE COST OF THE GUARDRAIL ANCHOR ASSEMBLY SHALL BE INCLUDED IN THE UNIT CONTRACT PRICE BID FOR CONCRETE BARRIER RAIL.

THE 1 1/4'' Ø HOLES SHALL BE FORMED OR DRILLED WITH A CORE BIT. IMPACT TOOLS WILL NOT BE PERMITTED. ANY CONCRETE DAMAGED BY THIS WORK SHALL BE REPAIRED TO THE SATISFACTION OF THE ENGINEER.

THE C6 X 8.2 RUBRAIL IS TO BE ADHESIVELY ANCHORED TO THE RAIL USING THREE 3/4" Ø X 6" BOLTS WITH WASHERS. LEVEL ONE FIELD TESTING IS REQUIRED, AND THE YIELD LOAD OF THE 3/4" Ø BOLT IS 12 KIPS. FOR ADHESIVELY ANCHORED ANCHOR BOLTS OR DOWELS, SEE SPECIAL PROVISIONS. SEE ROADWAY STANDARD 862.03 FOR DETAILS AND LOCATION OF THE RUBRAIL.

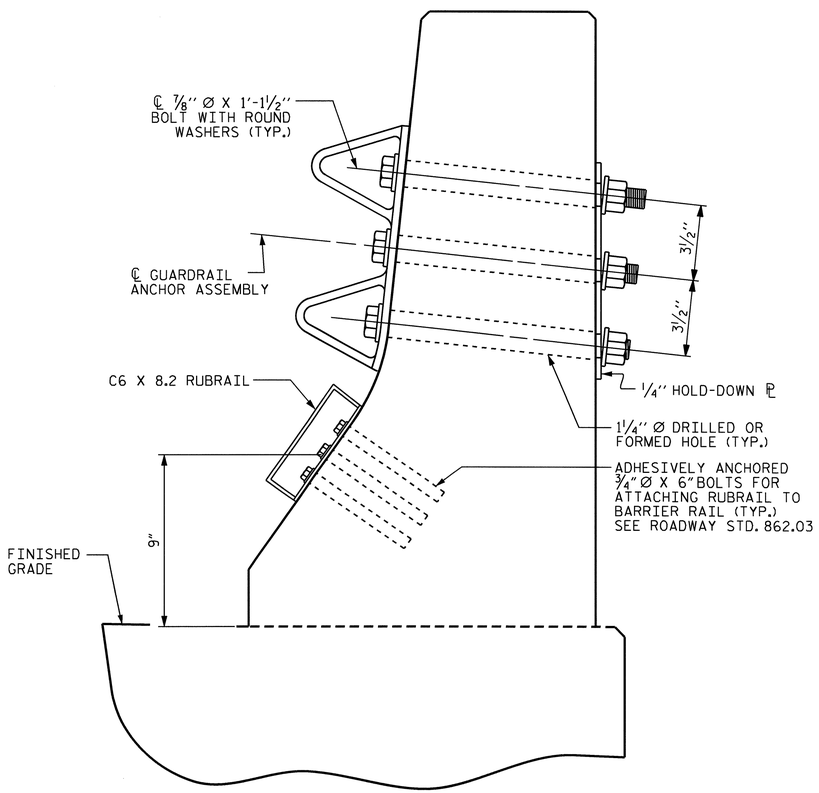

SECTION E-E

GUARDRAIL ANCHOR ASSEMBLY DETAILS

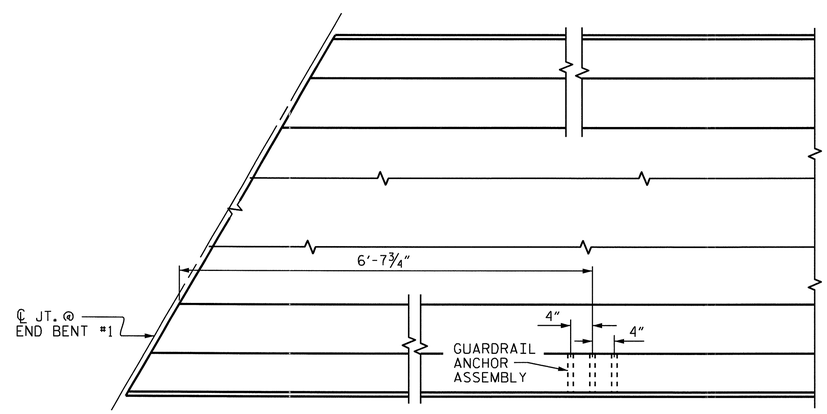

PLAN

LOCATION OF ANCHORS FOR GUARDRAIL

END BENT NO.1 SHOWN, END BENT NO.2 SIMILAR

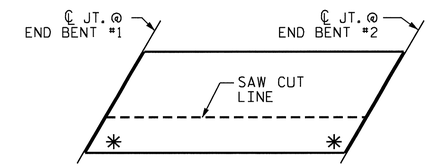

SKETCH SHOWING POINTS OF ATTACHMENTS

✳ DENOTES GUARDRAIL ANCHOR ASSEMBLY

PROJECT NO. R-2233AB
RUTHERFORD COUNTY
STATION: 560+00.35 -L-

STATE OF NORTH CAROLINA
DEPARTMENT OF TRANSPORTATION
RALEIGH

STANDARD
GUARDRAIL ANCHORAGE FOR BARRIER RAIL

NORTH CAROLINA PROFESSIONAL SEAL 20125 ENGINEER MOHSAIN R. EMEK, JR. 9-10-10

REVISIONS								SHEET NO.
NO.	BY:	DATE:	NO.	BY:	DATE:			S-164
1			3					TOTAL SHEETS
2			4					184

ASSEMBLED BY : D. HODGE	DATE : 8/10
CHECKED BY : M.G. CHEEK	DATE : 8/10
DRAWN BY : TLA 5/06	ADDED 5/1/06R KMM/GM
CHECKED BY : GM 5/06	

15-SEP-2010 14:56
R:\Structures\FinalPlans\Str. #5\R-2233AB_SD_STR#5_09_BR.dgn
afigueroa

(SHT 2) STR. #5 STD. NO. GRA2

BAR SCHEDULE

SPAN A

BAR	No.	SIZE	TYPE	LENGTH	WEIGHT
* A1	41	#5	STR.	22'-3"	951
A2	41	#5	STR.	22'-3"	951
* A101	2	#5	STR.	21'-7"	45
* A102	2	#5	STR.	20'-11"	44
* A103	2	#5	STR.	20'-2"	42
* A104	2	#5	STR.	19'-6"	41
* A105	2	#5	STR.	18'-10"	39
* A106	2	#5	STR.	18'-1"	38
* A107	2	#5	STR.	17'-5"	36
* A108	2	#5	STR.	16'-9"	35
* A109	2	#5	STR.	16'-0"	33
* A110	2	#5	STR.	15'-4"	32
* A111	2	#5	STR.	14'-8"	31
* A112	2	#5	STR.	13'-11"	29
* A113	2	#5	STR.	13'-3"	28
* A114	2	#5	STR.	12'-7"	26
* A115	2	#5	STR.	11'-11"	25
* A116	2	#5	STR.	11'-2"	23
* A117	2	#5	STR.	10'-6"	22
* A118	2	#5	STR.	9'-10"	21
* A119	2	#5	STR.	9'-1"	19
* A120	2	#5	STR.	8'-5"	18
* A121	2	#5	STR.	7'-9"	16
* A122	2	#5	STR.	7'-0"	15
* A123	2	#5	STR.	6'-4"	13
* A124	2	#5	STR.	5'-8"	12
* A125	2	#5	STR.	5'-0"	10
* A126	2	#5	STR.	4'-3"	9
* A127	2	#5	STR.	3'-7"	7
* A128	2	#5	STR.	2'-11"	6
* A129	2	#5	STR.	2'-2"	5
* A130	2	#5	STR.	1'-6"	3
A201	2	#5	STR.	21'-7"	45
A202	2	#5	STR.	20'-11"	44
A203	2	#5	STR.	20'-2"	42
A204	2	#5	STR.	19'-6"	41
A205	2	#5	STR.	18'-10"	39
A206	2	#5	STR.	18'-1"	38
A207	2	#5	STR.	17'-5"	36
A208	2	#5	STR.	16'-9"	35
A209	2	#5	STR.	16'-0"	33
A210	2	#5	STR.	15'-4"	32
A211	2	#5	STR.	14'-8"	31
A212	2	#5	STR.	13'-11"	29
A213	2	#5	STR.	13'-3"	28
A214	2	#5	STR.	12'-7"	26
A215	2	#5	STR.	11'-11"	25
A216	2	#5	STR.	11'-2"	23
A217	2	#5	STR.	10'-6"	22
A218	2	#5	STR.	9'-10"	21
A219	2	#5	STR.	9'-1"	19
A220	2	#5	STR.	8'-5"	18
A221	2	#5	STR.	7'-9"	16
A222	2	#5	STR.	7'-0"	15
A223	2	#5	STR.	6'-4"	13
A224	2	#5	STR.	5'-8"	12
A225	2	#5	STR.	5'-0"	10
A226	2	#5	STR.	4'-3"	9
A227	2	#5	STR.	3'-7"	7
A228	2	#5	STR.	2'-11"	6
A229	2	#5	STR.	2'-2"	5
A230	2	#5	STR.	1'-6"	3
* B1	32	#4	STR.	22'-2"	474
B2	24	#5	STR.	42'-4"	1060
* D1	28	#6	STR.	2'-6"	105
* G1	2	#5	STR.	28'-11"	60
* J1	27	#4	5	1'-5"	26
* K1	8	#8	1	13'-11"	297
* K2	4	#8	2	20'-9"	222
K3	12	#6	STR.	8'-3"	149
* S1	28	#5	3	4'-10"	141
* S2	14	#4	4	4'-9"	44
* S3	14	#4	4	3'-5"	32

REINFORCING STEEL 2,883 LBS.

* EPOXY COATED REINFORCING STEEL 3,075 LBS.

* THESE BARS ARE EPOXY COATED

SPAN B

BAR	No.	SIZE	TYPE	LENGTH	WEIGHT
* A1	108	#5	STR.	22'-3"	2506
A2	108	#5	STR.	22'-3"	2506
* A101	2	#5	STR.	21'-7"	45
* A102	2	#5	STR.	20'-11"	44
* A103	2	#5	STR.	20'-2"	42
* A104	2	#5	STR.	19'-6"	41
* A105	2	#5	STR.	18'-10"	39
* A106	2	#5	STR.	18'-1"	38
* A107	2	#5	STR.	17'-5"	36
* A108	2	#5	STR.	16'-9"	35
* A109	2	#5	STR.	16'-0"	33
* A110	2	#5	STR.	15'-4"	32
* A111	2	#5	STR.	14'-8"	31
* A112	2	#5	STR.	13'-11"	29
* A113	2	#5	STR.	13'-3"	28
* A114	2	#5	STR.	12'-7"	26
* A115	2	#5	STR.	11'-11"	25
* A116	2	#5	STR.	11'-2"	23
* A117	2	#5	STR.	10'-6"	22
* A118	2	#5	STR.	9'-10"	21
* A119	2	#5	STR.	9'-1"	19
* A120	2	#5	STR.	8'-5"	18
* A121	2	#5	STR.	7'-9"	16
* A122	2	#5	STR.	7'-0"	15
* A123	2	#5	STR.	6'-4"	13
* A124	2	#5	STR.	5'-8"	12
* A125	2	#5	STR.	5'-0"	10
* A126	2	#5	STR.	4'-3"	9
* A127	2	#5	STR.	3'-7"	7
* A128	2	#5	STR.	2'-11"	6
* A129	2	#5	STR.	2'-2"	5
* A130	2	#5	STR.	1'-6"	3
A201	2	#5	STR.	21'-7"	45
A202	2	#5	STR.	20'-11"	44
A203	2	#5	STR.	20'-2"	42
A204	2	#5	STR.	19'-6"	41
A205	2	#5	STR.	18'-10"	39
A206	2	#5	STR.	18'-1"	38
A207	2	#5	STR.	17'-5"	36
A208	2	#5	STR.	16'-9"	35
A209	2	#5	STR.	16'-0"	33
A210	2	#5	STR.	15'-4"	32
A211	2	#5	STR.	14'-8"	31
A212	2	#5	STR.	13'-11"	29
A213	2	#5	STR.	13'-3"	28
A214	2	#5	STR.	12'-7"	26
A215	2	#5	STR.	11'-11"	25
A216	2	#5	STR.	11'-2"	23
A217	2	#5	STR.	10'-6"	22
A218	2	#5	STR.	9'-10"	21
A219	2	#5	STR.	9'-1"	19
A220	2	#5	STR.	8'-5"	18
A221	2	#5	STR.	7'-9"	16
A222	2	#5	STR.	7'-0"	15
A223	2	#5	STR.	6'-4"	13
A224	2	#5	STR.	5'-8"	12
A225	2	#5	STR.	5'-0"	10
A226	2	#5	STR.	4'-3"	9
A227	2	#5	STR.	3'-7"	7
A228	2	#5	STR.	2'-11"	6
A229	2	#5	STR.	2'-2"	5
A230	2	#5	STR.	1'-6"	3
* B3	48	#4	STR.	28'-6"	914
B4	48	#5	STR.	41'-10"	2094
* D1	54	#6	STR.	2'-6"	203
* G1	2	#5	STR.	28'-11"	60
* J1	54	#4	5	1'-5"	51
* K4	8	#8	1	14'-6"	310
* K5	4	#8	2	21'-11"	234
K6	12	#6	STR.	7'-7"	137
* S4	28	#5	3	5'-10"	170
* S5	28	#4	4	3'-11"	73

REINFORCING STEEL 5,460 LBS.

* EPOXY COATED REINFORCING STEEL 5,244 LBS.

* THESE BARS ARE EPOXY COATED

SPAN C

BAR	No.	SIZE	TYPE	LENGTH	WEIGHT
* A1	108	#5	STR.	22'-3"	2506
A2	108	#5	STR.	22'-3"	2506
* A101	2	#5	STR.	21'-7"	45
* A102	2	#5	STR.	20'-11"	44
* A103	2	#5	STR.	20'-2"	42
* A104	2	#5	STR.	19'-6"	41
* A105	2	#5	STR.	18'-10"	39
* A106	2	#5	STR.	18'-1"	38
* A107	2	#5	STR.	17'-5"	36
* A108	2	#5	STR.	16'-9"	35
* A109	2	#5	STR.	16'-0"	33
* A110	2	#5	STR.	15'-4"	32
* A111	2	#5	STR.	14'-8"	31
* A112	2	#5	STR.	13'-11"	29
* A113	2	#5	STR.	13'-3"	28
* A114	2	#5	STR.	12'-7"	26
* A115	2	#5	STR.	11'-11"	25
* A116	2	#5	STR.	11'-2"	23
* A117	2	#5	STR.	10'-6"	22
* A118	2	#5	STR.	9'-10"	21
* A119	2	#5	STR.	9'-1"	19
* A120	2	#5	STR.	8'-5"	18
* A121	2	#5	STR.	7'-9"	16
* A122	2	#5	STR.	7'-0"	15
* A123	2	#5	STR.	6'-4"	13
* A124	2	#5	STR.	5'-8"	12
* A125	2	#5	STR.	5'-0"	10
* A126	2	#5	STR.	4'-3"	9
* A127	2	#5	STR.	3'-7"	7
* A128	2	#5	STR.	2'-11"	6
* A129	2	#5	STR.	2'-2"	5
* A130	2	#5	STR.	1'-6"	3
A201	2	#5	STR.	21'-7"	45
A202	2	#5	STR.	20'-11"	44
A203	2	#5	STR.	20'-2"	42
A204	2	#5	STR.	19'-6"	41
A205	2	#5	STR.	18'-10"	39
A206	2	#5	STR.	18'-1"	38
A207	2	#5	STR.	17'-5"	36
A208	2	#5	STR.	16'-9"	35
A209	2	#5	STR.	16'-0"	33
A210	2	#5	STR.	15'-4"	32
A211	2	#5	STR.	14'-8"	31
A212	2	#5	STR.	13'-11"	29
A213	2	#5	STR.	13'-3"	28
A214	2	#5	STR.	12'-7"	26
A215	2	#5	STR.	11'-11"	25
A216	2	#5	STR.	11'-2"	23
A217	2	#5	STR.	10'-6"	22
A218	2	#5	STR.	9'-10"	21
A219	2	#5	STR.	9'-1"	19
A220	2	#5	STR.	8'-5"	18
A221	2	#5	STR.	7'-9"	16
A222	2	#5	STR.	7'-0"	15
A223	2	#5	STR.	6'-4"	13
A224	2	#5	STR.	5'-8"	12
A225	2	#5	STR.	5'-0"	10
A226	2	#5	STR.	4'-3"	9
A227	2	#5	STR.	3'-7"	7
A228	2	#5	STR.	2'-11"	6
A229	2	#5	STR.	2'-2"	5
A230	2	#5	STR.	1'-6"	3
* B3	48	#4	STR.	28'-6"	914
B4	48	#5	STR.	41'-10"	2094
* D1	54	#6	STR.	2'-6"	203
* G1	2	#5	STR.	28'-11"	60
* J1	54	#4	5	1'-5"	51
* K4	8	#8	1	14'-6"	310
* K5	4	#8	2	21'-11"	234
K6	12	#6	STR.	7'-7"	137
* S4	28	#5	3	5'-10"	170
* S5	28	#4	4	3'-11"	73

REINFORCING STEEL 5,460 LBS.

* EPOXY COATED REINFORCING STEEL 5,244 LBS.

* THESE BARS ARE EPOXY COATED

SPAN D

BAR	No.	SIZE	TYPE	LENGTH	WEIGHT
* A1	63	#5	STR.	22'-3"	1462
A2	63	#5	STR.	22'-3"	1462
* A101	2	#5	STR.	21'-7"	45
* A102	2	#5	STR.	20'-11"	44
* A103	2	#5	STR.	20'-2"	42
* A104	2	#5	STR.	19'-6"	41
* A105	2	#5	STR.	18'-10"	39
* A106	2	#5	STR.	18'-1"	38
* A107	2	#5	STR.	17'-5"	36
* A108	2	#5	STR.	16'-9"	35
* A109	2	#5	STR.	16'-0"	33
* A110	2	#5	STR.	15'-4"	32
* A111	2	#5	STR.	14'-8"	31
* A112	2	#5	STR.	13'-11"	29
* A113	2	#5	STR.	13'-3"	28
* A114	2	#5	STR.	12'-7"	26
* A115	2	#5	STR.	11'-11"	25
* A116	2	#5	STR.	11'-2"	23
* A117	2	#5	STR.	10'-6"	22
* A118	2	#5	STR.	9'-10"	21
* A119	2	#5	STR.	9'-1"	19
* A120	2	#5	STR.	8'-5"	18
* A121	2	#5	STR.	7'-9"	16
* A122	2	#5	STR.	7'-0"	15
* A123	2	#5	STR.	6'-4"	13
* A124	2	#5	STR.	5'-8"	12
* A125	2	#5	STR.	5'-0"	10
* A126	2	#5	STR.	4'-3"	9
* A127	2	#5	STR.	3'-7"	7
* A128	2	#5	STR.	2'-11"	6
* A129	2	#5	STR.	2'-2"	5
* A130	2	#5	STR.	1'-6"	3
A201	2	#5	STR.	21'-7"	45
A202	2	#5	STR.	20'-11"	44
A203	2	#5	STR.	20'-2"	42
A204	2	#5	STR.	19'-6"	41
A205	2	#5	STR.	18'-10"	39
A206	2	#5	STR.	18'-1"	38
A207	2	#5	STR.	17'-5"	36
A208	2	#5	STR.	16'-9"	35
A209	2	#5	STR.	16'-0"	33
A210	2	#5	STR.	15'-4"	32
A211	2	#5	STR.	14'-8"	31
A212	2	#5	STR.	13'-11"	29
A213	2	#5	STR.	13'-3"	28
A214	2	#5	STR.	12'-7"	26
A215	2	#5	STR.	11'-11"	25
A216	2	#5	STR.	11'-2"	23
A217	2	#5	STR.	10'-6"	22
A218	2	#5	STR.	9'-10"	21
A219	2	#5	STR.	9'-1"	19
A220	2	#5	STR.	8'-5"	18
A221	2	#5	STR.	7'-9"	16
A222	2	#5	STR.	7'-0"	15
A223	2	#5	STR.	6'-4"	13
A224	2	#5	STR.	5'-8"	12
A225	2	#5	STR.	5'-0"	10
A226	2	#5	STR.	4'-3"	9
A227	2	#5	STR.	3'-7"	7
A228	2	#5	STR.	2'-11"	6
A229	2	#5	STR.	2'-2"	5
A230	2	#5	STR.	1'-6"	3
* B5	32	#4	STR.	28'-5"	607
B6	24	#5	STR.	54'-9"	1371
* D1	36	#6	STR.	2'-6"	135
* G1	2	#5	STR.	28'-11"	60
* J1	27	#4	5	1'-5"	26
* K1	8	#8	1	13'-11"	297
* K2	4	#8	2	20'-9"	222
K3	12	#6	STR.	8'-3"	149
* S1	28	#5	3	4'-10"	141
* S2	14	#4	4	4'-9"	44
* S3	14	#4	4	3'-5"	32

REINFORCING STEEL 3,705 LBS.

* EPOXY COATED REINFORCING STEEL 3,749 LBS.

* THESE BARS ARE EPOXY COATED

BAR TYPES

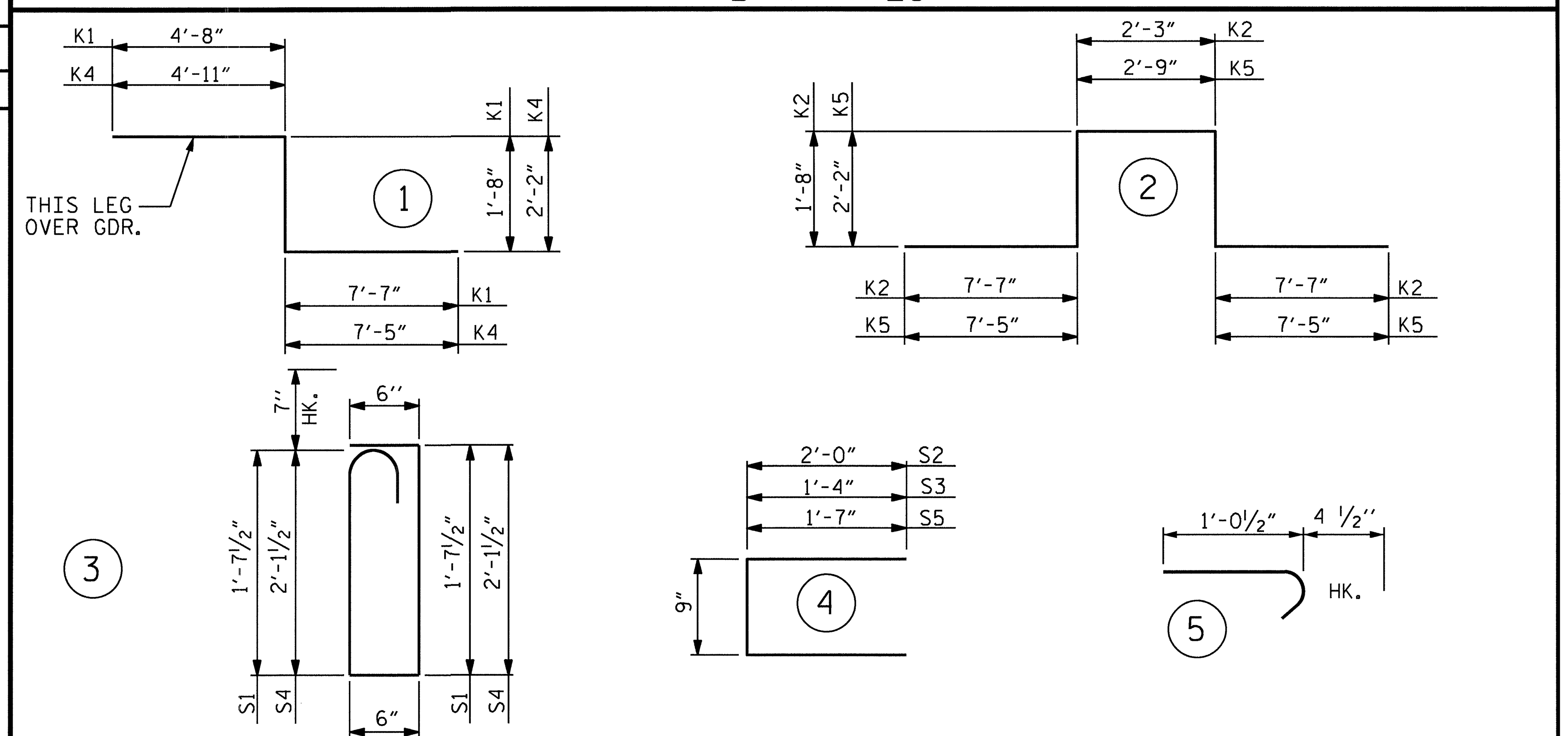

ALL BAR DIMENSIONS ARE OUT TO OUT

SUPERSTRUCTURE BILL OF MATERIAL

	CLASS AA CONCRETE	REINFORCING STEEL	EPOXY COATED REINFORCING STEEL
	(CU. YDS.)	(LBS.)	(LBS.)
SPAN "A"	31.3	2,883	3,075
SPAN "B"	58.2	5,460	5,244
SPAN "C"	58.1	5,460	5,244
SPAN "D"	39.7	3,705	3,749
TOTALS**	187.3	17,508	17,312

** QUANTITIES FOR BARRIER RAIL ARE NOT INCLUDED

GROOVING BRIDGE FLOORS

APPROACH SLABS	602	SQ.FT.
BRIDGE DECK	5,006	SQ.FT.
TOTAL	5,608	SQ.FT.

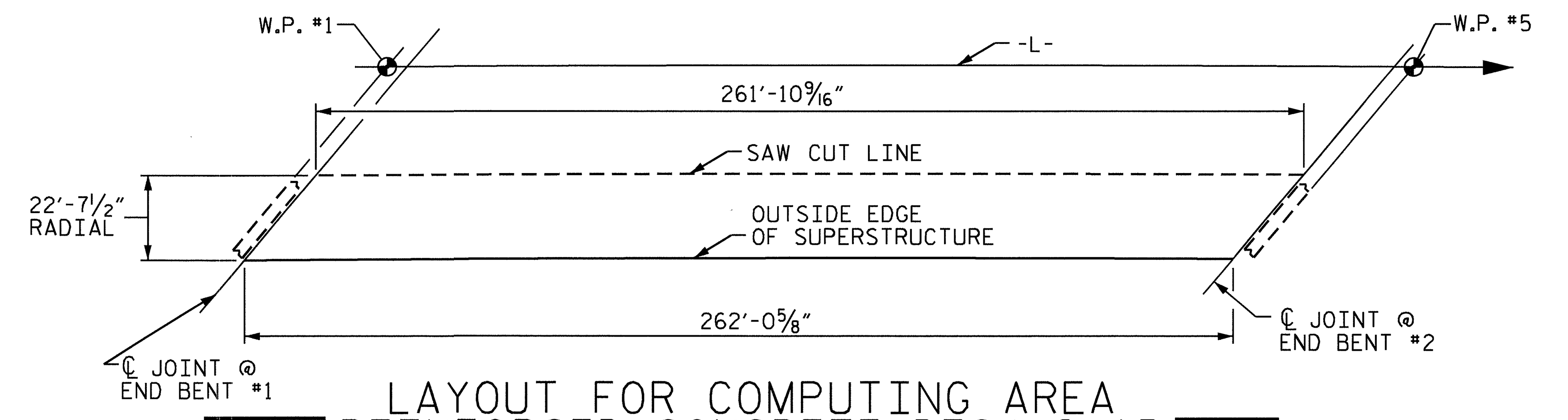

LAYOUT FOR COMPUTING AREA REINFORCED CONCRETE DECK SLAB (SQ. FT. = 5,927)

SUPERSTRUCTURE REINFORCING STEEL LENGTHS ARE BASED ON THE FOLLOWING MINIMUM SPLICE LENGTHS

BAR SIZE	SUPERSTRUCTURE EXCEPT APPROACH SLABS, PARAPET, AND BARRIER RAIL		APPROACH SLABS		PARAPET AND BARRIER RAIL
	EPOXY COATED	UNCOATED	EPOXY COATED	UNCOATED	
#4	2'-0"	1'-9"	2'-0"	1'-9"	2'-9"
#5	2'-6"	2'-2"	2'-6"	2'-2"	3'-5"
#6	3'-0"	2'-7"	3'-10"	2'-7"	4'-4"
#7	5'-3"	3'-6"			
#8	6'-10"	4'-7"			

PROJECT NO. R-2233AB

RUTHERFORD COUNTY

STATION: 560+00.35 -L-

STATE OF NORTH CAROLINA
DEPARTMENT OF TRANSPORTATION
RALEIGH

STANDARD

SUPERSTRUCTURE BILL OF MATERIAL

NORTH CAROLINA PROFESSIONAL SEAL 20125 ENGINEER MARSHALL G. CHEEK, JR. 9.2010

REVISIONS							SHEET NO.
NO.	BY:	DATE:	NO.	BY:	DATE:		S-165
1			3				TOTAL SHEETS
2			4				184

STR. #5 STD. NO. BOM2

ASSEMBLED BY : D. HODGE		DATE : 3/10	
CHECKED BY : M.G. CHEEK		DATE : 5/10	
DRAWN BY : JMB 5/87		REV. 6/1/94	EEM/GRP
CHECKED BY : SJD 9/87		REV. 8/16/99	RWW/LES
		REV. 5/1/06	TLA/GM

15-SEP-2010 14:56
R:\Structures\Final Plans\Str. #5\R-2233AB_SD_STR#5_10_BM.dgn
afigueroa

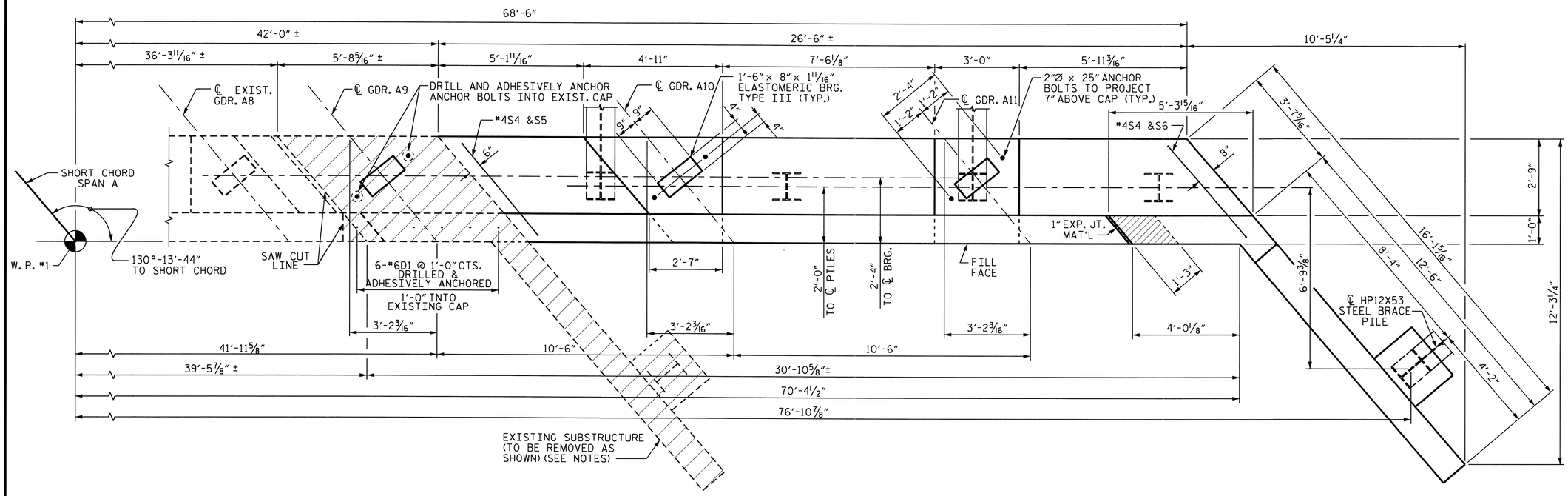

PLAN

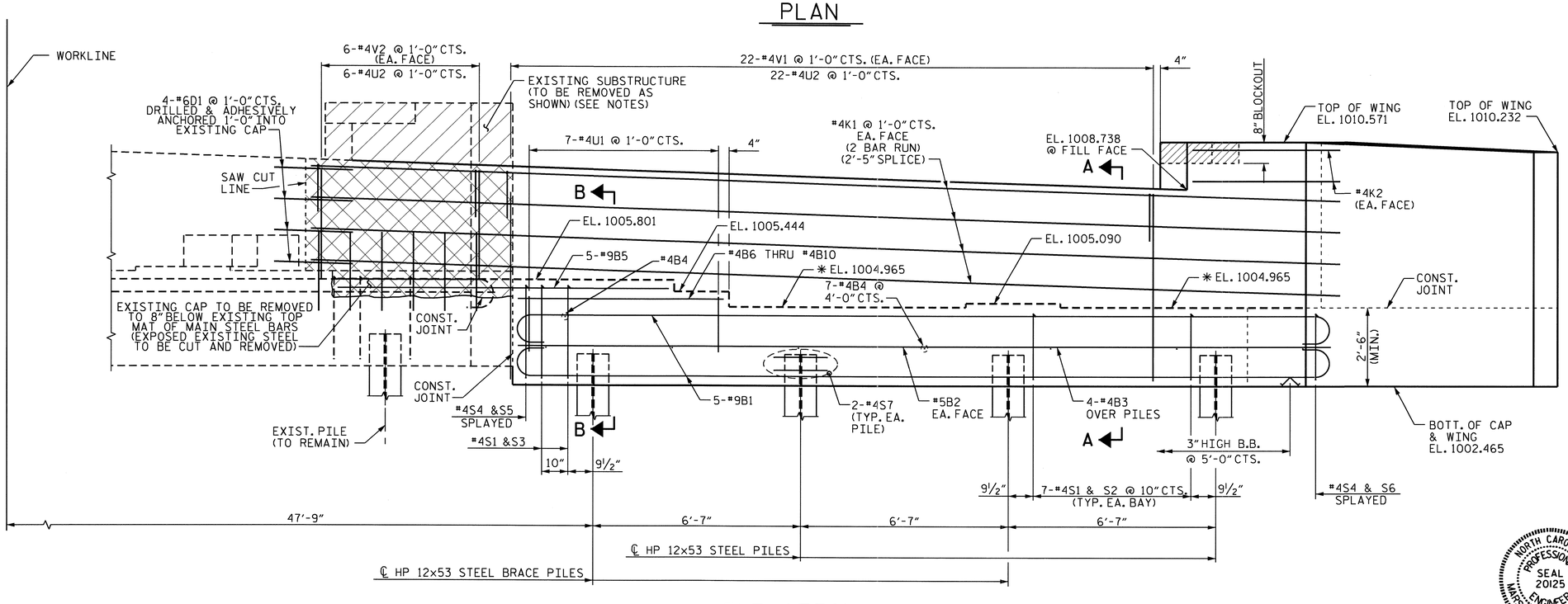

ELEVATION

(WING BRACE PILE NOT SHOWN FOR CLARITY)

✱ FOR LOCATION OF ELEVATIONS BETWEEN BRIDGE SEAT BUILD-UPS, SEE "SECTION A-A", SHEET 3 OF 3.

NOTES

STIRRUPS IN CAP MAY BE SHIFTED AS NECESSARY TO CLEAR ANCHOR BOLTS.

BACKWALL SHALL BE PLACED BEFORE APPLYING THE EPOXY PROTECTIVE COATING.

THE TOP SURFACE AREAS OF THE END BENT CAP SHALL BE CURED IN ACCORDANCE WITH THE STANDARD SPECIFICATIONS EXCEPT THE MEMBRANE CURING COMPOUND METHOD SHALL NOT BE USED.

THE TOP SURFACE OF THE CAP EXCEPT THE BRIDGE SEAT BUILDUPS SHALL BE SLOPED TRANSVERSELY FROM THE FILL FACE TO THE BACK FACE AT THE RATE OF 2%.

THE CONCRETE IN THE SHADED AREA OF THE WING SHALL BE POURED AFTER THE JOINT BETWEEN THE DECK AND THE APPROACH SLAB HAS BEEN SAWED AND THE BARRIER RAIL IS CAST IF SLIP FORMING IS USED.

FOR BOND OF NEW CONCRETE TO OLD, THE OLD CONCRETE SHALL BE THOROUGHLY ROUGHENED, CLEANED OF LOOSE MATERIAL, AND WETTED FOR A MINIMUM OF 2 HOURS PRIOR TO PLACING NEW CONCRETE. PAYMENT FOR THIS WORK SHALL BE INCLUDED IN THE CONTRACT PRICE FOR CLASS A CONCRETE.

THE CONTRACTOR SHALL USE ADHESIVELY ANCHORED DOWELS. LEVEL I FIELD TESTING IS REQUIRED, AND THE YIELD LOAD OF THE DOWELS IS 26.4K. FOR ADHESIVELY ANCHORED DOWELS, SEE SPECIAL PROVISIONS.

THE CONTRACTOR SHALL USE ADHESIVELY ANCHORED ANCHOR BOLTS AT GIRDER 9. THE YIELD LOAD OF THE ANCHOR BOLTS IS 145K. FIELD TESTING OF THE ADHESIVE BONDING SYSTEM IS NOT REQUIRED. FOR ADHESIVELY ANCHORED ANCHOR BOLTS, SEE SPECIAL PROVISIONS.

THE CONTRACTOR SHALL PROVIDE FOR INSTALLATION OF THE 4"Ø DRAIN PIPE THROUGH THE WING WALL AS REQUIRED FOR REINFORCED BRIDGE APPROACH FILLS, SEE THE ROADWAY PLANS. REINFORCING STEEL IN THE WING WALL MAY BE SHIFTED AS NECESSARY TO CLEAR THE DRAIN PIPE.

PORTION OF EXISTING SUBSTRUCTURE TO BE REMOVED AS DIRECTED BY ENGINEER.

PROJECT NO. R-2233AB
RUTHERFORD COUNTY
STATION: 560+00.35 -L-

SHEET 1 OF 3

STATE OF NORTH CAROLINA
DEPARTMENT OF TRANSPORTATION
RALEIGH

SUBSTRUCTURE
END BENT #1

REVISIONS						SHEET NO.
NO.	BY:	DATE:	NO.	BY:	DATE:	S-166
1			3			TOTAL SHEETS
2			4			184

NORTH CAROLINA PROFESSIONAL SEAL 20125 ENGINEER
MARSHALL C. CHEEK, JR.
9-21-10

DRAWN BY : Keith D. Layne DATE : 5/04/10
CHECKED BY : D. HODGE DATE : 7/10

21-SEP-2010 08:25
R:\Structures\Final Plans\Str. #5\R-2233AB_SD_STR#5_12_EB.dgn
dahodge

STR. #5

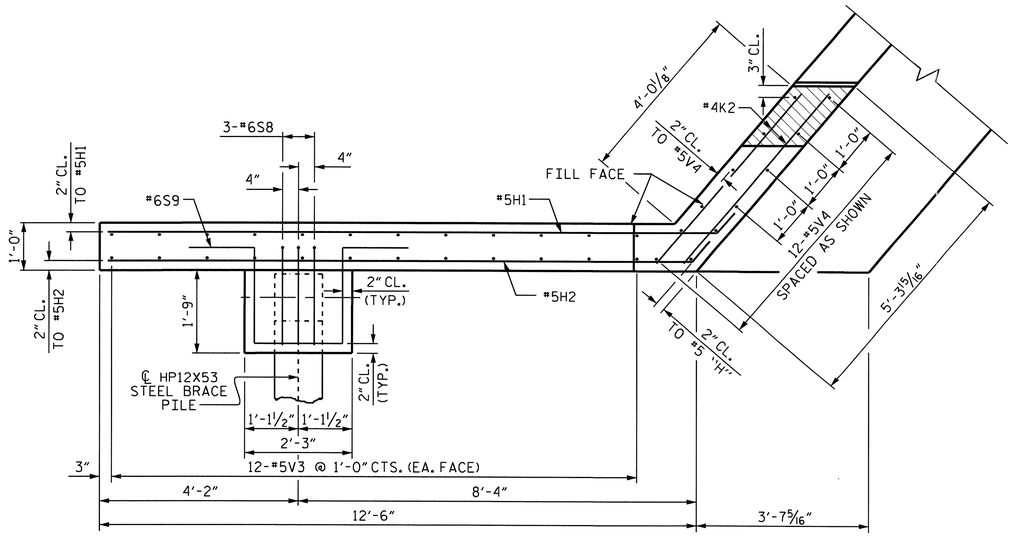

PLAN OF WING

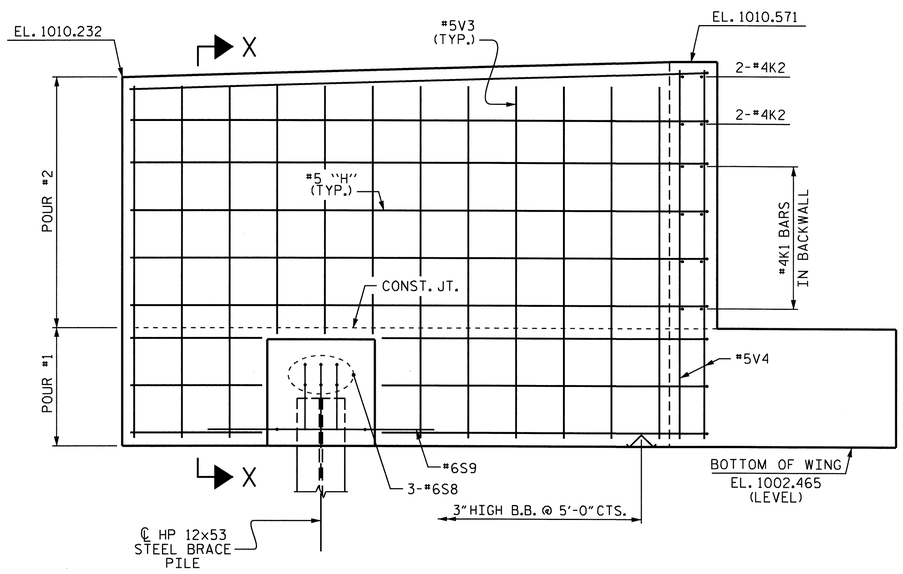

ELEVATION OF WING

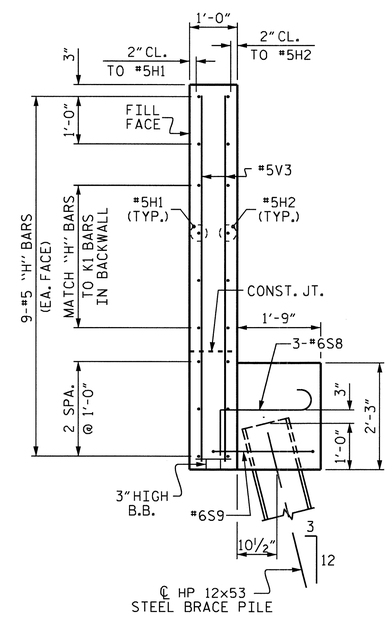

SECTION X-X

PROJECT NO. R-2233AB

RUTHERFORD COUNTY

STATION: 560+00.35 -L-

SHEET 2 OF 3

STATE OF NORTH CAROLINA
DEPARTMENT OF TRANSPORTATION
RALEIGH

SUBSTRUCTURE

END BENT #1

NORTH CAROLINA PROFESSIONAL SEAL 20125 ENGINEER
INTERNAL QUALITY CHECK
9-20-10

REVISIONS						SHEET NO.
NO.	BY:	DATE:	NO.	BY:	DATE:	S-167
1			3			TOTAL SHEETS
2			4			184

DRAWN BY : Keith D. Layne DATE : 5/04/10
CHECKED BY : D. HODGE DATE : 7/10

06-AUG-2010 07:28
R:\Structures\Str*5\klayne\R-2233AB_sd_Ebts_05.dgn
dahodge

STR. #5

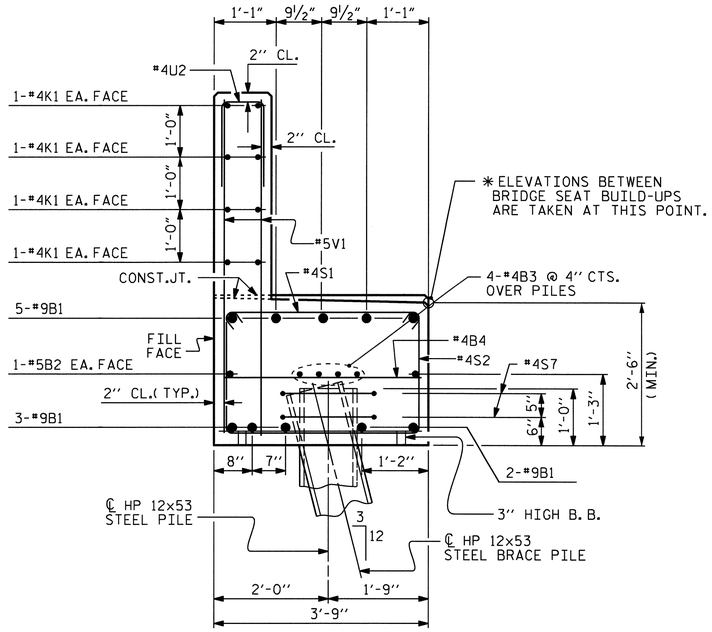

SECTION A-A

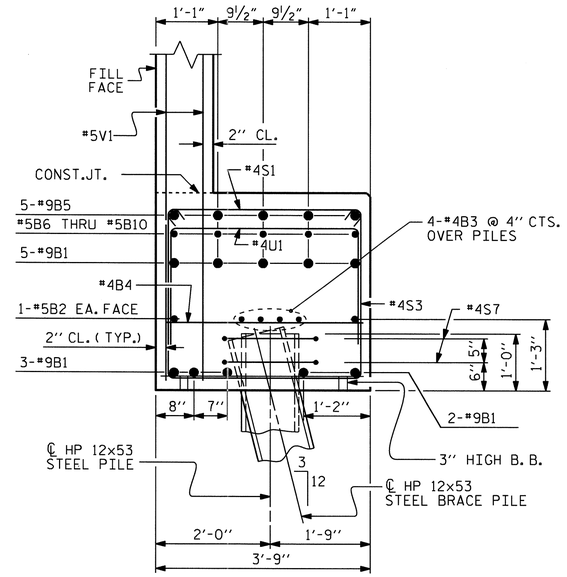

SECTION B-B

BAR TYPES

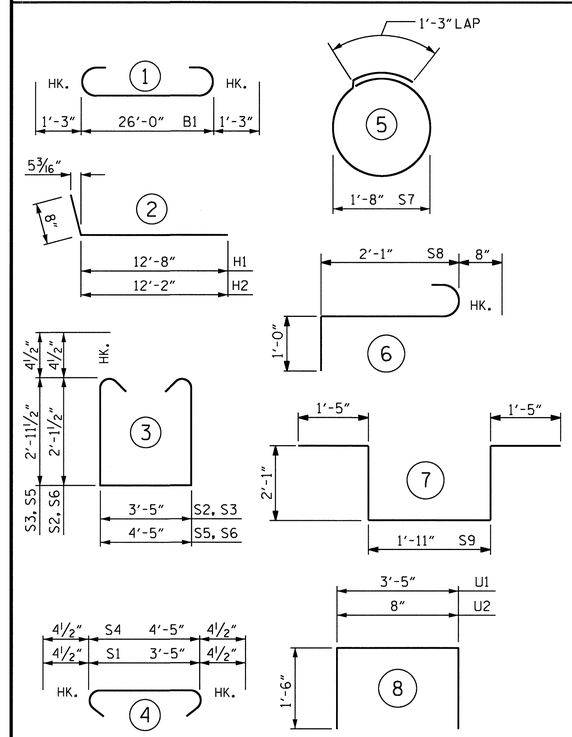

ALL BAR DIMENSIONS ARE OUT TO OUT.

BILL OF MATERIAL
END BENT #1

BAR	NO.	SIZE	TYPE	LENGTH	WEIGHT
B1	10	#9	1	28'-6"	969
B2	2	#5	STR	26'-2"	55
B3	4	#4	STR	26'-2"	70
B4	8	#4	STR	3'-5"	18
B5	5	#9	STR	10'-4"	176
B6	1	#4	STR	6'-8"	4
B7	1	#4	STR	7'-4"	5
B8	1	#4	STR	8'-0"	5
B9	1	#4	STR	8'-8"	6
B10	1	#4	STR	9'-5"	6
D1	10	#6	STR	2'-6"	38
H1	9	#5	2	13'-4"	125
H2	9	#5	2	12'-10"	120
K1	16	#4	STR	17'-1"	183
K2	4	#4	STR	4'-10"	13
S1	23	#4	4	4'-2"	64
S2	21	#4	3	8'-5"	118
S3	2	#4	3	10'-1"	13
S4	2	#4	4	5'-2"	7
S5	1	#4	3	11'-1"	7
S6	1	#4	3	9'-5"	6
S7	8	#4	5	6'-6"	35
S8	3	#6	6	3'-9"	17
S9	1	#6	7	8'-11"	13
U1	7	#4	8	6'-5"	30
U2	28	#4	8	3'-8"	69
V1	44	#4	STR	6'-9"	198
V2	12	#4	STR	3'-5"	27
V3	24	#5	STR	7'-5"	186
V4	12	#5	STR	7'-9"	97
REINFORCING STEEL Lbs.					2,680

CLASS "A" CONCRETE (Cu. Yds.)
POUR #1 CAP & LOWER WING = 11.7
POUR #2 UPPER WING & BACKWALL = 8.1
TOTAL Cu. Yds. 19.8

HP 12x53 STEEL PILES
No. 5 LIN. FT. 325

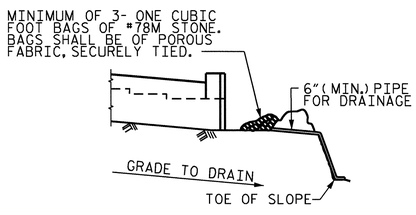

BAGGED STONE AND PIPE SHALL BE PLACED IMMEDIATELY AFTER COMPLETION OF END BENT EXCAVATION. PIPE MAY BE EITHER CONCRETE, CORRUGATED STEEL, CORRUGATED ALUMINUM ALLOY, OR CORRUGATED PLASTIC. PERFORATED PIPE WILL NOT BE ALLOWED.

BAGGED STONE SHALL REMAIN IN PLACE UNTIL THE ENGINEER DIRECTS THAT IT BE REMOVED. THE CONTRACTOR SHALL REMOVE AND DISPOSE OF SILT ACCUMULATIONS AT BAGGED STONE WHEN SO DIRECTED BY THE ENGINEER. BAGS SHALL BE REMOVED AND REPLACED WHENEVER THE ENGINEER DETERMINES THAT THEY HAVE DETERIORATED AND LOST THEIR EFFECTIVENESS.

NO SEPARATE PAYMENT WILL BE MADE FOR THIS WORK AND THE ENTIRE COST OF THIS WORK SHALL BE INCLUDED IN THE UNIT CONTRACT PRICE BID FOR THE SEVERAL PAY ITEMS.

TEMPORARY DRAINAGE AT END BENT

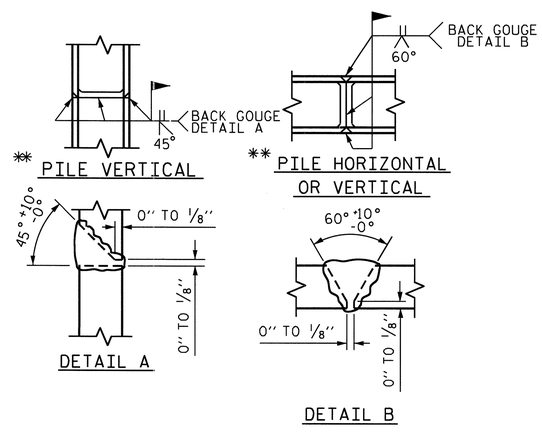

PILE SPLICE DETAILS

✱✱ POSITION OF PILE DURING WELDING.

PROJECT NO. R-2233AB
RUTHERFORD COUNTY
STATION: 560+00.35 -L-

SHEET 3 OF 3

STATE OF NORTH CAROLINA
DEPARTMENT OF TRANSPORTATION
RALEIGH

SUBSTRUCTURE
END BENT #1

NORTH CAROLINA PROFESSIONAL SEAL 20125 ENGINEER MARSHALL L. CHECK, JR.
9-20-10

REVISIONS						SHEET NO.
NO.	BY:	DATE:	NO.	BY:	DATE:	S-168
1			3			TOTAL SHEETS
2			4			184

DRAWN BY : Keith D. Layne DATE : 5/04/10
CHECKED BY : D. HODGE DATE : 7/10

20-SEP-2010 08:10
R:\Structures\Final Plans\Str. #5\R-2233AB_SD_STR#5_12_EB.dgn
dahodge

STR. #5

NOTES

STIRRUPS IN CAP MAY BE SHIFTED AS NECESSARY TO CLEAR ANCHOR BOLTS.

HOOKS ON "V" BARS MAY BE TURNED AS NECESSARY FOR PLACING REINFORCING STEEL.

THE CONTRACTOR'S ATTENTION IS CALLED TO THE FACT THAT THE CENTERLINE OF THE COLUMNS IS OFFSET 3" FROM THE BENT CONTROL LINE.

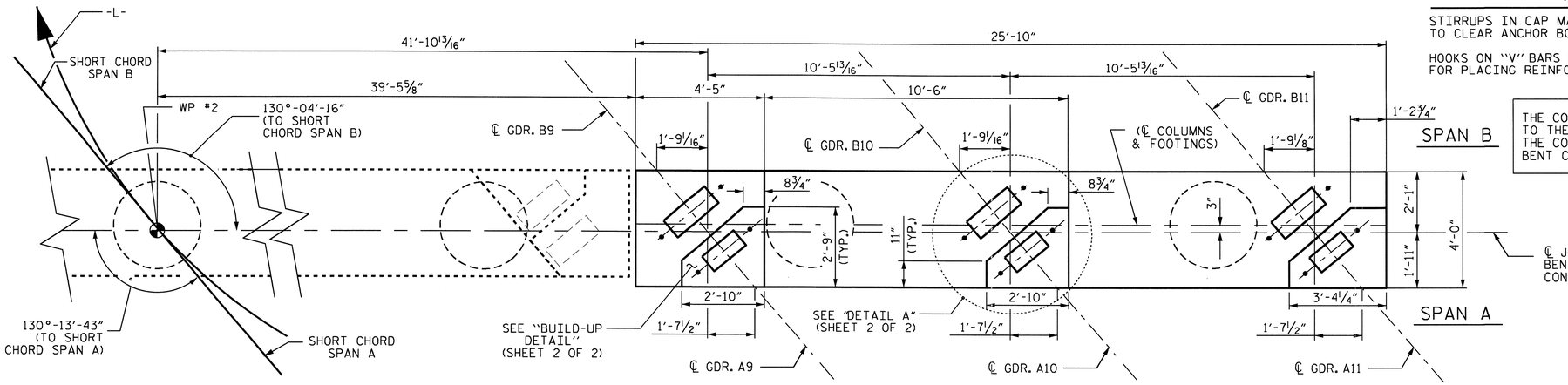

PLAN

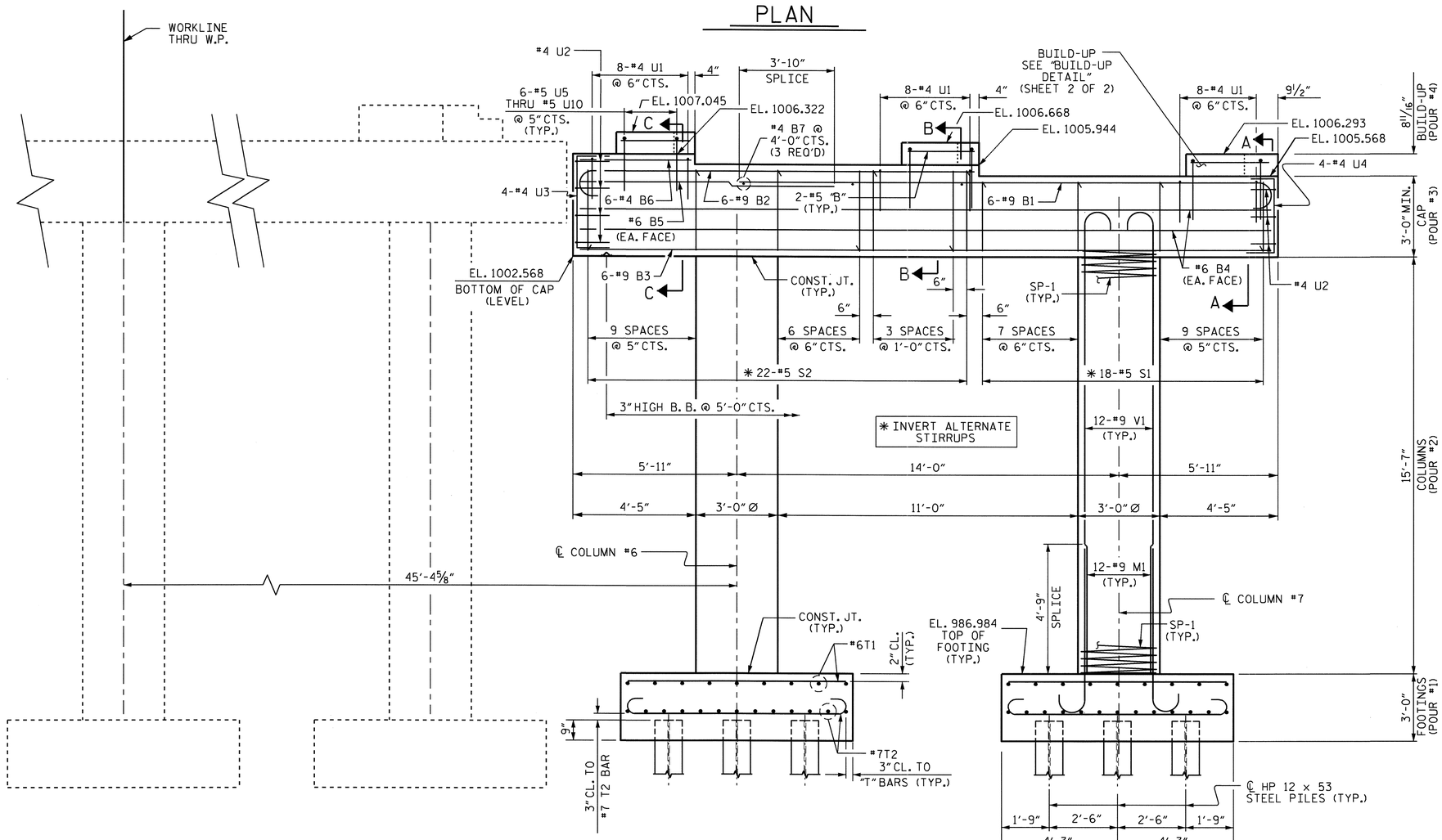

ELEVATION

(REINFORCING STEEL & DIMENSIONS TYPICAL FOR EACH COLUMN & FOOTING)

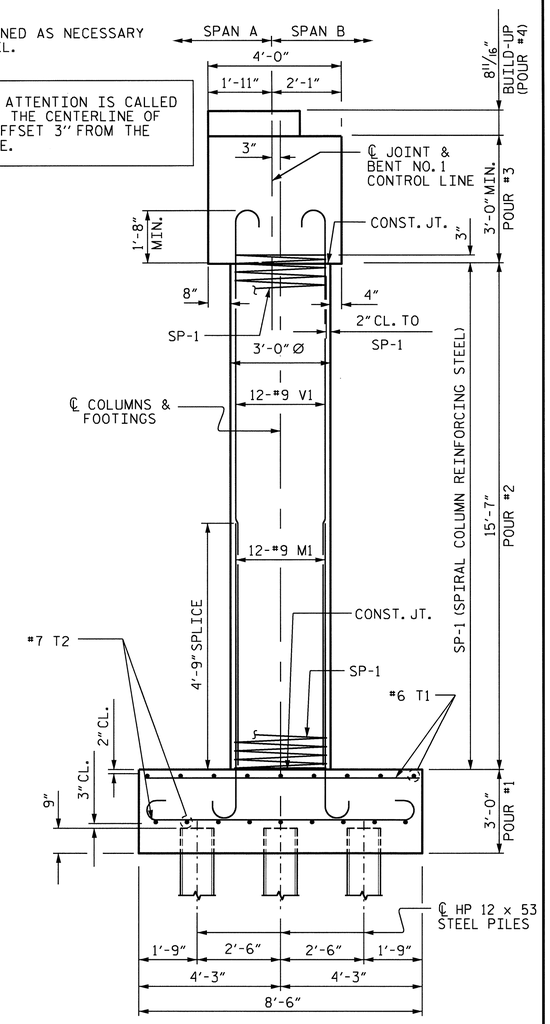

END ELEVATION

REINFORCING STEEL & DIMENSIONS TYPICAL FOR EACH COLUMN & FOOTING

PROJECT NO. R-2233AB

RUTHERFORD COUNTY

STATION: 560+00.35 -L-

SHEET 1 OF 2

STATE OF NORTH CAROLINA
DEPARTMENT OF TRANSPORTATION
RALEIGH

SUBSTRUCTURE
BENT NO. 1

NORTH CAROLINA PROFESSIONAL SEAL 20125 ENGINEER MARSHALL G. CHEEK, JR. 9-20-10

REVISIONS						SHEET NO.
NO.	BY:	DATE:	NO.	BY:	DATE:	S-169
1			3			TOTAL SHEETS
2			4			184

DRAWN BY : A.L. FIGUEROA DATE : 8-01-10
CHECKED BY : M.G. CHEEK DATE : 8-13-10

15-SEP-2010 14:56
R:\Structures\Final Plans\Str. #5\R-2233AB_SD_STR#5_13_Bent 1-2-3.dgn
afigueroa

STR#5 NCBDS

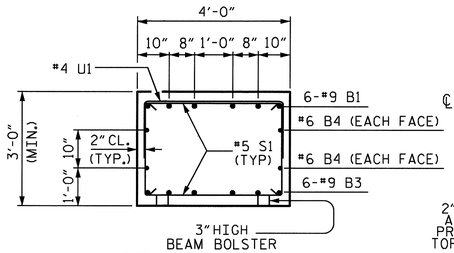

SECTION A-A

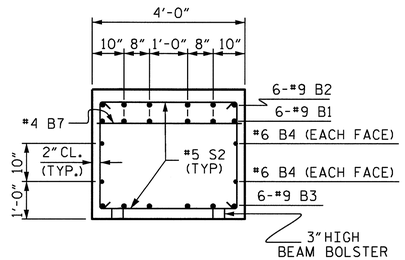

SECTION B-B

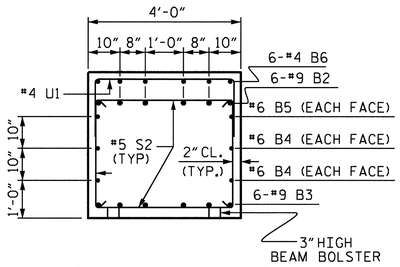

SECTION C-C

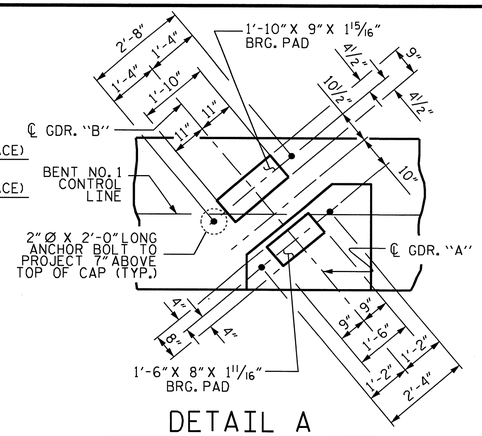

DETAIL A

(TYP. EACH GIRDER)

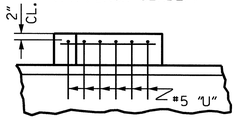

PARTIAL ELEVATION BUILD-UP

(TYP. FOR EACH GIRDER)

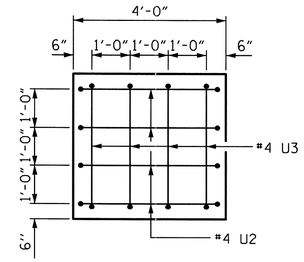

LEFT SIDE END OF CAP VIEW

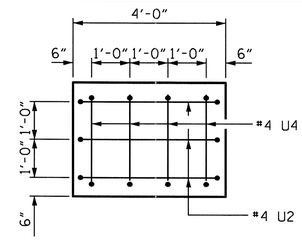

RIGHT SIDE END OF CAP VIEW

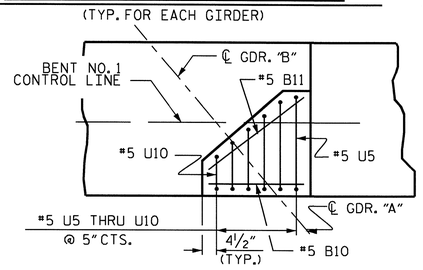

BUILD-UP DETAIL

(TYP. FOR GIRDER A9 AND A10)

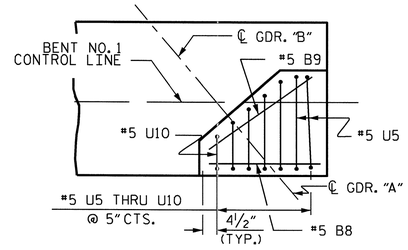

BUILD-UP DETAIL

(FOR GIRDER A11)

BAR TYPES

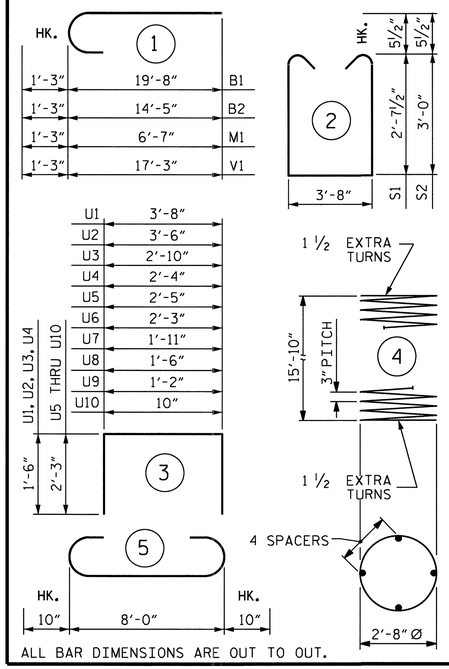

ALL BAR DIMENSIONS ARE OUT TO OUT.

BILL OF MATERIAL

BENT NO. 1

BAR	NO.	SIZE	TYPE	LENGTH	WEIGHT
B1	6	#9	1	20'-11"	427
B2	6	#9	1	15'-8"	320
B3	6	#9	STR	25'-6"	520
B4	4	#6	STR	25'-6"	153
B5	2	#6	STR	10'-0"	30
B6	6	#4	STR	4'-1"	16
B7	3	#4	STR	3'-8"	7
B8	1	#5	STR	2'-11"	3
B9	1	#5	STR	3'-3"	3
B10	2	#5	STR	2'-6"	5
B11	2	#5	STR	3'-1"	6
M1	24	#9	1	7'-10"	639
S1	18	#5	2	9'-10"	185
S2	22	#5	2	10'-7"	243
T1	36	#6	STR	8'-2"	442
T2	44	#7	5	9'-8"	869
U1	24	#4	3	6'-8"	107
U2	7	#4	3	6'-6"	30
U3	4	#4	3	5'-10"	16

BAR	NO.	SIZE	TYPE	LENGTH	WEIGHT
U4	4	#4	3	5'-4"	14
U5	4	#5	3	6'-11"	29
U6	3	#5	3	6'-9"	21
U7	3	#5	3	6'-5"	20
U8	3	#5	3	6'-0"	19
U9	3	#5	3	5'-8"	18
U10	3	#5	3	5'-4"	17
V1	24	#9	1	18'-6"	1510

REINFORCING STEEL 5,669 LBS.

SP-1	2	*	4	548'-8"	733

SPIRAL COLUMN REINFORCING STEEL 733 LBS.

CLASS A CONCRETE BREAKDOWN

POUR #1 (FOOTINGS)	16.1 CU.YD.
POUR #2 (COLUMNS)	8.2 CU.YD.
POUR #3 (CAP)	12.6 CU.YD.
POUR #4 (BUILD-UP)	0.5 CU.YD.
TOTAL	37.4 CU.YD.

HP 12 X 53 STEEL PILES NO. 14 700 LIN.FT.

FOUNDATION EXCAVATION LUMP SUM

* THE SP-1 SPIRAL REINFORCING STEEL SHALL BE W20 OR D-20 COLD DRAWN WIRE OR #4 PLAIN OR DEFORMED BAR.

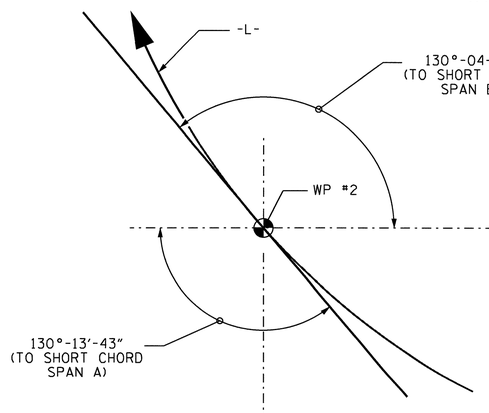

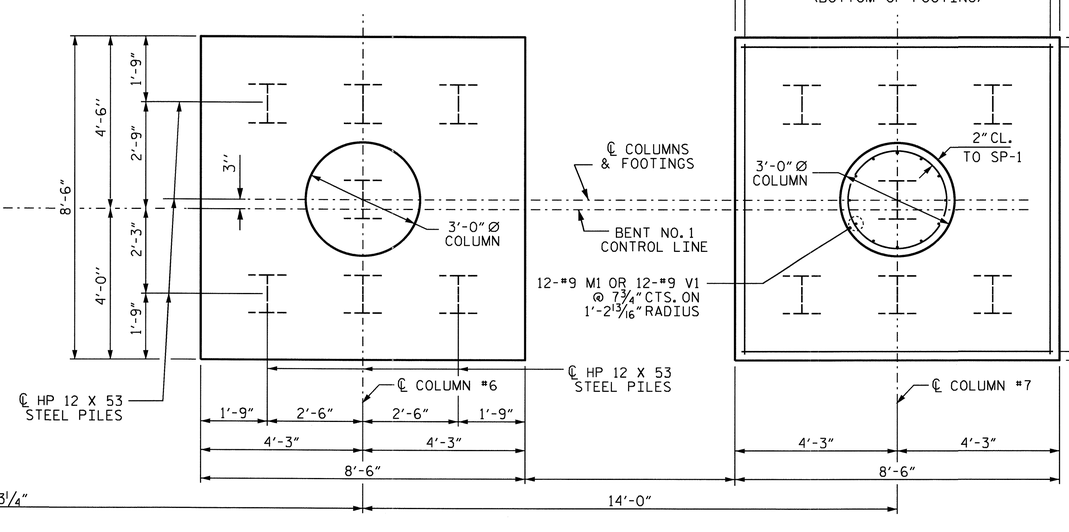

PLAN OF FOOTING

(REINFORCING STEEL & DIMENSIONS TYPICAL FOR EACH COLUMN & FOOTING)

PROJECT NO. R-2233AB
RUTHERFORD COUNTY
STATION: 560+00.35 -L-

SHEET 2 OF 2

STATE OF NORTH CAROLINA
DEPARTMENT OF TRANSPORTATION
RALEIGH

SUBSTRUCTURE
BENT NO. 1

NORTH CAROLINA PROFESSIONAL SEAL 20125 ENGINEER MARSHALL G. CHEEK, JR.
9-10-10

REVISIONS						SHEET NO.
NO.	BY:	DATE:	NO.	BY:	DATE:	S-170
1			3			TOTAL SHEETS
2			4			184

DRAWN BY : A.L. FIGUEROA DATE : 8-01-10
CHECKED BY : M.G. CHEEK DATE : 8-13-10

15-SEP-2010 14:56
R:\Structures\Final Plans\Str. *5\R-2233AB_SD_STR*5_13_Bent 1-2-3.dgn
afigueroa

STR*5 NCBDS

NOTES

STIRRUPS IN CAP MAY BE SHIFTED AS NECESSARY TO CLEAR ANCHOR BOLTS.

HOOKS ON "V" BARS MAY BE TURNED AS NECESSARY FOR PLACING REINFORCING STEEL.

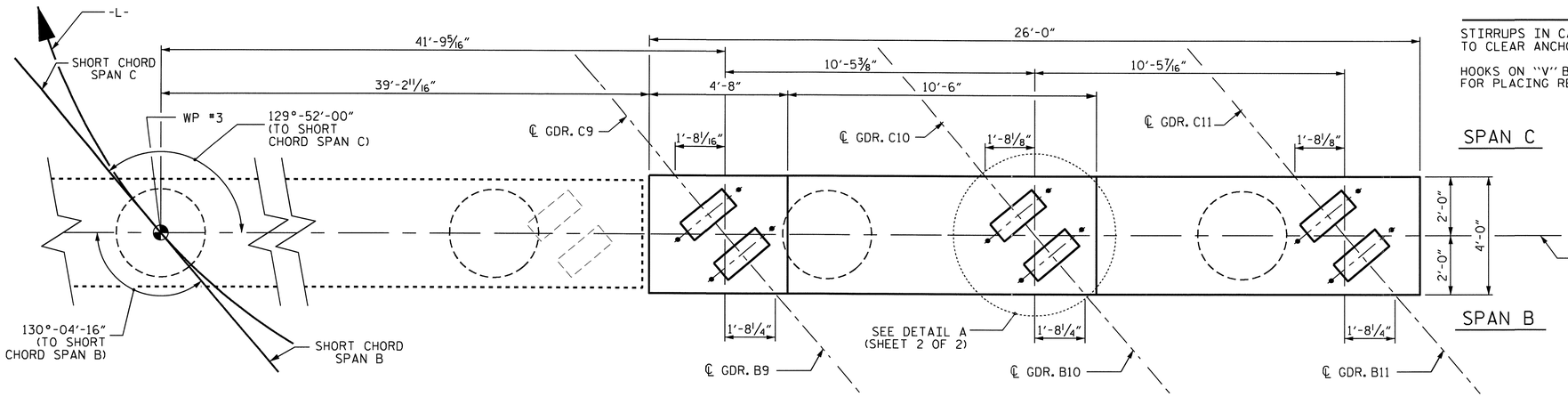

PLAN

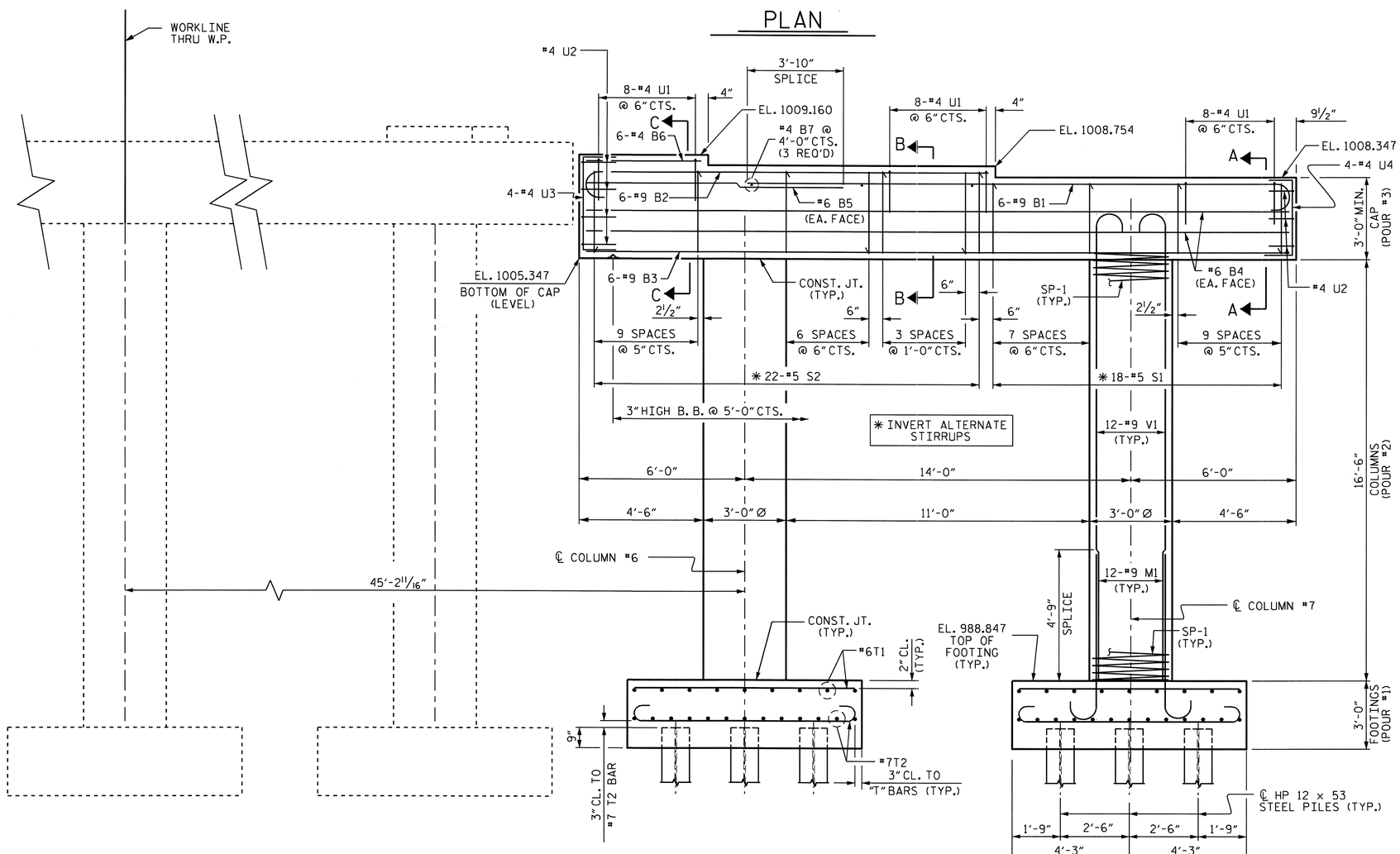

ELEVATION

(REINFORCING STEEL & DIMENSIONS TYPICAL FOR EACH COLUMN & FOOTING)

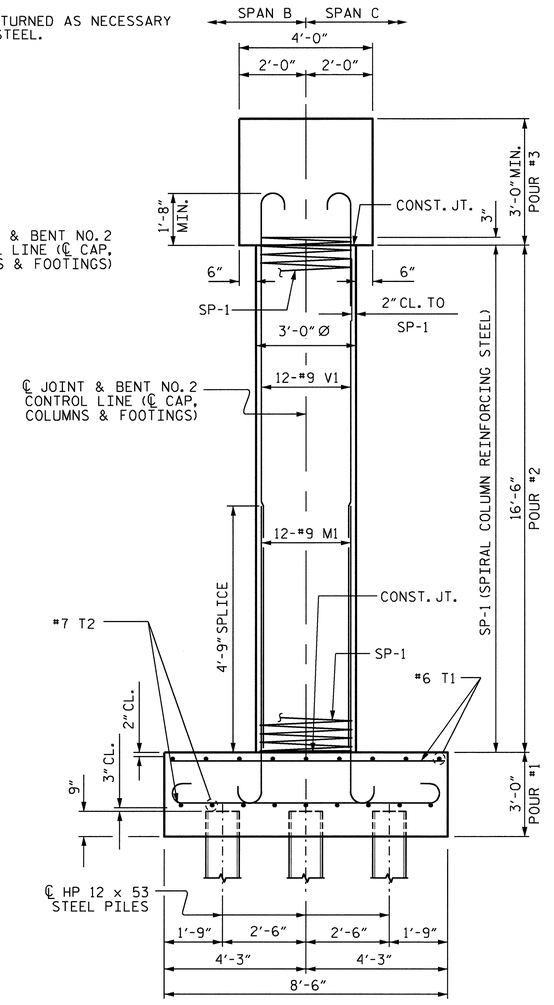

END ELEVATION

REINFORCING STEEL & DIMENSIONS TYPICAL FOR EACH COLUMN & FOOTING

PROJECT NO. R-2233AB

RUTHERFORD COUNTY

STATION: 560+00.35 -L-

SHEET 1 OF 2

STATE OF NORTH CAROLINA
DEPARTMENT OF TRANSPORTATION
RALEIGH

SUBSTRUCTURE
BENT NO. 2

NORTH CAROLINA PROFESSIONAL SEAL 20125 ENGINEER MARSHALL G. CHEEK, JR.
9-20-10

REVISIONS						SHEET NO.
NO.	BY:	DATE:	NO.	BY:	DATE:	S-171
1			3			TOTAL SHEETS
2			4			184

DRAWN BY : A.L. FIGUEROA DATE : 7-19-10
CHECKED BY : M. G. CHEEK DATE : 8-13-10

15-SEP-2010 14:56
R:\Structures\FinalPlans\Str. #5\R-2233AB_SD_STR#5_13_Bent 1-2-3.dgn
afigueroa

STR#5 NCBDS

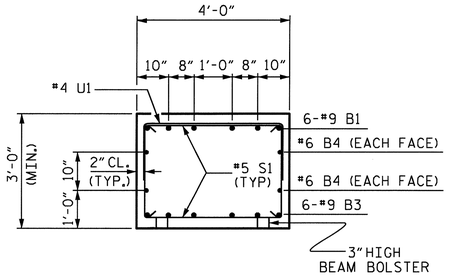

SECTION A-A

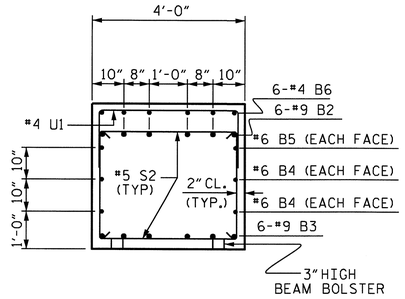

SECTION C-C

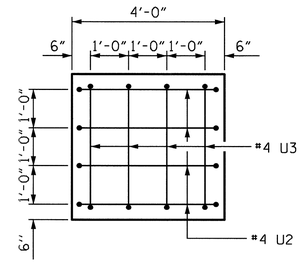

LEFT SIDE END OF CAP VIEW

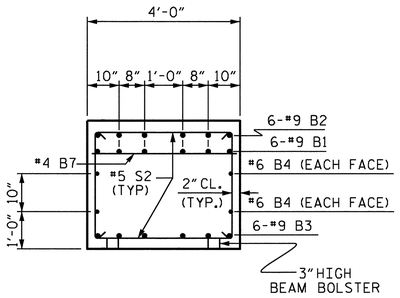

SECTION B-B

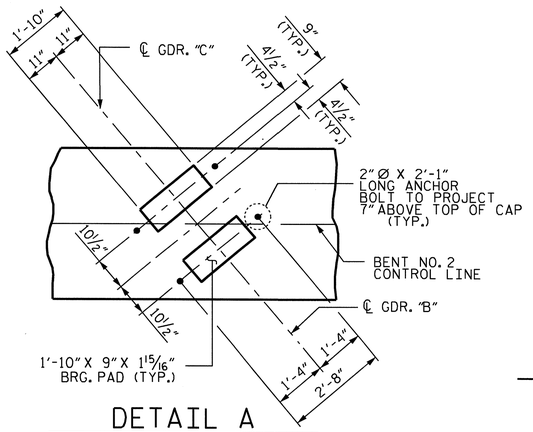

DETAIL A

(TYP. EACH GIRDER)

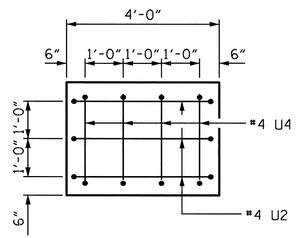

RIGHT SIDE END OF CAP VIEW

BAR TYPES

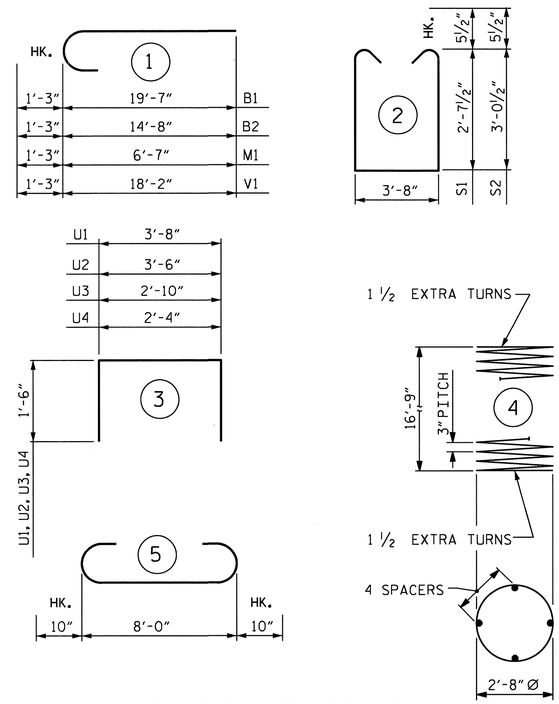

ALL BAR DIMENSIONS ARE OUT TO OUT.

✱ THE SP-1 SPIRAL REINFORCING STEEL SHALL BE W20 OR D-20 COLD DRAWN WIRE OR #4 PLAIN OR DEFORMED BAR.

BILL OF MATERIAL

BENT NO. 2

BAR	NO.	SIZE	TYPE	LENGTH	WEIGHT
B1	6	#9	1	20'-10"	425
B2	6	#9	1	15'-11"	325
B3	6	#9	STR	25'-8"	524
B4	4	#6	STR	25'-8''	154
B5	2	#6	STR	10'-0''	30
B6	6	#4	STR	4'-4''	17
B7	3	4	STR	3'-8''	7
M1	24	#9	1	7'-10"	639
S1	18	#5	2	9'-10"	185
S2	22	#5	2	10'-8"	245
T1	36	#6	STR	8'-2"	442
T2	44	#7	5	9'-8"	869
U1	24	#4	3	6'-8"	107
U2	7	#4	3	6'-6"	30
U3	4	#4	3	5'-10"	16
U4	4	#4	3	5'-4"	14
V1	24	#9	1	19'-5"	1584
REINFORCING STEEL				5,613	LBS.
SP-1	2	✱	4	577'-7''	772
SPIRAL COLUMN REINFORCING STEEL				772	

CLASS A CONCRETE BREAKDOWN

POUR #1 (FOOTINGS)	16.1	CU.YD.
POUR #2 (COLUMNS)	8.6	CU.YD.
POUR #3 (CAP)	12.7	CU.YD.
TOTAL	37.4	CU.YD.

HP 12 X 53 STEEL PILES NO. 14	770	LIN.FT.
FOUNDATION EXCAVATION		LUMP SUM

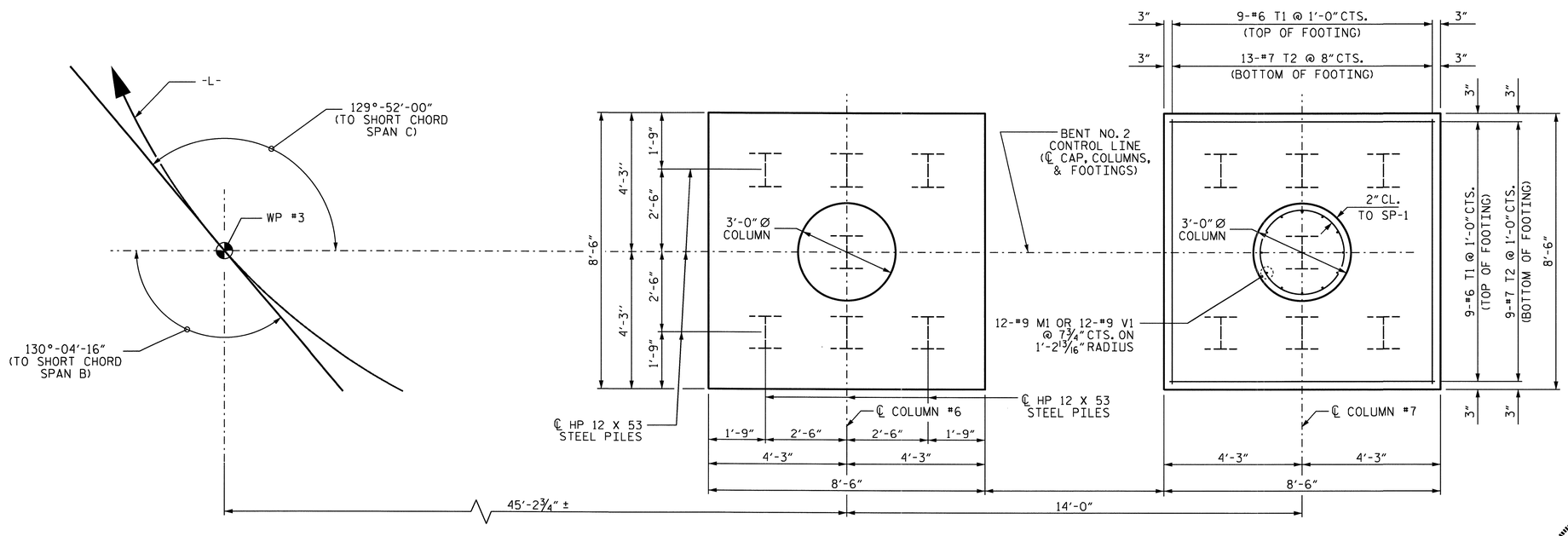

PLAN OF FOOTING

(REINFORCING STEEL & DIMENSIONS TYPICAL FOR EACH COLUMN & FOOTING)

PROJECT NO. R-2233AB
RUTHERFORD COUNTY
STATION: 560+00.35 -L-

SHEET 2 OF 2

STATE OF NORTH CAROLINA
DEPARTMENT OF TRANSPORTATION
RALEIGH

SUBSTRUCTURE
BENT NO. 2

NORTH CAROLINA PROFESSIONAL SEAL 20125 ENGINEER MARSHALL G. CHEEK, JR.
9-20-10

REVISIONS						SHEET NO.
NO.	BY:	DATE:	NO.	BY:	DATE:	S-172
1			3			TOTAL SHEETS
2			4			184

DRAWN BY : A.L. FIGUEROA DATE : 7-15-10
CHECKED BY : M. G. CHEEK DATE : 8-13-10

15-SEP-2010 14:56
R:\Structures\Final Plans\Str. #5\R-2233AB_SD_STR#5_13_Bent 1-2-3.dgn
aflgueroa

STR#5 NC005

NOTES

STIRRUPS IN CAP MAY BE SHIFTED AS NECESSARY TO CLEAR ANCHOR BOLTS.

HOOKS ON "V" BARS MAY BE TURNED AS NECESSARY FOR PLACING REINFORCING STEEL.

THE CONTRACTOR'S ATTENTION IS CALLED TO THE FACT THAT THE CENTERLINE OF THE COLUMNS IS OFFSET 3" FROM THE BENT CONTROL LINE.

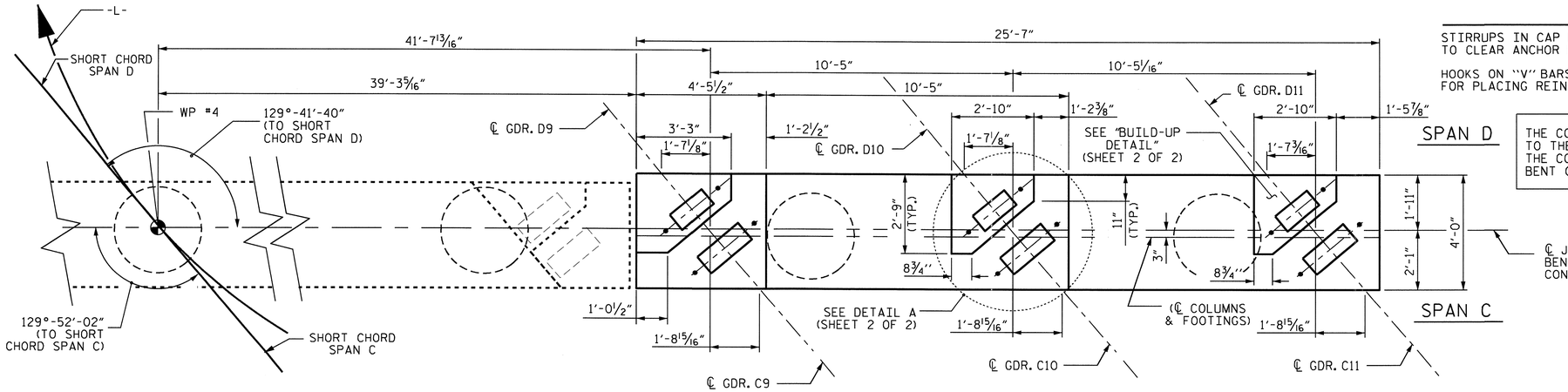

PLAN

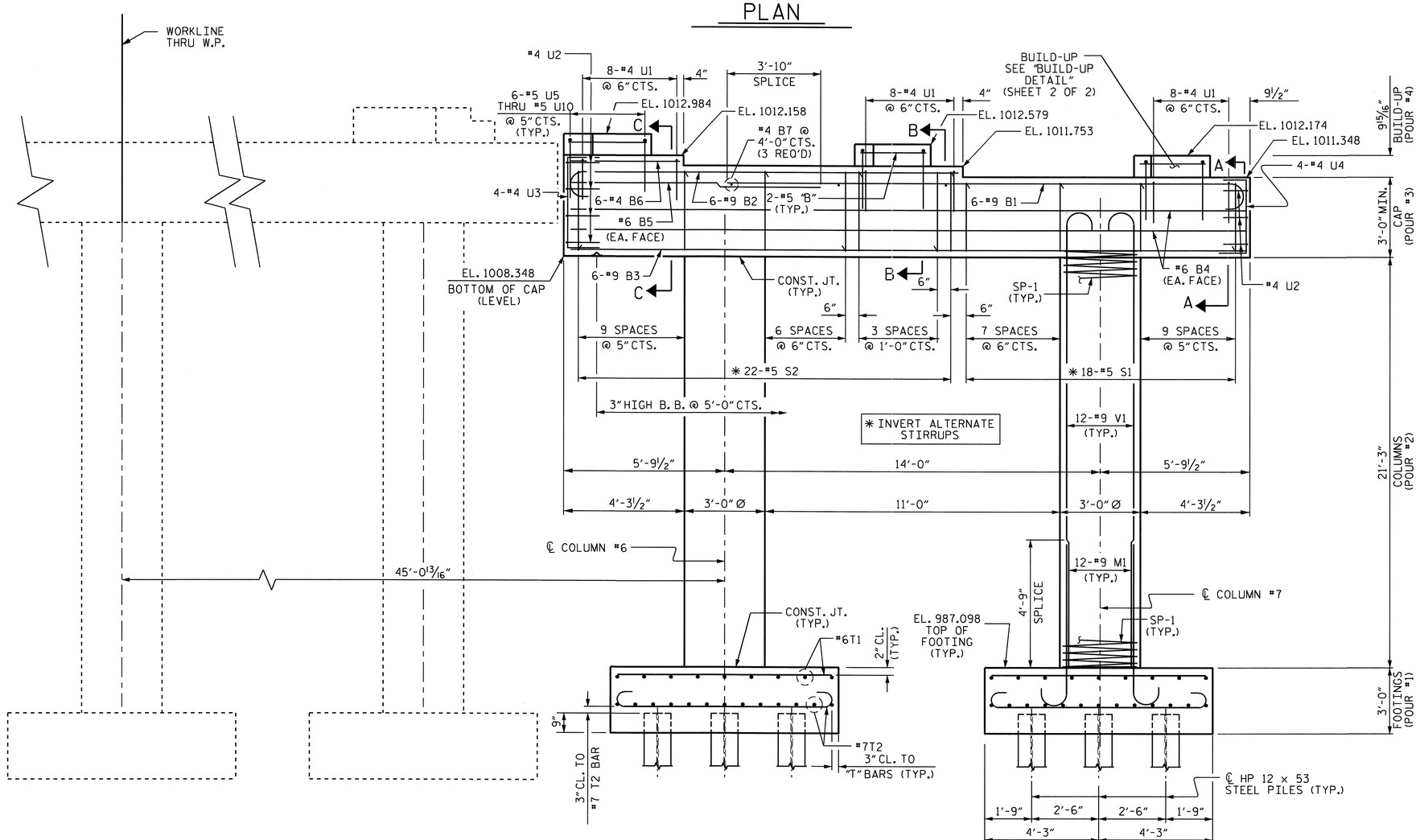

ELEVATION

(REINFORCING STEEL & DIMENSIONS TYPICAL FOR EACH COLUMN & FOOTING)

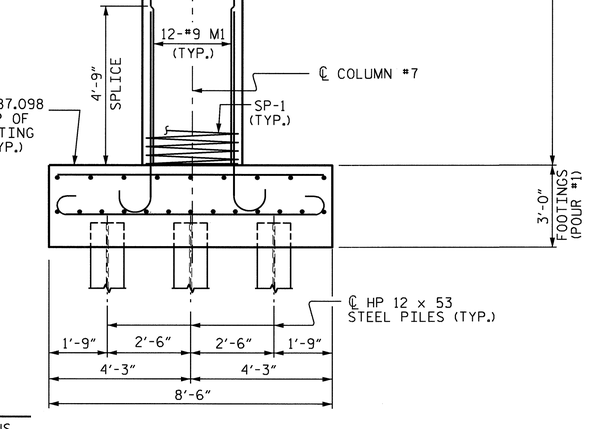

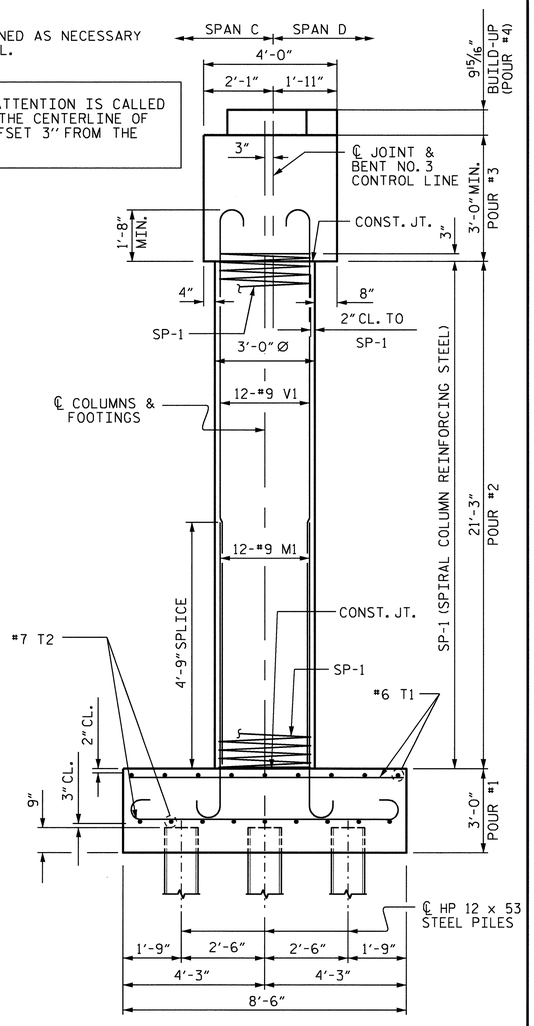

END ELEVATION

REINFORCING STEEL & DIMENSIONS TYPICAL FOR EACH COLUMN & FOOTING

PROJECT NO. R-2233AB

RUTHERFORD COUNTY

STATION: 560+00.35 -L-

SHEET 1 OF 2

STATE OF NORTH CAROLINA
DEPARTMENT OF TRANSPORTATION
RALEIGH

SUBSTRUCTURE
BENT NO. 3

NORTH CAROLINA PROFESSIONAL SEAL 20125 ENGINEER MARSHALL G. CHEEK, JR.
4-20-11

REVISIONS						SHEET NO.
NO.	BY:	DATE:	NO.	BY:	DATE:	S-173
1			3			TOTAL SHEETS
2			4			184

DRAWN BY : A.L. FIGUEROA DATE : 7-19-10
CHECKED BY : M.G. CHEEK DATE : 8-13-10

15-SEP-2010 14:56
R:\Structures\FinalPlans\Str. #5\R-2233AB_SD_STR#5_13_Bent 1-2-3.dgn
afigueroa

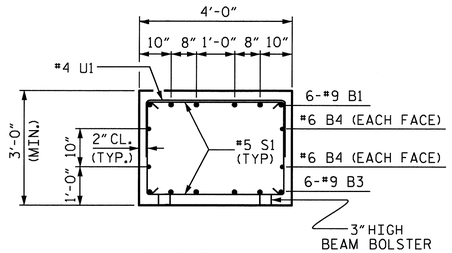

SECTION A-A

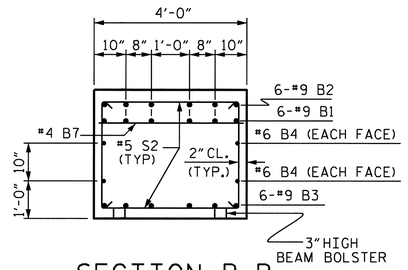

SECTION B-B

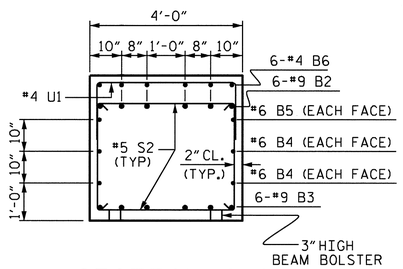

SECTION C-C

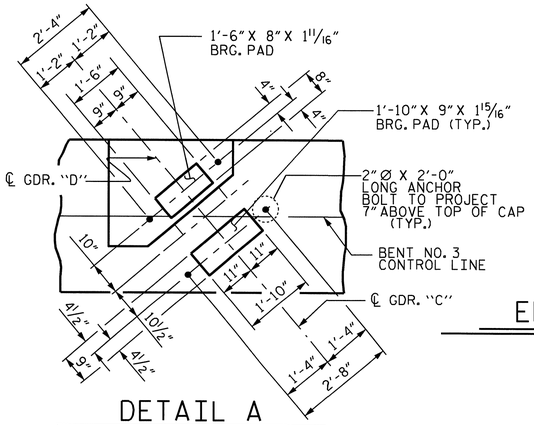

DETAIL A

(TYP. EACH GIRDER)

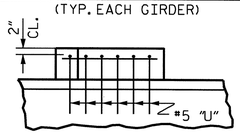

PARTIAL ELEVATION BUILD-UP

(TYP. FOR EACH GIRDER)

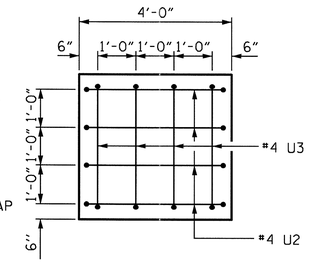

LEFT SIDE END OF CAP VIEW

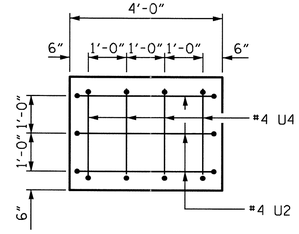

RIGHT SIDE END OF CAP VIEW

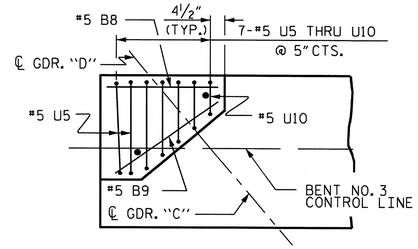

BUILD-UP DETAIL

(FOR GIRDER D9)

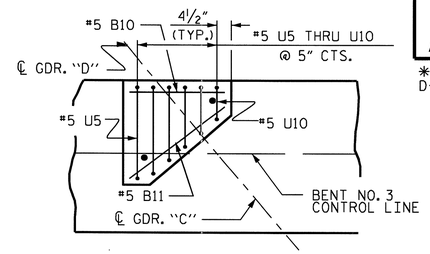

BUILD-UP DETAIL

(TYP. FOR GIRDER D10 & D11)

BAR TYPES

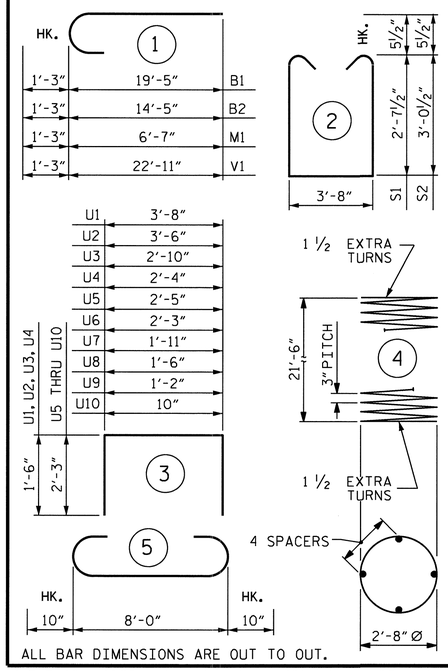

ALL BAR DIMENSIONS ARE OUT TO OUT.

BILL OF MATERIAL

BENT NO. 3

BAR	NO.	SIZE	TYPE	LENGTH	WEIGHT
B1	6	#9	1	20'-8"	422
B2	6	#9	1	15'-8"	320
B3	6	#9	STR	25'-3"	515
B4	4	#6	STR	25'-3"	152
B5	2	#6	STR	10'-0"	30
B6	6	#4	STR	4'-1"	16
B7	3	#4	STR	3'-8"	7
B8	1	#5	STR	2'-11"	3
B9	1	#5	STR	3'-3"	3
B10	2	#5	STR	2'-6"	5
B11	2	#5	STR	3'-1"	6
M1	24	#9	1	7'-10"	639
S1	18	#5	2	9'-10"	185
S2	22	#5	2	10'-8"	245
T1	36	#6	STR	8'-2"	442
T2	44	#7	5	9'-8"	869
U1	24	#4	3	6'-8"	107
U2	7	#4	3	6'-6"	30
U3	4	#4	3	5'-10"	16

BAR	NO.	SIZE	TYPE	LENGTH	WEIGHT
U4	4	#4	3	5'-4"	14
U5	4	#5	3	6'-11"	29
U6	3	#5	3	6'-9"	21
U7	3	#5	3	6'-5"	20
U8	3	#5	3	6'-0"	19
U9	3	#5	3	5'-8"	18
U10	3	#5	3	5'-4"	17
V1	24	#9	1	24'-2"	1972
REINFORCING STEEL				6,122	LBS.
SP-1	2	*	4	734'-4"	981
SPIRAL COLUMN REINFORCING STEEL				981	LBS.

CLASS A CONCRETE BREAKDOWN

POUR #1 (FOOTINGS)	16.1	CU.YD.
POUR #2 (COLUMNS)	11.1	CU.YD.
POUR #3 (CAP)	12.6	CU.YD.
POUR #4 (BUILD-UP)	0.6	CU.YD.
TOTAL	40.4	CU.YD.

HP 12 X 53 STEEL PILES NO. 14	490	LIN.FT.
FOUNDATION EXCAVATION	LUMP SUM	

* THE SP-1 SPIRAL REINFORCING STEEL SHALL BE W20 OR D-20 COLD DRAWN WIRE OR #4 PLAIN OR DEFORMED BAR.

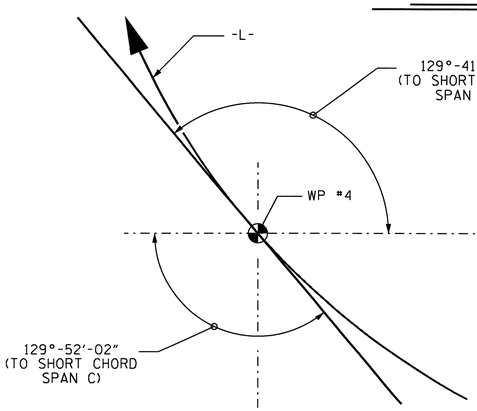

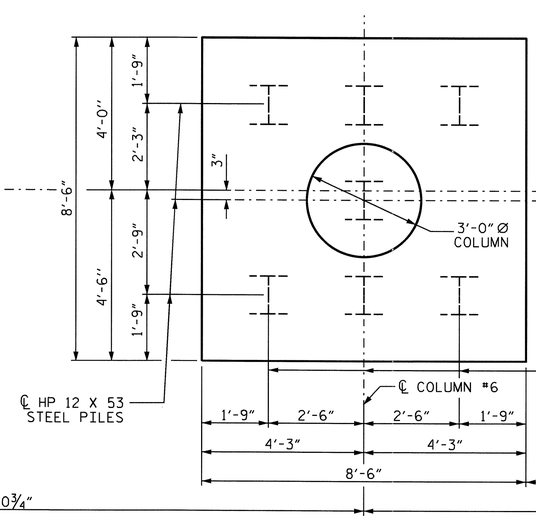

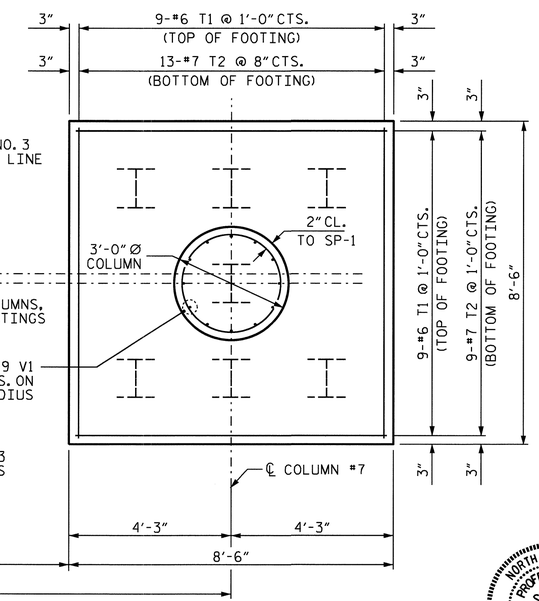

PLAN OF FOOTING

(REINFORCING STEEL & DIMENSIONS TYPICAL FOR EACH COLUMN & FOOTING)

NORTH CAROLINA PROFESSIONAL SEAL 20125 ENGINEER MARSHALL G. CHEEK, JR.
9-20-16

PROJECT NO. R-2233AB
RUTHERFORD COUNTY
STATION: 560+00.35 -L-

SHEET 2 OF 2

STATE OF NORTH CAROLINA
DEPARTMENT OF TRANSPORTATION
RALEIGH

SUBSTRUCTURE
BENT NO. 3

REVISIONS						SHEET NO.
NO.	BY:	DATE:	NO.	BY:	DATE:	S-174
1			3			TOTAL SHEETS
2			4			184

DRAWN BY : A.L. FIGUEROA DATE : 7-15-10
CHECKED BY : M.G. CHEEK DATE : 8-13-10

15-SEP-2010 14:56
R:\Structures\Final Plans\Str. *5\R-2233AB_SD_STR*5_13_Bent 1-2-3.dgn
aflgueroa

STR*5 NCBDS

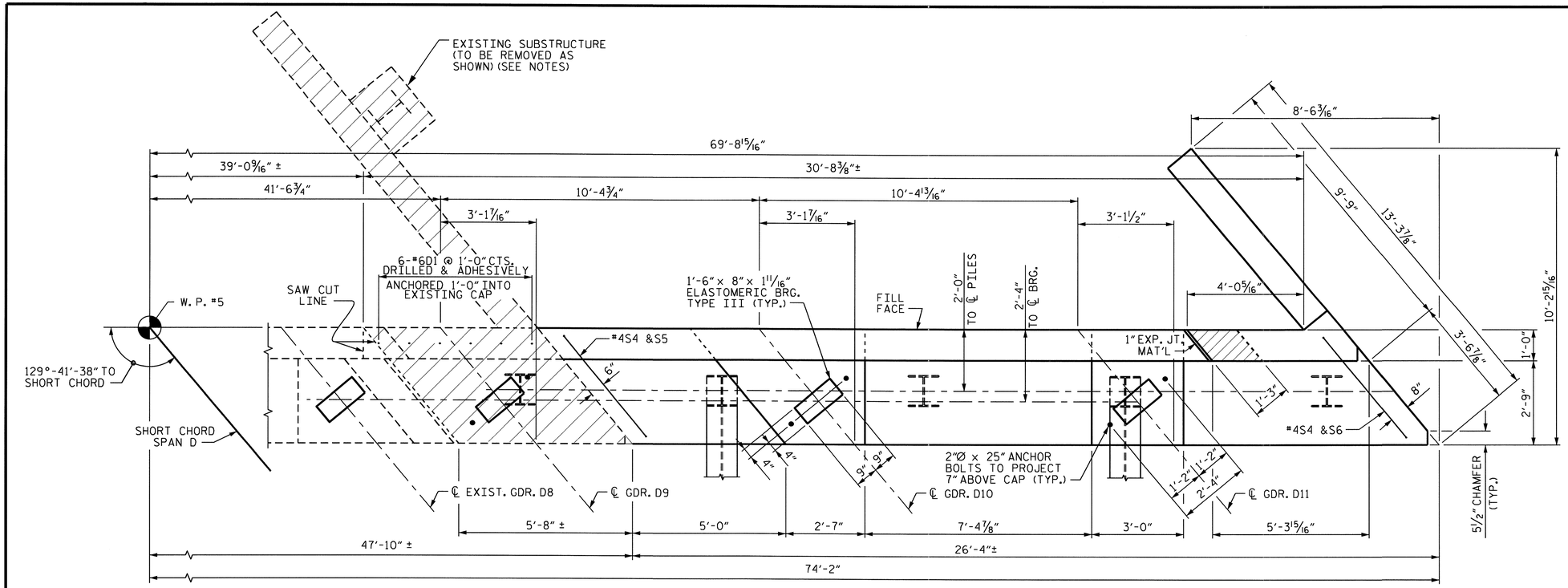

PLAN

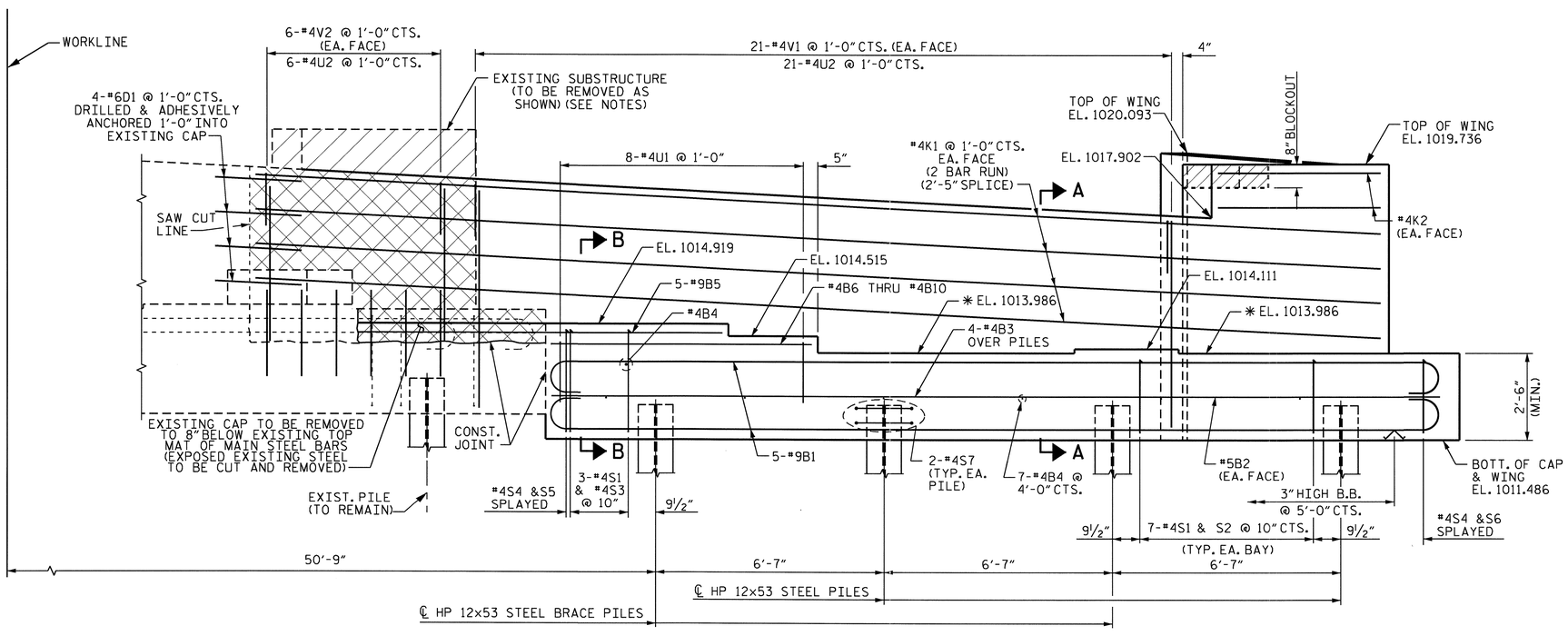

ELEVATION

✱ FOR LOCATION OF ELEVATIONS BETWEEN BRIDGE SEAT BUILD-UPS, SEE "SECTION A-A", SHEET 3 OF 3.

NOTES

STIRRUPS IN CAP MAY BE SHIFTED AS NECESSARY TO CLEAR ANCHOR BOLTS.

BACKWALL SHALL BE PLACED BEFORE APPLYING THE EPOXY PROTECTIVE COATING.

THE TOP SURFACE AREAS OF THE END BENT CAP SHALL BE CURED IN ACCORDANCE WITH THE STANDARD SPECIFICATIONS EXCEPT THE MEMBRANE CURING COMPOUND METHOD SHALL NOT BE USED.

THE TOP SURFACE OF THE CAP EXCEPT THE BRIDGE SEAT BUILDUPS SHALL BE SLOPED TRANSVERSELY FROM THE FILL FACE TO THE BACK FACE AT THE RATE OF 2%.

THE CONCRETE IN THE SHADED AREA OF THE WING SHALL BE POURED AFTER THE JOINT BETWEEN THE DECK AND THE APPROACH SLAB HAS BEEN SAWED AND THE BARRIER RAIL IS CAST IF SLIP FORMING IS USED.

FOR BOND OF NEW CONCRETE TO OLD, THE OLD CONCRETE SHALL BE THOROUGHLY ROUGHENED, CLEANED OF LOOSE MATERIAL, AND WETTED FOR A MINIMUM OF 2 HOURS PRIOR TO PLACING NEW CONCRETE. PAYMENT FOR THIS WORK SHALL BE INCLUDED IN THE CONTRACT PRICE FOR CLASS A CONCRETE.

THE CONTRACTOR SHALL USE ADHESIVELY ANCHORED DOWELS. LEVEL I FIELD TESTING IS REQUIRED, AND THE YIELD LOAD OF THE DOWELS IS 26.4K. FOR ADHESIVELY ANCHORED DOWELS, SEE SPECIAL PROVISIONS.

THE CONTRACTOR SHALL USE ADHESIVELY ANCHORED ANCHOR BOLTS AT GIRDER 9. THE YIELD LOAD OF THE ANCHOR BOLTS IS 145K. FIELD TESTING OF THE ADHESIVE BONDING SYSTEM IS NOT REQUIRED. FOR ADHESIVELY ANCHORED ANCHOR BOLTS, SEE SPECIAL PROVISIONS.

THE CONTRACTOR SHALL PROVIDE FOR INSTALLATION OF THE 4"Ø DRAIN PIPE THROUGH THE WING WALL AS REQUIRED FOR REINFORCED BRIDGE APPROACH FILLS, SEE THE ROADWAY PLANS. REINFORCING STEEL IN THE WING WALL MAY BE SHIFTED AS NECESSARY TO CLEAR THE DRAIN PIPE.

PORTION OF EXISTING SUBSTRUCTURE TO BE REMOVED AS DIRECTED BY ENGINEER.

PROJECT NO. R-2233AB
RUTHERFORD COUNTY
STATION: 560+00.35 -L-

SHEET 1 OF 3

STATE OF NORTH CAROLINA
DEPARTMENT OF TRANSPORTATION
RALEIGH

SUBSTRUCTURE
END BENT #2

NORTH CAROLINA PROFESSIONAL SEAL 20125 ENGINEER MARSHALL C. CHEEK, JR.
9-21-10

REVISIONS						SHEET NO.
NO.	BY:	DATE:	NO.	BY:	DATE:	S-175
1			3			TOTAL SHEETS
2			4			184

DRAWN BY : Keith D. Layne DATE : 5/06/10
CHECKED BY : D. HODGE DATE : 7/10

21-SEP-2010 08:25
R:\Structures\Final Plans\Str. #5\R-2233AB_SD_STR#5_12_EB.dgn
dahodge

STR. #5

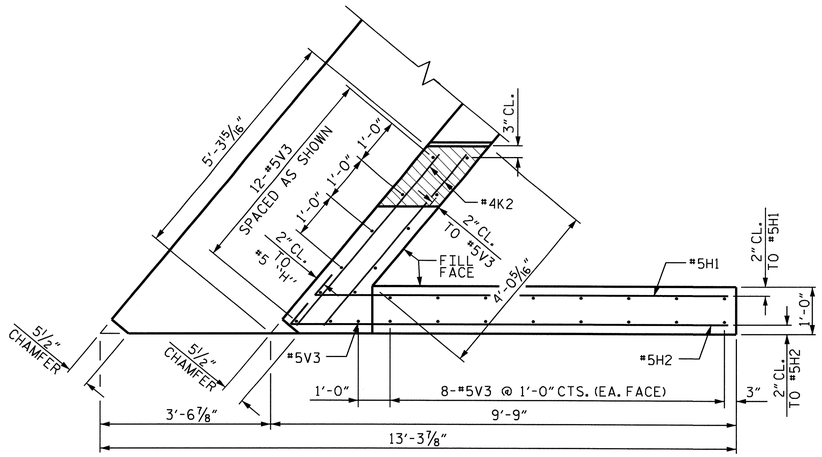

PLAN OF WING

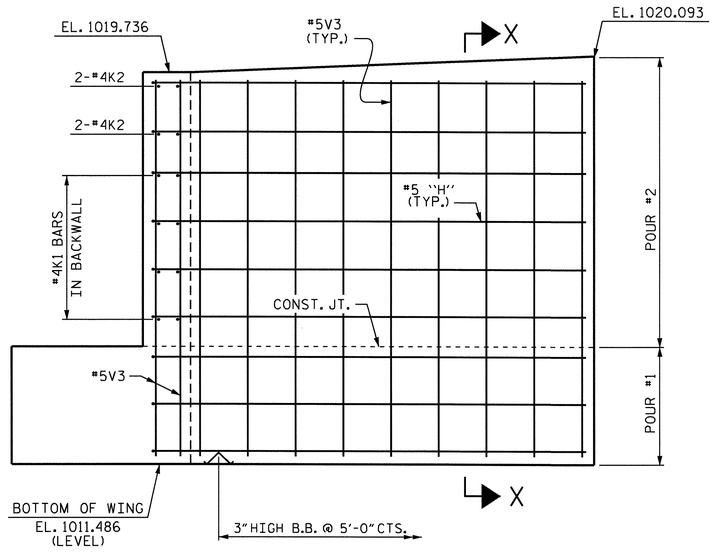

ELEVATION OF WING

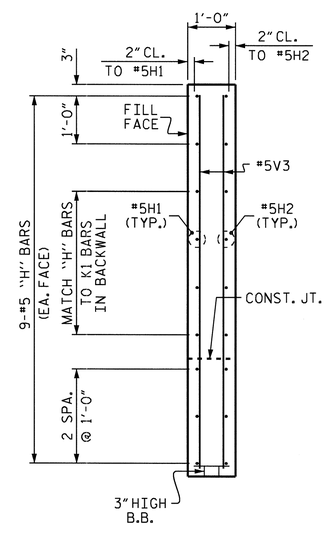

SECTION X-X

PROJECT NO. R-2233AB

RUTHERFORD COUNTY

STATION: 560+00.35 -L-

SHEET 2 OF 3

STATE OF NORTH CAROLINA
DEPARTMENT OF TRANSPORTATION
RALEIGH

SUBSTRUCTURE

END BENT #2

NORTH CAROLINA PROFESSIONAL SEAL 20125 ENGINEER MARSHALL W. CREEK, JR.
9-20-16

REVISIONS						SHEET NO.
NO.	BY:	DATE:	NO.	BY:	DATE:	S-176
1			3			TOTAL SHEETS
2			4			184

DRAWN BY : Keith D. Layne DATE : 5/04/10
CHECKED BY : D. HODGE DATE : 7/10

06-AUG-2010 07:27
R:\Structures\Str#5\klayne\R-2233AB_sd_Ebts_05.dgn
dahodge

STR. #5

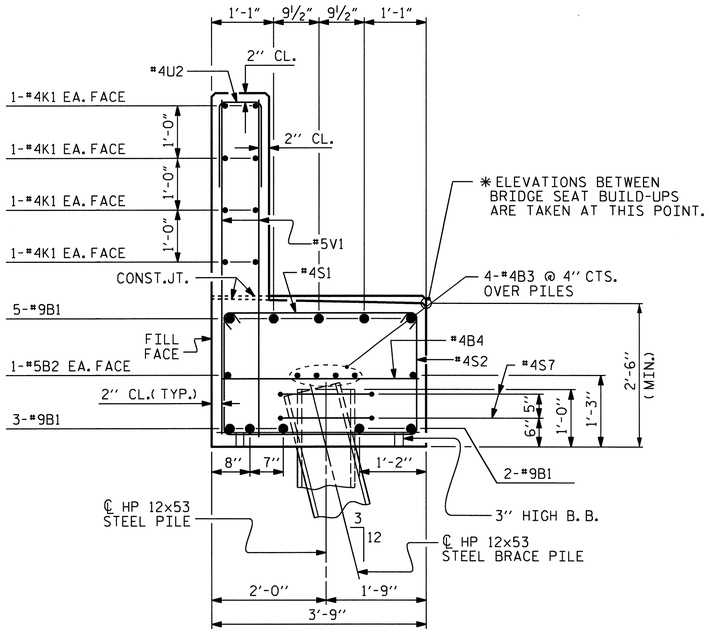

SECTION A-A

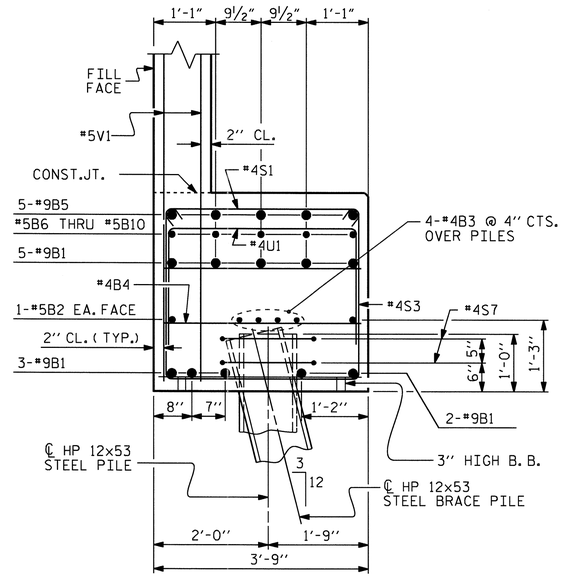

SECTION B-B

BAR TYPES

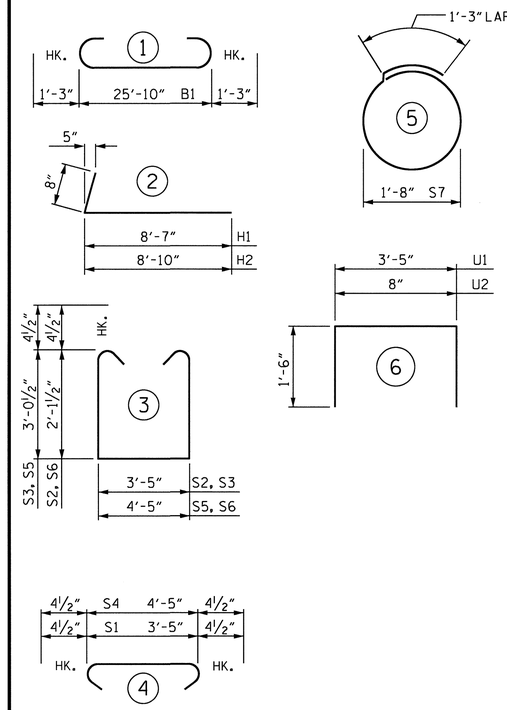

BILL OF MATERIAL
END BENT #2

BAR	NO.	SIZE	TYPE	LENGTH	WEIGHT
B1	10	#9	1	28'-4"	963
B2	2	#5	STR	25'-10"	54
B3	4	#4	STR	25'-10"	69
B4	8	#4	STR	3'-5"	18
B5	5	#9	STR	10'-2"	173
B6	1	#4	STR	7'-5"	5
B7	1	#4	STR	8'-1"	5
B8	1	#4	STR	9'-3"	6
B9	1	#4	STR	9'-9"	7
B10	1	#4	STR	10'-0"	7
D1	10	#6	STR	2'-6"	38
H1	9	#5	2	9'-3"	87
H2	9	#5	2	9'-6"	89
K1	16	#4	STR	17'-0"	182
K2	4	#4	STR	4'-7"	12
S1	24	#4	4	4'-2"	67
S2	21	#4	3	8'-5"	118
S3	3	#4	3	10'-3"	21
S4	2	#4	4	5'-2"	7
S5	1	#4	3	11'-3"	8
S6	1	#4	3	9'-5"	6
S7	8	#4	5	6'-6"	35
U1	8	#4	6	6'-5"	34
U2	27	#4	6	3'-8"	66
V1	42	#4	STR	6'-0"	168
V2	12	#4	STR	4'-8"	37
V3	29	#5	STR	7'-11"	239

REINFORCING STEEL Lbs. 2,521

CLASS "A" CONCRETE (Cu. Yds.)
POUR #1 CAP & LOWER WING = 11.1
POUR #2 UPPER WING & BACKWALL = 7.3
TOTAL Cu. Yds. 18.4

HP 12x53 STEEL PILES
No. 4 LIN. FT. 280

ALL BAR DIMENSIONS ARE OUT TO OUT.

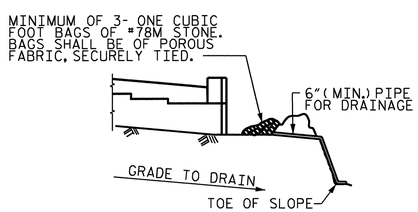

BAGGED STONE AND PIPE SHALL BE PLACED IMMEDIATELY AFTER COMPLETION OF END BENT EXCAVATION. PIPE MAY BE EITHER CONCRETE, CORRUGATED STEEL, CORRUGATED ALUMINUM ALLOY, OR CORRUGATED PLASTIC. PERFORATED PIPE WILL NOT BE ALLOWED.

BAGGED STONE SHALL REMAIN IN PLACE UNTIL THE ENGINEER DIRECTS THAT IT BE REMOVED. THE CONTRACTOR SHALL REMOVE AND DISPOSE OF SILT ACCUMULATIONS AT BAGGED STONE WHEN SO DIRECTED BY THE ENGINEER. BAGS SHALL BE REMOVED AND REPLACED WHENEVER THE ENGINEER DETERMINES THAT THEY HAVE DETERIORATED AND LOST THEIR EFFECTIVENESS.

NO SEPARATE PAYMENT WILL BE MADE FOR THIS WORK AND THE ENTIRE COST OF THIS WORK SHALL BE INCLUDED IN THE UNIT CONTRACT PRICE BID FOR THE SEVERAL PAY ITEMS.

TEMPORARY DRAINAGE AT END BENT

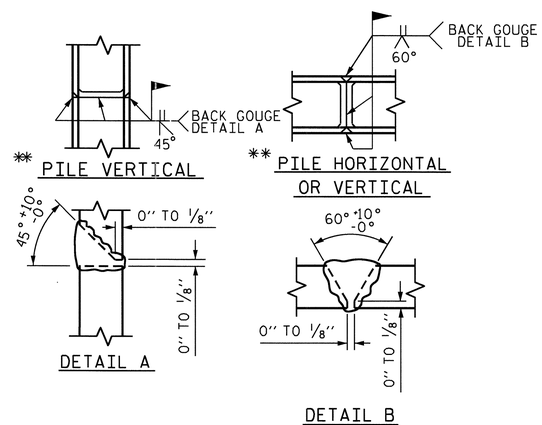

PILE SPLICE DETAILS

✱✱ POSITION OF PILE DURING WELDING.

PROJECT NO. R-2233AB
RUTHERFORD COUNTY
STATION: 560+00.35 -L-

SHEET 3 OF 3

STATE OF NORTH CAROLINA
DEPARTMENT OF TRANSPORTATION
RALEIGH

SUBSTRUCTURE
END BENT #2

NORTH CAROLINA PROFESSIONAL SEAL 20125 ENGINEER MARSHALL L. HICKS, JR.
9-10-10

REVISIONS						SHEET NO.
NO.	BY:	DATE:	NO.	BY:	DATE:	S-177
1			3			TOTAL SHEETS
2			4			184

DRAWN BY : Keith D. Layne DATE : 5/04/10
CHECKED BY : D. HODGE DATE : 7/10

20-SEP-2010 08:10
R:\Structures\Final Plans\Str. #5\R-2233AB_SD_STR#5_12_EB.dgn
dahodge

STR. #5

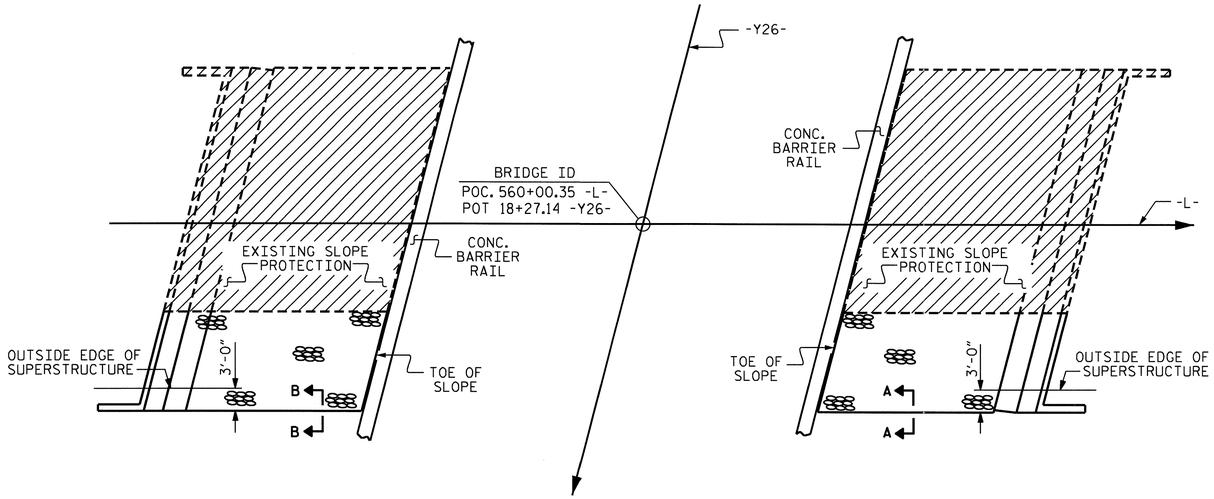

END BENT No. 1

END BENT No. 2

PLAN

(SEE GENERAL DRAWING FOR BERM WIDTHS AND ELEVATIONS)

GENERAL NOTES

SLOPE PROTECTION SHALL BE PLACED UNDER THE ENDS OF THE BRIDGE AS SHOWN IN THE DETAILS. THE CONTRACTOR, AT HIS OPTION, MAY USE ALTERNATE "B" ONLY FOR HIGHWAY OVER HIGHWAY GRADE SEPARATIONS WITH 2:1 END BENT SLOPE IN RURAL, UNPOPULATED AREAS. STRAIGHT EDGING WILL NOT BE REQUIRED UNLESS, IN THE OPINION OF THE ENGINEER, VISUAL INSPECTION INDICATES A NEED FOR IT. MEASUREMENT AND PAYMENT SHALL BE AS PRESCRIBED IN SECTION 462 OF THE STANDARD SPECIFICATIONS. FOR BERM WIDTH, SEE GENERAL DRAWING.

ALTERNATE "B"

ALTERNATE "B" SHALL CONSIST OF A COMBINATION CONCRETE SLAB AND STONE SLOPE PROTECTION. THE CONCRETE PORTIONS SHALL CONSIST OF PAVED STRIPS ALONG THE DITCH AS SHOWN IN THE DETAILS. FILTER FABRIC AND 8" OF STONE SHALL BE PLACED OVER THE REMAINING AREA SHOWN ON THE PLANS TO BE COVERED WITH SLOPE PROTECTION. CONCRETE SHALL BE CLASS "B". THE COST OF THE CONCRETE, FILTER FABRIC, STONE AND WELDED WIRE FABRIC 6 X 6 - W1.4 X W1.4, SHALL BE INCLUDED IN THE CONTRACT UNIT PRICE BID PER SQUARE YARD FOR SLOPE PROTECTION. SUBGRADING, STONE TYPE, STONE SIZING, AND HERBICIDE PROTECTION, SHALL BE IN ACCORDANCE WITH THE STANDARD SPECIFICATIONS EXCEPT THE HERBICIDE TYPE SHALL BE SUBMITTED TO THE ENGINEER FOR APPROVAL PRIOR TO APPLICATION.

ESTIMATED QUANTITIES		
BRIDGE @ STA. 560+00.35 -L-	RIP RAP CLASS II	FILTER FABRIC FOR DRAINAGE
	TONS	SQUARE YARDS
END BENT 1	36	120
END BENT 2	42	140

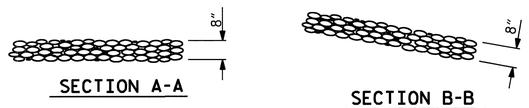

SECTION A-A

SECTION B-B

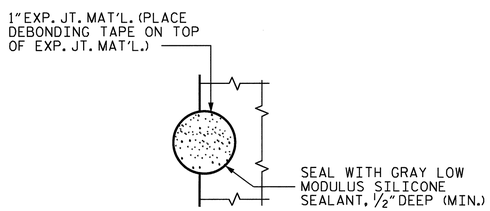

PLAN WHERE CONCRETE SLOPE PROTECTION MUST BE PLACED AROUND A BENT COLUMN

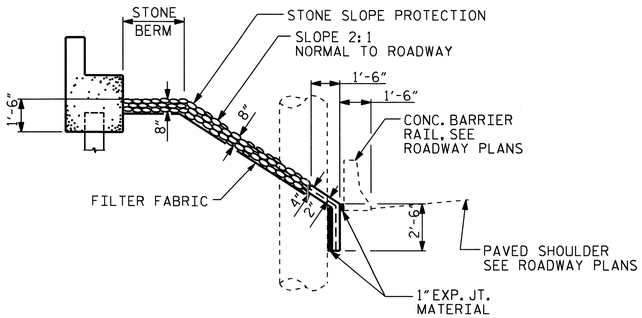

SECTION ALONG ℄ ROADWAY WITH SHOULDER PIER

DETAILS FOR ALTERNATE "B"

PROJECT NO. R-2233AB
RUTHERFORD COUNTY
STATION: 560+00.35 -L-

STATE OF NORTH CAROLINA
DEPARTMENT OF TRANSPORTATION
RALEIGH

STANDARD
SLOPE PROTECTION DETAILS

NORTH CAROLINA PROFESSIONAL SEAL 20125 ENGINEER MARSHALL G. CHEEK, JR.
9-23-6

REVISIONS							
NO.	BY:	DATE:	NO.	BY:	DATE:		
1			3				
2			4				

SHEET NO. S-178
TOTAL SHEETS 184

ASSEMBLED BY : D. HODGE	DATE : 8/10	
CHECKED BY : M.G. CHEEK	DATE : 8/10	
DRAWN BY : ELR 5/92	REV. 7/10/01	LES/RDR
CHECKED BY : GRP 6/92	REV. 5/7/03	RWW/JTE
	REV. 5/1/06	TLA/GM

16-SEP-2010 09:41
R:\Structures\FinalPlans\Str. #5\R-2233AB_SD_SP.dgn
dahodge

STR. #5

STD. NO. SP1 (SHT 3)

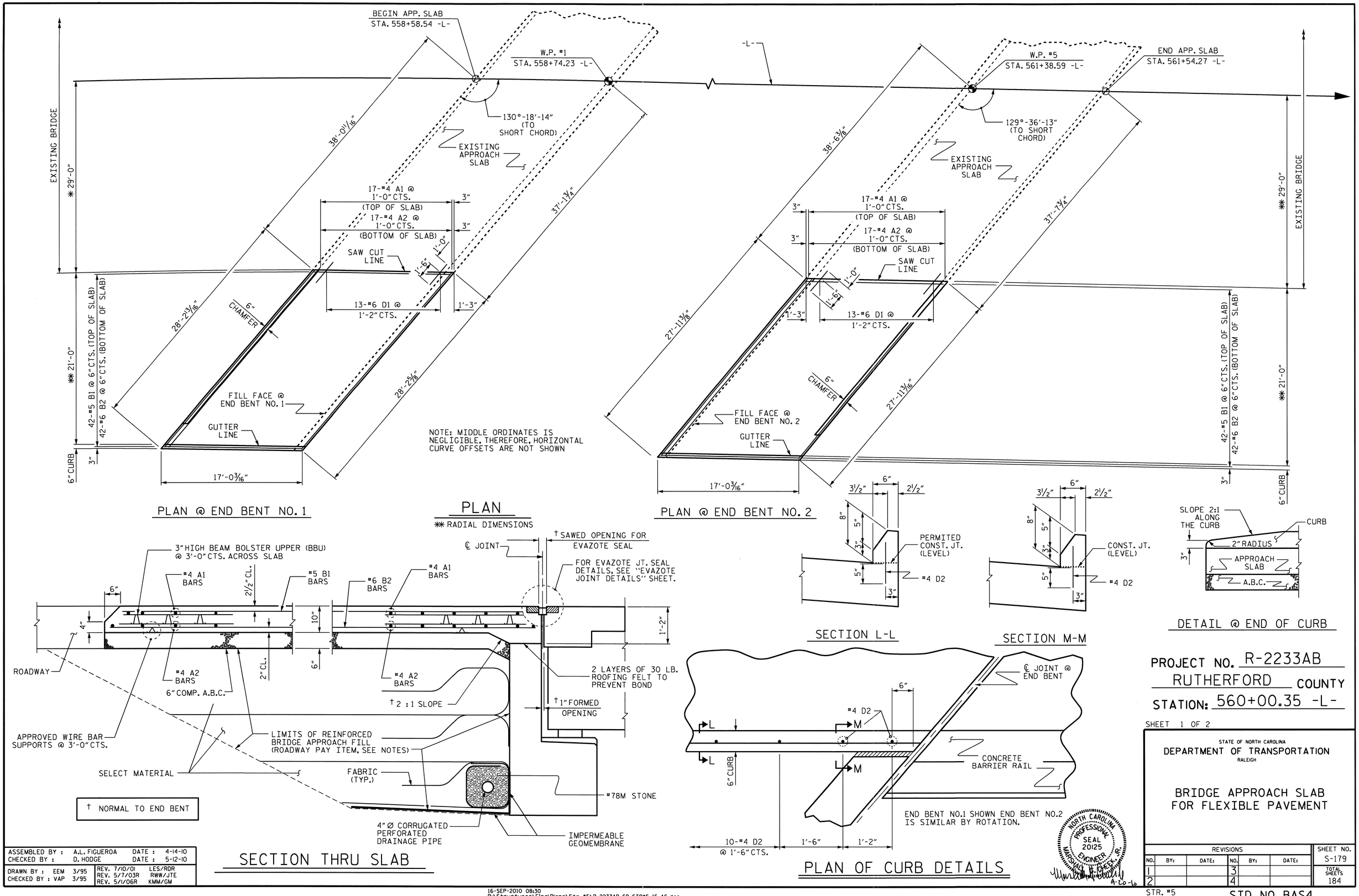

PROJECT NO. R-2233AB
RUTHERFORD COUNTY
STATION: 560+00.35 -L-

SHEET 1 OF 2

STATE OF NORTH CAROLINA
DEPARTMENT OF TRANSPORTATION
RALEIGH

BRIDGE APPROACH SLAB FOR FLEXIBLE PAVEMENT

ASSEMBLED BY : A.L. FIGUEROA	DATE : 4-14-10		
CHECKED BY : D. HODGE	DATE : 5-12-10		
DRAWN BY : EEM 3/95	REV. 7/10/01	LES/RDR	
CHECKED BY : VAP 3/95	REV. 5/7/03R	RWW/JTE	
	REV. 5/1/06R	KMM/GM	

REVISIONS								SHEET NO.
NO.	BY:	DATE:	NO.	BY:	DATE:			S-179
1			3					TOTAL SHEETS
2			4					184

STR. #5

STD. NO. BAS4

16-SEP-2010 08:30
R:\Structures\Final Plans\Str. #5\R-2233AB_SD_STR#5_15_AS.dgn
dahodge

NOTES

APPROACH SLAB SHALL NOT BE CONSTRUCTED PRIOR TO COMPLETION OF THE BRIDGE DECK.

AREA BETWEEN THE WINGWALL AND APPROACH SLAB SHALL BE GRADED TO DRAIN THE WATER AWAY FROM THE FILL FACE OF THE BRIDGE AND SHALL BE PAVED. SEE ROADWAY PLANS.

THE 6" COMP. A.B.C. SHALL BE FLUSH WITH THE ROADWAY END OF THE APPROACH SLAB AND SHALL EXTEND 1'-0" OUTSIDE EXTERIOR EDGE OF THE APPROACH SLAB.

THE CONTRACTOR MAY USE 4" TYPE B-25.0B ASPHALT CONCRETE BASE COURSE IN LIEU OF 6" COMP. A.B.C. IF THIS OPTION IS USED, THE BASE COURSE SHALL BE FLUSH WITH THE ROADWAY END OF THE APPROACH SLAB, AND THE WIDTH SHALL BE THE SAME AS THAT OF THE APPROACH SLAB.

THE CONTRACTOR MAY USE 5" CLASS "A" CONCRETE BASE IN LIEU OF 6" COMP. A.B.C. IF THIS OPTION IS USED, THE CONCRETE BASE SHALL BE FLUSH WITH THE ROADWAY END OF THE APPROACH SLAB, AND THE WIDTH SHALL BE THE SAME AS THAT OF THE APPROACH SLAB. THE CONCRETE SHALL BE FINISHED TO A SMOOTH SURFACE AND A LAYER OF 30 LBS. ROOFING FELT SHALL BE PLACED BETWEEN THE CONCRETE BASE AND THE APPROACH SLAB TO PREVENT BOND. THE APPROACH SLAB SHALL NOT BE CAST UNTIL THE CONCRETE BASE HAS REACHED AN AGE OF THREE CURING DAYS.

D2 DOWELS MAY BE PUSHED INTO GREEN CONCRETE AFTER THE SLAB HAS BEEN SCREEDED AND FLOAT FINISHED.

D1 DOWELS SHALL BE ADHESIVELY ANCHORED 1'-0" INTO EXISTING APPROACH SLAB. NO FIELD TESTING IS REQUIRED. FOR ADHESIVELY ANCHORED DOWELS, SEE SPECIAL PROVISIONS.

BILL OF MATERIAL

APPROACH SLAB AT EB NO.1

BAR	NO.	SIZE	TYPE	LENGTH	WEIGHT
* A1	17	#4	STR	27'-9"	315
A2	17	#4	STR	27'-9"	315
* B1	42	#5	STR	15'-9"	690
B2	42	#6	STR	16'-6"	1041
* D1	13	#6	STR	2'-6"	49
* D2	12	#4	STR	10"	7

REINFORCING STEEL	LBS.	1,356
* EPOXY COATED REINFORCING STEEL	LBS.	1,061
CLASS AA CONCRETE		11.4 C.Y.

APPROACH SLAB AT EB NO.2

BAR	NO.	SIZE	TYPE	LENGTH	WEIGHT
* A1	17	#4	STR	27'-6"	312
A2	17	#4	STR	27'-6"	312
* B1	42	#5	STR	15'-9"	690
B2	42	#6	STR	16'-6"	1041
* D1	13	#6	STR	2'-6"	49
* D2	12	#4	STR	10"	7

REINFORCING STEEL	LBS.	1,353
* EPOXY COATED REINFORCING STEEL	LBS.	1,058
CLASS AA CONCRETE		11.4 C.Y.

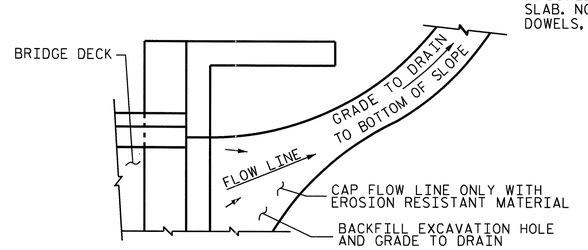

NOTE: IF THE APPROACH SLAB IS NOT CONSTRUCTED IMMEDIATELY AFTER THE BACKFILLING OF THE END BENT EXCAVATION, GRADE TO DRAIN TO THE BOTTOM OF THE SLOPE AND PROVIDE EROSION RESISTANT MATERIAL, SUCH AS FIBERGLASS ROVING OR AS DIRECTED BY THE ENGINEER TO PREVENT SOIL EROSION AND TO PROTECT THE AREA ADJACENT TO THE STRUCTURE. THE CONTRACTOR WILL BE REQUIRED TO REMOVE THESE MATERIALS PRIOR TO CONSTRUCTION OF THE APPROACH SLAB.

TEMPORARY DRAINAGE DETAIL

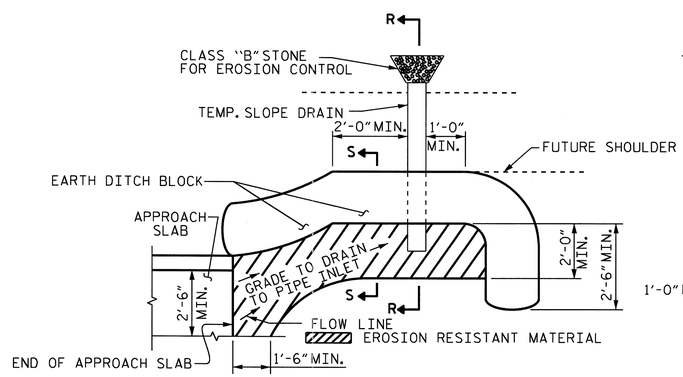

NOTE: IMMEDIATELY AFTER THE CONSTRUCTION OF THE APPROACH SLAB, THE CONTRACTOR SHALL PROVIDE TEMPORARY BERM AND SLOPE DRAIN. CONTRACTOR SHALL GRADE TO PIPE INLET AND PROVIDE EROSION RESISTANT MATERIAL AS SHOWN. THE EROSION RESISTANT MATERIAL SHALL BE EITHER 1) ASPHALT PLANT MIX, TYPE 1 OR TYPE 2, MIN. 2" DEPTH, 2) EROSION CONTROL MAT, OR 3) CONCRETE, AS DIRECTED BY THE ENGINEER. THE SLOPE DRAIN SHALL CONSIST OF A NON-PERFORATED TEMPORARY DRAINAGE PIPE, 12 INCHES DIAMETER.

PLAN VIEW

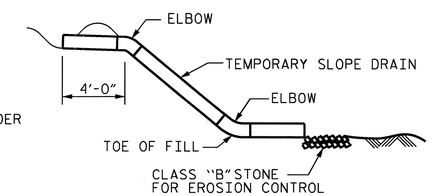

SECTION R-R

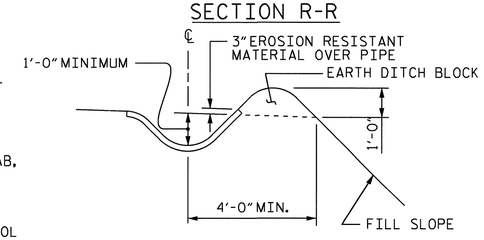

SECTION S-S

TEMPORARY BERM AND SLOPE DRAIN DETAILS

PROJECT NO. R-2233AB
RUTHERFORD COUNTY
STATION: 560+00.35 -L-

SHEET 2 OF 2

STATE OF NORTH CAROLINA
DEPARTMENT OF TRANSPORTATION
RALEIGH

BRIDGE APPROACH SLAB DETAILS

NORTH CAROLINA PROFESSIONAL SEAL 20125 ENGINEER MARSHALL L. JETER, JR.
9-20-10

ASSEMBLED BY :	A.L. FIGUEROA	DATE :	4-14-10
CHECKED BY :	D. HODGE	DATE :	5-12-10

DRAWN BY : FCJ	11/88	REV. 10/17/00	RWW/LES
CHECKED BY : ARB	11/88	REV. 5/7/03	RWW/JTE
		REV. 5/1/06	TLA/GM

REVISIONS						SHEET NO.
NO.	BY:	DATE:	NO.	BY:	DATE:	S-180
1			3			TOTAL SHEETS
2			4			184

STR. #5 STD. NO. BAS10

15-SEP-2010 14:56
R:\Structures\Final Plans\Str. #5\R-2233AB_SD_STR#5_15_AS.dgn
afigueroa

OVERHANG BRACKET CALCULATION INSTRUCTIONS

AASHTO SHAPES - TYPES III, IV, V, AND VI

1. RECORD KNOWN INFORMATION ON "BRIDGE OVERHANG BRACKET SUMMARY" ON SHEET 2
2. CALCULATE THE MAXIMUM SCREED LOAD PER BRACKET (SLPB) WITH AN ESTIMATED R = 1.5. SLPB = R X W. ROUND VALUE UP TO NEAREST SLPB VALUE INDICATED ON APPROPRIATE TABLE 1-1, 1-2, 1-3, OR 1-4.
3. WITH THE ESTIMATED SLPB, OVERHANG SLAB THICKNESS, "K" VALUE, AND 45° HANGER SAFE WORKING LOAD (SWL), ENTER THE APPROPRIATE TABLE 1-1, 1-2, 1-3, OR 1-4 (BASED ON OVERHANG DIMENSION) AND DETERMINE THE BRACKET SPACING, S.
4. CALCULATE S/D1 AND S/D2, ROUNDING UP TO NEAREST VALUE IN TABLE 2. ENTER TABLE 2 AND DETERMINE R VALUE.
5. CALCULATE REVISED SLPB. ROUND VALUE UP TO NEAREST SLPB VALUE INDICATED ON APPROPRIATE TABLE 1-1, 1-2, 1-3, OR 1-4.
6. WITH THE REVISED SLPB, OVERHANG SLAB THICKNESS, "K" VALUE AND 45 HANGER SAFE WORKING LOAD (SWL), ENTER THE APPROPRIATE TABLE 1-1, 1-2, 1-3 OR 1-4 (BASED ON OVERHANG DIMENSION) AND DETERMINE REVISED BRACKET SPACING, S.
7. CONTINUE ITERATIONS OF STEPS 4-6 UNTIL THE REVISED BRACKET SPACING, S, IS THE SAME AS THE PREVIOUS S VALUE.
8. CHECK LUMBER JOIST SPACING: WITH BRACKET SPACING VALUE, S, ROUND THIS VALUE UP TO THE NEAREST VALUE OF ALLOWABLE SPAN LENGTH OF JOIST OF TABLE 3. USING THIS VALUE, ALONG WITH THE AVERAGE OVERHANG SLAB THICKNESS AND THE LUMBER JOIST SIZE, DETERMINE JOIST SPACING FROM TABLE 3. IF NECESSARY, ADJUST LUMBER JOIST SIZE AND/OR JOIST SPACING TO MEET ALLOWABLE SPAN LENGTH OF JOIST.
9. CONVERSELY, IF THE DESIRED JOIST SPACING IS KNOWN, USE THIS ALONG WITH THE AVERAGE OVERHANG SLAB THICKNESS AND THE LUMBER JOIST SIZE TO DETERMINE IF ALLOWABLE SPAN LENGTH OF JOIST IS GREATER THAN THE BRACKET SPACING, S. IF NECESSARY, ADJUST LUMBER JOIST SIZE TO MEET REQUIREMENTS OF ALLOWABLE SPAN LENGTH OF JOIST AND JOIST SPACING.
10. RECORD REMAINING INFORMATION ON "BRIDGE OVERHANG BRACKET SUMMARY" FORM.
11. SUBMIT FORM AND CALCULATIONS FOR REVIEW AND APPROVAL.

TABLE 1-1

(FOR USE ON **UP TO 2'-0" OVERHANG Ⓛ** & 54" HORIZONTAL LEG LENGTH OF THE OVERHANG BRACKET)

AVG. SLAB THICKNESS Ⓣ (in)	BRACKET Ⓚ DIMENSION (in)	SCREED LOAD PER BRACKET									45° HANGER SWL (lbs)
		2500 lbs.	2250 lbs.	2000 lbs.	1750 lbs.	1500 lbs.	1250 lbs.	1000 lbs.	750 lbs.	0 lbs.	
		BRACKET SPACING									
10	30				2'-1"	2'-7"	3'-2"	3'-8"	4'-2"	5'-9"	4000
		3'-6"	4'-0"	4'-5"	4'-9"	5'-1"	5'-3"	5'-5"	5'-7"	6'-7"	6000
	40				2'-1"	2'-7"	3'-2"	3'-8"	4'-2"	5'-9"	4000
		3'-6"	4'-0"	4'-5"	4'-9"	5'-1"	5'-3"	5'-5"	5'-7"	6'-7"	6000
	50				2'-1"	2'-7"	3'-2"	3'-8"	4'-2"	5'-9"	4000
		3'-6"	4'-0"	4'-5"	4'-9"	5'-1"	5'-3"	5'-5"	5'-7"	6'-7"	6000
12	30					2'-4"	2'-10"	3'-4"	3'-9"	5'-2"	4000
		3'-2"	3'-7"	4'-1"	4'-7"	5'-0"	5'-2"	5'-4"	5'-7"	6'-5"	6000
	40					2'-4"	2'-10"	3'-4"	3'-9"	5'-2"	4000
		3'-2"	3'-7"	4'-1"	4'-7"	5'-0"	5'-2"	5'-4"	5'-7"	6'-5"	6000
	50					2'-4"	2'-10"	3'-4"	3'-9"	5'-2"	4000
		3'-2"	3'-7"	4'-1"	4'-7"	5'-0"	5'-2"	5'-4"	5'-7"	6'-5"	6000
14	30					2'-2"	2'-7"	3'-0"	3'-5"	4'-9"	4000
		2'-10"	3'-4"	3'-9"	4'-2"	4'-7"	5'-0"	5'-4"	5'-7"	6'-4"	6000
	40					2'-2"	2'-7"	3'-0"	3'-5"	4'-9"	4000
		2'-10"	3'-4"	3'-9"	4'-2"	4'-7"	5'-0"	5'-4"	5'-7"	6'-4"	6000
	50					2'-2"	2'-7"	3'-0"	3'-5"	4'-9"	4000
		2'-10"	3'-4"	3'-9"	4'-2"	4'-7"	5'-0"	5'-4"	5'-7"	6'-4"	6000
16	30					2'-0"	2'-4"	2'-9"	3'-2"	4'-4"	4000
		2'-8"	3'-0"	3'-5"	3'-10"	4'-3"	4'-7"	5'-0"	5'-5"	6'-3"	6000
	40					2'-0"	2'-4"	2'-9"	3'-2"	4'-4"	4000
		2'-8"	3'-0"	3'-5"	3'-10"	4'-3"	4'-7"	5'-0"	5'-5"	6'-3"	6000
	50					2'-0"	2'-4"	2'-9"	3'-2"	4'-4"	4000
		2'-8"	3'-0"	3'-5"	3'-10"	4'-3"	4'-7"	5'-0"	5'-5"	6'-3"	6000

TABLE 1-2

(FOR USE ON **OVER 2'-0" TO 2'-6" OVERHANG Ⓛ** & 54" HORIZONTAL LEG LENGTH OF THE OVERHANG BRACKET)

AVG. SLAB THICKNESS Ⓣ (in)	BRACKET Ⓚ DIMENSION (in)	SCREED LOAD PER BRACKET									45° HANGER SWL (lbs)
		2500 lbs.	2250 lbs.	2000 lbs.	1750 lbs.	1500 lbs.	1250 lbs.	1000 lbs.	750 lbs.	0 lbs.	
		BRACKET SPACING									
10	30					2'-4"	2'-9"	3'-3"	3'-8"	5'-1"	4000
		3'-1"	3'-6"	4'-0"	4'-5"	4'-11"	5'-3"	5'-5"	5'-7"	6'-7"	6000
	40					2'-4"	2'-9"	3'-3"	3'-8"	5'-1"	4000
		3'-1"	3'-6"	4'-0"	4'-5"	4'-11"	5'-3"	5'-5"	5'-7"	6'-7"	6000
	50					2'-4"	2'-9"	3'-3"	3'-8"	5'-1"	4000
		3'-1"	3'-6"	4'-0"	4'-5"	4'-11"	5'-3"	5'-5"	5'-7"	6'-7"	6000
12	30					2'-1"	2'-6"	2'-11"	3'-4"	4'-6"	4000
		2'-9"	3'-2"	3'-7"	4'-0"	4'-5"	4'-10"	5'-3"	5'-7"	6'-5"	6000
	40					2'-1"	2'-6"	2'-11"	3'-4"	4'-6"	4000
		2'-9"	3'-2"	3'-7"	4'-0"	4'-5"	4'-10"	5'-3"	5'-7"	6'-5"	6000
	50					2'-1"	2'-6"	2'-11"	3'-4"	4'-6"	4000
		2'-9"	3'-2"	3'-7"	4'-0"	4'-5"	4'-10"	5'-3"	5'-7"	6'-5"	6000
14	30						2'-3"	2'-7"	3'-0"	4'-1"	4000
		2'-6"	2'-10"	3'-3"	3'-7"	4'-0"	4'-4"	4'-9"	5'-1"	6'-3"	6000
	40						2'-3"	2'-7"	3'-0"	4'-1"	4000
		2'-6"	2'-10"	3'-3"	3'-7"	4'-0"	4'-4"	4'-9"	5'-1"	6'-3"	6000
	50						2'-3"	2'-7"	3'-0"	4'-1"	4000
		2'-6"	2'-10"	3'-3"	3'-7"	4'-0"	4'-4"	4'-9"	5'-1"	6'-3"	6000
16	30						2'-1"	2'-5"	2'-9"	3'-9"	4000
		2'-3"	2'-7"	2'-11"	3'-4"	3'-8"	4'-0"	4'-4"	4'-8"	5'-8"	6000
	40						2'-1"	2'-5"	2'-9"	3'-9"	4000
		2'-3"	2'-7"	2'-11"	3'-4"	3'-8"	4'-0"	4'-4"	4'-8"	5'-8"	6000
	50						2'-1"	2'-5"	2'-9"	3'-9"	4000
		2'-3"	2'-7"	2'-11"	3'-4"	3'-8"	4'-0"	4'-4"	4'-8"	5'-8"	6000

TABLE 1-3

(FOR USE ON **OVER 2'-6" TO 3'-0" OVERHANG Ⓛ** & 54" HORIZONTAL LEG LENGTH OF THE OVERHANG BRACKET)

AVG. SLAB THICKNESS Ⓣ (in)	BRACKET Ⓚ DIMENSION (in)	SCREED LOAD PER BRACKET									45° HANGER SWL (lbs)
		2500 lbs.	2250 lbs.	2000 lbs.	1750 lbs.	1500 lbs.	1250 lbs.	1000 lbs.	750 lbs.	0 lbs.	
		BRACKET SPACING									
10	30					2'-1"	2'-6"	2'-11"	3'-4"	4'-6"	4000
						4'-5"	4'-10"	5'-3"	5'-7"	6'-7"	6000
	40					2'-1"	2'-6"	2'-11"	3'-4"	4'-6"	4000
		2'-9"	3'-2"	3'-7"	4'-0"	4'-5"	4'-10"	5'-3"	5'-7"	6'-7"	6000
	50					2'-1"	2'-6"	2'-11"	3'-4"	4'-6"	4000
		2'-9"	3'-2"	3'-7"	4'-0"	4'-5"	4'-10"	5'-3"	5'-7"	6'-7"	6000
12	30						2'-2"	2'-7"	2'-11"	4'-0"	4000
						3'-11"	4'-3"	4'-8"	5'-0"	6'-1"	6000
	40						2'-2"	2'-7"	2'-11"	4'-0"	4000
		2'-5"	2'-10"	3'-2"	3'-6"	3'-11"	4'-3"	4'-8"	5'-0"	6'-1"	6000
	50						2'-2"	2'-7"	2'-11"	4'-0"	4000
		2'-5"	2'-10"	3'-2"	3'-6"	3'-11"	4'-3"	4'-8"	5'-0"	6'-1"	6000
14	30						2'-0"	2'-4"	2'-8"	3'-8"	4000
					3'-2"	3'-6"	3'-10"	4'-2"	4'-6"	5'-6"	6000
	40						2'-0"	2'-4"	2'-8"	3'-8"	4000
		2'-2"	2'-6"	2'-10"	3'-2"	3'-6"	3'-10"	4'-2"	4'-6"	5'-6"	6000
	50						2'-0"	2'-4"	2'-8"	3'-8"	4000
		2'-2"	2'-6"	2'-10"	3'-2"	3'-6"	3'-10"	4'-2"	4'-6"	5'-6"	6000
16	30							2'-1"	2'-5"	3'-4"	4000
					2'-11"	3'-2"	3'-6"	3'-10"	4'-1"	5'-0"	6000
	40							2'-1"	2'-5"	3'-4"	4000
		2'-0"	2'-4"	2'-7"	2'-11"	3'-2"	3'-6"	3'-10"	4'-1"	5'-0"	6000
	50							2'-1"	2'-5"	3'-4"	4000
		2'-0"	2'-4"	2'-7"	2'-11"	3'-2"	3'-6"	3'-10"	4'-1"	5'-0"	6000

TABLE 1-4

(FOR USE ON **OVER 3'-0" TO 3'-6" OVERHANG Ⓛ** & 54" HORIZONTAL LEG LENGTH OF THE OVERHANG BRACKET)

AVG. SLAB THICKNESS Ⓣ (in)	BRACKET Ⓚ DIMENSION (in)	SCREED LOAD PER BRACKET									45° HANGER SWL (lbs)
		2500 lbs.	2250 lbs.	2000 lbs.	1750 lbs.	1500 lbs.	1250 lbs.	1000 lbs.	750 lbs.	0 lbs.	
		BRACKET SPACING									
10	30						2'-1"	2'-5"	2'-9"	3'-10"	4000
						2'-3"	2'-11"	3'-7"	4'-3"	5'-9"	6000
	40						2'-1"	2'-5"	2'-9"	3'-10"	4000
				2'-4"	3'-0"	3'-7"	4'-1"	4'-5"	4'-9"	5'-9"	6000
	50						2'-1"	2'-5"	2'-9"	3'-10"	4000
		2'-4"	2'-8"	3'-0"	3'-4"	3'-8"	4'-1"	4'-5"	4'-9"	5'-9"	6000
12	30							2'-2"	2'-6"	3'-5"	4000
						2'-1"	2'-8"	3'-4"	3'-11"	5'-2"	6000
	40							2'-2"	2'-6"	3'-5"	4000
				2'-2"	2'-9"	3'-4"	3'-7"	3'-11"	4'-3"	5'-2"	6000
	50							2'-2"	2'-6"	3'-5"	4000
		2'-1"	2'-4"	2'-8"	3'-0"	3'-4"	3'-7"	3'-11"	4'-3"	5'-2"	6000
14	30								2'-3"	3'-1"	4000
						2'-0"	2'-6"	3'-1"	3'-8"	4'-8"	6000
	40								2'-3"	3'-1"	4000
				2'-0"	2'-7"	3'-0"	3'-3"	3'-6"	3'-10"	4'-8"	6000
	50								2'-3"	3'-1"	4000
			2'-2"	2'-5"	2'-8"	3'-0"	3'-3"	3'-6"	3'-10"	4'-8"	6000
16	30								2'-0"	2'-9"	4000
							2'-4"	2'-10"	3'-5"	4'-3"	6000
	40								2'-0"	2'-9"	4000
					2'-5"	2'-8"	2'-11"	3'-3"	3'-6"	4'-3"	6000
	50								2'-0"	2'-9"	4000
				2'-2"	2'-5"	2'-8"	2'-11"	3'-3"	3'-6"	4'-3"	6000

DEFINITIONS

SLPB = SCREED LOAD PER BRACKET (R x W)
R = SCREED LOAD FACTOR, OBTAINED FROM TABLE 2
W = WHEEL LOAD
S = BRACKET SPACING
T = AVERAGE SLAB THICKNESS
SWL = SAFE WORKING LOAD
K = DIMENSION DEFINED ON "BRIDGE OVERHANG BRACKET SUMMARY" ON SHEET 2
L = OVERHANG MEASURED FROM EDGE OF TOP FLANGE TO EDGE OF SUPERSTRUCTURE

NORTH CAROLINA PROFESSIONAL SEAL 18788 ENGINEER CHANG-CHUAN VICTOR CHAO

Chang-Chuan V. Chao
12-18-2009

PROJECT NO. R-2233AB
RUTHERFORD COUNTY
STATION: 560+00.35 -L-

SHEET 1 OF 4

STATE OF NORTH CAROLINA
DEPARTMENT OF TRANSPORTATION
RALEIGH

STANDARD OVERHANG FALSEWORK
AASHTO TYPES
III, IV, V, AND VI

REVISIONS						SHEET NO.
NO.	BY:	DATE:	NO.	BY:	DATE:	S-181
1			3			TOTAL SHEETS
2			4			184

STR. #5 OF1

ASSEMBLED BY:	DATE:
CHECKED BY:	DATE:
DRAWN BY: R. WRIGHT 06/04	REV.
CHECKED BY: C. V. CHAO 06/04	

18-DEC-2009 09:36
d:\wdir\victor\overhangfalsework\tiebar&strut\r-2233ab_type_iv\r2233ab*5overhangsheets.dgn
vchao

BRIDGE OVERHANG BRACKET SUMMARY

TOTAL SCREED WEIGHT = _____ LBS.
NUMBER OF SCREED WHEELS = _____
SCREED WHEEL LOAD (W) = _____ LBS.
SCREED LOAD PER BRACKET = _____ LBS.

PROJECT No. : _____
COUNTY : _____
STATION : _____
DESCRIPTION : _____

DATE : _____
DESIGN BY : _____
CHECK BY : _____

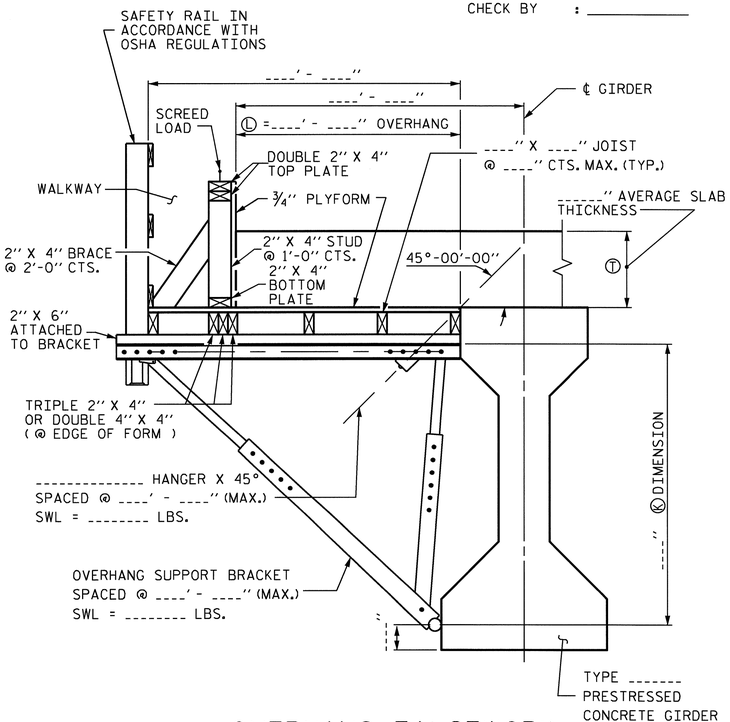

OVERHANG FALSEWORK

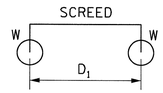

4-WHEEL MACHINE

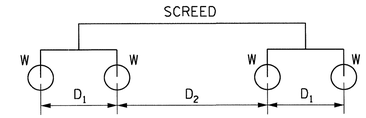

8-WHEEL MACHINE

4 WHEEL MACHINE	
S/D1	R
<= 1.0	1.00
1.1	1.09
1.2	1.17
1.3	1.23
1.4	1.29
1.5	1.33
1.6	1.38
1.7	1.41
1.8	1.44
1.9	1.47
2.0	1.50
2.2	1.55
2.4	1.58
2.6	1.62
2.8	1.64
3.0	1.67
3.5	1.71
4.0	1.75

TABLE 2: SCREED LOAD FACTOR "R"

		THE SCREED LOAD FACTOR R (FOR 8 WHEEL MACHINE)																	
		S/D_2																	
		<= 1.0	1.1	1.2	1.3	1.4	1.5	1.6	1.7	1.8	1.9	2.0	2.2	2.4	2.6	2.8	3.0	3.5	4.0
S/D_1	<= 1.0	1.00	1.09	1.17	1.23	1.29	1.33	1.38	1.41	1.44	1.47	1.50	1.55	1.58	1.62	1.64	1.67	1.71	1.75
	1.1	1.09	1.18	1.26	1.32	1.38	1.42	1.47	1.50	1.54	1.56	1.59	1.64	1.67	1.71	1.73	1.76	1.81	1.84
	1.2	1.17	1.26	1.33	1.40	1.45	1.50	1.54	1.58	1.61	1.64	1.67	1.71	1.75	1.78	1.81	1.83	1.88	1.92
	1.3	1.23	1.32	1.40	1.46	1.52	1.56	1.61	1.64	1.68	1.70	1.73	1.78	1.81	1.85	1.87	1.90	1.95	1.98
	1.4	1.29	1.38	1.45	1.52	1.57	1.62	1.66	1.70	1.73	1.76	1.79	1.83	1.87	1.90	1.93	1.95	2.00	2.07
	1.5	1.33	1.42	1.50	1.56	1.62	1.67	1.71	1.75	1.78	1.81	1.83	1.88	1.92	1.95	1.98	2.00	2.10	2.17
	1.6	1.38	1.47	1.54	1.61	1.66	1.71	1.75	1.79	1.82	1.85	1.88	1.92	1.96	1.99	2.04	2.08	2.18	2.25
	1.7	1.41	1.50	1.58	1.64	1.70	1.75	1.79	1.82	1.86	1.89	1.91	1.96	2.00	2.05	2.11	2.16	2.25	2.32
	1.8	1.44	1.54	1.61	1.68	1.73	1.78	1.82	1.86	1.89	1.92	1.94	1.99	2.06	2.12	2.17	2.22	2.32	2.39
	1.9	1.47	1.56	1.64	1.70	1.76	1.81	1.85	1.89	1.92	1.95	1.97	2.04	2.11	2.18	2.23	2.28	2.38	2.45
	2.0	1.50	1.59	1.67	1.73	1.79	1.83	1.88	1.91	1.94	1.97	2.00	2.09	2.17	2.23	2.29	2.33	2.43	2.50
	2.2	1.55	1.64	1.71	1.78	1.83	1.88	1.92	1.96	1.99	2.04	2.09	2.18	2.26	2.32	2.38	2.42	2.52	2.59
	2.4	1.58	1.67	1.75	1.81	1.87	1.92	1.96	2.00	2.06	2.11	2.17	2.26	2.33	2.40	2.45	2.50	2.60	2.67
	2.6	1.62	1.71	1.78	1.85	1.90	1.95	1.99	2.05	2.12	2.18	2.23	2.32	2.40	2.46	2.52	2.56	2.66	2.73
	2.8	1.64	1.73	1.81	1.87	1.93	1.98	2.04	2.11	2.17	2.23	2.29	2.38	2.45	2.52	2.57	2.62	2.71	2.79
	3.0	1.67	1.76	1.83	1.90	1.95	2.00	2.08	2.16	2.22	2.28	2.33	2.42	2.50	2.56	2.62	2.67	2.76	2.83
	3.5	1.71	1.81	1.88	1.95	2.00	2.10	2.18	2.25	2.32	2.38	2.43	2.52	2.60	2.66	2.71	2.76	2.86	2.93
	4.0	1.75	1.84	1.92	1.98	2.07	2.17	2.25	2.32	2.39	2.45	2.50	2.59	2.67	2.73	2.79	2.83	2.93	3.00

TABLE 3: ALLOWABLE SPAN LENGTH OF JOISTS AND JOIST SPACINGS

AVG. SLAB THICKNESS Ⓣ (IN)	LUMBER JOIST SIZE (IN X IN)	JOIST SPACINGS			
		15 IN	12 IN	10 IN	8 IN
		THE ALLOWABLE SPAN LENGTH OF JOISTS			
10	2 X 4	———	4' - 6"	4' - 9"	5' - 0"
	4 X 4	5' - 9"	6' - 3"	6' - 6"	6' - 7"
12	2 X 4	———	4' - 3"	4' - 9"	5' - 0"
	4 X 4	5' - 3"	6' - 0"	6' - 3"	6' - 5"
14	2 X 4	———	4' - 0"	4' - 6"	5' - 0"
	4 X 4	———	5' - 6"	6' - 0"	6' - 4"
16	2 X 4	———	4' - 0"	4' - 3"	4' - 9"
	4 X 4	———	5' - 3"	5' - 9"	6' - 3"

NOTES

DESIGN INCLUDES CONSTRUCTION LIVE LOAD 20 PSF ON THE AREA SUPPORTED AND 75 PLF AT THE OUTSIDE DECK OF OVERHANGS.

REQUIRED MINIMUM DIAGONAL LEG CAPACITY: 3600 LB WORKING LOAD

THE CONTRACTOR HAS THE OPTION OF SUBMITTING HIS OWN DESIGN FOR OVERHANG FALSEWORK IN ACCORDANCE WITH THE SPECIAL PROVISIONS.

SUBMITTALS UTILIZING THE INSTRUCTIONS AND PROCEDURES DESCRIBED ON SHEET 1 OF 3 SHALL BE IN ACCORDANCE WITH THE APPLICABLE SECTIONS OF THE SPECIFICATIONS AND SPECIAL PROVISIONS, EXCEPT THAT CALCULATIONS FOR OVERHANG FALSEWORK NEED NOT BE SEALED BY A REGISTERED ENGINEER.

FOR OVERHANG FALSEWORK BRACING DESIGN, SEE SHEET 3 OF 3.

PROJECT NO. R-2233AB
RUTHERFORD COUNTY
STATION: 560+00.35 -L-

SHEET 2 OF 4

STATE OF NORTH CAROLINA
DEPARTMENT OF TRANSPORTATION
RALEIGH

STANDARD OVERHANG FALSEWORK
AASHTO TYPES
III, IV, V, AND VI

NORTH CAROLINA PROFESSIONAL SEAL 18788 ENGINEER CHANG-CHUAN VICTOR CHAO

Chang-Chuan V. Chao
12-18-2009

ASSEMBLED BY:	DATE:
CHECKED BY:	DATE:
DRAWN BY: R. WRIGHT 06/04	REV.
CHECKED BY: C. V. CHAO 06/04	

REVISIONS						SHEET NO.
NO.	BY:	DATE:	NO.	BY:	DATE:	S-182
1			3			TOTAL SHEETS
2			4			184

STR. #5 OF2

18-DEC-2009 09:36
d:\wdir\victor\overhangfalsework\tiebar&strut\r-2233ab_type_iv\r2233ab*5overhangsheets.dgn
vchao

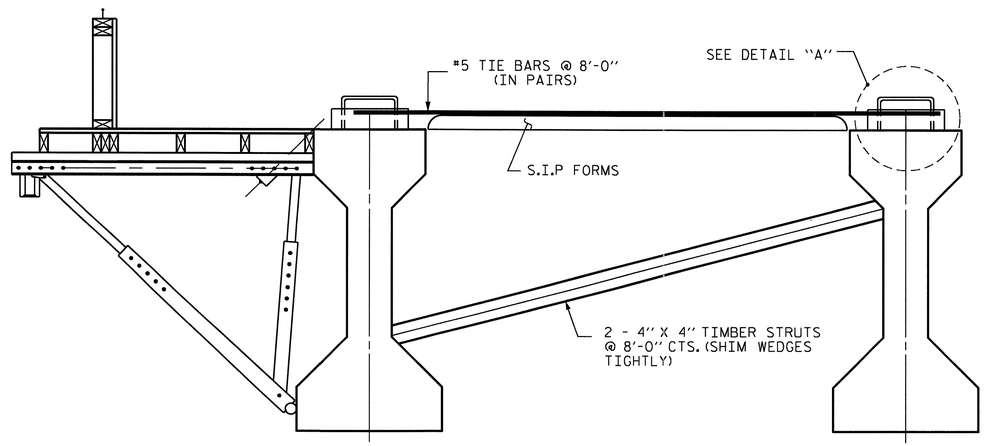

EXTERIOR GIRDER

INTERIOR GIRDER

DETAIL OF REQUIRED OVERHANG FALSEWORK BRACING SYSTEM

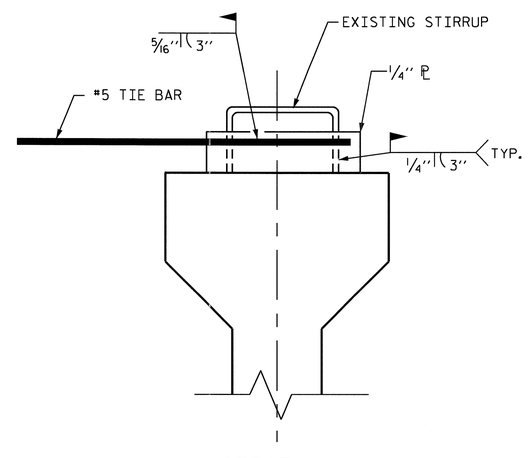

DETAIL "A"

NOTES:

EACH #5 TIE BAR SHALL BE WELDED TO ONE STIRRUP LOOP AS SHOWN IN DETAIL "A". #5 TIE BARS SHALL BE WELDED TO TWO ADJACENT STIRRUPS OF THE EXTERIOR GIRDER AND THE ADJACENT INTERIOR GIRDER BETWEEN PERMANENT DIAPHRAGMS. WELD STEEL PLATES IN BETWEEN THE TIE BARS AND THE STIRRUP LOOP. WELDING TWO TIE BARS TO THE SAME STIRRUP LOOP SHALL NOT BE PERMITTED.

MAXIMUM SPACING BETWEEN THE BRACING (TIE BARS-TIMBER STRUT) IS 8'-0" CTS. #5 TIE BARS SHALL BE LOCATED OVER A TIMBER STRUT.

INSTALL TIE BARS AND TIMBER STRUTS PRIOR TO PLACEMENT OF CONCRETE OR SCREED WEIGHT ONTO THE OVERHANG FALSEWORK.

PROJECT NO. R-2233AB
RUTHERFORD COUNTY
STATION: 560+00.35 -L-

SHEET 3 OF 4

STATE OF NORTH CAROLINA
DEPARTMENT OF TRANSPORTATION
RALEIGH

STANDARD OVERHANG FALSEWORK
AASHTO TYPES
III, IV, V, AND VI

(SPANS A & D)

NORTH CAROLINA PROFESSIONAL SEAL 18788 ENGINEER CHANG-CHUAN VICTOR CHAO

Chang-Chuan V. Chao
12-18-2009

REVISIONS						SHEET NO.
NO.	BY:	DATE:	NO.	BY:	DATE:	S-183
1			3			TOTAL SHEETS
2			4			184

DRAWN BY: R. WRIGHT 06/04 DATE : _____
CHECKED BY: C. V. CHAO 06/04 DATE : _____

18-DEC-2009 09:37
ds\wdir\victor\overhangfalsework\tiebar&strut\r-2233ab_type_iv\r2233ab*5overhangsheets.dgn
vchao

STR. #5

OF3

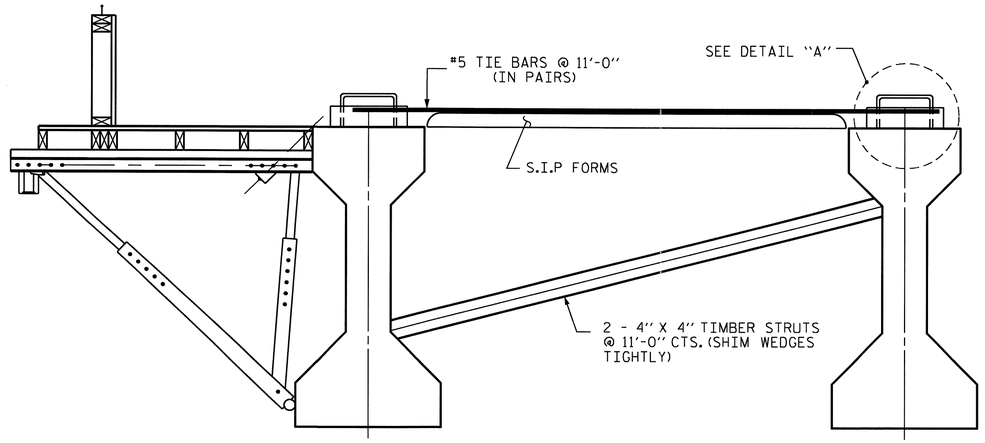

EXTERIOR GIRDER

INTERIOR GIRDER

DETAIL OF REQUIRED OVERHANG FALSEWORK BRACING SYSTEM

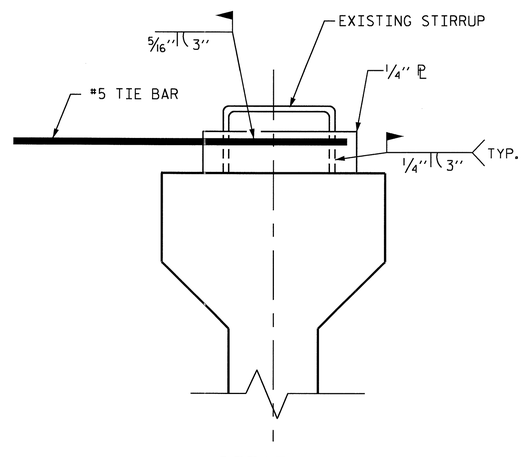

DETAIL "A"

NOTES:

EACH #5 TIE BAR SHALL BE WELDED TO ONE STIRRUP LOOP AS SHOWN IN DETAIL "A". #5 TIE BARS SHALL BE WELDED TO TWO ADJACENT STIRRUPS OF THE EXTERIOR GIRDER AND THE ADJACENT INTERIOR GIRDER BETWEEN PERMANENT DIAPHRAGMS. WELD STEEL PLATES IN BETWEEN THE TIE BARS AND THE STIRRUP LOOP. WELDING TWO TIE BARS TO THE SAME STIRRUP LOOP SHALL NOT BE PERMITTED.

MAXIMUM SPACING BETWEEN THE BRACING (TIE BARS-TIMBER STRUT) IS 11'-0" CTS. #5 TIE BARS SHALL BE LOCATED OVER A TIMBER STRUT.

INSTALL TIE BARS AND TIMBER STRUTS PRIOR TO PLACEMENT OF CONCRETE OR SCREED WEIGHT ONTO THE OVERHANG FALSEWORK.

PROJECT NO. R-2233AB
RUTHERFORD COUNTY
STATION: 560+00.35 -L-

SHEET 4 OF 4

STATE OF NORTH CAROLINA
DEPARTMENT OF TRANSPORTATION
RALEIGH

STANDARD OVERHANG FALSEWORK
AASHTO TYPES
III, IV, V, AND VI

(SPANS B & C)

NORTH CAROLINA PROFESSIONAL SEAL 18788 ENGINEER CHANG-CHUAN VICTOR CHAO

Chang-Chuan V. Chao
12-18-2009

REVISIONS						SHEET NO.
NO.	BY:	DATE:	NO.	BY:	DATE:	S-184
1			3			TOTAL SHEETS
2			4			184

DRAWN BY: R. WRIGHT 06/04 DATE :
CHECKED BY: C. V. CHAO 06/04 DATE :

18-DEC-2009 09:38
d:\wdir\victor\overhangfalsework\tiebar&strut\r-2233ab_type_iv\r2233ab*5overhangsheets.dgn
vchao

STR. #5

OF 4

B.M. #14 - RAILROAD SPIKE IN BASE OF 14'' OAK, 300.35 FT. LT. OF STA. 536+18.10 -L- EL. 975.07'

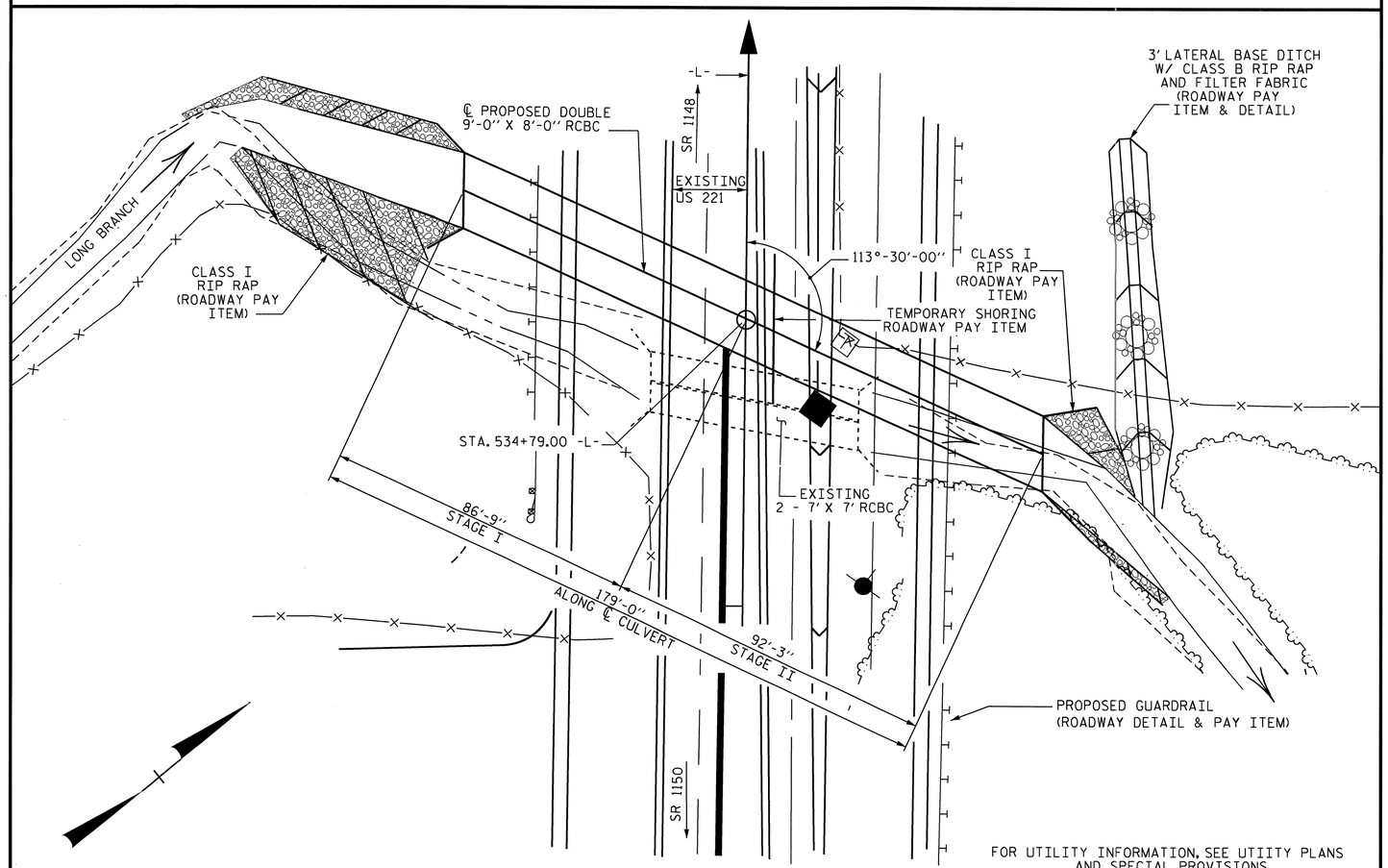

LOCATION SKETCH

NOTES

ASSUMED LIVE LOAD = HS20 OR ALTERNATE LOADING.

DESIGN FILL---------- 13.00 FT.

FOR OTHER DESIGN DATA AND NOTES, SEE STANDARD NOTE SHEET.

3'' Ø WEEP HOLES INDICATED TO BE IN ACCORDANCE WITH THE SPECIFICATIONS.

CONCRETE IN STAGE I CULVERT TO BE POURED IN THE FOLLOWING ORDER:

1. WING FOOTING AND FLOOR SLAB INCLUDING 4 INCHES OF ALL VERTICAL WALLS.
2. THE REMAINING PORTIONS OF THE WALLS AND WINGS FULL HEIGHT FOLLOWED BY ROOF SLAB AND HEADWALLS.

CONCRETE IN STAGE II CULVERT TO BE POURED IN THE FOLLOWING ORDER:

1. PHASE I WING FOOTINGS AND FLOOR SLAB INCLUDING 4'' OF PHASE I VERTICAL WALLS.
2. THE REMAINING PORTIONS PHASE I WALLS AND PHASE I WINGS FULL HEIGHT.
3. PHASE II WING FOOTINGS AND FLOOR SLAB INCLUDING 4'' OF PHASE II VERTICAL WALLS.
4. THE REMAINING PORTIONS OF PHASE II WALLS AND PHASE II WINGS FULL HEIGHT.
5. ROOF SLAB AND HEADWALL.

THE RESIDENT ENGINEER SHALL CHECK THE LENGTH OF CULVERT BEFORE STAKING IT OUT TO MAKE CERTAIN THAT IT WILL PROPERLY TAKE CARE OF THE FILL.

DIMENSIONS FOR WING LAYOUT AS WELL AS ADDITIONAL REINFORCING STEEL EMBEDDED IN BARREL ARE SHOWN ON WING SHEET.

TRANSVERSE CONSTRUCTION JOINTS SHALL BE USED IN THE BARREL, SPACED TO LIMIT THE POURS TO A MAXIMUM OF 70'-0''. LOCATION OF THE JOINTS SHALL BE SUBJECT TO APPROVAL OF THE ENGINEER.

AT THE CONTRACTOR'S OPTION, HE MAY SPLICE THE VERTICAL REINFORCING STEEL IN THE INTERIOR FACES OF THE EXTERIOR WALLS ABOVE LOWER WALL CONSTRUCTION JOINT. THE SPLICE LENGTH SHALL BE AS PROVIDED IN THE SPLICE LENGTH CHART SHOWN ON THE PLANS. EXTRA WEIGHT OF STEEL DUE TO THE SPLICES SHALL BE PAID FOR BY THE CONTRACTOR.

AT THE CONTRACTOR'S OPTION HE MAY SUBMIT, TO THE ENGINEER FOR APPROVAL, DESIGN AND DETAIL DRAWINGS FOR A PRECAST REINFORCED CONCRETE BOX CULVERT IN LIEU OF THE CAST-IN-PLACE CULVERT SHOWN ON THE PLANS. THE DESIGN SHALL PROVIDE THE SAME SIZE AND NUMBER OF BARRELS AS USED ON THE CAST-IN-PLACE DESIGN. FOR OPTIONAL PRECAST REINFORCED CONCRETE BOX CULVERT, SEE SPECIAL PROVISIONS.

FOR ADHESIVELY ANCHORED ANCHOR BOLTS OR DOWELS, SEE SPECIAL PROVISIONS.

FOR MAINTENANCE OF TRAFFIC, SEE TRAFFIC CONTROL PLANS.

FOR LIMITS OF TEMPORARY SHORING FOR MAINTENANCE OF TRAFFIC, SEE TRAFFIC CONTROL PLANS.

STEEL SHEET PILING REQUIRED FOR SHORING SHALL BE HOT ROLLED.

FOR CONSTRUCTION SEQUENCE, SEE EROSION CONTROL PLANS.

FOR FALSEWORK AND FORMWORK, SEE SPECIAL PROVISIONS.

FOR GROUT FOR STRUCTURES, SEE SPECIAL PROVISIONS.

FOR SUBMITTAL OF WORKING DRAWINGS, SEE SPECIAL PROVISIONS.

FOR CULVERT DIVERSION DETAILS AND PAY ITEM, SEE EROSION CONTROL PLANS.

FOR CRANE SAFETY, SEE SPECIAL PROVISIONS.

FOR CURING CONCRETE, SEE SPECIAL PROVISIONS.

FOR EROSION CONTROL MEASURES, SEE EROSION CONTROL PLANS.

AFTER SERVING AS A TEMPORARY STRUCTURE, THE EXISTING DOUBLE 7' X 7' REINFORCED CONCRETE BOX CULVERT SHALL BE REMOVED.

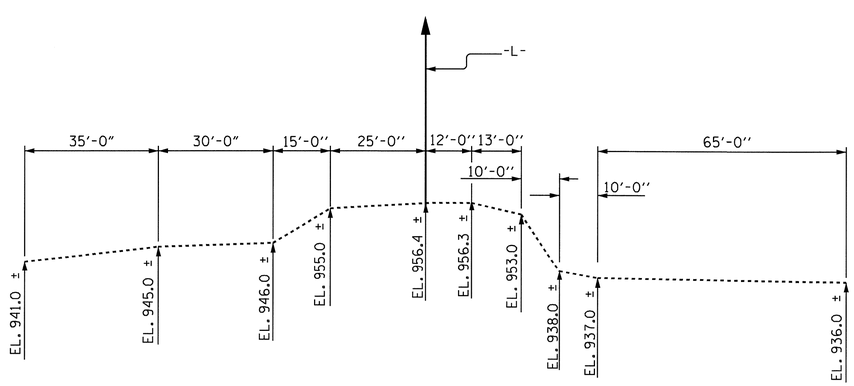

PROFILE ALONG ℄ CULVERT

HYDRAULIC DATA

DESIGN DISCHARGE _____ = 480 C.F.S

FREQUENCY OF DESIGN FLOOD_____= 50 YEARS

DESIGN HIGH WATER ELEVATION = 947.8 FT.

DRAINAGE AREA = _____ = 0.7 SQ. MI.

BASIC DISCHARGE (Q100) _____ = 600 C.F.S.

BASIC HIGH WATER ELEVATION = 948.0 FT.

OVERTOPPING FLOOD DATA

OVERTOPPING DISCHARGE --------- = 950 + C.F.S.

FREQUENCY OF OVERTOPPING FLOOD ----- = 500 + YEARS

OVERTOPPING FLOOD ELEVATION = 955.4 FT.

ROADWAY DATA

GRADE POINT ELEV. @ STATION 534+79.00 -L- = 958.517 FT.

BED ELEV. @ STATION 534+79.00 -L- = 938.0 FT.

ROADWAY SLOPES = 2:1

TOTAL STRUCTURE QUANTITIES

CLASS A CONCRETE	
STAGE I	197.2 C.Y.
STAGE II	206.9 C.Y.
TOTAL	404.1 C.Y.
REINFORCING STEEL	
STAGE I	27,866 LBS.
STAGE II	30,571 LBS.
TOTAL	58,437 LBS.
CULVERT EXCAVATION	LUMP SUM
FOUNDATION COND. MAT'L	
STAGE I	122 TONS
STAGE II	130 TONS
TOTAL	252 TONS
REMOVAL OF EXISTING STRUCTURE	LUMP SUM

PROJECT NO. R-2233AB

RUTHERFORD COUNTY

STATION: 534+79.00 -L-

SHEET 1 OF 11

STATE OF NORTH CAROLINA
DEPARTMENT OF TRANSPORTATION
RALEIGH

DOUBLE 9'-0'' X 8'-0''
CONCRETE BOX CULVERT

NORTH CAROLINA PROFESSIONAL SEAL 20125 ENGINEER MARSHALL FULCHER, JR.
4-21-10

REVISIONS						SHEET NO.
NO.	BY:	DATE:	NO.	BY:	DATE:	C-1
1			3			TOTAL SHEETS
2			4			11

DRAWN BY : M. POOLE/ALF DATE : 08/09
CHECKED BY : M. G. CHEEK DATE : 02/10

21-SEP-2010 09:04
R:\Structures\Final Plans\Str. #6\R2233AB_SD_CU_06.dgn
dahodge

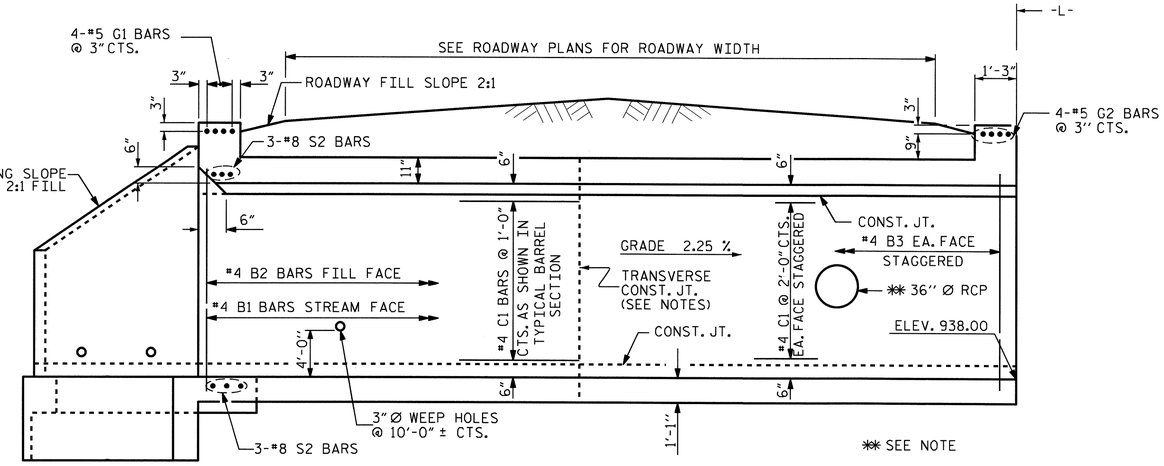

EXTERIOR WALL INTERIOR WALL

CULVERT SECTION NORMAL TO ROADWAY

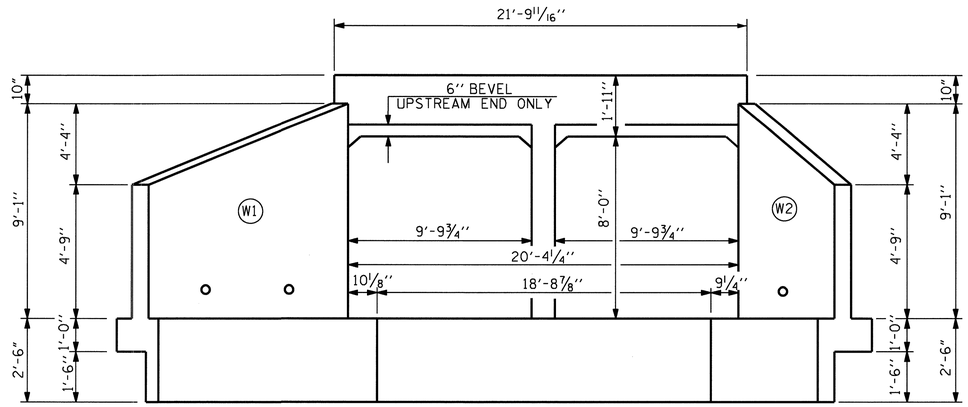

INLET END ELEVATION NORMAL TO SKEW

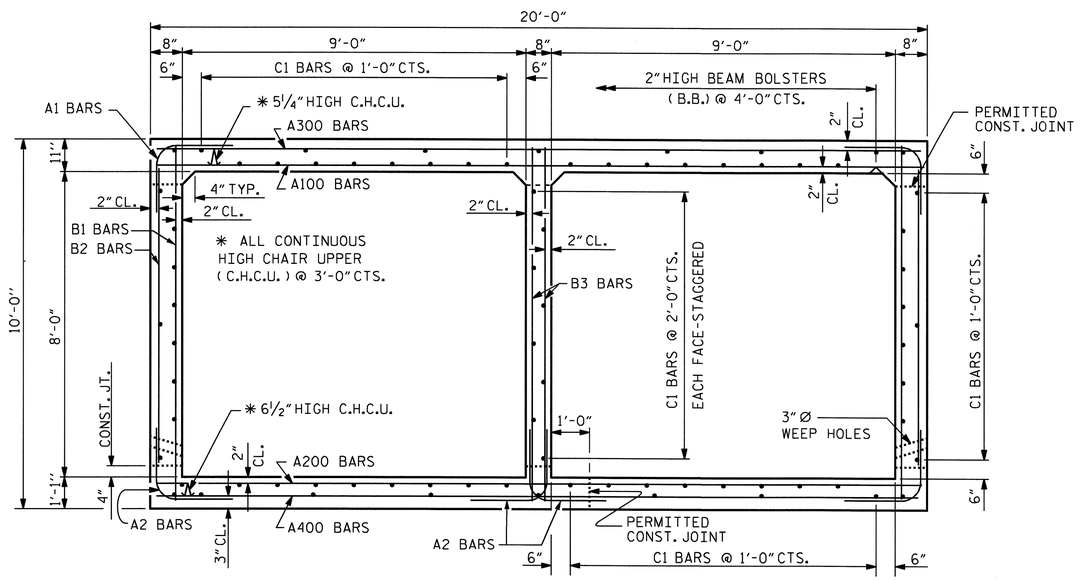

RIGHT ANGLE SECTION OF BARREL

THERE ARE 76 "C" BARS IN SECTION OF BARREL.

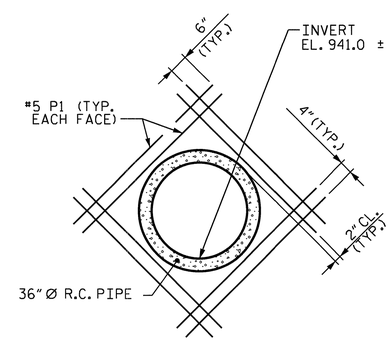

36" Ø PIPE DETAIL

** THE PIPE THRU THE WALL OF THE CULVERT WILL BE LOCATED BY THE ENGINEER. THE REINFORCING STEEL WILL BE CUT & FIELD BENT AS NECESSARY TO CLEAR THE PIPE.

PROJECT NO. R-2233AB
RUTHERFORD COUNTY
STATION: 534+79.00 -L-

SHEET 2 OF 11

STATE OF NORTH CAROLINA
DEPARTMENT OF TRANSPORTATION
RALEIGH

DOUBLE 9'-0" X 8'-0" CONCRETE BOX CULVERT
STAGE I

NORTH CAROLINA PROFESSIONAL SEAL 20125 ENGINEER MARSHALL G. CHEEK, JR.
4-20-10

REVISIONS						SHEET NO.
NO.	BY:	DATE:	NO.	BY:	DATE:	C-2
1			3			TOTAL SHEETS
2			4			11

DRAWN BY : M. POOLE/ALF DATE : 08/09
CHECKED BY : M. G. CHEEK DATE : 02/10

20-SEP-2010 13:58
R:\Structures\FinalPlans\Str. #6\R2233AB_SD_CU_06.dgn
afigueroa

STR. #6

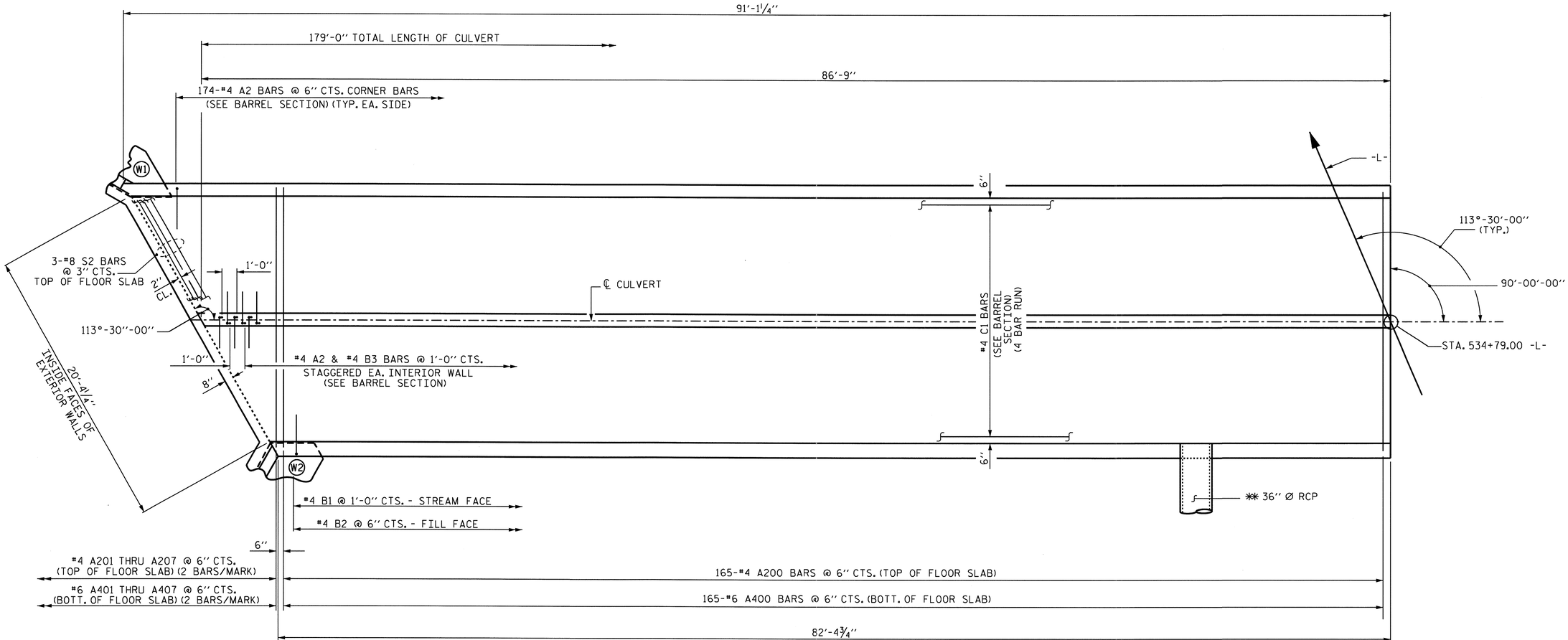

PLAN OF FLOOR SLAB

** THE 36" Ø RCP WILL BE LOCATED BY THE ENGINEER. THE INVERT OF THE PIPE IS ELEVATION 941.0. THE REINFORCING STEEL SHALL BE FIELD CUT AS NECESSARY TO CLEAR THE PIPE.

PROJECT NO. R-2233AB
RUTHERFORD COUNTY
STATION: 534+79.00 -L-

SHEET 3 OF 11

STATE OF NORTH CAROLINA
DEPARTMENT OF TRANSPORTATION
RALEIGH

DOUBLE 9'-0" X 8'-0" CONCRETE BOX CULVERT
STAGE I

NORTH CAROLINA PROFESSIONAL SEAL 20125 ENGINEER MARSHALL G. CHEEK, JR.
9-20-10

REVISIONS						SHEET NO.
NO.	BY:	DATE:	NO.	BY:	DATE:	C-3
1			3			TOTAL SHEETS
2			4			11

DRAWN BY : M. POOLE/ALF DATE : 08/09
CHECKED BY : M. G. CHEEK DATE : 02/10

15-SEP-2010 16:59
R:\Structures\FinalPlans\Str. #6\R2233AB_SD_CU_06.dgn
afigueroa

STR. #6

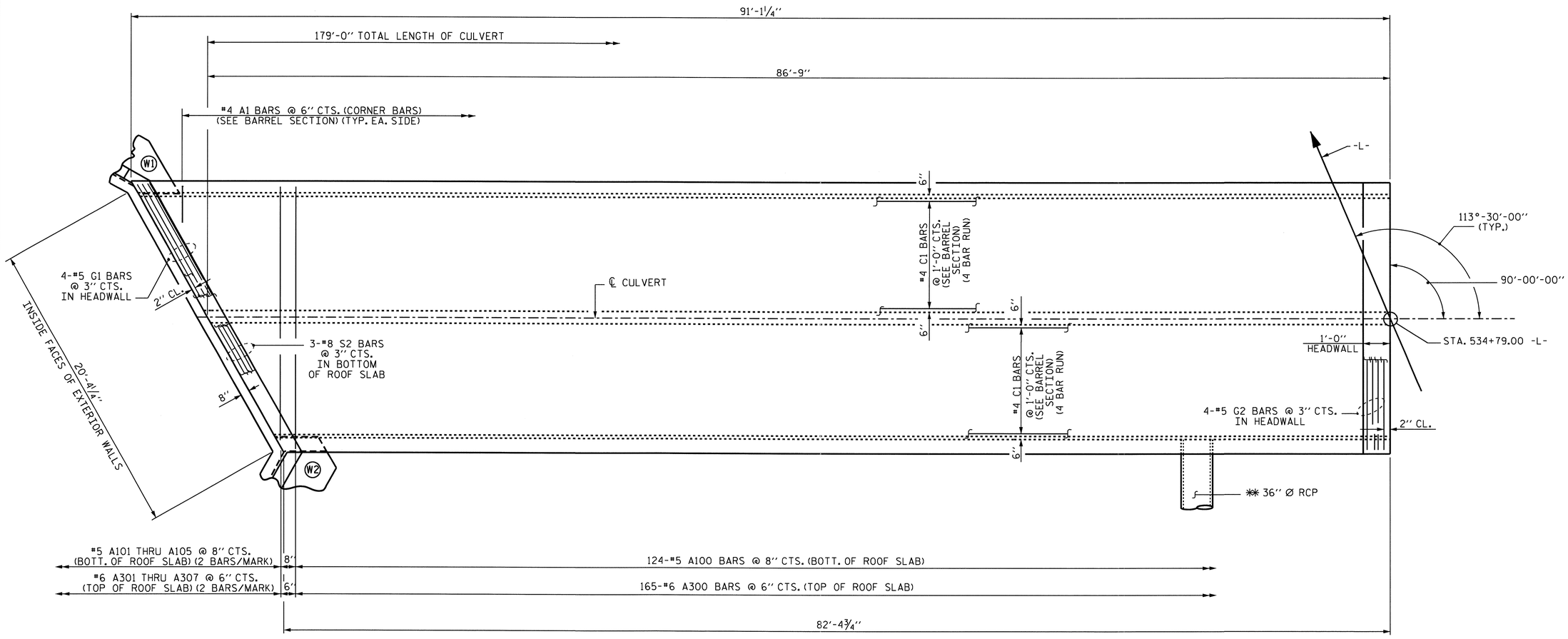

PLAN OF ROOF SLAB

** THE 36'' Ø RCP WILL BE LOCATED BY THE ENGINEER. THE INVERT OF THE PIPE IS ELEVATION 941.0. THE REINFORCING STEEL SHALL BE FIELD CUT AS NECESSARY TO CLEAR THE PIPE.

PROJECT NO. R-2233AB
RUTHERFORD COUNTY
STATION: 534+79.00 -L-

SHEET 4 OF 11

STATE OF NORTH CAROLINA
DEPARTMENT OF TRANSPORTATION
RALEIGH

DOUBLE 9'-0'' X 8'-0'' CONCRETE BOX CULVERT
STAGE I

NORTH CAROLINA PROFESSIONAL SEAL 20125 ENGINEER
MARSHALL G. CHEEK, JR.
9-20-2010

REVISIONS						SHEET NO.
NO.	BY:	DATE:	NO.	BY:	DATE:	C-4
1			3			TOTAL SHEETS
2			4			11

DRAWN BY : M. POOLE/ALF DATE : 08/09
CHECKED BY : M. G. CHEEK DATE : 02/10

15-SEP-2010 16:59
R:\Structures\FinalPlans\Str. #6\R2233AB_SD_CU_06.dgn
afigueroa

STR. #6

SPLICE LENGTH CHART

BAR	SIZE	SPLICE LENGTH
A200	4	1'-9"
A400	6	2'-4"
B1	4	1'-9"
B3	4	1'-9"
C1	4	1'-11"

BAR TYPE

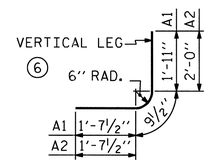

BAR DIMENSIONS ARE OUT TO OUT

BAR SCHEDULE - STAGE I

BAR	NO.	SIZE	TYPE	LENGTH	WEIGHT	BAR	NO.	SIZE	TYPE	LENGTH	WEIGHT	BAR	NO.	SIZE	TYPE	LENGTH	WEIGHT
A1	348	4	6	4'-4"	1007	A300	165	6	STR	19'-7"	4853	B1	174	4	STR	9'-6"	1104
A2	522	4	6	4'-5"	1540	A301	2	6	STR	17'-0"	51	B2	348	4	STR	7'-4"	1705
						A302	2	6	STR	14'-7"	44	B3	174	4	STR	9'-6"	1104
A100	124	5	STR	19'-7"	2533	A303	2	6	STR	12'-3"	37						
A101	2	5	STR	16'-2"	34	A304	2	6	STR	9'-11"	30	C1	304	4	STR	24'-2"	4908
A102	2	5	STR	13'-0"	27	A305	2	6	STR	7'-7"	23						
A103	2	5	STR	9'-11"	21	A306	2	6	STR	5'-2"	16	D2	3	6	STR	2'-8"	12
A104	2	5	STR	6'-9"	14	A307	2	6	STR	2'-10"	9	D3	10	6	STR	1'-8"	25
A105	2	5	STR	3'-7"	7							D4	10	6	STR	1'-2"	12
						A400	165	6	STR	19'-7"	4853						
A200	165	4	STR	19'-7"	2158	A401	2	6	STR	17'-0"	51	G1	4	5	STR	21'-4"	89
A201	2	4	STR	17'-0"	23	A402	2	6	STR	14'-7"	44	G2	4	5	STR	19'-8"	82
A202	2	4	STR	14'-7"	19	A403	2	6	STR	12'-3"	37						
A203	2	4	STR	12'-3"	16	A404	2	6	STR	9'-11"	30	P1	16	5	STR	5'-6"	92
A204	2	4	STR	9'-11"	13	A405	2	6	STR	7'-7"	23						
A205	2	4	STR	7'-7"	10	A406	2	6	STR	5'-2"	16	S2	6	8	STR	21'-4"	342
A206	2	4	STR	5'-2"	7	A407	2	6	STR	2'-10"	9	REINFORCING STEEL				=	27,034 LBS.
A207	2	4	STR	2'-10"	4												

STAGE I QUANTITIES

CLASS A CONCRETE
- BARREL @ 2.082 CY/FT — 180.6 CY
- WINGS, ETC. — 14.7 CY
- SILLS — 1.9 CY
- TOTAL — 197.2 CY

REINFORCING STEEL
- BARREL & SILLS — 27,034 LBS.
- WINGS, ETC. — 832 LBS.
- TOTAL — 27,866 LBS.

CULVERT EXCAVATION --------- LUMP SUM

FOUNDATION COND. MAT'L -------- 122 TONS

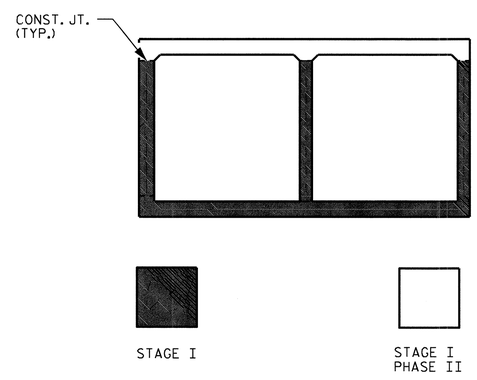

STAGING SEQUENCE

STAGE I
LOOKING DOWNSTREAM

PROJECT NO. R-2233AB
RUTHERFORD COUNTY
STATION: 534+79.00 -L-

SHEET 5 OF 11

STATE OF NORTH CAROLINA
DEPARTMENT OF TRANSPORTATION
RALEIGH

DOUBLE 9'-0" X 8'-0" CONCRETE BOX CULVERT STAGE I

NORTH CAROLINA PROFESSIONAL SEAL 20125 ENGINEER MARSHALL G. CHEEK, JR.
9-20-10

REVISIONS						SHEET NO.
NO.	BY:	DATE:	NO.	BY:	DATE:	C-5
1			3			TOTAL SHEETS
2			4			11

DRAWN BY : M. POOLE/ALF DATE : 08/09
CHECKED BY : M. G. CHEEK DATE : 02/10

NOTES

MATERIAL EXCAVATED FROM THE EXISTING BED SHALL BE STOCKPILED FOR USE IN THE PROPOSED CULVERT AS SHOWN IN THE FLOOR SILL LAYOUT. BED MATERIAL SHALL BE SUPPLEMENTED WITH CLASS 'B' RIP RAP AS NECESSARY. STONE LARGER THAN 75mm SHALL NOT BE PLACED WITHIN THE LOW FLOW CHANNEL. BED MATERIAL SHALL BE SUBJECT TO APPROVAL BY THE ENGINEER.

THE ENTIRE COST OF WORK REQUIRED TO PLACE THE EXCAVATED MATERIAL OR SUPPLEMENTAL MATERIAL AS SHOWN ON THE PLANS SHALL BE INCLUDED IN THE CONTACT LUMP SUM PRICE BID FOR CULVERT EXCAVATION.

THE ENTIRE COST OF WORK REQUIRED TO CONSTRUCT THE SILLS SHALL BE INCLUDED IN THE VARIOUS PAY ITEMS.

THE STOCKPILED MATERIAL SHALL BE PLACED IN THE LEFT CULVERT BARREL TO A DEPTH OF 2'-0". THE STOCKPILE MATERIAL SHALL BE PLACED IN THE RIGHT BARREL TO THE TOPS OF THE SILL ELEVATIONS TO PROVIDE A CONTINUOUS 6" DEPTH LOW FLOW CHANNEL BETWEEN THE LOW SILLS. A DEPTH OF MATERIAL OF 6" SHALL BE MAINTAINED ALONG THE LOW FLOW CHANNEL.

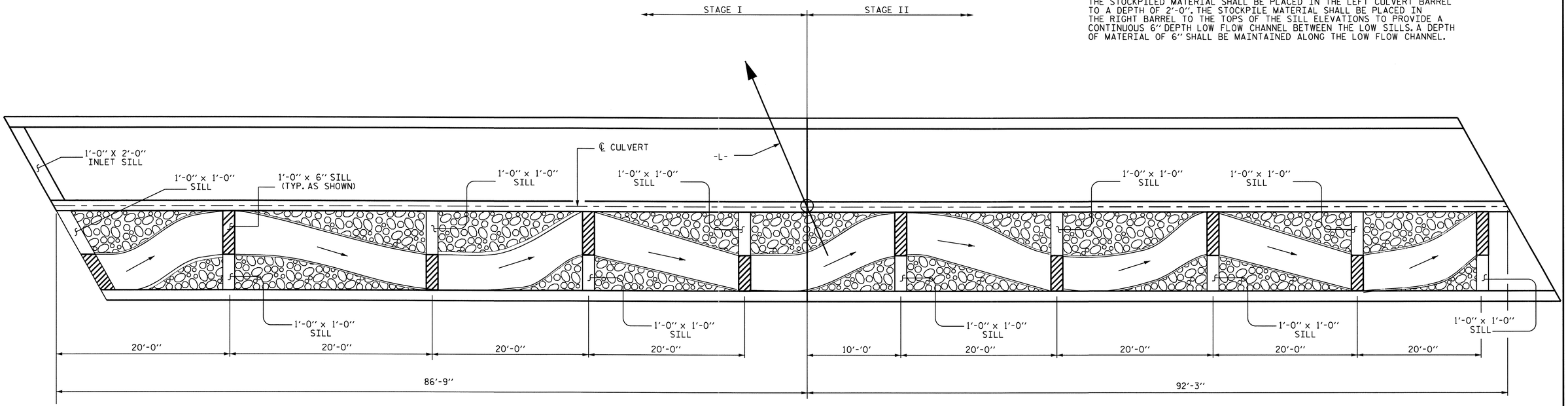

FLOOR SILL LAYOUT

NOTE: LOW FLOW SILLS ARE DENOTED BY CROSS-HATCHED AREA

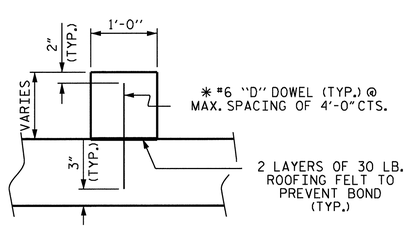

✱ DOWELS MAY BE PUSHED INTO GREEN CONCRETE AFTER SLAB HAS BEEN FLOAT FINISHED.

SECTION THRU SILL

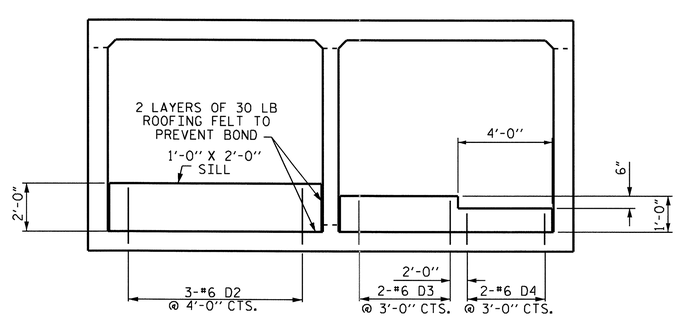

ELEVATION

CULVERT SILL DETAILS

PROJECT NO. R-2233AB

RUTHERFORD COUNTY

STATION: 534+79.00 -L-

SHEET 6 OF 11

STATE OF NORTH CAROLINA
DEPARTMENT OF TRANSPORTATION
RALEIGH

DOUBLE 9'-0" X 8'-0" CONCRETE BOX CULVERT

NORTH CAROLINA PROFESSIONAL SEAL 20125 ENGINEER MARSHALL G. CHEEK, JR.
9-10-09

REVISIONS						SHEET NO.
NO.	BY:	DATE:	NO.	BY:	DATE:	C-6
1			3			TOTAL SHEETS
2			4			11

STR. #6

DRAWN BY : M. POOLE/ALF DATE : 08/09
CHECKED BY : M. G. CHEEK DATE : 02/10

15-SEP-2010 16:59
R:\Structures\FinalPlans\Str. #6\R2233AB_SD_CU_06.dgn
afigueroa

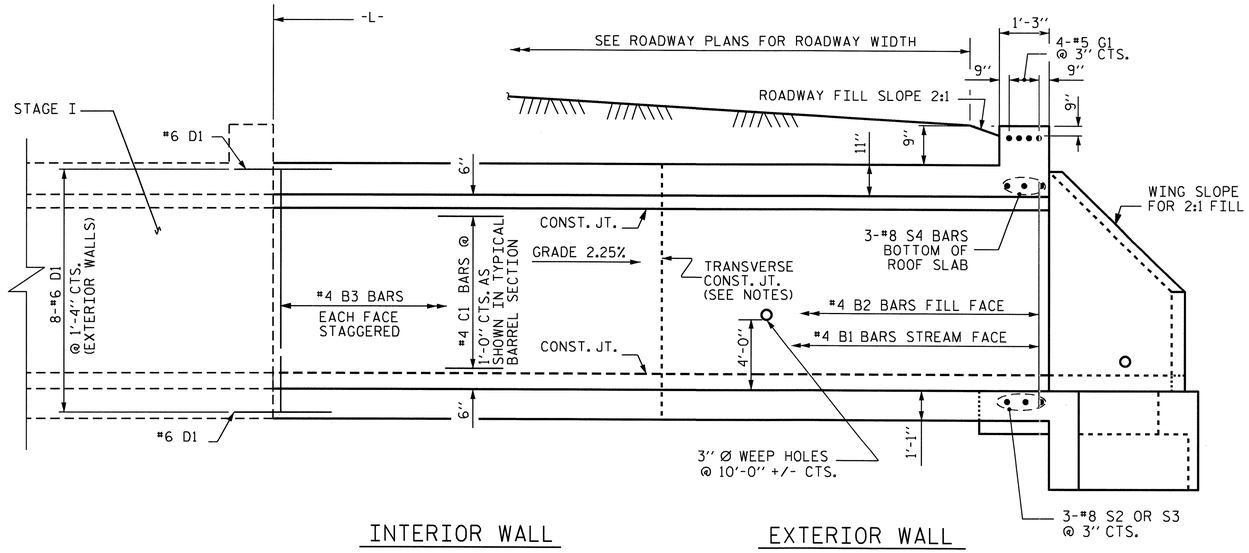

CULVERT SECTION NORMAL TO ROADWAY

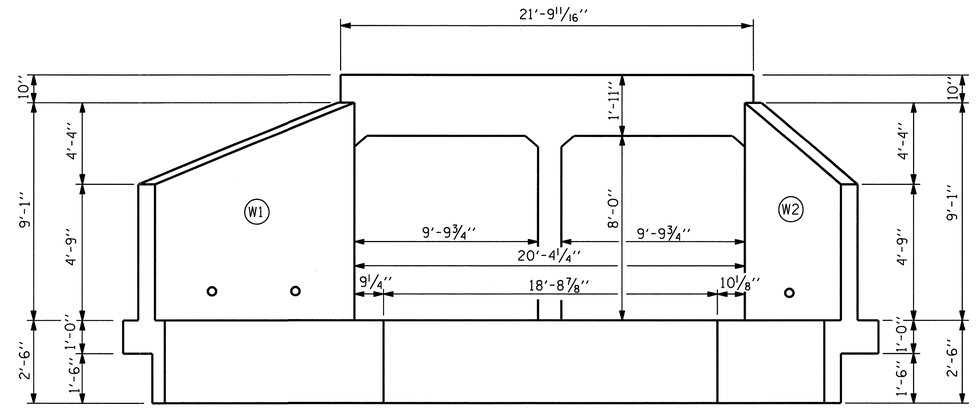

OUTLET END ELEVATION NORMAL TO SKEW

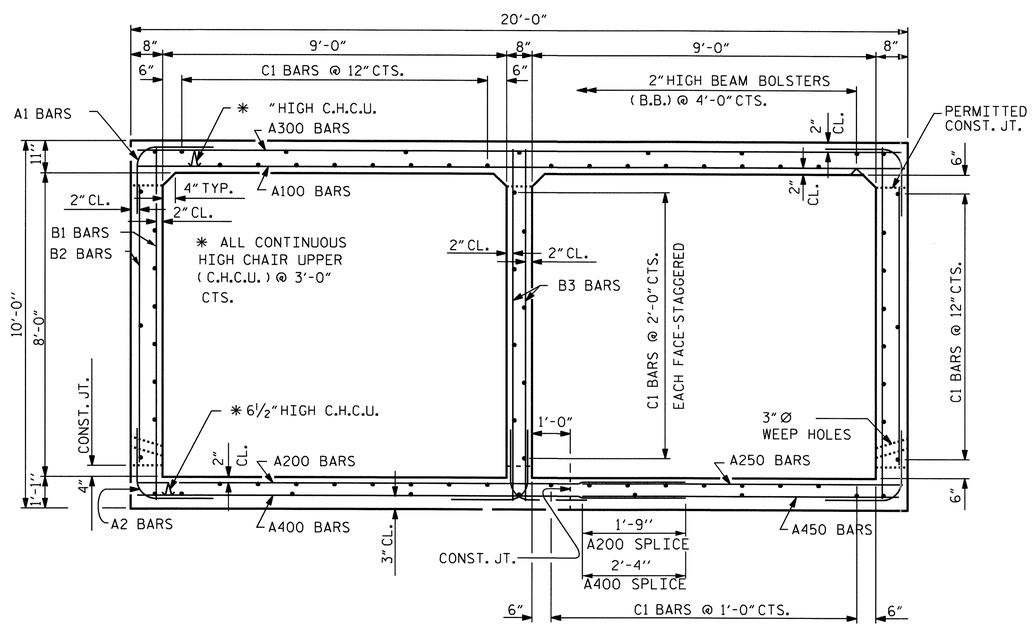

RIGHT ANGLE SECTION OF BARREL

THERE ARE 76 "C" BARS IN SECTION OF BARREL.

PROJECT NO. R-2233AB

RUTHERFORD COUNTY

STATION: 534+79.00 -L-

SHEET 7 OF 11

STATE OF NORTH CAROLINA
DEPARTMENT OF TRANSPORTATION
RALEIGH

DOUBLE 9'-0" X 8'-0" CONCRETE BOX CULVERT
STAGE II

NORTH CAROLINA PROFESSIONAL SEAL 20125 ENGINEER MARSHALL G. CHEEK, JR.
9-20-10

REVISIONS						SHEET NO.
NO.	BY:	DATE:	NO.	BY:	DATE:	C-7
1			3			TOTAL SHEETS
2			4			11

STR. #6

DRAWN BY : M. POOLE/ALF DATE : 08/09
CHECKED BY : M. G. CHEEK DATE : 02/10

20-SEP-2010 13:59
R:\Structures\FinalPlans\Str. #6\R2233AB_SD_CU_06.dgn
atigueroa

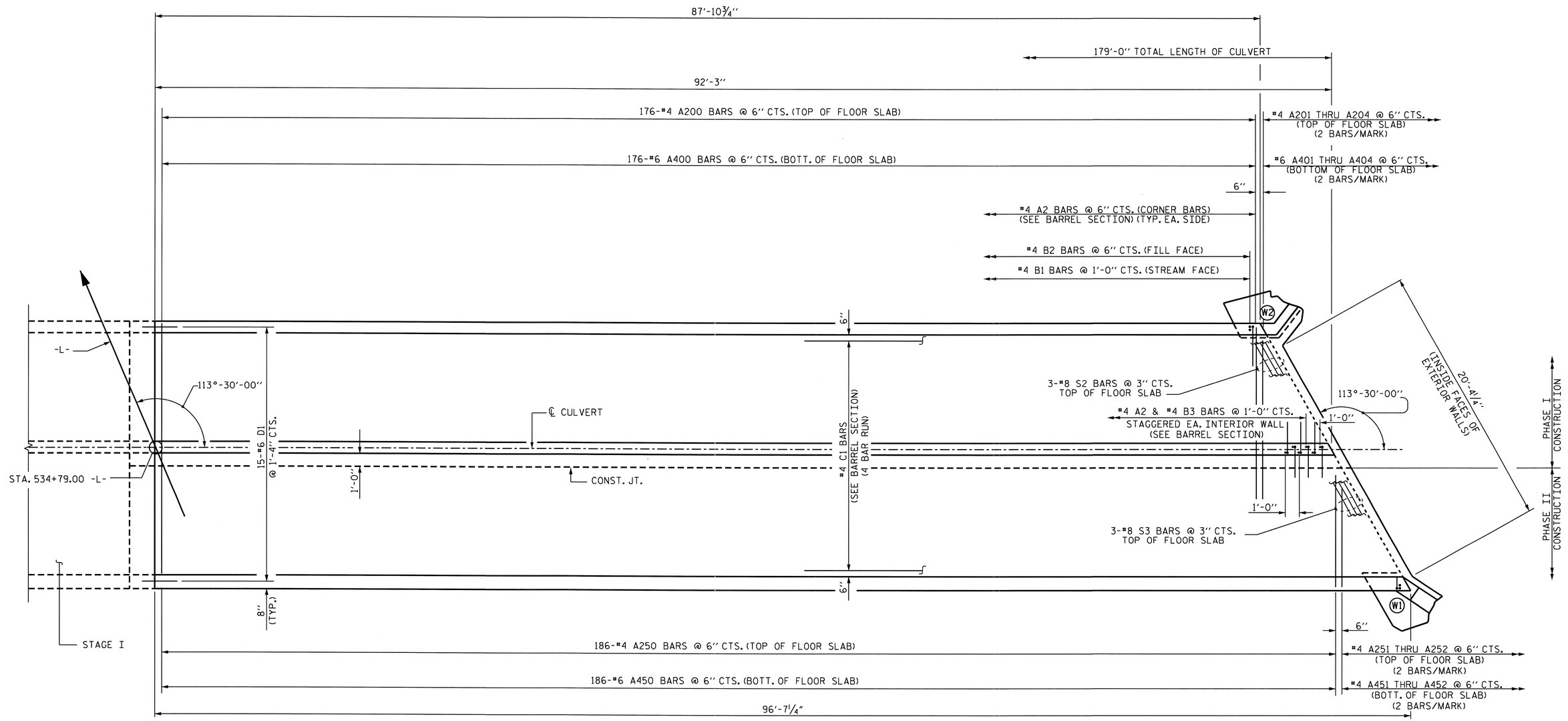

PROJECT NO. R-2233AB

RUTHERFORD COUNTY

STATION: 534+79.00 -L-

SHEET 8 OF 11

PLAN OF FLOOR SLAB

STATE OF NORTH CAROLINA
DEPARTMENT OF TRANSPORTATION
RALEIGH

DOUBLE 9'-0" X 8'-0" CONCRETE BOX CULVERT
STAGE II

NORTH CAROLINA PROFESSIONAL SEAL 20125 ENGINEER MARSHALL G. CHEEK, JR.
9-10-10

REVISIONS						SHEET NO.
NO.	BY:	DATE:	NO.	BY:	DATE:	C-8
1			3			TOTAL SHEETS
2			4			11

DRAWN BY : M. POOLE/ALF DATE : 08/09
CHECKED BY : M. G. CHEEK DATE : 02/10

15-SEP-2010 16:59
R:\Structures\Final Plans\Str. #6\R2233AB_SD_CU_06.dgn
afigueroa

STR. #6

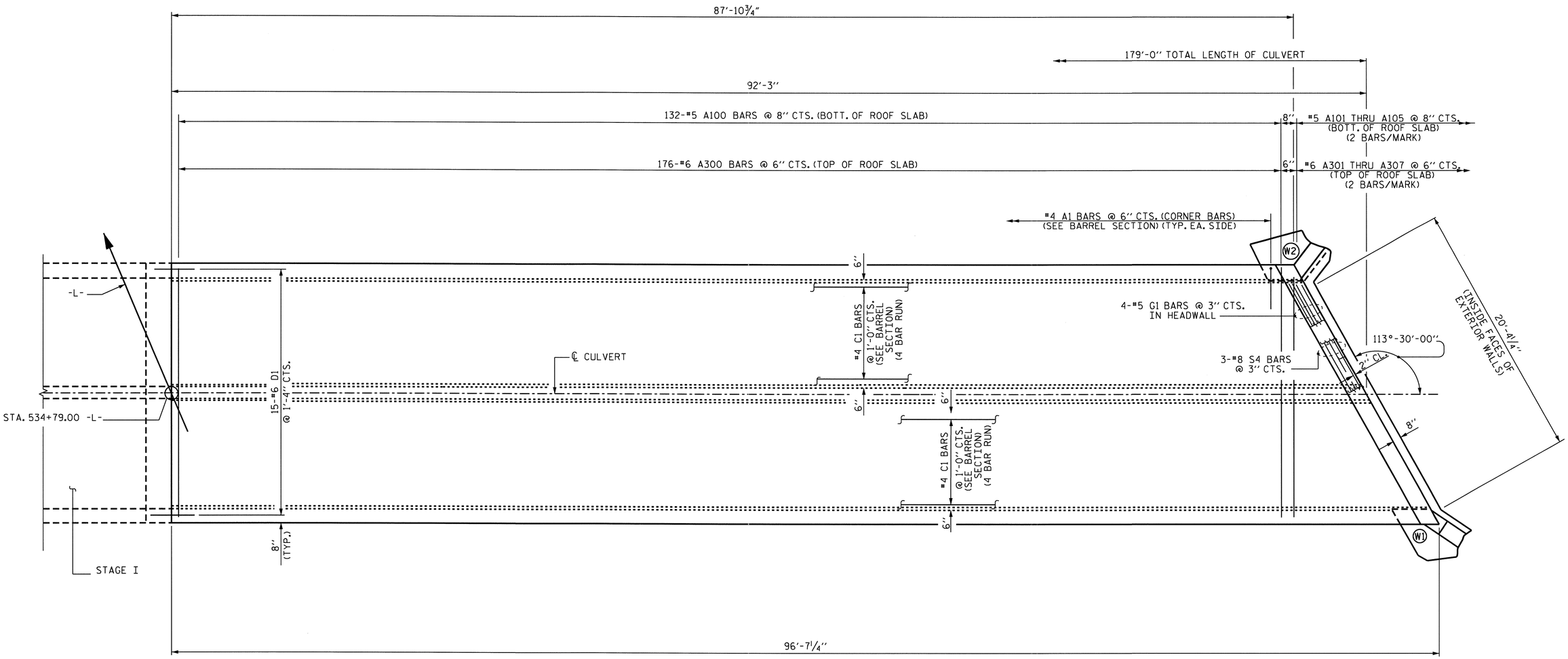

PLAN OF ROOF SLAB

PROJECT NO. R-2233AB
RUTHERFORD COUNTY
STATION: 534+79.00 -L-

SHEET 9 OF 11

STATE OF NORTH CAROLINA
DEPARTMENT OF TRANSPORTATION
RALEIGH

DOUBLE 9'-0" X 8'-0" CONCRETE BOX CULVERT
STAGE II

NORTH CAROLINA PROFESSIONAL SEAL 20125 ENGINEER MARSHALL G. CHEEK, JR.
9-20-10

REVISIONS						SHEET NO.
NO.	BY:	DATE:	NO.	BY:	DATE:	C-9
1			3			TOTAL SHEETS
2			4			11

DRAWN BY : M. POOLE/ALF DATE : 08/09
CHECKED BY : M. G. CHEEK DATE : 02/10

15-SEP-2010 16:59
R:\Structures\FinalPlans\Str. #6\R2233AB_SD_CU_06.dgn
afigueroa

STR. #6

SPLICE LENGTH CHART

BAR	SIZE	SPLICE LENGTH
A200	4	1'-9"
A400	6	2'-4"
B1	4	1'-9"
B3	4	1'-9"
C1	4	1'-11"
"S"	8	4'-11"

BAR TYPE

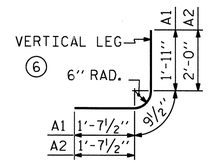

BAR DIMENSIONS ARE OUT TO OUT

BAR SCHEDULE STAGE II

BAR	NO.	SIZE	TYPE	LENGTH	WEIGHT
A1	370	4	6	4'-4"	1071
A2	556	4	6	4'-5"	1640
A100	132	5	STR	19'-7"	2696
A101	2	5	STR	16'-2"	34
A102	2	5	STR	13'-0"	27
A103	2	5	STR	9'-11"	21
A104	2	5	STR	6'-9"	14
A105	2	5	STR	3'-7"	7
A200	176	4	STR	12"-11"	1519
A201	2	4	STR	11'-5"	15
A202	2	4	STR	9'-2"	12
A203	2	4	STR	6'-10"	9
A204	2	4	STR	4'-6"	6
A250	186	4	STR	8'-4"	1035
A251	2	4	STR	6'-2"	8
A252	2	4	STR	3'-11"	5
A300	176	6	STR	19'-7"	5177
A301	2	6	STR	17'-0"	51
A302	2	6	STR	14'-7"	44
A303	2	6	STR	12'-3"	37
A304	2	6	STR	9'-11"	30
A305	2	6	STR	7'-7"	23
A306	2	6	STR	5'-2"	16
A307	2	6	STR	2'-10"	9

BAR	NO.	SIZE	TYPE	LENGTH	WEIGHT
A400	176	6	STR	13'-6"	3569
A401	2	6	STR	11'-5"	34
A402	2	6	STR	9'-2"	28
A403	2	6	STR	6'-10"	21
A404	2	6	STR	4'-6"	14
A450	186	6	STR	8'-4"	2328
A451	2	6	STR	6'-2"	19
A452	2	6	STR	3'-11"	12
B1	186	4	STR	9'-6"	1180
B2	370	4	STR	7'-4"	1812
B3	186	4	STR	9'-6"	1180
C1	304	4	STR	25'-6"	5178
D1	46	6	STR	2'-6"	173
D3	10	6	STR	1'-8"	25
D4	10	6	STR	1'-2"	18
G1	4	5	STR	21'-4"	89
S2	3	8	STR	17'-3"	138
S3	3	8	STR	9'-1"	73
S4	3	8	STR	21'-4"	342
REINFORCING STEEL					29,739 LBS.

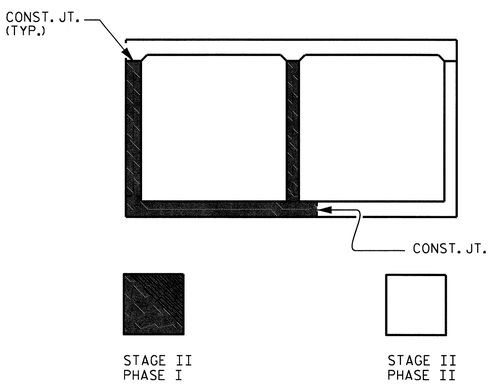

PHASING SEQUENCE

STAGE II
LOOKING DOWNSTREAM

STAGE II QUANTITIES

CLASS A CONCRETE
BARREL @ 2.082 CY/FT 192.1 CY
WINGS, ETC. 13.7 CY
SILLS 1.1 CY
TOTAL 206.9 CY

REINFORCING STEEL
BARREL & SILLS 29,739 LBS.
WINGS, ETC. 832 LBS.
TOTAL 30,571 LBS.

CULVERT EXCAVATION --------- LUMP SUM
FUNDATION COND. MAT'L -------- 130 TONS

PROJECT NO. R-2233AB
RUTHERFORD COUNTY
STATION: 534+79.00 -L-

SHEET 10 OF 11

STATE OF NORTH CAROLINA
DEPARTMENT OF TRANSPORTATION
RALEIGH

DOUBLE 9'-0" X 8'-0" CONCRETE BOX CULVERT STAGE II

NORTH CAROLINA PROFESSIONAL SEAL 20125 ENGINEER MARSHALL G. CHEEK, JR.
9-20-10

REVISIONS						SHEET NO.
NO.	BY:	DATE:	NO.	BY:	DATE:	C-10
1			3			TOTAL SHEETS
2			4			11

DRAWN BY : M. POOLE/ALF DATE : 08/09
CHECKED BY : M. G. CHEEK DATE : 02/10

20-SEP-2010 13:59
R:\Structures\FinalPlans\Str. #6\R2233AB_SD_CU_06.dgn
afigueroa

STR. #6

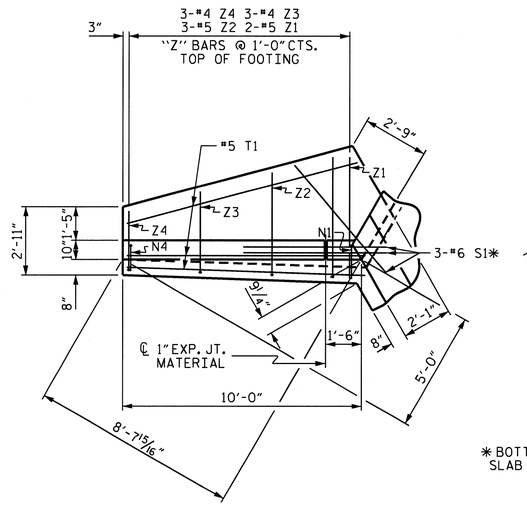

PLAN W2

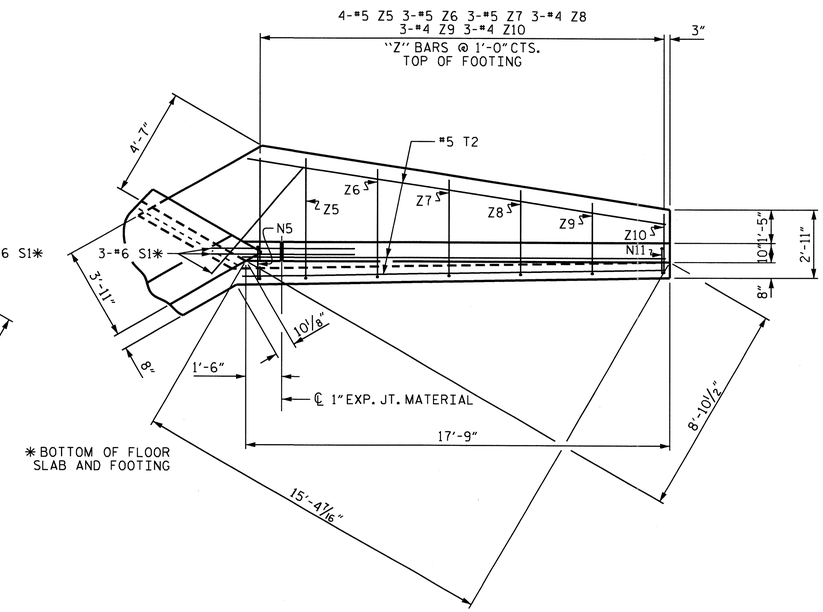

PLAN W1

NOTE

A 3 FOOT STRIP OF FILTER FABRIC SHALL BE ATTACHED TO THE FILL FACE OF THE WING COVERING THE ENTIRE LENGTH OF THE EXPANSION JOINT.

BAR TYPES

ALL BAR DIMENSIONS ARE OUT TO OUT.

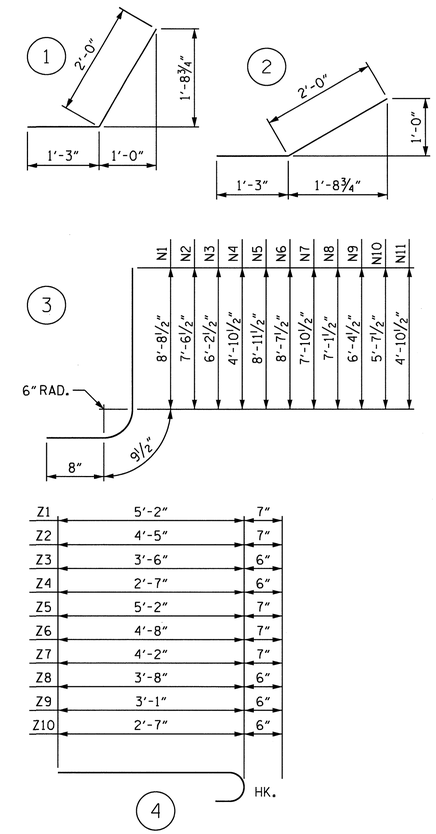

BILL OF MATERIAL

BAR	NO.	SIZE	TYPE	LENGTH	WEIGHT
H1	6	#4	STR	8'-1"	32
H2	2	#4	STR	7'-3"	10
H3	2	#4	STR	3'-11"	5
H4	12	#4	1	3'-3"	26
H5	2	#4	STR	8'-10"	12
H6	6	#4	STR	15'-10"	63
H7	2	#4	STR	14'-4"	19
H8	2	#4	STR	8'-3"	11
H9	2	#4	STR	2'-3"	3
H10	12	#4	2	3'-3"	26
H11	2	#4	STR	16'-4"	22
N1	2	#5	3	10'-2"	21
N2	3	#5	3	9'-0"	28
N3	3	#4	3	7'-8"	15
N4	3	#4	3	6'-4"	13
N5	2	#5	3	10'-5"	22
N6	2	#5	3	10'-1"	21
N7	3	#5	3	9'-4"	29
N8	3	#5	3	8'-7"	27
N9	3	#4	3	7'-10"	16
N10	3	#4	3	7'-1"	14
N11	3	#4	3	6'-4"	13
S1	6	#6	STR	6'-0"	54
T1	3	#5	STR	10'-0"	31
T2	3	#5	STR	17'-9"	56
V1	2	#4	STR	8'-1"	11
V2	3	#4	STR	7'-0"	14
V3	3	#4	STR	5'-8"	11
V4	3	#4	STR	4'-4"	9
V5	2	#4	STR	8'-4"	11
V6	2	#4	STR	8'-0"	11
V7	3	#4	STR	7'-3"	15
V8	3	#4	STR	6'-6"	13
V9	3	#4	STR	5'-9"	12
V10	3	#4	STR	5'-0"	10
V11	3	#4	STR	4'-3"	9
Z1	2	#5	4	5'-9"	12
Z2	3	#5	4	5'-0"	16
Z3	3	#4	4	4'-0"	8
Z4	3	#4	4	3'-1"	6
Z5	4	#5	4	5'-9"	24
Z6	3	#5	4	5'-3"	16
Z7	3	#5	4	4'-9"	15
Z8	3	#4	4	4'-2"	8
Z9	3	#4	4	3'-7"	7
Z10	3	#4	4	3'-1"	6
REINFORCING STEEL FOR 2 WINGS					832 LBS

CLASS A CONCRETE STAGE I	
2 WINGS	11.5 CY
2 HEADWALLS	2.0 CY
1 END CURTAIN WALL	1.2 CY
TOTAL	14.7 CY

CLASS A CONCRETE STAGE II	
2 WINGS	11.5 CY
1 HEADWALL	1.0 CY
1 END CURTAIN WALL	1.2 CY
TOTAL	13.7 CY

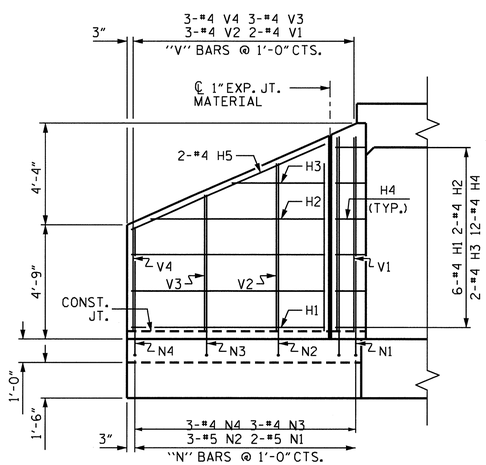

ELEVATION W2

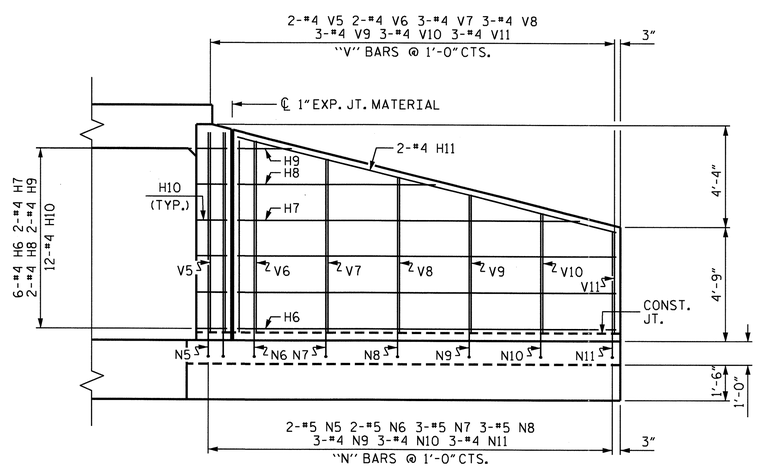

ELEVATION W1

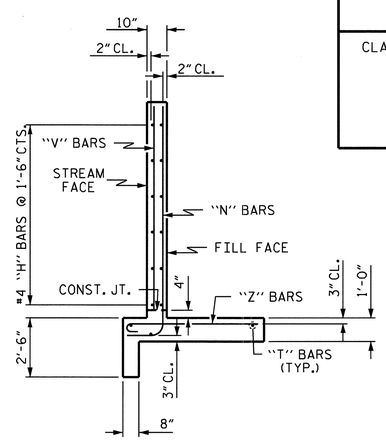

TYPICAL WING SECTION

PROJECT NO. R-2233AB

RUTHERFORD COUNTY

STATION: 534+79.00 -L-

SHEET 11 OF 11

STATE OF NORTH CAROLINA
DEPARTMENT OF TRANSPORTATION
RALEIGH

WINGS FOR CONCRETE BOX CULVERT STAGE I OR II

NORTH CAROLINA PROFESSIONAL SEAL 20125 ENGINEER MARSHALL G. CHEEK, JR.
9-20-10

ASSEMBLED BY : M. POOLE/ALF	DATE : 08/09		
CHECKED BY : M. G. CHEEK	DATE : 02/10		
DRAWN BY : CCJ 11/99			
CHECKED BY : RWW 03/00			

REVISIONS						SHEET NO.
NO.	BY:	DATE:	NO.	BY:	DATE:	C-11
1			3			TOTAL SHEETS
2			4			11

03-AUG-2010 11:38
R:\Structures\Str#6\mpoole\R2233AB_SD_CU_06.dgn
aflgueroa

STR. #6

STANDARD NOTES

DESIGN DATA:

SPECIFICATIONS	A.A.S.H.T.O. (CURRENT)
LIVE LOAD	SEE PLANS
IMPACT ALLOWANCE	SEE A.A.S.H.T.O.
STRESS IN EXTREME FIBER OF	
STRUCTURAL STEEL - AASHTO M270 GRADE 36	20,000 LBS. PER SQ. IN.
- AASHTO M270 GRADE 50W	27,000 LBS. PER SQ. IN.
- AASHTO M270 GRADE 50	27,000 LBS. PER SQ. IN.
REINFORCING STEEL IN TENSION	
GRADE 60	24,000 LBS. PER SQ. IN.
CONCRETE IN COMPRESSION	1,200 LBS. PER SQ. IN.
CONCRETE IN SHEAR	SEE A.A.S.H.T.O.
STRUCTURAL TIMBER - TREATED OR	
UNTREATED - EXTREME FIBER STRESS	1,800 LBS. PER SQ. IN.
COMPRESSION PERPENDICULAR TO GRAIN OF TIMBER	375 LBS. PER SQ. IN.
EQUIVALENT FLUID PRESSURE OF EARTH	30 LBS. PER CU. FT. (MINIMUM)

MATERIAL AND WORKMANSHIP:

EXCEPT AS MAY OTHERWISE BE SPECIFIED ON PLANS OR IN THE SPECIAL PROVISIONS, ALL MATERIAL AND WORKMANSHIP SHALL BE IN ACCORDANCE WITH THE 2006 "STANDARD SPECIFICATIONS FOR ROADS AND STRUCTURES" OF THE N. C. DEPARTMENT OF TRANSPORTATION.

STEEL SHEET PILING FOR PERMANENT OR TEMPORARY APPLICATIONS SHALL BE HOT ROLLED.

CONCRETE:

UNLESS OTHERWISE REQUIRED ON PLANS, CLASS A CONCRETE SHALL BE USED FOR ALL PORTIONS OF ALL STRUCTURES WITH THE EXCEPTION THAT: CLASS AA CONCRETE SHALL BE USED IN BRIDGE SUPERSTRUCTURES, ABUTMENT BACKWALLS, AND APPROACH SLABS; AND CLASS B CONCRETE SHALL BE USED FOR SLOPE PROTECTION AND RIP RAP.

CONCRETE CHAMFERS:

UNLESS OTHERWISE NOTED ON THE PLANS, ALL EXPOSED CORNERS ON STRUCTURES SHALL BE CHAMFERED 3/4" WITH THE FOLLOWING EXCEPTIONS: TOP CORNERS OF CURBS MAY BE ROUNDED TO 1-1/2" RADIUS WHICH IS BUILT INTO CURB FORMS; CORNERS OF TRANSVERSE FLOOR EXPANSION JOINTS SHALL BE ROUNDED WITH A 1/4" FINISHING TOOL UNLESS OTHERWISE REQUIRED ON PLANS; AND CORNERS OF EXPANSION JOINTS IN THE ROADWAY FACES AND TOPS OF CURBS AND SIDEWALKS SHALL BE ROUNDED TO A 1/4" RADIUS WITH A FINISHING STONE OR TOOL UNLESS OTHERWISE REQUIRED ON PLANS.

DOWELS:

DOWELS WHEN INDICATED ON PLANS AS FOR CULVERT EXTENSIONS, SHALL BE EMBEDDED AT LEAST 12" INTO THE OLD CONCRETE AND GROUTED INTO PLACE WITH 1:2 CEMENT MORTAR.

ALLOWANCE FOR DEAD LOAD DEFLECTION, SETTLEMENT, ETC. IN CASTING SUPERSTRUCTURES:

BRIDGES SHALL BE BUILT ON THE GRADE OR VERTICAL CURVE SHOWN ON PLANS. SLABS, CURBS AND PARAPETS SHALL CONFORM TO THE GRADE OR CURVE.

ALL DIMENSIONS WHICH ARE GIVEN IN SECTION AND ARE AFFECTED BY DEAD LOAD DEFLECTIONS ARE DIMENSIONS AT CENTER LINE OF BEARING UNLESS OTHERWISE NOTED ON PLANS. IN SETTING FORMS FOR STEEL BEAM BRIDGES AND PRESTRESSED CONCRETE GIRDER BRIDGES, ADJUSTMENTS SHALL BE MADE DUE TO THE DEAD LOAD DEFLECTIONS FOR THE ELEVATIONS SHOWN. WHERE BLOCKS ARE SHOWN OVER BEAMS FOR BUILDING UP TO THE SLAB, THE VERTICAL DIMENSIONS OF THE BLOCKS SHALL BE ADJUSTED BETWEEN BEARINGS TO COMPENSATE FOR DEAD LOAD DEFLECTIONS, VERTICAL CURVE ORDINATE, AND ACTUAL BEAM CAMBER. WHERE BOTTOM OF SLAB IS IN LINE WITH BOTTOM OF TOP FLANGES, DEPTH OF SLAB BETWEEN BEARINGS SHALL BE ADJUSTED TO COMPENSATE FOR DEAD LOAD DEFLECTION, VERTICAL CURVE ORDINATE, AND ACTUAL BEAM CAMBER.

IN SETTING FALSEWORK AND FORMS FOR REINFORCED CONCRETE SPANS, AN ALLOWANCE SHALL BE MADE FOR DEAD LOAD DEFLECTIONS, SETTLEMENT OF FALSEWORK, AND PERMANENT CAMBER WHICH SHALL BE PROVIDED FOR IN ADDITION TO THE ELEVATIONS SHOWN. AFTER REMOVAL OF THE FALSEWORK, THE FINISHED STRUCTURES SHALL CONFORM TO THE PROFILE AND ELEVATIONS SHOWN ON THE PLANS AND CONSTRUCTION ELEVATIONS FURNISHED BY THE ENGINEER.

DETAILED DRAWINGS FOR FALSEWORK OR FORMS FOR BRIDGE SUPERSTRUCTURE AND ANY STRUCTURE OR PARTS OF A STRUCTURE AS NOTED ON THE PLANS SHALL BE SUBMITTED TO THE ENGINEER FOR APPROVAL BEFORE CONSTRUCTION OF THE FALSEWORK OR FORMS IS STARTED.

REINFORCING STEEL:

ALL REINFORCING STEEL SHALL BE DEFORMED. DIMENSIONS RELATIVE TO PLACEMENT OF REINFORCING ARE TO CENTERS OF BARS UNLESS OTHERWISE INDICATED IN THE PLANS. DIMENSIONS ON BAR DETAILS ARE TO CENTERS OF BARS OR ARE OUT TO OUT AS INDICATED ON PLANS.

WIRE BAR SUPPORTS SHALL BE PROVIDED FOR REINFORCING STEEL WHERE INDICATED ON THE PLANS. WHEN BAR SUPPORT PIECES ARE PLACED IN CONTINUOUS LINES, THEY SHALL BE SO PLACED THAT THE ENDS OF THE SUPPORTING WIRES SHALL BE LAPPED TO LOCK LEGS ON ADJOINING PIECES.

STRUCTURAL STEEL:

AT THE CONTRACTOR'S OPTION, HE MAY SUBSTITUTE 7/8" Ø SHEAR STUDS FOR THE 3/4" Ø STUDS SPECIFIED ON THE PLANS. THIS SUBSTITUTION SHALL BE MADE AT THE RATE OF 3 - 7/8" Ø STUDS FOR 4 - 3/4" Ø STUDS, AND STUD SPACING CHANGES SHALL BE MADE AS NECESSARY TO PROVIDE THE SAME EQUIVALENT NUMBER OF 7/8" Ø STUDS ALONG THE BEAM AS SHOWN FOR 3/4" Ø STUDS BASED ON THE RATIO OF 3 - 7/8" Ø STUDS FOR 4 - 3/4" Ø STUDS. STUDS OF THE LENGTH SPECIFIED ON THE PLANS MUST BE PROVIDED. THE MAXIMUM SPACING SHALL BE 2'-0".

EXCEPT AT THE INTERIOR SUPPORTS OF CONTINUOUS BEAMS WHERE THE COVER PLATE IS IN CONTACT WITH BEARING PLATE, THE CONTRACTOR MAY, AT HIS OPTION, SUBSTITUTE FOR THE COVER PLATES DESIGNATED ON THE PLANS COVER PLATES OF THE EQUIVALENT AREA PROVIDED THESE PLATES ARE AT LEAST 5/16" IN THICKNESS AND DO NOT EXCEED A WIDTH EQUAL TO THE FLANGE WIDTH LESS 2" OR A THICKNESS EQUAL TO 2 TIMES THE FLANGE THICKNESS. THE SIZE OF FILLET WELDS SHALL CONFORM TO THE REQUIREMENTS OF THE CURRENT ANSI/AASHTO/AWS "BRIDGE WELDING CODE". ELECTROSLAG WELDING WILL NOT BE PERMITTED.

WITH THE SOLE EXCEPTION OF EDGES AT SURFACES WHICH BEAR ON OTHER SURFACES, ALL SHARP EDGES AND ENDS OF SHAPES AND PLATES SHALL BE SLIGHTLY ROUNDED BY SUITABLE MEANS TO A RADIUS OF APPROXIMATELY 1/16 INCH OR EQUIVALENT FLAT SURFACE AT A SUITABLE ANGLE PRIOR TO PAINTING, GALVANIZING, OR METALLIZING.

HANDRAILS AND POSTS:

METAL STANDARDS AND FACES OF THE CONCRETE END POSTS FOR THE METAL RAIL SHALL BE SET NORMAL TO THE GRADE OF THE CURB, UNLESS OTHERWISE SHOWN ON PLANS. THE METAL RAIL AND TOPS OF CONCRETE POSTS USED WITH THE ALUMINUM RAIL SHALL BE BUILT PARALLEL TO THE GRADE OF THE CURB.

METAL HANDRAILS SHALL BE IN ACCORDANCE WITH THE PLANS. RAILS SHALL BE AS MANUFACTURED FOR BRIDGE RAILING. CASTINGS SHALL BE OF A UNIFORM APPEARANCE. FINS AND OTHER DEFORMATIONS RESULTING FROM CASTING OR OTHERWISE SHALL BE REMOVED IN A MANNER SO THAT A UNIFORM COLORING OF THE COMPLETED CASTING SHALL BE OBTAINED. CASTINGS WITH DISCOLORATIONS OR OF NON-UNIFORM COLORING WILL NOT BE ACCEPTED. CERTIFIED MILL REPORTS ARE REQUIRED FOR METAL RAILS AND POSTS.

SPECIAL NOTES:

GENERALLY, IN CASE OF DISCREPANCY, THIS STANDARD SHEET OF NOTES SHALL GOVERN OVER THE SPECIFICATIONS, BUT THE REMAINDER OF THE PLANS SHALL GOVERN OVER NOTES HEREON, AND SPECIAL PROVISIONS SHALL GOVERN OVER ALL. SEE SPECIFICATIONS ARTICLE 105-4.

ENGLISH

JANUARY, 1990

STD. NO. SN