STATE	STATE PROJECT REFERENCE NO.	SHEET NO.	TOTAL SHEETS
N.C.	U-3110B	1	

STATE PROJ. NO.	F.A. PROJ. NO.	DESCRIPTION
34901.1.1	STP-0701(7)	P.E.
34901.2.4	STP-1311(5)	R/W, UTIL.
34901.3.GV2	STP-1311(10)	CONST.

TIP PROJECT: U-3110B

CONTRACT: C202557

See Sheet 1-A For Index of Sheets

STATE OF NORTH CAROLINA
DIVISION OF HIGHWAYS

ALAMANCE COUNTY

LOCATION: SR 1311 (COOK RD.) WIDENING AND EXTENSION FROM SR 1309 (WESTBROOK AVE.) TO NC 100

TYPE OF WORK: GRADING, PAVING, DRAINAGE, STRUCTURES AND SIGNALS

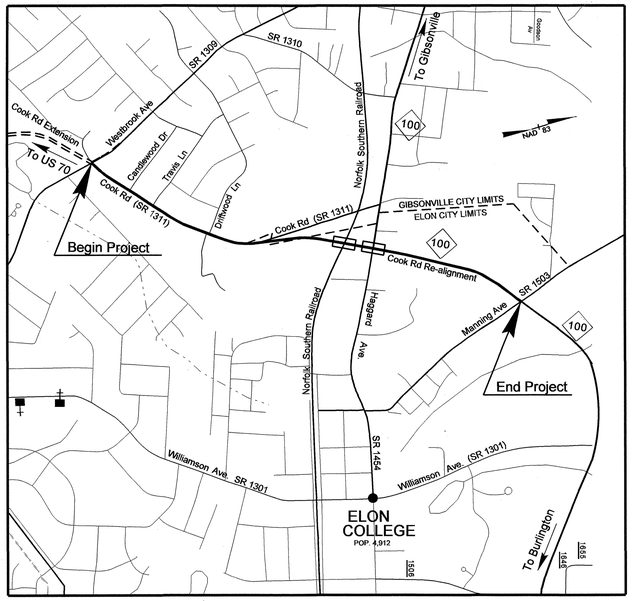

VICINITY MAP

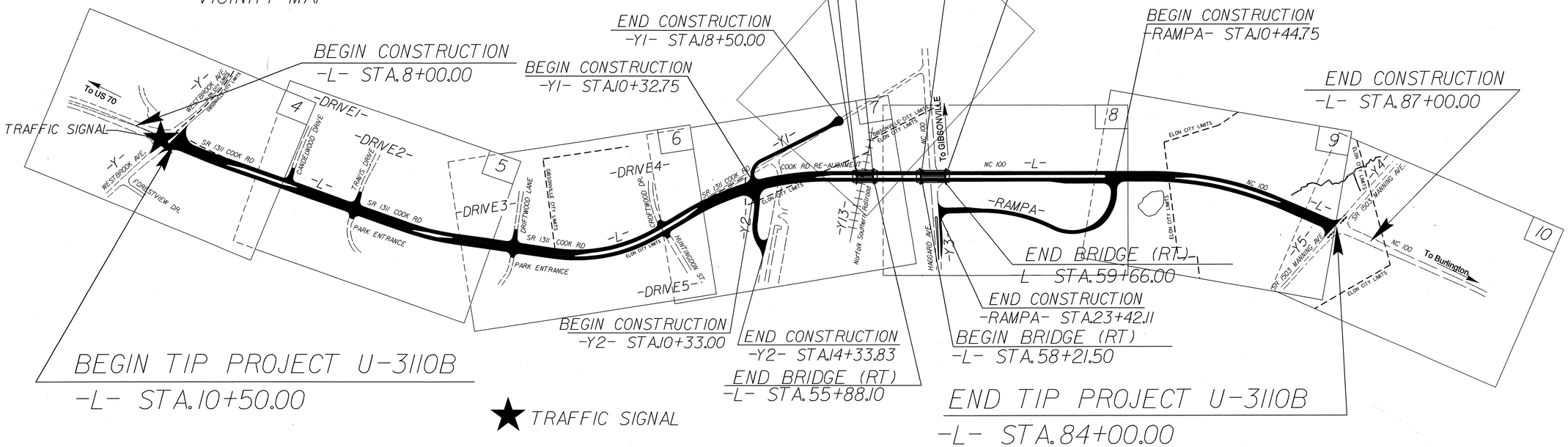

GRAPHIC SCALES

50 25 0 50 100 — PLANS

50 25 0 50 100 — PROFILE (HORIZONTAL)

10 5 0 10 20 — PROFILE (VERTICAL)

DESIGN DATA

ADT 2010 = 9,367
ADT 2030 = 16,200
DHV = 12 %
D = 65 %
T = 7 % *
V = 50 MPH
* TTST 2% DUAL 5%
FUNC CLASS = URBAN COLLECTOR

PROJECT LENGTH

LENGTH OF ROADWAY TIP PROJECT U-3110B = 1.317 MILES
LENGTH OF STRUCTURES TIP PROJECT U-3110B = 0.075 MILES
TOTAL LENGTH OF TIP PROJECT U-3110B = 1.392 MILES

Prepared in the Office of:
DIVISION OF HIGHWAYS
1000 Birch Ridge Dr., Raleigh NC, 27610

2006 STANDARD SPECIFICATIONS

RIGHT OF WAY DATE: AUGUST 18, 2008

LETTING DATE: OCTOBER 19, 2010

G.E. BREW
PROJECT ENGINEER

E L MORRISON
PROJECT DESIGN ENGINEER

HYDRAULICS ENGINEER
8-04-10
NORTH CAROLINA PROFESSIONAL SEAL 18442 ENGINEER RICHARD LEON BOLLINGER, JR.
SIGNATURE:

ROADWAY DESIGN ENGINEER
7-27-10
NORTH CAROLINA PROFESSIONAL SEAL 18903 ENGINEER GREGORY E. BREW P.E.
SIGNATURE:

DIVISION OF HIGHWAYS STATE OF NORTH CAROLINA
STATE OF NORTH CAROLINA DEPARTMENT OF TRANSPORTATION
STATE HIGHWAY DESIGN ENGINEER

09/08/99
14-JUL-2010 10:52
r:\roadway\proj\u-3110b_rdy_tsh.dgn
$$$$USERNAME$$$$

PROJECT REFERENCE NO.	SHEET NO.
U-3110B	1-A

ROADWAY DESIGN ENGINEER

NORTH CAROLINA PROFESSIONAL SEAL 18998 ENGINEER GREGORY E. BIRT

1-27-10

INDEX OF SHEETS

SHEET NUMBER	SHEET
1	TITLE SHEET
1-A	INDEX OF SHEETS, GENERAL NOTES, AND LIST OF STANDARD DRAWINGS
1-B	CONVENTIONAL SYMBOLS
1-C THRU 1-D	SURVEY CONTROL
1-E	PARCEL INDEX SHEET
2 THRU 2-N	PAVEMENT SCHEDULE, TYPICAL SECTIONS, AND MISCELLANEOUS DETAILS
3	SUMMARY OF QUANTITIES
3-A THRU 3-H	SUMMARY OF DRAINAGE QUANTITIES SUMMARY OF GUARDRAIL, EARTHWORK SUMMARY, ASPHALT PAVEMENT REMOVAL SUMMARY AND PARCEL INDEX
4 THRU 11	PLAN SHEETS
12 THRU 17	PROFILE SHEETS
TCP-1 THRU TCP-16	TRAFFIC CONTROL PLANS
SD-1 THRU SD-2	SPECIAL SIGN DESIGN
PMP-1 THRU PMP-8	PAVEMENT MARKING PLANS
RF-1	REFORESTATION PLANS
EC-1 THRU EC-19	EROSION CONTROL PLANS
SIGN-1 THRU SIGN-12	SIGNING PLANS
SIG-1 THRU SIG-21	SIGNAL PLANS
UC-1 THRU UC-6	UTILITIES PLANS
UO-1 THRU UO-7	UTILITIES BY OTHERS
X-1A	CROSS SECTION SUMMARY
X-1 THRU X-47	CROSS-SECTIONS
S-1 THRU S-146	STRUCTURE PLANS

EFF. 07-18-06
REV. 01-02-07

2006 ROADWAY ENGLISH STANDARD DRAWINGS

The following Roadway Standards as appear in "Roadway Standard Drawings" Highway Design Branch - N. C. Department of Transportation - Raleigh, N. C., Dated July 18, 2006 are applicable to this project and by reference hereby are considered a part of these plans:

STD.NO.	TITLE
DIVISION 2 - EARTHWORK	
200.02	Method of Clearing - Method II
200.03	Method of Clearing - Method III
225.02	Guide for Grading Subgrade - Secondary and Local
225.04	Method of Obtaining Superelevation - Two Lane Pavement
DIVISION 3 - PIPE CULVERTS	
310.10	Driveway Pipe Construction
DIVISION 4 - MAJOR STRUCTURES	
422.10	Reinforced Bridge Approach Fills
DIVISION 5 - SUBGRADE, BASES AND SHOULDERS	
560.01	Method of Shoulder Construction - High Side of Superelevated Curve - Method I
DIVISION 6 - ASPHALT BASES AND PAVEMENTS	
610.03	Guide for Paving Shoulders Under Bridges - Method III
654.01	Pavement Repairs
DIVISION 8 - INCIDENTALS	
806.01	Concrete Right-of-Way Marker
806.02	Granite Right-of-Way Marker
815.03	Pipe Underdrain and Blind Drain
838.01	Concrete Endwall for Single and Double Pipe Culverts - 15" thru 48" Pipe 90 Skew
838.11	Brick Endwall for Single and Double Pipe Culverts - 15" thru 48" Pipe 90 Skew
838.27	Reinforced Concrete Endwall - for Single 60" Pipe 90 Skew
838.33	Reinforced Concrete Endwall - for Single 66" Pipe 90 Skew
838.45	Notes for Reinforced Concrete Endwall - Std. Dwg 838.21 thru 838.40
838.57	Reinforced Brick Endwall - for Single 60" Pipe 90 Skew
838.63	Reinforced Brick Endwall - for Single 66" Pipe 90 Skew
838.75	Notes for Reinforced Brick Endwall - Std. Dwg 838.51 thru 838.70
838.80	Precast Endwalls - 12" thru 72" Pipe 90 Skew
840.00	Concrete Base Pad for Drainage Structures
840.01	Brick Catch Basin - 12" thru 54" Pipe
840.02	Concrete Catch Basin - 12" thru 54" Pipe
840.03	Frame, Grates and Hood - for Use on Standard Catch Basin
840.14	Concrete Drop Inlet - 12" thru 30" Pipe
840.15	Brick Drop Inlet - 12" thru 30" Pipe
840.16	Drop Inlet Frame and Grates - for use with Std. Dwg 840.14 and 840.15
840.31	Concrete Junction Box - 12" thru 66" Pipe
840.32	Brick Junction Box - 12" thru 66" Pipe
840.45	Precast Drainage Structure
840.46	Traffic Bearing Precast Drainage Structure
840.66	Drainage Structure Steps
840.72	Pipe Collar
846.01	Concrete Curb, Gutter and Curb & Gutter
848.01	Concrete Sidewalk
848.02	Driveway Turnout - Radius Type
848.04	Street Turnout
852.01	Concrete Islands
852.04	Method for Placement of Drop Inlets in Grassed Median - Using 1'-6" Curb and Gutter
852.05	Median Curb for Catch Basin - for Use with 1'-6" Curb and Gutter
852.06	Method for Placement of Drop Inlets in Concrete Islands
862.01	Guardrail Placement
862.02	Guardrail Installation
862.03	Structure Anchor Units
862.04	Anchoring End of Guardrail - B-77 and B-83 Anchor Units
876.01	Rip Rap in Channels
876.02	Guide for Rip Rap at Pipe Outlets
876.04	Drainage Ditches with Class 'B' Rip Rap

GENERAL NOTES:

2006 SPECIFICATIONS
EFFECTIVE: 07-18-06
REVISED: 07-30-08

GRADING AND SURFACING OR RESURFACING AND WIDENING:

THE GRADE LINES SHOWN DENOTE THE FINISHED ELEVATION OF THE PROPOSED SURFACING AT GRADE POINTS SHOWN ON THE TYPICAL SECTIONS. WHERE NO GRADE LINES ARE SHOWN, THE PROFILES SHOWN DENOTE THE TOP ELEVATION OF THE EXISTING PAVEMENT ALONG THE CENTER LINE OF SURVEY ON WHICH THE PROPOSED RESURFACING WILL BE PLACED. GRADE LINES MAY BE ADJUSTED BY THE ENGINEER IN ORDER TO SECURE A PROPER TIE-IN.

CLEARING:

CLEARING ON THIS PROJECT SHALL BE PERFORMED TO THE LIMITS ESTABLISHED BY METHOD II.

SUPERELEVATION:

ALL CURVES ON THIS PROJECT SHALL BE SUPERELEVATED IN ACCORDANCE WITH STD. NO. 225.04 USING THE RATE OF SUPERELEVATION AND RUNOFF SHOWN ON THE PLANS. SUPERELEVATION IS TO BE REVOLVED ABOUT THE GRADE POINTS SHOWN ON THE TYPICAL SECTIONS.

SHOULDER CONSTRUCTION:

ASPHALT, EARTH, AND CONCRETE SHOULDER CONSTRUCTION ON THE HIGH SIDE OF SUPERELEVATED CURVES SHALL BE IN ACCORDANCE WITH STD. NO. 560.01.

SIDE ROADS:

THE CONTRACTOR WILL BE REQUIRED TO DO ALL NECESSARY WORK TO PROVIDE SUITABLE CONNECTIONS WITH ALL ROADS, STREETS, AND DRIVES ENTERING THIS PROJECT. THIS WORK WILL BE PAID FOR AT THE CONTRACT UNIT PRICE FOR THE PARTICULAR ITEMS INVOLVED.

UNDERDRAINS:

UNDERDRAINS SHALL BE CONSTRUCTED IN ACCORDANCE WITH STD. NO. 815.03 AT LOCATIONS DIRECTED BY THE ENGINEER.

DRIVEWAYS:

DRIVEWAYS SHALL BE CONSTRUCTED IN ACCORDANCE WITH STD. 848.02 USING 3' RADII OR RADII AS SHOWN ON THE PLANS. LOCATIONS OF DRIVES WILL BE AS SHOWN ON THE PLANS OR AS DIRECTED BY THE ENGINEER.

STREET TURNOUT:

STREET RETURNS SHALL BE CONSTRUCTED IN ACCORDANCE WITH STD. NO. 848.04 USING THE RADII NOTED ON PLANS.

GUARDRAIL:

THE GUARDRAIL LOCATIONS SHOWN ON THE PLANS MAY BE ADJUSTED DURING CONSTRUCTION AS DIRECTED BY THE ENGINEER. THE CONTRACTOR SHOULD CONSULT WITH THE ENGINEER PRIOR TO ORDERING GUARDRAIL MATERIAL.

TEMPORARY SHORING:

SHORING REQUIRED FOR THE MAINTENANCE OF TRAFFIC WILL BE PAID FOR AS "EXTRA WORK" IN ACCORDANCE WITH SECTION 104-7.

END BENTS:

THE ENGINEER SHALL CHECK THE STRUCTURE END BENT PLANS, DETAILS, AND CROSS-SECTION PRIOR TO SETTING OF THE SLOPE STAKES FOR THE EMBANKMENT OR EXCAVATION APPROACHING A BRIDGE.

UTILITIES:

UTILITY OWNERS ON THIS PROJECT ARE DUKE ENERGY, CENTURY LINK,

PIEDMONT NATURAL GAS COMPANY, AND TIME WARNER CABLE

ANY RELOCATION OF EXISTING UTILITIES WILL BE ACCOMPLISHED BY OTHERS, EXCEPT AS SHOWN ON THE PLANS.

RIGHT-OF-WAY MARKERS:

ALL RIGHT-OF-WAY MARKERS ON THIS PROJECT SHALL BE PLACED BY CONTRACT.

WHEELCHAIR RAMPS:

WHEELCHAIR RAMPS ARE SHOWN ON THE PLANS AT APPROXIMATE LOCATIONS. THE CONSTRUCTION OF ALL WHEELCHAIR RAMPS SHALL BE IN ACCORDANCE WITH STD. NO. 848.05

8/17/99
27-JUL-2010 08:23
R:\Roadway\Proj\U-3110B_Rdy_1A_sht.dgn
$$$$USERNAME$$$$

3/15/06

PROJECT REFERENCE NO.	SHEET NO.
U-3110B	1-B

Note: Not to Scale

****S.U.E. = Subsurface Utility Engineering***

STATE OF NORTH CAROLINA
DIVISION OF HIGHWAYS

CONVENTIONAL PLAN SHEET SYMBOLS

BOUNDARIES AND PROPERTY:

- State Line
- County Line
- Township Line
- City Line
- Reservation Line
- Property Line
- Existing Iron Pin — EIP
- Property Corner
- Property Monument — ECM
- Parcel/Sequence Number — 123
- Existing Fence Line
- Proposed Woven Wire Fence
- Proposed Chain Link Fence
- Proposed Barbed Wire Fence
- Existing Wetland Boundary — WLB
- Proposed Wetland Boundary — WLB
- Existing Endangered Animal Boundary — EAB
- Existing Endangered Plant Boundary — EPB

BUILDINGS AND OTHER CULTURE:

- Gas Pump Vent or U/G Tank Cap
- Sign — S
- Well — W
- Small Mine
- Foundation
- Area Outline
- Cemetery
- Building
- School
- Church
- Dam

HYDROLOGY:

- Stream or Body of Water
- Hydro, Pool or Reservoir
- Jurisdictional Stream — JS
- Buffer Zone 1 — BZ 1
- Buffer Zone 2 — BZ 2
- Flow Arrow
- Disappearing Stream
- Spring
- Wetland
- Proposed Lateral, Tail, Head Ditch — FLOW
- False Sump

RAILROADS:

- Standard Gauge — CSX TRANSPORTATION
- RR Signal Milepost — MILEPOST 35
- Switch — SWITCH
- RR Abandoned
- RR Dismantled

RIGHT OF WAY:

- Baseline Control Point
- Existing Right of Way Marker
- Existing Right of Way Line
- Proposed Right of Way Line — RW
- Proposed Right of Way Line with Iron Pin and Cap Marker — RW
- Proposed Right of Way Line with Concrete or Granite Marker — RW
- Existing Control of Access — CA
- Proposed Control of Access — CA
- Existing Easement Line — E
- Proposed Temporary Construction Easement — E
- Proposed Temporary Drainage Easement — TDE
- Proposed Permanent Drainage Easement — PDE
- Proposed Permanent Utility Easement — PUE

ROADS AND RELATED FEATURES:

- Existing Edge of Pavement
- Existing Curb
- Proposed Slope Stakes Cut — C
- Proposed Slope Stakes Fill — F
- Proposed Wheel Chair Ramp — WCR
- Existing Metal Guardrail
- Proposed Guardrail
- Existing Cable Guiderail
- Proposed Cable Guiderail
- Equality Symbol
- Pavement Removal

VEGETATION:

- Single Tree
- Single Shrub
- Hedge
- Woods Line
- Orchard
- Vineyard — Vineyard

EXISTING STRUCTURES:

MAJOR:

- Bridge, Tunnel or Box Culvert — CONC
- Bridge Wing Wall, Head Wall and End Wall — CONC WW

MINOR:

- Head and End Wall — CONC HW
- Pipe Culvert
- Footbridge
- Drainage Box: Catch Basin, DI or JB — CB
- Paved Ditch Gutter
- Storm Sewer Manhole — S
- Storm Sewer — S

UTILITIES:

POWER:

- Existing Power Pole
- Proposed Power Pole
- Existing Joint Use Pole
- Proposed Joint Use Pole
- Power Manhole — P
- Power Line Tower
- Power Transformer
- U/G Power Cable Hand Hole — HH
- H-Frame Pole
- Recorded U/G Power Line — P
- Designated U/G Power Line (S.U.E.*) — P

TELEPHONE:

- Existing Telephone Pole
- Proposed Telephone Pole
- Telephone Manhole — T
- Telephone Booth
- Telephone Pedestal — T
- Telephone Cell Tower
- U/G Telephone Cable Hand Hole — HH
- Recorded U/G Telephone Cable — T
- Designated U/G Telephone Cable (S.U.E.*) — T
- Recorded U/G Telephone Conduit — TC
- Designated U/G Telephone Conduit (S.U.E.*) — TC
- Recorded U/G Fiber Optics Cable — T FO
- Designated U/G Fiber Optics Cable (S.U.E.*) — T FO

WATER:

- Water Manhole — W
- Water Meter
- Water Valve
- Water Hydrant
- Recorded U/G Water Line — W
- Designated U/G Water Line (S.U.E.*) — W
- Above Ground Water Line — A/G Water

TV:

- TV Satellite Dish
- TV Pedestal — C
- TV Tower
- U/G TV Cable Hand Hole — HH
- Recorded U/G TV Cable — TV
- Designated U/G TV Cable (S.U.E.*) — TV
- Recorded U/G Fiber Optic Cable — TV FO
- Designated U/G Fiber Optic Cable (S.U.E.*) — TV FO

GAS:

- Gas Valve
- Gas Meter
- Recorded U/G Gas Line — G
- Designated U/G Gas Line (S.U.E.*) — G
- Above Ground Gas Line — A/G Gas

SANITARY SEWER:

- Sanitary Sewer Manhole
- Sanitary Sewer Cleanout
- U/G Sanitary Sewer Line — SS
- Above Ground Sanitary Sewer — A/G Sanitary Sewer
- Recorded SS Forced Main Line — FSS
- Designated SS Forced Main Line (S.U.E.*) — FSS

MISCELLANEOUS:

- Utility Pole
- Utility Pole with Base
- Utility Located Object
- Utility Traffic Signal Box — S
- Utility Unknown U/G Line — ?UTL
- U/G Tank; Water, Gas, Oil
- A/G Tank; Water, Gas, Oil
- U/G Test Hole (S.U.E.*)
- Abandoned According to Utility Records — AATUR
- End of Information — E.O.I.

PROJECT REFERENCE NO.	SHEET NO.
U-3110B	1C
Location and Surveys	

U-3110B SURVEY CONTROL SHEET

NOTES

1. THE CONTROL DATA FOR THIS PROJECT CAN BE FOUND ELECTRONICALLY BY SELECTING PROJECT CONTROL DATA AT:

   HTTP://WWW.DOH.DOT.STATE.NC.US/PRECONSTRUCT/HIGHWAY/LOCATION/PROJECT/

   THE FILES TO BE FOUND ARE AS FOLLOWS:

   U3110B_LS_CONTROL_070926.TXT

   SITE CALIBRATION INFORMATION HAS NOT BEEN PROVIDED FOR THIS PROJECT. IF FURTHER INFORMATION IS NEEDED, PLEASE CONTACT THE LOCATION AND SURVEYS UNIT.

△ INDICATES GEODETIC CONTROL MONUMENTS USED OR SET FOR HORIZONTAL PROJECT CONTROL BY THE NCDOT LOCATION AND SURVEYS UNIT.

PROJECT CONTROL ESTABLISHED USING GLOBAL POSITIONING SYSTEM FROM EXISTING NCGS MONUMENTATION.

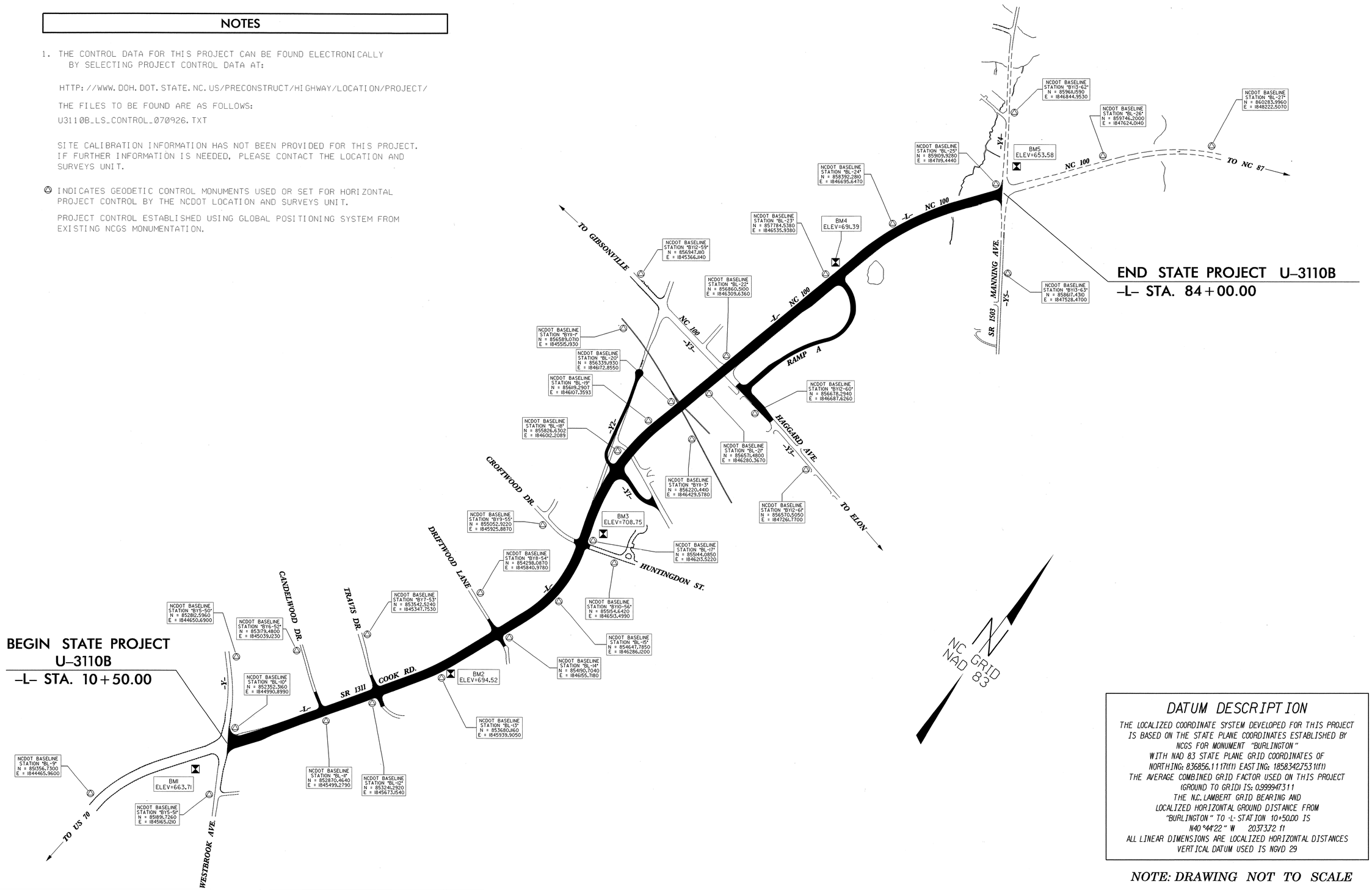

DATUM DESCRIPTION

THE LOCALIZED COORDINATE SYSTEM DEVELOPED FOR THIS PROJECT IS BASED ON THE STATE PLANE COORDINATES ESTABLISHED BY NCGS FOR MONUMENT "BURLINGTON"
WITH NAD 83 STATE PLANE GRID COORDINATES OF
NORTHING: 836856.1117(ft) EASTING: 1858342.7531(ft)
THE AVERAGE COMBINED GRID FACTOR USED ON THIS PROJECT (GROUND TO GRID) IS: 0.999947311
THE N.C. LAMBERT GRID BEARING AND LOCALIZED HORIZONTAL GROUND DISTANCE FROM "BURLINGTON" TO -L- STATION 10+50.00 IS
N40°44'22" W 2037.372 ft
ALL LINEAR DIMENSIONS ARE LOCALIZED HORIZONTAL DISTANCES
VERTICAL DATUM USED IS NGVD 29

NOTE: DRAWING NOT TO SCALE

12/01/2005
14-APR-2010 08:41
R:\Roadway\Proj\u3110b_ls_lc_070926.dgn
$$$$USERNAME$$$$

U-3110B SURVEY CONTROL SHEET

PROJECT REFERENCE NO.	SHEET NO.
U-3110B	1D
Location and Surveys	

BASELINE DATA

BL

POINT	DESC.	NORTH	EAST	ELEVATION	L STATION	OFFSET
9	BL-9	851356.7300	1844465.9600	645.10	OUTSIDE PROJECT LIMITS	
10	BL-10	852352.3160	1844990.8990	662.23	10+65.87	79.72 LT
11	BL-11	852870.4640	1845499.2790	673.60	17+80.88	55.24 RT
12	BL-12	853241.2920	1845673.1540	681.28	21+86.98	2.05 RT
13	BL-13	853680.1160	1845939.9050	691.67	27+00.87	3.16 LT
14	BL-14	854190.7040	1846155.7180	698.50	32+55.59	4.85 RT
15	BL-15	854647.7850	1846286.1200	701.99	37+33.28	5.57 LT
17	BL-17	855144.0850	1846213.5220	703.73	42+41.92	6.18 LT
18	BL-18	855826.6302	1846012.2089	696.17	49+31.72	97.36 LT
19	BL-19	856119.2907	1846107.3593	696.02	52+22.48	40.88 LT
20	BL-20	856339.1930	1846172.8550	704.68	54+51.05	27.22 LT
21	BL-21	856571.4800	1846280.3670	704.27	57+01.75	24.40 RT
22	BL-22	856860.5100	1846309.6360	695.81	59+89.82	13.11 LT
23	BL-23	857784.5380	1846535.9380	685.36	69+41.11	3.83 LT
24	BL-24	858392.2810	1846695.6470	671.16	75+68.17	16.14 LT
25	BL-25	859109.9280	1847119.4440	656.59	83+97.59	47.46 LT
26	BL-26	859746.2000	1847624.0140	658.62	OUTSIDE PROJECT LIMITS	
27	BL-27	860283.9960	1848222.5070	654.83	OUTSIDE PROJECT LIMITS	

BY5

POINT	DESC.	NORTH	EAST	ELEVATION	Y STATION	OFFSET
50	BY5-50	852812.5960	1844650.6900	659.60	OUTSIDE PROJECT LIMITS	
110	BL-10	852352.3160	1844990.8990	684.27	12+44.83	25.61 LT
51	BY5-51	851891.7260	1845165.1210	656.21	OUTSIDE PROJECT LIMITS	

BY6

POINT	DESC.	NORTH	EAST	ELEVATION	L STATION	OFFSET
52	BY6-52	853179.4800	1845039.1230	676.37	17+93.45	498.91 LT
111	BL-11	852870.4640	1845499.2790	673.63	17+80.88	55.24 RT

BY7

POINT	DESC.	NORTH	EAST	ELEVATION	L STATION	OFFSET
53	BY7-53	853542.5240	1845347.7530	677.96	22+65.56	434.36 LT
112	BL-12	853241.2920	1845673.1540	681.28	21+86.98	2.05 RT

BY8

POINT	DESC.	NORTH	EAST	ELEVATION	L STATION	OFFSET
54	BY8-54	854298.0870	1845840.9780	691.37	32+42.02	327.43 LT
114	BL-14	854190.7040	1846155.7180	698.50	32+55.59	4.85 RT

BY9

POINT	DESC.	NORTH	EAST	ELEVATION	L STATION	OFFSET
55	BY9-55	855052.9220	1845925.8870	703.40	42+41.99	307.92 LT
117	BL-17	855144.0850	1846213.5220	703.73	42+41.92	6.18 LT

BY10

POINT	DESC.	NORTH	EAST	ELEVATION	L STATION	OFFSET
118		855826.6340	1846012.2050	696.17	49+31.72	97.36 LT
56	BY10-56	855154.6420	1846513.4990	706.19	41+61.29	282.95 RT

BY11

POINT	DESC.	NORTH	EAST	ELEVATION	L STATION	OFFSET
1	BY11-1	856589.0710	1845515.1930	701.31	55+44.12	724.56 LT
2	BY11-2	856588.3440	1845721.4660	704.10	55+90.52	523.58 LT
120	BL-20	856339.1930	1846172.8550	704.67	54+51.05	27.22 LT
3	BY11-3	856220.4410	1846429.5780	707.88	53+94.06	249.84 RT

BY12

POINT	DESC.	NORTH	EAST	ELEVATION	Y3 STATION	OFFSET
59	BY12-59	856947.1110	1845366.1140	695.85	OUTSIDE PROJECT LIMITS	
122	BL-22	856860.5100	1846309.6360	695.81	19+19.61	93.37 LT
60	BY12-60	856678.2940	1846687.6260	710.34	23+22.31	26.33 RT
61	BY12-61	856570.5050	1847261.7700	701.72	29+07.48	16.33 RT

BY13

POINT	DESC.	NORTH	EAST	ELEVATION	Y4 STATION	OFFSET
62	BY13-62	859611.1590	1846844.9530	640.79	OUTSIDE PROJECT LIMITS	
125	BL-25	859109.9280	1847119.4440	656.59	13+95.97	39.78 RT
63	BY13-63	858617.4310	1847528.4700	670.81	OUTSIDE PROJECT LIMITS	

NOTES

1. THE CONTROL DATA FOR THIS PROJECT CAN BE FOUND ELECTRONICALLY BY SELECTING PROJECT CONTROL DATA AT:

   HTTP://WWW.DOH.DOT.STATE.NC.US/PRECONSTRUCT/HIGHWAY/LOCATION/PROJECT/

   THE FILES TO BE FOUND ARE AS FOLLOWS:

   U3110B_LS_CONTROL_070926.TXT

   SITE CALIBRATION INFORMATION HAS NOT BEEN PROVIDED FOR THIS PROJECT. IF FURTHER INFORMATION IS NEEDED, PLEASE CONTACT THE LOCATION AND SURVEYS UNIT.

   PROJECT CONTROL ESTABLISHED USING GLOBAL POSITIONING SYSTEM FROM EXISTING NCGS MONUMENTATION.

BENCHMARK DATA

****

BM1 ELEVATION = 663.71
N 851981 E 1844954
L STATION 10+00
S 13° 07' 37.8" W DIST 278.61
RR SPIKE SET IN BASE OF 16 INCH WHITE OAK

****

****

BM2 ELEVATION = 694.52
N 853689 E 1845990
L STATION 27+31 38 RIGHT
RR SPIKE SET IN ROOT OF TWIN ASH

****

****

BM3 ELEVATION = 708.75
N 855249 E 1846322
L STATION 43+09 129 RIGHT
RR SPIKE SET IN BASE OF 30 INCH MAPLE

****

****

BM4 ELEVATION = 691.39
N 857923 E 1846484
L STATION 70+64 86 LEFT
RR SPIKE SET IN BASE OF 20 INCH WILLOW OAK

****

****

BM5 ELEVATION = 653.58
N 859313 E 1847132
L STATION 85+68 159 LEFT
RR SPIKE SET IN BASE OF 18 INCH SWEET GUM

****

DATUM DESCRIPTION

THE LOCALIZED COORDINATE SYSTEM DEVELOPED FOR THIS PROJECT IS BASED ON THE STATE PLANE COORDINATES ESTABLISHED BY NCGS FOR MONUMENT "BURLINGTON"
WITH NAD 83 STATE PLANE GRID COORDINATES OF
NORTHING: 836856.1117(ft) EASTING: 1858342.7531(ft)
THE AVERAGE COMBINED GRID FACTOR USED ON THIS PROJECT (GROUND TO GRID) IS: 0.999947311
THE N.C. LAMBERT GRID BEARING AND LOCALIZED HORIZONTAL GROUND DISTANCE FROM "BURLINGTON" TO -L- STATION 10+50.00 IS
N40°44'22" W 2037.372 ft
ALL LINEAR DIMENSIONS ARE LOCALIZED HORIZONTAL DISTANCES
VERTICAL DATUM USED IS NGVD 29

NOTE: DRAWING NOT TO SCALE

14-APR-2010 08:41
R:\Roadway\Proj\u3110b_ls_1d_070926.dgn
$$$$USERNAME$$$$

PROJ. REFERENCE NO.	SHEET NO.
U-3110b	1-E

STATE OF NORTH CAROLINA
DIVISION OF HIGHWAYS

PARCEL INDEX SHEET

PARCEL No.	SHEET No.	PROPERTY OWNER NAME
1	4	ROGER D. & PENNY HILDERBRAN
2	4,5	N.C. DEPARTMENT OF TRANSPORTATION
3	4	JAMES E. II & TINA C. AVANT
4	4	GEORGE R. LENTZ, SR
5	4,5	NANCY G. BELL
6	5	PARTICK M. SLADE
7	5,6	BETH SCHMIDT PARK
8	5	LEONARD & VERONICA REVELS
9	5	LEONARD M. & CARNELLA D. WILLIAMS
10	5	RICHARD P. & DORA A. DENAULT
11	5	JAMES D. LOCKLEY & WIFE, MARY M. LOCKLEY
12	5	ALVA B. & BEATRICE A. SELLERS
13	5	LESTER L. FOSTER, JR. & MARIA B. FOSTER
14	5	YVONNE A. MAIZLAND REVOCABLE LIVING TRUST
15	5	W. WORTH & SARAH R. ZIMMERMAN
16	5,6	LARRY E. & ROSEMARY H. RAY
17	6	JOHN M. & JANA F. PATTERSON
18	6	DAVID R. & DIANE P. FRANK
19	6	JANICE E. PFLUMM
20	6	TOWN OF ELON
21	6	DAVID P. & SUSAN A. HONEYCUTT
22	6	ERNEST B. & BARBARA CONNER
23	6	LEONARD T. DUDKA
24	7	DAVID H. & JANET L. TESSMAN
25	7	PIERCE HOMES OF CAROLINA, INC
26	7	ERIK B. SMITH & WIFE AMY M. SMITH
28	7,11	RUBY C00K FARLOW
29	7,11	SONOCO PRODUCTS COMPANY
31	7,8	McDONALD LAND COMPANY, LLC
33	8	ELON SELF STORAGE, LLC
34	9	NORBERT A. & KLARA S. STAIC

PARCEL No.	SHEET No.	PROPERTY OWNER NAME

PROJECT REFERENCE NO.	SHEET NO.
U-3110B	2
ROADWAY DESIGN ENGINEER	PAVEMENT DESIGN ENGINEER
7-29-10	09/02/2010

FINAL PAVEMENT SCHEDULE

C1	PROP. APPROX. 3 " ASPHALT CONC. SURFACE COURSE, TYPE S9.5B, AT AN AVERAGE RATE OF 168 LBS. PER SQ. YD. IN EACH OF TWO LAYERS	R1	2'-6" CONCRETE CURB AND GUTTER.
C2	PROP. VAR. DEPTH ASPHALT CONC. SURFACE COURSE, TYPE S9.5B, AT AN AVERAGE RATE OF 112 LBS. PER SQ. YD. PER 1" DEPTH, TO BE PLACED IN LAYERS NOT TO EXCEED 2" IN DEPTH.	R2	1'-6" CONCRETE CURB AND GUTTER.
C3	PROP. APPROX. 1.5 " ASPHALT CONC. SURFACE COURSE, TYPE S9.5B, AT AN AVERAGE RATE OF 168 LBS. PER SQ. YD.	R3	5" MONOLITHIC CONCRETE ISLAND.
D1	PROP. APPROX. 4 " ASPHALT CONC. INTERMEDIATE COURSE, TYPE I19.0B, AT AN AVERAGE RATE OF 456 LBS. PER SQ. YD.	S	4" CONCRETE SIDEWALK
D2	PROP. VAR. DEPTH ASPHALT CONC. INTERMEDIATE COURSE, TYPE I19.0B, AT AN AVERAGE RATE OF 114 LBS. PER SQ. YD. PER 1" DEPTH, TO BE PLACED IN LAYERS NOT LESS THAN 2½" IN DEPTH OR GREATER THAN 4" IN DEPTH.	S1	4" CONCRETE MULTI-USE PATH
D3	PROP. APPROX. 2.5" ASPHALT CONC. INTERMEDIATE COURSE, TYPE I19.0B, AT AN AVERAGE RATE OF 285 LBS. PER SQ. YD.	T	EARTH MATERIAL.
E1	PROP. APPROX. 5" ASPHALT CONC. BASE COURSE, TYPE B25.0B, AT AN AVERAGE RATE OF 570 LBS. PER SQ. YD.	U	EXISTING PAVEMENT.
E2	PROP. VAR. DEPTH ASPHALT CONC. BASE COURSE, TYPE B25.0B, AT AN AVERAGE RATE OF 114 LBS. PER SQ. YD. PER 1" DEPTH, TO BE PLACED IN LAYERS NOT LESS THAN 3" IN DEPTH OR GREATER THAN 5½" IN DEPTH.	W	VARIABLE DEPTH ASPHALT PAVEMENT. (SEE WEDGING DETAIL)
E3	PROP. APPROX. 4" ASPHALT CONC. BASE COURSE, TYPE B25.0B, AT AN AVERAGE RATE OF 456 LBS. PER SQ. YD.		
E4	PROP. APPROX. 4.5" ASPHALT CONC. BASE COURSE, TYPE B25.0B, AT AN AVERAGE RATE OF 513 LBS. PER SQ. YD.		

NOTE: PAVEMENT EDGE SLOPES ARE 1:1 UNLESS SHOWN OTHERWISE.

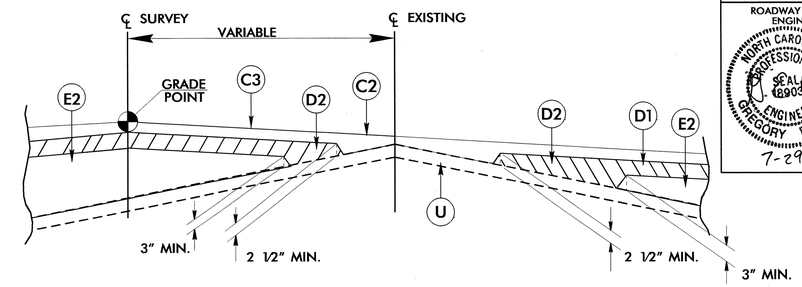

Detail Showing Method Of Wedging

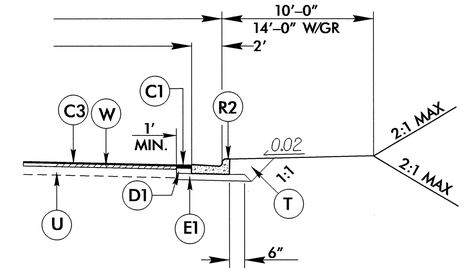

DETAIL 4

DETAIL OF PLACING CONC. CURB & GUTTER ADJACENT TO EXISTING PAVEMENT

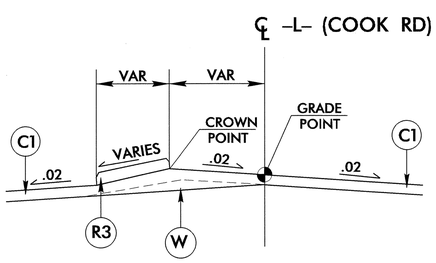

SUPERELEVATION TREATMENT ADJACENT TO PROPOSED CHANNELIZATION

TO BE USED IN CONJUNCTION WITH STATIONS LISTED BELOW LEFT OR RIGHT SIDE

-L- STA. 10+70 TO 11+88 LT
-L- STA. 18+14 TO 21+75 RT
-L- STA. 22+65 TO 24+66 LT
-L- STA. 29+60 TO 31+80 RT
-L- STA. 32+70 TO 33+82 LT
-L- STA. 66+00 TO 69+48 LT
-L- STA. 70+45 TO 71+32 LT
-L- STA. 81+45 TO 83+42 RT

NOTE: SIDEWALK TO BE INSTALLED FROM WESTBROOK AVENUE TO CROFTWOOD DRIVE (LEFT SIDE ONLY)

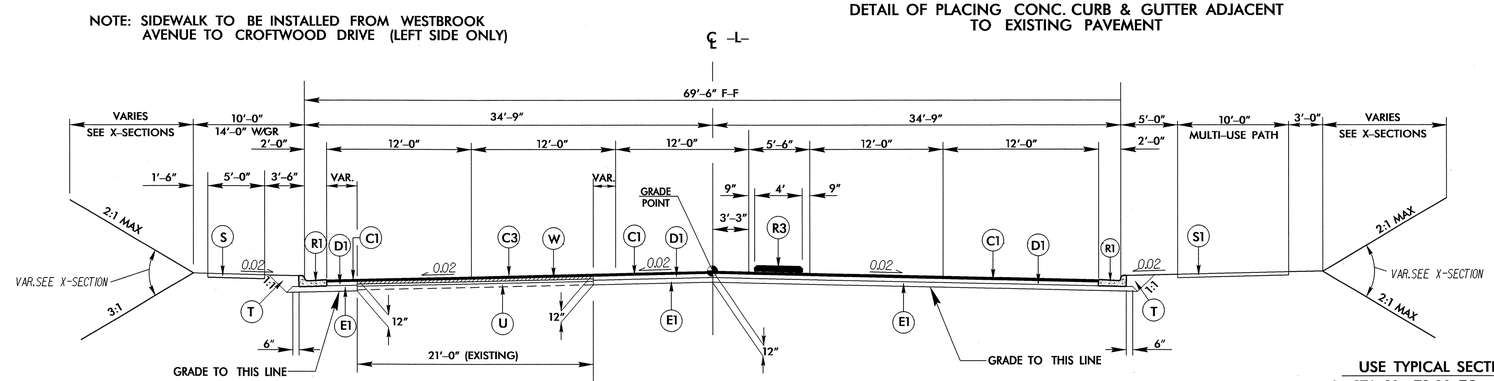

TYPICAL SECTION NO. 1

USE TYPICAL SECTION NO.1
-L- STA. 10+73.00 TO -L- STA. 13+88.47
-L- STA. 42+50.00 TO -L- STA. 43+90.00

TRANSITION FROM EXISTING TO TS NO. 1 FROM
-L- STA. 10+00.00 TO -L- STA. 10+73.00

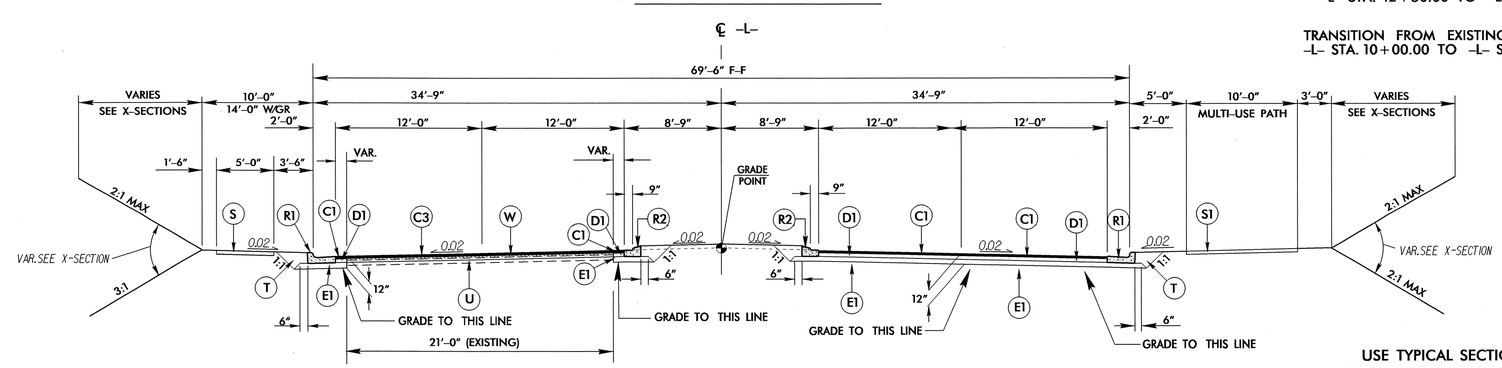

TYPICAL SECTION NO. 2

USE TYPICAL SECTION NO. 2

-L- STA. 13+88.47 TO -L- STA. 17+00.00

29-JUL-2010 10:10
R:\Roadway Proj\u-3110b_rdy_typ.dgn
$$$$USERNAME$$$$
6/2/99

PROJECT REFERENCE NO.	SHEET NO.
U-3110B	2-A
ROADWAY DESIGN ENGINEER	PAVEMENT DESIGN ENGINEER

NORTH CAROLINA PROFESSIONAL SEAL 18903 ENGINEER GREGORY E. BREWER
7-27-10

NORTH CAROLINA PROFESSIONAL SEAL 031484 ENGINEER VLADIMIR G. MITCHEV
08/06/2010

6/2/99

PAVEMENT SCHEDULE	
C1	3" S9.5B
D1	4" I19.0B
E1	5" B-25.0B
R1	2'-6" C&G
R2	1'-6" C&G
R3	5" MONO. ISLAND
S	4" CONC SIDEWALK
S1	4" MULTI-USE PATH
T	EARTH MATERIAL

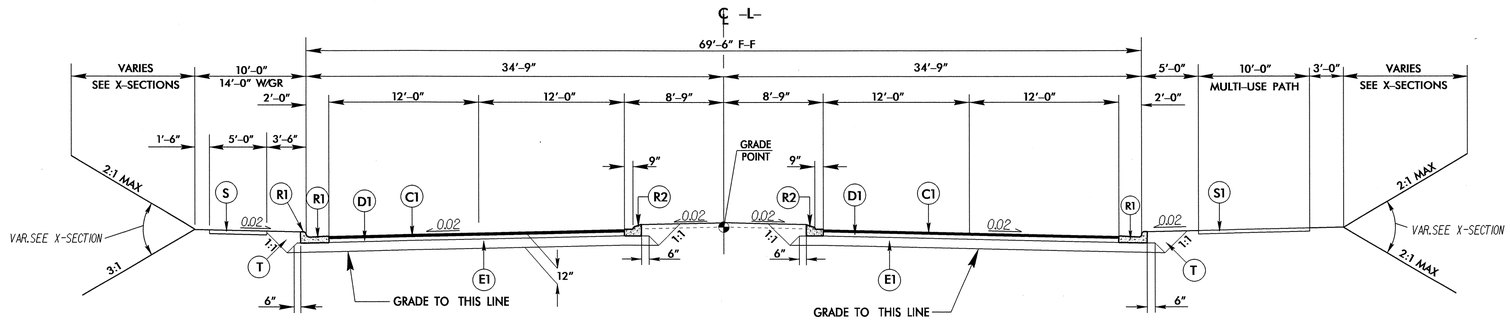

TYPICAL SECTION NO. 2A

USE TYPICAL SECTION NO. 2A

-L- STA. 17+00.00 TO -L- STA. 18+43.83
-L- STA. 25+95.83 TO -L- STA. 28+49.15

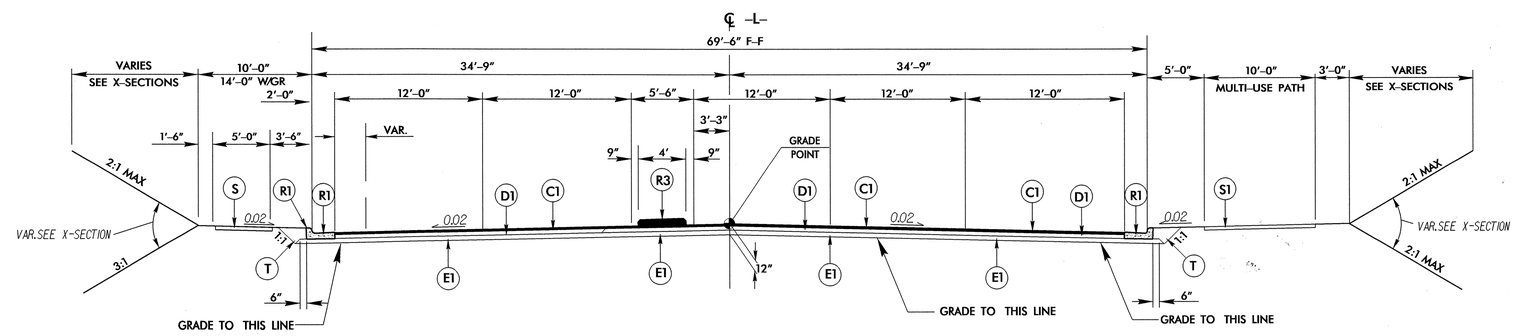

TYPICAL SECTION NO. 3

USE TYPICAL SECTION NO. 3

-L- STA. 18+43.83 TO -L- STA. 22+65.83
-L- STA. 28+49.15 TO -L- STA. 32+71.15
-L- STA. 38+20.00 TO -L- STA. 42+26.95

TRANSITION FROM TS NO. 4 TO TS NO. 3
STA. 37+20.00 TO STA. 38+20.00

23-JUL-2010 14:56
R:\Roadway\Proj\u-3110b_rdy_typ.dgn
$$$$USERNAME$$$$

PROJECT REFERENCE NO.	SHEET NO.
U-3110B	2-B
ROADWAY DESIGN ENGINEER	PAVEMENT DESIGN ENGINEER

NORTH CAROLINA PROFESSIONAL SEAL 18903 ENGINEER GREGORY E. BREW 7-27-10

NORTH CAROLINA PROFESSIONAL SEAL 031484 ENGINEER VLADIMIR G. MITCHEV 07/02/2010

PAVEMENT SCHEDULE			
C1	3" S9.5B	R1	2'-6" C&G
D1	4" I19.0B	R3	5" MONO. ISLAND
E1	5" B-25.0B	S	4" CONC SIDEWALK
		S1	4" MULTI-USE PATH
		T	EARTH MATERIAL

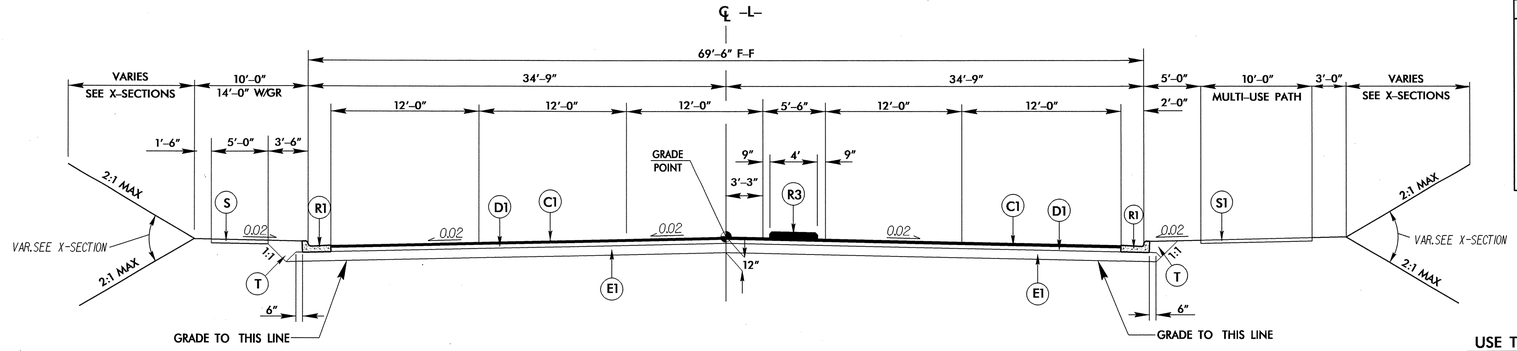

TYPICAL SECTION NO. 4

USE TYPICAL SECTION NO. 4

-L- STA. 22+65.83 TO -L- STA. 25+95.83
-L- STA. 32+71.15 TO -L- STA. 37+20.00

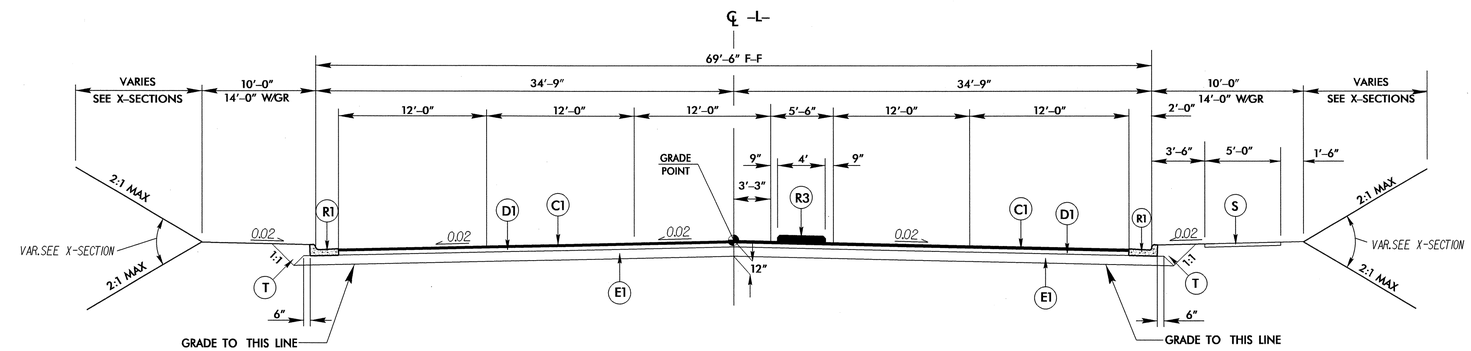

TYPICAL SECTION NO. 5

USE TYPICAL SECTION NO. 5

-L- STA. 42+26.95 TO -L- STA. 42+50.00
-L- STA. 48+45.77 TO -L- STA. 51+00.00

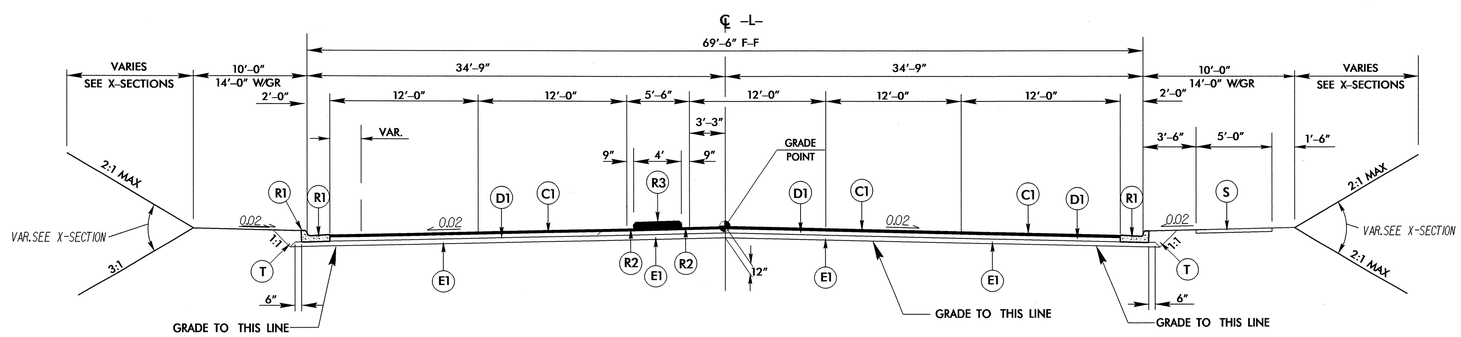

TYPICAL SECTION NO. 6

USE TYPICAL SECTION NO. 6

-L- STA. 44+90.00 TO -L- STA. 46+35.70

TRANSITION FROM TS NO. 1 TO TS NO. 6
-L- STA. 43+90.00 TO -L- STA. 44+90.00

6/2/99

14-JUL-2010 14:18
R:\Roadway\Proj\3110b_rdy_typ.dgn
$$$$USERNAME$$$$

PROJECT REFERENCE NO.	SHEET NO.
U-3110B	2-C
ROADWAY DESIGN ENGINEER	PAVEMENT DESIGN ENGINEER

NORTH CAROLINA PROFESSIONAL SEAL 18903 ENGINEER GREGORY E. BRIEN
7-27-10

NORTH CAROLINA PROFESSIONAL SEAL 031484 ENGINEER CARTMIR G. MITCHELL
08/02/2010

PAVEMENT SCHEDULE			
C1	3" S9.5B	R1	2'-6" C&G
D1	4" I19.0B	R2	1'-6" C&G
E1	5" B-25.0B	R3	5" MONO. ISLAND
		T	EARTH MATERIAL

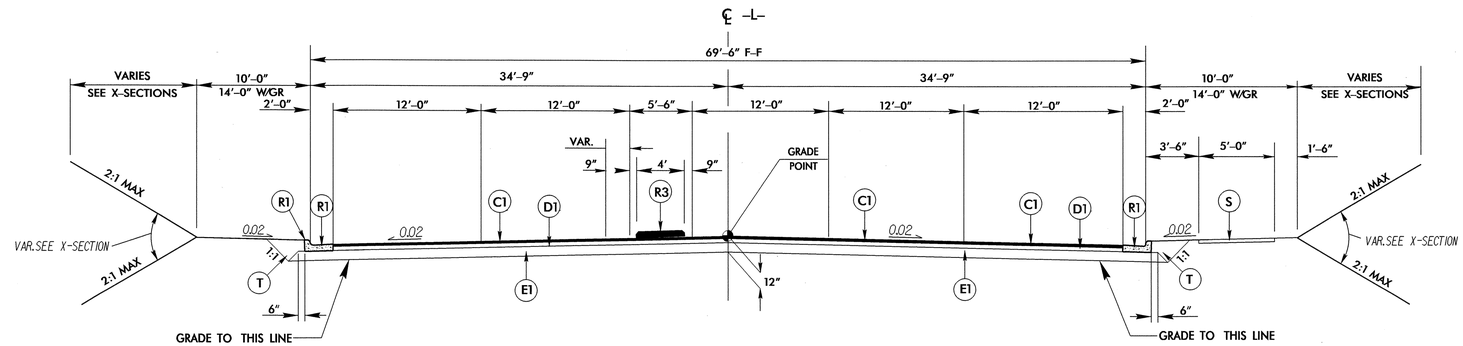

TYPICAL SECTION NO. 7

USE TYPICAL SECTION NO. 7

-L- STA. 46+35.70 TO -L- STA. 48+45.77

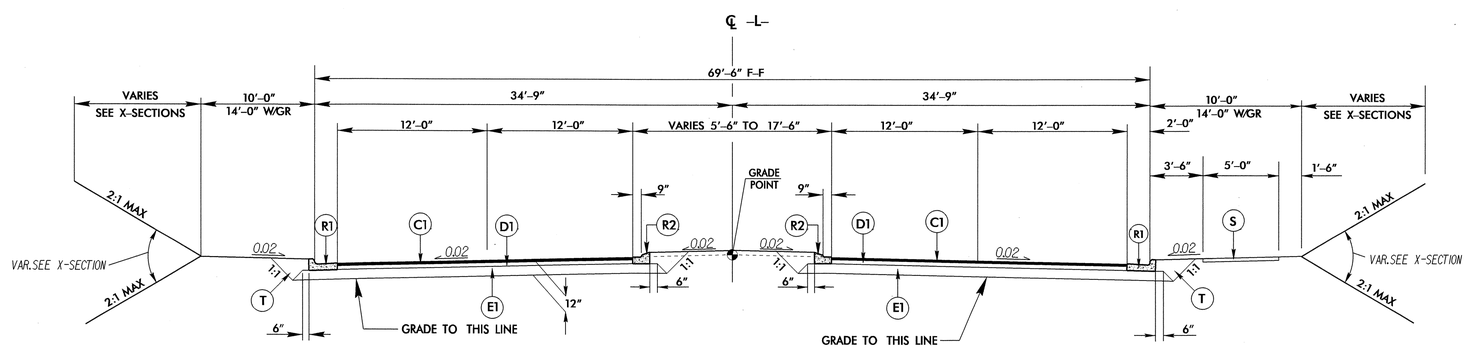

TYPICAL SECTION NO. 8

USE TYPICAL SECTION NO. 8

-L- STA. 51+00.00 TO -L- STA. 53+40.98 (BEGIN BRIDGE)

6/2/99

23-JUL-2010 14:58
R:\Roadway\Proj\u-3110b_rdy_typ.dgn
$$$$USERNAME$$$$

PROJECT REFERENCE NO.	SHEET NO.
U-3110B	2-D

ROADWAY DESIGN ENGINEER

NORTH CAROLINA PROFESSIONAL SEAL 18900 ENGINEER GREGORY E. ERTEN

8-25-10

PAVEMENT DESIGN ENGINEER

NORTH CAROLINA PROFESSIONAL SEAL 22896 ENGINEER CLARK S. MORRISON

8/25/10

PAVEMENT SCHEDULE			
C1	3" S9.5B	R1	2'-6" C&G
D1	4" I19.0B	R2	1'-6" C&G
E1	5" B-25.0B	T	EARTH MATERIAL

(BRIDGE OVER RAILROAD)

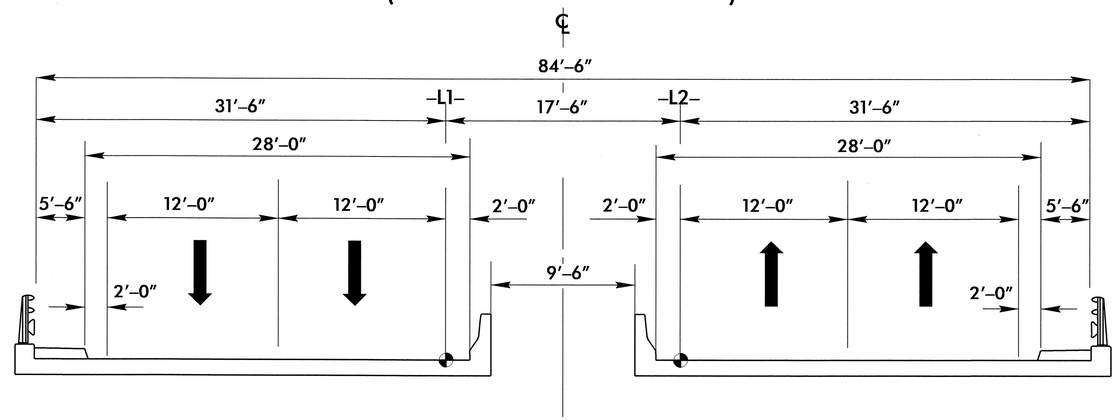

TYPICAL SECTION NO. 9

USE TYPICAL SECTION NO. 9

-L- STA. 53+40.98 TO STA. 55+89.56

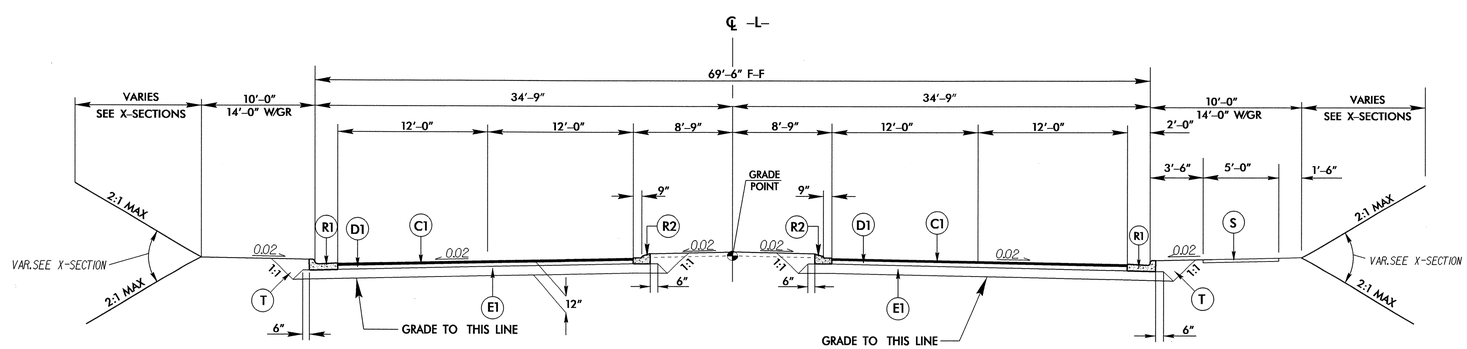

TYPICAL SECTION NO. 10

USE TYPICAL SECTION NO. 10

-L- STA. 55+89.56 (END BRIDGE) TO -L- STA. 58+20.87 (BEGIN BRIDGE)
-L- STA. 59+65.22 (END BRIDGE) TO -L- STA. 70+45.85

6/2/99
24-AUG-2010 09:01
R:\Roadway\Proj\3110b_rdy_typ.dgn
$$$$USERNAME$$$$

PROJECT REFERENCE NO.	SHEET NO.
U-3110B	2-E

ROADWAY DESIGN ENGINEER

NORTH CAROLINA PROFESSIONAL SEAL 18903 ENGINEER GREGORY E. BREW

PAVEMENT DESIGN ENGINEER

NORTH CAROLINA PROFESSIONAL SEAL 031484 ENGINEER VLADIMIR G. MITCHEV

08/27/2010

PAVEMENT SCHEDULE			
C1	3" S9.5B	T	EARTH MATERIAL
D1	4" I19.0B	U	EXISTING PAVEMENT
E1	5" B25.0B	W	WEDGING
R1	2'-6" C&G		
R2	1'-6" C&G		
R3	5" MONO. ISLAND		

-L1- & -L2- (BRIDGE OVER -Y3-)

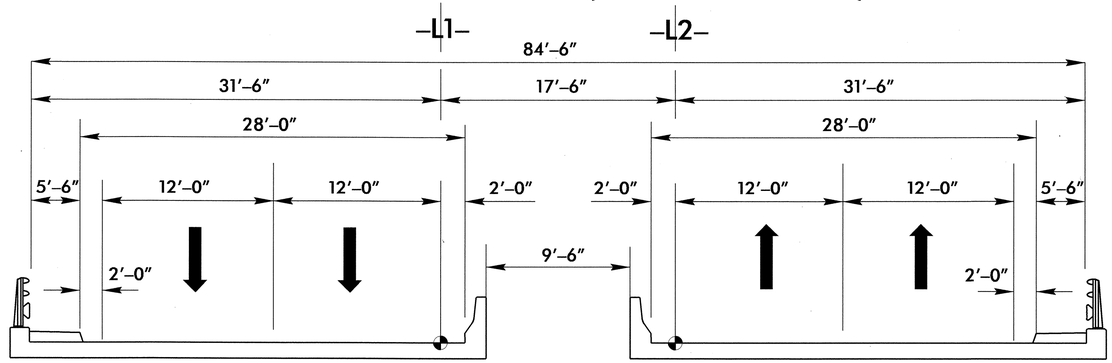

TYPICAL SECTION NO. 11

USE TYPICAL SECTION NO. 11
-L- STA. 58+20.87 TO STA. 59+65.22

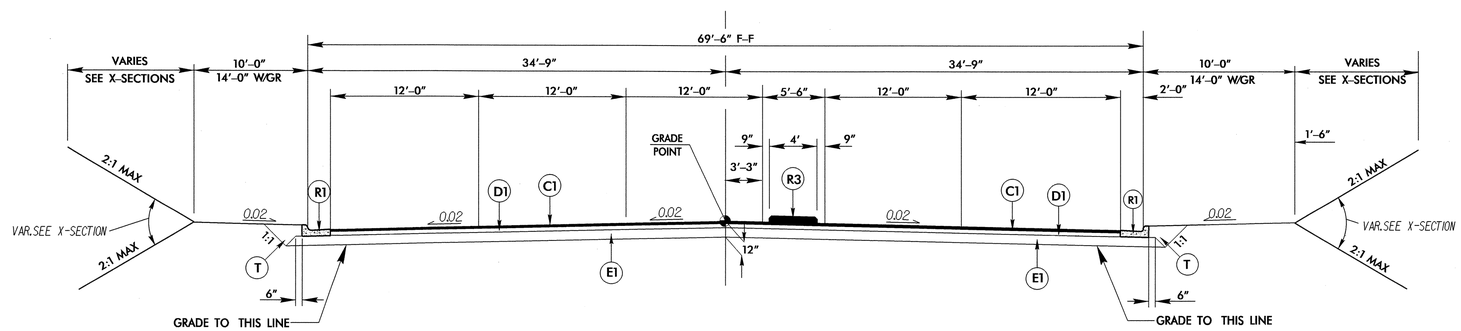

TYPICAL SECTION NO. 12

USE TYPICAL SECTION NO. 12
-L- STA. 70+45.85 TO -L- STA. 73+75.85

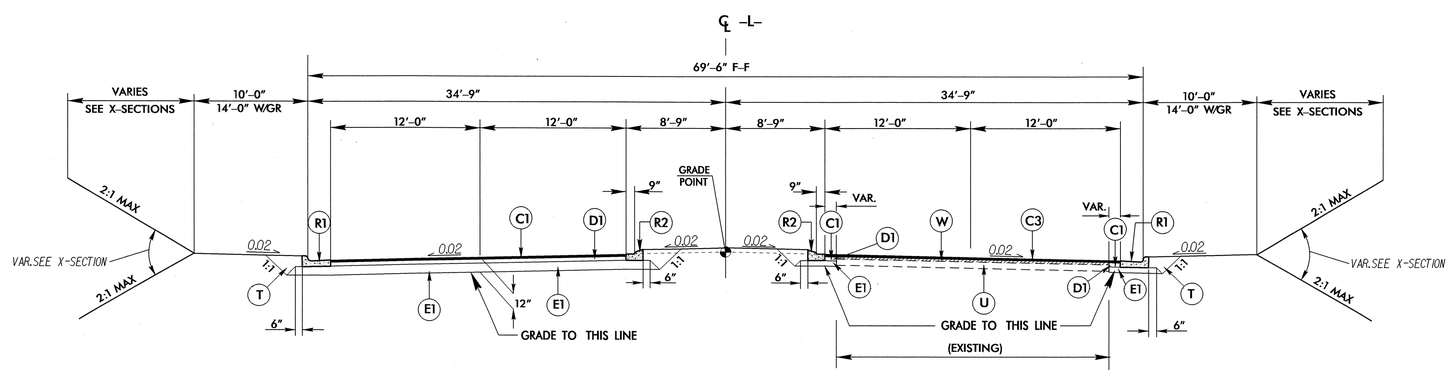

TYPICAL SECTION NO. 13

USE TYPICAL SECTION NO. 13
-L- STA. 73+75.85 TO -L- STA 80+49.67

6/2/99

23-JUL-2010 15:03
R:\Roadway\Proj\u-3110b_rdy_typ.dgn
$$$$USERNAME$$$$

PROJECT REFERENCE NO.	SHEET NO.
U-3110B	2-F
ROADWAY DESIGN ENGINEER	PAVEMENT DESIGN ENGINEER
7-27-10	08/02/2010

PAVEMENT SCHEDULE

C1	3" S9.5B	T	EARTH MATERIAL
C3	1.5" S9.5B	U	EXISTING PAVEMENT
D1	4" I19.0B	W	WEDGING
E1	5" B-25.0B		
E3	4" B-25.0B		
R1	2'-6" C&G		
R3	5" MONO. ISLAND		

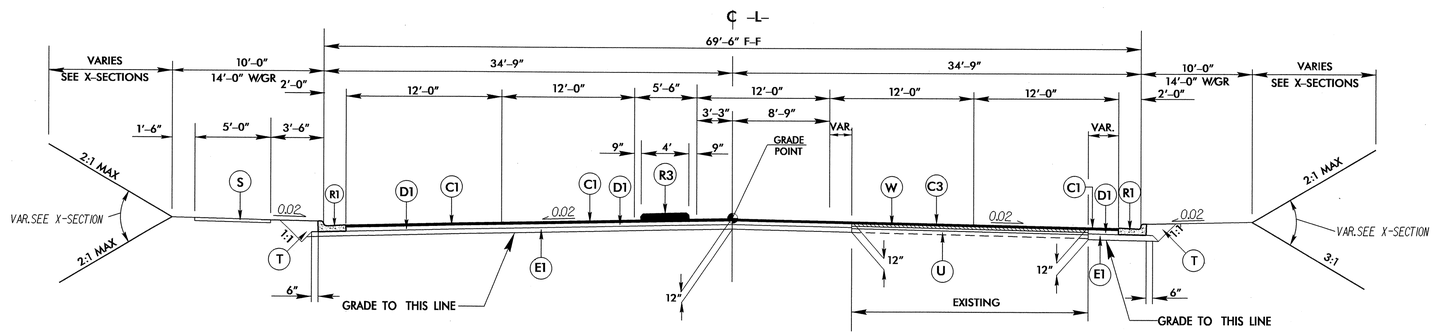

TYPICAL SECTION NO. 14

USE TYPICAL SECTION NO. 14

-L- STA. 80+49.67 TO -L- STA. 83+43.49

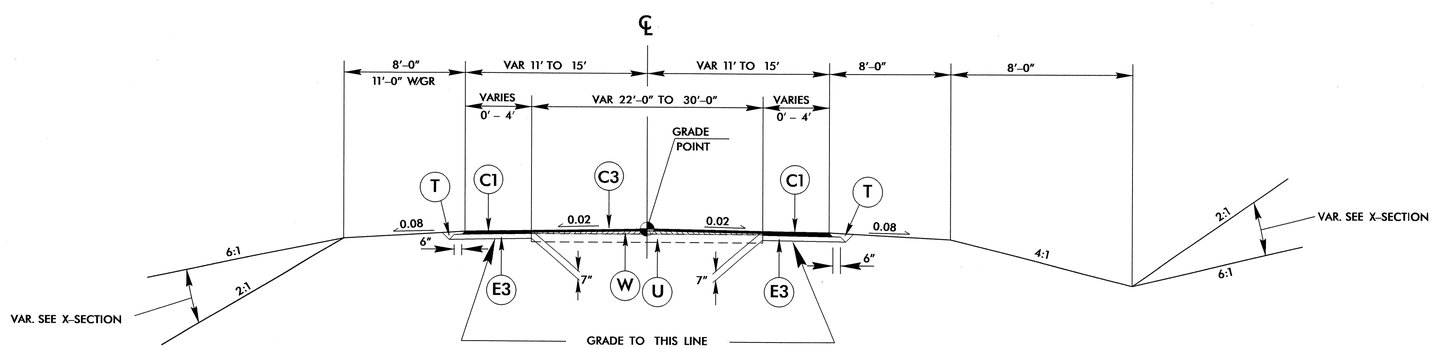

TYPICAL SECTION NO. 15

USE TYPICAL SECTION NO. 15

-Y1- STA. 17+00.00 TO 18+36.98

14-JUL-2010 14:18
R:\Roadway\PFO\u-3110b_rdy_typ.dgn
$$$$USERNAME$$$$

PAVEMENT SCHEDULE			
C1	3" S9.5B	T	EARTH MATERIAL
C3	1.5"" S9.5B	U	EXISTING PAVEMENT
D3	2.5" I19.0B	W	WEDGING
E3	4" B-25.0B		
E4	4.5" B-25.0B		

PROJECT REFERENCE NO.	SHEET NO.
U-3110B	2-G
R/W SHEET NO.	
ROADWAY DESIGN ENGINEER	PAVEMENT DESIGN ENGINEER

NORTH CAROLINA PROFESSIONAL SEAL 18908 ENGINEER GREGORY E. BREW
7-29-10

NORTH CAROLINA PROFESSIONAL SEAL 031484 ENGINEER VLADIMIR G. MIKHEEV
8/02/2010

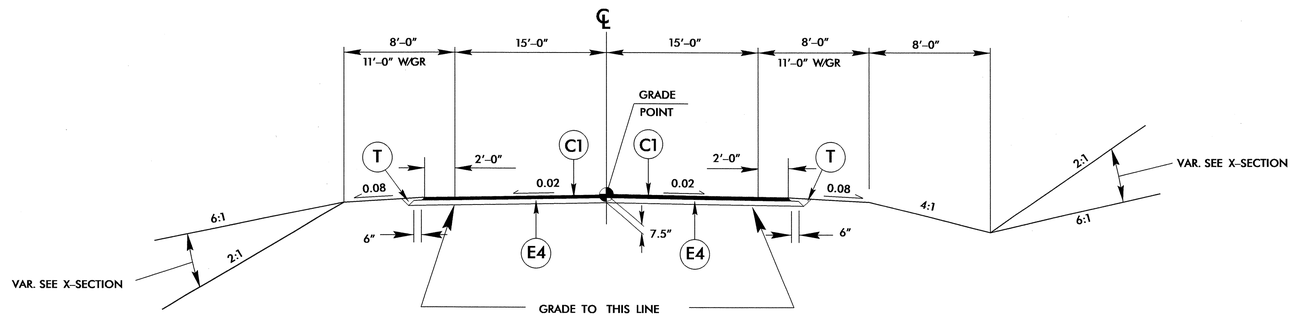

TYPICAL SECTION NO. 16

USE TYPICAL SECTION NO. 16

-Y2- STA. 10+75.00 TO 14+12.00

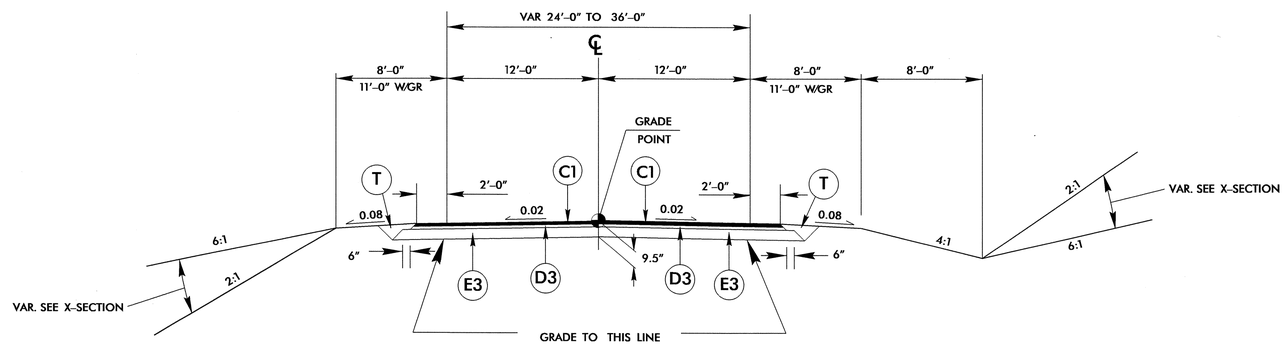

TYPICAL SECTION NO. 17

USE TYPICAL SECTION NO. 17

-RAMPA- STA. 10+85.00 TO 22+75.00

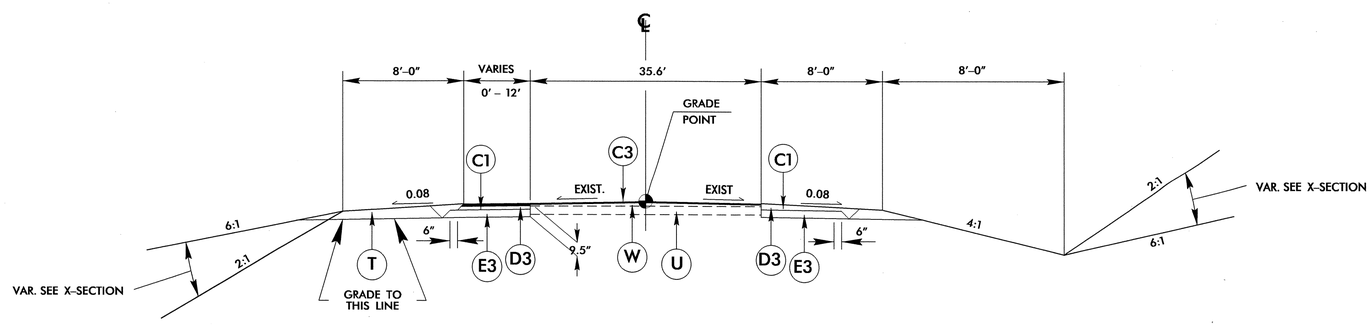

TYPICAL SECTION NO. 18

USE TYPICAL SECTION NO. 18

-Y3- STA. 20+73.50 TO STA. 24+75

5/14/99

23-JUL-2010 09:54
R:\Roadway\Proj\u-3110b_rdy_typ.dgn
$$$$USERNAME$$$$

PROJECT REFERENCE NO.	SHEET
U-3110B	2-H

GEOTECHNICAL ENGINEER

ENGINEER

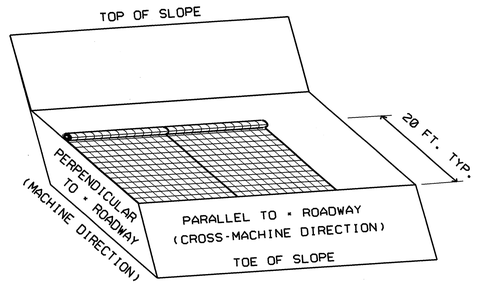

20 FT. LONG (PRIMARY) GEOGRID REINFORCEMENT DETAIL

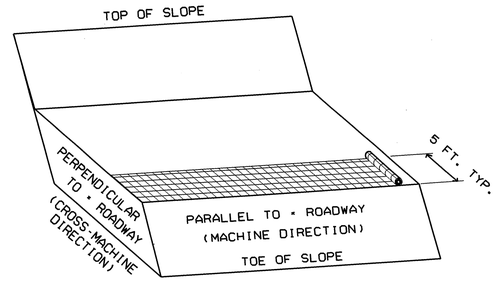

5 FT. WIDE (SECONDARY) GEOGRID REINFORCEMENT DETAIL

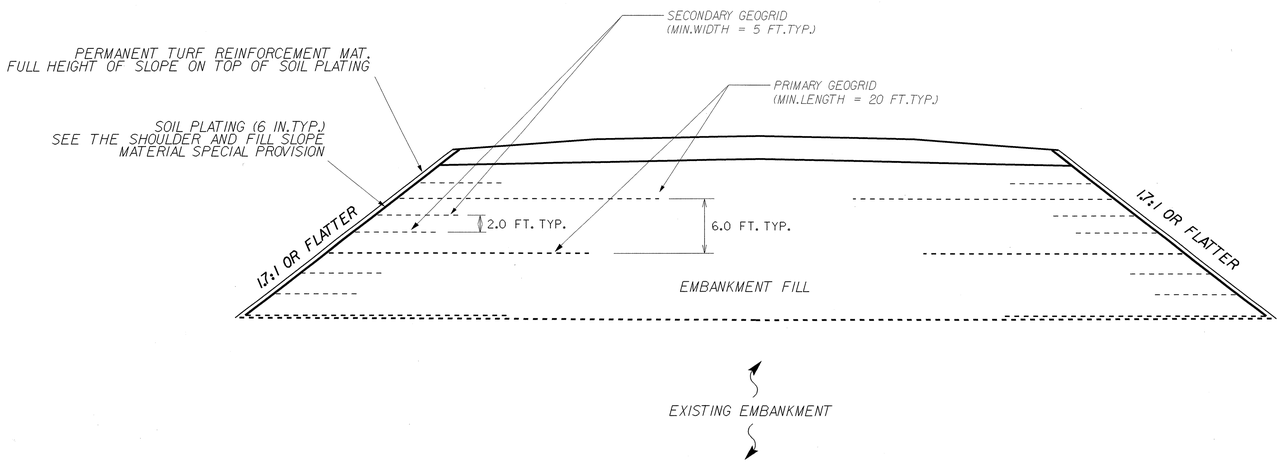

GEOGRID REINFORCED SLOPE TYPICAL SECTION

N.T.S.

NOTES

1. GEOGRID REINFORCEMENT SHALL BE PLACED AT THE LOCATIONS LISTED IN THE GEOGRID REINFORCED SLOPE TABLE WHERE SLOPES ARE STEEPER THAN 2.0:1 (H:V).
2. LAYERS OF REINFORCEMENT MAY NEED TO BE ADDED OR SUBTRACTED AT THE TOP OF SLOPE AS THE EMBANKMENT HEIGHT VARIES THROUGH THE STEEPENED SECTION.
3. THE TOP LAYER OF REINFORCEMENT MAY BE LOWERED SLIGHTLY IF NECESSARY TO PREVENT INTERFERENCE WITH THE SUBGRADE.
4. THE FIRST LAYER OF GEOGRID SHALL BE PLACED ON LEVEL GROUND NOT STEEPER THAN 5% GRADE.
5. SEE THE SPECIAL PROVISION FOR GEOGRID REINFORCEMENT FOR DETAILED REQUIREMENTS OF MATERIALS AND CONSTRUCTION.
6. PERMANENT TURF REINFORCEMENT MATTING SHALL BE PLACED AT THE LOCATIONS LISTED IN THE SLOPE TABLE WHERE SLOPES ARE STEEPER THAN 2.0:1 (H:V).
7. BACKFILL WITHIN THE REINFORCED VOLUME SHALL BE COMMON BORROW MATERIAL IN ACCORDANCE WITH SECTION 1018 OF THE STANDARD SPECIFICATIONS.
8. PLATE THE FACE OF THE SLOPE WITH 6 INCHES OF SOIL IN ACCORDANCE WITH THE SHOULDER AND FILL SLOPE MATERIAL SPECIAL PROVISION.
9. THE ENTIRE EMBANKMENT SHALL BE CONSTRUCTED SIMULATANEOUSLY WITH THE SLOPE REINFORCEMENT.

GEOGRID REINFORCED SLOPE LOCATION

ALIGNMENT	BEGIN STATION	END STATION	LOCATION
-L-	55+50.00 ±	58+50.00 ±	LEFT
-L-	55+50.00 ±	58+50.00 ±	RIGHT

REINFORCED SLOPE ESTIMATED QUANTITIES

PRIMARY GEOGRID REINFORCEMENT	8180 SQ YD.
SECONDARY GEOGRID REINFORCEMENT	3880 SQ YD.
PERMANENT TURF REINFORCEMENT MAT	4580 SQ YD.

PREPARED BY: JYP	DATE: 06/2010
REVIEWED BY: JRB	DATE: 06/2010

GEOTECHNICAL ENGINEERING UNIT

- [X] EASTERN REGIONAL OFFICE
- [ ] WESTERN REGIONAL OFFICE
- [ ] CONTRACT OFFICE

STATE OF NORTH CAROLINA DEPARTMENT OF TRANSPORTATION RALEIGH

GEOGRID REINFORCED SLOPE DETAIL

REVISIONS

NO.	BY	DATE	NO.	BY	DATE
1			3		
2			4		

STATE OF NORTH CAROLINA
DEPT. OF TRANSPORTATION
DIVISION OF HIGHWAYS
RALEIGH, N.C.

7-06

ENGLISH DETAIL DRAWING FOR
METHOD OF PIPE INSTALLATION

FLEXIBLE PIPE

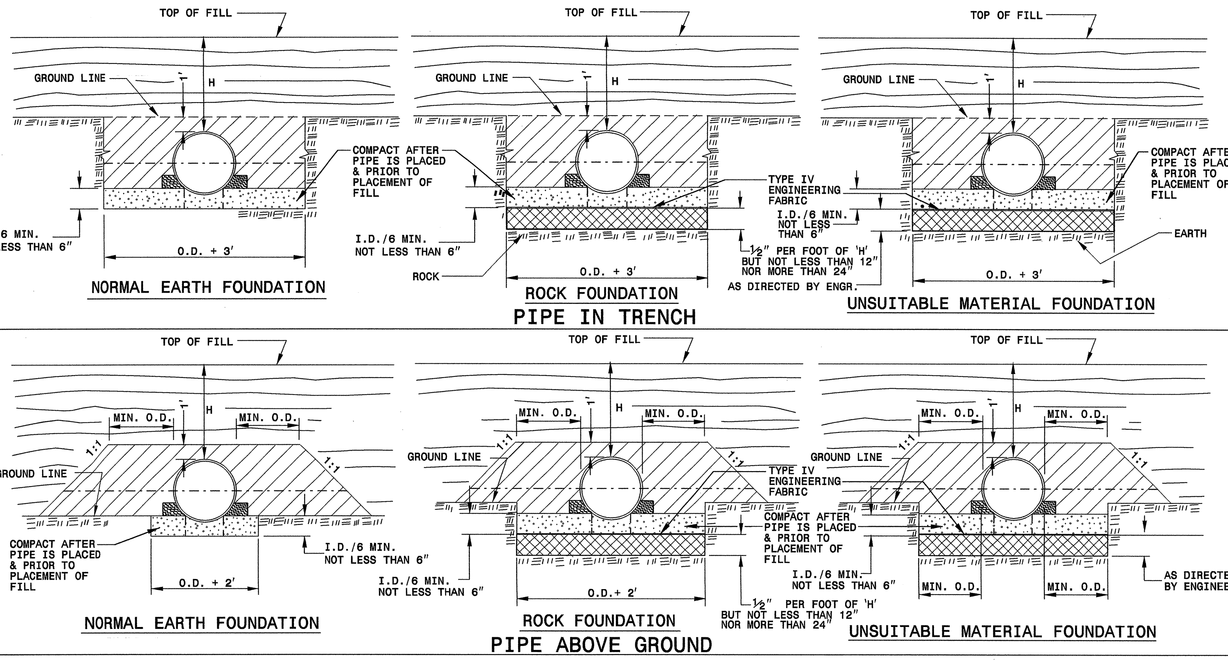

GENERAL NOTES:

I.D. = THE MAXIMUM HORIZONTAL INSIDE DIAMETER DIMENSION.

O.D. = THE MAXIMUM HORIZONTAL OUTSIDE DIAMETER DIMENSION.

H = THE FILL HEIGHT MEASURED VERTICALLY AT ANY POINT ALONG THE PIPE FROM THE TOP OF THE PIPE TO THE TOP OF THE EMBANKMENT AT THAT POINT.

TAKE CARE TO FULLY COMPACT HAUNCH ZONE OF PIPE BACKFILL.

LOOSELY PLACED SELECT MATERIAL CLASS III OR CLASS II, TYPE 1 FOR PIPE BEDDING. LEAVE SECTION DIRECTLY BENEATH PIPE UNCOMPACTED AS PIPE SEATING AND BACKFILL WILL ACCOMPLISH COMPACTION.

DO NOT OPERATE HEAVY EQUIPMENT OVER ANY PIPE CULVERT UNTIL THE PIPE CULVERT HAS BEEN PROPERLY BACKFILLED AND COVERED WITH AT LEAST 3 FEET OF APPROVED MATERIAL.

SPRINGLINE OF PIPE

SELECT BACKFILL MATERIAL CLASS III OR CLASS II, TYPE 1 ABOVE AND BELOW SPRINGLINE.

APPROVED SUITABLE LOCAL MATERIAL.

UNDISTURBED EARTH MATERIAL

SELECT MATERIAL CLASS V OR VI FOR FOUNDATION CONDITIONING. ENCAPSULATE WITH ENGINEERING FABRIC AS DIRECTED BY THE ENGINEER.

SHEET 1 OF 3
300D01

STATE OF NORTH CAROLINA
DEPT. OF TRANSPORTATION
DIVISION OF HIGHWAYS
RALEIGH, N.C.

7-06

ENGLISH DETAIL DRAWING FOR
METHOD OF PIPE INSTALLATION

RIGID PIPE

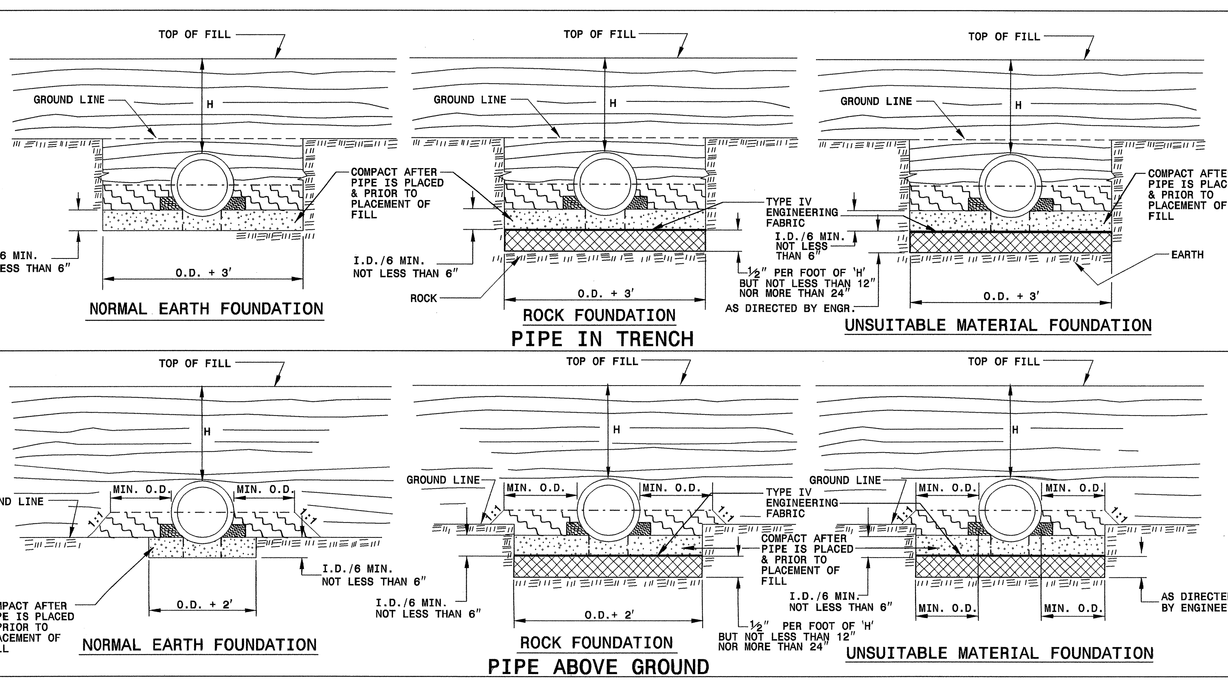

GENERAL NOTES:

I.D. = THE MAXIMUM HORIZONTAL INSIDE DIAMETER DIMENSION.

O.D. = THE MAXIMUM HORIZONTAL OUTSIDE DIAMETER DIMENSION.

H = THE FILL HEIGHT MEASURED VERTICALLY AT ANY POINT ALONG THE PIPE FROM THE TOP OF THE PIPE TO THE TOP OF THE EMBANKMENT AT THAT POINT.

TAKE CARE TO FULLY COMPACT HAUNCH ZONE OF PIPE BACKFILL.

LOOSELY PLACED SELECT MATERIAL CLASS III OR CLASS II, TYPE 1 FOR PIPE BEDDING. LEAVE SECTION DIRECTLY BENEATH PIPE UNCOMPACTED AS PIPE SEATING AND BACKFILL WILL ACCOMPLISH COMPACTION.

DO NOT OPERATE HEAVY EQUIPMENT OVER ANY PIPE CULVERT UNTIL THE PIPE CULVERT HAS BEEN PROPERLY BACKFILLED AND COVERED WITH AT LEAST 3 FEET OF APPROVED MATERIAL.

SPRINGLINE OF PIPE

SELECT BACKFILL MATERIAL CLASS III OR CLASS II, BELOW SPRINGLINE.

APPROVED SUITABLE LOCAL MATERIAL ABOVE SPRINGLINE.

UNDISTURBED EARTH MATERIAL

SELECT MATERIAL CLASS V OR VI FOR FOUNDATION CONDITIONING. ENCAPSULATE WITH ENGINEERING FABRIC AS DIRECTED BY THE ENGINEER.

SHEET 2 OF 3
300D01

PROJECT SERVICES UNIT
STANDARDS AND SPECIAL DESIGN
Office 919-250-4128 FAX 919-250-4119

SEE PLATE FOR TITLE

ORIGINAL BY: KKempf DATE: 5-15-09
MODIFIED BY: DATE: 7/24/14
CHECKED BY: DATE:
FILE SPEC: /rc/jkrcf/stds/stdsrodetails/30001/0300d01.dgn

NORTH CAROLINA PROFESSIONAL SEAL 022986 ENGINEER JOHN L. HOWERTON

PROJECT REFERENCE NO. U-3110B
SHEET NO. 21

STATE OF NORTH CAROLINA
DEPT. OF TRANSPORTATION
DIVISION OF HIGHWAYS
RALEIGH, N.C.

7-06

ENGLISH DETAIL DRAWING FOR
METHOD OF PIPE INSTALLATION
FILL HEIGHT TABLES

SHEET 3 OF 3
300D01

FLEXIBLE PIPE

Round Corrugated Steel Pipe
2 2/3 x ½ corrugation **

Diameter (inches)	Minimum cover (inches)	Maximum Height of Cover (feet) (Ga) 16	14	12	10	8
12	12	204	256			
15	12	162	204			
18	12	135	169	239		
21	12	115	145	204		
24	12	100	126	178		
30	12	79	100	142		
36	12	65	83	117	152	
42	12	55	70	100	130	160
48	12	48	61	87	113	139
54	12		54	77	100	123
60	12			69	90	111
66	12				81	100
72	12				74	91
78	12					81
84	12					69

Round Corrugated Aluminum Pipe
2 2/3 x ½ corrugation **

Diameter (inches)	Minimum cover (inches)	Maximum Height of Cover (feet) (Ga) 16	14	12	10	8
12	12	123	155	218	281	344
15	12	98	123	174	224	275
18	12	81	102	144	187	228
21	12	69	87	123	160	195
24	12	60	76	108	139	171
27	12		67	95	123	151
30	12		60	85	111	136
36	12		50	71	92	113
42	12			60	78	96
48	12			52	68	84
54	12			46	50	74
60	12				50	62
66	12					51
72	12					41

** FOR DIFFERENT CORRUGATIONS AND ARCH PIPES REFER TO ROADWAY DESIGN MANUAL OR MANUFACTURERS SPECIFICATION.

REFER TO THE FOLLOWING FOR PIPE SPECIFICATIONS

CSP - AASHTO M36
CAAP - AASHTO M196
HDPE - AASHTO M294
PVC - ASTM F949 or AASHTO M304

NOTES: FILL HEIGHTS SHOWN WERE CALCULATED USING AASHTO LRFD BRIDGE DESIGN SPECIFICATIONS

1' MINIMUM COVER FOR ALL SIDE DRAIN PIPE IN ACCORDANCE WITH THE STANDARD SPECIFICATIONS

HDPE - * (Minimum fill) 2' for pipe diameters ≥ 12" and ≤ 60"
* (Maximum fill) 20' for pipe diameters ≤ 24"
17' for pipe diameters ≥ 30" and ≤ 60"

PVC - * (Minimum fill) 2' for pipe diameters ≥ 12" and ≤ 36"
* (Maximum fill) 30' for pipe diameters ≥ 12" and ≤ 36"

* FILL HEIGHT IS MEASURED FROM THE TOP OF THE PIPE TO THE BOTTOM OF THE PAVEMENT STRUCTURE

RIGID PIPE

RCP - * (Minimum fill) 1' for Class IV & CLASS V
2' for Class III & Class II

* (Maximum fill) 10' - Class II pipe
20' - Class III pipe
30' - Class IV pipe
40' - Class V pipe

(For fills > 40' & < 80' use LRFD Direct Design Method)

* FILL HEIGHT IS MEASURED FROM THE TOP OF THE PIPE TO THE BOTTOM OF THE PAVEMENT STRUCTURE

REFER TO THE FOLLOWING FOR PIPE SPECIFICATIONS

RCP - AASHTO M170

NOTES: FILL HEIGHTS SHOWN WERE CALCULATED USING AASHTO LRFD BRIDGE DESIGN SPECIFICATIONS

1' MINIMUM COVER FOR ALL SIDE DRAIN PIPE IN ACCORDANCE WITH THE STANDARD SPECIFICATIONS

STATE OF NORTH CAROLINA
DEPT. OF TRANSPORTATION
DIVISION OF HIGHWAYS
RALEIGH, N.C.

7-06

ENGLISH DETAIL DRAWING FOR
METHOD OF PIPE INSTALLATION
FILL HEIGHT TABLES

SHEET 3 OF 3
300D01

PROJECT SERVICES UNIT
STANDARDS AND SPECIAL DESIGN
Office 919-250-4128 FAX 919-250-4119

SEE PLATE FOR TITLE

ORIGINAL BY: KKempf DATE: 5-15-09
MODIFIED BY: DATE:
CHECKED BY: DATE: 7/29/09
FILE SPEC/07-06/d/stds/stdstodetails/30001/0300d01.dgn

NORTH CAROLINA PROFESSIONAL SEAL 022566 ENGINEER
DIVISION OF HIGHWAYS
7/29/10

PROJECT REFERENCE NO. U-3110 B
SHEET NO. 2-J

PROJECT REFERENCE NO.	SHEET NO.
U-3110B	2-K

5/14/99

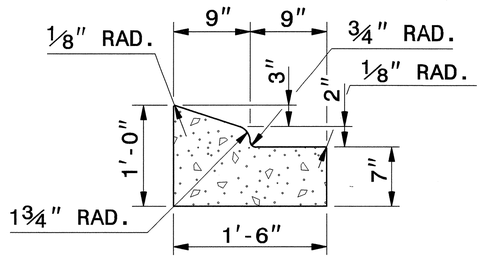

1'-6" CURB AND GUTTER

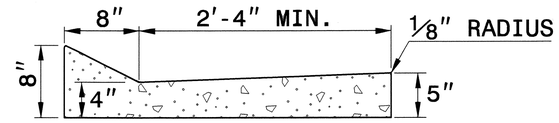

SHOULDER BERM GUTTER

NOTE: SEE STD. DWG. 846.01 FOR ADDITIONAL CURB AND GUTTER INFORMATION.

SEE ROADWAY PLANS FOR LOCATION OF CURB TRANSITION.

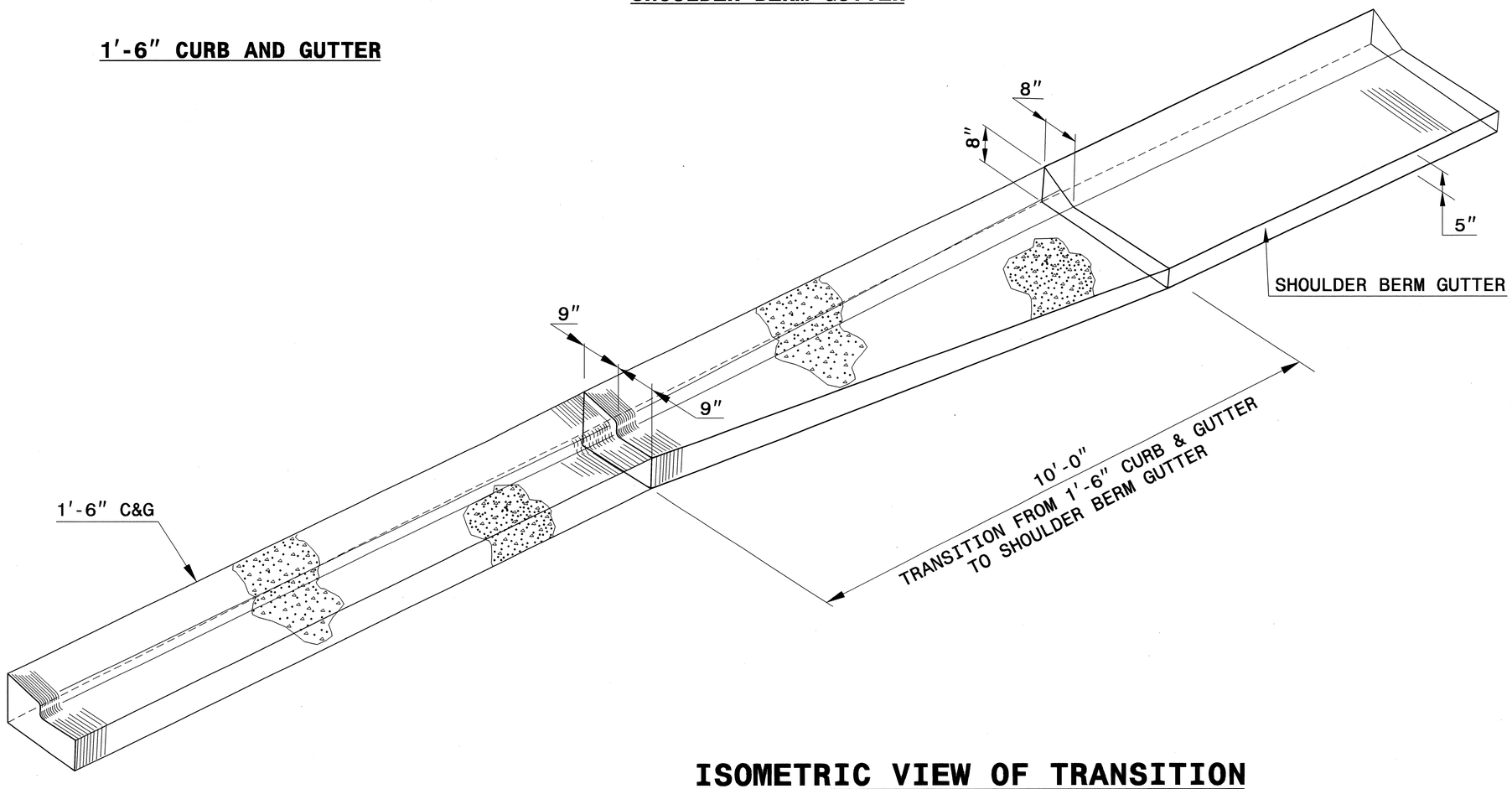

ISOMETRIC VIEW OF TRANSITION

NORTH CAROLINA PROFESSIONAL SEAL 022966 ENGINEER JOEL S. LOWERY
7/29/10

PROJECT SERVICES UNIT
STANDARDS AND SPECIAL DESIGN
Office 919-250-4128 FAX 919-250-4119

DETAIL OF 1'-6" C&G TO SHOULDER BERM GUTTER TRANSITION SECTION

ORIGINAL BY: E.E. WARD DATE: 11-21-03
MODIFIED BY: DATE:
CHECKED BY: Joel S. Lowery DATE: 5/4/10
FILE SPEC.: /usr/details/stand/cgtransit.dgn

STATE OF NORTH CAROLINA
DEPT. OF TRANSPORTATION
DIVISION OF HIGHWAYS
RALEIGH, N.C.

ENGLISH DETAIL DRAWING FOR
WHEELCHAIR RAMP
PROPOSED CURB AND GUTTER

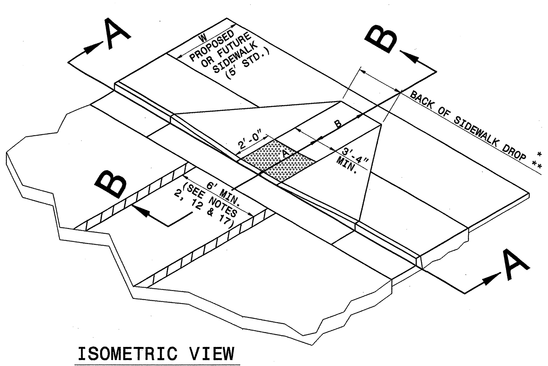

ISOMETRIC VIEW

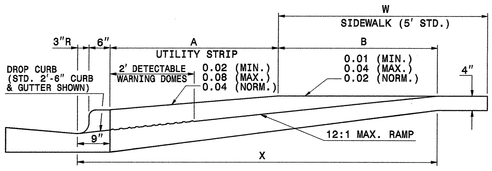

SECTION B-B

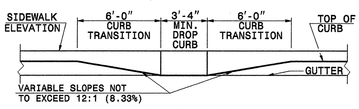

SECTION A-A

NOTES:
1. DETECTABLE WARNING DOMES SHALL COVER 2'-0" LENGTH AND FULL WIDTH OF THE RAMP FLOOR AS SHOWN ON THE DETAILS.
2. OBTAIN 70% CONTRAST VISIBILITY WITH ADJOINING SURFACE, EITHER LIGHT-ON-DARK, OR DARK-ON-LIGHT SEQUENCE COVERING THE ENTIRE RAMP.

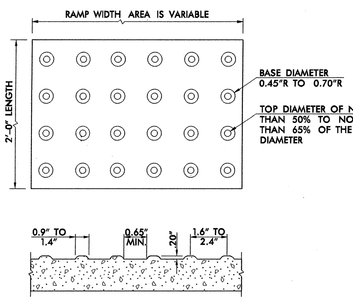

DETECTABLE WARNING DOMES

W	A	W+A+9"	X	B
5'	0.0'	5.8'	5.8'	5.0'*
6'	0.0'	6.8'	6.8'	6.0'**
7'	0.0'	7.8'	7.3'	6.5'**
8'	0.0'	8.8'	7.3'	6.5'**
5'	2.0'	7.8'	7.8'	5.0'
5'	2.5'	8.3'	8.1'	4.8'
5'	3.0'	8.8'	8.3'	4.4'
5'	3.5'	9.3'	8.4'	4.1'
5'	4.0'	9.8'	8.6'	3.8'
5'	4.5'	10.3'	8.7'	3.4'
5'	5.0'	10.8'	8.9'	3.1'

B = X-(A+9")
B = DISTANCE FROM FRONT EDGE OF SIDEWALK TO BACK POINT OF 12:1 (8.33%) SLOPE.
* BACK OF SIDEWALK DROP REQUIRED FOR ALL SIDEWALK SLOPES.
** BACK OF SIDEWALK DROP REQUIRED FOR SIDEWALK SLOPES 0.04.

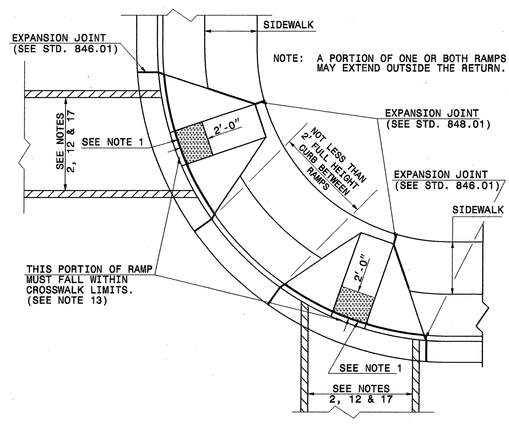

PLAN VIEW
DUAL RAMPS
ANY RADII
(40" MIN. FLOOR WIDTH)

SHEET 1 OF 3
848D05

STATE OF NORTH CAROLINA
DEPT. OF TRANSPORTATION
DIVISION OF HIGHWAYS
RALEIGH, N.C.

ENGLISH DETAIL DRAWING FOR
WHEELCHAIR RAMP
PROPOSED CURB AND GUTTER

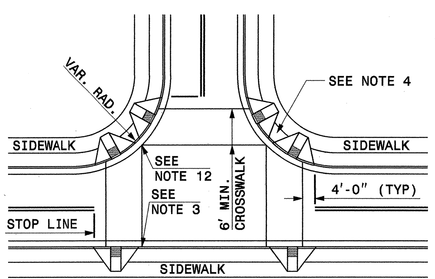

DETAIL SHOWING TYPICAL LOCATION OF WHEELCHAIR RAMPS, PEDESTRIAN CROSSWALKS AND STOP LINES FOR TEE INTERSECTIONS

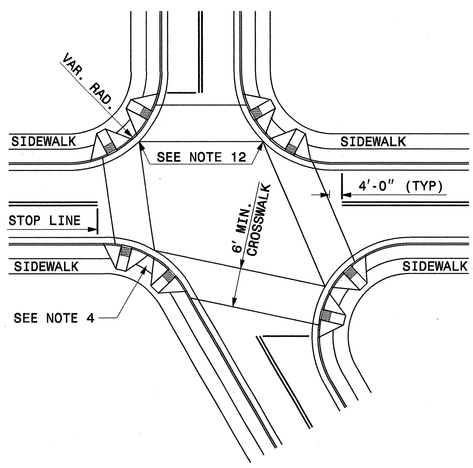

DETAIL SHOWING TYPICAL LOCATION OF WHEELCHAIR RAMPS, PEDESTRIAN CROSSWALKS AND STOP LINES

ROADWAY PLAN SYMBOL
WCR
FOR PROPOSED WHEELCHAIR RAMP

PROPOSED WHEELCHAIR RAMP
PROPOSED OR FUTURE SIDEWALK

ALLOWABLE LOCATIONS

DUAL RAMP RADII.....ANY

SHEET 2 OF 3
848D05

PROJECT SERVICES UNIT
STANDARDS AND SPECIAL DESIGN
Office 919-250-4128 FAX 919-250-4119

SEE PLATE FOR TITLE

ORIGINAL BY: STD NO. 848.05 DATE: 4-22-10
MODIFIED BY: DATE:
CHECKED BY: DATE: 4/21/10
FILE SPEC.: S:\Specialdetails\Ericward\STDS\848d05.dgn

NORTH CAROLINA PROFESSIONAL SEAL 025896 ENGINEER JOHN CHRISTOPHER WALKER 7/21/10

PROJECT REFERENCE NO. U-3110B
SHEET NO. 2-L

STATE OF
NORTH CAROLINA
DEPT. OF TRANSPORTATION
DIVISION OF HIGHWAYS
RALEIGH, N.C.

ENGLISH DETAIL DRAWING FOR

WHEELCHAIR RAMP

PROPOSED CURB AND GUTTER

SHEET 3 OF 3

848D05

NOTES:

1. CONSTRUCT THE WALKING SURFACE WITH SLIP RESISTANTANCE AND A 70% CONTRASTING COLOR TO THE SIDEWALK.
2. CROSSWALK WIDTHS AND CONFIGURATION VARY BUT MUST CONFORM TO TRAFFIC DESIGN STANDARDS.
3. NORTH CAROLINA GENERAL STATUTE 136-44.14 REQUIRES THAT ALL STREET CURBS BEING CONSTRUCTED OR RECONSTRUCTED FOR MAINTENANCE PROCEDURES, TRAFFIC OPERATIONS, REPAIRS, CORRECTION OF UTILTIES OR ALTERED FOR ANY REASON AFTER SEPTEMBER 1, 1973 SHALL PROVIDE WHEELCHAIR RAMPS FOR THE PHYSICALLY DISABLED AT ALL INTERSECTIONS WHERE BOTH CURB AND GUTTER AND SIDEWALKS ARE PROVIDED AND AT OTHER POINTS OF PEDESTRIAN FLOW.

   IN ADDITION, SECTION 228 OF THE 1973 FEDERAL AID HIGHWAY SAFETY ACT REQUIRES PROVISION OF CURB RAMPS ON ANY CURB CONSTRUCTION AFTER JULY 1,1976 WHETHER A SIDEWALK IS PROPOSED INITIALLY OR IS PLANNED FOR A FUTURE DATE.

   THE AMERICANS WITH DISABILITIES ACT (ADA) OF 1990 EXTENDS TO INDIVIDUALS WITH DISABILITIES. COMPREHENSIVE CIVIL RIGHTS PROTECTIONS SIMILIAR TO THOSE PROVIDED TO PERSONS ON THE BASIS OF RACE, SEX, NATIONAL ORIGIN AND RELIGION UNDER THE CIVIL RIGHTS ACT OF 1964. THESE CURB RAMPS HAVE BEEN DESIGNED TO COMPLY WITH THE CURRENT ADA STANDARDS.
4. PROVIDE WHEELCHAIR RAMPS AT LOCATIONS AS SHOWN ON THE PLANS OR AS DIRECTED BY THE ENGINEER. LOCATE WHEELCHAIR RAMPS AS DIRECTED BY THE ENGINEER WHERE EXISTING LIGHT POLES, FIRE HYDRANTS, DROP INLETS, ETC. AFFECT PLACEMENT. WHERE TWO RAMPS ARE INSTALLED PLACE NOT LESS THAN 2 FEET OF FULL HEIGHT CURB BETWEEN THE RAMPS. PLACE DUAL RAMPS AS NEAR PERPENDICULAR TO THE TRAVEL LANE BEING CROSSED AS POSSIBLE.
5. DO NOT EXCEED 0.08 (12:1) SLOPE ON THE WHEELCHAIR RAMP IN RELATIONSHIP TO THE GRADE OF THE STREET.
6. CONSTRUCT WHEELCHAIR RAMPS 40" (3'-4") OR GREATER FOR DUAL RAMPS.
7. USE CLASS "B" CONCRETE WITH A SIDEWALK FINISH IN ORDER TO OBTAIN A ROUGH NON-SKID TYPE SURFACE.
8. PLACE A ½" EXPANSION JOINT WHERE THE CONCRETE WHEELCHAIR RAMP JOINS THE CURB AND AS SHOWN ON STD. DWG. 848.01.
9. PLACE THE INSIDE PEDESTRIAN CROSSWALK LINES NO CLOSER IN THE INTERSECTION BY BISECTING THE INTERSECTION RADII, WITH ALLOWANCE OF A 4' CLEAR ZONE IN THE VEHICULAR TRAVELWAY WHEN ONE RAMP IS INSTALLED. (SEE NOTE 17)
10. COORDINATE THE CURB CUT AND THE PEDESTRIAN CROSSWALK LINES SO THE FLOOR OF THE WHEELCHAIR RAMP WILL FALL WITHIN THE PEDESTRIAN CROSSWALK LINES. PLACE DIAGONAL RAMPS WITH FLARED SIDES SO 24" OF FULL HEIGHT CURB FALLS WITHIN THE CROSSWALK MARKINGS ON EACH SIDE OF THE FLARES.
11. CONSTRUCT THE PEDESTRIAN CROSSWALK A MINIMUM OF 6 FEET. A CROSSWALK WIDTH OF 10 FEET OR GREATER IS DESIRABLE.
12. USE STOP LINES, NORMALLY PERPENDICULAR TO THE LANE LINES, WHERE IT IS IMPORTANT TO INDICATE THE POINT BEHIND WHICH VEHICLES ARE REQUIRED TO STOP IN COMPLIANCE WITH A TRAFFIC SIGNAL, STOP SIGN OR OTHER LEGAL REQUIREMENT. AN UNUSUAL APPROACH SKEW MAY REQUIRE THE PLACEMENT OF THE STOP LINE TO BE PARALLEL TO THE INTERSECTING ROADWAY.
13. TERMINATE PARKING A MINIMUM OF 20 FEET BACK OF PEDESTRIAN CROSSWALK.
14. PLACE ALL PAVEMENT MARKINGS IN ACCORDANCE WITH THE LATEST EDITION OF THE MANUAL OF UNIFORM TRAFFIC CONTROL DEVICES (MUTCD) PUBLISHED BY THE FEDERAL HIGHWAY ADMINISTRATION AND THE NORTH CAROLINA SUPPLEMENT TO THE MUTCD.

STATE OF
NORTH CAROLINA
DEPT. OF TRANSPORTATION
DIVISION OF HIGHWAYS
RALEIGH, N.C.

ENGLISH DETAIL DRAWING FOR

WHEELCHAIR RAMP

PROPOSED CURB AND GUTTER

SHEET 3 OF 3

848D05

PROJECT SERVICES UNIT
STANDARDS AND SPECIAL DESIGN
Office 919-250-4128 FAX 919-250-4119

SEE PLATE FOR TITLE

ORIGINAL BY: STD. NO. 848.05 DATE: 4-22-10
MODIFIED BY: DATE:
CHECKED BY: DATE: 4/22/10
FILE SPEC.: S:\Special Details\ericward\STDS\848d05.dgn

NORTH CAROLINA PROFESSIONAL ENGINEER SEAL 022566 JOHN L. HICKS JR.
7/21/10

PROJECT REFERENCE NO.	SHEET NO.
U-3110B	2-M1

5/14/99

PROJECT REFERENCE NO.	SHEET NO.
0-3110B	2-N

STATE OF
NORTH CAROLINA
DEPT. OF TRANSPORTATION
DIVISION OF HIGHWAYS
RALEIGH, N.C.

ENGLISH DETAIL DRAWING FOR
REINFORCED CONCRETE ENDWALL
FOR SINGLE 60" PIPE 60° OR 120° SKEW

SHEET 1 OF 1
838D29

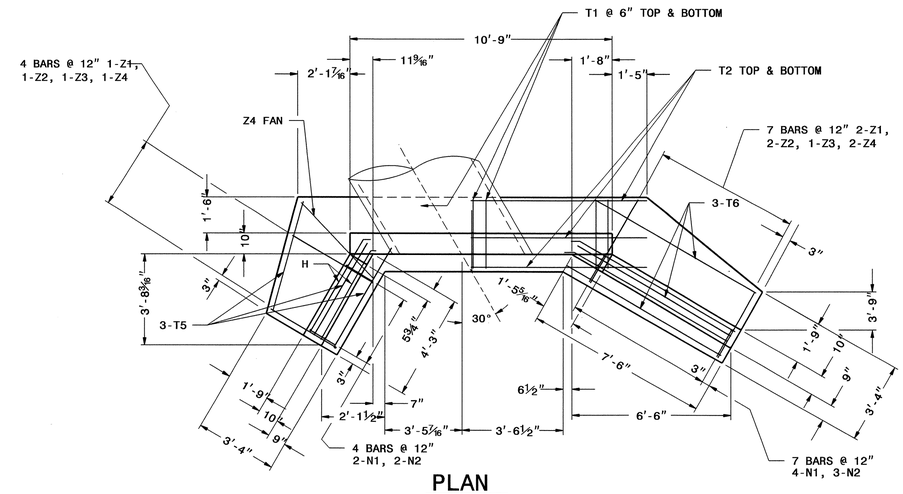

PLAN

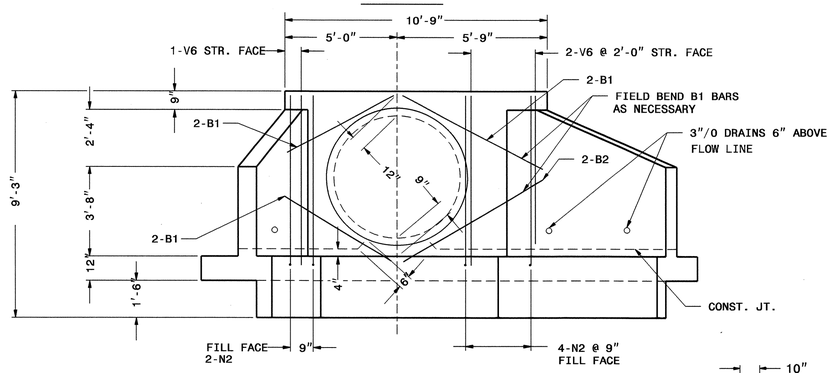

ELEVATION

"H", "N", & "Z" BAR DIMENSIONS ARE OUT TO OUT.

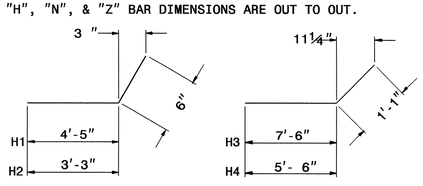

"H" BARS "H" BARS

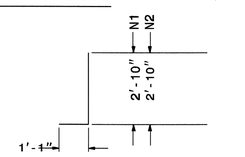

"N" BARS

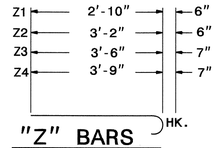

"Z" BARS

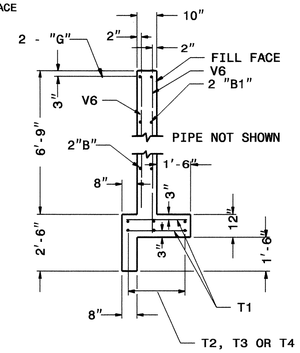

SECTION - BB

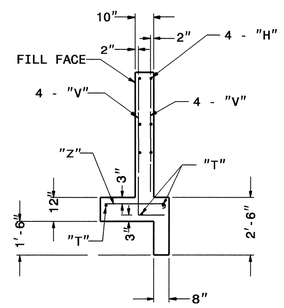

SECTION - AA

SEE STD. NO. 838.45 FOR GENERAL NOTES.

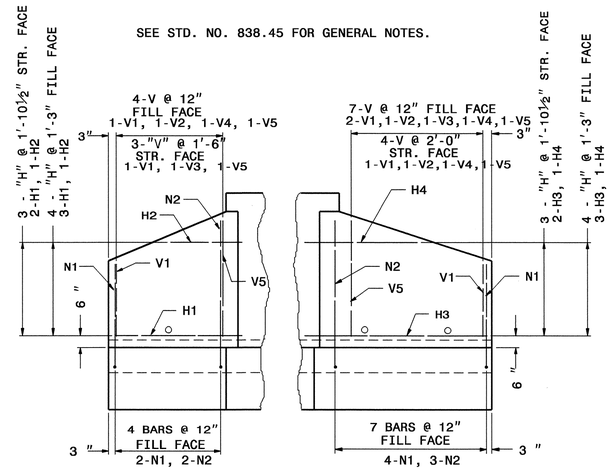

WING ELEVATION

BILL OF MATERIAL FOR ENDWALLS				
REINF. STEEL			1 - PIPES	
BAR	SIZE	LENGTH	NO.	WEIGHT
Z1	#4	3'-4"	3	7
Z2	#4	3'-7"	3	7
Z3	#5	4'-1"	2	9
Z4	#5	4'-4"	4	18
N1	#4	3'-5"	6	14
N2	#4	3'-11"	11	45
V1	#4	3'-3"	5	11
V2	#4	3'-11"	3	8
V3	#4	4'-3"	2	6
V4	#4	4'-6"	3	9
V5	#4	5'-1"	5	17
V6	#4	6'-3"	9	38
H1	#4	4'-11"	5	16
H2	#4	3'-9"	2	5
H3	#4	8'-7"	5	29
H4	#4	6'-7"	2	9
G1	#7	10'-5"	2	43
T1	#4	2'-6"	42	70
T2	#4	13'-11"	6	56
T5	#4	4'-6"	3	9
T6	#4	7'-0"	3	14
B1	#4	5'-0"	6	20
B2	#4	6'-6"	2	9
REINF. STEEL LBS.				469
CONC/C.M. CU. YDS.			6.7	
CONC/R.C. CU. YDS.			6.4	

STATE OF
NORTH CAROLINA
DEPT. OF TRANSPORTATION
DIVISION OF HIGHWAYS
RALEIGH, N.C.

ENGLISH DETAIL DRAWING FOR
REINFORCED CONCRETE ENDWALL
FOR SINGLE 60" PIPE 60° OR 120° SKEW

SHEET 1 OF 1
838D29

NORTH CAROLINA PROFESSIONAL SEAL 022966 ENGINEER JOEL B. HOWARD
8/3/10

CONTRACT STANDARDS AND DEVELOPMENT UNIT
Office 919-250-4128 FAX 919-250-4119

SEE TITLE

ORIGINAL BY: _____ DATE: _____
MODIFIED BY: _____ DATE: _____
CHECKED BY: Joel B. Howard DATE: 7/30/10
FILE SPEC.: _____

STATE OF NORTH CAROLINA
DIVISION OF HIGHWAYS
ROADWAY SUMMARY OF QUANTITIES FOR CONTRACT - C202557

ItemNumber	Sec #	Quantity	Unit	Description
0000100000-N	800	Lump Sum		MOBILIZATION
0001000000-E	200	Lump Sum		CLEARING & GRUBBING .. ACRE(S)
0008000000-E	200	1	ACR	SUPPLEMENTARY CLEARING & GRUBBING
0022000000-E	225	8,850	CY	UNCLASSIFIED EXCAVATION
0029000000-N	SP	Lump Sum		REINFORCED BRIDGE APPROACH FILL, STATION ********** (54+63.6 RT)
0029000000-N	SP	Lump Sum		REINFORCED BRIDGE APPROACH FILL, STATION ********** (54+67.22 LT)
0029000000-N	SP	Lump Sum		REINFORCED BRIDGE APPROACH FILL, STATION ********** (58+92.53 LT)
0029000000-N	SP	Lump Sum		REINFORCED BRIDGE APPROACH FILL, STATION ********** (58+93.75 RT)
0036000000-E	225	4,430	CY	UNDERCUT EXCAVATION
0038000000-E	SP	5,859	CY	SHALLOW UNDERCUT
0080000000-E	SP	20,465	TON	CLASS IV SUBGRADE STABILIZATION
0106000000-E	230	336,350	CY	BORROW EXCAVATION
0134000000-E	240	2,610	CY	DRAINAGE DITCH EXCAVATION
0156000000-E	250	3,420	SY	REMOVAL OF EXISTING ASPHALT PAVEMENT
0177000000-E	250	210	SY	BREAKING OF EXISTING ASPHALT PAVEMENT
0195000000-E	SP	4,140	CY	SELECT GRANULAR MATERIAL
0196000000-E	270	36,250	SY	FABRIC FOR SOIL STABILIZATION
0241000000-E	SP	4,580	SY	GENERIC GRADING ITEM PERMANENT TURF REINFORCEMENT MAT
0241000000-E	SP	8,180	SY	GENERIC GRADING ITEM PRIMARY GEOGRID REINFORCEMENT
0241000000-E	SP	3,880	SY	GENERIC GRADING ITEM SECONDARY GEOGRID REINFORCEMENT
0318000000-E	SP	1,273	TON	FOUNDATION CONDITIONING MATERIAL, MINOR STRS
0320000000-E	SP	2,600	SY	FOUNDATION CONDITIONING FABRIC
0973100000-E	SP	80	LF	**" WELDED STEEL PIPE, ****" THICK, GRADE ** IN SOIL (60", 0.875", B)
0973300000-E	SP	80	LF	**" WELDED STEEL PIPE, ****" THICK, GRADE ** NOT IN SOIL (60", 0.875", B)
0987000000-E	310	408	LF	GENERIC PIPE ITEM 15" CS PIPE CULVERTS, 0.064" THICK
0987000000-E	310	3,644	LF	GENERIC PIPE ITEM 15" RC PIPE CULVERTS, CLASS III
0987000000-E	310	48	LF	GENERIC PIPE ITEM 15" SIDE DRAIN PIPE
0987000000-E	310	100	LF	GENERIC PIPE ITEM 18" CS PIPE CULVERTS, 0.064" THICK
0987000000-E	310	1,088	LF	GENERIC PIPE ITEM 18" RC PIPE CULVERTS, CLASS III
0987000000-E	310	284	LF	GENERIC PIPE ITEM 18" RC PIPE CULVERTS, CLASS IV
0987000000-E	310	192	LF	GENERIC PIPE ITEM 18" SIDE DRAIN PIPE
0987000000-E	310	904	LF	GENERIC PIPE ITEM 24" RC PIPE CULVERTS, CLASS III
0987000000-E	310	864	LF	GENERIC PIPE ITEM 30" RC PIPE CULVERTS, CLASS III
0987000000-E	310	24	LF	GENERIC PIPE ITEM 36" RC PIPE CULVERTS, CLASS III
0987000000-E	310	68	LF	GENERIC PIPE ITEM 42" RC PIPE CULVERTS, CLASS III
0987000000-E	310	212	LF	GENERIC PIPE ITEM 42" RC PIPE CULVERTS, CLASS IV
0987000000-E	310	28	LF	GENERIC PIPE ITEM 60" RC PIPE CULVERTS, CLASS III
0987000000-E	310	24	LF	GENERIC PIPE ITEM 66" RC PIPE CULVERTS, CLASS III
0988000000-E	310	9	EA	GENERIC PIPE ITEM 15" CS PIPE ELBOWS, 0.064" THICK

STATE OF NORTH CAROLINA
DIVISION OF HIGHWAYS

SUMMARY OF QUANTITIES

ItemNumber	Sec #	Quantity	Unit	Description
0988000000-E	310	1	EA	GENERIC PIPE ITEM 18" CS PIPE ELBOWS, 0.064" THICK
0995000000-E	340	2,241	LF	PIPE REMOVAL
1000000000-E	462	162	SY	6" SLOPE PROTECTION
1011000000-N	500	Lump Sum		FINE GRADING
1220000000-E	545	3,500	TON	INCIDENTAL STONE BASE
1489000000-E	610	14,100	TON	ASPHALT CONC BASE COURSE, TYPE B25.0B
1498000000-E	610	12,780	TON	ASPHALT CONC INTERMEDIATE COURSE, TYPE I19.0B
1519000000-E	610	10,250	TON	ASPHALT CONC SURFACE COURSE, TYPE S9.5B
1560000000-E	620	1,825	TON	ASPHALT BINDER FOR PLANT MIX, GRADE PG 64-22
1693000000-E	654	500	TON	ASPHALT PLANT MIX, PAVEMENT REPAIR
2000000000-N	806	46	EA	RIGHT OF WAY MARKERS
2022000000-E	SP	168	CY	SUBDRAIN EXCAVATION
2033000000-E	SP	84	CY	SUBDRAIN FINE AGGREGATE
2044000000-E	SP	500	LF	6" PERFORATED SUBDRAIN PIPE
2070000000-N	SP	1	EA	SUBDRAIN PIPE OUTLETS
2077000000-E	SP	6	LF	6" OUTLET PIPE (SUBDRAINS)
2209000000-E	838	7.82	CY	ENDWALLS
2220000000-E	838	11.9	CY	REINFORCED ENDWALLS
2253000000-E	840	10.17	CY	PIPE COLLARS
2286000000-N	840	90	EA	MASONRY DRAINAGE STRUCTURES
2297000000-E	840	4.739	CY	MASONRY DRAINAGE STRUCTURES
2308000000-E	840	36.15	LF	MASONRY DRAINAGE STRUCTURES
2364000000-N	840	34	EA	FRAME WITH TWO GRATES, STD 840.16
2374000000-N	840	34	EA	FRAME WITH GRATE & HOOD, STD 840.03, TYPE ** (F)
2374000000-N	840	19	EA	FRAME WITH GRATE & HOOD, STD 840.03, TYPE ** (G)
2396000000-N	840	1	EA	FRAME WITH COVER, STD 840.54
2440000000-N	852	4	EA	CONCRETE TRANSITIONAL SECTION FOR CATCH BASIN
2451000000-N	852	17	EA	CONCRETE TRANSITIONAL SECTION FOR DROP INLETS
2542000000-E	846	6,390	LF	1'-6" CONCRETE CURB & GUTTER
2549000000-E	846	13,920	LF	2'-6" CONCRETE CURB & GUTTER
2556000000-E	846	240	LF	SHOULDER BERM GUTTER
2591000000-E	848	6,300	SY	4" CONCRETE SIDEWALK
2605000000-N	848	28	EA	CONCRETE WHEELCHAIR RAMPS
2612000000-E	848	260	SY	6" CONCRETE DRIVEWAY
2647000000-E	852	2,620	SY	5" MONOLITHIC CONCRETE ISLANDS (SURFACE MOUNTED)
2860000000-N	859	1	EA	CONVERT EXISTING CATCH BASIN TO JUNCTION BOX
3000000000-N	SP	2	EA	IMPACT ATTENUATOR UNIT, TYPE 350
3030000000-E	862	5,662.5	LF	STEEL BM GUARDRAIL
3045000000-E	862	487.5	LF	STEEL BM GUARDRAIL, SHOP CURVED
3105000000-N	862	4	EA	STEEL BM GUARDRAIL TERMINAL SECTIONS
3150000000-N	862	5	EA	ADDITIONAL GUARDRAIL POSTS
3210000000-N	862	3	EA	GUARDRAIL ANCHOR UNITS, TYPE CAT-1
3215000000-N	862	8	EA	GUARDRAIL ANCHOR UNITS, TYPE III
3270000000-N	SP	9	EA	GUARDRAIL ANCHOR UNITS, TYPE 350
3317000000-N	862	8	EA	GUARDRAIL ANCHOR UNITS, TYPE B-77
3628000000-E	876	105	TON	RIP RAP, CLASS I
3649000000-E	876	150	TON	RIP RAP, CLASS B
3656000000-E	876	3,220	SY	FILTER FABRIC FOR DRAINAGE
3659000000-N	SP	1	EA	PREFORMED SCOUR HOLES WITH LEVEL SPREADER APRON
4072000000-E	903	2,075	LF	SUPPORTS, 3-LB STEEL U-CHANNEL
4096000000-N	904	7	EA	SIGN ERECTION, TYPE D
4102000000-N	904	56	EA	SIGN ERECTION, TYPE E
4108000000-N	904	13	EA	SIGN ERECTION, TYPE F
4116100000-N	904	1	EA	SIGN ERECTION, RELOCATE, TYPE **** (GROUND MOUNTED) (E)
4155000000-N	907	54	EA	DISPOSAL OF SIGN SYSTEM, U-CHANNEL
4192000000-N	907	8	EA	DISPOSAL OF SUPPORT, U-CHANNEL
4237000000-N	907	12	EA	STOCKPILE SIGN, D, E OR F
4400000000-E	1110	1,647	SF	WORK ZONE SIGNS (STATIONARY)
4405000000-E	1110	746	SF	WORK ZONE SIGNS (PORTABLE)
4410000000-E	1110	242	SF	WORK ZONE SIGNS (BARRICADE MOUNTED)
4415000000-N	1115	2	EA	FLASHING ARROW PANELS, TYPE C
4420000000-N	1120	3	EA	CHANGEABLE MESSAGE SIGN
4422000000-N	1120	18	DAY	CHANGEABLE MESSAGE SIGN (SHORT TERM)
4430000000-N	1130	250	EA	DRUMS
4435000000-N	1135	75	EA	CONES
4445000000-E	1145	216	LF	BARRICADES (TYPE III)
4455000000-N	1150	1,250	MD	FLAGGER
4465000000-N	1160	6	EA	TEMPORARY CRASH CUSHIONS
4470000000-N	1160	2	EA	RESET TEMPORARY CRASH CUSHIONS
4480000000-N	1165	2	EA	TMIA
4495000000-E	1170	1,260	LF	PORTABLE CONCRETE BARRIER (DRAINAGE)
4506000000-E	1170	720	LF	RESET PORTABLE CONCRETE BARRIER (DRAINAGE)
4516000000-N	1180	75	EA	SKINNY DRUM

5/28/99
10-JUN-2010 09:31
R:\Roadway\Proj\U-3110B_Rdy_3_sht.dgn
$$$$USERNAME$$$$

STATE OF NORTH CAROLINA
SUMMARY OF QUANTITIES

PROJECT REFERENCE No.	SHEET No.
U-3110B	3 (2 of 2)

ItemNumber	Sec #	Quantity	Unit	Description
4600000000-N	SP	34	EA	GENERIC TRAFFIC CONTROL ITEM WARNING FLAGS
4650000000-N	1251	558	EA	TEMPORARY RAISED PAVEMENT MARKERS
4685000000-E	1205	4,402	LF	THERMOPLASTIC PAVEMENT MARKING LINES (4", 90 MILS)
4686000000-E	1205	21,905	LF	THERMOPLASTIC PAVEMENT MARKING LINES (4", 120 MILS)
4695000000-E	1205	993	LF	THERMOPLASTIC PAVEMENT MARKING LINES (8", 90 MILS)
4710000000-E	1205	431	LF	THERMOPLASTIC PAVEMENT MARKING LINES (24", 120 MILS)
4721000000-E	1205	2	EA	THERMOPLASTIC PAVEMENT MARKING CHARACTER (120 MILS)
4725000000-E	1205	50	EA	THERMOPLASTIC PAVEMENT MARKING SYMBOL (90 MILS)
4770000000-E	1205	760	LF	COLD APPLIED PLASTIC PAVEMENT MARKING LINES, TYPE ** (4") (II)
4770000000-E	1205	2,679	LF	COLD APPLIED PLASTIC PAVEMENT MARKING LINES, TYPE ** (4") (IV)
4810000000-E	1205	115,929	LF	PAINT PAVEMENT MARKING LINES (4")
4820000000-E	1205	272	LF	PAINT PAVEMENT MARKING LINES (8")
4835000000-E	1205	668	LF	PAINT PAVEMENT MARKING LINES (24")
4840000000-N	1205	16	EA	PAINT PAVEMENT MARKING CHARAC-TER
4845000000-N	1205	242	EA	PAINT PAVEMENT MARKING SYMBOL
4850000000-E	1205	12,625	LF	REMOVAL OF PAVEMENT MARKING LINES (4")
4870000000-E	1205	174	LF	REMOVAL OF PAVEMENT MARKING LINES (24")
4875000000-N	1205	14	EA	REMOVAL OF PAVEMENT MARKING SYMBOLS & CHARACTERS
4900000000-N	1251	205	EA	PERMANENT RAISED PAVEMENT MARKERS
4905000000-N	1253	260	EA	SNOWPLOWABLE PAVEMENT MARKERS
4915000000-E	1264	3	EA	7' U-CHANNEL POSTS
4955000000-N	1264	3	EA	OBJECT MARKERS (END OF ROAD)
5325200000-E	1510	6	LF	2" WATER LINE
5325600000-E	1510	4,178	LF	6" WATER LINE
5536000000-E	1515	2	EA	2" VALVE
5540000000-E	1515	7	EA	6" VALVE
5648000000-N	1515	20	EA	RELOCATE WATER METER
5672000000-N	1515	4	EA	RELOCATE FIRE HYDRANT
5882000000-N	SP	14	EA	GENERIC UTILITY ITEM ADJUST MANHOLE
6000000000-E	1605	10,000	LF	TEMPORARY SILT FENCE
6006000000-E	1610	2,225	TON	STONE FOR EROSION CONTROL, CLASS A
6009000000-E	1610	8,500	TON	STONE FOR EROSION CONTROL, CLASS B
6012000000-E	1610	6,000	TON	SEDIMENT CONTROL STONE
6015000000-E	1615	40	ACR	TEMPORARY MULCHING
6018000000-E	1620	700	LB	SEED FOR TEMPORARY SEEDING
6021000000-E	1620	4.75	TON	FERTILIZER FOR TEMPORARY SEED-ING
6024000000-E	1622	5,000	LF	TEMPORARY SLOPE DRAINS
6027000000-N	1622	100	EA	INLET PROTECTION AT TEMPORARY SLOPE DRAINS
6029000000-E	SP	460	LF	SAFETY FENCE
6030000000-E	1630	13,000	CY	SILT EXCAVATION
6036000000-E	1631	31,000	SY	MATTING FOR EROSION CONTROL
6037000000-E	SP	100	SY	COIR FIBER MAT
6038000000-E	SP	950	SY	PERMANENT SOIL REINFORCEMENT MAT
6042000000-E	1632	9,200	LF	1/4" HARDWARE CLOTH
6070000000-N	SP	4	EA	SPECIAL STILLING BASINS
6071010000-E	SP	2,250	LF	WATTLE
6071020000-E	SP	850	LB	POLYACRYLAMIDE (PAM)

ItemNumber	Sec #	Quantity	Unit	Description
6071030000-E	SP	4,000	LF	COIR FIBER BAFFLES
6071050000-E	SP	4	EA	**" SKIMMER (1-1/2")
6084000000-E	1660	70	ACR	SEEDING & MULCHING
6087000000-E	1660	66	ACR	MOWING
6090000000-E	1661	300	LB	SEED FOR REPAIR SEEDING
6093000000-E	1661	2.25	TON	FERTILIZER FOR REPAIR SEEDING
6096000000-E	1662	1,275	LB	SEED FOR SUPPLEMENTAL SEEDING
6108000000-E	1665	38.25	TON	FERTILIZER TOPDRESSING
6114500000-N	SP	25	MHR	SPECIALIZED HAND MOWING
6117000000-N	SP	36	EA	RESPONSE FOR EROSION CONTROL
6123000000-E	1670	0.5	ACR	REFORESTATION
7000000000-E	1705	8	EA	PEDESTRIAN SIGNAL HEAD (**", ** SECTION) (16", 1 SECTION W/ COUNTDOWN)
7060000000-E	1705	4,130	LF	SIGNAL CABLE
7120000000-E	1705	15	EA	VEHICLE SIGNAL HEAD (12", 3 SECTION)
7132000000-E	1705	3	EA	VEHICLE SIGNAL HEAD (12", 4 SECTION)
7144000000-E	1705	2	EA	VEHICLE SIGNAL HEAD (12", 5 SECTION)
7264000000-E	1710	730	LF	MESSENGER CABLE (3/8")
7288000000-E	1715	260	LF	PAVED TRENCHING (**********) (1, 2")
7300000000-E	1715	340	LF	UNPAVED TRENCHING (**********) (1, 2")
7301000000-E	1715	260	LF	DIRECTIONAL DRILL (**********) (1, 2")
7324000000-N	1716	5	EA	JUNCTION BOX (STANDARD SIZE)
7360000000-N	1720	8	EA	WOOD POLE
7372000000-N	1721	14	EA	GUY ASSEMBLY
7396000000-E	1722	2	EA	1/2" RISER WITH WEATHERHEAD
7408000000-E	1722	4	EA	1" RISER WITH WEATHERHEAD

ItemNumber	Sec #	Quantity	Unit	Description
7420000000-E	1722	3	EA	2" RISER WITH WEATHERHEAD
7444000000-E	1725	1,650	LF	INDUCTIVE LOOP SAWCUT
7456000000-E	1726	3,630	LF	LEAD-IN CABLE (**********) (14-2)
7588000000-N	SP	2	EA	METAL POLE WITH SINGLE MAST ARM
7613000000-N	SP	2	EA	SOIL TEST
7614100000-E	SP	16	CY	DRILLED PIER FOUNDATION
7631000000-N	SP	2	EA	MAST ARM WITH METAL POLE DE-SIGN
7636000000-N	1745	1	EA	SIGN FOR SIGNALS
7684000000-N	1750	2	EA	SIGNAL CABINET FOUNDATION
7756000000-N	1751	2	EA	CONTROLLER WITH CABINET (TYPE 2070L, BASE MOUNTED)
7780000000-N	1751	13	EA	DETECTOR CARD (TYPE 2070L)
7901000000-N	1753	2	EA	CABINET BASE EXTENDER
7948000000-N	SP	3	EA	TRAFFIC SIGNAL REMOVAL
7960000000-N	SP	2	EA	METAL POLE FOUNDATION REMOVAL
7972000000-N	SP	2	EA	METAL POLE REMOVAL

COMPUTED BY:	DATE:
CHECKED BY:	DATE:

PROJECT REFERENCE NO.	SHEET NO.
U-3110B	3A

STATE OF NORTH CAROLINA
DIVISION OF HIGHWAYS

LIST OF PIPES, ENDWALLS, ETC. (FOR PIPES 48" & UNDER)

STATION	LOCATION (LT,RT, OR CL)	STRUCTURE NO.		TOP ELEVATION	INVERT ELEVATION	INVERT ELEVATION	SLOPE CRITICAL	CLASS III R.C. PIPE (UNLESS NOTED OTHERWISE)								BITUMINOUS COATED C.S. PIPE TYPE B (UNLESS NOTED OTHRWISE)													CLASS IV R.C. PIPE								15" SIDE DRAIN PIPE	18" SIDE DRAIN PIPE	24" SIDE DRAIN PIPE	ENDWALLS STD. 838.01, STD. 838.11 OR STD. 838.80 (UNLESS NOTED OTHERWISE) CU. YDS.		QUANTITIES FOR DRAINAGE STRUCTURES * TOTAL L.F. FOR PAY QUANTITY SHALL BE COL. 'A' + (1.3 X COL.'B')			C.B. STD. 840.01 OR STD. 840.02	FRAME, GRATES AND HOOD STANDARD 840.03				CONCRETE TRANSITIONAL SECTION		D.I. STD. 840.14 OR STD. 840.15	D.I. FRAME & GRATE STD. 840.16	G.D.I. TYPE "A" STD. 840.17 OR 840.26	G.D.I. TYPE "B" STD. 840.18 OR 840.27	G.D.I. TYPE "D" STD. 840.19 OR 840.28	G.D.I. FRAME WITH GRATE STD. 840.22	G.D.I. FRAME WITH TWO GRATES STD. 840.22	G.D.I. (N.S.) FRAME WITH GRATE STD. 840.24	G.D.I. (N.S.) FRAME WITH TWO GRATES STD. 840.24	CONVERT EXITS. C.B. TO J.B.						CORR. STEEL ELBOWS NO. & SIZE	CONC. COLLARS CL. "B" C.Y. STD 840.72	CONC. & BRICK PIPE PLUG, C.Y. STD. 840.71	PIPE REMOVAL LIN.FT.	REMARKS
SIZE		FROM	TO					12"	15"	18"	24"	30"	36"	42"	48"	12"	15"	18"	24"		30"		36"		42"		48"		12"	15"	18"	24"	30"	36"	42"	48"				R.C.P.	C.S.P.	PER EACH (0' THRU 5.0')	LIN. *FT. A: 5.0' THRU 10.0'	B: 10.0' AND ABOVE		TYPE OF GRATE E	F	G		CATCH BASIN	DROP INLET																				
THICKNESS OR GAUGE																.064	.064	.064	.064		.079		.079		.109		.109																																												
-L-																																																																								
11+08.31	LT	1		663.64																																						1			1		1																								
11+27.48	RT	2	3		661.25	660.40				32'																																																												18'	
11+27.52	RT	3		663.81																																						1			1			1																							
11+29.23	LT	4		662.50																																																									1										
	LT	4	5		654.95	660.00						116'																																																											
12+43.16	LT	5		665.14																																						1	5	.2	1		1																								
	LT	5	6		662.40	663.01			40'																																																														
12+43.06	RT	6		666.18																																						1									1	1	1																			
	RT	6	7		663.16	663.46			36'																																																														
12+78.42	RT	7		666.63																																						1									1	1	1																			
	LT	5	8		660.15	661.70						144'																																																										20'	
13+86.67	LT	8		666.35																																						1	1.2		1		1																								
	LT	8	9		661.85	664.58			40'																																																															
13+91.85	RT	9		667.75																																						1	.9								1	1	1																			
	LT	8	10		661.85	662.00			24'																																																															
13+91.85	LT	10		664.25																																																1	1																			
	LT	10	11		662.15	663.40			36'																																																													21'	
14+18.73	LT	11		665.65																																						1										1	1																			
15+19.77	LT	12		667.00																																						1										1	1																			
	LT	12	13		664.75	664.55			44'																																																													19'	
15+63.48	LT	13		668.50																																						1										1	1																			
	LT	13	14		664.55	664.45			20'																																																																
	LT	8	14		661.85	664.30						176'																																																											
15+63.80	LT	14		669.15																																						1	2.3		1		1																								
	MED	14	16		664.45	665.42			68'																																																																
15+63.63	RT	16		669.15																																						1			1			1																							
15+20.82	RT	15		668.64																																						1			1			1																							
	RT	15	16		665.64	665.42			44'																																																																
	LT	14	17		664.45	671.15						268'																																																										50'	
18+27.94	LT	17		675.40																																						1	5	.95	1		1																								
	LT	17	18		671.65	672.10			20'																																																																
18+28.05	LT	18		674.35																																						1										1	1																			
	MED	17	19		671.65	672.40			68'																																																																
18+27.71	RT	19		675.40																																						1			1			1																							
	LT	17	20		671.65	675.98					208'																																																											20'	
20+35.66	LT	20		679.58																																						1	2.93		1		1																								
	LT	20	21		675.83	676.50			16'																																																																
20+35.73	LT	21		678.75																																						1										1	1																			
	LT	20	22		675.98	680.84					232'																																																											42'	
22+66.12	LT	22		684.59																																						1	3.61		1		1																								
	LT	22	23		680.99	681.40			20'																																																																
22+66.20	LT	23		683.65																																						1										1	1																			
	MED	22	24		680.99	681.59			68'																																																														34'	
22+65.87	RT	24		684.59																																						1			1			1																							
	LT	22	25		680.99	684.65					204'																																																											21'	
22+69.92	LT	25		688.40																																						1	2.41		1		1																								
	LT	25	26		685.55	685.65			20'																																																																
24+70.00	LT	26		687.90																																						1										1	1																			
SHEET 1 TOTALS									564'	32'	644'	704'																														23	23.35'	1.15'	13		8	5			3	11	11																	245'	

ABBREVIATIONS

C.B.	CATCH BASIN
N.D.I.	NARROW DROP INLET
D.I.	DROP INLET
G.D.I.	GRATED DROP INLET
G.D.I. (N.S.)	GRATED DROP INLET (NARROW SLOT)
J.B.	JUNCTION BOX
M.H.	MANHOLE
T.B.D.I.	TRAFFIC BEARING DROP INLET
T.B.J.B.	TRAFFIC BEARING JUNCTION BOX

4/04/06

11-AUG-2010 12:08
R:\Roadway\Proj\u-3110b_rdy_sum.dgn
$$$$USERNAME$$$$

COMPUTED BY: ________ DATE: ________
CHECKED BY: ________ DATE: ________

STATE OF NORTH CAROLINA
DIVISION OF HIGHWAYS

PROJECT REFERENCE NO.	SHEET NO.
U-3110B	3B

LIST OF PIPES, ENDWALLS, ETC. (FOR PIPES 48" & UNDER)

ABBREVIATIONS

- C.B. CATCH BASIN
- N.D.I. NARROW DROP INLET
- D.I. DROP INLET
- G.D.I. GRATED DROP INLET
- G.D.I. (N.S.) GRATED DROP INLET (NARROW SLOT)
- J.B. JUNCTION BOX
- M.H. MANHOLE
- T.B.D.I. TRAFFIC BEARING DROP INLET
- T.B.J.B. TRAFFIC BEARING JUNCTION BOX

Other column headings (no entries on this sheet): CLASS III R.C. PIPE (UNLESS NOTED OTHERWISE) 12", 30", 36", 42", 48"; BITUMINOUS COATED C.S. PIPE TYPE B (UNLESS NOTED OTHRWISE) 12" .064, 15" .064, 18" .064, 24" .064, 30" .079, 36" .079, 42" .109, 48" .109; CLASS IV R.C. PIPE 12", 15", 18", 24", 30", 36", 42", 48"; 15" SIDE DRAIN PIPE; 18" SIDE DRAIN PIPE; 24" SIDE DRAIN PIPE; ENDWALLS STD. 838.01, STD. 838.11 OR STD. 838.80 (UNLESS NOTED OTHERWISE) CU. YDS. R.C.P., C.S.P.; G.D.I. TYPE "A" STD. 840.17 OR 840.26; G.D.I. TYPE "B" STD. 840.18 OR 840.27; G.D.I. TYPE "D" STD. 840.19 OR 840.28; G.D.I. FRAME WITH GRATE STD. 840.22; G.D.I. FRAME WITH TWO GRATES STD. 840.22; G.D.I. (N.S.) FRAME WITH GRATE STD. 840.24; G.D.I. (N.S.) FRAME WITH TWO GRATES STD. 840.24; J.B. STD. 840.31 OR 840.32; CORR. STEEL ELBOWS NO. & SIZE; CONC. COLLARS CL. "B" C.Y. STD 840.72; CONC. & BRICK PIPE PLUG, C.Y. STD. 840.71.

Column notes: QUANTITIES FOR DRAINAGE STRUCTURES (PER EACH (0' THRU 5.0'); LIN. *FT. A = 5.0' THRU 10.0'; B = 10.0' AND ABOVE). * TOTAL L.F. FOR PAY QUANTITY SHALL BE COL. 'A' + (1.3 X COL.'B'). FRAME, GRATES AND HOOD STANDARD 840.03 – TYPE OF GRATE E, F, G. CONCRETE TRANSITIONAL SECTION – CATCH BASIN, DROP INLET.

STATION	LOCATION (LT,RT, OR CL)	STRUCTURE NO. FROM	STRUCTURE NO. TO	TOP ELEVATION	INVERT ELEVATION	INVERT ELEVATION	SLOPE CRITICAL	CLASS III R.C. PIPE 15"	CLASS III R.C. PIPE 18"	CLASS III R.C. PIPE 24"	PER EACH (0' THRU 5.0')	A 5.0' THRU 10.0'	B 10.0' AND ABOVE	C.B. STD. 840.01 OR STD. 840.02	GRATE E	GRATE F	GRATE G	CATCH BASIN	DROP INLET	D.I. STD. 840.14 OR STD. 840.15	D.I. FRAME & GRATE STD. 840.16	PIPE REMOVAL LIN.FT.	REMARKS
-L-																							
	LT	25	27		685.55	687.18		64'															
25+18.60	RT	27		690.35							1								1	1	1		
	RT	27	28		687.33	688.37		56'															
25+73.86	RT	28		691.54							1								1	1	1		
	LT	25	30		684.80	686.92				148'												20'	
26+17.75	LT	29		688.75							1									1	1		
	LT	29	30		687.50	687.07		20'															
26+16.79	LT	30		690.67							1			1		1							
	LT	30	34		687.07	688.92				112'												20'	
27+81.59	LT	31		693.00							1	1.07								1	1		
	LT	31	32		690.75	689.40		52'														23'	
27+28.02	LT	32		691.50							1									1	1		
	LT	32	34		689.25	689.07		20'															
	LT	33	34		691.80	689.07		52'															
27+53.24	RT	33		694.97							1			1		1		1					
27+28.30	LT	34		692.67							1			1		1							
	LT	34	36		689.07	692.10			184'													25'	
29+15.10	LT	36		696.66							1	2.59		1		1							
	LT	35	36		693.00	692.50		20'															
29+15.10	LT	35		695.25							1									1	1		
	LT	36	40		692.25	693.20			96'													20'	
30+73.05	LT	37		698.00							1	1.25								1	1		
	LT	37	38		695.75	695.50		64'															
30+10.19	LT	38		697.90							1									1	1		
	LT	38	40		695.35	693.60		20'															
30+10.19	LT	40		698.18							1			1		1							
	MED	40	39		693.60	695.41		68'															
30+10.19	RT	39		698.41							1			1			1						
	LT	40	42		693.35	695.20			260'													63'	
32+70.79	RT	41		699.69							1	1.34		1			1						
	MED	41	42		696.52	695.35		68'														33'	
32+70.79	LT	42		699.75							1			1		1							
	LT	42	44		695.35	697.29		256'														21'	
35+26.43	LT	44		700.29							1			1		1							
	LT	43	44		698.00	697.44		40'														21'	
35+26.43	RT	43		702.17							1								1	1	1		
34+54.42	RT	43A		701.70							1								1	1	1		
	RT	43A	43		698.53	698.15		72'															
	LT	44	46		697.44	698.49		168'														24'	
37+00.00	LT	46		701.49							1			1		1							
	MED	45	46		699.86	698.64		40'															
37+00.00	RT	45		703.03							1								1	1	1	22'	
	LT	46	47		698.64	699.41		180'															
38+86.02	LT	47		702.41							1			1		1							
	MED	47	48		699.56	700.78		28'															
38+85.24	RT	48		703.95							1								1	1	1	22'	
40+77.91	RT	49		704.90							1								1	1	1	30'	REMOVE EXISTING DI
	LT	49	51		699.30	698.95			28'													47'	
SHEET 2 TOTALS								1,288	568'	260'	24	6.25		11		9	2	1	7	13	13	391'	

4/04/06
11-AUG-2010 12:09
R:\Roadway\Proj\u-3110b_rdy_sum.dgn
$$$$USERNAME$$$$

COMPUTED BY: ________________ DATE: ________________
CHECKED BY: ________________ DATE: ________________

PROJECT REFERENCE NO.	SHEET NO.
U-3110B	3C

STATE OF NORTH CAROLINA
DIVISION OF HIGHWAYS

LIST OF PIPES, ENDWALLS, ETC. (FOR PIPES 48" & UNDER)

STATION / SIZE / THICKNESS OR GAUGE / -L-	LOCATION (LT,RT, OR CL)	STRUCTURE NO. FROM	STRUCTURE NO. TO	TOP ELEVATION	INVERT ELEVATION	INVERT ELEVATION	SLOPE CRITICAL	CLASS III R.C. PIPE (UNLESS NOTED OTHERWISE) 12"	15"	18"	24"	30"	36"	42"	48"	BITUMINOUS COATED C.S. PIPE TYPE B (UNLESS NOTED OTHRWISE) 12" .064	15" .064	18" .064	24" .064	30" .079	36" .079	42" .109	48" .109	CLASS IV R.C. PIPE 12"	15"	18"	24"	30"	36"	42"	48"	15" SIDE DRAIN PIPE	18" SIDE DRAIN PIPE	24" SIDE DRAIN PIPE	ENDWALLS STD. 838.01, STD. 838.11 OR STD. 838.80 (UNLESS NOTED OTHERWISE) CU. YDS. R.C.P.	C.S.P.	QUANTITIES FOR DRAINAGE STRUCTURES PER EACH (0' THRU 5.0')	* TOTAL L.F. FOR PAY QUANTITY SHALL BE COL. 'A' + (1.3 X COL.'B') LIN. *FT. A 5.0' THRU 10.0'	B 10.0' AND ABOVE	C.B. STD. 840.01 OR STD. 840.02	FRAME, GRATES AND HOOD STANDARD 840.03 TYPE OF GRATE E	F	G	CONCRETE TRANSITIONAL SECTION CATCH BASIN	DROP INLET	D.I. STD. 840.14 OR STD. 840.15	D.I. FRAME & GRATE STD. 840.16	G.D.I. TYPE "A" STD. 840.17 OR 840.26	G.D.I. TYPE "B" STD. 840.18 OR 840.27	G.D.I. TYPE "D" STD. 840.19 OR 840.28	G.D.I. FRAME WITH GRATE STD. 840.22	G.D.I. FRAME WITH TWO GRATES STD. 840.22	G.D.I. (N.S.) FRAME WITH GRATE STD. 840.24	G.D.I. (N.S.) FRAME WITH TWO GRATES STD. 840.24	J.B. STD. 840.31 OR 840.32	T.B.J.B. STD. 840.34	M.H. FRAME & COVER STD. 840.54	CORR. STEEL ELBOWS NO. & SIZE	CONC. COLLARS CL. "B" C.Y. STD 840.72	PIPE REMOVAL LIN.FT.	REMARKS
	RT	49	55		699.30	700.05				88'																																																		89'	
40+76.00	LT	50		703.01																																	1			1		1																			
40+71.55	LT	51			698.95	698.82				20'																																																		28'	
	LT	50	52		698.95	699.65			92'																																																				
41+65.83	LT	52		704.25																																	1	.3		1		1																			
	LT	52	53		699.80	700.00			36'																																																			77'	
41+97.14	LT	53		704.30																																	1			1		1																			
	LT	53	54		700.15	700.25			24'																																																				
42+15.12	LT	54		702.50																																	1									1	1																
41+63.70	MED	55	55a	704.95	Exist.	700.05				8'																																																			
	MED	55																																			1																			1	1		.4465		
	MED	55	59		700.05	701.00			140'																																																		55'	
41+00.13	RT	56		703.00																																	1									1	1																
	RT	56	57		700.75	700.47			72'																																																	.4465		
41+64.27	RT	57		704.25																																	1			1		1																			
	RT	57	58		700.47	701.90			56'																																																				
42+17.13	RT	58		704.15																																	1									1	1																
43+01.46	LT	59		705.82																																	1								1	1	1																
	LT	59	60		701.00	701.25			36'																																																				
43+34.03	LT	60		706.10																																	1	.1							1	1	1															84'	
	MED	59	61		701.00	702.93			44'																																																				
43+01.27	RT	61		704.99																																	1			1			1																		
	RT	61	62		701.40	701.88			88'																																																				.786
43+88.86	RT	62		704.88																																	1			1			1																		
44+48.84	LT	63		706.78																																	1								1	1	1																
44+48.84	LT	64			703.61	703.00			60'																																																				
-Y2- 13+95.75	MED	65																															192'																												
-Y2- 10+91.69	MED	66	121		707.60	697.70				128'																																																		24'	
48+85.48	RT	67			713.65	697.70											72'																																									1@15"			Rod & Lug Connectors
48+70.00	RT	68		716.65																																	1			1			1																		
	RT	68	69		713.80	714.23			32'																																																				
48+55.94	RT	69	68	717.40																																	1								1	1	1																
-Y1- 11+07.09	MED	70			697.50	692.25																				284'																																		58'	
49+84.75	MED	71			696.50	692.00																									212'					3.91																											
50+48.73	RT	72		728.24																																	1								1	1	1																
	RT	72	73		725.07	722.63			28'																																																				
50+48.36	RT	73		725.48																																	1			1			1																		
50+43.48	RT	73	74		722.48	696.80											84'																																									2@15"			Rod & Lug Connectors
-Y1- 14+90.07	MED	75			691.00	689.00								68'																						3.91																										52'	
53+00.00	LT	76		735.83																																	1			1		1																			
	MED	76	77		732.83	732.15			68'																																																				
53+00.00	RT	77		735.81																																	1			1			1																2@15"			
53+00.00	RT	77	78		732.00	700.00											96'																																												
57+88.00	LT	80	79		729.50	692.00											96'																																									2@15"			
53+88.00	LT	80		733.32																																	1			1			1																		
	MED	80	81		729.65	730.32			68'																																																				
57+88.76	RT	81		733.32																																	1			1		1																			
58+60.00	MED	82			699.75	694.00				176'																																																			
-Y3- 23+28.76	LT	83																														48'																													
SHEET 3 TOTALS									844'	420'				68'			348'									284'					212'		48'	192'		7.82		21	.4		12		6	6		5	8	8										1	1	7@15"	.8930	467	

ABBREVIATIONS

- C.B. CATCH BASIN
- N.D.I. NARROW DROP INLET
- D.I. DROP INLET
- G.D.I. GRATED DROP INLET
- G.D.I. (N.S.) GRATED DROP INLET (NARROW SLOT)
- J.B. JUNCTION BOX
- M.H. MANHOLE
- T.B.D.I. TRAFFIC BEARING DROP INLET
- T.B.J.B. TRAFFIC BEARING JUNCTION BOX

4/04/06

11-AUG-2010 12:09
R:\Roadway\Proj\u-3110b_rdy_sum.dgn
$$$$USERNAME$$$$

4/04/06

COMPUTED BY: ________ DATE: ________
CHECKED BY: ________ DATE: ________

STATE OF NORTH CAROLINA
DIVISION OF HIGHWAYS

PROJECT REFERENCE NO.	SHEET NO.
U-3110B	3D

LIST OF PIPES, ENDWALLS, ETC. (FOR PIPES 48" & UNDER)

STATION	LOCATION (LT,RT, OR CL)	STRUCTURE NO. FROM	STRUCTURE NO. TO	TOP ELEVATION	INVERT ELEVATION	INVERT ELEVATION	SLOPE CRITICAL	CLASS III R.C. PIPE (UNLESS NOTED OTHERWISE) 12"	15"	18"	24"	30"	36"	42"	48"
-L-															
59+64.60	RT	84			697.50	695.35				28'					
59+71.06	RT	85		699.10											
59+39.14	LT	86			Exist.	692.25				12'					
63+39.53	LT	87		714.14											
	MED	87	88		711.14	710.65			68'						
63+39.53	RT	88		714.14											
63+39.53	RT	89			710.50	697.20									
67+15.82	LT	90		701.65											
	MED	90	91		698.65	697.75			80'						
67+15.82	RT	91		701.41											
67+15.82	RT	91	92		694.70	689.50			56'						
69+34.74	LT	93		694.11											
69+34.74	MED	93	94		691.11	690.15			80'						
69+34.74	RT	94		693.87											
69+34.74	RT	94	95		690.00	686.00			40'						
-RAMPA- 11+02.90	MED	96	97		685.00	675.00						160'			
-RAMPA- 11+02.90	LT	97		679.00											
-RAMPA- 11+02.90	LT	97	98		673.00	673.00							24'		
70+96.39	LT	99		689.00											
70+96.39	LT	99	100		686.00	683.90			40'						
74+49.50	LT	101		677.50											
	MED	101	102		674.33	672.93			40'						
74+52.13	RT	102		675.78											
74+51.94	RT	102	103		672.78	670.00			36'						
79+00.00	LT	104		663.89											
	LT	104	105		660.89	659.83			52'						
79+49.66	LT	105		662.66											
	MED	105	106		659.66	657.50			44'						
79+49.66	RT	106		660.83											
79+49.66	RT	106	107		653.00	648.50			48'						
79+77.24	LT	108			658.50	647.00									
80+90.24	LT	113		660.13											
	LT	113	114		657.13	656.00			48'						
81+38.27	LT	114		659.50											
	MED	114	115		655.85	653.15			40'						
81+38.27	RT	115		658.21											
79+51.03	LT	105	113						140'						
83+00.00	LT	117		658.17											
	LT	117	118		655.17	652.80			80'						
83+74.88	LT	118		657.65											
83+00.00	RT	119		658.17											
	RT	119	120		655.17	653.98			56'						
83+53.59	RT	120		658.20											
-Y2- 10+97.50	RT	121			712.51	706.05									
-Y2- 10+97.50	RT	121	121a							28'					
SHEET 4 TOTALS									948'	68'		160'	24'		
PROJECT TOTALS									3644'	1088'	904'	864'	24'	68'	

STATION	LOC.	FROM	TO	BITUMINOUS COATED C.S. PIPE TYPE B (UNLESS NOTED OTHRWISE) 12"	15" .064	18" .064	24" .064	30" .079	36" .079	42" .109	48" .109	CLASS IV R.C. PIPE 12"	15"	18"	24"	30"	36"	42"	48"	15" SIDE DRAIN PIPE	18" SIDE DRAIN PIPE	24" SIDE DRAIN PIPE	ENDWALLS STD. 838.01, STD. 838.11 OR STD. 838.80 (UNLESS NOTED OTHERWISE) CU. YDS. R.C.P.	C.S.P.
63+39.53	RT	89			60'																			
79+77.24	LT	108				100'																		
SHEET 4 TOTALS					60'	100'																		
PROJECT TOTALS					408'	100'								284'				212'		48'	192'		7.82	

STATION	LOC.	FROM	TO	QUANTITIES FOR DRAINAGE STRUCTURES PER EACH (0' THRU 5.0')	* TOTAL L.F. FOR PAY QUANTITY SHALL BE COL. 'A' + (1.3 X COL.'B') LIN. *FT. A 5.0' THRU 10.0'	B 10.0' AND ABOVE	C.B. STD. 840.01 OR STD. 840.02	FRAME, GRATES AND HOOD STANDARD 840.03 TYPE OF GRATE E	F	G	CONCRETE TRANSITIONAL SECTION CATCH BASIN	DROP INLET	D.I. STD. 840.14 OR STD. 840.15	D.I. FRAME & GRATE STD. 840.16	G.D.I. TYPE "A" STD. 840.17 OR 840.26	G.D.I. TYPE "B" STD. 840.18 OR 840.27	G.D.I. TYPE "D" STD. 840.19 OR 840.28	G.D.I. FRAME WITH GRATE STD. 840.22	G.D.I. FRAME WITH TWO GRATES STD. 840.22	G.D.I. (N.S.) FRAME WITH GRATE STD. 840.24	G.D.I. (N.S.) FRAME WITH TWO GRATES STD. 840.24	J.B. STD. 840.31 OR 840.32	T.B.J.B. STD. 840.34	M.H. FRAME & COVER STD. 840.54	CONVERT EXITS. C.B. TO J.B.	CORR. STEEL ELBOWS NO. & SIZE	CONC. COLLARS CL. "B" C.Y. STD 840.72	CONC. & BRICK PIPE PLUG, C.Y. STD. 840.71	PIPE REMOVAL LIN.FT.	REMARKS
59+71.06	RT	85		1																		1									
59+39.14	LT	86																									.4465			
63+39.53	LT	87		1			1			1																				
63+39.53	RT	88		1			1		1																					
63+39.53	RT	89																								2@15"				Rod & Lug Connectors
67+15.82	LT	90		1			1			1																				
	MED	90	91																										112'	
67+15.82	RT	91		1			1		1																					
67+15.82	RT	91	92																										588'	
69+34.74	LT	93		1			1			1																				
69+34.74	RT	94		1			1		1																					
-RAMPA- 11+02.90	LT	97		1	1.0																	1								
-RAMPA- 11+02.90	LT	97	98																										79'	
70+96.39	LT	99		1			1			1																				
70+96.39	LT	99	100																										175'	
74+49.50	LT	101		1			1		1		1																			
74+52.13	RT	102		1			1		1																					
79+00.00	LT	104		1			1		1		1																			
79+49.66	LT	105		1			1		1		1																			
79+49.66	RT	106		1			1		1																					
79+49.66	RT	106	107																										58'	
79+77.24	LT	108																								1@18"			65'	
80+90.24	LT	113		1								1	1	1																
81+38.27	LT	114		1								1	1	1																
81+38.27	RT	115		1			1		1																				24'	
79+51.03	LT	105	113																										37'	
83+00.00	LT	117		1			1			1																				
83+74.88	LT	118		1			1			1																				
83+00.00	RT	119		1			1		1																					
83+53.59	RT	120		1			1		1																					
-Y2- 10+97.50	RT	121		1			1		1																					
SHEET 4 TOTALS				22	1.0		17		12	6	3	2	2	2								2				2@15" 1@18"			1,138'	
PROJECT TOTALS				90	31	1.15	53		34	19	4	17	34	34								2	1	1	1	9@15" 1@18"	1.3395		2,241'	

ABBREVIATIONS

C.B.	CATCH BASIN
N.D.I.	NARROW DROP INLET
D.I.	DROP INLET
G.D.I.	GRATED DROP INLET
G.D.I. (N.S.)	GRATED DROP INLET (NARROW SLOT)
J.B.	JUNCTION BOX
M.H.	MANHOLE
T.B.D.I.	TRAFFIC BEARING DROP INLET
T.B.J.B.	TRAFFIC BEARING JUNCTION BOX

11-AUG-2010 12:10
R:\Roadway\Proj\u-3110b_rdy_sum.dgn
$$$$USERNAME$$$$

COMPUTED BY: _____ DATE: _____
CHECKED BY: _____ DATE: _____

PROJECT REFERENCE NO.	SHEET NO.
U-3110B	3E

STATE OF NORTH CAROLINA
DIVISION OF HIGHWAYS

LIST OF PIPES, ENDWALLS, ETC. (FOR PIPES 54" & OVER)

STATION	LOCATION (LT,RT, OR CL)	STRUCTURE NO. FROM	STRUCTURE NO. TO	TOP ELEVATION	INVERT ELEVATION	INVERT ELEVATION	SLOPE CRITICAL	CLASS III R.C. PIPE (UNLESS NOTED OTHERWISE) 54"	60"	66"	72"	78"	84"			BITUMINOUS COATED C.S. PIPE TYPE B 54" .109	54" .138	54" .168	54" SHOP ELON-GATED .138	54" SHOP ELON-GATED .168	60" .138	60" .168	66" .138	66" .168	72" .138	72" .168			WELDED STEEL PIPE 60" 12	60" 10		66" 12	66" 10		72" 12	72" 10					REINFORCED ENDWALLS WITH R.C. - C.Y.	WITH C.S. - C.Y.	MASONARY DRAINAGE STRUCTURES CUBIC YARDS	C.B. STD. 840.01 OR STD. 840.02	FRAME, GRATES AND HOOD STANDARD 840.03 TYPE OF GRATE E	F	G		CONCRETE TRANSITIONAL SECTION CATCH BASIN	DROP INLET	60" WELDED STEEL PIPE					J.B. STD. 840.31 OR 840.32	REINF. CONC. FLARED END SECTIONS NO. & SIZE	CORR. STEEL FLARED END SECTIONS NO. & SIZE	REINF. CONC. ELBOWS NO. & SIZE	CORR. STEEL ELBOWS NO. & SIZE	CONC. COLLARS CL. "B" C.Y. STD 840.72		REMARKS
SIZE / THICKNESS OR GAUGE																																																													
-L-																																																													
75+95.71	RT	109			644.20	644.13																																					4.739														1							
79+97.22	RT	109	110							8'																																6.30																		3.13		
80+68.28	MED	111			647.00	645.00			28'																																		5.60												160'						2.85		
80+93.30	LT	112			643.50	643.40				16'																																																			2.85		
SHEET 5 TOTALS								28'	24'																																	6.30	5.60	4.739												160'				1					8.83		

ABBREVIATIONS

C.B.	CATCH BASIN
N.D.I.	NARROW DROP INLET
D.I.	DROP INLET
G.D.I.	GRATED DROP INLET
G.D.I. (N.S.)	GRATED DROP INLET (NARROW SLOT)
J.B.	JUNCTION BOX
M.H.	MANHOLE
T.B.D.I.	TRAFFIC BEARING DROP INLET
T.B.J.B.	TRAFFIC BEARING JUNCTION BOX

6/21/00
23-JUL-2010 15:13
R:\Roadway\Proj\u-3110b_rdy_sum.dgn
$$$$USERNAME$$$$

RD248605

COMPUTED BY: BWJ DATE: 7/21/2020
CHECKED BY: DATE:

DIVISION OF HIGHWAYS
STATE OF NORTH CAROLINA
GUARDRAIL SUMMARY

PROJECT REFERENCE NO.	SHEET NO.
U-3110B	3F

"N" = DISTANCE FROM EDGE OF LANE TO FACE OF GUARDRAIL
TOTAL SHOULDER WIDTH = DISTANCE FROM EDGE OF TRAVEL LANE TO SHOULDER BREAK POINT.
FLARE LENGTH = DISTANCE FROM LAST SECTION OF PARALLEL GUARDRAIL TO END OF GUARDRAIL
W = TOTAL WIDTH OF FLARE FROM BEGINNING OF TAPER TO END OF GUARDRAIL.

G = GATING IMPACT ATTENUATOR TYPE 350
NG = NON-GATING IMPACT ATTENUATOR TYPE 350

SURVEY LINE	BEG. STA.	END STA.	LOCATION	LENGTH			WARRANT POINT		"N" DIST. FROM E.O.L.	TOTAL SHOULDER WIDTH	FLARE LENGTH		W		ANCHORS									IMPACT ATTENUATOR TYPE 350		SINGLE FACED CONCRETE BARRIER	REMOVE EXISTING GUARDRAIL	REMOVE & STOCKPILE EXISTING GUARDRAIL	REMARKS
				STRAIGHT	SHOP CURVED	DOUBLE FACED	APPROACH END	TRAILING END			APPROACH END	TRAILING END	APPROACH END	TRAILING END	GRAU 350	TYPE III	CAT-1	TES	B-77					G	NG				
-L-	46+32.99	47+45.49	LT	112.50'				46+32.99	12'	14' BERM							1												
-Y1-	10+48.55	15+53.02	LT	375.00'	175.00'		14+78.02		8'	11'	50.00'		1		1														
-Y1-	10+39.83	14+46.29	RT	262.50'	125.00'			13+71.29	8'	11'		50.00'		1	1														Guardrail Barricade
-L-	48+42.93	53+49.18	LT	512.50'				53+49.18 BR	7.5'	14' BERM		175.00'		4.5		1													
-L-MED-	51+59.15	53+40.01	INSIDE RT	187.50'			53+40.01 BR		2'										1						1				
-L-MED-	51+60.70	53+41.95	INSIDE LT	187.50'				53+41.95 BR	2'			225.00'		4.5					1										
-Y2-	10+40.76	10+72.74	LT	50.00'	62.50'		10+22.74		8'	11'	50.00'		1		1														
-L-	48+76.52	53+32.77	RT	462.50'			53+32.77 BR		7.5'	14' BERM	175.00'		3.5			1													
-L-	48+92.64	49+42.64	RT	50.00'														2											Road Barrier END OF SERVICE ROAD
-L-	55+98.45	58+18.08	LT	225.00'			55+98.45 BR	58+18.08 BR	7.5'	14' BERM						2													
-L-MED-	55+90.95	58+20.54	INSIDE LT	250.00'			55+90.95 BR	58+20.54 BR	2'										2										
-L-MED-	55+88.95	58+21.24	INSIDE RT	250.00'			58+21.24 BR	55+88.95 BR	2'										2										
-L-	55+81.45	58+23.70	RT	250.00'			58+23.70 BR	55+81.45 BR	7.5'	14' BERM						2													
-L-	59+62.58	68+56.33	LT	900.00'			59+62.58 BR		7.5'	14' BERM	175.00'		3.5		1	1													SEE PLAN SHEETS FOR FLARES
-L-MED-	59+65.04	60+52.13	INSIDE LT	87.50'			59+65.04 BR			.	225.00'		4.5						1						1				
-L-MED-	59+65.74	60+52.13	INSIDE RT	87.50'				59+65.74 BR				225.00'		4.5					1										
-L-	59+68.20	69+36.95	RT	975.00'				59+68.20 BR	7.5'	14' BERM		175.00'	3.5	4.5		1													
-RAMPA-	10+52.75	11+65.25	RT	50.00'	62.50'			11+15.13	8'	11'		50.00'		1	1														SEE PLAN SHEETS FOR FLARES
-RAMPA-	10+40.75	14+03.25	LT	300.00'	62.50'			13+28.25	8'	11'		50.00'		1	1														
-L-	70+73.73	72+48.73	RT	175.00'				71+48.73	12'	14' BERM					1														
-L-	79+94.85	82+51.10	LT	262.50'				79+94.85	12'	14' BERM					1		1												
-L-	78+49.00	82+05.25	RT	362.50'				82+05.25	12'	14' BERM					1		1												
-Y1-	19+47.13	19+78.12	CL	50.00'														2											Road Barrier END OF -Y1-
			SUBTOTAL	6425.00'	487.50'										9	8	3	4	8						2				
	DEDUCTIONS FOR ANCHOR UNITS:																												
		9 GRAU-350 @ 50.00'		-450.00'																									
		8 TYPE III @ 18.75'		-150.00'																									
		8 B-77 @ 18.75'		-150.00'																									
		3 CAT-1 @ 6.25		-18.75'																									
			TOTAL	**5656.25'**	**487.50'**										**9**	**8**	**3**	**4**	**8**						**2**				
			SAY	**5662.50'**	**487.50'**																								
	ADDITIONAL GUARDRAIL POST = 5 EA																												

DIVISION OF HIGHWAYS
STATE OF NORTH CAROLINA

SUMMARY OF EARTHWORK

IN CUBIC YARDS

LOCATION	UNCLASSIFIED EXCAVATION	UNDERCUT	EMBT+%	BORROW	WASTE
-L- Sta. 11+00.00 RT TO -L- Sta. 41+00.00 RT	419		8,766	8,705	358
-L- Sta. 41+00.00 RT TO -L- Sta. 53+00.00 RT	8,155		48,841	48,821	1,835
-L- Sta. 56+00.00 RT TO -L- Sta. 57+50.00 RT			15,733	15,733	
-L- Sta. 60+00.00 RT TO -L- Sta. 83+50.00 RT	210		62,387	62,177	
-L- Sta. 11+00.00 LT TO -L- Sta. 41+00.00 LT	1,339		2,886	2,815	1,268
-L- Sta. 41+00.00 LT TO -L- Sta. 53+00.00 LT	16		63,877	63,868	7
-L- Sta. 56+00.00 LT TO -L- Sta. 57+50.00 LT			19,390	19,390	
-L- Sta. 60+00.00 LT TO -L- Sta. 83+50.00 LT	43		72,542	72,499	
-Y1- Sta. 11+00.00 TO -Y1- Sta. 18+00.00	524		16,895	16,641	270
-Y2- Sta. 11+00.00 TO -Y2- Sta. 14+00.00	360		1,939	1,579	
-Y3- Sta. 19+00.00 TO -Y3- Sta. 24+50.00	560		131	131	560
-RAMPA- Sta. 10+50.00 TO -RAMPA- Sta. 22+50.00	4,817	2,676	8,960	8,960	7,493
LOSS DUE TO CLEARING & GRUBBING	-1,300			+1,300	
ADDITIONAL UNDERCUT		1,750	2,100	2,100	
SELECT GRANULAR MAT. IN LIEU OF BORROW			-4,140	-4,140	
WASTE IN LIEU OF BORROW				-274	-274
PROJECT TOTAL	8,843	4,426	320,308	320,306	13,267
EST. 5% TO REPLACE TOP SOIL ON BORROW PIT				16,015	
SHALLOW UNDERCUT = 5,859 CY					
SELECT GRANULAR MATERIAL = 4,140 CY					
DDE = 2,610 CY					
CLASS IV SUB. STAB. = 20,465 TONS					
GRAND TOTAL	8,843	4,426	320,308	336,321	13,267
SAY	8,850	4,430		336,350	

NOTE: Earthwork quantities are calculated by the Roadway Design Unit. These earthwork quantities are based in part on subsurface data provided by the Geotechnical Engineering Unit.

COMPUTED BY: BWJ
CHECKED BY: BJM
DATE: June 14, 2010
DATE: June 14, 2010

PROJECT REFERENCE NO. U-3110B
SHEET NO. 3G

PROJECT REFERENCE NO.	SHEET NO.
U-3110B	3-H

STATE OF NORTH CAROLINA
DIVISION OF HIGHWAYS

SUMMARY OF QUANTITIES

PAVEMENT REMOVAL SUMMARY

SURVEY LINE	STATION	STATION	LOCATION LT/RT/CL	YD²
L	44+67.52	48+00.00	LT	581.78
L	48+16.81	52+20.21	LT	1116.00
Y1	18+50.00	23+14.53	CL	1636.47
Y3	14+03.67	15+03.69	RT	75.86
			TOTAL:	3410.11
			SAY:	3420.00

BREAKING OF EXISTING PAVEMENT

SURVEY LINE	STATION	STATION	LENGTH	WIDTH	YD²
L	49+46.00	49+71.00	25.12	65.5	182.82
Y1	48+04.00	48+15.00	10.86	22.0	26.55
				TOTAL:	209.37
				SAY:	210.00

SHOULDER BERM GUTTER SUMMARY

SURVEY LINE	STATION	STATION	LENGTH
L	52+88.00	53+18.74	30.7
L	52+85.93	53+15.13	29.2
L	56+15.69	56+44.87	29.2
L	56+12.08	56+42.86	30.8
L	57+66.87	57+96.12	29.3
L	57+67.07	57+97.33	30.3
L	59+88.95	60+19.21	30.3
L	59+90.16	60+19.90	29.7
		TOTAL:	239.4
		SAY:	240

5/28/99
29-JUL-2010 10:16
R:\Roadway\Proj\u-3110b_rdy_sum.dgn
$$$$USERNAME$$$$

PROJECT REFERENCE NO.	SHEET NO.
U-3110B	4
R/W SHEET NO.	
ROADWAY DESIGN ENGINEER	HYDRAULICS ENGINEER

NORTH CAROLINA PROFESSIONAL ENGINEER SEAL 16603 GREGORY E. BREW 7-29-10

NORTH CAROLINA PROFESSIONAL ENGINEER SEAL 18442 RICHARD LEON BOLLINGER, JR. 8-04-10

FOR -L- PROFILE SEE SHEET 12

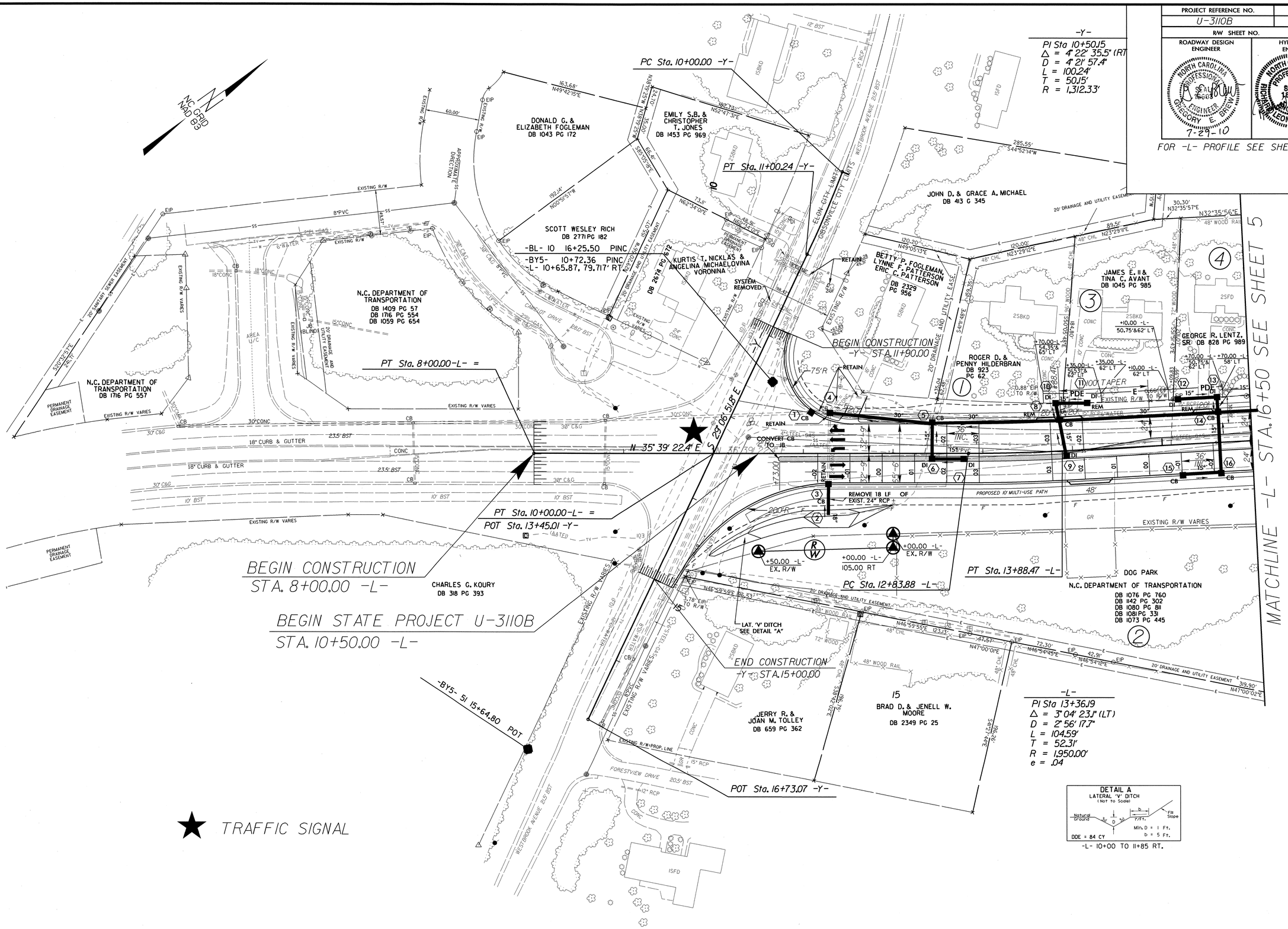

REVISIONS

8/17/99

28-JUL-2010 14:34
R:\Roadway\Proj\u-3110b_rdy_psh4r.dgn
$$$$USERNAME$$$$

PROJECT REFERENCE NO.	SHEET NO.
U-3110B	5
R/W SHEET NO.	
ROADWAY DESIGN ENGINEER	HYDRAULICS ENGINEER
NORTH CAROLINA PROFESSIONAL SEAL 18803 ENGINEER GREGORY E. BREWER 7-27-10	NORTH CAROLINA PROFESSIONAL SEAL 18442 ENGINEER RICHARD LEON BOLLINGER 8-04-10

FOR -L- PROFILE SEE SHEET 12

FOR -DRIVE1- & -DRIVE2- PROFILES SEE SHEET 16

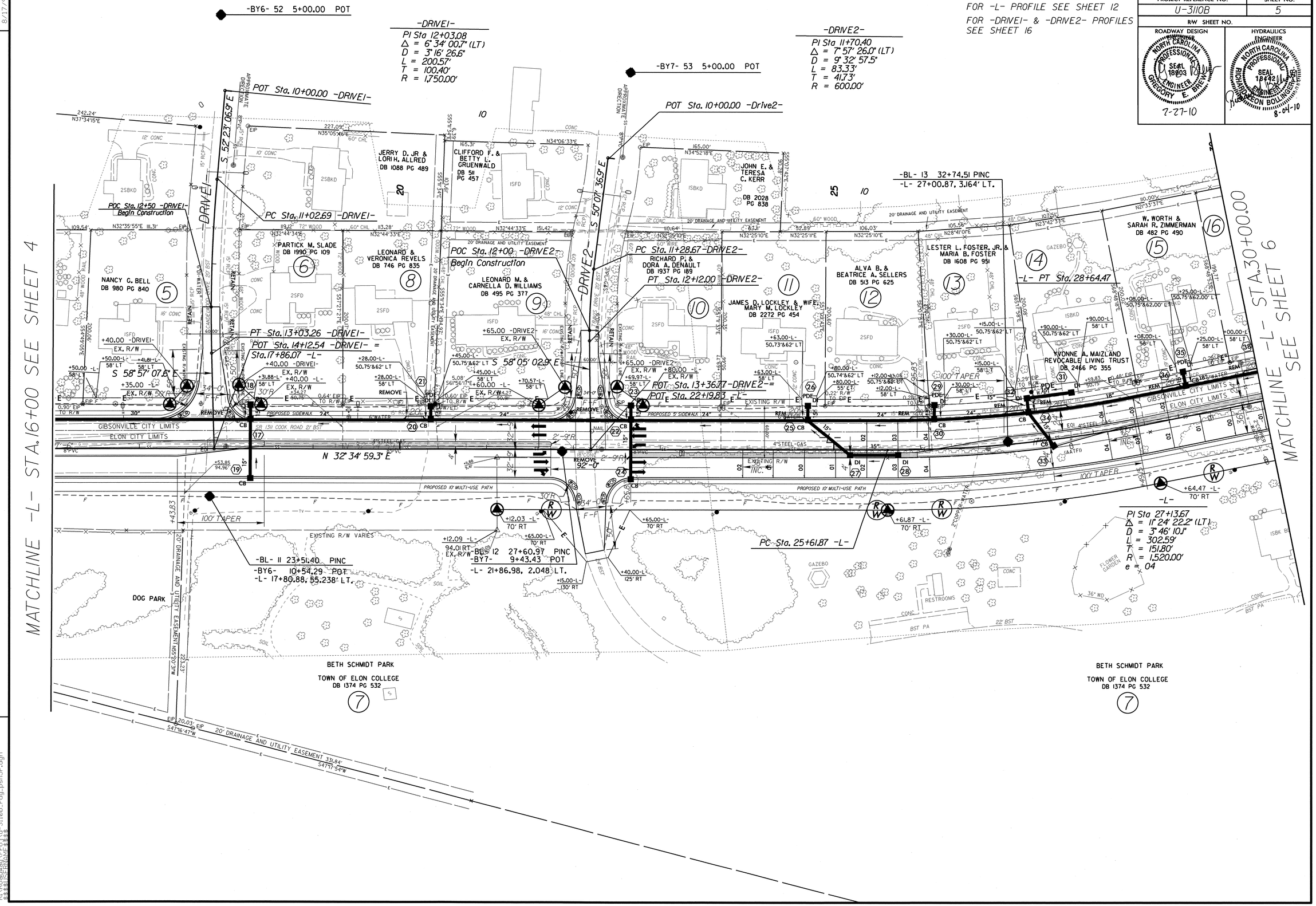

REVISIONS

8/17/99

22-JUL-2010 09:31
R:\Roadway\Proj\u-3110b_rdy_psh5r.dgn
$$$$USERNAME$$$$

PROJECT REFERENCE NO.	SHEET NO.
U-3110B	6
R/W SHEET NO.	
ROADWAY DESIGN ENGINEER	HYDRAULICS ENGINEER

NORTH CAROLINA PROFESSIONAL SEAL 19903 ENGINEER GREGORY E. BREWER 7-27-10

NORTH CAROLINA PROFESSIONAL SEAL 18442 ENGINEER RICHARD LEON BOLLINGER 8-04-10

FOR -L- PROFILE SEE SHEETS 12 & 13
FOR -DRIVE3-, -DRIVE4- & -DRIVE5-
PROFILES SEE SHEETS 16 & 17

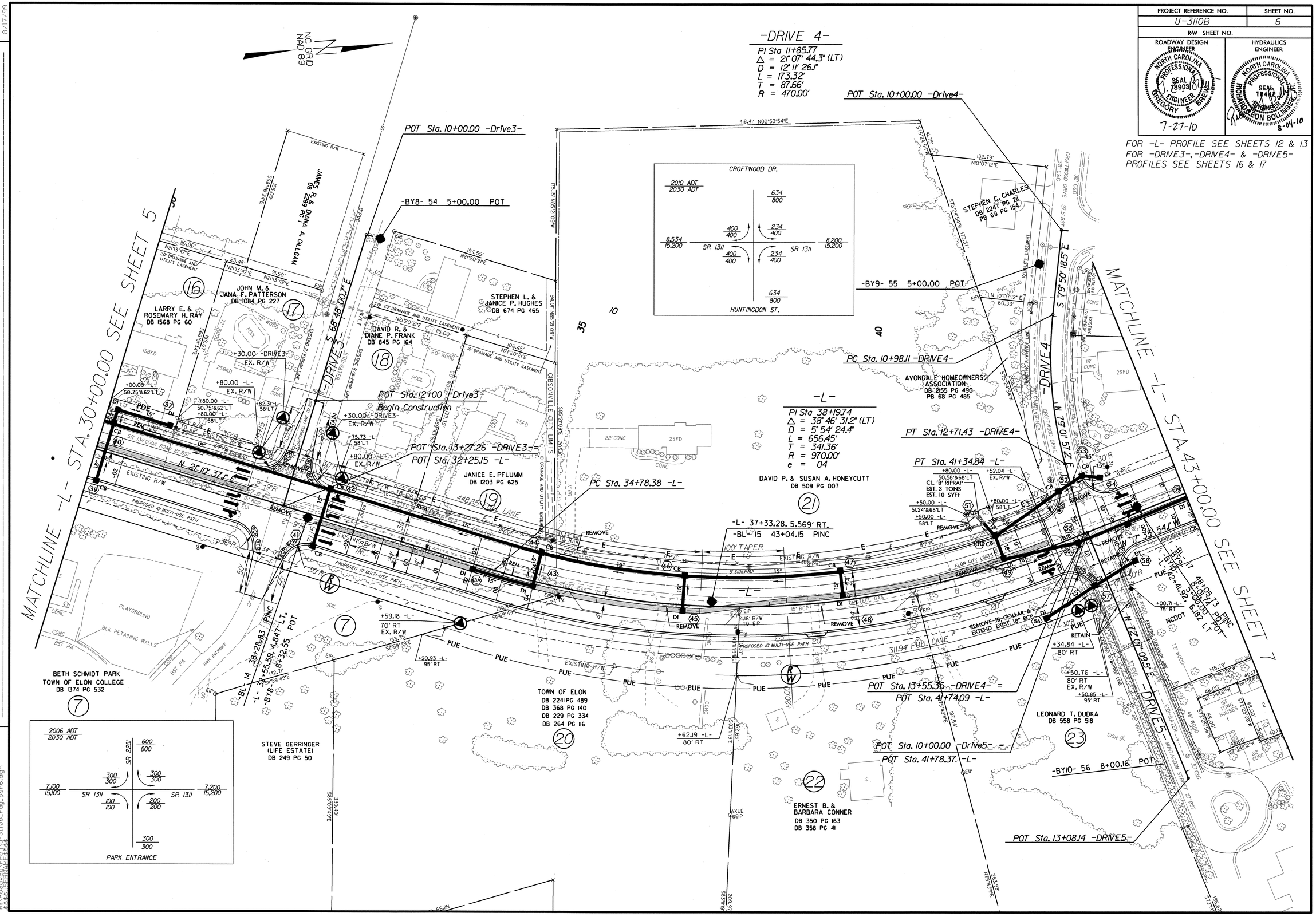

REVISIONS

8/17/99

22-JUL-2010 09:51
R:\Roadway\Proj\u-3110b_rdy_psh6.dgn
$$$$USERNAME$$$$

PROJECT REFERENCE NO.	SHEET NO.
U-3110B	7
R/W SHEET NO.	
ROADWAY DESIGN ENGINEER	HYDRAULICS ENGINEER
NORTH CAROLINA PROFESSIONAL SEAL 19008 ENGINEER GREGORY E. BREWER 8-26-10	NORTH CAROLINA PROFESSIONAL SEAL 18442 ENGINEER RICHARD KEVON BOLINGER 8-26-10

FOR -L- PROFILE SEE SHEETS 13 & 13A
FOR -Y1- & -Y2- PROFILES
SEE SHEET 15
FOR STRUCTURES SEE
STRUCTURE PLAN SHEETS S-1 THRU S-82

SEE SHEET 11 MATCHLINE -Y1- STA. 16+24.48

MATCHLINE -L- STA. 43+00.00 SEE SHEET 6

MATCHLINE -L- STA. 56+50.00 SEE SHEET 8

NC GRID NAD 83

SKETCH SHOWING BRIDGE/PAVEMENT RELATIONSHIP

TYPE III — 7'-6" — 24' — 40'-6" — 24' — 7'-6" — TYPE III

-Y1-
PI Sta 11+26.77
Δ = 79° 23' 38.5" (RT)
D = 57° 17' 44.8"
L = 138.57'
T = 83.01'
R = 100.00'

PI Sta 15+80.05
Δ = 5° 05' 39.5" (LT)
D = 5° 43' 46.5"
L = 88.91'
T = 44.49'
R = 1,000.00'

JOHN J. & RACQUEL BUSKO DB 2474 PG 358 PB 69 PG 154

ERIK B. SMITH & WIFE AMY M. SMITH

DAVID H. & JANET L. TESSMAN DB 2493 PG 224 PB 69 PG 154

TODD D. LAVINDER & DAWN D. LAVINDER DB 2433 PG 783 PB 69 PG 154

JEFFREY B. HACOOD DB 2589 PG 49 PB 69 PG 154

ROBERT D. THURMAN, JR. & ASHLEY C. THURMAN DB 2543 PG 224 PB 69 PG 154

ARCHIE B. JEFFRIES & GRACE B. JEFFRIES DB 2247 PG 998 PB 69 PG 154

BRENDA K. FOUST DB 2312 PG 876 PB 68 PG 485

DAVID W. STEWART & MELISSA M. STEWART DB 2581 PG 868 PB 68 PG 485

RUBY COOK FARLOW

SONOCO PRODUCTS COMPANY DB 387 PG 599

N.C. DEPARTMENT OF TRANSPORTATION (formerly - MARK A. COOK ET AL) (DB 1703 PG 499) (formerly - DAVID C. & DIANE J. DAY) (DB 1079 PG 681)

PIERCE HOMES OF CAROLINA, INC DB 1403 PG 234

HOPE REAL ESTATE, LLC DB 1531 PG 816

FBD, LLC DB 2666 PG 376

ELON CITY LIMITS

-Y13-
PIs Sta 15+00.48
Θs = 4° 24' 55.6"
Ls = 420.00'
LT = 280.09'
ST = 140.08'

END SBG STA. 56+44.87

PT Sta. 52+42.01 -L-
PT Sta. 52+42.01 -L- LT
PT Sta. 52+42.01 -L- RT

BEGIN BRIDGE -L- STA. 53+18.74-
BEGIN APPROACH SLAB END SBG STA. 53+18.74

BEGIN SBG STA. 52+88.00
BEGIN SBG STA. 52+85.93

END APPROACH SLAB BEGIN SBG STA. 56+15.69
END BRIDGE -L- STA. 55+91.72

END BRIDGE -L- STA. 55+88.10
END APPROACH SLAB BEGIN SBG STA. 56+12.08

END SBG STA. 56+42.86

BEGIN APPROACH SLAB -L- STA. 53+15.13-
BEGIN BRIDGE -L- STA. 53+39.10-

-L- STA. 54+69.91 = -Y13- STA. 17+53.72

PC Sta. 10+43.76-Y1-
PC Sta. 10+21.79-Y2-
PT Sta. 11+16.35-Y2-
PI Sta 10+69.64
Δ = 21° 40' 24.2" (RT)
D = 22° 55' 05.9"
L = 94.57'
T = 47.86'
R = 250.00'

PC Sta. 12+29.09-Y2-
PI Sta 48+09.51
Δ = 30° 48' 02.0" (RT)
D = 3° 28' 20.9"
L = 886.99'
T = 454.49'
R = 1,650.00'

PT Sta. 14+24.20-Y2-
POT Sta. 14+33.83-Y2-

PI Sta 13+35.20
Δ = 55° 53' 44.4" (LT)
D = 28° 38' 52.4"
L = 195.11'
T = 106.11'
R = 200.00'

POT STA. 54+69.91 -L-
-Y13- POS 17+53.72

TYPE III ST Sta. 17+80.40

-BL- 20 60+54.53 PINC
-BYII- 12+21.86 PINC
-L- 54+51.05 LT

-BYII- 3 15+04.72 POT

S 65°07'15.2" E

N 57°38'20.8" E

S 87°51'40.9" W

N 12°44'40.6" W

-L- PC Sta. 43+55.01

2010 ADT / 2030 ADT
8,200 / 15,200
SR 1311
100/100 — 217/300 — 417/500 — 634/800
8,400 / 15,400
PLANT ENTRANCE (SERVICE RD)

1-GEORGE E. & SYLVIA A. STOCKWELL DB 1579 PG 378
2-HAROLD D. & INEZ L. VERNON DB 1899 PG 313
3-BLAKE & WANDA JONES DB 1905 PG 342
4-LORRAINE W. MATKINS DB 1575 PG 905
5-PHUONG CAM TRINH DB 2656 PG 68
6-JAMES L. & DEBBIE C. WILSON DB 1883 PG 256
7-KELLY N. MONTGOMERY DB 1576 PG 341

DETAIL B
LATERAL 'V' DITCH
(Not to Scale)
Natural Ground — 3:1 — D — 3:1 — b — F/F ft. — Fill Slope
Min. D = 1 Ft.
b = 5 Ft.
DDE = 256 CY
-L- 44+50 TO 47+50 LT.
-Y1- 14+88 TO 16+00 RT.
-Y1- 13+00 TO 13+25 RT.

DETAIL C
LATERAL 'V' DITCH
(Not to Scale)
Natural Ground — 3:1 — D — 3:1 — b — F/F ft. — Fill Slope
Min. D = 1.3 Ft.
b = 5 Ft.
DDE = 360 CY
-L- 49+55 TO 53+00 RT.

DETAIL D
LATERAL BASE DITCH
(Not to Scale)
Natural Ground — 2:1 — D — 3:1 — b — F/F ft. — B — Fill Slope
Min. D = 2.5 Ft.
B = 5 Ft.
b = 4 Ft.
-L- 49+00 TO 49+55 RT.
-Y1- 13+25 TO 14+88 RT.

DETAIL E
SPECIAL CUT DITCH
(Not to Scale)
Natural Ground — 3:1 — D — Alt or Flatter — Front Ditch Slope
Min. D = 1 Ft.
-Y1- 16+00 TO 16+50 RT.

REVISIONS

8/17/99

26-AUG-2010 10:52
R:\Roadway\Proj\u-3110b_rdy_psh7.dgn
$$$$USERNAME$$$$

PROJECT REFERENCE NO.	SHEET NO.
U-3110B	8
RW SHEET NO.	
ROADWAY DESIGN ENGINEER	HYDRAULICS ENGINEER

NORTH CAROLINA PROFESSIONAL SEAL 18903 ENGINEER GREGORY E. BREE 8-25-10

NORTH CAROLINA PROFESSIONAL SEAL 18447 ENGINEER RICHARD BOLLINGER JR. 8-26-10

A GEOGRID REINFORCED SLOPE SHALL BE PLACED BETWEEN STATION 55+50.00+- (-L-) TO STATION 58+50.00+- (-L-) SEE GEOGRID REINFORCED SLOPE SPECIAL PROVISION.

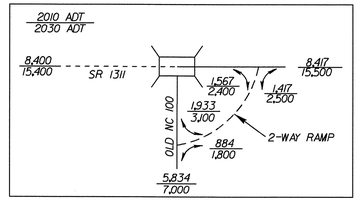

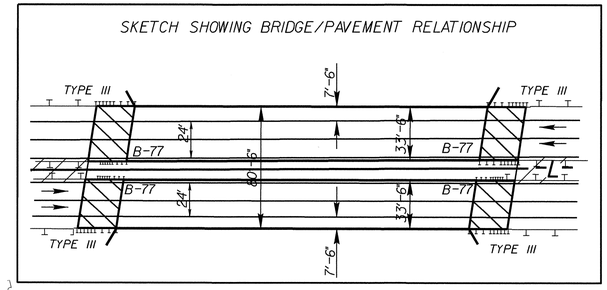

FOR -L- PROFILE SEE SHEETS 13, 13A & 14
FOR -RAMPA- PROFILE SEE SHEET 17
FOR -Y3- PROFILE SEE SHEET 15
FOR STRUCTURES SEE STRUCTURE PLAN SHEETS S-83 THRU S-146

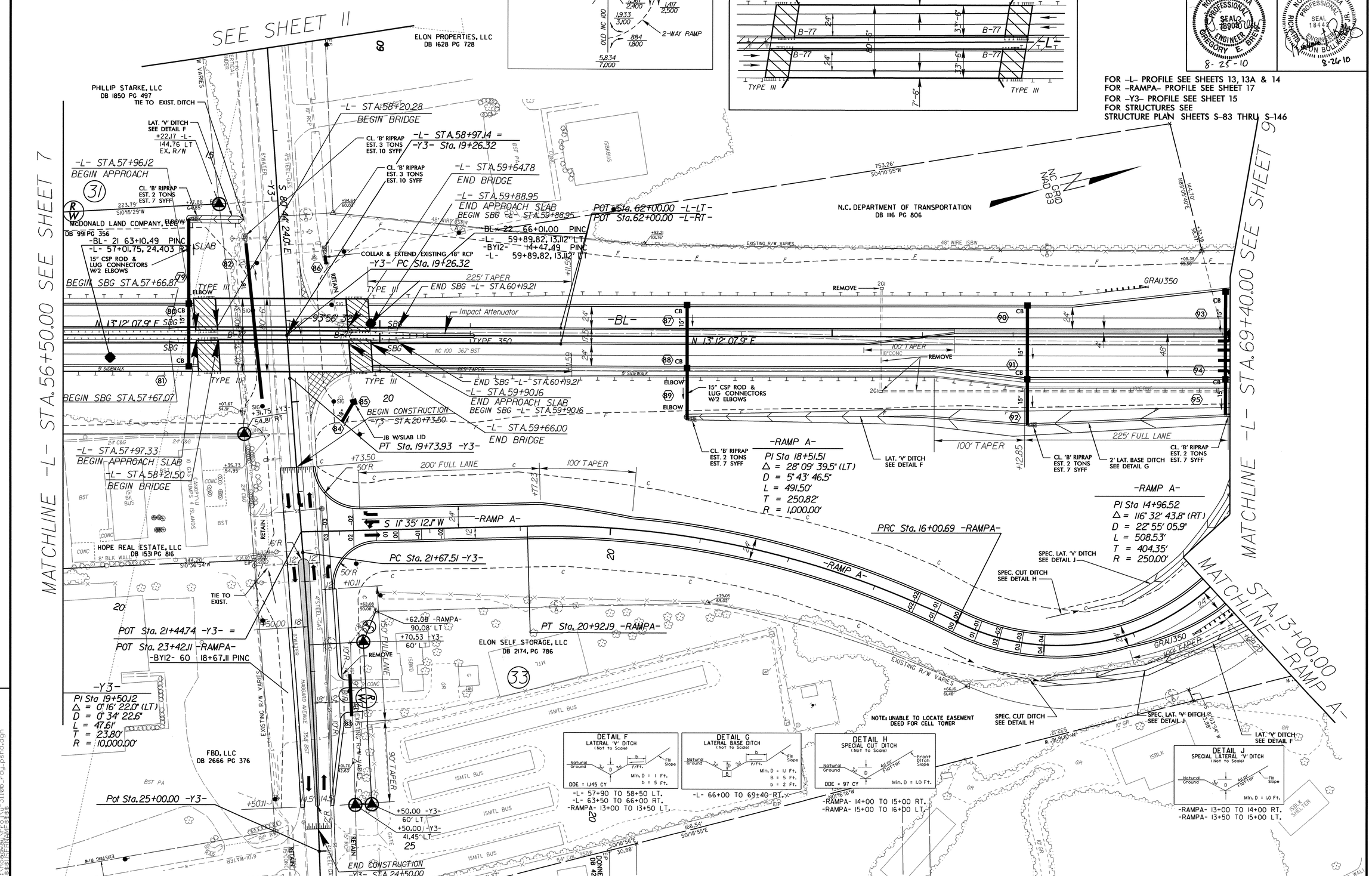

REVISIONS

8/17/99

24-AUG-2010 12:24
R:\Roadway\Proj\u-3110b_rdy_psh8.dgn

PROJECT REFERENCE NO.	SHEET NO.
U-3110B	9
R/W SHEET NO.	
ROADWAY DESIGN ENGINEER	HYDRAULICS ENGINEER

FOR -L- PROFILE SEE SHEETS 14
FOR -RAMPA- PROFILE SEE SHEET 17

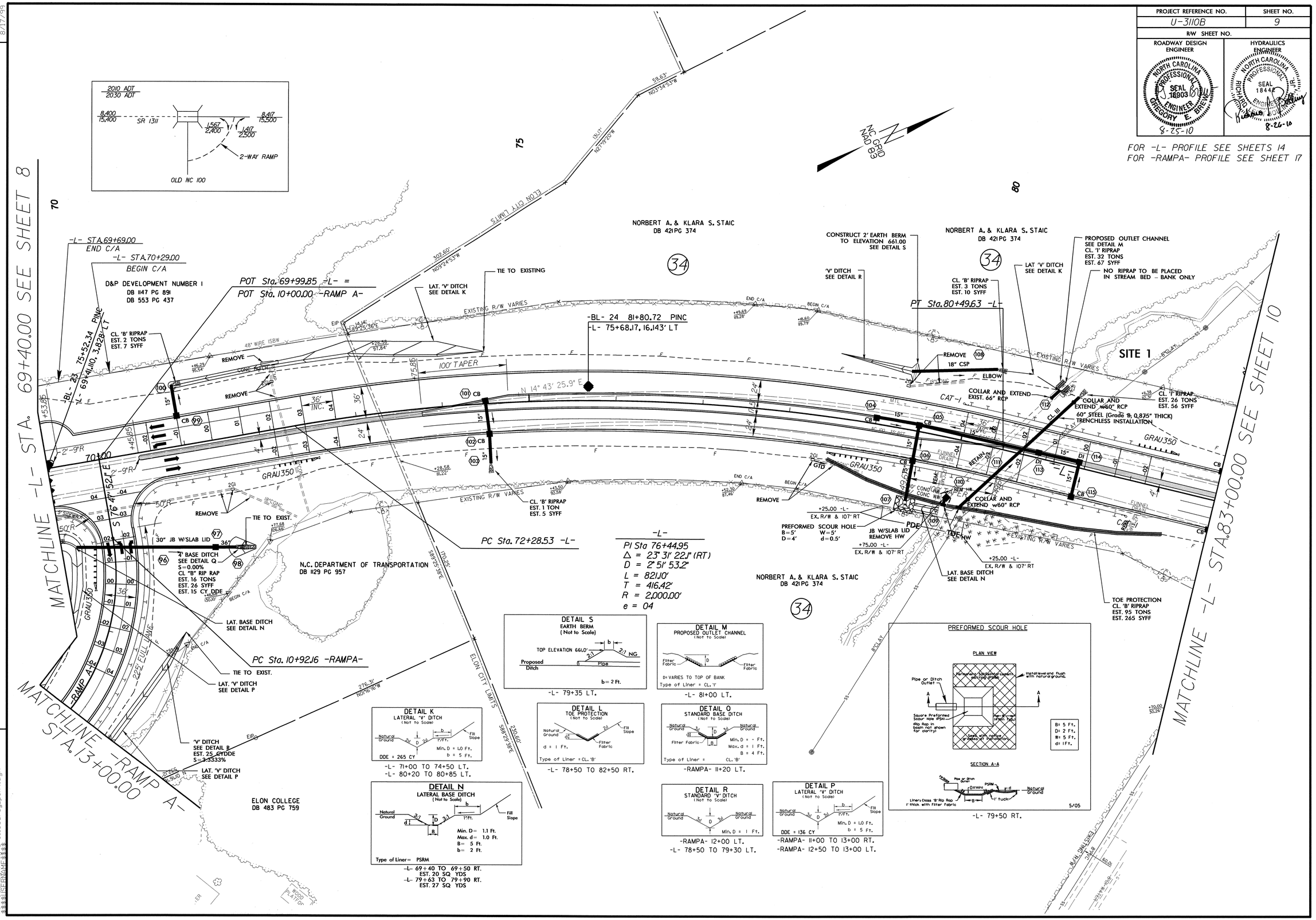

REVISIONS

8/17/99

24-AUG-2010 12:24
R:\Roadway\Proj\u-3110b_rdy_psh9.dgn
$$$$USERNAME$$$$

PROJECT REFERENCE NO.	SHEET NO.
U-3110B	10
R/W SHEET NO.	
ROADWAY DESIGN ENGINEER	HYDRAULICS ENGINEER
NORTH CAROLINA PROFESSIONAL SEAL 18903 ENGINEER GREGORY E. BREW 7-27-10	NORTH CAROLINA PROFESSIONAL SEAL 18442 ENGINEER RICHARD LEON BOLLINGER JR. 8-04-10

FOR -L- PROFILE SEE SHEET 14

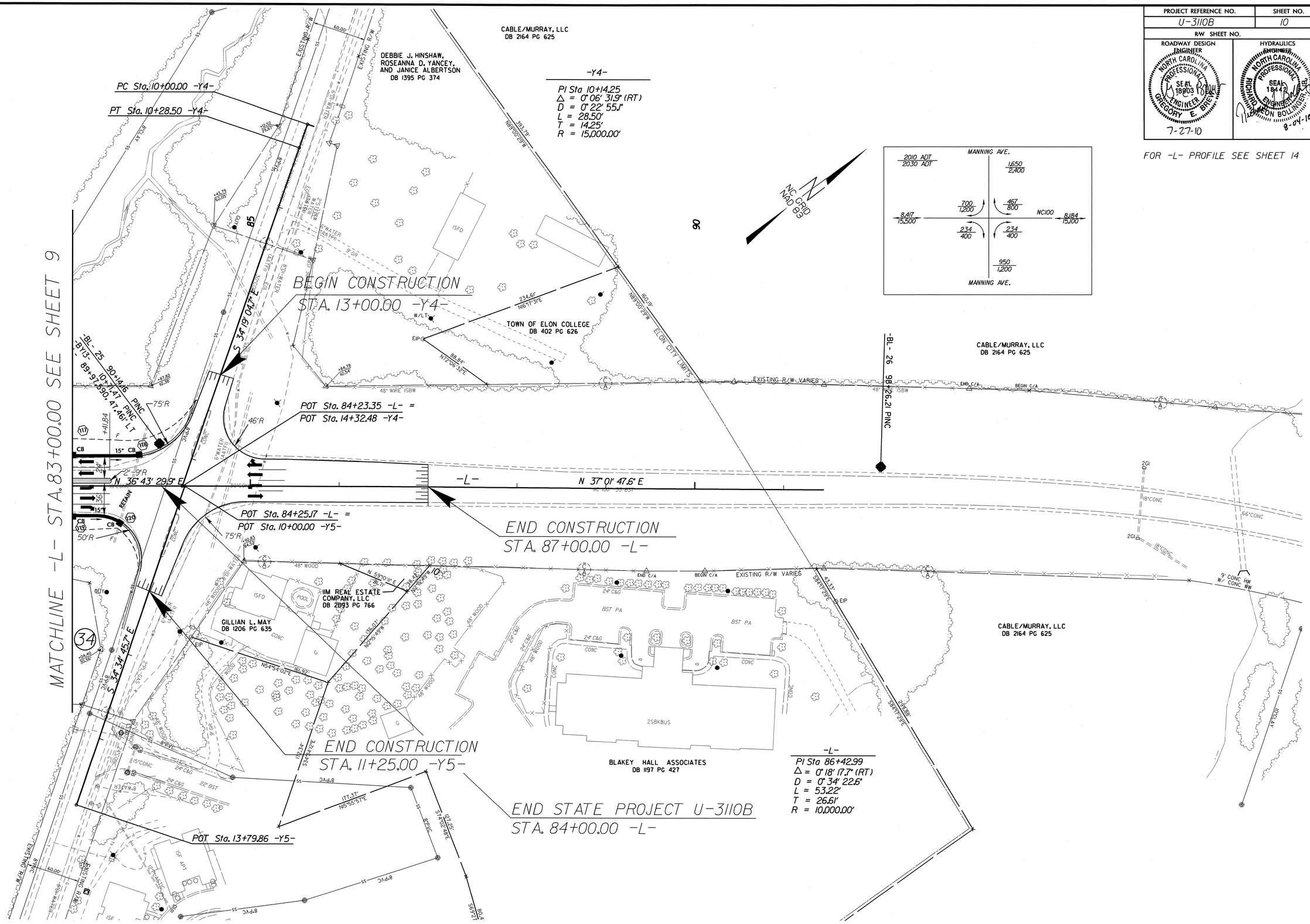

REVISIONS

8/17/99

19: JUL-2010 16:11
R:\HDE-2010\16:10\U-3110B_Rdy_psh10.dgn
$$$$USERNAME$$$$
$$$$DATE$$$$

PROJECT REFERENCE NO.	SHEET NO.
U-3110B	11
R/W SHEET NO.	
ROADWAY DESIGN ENGINEER	HYDRAULICS ENGINEER
NORTH CAROLINA PROFESSIONAL SEAL 18903 ENGINEER GREGORY E. BREWER 7-27-10	NORTH CAROLINA PROFESSIONAL SEAL 18442 ENGINEER RICHARD LEON BOLLINGER 8-04-10

FOR -Y1- PROFILE SEE SHEET 15

NOTE:
See Sheet 8 for -L- & -RampA- Plan Design

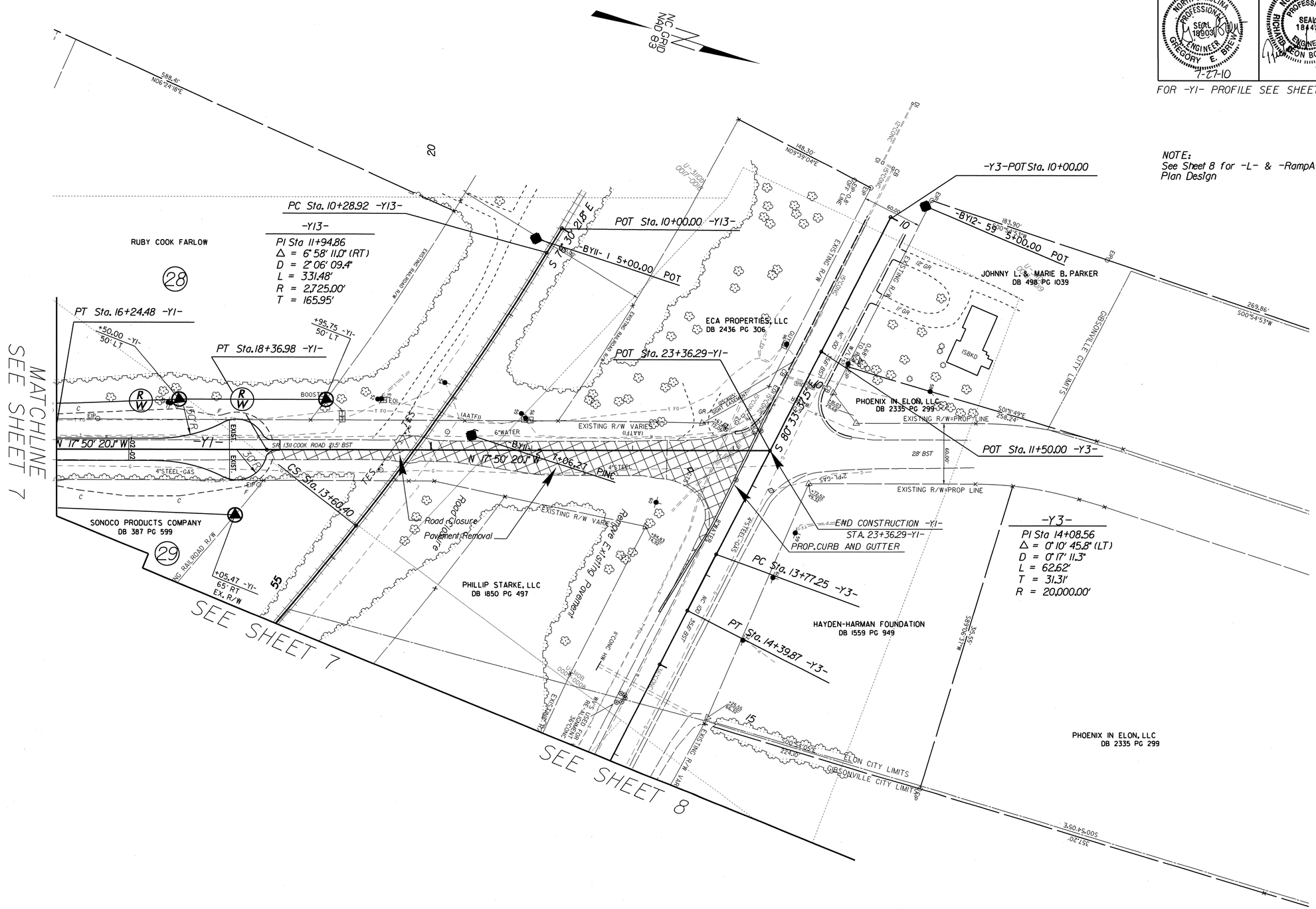

REVISIONS

8/17/99

19-JUL-2010 16:12
R:\Roadway\Proj\U-3110B_Rdy_psh11.dgn

PROJECT REFERENCE NO.	SHEET NO.
U-3110B	12

ROADWAY DESIGN ENGINEER

NORTH CAROLINA PROFESSIONAL SEAL 18903 ENGINEER GREGORY E. BREW

7-27-10

HYDRAULICS ENGINEER

NORTH CAROLINA PROFESSIONAL SEAL 18443 ENGINEER RICHARD LEON BOLLINGER, JR.

8-04-10

FOR -L- PLAN SEE SHEET NO.4 & 5

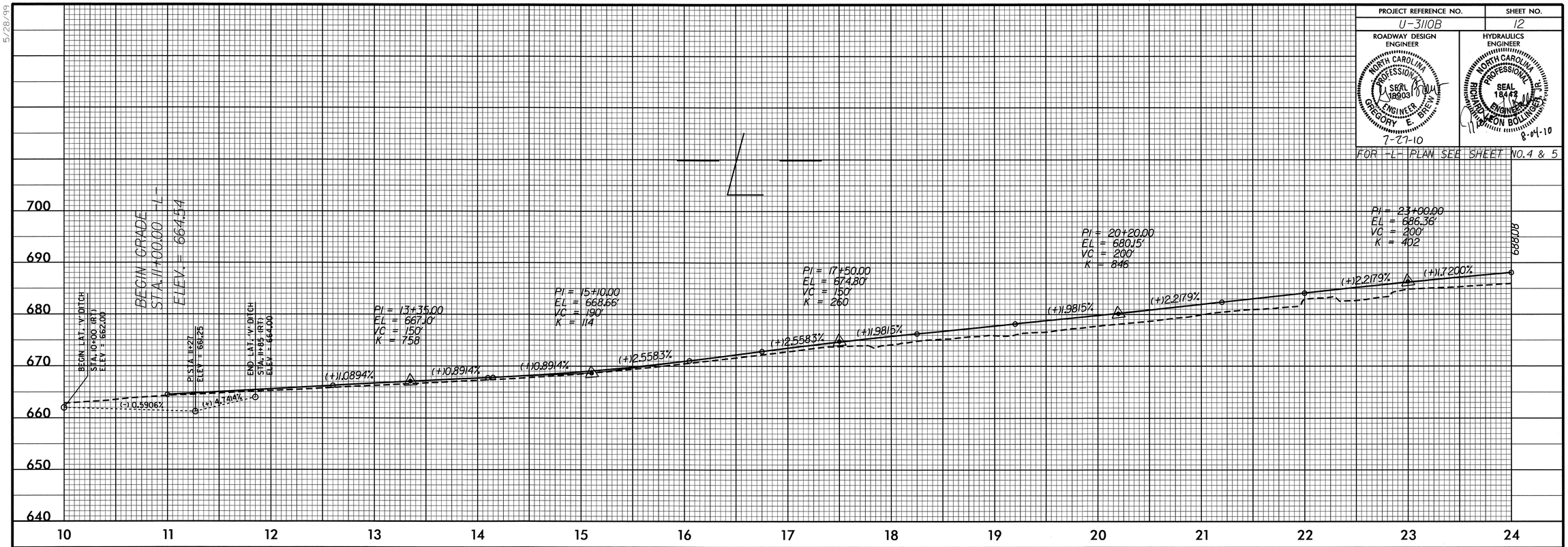

FOR -L- PLAN SEE SHEET NO.5 & 6

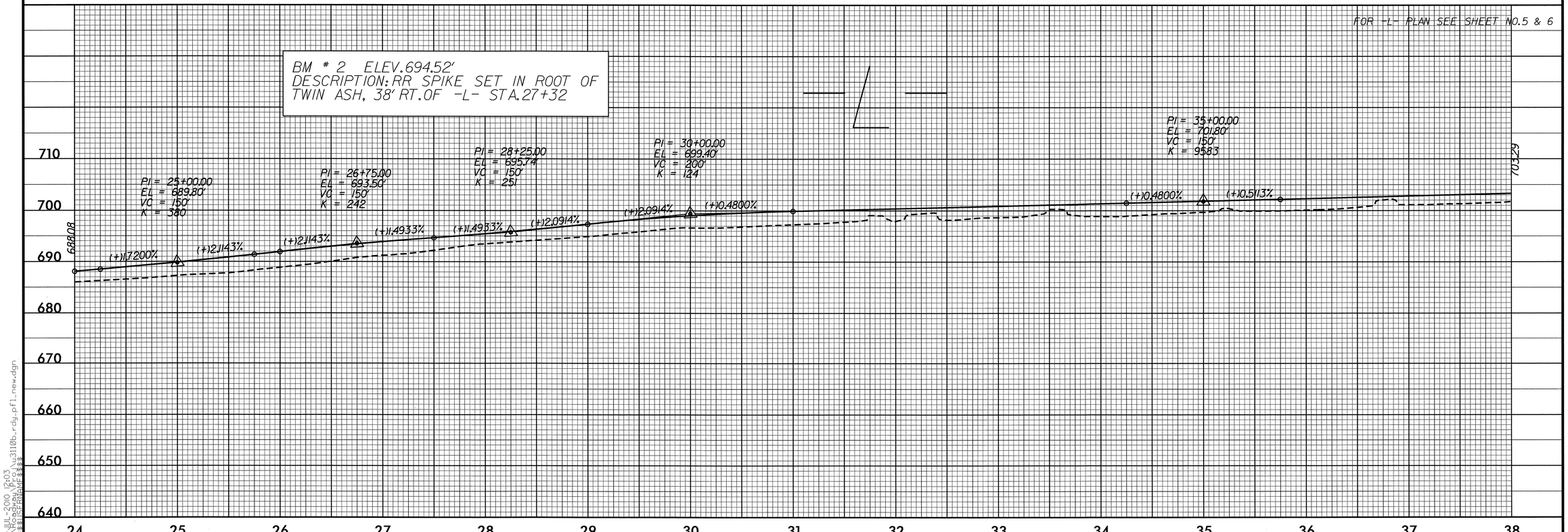

5/28/99

19-JUL-2010 12:03
R:\Roadway\Proj\u3110b_rdy_pfl_new.dgn
$$$$USERNAME$$$$

PROJECT REFERENCE NO.	SHEET NO.
U-3110B	13

ROADWAY DESIGN ENGINEER
NORTH CAROLINA PROFESSIONAL SEAL 16903 ENGINEER GREGORY E. BREWER
7-27-10

HYDRAULICS ENGINEER
NORTH CAROLINA PROFESSIONAL SEAL 18442 ENGINEER JOHN BOLINGER JR.
8-04-10

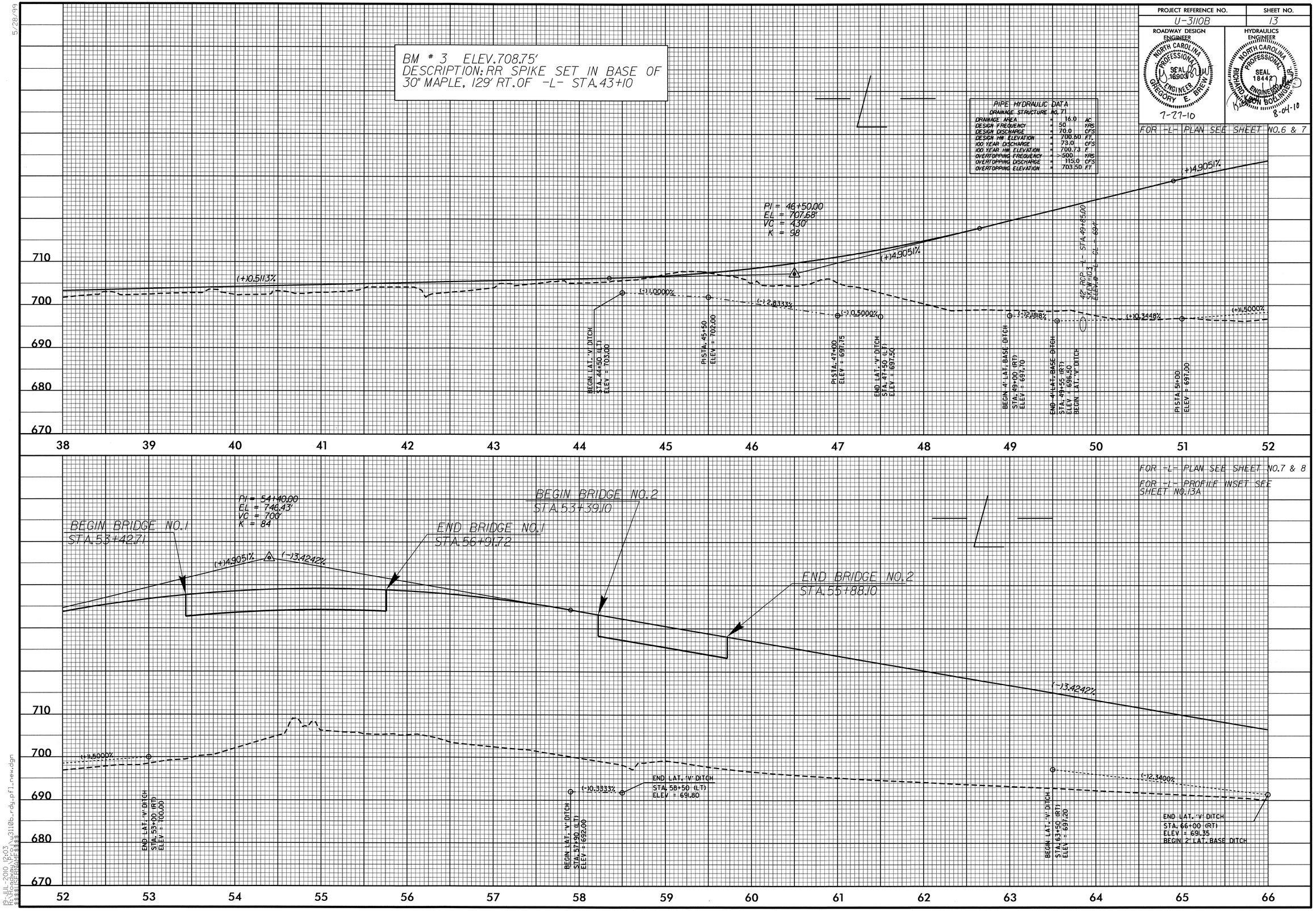

5/28/99

19-JUL-2010 12:03
R:\Roadway\Proj\u3110b_rdy_pf1_new.dgn
$$$$USERNAME$$$$

5/28/99

PROJECT REFERENCE NO.	SHEET NO.
U-3110B	13A
ROADWAY DESIGN ENGINEER	HYDRAULICS ENGINEER

NORTH CAROLINA PROFESSIONAL SEAL 19903 ENGINEER GREGORY E. BREW
7-27-10

NORTH CAROLINA PROFESSIONAL SEAL 18442 ENGINEER RICHARD LEON GOLLINGER
8-04-10

FOR -L- PLAN SEE SHEET NO.6 & 7

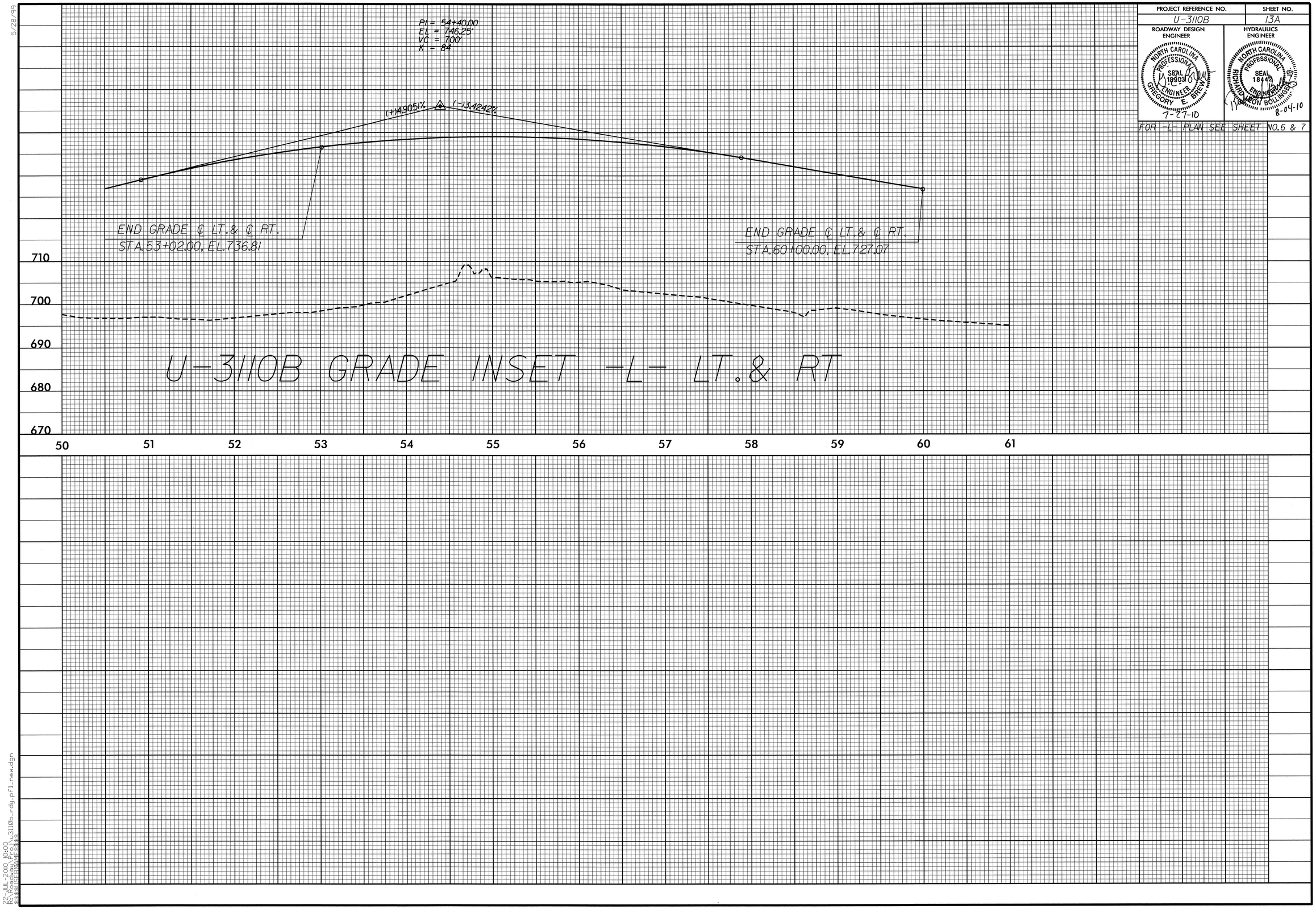

22-JUL-2010 10:00
R:\Roadway\Proj\u3110b_rdy_prfl_new.dgn
$$$$USERNAME$$$$

PROJECT REFERENCE NO.	SHEET NO.
U-3110B	14

ROADWAY DESIGN ENGINEER — NORTH CAROLINA PROFESSIONAL SEAL 18603 ENGINEER GREGORY E. BREWER — 7-27-10

HYDRAULICS ENGINEER — NORTH CAROLINA PROFESSIONAL SEAL 18442 ENGINEER RICHARD BOLINGER, JR. — 8-04-10

FOR -L- PLAN SEE SHEET NO.8 & 9

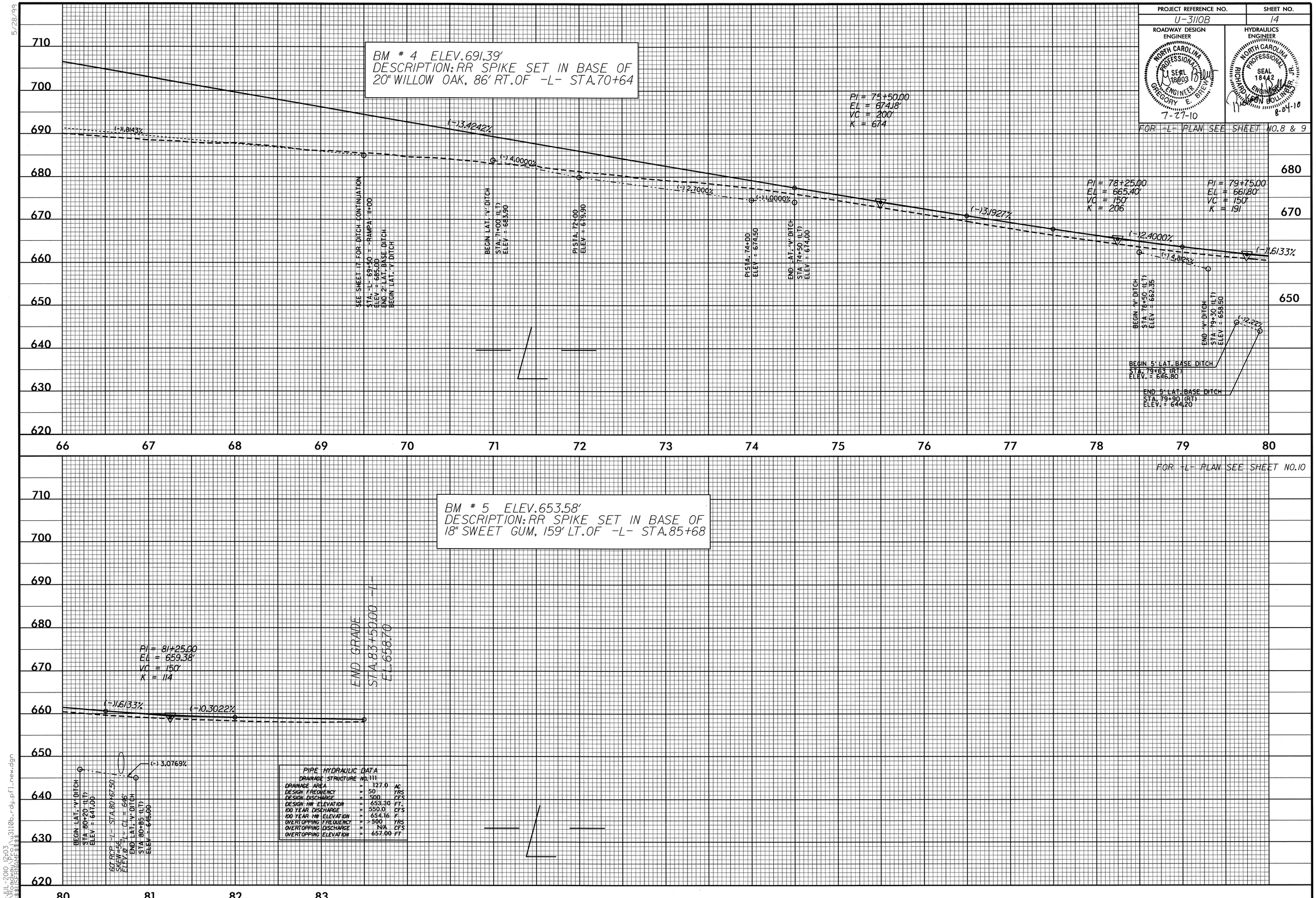

5/28/99

19-JUL-2010 12:03
R:\Roadway\Proj\u3110b_rdy_pfl_new.dgn
$$$$USERNAME$$$$

PROJECT REFERENCE NO.	SHEET NO.
U-3110B	15

ROADWAY DESIGN ENGINEER
NORTH CAROLINA PROFESSIONAL SEAL 18903 ENGINEER GREGORY E. BREWER
7-27-10

HYDRAULICS ENGINEER
NORTH CAROLINA PROFESSIONAL SEAL 18447 ENGINEER RICHARD BOLLINGER JR.
8-04-10

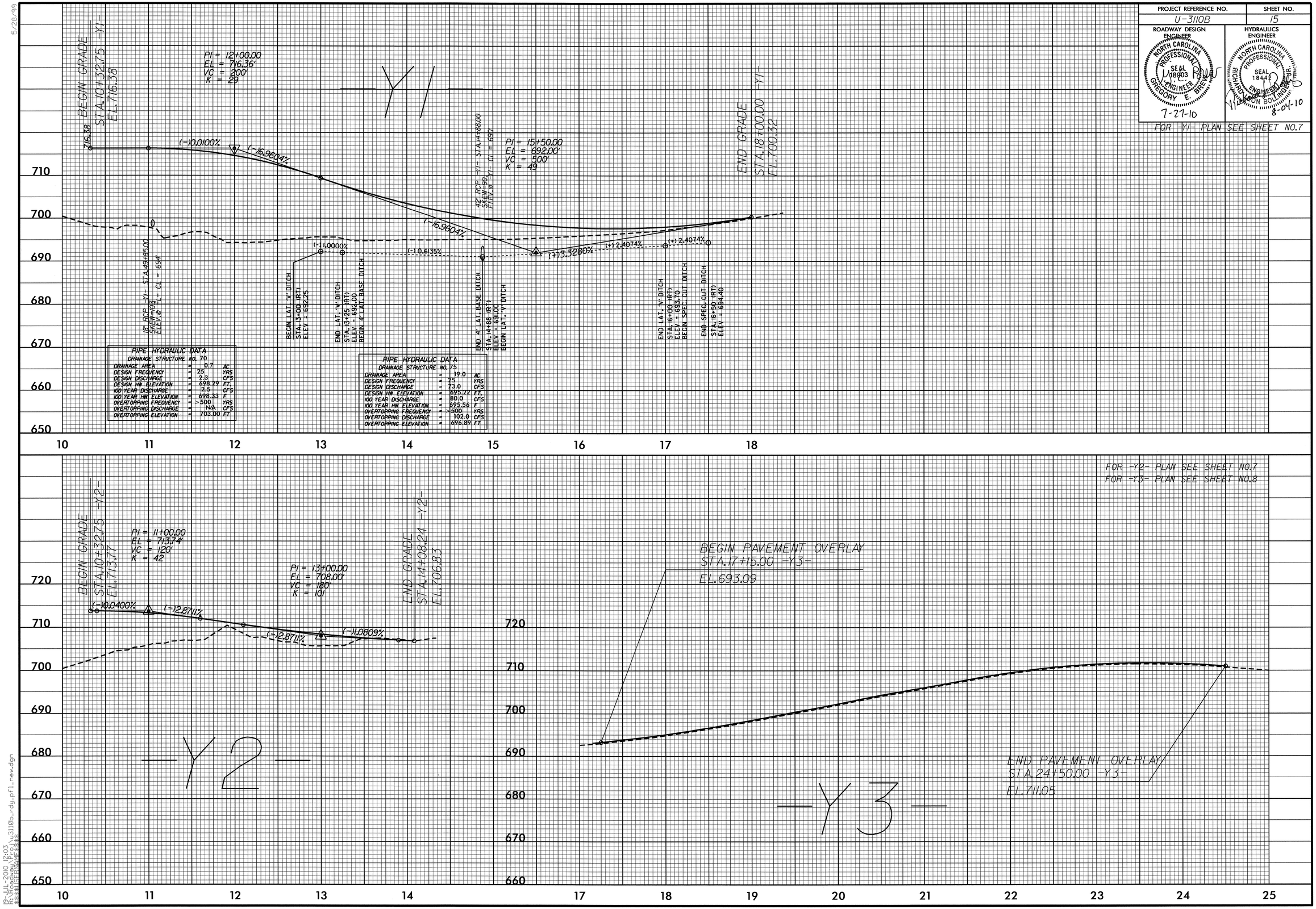

5/28/99

19-JUL-2010 12:03
R:\Roadway\Proj\u3110b_rdy_pfl_new.dgn
$$$$USERNAME$$$$

PROJECT REFERENCE NO.	SHEET NO.
U-3110B	16
ROADWAY DESIGN ENGINEER	HYDRAULICS ENGINEER

NORTH CAROLINA PROFESSIONAL SEAL 18903 ENGINEER GREGORY E. BREWER 7-27-10

NORTH CAROLINA PROFESSIONAL SEAL 18442 ENGINEER RICHARD LEON BOLLING 8-04-10

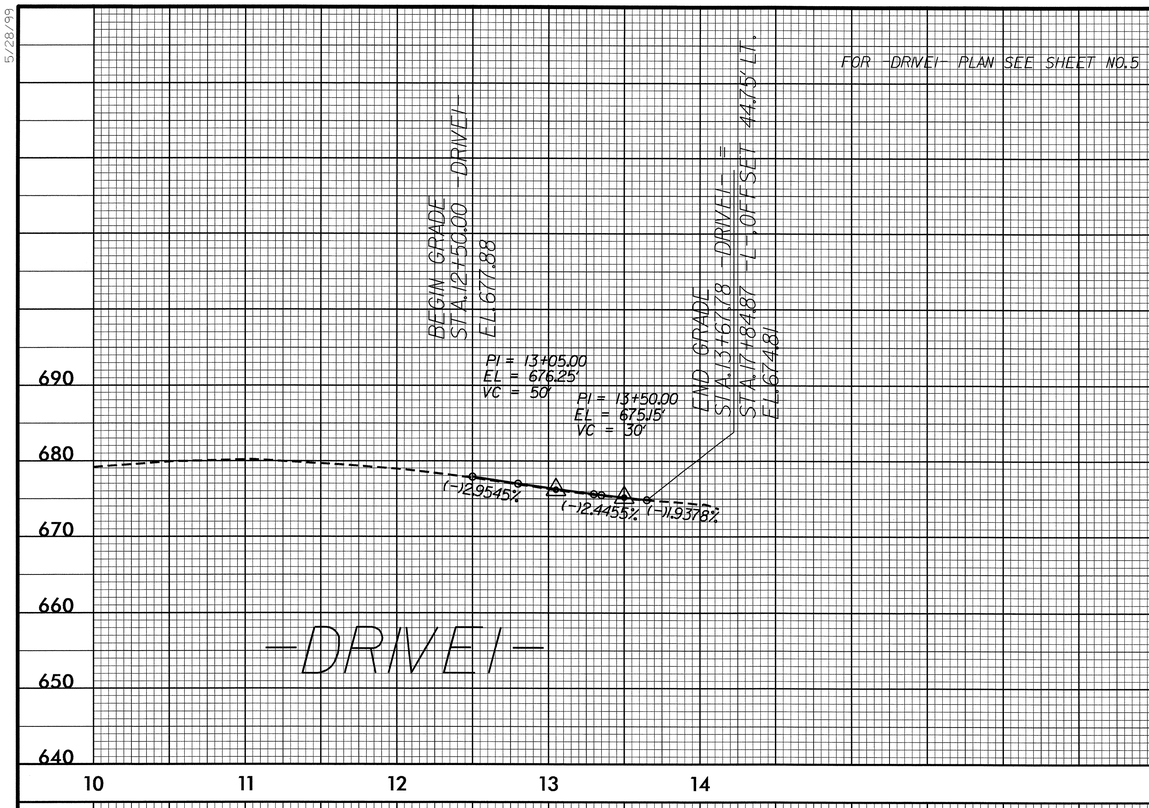

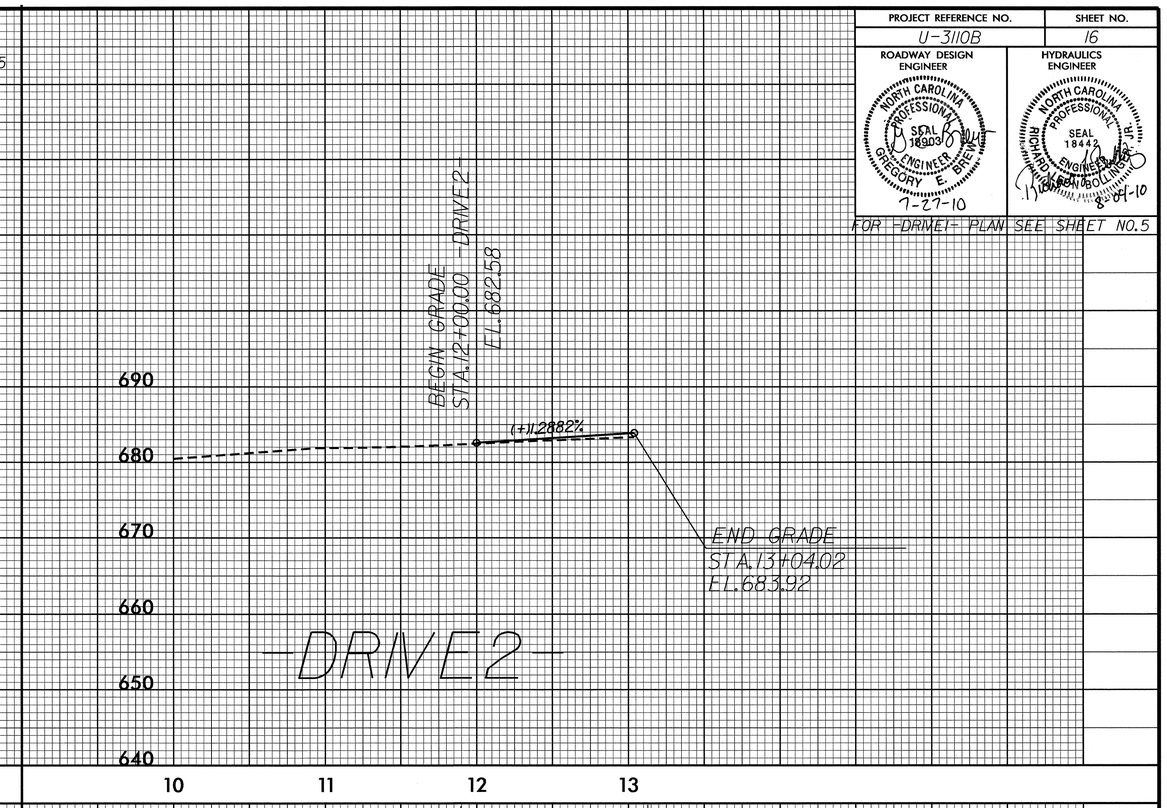

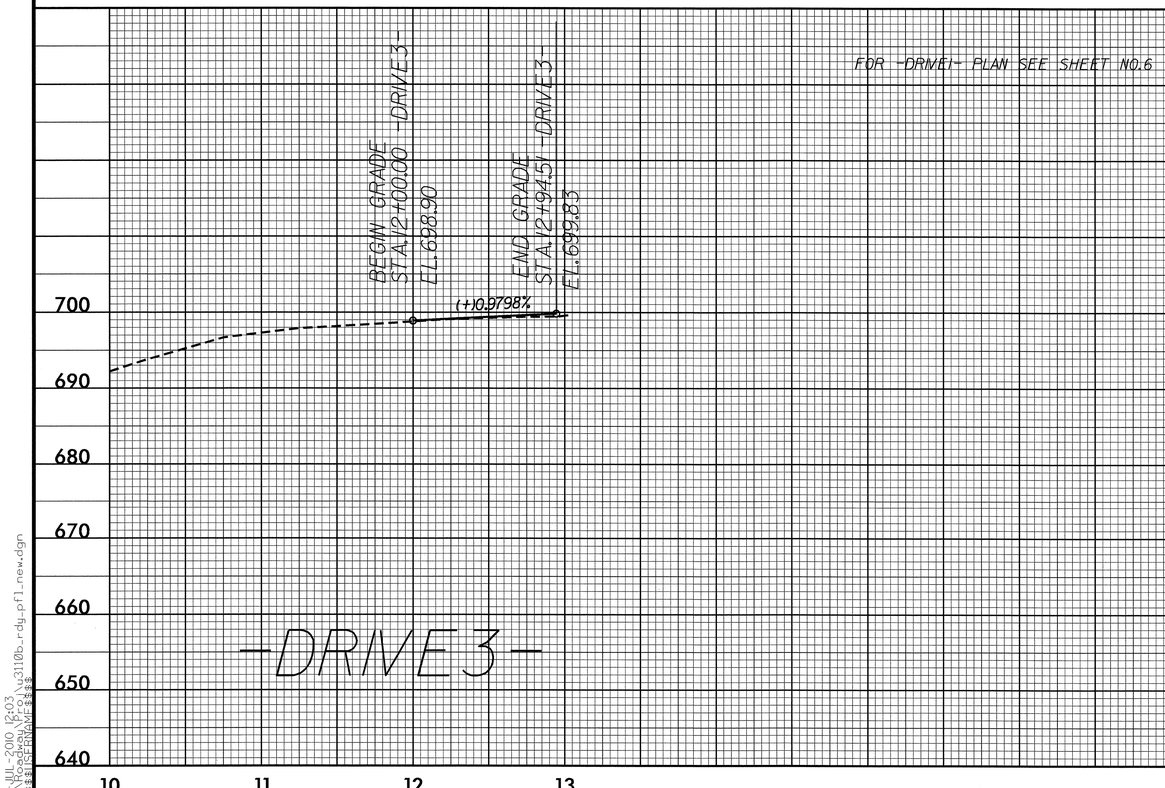

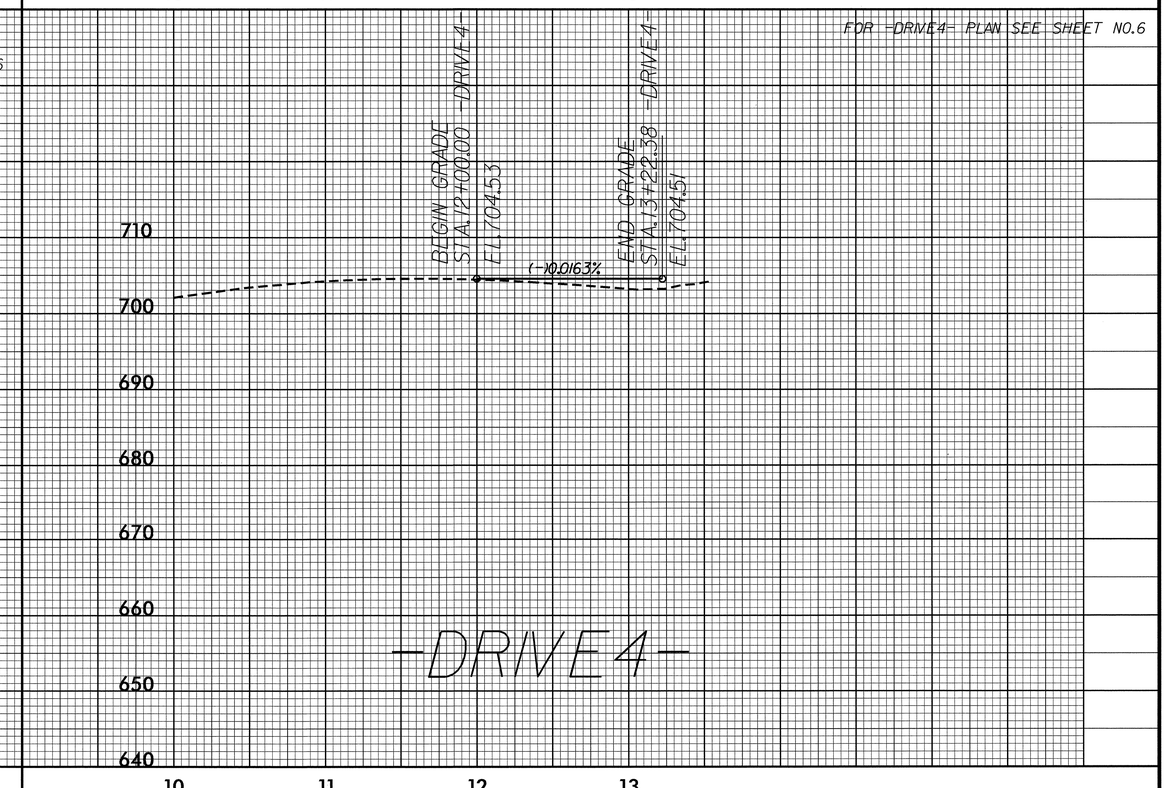

5/28/99

19-JUL-2010 12:03
R:\Roadway\u3110b_rdy_pfl_new.dgn
$$$$USERNAME$$$$

PROJECT REFERENCE NO.	SHEET NO.
U-3110B	17

ROADWAY DESIGN ENGINEER

NORTH CAROLINA PROFESSIONAL SEAL 18903 ENGINEER GREGORY E. BRIEN

7-27-10

HYDRAULICS ENGINEER

NORTH CAROLINA PROFESSIONAL SEAL 18442 ENGINEER RICHARD LEON BOLLINGER JR.

8-09-10

FOR -DRIVE5- PLAN SEE SHEET NO.7

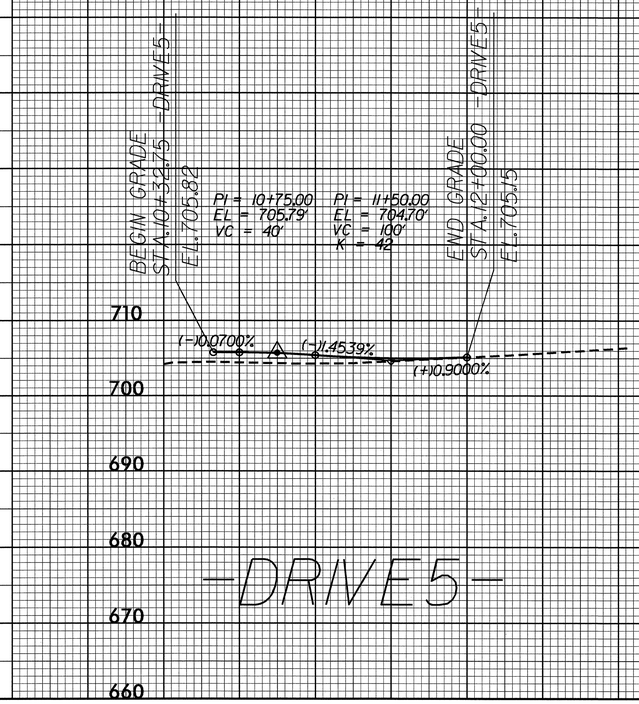

FOR -RAMPA- PLAN SEE SHEET NO.8 & 9

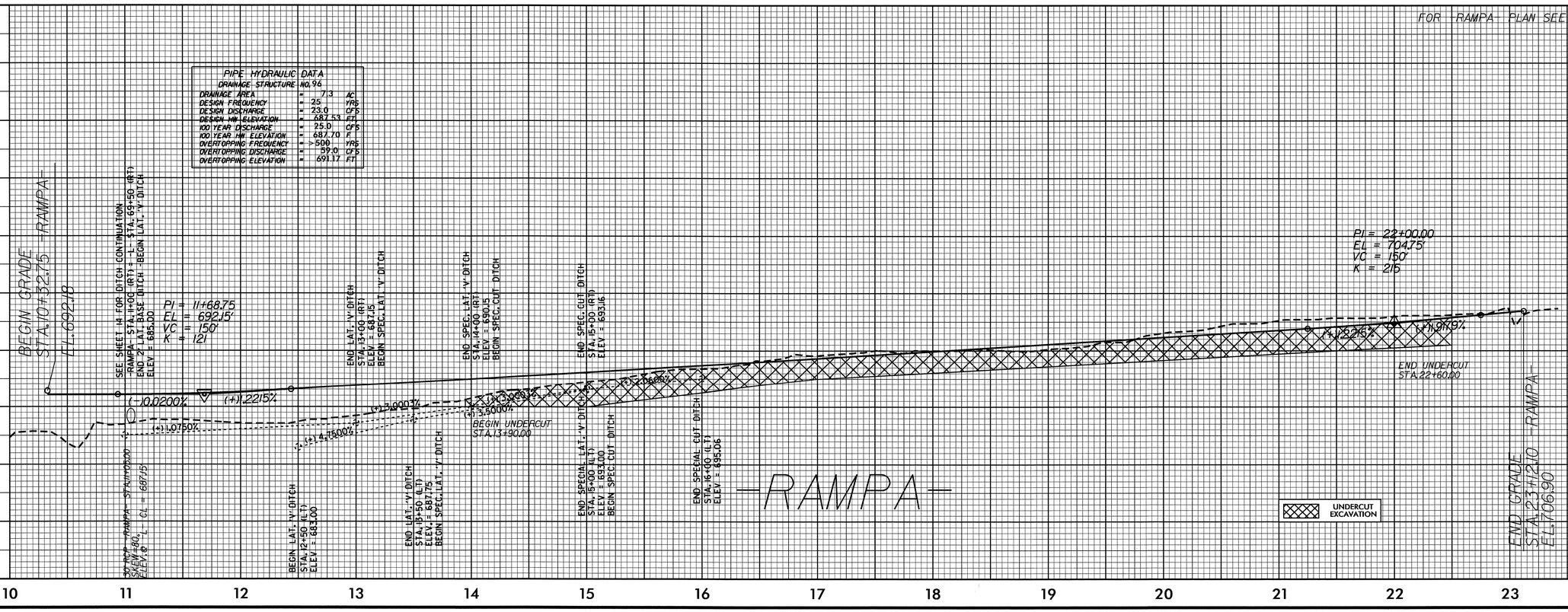

22-JUL-2010 10:48
R:\Roadway\Proj\u3110b_rdy_pfl_new.dgn
$$$$USERNAME$$$$