STATE	STATE PROJECT REFERENCE NO.	SHEET NO.	TOTAL SHEETS
N.C.	W-5214A	1	

STATE PROJ. NO.	F.A. PROJ. NO.	DESCRIPTION
45344.1.1	STPNHS-0025(27)	PE
45344.3.1	STPNHS-0025(27)	Construction

STATE OF NORTH CAROLINA
DIVISION OF HIGHWAYS

HENDERSON COUNTY

LOCATION: US 25 FROM NORTH OF THE NC/SC STATE LINE, NORTHWARD TO SR 1858 (OLD ZIRCONIA ROAD).

TYPE OF WORK: INSTALLING MEDIAN GUARDRAIL.

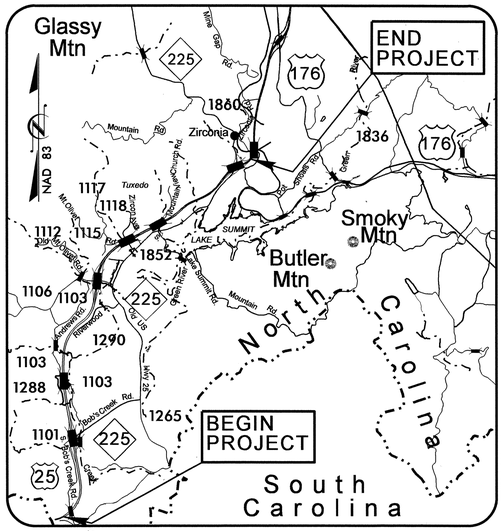

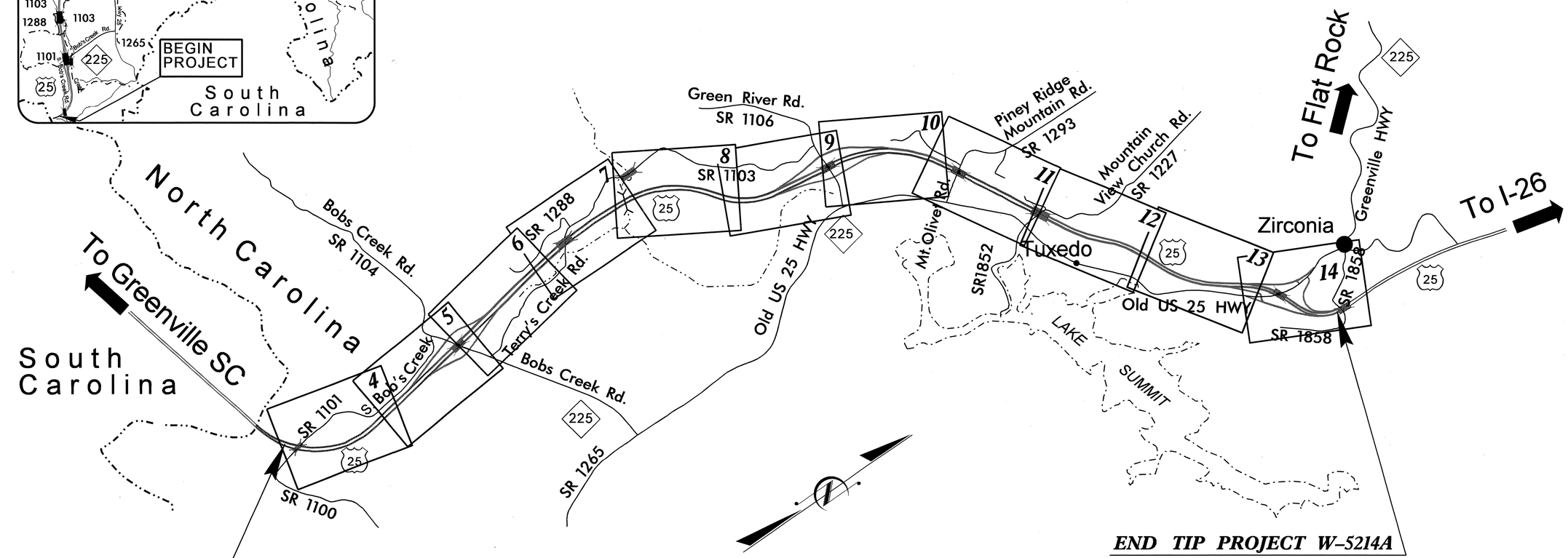

END TIP PROJECT W-5214A
-L- Sta. 321+50.00

BEGIN TIP PROJECT W-5214A
-L- Sta. 27+00.00

TIP PROJECT: W-5214A

CONTRACT No: C202588

GRAPHIC SCALES	DESIGN DATA	PROJECT LENGTH
100 50 0 100 200 PLANS	ADT 2010 = 13,000 V = 65 MPH FUNC. CLASS. = FREEWAY	LENGTH ROADWAY TIP PROJECT W-5214A = 5.578 MILES TOTAL LENGTH TIP PROJECT W-5214A = 5.578 MILES

Prepared In the Office of:
DIVISION OF HIGHWAYS
1000 Birch Ridge Dr., Raleigh NC, 27610

2006 STANDARD SPECIFICATIONS

RIGHT OF WAY DATE: N/A

LETTING DATE: MAY 18, 2010

JIMMY GOODNIGHT, P.E.
PROJECT ENGINEER

STEVE KENDALL, P.E.
PROJECT DESIGN ENGINEER

ROADWAY DESIGN ENGINEER
NORTH CAROLINA PROFESSIONAL SEAL 33296 ENGINEER STEVEN D. KENDALL
3-31-10
SIGNATURE: S.D. Kendall P.E.

DIVISION OF HIGHWAYS STATE OF NORTH CAROLINA
STATE OF NORTH CAROLINA DEPARTMENT OF TRANSPORTATION
P.E.
STATE HIGHWAY DESIGN ENGINEER

09/08/99

31-MAR-2010 09:24
R:\Roadway\Proj\W4715_rdy_tsh.dgn
$$$$USERNAME$$$$

5/28/99

STATE OF NORTH CAROLINA
DIVISION OF HIGHWAYS

PROJECT REFERENCE NO.	SHEET NO.
W-5214A	1-A

ROADWAY DESIGN ENGINEER

NORTH CAROLINA PROFESSIONAL SEAL 025294 ENGINEER STEVEN D. KENDRICK

INDEX OF SHEETS

SHEET No.	SHEET
1	TITLE SHEET
1-A	INDEX OF SHEETS, GENERAL NOTES AND LIST OF STANDARD DRAWINGS
1-B	CONVENTIONAL SYMBOLS
2	TYPICAL SECTIONS
3	SUMMARY OF QUANTITIES
3-A	DRAINAGE SUMMARY & REPAIRS SHEET GUIDERAIL & GUARDRAIL SUMMARY SHEET
4 THRU 14	PLAN SHEETS
TCP-1 THRU TCP-4	TRAFFIC CONTROL, MARKINGS, & DELINEATION

GENERAL NOTES

2006 SPECIFICATIONS
EFFECTIVE: 07-18-06
REVISED: 07-18-06

GUARDRAIL:
THE GUARDRAIL LOCATIONS SHOWN ON THE PLANS MAY BE ADJUSTED DURING CONSTRUCTION AS DIRECTED BY THE ENGINEER.
THE CONTRACTOR SHOULD CONSULT WITH THE ENGINEER PRIOR TO ORDERING GUARDRAIL MATERIAL.

2006 ROADWAY ENGLISH STANDARD DRAWINGS

EFF. 07-18-06
REV. 01-02-07

N. C. Department of Transportation – Raleigh, N. C., Dated July 18, 2006 are applicable to this project and by reference hereby are considered part of these plans. The following Roadway Standards as appear in "Roadway Standard Drawings" Highway Design Branch –

STD.NO.	TITLE
DIVISION 8 – INCIDENTALS	
840.18	Concrete Grated Drop Inlet Type 'B' – 12" thru 36" Pipe
840.22	Frames and Wide Slot Sag Grates
850.01	Concrete Paved Ditches
862.01	Guardrail Placement
862.02	Guardrail Installation
865.01	Cable Guiderail
DIVISION 16 – EROSION CONTROL AND ROADSIDE DEVELOPMENT	
1632.03	Rock Inlet Sediment Trap Type 'C'

25-MAR-2010 08:28
R:\Roadway\Proj\W4715_rdy_tsh.dgn
$$$$USERNAME$$$$

3/15/06

PROJECT REFERENCE NO.	SHEET NO.
W-5214A	1-B

Note: Not to Scale

****S.U.E. = Subsurface Utility Engineering***

STATE OF NORTH CAROLINA
DIVISION OF HIGHWAYS

CONVENTIONAL PLAN SHEET SYMBOLS

BOUNDARIES AND PROPERTY:

- State Line
- County Line
- Township Line
- City Line
- Reservation Line
- Property Line
- Existing Iron Pin — EIP
- Property Corner
- Property Monument — ECM
- Parcel/Sequence Number — 123
- Existing Fence Line
- Proposed Woven Wire Fence
- Proposed Chain Link Fence
- Proposed Barbed Wire Fence
- Existing Wetland Boundary — WLB
- Proposed Wetland Boundary — WLB
- Existing Endangered Animal Boundary — EAB
- Existing Endangered Plant Boundary — EPB

BUILDINGS AND OTHER CULTURE:

- Gas Pump Vent or U/G Tank Cap
- Sign — S
- Well — W
- Small Mine
- Foundation
- Area Outline
- Cemetery
- Building
- School
- Church
- Dam

HYDROLOGY:

- Stream or Body of Water
- Hydro, Pool or Reservoir
- Jurisdictional Stream — JS
- Buffer Zone 1 — BZ 1
- Buffer Zone 2 — BZ 2
- Flow Arrow
- Disappearing Stream
- Spring
- Wetland
- Proposed Lateral, Tail, Head Ditch — FLOW
- False Sump

RAILROADS:

- Standard Gauge — CSX TRANSPORTATION
- RR Signal Milepost — MILEPOST 35
- Switch — SWITCH
- RR Abandoned
- RR Dismantled

RIGHT OF WAY:

- Baseline Control Point
- Existing Right of Way Marker
- Existing Right of Way Line
- Proposed Right of Way Line — RW
- Proposed Right of Way Line with Iron Pin and Cap Marker — RW
- Proposed Right of Way Line with Concrete or Granite Marker — RW
- Existing Control of Access — CA
- Proposed Control of Access — CA
- Existing Easement Line — E
- Proposed Temporary Construction Easement — E
- Proposed Temporary Drainage Easement — TDE
- Proposed Permanent Drainage Easement — PDE
- Proposed Permanent Utility Easement — PUE

ROADS AND RELATED FEATURES:

- Existing Edge of Pavement
- Existing Curb
- Proposed Slope Stakes Cut — C
- Proposed Slope Stakes Fill — F
- Proposed Wheel Chair Ramp — WCR
- Proposed Wheel Chair Ramp Curb Cut — WCC
- Curb Cut for Future Wheel Chair Ramp — CCFR
- Existing Metal Guardrail
- Proposed Guardrail
- Existing Cable Guiderail
- Proposed Cable Guiderail
- Equality Symbol
- Pavement Removal

VEGETATION:

- Single Tree
- Single Shrub
- Hedge
- Woods Line
- Orchard
- Vineyard — Vineyard

EXISTING STRUCTURES:

MAJOR:

- Bridge, Tunnel or Box Culvert — CONC
- Bridge Wing Wall, Head Wall and End Wall — CONC WW

MINOR:

- Head and End Wall — CONC HW
- Pipe Culvert
- Footbridge
- Drainage Box: Catch Basin, DI or JB — CB
- Paved Ditch Gutter
- Storm Sewer Manhole — S
- Storm Sewer — S

UTILITIES:

POWER:

- Existing Power Pole
- Proposed Power Pole
- Existing Joint Use Pole
- Proposed Joint Use Pole
- Power Manhole — P
- Power Line Tower
- Power Transformer
- U/G Power Cable Hand Hole — HH
- H-Frame Pole
- Recorded U/G Power Line — P
- Designated U/G Power Line (S.U.E.*) — P

TELEPHONE:

- Existing Telephone Pole
- Proposed Telephone Pole
- Telephone Manhole — T
- Telephone Booth
- Telephone Pedestal — T
- Telephone Cell Tower
- U/G Telephone Cable Hand Hole — HH
- Recorded U/G Telephone Cable — T
- Designated U/G Telephone Cable (S.U.E.*) — T
- Recorded U/G Telephone Conduit — TC
- Designated U/G Telephone Conduit (S.U.E.*) — TC
- Recorded U/G Fiber Optics Cable — T FO
- Designated U/G Fiber Optics Cable (S.U.E.*) — T FO

WATER:

- Water Manhole — W
- Water Meter
- Water Valve
- Water Hydrant
- Recorded U/G Water Line — W
- Designated U/G Water Line (S.U.E.*) — W
- Above Ground Water Line — A/G Water

TV:

- TV Satellite Dish
- TV Pedestal — C
- TV Tower
- U/G TV Cable Hand Hole — HH
- Recorded U/G TV Cable — TV
- Designated U/G TV Cable (S.U.E.*) — TV
- Recorded U/G Fiber Optic Cable — TV FO
- Designated U/G Fiber Optic Cable (S.U.E.*) — TV FO

GAS:

- Gas Valve
- Gas Meter
- Recorded U/G Gas Line — G
- Designated U/G Gas Line (S.U.E.*) — G
- Above Ground Gas Line — A/G Gas

SANITARY SEWER:

- Sanitary Sewer Manhole
- Sanitary Sewer Cleanout
- U/G Sanitary Sewer Line — SS
- Above Ground Sanitary Sewer — A/G Sanitary Sewer
- Recorded SS Forced Main Line — FSS
- Designated SS Forced Main Line (S.U.E.*) — FSS

MISCELLANEOUS:

- Utility Pole
- Utility Pole with Base
- Utility Located Object
- Utility Traffic Signal Box — S
- Utility Unknown U/G Line — ?UTL
- U/G Tank; Water, Gas, Oil
- A/G Tank; Water, Gas, Oil
- U/G Test Hole (S.U.E.*)
- Abandoned According to Utility Records — AATUR
- End of Information — E.O.I.

PROJECT REFERENCE NO.	SHEET NO.
W-5214A	2

ROADWAY DESIGN ENGINEER
NORTH CAROLINA PROFESSIONAL SEAL 33296 ENGINEER STEVEN D. KENDALL
S.D. Kendall 3-31-10

GI	DOUBLE FACED CABLE GUIDERAIL.
GR	STEEL BM GUARDRAIL, DOUBLE FACED.

NOTE:
SEE STD. 862.01 FOR GUARDRAIL PLACEMENT.
SEE STD. 865.01 FOR CABLE GUIDERAIL PLACEMENT.

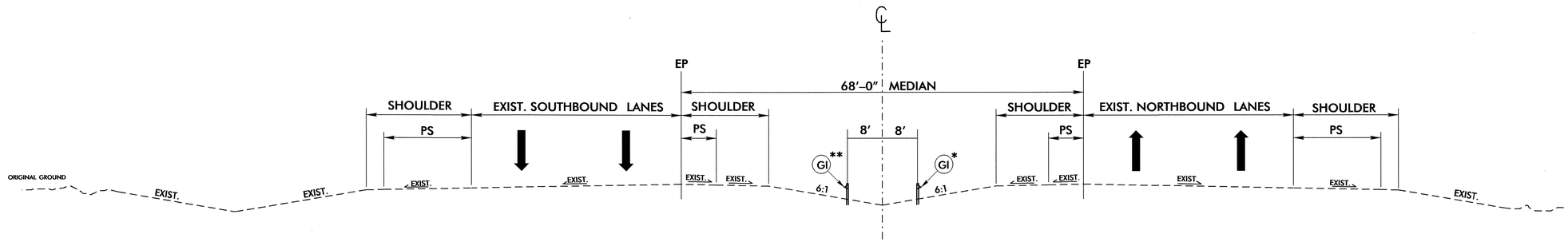

TYPICAL SECTION NO. 1

* –L– Sta. 33+70.00 to Sta. 75+22.45
–L– Sta. 75+22.45 to Sta. 77+78.45 TRANS. RT. to LT.
** –L– Sta. 77+78.45 to Sta. 79+28.00
* –L– Sta. 81+16.00 to Sta. 82+47.88
–L– Sta. 82+47.88 to Sta. 85+03.88 TRANS. RT. to LT.
** –L– Sta. 85+03.88 to Sta. 115+65.00
* –L– Sta. 117+55.00 to Sta. 119+30.00
–L– Sta. 119+30.00 to Sta. 121+86.00 TRANS. RT. to LT.
** –L– Sta. 121+86.00 to Sta. 155+47.00
–L– Sta. 155+47.00 to Sta. 158+03.00 TRANS. LT. to RT.
* –L– Sta. 158+03.00 to Sta. 181+51.94
–L– Sta. 181+51.94 to Sta. 184+07.94 TRANS. RT. to LT.
** –L– Sta. 184+07.94 to Sta. 185+55.00
* –L– Sta. 187+77.00 to Sta. 214+84.00
–L– Sta. 214+84.00 to Sta. 217+40.00 TRANS. RT. to LT.
** –L– Sta. 217+40.00 to Sta. 219+45.00
* –L– Sta. 221+33.00 to Sta. 223+00.00
–L– Sta. 223+00.00 to Sta. 225+56.00 TRANS. RT. to LT.
** –L– Sta. 225+56.00 to Sta. 241+39.00

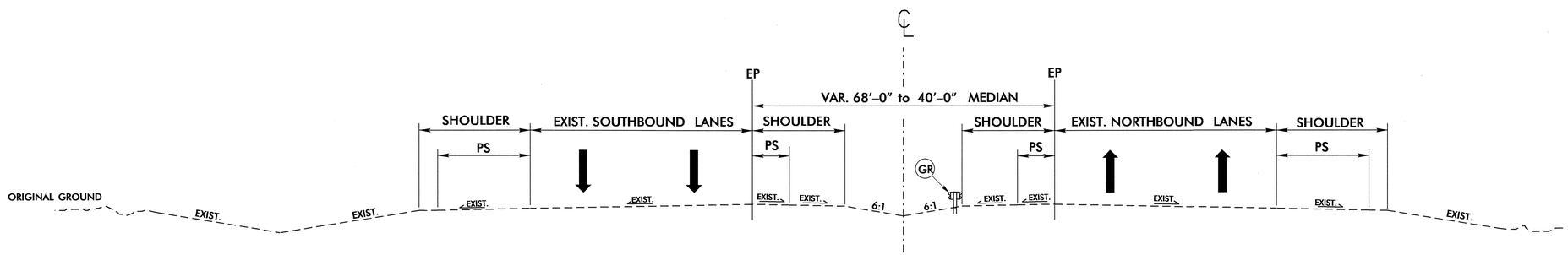

TYPICAL SECTION NO. 2

–L– Sta. 247+79.00 to Sta. 290+66.50
–L– Sta. 293+69.00 to Sta. 301+81.50
–L– Sta. 311+10.00 to Sta. 319+72.50

6/2/99

31-MAR-2010 09:21
R:\Roadway\Proj\W4715_rdy_typ.dgn
$$$$USERNAME$$$$

STATE OF NORTH CAROLINA
DIVISION OF HIGHWAYS

SUMMARY OF QUANTITIES

NORTH CAROLINA PROFESSIONAL SEAL 33296 ENGINEER STEVEN D. KENDALL

S. D. Kendall
3-30-10

STATE OF NORTH CAROLINA
DIVISION OF HIGHWAYS
ROADWAY SUMMARY OF QUANTITIES FOR CONTRACT - C202588

ItemNumber	Sec #	Quantity	Unit	Description
0000100000-N	800	Lump Sum		MOBILIZATION
2354000000-N	840	2	EA	FRAME WITH GRATE, STD 840.22
2473000000-N	SP	15	EA	GENERIC DRAINAGE ITEM DRAINAGE GRATE CLEAN-OUT
2473000000-N	SP	16	EA	GENERIC DRAINAGE ITEM REPAIR CONCRETE APRONS @ DIS
2619000000-E	850	16	SY	4" CONCRETE PAVED DITCH
3030000000-E	862	1,600	LF	STEEL BM GUARDRAIL
3060000000-E	862	6,075	LF	STEEL BM GUARDRAIL, DOUBLE FACED
3150000000-N	862	5	EA	ADDITIONAL GUARDRAIL POSTS
3285000000-N	SP	1	EA	GUARDRAIL ANCHOR UNITS, TYPE M-350
3375000000-E	SP	660	LF	REMOVE & STOCKPILE EXISTING GUARDRAIL
3389400000-E	865	20,000	LF	DOUBLE FACED CABLE GUIDERAIL
3389500000-N	SP	5	EA	ADDITIONAL GUIDERAIL POSTS
3389600000-N	865	26	EA	CABLE GUIDERAIL ANCHOR UNITS
4400000000-E	1110	352	SF	WORK ZONE SIGNS (STATIONARY)
4405000000-E	1110	128	SF	WORK ZONE SIGNS (PORTABLE)
4415000000-N	1115	2	EA	FLASHING ARROW PANELS, TYPE C
4420000000-N	1120	2	EA	CHANGEABLE MESSAGE SIGN
4430000000-N	1130	120	EA	DRUMS
4480000000-N	1165	2	EA	TMIA
4516000000-N	1180	160	EA	SKINNY DRUM
6012000000-E	1610	150	TON	SEDIMENT CONTROL STONE
6042000000-E	1632	300	LF	1/4" HARDWARE CLOTH
6084000000-E	1660	1	ACR	SEEDING & MULCHING

5/28/99

25-MAR-2010 08:30
R:\Roadway\Proj\W4715_rdy_sum.dgn
$$$$USERNAME$$$$

COMPUTED BY: T. BURNS DATE: MARCH 17, 2010
CHECKED BY: L. CHAROVA DATE: MARCH 18, 2010

STATE OF NORTH CAROLINA
DIVISION OF HIGHWAYS

PROJECT REFERENCE NO.	SHEET NO.
W-5214A	3-A

DRAINAGE SUMMARY AND REPAIR

STATION	LOCATION (LT,RT, OR CL)	STRUCTURE NO. FROM	STRUCTURE NO. TO	WIDE SLOT GRATE, SEE STD. 840.22	GRATE CLEAN-OUT	CONC. PAVED DITCHES, Sq. Yds., SEE Std. 850.01	CONCRETE APRON, REPAIRS SEE STD. 840.18	REMARKS
28+30	MD.	1		1	1		1	REPAIR CONC. APRON
33+88	MD.	2			1		1	REPAIR CONC. APRON
39+17	MD.	3			1		1	REPAIR CONC. APRON
43+16	MD.	4			1	8	1	REPAIR CONC. APRON & 10' PAVED DITCH
50+29	MD.	5					1	REPAIR CONC. APRON
78+90	MD.	6					1	REPAIR CONC. APRON
90+28	MD.	7					1	REPAIR CONC. APRON
99+87	MD.	8					1	REPAIR CONC. APRON
114+24	MD.	9			1			
123+13	MD.	10			1		1	REPAIR CONC. APRON
138+78	MD.	11					1	REPAIR CONC. APRON
142+87	MD.	12			1		1	REPAIR CONC. APRON
147+79	MD.	13					1	REPAIR CONC. APRON
175+87	MD.	14					1	REPAIR CONC. APRON
180+81	MD.	15			1		1	REPAIR CONC. APRON
199+48	MD.	16		1	1		1	REPAIR CONC. APRON
218+93	MD.	17			1			
223+28	MD.	18			1			
229+95	MD.	19			1		1	REPAIR CONC. APRON
237+57	MD.	20			1			
243+98	MD.	21			1			
275+24	MD.	22			1			
310+88	MD.	23			1	8		REPAIR 10' PAVED DITCH
GRAND TOTAL				2	15	16	16	

GUIDERAIL SUMMARY

CENTER MEDIAN	BEG. STA.	END STA.	LOCATION	LENGTH STRAIGHT	LENGTH SHOP CURVED	LENGTH DOUBLE FACED	ANCHORS CABLE ANCHOR	ANCHORS	REMOVE AND STOCKPILE EXISTING GUARDRAIL	EXTRA POSTS	REMARKS
L	33+70	79+28	MD.			4,558	6				
L	81+16	115+65	MD.			3,449	4				
L	117+55	185+55	MD.			6,800	8				
L	187+77	219+45	MD.			3,168	4				
L	221+33	241+39	MD.			2,006	4				
			TOTAL			19,981					
			SAY			20,000	26			5	

GUARDRAIL SUMMARY

CENTER MEDIAN	BEG. STA.	END STA.	LOCATION	LENGTH STRAIGHT	LENGTH SHOP CURVED	LENGTH DOUBLE FACED	ANCHORS	ANCHORS M-350	REMOVE AND STOCKPILE EXISTING GUARDRAIL	EXTRA POSTS	REMARKS
L	244+16.5	247+79.0	MD.	362.5				1			
L	245+66.5	247+79.0	MD.	212.5					50'		
L	247+79.0	290+79.0	MD.			4,300					
L	290+79.0	291+66.5	MD.	87.5					131'		
L	292+44.0	293+69.0	MD.	125					50'		
L	293+06.5	293+69.0	MD.	62.5					25'		
L	293+69.0	302+19.0	MD.			850					
L	302+19.0	303+06.5	MD.	87.5					180'		
L	308+35.0	311+10.0	MD.	275					30'		
L	308+72.5	311+10.0	MD.	237.5					25'		
L	311+10.0	319+97.5	MD.			887.5					
L	319+97.5	321+10.0	MD.	137.5					160		
			TOTAL	1,562.5		6,037.5			652'		
			SAY	1,600		6,075		1	660	5	

4/24/06
29-MAR-2010 14:28
R:\Roadway\Proj\W4715_rdy_sum.dgn
$$$$USERNAME$$$$

PROJECT REFERENCE NO.	SHEET NO.
W-5214A	4
R/W SHEET NO.	

ROADWAY DESIGN ENGINEER
NORTH CAROLINA PROFESSIONAL SEAL 33296 ENGINEER STEVEN D. KENDALL
S. D. Kendall 3-30-10

PI Sta 40+50.71
Δ = 104° 47' 25.2" (LT)
D = 2° 44' 52.8"
L = 3,813.33'
T = 2,706.95'
R = 2,085.00'

NOTE: ALL EXISTING PIPES AND STRUCTURES ARE NOT SHOWN. EXACT LOCATION TO BE DETERMINED IN FIELD DURING CONSTRUCTION.

29-MAR-2010 14:35
R:\Roadway\Proj\10025GR_Rdy_psh_04.dgn
$$$$USER NAME$$$$

8/17/99

PROJECT REFERENCE NO.	SHEET NO.
W-5214A	5
R/W SHEET NO.	
ROADWAY DESIGN	

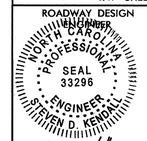

S D. Kendall
3-30-10

NOTE: ALL EXISTING PIPES AND STRUCTURES ARE NOT SHOWN. EXACT LOCATION TO BE DETERMINED IN FIELD DURING CONSTRUCTION.

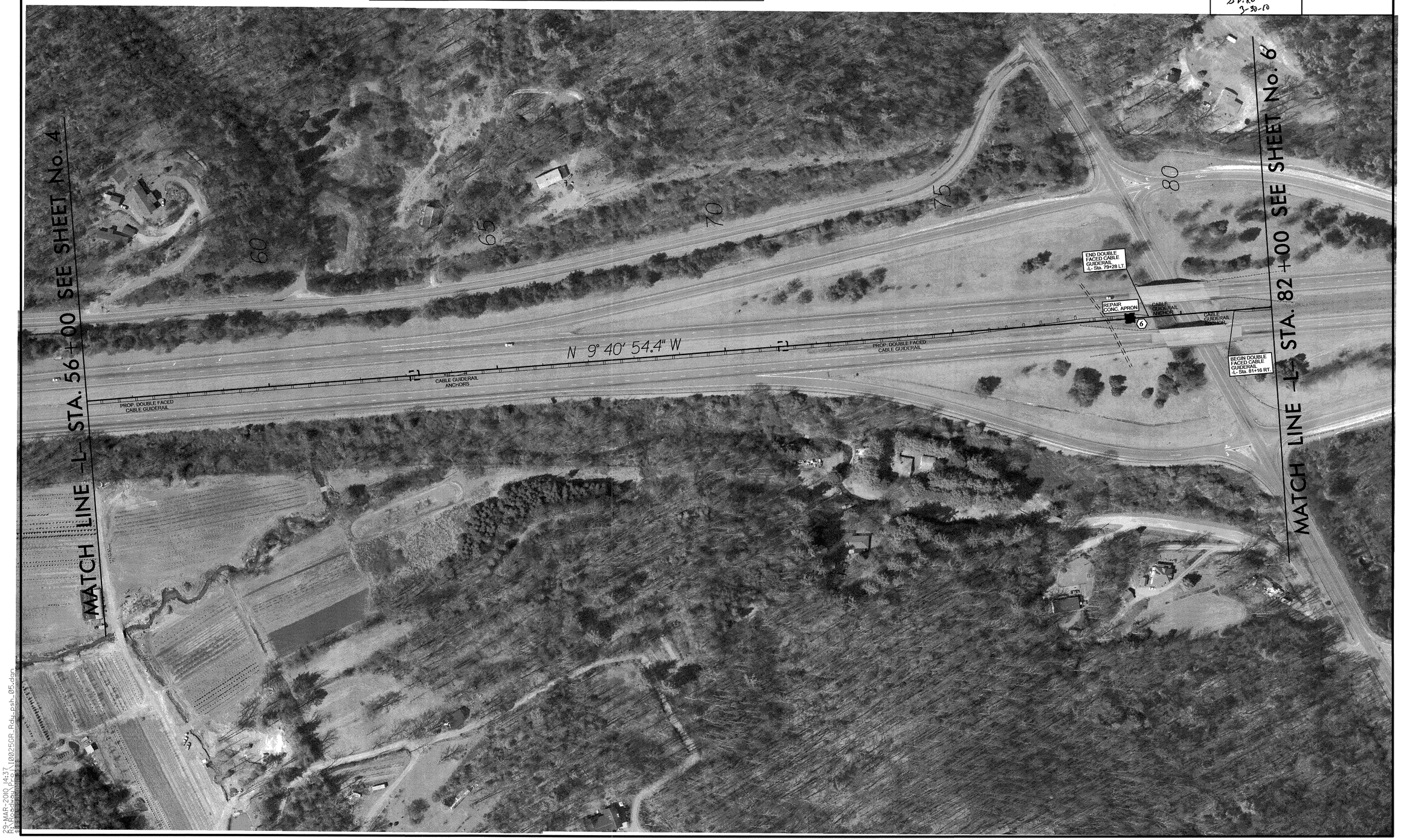

29-MAR-2010 14:37
R:\Roadway\Proj\W0025GR_Rdy_psh_05.dgn

8/17/99

PI Sta 117+26.91
△ = 11° 26' 58.4" (RT)
D = 0° 31' 15.1"
L = 2,198.16'
T = 1,102.75'
R = 11,000.00'

NOTE: ALL EXISTING PIPES AND STRUCTURES ARE NOT SHOWN. EXACT LOCATION TO BE DETERMINED IN FIELD DURING CONSTRUCTION.

PROJECT REFERENCE NO.	SHEET NO.
W-5214A	6
R/W SHEET NO.	

ROADWAY DESIGN ENGINEER

NORTH CAROLINA PROFESSIONAL SEAL 33296 ENGINEER STEVEN D. KENDALL

D.D. Kendall 3-30-10

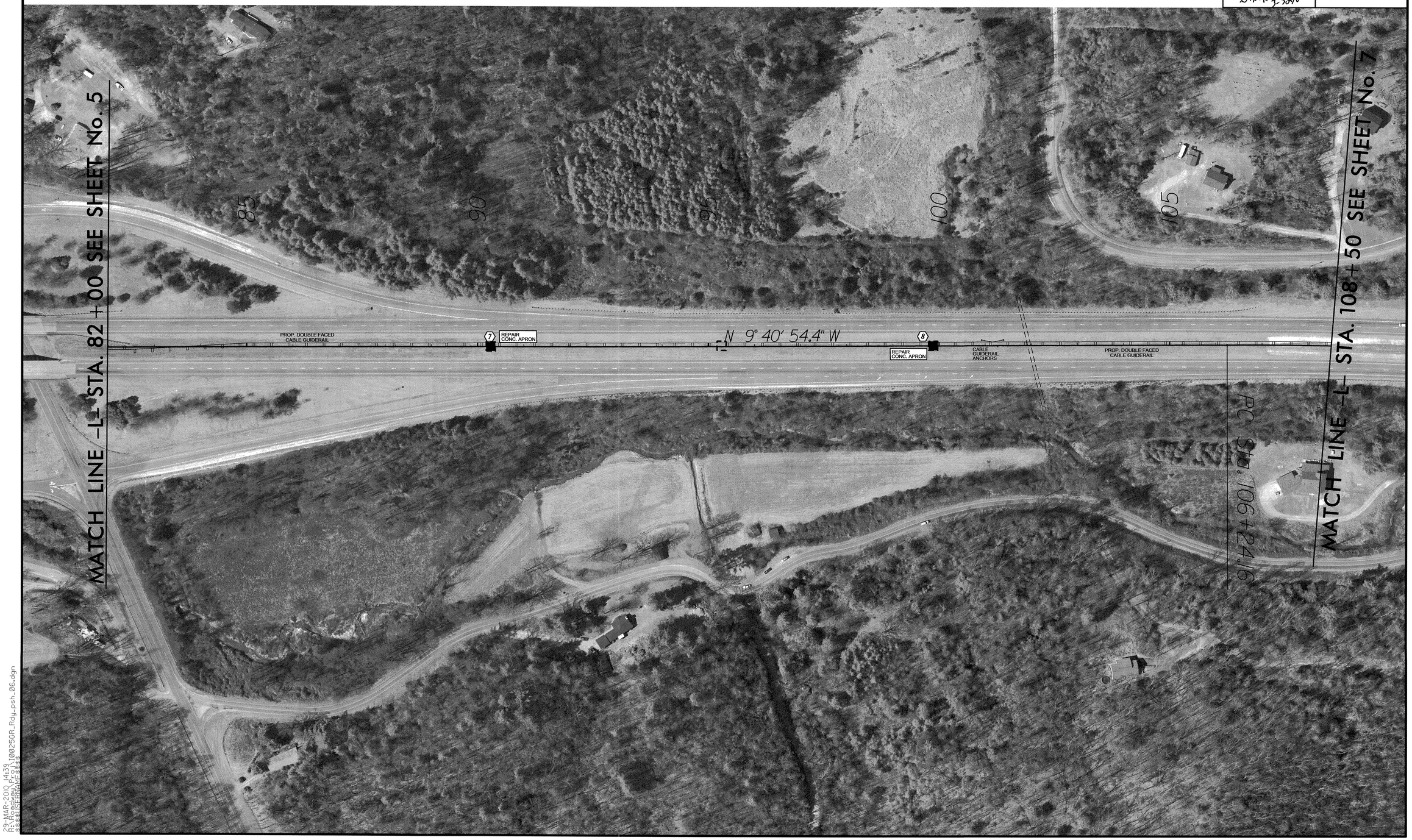

29-MAR-2010 14:39
R:\Roadway\Proj\I00256R_Rdy_psh_06.dgn
$$$$USERNAME$$$$

PROJECT REFERENCE NO.	SHEET NO.
W-5214A	7
R/W SHEET NO.	

ROADWAY DESIGN ENGINEER

NORTH CAROLINA PROFESSIONAL SEAL 33296 ENGINEER STEVEN D. KENDALL

S.D. Kendall 3-30-10

PI Sta 117+26.91
△ = 11° 26′ 58.4″ (RT)
D = 0° 31′ 15.1″
L = 2,198.16′
T = 1,102.75′
R = 11,000.00′

PI Sta 144+33.81
△ = 49° 22′ 21.7″ (RT)
D = 2° 13′ 14.8″
L = 2,223.23′
T = 1,185.92′
R = 2,580.00′

NOTE: ALL EXISTING PIPES AND STRUCTURES ARE NOT SHOWN. EXACT LOCATION TO BE DETERMINED IN FIELD DURING CONSTRUCTION.

29-MAR-2010 15:23
R:\Roadway\Proj\10025GR_Rdy_psh_07.dgn
$$$$USERNAME$$$$

PROJECT REFERENCE NO.	SHEET NO.
W-5214A	8
R/W SHEET NO.	
ROADWAY DESIGN ENGINEER	1

NORTH CAROLINA PROFESSIONAL SEAL 33296 ENGINEER STEVEN D. KENDALL

S.D. Kendall 3-30-10

PI Sta 144+33.81
Δ = 49° 22' 21.7" (RT)
D = 2° 13' 14.8"
L = 2,223.23'
T = 1,185.92'
R = 2,580.00'

PI Sta 166+40.65
Δ = 43° 23' 20.8" (LT)
D = 2° 59' 31.0"
L = 1,450.20'
T = 761.86'
R = 1,915.00'

NOTE: ALL EXISTING PIPES AND STRUCTURES ARE NOT SHOWN. EXACT LOCATION TO BE DETERMINED IN FIELD DURING CONSTRUCTION.

8/17/99

29-MAR-2010 14:42
R:\Roadway\Proj\10025GR_Rdy_psh_08.dgn
$$$$USER$$$$

8/17/99

PROJECT REFERENCE NO.	SHEET NO.
W-5214A	9
R/W SHEET NO.	

ROADWAY DESIGN ENGINEER

NORTH CAROLINA PROFESSIONAL SEAL 33296 ENGINEER HELEN D. KENDALL

D.D. Kendall 3-30-10

PI Sta 166+40.65
△ = 43° 23' 20.8" (LT)
D = 2° 59' 31.0"
L = 1,450.20'
T = 761.86'
R = 1,915.00'

NOTE: ALL EXISTING PIPES AND STRUCTURES ARE NOT SHOWN. EXACT LOCATION TO BE DETERMINED IN FIELD DURING CONSTRUCTION.

29-MAR-2010 14:44
R:\Roadway\Proj\10025GR_Rdy_psh_09.dgn
$$$$USERNAME$$$$

PI Sta 192+16.98
△ = 14° 13′ 38.6″ (RT)
D = 2° 39′ 53.7″
L = 533.88′
T = 268.32′
R = 2,150.00′

PI Sta 206+23.38
△ = 39° 51′ 27.2″ (RT)
D = 1° 59′ 31.9″
L = 2,000.68′
T = 1,042.73′
R = 2,876.00′

NOTE: ALL EXISTING PIPES AND STRUCTURES ARE NOT SHOWN. EXACT LOCATION TO BE DETERMINED IN FIELD DURING CONSTRUCTION.

PROJECT REFERENCE NO.	SHEET NO.
W-5214A	10
R/W SHEET NO.	

ROADWAY DESIGN ENGINEER

NORTH CAROLINA PROFESSIONAL SEAL 33296 ENGINEER STEVEN D. KENDALL

3-29-10

8/17/99

29-MAR-2010 14:45
R:\Roadway\Proj\I00425GR_Rdy_psh_10.dgn
$$$$USERNAME$$$$

PROJECT REFERENCE NO.	SHEET NO.
W-5214A	11
R/W SHEET NO.	
ROADWAY DESIGN ENGINEER	

NORTH CAROLINA PROFESSIONAL SEAL 33296 ENGINEER STEVEN D. KENDALL

PI Sta 206+23.38
△ = 39° 51′ 27.2″ (RT)
D = 1° 59′ 31.9″
L = 2,000.68′
T = 1,042.73′
R = 2,876.00′

NOTE: LOCATION OF ALL EXISTING PIPES AND STRUCTURES ARE ONLY APPROXIMATE. EXACT LOCATION TO BE DETERMINED IN FIELD DURING CONSTRUCTION.

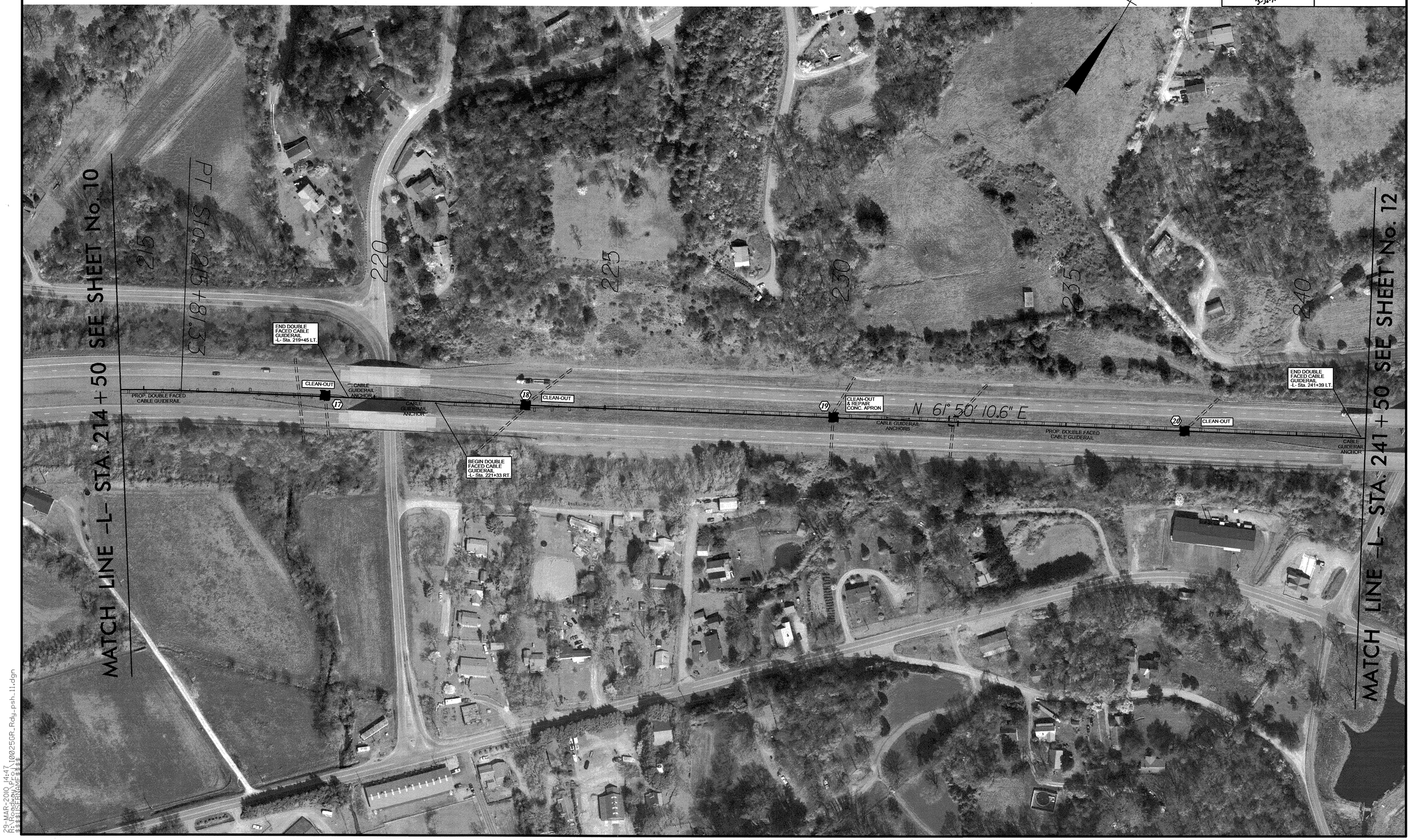

8/17/99

29-MAR-2000 14:47
R:\Roadway\Proj\I0025GR_Rdg_psh_11.dgn
$$$$USERNAME$$$$

PROJECT REFERENCE NO.	SHEET NO.
W-5214A	12
R/W SHEET NO.	

ROADWAY DESIGN ENGINEER
NORTH CAROLINA PROFESSIONAL SEAL 33296 ENGINEER STEVEN D. KENDALL
3-30-10

PI Sta 253+63.26
△ = 14° 06' 57.8" (LT)
D = 1° 54' 35.5"
L = 739.12'
T = 371.44'
R = 3,000.00'

PI Sta 265+83.63
△ = 18° 43' 52.1" (RT)
D = 2° 17' 30.6"
L = 817.30'
T = 412.33'
R = 2,500.00'

NOTE: LOCATION OF ALL EXISTING PIPES AND STRUCTURES ARE ONLY APPROXIMATE. EXACT LOCATION TO BE DETERMINED IN FIELD DURING CONSTRUCTION.

29-MAR-2010 14:49
R:\Roadway\Proj\10025GR_Rdy_psh_12.dgn
$$$$USERNAME$$$$

PROJECT REFERENCE NO.	SHEET NO.
W-5214A	13
R/W SHEET NO.	

ROADWAY DESIGN ENGINEER

NORTH CAROLINA PROFESSIONAL SEAL 33296 ENGINEER STEVEN D. KENDALL

S. D. Kendall 3-30-10

PI Sta 283+17.29
△ = 29° 18' 51.8" (LT)
D = 1° 58' 32.6"
L = 1,483.73'
T = 758.49'
R = 2,900.00'

PI Sta 302+83.94
△ = 33° 43' 24.5" (RT)
D = 2° 56' 17.7"
L = 1,147.74'
T = 591.03'
R = 1,950.00'

NOTE: LOCATION OF ALL EXISTING PIPES AND STRUCTURES ARE ONLY APPROXIMATE. EXACT LOCATION TO BE DETERMINED IN FIELD DURING CONSTRUCTION.

29-MAR-2010 14:50
R:\Roadway\Proj\10025GR_Rdy_psh_13.dgn
$$$$USERNAME$$$$

8/17/99

PROJECT REFERENCE NO.	SHEET NO.
W-5214A	14
R/W SHEET NO.	
ROADWAY DESIGN ENGINEER	1

NORTH CAROLINA PROFESSIONAL SEAL 33296 ENGINEER STEVEN D. KENDALL
S. D. Kendall 7-30-10

PI Sta 302+83.94
Δ = 33° 43′ 24.5″ (RT)
D = 2° 56′ 17.7″
L = 1,147.74′
T = 591.03′
R = 1,950.00′

PI Sta 309+75.54
Δ = 4° 03′ 57.6″ (LT)
D = 1° 30′ 28.0″
L = 269.67′
T = 134.89′
R = 3,800.00′

PI Sta 317+87.38
Δ = 65° 08′ 08.6″ (LT)
D = 5° 24′ 18.9″
L = 1,205.04′
T = 677.06′
R = 1,060.00′

NOTE: LOCATION OF ALL EXISTING PIPES AND STRUCTURES ARE ONLY APPROXIMATE. EXACT LOCATION TO BE DETERMINED IN FIELD DURING CONSTRUCTION.

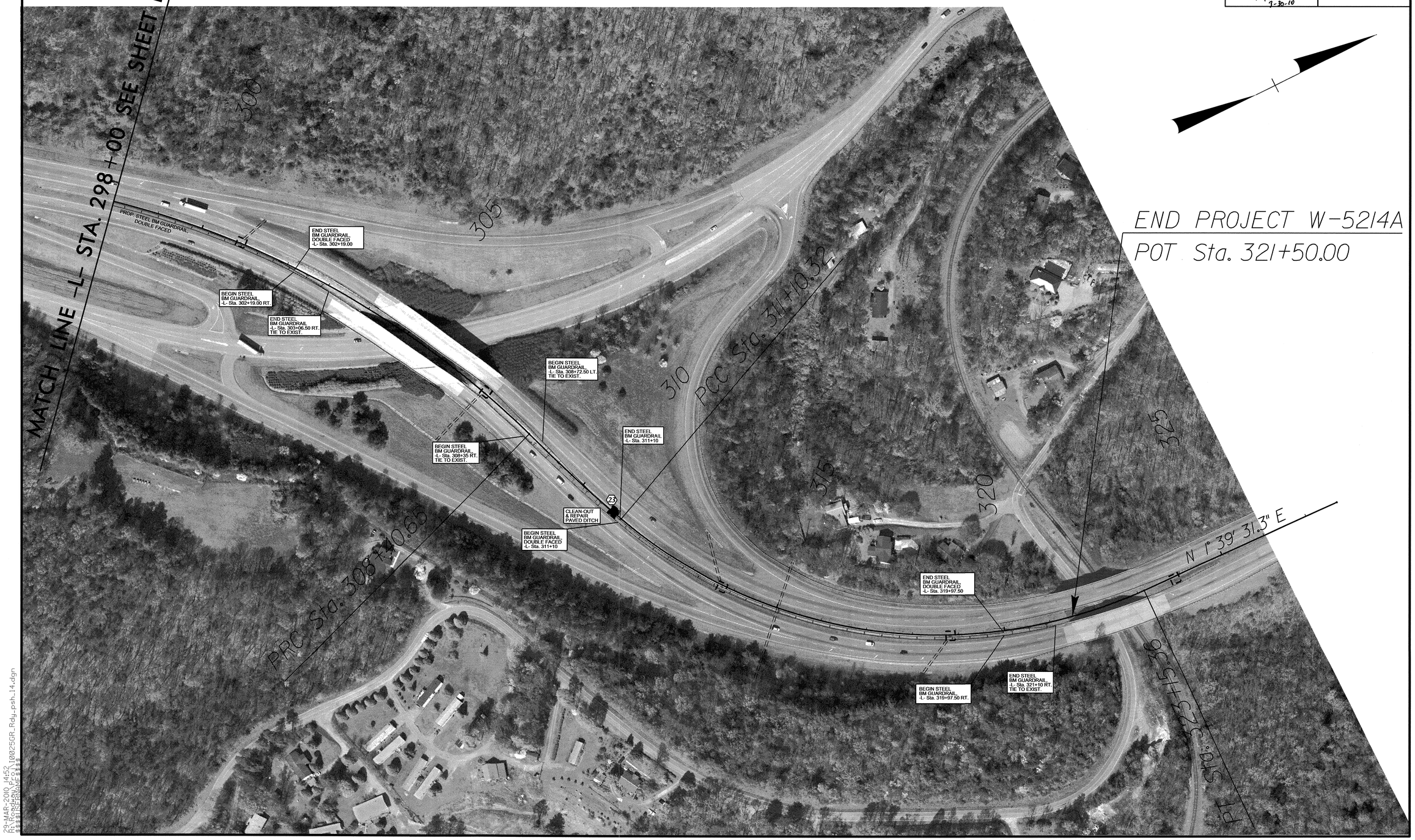

29-MAR-2010 14:52
R:\Roadway\Proj\100250R_Rdy_psh_14.dgn
$$$$USERNAME$$$$