09/08/99

TIP PROJECT: B-4517

CONTRACT: C202378

STRUCTURE

STATE OF NORTH CAROLINA
DIVISION OF HIGHWAYS

GASTON COUNTY

STATE	STATE PROJECT REFERENCE NO.	SHEET NO.	TOTAL SHEETS
N.C.	B-4517		

STATE PROJ. NO.	F.A. PROJ. NO.	DESCRIPTION
33741.1.1	BRSTP-1103(15)	PE
33741.2.1	BRSTP-1103(15)	R/W & UTIL
33741.3.1	BRSTP-1103(15)	CONSTRUCTION

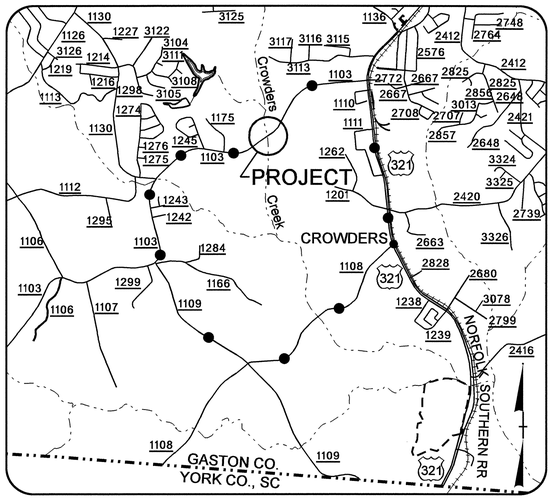

VICINITY MAP

DETOUR ROUTE

LOCATION: BRIDGE NO. 49 OVER CROWDERS CREEK ON SR 1103

TYPE OF WORK: GRADING, PAVING, DRAINAGE, AND STRUCTURE

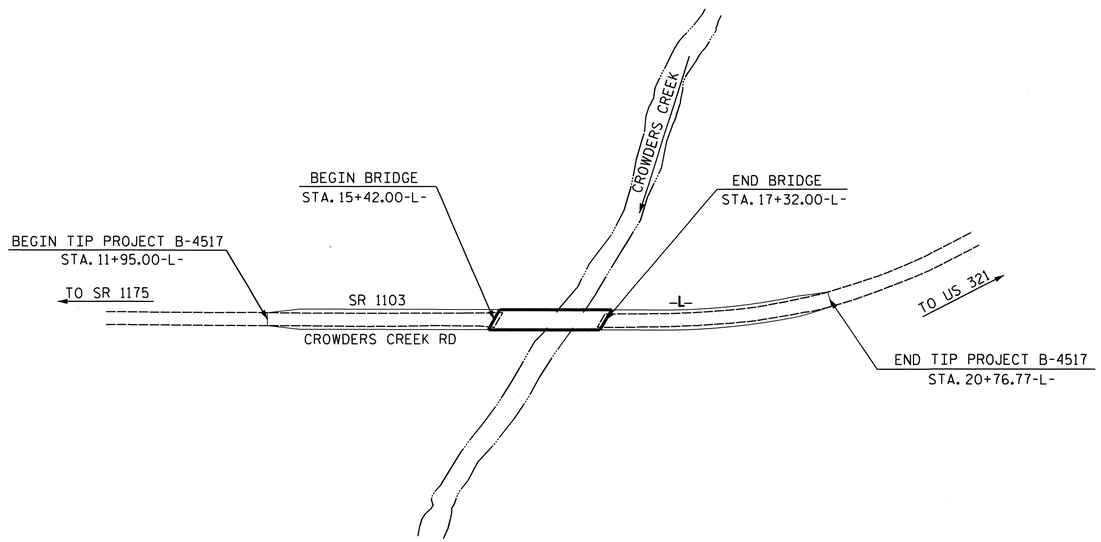

STATE OF NORTH CAROLINA DEPARTMENT OF TRANSPORTATION

DESIGN DATA

ADT 2010 = 8,674
ADT 2030 = 14,600
DHV = 10 %
D = 60 %
T = 4 % *
**V = 60 MPH
* TTST 1% DUAL 3%
** DESIGN EXCEPTION
FUNC. CLASS = URBAN COLLECTOR

PROJECT LENGTH

LENGTH ROADWAY TIP PROJECT B-4517	=	0.131 MILES
LENGTH STRUCTURE TIP PROJECT B-4517	=	0.036 MILES
TOTAL LENGTH TIP PROJECT B-4517	=	0.167 MILES

Prepared in the Office of:
DIVISION OF HIGHWAYS
1000 Birch Ridge Dr., Raleigh NC, 27610

2006 STANDARD SPECIFICATIONS

LETTING DATE:
APRIL 20, 2010

J. M. BAILEY, P.E.
PROJECT ENGINEER

B. D. KLAPPENBACH, P.E.
PROJECT DESIGN ENGINEER

STRUCTURE DESIGN UNIT
1000 Birch Ridge Dr.
Raleigh NC, 27610

DIVISION OF HIGHWAYS
STATE OF NORTH CAROLINA

P.E.
STATE HIGHWAY DESIGN ENGINEER

DEPARTMENT OF TRANSPORTATION
FEDERAL HIGHWAY ADMINISTRATION

APPROVED
DIVISION ADMINISTRATOR DATE

25-FEB-2010 10:01
$$$

F. A. PROJECT: BRSTP-1103(15)

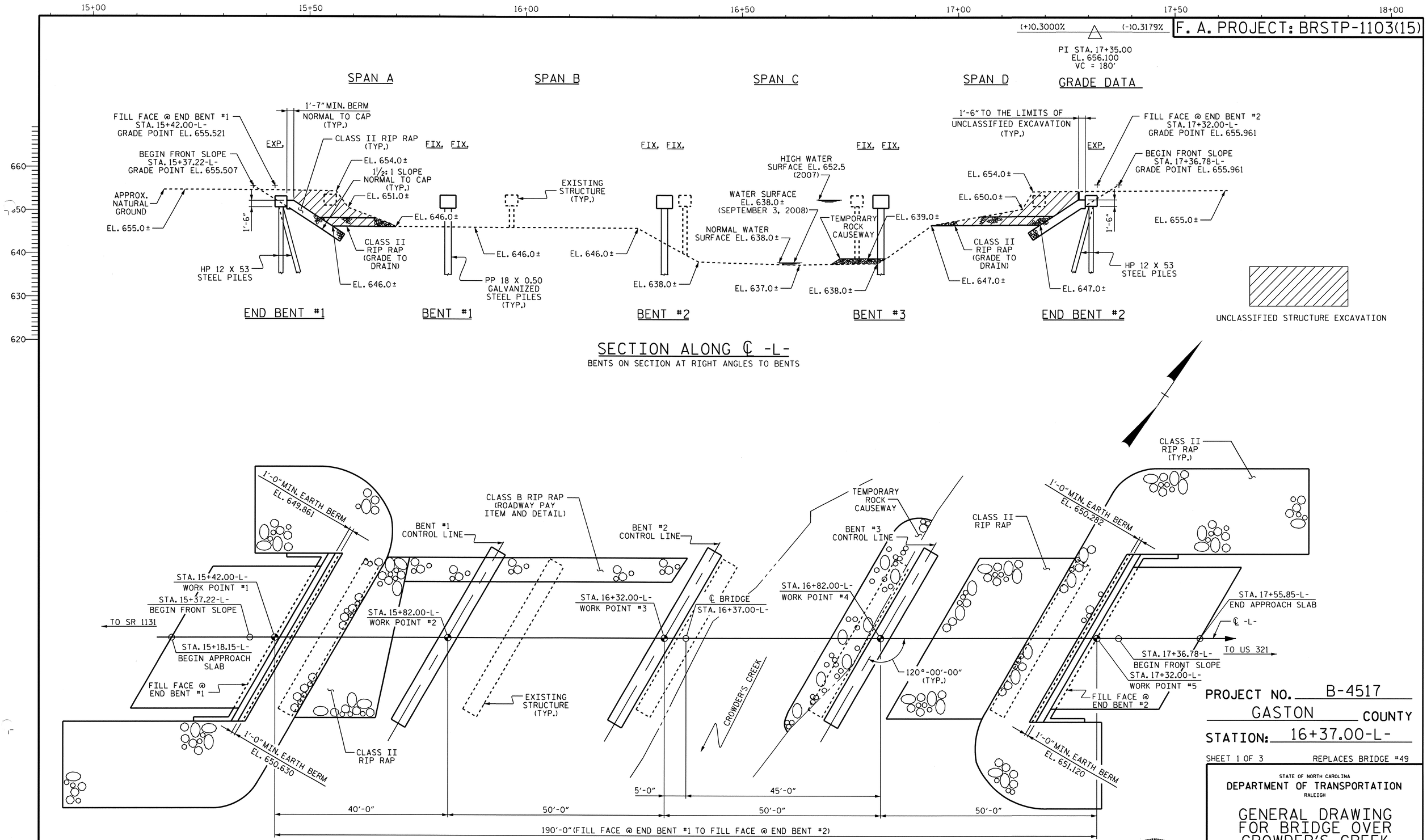

PLAN

PILES NOT SHOWN FOR CLARITY

PROJECT NO. B-4517

GASTON COUNTY

STATION: 16+37.00-L-

SHEET 1 OF 3 REPLACES BRIDGE #49

STATE OF NORTH CAROLINA
DEPARTMENT OF TRANSPORTATION
RALEIGH

GENERAL DRAWING FOR BRIDGE OVER CROWDER'S CREEK ON SR 1103 BETWEEN SR 1175 AND US 321

REVISIONS							SHEET NO.
NO.	BY:	DATE:	NO.	BY:	DATE:		S-1
1			3				TOTAL SHEETS
2			4				31

NORTH CAROLINA PROFESSIONAL SEAL 022506 ENGINEER JESSE C. McARTHUR-BAILEY

NORTH CAROLINA PROFESSIONAL SEAL 16828 ENGINEER BRUCE D. KLAPPENBACH

DRAWN BY : M. G. SHAIKH DATE : 12-23-09
CHECKED BY : C. R. YARBROUGH DATE : 1-09

01-MAR-2010 11:21
r:\structures\mshaikh\microstation\b-4517_sd_gd.dgn
bklappenbach

NCDOS

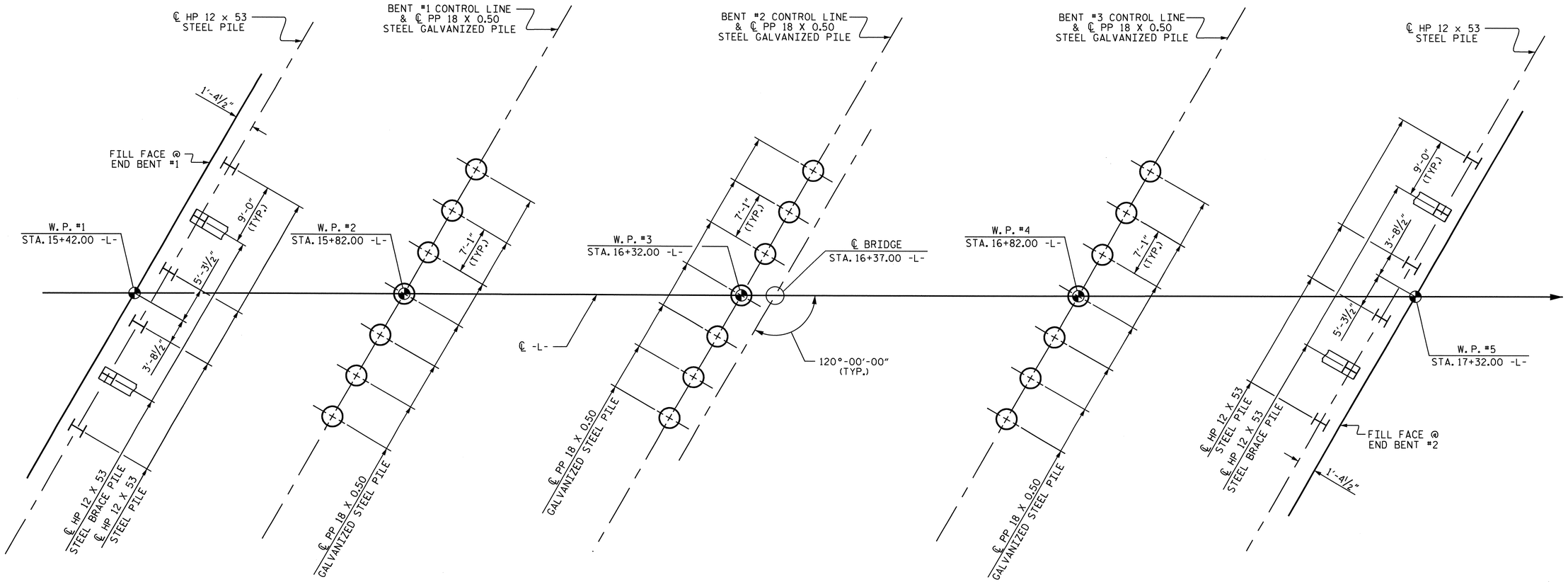

FOUNDATION LAYOUT

DIMENSIONS LOCATING END BENT AND BENT PILES ARE TO THE PILE CENTERLINE.

ALL BRACE PILES IN END BENTS ARE BATTERED 3:12.

NOTES

FOR PILES, SEE SPECIAL PROVISIONS.

PILES AT END BENT NO. 1 ARE DESIGNED FOR A FACTORED RESISTANCE OF 75 TONS PER PILE. DRIVE PILES TO A REQUIRED DRIVING RESISTANCE OF 125 TONS PER PILE.

PILES AT BENT NO. 1 ARE DESIGNED FOR A FACTORED RESISTANCE OF 130 TONS PER PILE. DRIVE PILES TO A REQUIRED DRIVING RESISTANCE OF 217 TONS PER PILE.

INSTALL PILES AT BENT NO. 1 TO A TIP ELEVATION NO HIGHER THAN 581.1 FT. (LT), 598.6 FT. (RT).

THE SCOUR CRITICAL ELEVATION FOR BENT NO. 1 IS ELEVATION 620 FT. SCOUR CRITICAL ELEVATIONS ARE USED TO MONITOR POSSIBLE SCOUR PROBLEMS DURING THE LIFE OF THE STRUCTURE.

PILES AT BENT NO. 2 ARE DESIGNED FOR A FACTORED RESISTANCE OF 130 TONS PER PILE. DRIVE PILES TO A REQUIRED DRIVING RESISTANCE OF 217 TONS PER PILE.

INSTALL PILES AT BENT NO. 2 TO A TIP ELEVATION NO HIGHER THAN 615 FT.

THE SCOUR CRITICAL ELEVATION FOR BENT NO. 2 IS ELEVATION 611 FT. SCOUR CRITICAL ELEVATIONS ARE USED TO MONITOR POSSIBLE SCOUR PROBLEMS DURING THE LIFE OF THE STRUCTURE.

PILES AT BENT NO. 3 ARE DESIGNED FOR A FACTORED RESISTANCE OF 130 TONS PER PILE. DRIVE PILES TO A REQUIRED DRIVING RESISTANCE OF 216.7 TONS PER PILE.

INSTALL PILES AT BENT NO. 3 TO A TIP ELEVATION NO HIGHER THAN 609.1 FT. (LT), 599.3 (RT).

THE SCOUR CRITICAL ELEVATION FOR BENT NO. 3 IS ELEVATION 614 FT. SCOUR CRITICAL ELEVATIONS ARE USED TO MONITOR POSSIBLE SCOUR PROBLEMS DURING THE LIFE OF THE STRUCTURE.

PILES AT END BENT NO. 2 ARE DESIGNED FOR A FACTORED RESISTANCE OF 85 TONS PER PILE. DRIVE PILES TO A REQUIRED DRIVING RESISTANCE OF 142 TONS PER PILE.

NORTH CAROLINA PROFESSIONAL SEAL 15825 ENGINEER BRUCE D. KLAPPENBACH
2-26-2010

PROJECT NO. B-4517
GASTON COUNTY
STATION: 16+37.00 -L-

SHEET 2 OF 3

STATE OF NORTH CAROLINA
DEPARTMENT OF TRANSPORTATION
RALEIGH

GENERAL DRAWING FOR BRIDGE OVER CROWDER'S CREEK ON SR 1103 BETWEEN SR 1175 AND US 321

REVISIONS						SHEET NO.
NO.	BY:	DATE:	NO.	BY:	DATE:	S-2
1			3			TOTAL SHEETS
2			4			31

DRAWN BY : M. G. SHAIKH DATE : 12-23-09
CHECKED BY : B. D. KLAPPENBACH DATE : 01-05-10

25-FEB-2010 10:50
r:\structures\mshaikh\microstation\b-4517_sd_gd.dgn
mshaikh

BENCH MARK #2: CHISELED SQUARE IN S.W. CORNER ON TOP OF CONC. FORCED SEWER BOX 197' LEFT OF STA. 19+08.00 -L-, EL. = 647.93'

HYDRAULIC DATA

DESIGN DISCHARGE	= 8300 C.F.S.
FREQUENCY OF DESIGN FLOOD	= 50 YR.
DESIGN HIGH WATER ELEVATION	= 653.3
DRAINAGE AREA	= 36.2 SQ. MI.
BASIC DISCHARGE (Q100)	= 9100 C.F.S.
BASIC HIGH WATER ELEVATION	= 653.9

OVERTOPPING FLOOD DATA

OVERTOPPING DISCHARGE	= 15000± C.F.S.
FREQUENCY OF OVERTOPPING FLOOD	= 500 YR.±
OVERTOPPING FLOOD ELEVATION	= 655.0

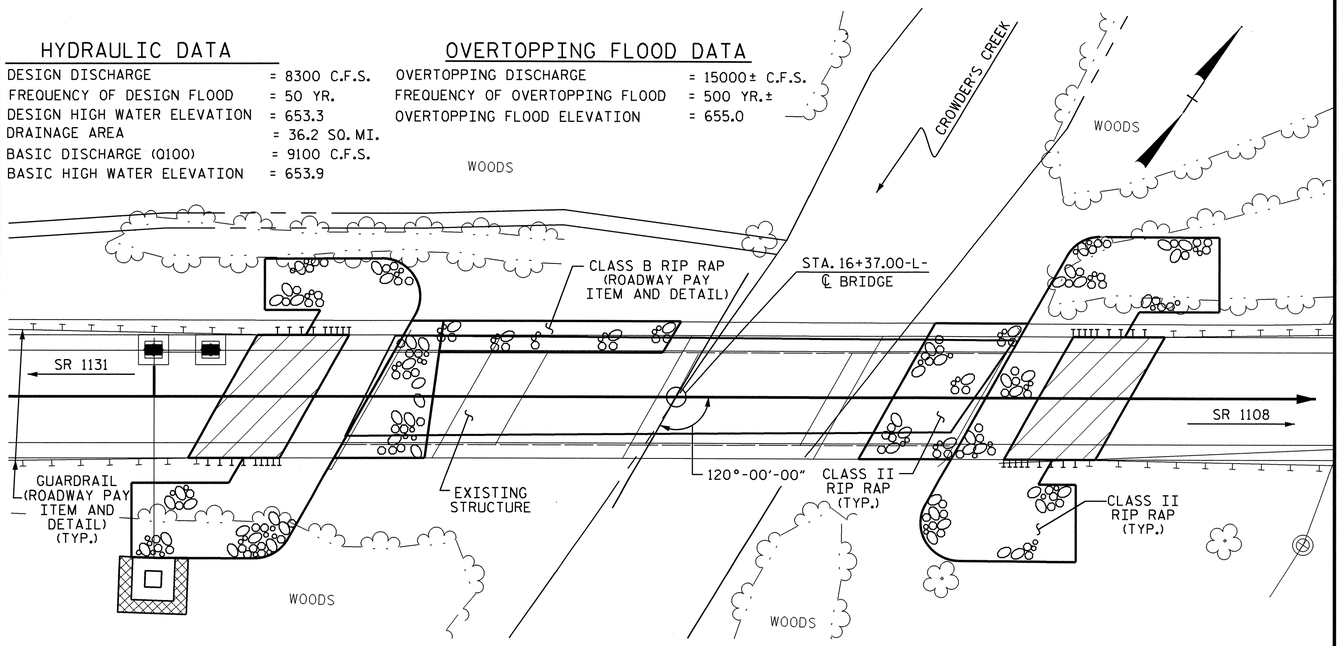

NOTE: FOR UTILITY INFORMATION, SEE UTILITY PLANS AND SPECIAL PROVISIONS.

LOCATION SKETCH

NOTES

ASSUMED LIVE LOAD = HL 93 OR ALTERNATE LOADING.

FOR OTHER DESIGN DATA AND GENERAL NOTES, SEE SHEET SN.

FOR EROSION CONTROL MEASURES SEE EROSION CONTROL PLANS.

THIS BRIDGE HAS BEEN DESIGNED IN ACCORDANCE WITH THE AASHTO LRFD BRIDGE DESIGN SPECIFICATIONS.

REMOVAL OF THE EXISTING BRIDGE SHALL BE PERFORMED SO AS NOT TO ALLOW DEBRIS TO FALL INTO THE WATER. THE CONTRACTOR SHALL REMOVE THE BRIDGE AND SUBMIT PLANS FOR DEMOLITION IN ACCORDANCE WITH ARTICLE 402-2 OF THE STANDARD SPECIFICATIONS.

THE MATERIAL SHOWN IN THE CROSS-HATCHED AREA SHALL BE EXCAVATED FOR A DISTANCE OF 40 FT. EACH SIDE OF CENTERLINE ROADWAY AS DIRECTED BY THE ENGINEER. THIS WORK WILL BE PAID FOR AT THE CONTRACT LUMP SUM PRICE FOR UNCLASSIFIED STRUCTURE EXCAVATION. SEE SECTION 412 OF THE STANDARD SPECIFICATIONS.

THE SUBSTRUCTURE OF THE EXISTING BRIDGE INDICATED ON THE PLANS IS FROM THE BEST INFORMATION AVAILABLE. SINCE THIS INFORMATION IS SHOWN FOR THE CONVENIENCE OF THE CONTRACTOR, THE CONTRACTOR SHALL HAVE NO CLAIM WHATSOEVER AGAINST THE DEPARTMENT OF TRANSPORTATION FOR ANY DELAYS OR ADDITIONAL COST INCURRED BASED ON DIFFERENCES BETWEEN THE EXISTING BRIDGE SUBSTRUCTURE SHOWN ON THE PLANS AND THE ACTUAL CONDITIONS AT THE PROJECT SITE.

THIS STRUCTURE HAS BEEN DESIGNED IN ACCORDANCE WITH HEC 18, "EVALUATING SCOUR AT BRIDGES", MAY, 2001.

THE CONTRACTOR SHALL PROVIDE INDEPENDENT ASSURANCE SAMPLES OF REINFORCING STEEL AS FOLLOWS: FOR PROJECTS REQUIRING UP TO 400 TONS OF REINFORCING STEEL, ONE 30 INCH SAMPLE OF EACH SIZE BAR USED, AND FOR PROJECTS REQUIRING OVER 400 TONS OF REINFORCING STEEL, TWO 30 INCH SAMPLES OF EACH SIZE BAR USED. THE BARS FROM WHICH THE SAMPLES ARE TAKEN MUST THEN BE SPLICED WITH REPLACEMENT BARS OF THE SIZE AND LENGTH OF THE SAMPLE, PLUS A MINIMUM LAP SPLICE OF THIRTY BAR DIAMETERS.

INASMUCH AS THE PAINT SYSTEM ON THE EXISTING STRUCTURAL STEEL CONTAINS LEAD, THE CONTRACTOR'S ATTENTION IS DIRECTED TO ARTICLE 107-1 OF THE STANDARD SPECIFICATIONS. ANY COSTS RESULTING FROM COMPLIANCE WITH APPLICABLE STATE OR FEDERAL REGULATIONS PERTAINING TO HANDLING OF MATERIALS CONTAINING LEAD BASED PAINT SHALL BE INCLUDED IN THE BID PRICE FOR "REMOVAL OF EXISTING STRUCTURE AT STATION 16+37.00 -L-."

AT THE CONTRACTOR'S OPTION, AND UPON REMOVAL OF THE CAUSEWAY, THE CLASS II RIP RAP USED IN THE CAUSEWAY MAY BE PLACED AS RIP RAP SLOPE PROTECTION. SEE SPECIAL PROVISIONS FOR CONSTRUCTION, MAINTENANCE AND REMOVAL OF TEMPORARY ACCESS AT STATION 16+37.00 -L-.

FOR SUBMITTAL OF WORKING DRAWINGS, SEE SPECIAL PROVISIONS.

FOR FALSEWORK AND FORMWORK, SEE SPECIAL PROVISIONS.

FOR CRANE SAFETY, SEE SPECIAL PROVISIONS.

FOR PRESTRESSED CONCRETE MEMBERS, SEE SPECIAL PROVISIONS.

THE EXISTING STRUCTURE CONSISTING OF 4 SPANS (1 @ 40'-5", 1 @ 40'-0", 1 @ 40'-3", AND 1 @ 40'-2"), WITH A 5.75" REINFORCED CONCRETE SLAB ON 4 LINES OF STEEL I-BEAMS AND A CLEAR ROADWAY WIDTH OF 24', ON CONCERETE CAPS AND TIMBER PILES AT THE END BENTS AND INTERIOR BENTS, LOCATED AT THE SAME LOCATION AS THE PROPOSED STRUCTURE, SHALL BE REMOVED. THE EXISTING BRIDGE IS PRESENTLY POSTED BELOW THE LEGAL LOAD LIMIT. SHOULD THE STRUCTURAL INTEGRITY OF THE BRIDGE FURTHER DETERIORATE, THIS LOAD LIMITATION MAY BE REDUCED AS FOUND NECESSARY DURING THE LIFE OF THE PROJECT.

FOR CURING CONCRETE, SEE SPECIAL PROVISIONS.

FOR CONCRETE WEARING SURFACE, SEE SPECIAL PROVISIONS.

FOR GROUT FOR STRUCTURES, SEE SPECIAL PROVISIONS.

FOR CONSTRUCTION, MAINTENANCE AND REMOVAL OF TEMPORARY ACCESS AT STA. 16+37.00 -L-, SEE SPECIAL PROVISIONS.

FOR VERTICAL CONCRETE BARRIER RAIL, SEE SPECIAL PROVISIONS.

FOR INTERIOR BENT 1, 2, AND 3, ONLY PARTIAL GALVANIZING OF THE PILES IS REQUIRED. SEE INTERIOR BENT SHEETS FOR DETAILS.

TOTAL BILL OF MATERIAL

	CONSTRUCTION, MAINTENANCE AND REMOVAL OF TEMPORARY ACCESS	REMOVAL OF EXISTING STRUCTURE	UNCLASSIFIED STRUCTURE EXCAVATION	CONCRETE WEARING SURFACE	GROOVING BRIDGE FLOORS	CLASS A CONCRETE	BRIDGE APPROACH SLABS	REINFORCING STEEL	HP 12 X 53 STEEL PILES		PP 18 X 0.50 GALVANIZED STEEL PILES		VERTICAL CONCRETE BARRIER RAIL	RIP RAP CLASS II (2'-0" THICK)	FILTER FABRIC FOR DRAINAGE	ELASTOMERIC BEARINGS	EVAZOTE JOINT SEALS	3'-0" X 1'-9" PRESTRESSED CONCRETE CORED SLABS	
	LUMP SUM	LUMP SUM	LUMP SUM	SQ.FT.	SQ. FT.	CU.YDS.	LUMP SUM	LBS.	NO.	LIN.FT.	NO.	LIN.FT.	LIN.FT.	TONS	SQ.YDS.	LUMP SUM	LUMP SUM	NO.	LIN. FT.
SUPERSTRUCTURE				6305	7226		LUMP SUM						374.80			LUMP SUM	LUMP SUM	48	2243.5
END BENT NO.1						16.2		2411	6	270				330	370				
BENT NO.1						15.0		2463			7	455							
BENT NO.2						15.0		2463			7	350							
BENT NO.3						15.0		2463			7	350							
END BENT NO.2						16.1		2436	6	300				350	385				
TOTAL	LUMP SUM	LUMP SUM	LUMP SUM	6305	7226	77.3	LUMP SUM	12236	12	570	21	1155	374.80	680	755	LUMP SUM	LUMP SUM	48	2243.5

PROJECT NO. B-4517

GASTON COUNTY

STATION: 16+37.00-L-

SHEET 3 OF 3

STATE OF NORTH CAROLINA
DEPARTMENT OF TRANSPORTATION
RALEIGH

GENERAL DRAWING FOR BRIDGE OVER CROWDER'S CREEK ON SR 1103 BETWEEN SR 1175 AND US 321

NORTH CAROLINA PROFESSIONAL SEAL 15825 ENGINEER BRUCE D. KLAPPENBACH 2-26-2010

REVISIONS						SHEET NO.
NO.	BY:	DATE:	NO.	BY:	DATE:	S-3
1			3			TOTAL SHEETS
2			4			31

DRAWN BY : M. G. SHAIKH DATE : 12-29-09
CHECKED BY : B. D. KLAPPENBACH DATE : 01-05-10

25-FEB-2010 10:50
r:\structures\mshaikh\microstation\b-4517_sd_gd.dgn
mshaikh

LOAD AND RESISTANCE FACTOR RATING (LRFR) SUMMARY FOR PRESTRESSED CONCRETE GIRDERS

LEVEL		VEHICLE	WEIGHT (W) (TONS)	CONTROLLING LOAD RATING (#)	MINIMUM RATING FACTORS (RF)	TONS = W X RF	STRENGTH I LIMIT STATE											SERVICE III LIMIT STATE						COMMENT NUMBER
								MOMENT					SHEAR						MOMENT					
							LIVELOAD FACTORS	DISTRIBUTION FACTORS (DF)	RATING FACTOR	SPAN	GIRDER LOCATION	DISTANCE FROM LEFT END OF SPAN (ft)	DISTRIBUTION FACTORS (DF)	RATING FACTOR	SPAN	GIRDER LOCATION	DISTANCE FROM LEFT END OF SPAN (ft)	LIVELOAD FACTORS	DISTRIBUTION FACTORS (DF)	RATING FACTOR	SPAN	GIRDER LOCATION	DISTANCE FROM LEFT END OF SPAN (ft)	
DESIGN LOAD RATING		HL-93(Inv)	N/A	1	1.112	--	1.75	0.251	1.11	B	EL	24.35	0.656	1.3	B	EL	2.435	0.80	0.251	1.15	B	EL	24.35	
		HL-93(Opr)	N/A	--	1.442	--	1.35	0.251	1.44	B	EL	24.35	0.656	1.68	B	EL	2.435	N/A	--	--	--	--	--	
		HS-20(Inv)	36.000	2	1.379	49.651	1.75	0.251	1.38	B	EL	24.35	0.655	1.55	D	EL	2.374	0.80	0.251	1.43	B	EL	24.35	
		HS-20(Opr)	36.000	--	1.788	64.362	1.35	0.251	1.79	B	EL	24.35	0.655	2.01	D	EL	2.374	N/A	--	--	--	--	--	
LEGAL LOAD RATING	SV	SNSH	13.500	--	2.899	39.132	1.4	0.251	3.5	B	EL	24.35	0.655	4.34	D	EL	2.374	0.80	0.251	2.90	B	EL	24.35	
		SNGARBS2	20.000	--	2.292	45.836	1.4	0.251	2.77	B	EL	24.35	0.655	3.17	D	EL	2.374	0.80	0.251	2.29	B	EL	24.35	
		SNAGRIS2	22.000	--	2.231	49.072	1.4	0.251	2.69	B	EL	24.35	0.655	2.97	D	EL	2.374	0.80	0.251	2.23	B	EL	24.35	
		SNCOTTS3	27.250	--	1.446	39.404	1.4	0.251	1.75	B	EL	24.35	0.655	2.17	D	EL	2.374	0.80	0.251	1.45	B	EL	24.35	
		SNAGGRS4	34.925	--	1.258	43.94	1.4	0.251	1.52	B	EL	24.35	0.655	1.86	D	EL	2.374	0.80	0.251	1.26	B	EL	24.35	
		SNS5A	35.550	--	1.227	43.613	1.4	0.251	1.48	B	EL	24.35	0.655	1.92	D	EL	2.374	0.80	0.251	1.23	B	EL	24.35	
		SNS6A	39.950	--	1.148	45.844	1.4	0.251	1.39	B	EL	24.35	0.655	1.77	D	EL	2.374	0.80	0.251	1.15	B	EL	24.35	
		SNS7B	42.000	--	1.094	45.933	1.4	0.251	1.32	B	EL	24.35	0.655	1.78	D	EL	2.374	0.80	0.251	1.09	B	EL	24.35	
	TTST	TNAGRIT3	33.000	--	1.406	46.398	1.4	0.251	1.7	B	EL	24.35	0.655	2.09	D	EL	2.374	0.80	0.251	1.41	B	EL	24.35	
		TNT4A	33.075	--	1.418	46.914	1.4	0.251	1.71	B	EL	24.35	0.655	2.01	D	EL	2.374	0.80	0.251	1.42	B	EL	24.35	
		TNT6A	41.600	--	1.182	49.167	1.4	0.251	1.43	B	EL	24.35	0.655	1.94	D	EL	2.374	0.80	0.251	1.18	B	EL	24.35	
		TNT7A	42.000	--	1.2	50.4	1.4	0.251	1.45	B	EL	24.35	0.655	1.8	D	EL	2.374	0.80	0.251	1.20	B	EL	24.35	
		TNT7B	42.000	--	1.251	52.541	1.4	0.251	1.51	B	EL	24.35	0.655	1.71	D	EL	2.374	0.80	0.251	1.25	B	EL	24.35	
		TNAGRIT4	43.000	--	1.187	51.056	1.4	0.251	1.43	B	EL	24.35	0.655	1.65	D	EL	2.374	0.80	0.251	1.19	B	EL	24.35	
		TNAGT5A	45.000	--	1.109	49.903	1.4	0.251	1.34	B	EL	24.35	0.655	1.67	D	EL	2.374	0.80	0.251	1.11	B	EL	24.35	
		TNAGT5B	45.000	3	1.086	48.884	1.4	0.251	1.31	B	EL	24.35	0.655	1.56	D	EL	2.374	0.80	0.251	1.09	B	EL	24.35	

LOAD FACTORS:

DESIGN LOAD RATING FACTORS	LIMIT STATE	γ_{DC}	γ_{DW}
	STRENGTH I	1.25	1.50
	SERVICE III	1.00	1.00

	YEAR	ADTT
CURRENT	2010	208
FUTURE	2030	350

NOTES:

MINIMUM RATING FACTORS ARE BASED ON THE STRENGTH I AND SERVICE III LIMIT STATES.

ALLOWABLE STRESSES FOR SERVICE III LIMIT STATE ARE AS REQUIRED FOR DESIGN.

COMMENTS:

1. SPAN B AND SPAN C ARE IDENTICAL.
2.
3.
4.

(#) CONTROLLING LOAD RATING

(1) DESIGN LOAD RATING (HL-93)

(2) DESIGN LOAD RATING (HS-20)

(3) LEGAL LOAD RATING **

** SEE CHART FOR VEHICLE TYPE

GIRDER LOCATION

I - INTERIOR GIRDER
EL - EXTERIOR LEFT GIRDER
ER - EXTERIOR RIGHT GIRDER

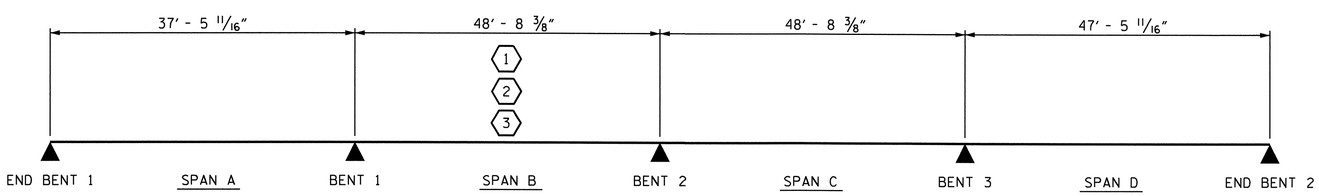

LRFR SUMMARY

PROJECT NO. B-4517

GASTON COUNTY

STATION: 16+37.00 -L-

STATE OF NORTH CAROLINA
DEPARTMENT OF TRANSPORTATION
RALEIGH

STANDARD

LRFR SUMMARY FOR PRESTRESSED CONCRETE GIRDERS
(NON-INTERSTATE TRAFFIC)

NORTH CAROLINA PROFESSIONAL SEAL 15825 ENGINEER BRUCE O. KLAPPENBACH
2-26-2010

REVISIONS						SHEET NO.
NO.	BY:	DATE:	NO.	BY:	DATE:	S-4
1			3			TOTAL SHEETS
2			4			31

STD. NO. LRFR1

ASSEMBLED BY : S.T. CHAMPION DATE : 02/10
CHECKED BY : G.W. DICKEY DATE : 02/10
DRAWN BY : MAA 1/08
CHECKED BY : GM/DI 2/08
REV. 11/12/08R MAA/GM

26-FEB-2010 12:31
R:\Structures\schampion\Microstation\b4517_sd_rating.dgn
bklappenbach

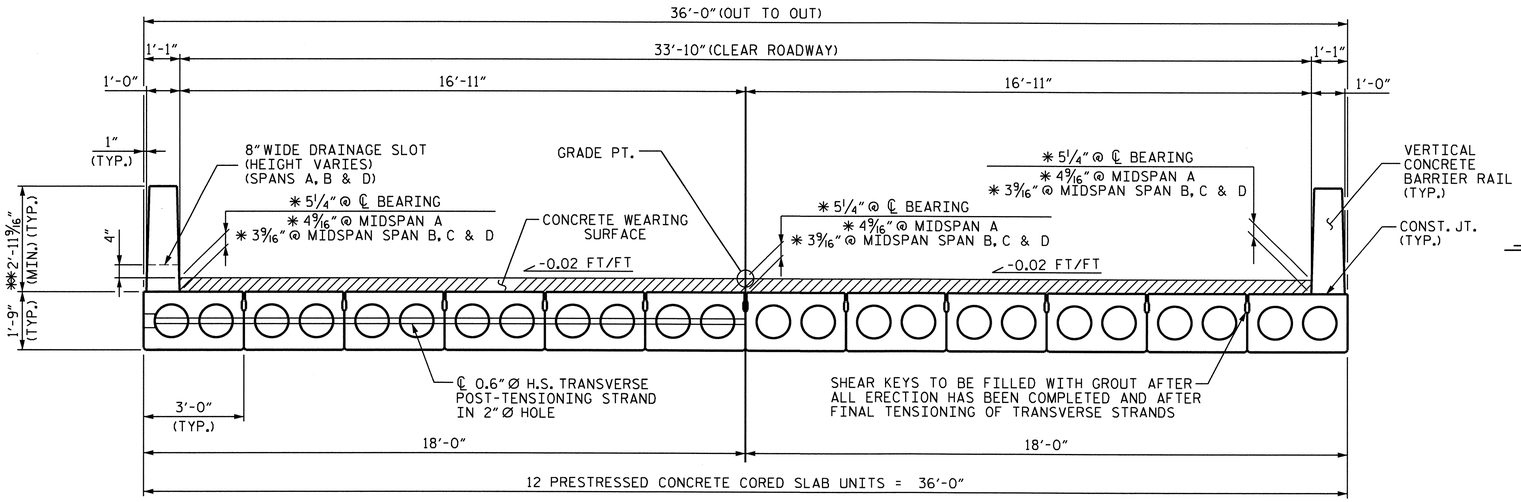

TYPICAL SECTION

✱ BASED ON PREDICTED FINAL CAMBER AND THEORETICAL GRADE LINE ELEVATIONS.
✱✱ THE MINIMUM HEIGHT OF THE BARRIER RAIL IS SHOWN. THE HEIGHT OF THE BARRIER RAIL VARIES WHILE THE TOP OF THE RAIL FOLLOWS THE PROFILE OF THE GUTTER LINE.

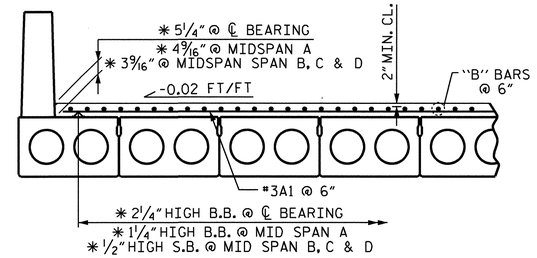

REINFORCING FOR CONCRETE WEARING SURFACE

(PARTIAL TYPICAL SECTION)
SEE "REINFORCING STEEL FOR CONCRETE WEARING SURFACE" SHEET.

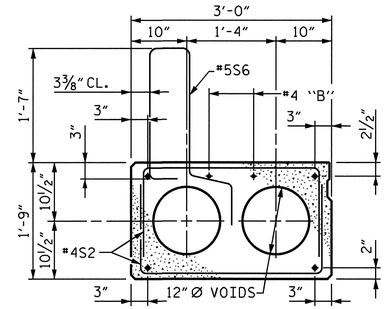

EXTERIOR SLAB SECTION

(FOR PRESTRESSED STRAND LAYOUT, SEE INTERIOR SLAB SECTION.)

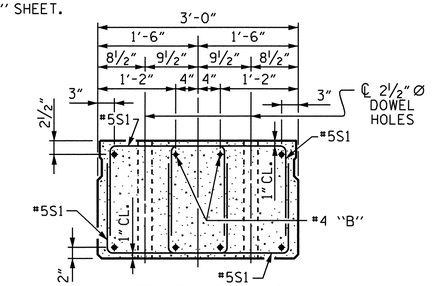

END ELEVATION

SHOWING PLACEMENT OF DOUBLE STIRRUPS AND LOCATION OF DOWEL HOLES.
(STRAND LAYOUT NOT SHOWN.)
INTERIOR SLAB SECTION SHOWN-EXTERIOR SLAB SECTION SIMILAR EXCEPT SHEAR KEY LOCATION.

EXPANSION END

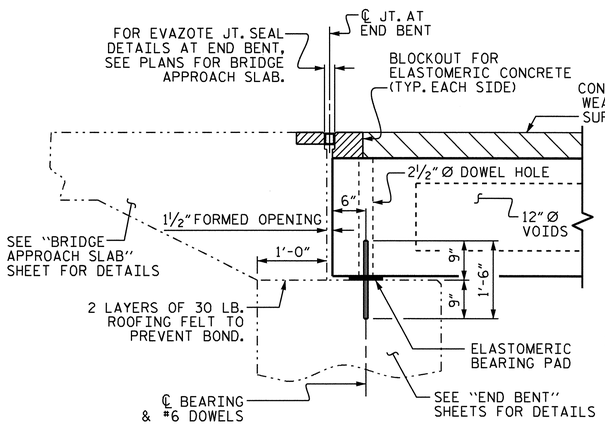

SECTION AT END BENT

FIXED END FIXED END

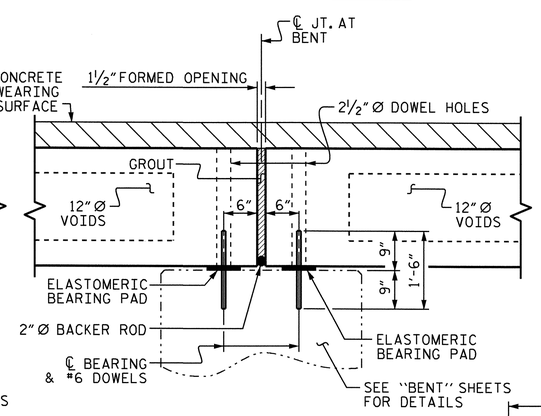

SECTION AT BENT

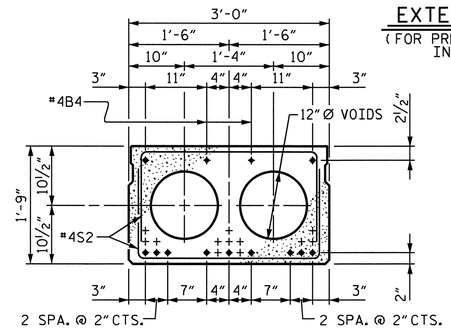

INTERIOR SLAB SECTION - SPAN A

0.6" Ø LOW RELAXATION STRAND LAYOUT
11 STRANDS

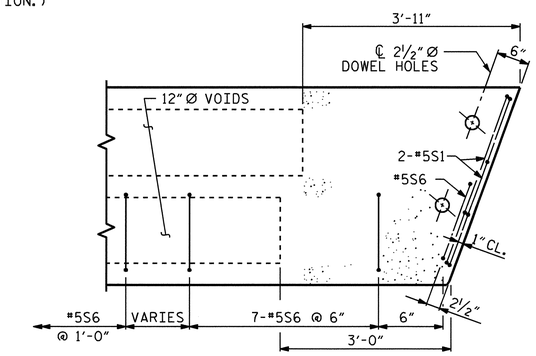

PART PLAN - EXTERIOR SECTION

NOTE: EXTERIOR SECTION SHOWN - INTERIOR SECTION SIMILAR EXCEPT OMIT #5S6 BARS.

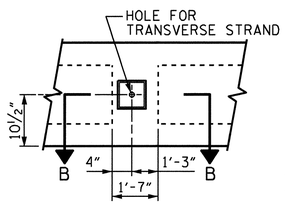

ELEVATION VIEW

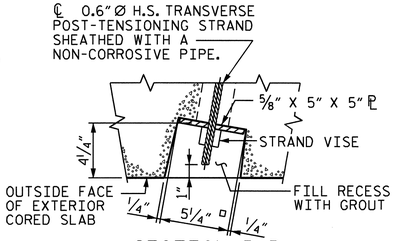

SECTION B-B

GROUTED RECESS AT END OF POST-TENSIONED STRAND

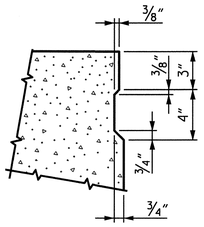

SHEAR KEY DETAIL

NOTE: OMIT SHEAR KEY ON OUTSIDE FACE OF EXTERIOR CORED SLABS.

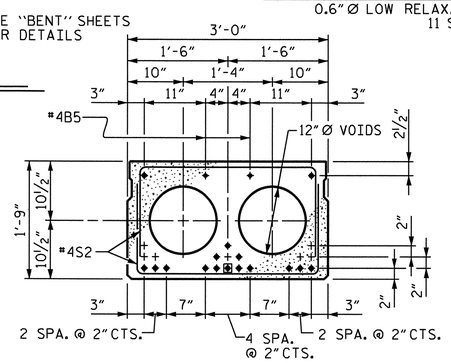

INTERIOR SLAB SECTION - SPAN B OR C

0.6" Ø LOW RELAXATION STRAND LAYOUT
16 STRANDS

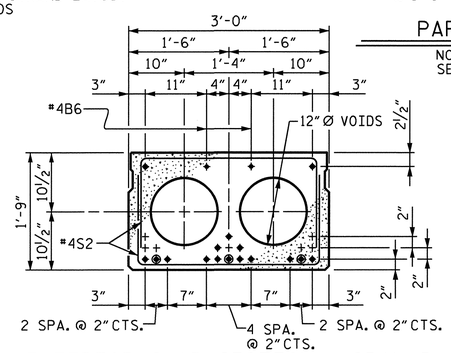

INTERIOR SLAB SECTION - SPAN D

0.6" Ø LOW RELAXATION STRAND LAYOUT
16 STRANDS

✱ THE BOND SHALL BE BROKEN ON THESE STRANDS FOR A DISTANCE OF 4'-0" FROM END OF THE CORED SLAB UNIT. SEE STANDARD SPECIFICATIONS ARTICLE 1078-7.

● THE BOND SHALL BE BROKEN ON THESE STRANDS FOR A DISTANCE OF 5'-0" FROM END OF THE CORED SLAB UNIT. SEE STANDARD SPECIFICATIONS ARTICLE 1078

PROJECT NO. B-4517
GASTON COUNTY
STATION: 16+37.00 -L-

SHEET 1 OF 11

STATE OF NORTH CAROLINA
DEPARTMENT OF TRANSPORTATION
RALEIGH

STANDARD

3'-0" X 1'-9" PRESTRESSED CONCRETE CORED SLAB UNIT

NORTH CAROLINA PROFESSIONAL SEAL 15825 ENGINEER BRUCE D. KLAPPENBACH
2-26-2010

REVISIONS							SHEET NO.
NO.	BY:	DATE:	NO.	BY:	DATE:		S-5
1			3				TOTAL SHEETS
2			4				31

STD. NO. PCS2

ASSEMBLED BY : C.R. YARBROUGH	DATE : 06/09		
CHECKED BY : D.A. GLADDEN	DATE : 10/09		
DRAWN BY : WJH 4/89	REV. 10/17/00	RWW/LES	
CHECKED BY : FCJ 5/89	REV. 7/10/01RR	RWW/LES	
	REV. 5/1/06	TLA/GM	

25-FEB-2010 10:03
r:\structures\cyarbrough\microstation\b-4517_sd_cs.dgn
cyarbrough

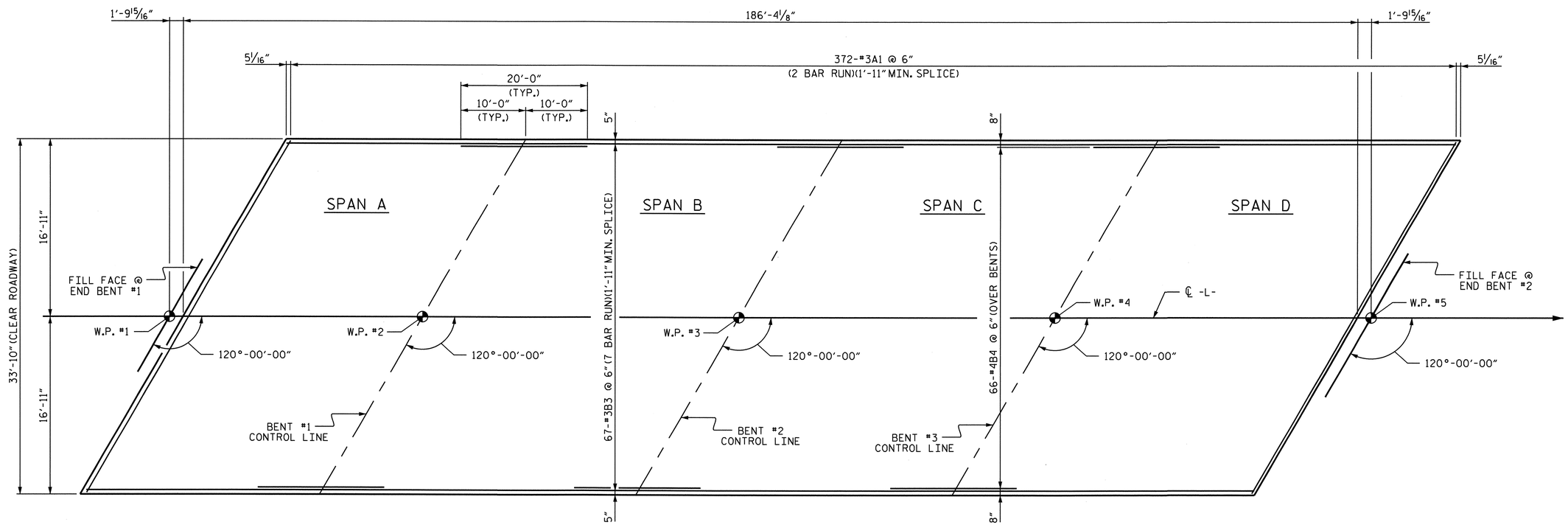

PLAN OF REINFORCING STEEL FOR CONCRETE WEARING SURFACE

PROJECT NO. B-4517

GASTON COUNTY

STATION: 16+37.00 -L-

SHEET 2 OF 11

STATE OF NORTH CAROLINA
DEPARTMENT OF TRANSPORTATION
RALEIGH

REINFORCING STEEL FOR CONCRETE WEARING SURFACE

NORTH CAROLINA PROFESSIONAL SEAL 15825 ENGINEER D. K. LAPPENBUSCH
2-6-2010

REVISIONS						SHEET NO.
NO.	BY:	DATE:	NO.	BY:	DATE:	S-6
1			3			TOTAL SHEETS
2			4			31

DRAWN BY : C.R. YARBROUGH DATE : 07/09
CHECKED BY : D.A. GLADDEN DATE : 10/09

02-FEB-2010 13:41
r:\structures\cyarbrough\microstation\b-4517_sd_cs.dgn
dgladden

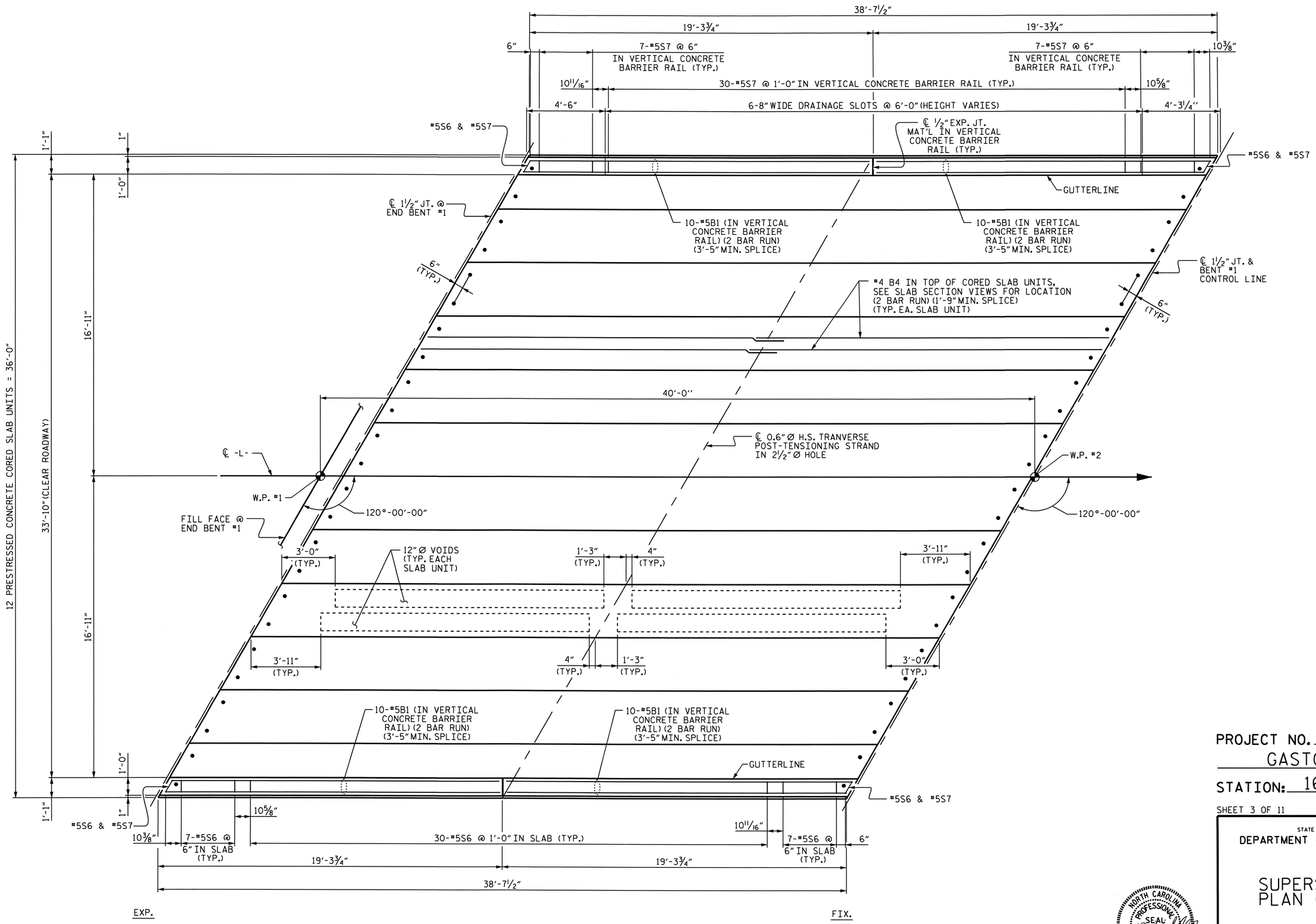

PLAN OF SPAN A

PROJECT NO. B-4517

GASTON COUNTY

STATION: 16+37.00 -L-

SHEET 3 OF 11

STATE OF NORTH CAROLINA
DEPARTMENT OF TRANSPORTATION
RALEIGH

SUPERSTRUCTURE PLAN OF SPAN A

NORTH CAROLINA PROFESSIONAL SEAL 15825 ENGINEER BRUCE D. KLAPPENBACH
2-8-2010

REVISIONS						SHEET NO.
NO.	BY:	DATE:	NO.	BY:	DATE:	S-7
1			3			TOTAL SHEETS
2			4			31

DRAWN BY : C.R. YARBROUGH DATE : 06/09
CHECKED BY : D.A. GLADDEN DATE : 10/09

08-FEB-2010 16:54
R:\Structures\cyarbrough\Microstation\b-4517_sd_cs.dgn
bklappenbach

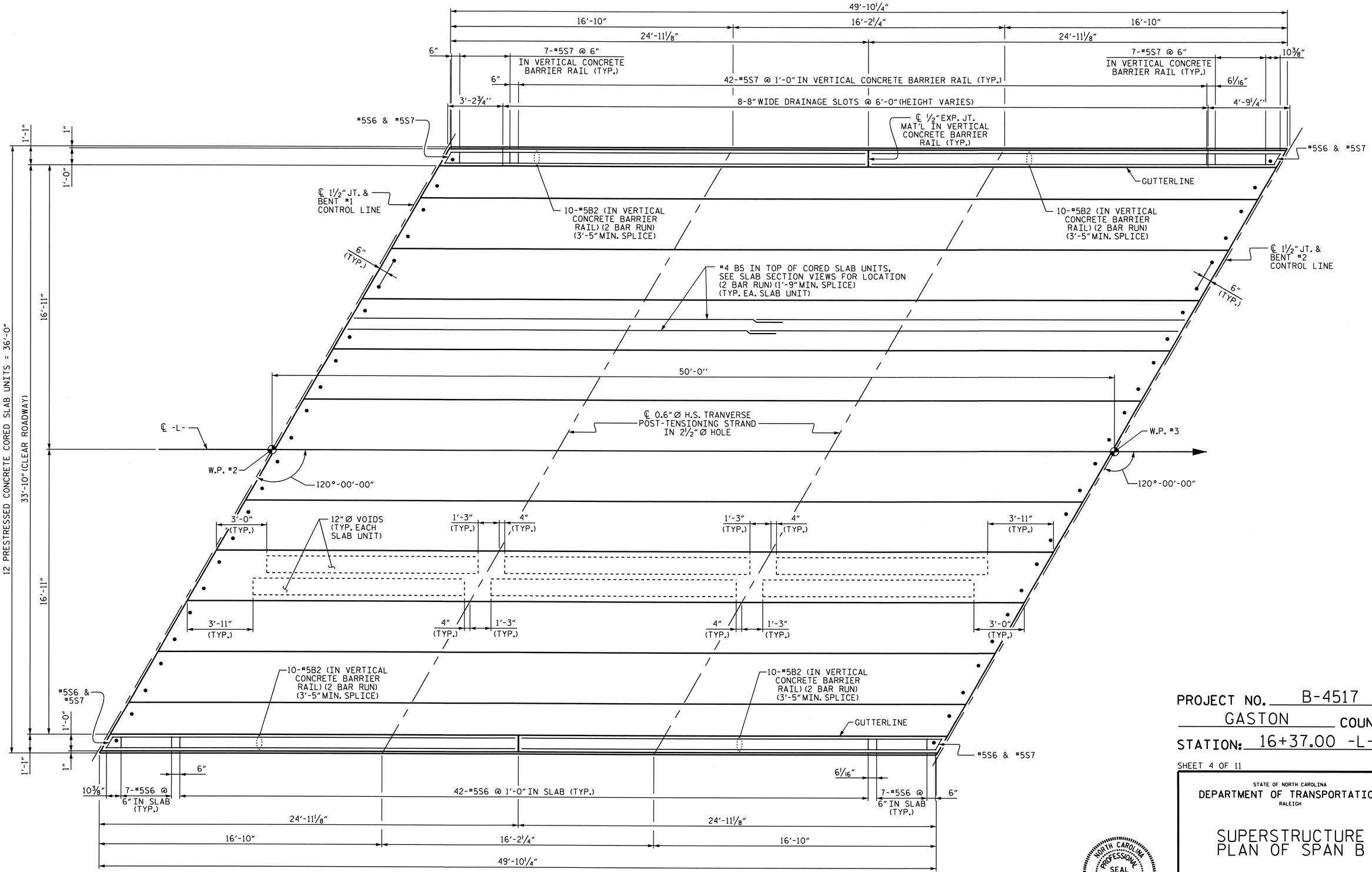

PLAN OF SPAN B

PROJECT NO. B-4517

GASTON COUNTY

STATION: 16+37.00 -L-

SHEET 4 OF 11

STATE OF NORTH CAROLINA
DEPARTMENT OF TRANSPORTATION
RALEIGH

SUPERSTRUCTURE PLAN OF SPAN B

NORTH CAROLINA PROFESSIONAL SEAL 15825 ENGINEER BRUCE D. KLAPPENBACH
2-8-2010

REVISIONS						SHEET NO.
NO.	BY:	DATE:	NO.	BY:	DATE:	S-8
1			3			TOTAL SHEETS
2			4			31

DRAWN BY : C.R. YARBROUGH DATE : 06/09
CHECKED BY : D.A. GLADDEN DATE : 10/09

08-FEB-2010 16:54
R:\Structures\cyarbrough\Microstation\b-4517_sd_cs.dgn
bklappenbach

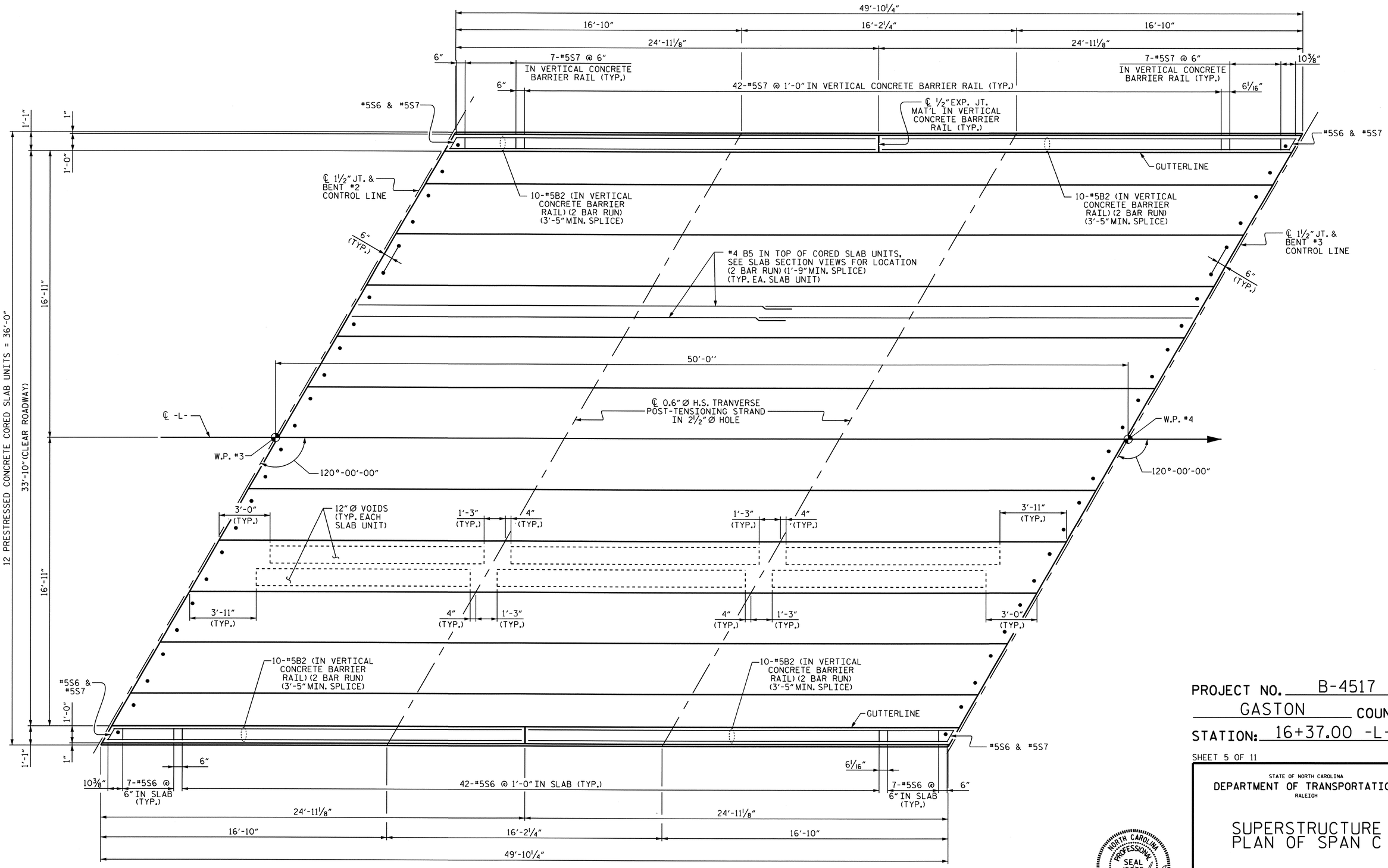

PLAN OF SPAN C

PROJECT NO. B-4517

GASTON COUNTY

STATION: 16+37.00 -L-

SHEET 5 OF 11

STATE OF NORTH CAROLINA
DEPARTMENT OF TRANSPORTATION
RALEIGH

SUPERSTRUCTURE PLAN OF SPAN C

NORTH CAROLINA PROFESSIONAL SEAL 15825 ENGINEER BRUCE D. KLAPPENBACH

2-8-2010

REVISIONS						SHEET NO.
NO.	BY:	DATE:	NO.	BY:	DATE:	S-9
1			3			TOTAL SHEETS
2			4			31

DRAWN BY : C.R. YARBROUGH DATE : 06/09
CHECKED BY : D.A. GLADDEN DATE : 10/09

08-FEB-2010 16:54
R:\Structures\cyarbrough\Microstation\b-4517_sd_cs.dgn
bklappenbach

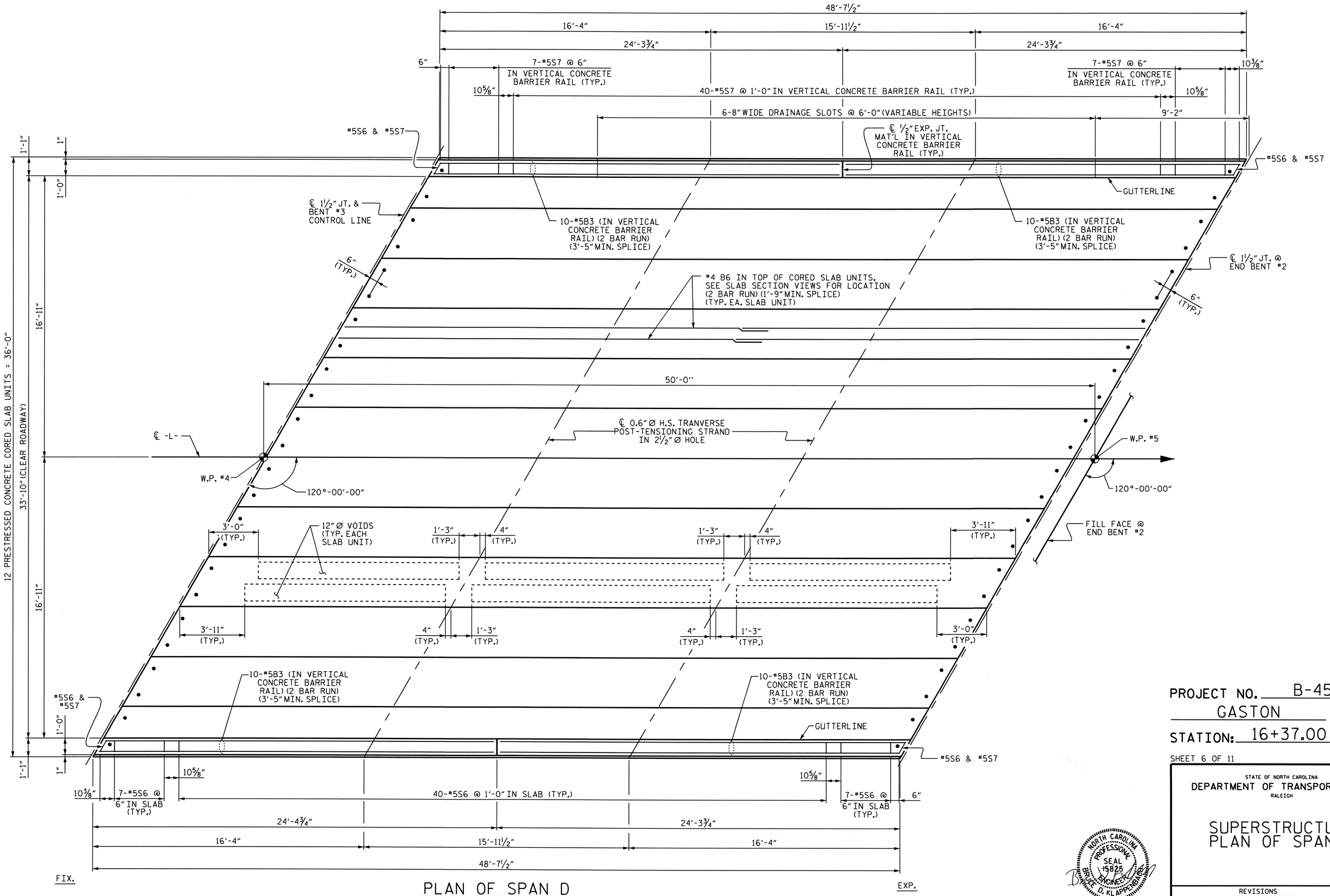

PLAN OF SPAN D

PROJECT NO. B-4517

GASTON COUNTY

STATION: 16+37.00 -L-

SHEET 6 OF 11

STATE OF NORTH CAROLINA
DEPARTMENT OF TRANSPORTATION
RALEIGH

SUPERSTRUCTURE PLAN OF SPAN D

NORTH CAROLINA PROFESSIONAL SEAL 15825 ENGINEER BRUCE D. KLAPPENBACH

2-8-2010

REVISIONS						
NO.	BY:	DATE:	NO.	BY:	DATE:	
1			3			
2			4			

SHEET NO. S-10

TOTAL SHEETS 31

DRAWN BY : C.R. YARBROUGH DATE : 06/09
CHECKED BY : D.A. GLADDEN DATE : 10/09

08-FEB-2010 16:54
R:\Structures\cyarbrough\Microstation\b-4517_sd_cs.dgn
bklappenbach

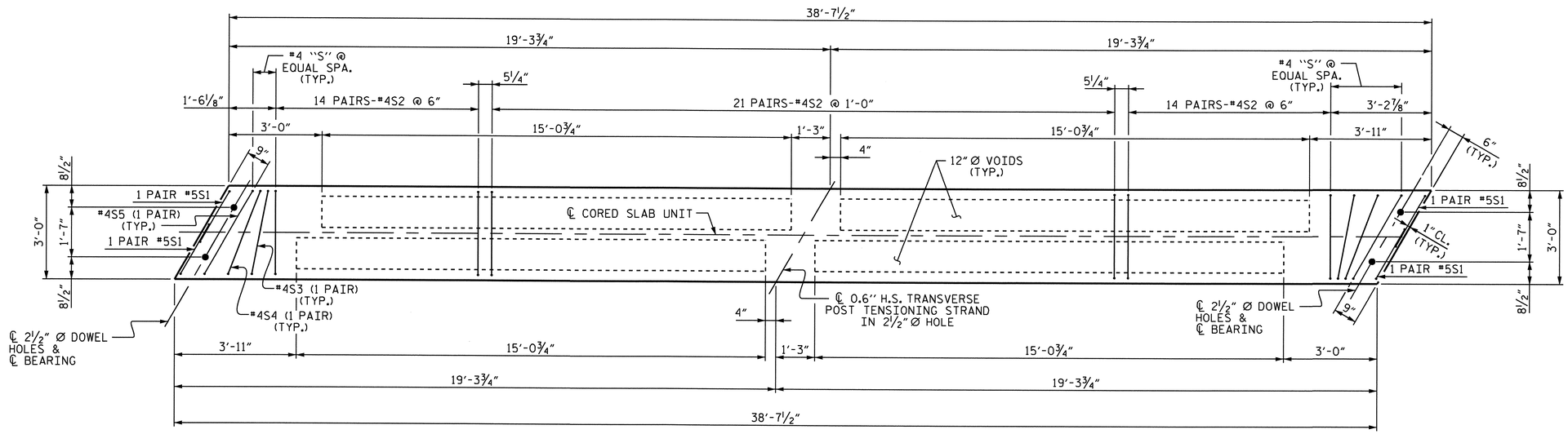

PLAN OF INTERIOR CORED SLAB UNIT (SPAN A)

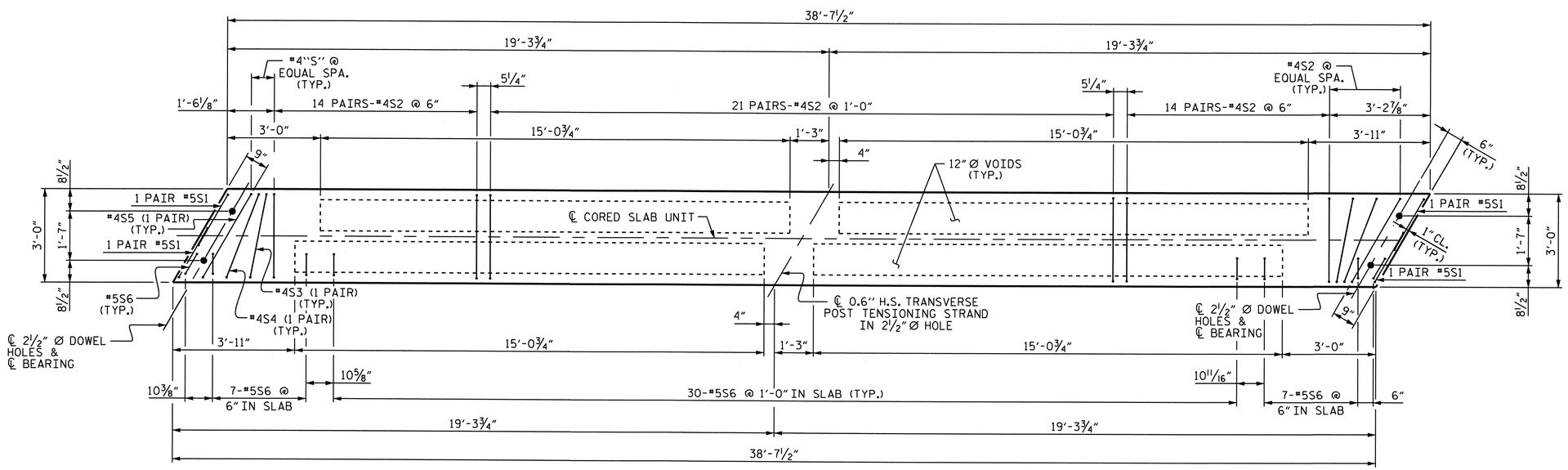

PLAN OF EXTERIOR CORED SLAB UNIT (SPAN A)

PROJECT NO. B-4517

GASTON COUNTY

STATION: 16+37.00 -L-

SHEET 7 OF 11

STATE OF NORTH CAROLINA
DEPARTMENT OF TRANSPORTATION
RALEIGH

SUPERSTRUCTURE CORED SLAB UNIT DETAILS SPAN A

NORTH CAROLINA PROFESSIONAL SEAL 15825 ENGINEER BRIAN D. KLAPPENBACH
2-8-2010

REVISIONS						SHEET NO.
NO.	BY:	DATE:	NO.	BY:	DATE:	S-11
1			3			TOTAL SHEETS
2			4			31

DRAWN BY : C.R. YARBROUGH DATE : 07/09
CHECKED BY : D.A. GLADDEN DATE : 10/09

08-FEB-2010 16:54
R:\Structures\cyarbrough\Microstation\b-4517_sd_cs.dgn
bklappenbach

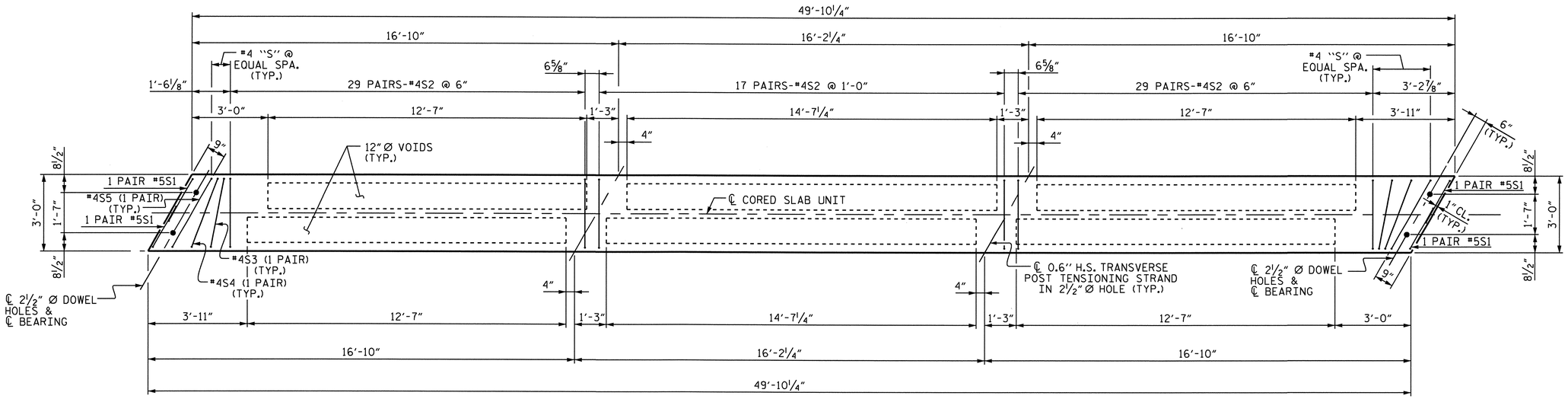

PLAN OF INTERIOR CORED SLAB UNIT (SPAN B & C)

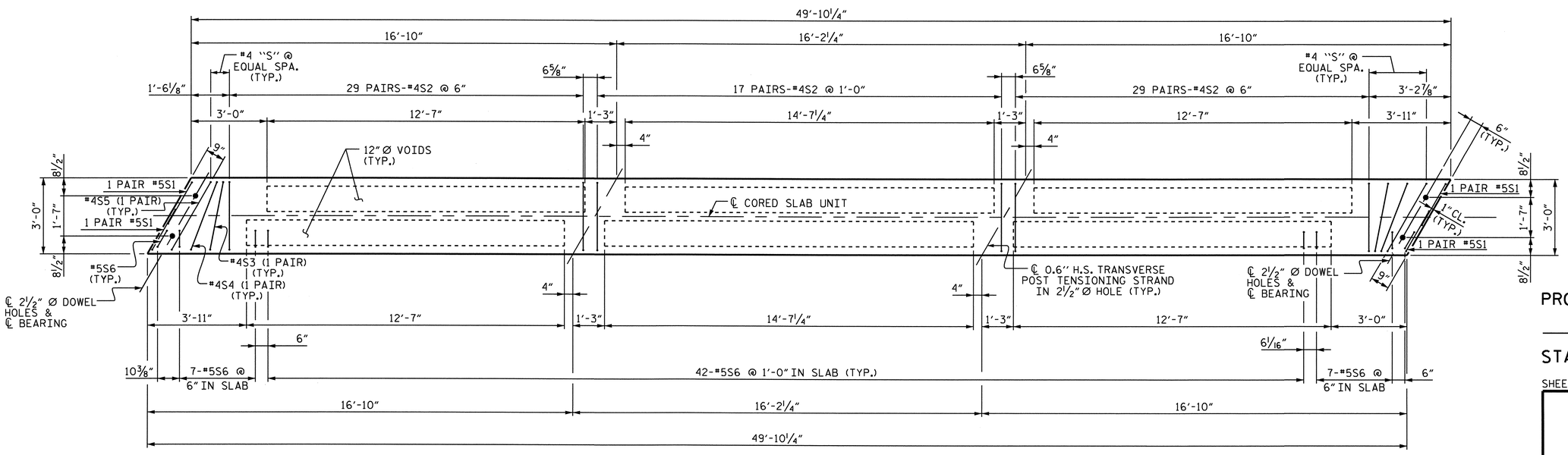

PLAN OF EXTERIOR CORED SLAB UNIT (SPAN B & C)

PROJECT NO. B-4517

GASTON COUNTY

STATION: 16+37.00 -L-

SHEET 8 OF 11

STATE OF NORTH CAROLINA
DEPARTMENT OF TRANSPORTATION
RALEIGH

SUPERSTRUCTURE CORED SLAB UNIT DETAILS SPAN B & C

NORTH CAROLINA PROFESSIONAL SEAL 15825 ENGINEER BRUCE O. KLAPPENBACH 2-8-2010

REVISIONS						SHEET NO.
NO.	BY:	DATE:	NO.	BY:	DATE:	S-12
1			3			TOTAL SHEETS
2			4			31

DRAWN BY : C.R. YARBROUGH DATE : 07/09
CHECKED BY : D.A. GLADDEN DATE : 10/09

08-FEB-2010 16:55
R:\Structures\cyarbrough\Microstation\b-4517_sd_cs.dgn
bklappenbach

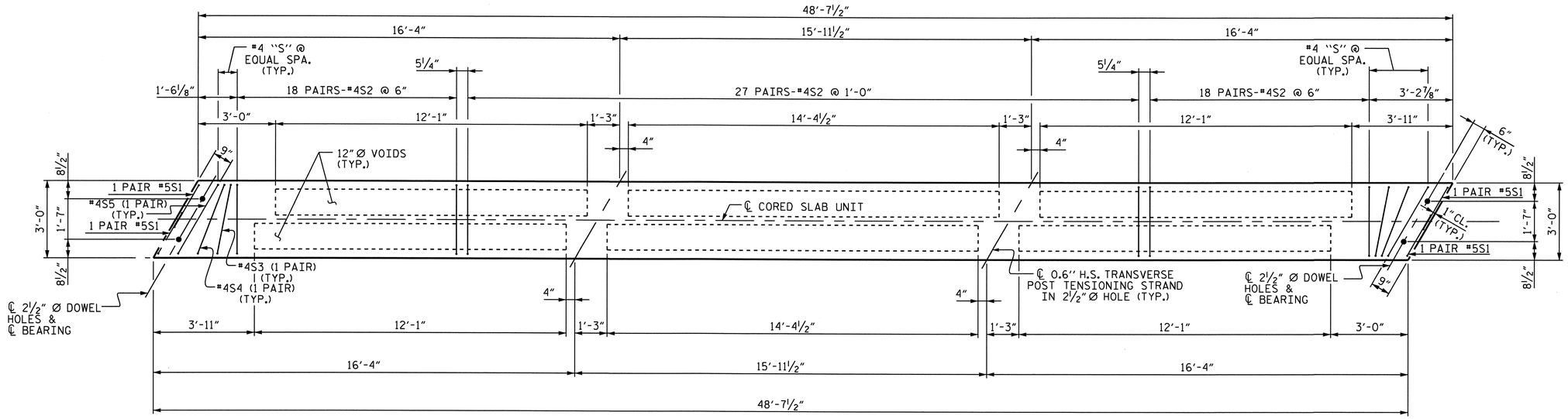

PLAN OF INTERIOR CORED SLAB UNIT (SPAN D)

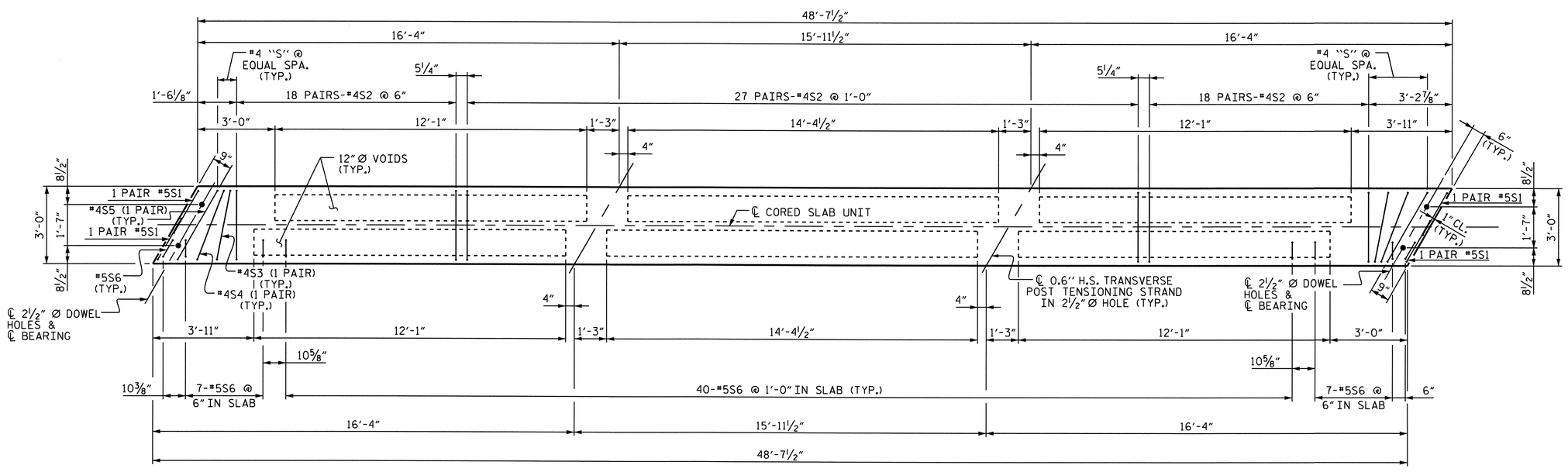

PLAN OF EXTERIOR CORED SLAB UNIT (SPAN D)

PROJECT NO. B-4517

GASTON COUNTY

STATION: 16+37.00 -L-

SHEET 9 OF 11

STATE OF NORTH CAROLINA
DEPARTMENT OF TRANSPORTATION
RALEIGH

SUPERSTRUCTURE CORED SLAB UNIT DETAILS SPAN D

NORTH CAROLINA PROFESSIONAL SEAL 15825 ENGINEER BRUCE D. KLAPPENBACH
2-8-2010

REVISIONS						SHEET NO.
NO.	BY:	DATE:	NO.	BY:	DATE:	S-13
1			3			TOTAL SHEETS
2			4			31

DRAWN BY : C.R. YARBROUGH DATE : 07/09
CHECKED BY : D.A. GLADDEN DATE : 10/09

08-FEB-2010 16:55
R:\Structures\cyarbrough\Microstation\b-4517_sd_cs.dgn
bklappenbach

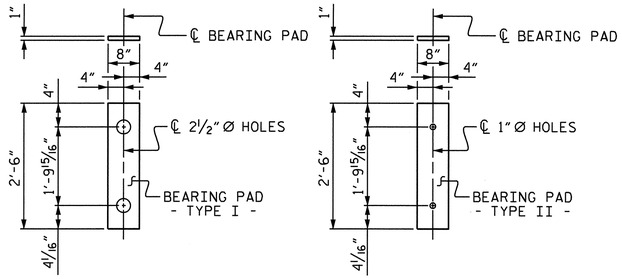

EXPANSION END
(TYPE I - 24 REQ'D)

FIXED END
(TYPE II - 72 REQ'D)

ELASTOMERIC BEARING DETAIL

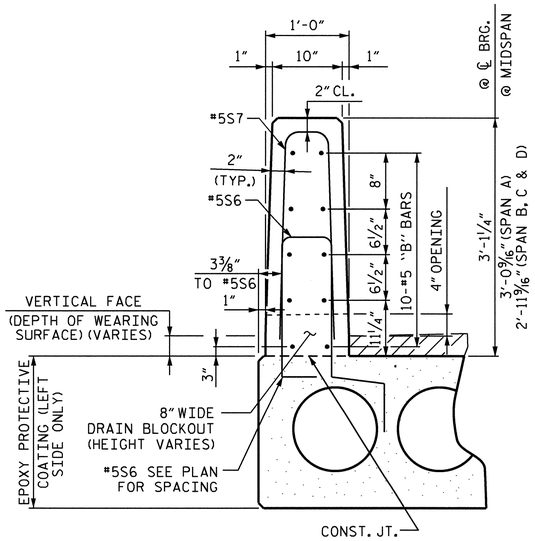

SECTION VIEW

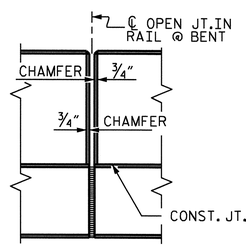

ELEVATION AT EXPANSION JOINT

VERTICAL CONCRETE BARRIER RAIL DETAILS

ELASTOMER IN BEARINGS FOR 1'-9" CORED SLAB UNIT SHALL BE 50 DUROMETER HARDNESS.

CORED SLABS REQUIRED

SPAN A	NUMBER	LENGTH	TOTAL LENGTH
EXTERIOR C.S.	2	38'-7½"	77'-3"
INTERIOR C.S.	10	38'-7½"	386'-3"
SUBTOTAL	12		463'-6"

SPAN B	NUMBER	LENGTH	TOTAL LENGTH
EXTERIOR C.S.	2	49'-10¼"	99'-8½"
INTERIOR C.S.	10	49'-10¼"	498'-6½"
SUBTOTAL	12		598'-3"

SPAN C	NUMBER	LENGTH	TOTAL LENGTH
EXTERIOR C.S.	2	49'-10¼"	99'-8½"
INTERIOR C.S.	10	49'-10¼"	498'-6½"
SUBTOTAL	12		598'-3"

SPAN D	NUMBER	LENGTH	TOTAL LENGTH
EXTERIOR C.S.	2	48'-7½"	97'-3"
INTERIOR C.S.	10	48'-7½"	486'-3"
SUBTOTAL	12		583'-6"
TOTAL LENGTH			2243'-6"

GROOVING BRIDGE FLOORS

CONCRETE OVERLAY	5733 SQ. FT.
APPROACH SLABS	1493 SQ. FT.
TOTAL	7226 SQ. FT.

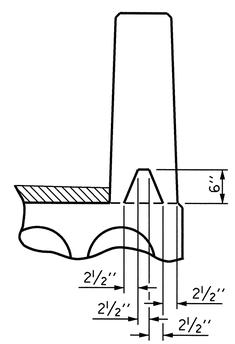

SECTION S-S

AT DAM IN OPEN JOINT
(THIS IS TO BE USED ONLY
WHEN SLIP FORM IS USED)

BAR TYPES

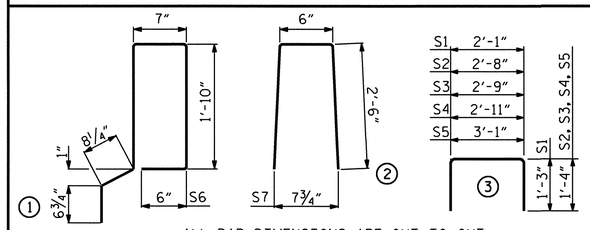

ALL BAR DIMENSIONS ARE OUT TO OUT

BILL OF MATERIAL FOR ONE CORED SLAB SECTION — SPAN A

BAR	NUMBER	SIZE	TYPE	EXTERIOR UNIT LENGTH	EXTERIOR UNIT WEIGHT	INTERIOR UNIT LENGTH	INTERIOR UNIT WEIGHT
B4	4	#4	STR	20'-1"	54	20'-1"	54
S1	8	#5	3	4'-7"	38	4'-7"	38
S2	98	#4	3	5'-4"	349	5'-4"	349
S3	4	#4	3	5'-5"	14	5'-5"	14
S4	4	#4	3	5'-7"	15	5'-7"	15
S5	4	#4	3	5'-9"	15	5'-9"	15
* S6	46	#5	1	6'-0"	288		
REINFORCING STEEL					LBS. 431		LBS. 431
* EPOXY COATED REINFORCING STEEL					LBS. 288		
5000 P.S.I. CONCRETE					CU. YDS. 5.8		CU. YDS. 5.8
0.6"Ø L.R. STRANDS		No.			11		11

BILL OF MATERIAL FOR ONE CORED SLAB SECTION — SPANS B & C

BAR	NUMBER	SIZE	TYPE	EXTERIOR UNIT LENGTH	EXTERIOR UNIT WEIGHT	INTERIOR UNIT LENGTH	INTERIOR UNIT WEIGHT
B5	4	#4	STR	25'-8"	69	25'-8"	69
S1	8	#5	3	4'-7"	38	4'-7"	38
S2	150	#4	3	5'-4"	534	5'-4"	534
S3	4	#4	3	5'-5"	14	5'-5"	14
S4	4	#4	3	5'-7"	15	5'-7"	15
S5	4	#4	3	5'-9"	15	5'-9"	15
* S6	58	#5	1	6'-0"	363		
REINFORCING STEEL					LBS. 685		LBS. 685
* EPOXY COATED REINFORCING STEEL					LBS. 363		
5000 P.S.I. CONCRETE					CU. YDS. 7.4		CU. YDS. 7.4
0.6"Ø L.R. STRANDS		No.			16		16

BILL OF MATERIAL FOR ONE CORED SLAB SECTION — SPAN D

BAR	NUMBER	SIZE	TYPE	EXTERIOR UNIT LENGTH	EXTERIOR UNIT WEIGHT	INTERIOR UNIT LENGTH	INTERIOR UNIT WEIGHT
B6	4	#4	STR	25'-1"	67	25'-1"	67
S1	8	#5	3	4'-7"	38	4'-7"	38
S2	126	#4	3	5'-4"	449	5'-4"	449
S3	4	#4	3	5'-5"	14	5'-5"	14
S4	4	#4	3	5'-7"	15	5'-7"	15
S5	4	#4	3	5'-9"	15	5'-9"	15
* S6	56	#5	1	6'-0"	350		
REINFORCING STEEL					LBS. 598		LBS. 598
* EPOXY COATED REINFORCING STEEL					LBS. 350		
5000 P.S.I. CONCRETE					CU. YDS. 7.3		CU. YDS. 7.2
0.6"Ø L.R. STRANDS		No.			16		16

NOTES

ALL PRESTRESSING STRANDS SHALL BE 7-WIRE LOW RELAXATION GRADE 270 STRANDS AND SHALL CONFORM TO AASHTO M203 EXCEPT FOR SAMPLING REQUIREMENTS WHICH SHALL BE IN ACCORDANCE WITH THE STANDARD SPECIFICATIONS.

ALL REINFORCING STEEL CAST WITH THE CORED SLAB SECTIONS SHALL BE GRADE 60 AND SHALL BE INCLUDED IN THE UNIT PRICE BID FOR PRESTRESSED CONCRETE CORED SLABS.

RECESSES FOR TRANSVERSE STRANDS SHALL BE GROUTED AFTER THE TENSIONING OF THE STRANDS.

THE 2½"Ø DOWEL HOLES AT FIXED ENDS OF SLAB SECTIONS SHALL BE FILLED WITH NON-SHRINK GROUT.

THE 2"Ø BACKER ROD SHALL CONFORM TO THE REQUIREMENTS OF TYPE M BOND BREAKER. SEE SECTION 1028 OF THE STANDARD SPECIFICATIONS.

WHEN CORED SLABS ARE CAST, A POSITIVE HOLD-DOWN SYSTEM SHALL BE EMPLOYED TO PREVENT VOIDS FROM RISING OR MOVING SIDEWAYS. THIS SYSTEM SHALL BE DESIGNED TO BE LEFT IN PLACE UNTIL THE CONCRETE HAS REACHED RELEASE STRENGTH. AT LEAST THREE WEEKS PRIOR TO CASTING CORED SLABS, THE CONTRACTOR SHALL SUBMIT TO THE ENGINEER FOR REVIEW AND COMMENT, DETAILED DRAWINGS OF THE PROPOSED HOLD-DOWN SYSTEM. IN ADDITION TO STRUCTURAL DETAILS, LOCATION AND SPACING OF THE HOLD-DOWNS SHALL BE INDICATED.

THE TRANSFER OF LOAD FROM THE ANCHORAGES TO THE CORED SLAB UNIT SHALL BE DONE WHEN THE CONCRETE HAS REACHED A COMPRESSIVE STRENGTH OF NOT LESS THAN 4000 PSI FOR ALL SPANS.

ALL REINFORCING STEEL IN VERTICAL CONCRETE BARRIER RAILS SHALL BE EPOXY COATED.

PRESTRESSING STRANDS SHALL BE CUT FLUSH WITH THE CORED SLAB UNIT ENDS.

APPLY EPOXY PROTECTIVE COATING TO CORED SLAB UNIT ENDS AND TO THE EXTERIOR FACE OF THE LEFT EXTERIOR CORED SLAB UNITS.

VERTICAL GROOVED CONTRACTION JOINTS, ½" IN DEPTH, SHALL BE TOOLED IN ALL EXPOSED FACES OF THE VERTICAL CONCRETE BARRIER RAIL AND IN ACCORDANCE WITH ARTICLE 825-10(B) OF THE STANDARD SPECIFICATIONS. A VERTICAL CONTRACTION JOINT SHALL BE LOCATED AT EACH THIRD POINT BETWEEN VERTICAL CONCRETE BARRIER RAIL EXPANSION JOINTS. ONLY ONE CONTRACTION JOINT IS REQUIRED AT MIDPOINT OF VERTICAL CONCRETE BARRIER RAIL SEGMENTS LESS THAN 20 FEET IN LENGTH AND NO CONTRACTION JOINTS ARE REQUIRED FOR THOSE SEGMENTS LESS THAN 10 FEET IN LENGTH.

A 2" MIN. CLEARANCE TO REINFORCEMENT SHALL BE MAINTAINED FROM THE DRAINAGE SLOT. THE CONTRACTOR MAY FIELD CUT ANY "B" BARS IN THE VERTICAL CONCRETE BARRIER RAIL THAT CONFLICT WITH THE SLOT DRAINS.

FOR PRESTRESSED CONCRETE MEMBERS, SEE SPECIAL PROVISIONS.

PLACEMENT OF THE CONCRETE WEARING SURFACE SHALL OCCUR AFTER CASTING THE CONCRETE PARAPET. THE COST OF THE REINFORCING STEEL CAST WITH THE CONCRETE WEARING SURFACE SHALL BE INCLUDED IN THE UNIT PRICE BID FOR CONCRETE WEARING SURFACE. FOR CONCRETE WEARING SURFACE, SEE SPECIAL PROVISIONS.
WHEN A CONCRETE WEARING SURFACE IS DETAILED ON THE CORED SLAB BRIDGE TYPICAL SECTION, THE TOP SURFACE OF THE CORED SLAB UNITS SHALL HAVE A ⅜" RAKED FINISH.

TRANSVERSE POST TENSIONING OF THE CORED SLAB UNITS SHALL BE DONE IN ACCORDANCE WITH THE STANDARD SPECIFICATIONS, EXCEPT THAT THE STRANDS SHALL BE 0.6"Ø AND TENSIONED TO 43,950 POUNDS.

NORTH CAROLINA PROFESSIONAL SEAL 15825 ENGINEER D. KLAPPENBACH
2-26-2010

BILL OF MATERIAL FOR VERTICAL CONCRETE BARRIER RAIL

BAR	BARS PER SPAN: SPAN A	SPAN B	SPAN C	SPAN D	TOTAL NO.	SIZE	TYPE	LENGTH	WEIGHT
* B1	80				80	#5	STR	11'-6"	960
* B2		80	80		160	#5	STR	14'-3"	2378
* B3				80	80	#5	STR	14'-0"	1168
* S7	92	116	116	112	436	#5	2	5'-6"	2501
* EPOXY COATED REINFORCING STEEL									LBS. 7007
CLASS AA CONCRETE									CU. YDS. 39.5
TOTAL LIN. FT. OF VERTICAL CONCRETE BARRIER RAIL									LIN. FT. 374.80

PROJECT NO. B-4517
GASTON COUNTY
STATION: 16+37.00 -L-

SHEET 10 OF 11

GRADE 270 STRANDS

	0.6"Ø L.R.
AREA (SQUARE INCHES)	0.217
ULTIMATE STRENGTH (LBS. PER STRAND)	58,600
APPLIED PRESTRESS (LBS. PER STRAND)	43,950

BILL OF MATERIAL FOR CONCRETE WEARING SURFACE

BAR	NUMBER	SIZE	TYPE	LENGTH	WEIGHT
* A1	744	#3	STR	20'-4"	5688
* B3	469	#3	STR	28'-3"	4982
* B4	198	#4	STR	20'-0"	2645
* EPOXY COATED REINFORCING STEEL					LBS. 13315
CONCRETE WEARING SURFACE (SQ. FT.)					6305

DEAD LOAD DEFLECTION AND CAMBER

	SPAN A EXT. UNITS	SPAN A INT. UNITS	SPAN B EXT. UNITS	SPAN B INT. UNITS	SPAN C EXT. UNITS	SPAN C INT. UNITS	SPAN D EXT. UNITS	SPAN D INT. UNITS
	3'-0" x 1'-9"	3'-0" x 1'-9"	3'-0" x 1'-9"	3'-0" x 1'-9"	3'-0" x 1'-9"	3'-0" x 1'-9"	3'-0" x 1'-9"	3'-0" x 1'-9"
	0.6"Ø L.R. STRAND	0.6"Ø L.R. STRAND	0.6"Ø L.R. STRAND	0.6"Ø L.R. STRAND	0.6"Ø L.R. STRAND	0.6"Ø L.R. STRAND	0.6"Ø L.R. STRAND	0.6"Ø L.R. STRAND
CAMBER (SLAB ALONE IN PLACE)	13/16" ↑	13/16" ↑	2" ↑	2" ↑	2" ↑	2" ↑	1 15/16" ↑	1 15/16" ↑
DEFLECTION DUE TO CONCRETE OVERLAY	⅛" ↓	⅛" ↓	5/16" ↓	5/16" ↓	5/16" ↓	5/16" ↓	¼" ↓	¼" ↓
FINAL CAMBER	11/16" ↑	11/16" ↑	1 11/16" ↑	1 11/16" ↑	1 11/16" ↑	1 11/16" ↑	1 11/16" ↑	1 11/16" ↑

ASSEMBLED BY : C.R. YARBROUGH DATE : 07/09
CHECKED BY : D.A. GLADDEN DATE : 10/09
DRAWN BY : WJH 4/89
CHECKED BY : FCJ 5/89
REV. 7/10/01 RWW/LES
REV. 5/7/03 RRR RWW/JTE
REV. 5/1/06 R TLA/GM

26-FEB-2010 13:59
r:\structures\cyarbrough\microstation\b-4517_sd_cs.dgn
bklappenbach

STATE OF NORTH CAROLINA
DEPARTMENT OF TRANSPORTATION
RALEIGH

3'-0" X 1'-9" PRESTRESSED CONCRETE CORED SLAB UNIT

REVISIONS NO.	BY:	DATE:	NO.	BY:	DATE:
1			3		
2			4		

SHEET NO. S-14
TOTAL SHEETS 31

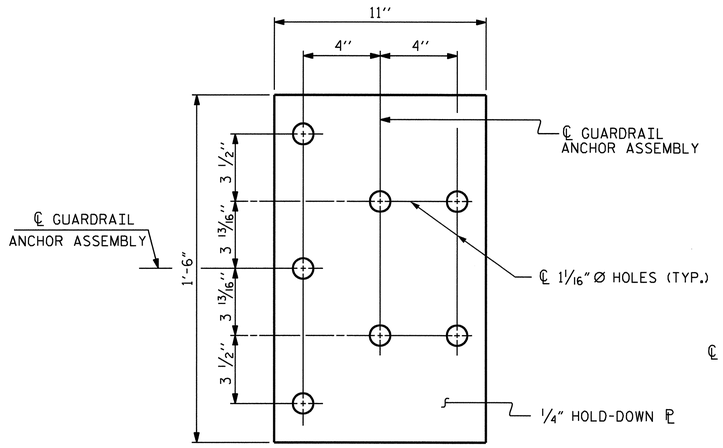

PLAN

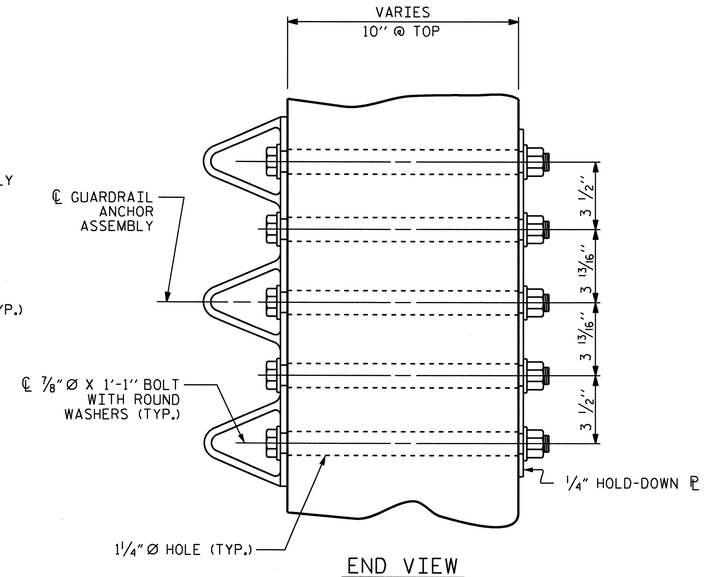

END VIEW

GUARDRAIL ANCHOR ASSEMBLY DETAILS

NOTES

THE GUARDRAIL ANCHOR ASSEMBLY SHALL CONSIST OF A 1/4'' HOLD DOWN PLATE AND 7 - 7/8'' Ø BOLTS WITH NUTS AND WASHERS.

THE HOLD-DOWN PLATE SHALL CONFORM TO AASHTO M270 GRADE 36. AFTER FABRICATION, THE HOLD-DOWN PLATE SHALL BE HOT-DIP GALVANIZED IN ACCORDANCE WITH AASHTO M111.

BOLTS SHALL CONFORM TO THE REQUIREMENTS OF ASTM A307 AND NUTS SHALL CONFORM TO THE REQUIREMENTS OF AASHTO M291. BOLTS, NUTS AND WASHERS SHALL BE GALVANIZED. AT THE CONTRACTOR'S OPTION, STAINLESS STEEL BOLTS, NUTS AND WASHERS MAY BE USED AS AN ALTERNATE FOR THE 7/8'' Ø GALVANIZED BOLTS, NUTS AND WASHERS. THEY SHALL CONFORM TO OR EXCEED THE MECHANICAL REQUIREMENTS OF ASTM A307. THE USE OF THIS ALTERNATE SHALL BE APPROVED BY THE ENGINEER.

AFTER INSTALLATION, THE EXPOSED THREAD OF THE BOLT SHALL BE BURRED WITH A SHARP POINTED TOOL.

THE COST OF THE GUARDRAIL ANCHOR ASSEMBLIES WITH BOLTS, NUTS AND WASHERS COMPLETE IN PLACE, SHALL BE INCLUDED IN THE VARIOUS PAY ITEMS.

THE VERTICAL REINFORCING BARS MAY BE SHIFTED SLIGHTLY IN THE VERTICAL CONCRETE BARRIER RAIL TO CLEAR ASSEMBLY BOLTS.

THE 1 1/4'' Ø HOLES SHALL BE FORMED OR DRILLED WITH A CORE BIT. IMPACT TOOLS WILL NOT BE PERMITTED. ANY CONCRETE DAMAGED BY THIS WORK SHALL BE REPAIRED TO THE SATISFACTION OF THE ENGINEER.

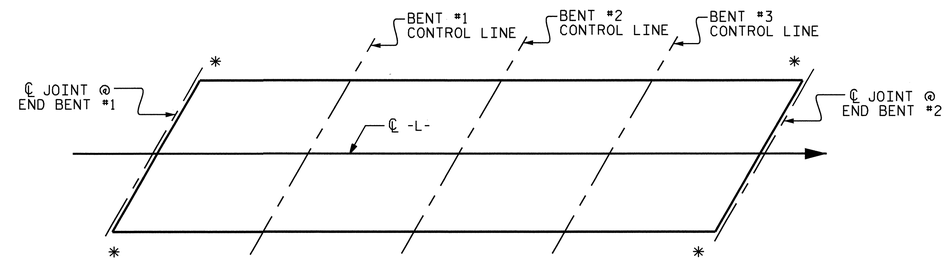

SKETCH SHOWING POINTS OF ATTACHMENT

* LOCATION OF GUARDRAIL ATTACHMENT

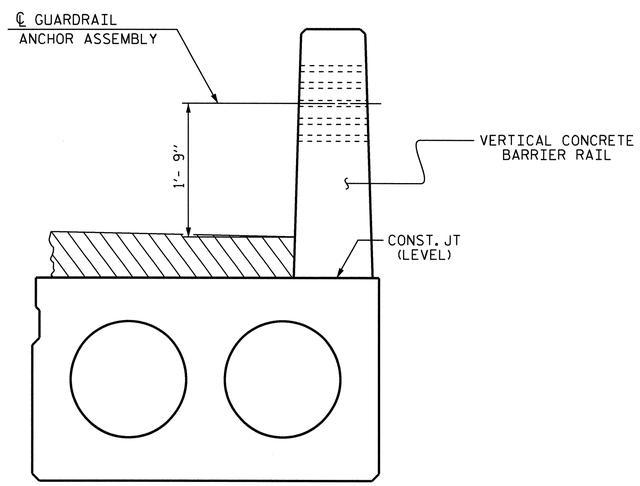

END VIEW

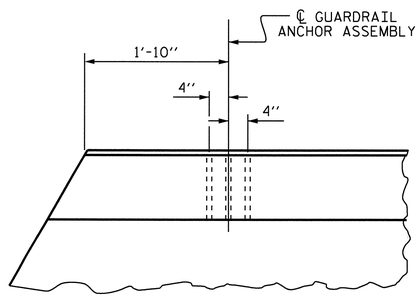

PLAN

LOCATION OF ANCHOR ASSEMBLY FOR GUARDRAIL

PROJECT NO. B-4517
GASTON COUNTY
STATION: 16+37.00 -L-

SHEET 11 OF 11

STATE OF NORTH CAROLINA
DEPARTMENT OF TRANSPORTATION
RALEIGH

GUARDRAIL ANCHORAGE DETAILS FOR VERTICAL CONCRETE BARRIER RAILS

NORTH CAROLINA PROFESSIONAL SEAL 15823 ENGINEER BRYCE D. KLAPPENBACH
2-26-2010

REVISIONS						SHEET NO.
NO.	BY:	DATE:	NO.	BY:	DATE:	S-15
1			3			TOTAL SHEETS
2			4			31

DRAWN BY : C.R. YARBROUGH DATE : 06/09
CHECKED BY : D.A. GLADDEN DATE : 10/09

25-FEB-2010 10:09
r:\structures\cyarbrough\microstation\b-4517_sd_cs.dgn
cyarbrough

TOP OF PILE ELEVATIONS	
PILE #	ELEVATION
1	651.409
2	651.551
3	651.693
4	651.836
5	651.978
6	652.120

NOTES

STIRRUPS IN CAP MAY BE SHIFTED AS NECESSARY TO CLEAR #6D1 DOWELS.

THE CONTRACTOR SHALL PROVIDE FOR INSTALLATION OF THE 4"DIAMETER DRAIN PIPE THROUGH THE WING WALL AS REQUIRED FOR REINFORCED BRIDGE APPROACH FILLS. SEE THE ROADWAY PLANS. REINFORCING STEEL IN THE WING WALL MAY BE SHIFTED AS NECESSARY TO CLEAR THE DRAIN PIPE.

THE CONCRETE IN THE SHADED AREA OF THE WING SHALL BE POURED AFTER THE VERTICAL CONCRETE BARRIER RAIL IS CAST IF SLIP FORMING IS USED.

THE LATERAL GUIDE AT EACH END OF THE CAP IS NOT TO BE POURED UNTIL AFTER CORED SLAB UNITS ARE IN PLACE.

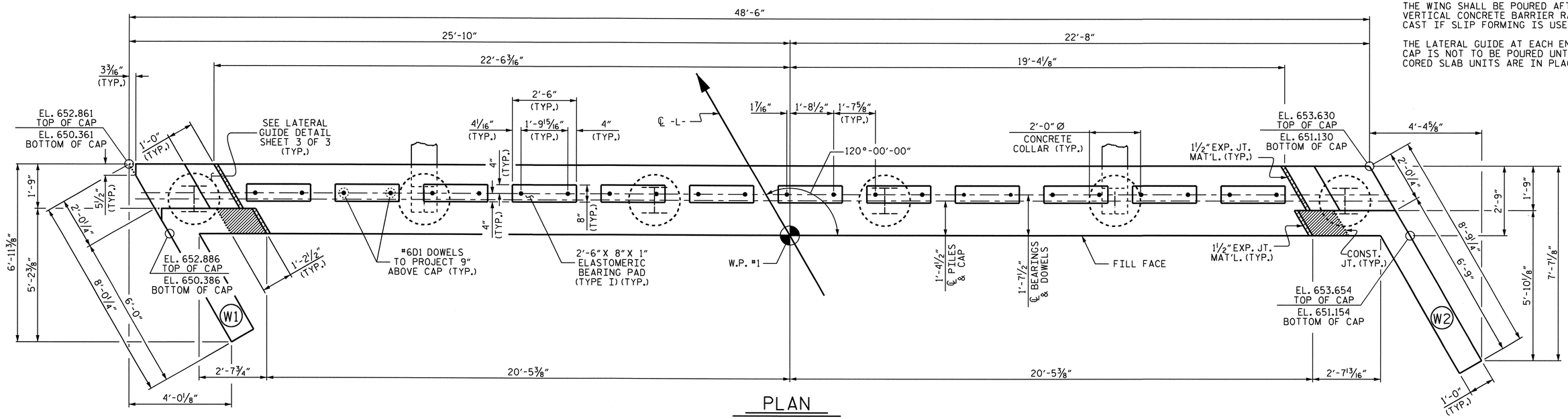

PLAN

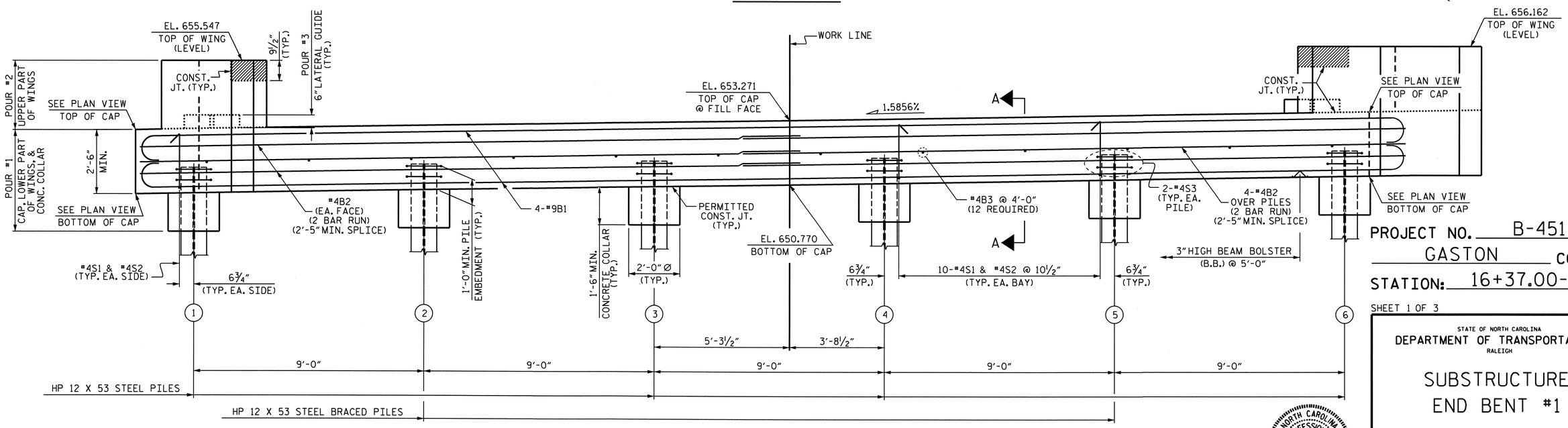

ELEVATION

PROJECT NO. B-4517

GASTON COUNTY

STATION: 16+37.00-L-

SHEET 1 OF 3

STATE OF NORTH CAROLINA
DEPARTMENT OF TRANSPORTATION
RALEIGH

SUBSTRUCTURE END BENT #1

NORTH CAROLINA PROFESSIONAL SEAL 19825 ENGINEER BRUCE D. KLAPPENBACH
2-26-2010

REVISIONS								SHEET NO.
NO.	BY:	DATE:	NO.	BY:	DATE:			S-16
1			3					TOTAL SHEETS
2			4					31

DRAWN BY : S.H. SOCKWELL DATE : 12/15/09
CHECKED BY : D.A. DAVENPORT DATE : 12/17/09

26-FEB-2010 14:00
R:\Structures\ssockwell\B-4517_SD_E*.dgn
bklappenbach

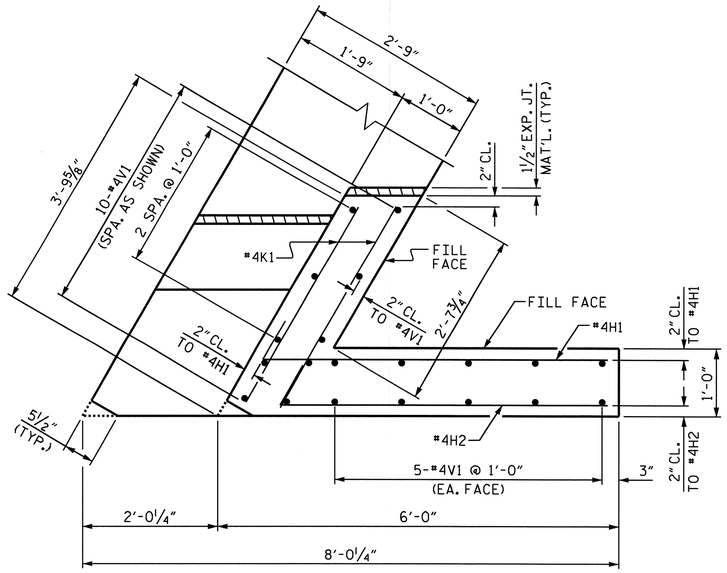

PLAN OF LEFT WING (W1)

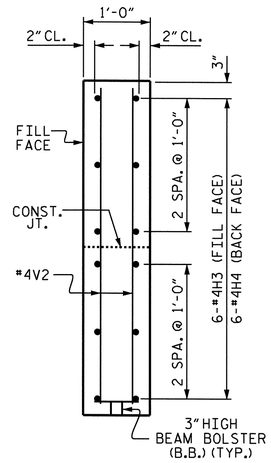

SECTION Y-Y

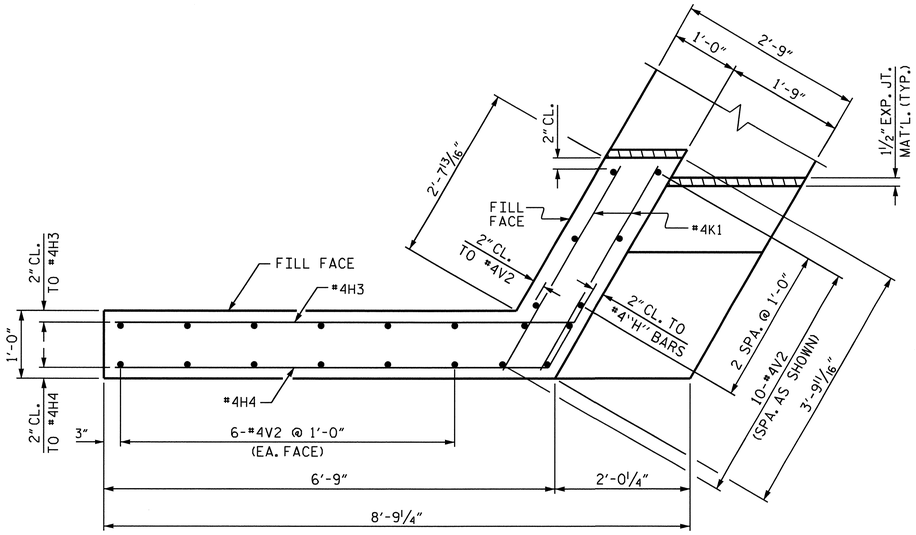

PLAN OF RIGHT WING (W2)

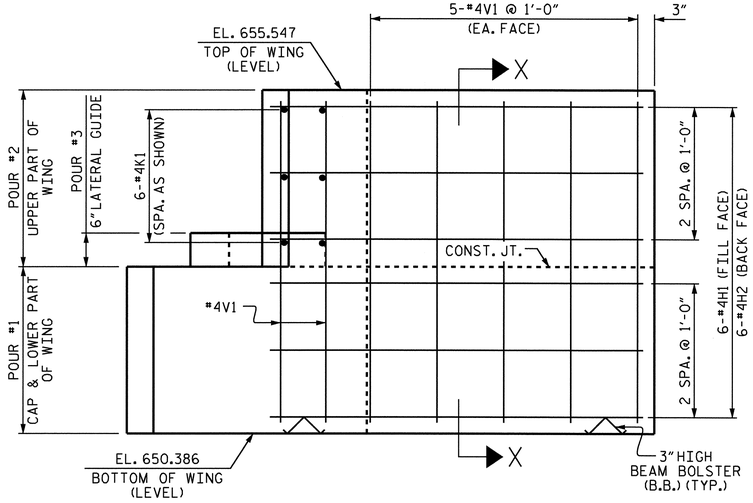

ELEVATION OF LEFT WING (W1)

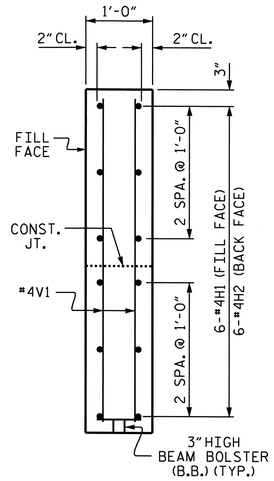

SECTION X-X

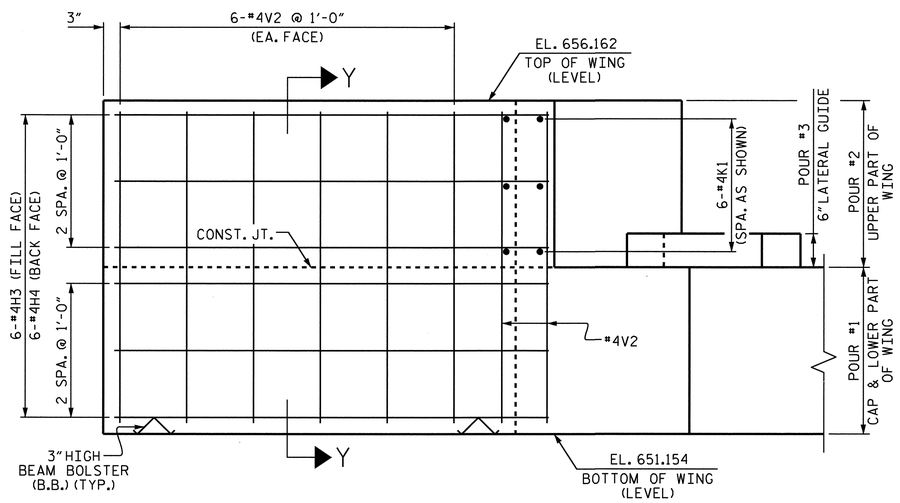

ELEVATION OF RIGHT WING (W2)

PROJECT NO. B-4517

GASTON COUNTY

STATION: 16+37.00-L-

SHEET 2 OF 3

STATE OF NORTH CAROLINA
DEPARTMENT OF TRANSPORTATION
RALEIGH

SUBSTRUCTURE
END BENT #1

NORTH CAROLINA PROFESSIONAL SEAL 15825 ENGINEER BRUCE D. KLAPPENBACH
2-6-2010

REVISIONS						SHEET NO.
NO.	BY:	DATE:	NO.	BY:	DATE:	S-17
1			3			TOTAL SHEETS
2			4			31

DRAWN BY : S.H. SOCKWELL DATE : 12/15/09
CHECKED BY : D.A. DAVENPORT DATE : 12/17/09

25-JAN-2010 11:50
r:\structures\ssockwell\b-4517_sd_e*.dgn
ssockwell

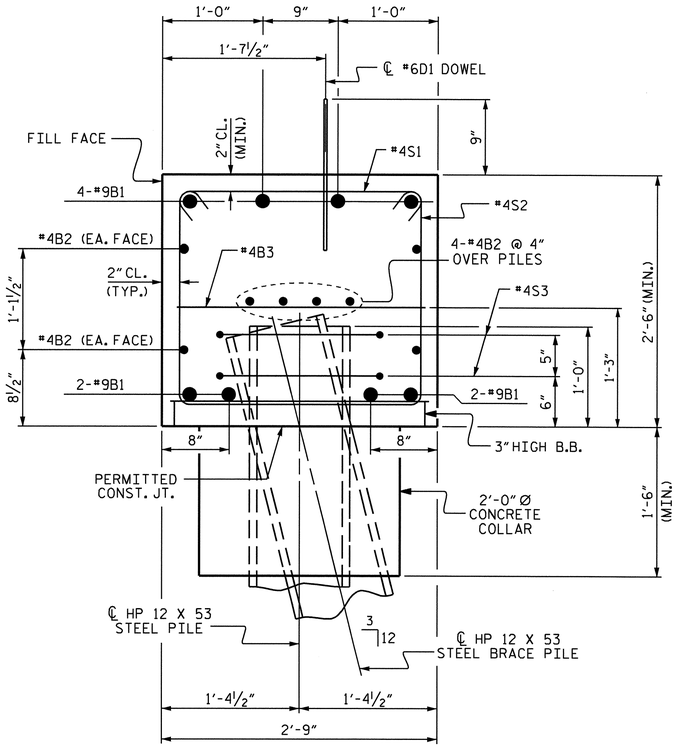

SECTION A-A

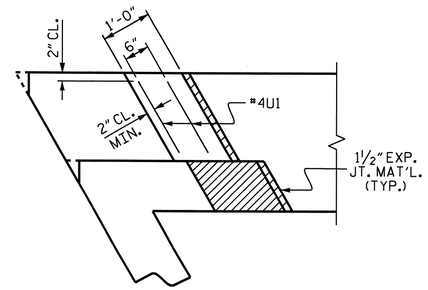

PLAN

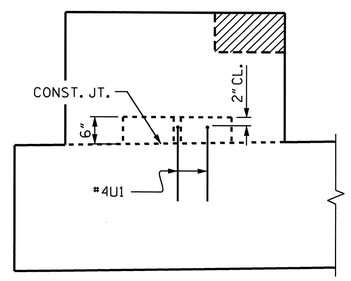

ELEVATION

LATERAL GUIDE DETAILS

BAR TYPES

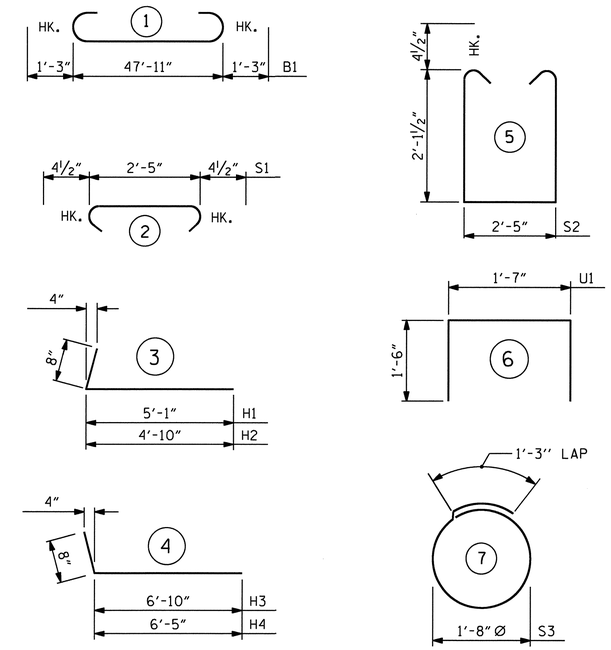

ALL BAR DIMENSIONS ARE OUT TO OUT.

BILL OF MATERIAL
END BENT #1

BAR	NO.	SIZE	TYPE	LENGTH	WEIGHT
B1	8	#9	1	50'-5"	1371
B2	16	#4	STR	25'-4"	271
B3	12	#4	STR	2'-5"	19
D1	24	#6	STR	1'-6"	54
H1	6	#4	3	5'-9"	23
H2	6	#4	3	5'-6"	22
H3	6	#4	4	7'-6"	30
H4	6	#4	4	7'-1"	28
K1	12	#4	STR	3'-5"	27
S1	52	#4	2	3'-2"	110
S2	52	#4	5	7'-5"	258
S3	12	#4	7	6'-6"	52
U1	4	#4	6	4'-7"	12
V1	20	#4	STR	4'-10"	65
V2	22	#4	STR	4'-8"	69
REINFORCING STEEL				=	2411 LBS.

CLASS A CONCRETE BREAKDOWN

POUR #1 CAP, CONC. COLLAR & LOWER PART OF WINGS 14.4 C.Y.

POUR #2 UPPER PART OF WINGS 1.7 C.Y.

POUR #3 LATERAL GUIDES 0.1 C.Y.

TOTAL CLASS A CONCRETE 16.2 C.Y.

HP 12 X 53 STEEL PILES
NO. 6 270 LIN. FT.

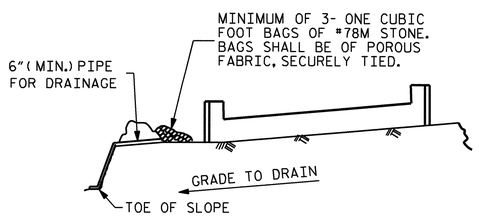

BAGGED STONE AND PIPE SHALL BE PLACED IMMEDIATELY AFTER COMPLETION OF END BENT EXCAVATION. PIPE MAY BE EITHER CONCRETE, CORRUGATED STEEL, CORRUGATED ALUMINUM ALLOY, OR CORRUGATED PLASTIC. PERFORATED PIPE WILL NOT BE ALLOWED.

BAGGED STONE SHALL REMAIN IN PLACE UNTIL THE ENGINEER DIRECTS THAT IT BE REMOVED. THE CONTRACTOR SHALL REMOVE AND DISPOSE OF SILT ACCUMULATIONS AT BAGGED STONE WHEN SO DIRECTED BY THE ENGINEER. BAGS SHALL BE REMOVED AND REPLACED WHENEVER THE ENGINEER DETERMINES THAT THEY HAVE DETERIORATED AND LOST THEIR EFFECTIVENESS.

NO SEPARATE PAYMENT WILL BE MADE FOR THIS WORK AND THE ENTIRE COST OF THIS WORK SHALL BE INCLUDED IN THE UNIT CONTRACT PRICE BID FOR THE SEVERAL PAY ITEMS.

TEMPORARY DRAINAGE AT END BENT

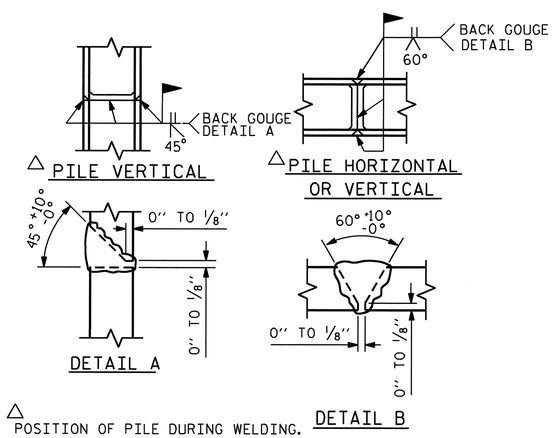

△ POSITION OF PILE DURING WELDING.

PILE SPLICE DETAILS

PROJECT NO. B-4517
GASTON COUNTY
STATION: 16+37.00-L-

SHEET 3 OF 3

STATE OF NORTH CAROLINA
DEPARTMENT OF TRANSPORTATION
RALEIGH

SUBSTRUCTURE
END BENT #1

NORTH CAROLINA PROFESSIONAL SEAL 5829 ENGINEER BRUCE D. KLAPPENBACH
2-4-2010

REVISIONS						SHEET NO.
NO.	BY:	DATE:	NO.	BY:	DATE:	S-18
1			3			TOTAL SHEETS
2			4			31

DRAWN BY : S.H. SOCKWELL DATE : 12/15/09
CHECKED BY : D.A. DAVENPORT DATE : 12/17/09

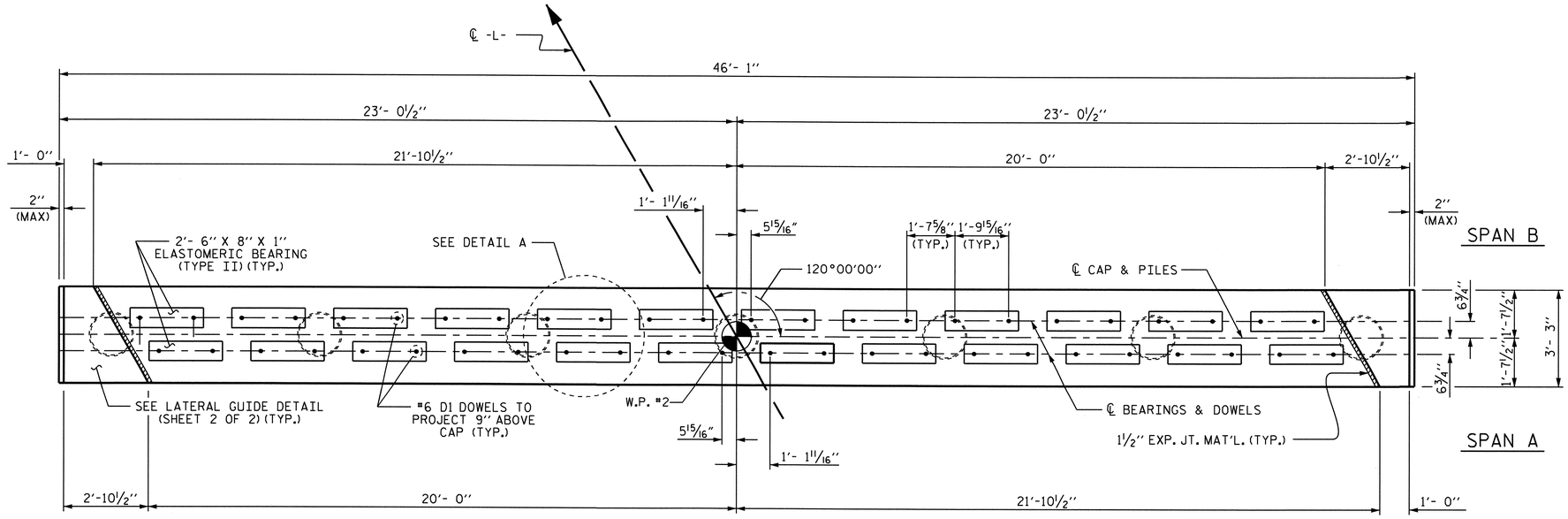

PLAN

NOTES

STIRRUPS IN CAP MAY BE SHIFTED AS NECESSARY TO CLEAR #6 D1 DOWELS.

THE LATERAL GUIDES SHALL NOT BE POURED UNTIL THE CORED SLAB UNITS ARE IN PLACE.

GALVANIZE THE TOP 30 FEET OF EACH INTERIOR BENT PILE IN ACCORDANCE WITH SECTION 1076 OF THE STANDARD SPECIFICATIONS.

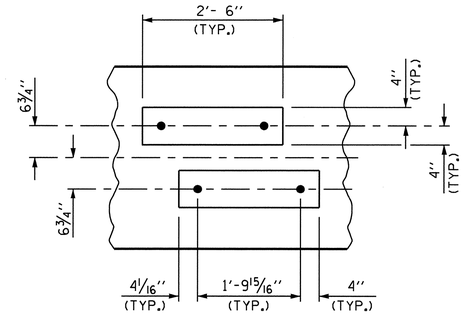

DETAIL A

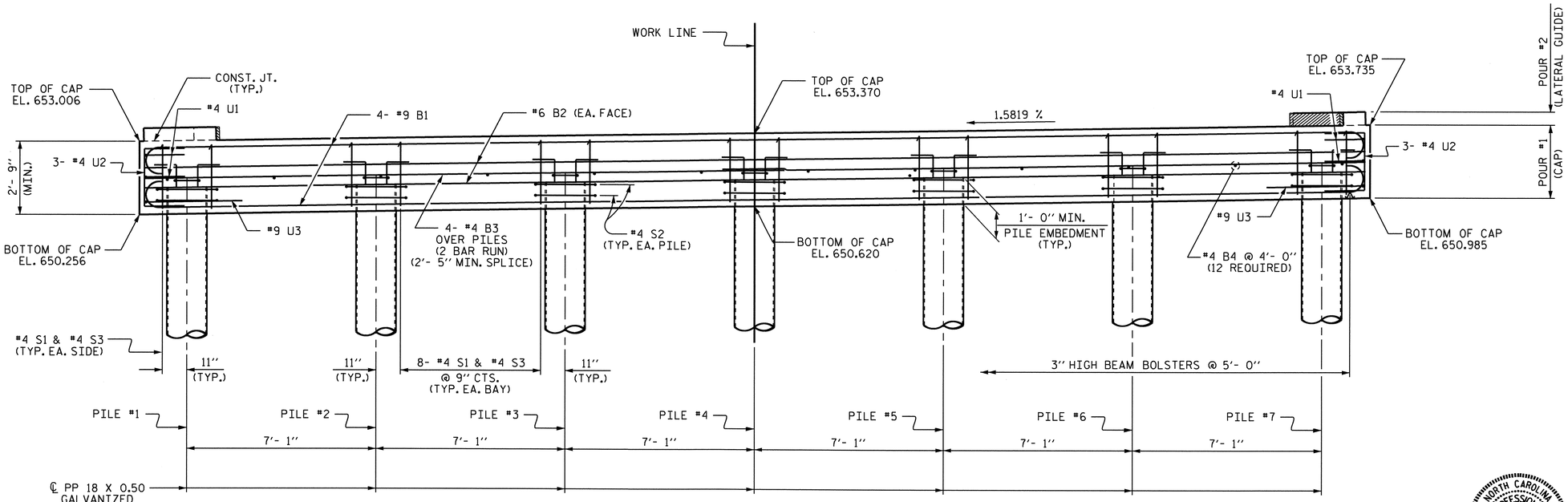

ELEVATION

TOP OF PILE ELEVATIONS	
PILE #1	EL. 651.298
PILE #2	EL. 651.408
PILE #3	EL. 651.520
PILE #4	EL. 651.632
PILE #5	EL. 651.744
PILE #6	EL. 651.856
PILE #7	EL. 651.968

PROJECT NO. B-4517

GASTON COUNTY

STATION: 16+37.00 -L-

SHEET 1 OF 2

STATE OF NORTH CAROLINA
DEPARTMENT OF TRANSPORTATION
RALEIGH

SUBSTRUCTURE
BENT #1

NORTH CAROLINA PROFESSIONAL SEAL 15825 ENGINEER BRUCE D. KLAPPENBACH
2-26-2010

REVISIONS							SHEET NO.
NO.	BY:	DATE:	NO.	BY:	DATE:		S-19
1			3				TOTAL SHEETS
2			4				31

DRAWN BY : D. A. GLADDEN DATE : 10-1-09
CHECKED BY : D. A. DAVENPORT DATE : 12-9-09

25-FEB-2010 10:34
r:\structures\dgladden\microstation\b4517_sd_b*.dgn
dgladden

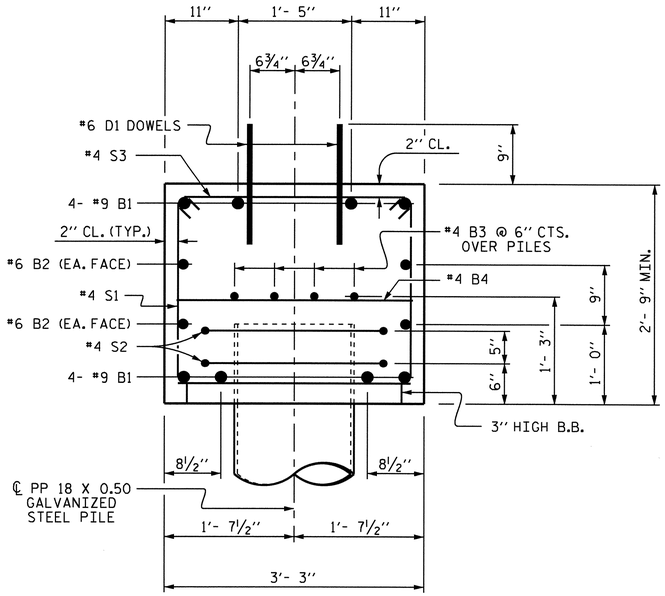

SECTION THRU CAP

REINFORCING STEEL IN PIPE PILE NOT SHOWN

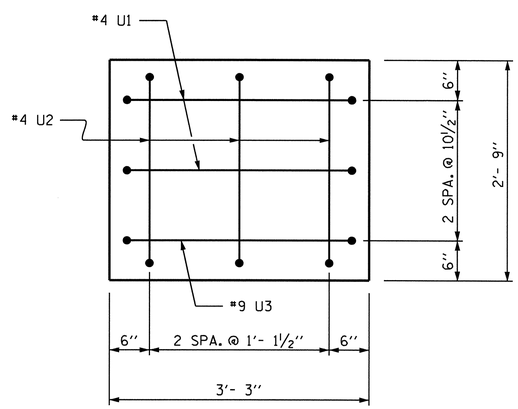

END OF CAP

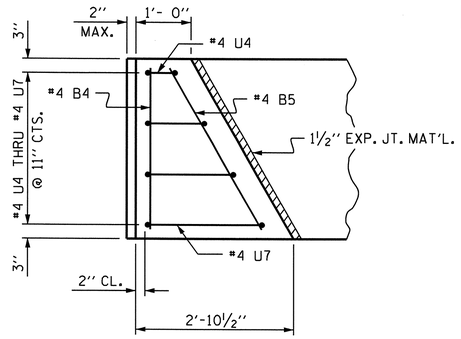

PLAN

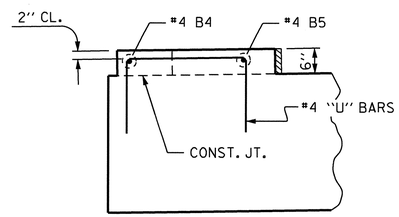

ELEVATION

LATERAL GUIDE DETAIL

BAR TYPES

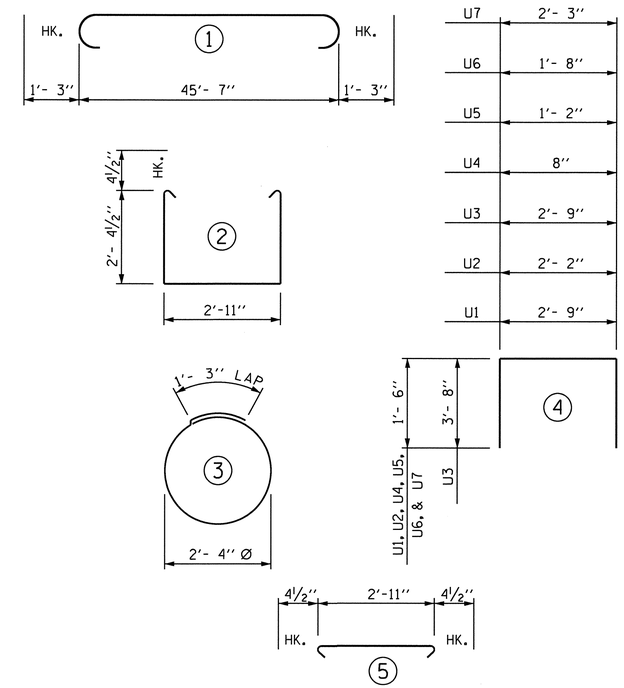

ALL BAR DIMENSIONS ARE OUT TO OUT.

BILL OF MATERIAL

BAR	NO.	SIZE	TYPE	LENGTH	WEIGHT
B1	8	#9	1	48'- 1''	1308
B2	4	#6	STR	45'- 9''	275
B3	8	#4	STR	24'- 1''	129
B4	14	#4	STR	2'-11''	27
B5	2	#4	STR	3'- 4''	4
D1	48	#6	STR	1'- 6''	108
S1	50	#4	2	8'- 5''	281
S2	14	#4	3	8'- 7''	80
S3	50	#4	5	3'- 8''	122
U1	4	#4	4	5'- 9''	15
U2	6	#4	4	5'- 2''	21
U3	2	#9	4	10'- 1''	69
U4	2	#4	4	3'- 8''	5
U5	2	#4	4	4'- 2''	6
U6	2	#4	4	4'- 8''	6
U7	2	#4	4	5'- 3''	7

REINFORCING STEEL = 2463 LBS

CLASS A CONCRETE

POUR #1 (CAP) 14.8 CUBIC YDS.

POUR #2 (LATERAL GUIDES) 0.2 CUBIC YDS.

▲ TOTAL CLASS A CONCRETE 15.0 CUBIC YDS.

PP 18 X 0.50 GALVANIZED STEEL PILE

NO. 7 455 LIN. FT.

▲ CONCRETE DISPLACED BY THE PP 18X0.5 GALVANIZED STEEL PILES HAS BEEN DEDUCTED FROM THE CONCRETE QUANTITY.

PROJECT NO. B-4517

GASTON COUNTY

STATION: 16+37.00 -L-

SHEET 2 OF 2

STATE OF NORTH CAROLINA
DEPARTMENT OF TRANSPORTATION
RALEIGH

SUBSTRUCTURE

BENT #1

NORTH CAROLINA PROFESSIONAL SEAL 19828 ENGINEER BRIAN D. KLAPPENBACH

2-26-2010

REVISIONS						SHEET NO.
NO.	BY:	DATE:	NO.	BY:	DATE:	S-20
1			3			TOTAL SHEETS
2			4			31

DRAWN BY : D. A. GLADDEN DATE : 10-1-09
CHECKED BY : D. A. DAVENPORT DATE : 12-9-09

26-FEB-2010 10:12
r:\structures\dgladden\microstation\b4517_sd_b*.dgn
bklappenbach

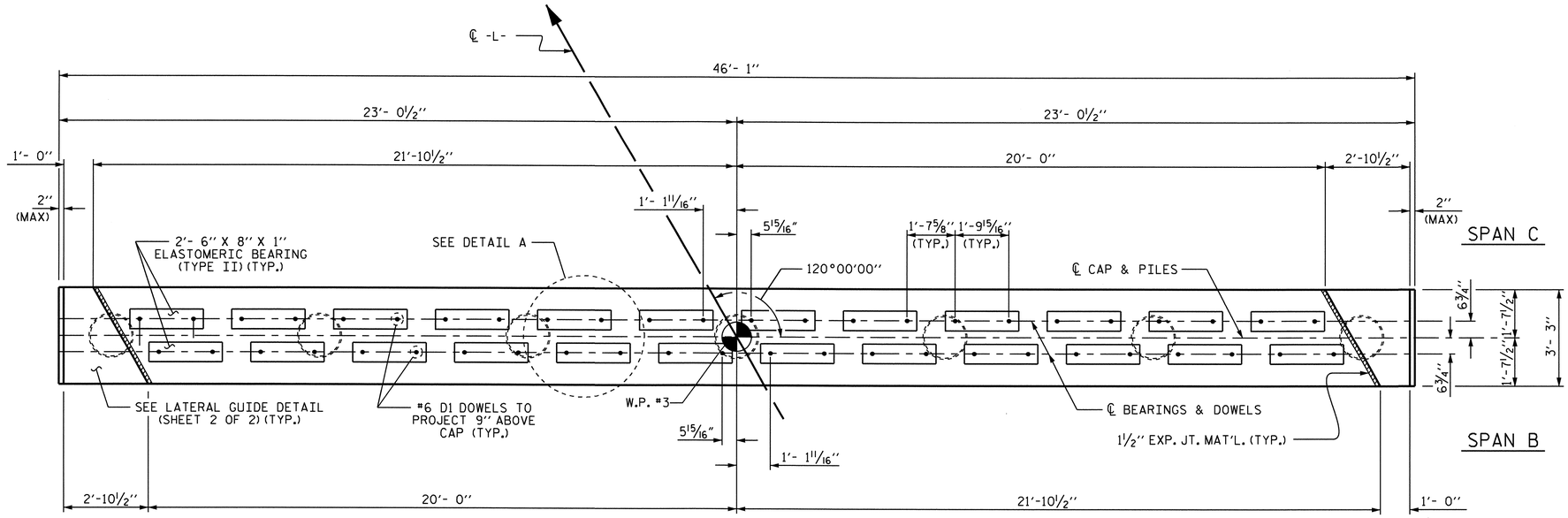

PLAN

NOTES

STIRRUPS IN CAP MAY BE SHIFTED AS NECESSARY TO CLEAR #6 D1 DOWELS.

THE LATERAL GUIDES SHALL NOT BE POURED UNTIL THE CORED SLAB UNITS ARE IN PLACE.

GALVANIZE THE TOP 30 FEET OF EACH INTERIOR BENT PILE IN ACCORDANCE WITH SECTION 1076 OF THE STANDARD SPECIFICATIONS.

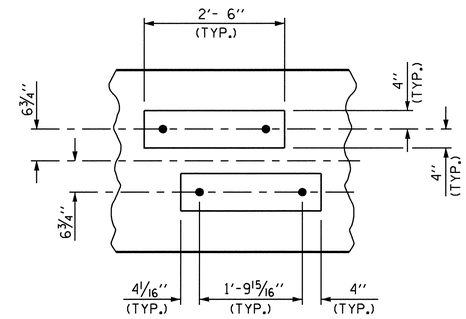

DETAIL A

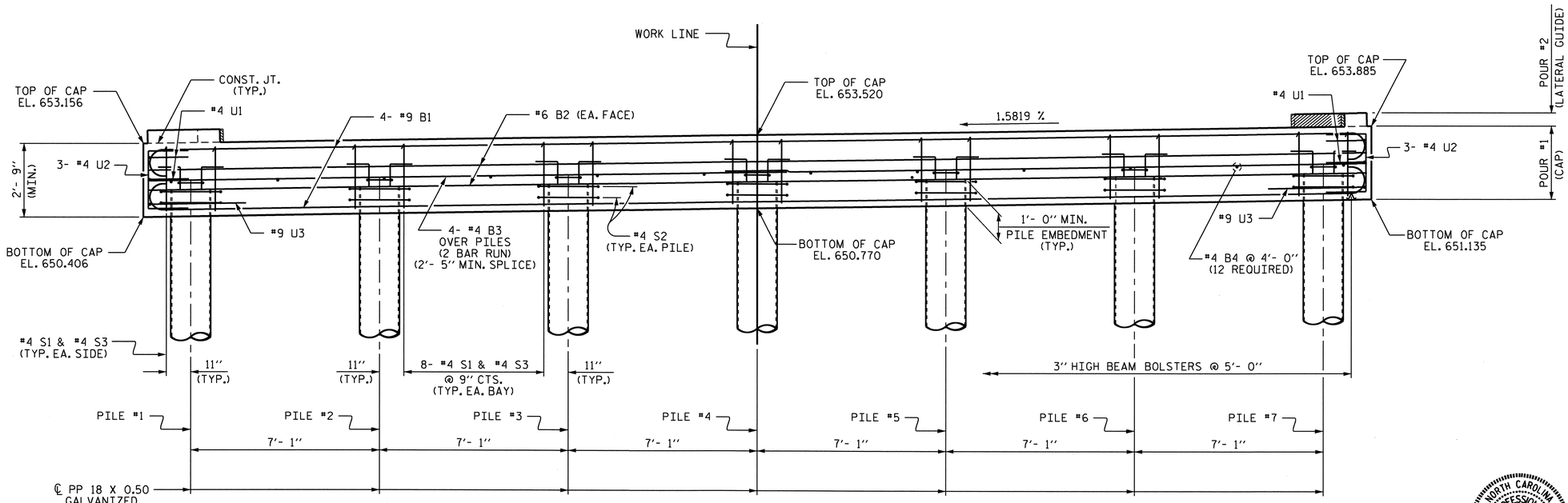

ELEVATION

TOP OF PILE ELEVATIONS	
PILE #1	EL. 651.446
PILE #2	EL. 651.557
PILE #3	EL. 651.670
PILE #4	EL. 651.782
PILE #5	EL. 651.894
PILE #6	EL. 652.006
PILE #7	EL. 652.118

PROJECT NO. B-4517

GASTON COUNTY

STATION: 16+37.00 -L-

SHEET 1 OF 2

STATE OF NORTH CAROLINA
DEPARTMENT OF TRANSPORTATION
RALEIGH

SUBSTRUCTURE BENT #2

NORTH CAROLINA PROFESSIONAL SEAL 15825 ENGINEER BRUCE D. KLAPPENBACH 2-26-2010

REVISIONS								SHEET NO.
NO.	BY:	DATE:	NO.	BY:	DATE:			S-21
1			3					TOTAL SHEETS
2			4					31

DRAWN BY : D. A. GLADDEN DATE : 10-1-09
CHECKED BY : D. A. DAVENPORT DATE : 12-9-09

25-FEB-2010 12:57
r:\structures\dgladden\microstation\b4517_sd_b*.dgn
bklappenbach

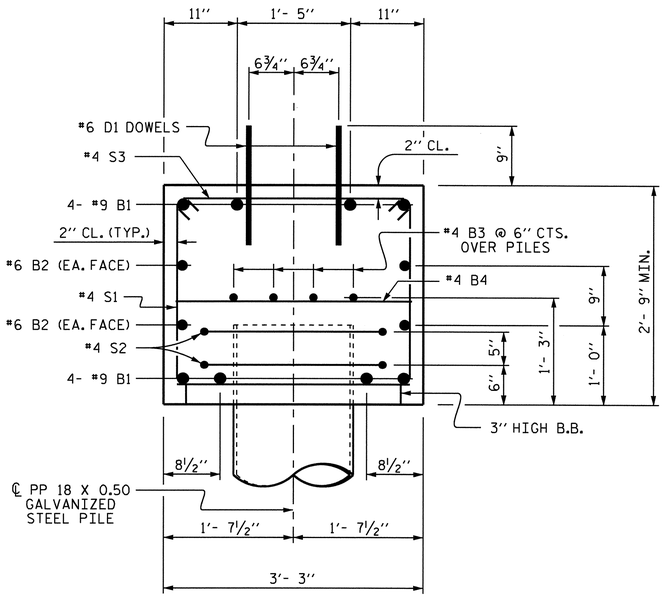

SECTION THRU CAP

REINFORCING STEEL IN PIPE PILE NOT SHOWN

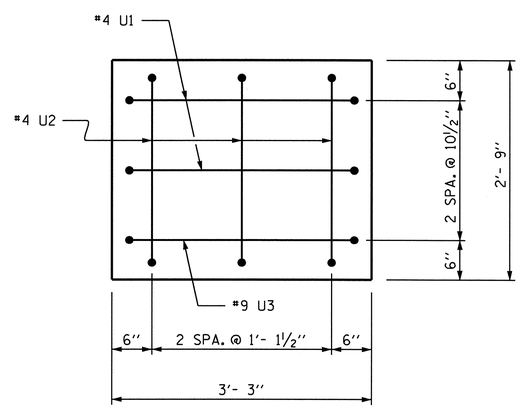

END OF CAP

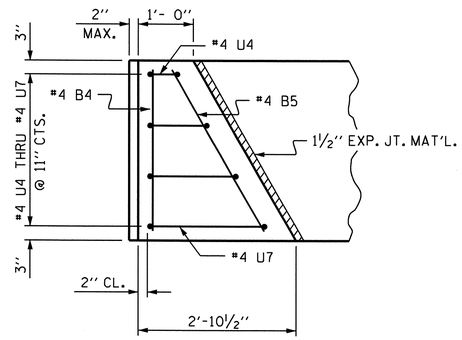

PLAN

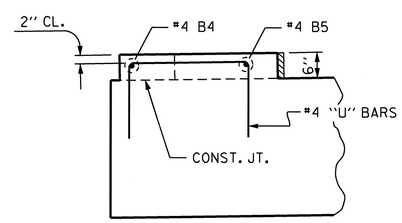

ELEVATION

LATERAL GUIDE DETAIL

BAR TYPES

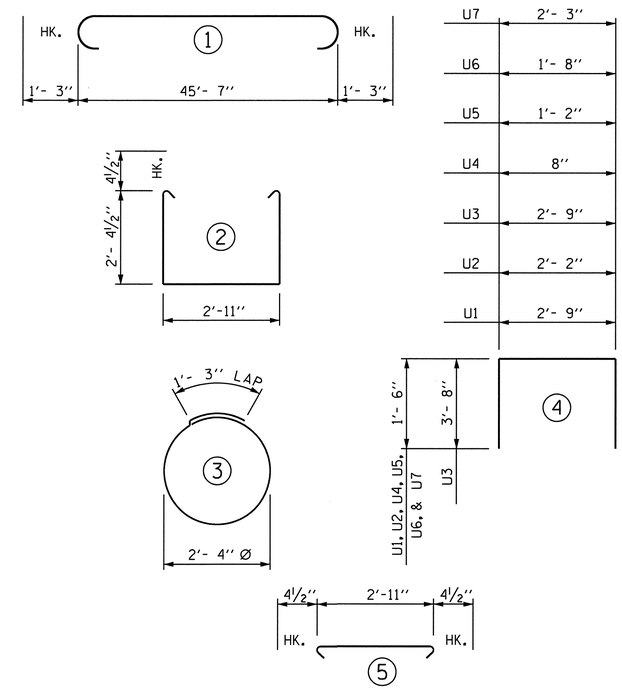

ALL BAR DIMENSIONS ARE OUT TO OUT.

BILL OF MATERIAL

BAR	NO.	SIZE	TYPE	LENGTH	WEIGHT
B1	8	#9	1	48'- 1''	1308
B2	4	#6	STR	45'- 9''	275
B3	8	#4	STR	24'- 1''	129
B4	14	#4	STR	2'-11''	27
B5	2	#4	STR	3'- 4''	4
D1	48	#6	STR	1'- 6''	108
S1	50	#4	2	8'- 5''	281
S2	14	#4	3	8'- 7''	80
S3	50	#4	5	3'- 8''	122
U1	4	#4	4	5'- 9''	15
U2	6	#4	4	5'- 2''	21
U3	2	#9	4	10'- 1''	69
U4	2	#4	4	3'- 8''	5
U5	2	#4	4	4'- 2''	6
U6	2	#4	4	4'- 8''	6
U7	2	#4	4	5'- 3''	7

REINFORCING STEEL = 2463 LBS

CLASS A CONCRETE

POUR #1 (CAP) 14.8 CUBIC YDS.

POUR #2 (LATERAL GUIDES) 0.2 CUBIC YDS.

▲ TOTAL CLASS A CONCRETE 15.0 CUBIC YDS.

PP 18 X 0.50 GALVANIZED STEEL PILE

NO. 7 350 LIN. FT.

▲ CONCRETE DISPLACED BY THE PP 18X0.5 GALVANIZED STEEL PILES HAS BEEN DEDUCTED FROM THE CONCRETE QUANTITY.

PROJECT NO. B-4517

GASTON COUNTY

STATION: 16+37.00 -L-

SHEET 2 OF 2

STATE OF NORTH CAROLINA
DEPARTMENT OF TRANSPORTATION
RALEIGH

SUBSTRUCTURE
BENT #2

NORTH CAROLINA PROFESSIONAL SEAL 15825 PROJECT ENGINEER D. KLAPPENBACH
2-26-2010

REVISIONS						SHEET NO.
NO.	BY:	DATE:	NO.	BY:	DATE:	S-22
1			3			TOTAL SHEETS
2			4			31

DRAWN BY : D. A. GLADDEN DATE : 10-1-09
CHECKED BY : D. A. DAVENPORT DATE : 12-9-09

26-FEB-2010 10:12
r:\structures\dgladden\microstation\b4517_sd_b*.dgn
bklappenbach

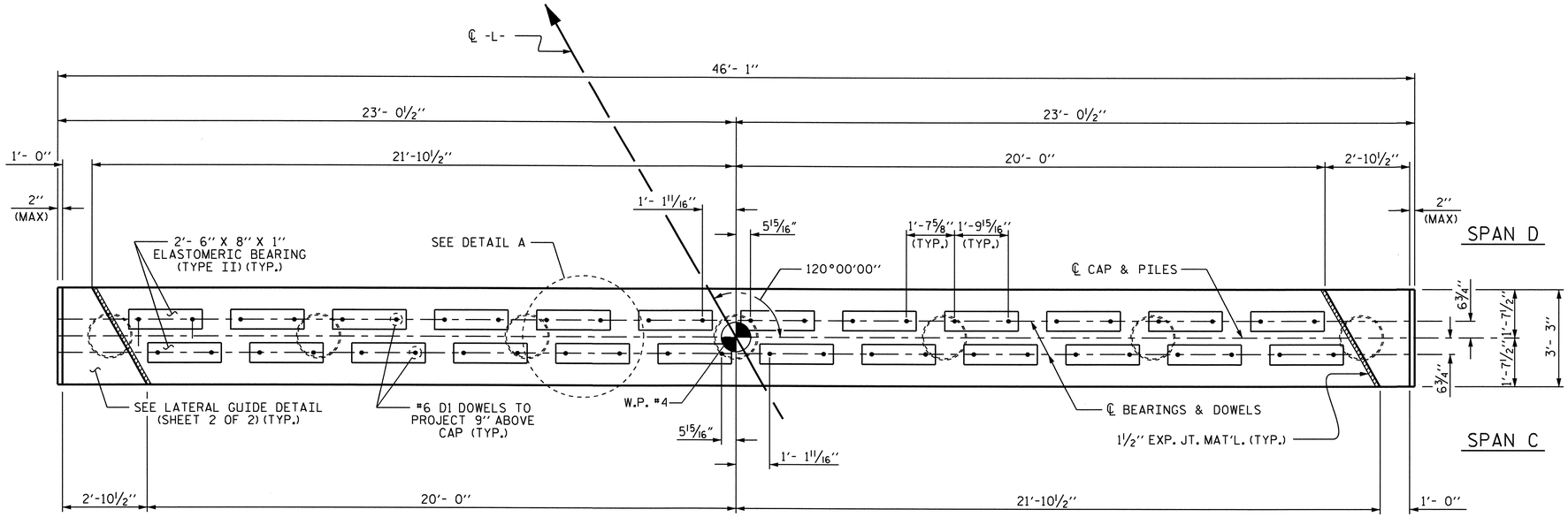

PLAN

NOTES

STIRRUPS IN CAP MAY BE SHIFTED AS NECESSARY TO CLEAR #6 DI DOWELS.

THE LATERAL GUIDES SHALL NOT BE POURED UNTIL THE CORED SLAB UNITS ARE IN PLACE.

GALVANIZE THE TOP 30 FEET OF EACH INTERIOR BENT PILE IN ACCORDANCE WITH SECTION 1076 OF THE STANDARD SPECIFICATIONS.

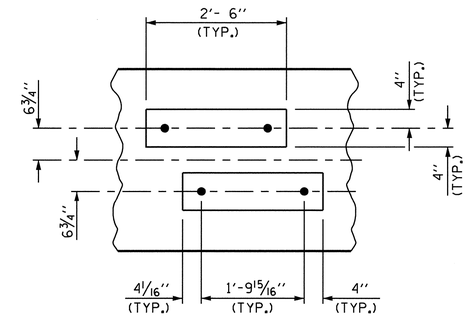

DETAIL A

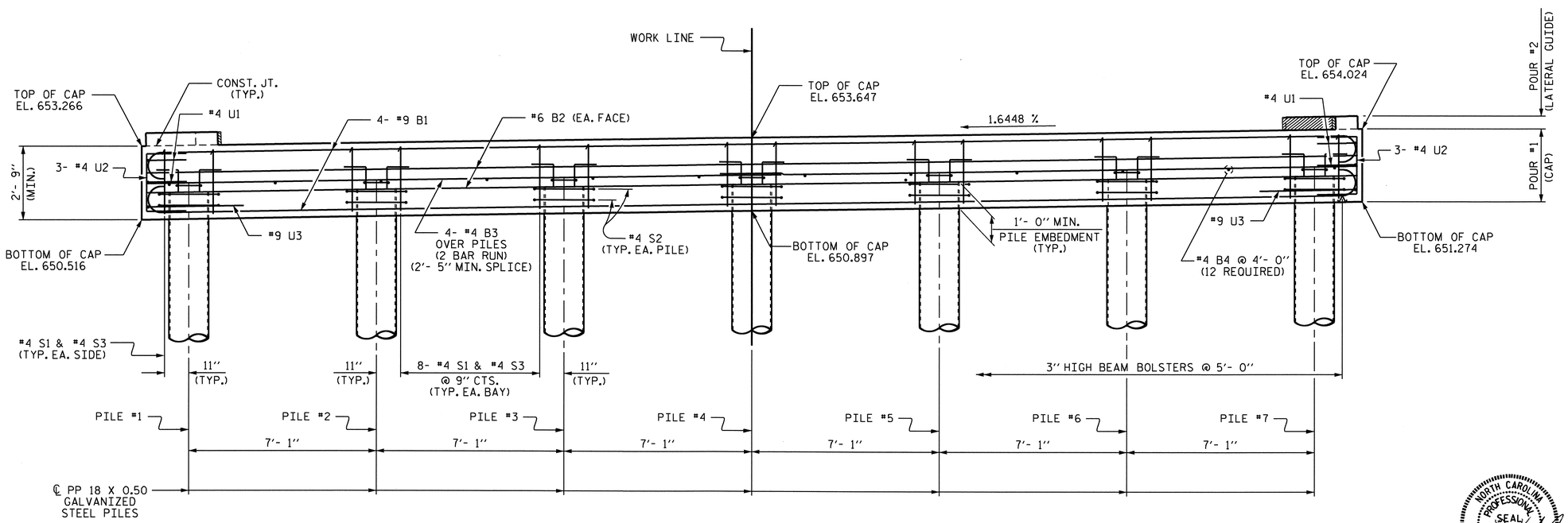

ELEVATION

TOP OF PILE ELEVATIONS	
PILE #1	EL. 651.560
PILE #2	EL. 651.676
PILE #3	EL. 651.793
PILE #4	EL. 651.909
PILE #5	EL. 652.025
PILE #6	EL. 652.142
PILE #7	EL. 652.259

PROJECT NO. B-4517

GASTON COUNTY

STATION: 16+37.00 -L-

SHEET 1 OF 2

STATE OF NORTH CAROLINA
DEPARTMENT OF TRANSPORTATION
RALEIGH

SUBSTRUCTURE BENT #3

NORTH CAROLINA PROFESSIONAL SEAL 15825 ENGINEER D. KLAPPENBACH
2-26-2010

REVISIONS								SHEET NO.
NO.	BY:	DATE:	NO.	BY:	DATE:			S-23
1			3					TOTAL SHEETS
2			4					31

DRAWN BY : D. A. GLADDEN DATE : 10-1-09
CHECKED BY : D. A. DAVENPORT DATE : 12-9-09

25-FEB-2010 12:57
r:\structures\dgladden\microstation\b4517_sd_b*.dgn
bklappenbach

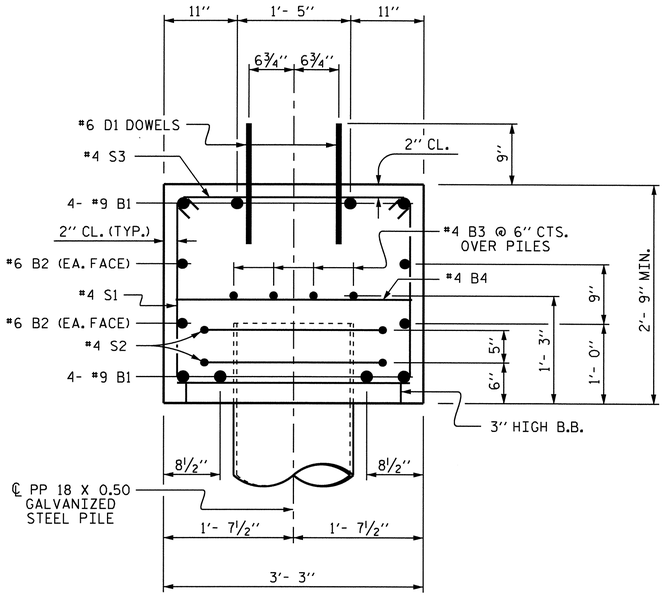

SECTION THRU CAP

REINFORCING STEEL IN PIPE PILE NOT SHOWN

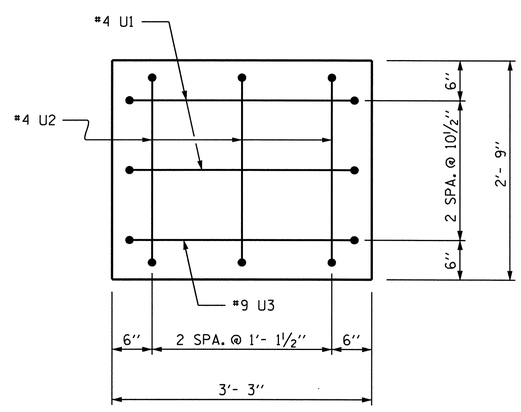

END OF CAP

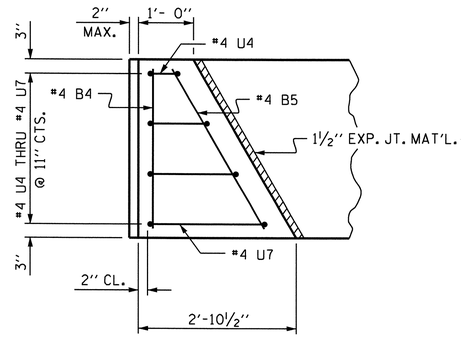

PLAN

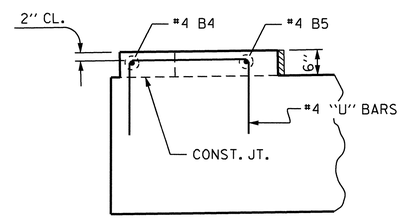

ELEVATION

LATERAL GUIDE DETAIL

BAR TYPES

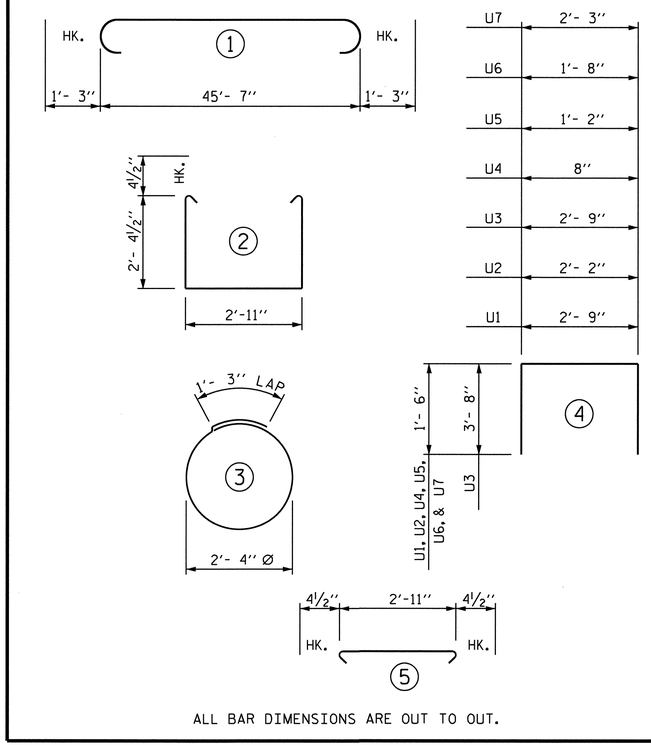

ALL BAR DIMENSIONS ARE OUT TO OUT.

BILL OF MATERIAL

BAR	NO.	SIZE	TYPE	LENGTH	WEIGHT
B1	8	#9	1	48'- 1''	1308
B2	4	#6	STR	45'- 9''	275
B3	8	#4	STR	24'- 1''	129
B4	14	#4	STR	2'-11''	27
B5	2	#4	STR	3'- 4''	4
D1	48	#6	STR	1'- 6''	108
S1	50	#4	2	8'- 5''	281
S2	14	#4	3	8'- 7''	80
S3	50	#4	5	3'- 8''	122
U1	4	#4	4	5'- 9''	15
U2	6	#4	4	5'- 2''	21
U3	2	#9	4	10'- 1''	69
U4	2	#4	4	3'- 8''	5
U5	2	#4	4	4'- 2''	6
U6	2	#4	4	4'- 8''	6
U7	2	#4	4	5'- 3''	7

REINFORCING STEEL = 2463 LBS

CLASS A CONCRETE

POUR #1 (CAP) 14.8 CUBIC YDS.

POUR #2 (LATERAL GUIDES) 0.2 CUBIC YDS.

▲ TOTAL CLASS A CONCRETE 15.0 CUBIC YDS.

PP 18 X 0.50 GALVANIZED STEEL PILE

NO. 7 350 LIN. FT.

▲ CONCRETE DISPLACED BY THE PP 18X0.5 GALVANIZED STEEL PILES HAS BEEN DEDUCTED FROM THE CONCRETE QUANTITY.

PROJECT NO. B-4517

GASTON COUNTY

STATION: 16+37.00 -L-

SHEET 2 OF 2

STATE OF NORTH CAROLINA
DEPARTMENT OF TRANSPORTATION
RALEIGH

SUBSTRUCTURE
BENT #3

NORTH CAROLINA PROFESSIONAL SEAL 15825 ENGINEER BRUCE O. KLAPPENBACH
2-26-2010

REVISIONS						SHEET NO.
NO.	BY:	DATE:	NO.	BY:	DATE:	S-24
1			3			TOTAL SHEETS
2			4			31

DRAWN BY : D. A. GLADDEN DATE : 10-1-09
CHECKED BY : D. A. DAVENPORT DATE : 12-9-09

26-FEB-2010 10:05
r:\structures\dgladden\microstation\b4517_sd_b*.dgn
bklappenbach

TOP OF PILE ELEVATIONS	
PILE #	ELEVATION
1	651.808
2	651.963
3	652.119
4	652.274
5	652.430
6	652.585

NOTES

STIRRUPS IN CAP MAY BE SHIFTED AS NECESSARY TO CLEAR #6D1 DOWELS.

THE CONTRACTOR SHALL PROVIDE FOR INSTALLATION OF THE 4" DIAMETER DRAIN PIPE THROUGH THE WING WALL AS REQUIRED FOR REINFORCED BRIDGE APPROACH FILLS. SEE THE ROADWAY PLANS. REINFORCING STEEL IN THE WING WALL MAY BE SHIFTED AS NECESSARY TO CLEAR THE DRAIN PIPE.

THE CONCRETE IN THE SHADED AREA OF THE WING SHALL BE POURED AFTER THE VERTICAL CONCRETE BARRIER RAIL IS CAST IF SLIP FORMING IS USED.

THE LATERAL GUIDE AT EACH END OF THE CAP IS NOT TO BE POURED UNTIL AFTER CORED SLAB UNITS ARE IN PLACE.

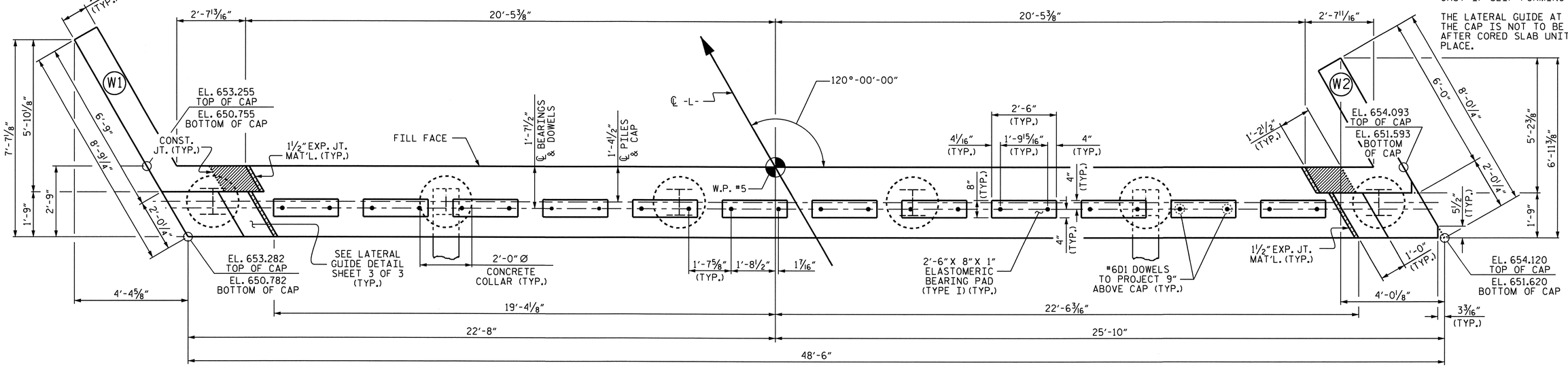

PLAN

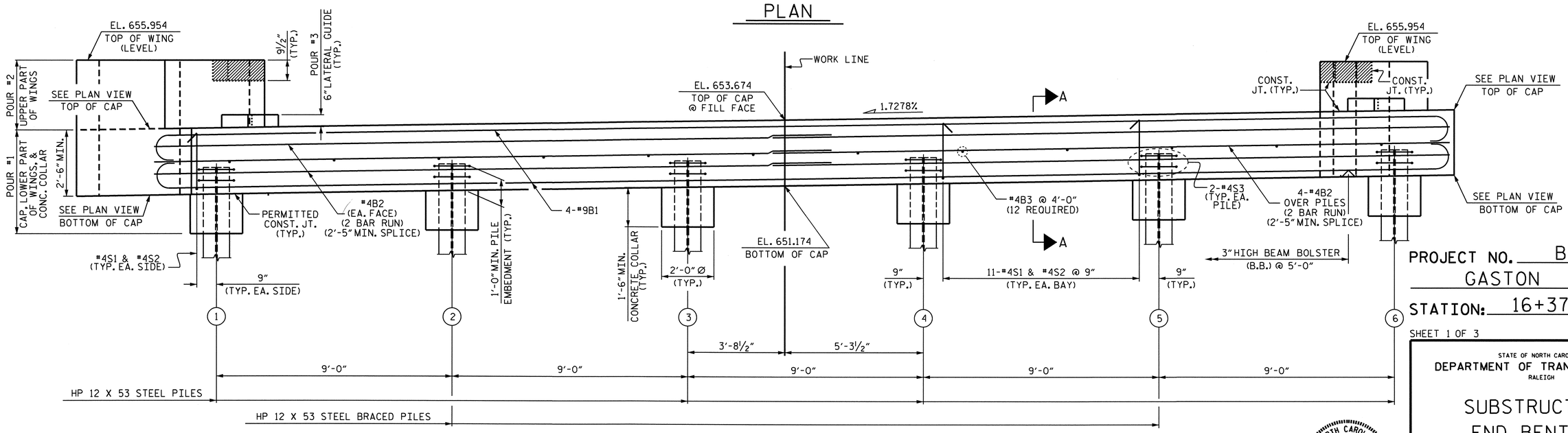

ELEVATION

PROJECT NO. B-4517

GASTON COUNTY

STATION: 16+37.00-L-

SHEET 1 OF 3

STATE OF NORTH CAROLINA
DEPARTMENT OF TRANSPORTATION
RALEIGH

SUBSTRUCTURE END BENT #2

NORTH CAROLINA PROFESSIONAL SEAL 15827 PROJECT ENGINEER D. KLAPPENBACH 2-26-2010

REVISIONS							
NO.	BY:	DATE:	NO.	BY:	DATE:	SHEET NO. S-25
1			3			TOTAL SHEETS 31
2			4			

DRAWN BY : S.H. SOCKWELL DATE : 12/15/09
CHECKED BY : D.A. DAVENPORT DATE : 12/17/09

26-FEB-2010 14:00
R:\Structures\ssockwell\B-4517_SD_E*.dgn
bklappenbach

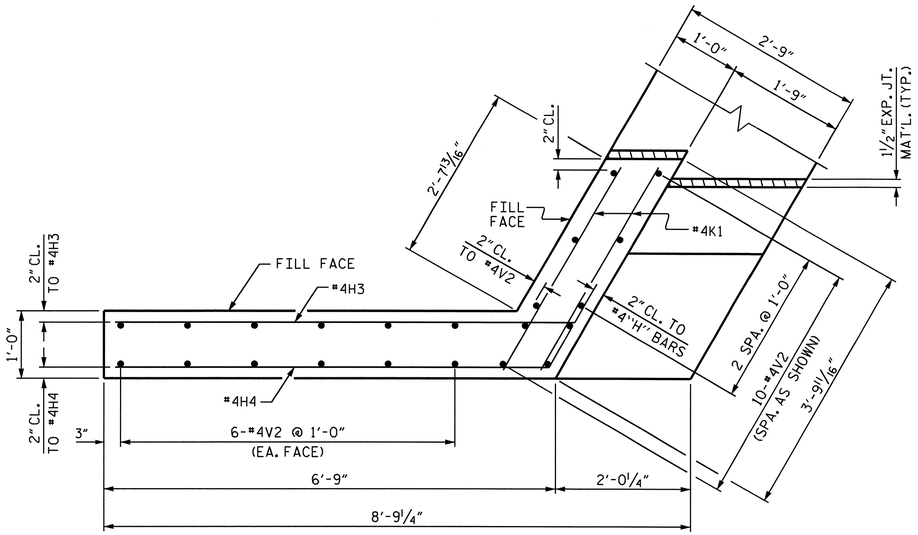

PLAN OF LEFT WING (W1)

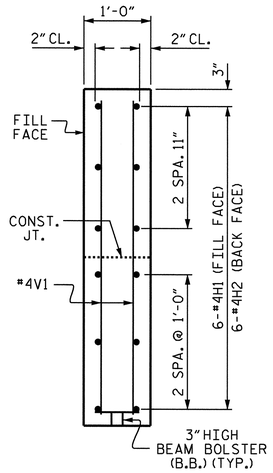

SECTION Y-Y

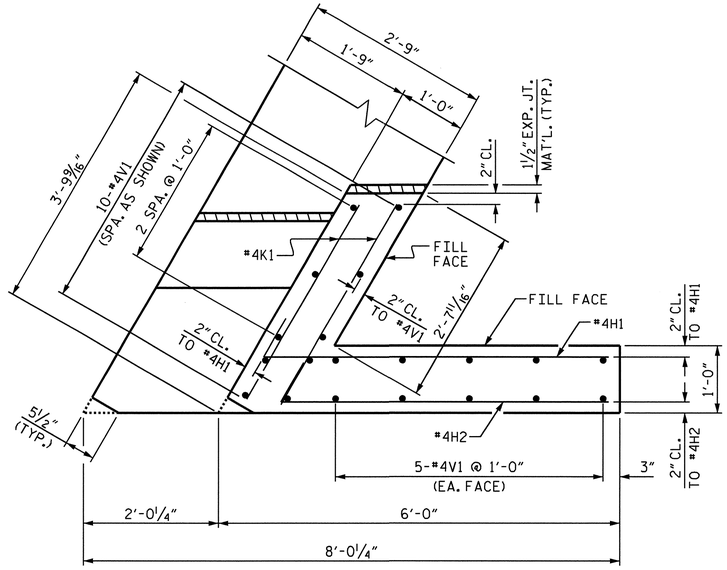

PLAN OF RIGHT WING (W2)

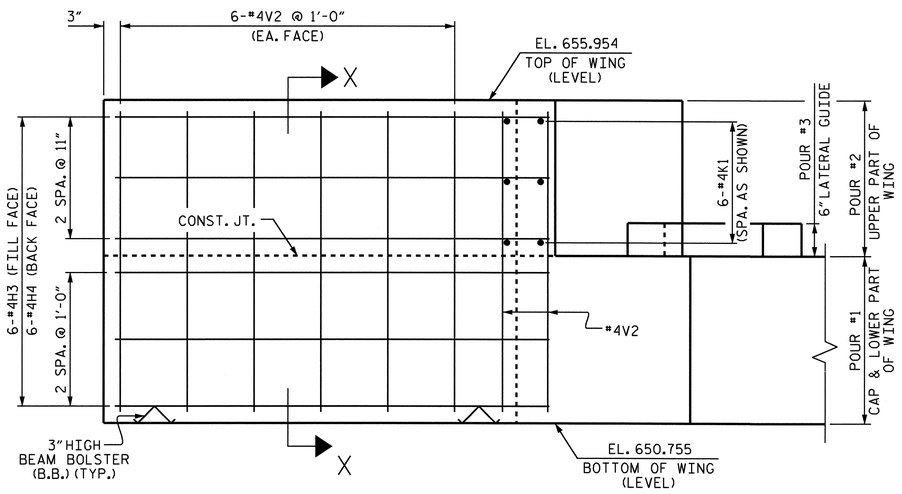

ELEVATION OF LEFT WING (W1)

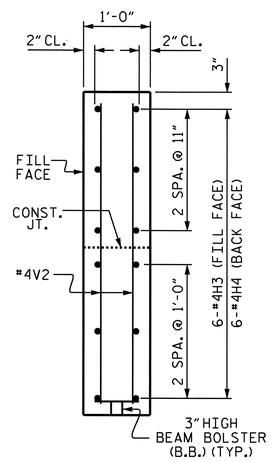

SECTION X-X

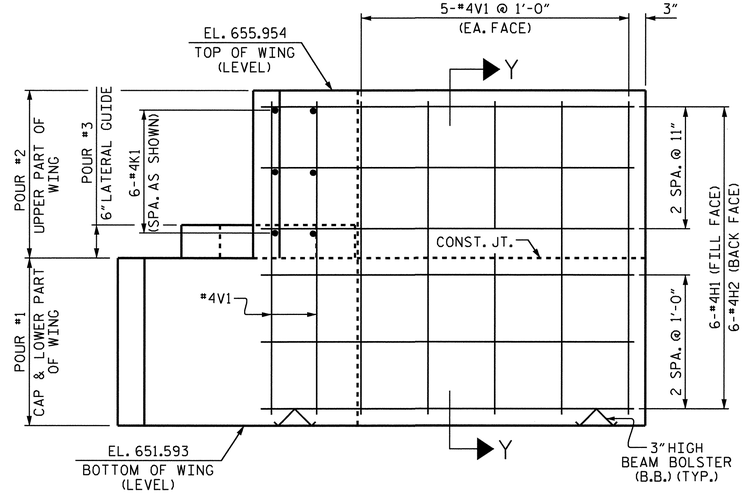

ELEVATION OF RIGHT WING (W2)

PROJECT NO. B-4517

GASTON COUNTY

STATION: 16+37.00-L-

SHEET 2 OF 3

STATE OF NORTH CAROLINA
DEPARTMENT OF TRANSPORTATION
RALEIGH

SUBSTRUCTURE
END BENT #2

NORTH CAROLINA PROFESSIONAL SEAL 15825 ENGINEER BRUCE D. KLAPPENBACH
2-6-2010

REVISIONS								SHEET NO.
NO.	BY:	DATE:	NO.	BY:	DATE:			S-26
1			3					TOTAL SHEETS
2			4					31

DRAWN BY : S.H. SOCKWELL DATE : 12/15/09
CHECKED BY : D.A. DAVENPORT DATE : 12/17/09

29-JAN-2010 11:20
r:\structures\ssockwell\b-4517_sd_e*.dgn
ssockwell

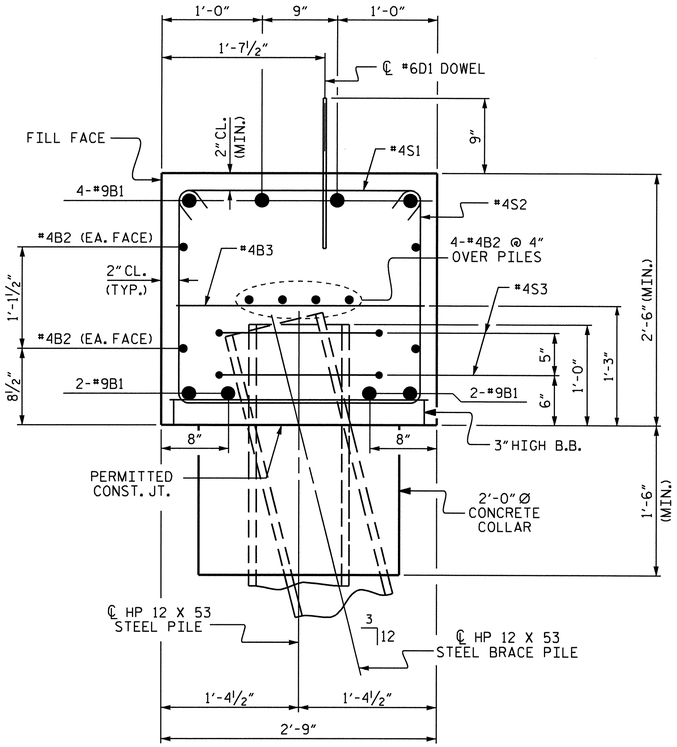

SECTION A-A

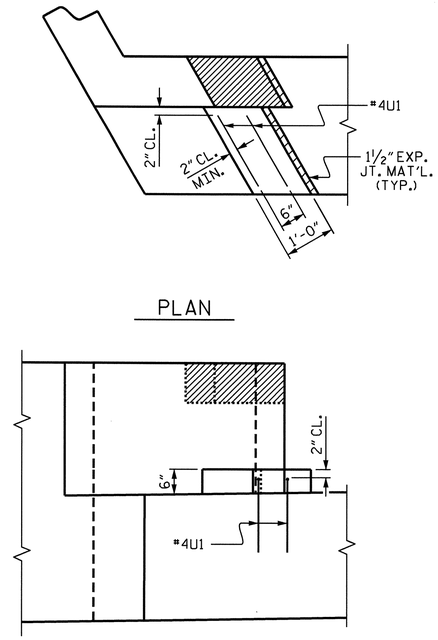

LATERAL GUIDE DETAILS

BAR TYPES

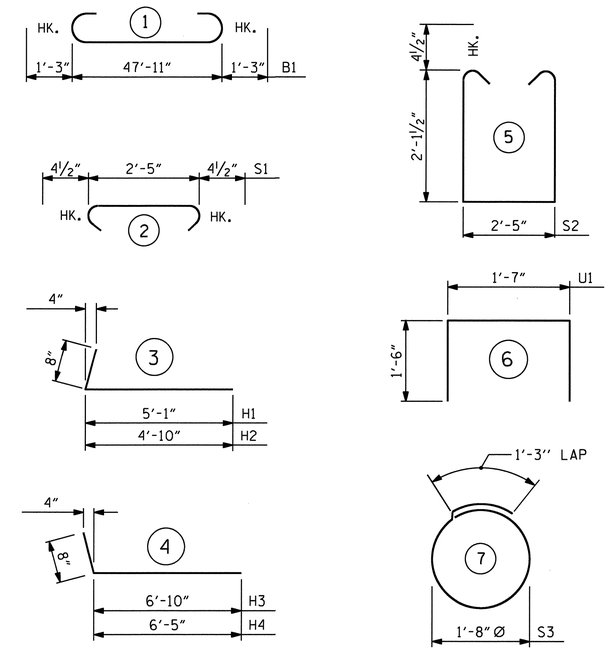

ALL BAR DIMENSIONS ARE OUT TO OUT.

BILL OF MATERIAL

END BENT #2

BAR	NO.	SIZE	TYPE	LENGTH	WEIGHT
B1	8	#9	1	50'-5"	1371
B2	16	#4	STR	25'-4"	271
B3	12	#4	STR	2'-5"	19
D1	24	#6	STR	1'-6"	54
H1	6	#4	3	5'-9"	23
H2	6	#4	3	5'-6"	22
H3	6	#4	4	7'-6"	30
H4	6	#4	4	7'-1"	28
K1	12	#4	STR	3'-5"	27
S1	57	#4	2	3'-2"	121
S2	57	#4	5	7'-5"	282
S3	12	#4	7	6'-6"	52
U1	4	#4	6	4'-7"	12
V1	20	#4	STR	4'-0"	53
V2	22	#4	STR	4'-10"	71
REINFORCING STEEL				=	2436 LBS.

CLASS A CONCRETE BREAKDOWN

POUR #1 CAP, CONC. COLLAR & LOWER PART OF WINGS 14.4 C.Y.

POUR #2 UPPER PART OF WINGS 1.6 C.Y.

POUR #3 LATERAL GUIDES 0.1 C.Y.

TOTAL CLASS A CONCRETE 16.1 C.Y.

HP 12 X 53 STEEL PILES
NO. 6 300 LIN. FT.

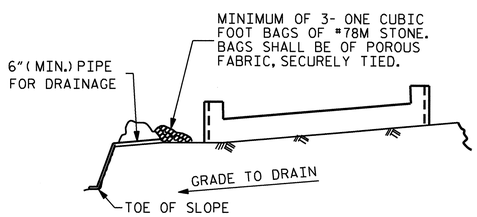

BAGGED STONE AND PIPE SHALL BE PLACED IMMEDIATELY AFTER COMPLETION OF END BENT EXCAVATION. PIPE MAY BE EITHER CONCRETE, CORRUGATED STEEL, CORRUGATED ALUMINUM ALLOY, OR CORRUGATED PLASTIC. PERFORATED PIPE WILL NOT BE ALLOWED.

BAGGED STONE SHALL REMAIN IN PLACE UNTIL THE ENGINEER DIRECTS THAT IT BE REMOVED. THE CONTRACTOR SHALL REMOVE AND DISPOSE OF SILT ACCUMULATIONS AT BAGGED STONE WHEN SO DIRECTED BY THE ENGINEER. BAGS SHALL BE REMOVED AND REPLACED WHENEVER THE ENGINEER DETERMINES THAT THEY HAVE DETERIORATED AND LOST THEIR EFFECTIVENESS.

NO SEPARATE PAYMENT WILL BE MADE FOR THIS WORK AND THE ENTIRE COST OF THIS WORK SHALL BE INCLUDED IN THE UNIT CONTRACT PRICE BID FOR THE SEVERAL PAY ITEMS.

TEMPORARY DRAINAGE AT END BENT

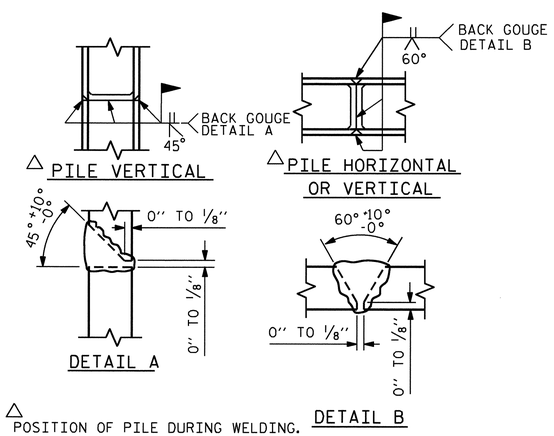

△ POSITION OF PILE DURING WELDING.

PILE SPLICE DETAILS

PROJECT NO. B-4517
GASTON COUNTY
STATION: 16+37.00-L-

SHEET 3 OF 3

STATE OF NORTH CAROLINA
DEPARTMENT OF TRANSPORTATION
RALEIGH

SUBSTRUCTURE
END BENT #2

NORTH CAROLINA PROFESSIONAL SEAL 15825 ENGINEER BRUCE D. KLAPPENBACH
2-6-2010

REVISIONS								SHEET NO.
NO.	BY:	DATE:	NO.	BY:	DATE:			S-27
1			3					TOTAL SHEETS
2			4					31

DRAWN BY : S.H. SOCKWELL DATE : 12/15/09
CHECKED BY : D.A. DAVENPORT DATE : 12/17/09

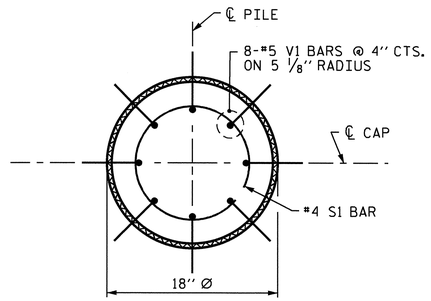

PLAN

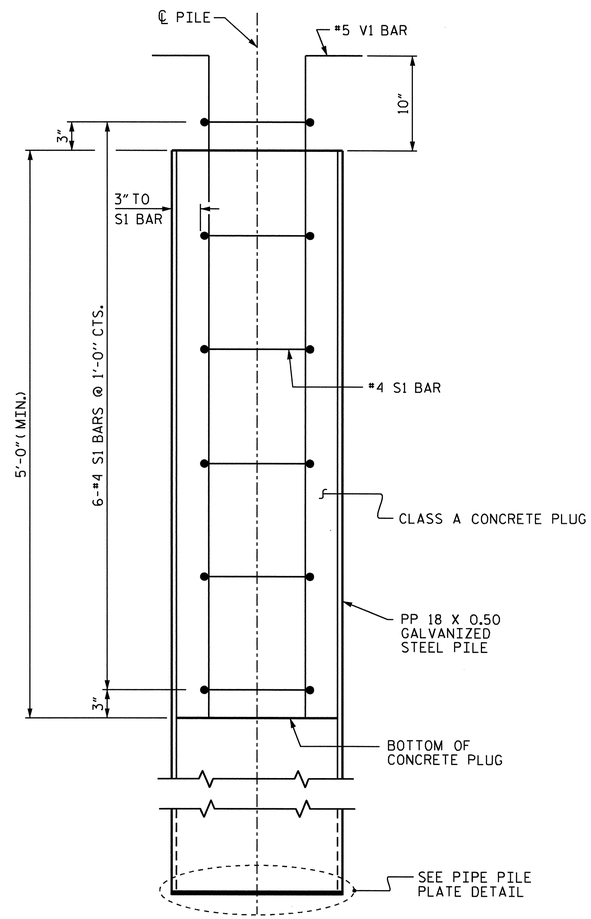

ELEVATION

PP 18 X 0.50 GALVANIZED STEEL PILE

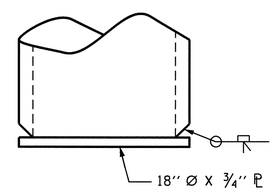

PIPE PILE PLATE DETAIL

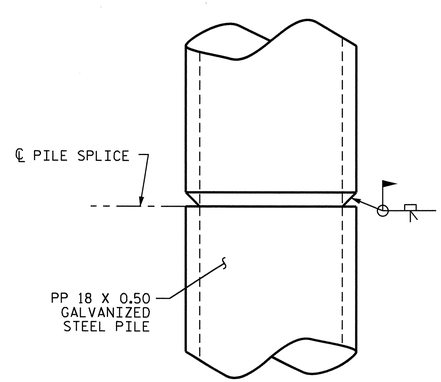

PIPE PILE SPLICE DETAIL

NOTES

PIPE PILES SHALL BE IN ACCORDANCE WITH SECTION 1084 OF THE STANDARD SPECIFICATIONS.

GALVANIZE STEEL PIPE PILES IN ACCORDANCE WITH SECTION 1076 OF THE STANDARD SPECIFICATIONS UNLESS METALLIZING IS REQUIRED. GALVANIZING OR METALLIZING PIPE PILE PLATES IS NOT REQUIRED.

PIPE PILE PLATES, IF REQUIRED, SHALL BE IN ACCORDANCE WITH SECTION 450 OF THE STANDARD SPECIFICATIONS.

REMOVE AND REPLACE OR REPAIR TO THE SATISFACTION OF THE ENGINEER PILES THAT ARE DAMAGED, DEFORMED OR COLLAPSED DURING INSTALLATION OR DRIVING.

PILE SPLICES SHALL BE IN ACCORDANCE WITH THE STANDARD SPECIFICATIONS AND AWS D1.1.

FOR CLOSED END PIPE PILES, REMOVE ALL SOIL AND WATER FROM INSIDE THE PILES JUST PRIOR TO PLACING REINFORCING STEEL AND CONCRETE FOR THE CONCRETE PLUG.

FORM THE CONCRETE PLUG SUCH THAT THE REINFORCING STEEL OR CONCRETE DOES NOT MOVE AND THE CLEARANCE FROM THE REINFORCING STEEL TO THE INSIDE OF THE PILE IS MAINTAINED AFTER CONCRETE PLACEMENT. DO NOT PLACE CONCRETE IN THE BENT CAP UNTIL THE CONCRETE PLUG HAS ATTAINED A MINIMUM COMPRESSIVE STRENGTH OF 1500 PSI.

THE REINFORCING STEEL, CLASS A CONCRETE, AND GALVANIZING ARE CONSIDERED INCIDENTAL TO THE CONTRACT UNIT PRICE BID PER LINEAR FOOT FOR PP 18 X 0.50 GALVANIZED STEEL PILES.

BILL OF MATERIAL FOR ONE PP 18 X 0.50 GALVANIZED STEEL PILE

BAR	NO.	SIZE	TYPE	LENGTH	WEIGHT
S1	6	#4	1	4'-5''	18
V1	8	#5	2	6'-8''	56
REINFORCING STEEL =				74	lbs
CLASS A CONCRETE					
5'-0'' MINIMUM PLUG					0.3 CY

BAR TYPES

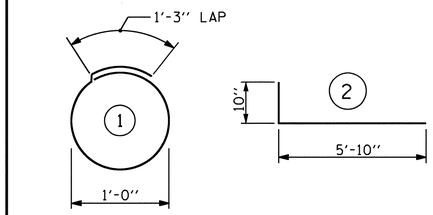

ALL BAR DIMENSIONS ARE OUT TO OUT.

PROJECT NO. B-4517
GASTON COUNTY
STATION: 16+37.00 -L-

STATE OF NORTH CAROLINA
DEPARTMENT OF TRANSPORTATION
RALEIGH

18'' STEEL PIPE PILE

NORTH CAROLINA PROFESSIONAL SEAL 15825 ENGINEER BRUCE D. KLAPPENBACH
2-6-2012

REVISIONS						SHEET NO.
NO.	BY:	DATE:	NO.	BY:	DATE:	S-28
1			3			TOTAL SHEETS
2			4			31

STD. NO. SPP3

ASSEMBLED BY : D. A. GLADDEN DATE : 10-1-09
CHECKED BY : D. A. DAVENPORT DATE : 12-9-09

DRAWN BY : RWW 1/01
CHECKED BY : LES 1/01

REV. 5/7/03 RWW/JTE
REV. 10/1/05 LBG/TLA
REV. 5/1/06R MAA/KMM

25-JAN-2010 11:38
R:\Structures\dgladden\Microstation\b4517_sd_b*.dgn
bklappenbach

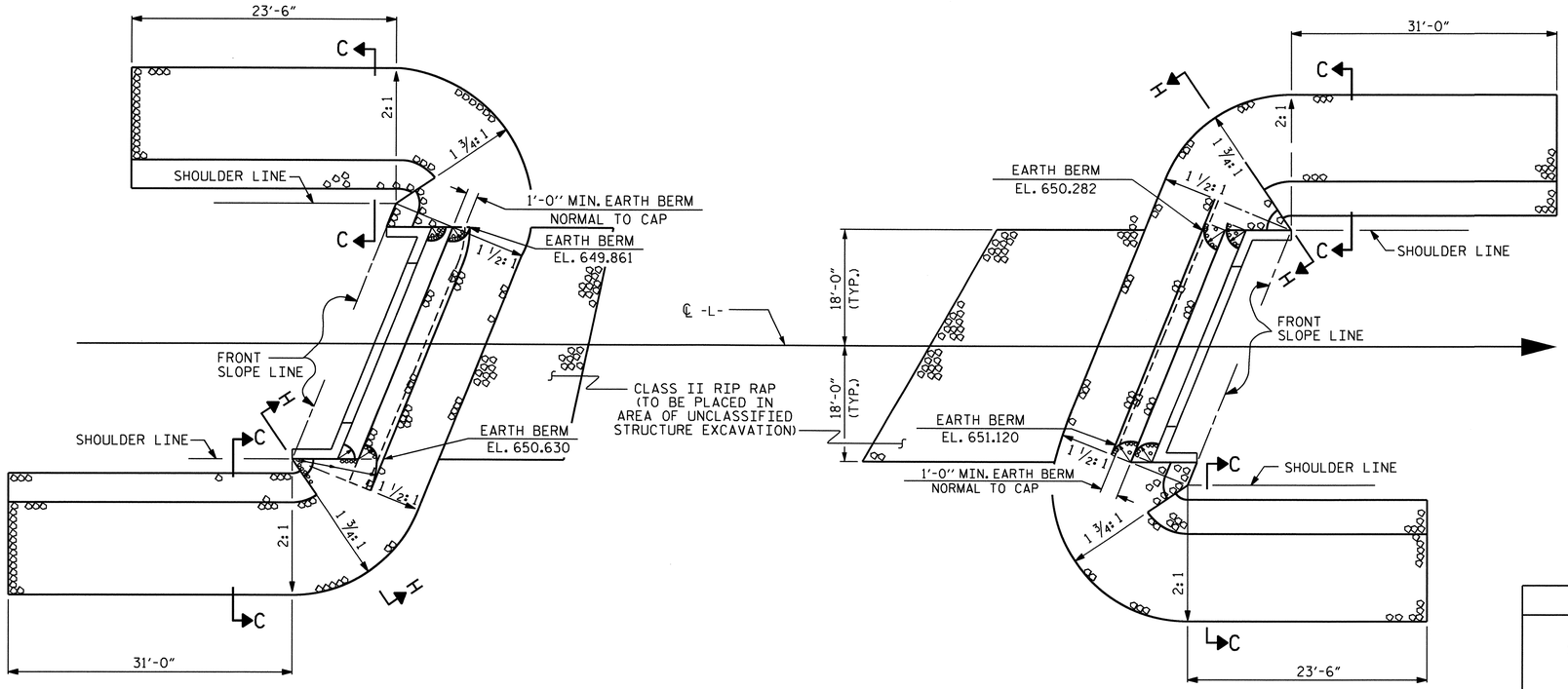

END BENT #1

END BENT #2

ESTIMATED QUANTITIES		
BRIDGE @ STA. 16+37.00 -L-	RIP RAP CLASS II	FILTER FABRIC FOR DRAINAGE
	TONS	SQUARE YARDS
END BENT 1	330	370
END BENT 2	350	385
TOTAL	680	755

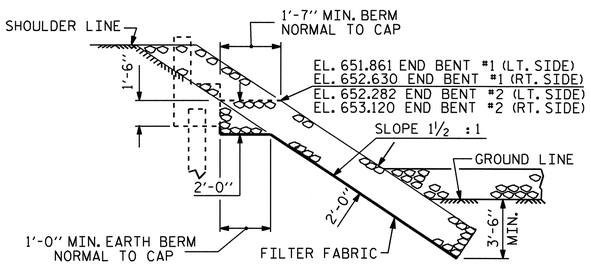

SECTION H-H

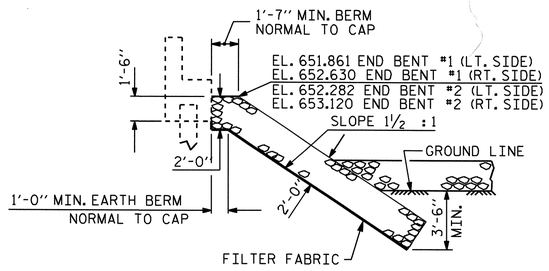

℄ SECTION
BERM RIP RAPPED

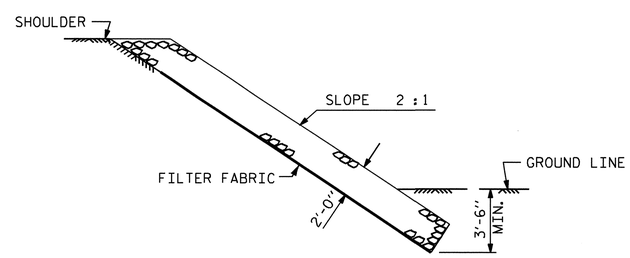

SECTION C-C

PROJECT NO. B-4517
GASTON COUNTY
STATION: 16+37.00 -L-

STATE OF NORTH CAROLINA
DEPARTMENT OF TRANSPORTATION
RALEIGH

RIP RAP DETAILS

NORTH CAROLINA PROFESSIONAL SEAL 15828 ENGINEER BRUCE D. KLAPPENBACH
2-8-2010

REVISIONS						SHEET NO.
NO.	BY:	DATE:	NO.	BY:	DATE:	S-29
1			3			TOTAL SHEETS
2			4			30

ASSEMBLED BY : W.B. HILL DATE : 12/09
CHECKED BY : B.D. KLAPPENBACH DATE : 02/03/10

DRAWN BY : REK 1/84
CHECKED BY : RDU 1/84

REV. 8/16/99 RWW/LES
REV. 10/17/00 RWW/LES
REV. 5/1/06 TLA/GM

08-FEB-2010 12:04
r:\structures\wbhill\microstation\b-4517_sd_rr.dgn
bklappenbach

SKEW > 90°

STD. NO. RR3

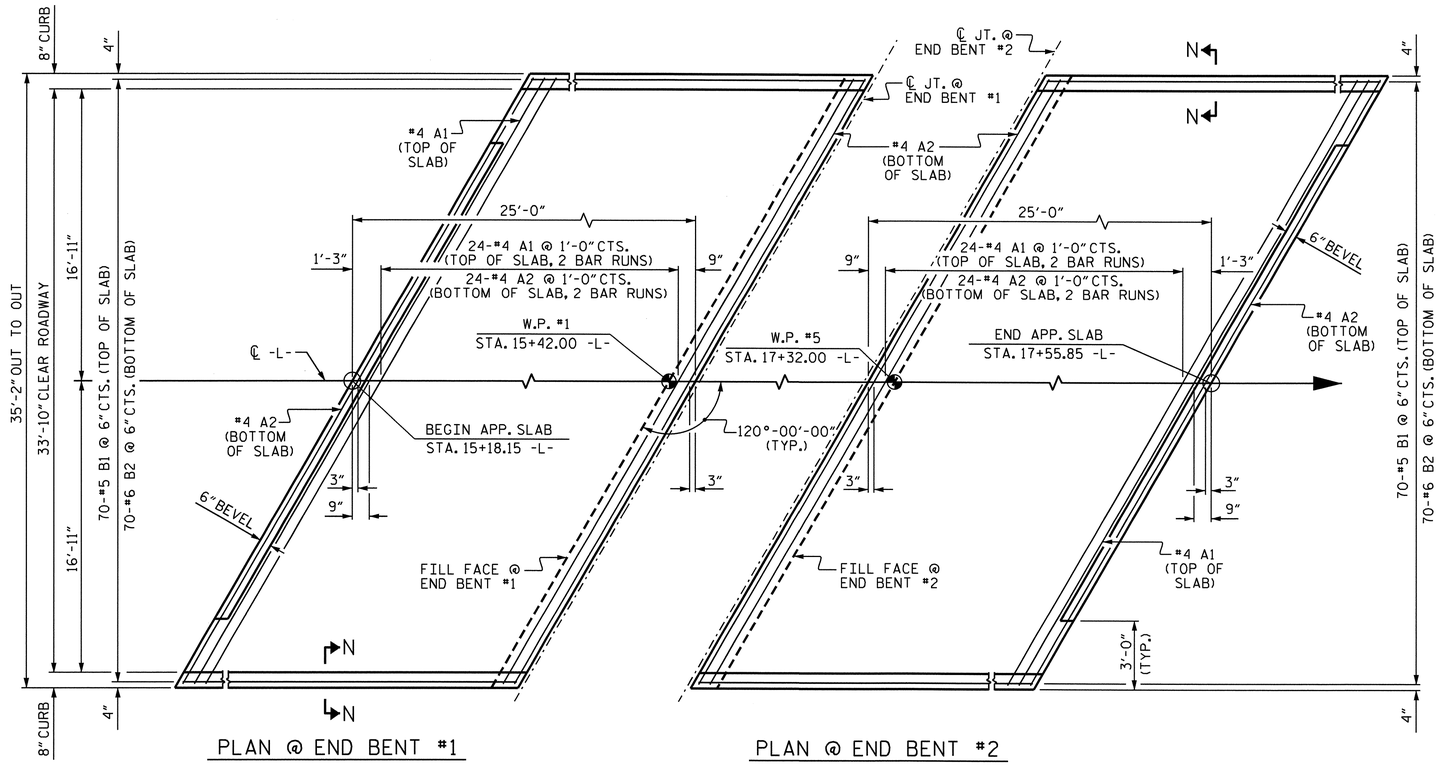

PLAN @ END BENT #1

PLAN @ END BENT #2

DIMENSIONS SHOWN ARE TYPICAL FOR BOTH APPROACH SLABS

NOTES

FOR REINFORCED BRIDGE APPROACH FILL INCLUDING FABRIC, IMPERMEABLE GEOMEMBRANE, 4" Ø DRAINAGE PIPE, #78M STONE, AND SELECT MATERIAL, SEE ROADWAY PLANS.

AREA BETWEEN THE WINGWALL AND APPROACH SLAB SHALL BE GRADED TO DRAIN THE WATER AWAY FROM THE FILL FACE OF THE BRIDGE AND SHALL BE PAVED. SEE ROADWAY PLANS.

THE 6" COMP. A.B.C. SHALL BE FLUSH WITH ROADWAY END OF THE APPROACH SLAB AND SHALL EXTEND 1'-0" OUTSIDE OF EACH EDGE OF SLAB.

THE CONTRACTOR MAY USE 4" TYPE B-25.0B ASPHALT CONCRETE BASE COURSE IN LIEU OF 6" COMP. A.B.C. IF THIS OPTION IS USED, THE BASE COURSE SHALL BE FLUSH WITH ROADWAY END OF THE APPROACH SLAB AND THE WIDTH SHALL BE THE SAME AS THAT OF THE APPROACH SLAB.

THE CONTRACTOR MAY USE 5" CLASS "A" CONCRETE BASE IN LIEU OF 6" COMP. A.B.C. IF THIS OPTION IS USED, THE CONCRETE BASE SHALL BE FLUSH WITH ROADWAY END OF THE APPROACH SLAB AND THE WIDTH SHALL BE THE SAME AS THAT OF THE APPROACH SLAB. THE CONCRETE SHALL BE FINISHED TO A SMOOTH SURFACE AND A LAYER OF 30 LB ROOFING FELT SHALL BE PLACED BETWEEN THE CONCRETE BASE AND THE APPROACH SLAB TO PREVENT BOND. THE APPROACH SLAB SHALL NOT BE CAST UNTIL THE CONCRETE BASE HAS REACHED AN AGE OF THREE CURING DAYS.

FOR EVAZOTE JOINT SEALS, SEE SPECIAL PROVISIONS.

THE NOMINAL UNCOMPRESSED SEAL WIDTH OF THE EVAZOTE JOINT SEAL SHALL BE 2½".

FOR ELASTOMERIC CONCRETE, SEE SPECIAL PROVISIONS.

APPROACH SLABS SHALL BE POURED AFTER CONCRETE OVERLAY IS POURED.

BILL OF MATERIAL

APPROACH SLAB AT EB #1

BAR	NO.	SIZE	TYPE	LENGTH	WEIGHT
* A1	50	#4	STR	21'-2"	707
A2	52	#4	STR	21'-0"	729
* B1	70	#5	STR	24'-1"	1758
B2	70	#6	STR	24'-8"	2593
REINFORCING STEEL				LBS.	3322
* EPOXY COATED REINFORCING STEEL				LBS.	2465
CLASS AA CONCRETE				C. Y.	32.9

APPROACH SLAB AT EB #2

BAR	NO.	SIZE	TYPE	LENGTH	WEIGHT
* A1	50	#4	STR	21'-2"	707
A2	52	#4	STR	21'-0"	729
* B1	70	#5	STR	24'-1"	1758
B2	70	#6	STR	24'-8"	2593
REINFORCING STEEL				LBS.	3322
* EPOXY COATED REINFORCING STEEL				LBS.	2465
CLASS AA CONCRETE				C. Y.	32.9

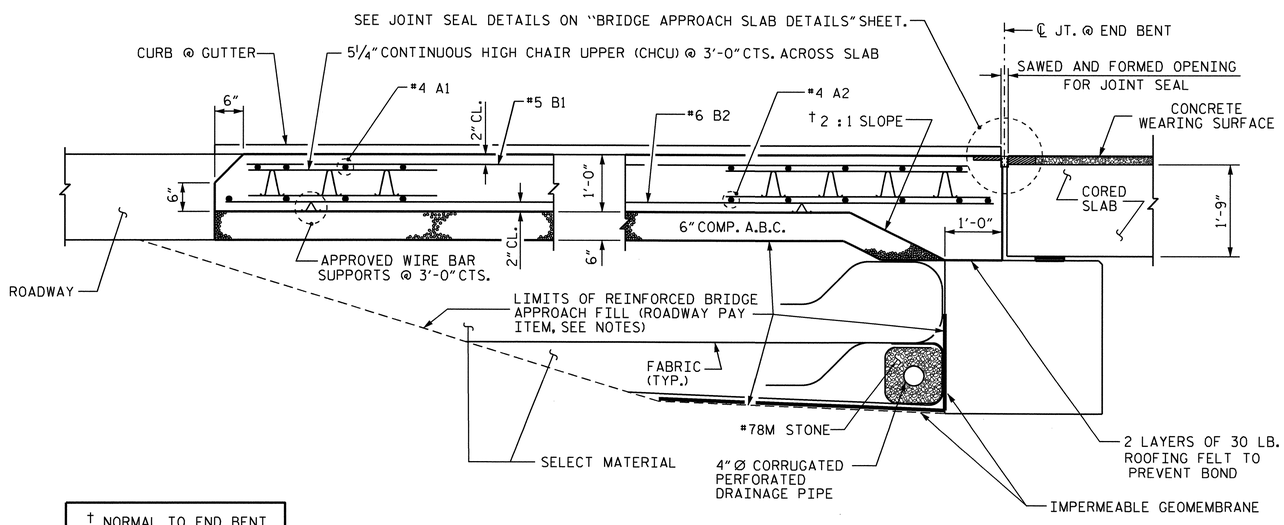

† NORMAL TO END BENT

SECTION THRU SLAB

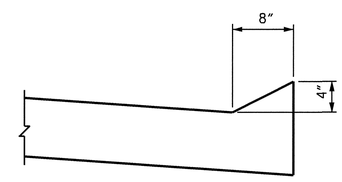

SECTION N-N

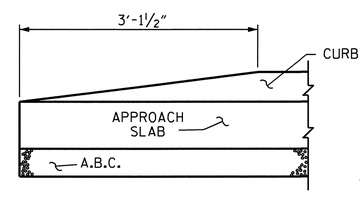

END OF CURB WITHOUT SHOULDER BERM GUTTER

CURB DETAILS

PROJECT NO. B-4517

GASTON COUNTY

STATION: 16+37.00 -L-

SHEET 1 OF 2

STATE OF NORTH CAROLINA
DEPARTMENT OF TRANSPORTATION
RALEIGH

BRIDGE APPROACH SLAB FOR PRESTRESSED CONCRETE CORED SLAB

NORTH CAROLINA PROFESSIONAL SEAL 19829 ENGINEER BRUCE D. KLAPPENBACH 2-26-2010

REVISIONS						SHEET NO.
NO.	BY:	DATE:	NO.	BY:	DATE:	S-30
1			3			TOTAL SHEETS
2			4			31

ASSEMBLED BY : W. B. HILL	DATE : 08/09		
CHECKED BY : C.R. YARBOROUGH	DATE : 09/09		
DRAWN BY : FCJ 6/87	REV. 7/10/01	LES/RDR	
CHECKED BY : EGA 6/87	REV. 5/7/03R	RWW/JTE	
	REV. 5/1/06R	KMM/GM	

24-FEB-2010 16:11
r:\structures\wbhill\microstation\b4517_sd_as.dgn
wbhill

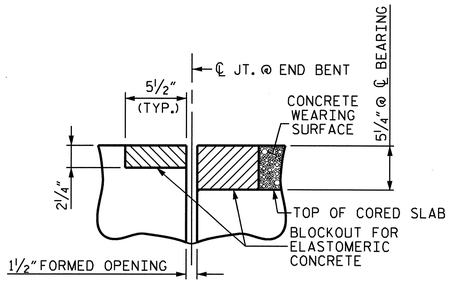

SECTION C-C
EVAZOTE JOINT SEAL
(PRE-SAWED ELASTOMERIC CONCRETE DIMENSIONS)

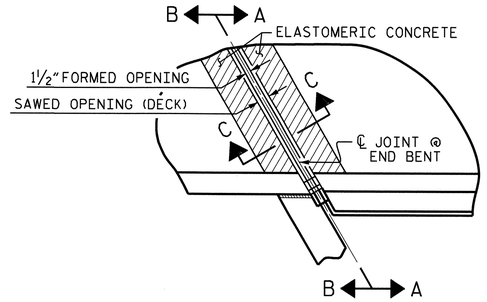

PLAN

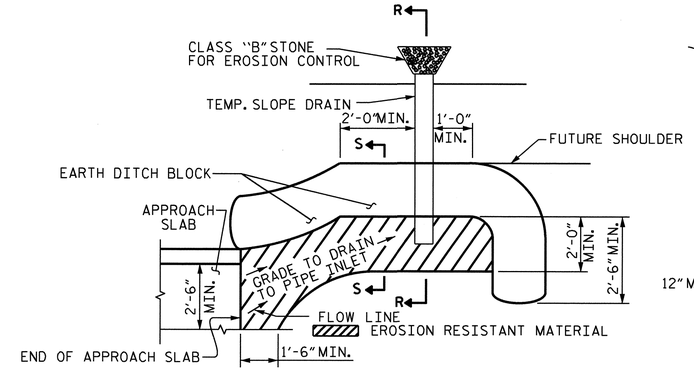

NOTE: IMMEDIATELY AFTER THE CONSTRUCTION OF THE APPROACH SLAB, THE CONTRACTOR SHALL PROVIDE TEMPORARY BERM AND SLOPE DRAIN. CONTRACTOR SHALL GRADE TO PIPE INLET AND PROVIDE EROSION RESISTANT MATERIAL AS SHOWN. THE EROSION RESISTANT MATERIAL SHALL BE EITHER 1) ASPHALT PLANT MIX, TYPE 1 OR TYPE 2, MIN. 2" DEPTH, 2) EROSION CONTROL MAT, OR 3) CONCRETE, AS DIRECTED BY THE ENGINEER. THE SLOPE DRAIN SHALL CONSIST OF A NON-PERFORATED TEMPORARY DRAINAGE PIPE, 12 INCHES IN DIAMETER.

PLAN VIEW

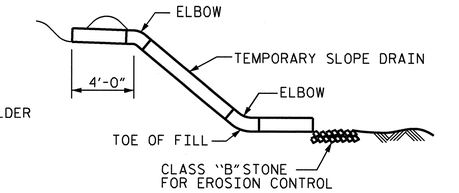

SECTION R-R

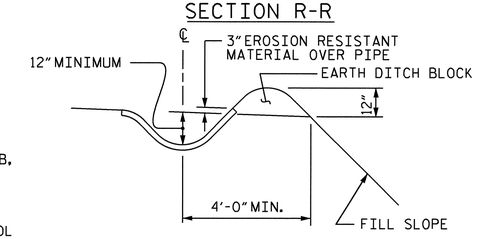

SECTION S-S

TEMPORARY BERM AND SLOPE DRAIN DETAILS

(TO BE USED WHEN SHOULDER BERM GUTTER IS REQUIRED)

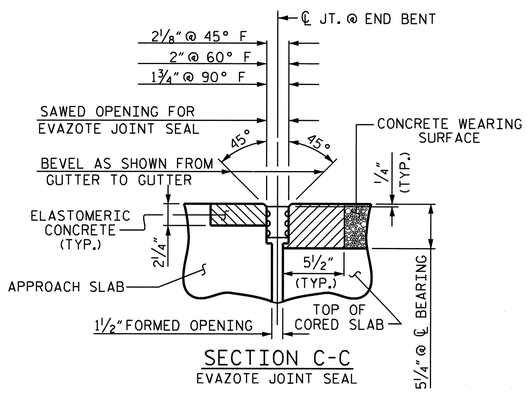

SECTION C-C
EVAZOTE JOINT SEAL

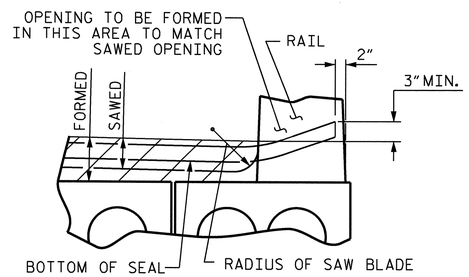

SECTION A-A

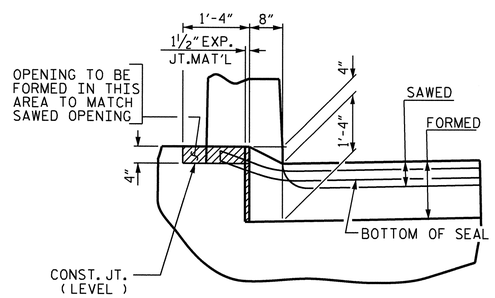

SECTION B-B

JOINT SEAL DETAILS @ END BENT

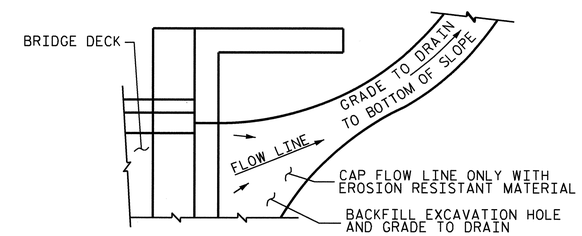

NOTE: IF THE APPROACH SLAB IS NOT CONSTRUCTED IMMEDIATELY AFTER THE BACKFILLING OF THE END BENT EXCAVATION, GRADE TO DRAIN TO THE BOTTOM OF THE SLOPE AND PROVIDE EROSION RESISTANT MATERIAL, SUCH AS FIBERGLASS ROVING OR AS DIRECTED BY THE ENGINEER TO PREVENT SOIL EROSION AND TO PROTECT THE AREA ADJACENT TO THE STRUCTURE. THE CONTRACTOR WILL BE REQUIRED TO REMOVE THESE MATERIALS PRIOR TO CONSTRUCTION OF THE APPROACH SLAB.

TEMPORARY DRAINAGE DETAIL

ELASTOMERIC CONCRETE	
END BENT NO.	ELASTOMERIC CONCRETE * (CU. FT.)
1	11.2
2	11.2
TOTAL	22.4

* BASED ON THE MINIMUM BLOCKOUT SHOWN.

PROJECT NO. B-4517
GASTON COUNTY
STATION: 16+37.00 -L-

SHEET 2 OF 2

STATE OF NORTH CAROLINA
DEPARTMENT OF TRANSPORTATION
RALEIGH

BRIDGE APPROACH SLAB DETAILS

NORTH CAROLINA PROFESSIONAL SEAL 15025 ENGINEER BRYCE D. KLAPPENBACH
2-6-2010

REVISIONS							
NO.	BY:	DATE:	NO.	BY:	DATE:	SHEET NO. S-31
1			3			TOTAL SHEETS 31
2			4			

ASSEMBLED BY : W. B. HILL		DATE :	08/09
CHECKED BY : C.R. YARBOROUGH		DATE :	09/09
DRAWN BY : FCJ	11/88	REV. 10/17/00	RWW/LES
CHECKED BY : ARB	11/88	REV. 5/7/03	RWW/JTE
		REV. 5/1/06R	MAA/KMM

02-FEB-2010 14:23
r:\structures\wbhill\microstation\b4517_sd_as.dgn
ssockwell

STD. NO. BAS10 (SHT 7)

STANDARD NOTES

DESIGN DATA:

SPECIFICATIONS	A.A.S.H.T.O. (CURRENT)
LIVE LOAD	SEE PLANS
IMPACT ALLOWANCE	SEE A.A.S.H.T.O.
STRESS IN EXTREME FIBER OF	
STRUCTURAL STEEL - AASHTO M270 GRADE 36	20,000 LBS. PER SQ. IN.
- AASHTO M270 GRADE 50W	27,000 LBS. PER SQ. IN.
- AASHTO M270 GRADE 50	27,000 LBS. PER SQ. IN.
REINFORCING STEEL IN TENSION GRADE 60	24,000 LBS. PER SQ. IN.
CONCRETE IN COMPRESSION	1,200 LBS. PER SQ. IN.
CONCRETE IN SHEAR	SEE A.A.S.H.T.O.
STRUCTURAL TIMBER - TREATED OR UNTREATED - EXTREME FIBER STRESS	1,800 LBS. PER SQ. IN.
COMPRESSION PERPENDICULAR TO GRAIN OF TIMBER	375 LBS. PER SQ. IN.
EQUIVALENT FLUID PRESSURE OF EARTH	30 LBS. PER CU. FT. (MINIMUM)

MATERIAL AND WORKMANSHIP:

EXCEPT AS MAY OTHERWISE BE SPECIFIED ON PLANS OR IN THE SPECIAL PROVISIONS, ALL MATERIAL AND WORKMANSHIP SHALL BE IN ACCORDANCE WITH THE 2006 "STANDARD SPECIFICATIONS FOR ROADS AND STRUCTURES" OF THE N. C. DEPARTMENT OF TRANSPORTATION.

STEEL SHEET PILING FOR PERMANENT OR TEMPORARY APPLICATIONS SHALL BE HOT ROLLED.

CONCRETE:

UNLESS OTHERWISE REQUIRED ON PLANS, CLASS A CONCRETE SHALL BE USED FOR ALL PORTIONS OF ALL STRUCTURES WITH THE EXCEPTION THAT: CLASS AA CONCRETE SHALL BE USED IN BRIDGE SUPERSTRUCTURES, ABUTMENT BACKWALLS, AND APPROACH SLABS; AND CLASS B CONCRETE SHALL BE USED FOR SLOPE PROTECTION AND RIP RAP.

CONCRETE CHAMFERS:

UNLESS OTHERWISE NOTED ON THE PLANS, ALL EXPOSED CORNERS ON STRUCTURES SHALL BE CHAMFERED 3/4" WITH THE FOLLOWING EXCEPTIONS: TOP CORNERS OF CURBS MAY BE ROUNDED TO 1-1/2" RADIUS WHICH IS BUILT INTO CURB FORMS; CORNERS OF TRANSVERSE FLOOR EXPANSION JOINTS SHALL BE ROUNDED WITH A 1/4" FINISHING TOOL UNLESS OTHERWISE REQUIRED ON PLANS; AND CORNERS OF EXPANSION JOINTS IN THE ROADWAY FACES AND TOPS OF CURBS AND SIDEWALKS SHALL BE ROUNDED TO A 1/4" RADIUS WITH A FINISHING STONE OR TOOL UNLESS OTHERWISE REQUIRED ON PLANS.

DOWELS:

DOWELS WHEN INDICATED ON PLANS AS FOR CULVERT EXTENSIONS, SHALL BE EMBEDDED AT LEAST 12" INTO THE OLD CONCRETE AND GROUTED INTO PLACE WITH 1:2 CEMENT MORTAR.

ALLOWANCE FOR DEAD LOAD DEFLECTION, SETTLEMENT, ETC. IN CASTING SUPERSTRUCTURES:

BRIDGES SHALL BE BUILT ON THE GRADE OR VERTICAL CURVE SHOWN ON PLANS. SLABS, CURBS AND PARAPETS SHALL CONFORM TO THE GRADE OR CURVE.

ALL DIMENSIONS WHICH ARE GIVEN IN SECTION AND ARE AFFECTED BY DEAD LOAD DEFLECTIONS ARE DIMENSIONS AT CENTER LINE OF BEARING UNLESS OTHERWISE NOTED ON PLANS. IN SETTING FORMS FOR STEEL BEAM BRIDGES AND PRESTRESSED CONCRETE GIRDER BRIDGES, ADJUSTMENTS SHALL BE MADE DUE TO THE DEAD LOAD DEFLECTIONS FOR THE ELEVATIONS SHOWN. WHERE BLOCKS ARE SHOWN OVER BEAMS FOR BUILDING UP TO THE SLAB, THE VERTICAL DIMENSIONS OF THE BLOCKS SHALL BE ADJUSTED BETWEEN BEARINGS TO COMPENSATE FOR DEAD LOAD DEFLECTIONS, VERTICAL CURVE ORDINATE, AND ACTUAL BEAM CAMBER. WHERE BOTTOM OF SLAB IS IN LINE WITH BOTTOM OF TOP FLANGES, DEPTH OF SLAB BETWEEN BEARINGS SHALL BE ADJUSTED TO COMPENSATE FOR DEAD LOAD DEFLECTION, VERTICAL CURVE ORDINATE, AND ACTUAL BEAM CAMBER.

IN SETTING FALSEWORK AND FORMS FOR REINFORCED CONCRETE SPANS, AN ALLOWANCE SHALL BE MADE FOR DEAD LOAD DEFLECTIONS, SETTLEMENT OF FALSEWORK, AND PERMANENT CAMBER WHICH SHALL BE PROVIDED FOR IN ADDITION TO THE ELEVATIONS SHOWN. AFTER REMOVAL OF THE FALSEWORK, THE FINISHED STRUCTURES SHALL CONFORM TO THE PROFILE AND ELEVATIONS SHOWN ON THE PLANS AND CONSTRUCTION ELEVATIONS FURNISHED BY THE ENGINEER.

DETAILED DRAWINGS FOR FALSEWORK OR FORMS FOR BRIDGE SUPERSTRUCTURE AND ANY STRUCTURE OR PARTS OF A STRUCTURE AS NOTED ON THE PLANS SHALL BE SUBMITTED TO THE ENGINEER FOR APPROVAL BEFORE CONSTRUCTION OF THE FALSEWORK OR FORMS IS STARTED.

REINFORCING STEEL:

ALL REINFORCING STEEL SHALL BE DEFORMED. DIMENSIONS RELATIVE TO PLACEMENT OF REINFORCING ARE TO CENTERS OF BARS UNLESS OTHERWISE INDICATED IN THE PLANS. DIMENSIONS ON BAR DETAILS ARE TO CENTERS OF BARS OR ARE OUT TO OUT AS INDICATED ON PLANS.

WIRE BAR SUPPORTS SHALL BE PROVIDED FOR REINFORCING STEEL WHERE INDICATED ON THE PLANS. WHEN BAR SUPPORT PIECES ARE PLACED IN CONTINUOUS LINES, THEY SHALL BE SO PLACED THAT THE ENDS OF THE SUPPORTING WIRES SHALL BE LAPPED TO LOCK LEGS ON ADJOINING PIECES.

STRUCTURAL STEEL:

AT THE CONTRACTOR'S OPTION, HE MAY SUBSTITUTE 7/8" Ø SHEAR STUDS FOR THE 3/4" Ø STUDS SPECIFIED ON THE PLANS. THIS SUBSTITUTION SHALL BE MADE AT THE RATE OF 3 - 7/8" Ø STUDS FOR 4 - 3/4" Ø STUDS, AND STUD SPACING CHANGES SHALL BE MADE AS NECESSARY TO PROVIDE THE SAME EQUIVALENT NUMBER OF 7/8" Ø STUDS ALONG THE BEAM AS SHOWN FOR 3/4" Ø STUDS BASED ON THE RATIO OF 3 - 7/8" Ø STUDS FOR 4 - 3/4" Ø STUDS. STUDS OF THE LENGTH SPECIFIED ON THE PLANS MUST BE PROVIDED. THE MAXIMUM SPACING SHALL BE 2'-0".

EXCEPT AT THE INTERIOR SUPPORTS OF CONTINUOUS BEAMS WHERE THE COVER PLATE IS IN CONTACT WITH BEARING PLATE, THE CONTRACTOR MAY, AT HIS OPTION, SUBSTITUTE FOR THE COVER PLATES DESIGNATED ON THE PLANS COVER PLATES OF THE EQUIVALENT AREA PROVIDED THESE PLATES ARE AT LEAST 5/16" IN THICKNESS AND DO NOT EXCEED A WIDTH EQUAL TO THE FLANGE WIDTH LESS 2" OR A THICKNESS EQUAL TO 2 TIMES THE FLANGE THICKNESS. THE SIZE OF FILLET WELDS SHALL CONFORM TO THE REQUIREMENTS OF THE CURRENT ANSI/AASHTO/AWS "BRIDGE WELDING CODE". ELECTROSLAG WELDING WILL NOT BE PERMITTED.

WITH THE SOLE EXCEPTION OF EDGES AT SURFACES WHICH BEAR ON OTHER SURFACES, ALL SHARP EDGES AND ENDS OF SHAPES AND PLATES SHALL BE SLIGHTLY ROUNDED BY SUITABLE MEANS TO A RADIUS OF APPROXIMATELY 1/16 INCH OR EQUIVALENT FLAT SURFACE AT A SUITABLE ANGLE PRIOR TO PAINTING, GALVANIZING, OR METALLIZING.

HANDRAILS AND POSTS:

METAL STANDARDS AND FACES OF THE CONCRETE END POSTS FOR THE METAL RAIL SHALL BE SET NORMAL TO THE GRADE OF THE CURB, UNLESS OTHERWISE SHOWN ON PLANS. THE METAL RAIL AND TOPS OF CONCRETE POSTS USED WITH THE ALUMINUM RAIL SHALL BE BUILT PARALLEL TO THE GRADE OF THE CURB.

METAL HANDRAILS SHALL BE IN ACCORDANCE WITH THE PLANS. RAILS SHALL BE AS MANUFACTURED FOR BRIDGE RAILING. CASTINGS SHALL BE OF A UNIFORM APPEARANCE. FINS AND OTHER DEFORMATIONS RESULTING FROM CASTING OR OTHERWISE SHALL BE REMOVED IN A MANNER SO THAT A UNIFORM COLORING OF THE COMPLETED CASTING SHALL BE OBTAINED. CASTINGS WITH DISCOLORATIONS OR OF NON-UNIFORM COLORING WILL NOT BE ACCEPTED. CERTIFIED MILL REPORTS ARE REQUIRED FOR METAL RAILS AND POSTS.

SPECIAL NOTES:

GENERALLY, IN CASE OF DISCREPANCY, THIS STANDARD SHEET OF NOTES SHALL GOVERN OVER THE SPECIFICATIONS, BUT THE REMAINDER OF THE PLANS SHALL GOVERN OVER NOTES HEREON, AND SPECIAL PROVISIONS SHALL GOVERN OVER ALL. SEE SPECIFICATIONS ARTICLE 105-4.

ENGLISH

JANUARY, 1990

STD. NO. SN