CONTRACT: C202066 TIP PROJECT: U-2810A

STRUCTURES

STATE	STATE PROJECT REFERENCE NO.	SHEET NO.	TOTAL SHEETS
N.C.	U-2810A		

STATE PROJ. NO.	F.A. PROJ. NO.	DESCRIPTION
34866.1.1	STP-1003(22)	P.E.
34866.2.1	STP-1003(22)	UTIL. & R/W
34866.3.1	STP-1003(68)	CONST.

STATE OF NORTH CAROLINA
DIVISION OF HIGHWAYS

CUMBERLAND COUNTY

LOCATION: FAYETTEVILLE – SR 1003 (CAMDEN RD.) FROM NC 59 TO THE HOPE MILLS BYPASS

TYPE OF WORK: GRADING, DRAINAGE, PAVING, CULVERT, BRIDGES & RETAINING WALL

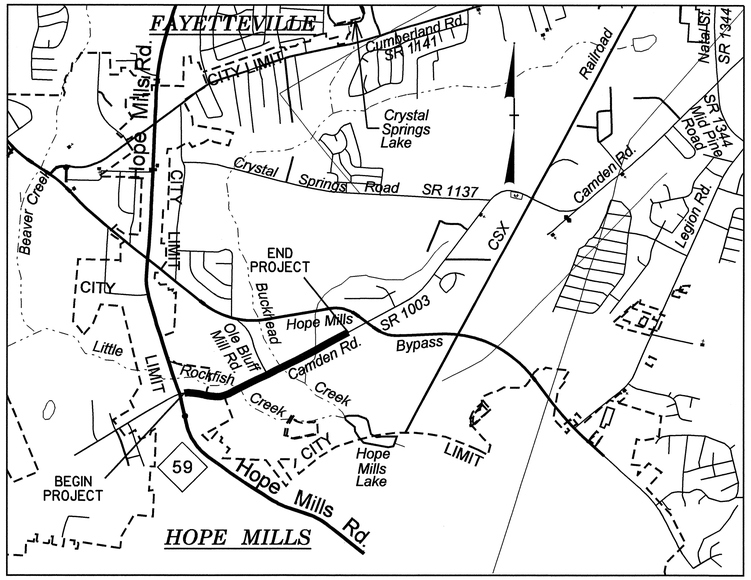

VICINITY MAP

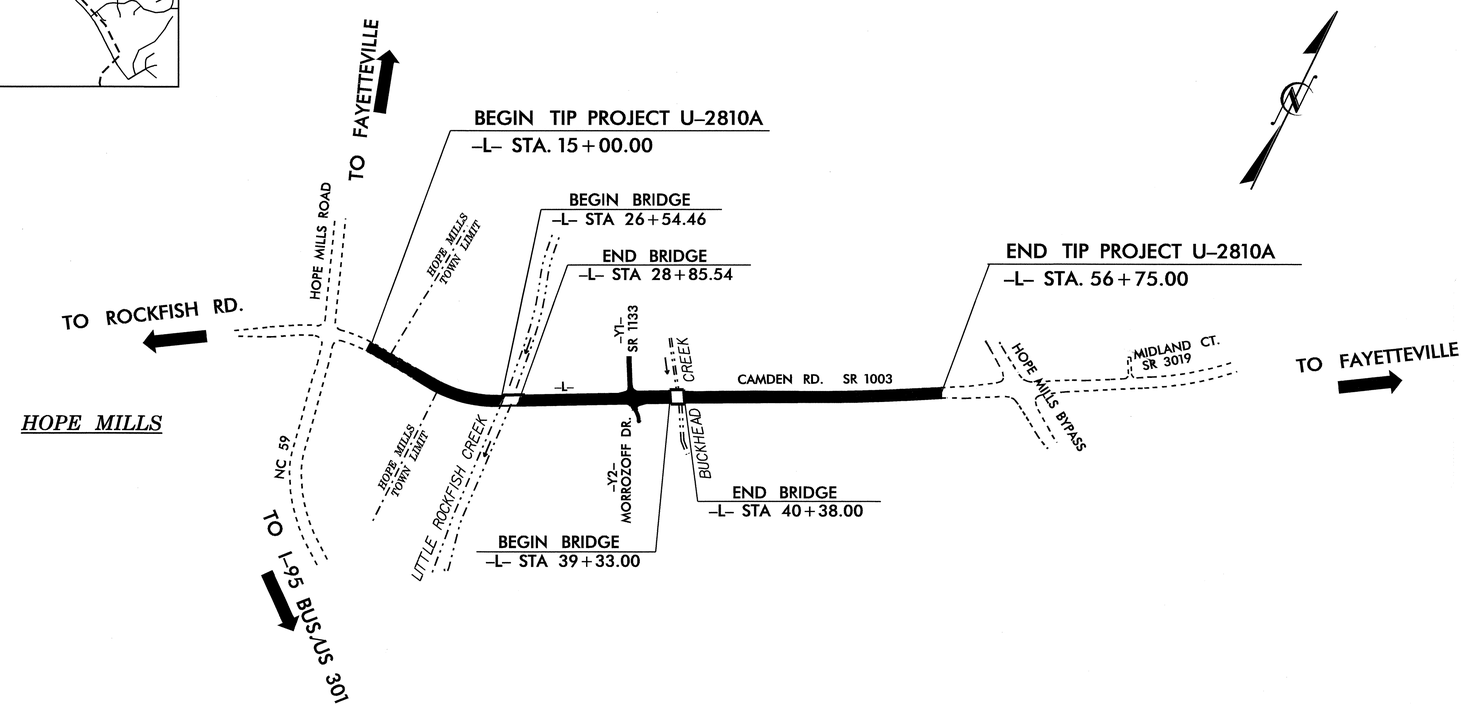

STATE OF NORTH CAROLINA DEPARTMENT OF TRANSPORTATION

DESIGN DATA

ADT 2004 = 15,400
ADT 2030 = 26,800
DHV = 10 %
D = 60 %
T = 5 % *
V = 50 MPH

* TTST 1% DUAL 4%

PROJECT LENGTH

LENGTH ROADWAY TIP PROJECT U-2810A = 0.727 MI
LENGTH STRUCTURE TIP PROJECT U-2810A = 0.064 MI
TOTAL LENGTH TIP PROJECT U-2810A = 0.791 MI

Prepared In the Office of:

DIVISION OF HIGHWAYS

2006 STANDARD SPECIFICATIONS

LETTING DATE :

January 19, 2010

J. C. FRYE, P.E.
PROJECT ENGINEER

T. H. FANG, P.E.
PROJECT DESIGN ENGINEER

STRUCTURE DESIGN UNIT
1000 BIRCH RIDGE DR.
RALEIGH, N.C. 27610

DIVISION OF HIGHWAYS
STATE OF NORTH CAROLINA

P.E.
STATE DESIGN ENGINEER

DEPARTMENT OF TRANSPORTATION
FEDERAL HIGHWAY ADMINISTRATION

APPROVED
DIVISION ADMINISTRATOR *DATE*

F.A. PROJECT STP-1003(68)

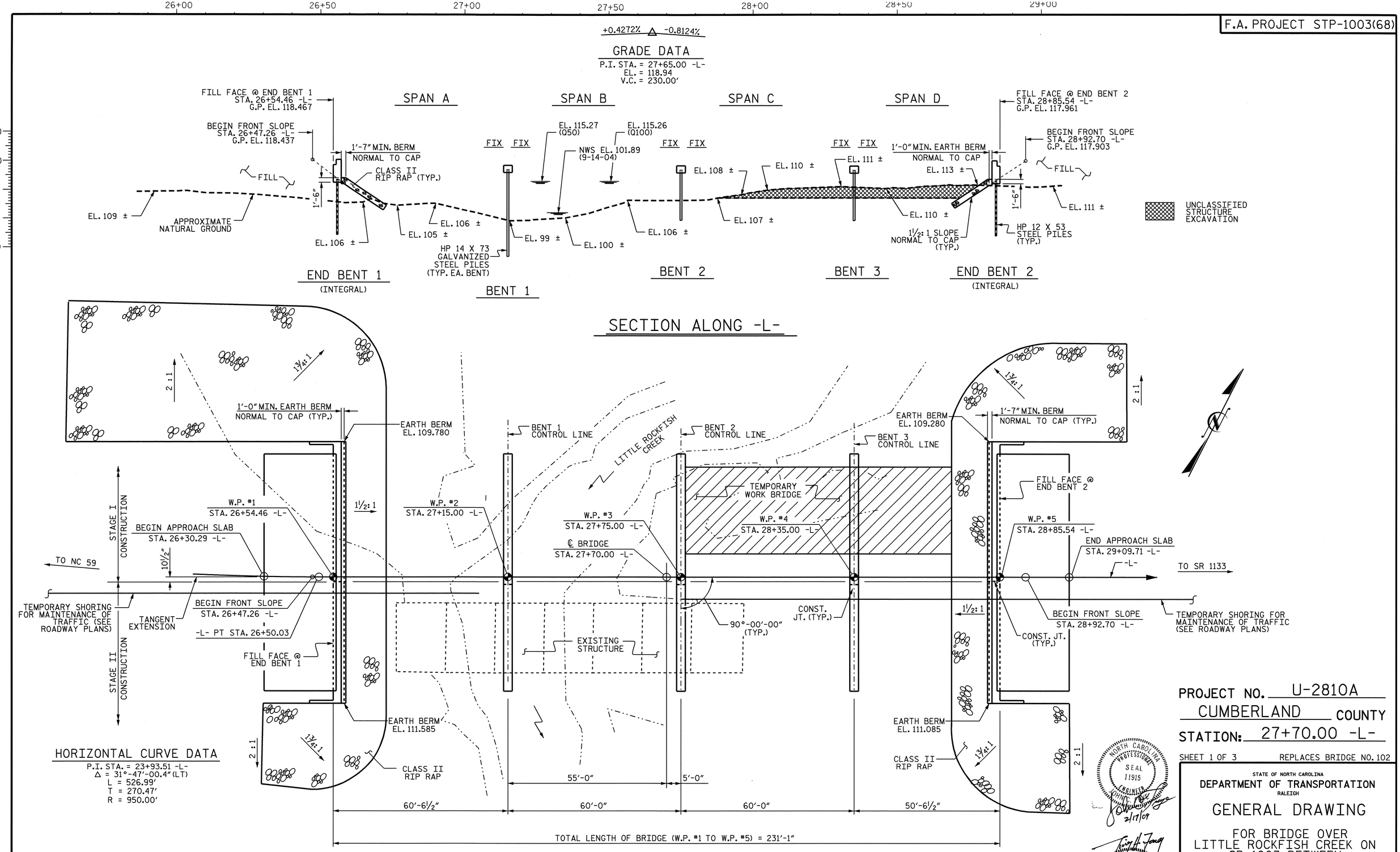

HORIZONTAL CURVE DATA

P.I. STA. = 23+93.51 -L-
Δ = 31°-47'-00.4" (LT)
L = 526.99'
T = 270.47'
R = 950.00'

PROJECT NO. U-2810A
CUMBERLAND COUNTY
STATION: 27+70.00 -L-

SHEET 1 OF 3 REPLACES BRIDGE NO. 102

STATE OF NORTH CAROLINA
DEPARTMENT OF TRANSPORTATION
RALEIGH

GENERAL DRAWING

FOR BRIDGE OVER
LITTLE ROCKFISH CREEK ON
SR 1003 BETWEEN
NC 59 AND SR 1133

NORTH CAROLINA PROFESSIONAL SEAL 11915 ENGINEER JOHN C. REY 2/17/09

NORTH CAROLINA PROFESSIONAL SEAL 16301 ENGINEER TING HSIUNG FANG 2/13/09

REVISIONS								SHEET NO.
NO.	BY:	DATE:	NO.	BY:	DATE:			S-1
1			3					TOTAL SHEETS
2			4					83

DRAWN BY : J. L. WALTON DATE : 5/06
CHECKED BY : T.H. FANG DATE : 7/06

13-FEB-2009 14:28
R:\Structures\str1\Final Plans\u-2810a_sd_gd_01.dgn
sdombrowski

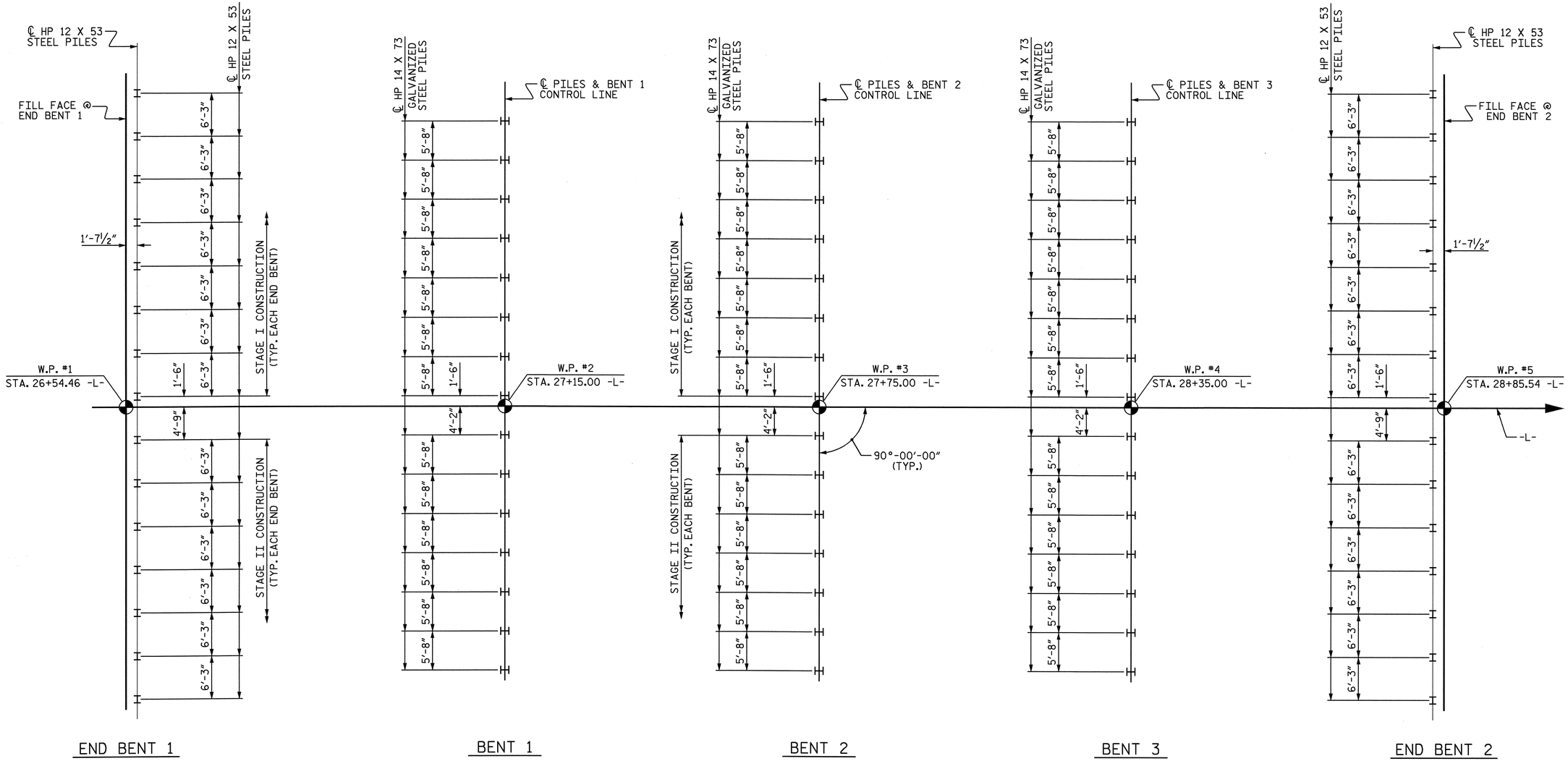

FOUNDATION LAYOUT

DIMENSIONS LOCATING PILES ARE SHOWN TO THE PILE CENTERLINE.
ORIENT PILES AS SHOWN.

NOTES

DRIVE PILES AT END BENTS 1 & 2 TO A REQUIRED BEARING CAPACITY OF 120 TONS PER PILE. THE REQUIRED BEARING CAPACITY IS EQUAL TO THE ALLOWABLE BEARING CAPACITY WITH A MINIMUM FACTOR OF SAFETY OF TWO.

DRIVE PILES TO A REQUIRED BEARING CAPACITY OF 200 TONS PER PILE IN BENT 1, 210 TONS PER PILE IN BENT 2 & 160 TONS PER PILE IN BENT 3. THE REQUIRED BEARING CAPACITY IS EQUAL TO THE ALLOWABLE BEARING CAPACITY WITH A MINIMUM FACTOR OF SAFETY OF TWO PLUS ANY ADDITIONAL CAPACITY TO ACCOUNT FOR DOWNDRAG OR NEGATIVE SKIN FRICTION AND SCOUR.

TESTING PILES WITH THE PILE DRIVING ANALYZER FOR LRFD IS REQUIRED AT BENT 3, SEE SPECIAL PROVISIONS FOR PILE DRIVING ANALYZER FOR LRFD.

THE ALLOWABLE BEARING CAPACITY FOR PILES AT END BENTS 1 & 2 IS 60 TONS PER PILE.

THE ALLOWABLE BEARING CAPACITY FOR PILES AT BENTS 1, 2 & 3 IS 75 TONS PER PILE.

DRIVE PILES TO A TIP ELEVATION NO HIGHER THAN 78 FT. IN BENT 1, 75 FT. IN BENT 2 AND 84 FT. IN BENT 3.

THE SCOUR CRITICAL ELEVATION IS 87 FT. FOR BENT 1 & 2 AND 95 FT. FOR BENT 3. SCOUR CRITICAL ELEVATIONS ARE USED TO MONITOR POSSIBLE SCOUR PROBLEMS DURING THE LIFE OF THE STRUCTURE.

FOR PILES, SEE SPECIAL PROVISIONS.

PROJECT NO. U-2810A
CUMBERLAND COUNTY
STATION: 27+70.00 -L-

SHEET 2 OF 3

STATE OF NORTH CAROLINA
DEPARTMENT OF TRANSPORTATION
RALEIGH

GENERAL DRAWING

FOR BRIDGE OVER LITTLE ROCKFISH CREEK ON SR 1003 BETWEEN NC 59 AND SR 1133

NORTH CAROLINA PROFESSIONAL SEAL 16301 ENGINEER TING HSILUNG FANG
1/15/09

REVISIONS						SHEET NO.
NO.	BY:	DATE:	NO.	BY:	DATE:	S-2
1			3			TOTAL SHEETS
2			4			83

DRAWN BY : E.C. LOCKLEAR DATE : 10-23-08
CHECKED BY : T. H. FANG DATE : 11-20-08

15-JAN-2009 10:09
R:\Structures\str1\Final Plans\U2810_sd_FL_01.dgn
sdombrowski

TOTAL BILL OF MATERIAL

	CONST., MAINT. & REMOVAL OF TEMP.ACCESS	REMOVAL OF EXISTING STRUCTURE	PDA ASSISTANCE	UNCLASSFIED STRUCTURE EXCAVATION	REINFORCED CONCRETE DECK SLAB	GROOVING BRIDGE FLOORS	CLASS A CONCRETE	BRIDGE APPROACH SLABS	REINFORCING STEEL	36" PRESTRESSED CONCRETE GIRDERS		HP 12 X 53 STEEL PILES		HP 14 X 73 GALVANIZED STEEL PILES		PILE REDRIVES	THREE BAR METAL RAIL	RIP RAP CLASS II (2'-0" THICK)	FILTER FABRIC FOR DRAINAGE	ELASTOMERIC BEARINGS	EVAZOTE JOINT SEALS
	LUMP SUM	LUMP SUM	EACH	CU. YDS	SQ. FT.	SQ. FT.	CU. YDS	LUMP SUM	LBS.	NO.	LIN. FT.	NO.	LIN. FT.	NO.	LIN. FT.	NO.	LIN. FT.	TONS	SQ. YDS.	LUMP SUM	LUMP SUM
SUPERSTRUCTURE					19,546	16,520				52	2946.67						443.83			LUMP SUM	LUMP SUM
END BENT 1				500			36.3		5,539			15	450					740	820		
BENT 1							31.8		5,476					15	600						
BENT 2							31.8		5,476					15	675						
BENT 3			1				31.8		5,476					15	750						
END BENT 2				1,630			36.3		5,539			15	450					515	575		
TOTAL	LUMP SUM	LUMP SUM	1	2,130	19,546	16,520	168.0	LUMP SUM	27,506	52	2946.67	30	900	45	2,025	30	443.83	1,255	1,395	LUMP SUM	LUMP SUM

BENCH MARK : #80 RR SPIKE IN BASE OF 24" PINE, 77.95' RIGHT OF STA. 17+08.99 -L-, EL 135.52

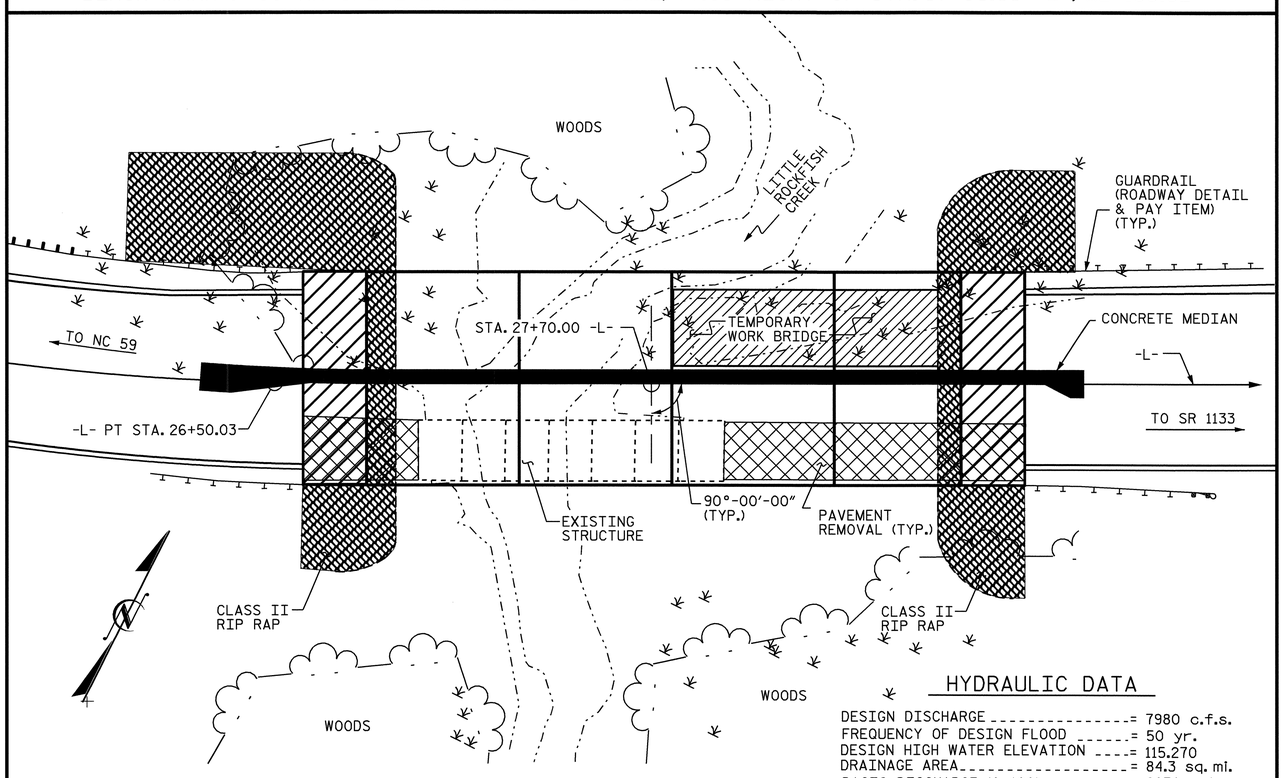

HYDRAULIC DATA

DESIGN DISCHARGE = 7980 c.f.s.
FREQUENCY OF DESIGN FLOOD = 50 yr.
DESIGN HIGH WATER ELEVATION = 115.270
DRAINAGE AREA = 84.3 sq. mi.
BASIC DISCHARGE (Q 100) = 8970 c.f.s.
BASIC HIGH WATER ELEVATION = 115.260

OVERTOPPING FLOOD DATA

OVERTOPPING DISCHARGE = 8970 c.f.s.
FREQUENCY OF OVERTOPPING FLOOD = 100 yr.
OVERTOPPING FLOOD ELEVATION = 115.260

FOR UTILITY INFORMATION, SEE UTILITY PLANS AND SPECIAL PROVISIONS.

LOCATION SKETCH

NOTES

ASSUMED LIVE LOAD = HS20 OR ALTERNATE LOADING, EXCEPT THAT THE GIRDERS HAVE BEEN DESIGNED FOR HS25.

FOR OTHER DESIGN DATA AND GENERAL NOTES, SEE SHEET SN.

FOR EROSION CONTROL MEASURES SEE EROSION CONTROL PLANS.

THIS BRIDGE HAS BEEN DESIGNED BY THE STRENGTH DESIGN METHOD AS SPECIFIED IN AASHTO STANDARD SPECIFICATIONS.

THIS BRIDGE HAS BEEN DESIGNED IN ACCORDANCE WITH THE REQUIREMENTS OF THE AASHTO STANDARD SPECIFICATIONS FOR SEISMIC DESIGN OF HIGHWAY BRIDGES FOR SEISMIC PERFORMANCE CATEGORY A.

REMOVABLE FORMS MAY BE USED IN LIEU OF METAL STAY-IN-PLACE FORMS IN ACCORDANCE WITH ARTICLE 420-3 OF THE STANDARD SPECIFICATIONS.

REMOVAL OF THE EXISTING BRIDGE SHALL BE PERFORMED SO AS NOT TO ALLOW DEBRIS TO FALL INTO THE WATER. THE CONTRACTOR SHALL REMOVE THE BRIDGE AND SUBMIT PLANS FOR DEMOLITION IN ACCORDANCE WITH ARTICLE 402-2 OF THE STANDARD SPECIFICATIONS.

THE MATERIAL SHOWN IN THE CROSS-HATCHED AREA ON SHEET S-1 SHALL BE EXCAVATED FOR A DISTANCE OF 75 FT. RIGHT AT END BENT 1; 25 FT. LEFT AND 75 FT. RIGHT AT END BENT 2 OF CENTERLINE ROADWAY AS DIRECTED BY THE ENGINEER. THIS WORK WILL BE PAID FOR AT THE CONTRACT UNIT PRICE PER CUBIC YARDS FOR UNCLASSIFIED STRUCTURE EXCAVATION.

THE SUBSTRUCTURE OF THE EXISTING BRIDGE INDICATED ON THE PLANS IS FROM THE BEST INFORMATION AVAILABLE. SINCE THIS INFORMATION IS SHOWN FOR THE CONVENIENCE OF THE CONTRACTOR, THE CONTRACTOR SHALL HAVE NO CLAIM WHATSOEVER AGAINST THE DEPARTMENT OF TRANSPORTATION FOR ANY DELAYS OR ADDITIONAL COST INCURRED BASED ON DIFFERENCES BETWEEN THE EXISTING BRIDGE SUBSTRUCTURE SHOWN ON THE PLANS AND THE ACTUAL CONDITIONS AT THE PROJECT SITE.

THE CONTRACTOR SHALL PROVIDE INDEPENDENT ASSURANCE SAMPLES OF REINFORCING STEEL AS FOLLOWS: FOR PROJECTS REQUIRING UP TO 400 TONS OF REINFORCING STEEL, ONE 30 INCH SAMPLE OF EACH SIZE BAR USED, AND FOR PROJECTS REQUIRING OVER 400 TONS OF REINFORCING STEEL, TWO 30 INCH SAMPLES OF EACH SIZE BAR USED. THE BARS FROM WHICH THE SAMPLES ARE TAKEN MUST THEN BE SPLICED WITH REPLACEMENT BARS OF THE SIZE AND LENGTH OF THE SAMPLE PLUS A MINIMUM LAP SPLICED OF THIRTY BAR DIAMETERS.

THE EXISTING PAVEMENT WITHIN THE AREA OF THE END BENT PILES SHALL BE REMOVED AND THE ROADBED SCARIFIED TO A MINIMUM DEPTH OF 2'-0".

FOR LIMITS OF TEMPORARY SHORING FOR MAINTENANCE OF TRAFFIC, SEE TRAFFIC CONTROL PLANS. FOR PAY ITEM FOR TEMPORARY SHORING FOR MAINTENANCE OF TRAFFIC, SEE ROADWAY PLANS.

FOR CONSTRUCTION, MAINTENANCE AND REMOVAL OF TEMPORARY ACCESS, SEE SPECIAL PROVISIONS.

FOR PRESTRESSED CONCRETE MEMBERS, SEE SPECIAL PROVISIONS.

FOR PLACING LOAD ON STRUCTURE MEMBERS, SEE SPECIAL PROVISIONS.

THE EXISTING STRUCTURE CONSISTING OF 7 SPANS; 1 @ 18'-7", 1 @ 16'-4", 1 @ 16'-8", 1 @ 17'-4", 1 @ 17'-0", 1 @ 17'-4", 1 @ 17'-2"; 24.1 FEET CLEAR ROADWAY WIDTH AND CONCRETE DECK ON 12 LINES OF STEEL I-BEAMS; CONCRETE CAP ON TIMBER PILES AT END BENTS AND INTERIOR BENTS; AND TIMBER CRUTCH BENTS, AND LOCATED AT THE SITE OF PROPOSED STRUCTURE SHALL BE REMOVED. THE EXISTING BRIDGE IS PRESENTLY POSTED BELOW THE LEGAL LOAD LIMIT. SHOULD THE STRUCTURAL INTEGRITY OF THE BRIDGE FURTHER DETERIORATE, THIS LOAD LIMITATION MAY BE REDUCED AS FOUND NECESSARY DURING THE LIFE OF THE PROJECT.

THIS STRUCTURE HAS BEEN DESIGNED IN ACCORDANCE WITH HEC 18, "EVALUATING SCOUR AT BRIDGES", MAY, 2001.

INASMUCH AS THE PAINT SYSTEM ON THE EXISTING STRUCTURAL STEEL CONTAINS LEAD, THE CONTRACTOR'S ATTENTION IS DIRECTED TO ARTICLE 107-1 OF THE STANDARD SPECIFICATIONS. ANY COSTS RESULTING FROM COMPLIANCE WITH APPLICABLE STATE OR FEDERAL REGULATIONS PERTAINING TO HANDLING OF MATERIALS CONTAINING LEAD BASED PAINT SHALL BE INCLUDED IN THE BID PRICE FOR "REMOVAL OF EXISTING STRUCTURE AT STATION 27+70.00 -L-."

FOR SUBMITTAL OF WORKING DRAWINGS, SEE SPECIAL PROVISIONS.

FOR FALSEWORK AND FORMWORK, SEE SPECIAL PROVISIONS.

GALVANIZE THE TOP 30 FEET OF EACH INTERIOR BENT PILE IN ACCORDANCE WITH SECTION 1076 OF THE STANDARD SPECIFICATIONS.

FOR CRANE SAFETY, SEE SPECIAL PROVISIONS.

NEEDLE BEAMS WILL NOT BE ALLOWED UNLESS OTHERWISE CALLED FOR ON THE PLANS OR APPROVED BY THE ENGINEER.

FOR GROUT FOR STRUCTURES, SEE SPECIAL PROVISIONS.

FOR CURING CONCRETE, SEE SPECIAL PROVISIONS.

PROJECT NO. U-2810A
CUMBERLAND COUNTY
STATION: 27+70.00 -L-

SHEET 3 OF 3

STATE OF NORTH CAROLINA
DEPARTMENT OF TRANSPORTATION
RALEIGH

GENERAL DRAWING

FOR BRIDGE OVER LITTLE ROCKFISH CREEK ON SR 1003 BETWEEN NC 59 AND SR 1133

NORTH CAROLINA PROFESSIONAL SEAL 16301 ENGINEER TING HSIUNG FANG
10/19/09

REVISIONS						SHEET NO.
NO.	BY:	DATE:	NO.	BY:	DATE:	S-3
1			3			TOTAL SHEETS
2			4			83

DRAWN BY : H. B. SHAH DATE : 10/08
CHECKED BY : T.H. FANG DATE : 11/08

19-OCT-2009 08:51
z:\structures\str1\final plans\u-2810a_sd_gd_01.dgn
tfang

STR #1

NOTES

SEE TRAFFIC CONTROL PLANS FOR LOCATION AND PAY LIMIT OF THE ANCHORED PORTABLE CONCRETE BARRIER.

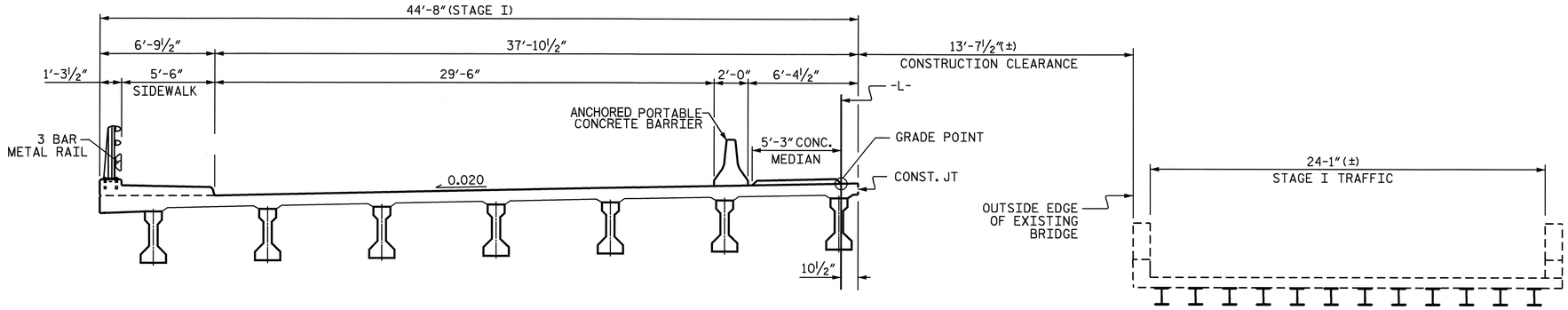

STAGE I CONSTRUCTION

CONSTRUCT LEFT SIDE OF PROPOSED BRIDGE
MAINTAIN TRAFFIC ON EXISTING STRUCTURE

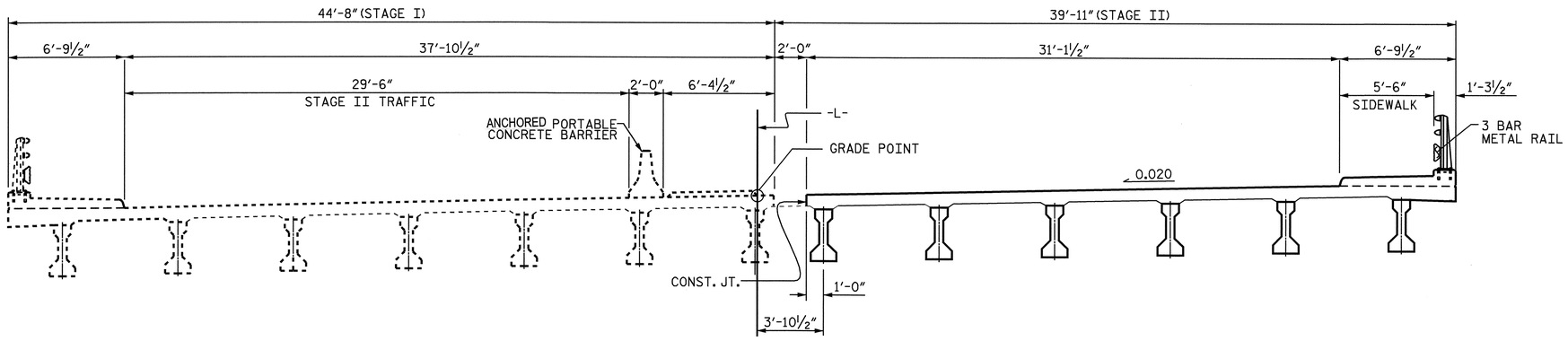

STAGE II CONSTRUCTION

MOVE TRAFFIC ONTO NEW BRIDGE. REMOVE EXISTING BRIDGE.

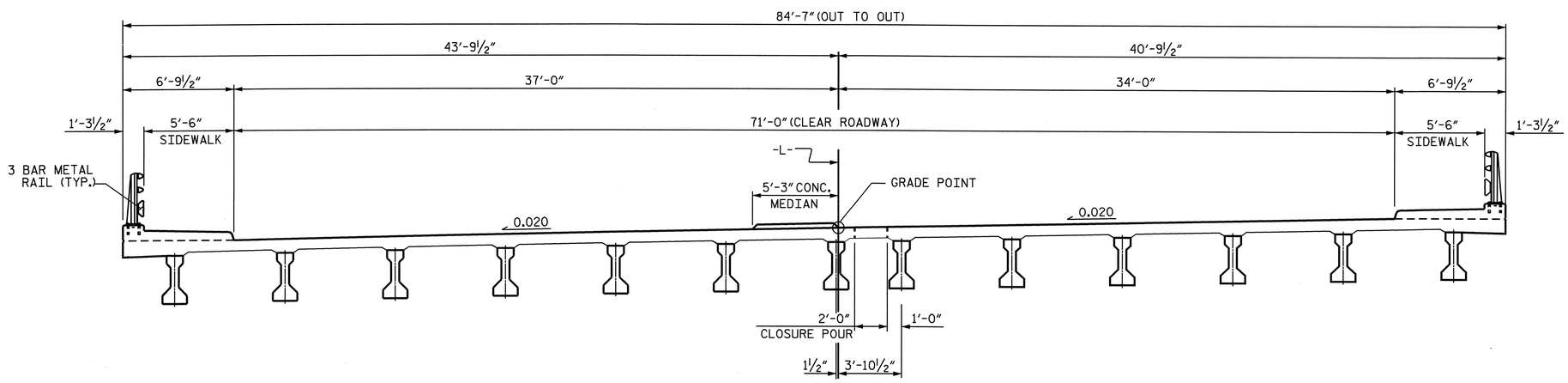

FINAL STAGE

CONSTRUCT THE CLOSURE POUR OF PROPOSED BRIDGE

NORTH CAROLINA PROFESSIONAL SEAL 16301 ENGINEER TING HSUNG FANG
1/15/09

PROJECT NO. U-2810A
CUMBERLAND COUNTY
STATION: 27+70.00 -L-

STATE OF NORTH CAROLINA
DEPARTMENT OF TRANSPORTATION
RALEIGH

CONSTRUCTION SEQUENCE

REVISIONS						SHEET NO.
NO.	BY:	DATE:	NO.	BY:	DATE:	S-4
1			3			TOTAL SHEETS
2			4			83

DRAWN BY : HARISH SHAH DATE : 12/08
CHECKED BY : T.H. FANG DATE : 12-08

15-JAN-2009 10:09
R:\Structures\str1\Final Plans\u-2810a_sd_gd_01.dgn
sdombrowski

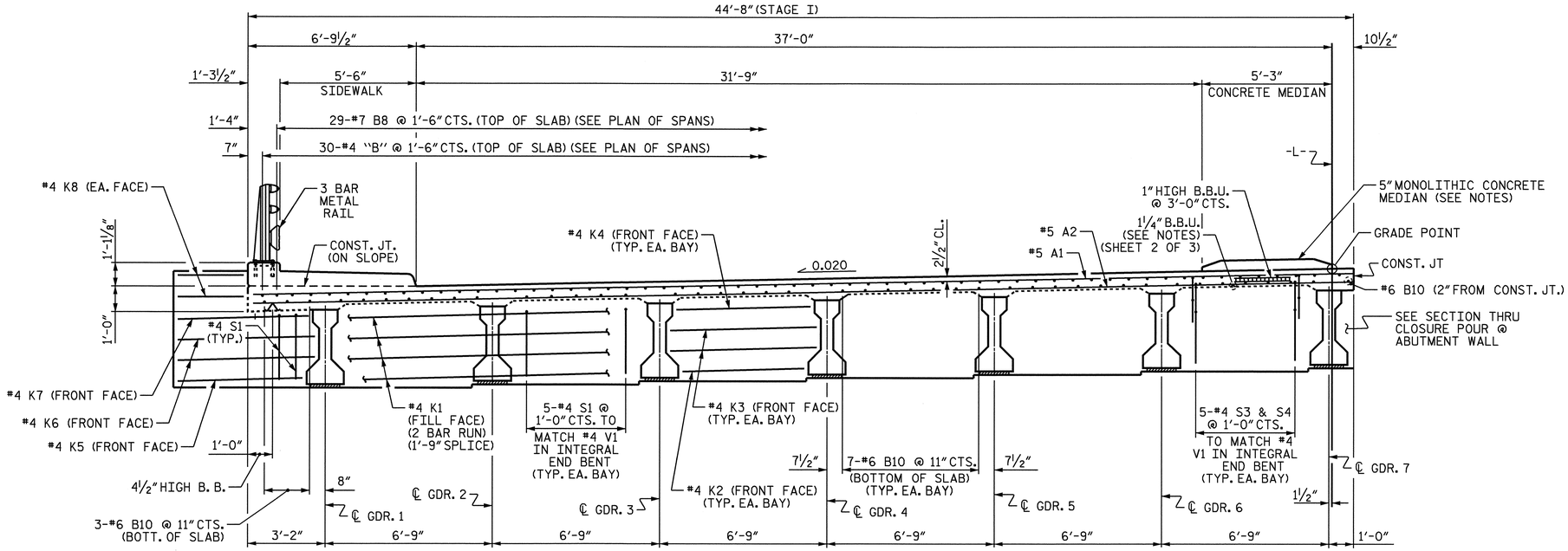

TYPICAL SECTION - STAGE I

SHOWING ABUTMENT WALL AT END BENT
LEFT WING, APPROACH SLAB BLOCKOUT & SIP FORMS NOT SHOWN FOR CLARITY.

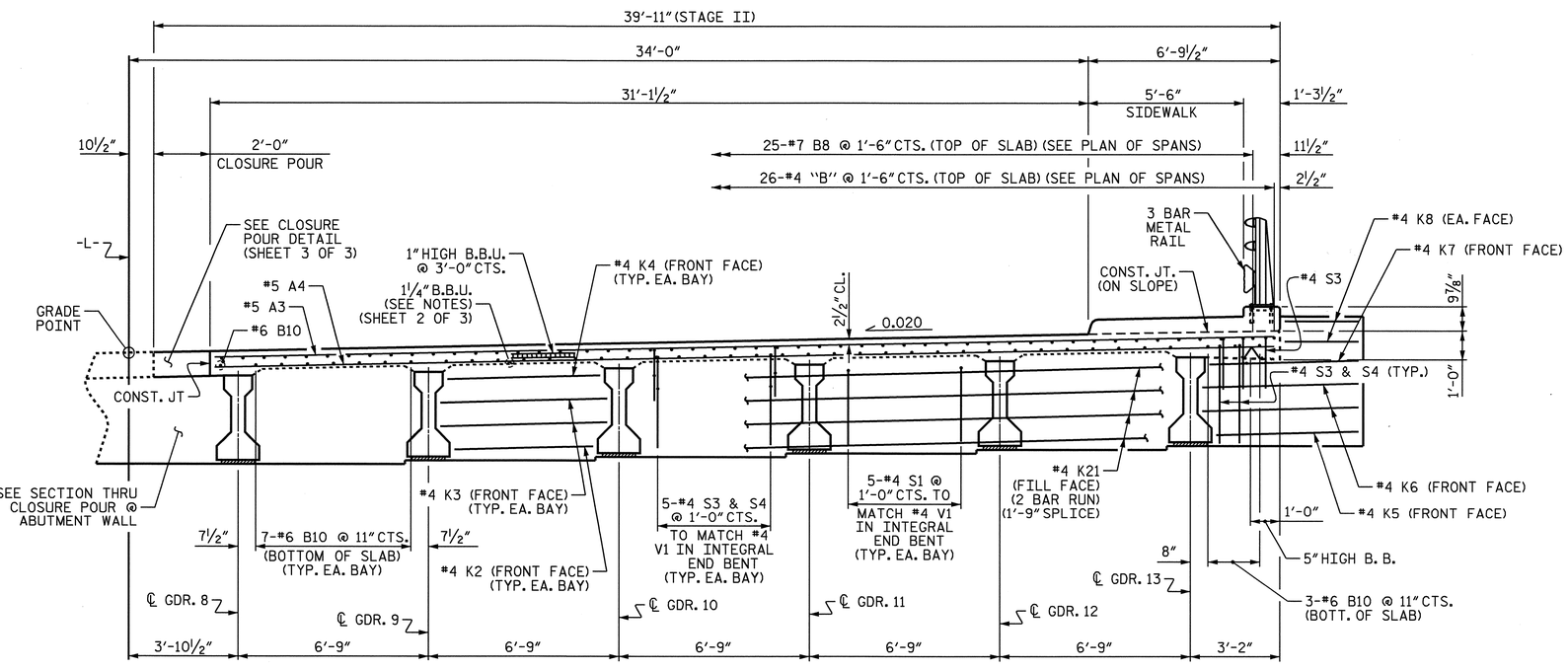

TYPICAL SECTION - STAGE II

SHOWING ABUTMENT WALL AT END BENT
RIGHT WING, APPROACH SLAB BLOCKOUT & SIP FORMS NOT SHOWN FOR CLARITY.

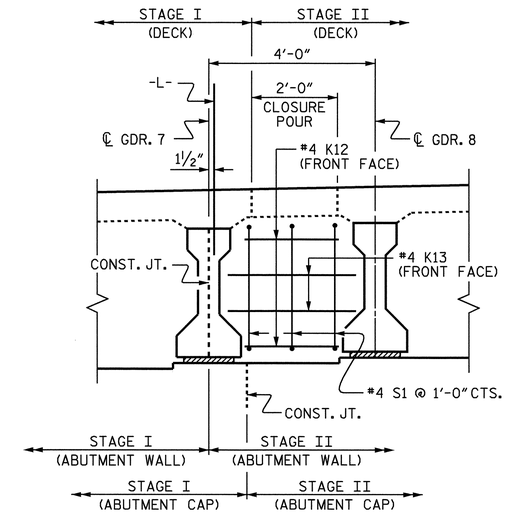

SECTION THRU CLOSURE POUR @ ABUTMENT WALL

#4 K1, K21, S3 & S4 NOT SHOWN FOR CLARITY.

CAST ABUTMENT WALLS BETWEEN GIRDERS 7 & 8 WITH STAGE II CONSTRUCTION, SEE "POUR SEQUENCE" DETAILS.

PROJECT NO. U-2810A
CUMBERLAND COUNTY
STATION: 27+70.00 -L-

SHEET 1 OF 3

STATE OF NORTH CAROLINA
DEPARTMENT OF TRANSPORTATION
RALEIGH

SUPERSTRUCTURE

TYPICAL SECTION

NORTH CAROLINA PROFESSIONAL SEAL 16301 ENGINEER TING HSIANG FANG
2/13/09

REVISIONS								SHEET NO.
NO.	BY:	DATE:	NO.	BY:	DATE:			S-5
1			3					TOTAL SHEETS
2			4					83

DRAWN BY : E. C. LOCKLEAR DATE : 10-08
CHECKED BY : T.H. FANG DATE : 11-08

13-FEB-2009 14:28
R:\Structures\str1\Final Plans\u-2810a_sd_ts_01.dgn
sdombrowski

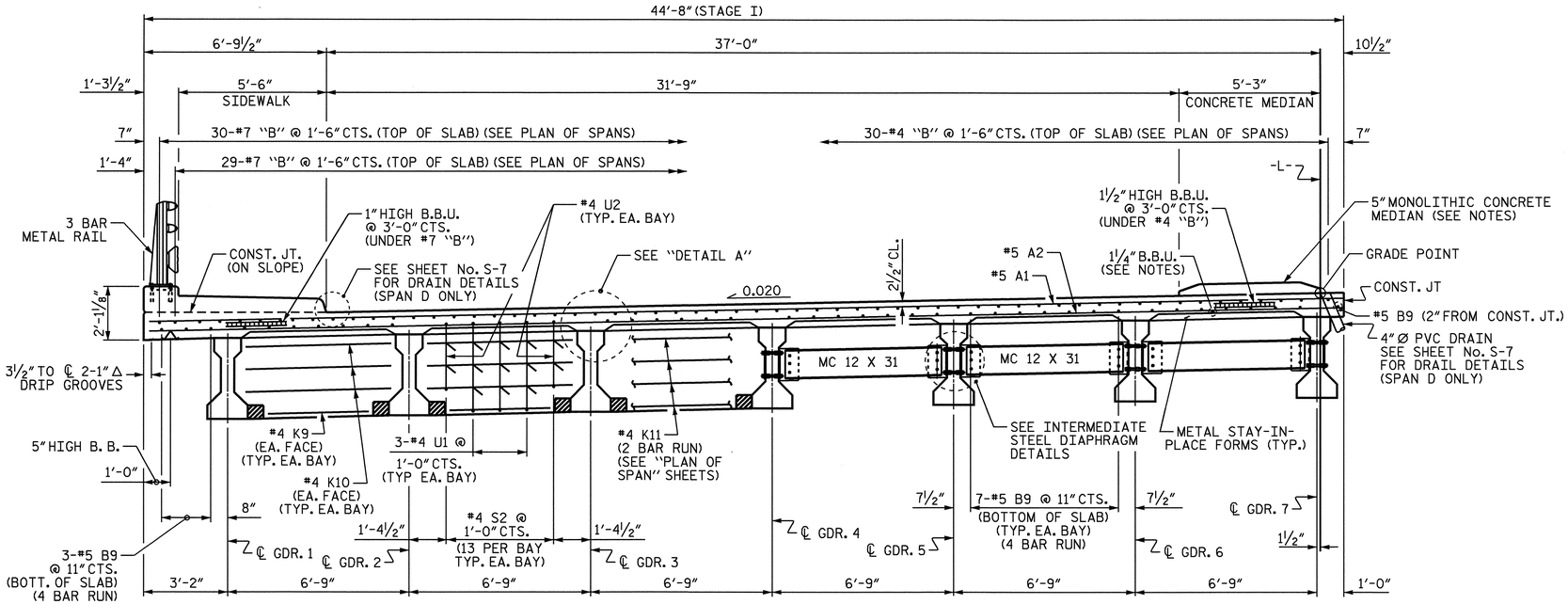

PARTIAL TYPICAL SECTION
(SHOWING BENT DIAPHRAGMS)

PARTIAL TYPICAL SECTION
(SHOWING INTERMEDIATE DIAPHRAGMS)

TYPICAL SECTION - STAGE I

DECK DRAINS @ LEFT GUTTER LINE NOT SHOWN FOR CLARITY.

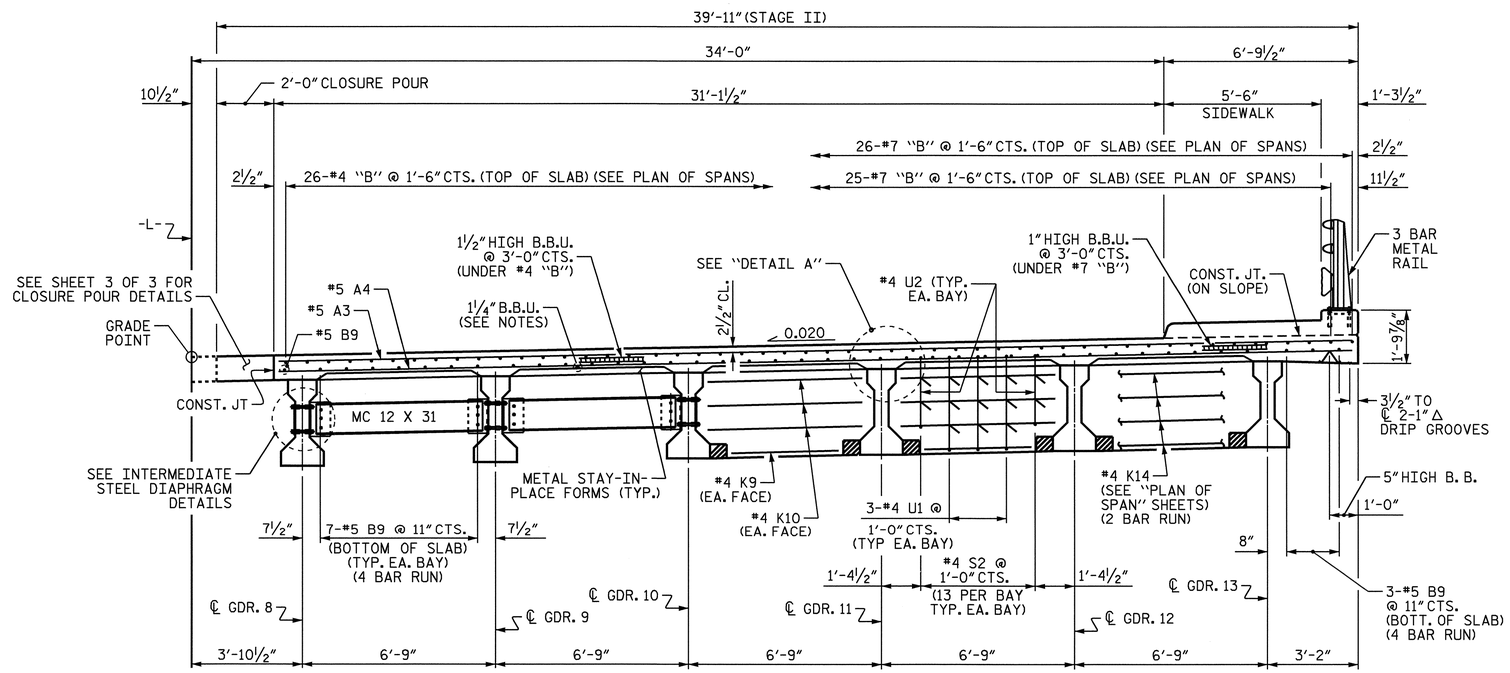

PARTIAL TYPICAL SECTION
(SHOWING INTERMEDIATE DIAPHRAGMS)

PARTIAL TYPICAL SECTION
(SHOWING BENT DIAPHRAGMS)

TYPICAL SECTION - STAGE II

NOTES

PROVIDE 1¼" HIGH BEAM BOLSTERS UPPER AT 4'-0" CTS. ATOP THE METAL STAY-IN-PLACE FORMS TO SUPPORT THE BOTTOM MAT OF "A" BARS. WHEN USING REMOVABLE FORMS, PROVIDE CONTINUOUS HIGH CHAIRS FOR METAL DECK (C.H.C.M.) @ 4'-0" CTS. WITH A HEIGHT TO SUPPORT THE BOTTOM MAT OF "A" BARS A CLEAR DISTANCE OF 2½" ABOVE THE TOP OF THE REMOVABLE FORM.

LONGITUDINAL STEEL MAY BE SHIFTED SLIGHTLY, AS NECESSARY, TO AVOID INTERFERENCE WITH STIRRUPS IN PRESTRESSED CONCRETE GIRDERS.

PREVIOUSLY CAST CONCRETE IN A CONTINUOUS UNIT SHALL HAVE ATTAINED A MINIMUM COMPRESSIVE STRENGTH OF 3,000 PSI BEFORE ADDITIONAL CONCRETE IS CAST IN THE UNIT.

FOR WING ELEVATIONS AND DETAILS, SEE "PLAN OF SPANS DETAILS" SHEETS.

FOR 5" MONOLITHIC CONCRETE MEDIAN REINFORCING STEEL AND DETAILS, SEE "CONCRETE MEDIAN" SHEET.

FOR SECTION THRU SIDEWALK AND DETAILS, SEE SHEET 3 OF 3.

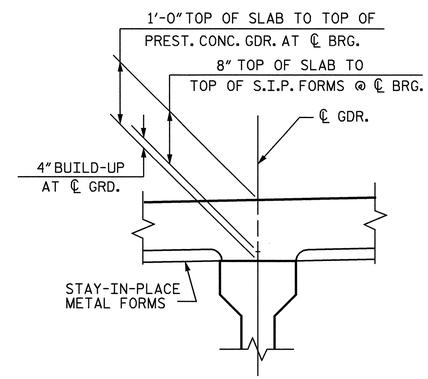

DETAIL A

PROJECT NO. U-2810A
CUMBERLAND COUNTY
STATION: 27+70.00 -L-

SHEET 2 OF 3

STATE OF NORTH CAROLINA
DEPARTMENT OF TRANSPORTATION
RALEIGH

SUPERSTRUCTURE

TYPICAL SECTION

NORTH CAROLINA PROFESSIONAL SEAL 16301 ENGINEER TING HSILING FANG
2/13/09

REVISIONS						SHEET NO.
NO.	BY:	DATE:	NO.	BY:	DATE:	S-6
1			3			TOTAL SHEETS
2			4			83

DRAWN BY : E. C. LOCKLEAR DATE : 10-08
CHECKED BY : T.H. FANG DATE : 11-08

13-FEB-2009 14:27
R:\Structures\str1\Final Plans\u-2810a_sd_ts_01.dgn
sdombrowski

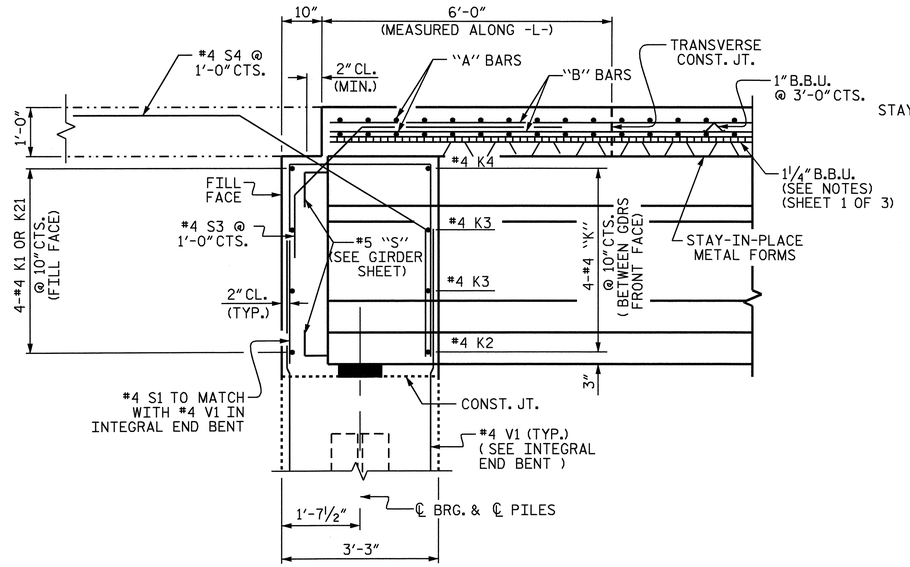

SECTION THRU INTEGRAL END BENT

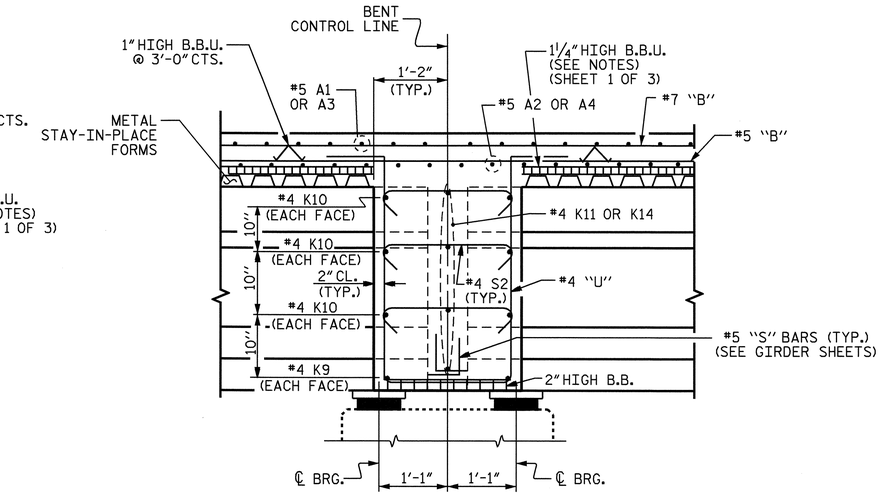

SECTION THRU BENT

NO BENT DIAPHRAGM REQUIRED IN THE CLOSURE-POUR BAY.

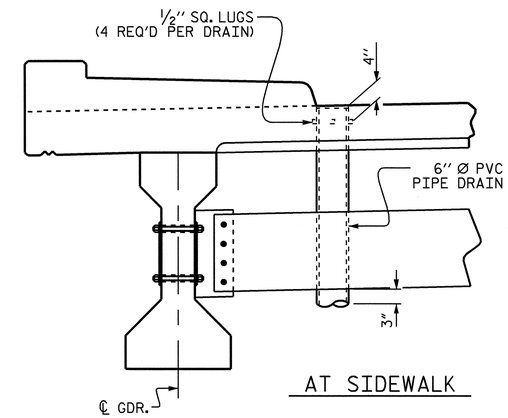

AT SIDEWALK

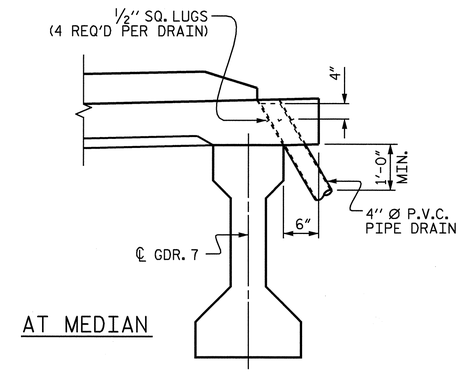

AT MEDIAN

DRAIN DETAILS

TOP OF FLOOR DRAIN TO BE SET ⅜" BELOW SURFACE OF SLAB.

4 - ½" SQUARE LUGS TO BE GLUED TO THE PVC PIPE AT EQUAL SPACES AROUND THE PIPE DRAIN APPROXIMATELY 4" FROM THE TOP OF THE PIPE.

THE 4"Ø & 6"Ø PVC PIPES AND FITTINGS SHALL BE SCHEDULE 40 AND CONFORM TO ASTM D1785.

COUPLING IN DRAIN PIPE WILL BE PERMITTED AS APPROVED BY THE ENGINEER.

SEE PLAN OF SPANS FOR LOCATION OF 4"Ø & 6"Ø PVC PIPE DRAINS.

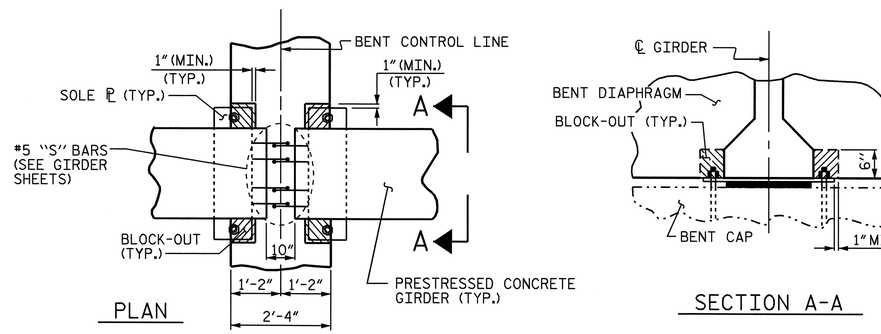

PLAN

SECTION A-A

BENT DIAPHRAGM BLOCK-OUT DETAIL

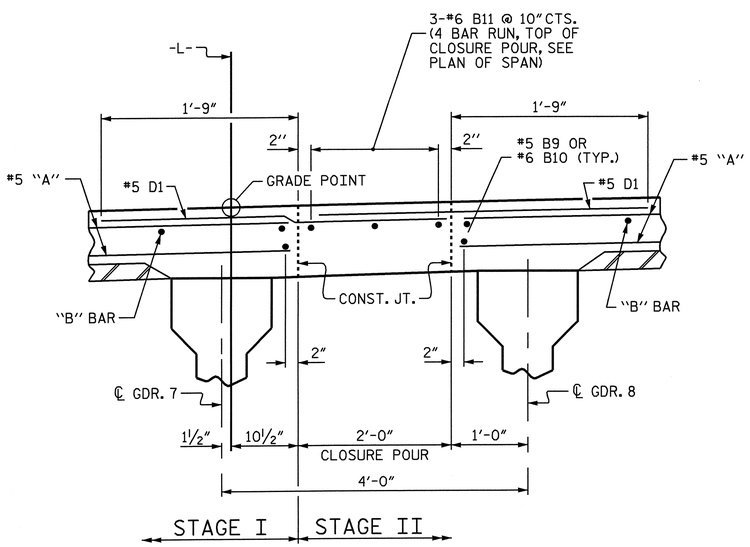

DECK CLOSURE POUR DETAIL

*5 D1 DOWELS SHALL BE PLACED IN THE SAME HORIZONTAL PLANE AS THE TOP SLAB REINFORCING STEEL.

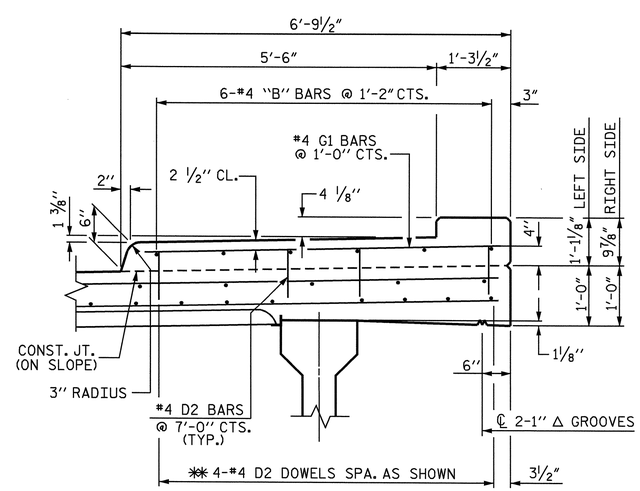

SECTION THRU SIDEWALK

** THE #4 D2 DOWELS MAY BE PUSHED INTO GREEN CONCRETE AFTER DECK OR APPROACH SLAB HAS BEEN SCREEDED OFF.

PROJECT NO. U-2810A
CUMBERLAND COUNTY
STATION: 27+70.00 -L-

SHEET 3 OF 3

STATE OF NORTH CAROLINA
DEPARTMENT OF TRANSPORTATION
RALEIGH

SUPERSTRUCTURE

TYPICAL SECTION DETAILS

NORTH CAROLINA PROFESSIONAL SEAL 16301 ENGINEER TING HSUNG FANG
1/15/09

REVISIONS						SHEET NO.
NO.	BY:	DATE:	NO.	BY:	DATE:	S-7
1			3			TOTAL SHEETS
2			4			83

DRAWN BY : E. C. LOCKLEAR DATE : 10-08
CHECKED BY : T.H. FANG DATE : 11-08

15-JAN-2009 10:09
R:\Structures\str1\Final Plans\u-2810a_sd_ts_01.dgn
sdombrowski

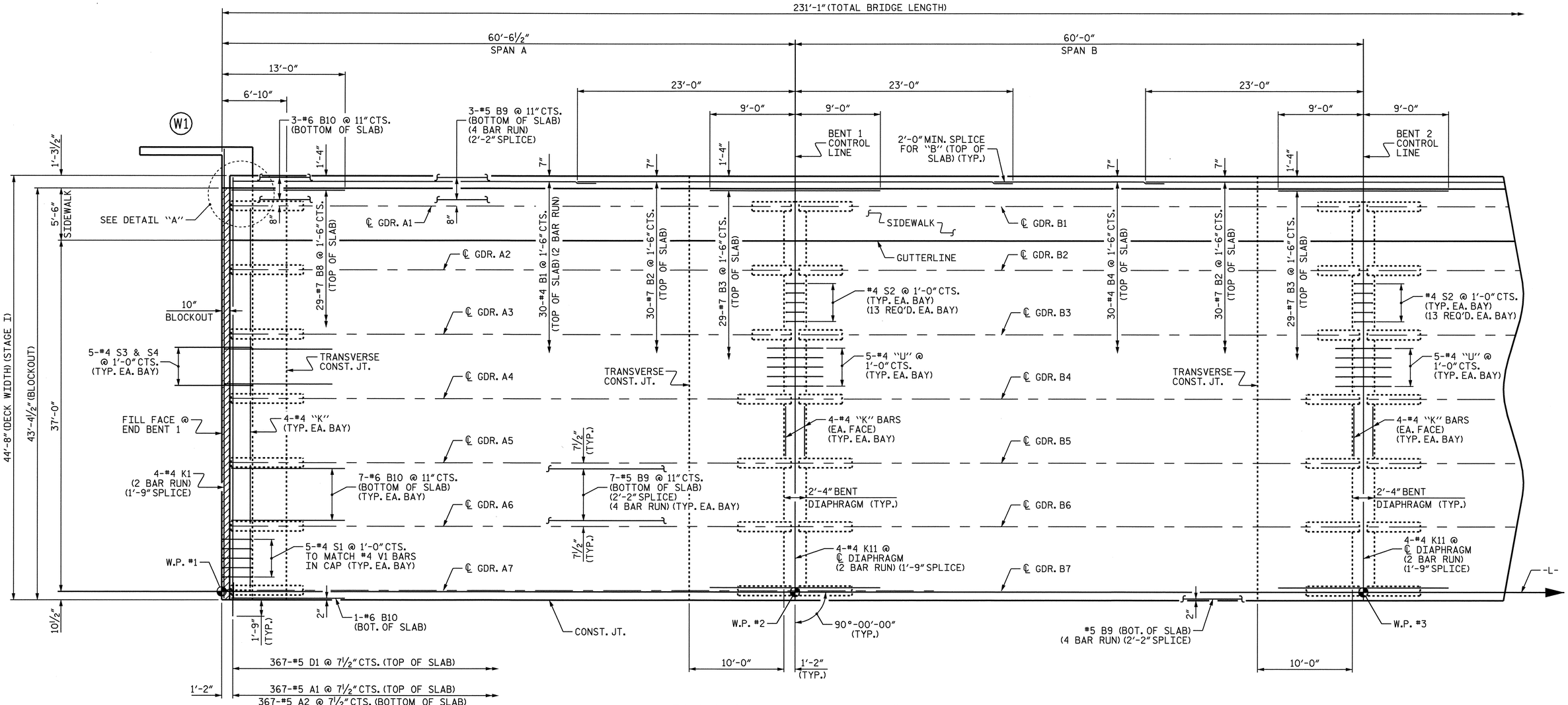

PLAN OF SPANS A & B

CONCRETE MEDIAN NOT SHOWN FOR CLARITY.

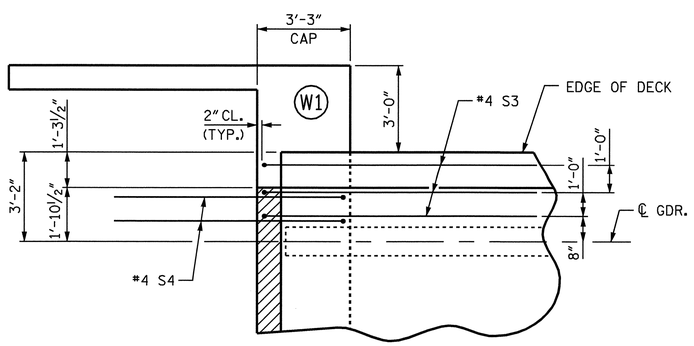

DETAIL "A"

S1 BARS NOT SHOWN FOR CLARITY.

PROJECT NO. U-2810A

CUMBERLAND COUNTY

STATION: 27+70.00 -L-

SHEET 1 OF 6

STATE OF NORTH CAROLINA
DEPARTMENT OF TRANSPORTATION
RALEIGH

SUPERSTRUCTURE

PLAN OF SPANS
SPANS A & B
STAGE I

NORTH CAROLINA PROFESSIONAL SEAL 16301 ENGINEER TING HSIUNG FANG

2/13/09

REVISIONS						SHEET NO.
NO.	BY:	DATE:	NO.	BY:	DATE:	S-8
1			3			TOTAL SHEETS
2			4			83

DRAWN BY : E.C. LOCKLEAR DATE : 10-17-08
CHECKED BY : T.H. FANG DATE : 11-18-08

13-FEB-2009 14:27
R:\Structures\str1\Final Plans\U2810_sd_S*_01.dgn
sdombrowski

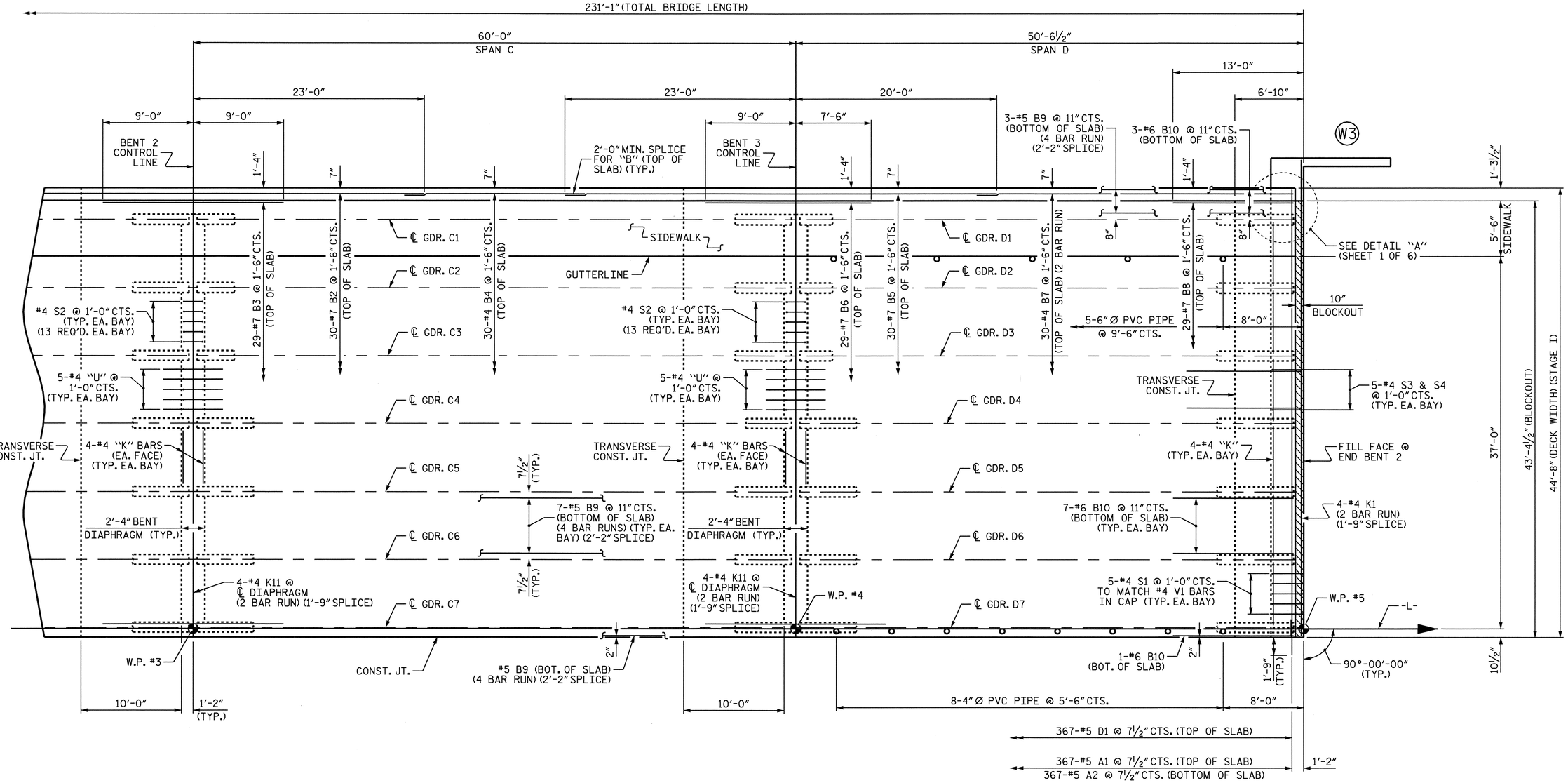

PLAN OF SPANS C & D

CONCRETE MEDIAN NOT SHOWN FOR CLARITY.

PROJECT NO. U-2810A

CUMBERLAND COUNTY

STATION: 27+70.00 -L-

SHEET 2 OF 6

STATE OF NORTH CAROLINA
DEPARTMENT OF TRANSPORTATION
RALEIGH

SUPERSTRUCTURE

PLAN OF SPANS
SPANS C & D
STAGE I

NORTH CAROLINA PROFESSIONAL SEAL 16301 ENGINEER TING HSIUNG FANG

2/13/09

REVISIONS						SHEET NO.
NO.	BY:	DATE:	NO.	BY:	DATE:	S-9
1			3			TOTAL SHEETS
2			4			83

DRAWN BY : E.C. LOCKLEAR DATE : 10-17-08
CHECKED BY : T.H. FANG DATE : 11-18-08

13-FEB-2009 14:27
R:\Structures\str1\Final Plans\U2810_sd_S*_01.dgn
sdombrowski

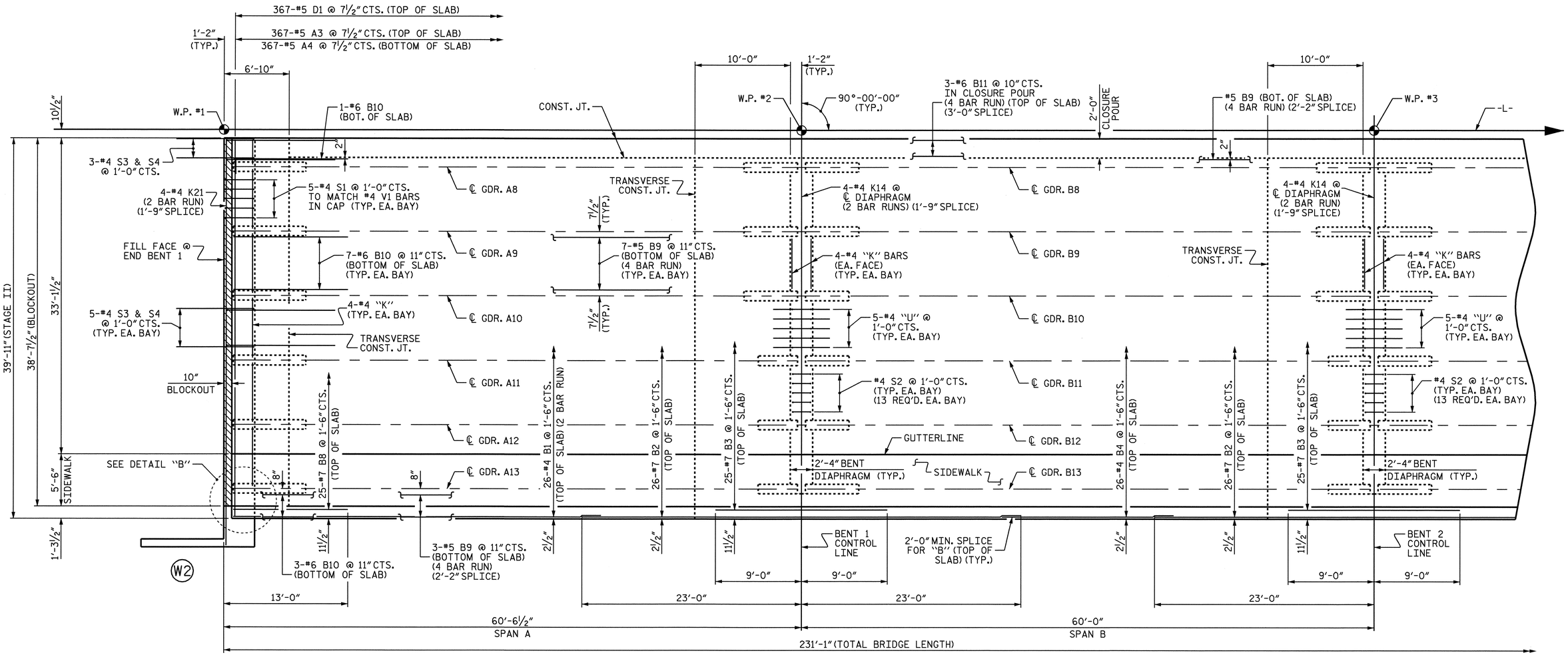

PLAN OF SPANS A & B

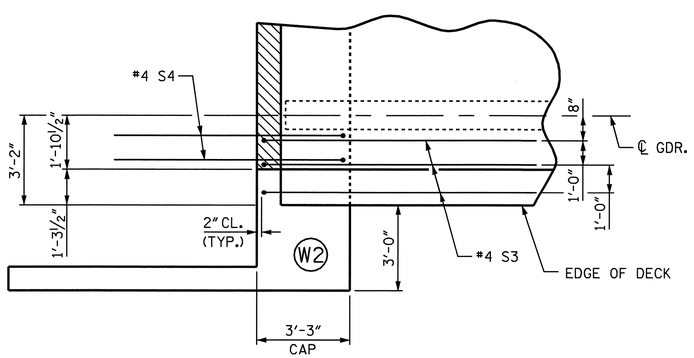

DETAIL "B"

S1 BARS NOT SHOWN FOR CLARITY.

PROJECT NO. U-2810A

CUMBERLAND COUNTY

STATION: 27+70.00 -L-

SHEET 3 OF 6

STATE OF NORTH CAROLINA
DEPARTMENT OF TRANSPORTATION
RALEIGH

SUPERSTRUCTURE

PLAN OF SPANS
SPANS A & B
STAGE II

NORTH CAROLINA PROFESSIONAL SEAL 16301 ENGINEER TING HSIUNG FANG

2/13/09

REVISIONS						SHEET NO.
NO.	BY:	DATE:	NO.	BY:	DATE:	S-10
1			3			TOTAL SHEETS
2			4			83

DRAWN BY : E.C. LOCKLEAR DATE : 10-17-08
CHECKED BY : T.H. FANG DATE : 11-18-08

13-FEB-2009 14:27
R:\Structures\str1\Final Plans\U2810_sd_S*_01.dgn
sdombrowski

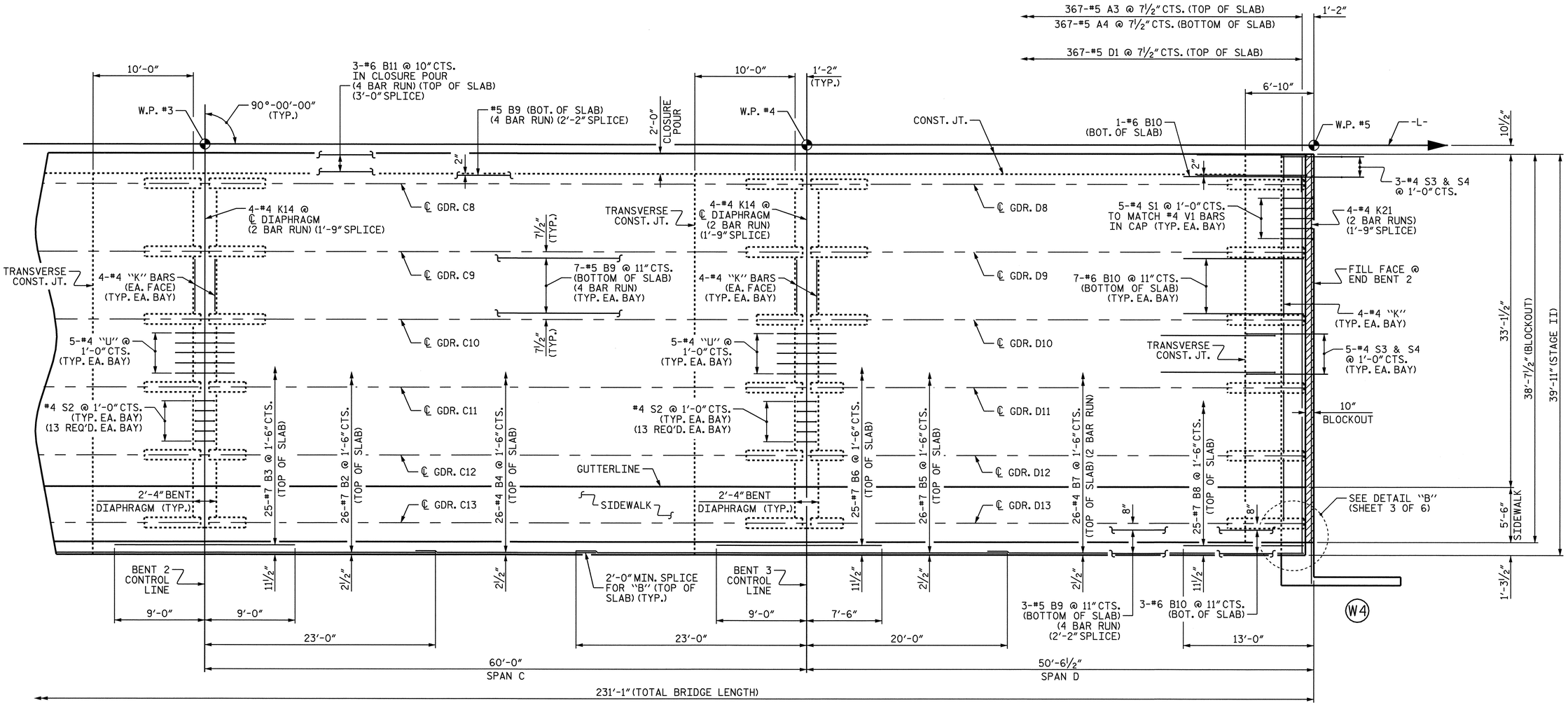

PLAN OF SPANS C & D

PROJECT NO. U-2810A
CUMBERLAND COUNTY
STATION: 27+70.00 -L-

SHEET 4 OF 6

STATE OF NORTH CAROLINA
DEPARTMENT OF TRANSPORTATION
RALEIGH

SUPERSTRUCTURE

PLAN OF SPANS
SPANS C & D
STAGE II

NORTH CAROLINA PROFESSIONAL SEAL 16301 ENGINEER TING HSILING FANG
2/13/09

REVISIONS						SHEET NO.
NO.	BY:	DATE:	NO.	BY:	DATE:	S-11
1			3			TOTAL SHEETS
2			4			83

DRAWN BY : E.C. LOCKLEAR DATE : 10-17-08
CHECKED BY : T.H. FANG DATE : 11-18-08

13-FEB-2009 14:27
R:\Structures\str1\Final Plans\U2810_sd_S*_01.dgn
sdombrowski

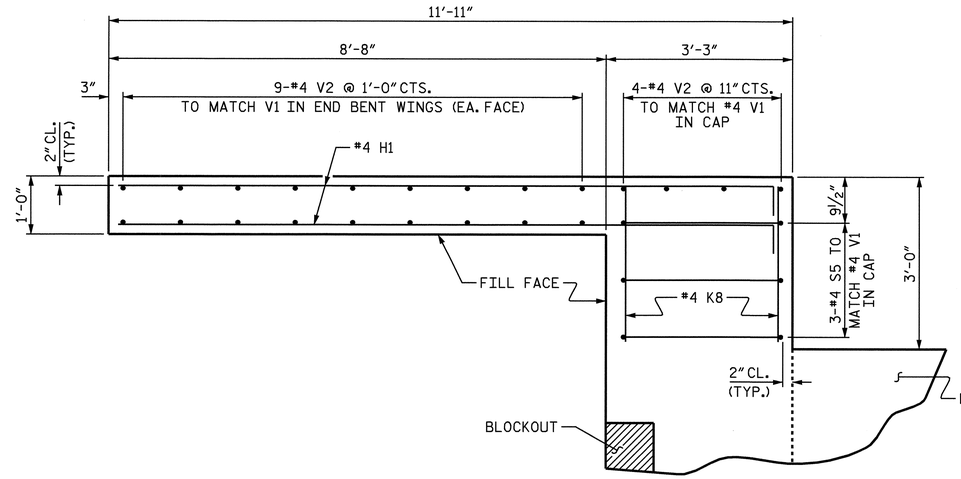

PLAN OF WING (W1)

AT END BENT 1

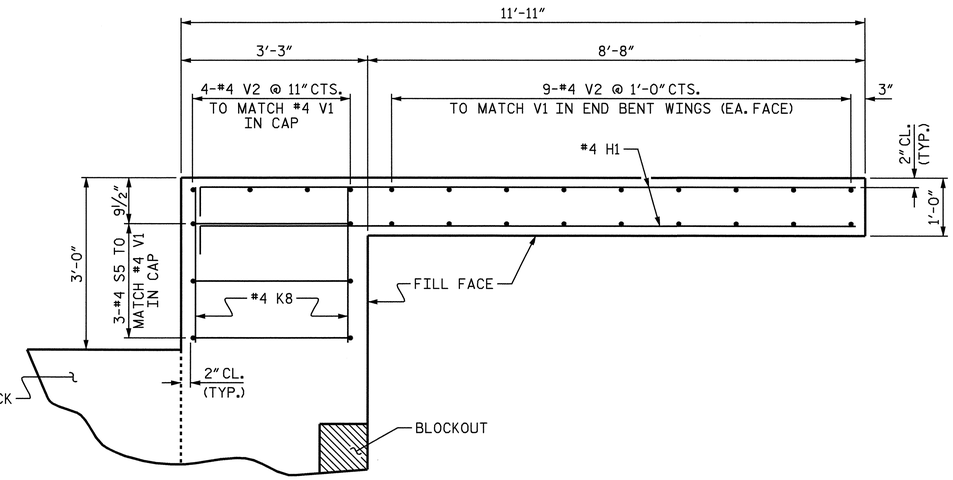

PLAN OF WING (W3)

AT END BENT 2

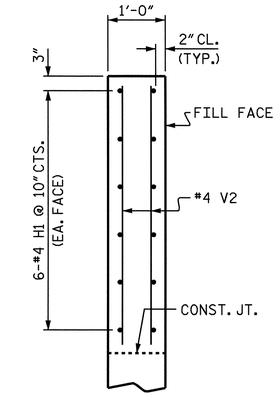

SECTION A-A

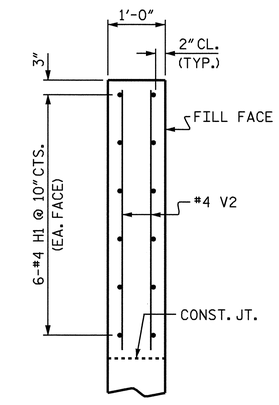

SECTION B-B

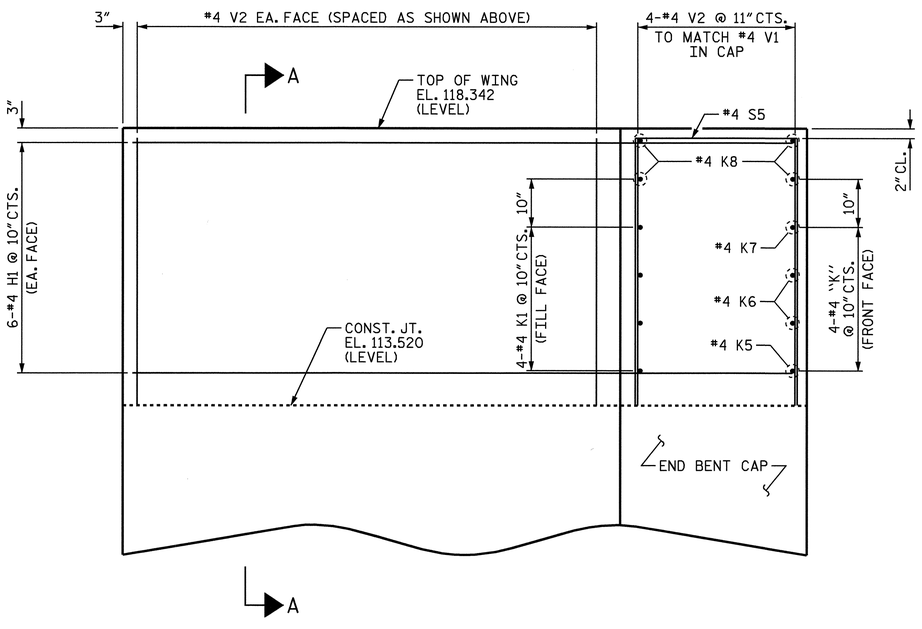

ELEVATION OF WING (W1)

AT END BENT 1

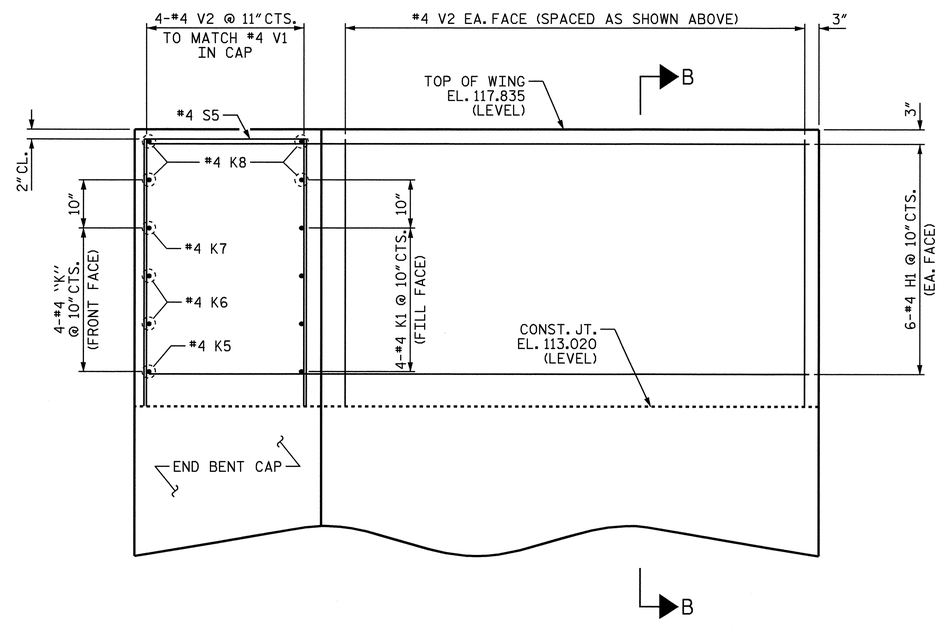

ELEVATION OF WING (W3)

AT END BENT 2

ABUTMENT WINGS

FOR END BENT REINFORCING STEEL AND DETAILS,
SEE "SUBSTRUCTURE END BENTS 1 & 2" SHEETS.

PROJECT NO. U-2810A
CUMBERLAND COUNTY
STATION: 27+70.00 -L-

SHEET 5 OF 6

STATE OF NORTH CAROLINA
DEPARTMENT OF TRANSPORTATION
RALEIGH

SUPERSTRUCTURE

PLAN OF SPAN DETAILS

STAGE I

NORTH CAROLINA PROFESSIONAL SEAL 16301 ENGINEER TING HSIUNG FANG
2/13/09

REVISIONS						SHEET NO.
NO.	BY:	DATE:	NO.	BY:	DATE:	S-12
1			3			TOTAL SHEETS
2			4			83

DRAWN BY : E.C. LOCKLEAR DATE : 10-17-08
CHECKED BY : T.H. FANG DATE : 11-08

13-FEB-2009 14:27
R:\Structures\str1\Final Plans\U2810_sd_S*_01.dgn
sdombrowski

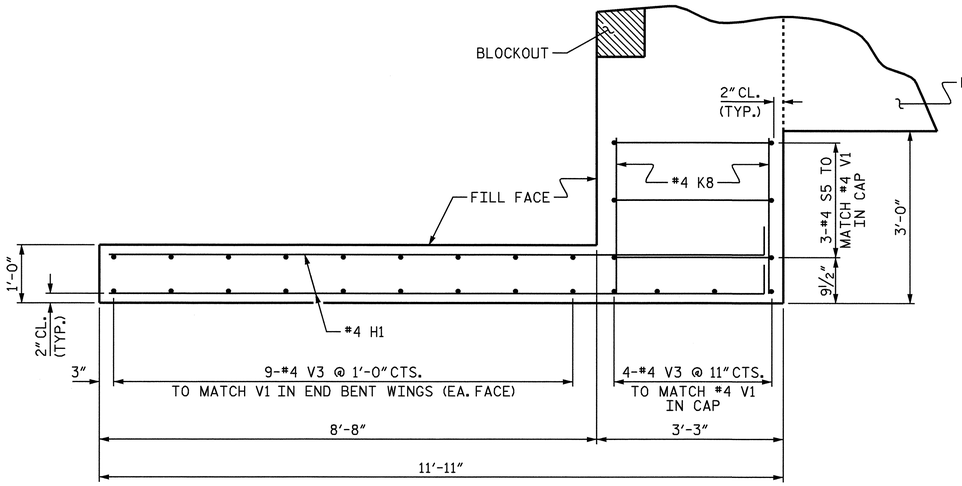

PLAN OF WING (W2)

AT END BENT 1

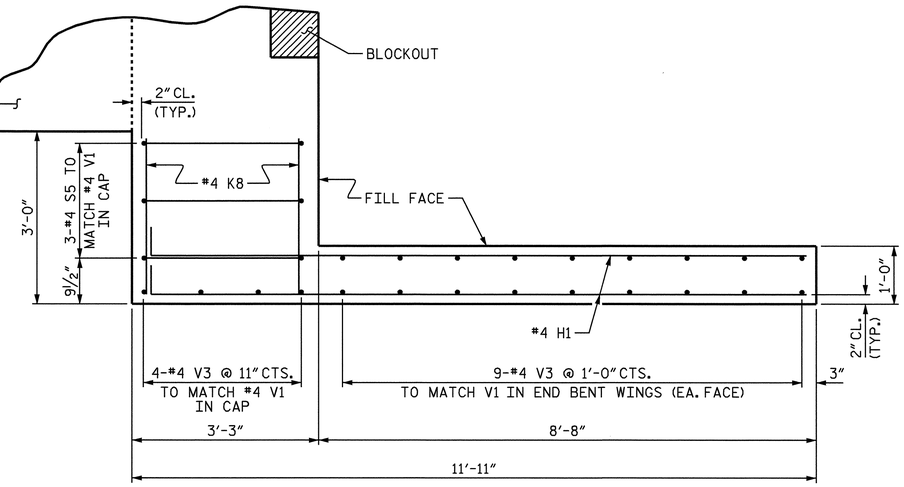

PLAN OF WING (W4)

AT END BENT 2

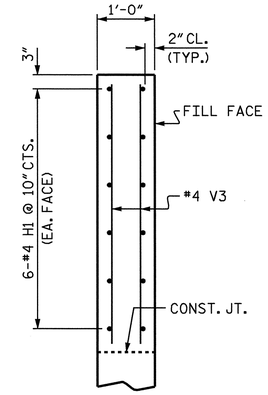

SECTION A-A

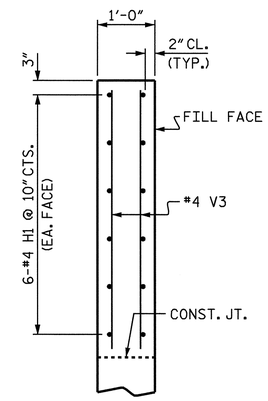

SECTION B-B

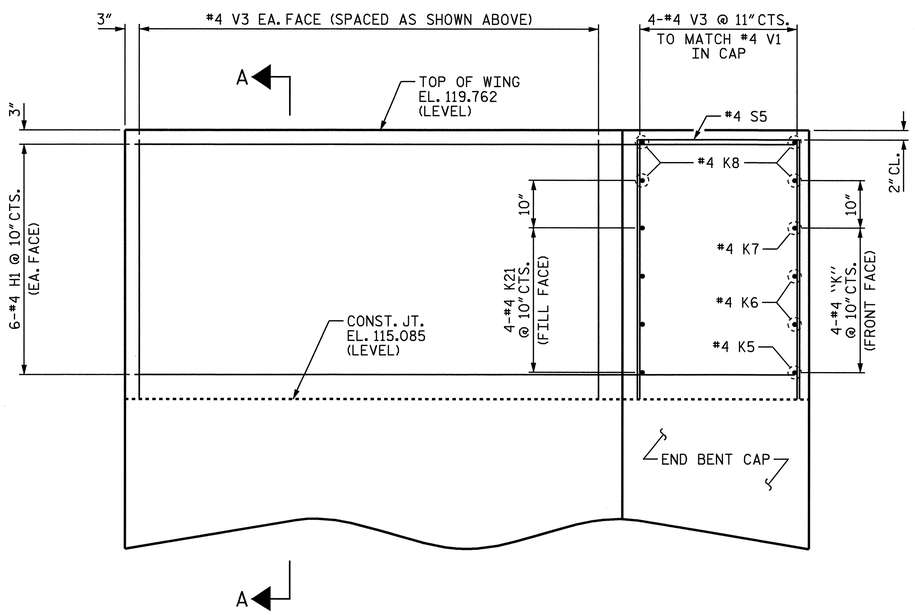

ELEVATION OF WING (W2)

AT END BENT 1

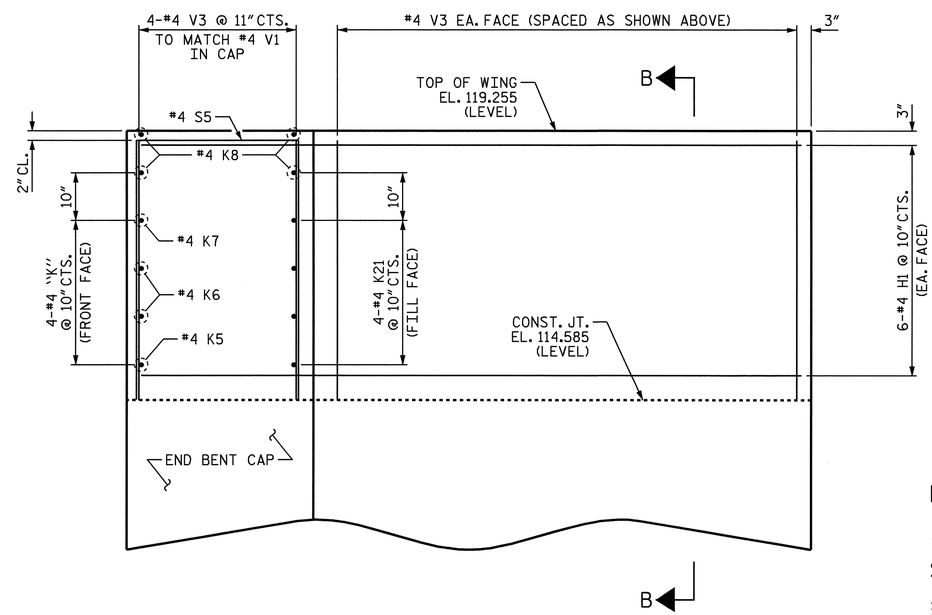

ELEVATION OF WING (W4)

AT END BENT 2

ABUTMENT WINGS

FOR END BENT REINFORCING STEEL AND DETAILS, SEE "SUBSTRUCTURE END BENTS 1 & 2" SHEETS.

PROJECT NO. U-2810A
CUMBERLAND COUNTY
STATION: 27+70.00 -L-

SHEET 6 OF 6

STATE OF NORTH CAROLINA
DEPARTMENT OF TRANSPORTATION
RALEIGH

SUPERSTRUCTURE

PLAN OF SPAN DETAILS

STAGE II

NORTH CAROLINA PROFESSIONAL SEAL 16301 ENGINEER TING HSIUNG FANG
2/13/09

REVISIONS						SHEET NO.
NO.	BY:	DATE:	NO.	BY:	DATE:	S-13
1			3			TOTAL SHEETS
2			4			83

DRAWN BY : E.C. LOCKLEAR DATE : 10-17-08
CHECKED BY : T.H. FANG DATE : 11-08

13-FEB-2009 14:27
R:\Structures\str1\Final Plans\U2810_sd_S*_01.dgn
sdombrowski

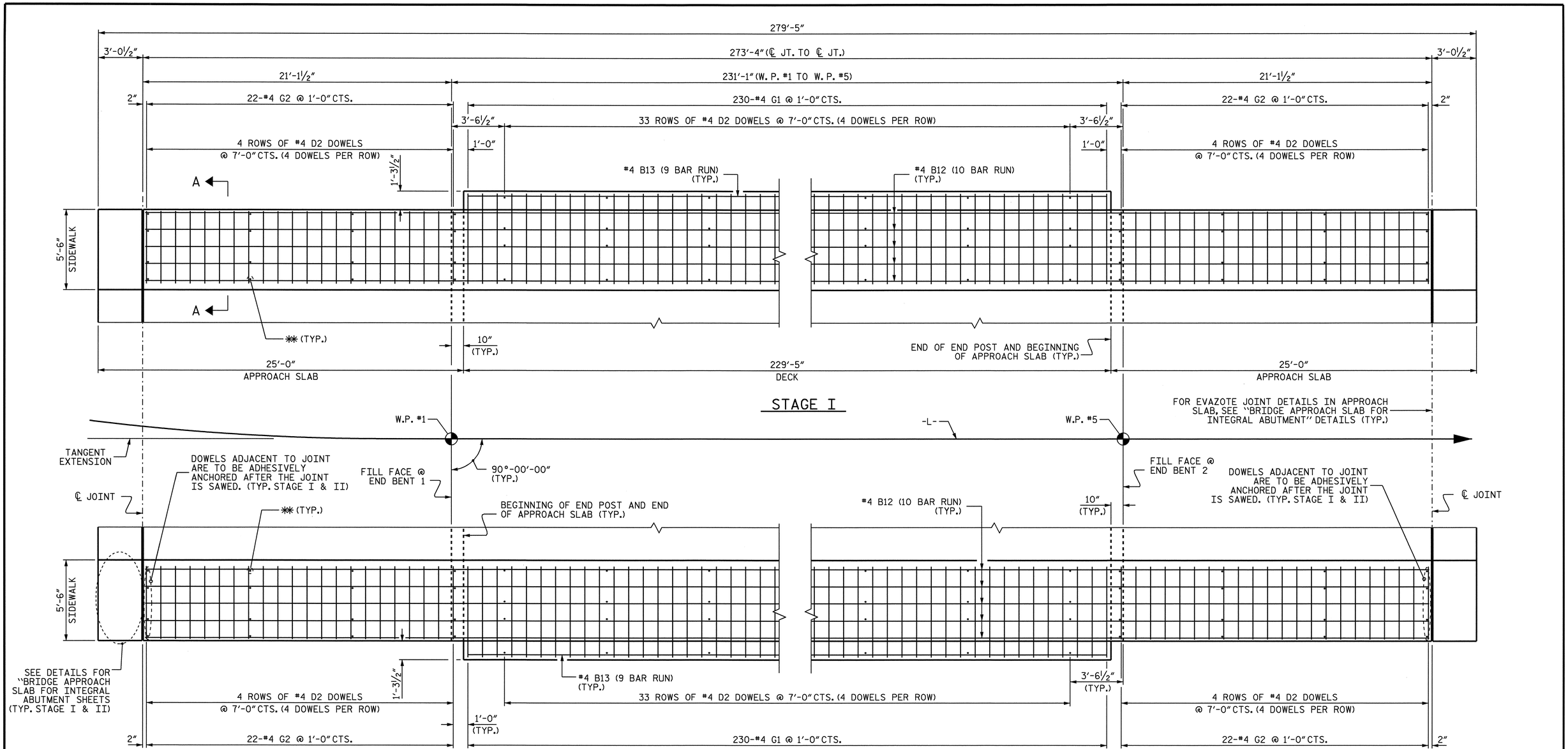

STAGE II

PLAN OF SIDEWALK

MINIMUM SPLICE LENGTH FOR ALL #4 "B" BARS ON THIS SHEET IS 2'-0".

PROJECT NO. U-2810A
CUMBERLAND COUNTY
STATION: 27+70.00 -L-

NOTES FOR SIDEWALKS AND CONCRETE MEDIAN:

THE JOINTS IN THE APPROACH SLABS SHALL BE SAWED PRIOR TO THE CASTING OF THE SIDEWALK AND CONCRETE MEDIAN.

THE SIDEWALK AND CONCRETE MEDIAN ON A CONTINUOUS UNIT SHALL NOT BE CAST UNTIL ALL CONCRETE IN THE UNIT HAS BEEN CAST AND HAS REACHED A MINIMUM COMPRESSIVE STRENGTH OF 3,000 PSI.

ALL REINFORCING STEEL IN THE SIDEWALK, CONCRETE MEDIAN, AND END POSTS SHALL BE EPOXY COATED.

GROOVED CONTRACTION JOINTS, ½" IN DEPTH, SHALL BE TOOLED IN ALL EXPOSED FACES OF THE SIDEWALK AND CONCRETE MEDIAN IN ACCORDANCE WITH ARTICLE B25-10(B) OF THE STANDARD SPECIFICATIONS. THE CONTRACTION JOINTS SHALL BE LOCATED AT A SPACING OF 8 FEET TO 10 FEET BETWEEN EXPANSION JOINTS. NO CONTRACTION JOINT WILL BE REQUIRED FOR SEGMENTS LESS THAN 10 FEET IN LENGTH.

FOR SIDEWALK COVER PLATE DETAILS IN APPROACH SLABS, SEE "BRIDGE APPROACH SLAB FOR INTEGRAL ABUTMENT" SHEETS.

FOR SECTION THRU SIDEWALK ON DECK, SEE "TYPICAL SECTION DETAILS" SHEET.

FOR SIDEWALK DETAILS ON SLEEPER SLABS, SEE "BRIDGE APPROACH SLAB FOR INTEGRAL ABUTMENT" SHEETS.

✱✱ THE #4 D2 DOWELS MAY BE PUSHED INTO GREEN CONCRETE AFTER DECK OR APPROACH SLAB HAS BEEN SCREEDED OFF, EXCEPT AS NOTED.

SIDEWALKS AND CONCRETE MEDIAN ON THE BRIDGE EXTENDING TO THE EXPANSION JOINT ON THE APPROACH SLABS ARE INCLUDED IN THE SUPERSTRUCTURE BILL OF MATERIAL AND PAID FOR AS PART OF THE REINFORCED CONCRETE DECK PAY ITEM. SIDEWALKS AND CONCRETE MEDIAN ON THE SLEEPER SLAB ONLY ARE INCLUDED IN THE APPROACH SLAB BILL OF MATERIAL AND PAID FOR AS PART OF THE BRIDGE APPROACH SLABS PAY ITEM.

NORTH CAROLINA PROFESSIONAL SEAL 26445 ENGINEER KOREY NEWTON
2/16/2009

STATE OF NORTH CAROLINA
DEPARTMENT OF TRANSPORTATION
RALEIGH

SUPERSTRUCTURE

SIDEWALK DETAILS

REVISIONS						SHEET NO.
NO.	BY:	DATE:	NO.	BY:	DATE:	S-14
1			3			TOTAL SHEETS
2			4			83

DRAWN BY : P. K. NEWTON DATE : 12-12-08
CHECKED BY : T. H. FANG DATE : 12-15-08

13-FEB-2009 14:38
r:\structures\str1\finalplans\u2810_sd_sw_01.dgn
sdombrowski

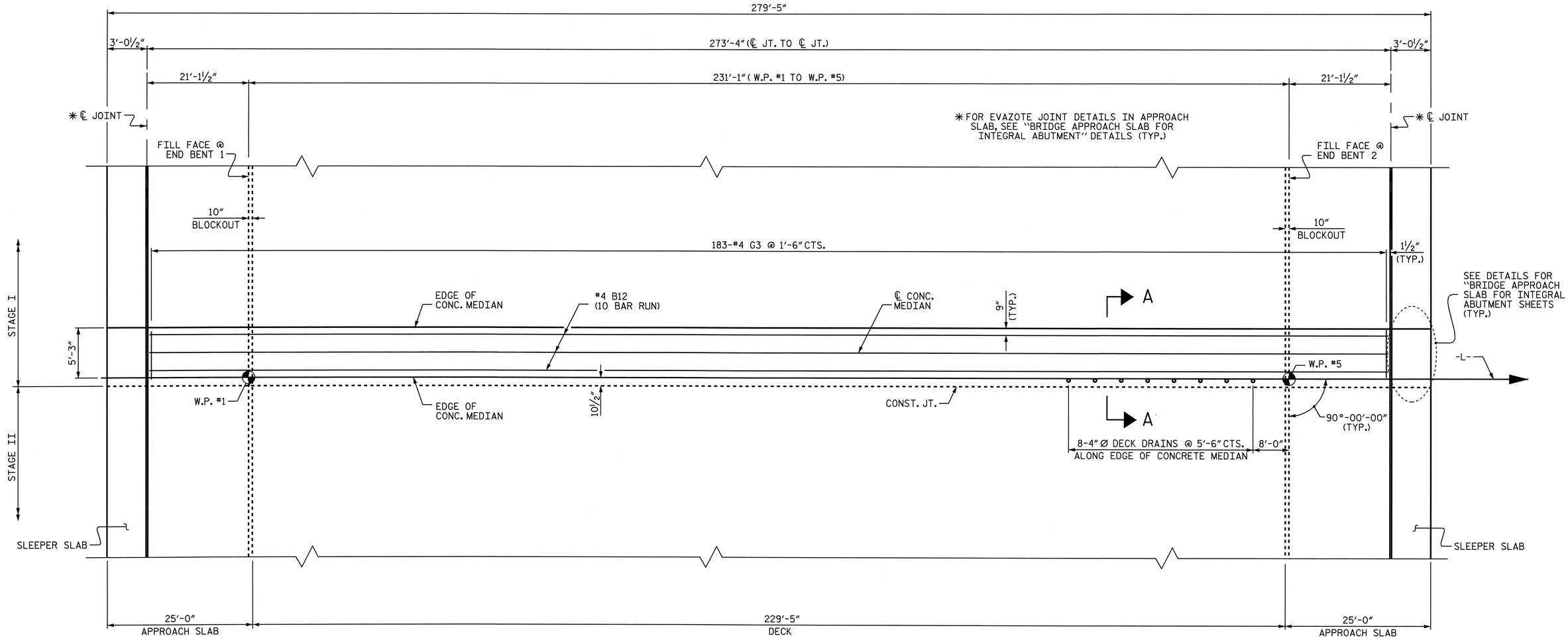

PLAN

ALL REINFORCING STEEL IN THE CONCRETE MEDIAN SHALL BE EPOXY COATED.

2'-0" MIN. SPLICE FOR #4 BARS

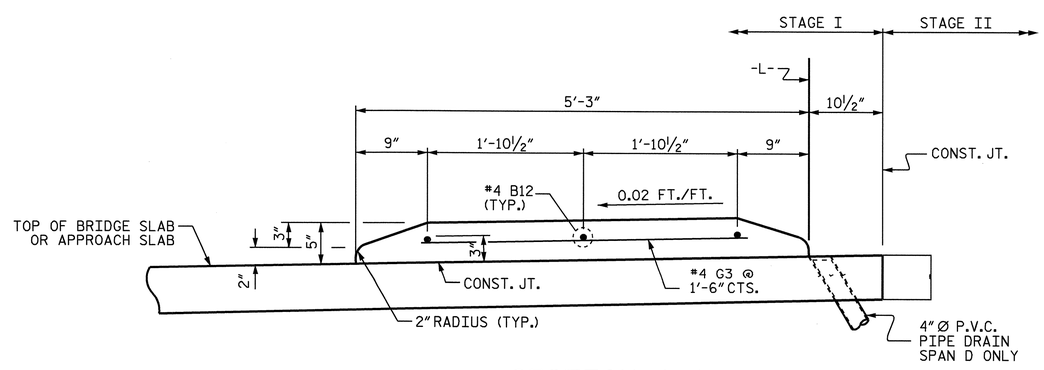

SECTION A-A

FOR CONCRETE MEDIAN ON SLEEPER SLABS, SEE "BRIDGE APPROACH SLAB FOR INTEGRAL ABUTMENT" SHEETS.

SEE NOTES ON "SIDEWALK DETAILS" SHEET.

PROJECT NO. U-2810A
CUMBERLAND COUNTY
STATION: 27+70.00 -L-

STATE OF NORTH CAROLINA
DEPARTMENT OF TRANSPORTATION
RALEIGH

SUPERSTRUCTURE

CONCRETE MEDIAN

(FOR STAGE I ONLY)

NORTH CAROLINA PROFESSIONAL SEAL 16301 ENGINEER TING HSIUNG FANG
1/15/09

REVISIONS						SHEET NO.
NO.	BY:	DATE:	NO.	BY:	DATE:	S-15
1			3			TOTAL SHEETS
2			4			83

DRAWN BY : E.C. LOCKLEAR DATE : 10-27-08
CHECKED BY : T.H. FANG DATE : 11-08

15-JAN-2009 10:09
R:\Structures\str1\Final Plans\U2810_sd_MD_01.dgn
sdombrowski

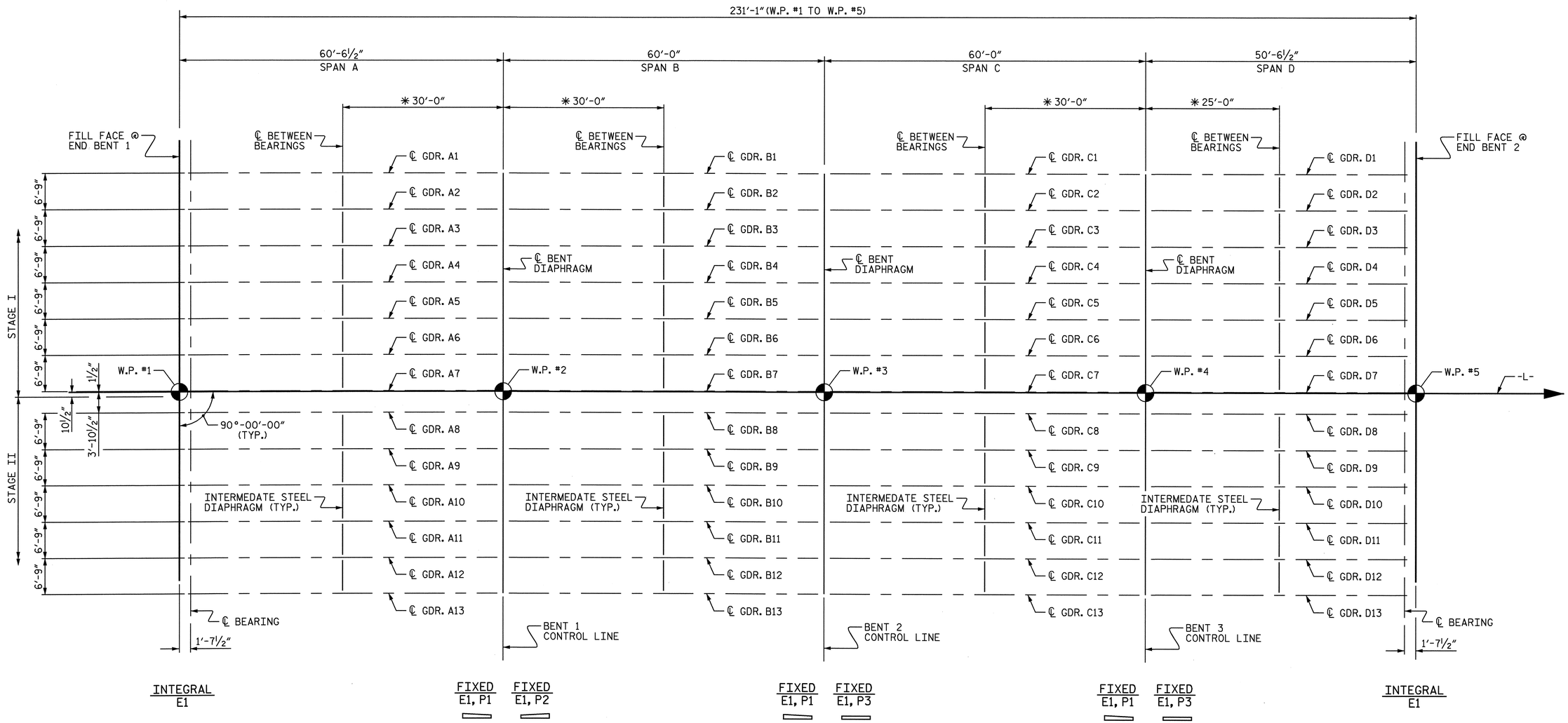

FRAMING PLAN

*DIMENSIONS MEASURING INTERMEDIATE DIAPHRAGMS ARE SHOWN TO ℄ BETWEEN BEARINGS.

PROJECT NO. U-2810A
CUMBERLAND COUNTY
STATION: 27+70.00 -L-

STATE OF NORTH CAROLINA
DEPARTMENT OF TRANSPORTATION
RALEIGH

SUPERSTRUCTURE

FRAMING PLAN

NORTH CAROLINA PROFESSIONAL SEAL 16301 ENGINEER TING HSIUNG FANG
1/15/09

REVISIONS						SHEET NO.
NO.	BY:	DATE:	NO.	BY:	DATE:	S-16
1			3			TOTAL SHEETS
2			4			83

DRAWN BY : E.C. LOCKLEAR DATE : 8-28-08
CHECKED BY : T.H. FANG DATE : 11-08

15-JAN-2009 10:09
R:\Structures\str1\Final Plans\U2810_sd_FP_01.dgn
sdombrowski

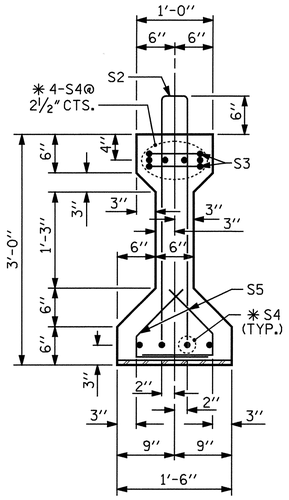

SECTION A-A

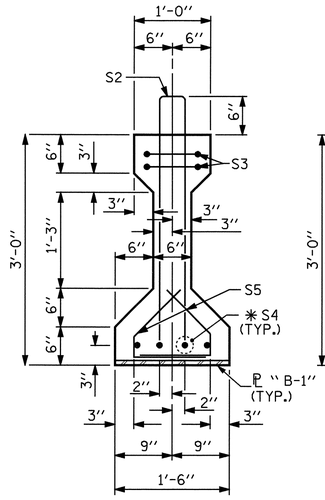

SECTION B-B

(FOR EMBEDDED ℄ "B-1" DETAILS, SEE SHEET 5 OF 5)

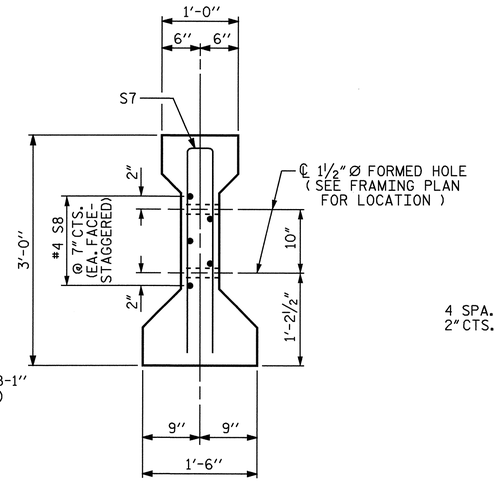

SECTION C-C

(S1 BARS NOT SHOWN)

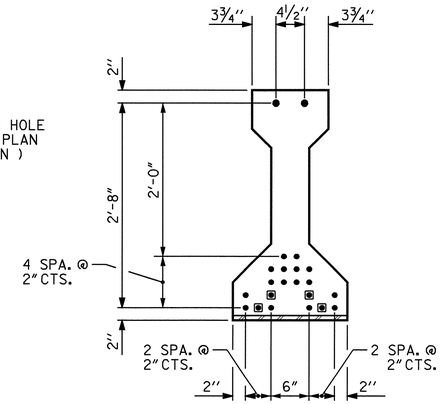

AT END OF GIRDER

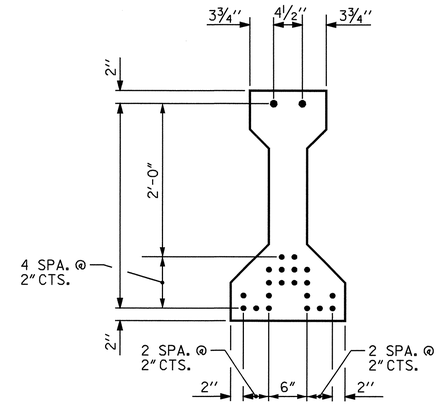

AT ℄ OF GIRDER

0.6" Ø LOW RELAXATION STRAND LAYOUT

■ STRANDS DEBONDED FOR 12'-0" FROM END OF GIRDER (22 STRANDS, ALL STRAIGHT, 4 DEBONDED)

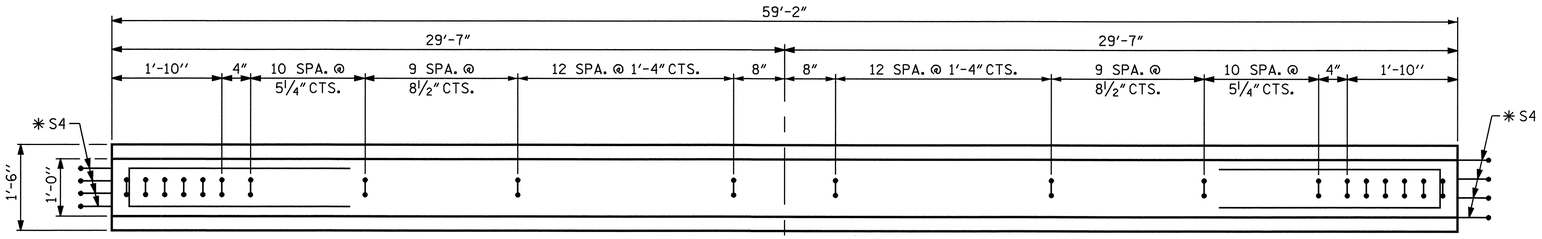

PLAN OF GIRDER

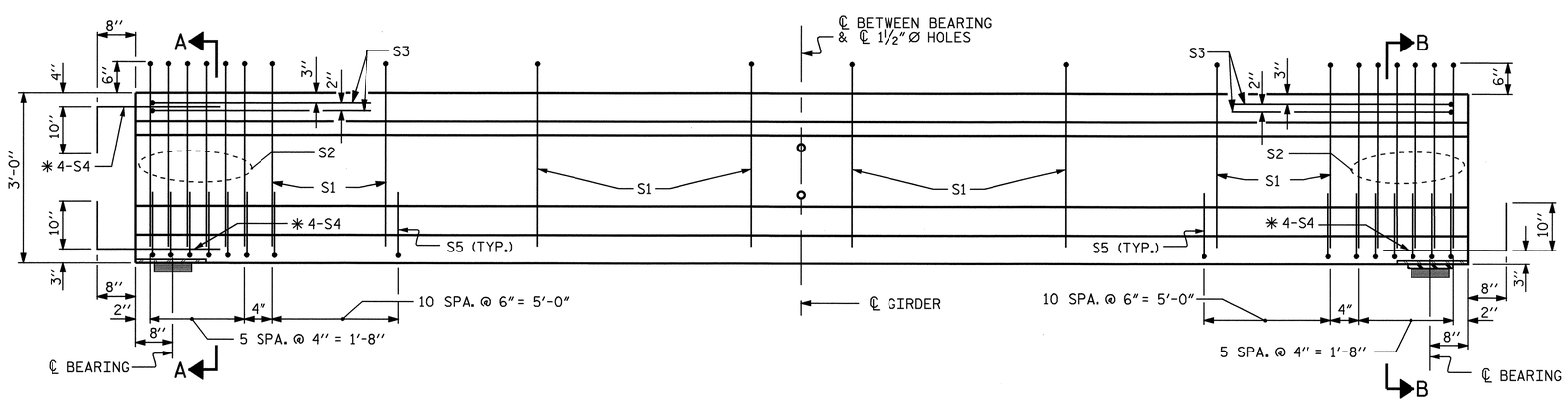

INTEGRAL END BENT

ELEVATION OF GIRDER

(SEE PARTIAL ELEVATION FOR ADDITIONAL "S" BARS IN THE INTERMEDIATE DIAPHRAM AREA)

FIX.

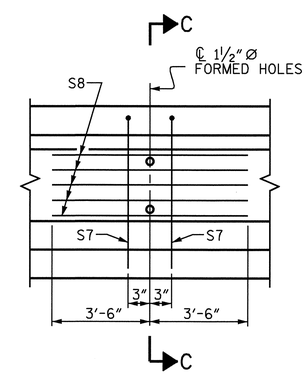

PARTIAL ELEVATION

SHOWING INTERMEDIATE DIAPHRAGM REINFORCING STEEL FOR ALL GIRDERS.

0.6" Ø L. R. GRADE 270 STRANDS

AREA (SQUARE INCHES)	ULTIMATE STRENGTH (LBS. PER STRAND)	APPLIED PRESTRESS (LBS. PER STRAND)
0.217	58,600	43,950

REINFORCING STEEL FOR ONE GIRDER

BAR	NUMBER	SIZE	TYPE	LENGTH	WEIGHT
S1	64	#4	1	6'-10"	292
S2	12	#5	1	6'-10"	86
S3	4	#4	3	8'-8"	23
✱ S4	12	#5	STR	3'-8"	46
S5	68	#4	2	2'-4"	106
S7	2	#5	3	5'-8"	12
S8	5	#4	STR	7'-0"	23
TOTAL				LBS.	588

✱ S4 BARS SHALL BE BENT BEFORE SHIPMENT. HEAT BENDING SHALL NOT BE ALLOWED.

BAR TYPES

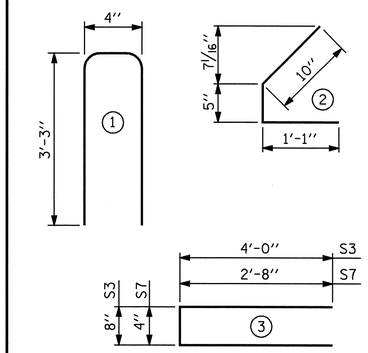

ALL BAR DIMENSIONS ARE OUT-TO-OUT

QUANTITIES FOR ONE GIRDER

	REINFORCING STEEL	8700 PSI CONCRETE	0.6" Ø L.R. STRANDS
	LB.	C.Y.	No.
	588	5.615	22

GIRDERS REQUIRED

	NUMBER	LENGTH	TOTAL LENGTH
STAGE I	7	59.17	414.17
STAGE II	6	59.17	355.00
TOTAL	13	——	769.17

PROJECT NO. U-2810A

CUMBERLAND COUNTY

STATION: 27+70.00 -L-

SHEET 1 OF 5

STATE OF NORTH CAROLINA
DEPARTMENT OF TRANSPORTATION
RALEIGH

STANDARD

AASHTO TYPE II
PRESTRESSED CONCRETE GIRDER
CONTINUOUS FOR LIVE LOAD
SPAN A

NORTH CAROLINA PROFESSIONAL SEAL 16301 ENGINEER TING HSIUNG FANG

2/13/09

ASSEMBLED BY : E.C. LOCKLEAR	DATE : 8-29-08
CHECKED BY : T.H. FANG	DATE : 11-25-08

DRAWN BY : ELR 8/91	REV. 8/16/99	RWW/LES
CHECKED BY : GRP 8/91	REV. 10/17/00	RWW/LES
	REV. 5/1/06	TLA/GM

REVISIONS						SHEET NO.
NO.	BY:	DATE:	NO.	BY:	DATE:	S-17
1			3			TOTAL SHEETS
2			4			83

STD. NO. PCG4

12-FEB-2009 09:44
z:\structures\str1\finalplans\u2810_sd_g*_01.dgn
ttfang

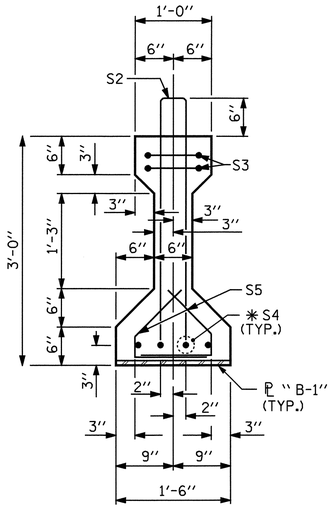

SECTION B-B

(FOR EMBEDDED ℄ "B-1" DETAILS SEE SHEET 5 OF 5)

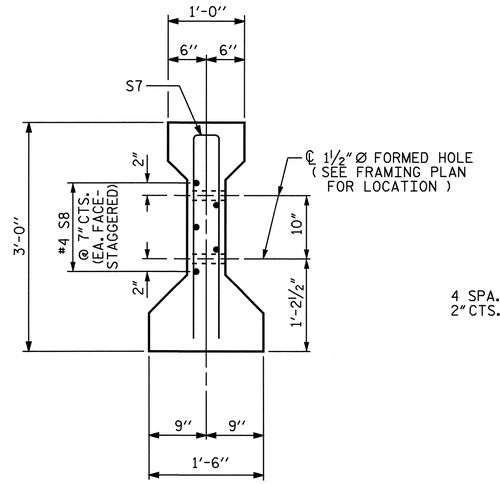

SECTION C-C

(S1 BARS NOT SHOWN)

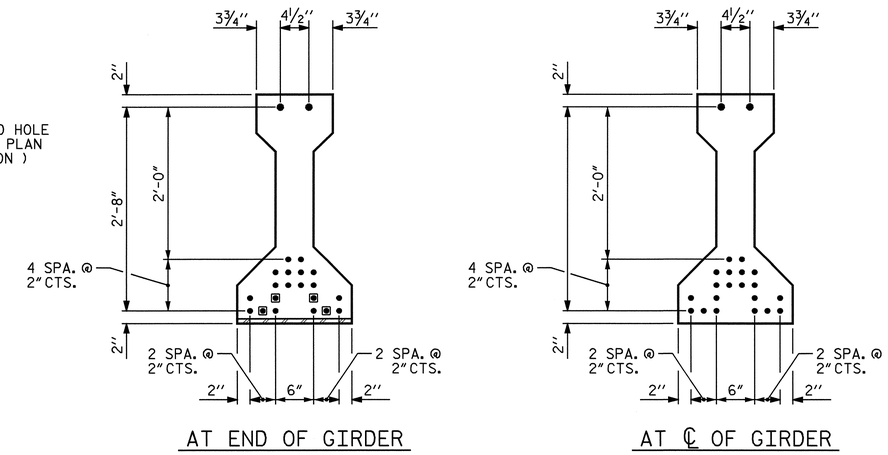

0.6" Ø LOW RELAXATION STRAND LAYOUT

▣ STRANDS DEBONDED FOR 12'-0" FROM END OF GIRDER (22 STRANDS, ALL STRAIGHT, 4 DEBONDED)

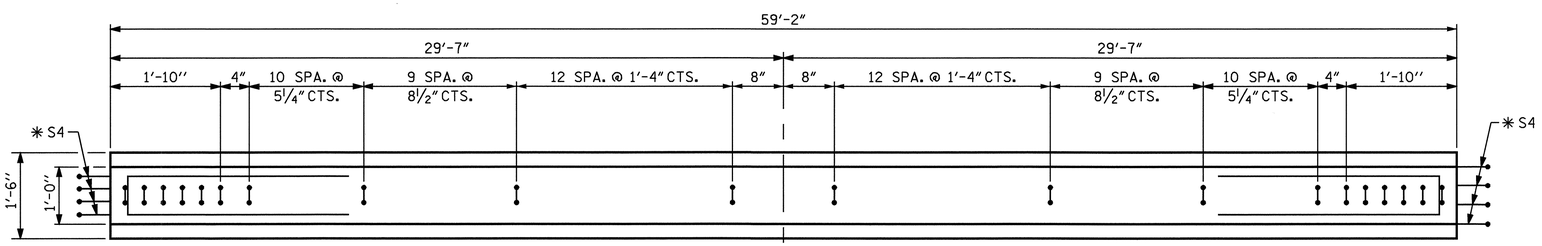

PLAN OF GIRDER

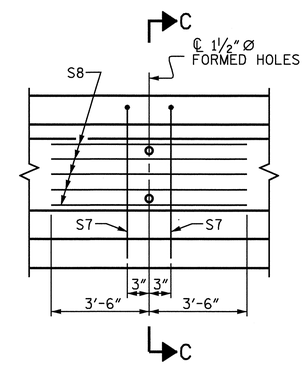

PARTIAL ELEVATION

SHOWING INTERMEDIATE DIAPHRAGM REINFORCING STEEL FOR ALL GIRDERS.

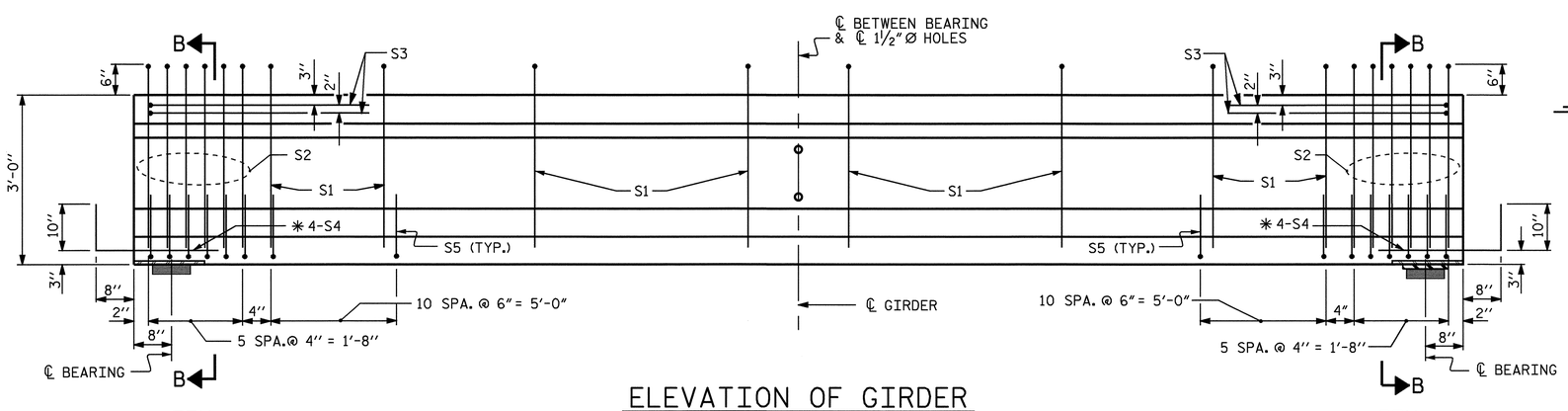

ELEVATION OF GIRDER

(SEE PARTIAL ELEVATION FOR ADDITIONAL "S" BARS IN THE INTERMEDIATE DIAPHRAM AREA)

0.6" Ø L. R. GRADE 270 STRANDS

AREA (SQUARE INCHES)	ULTIMATE STRENGTH (LBS. PER STRAND)	APPLIED PRESTRESS (LBS. PER STRAND)
0.217	58,600	43,950

REINFORCING STEEL FOR ONE GIRDER

BAR	NUMBER	SIZE	TYPE	LENGTH	WEIGHT
S1	64	#4	1	6'-10"	292
S2	12	#5	1	6'-10"	86
S3	4	#4	3	8'-8"	23
✱S4	8	#5	STR	3'-8"	31
S5	68	#4	2	2'-4"	106
S7	2	#5	3	5'-8"	12
S8	5	#4	STR	7'-0"	23
TOTAL				LBS.	573

✱S4 BARS SHALL BE BENT BEFORE SHIPMENT. HEAT BENDING SHALL NOT BE ALLOWED.

BAR TYPES

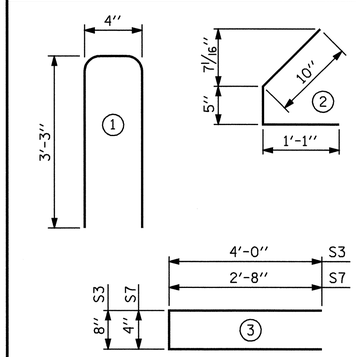

ALL BAR DIMENSIONS ARE OUT-TO-OUT

QUANTITIES FOR ONE GIRDER

	REINFORCING STEEL LB.	8700 PSI CONCRETE C.Y.	0.6" Ø L.R. STRANDS No.
	573	5.615	22

GIRDERS REQUIRED

	NUMBER	LENGTH	TOTAL LENGTH
STAGE I	14	59.17	828.34
STAGE II	12	59.17	710.00
TOTAL	26	——	1,538.34

PROJECT NO. U-2810A
CUMBERLAND COUNTY
STATION: 27+70.00 -L-

SHEET 2 OF 5

STATE OF NORTH CAROLINA
DEPARTMENT OF TRANSPORTATION
RALEIGH

STANDARD

AASHTO TYPE II
PRESTRESSED CONCRETE GIRDER
CONTINUOUS FOR LIVE LOAD
SPANS B & C

NORTH CAROLINA PROFESSIONAL SEAL 16301 ENGINEER TING HSILING FANG
2/13/09

ASSEMBLED BY : E.C. LOCKLEAR	DATE : 8-29-08
CHECKED BY : T.H. FANG	DATE : 11-25-08

DRAWN BY : ELR 8/91	REV. 8/16/99 RWW/LES
CHECKED BY : GRP 8/91	REV. 10/17/00R RWW/LES
	REV. 5/1/06 TLA/GM

REVISIONS

NO.	BY:	DATE:	NO.	BY:	DATE:
1			3		
2			4		

SHEET NO. S-18
TOTAL SHEETS 83

STD. NO. PCG4

13-FEB-2009 14:27
R:\Structures\str1\Final Plans\U2810_sd_G8_01.dgn
sdombrowski

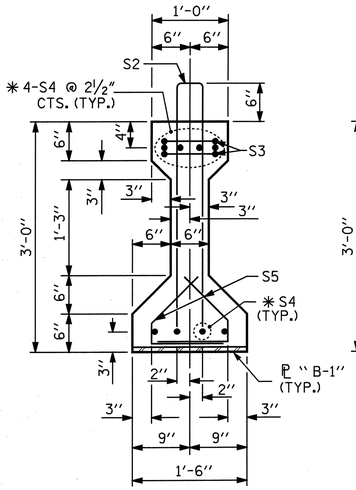

SECTION A-A

(FOR EMBEDDED ℄ "B-1" DETAILS SEE SHEET 5 OF 5)

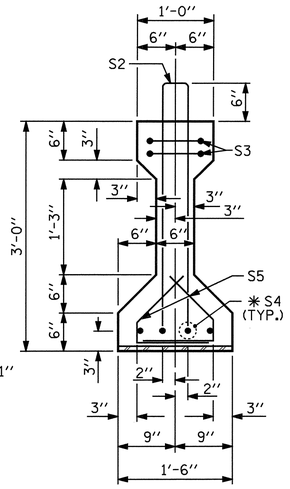

SECTION B-B

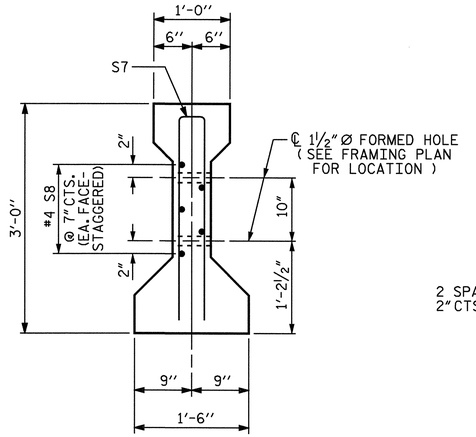

SECTION C-C

(S1 BARS NOT SHOWN)

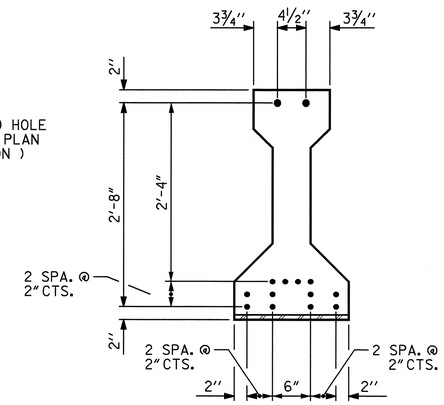

AT END OF GIRDER

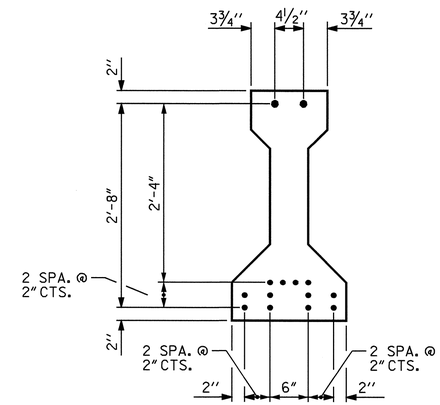

AT ℄ OF GIRDER

0.6" Ø LOW RELAXATION STRAND LAYOUT

(14 STRANDS, ALL STRAIGHT, NO DEBONDED)

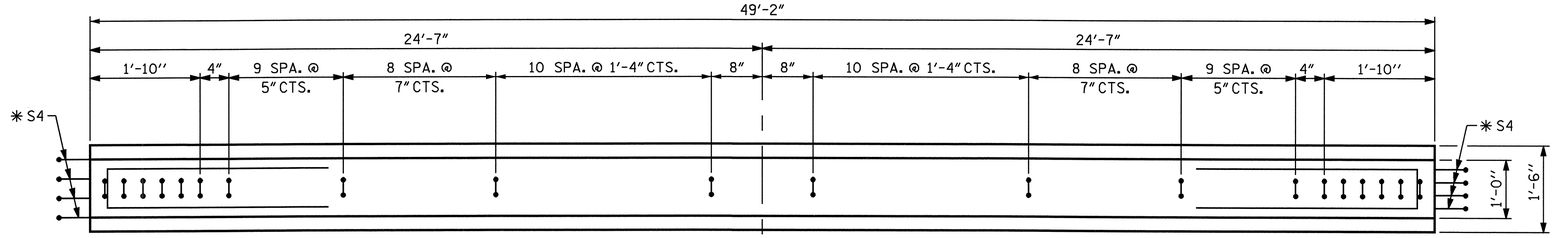

PLAN OF GIRDER

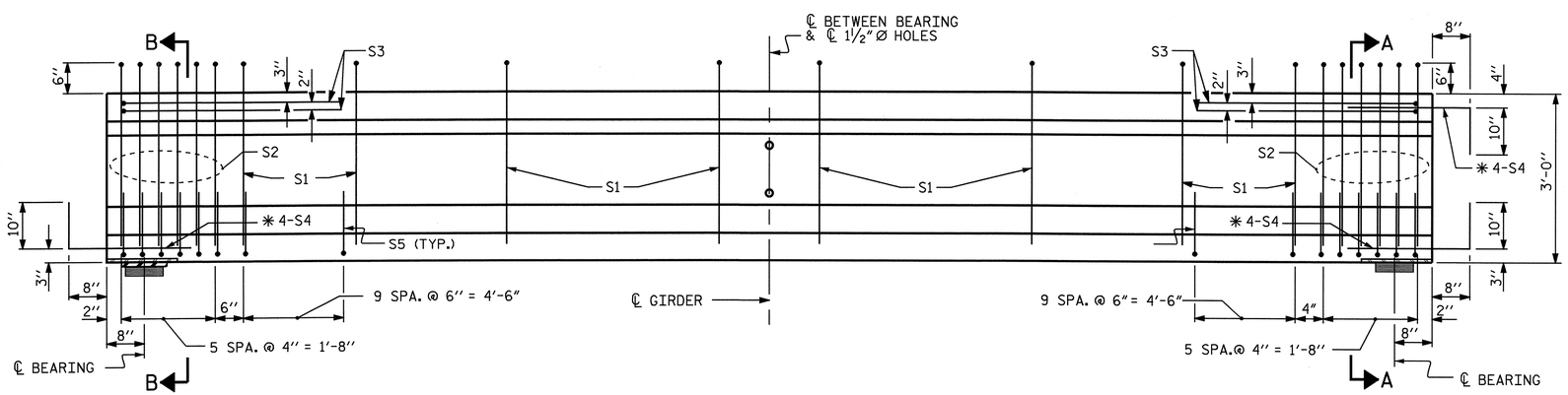

FIX.

INTEGRAL END BENT

ELEVATION OF GIRDER

(SEE PARTIAL ELEVATION FOR ADDITIONAL "S" BARS IN THE INTERMEDIATE DIAPHRAM AREA)

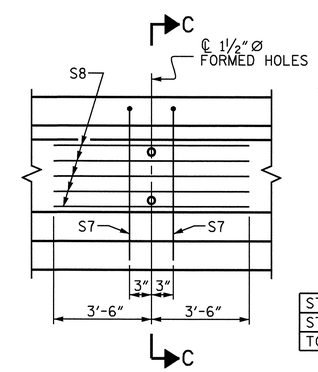

PARTIAL ELEVATION

SHOWING INTERMEDIATE DIAPHRAGM REINFORCING STEEL FOR ALL GIRDERS.

0.6" Ø L. R. GRADE 270 STRANDS

AREA (SQUARE INCHES)	ULTIMATE STRENGTH (LBS. PER STRAND)	APPLIED PRESTRESS (LBS. PER STRAND)
0.217	58,600	43,950

REINFORCING STEEL FOR ONE GIRDER

BAR	NUMBER	SIZE	TYPE	LENGTH	WEIGHT
S1	56	#4	1	6'-10"	256
S2	12	#5	1	6'-10"	86
S3	4	#4	3	8'-8"	23
✱ S4	12	#5	STR	3'-8"	46
S5	64	#4	2	2'-4"	100
S7	2	#5	3	5'-8"	12
S8	5	#4	STR	7'-0"	23
TOTAL				LBS.	546

✱ S4 BARS SHALL BE BENT BEFORE SHIPMENT. HEAT BENDING SHALL NOT BE ALLOWED.

BAR TYPES

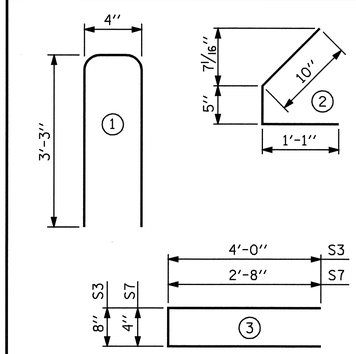

ALL BAR DIMENSIONS ARE OUT-TO-OUT

QUANTITIES FOR ONE GIRDER

	REINFORCING STEEL	6300 PSI CONCRETE	0.6" Ø L.R. STRANDS
	LB.	C.Y.	No.
	546	4.666	14

GIRDERS REQUIRED

	NUMBER	LENGTH	TOTAL LENGTH
STAGE I	7	49.17	344.17
STAGE II	6	49.17	295.00
TOTAL	13	——	639.17

PROJECT NO. U-2810A

CUMBERLAND COUNTY

STATION: 27+70.00 -L-

SHEET 3 OF 5

STATE OF NORTH CAROLINA
DEPARTMENT OF TRANSPORTATION
RALEIGH

STANDARD

AASHTO TYPE II
PRESTRESSED CONCRETE GIRDER
CONTINUOUS FOR LIVE LOAD
SPAN D

NORTH CAROLINA PROFESSIONAL SEAL 16301 ENGINEER TING HSIUNG FANG

1/15/09

REVISIONS						SHEET NO.
NO.	BY:	DATE:	NO.	BY:	DATE:	S-19
1			3			TOTAL SHEETS
2			4			83

STD. NO. PCG4

ASSEMBLED BY : E.C. LOCKLEAR	DATE : 8-29-08		
CHECKED BY : T.H. FANG	DATE : 11-25-08		
DRAWN BY : ELR 8/91	REV. 8/16/99 RWW/LES		
CHECKED BY : GRP 8/91	REV. 10/17/00R RWW/LES		
	REV. 5/1/06 TLA/GM		

15-JAN-2009 10:09
R:\Structures\str1\Final Plans\U2810_sd_G*_01.dgn
sdombrowski

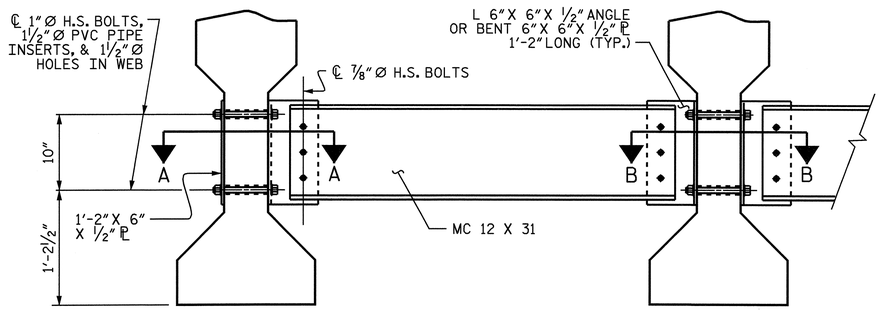

EXTERIOR GIRDER

INTERIOR GIRDER

PART SECTION AT INTERMEDIATE DIAPHRAGM

(TYPICAL FOR EACH BAY, EXCEPT CLOSURE POUR)

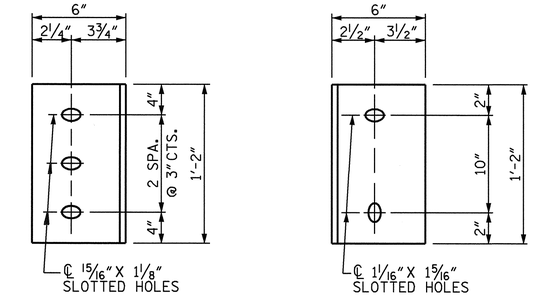

DIAPHRAGM FACE

WEB FACE

CONNECTOR PLATE DETAILS

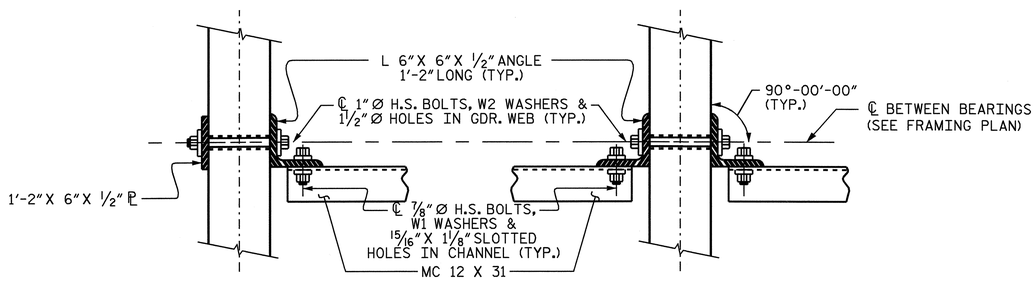

SECTION A-A

SECTION B-B

CONNECTION DETAILS

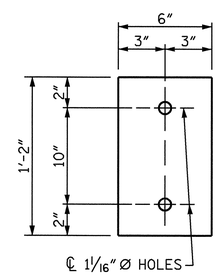

PLATE DETAILS

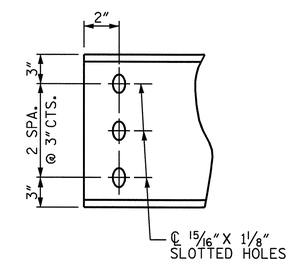

CHANNEL END

STRUCTURAL STEEL NOTES

ALL INTERMEDIATE DIAPHRAGM STEEL, CONNECTOR PLATES AND PLATE WASHERS SHALL BE AASHTO M270 GRADE 50 OR APPROVED EQUAL.

TENSION ON THE AASHTO M164 BOLTS THROUGH THE CHANNEL MEMBER SHALL BE CALIBRATED USING DIRECT TENSION INDICATOR WASHERS IN ACCORDANCE WITH ARTICLE 440-8 OF THE STANDARD SPECIFICATIONS.

TENSION ON THE AASHTO M164 BOLTS THROUGH THE GIRDER WEB SHALL BE SNUG TIGHTENED FOLLOWED BY AN ADDITIONAL ¼ TURN.

THE CHANNELS, ANGLES, WASHERS, PLATE WASHERS, AND DIRECT TENSION INDICATORS SHALL BE GALVANIZED OR METALLIZED IN ACCORDANCE WITH THE STANDARD SPECIFICATIONS. FOR THERMAL SPRAYED COATINGS (METALLIZATION), SEE SPECIAL PROVISIONS.

FOR METALLIZATION, APPLY AN 8 MIL THICK 99.99 PERCENT ZINC (W-Zn-1) THERMAL SPRAYED COATING WITH A 0.5 MIL THICK SEAL COAT TO ALL STEEL DIAPHRAGM SURFACES IN ACCORDANCE WITH THE THERMAL SPRAYED COATINGS SPECIAL PROVISIONS AND SECTION 442 OF THE STANDARD SPECIFICATIONS.

GALVANIZE THE HIGH STRENGTH BOLTS, NUTS, AND WASHERS IN ACCORDANCE WITH THE STANDARD SPECIFICATIONS. FOR HIGH STRENGTH BOLTS, SEE SPECIAL PROVISIONS.

USE A MINIMUM 7/16" THICK PLATE WASHER WITH STANDARD HOLES UNDER EACH BOLT HEAD AND NUT. THE PLATE WASHERS SHALL HAVE SUFFICIENT SIZE TO COVER THE HOLES AFTER INSTALLATION. DIRECT TENSION INDICATORS ARE TO BE USED IN CONJUNCTION WITH THE PLATE WASHERS.

PROVIDE SUFFICIENT LENGTH OF ALL BOLTS TO ACCOMMODATE WASHERS, DIRECT TENSION INDICATORS, THE THICKNESS OF CONNECTING MEMBER PLUS AT LEAST ¼" PROJECTION BEYOND THE NUT.

INTERMEDIATE DIAPHRAGM ASSEMBLY SHALL COMPLY WITH SECTION 1072 OF THE STANDARD SPECIFICATIONS.

CONTRACTOR SHALL SUBMIT TWO SETS OF WORKING DRAWINGS FOR THE INTERMEDIATE DIAPHRAGM ASSEMBLY FOR REVIEW, COMMENTS AND ACCEPTANCE. AFTER REVIEW, COMMENTS, AND ACCEPTANCE, SUBMIT SEVEN SETS FOR DISTRIBUTION.

IN THE EXTERIOR BAYS, TEMPORARY STRUTS SHALL BE PLACED BETWEEN PRESTRESSED GIRDERS ADJACENT TO THE STEEL DIAPHRAGMS. STRUTS SHALL REMAIN IN PLACE 3 DAYS AFTER CONCRETE IS PLACED. ALL AASHTO M164 H.S. BOLTS SHALL BE FULLY TIGHTENED AFTER THE STRUTS HAVE BEEN REMOVED.

THE COST OF THE STEEL DIAPHRAGMS AND ASSEMBLIES SHALL BE INCLUDED IN THE UNIT PRICE BID FOR PRESTRESSED CONCRETE GIRDERS.

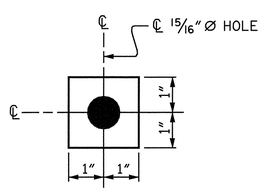

W1

ℙ 7/16" X 2" X 2"

USE WITH ⅞"Ø HVY. HEX NUTS & DIRECT TENSION INDICATOR WASHERS AT DIAPHRAGM CHANNEL TO CONNECTOR PLATE CONNECTIONS

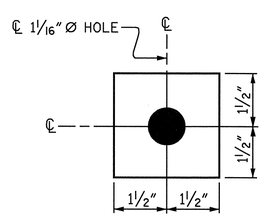

W2

ℙ 7/16" X 3" X 3"

USE WITH 1"Ø HVY. HEX NUTS AT CONNECTOR PLATE TO GIRDER CONNECTIONS

WASHER DETAILS

PROJECT NO. U-2810A

CUMBERLAND COUNTY

STATION: 27+70.00 -L-

SHEET 4 OF 5

STATE OF NORTH CAROLINA
DEPARTMENT OF TRANSPORTATION
RALEIGH

STANDARD

INTERMEDIATE STEEL DIAPHRAGMS FOR TYPE II, PRESTRESSED CONCRETE GIRDERS

NORTH CAROLINA PROFESSIONAL SEAL 16301 ENGINEER TING HSIUNG FANG

1/15/09

REVISIONS						SHEET NO.
NO.	BY:	DATE:	NO.	BY:	DATE:	S-20
1			3			TOTAL SHEETS
2			4			83

STD. NO. PCG12

ASSEMBLED BY : E.C. LOCKLEAR	DATE : 9-04-08
CHECKED BY : T.H. FANG	DATE : 11-25-08
DRAWN BY : TLA 6/05	ADDED 10/21/05
CHECKED BY : VC 6/05	REV. 5/1/06R KMM/GM

15-JAN-2009 10:08
R:\Structures\str1\Final Plans\U2810_sd_G*_01.dgn
sdombrowski

DEAD LOAD DEFLECTION TABLE

0.6"Ø LOW RELAXATION	SPANS A, B & C											SPAN D										
	GIRDER 1											GIRDER 1										
TENTH POINTS	0	.1	.2	.3	.4	.5	.6	.7	.8	.9	0	0	.1	.2	.3	.4	.5	.6	.7	.8	.9	0
CAMBER (GIRDER ALONE IN PLACE) ↑	0.0	0.081	0.153	0.209	0.245	0.257	0.245	0.209	0.153	0.081	0.0	0.0	0.039	0.074	0.101	0.119	0.125	0.119	0.101	0.074	0.039	0.0
✳ DEFLECTION DUE TO SUPERIMPOSED D.L. ↓	0.0	0.025	0.048	0.066	0.077	0.081	0.077	0.066	0.048	0.025	0.0	0.0	0.014	0.026	0.036	0.042	0.045	0.042	0.036	0.026	0.014	0.0
FINAL CAMBER ↑	0.0	11/16"	1 1/4"	1 11/16"	2"	2 1/8"	2"	1 11/16"	1 1/4"	11/16"	0.0	0.0	5/16"	9/16"	3/4"	15/16"	15/16"	15/16"	3/4"	9/16"	5/16"	0.0
	GIRDERS 2 & 3											GIRDERS 2 & 3										
TENTH POINTS	0	.1	.2	.3	.4	.5	.6	.7	.8	.9	0	0	.1	.2	.3	.4	.5	.6	.7	.8	.9	0
CAMBER (GIRDER ALONE IN PLACE) ↑	0.0	0.081	0.153	0.209	0.245	0.257	0.245	0.209	0.153	0.081	0.0	0.0	0.039	0.074	0.101	0.119	0.125	0.119	0.101	0.074	0.039	0.0
✳ DEFLECTION DUE TO SUPERIMPOSED D.L. ↓	0.0	0.025	0.047	0.064	0.075	0.079	0.075	0.064	0.047	0.025	0.0	0.0	0.014	0.026	0.035	0.041	0.044	0.041	0.035	0.026	0.014	0.0
FINAL CAMBER ↑	0.0	11/16"	1 1/4"	1 3/4"	2"	2 1/8"	2"	1 3/4"	1 1/4"	11/16"	0.0	0.0	5/16"	9/16"	13/16"	15/16"	1"	15/16"	13/16"	9/16"	5/16"	0.0
	GIRDERS 4, 5, 9 & 10											GIRDERS 4, 5, 9 & 10										
TENTH POINTS	0	.1	.2	.3	.4	.5	.6	.7	.8	.9	0	0	.1	.2	.3	.4	.5	.6	.7	.8	.9	0
CAMBER (GIRDER ALONE IN PLACE) ↑	0.0	0.081	0.153	0.209	0.245	0.257	0.245	0.209	0.153	0.081	0.0	0.0	0.039	0.074	0.101	0.119	0.125	0.119	0.101	0.074	0.039	0.0
✳ DEFLECTION DUE TO SUPERIMPOSED D.L. ↓	0.0	0.023	0.043	0.059	0.069	0.073	0.069	0.059	0.043	0.023	0.0	0.0	0.013	0.024	0.033	0.038	0.040	0.038	0.033	0.024	0.013	0.0
FINAL CAMBER ↑	0.0	11/16"	1 5/16"	1 13/16"	2 1/8"	2 3/16"	2 1/8"	1 13/16"	1 5/16"	11/16"	0.0	0.0	5/16"	5/8"	13/16"	15/16"	1"	15/16"	13/16"	5/8"	5/16"	0.0
	GIRDER 6											GIRDER 6										
TENTH POINTS	0	.1	.2	.3	.4	.5	.6	.7	.8	.9	0	0	.1	.2	.3	.4	.5	.6	.7	.8	.9	0
CAMBER (GIRDER ALONE IN PLACE) ↑	0.0	0.081	0.153	0.209	0.245	0.257	0.245	0.209	0.153	0.081	0.0	0.0	0.039	0.074	0.101	0.119	0.125	0.119	0.101	0.074	0.039	0.0
✳ DEFLECTION DUE TO SUPERIMPOSED D.L. ↓	0.0	0.024	0.045	0.061	0.072	0.075	0.072	0.061	0.045	0.024	0.0	0.0	0.013	0.025	0.034	0.040	0.042	0.040	0.034	0.025	0.013	0.0
FINAL CAMBER ↑	0.0	11/16"	1 5/16"	1 3/4"	2 1/16"	2 3/16"	2 1/16"	1 3/4"	1 5/16"	11/16"	0.0	0.0	5/16"	9/16"	13/16"	15/16"	1"	15/16"	13/16"	9/16"	5/16"	0.0
	GIRDERS 7 & 8											GIRDERS 7 & 8										
TENTH POINTS	0	.1	.2	.3	.4	.5	.6	.7	.8	.9	0	0	.1	.2	.3	.4	.5	.6	.7	.8	.9	0
CAMBER (GIRDER ALONE IN PLACE) ↑	0.0	0.081	0.153	0.209	0.245	0.257	0.245	0.209	0.153	0.081	0.0	0.0	0.039	0.074	0.101	0.119	0.125	0.119	0.101	0.074	0.039	0.0
✳ DEFLECTION DUE TO SUPERIMPOSED D.L. ↓	0.0	0.021	0.039	0.053	0.063	0.066	0.063	0.053	0.039	0.021	0.0	0.0	0.011	0.022	0.029	0.035	0.036	0.035	0.029	0.022	0.011	0.0
FINAL CAMBER ↑	0.0	3/4"	1 3/8"	1 7/8"	2 3/16"	2 5/16"	2 3/16"	1 7/8"	1 3/8"	3/4"	0.0	0.0	5/16"	5/8"	7/8"	1"	1 1/16"	1"	7/8"	5/8"	5/16"	0.0
	GIRDERS 11 & 12											GIRDERS 11 & 12										
TENTH POINTS	0	.1	.2	.3	.4	.5	.6	.7	.8	.9	0	0	.1	.2	.3	.4	.5	.6	.7	.8	.9	0
CAMBER (GIRDER ALONE IN PLACE) ↑	0.0	0.081	0.153	0.209	0.245	0.257	0.245	0.209	0.153	0.081	0.0	0.0	0.039	0.074	0.101	0.119	0.125	0.119	0.101	0.074	0.039	0.0
✳ DEFLECTION DUE TO SUPERIMPOSED D.L. ↓	0.0	0.024	0.046	0.063	0.074	0.078	0.074	0.063	0.046	0.024	0.0	0.0	0.013	0.026	0.035	0.041	0.043	0.041	0.035	0.026	0.013	0.0
FINAL CAMBER ↑	0.0	11/16"	1 1/4"	1 3/4"	2 1/16"	2 1/8"	2 1/16"	1 3/4"	1 1/4"	11/16"	0.0	0.0	5/16"	9/16"	13/16"	15/16"	1"	15/16"	13/16"	9/16"	5/16"	0.0
	GIRDER 13											GIRDER 13										
TENTH POINTS	0	.1	.2	.3	.4	.5	.6	.7	.8	.9	0	0	.1	.2	.3	.4	.5	.6	.7	.8	.9	0
CAMBER (GIRDER ALONE IN PLACE) ↑	0.0	0.081	0.153	0.209	0.245	0.257	0.245	0.209	0.153	0.081	0.0	0.0	0.039	0.074	0.101	0.119	0.125	0.119	0.101	0.074	0.039	0.0
✳ DEFLECTION DUE TO SUPERIMPOSED D.L. ↓	0.0	0.025	0.048	0.065	0.077	0.080	0.077	0.065	0.048	0.025	0.0	0.0	0.014	0.026	0.036	0.042	0.044	0.042	0.036	0.026	0.014	0.0
FINAL CAMBER ↑	0.0	11/16"	1 1/4"	1 3/4"	2"	2 1/8"	2"	1 3/4"	1 1/4"	11/16"	0.0	0.0	5/16"	9/16"	13/16"	15/16"	1"	15/16"	13/16"	9/16"	5/16"	0.0

✳ INCLUDES FUTURE WEARING SURFACE
ALL VALUES ARE SHOWN IN FEET (DECIMAL FORM), EXCEPT " FINAL CAMBER ", WHICH IS GIVEN IN INCHES (FRACTION FORM).

NOTES:

ALL PRESTRESSING STRANDS SHALL BE 7-WIRE LOW-RELAXATION GRADE 270 STRANDS AND SHALL CONFORM TO AASHTO M203 EXCEPT FOR SAMPLING REQUIREMENTS WHICH SHALL BE IN ACCORDANCE WITH THE STANDARD SPECIFICATIONS.

ALL REINFORCING STEEL SHALL BE GRADE 60.

EMBEDDED PLATE "B-1" SHALL BE GALVANIZED IN ACCORDANCE WITH THE STANDARD SPECIFICATIONS. BEVEL EDGES OF PLATE "B-1" TO GIVE CLOSE FIT BUT NOT TIGHT FIT TO STEEL CASTING FORM.

ANCHOR STUDS SHALL CONFORM TO AASHTO M169 GRADES 1010 THROUGH 1020 OR APPROVED EQUAL, AND SHALL MEET THE TYPE "B" REQUIREMENTS OF SUBSECTION 7.3 OF THE ANSI/AASHTO/AWS D1.5 BRIDGE WELDING CODE.

PRESTRESSING STRANDS MAY EXTEND A MAXIMUM OF 2" BEYOND THE GIRDER ENDS.

THE TRANSFER OF LOAD FROM THE ANCHORAGES TO THE GIRDER SHALL BE DONE WHEN CONCRETE HAS REACHED A COMPRESSIVE STRENGTH OF NOT LESS THAN 6900 PSI IN SPANS A, B & C AND 4800 PSI IN SPAN D.

DEPENDING ON THE TYPE OF SYSTEM USED TO SUPPORT THE DECK SLAB FORMS, PRESET ANCHORS MAY BE NECESSARY IN THE PRESTRESSED CONCRETE GIRDER.

THE TOP SURFACE OF THE GIRDER, EXCLUDING THE OUTSIDE 4", SHALL BE RAKED TO A DEPTH OF 1/4".

FOR PRESTRESSED CONCRETE MEMBERS, SEE SPECIAL PROVISIONS.

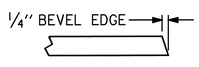

SECTION "G"

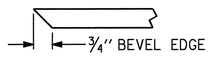

SECTION "F"

(SEE NOTES)

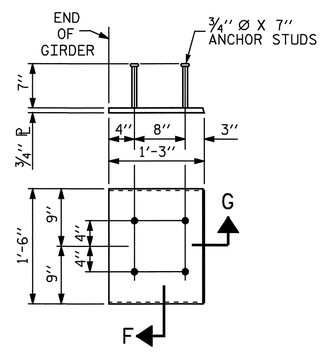

EMBEDDED PLATE "B-1" DETAILS FOR AASHTO TYPE II GIRDER

(2 REQ'D PER GIRDER)

PROJECT NO. U-2810A
CUMBERLAND COUNTY
STATION: 27+70.00 -L-

SHEET 5 OF 5

STATE OF NORTH CAROLINA
DEPARTMENT OF TRANSPORTATION
RALEIGH

STANDARD

PRESTRESSED CONCRETE GIRDER
CONTINUOUS FOR LIVE LOAD
DEAD LOAD DEFLECTIONS

NORTH CAROLINA PROFESSIONAL SEAL 16301 ENGINEER TING HSIUNG FANG
10/19/09

REVISIONS						SHEET NO.
NO.	BY:	DATE:	NO.	BY:	DATE:	S-21
1			3			TOTAL SHEETS
2			4			83

STD. NO. PCG11

ASSEMBLED BY : E.C. LOCKLEAR	DATE : 9-03-08
CHECKED BY : T.H. FANG	DATE : 11-25-08
DRAWN BY : ELR 11/91	REV. 10/17/00 RWW/LES
CHECKED BY : GRP 11/91	REV. 7/10/01RR LES/RDR
	REV. 5/1/06 TLA/GM

19-OCT-2009 08:58
z:\structures\str1\final plans\u2810_sd_g*_01.dgn
ttfang

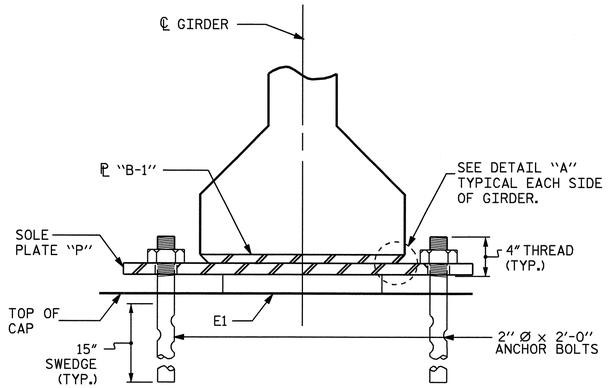

SECTION E-E
(FIXED)

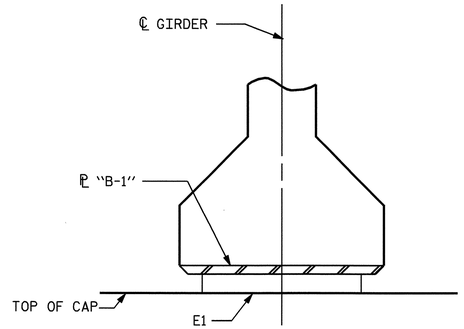

SECTION F-F
(AT INTEGRAL END BENT)

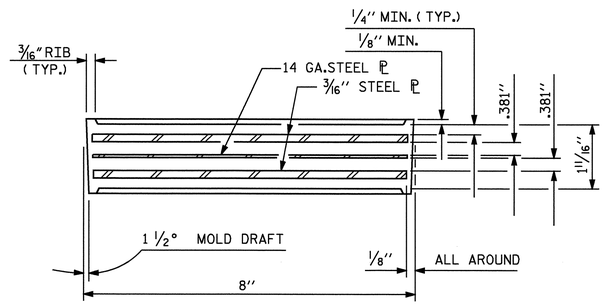

TYPICAL SECTION OF ELASTOMERIC BEARINGS

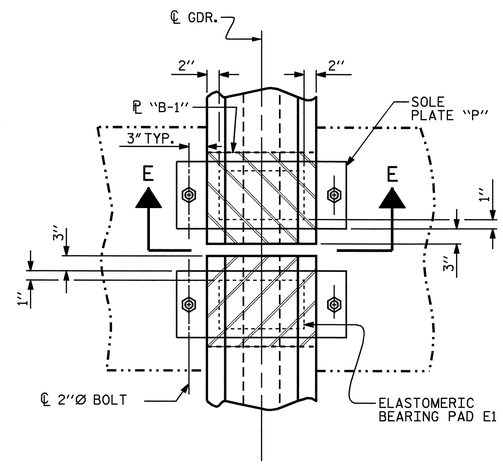

TYPICAL PLAN @ BENT

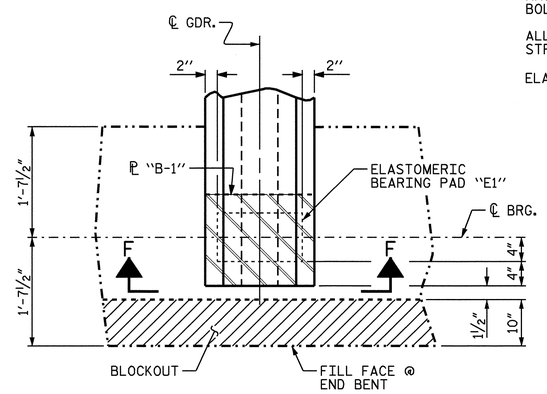

TYPICAL PLAN @ END BENT
(INTEGRAL)

NOTES

AT ALL FIXED POINTS OF SUPPORT, NUTS FOR ANCHOR BOLTS ARE TO BE TIGHTENED FINGER TIGHT AND THEN BACKED OFF 1/2 TURN. THE THREAD OF THE NUT AND BOLT SHALL THEN BE BURRED WITH A SHARP POINTED TOOL.

STEEL SOLE PLATES, ANCHOR BOLTS, AND NUTS SHALL BE GALVANIZED IN ACCORDANCE WITH THE STANDARD SPECIFICATIONS.

PRIOR TO WELDING, GRIND THE GALVANIZED SURFACE OF THE PORTION OF THE EMBEDDED PLATE AND SOLE PLATE THAT ARE TO BE WELDED. AFTER WELDING, DAMAGED GALVANIZED SURFACES SHALL BE REPAIRED IN ACCORDANCE WITH THE STANDARD SPECIFICATIONS.

WHEN WELDING THE SOLE PLATE TO THE EMBEDDED PLATE IN THE GIRDER, USE TEMPERATURE INDICATING WAX PENS, OR OTHER SUITABLE MEANS, TO ENSURE THAT THE TEMPERATURE OF THE SOLE PLATE DOES NOT EXCEED 300°F. TEMPERATURES ABOVE THIS MAY DAMAGE THE ELASTOMER.

SOLE PLATE "P", BOLTS, AND NUTS SHOULD BE INCLUDED IN THE PAY ITEM FOR PRESTRESSED CONCRETE GIRDERS.

ANCHOR BOLTS SHALL MEET THE REQUIREMENTS OF ASTM A449. NUTS SHALL MEET THE REQUIREMENTS OF AASHTO M291-DH OR AASHTO M292-2H. WASHERS SHALL MEET THE REQUIREMENTS OF AASHTO M293. SHOP DRAWINGS ARE NOT REQUIRED FOR ANCHOR BOLT, NUTS AND WASHERS. SHOP INSPECTION IS REQUIRED.

ALL SURFACES OF BEARING PLATES SHALL BE SMOOTH AND STRAIGHT.

ELASTOMER IN ALL BEARINGS SHALL BE 60 DUROMETER HARDNESS.

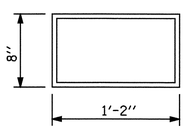

E1 (104 REQ'D)

PLAN VIEW OF ELASTOMERIC BEARING

TYPE II

— LOAD RATINGS —	
	MAX.D.L.+L.L.
36" PCG -TYPE II	82 K

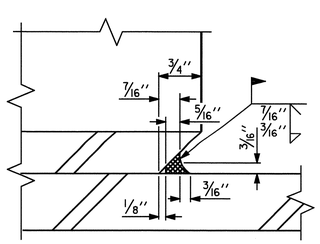

DETAIL "A"

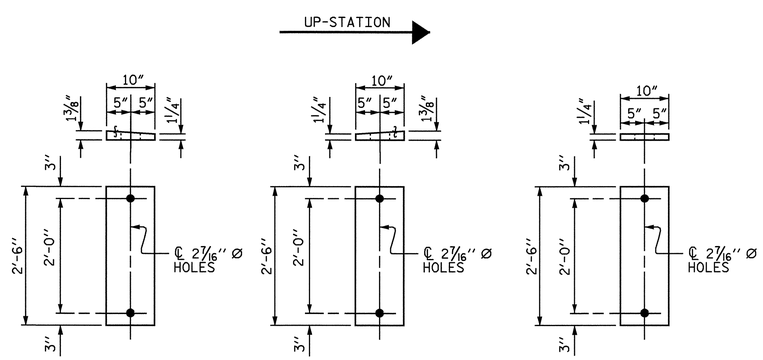

SOLE PLATE DETAILS ("P")

PROJECT NO. U-2810A
CUMBERLAND COUNTY
STATION: 27+70.00 -L-

STATE OF NORTH CAROLINA
DEPARTMENT OF TRANSPORTATION
RALEIGH

STANDARD

ELASTOMERIC BEARING DETAILS

PRESTRESSED CONCRETE GIRDER SUPERSTRUCTURE

NORTH CAROLINA PROFESSIONAL SEAL 16301 ENGINEER TING HSIUNG FANG
2/13/09

ASSEMBLED BY : H. B. SHAH	DATE : 11-08		
CHECKED BY : T. H. FANG	DATE : 11-08		
DRAWN BY : WJH 8/89	REV. 10/17/00	RWW/LES	
CHECKED BY : CRK 8/89	REV. 7/10/01	RWW/LES	
	REV. 5/1/06	TLA/GM	

REVISIONS						SHEET NO.
NO.	BY:	DATE:	NO.	BY:	DATE:	S-22
1			3			TOTAL SHEETS
2			4			83

STD. NO. EB3

13-FEB-2009 14:27
R:\Structures\str1\Final Plans\u-2810a_sd_ebp_01.dgn
sdombrowski

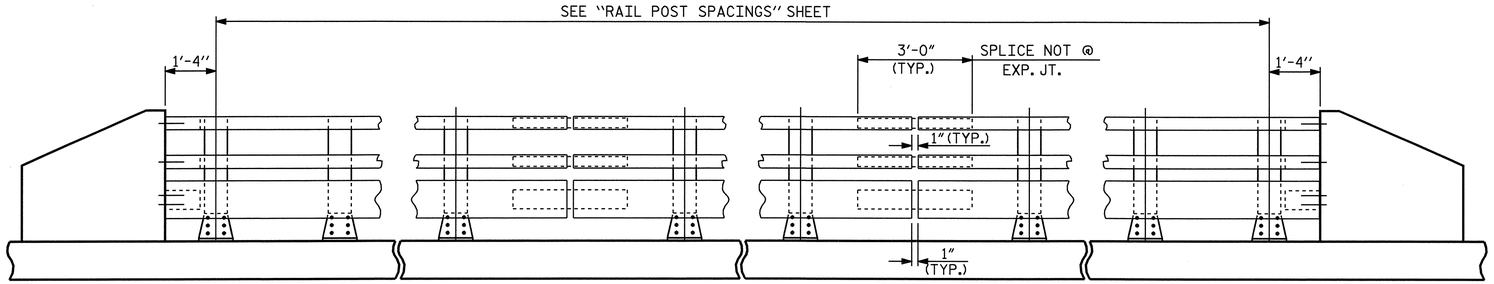

NOTE:
FOR ATTACHMENT OF METAL RAIL TO END POST, SEE STANDARD NO. BMR7 ON SHEET S-25.

ELEVATION

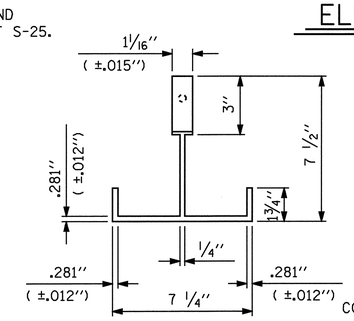

PLAN

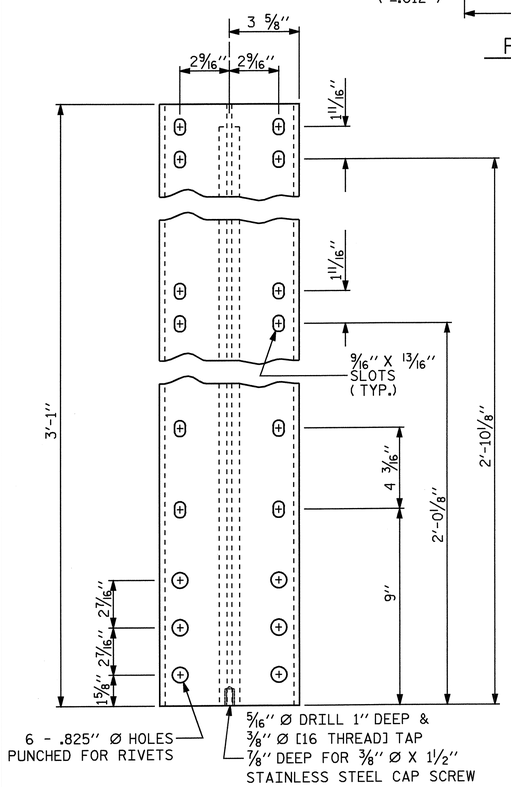

FRONT ELEVATION

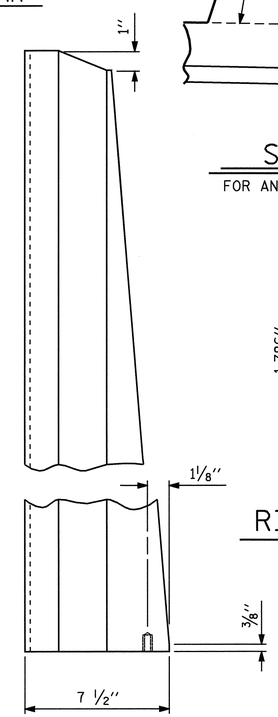

SIDE ELEVATION

DETAILS OF POST

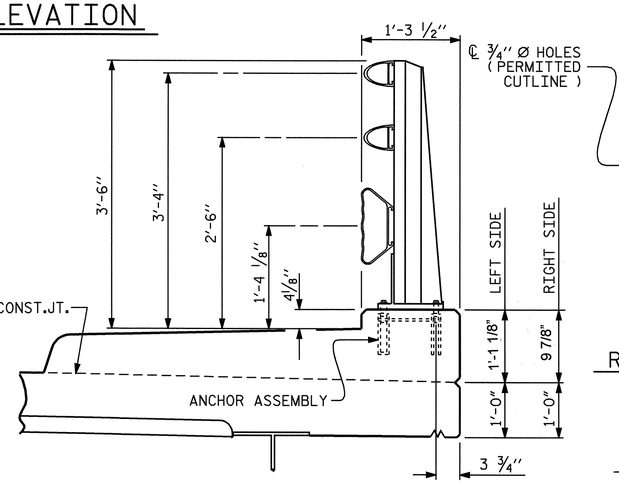

SECTION THRU RAIL

FOR ANCHOR ASSEMBLY, SEE "3 BAR METAL RAIL" STD.No.BMR6

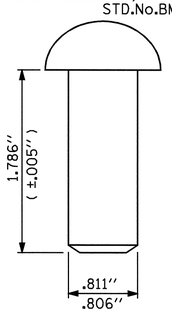

RIVET DETAIL

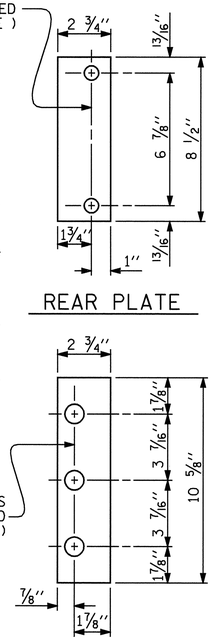

FRONT PLATE

REAR PLATE

SHIM DETAILS

NOTE:
SHIMS MAY BE CUT ALONG PERMITTED CUTLINE OR SLOTTED TO EDGE OF PLATE TO FACILITATE PLACEMENT.

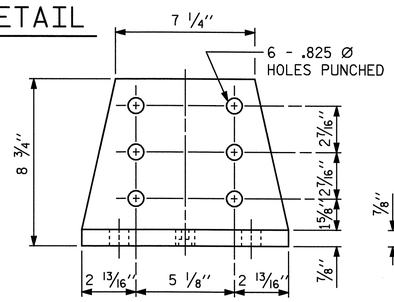

FRONT ELEVATION

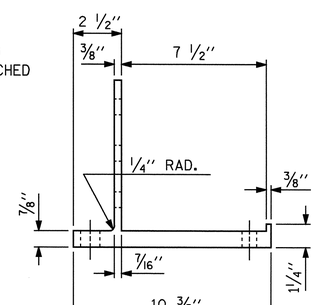

SIDE ELEVATION

POST BASE DETAILS

NOTES

AT THE CONTRACTOR'S OPTION, METAL RAIL MAY BE EITHER ALUMINUM OR GALVANIZED STEEL IN ACCORDANCE WITH THE REQUIREMENTS OF THE GENERAL NOTES AND THE FOLLOWING SPECIFICATIONS FOR THE ALTERNATE MATERIALS; HOWEVER, THE CONTRACTOR WILL BE REQUIRED TO USE THE SAME RAIL MATERIAL ON ALL STRUCTURES ON THE PROJECT FOR WHICH METAL RAIL IS DESIGNATED.

ALUMINUM RAILS

MATERIAL FOR POSTS, BASES AND RAILS, EXPANSION BARS AND CLAMP BARS SHALL BE ASTM B221 ALLOY 6061-T6.

MATERIAL FOR RIVETS SHALL BE ASTM B316 ALLOY 6061-T6. RIVETS SHALL BE STANDARD BUTTON HEAD AND CONE POINT COLD DRIVEN AS PER DRAWING.

THE BASE OF RAIL POSTS, OR ANY OTHER ALUMINUM SURFACE IN CONTACT WITH CONCRETE SHALL BE THOROUGHLY COATED WITH AN ALUMINUM IMPREGNATED CAULKING COMPOUND OF APPROVED QUALITY.

MATERIAL FOR SHIMS TO BE ASTM B209 ALLOY 6061-T6.

GALVANIZED STEEL RAILS

MATERIAL AND GALVANIZING ARE TO CONFORM TO THE FOLLOWING SPECIFICATIONS:

POST, POST BASES, RAILS, EXPANSION BARS AND CLAMP BARS : AASHTO M270 GRADE 36 STRUCTURAL STEEL - GALVANIZED TO AASHTO M111.

RIVETS: RIVETS SHALL MEET THE REQUIREMENTS OF ASTM A502 FOR GRADE 1 RIVETS.

THE CUT ENDS OF GALVANIZED STEEL RAILING, AFTER GRINDING SMOOTH SHALL BE GIVEN TWO COATS OF ZINC RICH PAINT MEETING THE REQUIREMENTS OF FEDERAL SPECIFICATION MIL-P-26915 USAF TYPE 1, OR OF FEDERAL SPECIFICATIONS TT-P-641.

SHIMS: SHIMS SHALL MEET THE REQUIREMENTS OF ASTM A570 FOR GRADE 33 OR A611 FOR GRADE C AND SHALL BE GALVANIZED IN ACCORDANCE WITH AASHTO M111.

RAIL CAPS: RAIL CAPS SHALL MEET THE REQUIREMENTS OF ASTM A570 FOR GRADE 33 OR A611 FOR GRADE C AND SHALL BE GALVANIZED IN ACCORDANCE WITH AASHTO M111.

GENERAL NOTES

RAILING SHALL BE CONTINUOUS FROM END POST TO END POST OF BRIDGE. EACH JOINT IN RAIL LENGTH SHALL BE SPLICED AS DETAILED. PANEL LENGTHS OF RAIL SHALL BE ATTACHED TO A MINIMUM OF THREE POSTS. PLACE ONE JOINT SPLICE JUST BEYOND THE 3RD RAIL POST FROM EACH END, TYPICALLY 14' FROM THE END. PLACE OTHER JOINTS AS NEEDED.

FOR END OF RAIL TO CLEAR FACE OF CONCRETE END POST DIMENSION, SEE STANDARD NO. BMR7.

CAP SCREWS SHALL BE ASTM F593 ALLOY 305 STAINLESS STEEL. WASHERS FOR RAIL ATTACHMENT SHALL MEET THE REQUIREMENTS OF ASTM F844 EXCEPT THEY SHALL BE MADE FROM ALLOY 304 STAINLESS STEEL.

CERTIFIED MILL REPORTS ARE REQUIRED FOR RAILS AND POSTS. SHOP INSPECTION IS NOT REQUIRED.

METAL RAIL POSTS SHALL BE SET NORMAL TO CURB GRADE.

METHOD OF MEASUREMENT FOR METAL RAILS: FOR LENGTH OF METAL RAILS TO BE PAID FOR, SEE THE STANDARD SPECIFICATIONS.

CURVED RAIL USAGE: WHERE RAILS ARE TO BE USED ON BRIDGES ON HORIZONTAL AND/OR VERTICAL CURVATURE THE CONTRACTOR MAY, AT HIS OPTION, HAVE THE REQUIRED CURVATURE IN THE RAIL FORMED IN THE SHOP OR IN THE FIELD. IN EITHER EVENT, THE RAIL SHALL CONFORM WITHOUT BUCKLING OR KINKING TO THE REQUIRED CURVATURE IN A UNIFORM MANNER ACCEPTABLE TO THE ENGINEER.

TO INSURE FUTURE IDENTIFICATION OF THE FABRICATOR, A PERMANENT IDENTIFYING MARK SHALL BE PLACED ON EACH POST. THE METHOD OF MARKING AND LOCATION SHALL BE SUCH THAT IT DOES NOT DETRACT FROM THE APPEARANCE OF THE POST, BUT REMAIN VISIBLE AFTER RAIL PLACEMENT.

SHIMS SHALL BE USED AS NECESSARY FOR POST ALIGNMENT.

ALLOY 6351-T5 MAY BE SUBSTITUTED FOR ALLOY 6061-T6 WHERE APPLICABLE.

MINOR VARIATIONS IN DETAILS OF METAL RAIL WILL BE CONSIDERED. DETAILS OF SUCH VARIATIONS, IF DESIRED, SHALL BE SUBMITTED FOR APPROVAL.

PAY LENGTH = 443.833 LIN.FT.

METAL RAIL PAY LENGTH	
STAGE I	221'-11"
STAGE II	221'-11"
TOTAL	443'-10"

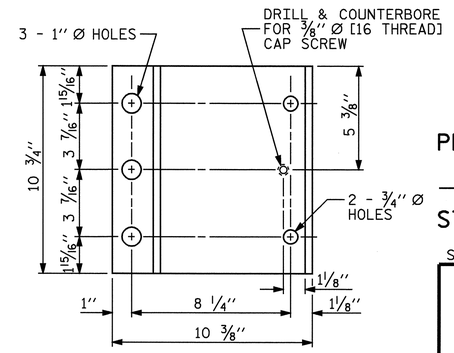

PLAN

PROJECT NO. U-2810A
CUMBERLAND COUNTY
STATION: 27+70.00 -L-

SHEET 1 OF 3

STATE OF NORTH CAROLINA
DEPARTMENT OF TRANSPORTATION
RALEIGH

STANDARD

3 BAR METAL RAIL

NORTH CAROLINA PROFESSIONAL SEAL 16301 ENGINEER TING HSIUNG FANG 1/15/09

REVISIONS								SHEET NO.
NO.	BY:	DATE:	NO.	BY:	DATE:			S-23
1			3					TOTAL SHEETS
2			4					83

ASSEMBLED BY : E. C. LOCKLEAR	DATE : 11-09-08		
CHECKED BY : T. H. FANG	DATE : 12-05-08		
DRAWN BY : JMB 1/88	REV. 10/17/00	RWW/LES	
CHECKED BY : GGH 1/88	REV. 5/7/03	RWW/JTE	
	REV. 5/1/06	TLA/GM	

15-JAN-2009 10:08
R:\Structures\str1\Final Plans\u-2810a_sd_bmr_01.dgn
sdombrowski

STD. NO. BMR5

NOTES

STRUCTURAL CONCRETE ANCHOR ASSEMBLY

THE STRUCTURAL CONCRETE ANCHOR ASSEMBLY SHALL CONSIST OF THE FOLLOWING COMPONENTS:

A. FERRULES SHALL BE MADE FROM STEEL MEETING THE REQUIREMENTS OF AASHTO M169, GRADE 12L14 AND SHALL HAVE A MINIMUM LENGTH OF THREADS OF 2" FOR 3/4" FERRULES AND 1 3/4" FOR 5/8" FERRULES.

B. 3 - 3/4" Ø X 2 1/2" BOLTS WITH WASHERS. BOLTS SHALL CONFORM TO THE REQUIREMENTS OF ASTM A307. BOLTS AND WASHERS SHALL BE GALVANIZED. AT THE CONTRACTOR'S OPTION, STAINLESS STEEL BOLTS AND WASHERS MAY BE USED AS AN ALTERNATE FOR THE 3/4" Ø X 2 1/2" GALVANIZED BOLTS AND WASHERS. THEY SHALL CONFORM TO OR EXCEED THE MECHANICAL REQUIREMENTS OF ASTM A307. THE USE OF THIS ALTERNATE SHALL BE APPROVED BY THE ENGINEER.

C. 2 - 5/8" Ø X 2 1/4" BOLTS WITH WASHERS. BOLTS SHALL CONFORM TO THE REQUIREMENTS OF ASTM A307. BOLTS AND WASHERS SHALL BE GALVANIZED. AT THE CONTRACTOR'S OPTION, STAINLESS STEEL BOLTS AND WASHERS MAY BE USED AS AN ALTERNATE FOR THE 5/8" Ø X 2 1/4" GALVANIZED BOLTS AND WASHERS. THEY SHALL CONFORM TO OR EXCEED THE MECHANICAL REQUIREMENTS OF ASTM A307. THE USE OF THIS ALTERNATE SHALL BE APPROVED BY THE ENGINEER.

D. WIRE STRUT SHOWN IN THE CONCRETE ANCHOR ASSEMBLY DETAIL IS THE MINIMUM ALLOWABLE SIZE AND SHALL HAVE A MINIMUM TENSILE STRENGTH OF 100,000 PSI. AS AN OPTION, A 7/16" Ø WIRE STRUT WITH A MINIMUM TENSILE STRENGTH OF 90,000 PSI IS ACCEPTABLE.

E. THE METAL RAIL ANCHOR ASSEMBLIES TO BE HOT DIPPED GALVANIZED TO CONFORM TO REQUIREMENTS OF AASHTO M111.

F. THE COST OF THE METAL RAIL ANCHOR ASSEMBLY WITH BOLTS AND WASHERS COMPLETE IN PLACE SHALL BE INCLUDED IN THE PRICE BID FOR LINEAR FEET OF METAL RAIL.

G. BOLTS TO BE TIGHTENED ONE-HALF TURN WITH A WRENCH FROM A FINGER-TIGHT POSITION.

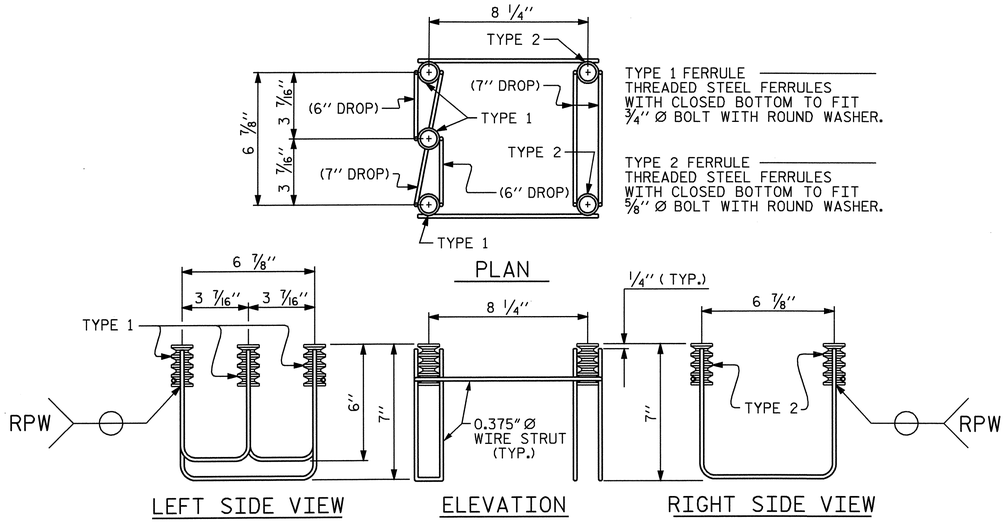

5-BOLT METAL RAIL ANCHOR ASSEMBLY

(74 ASSEMBLIES REQUIRED)

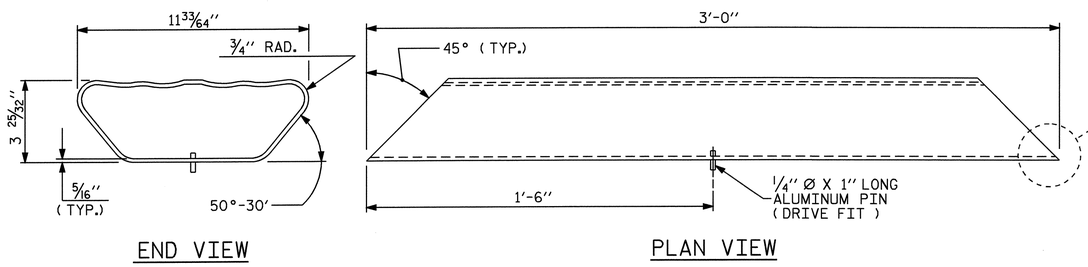

BOTTOM RAIL EXPANSION BAR

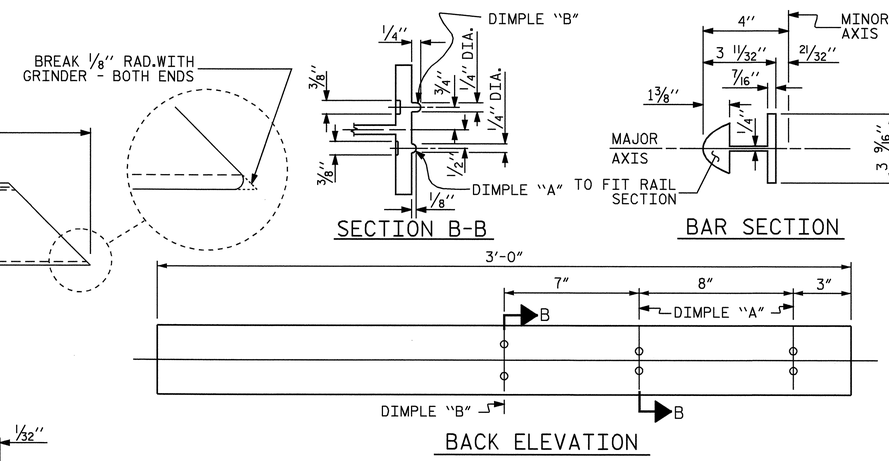

TOP & MIDDLE RAIL EXPANSION BAR

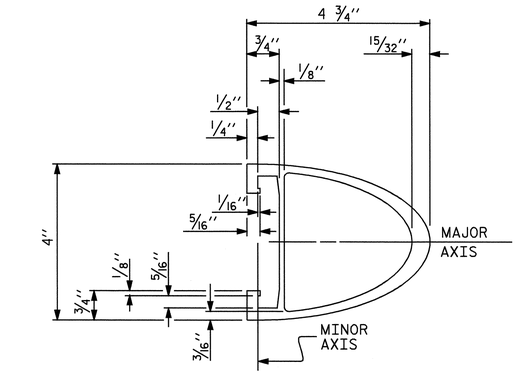

TOP & MIDDLE RAIL SECTION

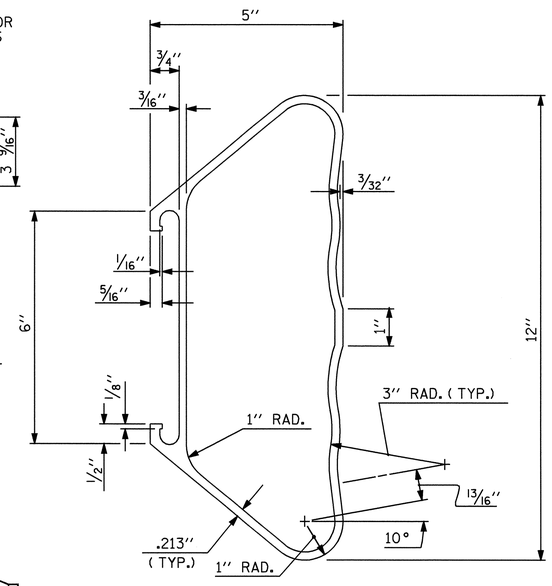

BOTTOM RAIL SECTION

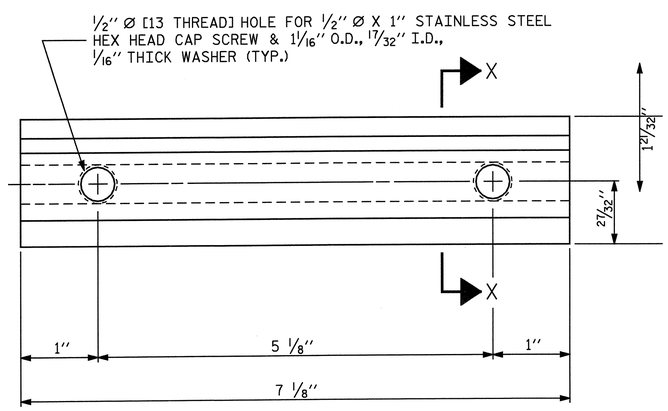

ELEVATION

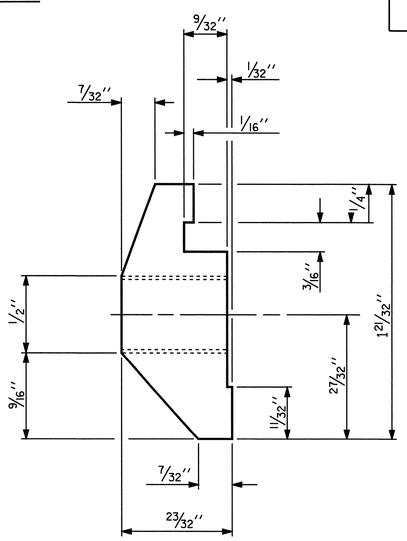

SECTION X-X

CLAMP BAR DETAIL

(6 REQUIRED PER POST)

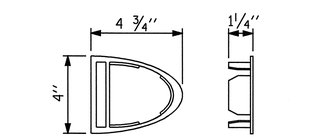

TOP & MIDDLE RAIL CAP

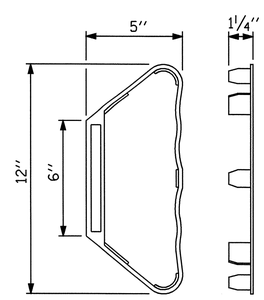

BOTTOM RAIL CAP

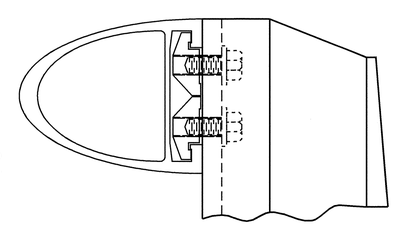

CLAMP ASSEMBLY

TOP RAIL SHOWN
(MIDDLE & BOTTOM RAIL ARE SIMILAR)

PROJECT NO. U-2810A
CUMBERLAND COUNTY
STATION: 27+70.00 -L-

SHEET 2 OF 3

STATE OF NORTH CAROLINA
DEPARTMENT OF TRANSPORTATION
RALEIGH

STANDARD

3 BAR METAL RAIL

NORTH CAROLINA PROFESSIONAL SEAL 16301 ENGINEER TING HSILUNG FANG
1/15/09

REVISIONS						SHEET NO.
NO.	BY:	DATE:	NO.	BY:	DATE:	S-24
1			3			TOTAL SHEETS
2			4			83

ASSEMBLED BY : E. C. LOCKLEAR	DATE : 11-09-08	
CHECKED BY : T. H. FANG	DATE : 12-05-08	
DRAWN BY : JMB 1/88	REV. 7/10/01	RWW/LES
CHECKED BY : GGH 1/88	REV. 5/7/03	RWW/JTE
	REV. 5/1/06	TLA/GM

15-JAN-2009 10:08
R:\Structures\str1\Final Plans\u-2810a_sd_bmr_01.dgn
sdombrowski

STD. NO. BMR6

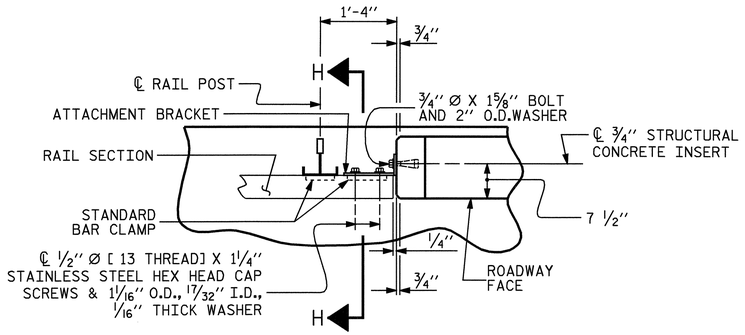

PLAN OF RAIL AND END POST

(STIFFENER ON 1/2" ℙ NOT SHOWN FOR CLARITY)

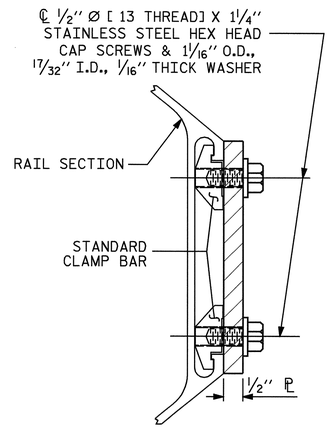

SECTION H-H

(FOR BOTTOM RAIL)

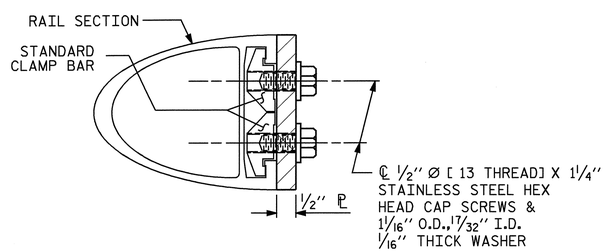

SECTION H-H

(FOR TOP & MIDDLE RAIL)

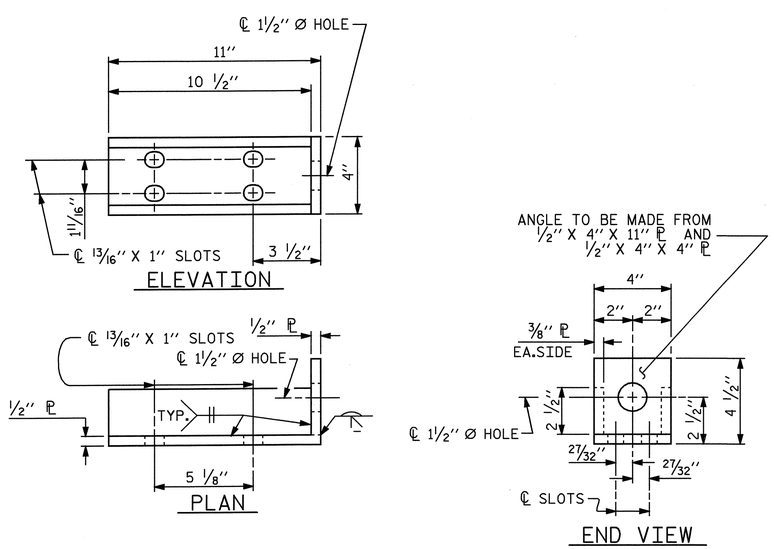

DETAILS FOR ATTACHMENT BRACKET

(TOP & MIDDLE RAIL ONLY)

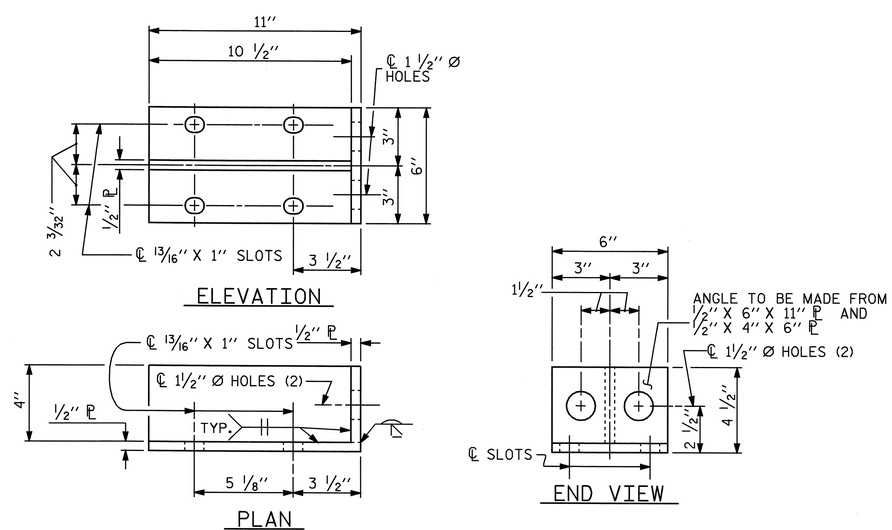

DETAILS FOR ATTACHMENT BRACKET

(BOTTOM RAIL ONLY)

NOTES

METAL RAIL TO END POST CONNECTION

THE METAL RAIL TO END POST CONNECTION SHALL CONSIST OF THE FOLLOWING COMPONENTS:

A. 1/2" PLATES SHALL CONFORM TO AASHTO M270 GRADE 36 AND SHALL BE GALVANIZED AFTER FABRICATION.

B. 3/4" STRUCTURAL CONCRETE INSERT SHALL HAVE A WORKING LOAD SHEAR CAPACITY OF 4800 LBS. THE FERRULES SHALL ENGAGE A 3/4" Ø X 1 5/8" BOLT WITH 2" O.D. WASHER IN PLACE. THE 3/4" Ø X 1 5/8" BOLT SHALL HAVE N. C. THREADS.

C. CAP SCREWS FOR RAIL ATTACHMENT TO ANGLE SHALL CONFORM TO THE REQUIREMENTS OF ASTM F593 ALLOY 305 STAINLESS STEEL. CAP SCREWS TO BE CENTERED IN SLOTS AT 60°F. WASHERS FOR RAIL ATTACHMENT SHALL MEET THE REQUIREMENTS OF ASTM F844 EXCEPT THEY SHALL BE MADE FROM ALLOY 304 STAINLESS STEEL.

D. STANDARD CLAMP BARS (STD. No. BMR6).

THE COST OF THE STANDARD CLAMP BARS AND CAP SCREWS USED IN THE METAL RAIL TO END POST CONNECTION SHALL BE INCLUDED IN THE UNIT CONTRACT PRICE BID FOR LINEAR FEET OF 3 BAR METAL RAIL.

THE 3/4" STRUCTURAL CONCRETE INSERT WITH BOLT SHALL BE ASSEMBLED IN THE SHOP.

THE COST OF THE 3/4" STRUCTURAL CONCRETE INSERT ASSEMBLY, AND THE 1/2" PLATES COMPLETE IN PLACE SHALL BE INCLUDED IN THE VARIOUS PAY ITEMS.

THE CONTRACTOR, AT HIS OPTION, MAY USE AN ADHESIVE BONDING SYSTEM IN LIEU OF THE STRUCTURAL CONCRETE INSERT EMBEDDED IN THE END POST. IF THE ADHESIVE BONDING SYSTEM IS USED, THE 3/4" Ø X 1 5/8" BOLT WITH WASHER SHALL BE REPLACED WITH A 3/4" Ø X 6 1/2" BOLT AND 2" O.D.WASHER. ALL SPECIFICATIONS THAT APPLY TO THE 3/4" Ø X 1 5/8" BOLT SHALL APPLY TO THE 3/4" Ø X 6 1/2" BOLT. FIELD TESTING OF THE ADHESIVE BONDING SYSTEM IS NOT REQUIRED.

NOTES

STRUCTURAL CONCRETE INSERT

THE STRUCTURAL CONCRETE INSERT ASSEMBLY SHALL CONSIST OF THE FOLLOWING COMPONENTS:

A. FERRULES SHALL BE MADE FROM STEEL MEETING THE REQUIREMENTS OF AASHTO M169, GRADE 12L14 AND SHALL HAVE A MINIMUM LENGTH OF THREADS OF 1 1/2".

B. 1 - 3/4" Ø X 1 5/8" BOLT WITH WASHER. BOLT SHALL CONFORM TO THE REQUIREMENTS OF ASTM A307. BOLT AND WASHER SHALL BE GALVANIZED. AT THE CONTRACTORS OPTION, STAINLESS STEEL BOLT AND WASHER MAY BE USED AS AN ALTERNATE FOR THE 3/4" Ø X 1 5/8" GALVANIZED BOLT AND WASHER. THEY SHALL CONFORM TO OR EXCEED THE MECHANICAL REQUIREMENTS OF ASTM A307. THE USE OF THIS ALTERNATE SHALL BE APPROVED BY THE ENGINEER.

C. WIRE STRUT SHOWN IN THE CONCRETE INSERT ASSEMBLY DETAIL IS THE MINIMUM ALLOWABLE SIZE AND SHALL HAVE A MINIMUM TENSILE STRENGTH OF 100,000 PSI. AS AN OPTION, A 7/16" Ø WIRE STRUT WITH A MINIMUM TENSILE STRENGTH OF 90,000 PSI IS ACCEPTABLE.

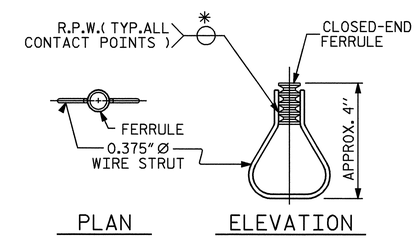

STRUCTURAL CONCRETE INSERT

* EACH WELDED ATTACHMENT OF WIRE TO FERRULE SHALL DEVELOP THE TENSILE STRENGTH OF THE WIRE.

PROJECT NO. U-2810A

CUMBERLAND COUNTY

STATION: 27+70.00 -L-

SHEET 3 OF 3

STATE OF NORTH CAROLINA
DEPARTMENT OF TRANSPORTATION
RALEIGH

STANDARD

3 BAR METAL RAIL

NORTH CAROLINA PROFESSIONAL SEAL 16301 ENGINEER TING HSIUNG FANG

1/15/09

ASSEMBLED BY : E. C. LOCKLEAR	DATE : 11-09-08
CHECKED BY : T. H. FANG	DATE : 12-05-08

DRAWN BY : JMB	1/88	REV. 7/10/01	RWW/LES
CHECKED BY : GGH	1/88	REV. 5/7/03	RWW/JTE
		REV. 5/1/06	TLA/GM

REVISIONS						SHEET NO.
NO.	BY:	DATE:	NO.	BY:	DATE:	S-25
1			3			TOTAL SHEETS
2			4			83

STD. NO. BMR7

15-JAN-2009 10:08
R:\Structures\str1\FinalPlans\u-2810a_sd_bmr_01.dgn
sdombrowski

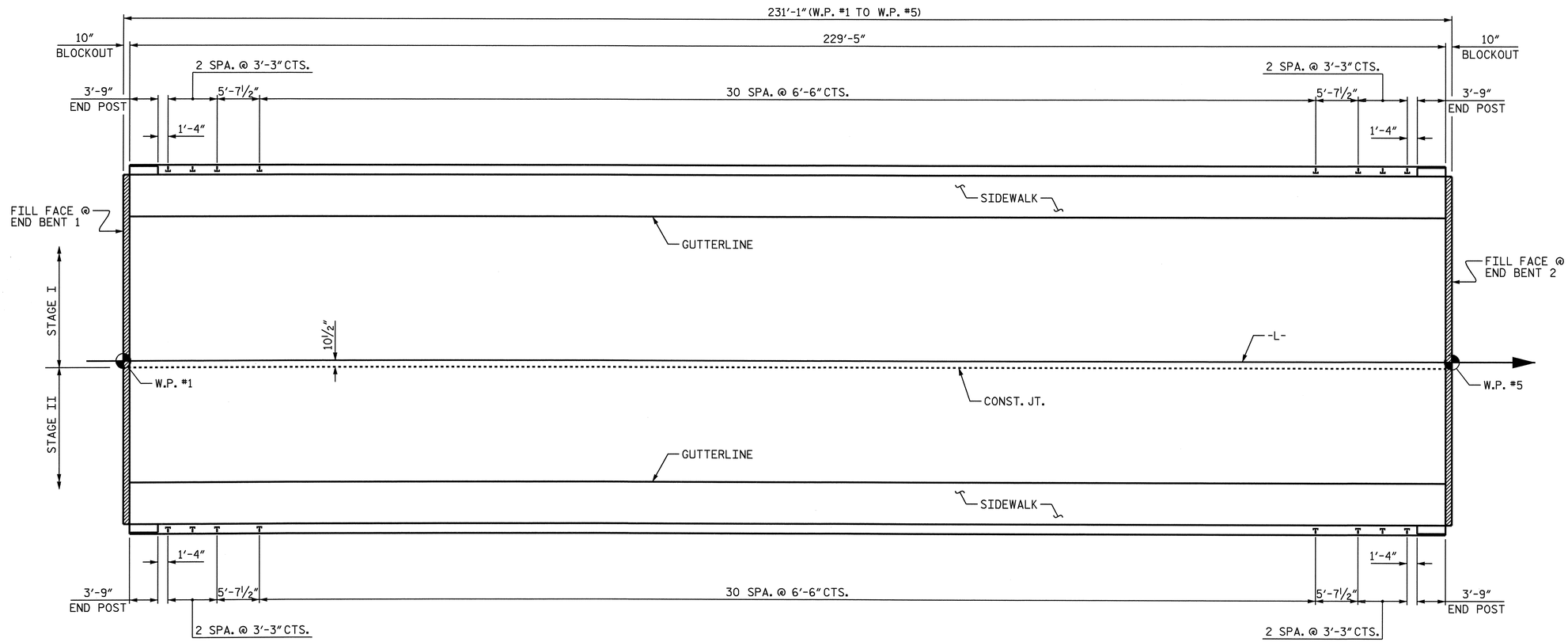

PLAN OF RAIL POST SPACING

BILL OF MATERIAL					
ONE END POST (4 REQ'D)					
BAR	NO.	SIZE	TYPE	LENGTH	WEIGHT
✱E1	2	#7	1	3'-5"	14
✱E2	2	#7	1	4'-0"	16
✱E3	2	#7	1	4'-7"	19
✱E4	2	#7	1	5'-1"	21
✱F1	6	#6	STR	3'-5"	31
✱F2	2	#6	STR	3'-8"	11

✱EPOXY COATED REINFORCING STEEL = 112 LBS.

CLASS AA CONCRETE = 0.4 C.Y.

BAR TYPES

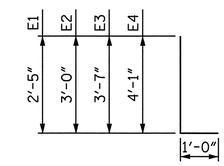

ALL BAR DIMENSIONS ARE OUT TO OUT

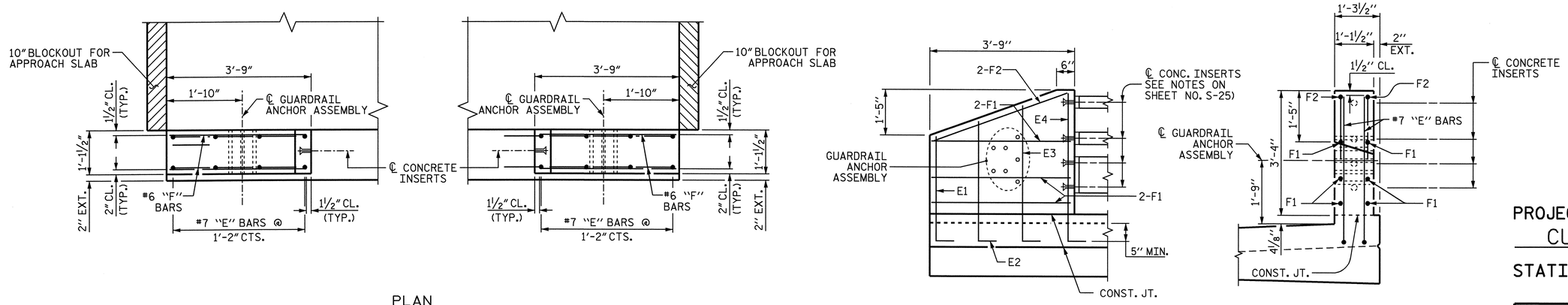

END POST DETAILS

ALL REINFORCING STEEL IN END POSTS SHALL BE EPOXY COATED.

PROJECT NO. U-2810A

CUMBERLAND COUNTY

STATION: 27+70.00 -L-

STATE OF NORTH CAROLINA
DEPARTMENT OF TRANSPORTATION
RALEIGH

SUPERSTRUCTURE

RAIL POSTS SPACINGS & END POST DETAILS

NORTH CAROLINA PROFESSIONAL SEAL 16301 ENGINEER TING HSIUNG FANG
1/15/09

REVISIONS						SHEET NO.
NO.	BY:	DATE:	NO.	BY:	DATE:	S-26
1			3			TOTAL SHEETS
2			4			83

DRAWN BY : E.C. LOCKLEAR DATE : 9-04-08
CHECKED BY : T. H. FANG DATE : 11-11-08

15-JAN-2009 10:08
R:\Structures\str1\Final Plans\u2810_sd_3mr_01.dgn
sdombrowski

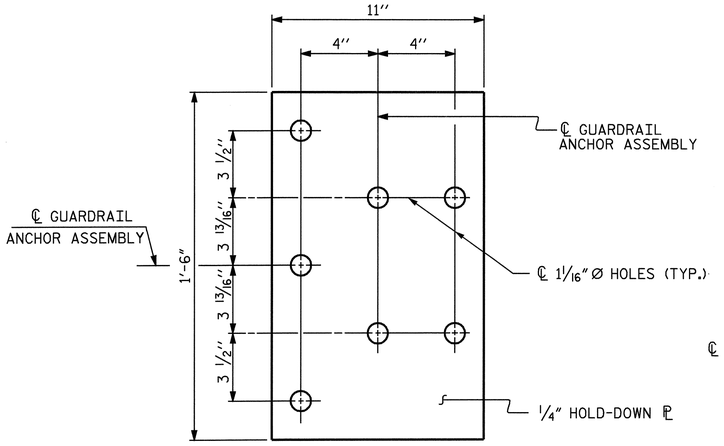

PLAN

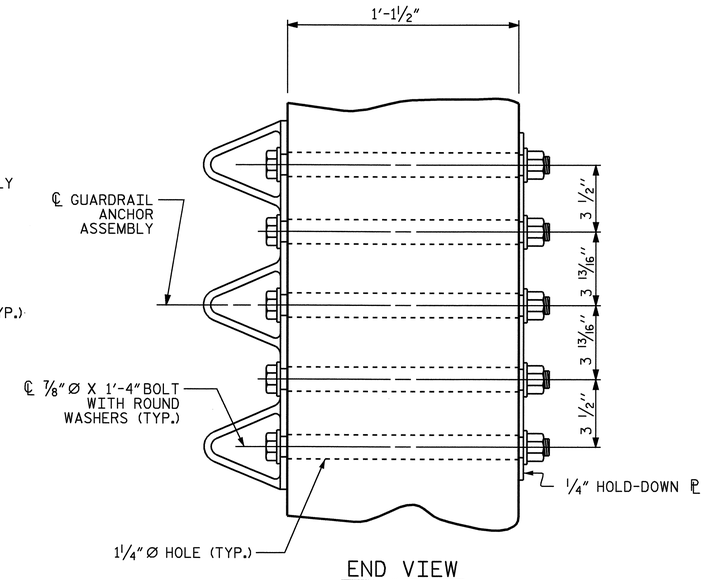

END VIEW

GUARDRAIL ANCHOR ASSEMBLY DETAILS

NOTES

THE GUARDRAIL ANCHOR ASSEMBLY SHALL CONSIST OF A 1/4'' HOLD DOWN PLATE AND 7 - 7/8'' Ø BOLTS WITH NUTS AND WASHERS.

THE HOLD-DOWN PLATE SHALL CONFORM TO AASHTO M270 GRADE 36. AFTER FABRICATION, THE HOLD-DOWN PLATE SHALL BE HOT-DIP GALVANIZED IN ACCORDANCE WITH AASHTO M111.

BOLTS SHALL CONFORM TO THE REQUIREMENTS OF ASTM A307 AND NUTS SHALL CONFORM TO THE REQUIREMENTS OF AASHTO M291. BOLTS, NUTS AND WASHERS SHALL BE GALVANIZED. AT THE CONTRACTOR'S OPTION, STAINLESS STEEL BOLTS, NUTS AND WASHERS MAY BE USED AS AN ALTERNATE FOR THE 7/8'' Ø GALVANIZED BOLTS, NUTS AND WASHERS. THEY SHALL CONFORM TO OR EXCEED THE MECHANICAL REQUIREMENTS OF ASTM A307. THE USE OF THIS ALTERNATE SHALL BE APPROVED BY THE ENGINEER.

AFTER INSTALLATION, THE EXPOSED THREAD OF THE BOLT SHALL BE BURRED WITH A SHARP POINTED TOOL.

THE COST OF THE GUARDRAIL ANCHOR ASSEMBLIES WITH BOLTS, NUTS AND WASHERS COMPLETE IN PLACE, SHALL BE INCLUDED IN THE VARIOUS PAY ITEMS.

THE VERTICAL REINFORCING BARS MAY BE SHIFTED SLIGHTLY IN THE END POST TO CLEAR ASSEMBLY BOLTS.

THE 1 1/4'' Ø HOLES SHALL BE FORMED OR DRILLED WITH A CORE BIT. IMPACT TOOLS WILL NOT BE PERMITTED. ANY CONCRETE DAMAGED BY THIS WORK SHALL BE REPAIRED TO THE SATISFACTION OF THE ENGINEER.

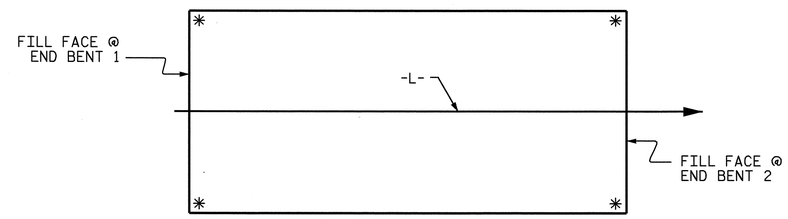

SKETCH SHOWING POINTS OF ATTACHMENT

✱ LOCATION OF GUARDRAIL ATTACHMENT.

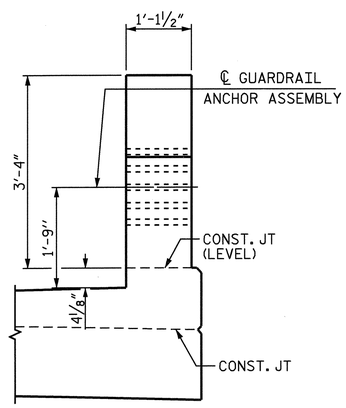

END VIEW

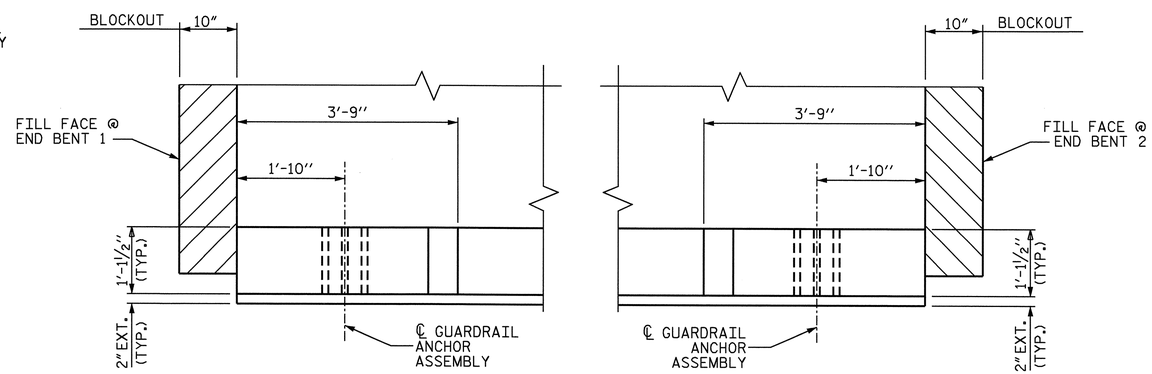

PLAN

STAGE II SIDE SHOWN, STAGE I SIMILAR

LOCATION OF GUARDRAIL ANCHOR AT END POST

PROJECT NO. U-2810A

CUMBERLAND COUNTY

STATION: 27+70.00 -L-

STATE OF NORTH CAROLINA
DEPARTMENT OF TRANSPORTATION
RALEIGH

STANDARD

GUARDRAIL ANCHORAGE DETAILS FOR METAL RAILS

NORTH CAROLINA PROFESSIONAL SEAL 16301 ENGINEER TING HSIUNG FANG

1/15/09

REVISIONS								SHEET NO.
NO.	BY:	DATE:	NO.	BY:	DATE:			S-27
1			3					TOTAL SHEETS
2			4					83

STD. NO. BMR8

ASSEMBLED BY : E.C. LOCKLEAR		DATE : 10-09-08	
CHECKED BY : T. H. FANG		DATE : 11-11-08	
DRAWN BY : EEM 6/94	REV. 10/17/00	RWW/LES	
CHECKED BY : RGW 6/94	REV. 5/7/03	RWW/JTE	
	REV. 5/1/06	TLA/GM	

15-JAN-2009 10:08
R:\Structures\str1\Final Plans\u2810_sd_3mr_01.dgn
sdombrowski

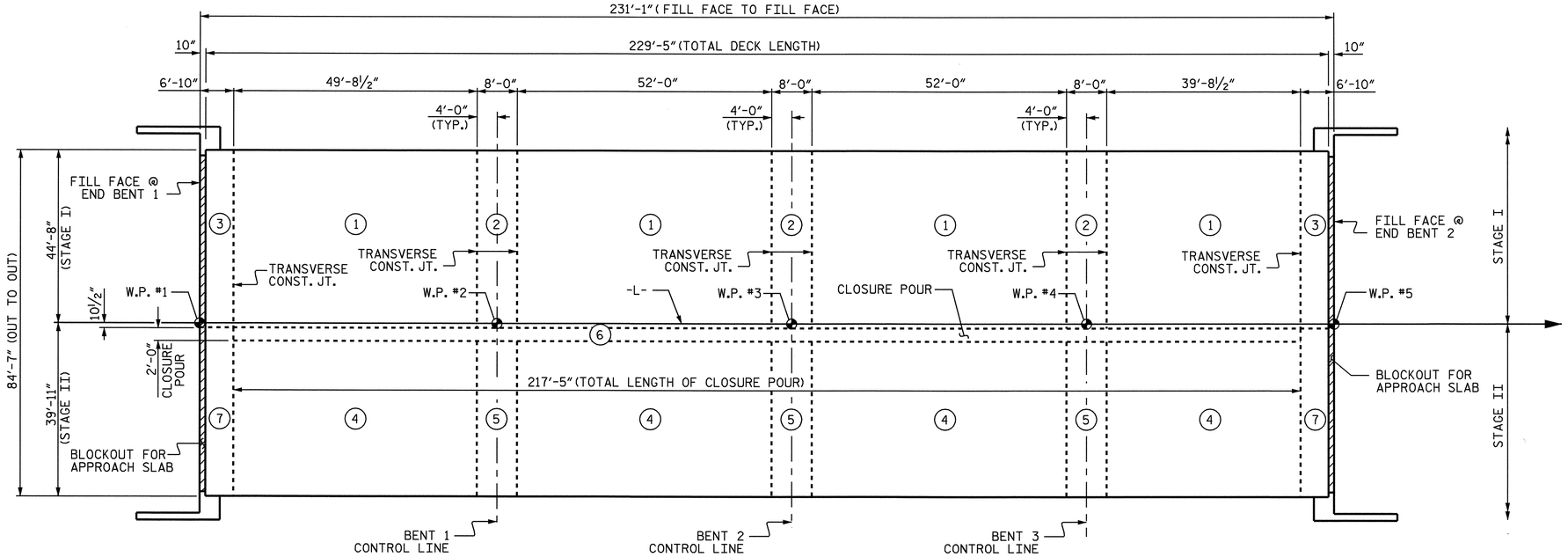

OPTIONAL POURING SEQUENCE

POUR 2 OR 5 CANNOT BE STARTED UNTIL BOTH ADJACENT POUR 1 OR 4 REACH A MINIMUM OF 3000 PSI RESPECTIVELY.
SEE TRANSVERSE CONSTRUCTION JOINT DETAIL

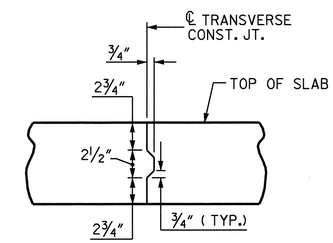

TRANSVERSE CONSTRUCTION JOINT DETAIL

NOTE: REINFORCING STEEL IN SLAB NOT SHOWN. LONGITUDINAL REINFORCING STEEL SHALL BE CONTINUOUS THRU JOINT

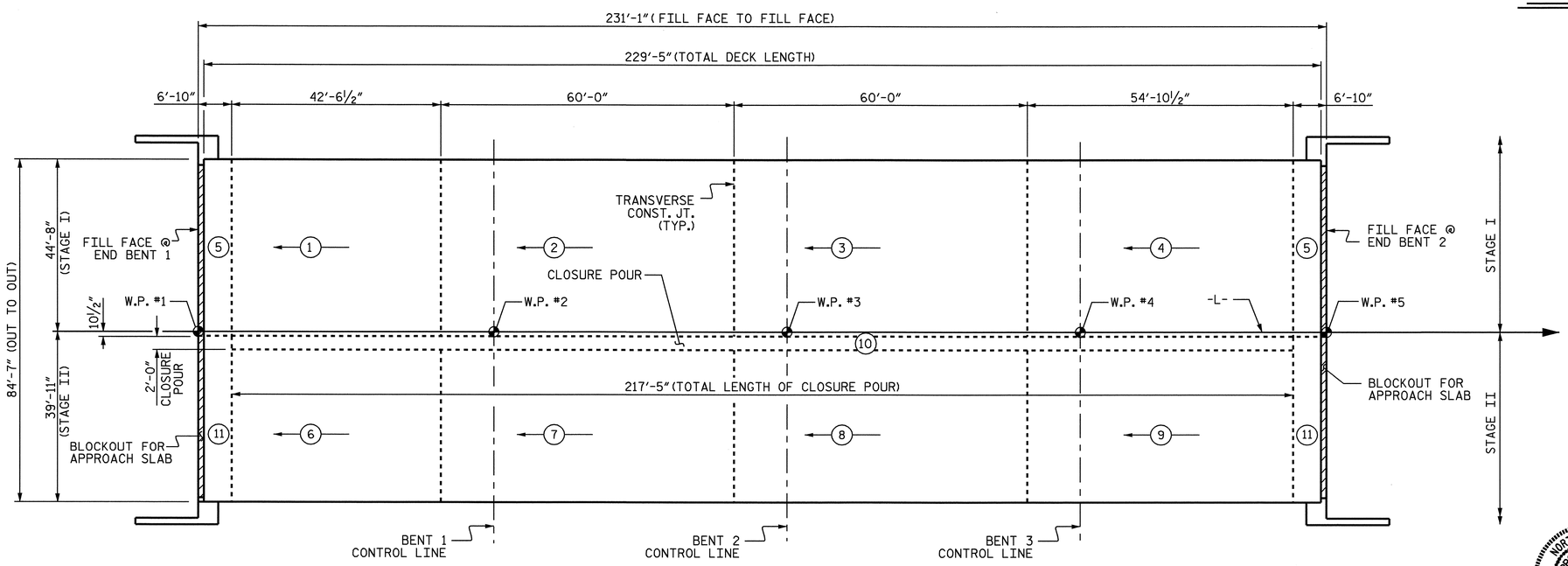

NOTE: THE UPPER PORTION OF THE WINGS SHALL BE POURED WITH THE SUPERSTRUCTURE.

POURING SEQUENCE

SEE TRANSVERSE CONSTRUCTION JOINT DETAIL

← (#) — = INDICATES POUR NUMBER AND DIRECTION OF POUR

PROJECT NO. U-2810A
CUMBERLAND COUNTY
STATION: 27+70.00 -L-

STATE OF NORTH CAROLINA
DEPARTMENT OF TRANSPORTATION
RALEIGH

SUPERSTRUCTURE

POUR SEQUENCE

NORTH CAROLINA PROFESSIONAL SEAL 16301 ENGINEER TING HSIUNG FANG
2/13/09

ASSEMBLED BY : HARISH SHAH	DATE : 11-08		
CHECKED BY : TING FANG	DATE : 12-08		
DRAWN BY : JMB 5/87	REV. 6/1/94	EEM/GRP	
CHECKED BY : SJD 9/87	REV. 8/16/99	RWW/LES	
	REV. 5/1/06	TLA/GM	

REVISIONS								SHEET NO.
NO.	BY:	DATE:	NO.	BY:	DATE:			S-28
1			3					TOTAL SHEETS
2			4					83

13-FEB-2009 14:27
R:\Structures\str1\FinalPlans\u-2810a_sd_bm_01.dgn
sdombrowski

STD. NO. BOM1

SUPERSTRUCTURE REINFORCING STEEL LENGTHS ARE BASED ON THE FOLLOWING MINIMUM SPLICE LENGTHS

BAR SIZE	SUPERSTRUCTURE EXCEPT APPROACH SLABS, PARAPET, AND BARRIER RAIL		APPROACH SLABS		PARAPET AND BARRIER RAIL
	EPOXY COATED	UNCOATED	EPOXY COATED	UNCOATED	
#4	2′-0″	1′-9″	2′-0″	1′-9″	2′-9″
#5	2′-6″	2′-2″	2′-6″	2′-2″	3′-5″
#6	3′-0″	2′-7″	3′-10″	2′-7″	4′-4″
#7	5′-3″	3′-6″			
#8	6′-10″	4′-7″			

GROOVING BRIDGE FLOORS

STAGE I		
APPROACH SLABS	1,323	SQ.FT.
BRIDGE DECK	6,596	SQ.FT.
TOTAL	7,919	SQ.FT.
STAGE II		
APPROACH SLABS	1,403	SQ.FT.
BRIDGE DECK	7,198	SQ.FT.
TOTAL	8,601	SQ.FT.
TOTAL		
APPROACH SLABS	2,726	SQ.FT.
BRIDGE DECK	13,794	SQ.FT.
TOTAL	16,520	SQ.FT.

SUPERSTRUCTURE BILL OF MATERIAL

		CLASS AA CONCRETE (CU. YD.)						REINFORCING STEEL (LBS)	EPOXY COATED REINFORCING STEEL (LBS)
STAGE I	POUR NO.	#1	#2	#3	#4	#5	TOTAL		
	DECK	59.87	96.32	96.32	89.12	61.19	402.82	31,471	38,469
	SIDEWALK						34.37		✻✻
	CONC. MEDIAN						22.35		✻✻
STAGE II	POUR NO.	#6	#7	#8	#9	#11	TOTAL		
	DECK	51.27	82.19	82.19	76.03	54.98	346.66	26,795	33,691
	SIDEWALK						34.37		✻✻
	CLOSURE POUR #10						10.74		✻✻
	TOTALS ✻✻						850.75	58,266	72,160

✻✻ QUANTITIES INCLUDED WITH SPAN TOTALS

BAR TYPES

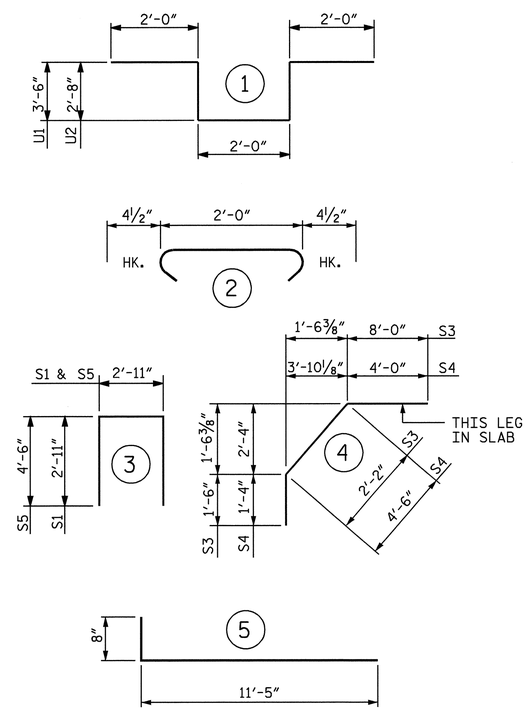

ALL BAR DIMENSIONS ARE OUT TO OUT

REINFORCING STEEL

STAGE I BAR	NO.	SIZE	TYPE	LENGTH	WEIGHT	STAGE II BAR	NO.	SIZE	TYPE	LENGTH	WEIGHT
✻ A1	367	#5	STR	44′-4″	16970	✻ A3	367	#5	STR	37′-7″	14386
A2	367	#5	STR	44′-4″	16970	A4	367	#5	STR	37′-7″	14386
✻ B1	60	#4	STR	20′-3″	812	✻ B1	52	#4	STR	20′-3″	703
✻ B2	60	#7	STR	46′-0″	5641	✻ B2	52	#7	STR	46′-0″	4889
✻ B3	58	#7	STR	18′-0″	2134	✻ B3	50	#7	STR	18′-0″	1840
✻ B4	60	#4	STR	18′-0″	721	✻ B4	52	#4	STR	18′-0″	625
✻ B5	30	#7	STR	43′-0″	2637	✻ B5	26	#7	STR	43′-0″	2285
✻ B6	29	#7	STR	16′-6″	978	✻ B6	25	#7	STR	16′-6″	843
✻ B7	60	#4	STR	16′-10″	675	✻ B7	52	#4	STR	16′-10″	585
✻ B8	58	#7	STR	12′-0″	1423	✻ B8	50	#7	STR	12′-0″	1226
B9	184	#5	STR	54′-0″	10363	B9	156	#5	STR	54′-0″	8786
B10	92	#6	STR	12′-0″	1658	B10	78	#6	STR	12′-0″	1406
						✻ B11	12	#6	STR	59′-7″	1074
✻ B12	80	#4	STR	29′-2″	1559	✻ B12	50	#4	STR	29′-2″	974
✻ B13	9	#4	STR	27′-3″	164	✻ B13	9	#4	STR	27′-3″	164
✻ D1	367	#5	STR	3′-7″	1372	✻ D1	367	#5	STR	3′-7″	1372
✻ D2	164	#4	STR	1′-0″	110	✻ D2	164	#4	STR	1′-0″	110
✻ G1	230	#4	STR	6′-4″	973	✻ G1	230	#4	STR	6′-4″	973
✻ G2	44	#4	STR	5′-0″	147	✻ G2	44	#4	STR	5′-0″	147
✻ G3	183	#4	STR	3′-11″	479						
H1	24	#4	5	12′-1″	194	H1	24	#4	5	12′-1″	194
K1	16	#4	STR	24′-1″	257	K21	16	#4	STR	22′-8″	242
K2	12	#4	STR	4′-11″	39	K2	10	#4	STR	4′-11″	33
K3	24	#4	STR	5′-11″	95	K3	20	#4	STR	5′-11″	79
K4	12	#4	STR	5′-5″	43	K4	10	#4	STR	5′-5″	36
K5	2	#4	STR	5′-1″	7	K5	2	#4	STR	5′-1″	7
K6	4	#4	STR	5′-7″	15	K6	4	#4	STR	5′-7″	15
K7	2	#4	STR	5′-4″	7	K7	2	#4	STR	5′-4″	7
K8	8	#4	STR	2′-8″	14	K8	8	#4	STR	2′-8″	14
K9	36	#4	STR	3′-9″	90	K9	30	#4	STR	3′-9″	75
K10	108	#4	STR	5′-5″	391	K10	90	#4	STR	5′-5″	326
K11	24	#4	STR	21′-3″	341						
						K12	4	#4	STR	2′-2″	6
						K13	4	#4	STR	3′-2″	8
						K14	24	#4	STR	17′-10″	286
S1	64	#4	3	8′-9″	374	S1	60	#4	3	8′-9″	351
S2	234	#4	2	2′-9″	430	S2	195	#4	2	2′-9″	358
✻ S3	66	#4	4	11′-8″	514	✻ S3	62	#4	4	11′-8″	483
✻ S4	64	#4	4	9′-10″	420	✻ S4	60	#4	4	9′-10″	394
S5	6	#4	3	11′-11″	48	S5	6	#4	3	11′-11″	48
✻ U1	54	#4	1	13′-0″	469	✻ U1	45	#4	1	13′-0″	391
✻ U2	36	#4	1	11′-4″	273	✻ U2	30	#4	1	11′-4″	227
V2	44	#4	STR	4′-7″	135	V3	44	#4	STR	4′-6″	132
REINFORCING STEEL = 31,471 LBS						REINFORCING STEEL = 26,795 LBS					
✻ EPOXY COATED REINF. STEEL = 38,469 LBS						✻ EPOXY COATED REINF. STEEL = 33,691 LBS					

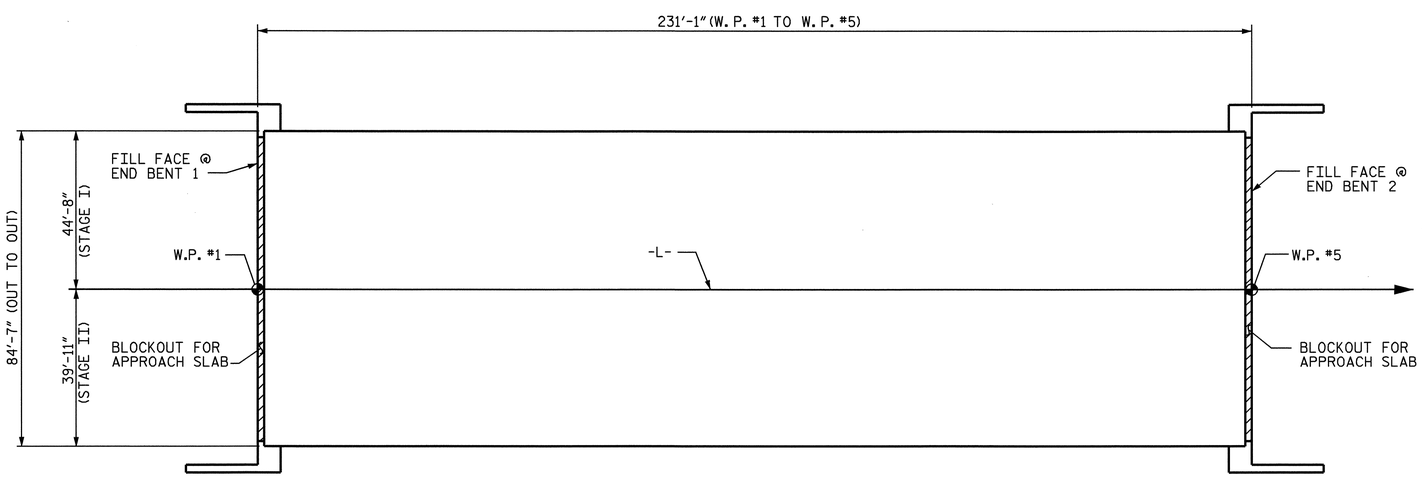

LAYOUT FOR COMPUTING AREA OF REINFORCED CONCRETE DECK SLAB (SQ. FT. = 19,546)

PROJECT NO. U-2810A
CUMBERLAND COUNTY
STATION: 27+70.00 -L-

NORTH CAROLINA PROFESSIONAL SEAL 16301 ENGINEER TING HSIUNG FANG
2/13/09

STATE OF NORTH CAROLINA
DEPARTMENT OF TRANSPORTATION
RALEIGH

STANDARD
SUPERSTRUCTURE BILL OF MATERIAL

ASSEMBLED BY : HARISH SHAH	DATE : 11-08
CHECKED BY : TING FANG	DATE : 12-08
DRAWN BY : JMB 5/87	REV. 6/1/94 EEM/GRP
CHECKED BY : SJD 9/87	REV. 8/16/99 RWW/LES
	REV. 5/1/06 TLA/GM

REVISIONS						SHEET NO.
NO.	BY:	DATE:	NO.	BY:	DATE:	S-29
1			3			TOTAL SHEETS
2			4			83

STD. NO. BOM1

13-FEB-2009 14:27
R:\Structures\str1\FinalPlans\u-2810a_sd_bm_01.dgn
sdombrowski

NOTES

SEE SUPERSTRUCTURE SHEETS FOR UPPER PART OF INTEGRAL END BENT DETAILS.

FOR PILE SPLICE DETAILS, SEE SHEET 3 OF 3.

THE CONTRACTOR SHALL PROVIDE FOR INSTALLATION OF THE 4" DIAMETER DRAIN PIPE THROUGH THE WING WALL AS REQUIRED FOR REINFORCED BRIDGE APPROACH FILLS, SEE THE ROADWAY PLANS. REINFORCING STEEL IN THE WING WALL MAY BE SHIFTED AS NECESSARY TO CLEAR THE DRAIN PIPE.

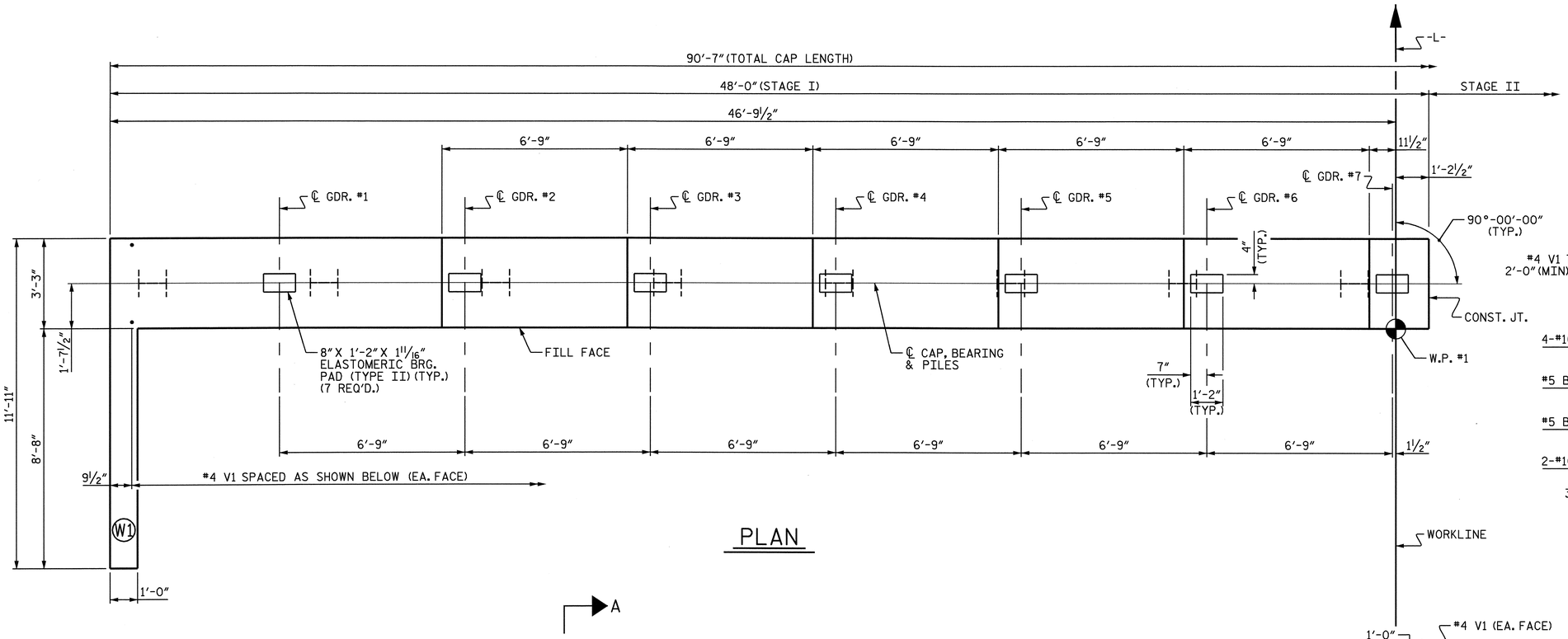

PLAN

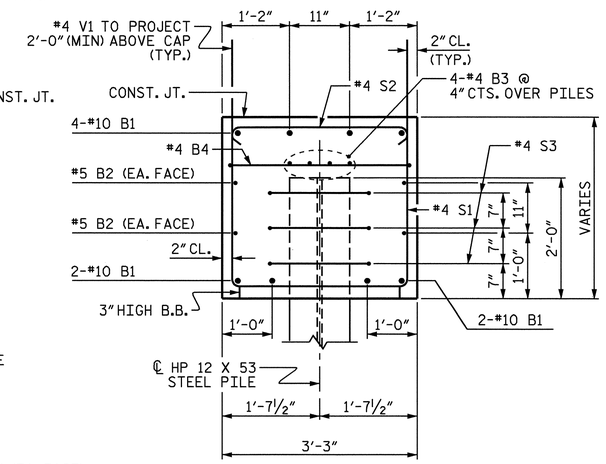

SECTION A-A

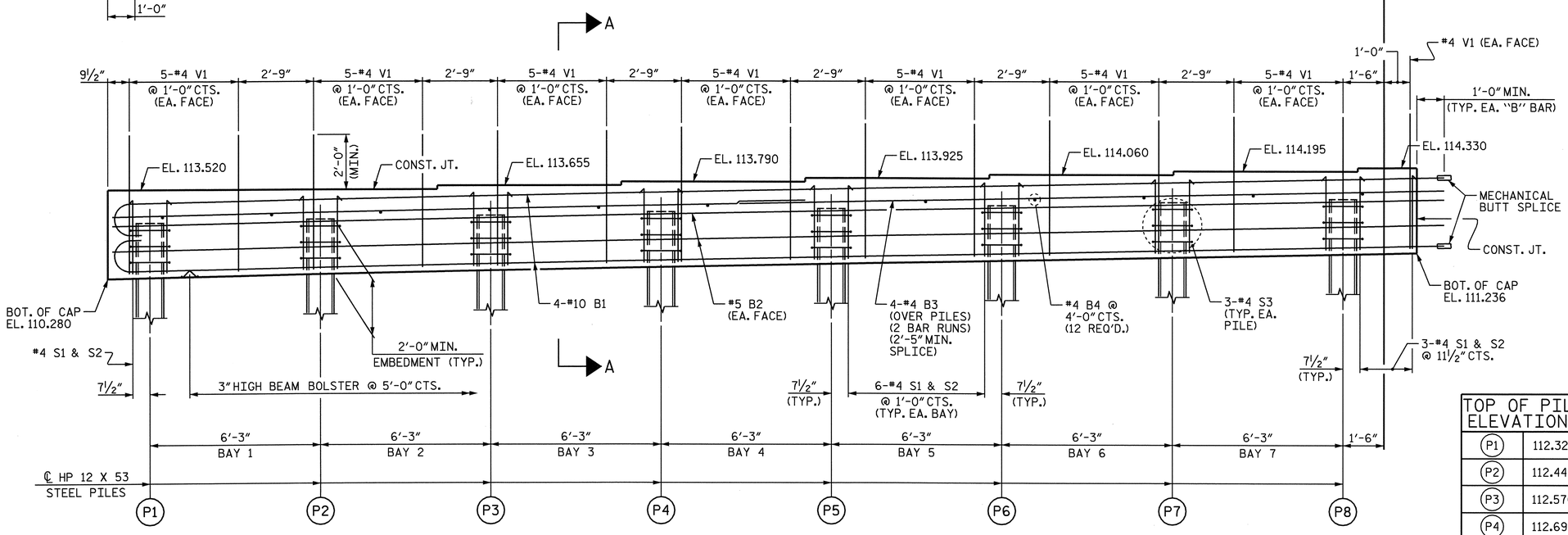

ELEVATION

LEFT WING NOT SHOWN FOR CLARITY.

TOP OF PILE ELEVATIONS	
P1	112.321
P2	112.445
P3	112.570
P4	112.694
P5	112.819
P6	112.943
P7	113.068
P8	113.192

NORTH CAROLINA PROFESSIONAL SEAL 16301 ENGINEER TING HSIUNG FANG
1/15/09

PROJECT NO. U-2810A
CUMBERLAND COUNTY
STATION: 27+70.00 -L-

SHEET 1 OF 3

STATE OF NORTH CAROLINA
DEPARTMENT OF TRANSPORTATION
RALEIGH

SUBSTRUCTURE
END BENT 1
(INTEGRAL)
STAGE I

REVISIONS						SHEET NO.
NO.	BY:	DATE:	NO.	BY:	DATE:	S-30
1			3			TOTAL SHEETS
2			4			83

DRAWN BY : E.C. LOCKLEAR DATE : 10-08
CHECKED BY : T.H. FANG DATE : 11-08

15-JAN-2009 10:08
R:\Structures\str1\Final Plans\U2810_sd_E*_01.dgn
sdombrowski

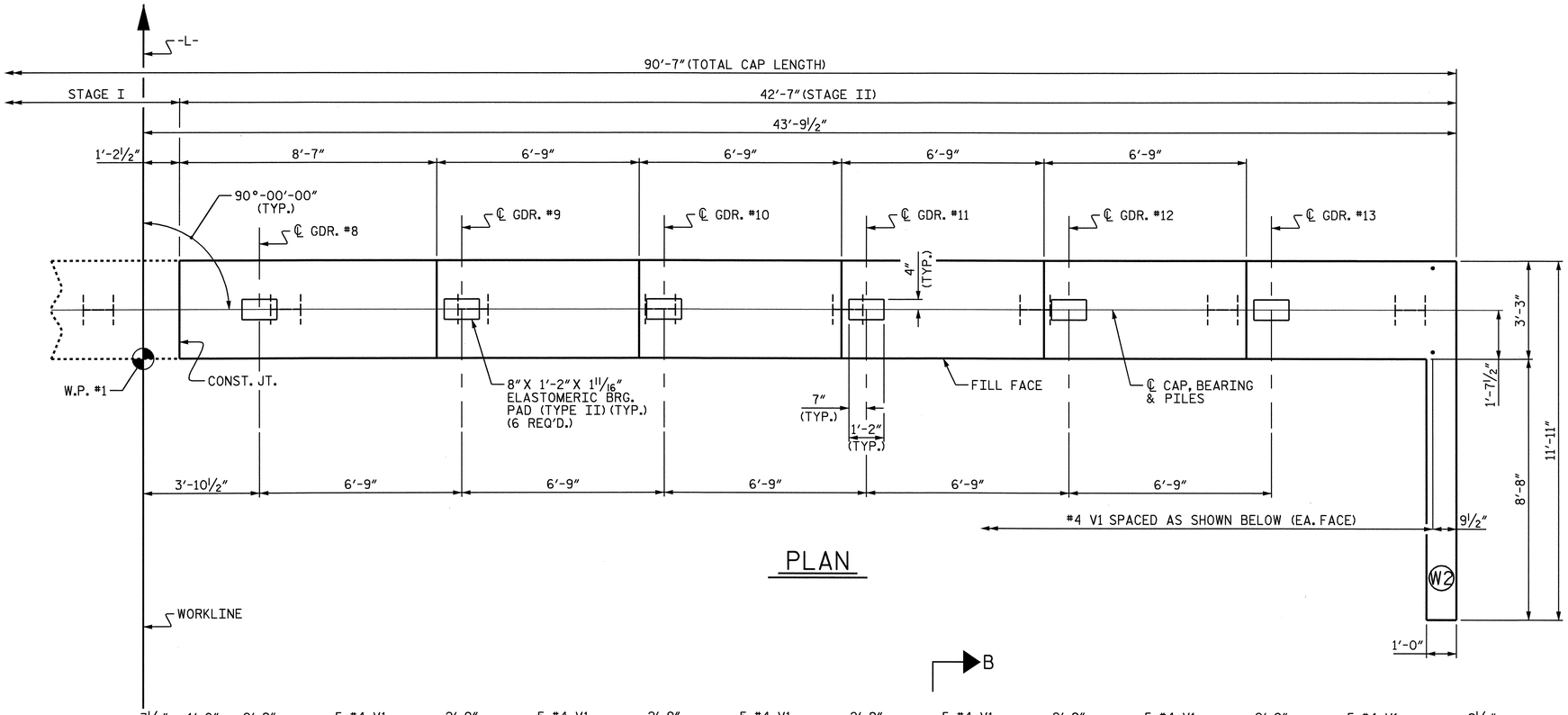

PLAN

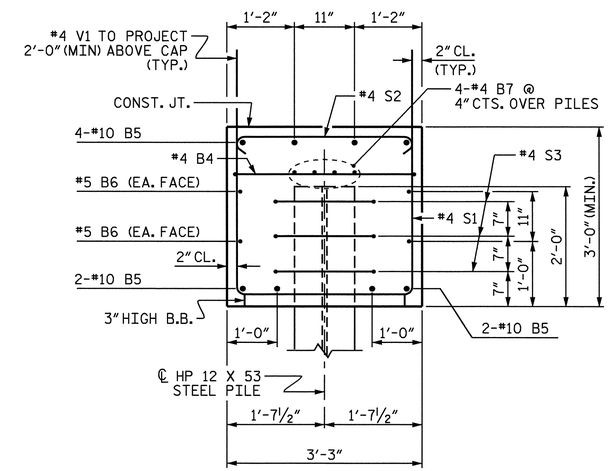

SECTION B-B

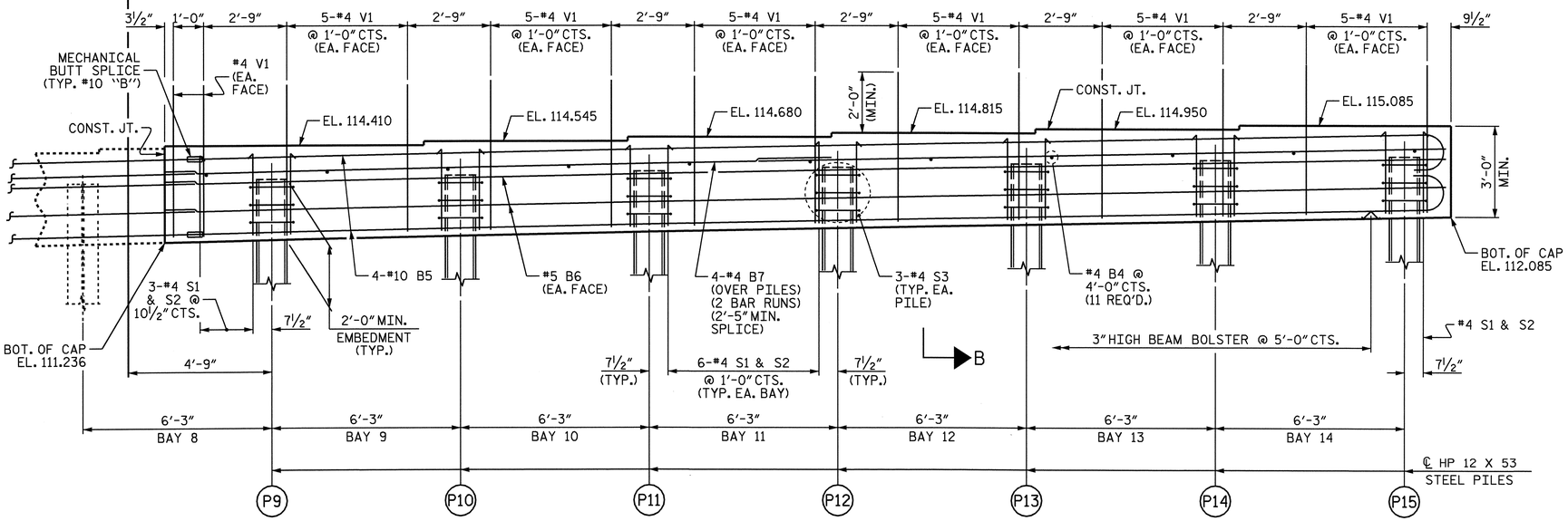

ELEVATION

RIGHT WING NOT SHOWN FOR CLARITY.

TOP OF PILE ELEVATIONS	
P9	113.317
P10	113.441
P11	113.566
P12	113.690
P13	113.814
P14	113.939
P15	114.063

PROJECT NO. U-2810A

CUMBERLAND COUNTY

STATION: 27+70.00 -L-

SHEET 2 OF 3

STATE OF NORTH CAROLINA
DEPARTMENT OF TRANSPORTATION
RALEIGH

SUBSTRUCTURE

END BENT 1
(INTEGRAL)
STAGE II

NORTH CAROLINA PROFESSIONAL SEAL 16301 ENGINEER TING HSIUNG FANG
1/15/09

REVISIONS						SHEET NO.
NO.	BY:	DATE:	NO.	BY:	DATE:	S-31
1			3			TOTAL SHEETS
2			4			83

DRAWN BY : E.C. LOCKLEAR DATE : 10-08
CHECKED BY : T.H. FANG DATE : 11-08

15-JAN-2009 10:08
R:\Structures\str1\Final Plans\U2810_sd_E*_01.dgn
sdombrowski

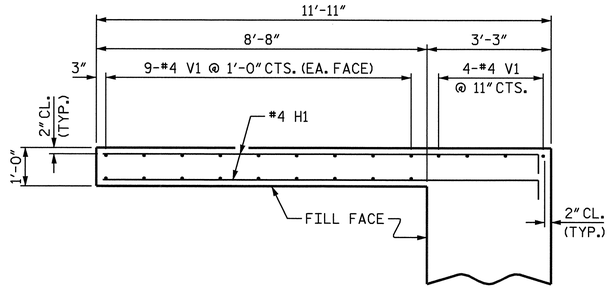

PLAN OF WING (W1)
STAGE I

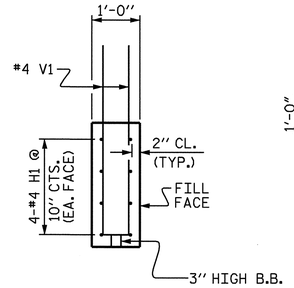

SECTION X-X

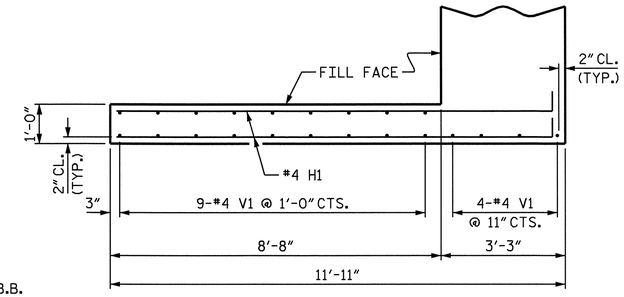

PLAN OF WING (W2)
STAGE II

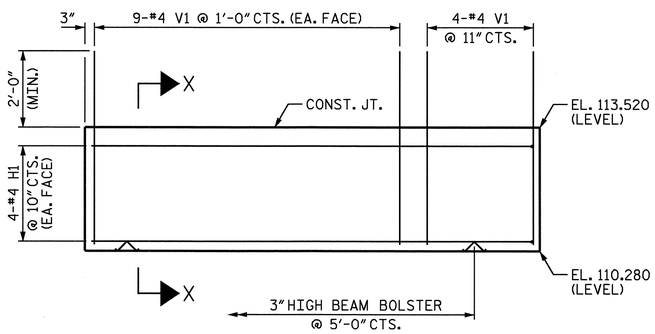

ELEVATION OF WING (W1)
STAGE I

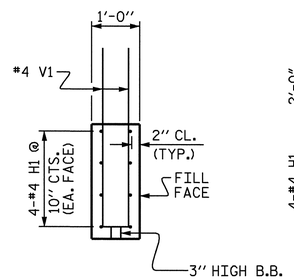

SECTION Y-Y

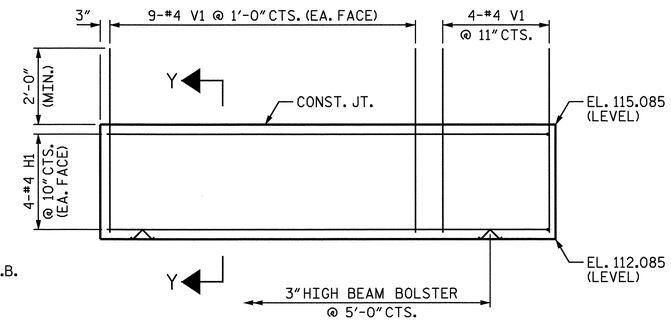

ELEVATION OF WING (W2)
STAGE II

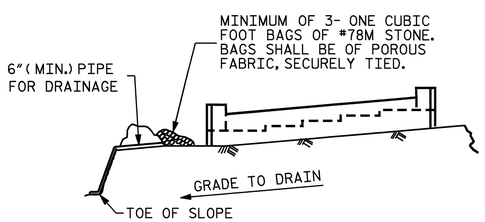

BAGGED STONE AND PIPE SHALL BE PLACED IMMEDIATELY AFTER COMPLETION OF END BENT EXCAVATION. PIPE MAY BE EITHER CONCRETE, CORRUGATED STEEL, CORRUGATED ALUMINUM ALLOY, OR CORRUGATED PLASTIC. PERFORATED PIPE WILL NOT BE ALLOWED.

BAGGED STONE SHALL REMAIN IN PLACE UNTIL THE ENGINEER DIRECTS THAT IT BE REMOVED. THE CONTRACTOR SHALL REMOVE AND DISPOSE OF SILT ACCUMULATIONS AT BAGGED STONE WHEN SO DIRECTED BY THE ENGINEER. BAGS SHALL BE REMOVED AND REPLACED WHENEVER THE ENGINEER DETERMINES THAT THEY HAVE DETERIORATED AND LOST THEIR EFFECTIVENESS.

NO SEPARATE PAYMENT WILL BE MADE FOR THIS WORK AND THE ENTIRE COST OF THIS WORK SHALL BE INCLUDED IN THE UNIT CONTRACT PRICE BID FOR THE SEVERAL PAY ITEMS.

TEMPORARY DRAINAGE AT END BENT

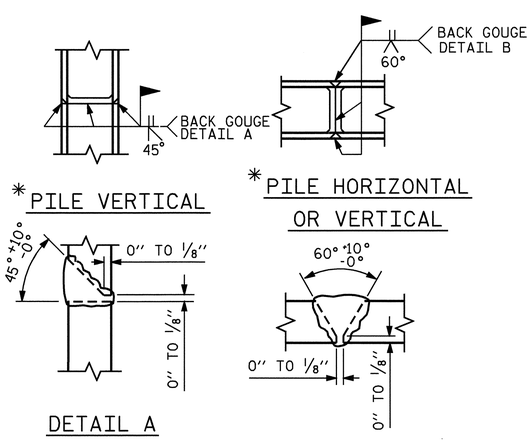

*POSITION OF PILE DURING WELDING.

PILE SPLICE DETAILS

BILL OF MATERIAL
END BENT 1

STAGE I						STAGE II					
BAR	NO.	SIZE	TYPE	LENGTH	WEIGHT	BAR	NO.	SIZE	TYPE	LENGTH	WEIGHT
B1	8	#10	1	50'-2"	1727	B4	11	#4	STR	2'-11"	21
B2	4	#5	STR	48'-10"	204	B5	8	#10	1	42'-9"	1472
B3	8	#4	STR	26'-4"	141	B6	4	#5	STR	42'-5"	177
B4	12	#4	STR	2'-11"	23	B7	8	#4	STR	22'-5"	120
H1	8	#4	2	12'-2"	65	H1	8	#4	2	12'-2"	65
S1	46	#4	3	9'-0"	277	S1	40	#4	3	9'-0"	240
S2	46	#4	4	3'-8"	113	S2	40	#4	4	3'-8"	98
S3	24	#4	5	6'-6"	104	S3	21	#4	5	6'-6"	91
V1	94	#4	STR	5'-0"	314	V1	86	#4	STR	5'-0"	287
REINFORCING STEEL = 2968 LBS						REINFORCING STEEL = 2571 LBS					
CLASS A CONCRETE QUANTITIES: CAP & WINGS 19.2 C.Y.						CLASS A CONCRETE QUANTITIES: CAP & WINGS 17.1 C.Y.					
HP 12 X 53 STEEL PILES: NO. 8 LIN. FT. 240						HP 12 X 53 STEEL PILES: NO. 7 LIN. FT. 210					

BAR TYPES

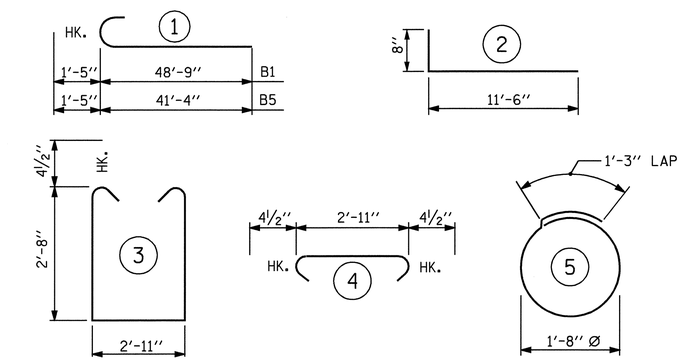

ALL BAR DIMENSIONS ARE OUT TO OUT

TOTAL BILL OF MATERIAL

REINFORCING STEEL	= 5539 LBS.
CLASS A CONCRETE	= 36.3 C.Y.
HP 12 X 53 STEEL PILES: NO. 15	LIN. FT. 450

PROJECT NO. U-2810A
CUMBERLAND COUNTY
STATION: 27+70.00 -L-

SHEET 3 OF 3

NORTH CAROLINA PROFESSIONAL SEAL 16301 ENGINEER TING HSIUNG FANG
2/12/09

STATE OF NORTH CAROLINA
DEPARTMENT OF TRANSPORTATION
RALEIGH

SUBSTRUCTURE

END BENT 1
(INTEGRAL)

REVISIONS						SHEET NO.
NO.	BY:	DATE:	NO.	BY:	DATE:	S-32
1			3			TOTAL SHEETS
2			4			83

DRAWN BY : E.C. LOCKLEAR DATE : 10-17-08
CHECKED BY : T.H. FANG DATE : 11-12-08

13-FEB-2009 14:27
R:\Structures\str1\Final Plans\U2810_sd_E*_01.dgn
sdombrowski

NOTES:

STIRRUPS IN CAP MAY BE SHIFTED AS NECESSARY TO CLEAR ANCHOR BOLTS.

GALVANIZE THE TOP 30 FEET OF EACH INTERIOR BENT PILE IN ACCORDANCE WITH SECTION 1076 OF THE STANDARD SPECIFICATIONS.

FOR PILE SPLICE DETAILS, SEE SHEET 2 OF 4.

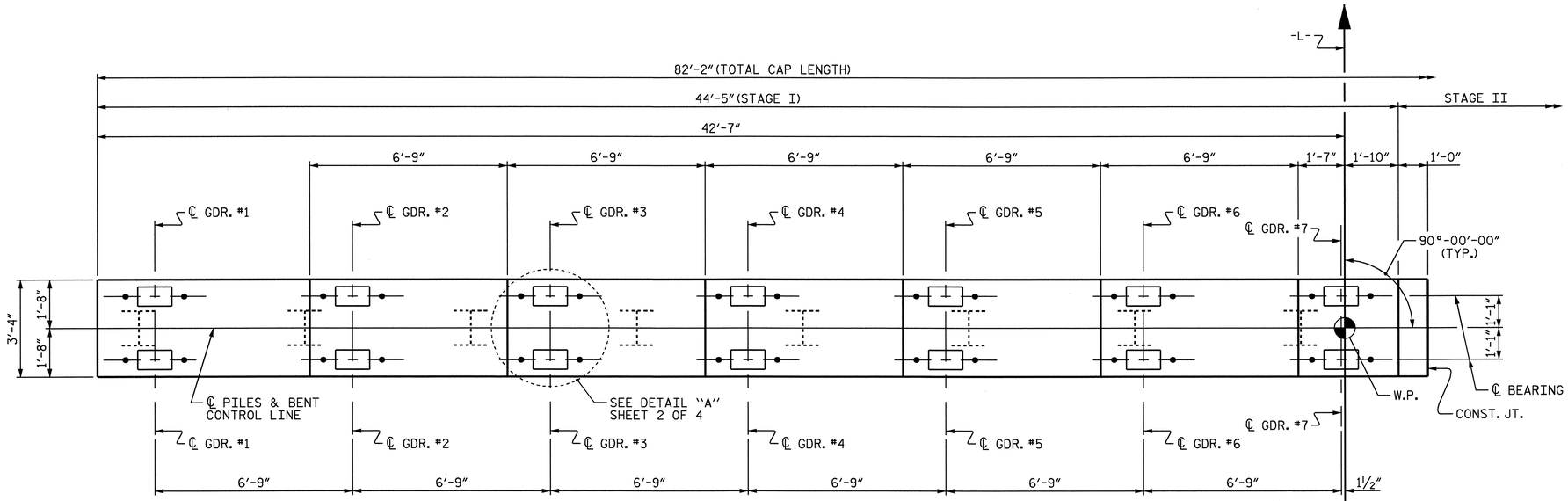

PLAN

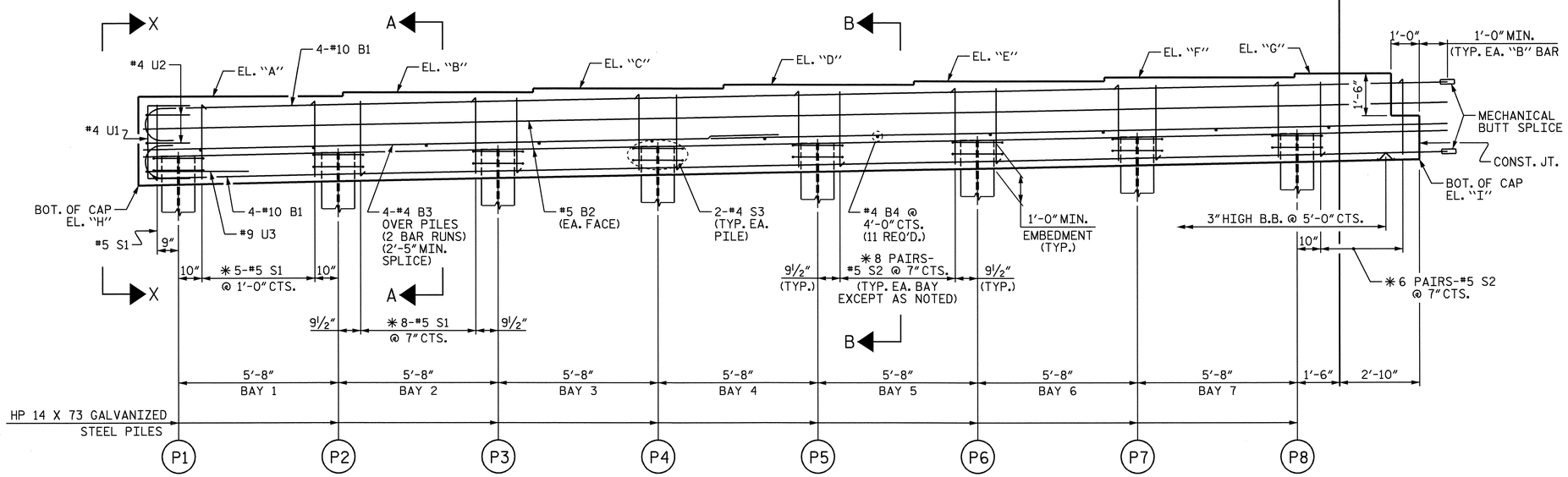

ELEVATION

✱ INVERT ALTERNATE STIRRUPS AS SHOWN.

SEAT ELEVATION			
ELEVATION	BENT 1	BENT 2	BENT 3
"A"	113.549	113.501	113.253
"B"	113.684	113.636	113.388
"C"	113.819	113.771	113.523
"D"	113.954	113.906	113.658
"E"	114.089	114.041	113.793
"F"	114.224	114.176	113.928
"G"	114.359	114.311	114.063
"H"	110.403	110.355	110.107
"I"	111.312	111.264	111.016

TOP OF PILE ELEVATION			
PILE No.	BENT 1	BENT 2	BENT 3
P1	111.441	111.393	111.145
P2	111.555	111.507	111.259
P3	111.668	111.620	111.372
P4	111.782	111.734	111.486
P5	111.895	111.847	111.599
P6	112.008	111.960	111.712
P7	112.122	112.074	111.826
P8	112.235	112.187	111.939

PROJECT NO. U-2810A
CUMBERLAND COUNTY
STATION: 27+70.00 -L-

SHEET 1 OF 4

NORTH CAROLINA PROFESSIONAL SEAL 16301 ENGINEER TING HSILING FANG
10/19/09

STATE OF NORTH CAROLINA
DEPARTMENT OF TRANSPORTATION
RALEIGH

SUBSTRUCTURE

BENTS 1-3
STAGE I

REVISIONS						SHEET NO.
NO.	BY:	DATE:	NO.	BY:	DATE:	S-33
1			3			TOTAL SHEETS
2			4			83

DRAWN BY : E.C. LOCKLEAR DATE : 10-22-08
CHECKED BY : T.H. FANG DATE : 11-12-08

19-OCT-2009 09:09
z:\structures\str1\finalplans\u2810_sd_b*_01.dgn
ffang

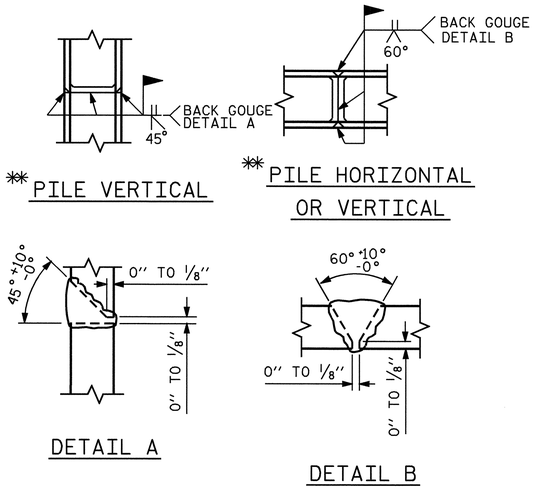

PILE SPLICE DETAILS

** POSITION OF PILE DURING WELDING.

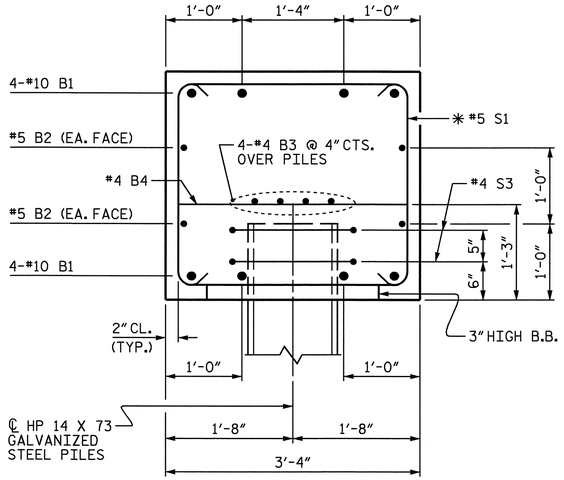

SECTION A-A

(SINGLE STIRRUP)
* INVERT ALTERNATE STIRRUPS

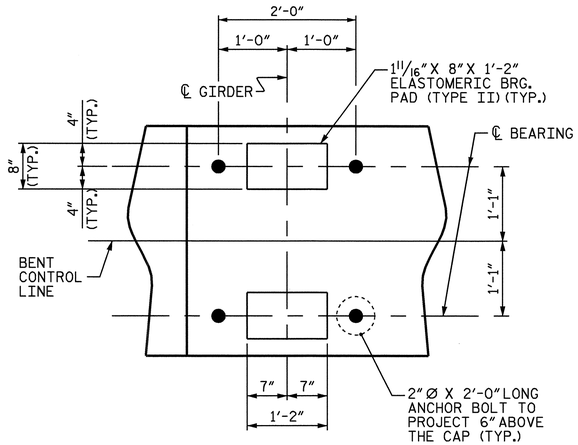

DETAIL "A"

(TYP. EA. GIRDER)

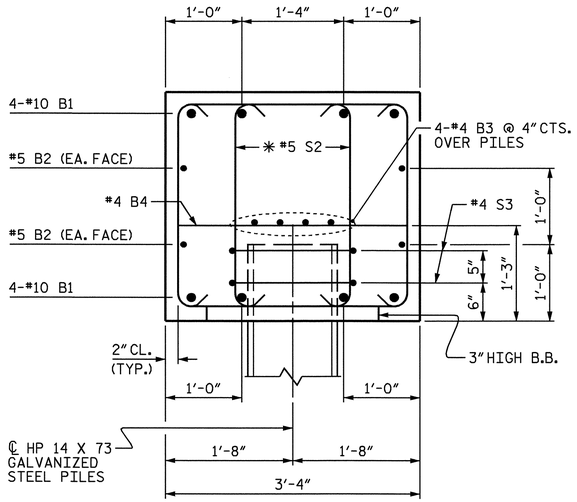

SECTION B-B

(DOUBLE STIRRUPS)
* INVERT ALTERNATE STIRRUPS

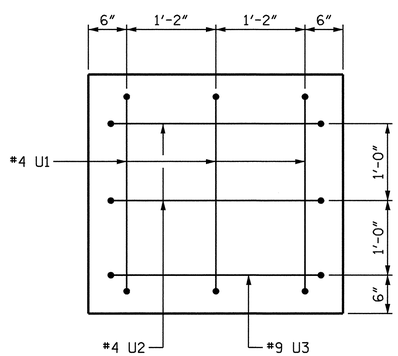

VIEW X-X

BILL OF MATERIAL

STAGE I

BENT 1						BENT 2						BENT 3					
BAR	NO.	SIZE	TYPE	LENGTH	WEIGHT	BAR	NO.	SIZE	TYPE	LENGTH	WEIGHT	BAR	NO.	SIZE	TYPE	LENGTH	WEIGHT
B1	8	#10	1	47'-7"	1638	B1	8	#10	1	47'-7"	1638	B1	8	#10	1	47'-7"	1638
B2	4	#5	STR	46'-3"	193	B2	4	#5	STR	46'-3"	193	B2	4	#5	STR	46'-3"	193
B3	8	#4	STR	24'-4"	130	B3	8	#4	STR	24'-3"	130	B3	8	#4	STR	24'-3"	130
B4	11	#4	STR	3'-0"	22	B4	11	#4	STR	3'-0"	22	B4	11	#4	STR	3'-0"	23
S1	14	#5	2	9'-2''	134	S1	14	#5	2	9'-2''	134	S1	14	#5	2	9'-2''	134
S2	92	#5	2	8'-6"	816	S2	92	#5	2	8'-6"	816	S2	92	#5	2	8'-6"	816
S3	16	#4	4	7'-7"	81	S3	16	#4	4	7'-7"	81	S3	16	#4	4	7'-7"	81
U1	3	#4	3	5'-6"	11	U1	3	#4	3	5'-6"	11	U1	3	#4	3	5'-6"	11
U2	2	#4	3	5'-10"	8	U2	2	#4	3	5'-10"	8	U2	2	#4	3	5'-10"	8
U3	1	#9	3	10'-2"	35	U3	1	#9	3	10'-2"	35	U3	1	#9	3	10'-2"	35
REINFORCING STEEL					3068 LBS.	REINFORCING STEEL					3068 LBS.	REINFORCING STEEL					3068 LBS.
CLASS A CONCRETE CAP					17.4 C.Y.	CLASS A CONCRETE CAP					17.4 C.Y.	CLASS A CONCRETE CAP					17.4 C.Y.
HP 14X73 GALVANIZED STEEL PILES NO. 8					320 LIN. FT.	HP 14X73 GALVANIZED STEEL PILES NO. 8					360 LIN. FT.	HP 14X73 GALVANIZED STEEL PILES NO. 8					400 LIN. FT.

BAR TYPES

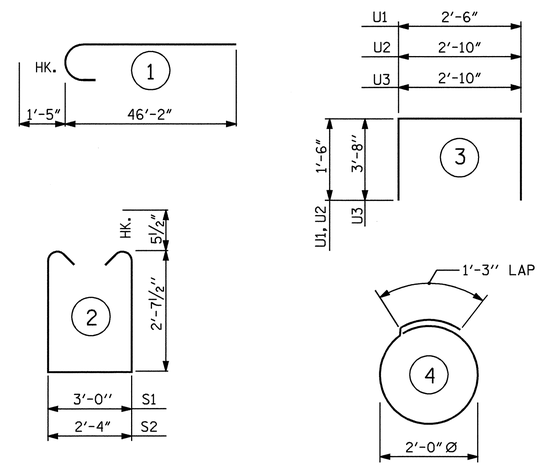

ALL BAR DIMENSIONS ARE OUT TO OUT.

PROJECT NO. U-2810A
CUMBERLAND COUNTY
STATION: 27+70.00 -L-

SHEET 2 OF 4

STATE OF NORTH CAROLINA
DEPARTMENT OF TRANSPORTATION
RALEIGH

SUBSTRUCTURE

BENTS 1-3
STAGE I

NORTH CAROLINA PROFESSIONAL SEAL 16301 ENGINEER TING HSIUNG FANG
2/13/09

REVISIONS						SHEET NO.
NO.	BY:	DATE:	NO.	BY:	DATE:	S-34
1			3			TOTAL SHEETS
2			4			83

DRAWN BY : E.C. LOCKLEAR DATE : 10-22-08
CHECKED BY : T.H. FANG DATE : 11-12-08

13-FEB-2009 14:27
R:\Structures\str1\Final Plans\U2810_sd_B*_01.dgn
sdombrowski

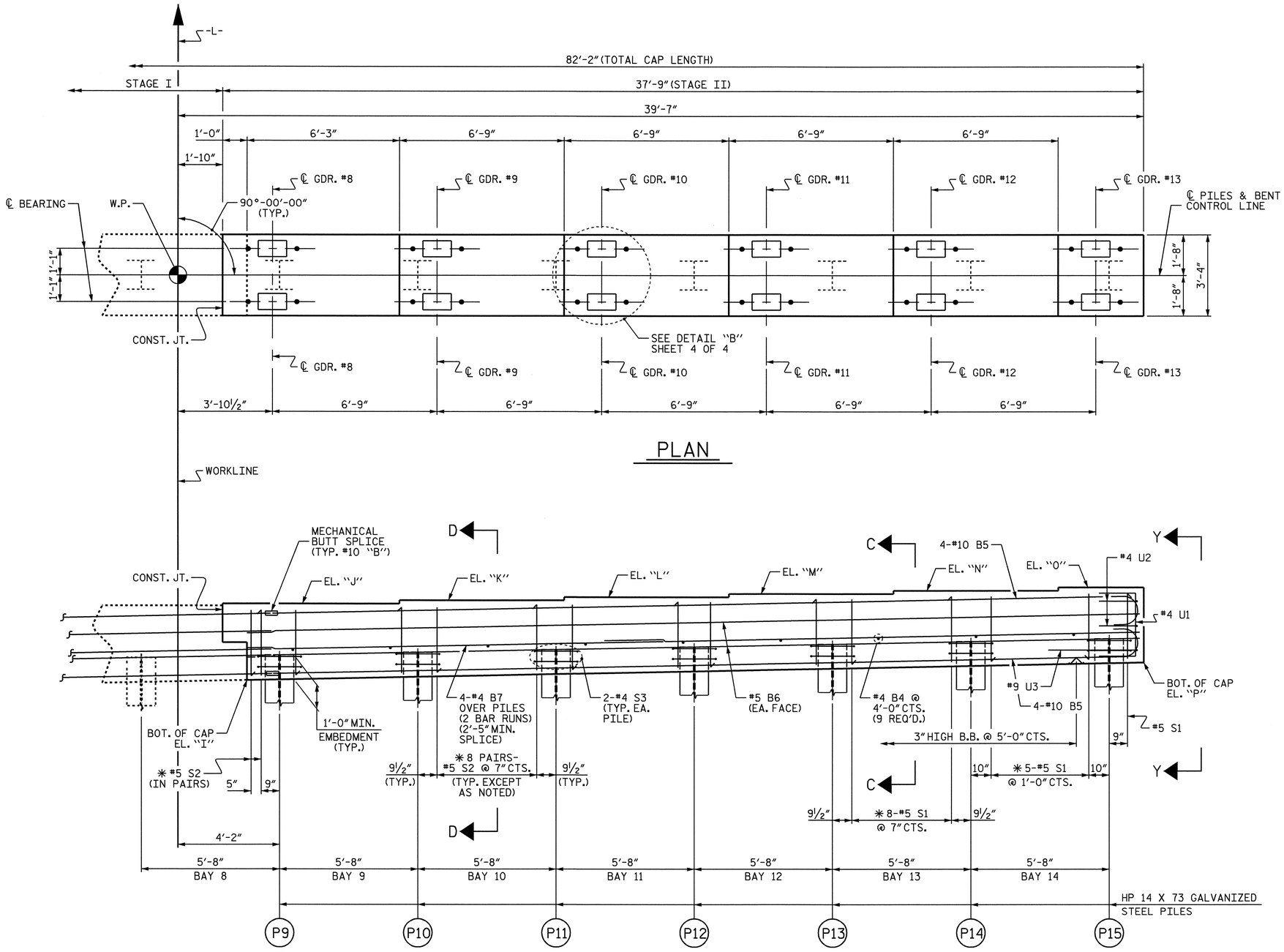

PLAN

ELEVATION

✱ INVERT ALTERNATE STIRRUPS AS SHOWN.

SEAT ELEVATION			
ELEVATION	BENT 1	BENT 2	BENT 3
"I"	111.312	111.264	111.016
"J"	114.439	114.391	114.143
"K"	114.574	114.526	114.278
"L"	114.709	114.661	114.413
"M"	114.844	114.796	114.548
"N"	114.979	114.931	114.683
"O"	115.114	115.066	114.818
"P"	112.046	111.998	111.750

TOP OF PILE ELEVATION			
PILE No.	BENT 1	BENT 2	BENT 3
P9	112.349	112.301	112.053
P10	112.462	112.414	112.166
P11	112.576	112.528	112.280
P12	112.689	112.641	112.393
P13	112.802	112.754	112.506
P14	112.916	112.868	112.620
P15	113.029	112.981	112.733

PROJECT NO. U-2810A
CUMBERLAND COUNTY
STATION: 27+70.00 -L-

SHEET 3 OF 4

STATE OF NORTH CAROLINA
DEPARTMENT OF TRANSPORTATION
RALEIGH

SUBSTRUCTURE

BENTS 1-3
STAGE II

NORTH CAROLINA PROFESSIONAL SEAL 16301 ENGINEER TING HSIUNG FANG
2/13/09

REVISIONS						
NO.	BY:	DATE:	NO.	BY:	DATE:	SHEET NO. S-35
1			3			TOTAL SHEETS 83
2			4			

DRAWN BY : E.C. LOCKLEAR DATE : 10-22-08
CHECKED BY : T.H. FANG DATE : 11-12-08

13-FEB-2009 14:27
R:\Structures\str1\Final Plans\U2810_sd_B*_01.dgn
sdombrowski

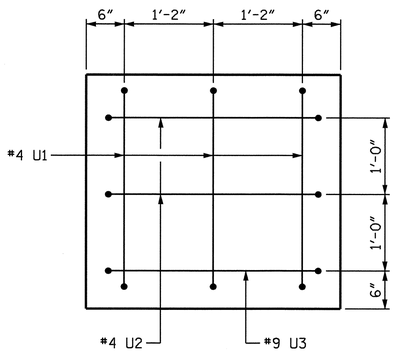

SECTION Y-Y

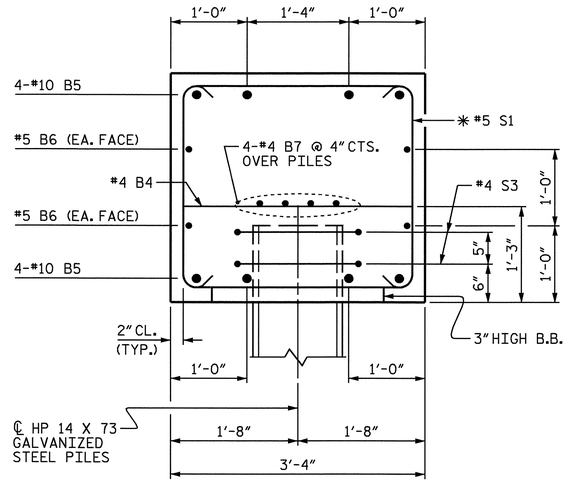

SECTION C-C

(SINGLE STIRRUP)
✱ INVERT ALTERNATE STIRRUPS

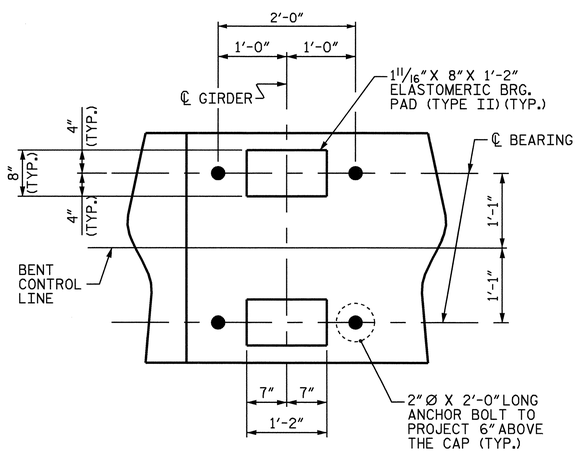

DETAIL "B"

(TYP. EA. GIRDER)

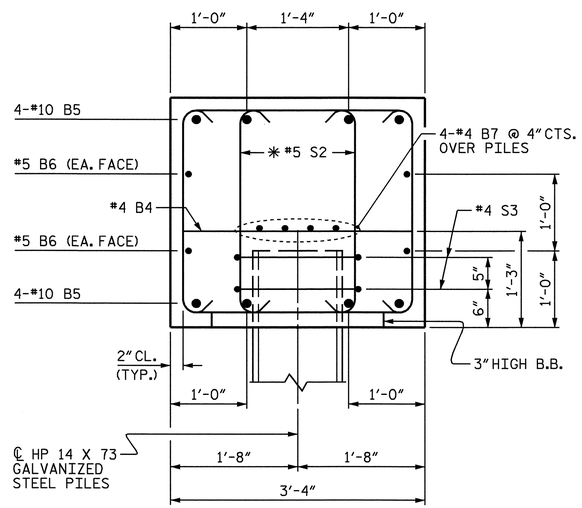

SECTION D-D

(DOUBLE STIRRUPS)
✱ INVERT ALTERNATE STIRRUPS

BILL OF MATERIAL

STAGE II

BENT 1

BAR	NO.	SIZE	TYPE	LENGTH	WEIGHT
B4	9	#4	STR	3'-0"	18
B5	8	#10	1	36'-11"	1271
B6	4	#5	STR	36'-7"	153
B7	8	#4	STR	19'-6"	104
S1	14	#5	2	9'-2"	134
S2	68	#5	2	8'-6"	603
S3	14	#4	4	7'-7"	71
U1	3	#4	3	5'-6"	11
U2	2	#4	3	5'-10"	8
U3	1	#9	3	10'-2"	35

REINFORCING STEEL 2408 LBS.

CLASS A CONCRETE
CAP 14.4 C.Y.

HP 14X73 GALVANIZED STEEL PILES
NO. 7 280 LIN. FT.

BENT 2

BAR	NO.	SIZE	TYPE	LENGTH	WEIGHT
B4	9	#4	STR	3'-0"	18
B5	8	#10	1	36'-11"	1271
B6	4	#5	STR	36'-7"	153
B7	8	#4	STR	19'-6"	104
S1	14	#5	2	9'-2"	134
S2	68	#5	2	8'-6"	603
S3	14	#4	4	7'-7"	71
U1	3	#4	3	5'-6"	11
U2	2	#4	3	5'-10"	8
U3	1	#9	3	10'-2"	35

REINFORCING STEEL 2408 LBS.

CLASS A CONCRETE
CAP 14.4 C.Y.

HP 14X73 GALVANIZED STEEL PILES
NO. 7 315 LIN. FT.

BENT 3

BAR	NO.	SIZE	TYPE	LENGTH	WEIGHT
B4	9	#4	STR	3'-0"	18
B5	8	#10	1	36'-11"	1271
B6	4	#5	STR	36'-7"	153
B7	8	#4	STR	19'-6"	104
S1	14	#5	2	9'-2"	134
S2	68	#5	2	8'-6"	603
S3	14	#4	4	7'-7"	71
U1	3	#4	3	5'-6"	11
U2	2	#4	3	5'-10"	8
U3	1	#9	3	10'-2"	35

REINFORCING STEEL 2408 LBS.

CLASS A CONCRETE
CAP 14.4 C.Y.

HP 14X73 GALVANIZED STEEL PILES
NO. 7 350 LIN. FT.

BAR TYPES

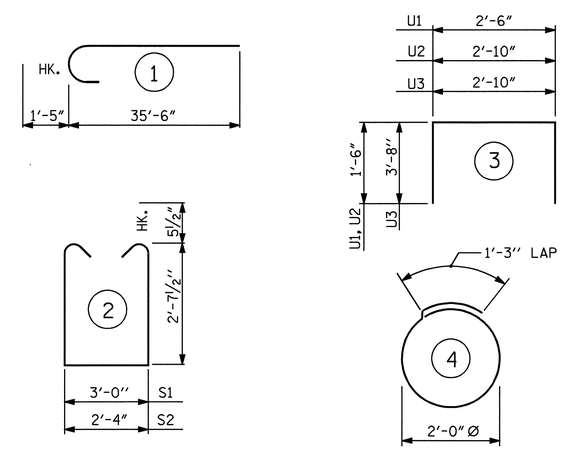

ALL BAR DIMENSIONS ARE OUT TO OUT.

PROJECT NO. U-2810A
CUMBERLAND COUNTY
STATION: 27+70.00 -L-

SHEET 4 OF 4

STATE OF NORTH CAROLINA
DEPARTMENT OF TRANSPORTATION
RALEIGH

SUBSTRUCTURE

BENTS 1-3
STAGE II

NORTH CAROLINA PROFESSIONAL SEAL 16301 ENGINEER TING HSILING FANG
2/13/09

REVISIONS							
NO.	BY:	DATE:	NO.	BY:	DATE:	SHEET NO.	S-36
1			3			TOTAL SHEETS	83
2			4				

DRAWN BY : E.C. LOCKLEAR DATE : 10-22-08
CHECKED BY : T.H. FANG DATE : 11-12-08

13-FEB-2009 14:27
R:\Structures\str1\Final Plans\U2810_sd_B*_01.dgn
sdombrowski

NOTES

SEE SUPERSTRUCTURE SHEETS FOR UPPER PART OF INTEGRAL END BENT DETAILS.

FOR PILE SPLICE DETAILS, SEE SHEET 3 OF 3.

THE CONTRACTOR SHALL PROVIDE FOR INSTALLATION OF THE 4"DIAMETER DRAIN PIPE THROUGH THE WING WALL AS REQUIRED FOR REINFORCED BRIDGE APPROACH FILLS, SEE THE ROADWAY PLANS. REINFORCING STEEL IN THE WING WALL MAY BE SHIFTED AS NECESSARY TO CLEAR THE DRAIN PIPE.

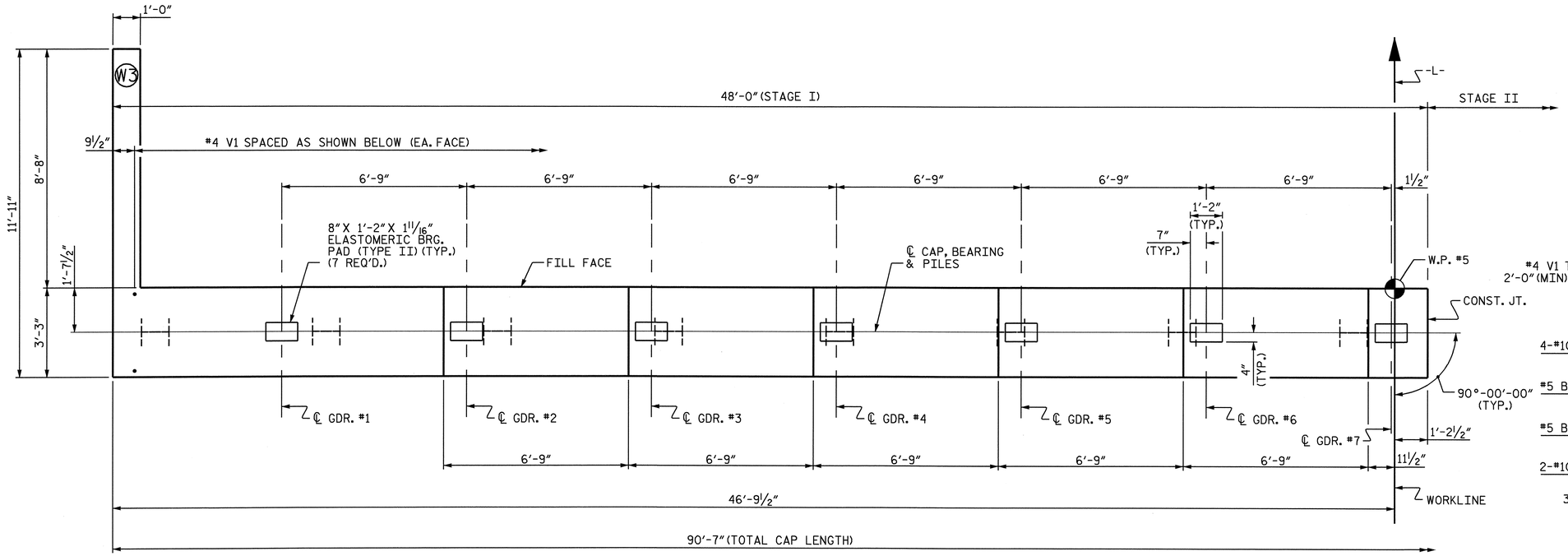

PLAN

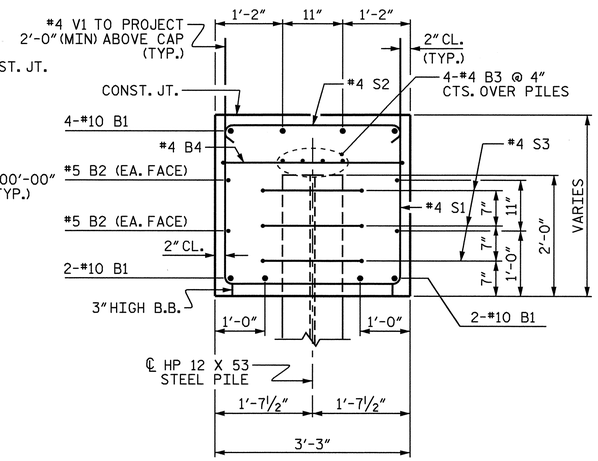

SECTION A-A

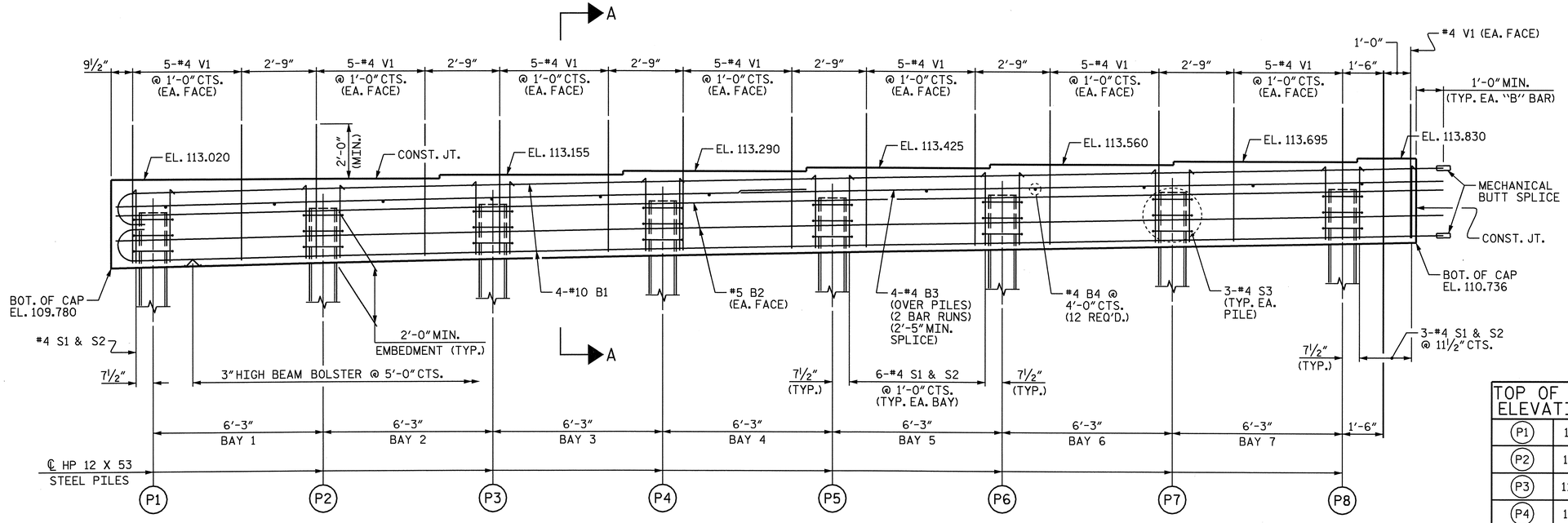

ELEVATION

LEFT WING NOT SHOWN FOR CLARITY.

TOP OF PILE ELEVATIONS	
P1	111.821
P2	111.945
P3	112.070
P4	112.194
P5	112.319
P6	112.443
P7	112.568
P8	112.692

NORTH CAROLINA PROFESSIONAL SEAL 16301 ENGINEER TING HSILING FANG
1/15/09

PROJECT NO. U-2810A

CUMBERLAND COUNTY

STATION: 27+70.00 -L-

SHEET 1 OF 3

STATE OF NORTH CAROLINA
DEPARTMENT OF TRANSPORTATION
RALEIGH

SUBSTRUCTURE

END BENT 2 (INTEGRAL)

STAGE I

REVISIONS						SHEET NO.
NO.	BY:	DATE:	NO.	BY:	DATE:	S-37
1			3			TOTAL SHEETS
2			4			83

DRAWN BY : E.C. LOCKLEAR DATE : 10-08
CHECKED BY : T.H. FANG DATE : 11-08

15-JAN-2009 10:08
R:\Structures\str1\Final Plans\U2810_sd_E*_01.dgn
sdombrowski

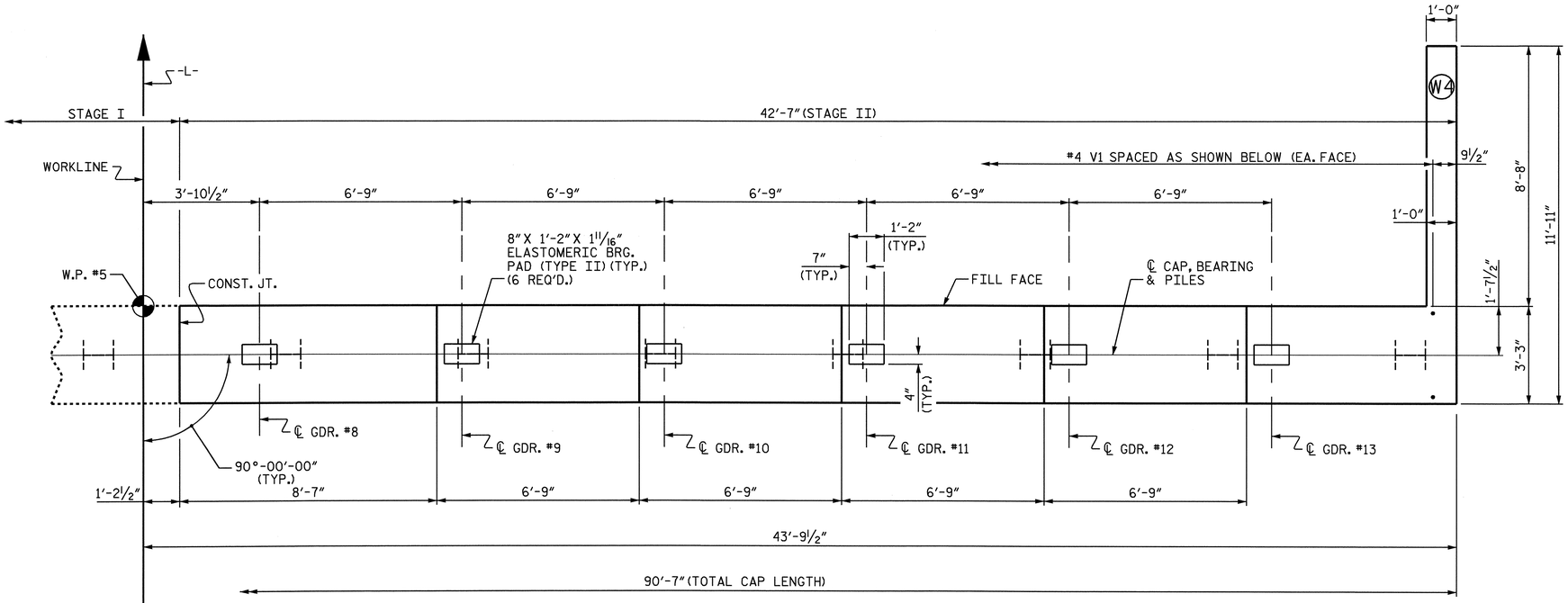

PLAN

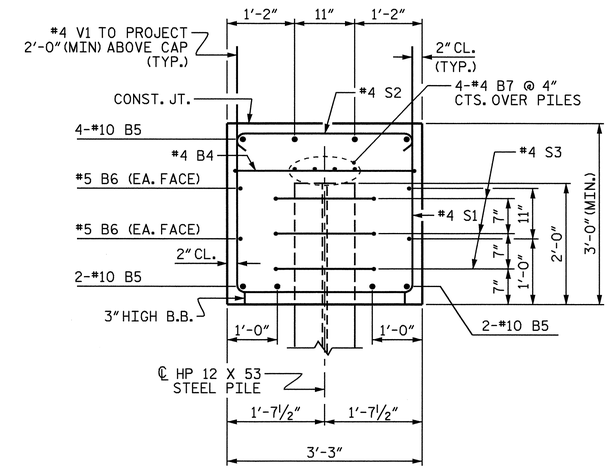

SECTION B-B

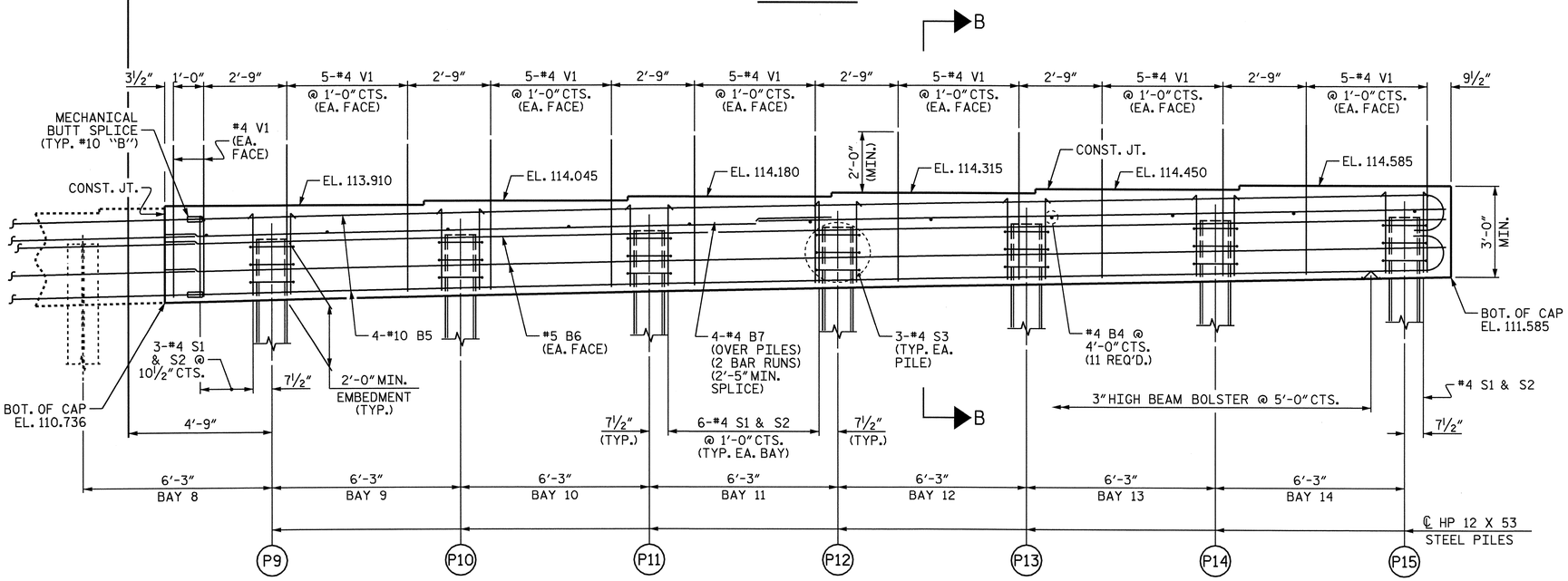

ELEVATION

RIGHT WING NOT SHOWN FOR CLARITY.

TOP OF PILE ELEVATIONS	
P9	112.817
P10	112.941
P11	113.066
P12	113.190
P13	113.314
P14	113.439
P15	113.563

PROJECT NO. U-2810A

CUMBERLAND COUNTY

STATION: 27+70.00 -L-

SHEET 2 OF 3

STATE OF NORTH CAROLINA
DEPARTMENT OF TRANSPORTATION
RALEIGH

SUBSTRUCTURE

END BENT 2 (INTEGRAL)

STAGE II

NORTH CAROLINA PROFESSIONAL SEAL 16301 ENGINEER TING HSIUNG FANG

1/15/09

REVISIONS						SHEET NO.
NO.	BY:	DATE:	NO.	BY:	DATE:	S-38
1			3			TOTAL SHEETS
2			4			83

DRAWN BY : E.C. LOCKLEAR DATE : 10-08

CHECKED BY : T.H. FANG DATE : 11-08

15-JAN-2009 10:08
R:\Structures\str1\Final Plans\U2810_sd_E*_01.dgn
sdombrowski

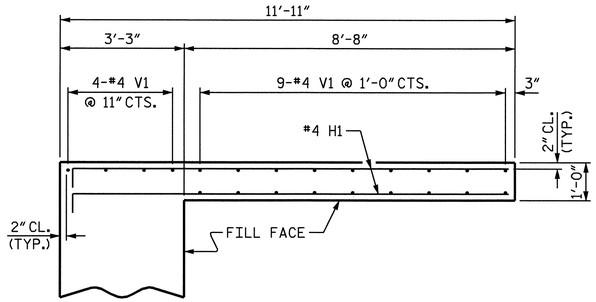

PLAN OF WING (W3)
STAGE I

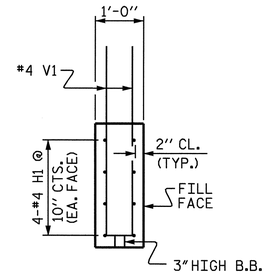

SECTION X-X

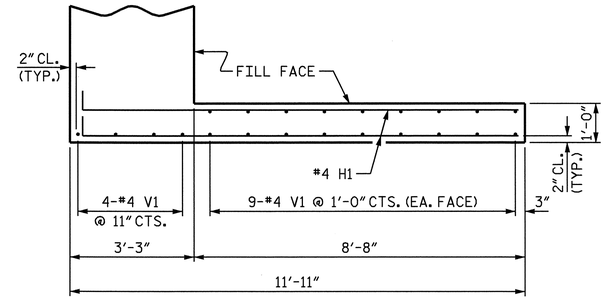

PLAN OF WING (W4)
STAGE II

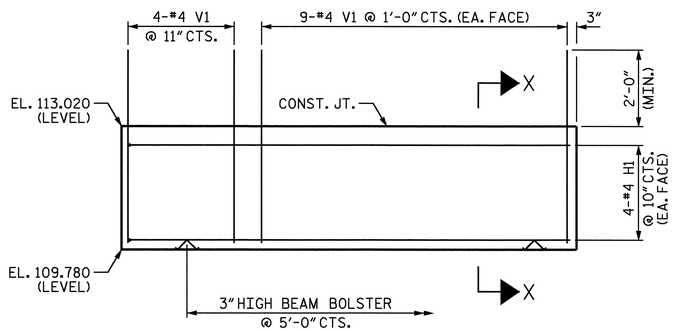

ELEVATION OF WING (W3)
STAGE I

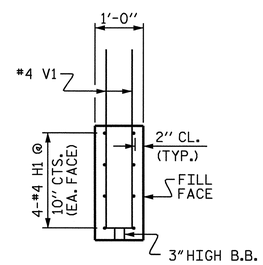

SECTION Y-Y

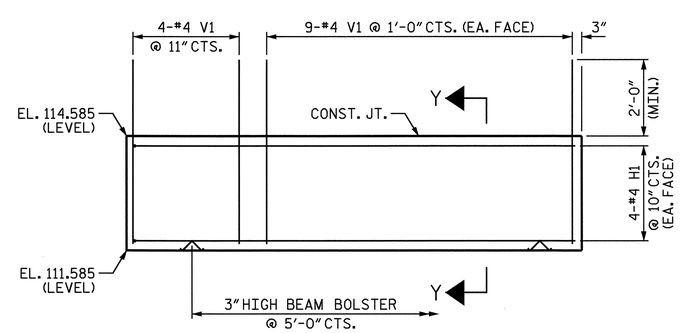

ELEVATION OF WING (W4)
STAGE II

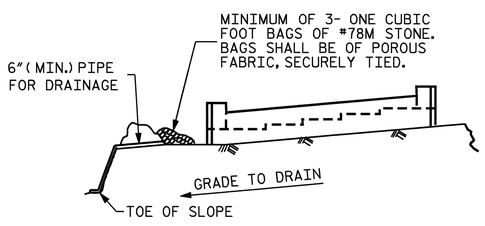

BAGGED STONE AND PIPE SHALL BE PLACED IMMEDIATELY AFTER COMPLETION OF END BENT EXCAVATION. PIPE MAY BE EITHER CONCRETE, CORRUGATED STEEL, CORRUGATED ALUMINUM ALLOY, OR CORRUGATED PLASTIC. PERFORATED PIPE WILL NOT BE ALLOWED.

BAGGED STONE SHALL REMAIN IN PLACE UNTIL THE ENGINEER DIRECTS THAT IT BE REMOVED. THE CONTRACTOR SHALL REMOVE AND DISPOSE OF SILT ACCUMULATIONS AT BAGGED STONE WHEN SO DIRECTED BY THE ENGINEER. BAGS SHALL BE REMOVED AND REPLACED WHENEVER THE ENGINEER DETERMINES THAT THEY HAVE DETERIORATED AND LOST THEIR EFFECTIVENESS.

NO SEPARATE PAYMENT WILL BE MADE FOR THIS WORK AND THE ENTIRE COST OF THIS WORK SHALL BE INCLUDED IN THE UNIT CONTRACT PRICE BID FOR THE SEVERAL PAY ITEMS.

TEMPORARY DRAINAGE AT END BENT

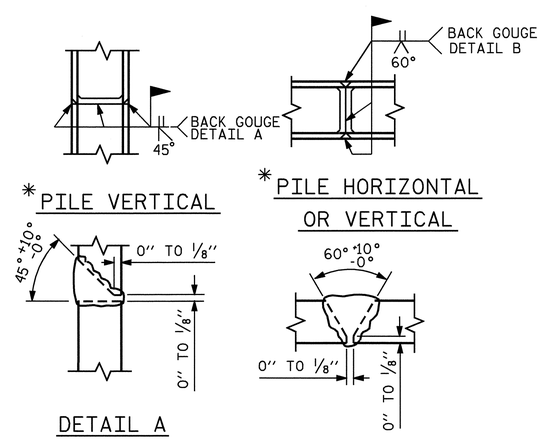

* POSITION OF PILE DURING WELDING.

PILE SPLICE DETAILS

BILL OF MATERIAL
END BENT 2

STAGE I						STAGE II					
BAR	NO.	SIZE	TYPE	LENGTH	WEIGHT	BAR	NO.	SIZE	TYPE	LENGTH	WEIGHT
B1	8	#10	1	50'-2"	1727	B4	11	#4	STR	2'-11"	21
B2	4	#5	STR	48'-10"	204	B5	8	#10	1	42'-9"	1472
B3	8	#4	STR	26'-4"	141	B6	4	#5	STR	42'-5"	177
B4	12	#4	STR	2'-11"	23	B7	8	#4	STR	22'-5"	120
H1	8	#4	2	12'-2"	65	H1	8	#4	2	12'-2"	65
S1	46	#4	3	9'-0"	277	S1	40	#4	3	9'-0"	240
S2	46	#4	4	3'-8"	113	S2	40	#4	4	3'-8"	98
S3	24	#4	5	6'-6"	104	S3	21	#4	5	6'-6"	91
V1	94	#4	STR	5'-0"	314	V1	86	#4	STR	5'-0"	287
REINFORCING STEEL = 2968 LBS						REINFORCING STEEL = 2571 LBS					
CLASS A CONCRETE QUANTITIES: CAP & WINGS 19.2 C.Y.						CLASS A CONCRETE QUANTITIES: CAP & WINGS 17.1 C.Y.					
HP 12 X 53 STEEL PILES: NO. 8 LIN. FT. 240						HP 12 X 53 STEEL PILES: NO. 7 LIN. FT. 210					

BAR TYPES

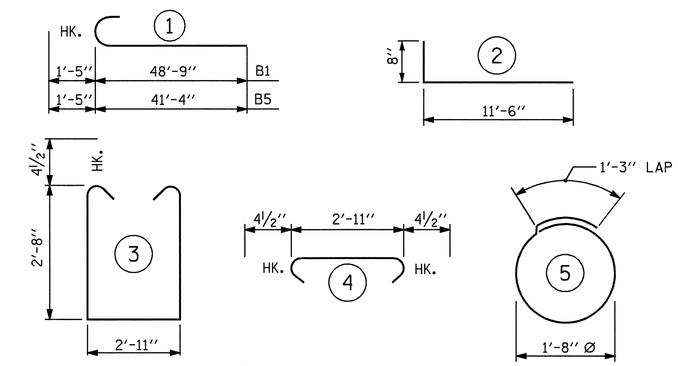

ALL BAR DIMENSIONS ARE OUT TO OUT

TOTAL BILL OF MATERIAL

REINFORCING STEEL	= 5539 LBS.
CLASS A CONCRETE	= 36.3 C.Y.
HP 12 X 53 STEEL PILES: NO. 15	LIN. FT. 450

PROJECT NO. U-2810A
CUMBERLAND COUNTY
STATION: 27+70.00 -L-

SHEET 3 OF 3

STATE OF NORTH CAROLINA
DEPARTMENT OF TRANSPORTATION
RALEIGH

SUBSTRUCTURE

END BENT 2
(INTEGRAL)

NORTH CAROLINA PROFESSIONAL SEAL 16301 ENGINEER HSIUNG FANG
2/13/09

REVISIONS						SHEET NO.
NO.	BY:	DATE:	NO.	BY:	DATE:	S-39
1			3			TOTAL SHEETS
2			4			83

DRAWN BY : E.C. LOCKLEAR DATE : 10-17-08
CHECKED BY : T.H. FANG DATE : 11-12-08

13-FEB-2009 14:27
R:\Structures\str1\Final Plans\U2810_sd_E*_01.dgn
sdombrowski

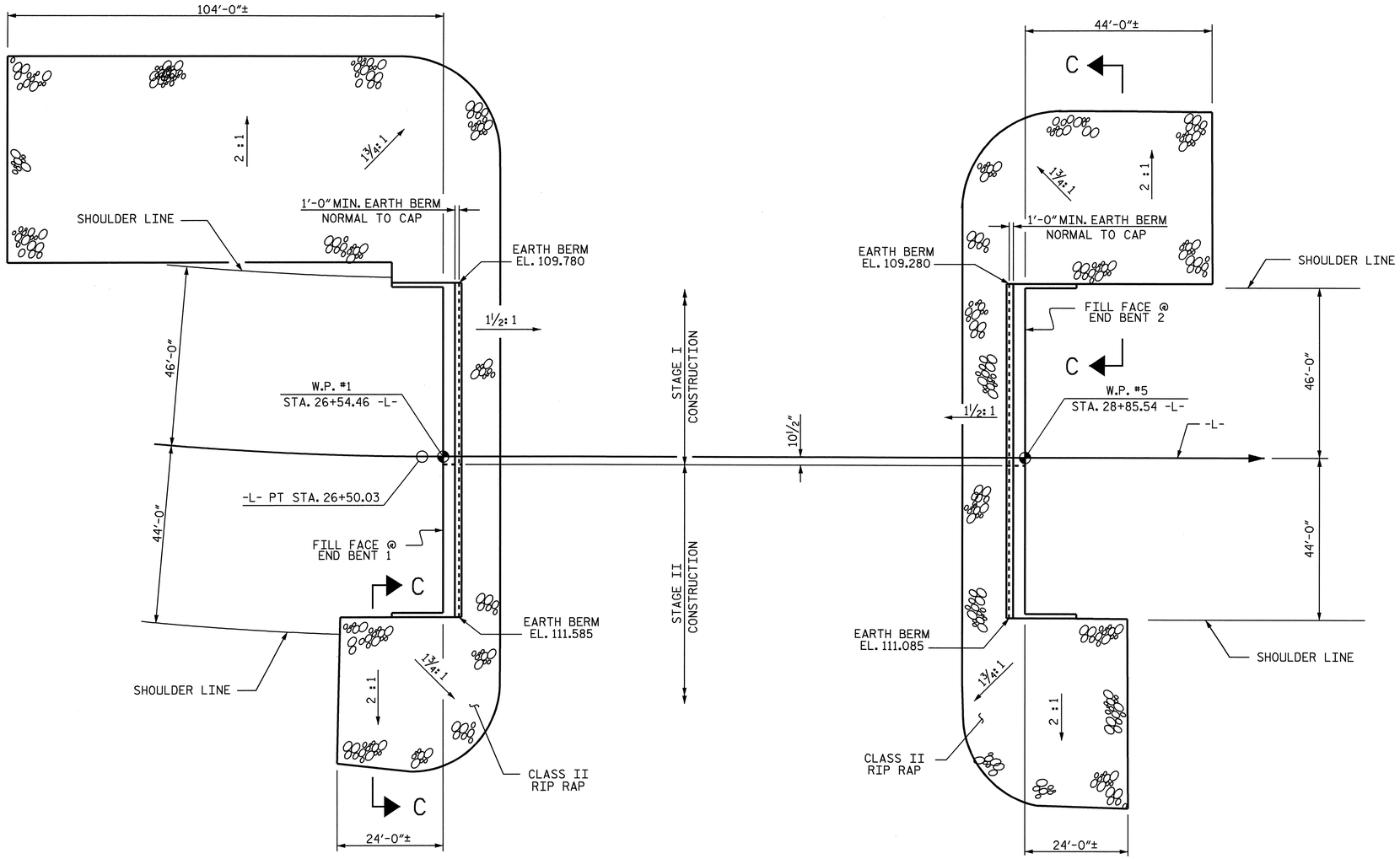

PLAN

ESTIMATED QUANTITIES						
BRIDGE @ STA. 27+70.00 -L-	RIP RAP CLASS II (TONS)			FILTER FABRIC FOR DRAINAGE (SQ. YARDS)		
	STAGE I	STAGE II	TOTAL	STAGE I	STAGE II	TOTAL
END BENT 1	550	190	740	610	210	820
END BENT 2	290	225	515	325	250	575
TOTAL			1255			1395

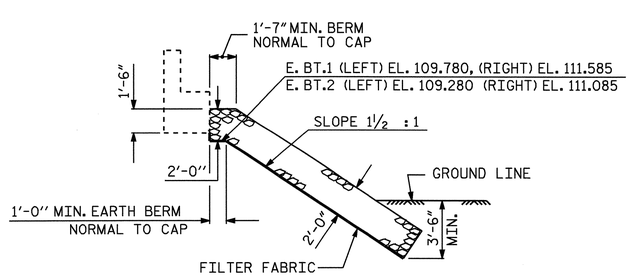

℄ SECTION

BERM RIP RAPPED

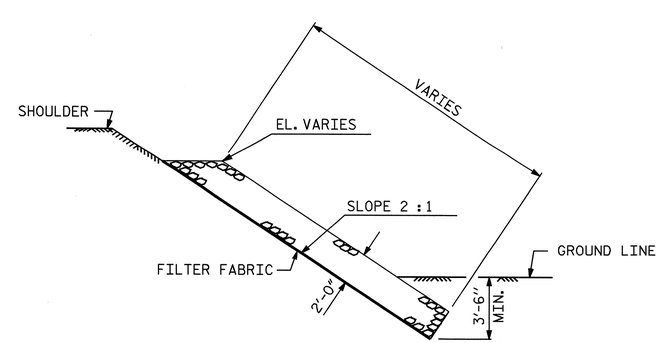

SECTION C-C

PROJECT NO. U-2810A

CUMBERLAND COUNTY

STATION: 27+70.00 -L-

STATE OF NORTH CAROLINA
DEPARTMENT OF TRANSPORTATION
RALEIGH

RIP RAP DETAILS

NORTH CAROLINA PROFESSIONAL SEAL 16301 ENGINEER TING HSIUNG FANG
1/15/09

REVISIONS						SHEET NO.
NO.	BY:	DATE:	NO.	BY:	DATE:	S-40
1			3			TOTAL SHEETS
2			4			83

DRAWN BY : HARISH SHAH DATE : 10/08
CHECKED BY : T. H. FANG DATE : 11/08

15-JAN-2009 10:08
R:\Structures\str1\Final Plans\u2810a-sd-rr_01.dgn
sdombrowski

STR #1

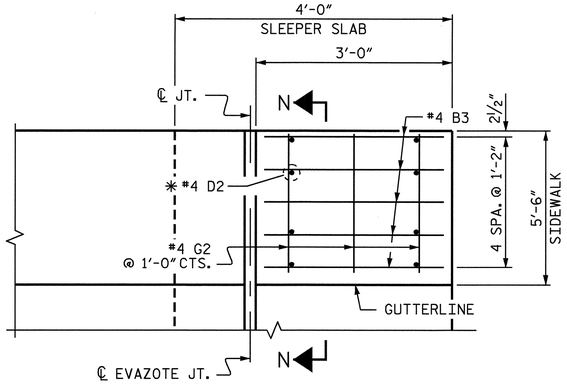

✱ THESE DOWELS ARE TO BE PLACED AFTER THE SAWING OF THE JOINT. THE HOLES SHALL BE DRILLED AND THE DOWELS GROUTED INTO PLACE.

PLAN

LEFT SIDE SHOWN, RIGHT SIDE SIMILAR.

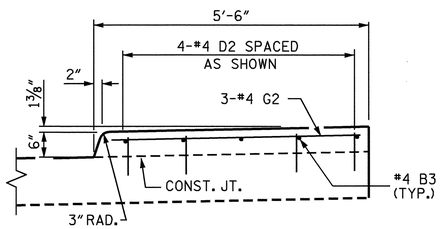

SECTION N-N

SIDEWALK DETAILS

NOTES

APPROACH SLAB SHALL NOT BE CONSTRUCTED PRIOR TO COMPLETION OF THE BRIDGE DECK.

FOR REINFORCED BRIDGE APPROACH FILL INCLUDING FABRIC, IMPERMEABLE GEOMEMBRANE, 4" Ø DRAINAGE PIPE, #78M STONE, AND SELECT MATERIAL, SEE ROADWAY PLANS.

AREA BETWEEN THE WINGWALL AND APPROACH SLAB SHALL BE GRADED TO DRAIN THE WATER AWAY FROM THE FILL FACE OF THE BRIDGE AND SHALL BE PAVED. SEE ROADWAY PLANS.

THE 6" COMP. A.B.C. SHALL BE FLUSH WITH THE SLEEPER SLAB AND SHALL EXTEND 1'-0" OUTSIDE OF EACH EDGE OF THE APPROACH SLAB.

THE CONTRACTOR MAY USE 4" TYPE B-25.0B ASPHALT CONCRETE BASE COURSE IN LIEU OF 6" COMP. A.B.C. IF THIS OPTION IS USED, THE BASE COURSE SHALL BE FLUSH WITH THE SLEEPER SLAB, AND THE WIDTH SHALL BE THE SAME AS THAT OF THE APPROACH SLAB.

THE CONTRACTOR MAY USE 5" CLASS "A" CONCRETE BASE IN LIEU OF 6" COMP. A.B.C. IF THIS OPTION IS USED, THE CONCRETE BASE SHALL BE FLUSH WITH THE SLEEPER SLAB, AND THE WIDTH SHALL BE THE SAME AS THAT OF THE APPROACH SLAB. THE CONCRETE SHALL BE FINISHED TO A SMOOTH SURFACE AND A LAYER OF 30 LB ROOFING FELT SHALL BE PLACED BETWEEN THE CONCRETE BASE AND THE APPROACH SLAB TO PREVENT BOND. THE APPROACH SLAB SHALL NOT BE CAST UNTIL THE CONCRETE BASE HAS REACHED AN AGE OF THREE CURING DAYS.

THE JOINT OPENING AT THE APPROACH SLAB/SLEEPER SLAB SHALL BE SAWED NO MORE THAN 12 HOURS AFTER THE APPROACH SLAB IS CAST. THE JOINT SHALL BE CLEANED OF ALL DEBRIS BEFORE THE SEALANT IS APPLIED. THE JOINT SEALER MATERIAL SHALL CONFORM TO THE REQUIREMENTS OF TYPE SL LOW MODULUS SILICONE SEALANT.

WITH EVAZOTE JOINT SEAL

FOR EVAZOTE JOINT SEALS, SEE SPECIAL PROVISIONS.

THE NOMINAL UNCOMPRESSED SEAL WIDTH OF THE EVAZOTE JOINT SEAL SHALL BE 2½".

FOR ELASTOMERIC CONCRETE, SEE SPECIAL PROVISIONS.

BAR TYPES

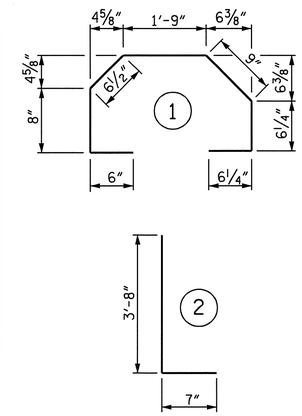

ALL BAR DIMENSIONS ARE OUT TO OUT

BILL OF MATERIAL

ONE APPROACH SLAB (2 REQ'D)

STAGE I						STAGE II					
BAR	NO.	SIZE	TYPE	LENGTH	WEIGHT	BAR	NO.	SIZE	TYPE	LENGTH	WEIGHT
✱ A1	62	#4	STR	23'-11"	991	✱ A3	60	#4	STR	20'-3"	839
A2	46	#4	STR	23'-6"	722	A4	46	#4	STR	20'-2"	620
✱ B1	87	#5	STR	21'-0"	1906	✱ B1	77	#5	STR	21'-0"	1687
B2	87	#6	STR	21'-6"	2809	B2	77	#6	STR	21'-6"	2487
✱ B3	8	#4	STR	2'-8"	14	✱ B3	5	#4	STR	2'-8"	9
✱ D2	8	#4	STR	1'-0"	5	✱ D2	8	#4	STR	1'-0"	5
✱ G2	3	#4	STR	5'-0"	10	✱ G2	3	#4	STR	5'-0"	10
✱ G3	3	#4	STR	3'-10"	8						
						✱ S4	39	#4	1	5'-3"	137
✱ S4	44	#4	1	5'-3"	154	S5	39	#5	2	4'-3"	173
S5	44	#5	2	4'-3"	195						
REINFORCING STEEL				LBS.	3726	REINFORCING STEEL				LBS.	3280
✱ EPOXY COATED REINFORCING STEEL				LBS.	3088	✱ EPOXY COATED REINFORCING STEEL				LBS.	2687
CLASS AA CONCRETE ✱✱						CLASS AA CONCRETE ✱✱					
POUR #1 - SLEEPER SLAB				C. Y.	5.8	POUR #1 - SLEEPER SLAB				C. Y.	5.2
POUR #2 - SLAB				C. Y.	33.7	POUR #2 - APPR. SLAB				C. Y.	31.5
TOTAL				C. Y.	39.5	TOTAL				C. Y.	36.7

✱✱ SIDEWALKS AND CONCRETE MEDIAN ON THE BRIDGE EXTENDING TO THE EXPANSION JOINT ON THE APPROACH SLABS ARE INCLUDED IN THE SUPERSTRUCTURE BILL OF MATERIAL AND PAID FOR AS PART OF THE REINFORCED CONCRETE DECK PAY ITEM. SIDEWALKS AND CONCRETE MEDIAN ON THE SLEEPER SLAB ONLY ARE INCLUDED IN THE APPROACH SLAB BILL OF MATERIAL AND PAID FOR AS PART OF THE BRIDGE APPROACH SLABS PAY ITEM.

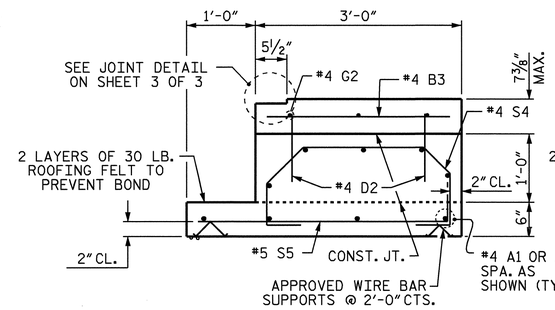

SECTION R-R

SHOWING SIDEWALK ON SLEEPER SLAB

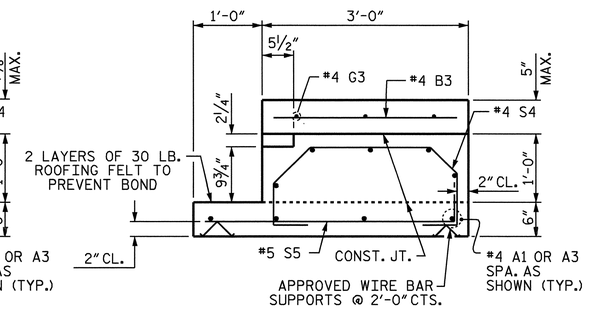

SECTION T-T

SHOWING CONCRETE MEDIAN ON SLEEPER SLAB

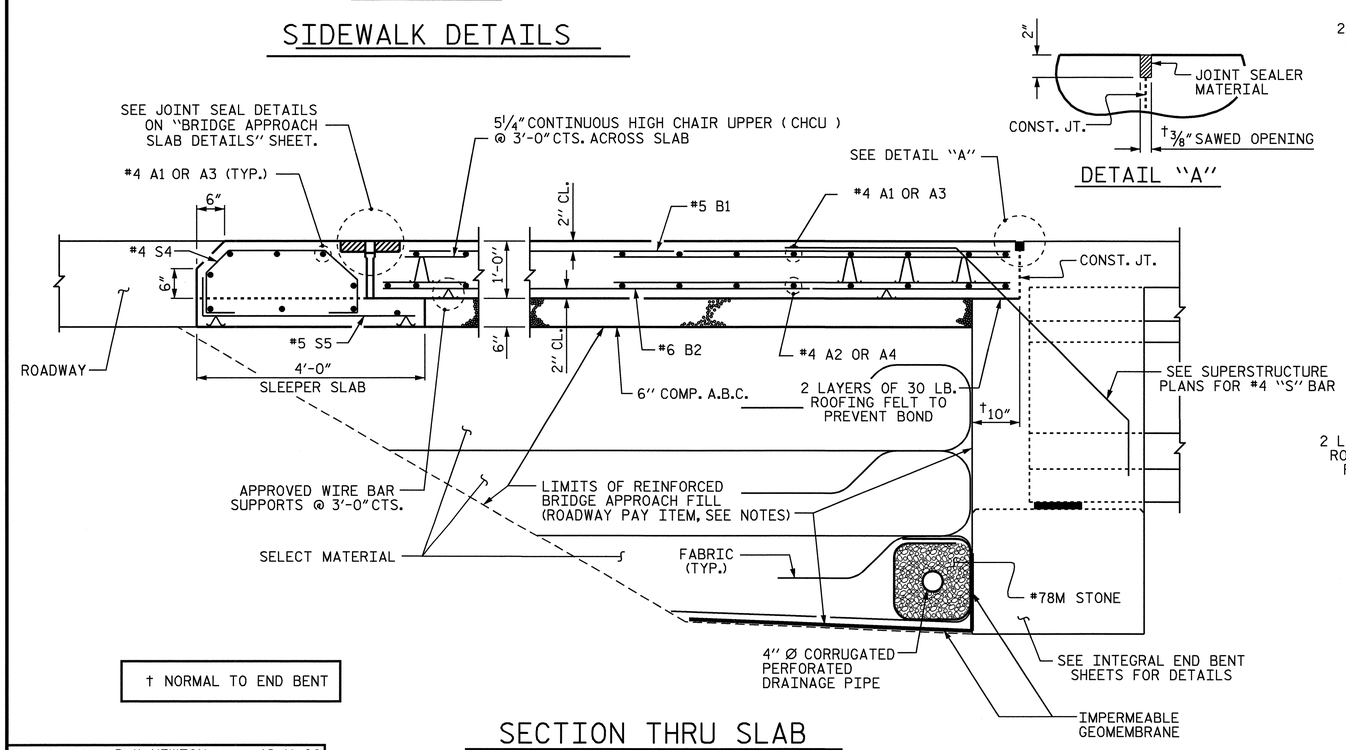

† NORMAL TO END BENT

SECTION THRU SLAB

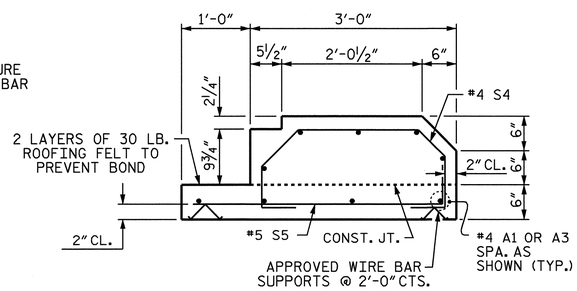

SECTION S-S

SHOWING SLEEPER SLAB

PROJECT NO. U-2810A

CUMBERLAND COUNTY

STATION: 27+70.00 -L-

SHEET 1 OF 3

STATE OF NORTH CAROLINA
DEPARTMENT OF TRANSPORTATION
RALEIGH

STANDARD

BRIDGE APPROACH SLAB
FOR INTEGRAL ABUTMENT

NORTH CAROLINA PROFESSIONAL SEAL 036448 ENGINEER P. KOREY NEWTON

2/16/2009

REVISIONS						SHEET NO.
NO.	BY:	DATE:	NO.	BY:	DATE:	S-41
1			3			TOTAL SHEETS
2			4			83

STR. #1

STD. NO. BAS11

ASSEMBLED BY : P. K. NEWTON	DATE : 12-11-08
CHECKED BY : T. H. FANG	DATE : 12-12-08
DRAWN BY : TLA 10/05	ADDED 5/1/06R KMM/GM
CHECKED BY : GM 5/06	

13-FEB-2009 14:27
R:\Structures\str1\Final Plans\U2810_sd_AS_01.dgn
sdombrowski

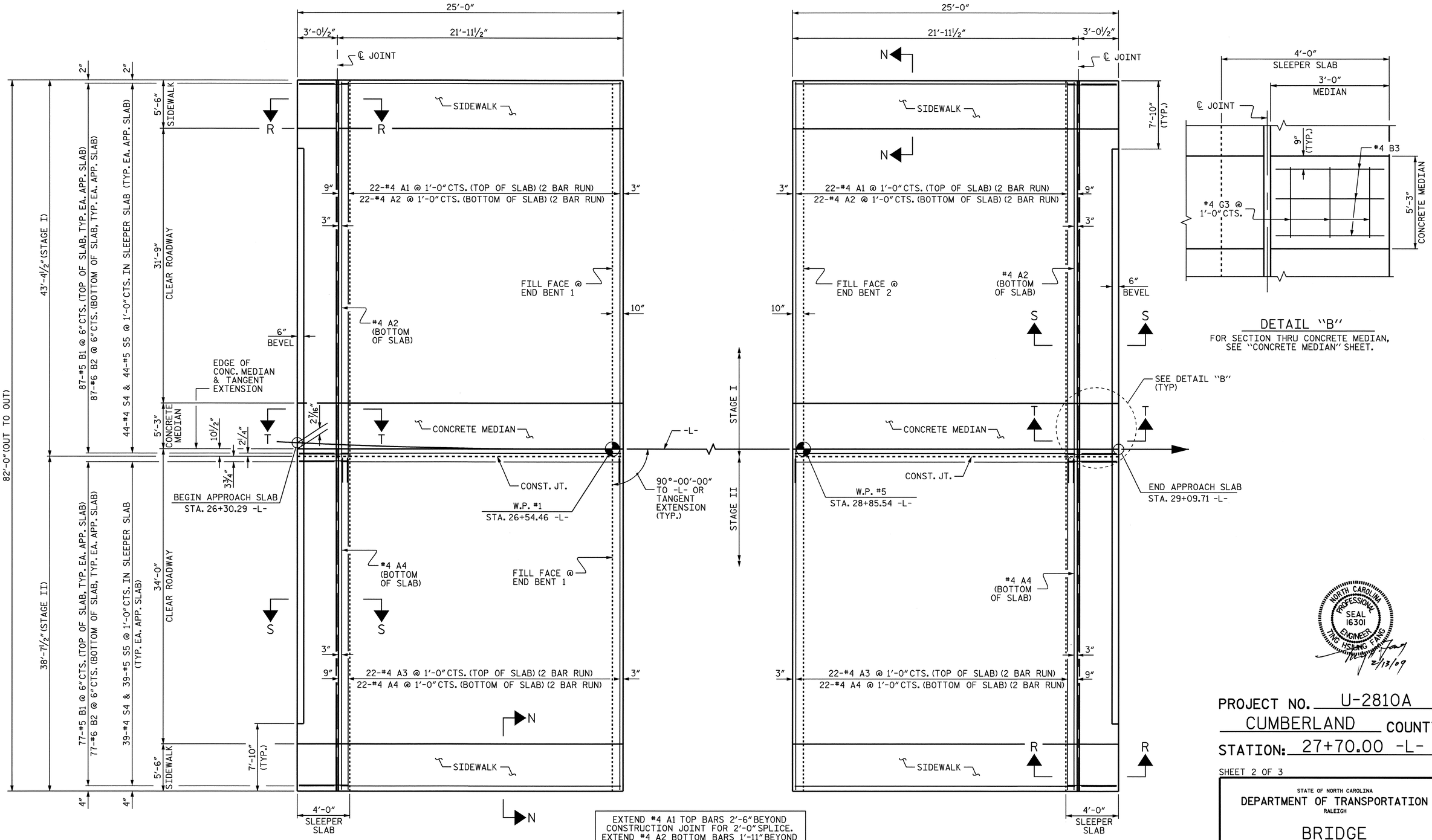

PLAN OF APPROACH SLABS

DIMENSIONS SHOWN ARE TYPICAL FOR BOTH APPROACH SLABS. REINFORCING STEELS IN SIDEWALKS AND SLEEPER SLABS ARE NOT SHOWN FOR CLARITY.

NORTH CAROLINA PROFESSIONAL SEAL 16301 ENGINEER TING HSIUNG FANG
2/13/09

PROJECT NO. U-2810A
CUMBERLAND COUNTY
STATION: 27+70.00 -L-

SHEET 2 OF 3

STATE OF NORTH CAROLINA
DEPARTMENT OF TRANSPORTATION
RALEIGH

BRIDGE APPROACH SLABS

FOR INTEGRAL ABUTMENT

REVISIONS						SHEET NO.
NO.	BY:	DATE:	NO.	BY:	DATE:	S-42
1			3			TOTAL SHEETS
2			4			83

DRAWN BY : E.C. LOCKLEAR DATE : 2-29-08
CHECKED BY : T. H. FANG DATE : 12-05-08

13-FEB-2009 14:27
R:\Structures\str1\Final Plans\U2810_sd_AS_01.dgn
sdombrowski

STR. #1

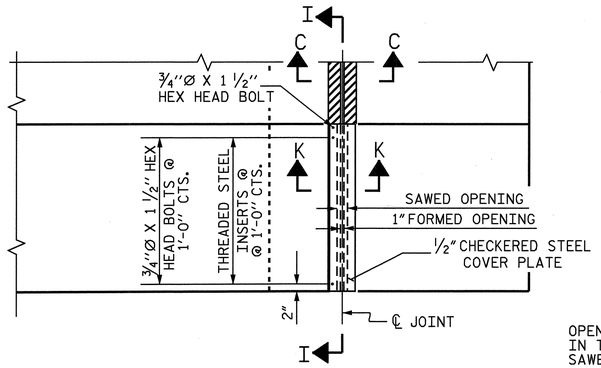

PLAN

APPROACH SLAB @ END BENT 2 SHOWN, APPROACH SLAB END BENT 1 SIMILAR

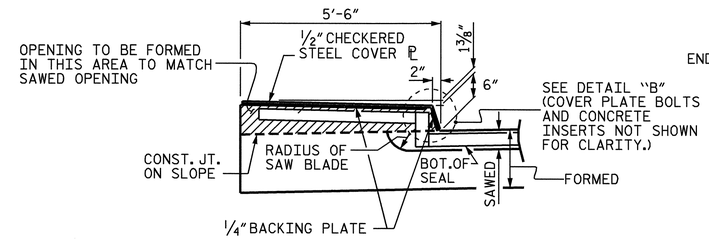

SECTION I-I

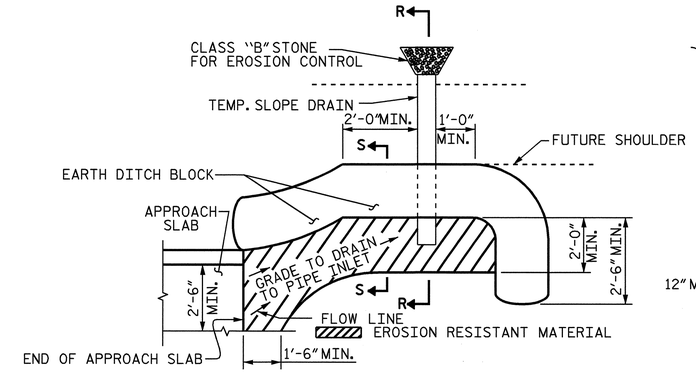

NOTE: IMMEDIATELY AFTER THE CONSTRUCTION OF THE APPROACH SLAB, THE CONTRACTOR SHALL PROVIDE TEMPORARY BERM AND SLOPE DRAIN. CONTRACTOR SHALL GRADE TO PIPE INLET AND PROVIDE EROSION RESISTANT MATERIAL AS SHOWN. THE EROSION RESISTANT MATERIAL SHALL BE EITHER 1) ASPHALT PLANT MIX, TYPE 1 OR TYPE 2, MIN. 2" DEPTH, 2) EROSION CONTROL MAT, OR 3) CONCRETE, AS DIRECTED BY THE ENGINEER. THE SLOPE DRAIN SHALL CONSIST OF A NON-PERFORATED TEMPORARY DRAINAGE PIPE, 12 INCHES IN DIAMETER.

PLAN VIEW

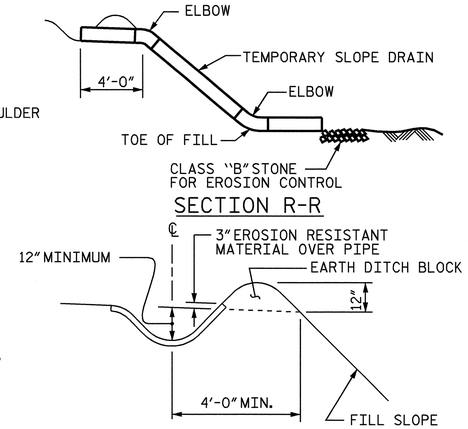

SECTION S-S

TEMPORARY BERM AND SLOPE DRAIN DETAILS

(TO BE USED WHEN SHOULDER BERM GUTTER IS REQUIRED)

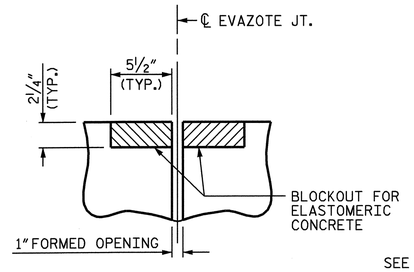

SECTION C-C

EVAZOTE JOINT SEAL (PRE-SAWED ELASTOMERIC CONCRETE DIMENSIONS)

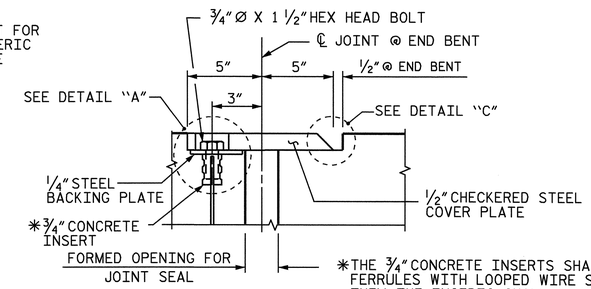

SECTION K-K

*THE 3/4" CONCRETE INSERTS SHALL BE CLOSED-END FERRULES WITH LOOPED WIRE STRUTS ATTACHED TO THEM. THE INSERTS SHALL CONFORM TO AASHTO M169, GRADE 12L14 AND SHALL HAVE A TENSILE WORKING LOAD CAPACITY OF 3000 LBS.

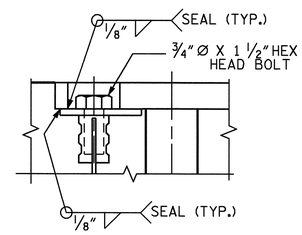

DETAIL "A"

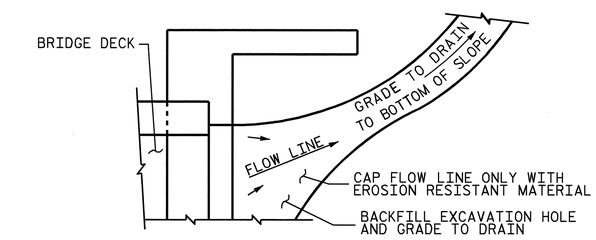

NOTE: IF THE APPROACH SLAB IS NOT CONSTRUCTED IMMEDIATELY AFTER THE BACKFILLING OF THE END BENT EXCAVATION, GRADE TO DRAIN TO THE BOTTOM OF THE SLOPE AND PROVIDE EROSION RESISTANT MATERIAL, SUCH AS FIBERGLASS ROVING OR AS DIRECTED BY THE ENGINEER TO PREVENT SOIL EROSION AND TO PROTECT THE AREA ADJACENT TO THE STRUCTURE. THE CONTRACTOR WILL BE REQUIRED TO REMOVE THESE MATERIALS PRIOR TO CONSTRUCTION OF THE APPROACH SLAB.

TEMPORARY DRAINAGE DETAIL

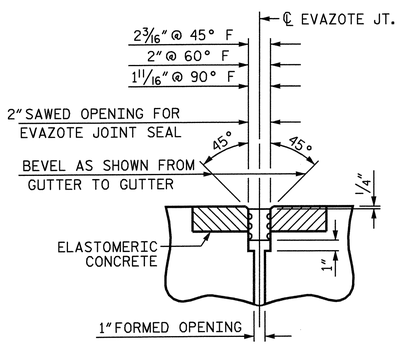

SECTION C-C

EVAZOTE JOINT SEAL IN BOTH APPROACH SLABS

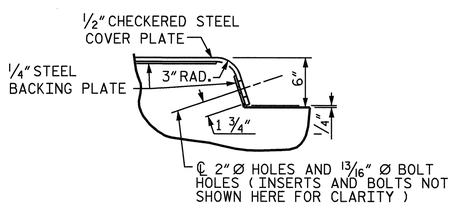

DETAIL "B"

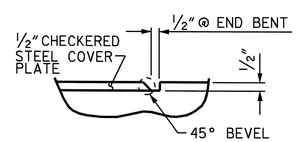

DETAIL "C"

ELASTOMERIC CONCRETE		
END BENT	ELASTOMERIC CONCRETE ** (CU. FT.)	
	STAGE I	STAGE II
1	6.2	5.7
2	6.2	5.7
TOTAL	12.4	11.4

** BASED ON THE MINIMUM BLOCKOUT SHOWN.

JOINT SEAL DETAILS @ END BENT

THE STEEL PLATES SHALL CONFORM TO AASHTO M270 GRADE 36 OR APPROVED EQUAL. AFTER FABRICATION, THE PLATES SHALL BE COMMERCIALLY BLAST CLEANED AND COATED WITH A MINIMUM THICKNESS OF 4 MILS (DRY) OF ZINC RICH PAINT IN ACCORDANCE WITH THE STANDARD SPECIFICATIONS. AT THE CONTRACTORS OPTION, THESE SURFACES MAY BE METALLIZED TO A MINIMUM THICKNESS OF 6 MILS. SEE SPECIAL PROVISIONS FOR THERMAL SPRAYED COATINGS.

THE 3/4" DIAMETER HEX HEAD BOLTS SHALL CONFORM TO ASTM F593 ALLOY 304 STAINLESS STEEL.

NO SEPARATE PAYMENT WILL BE MADE FOR FURNISHING AND INSTALLING THE COVER PLATE. THE ENTIRE COST OF THIS WORK SHALL BE INCLUDED IN THE LUMP SUM PRICE FOR "BRIDGE APPROACH SLABS".

PROJECT NO. U-2810A
CUMBERLAND COUNTY
STATION: 27+70.00 -L-

SHEET 3 OF 3

STATE OF NORTH CAROLINA
DEPARTMENT OF TRANSPORTATION
RALEIGH

STANDARD

BRIDGE APPROACH SLAB DETAILS

NORTH CAROLINA PROFESSIONAL SEAL 16301 ENGINEER TING HSIUNG FANG
1/15/09

REVISIONS							SHEET NO.
NO.	BY:	DATE:	NO.	BY:	DATE:		S-43
1			3				TOTAL SHEETS
2			4				83

ASSEMBLED BY : E.C. LOCKLEAR		DATE : 3-4-08	
CHECKED BY : T. H. FANG		DATE : 11-11-08	
DRAWN BY : FCJ	11/88	REV. 10/17/00	RWW/LES
CHECKED BY : ARB	11/88	REV. 5/7/03	RWW/JTE
		REV. 5/1/06R	MAA/KMM

15-JAN-2009 10:07
R:\Structures\str1\Final Plans\U2810_sd_AS_01.dgn
sdombrowski

STR. #1

STD. NO. BAS10

F.A. PROJECT NO. STP-1003(68)

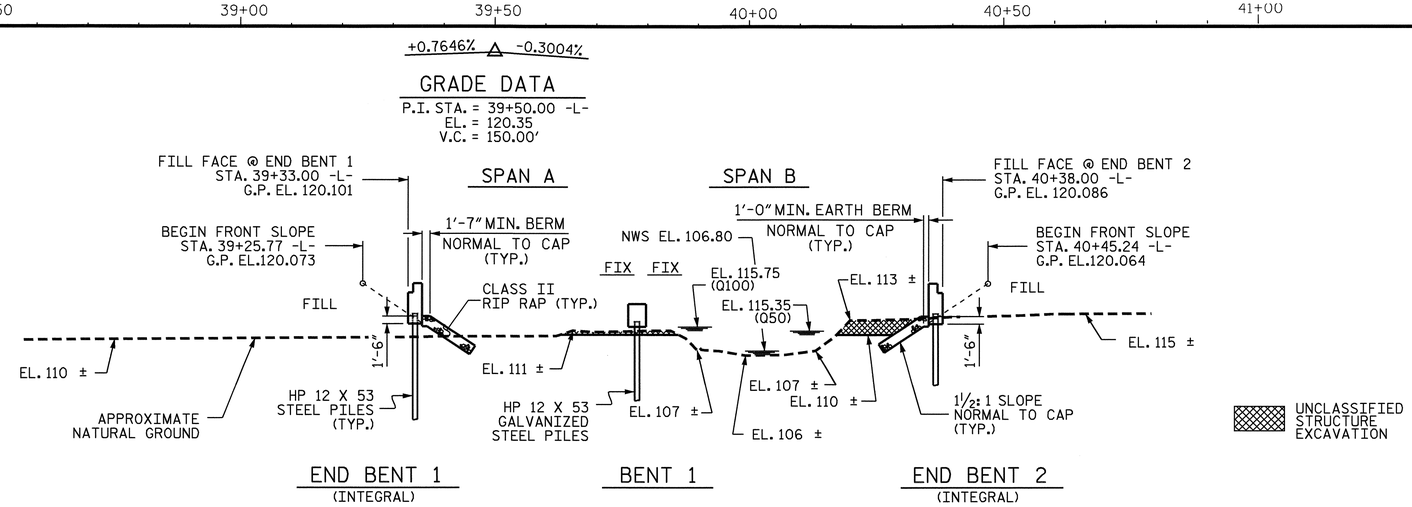

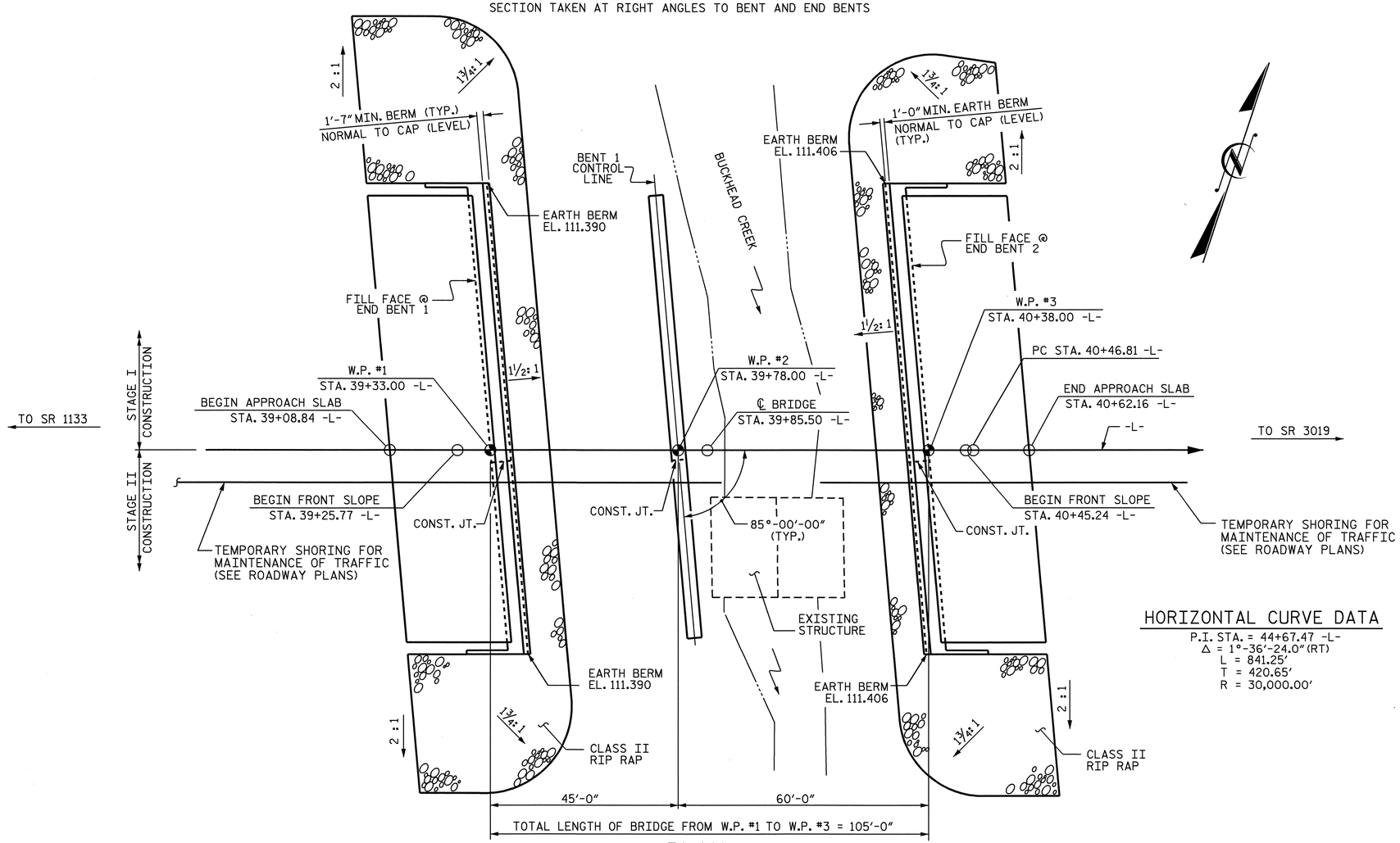

HORIZONTAL CURVE DATA

P.I. STA. = 44+67.47 -L-
Δ = 1°-36'-24.0"(RT)
L = 841.25'
T = 420.65'
R = 30,000.00'

NORTH CAROLINA PROFESSIONAL SEAL 11915 ENGINEER JOHN C. ROBY 2/17/09

NORTH CAROLINA PROFESSIONAL SEAL 16301 ENGINEER TING HSIANG FANG 2/18/09

PROJECT NO. U-2810A

CUMBERLAND COUNTY

STATION: 39+85.50 -L-

SHEET 1 OF 3 REPLACES BRIDGE NO. 120

STATE OF NORTH CAROLINA
DEPARTMENT OF TRANSPORTATION
RALEIGH

GENERAL DRAWING

FOR BRIDGE OVER
BUCKHEAD CREEK ON
SR 1003 BETWEEN
SR 1133 AND SR 3019

REVISIONS						SHEET NO.
NO.	BY:	DATE:	NO.	BY:	DATE:	S-44
1			3			TOTAL SHEETS
2			4			83

DRAWN BY : J.L. WALTON DATE : 5/06
CHECKED BY : T.H. FANG DATE : 7/06

16-FEB-2009 13:15
G:\TIPProjects-U\U2810\Structures\str2\FinalPlans\U-2810_sd_gd_02.dgn
zhbrown

STR #2

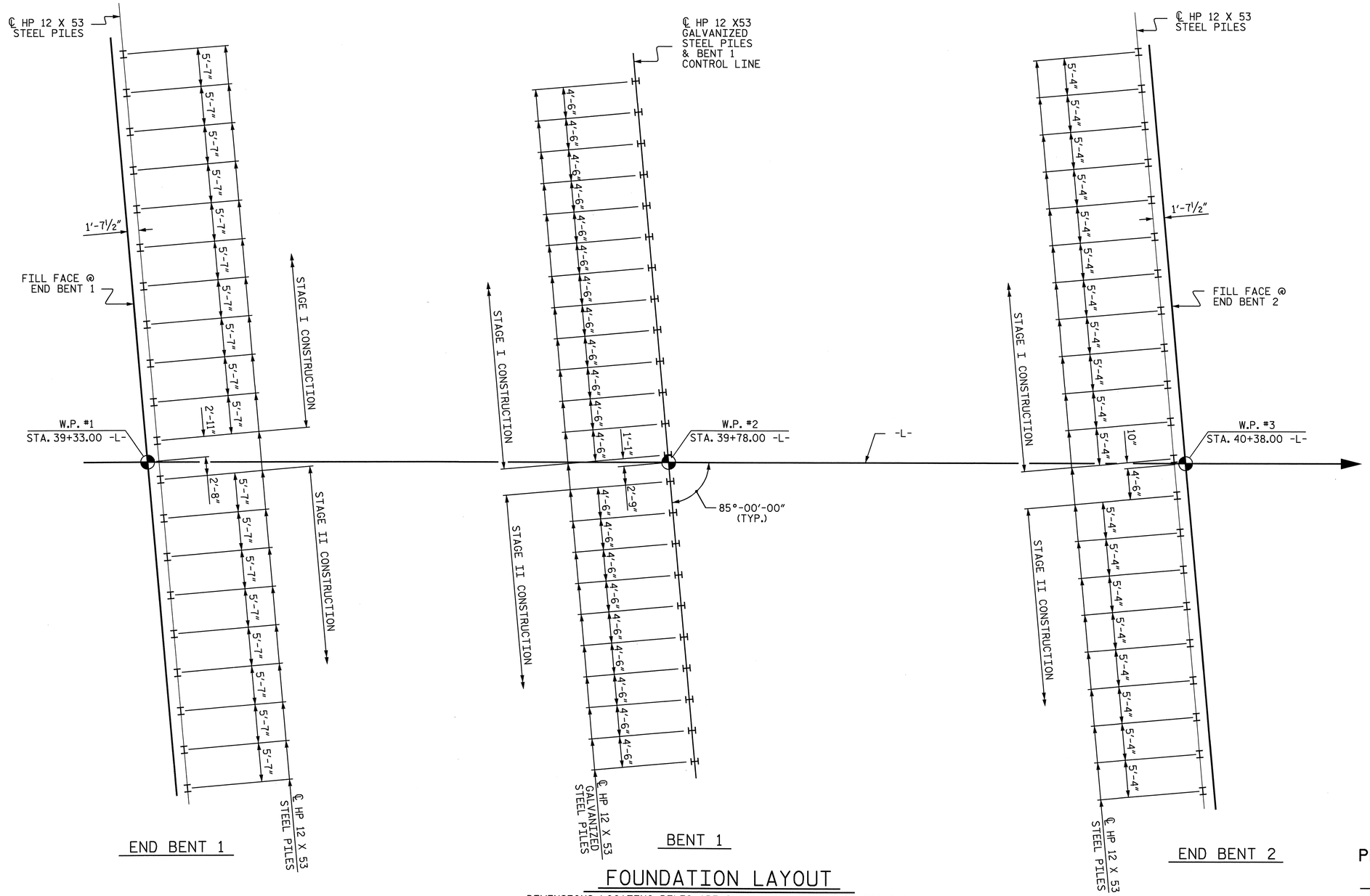

FOUNDATION LAYOUT

DIMENSIONS LOCATING PILES ARE SHOWN TO THE PILE CENTERLINE.
ORIENT PILES AS SHOWN.

NOTES

DRIVE PILES AT END BENTS 1 AND 2 TO A REQUIRED BEARING CAPACITY OF 120 TONS PER PILE. THE REQUIRED BEARING CAPACITY IS EQUAL TO THE ALLOWABLE BEARING CAPACITY WITH A MINIMUM FACTOR OF SAFETY OF TWO.

DRIVE PILES AT BENT 1 TO A REQUIRED BEARING CAPACITY OF 155 TONS PER PILE, THE REQUIRED BEARING CAPACITY IS EQUAL TO THE ALLOWABLE BEARING CAPACITY WITH A MINIMUM FACTOR OF SAFETY OF TWO PLUS ANY ADDITIONAL CAPACITY TO ACCOUNT FOR DOWN DRAG OR NEGATIVE SKIN FRICTION AND SCOUR.

TESTING PILES WITH THE PILE DRIVING ANALYZER (PDA) DURING DRIVING, RESTRIKING OR REDRIVING MAY BE REQUIRED. THE ENGINEER WILL DETERMINE THE NEED FOR PDA TESTING. SEE PILE DRIVING ANALYZER SPECIAL PROVISION.

THE ALLOWABLE BEARING CAPACITY FOR PILES AT END BENTS 1 & 2 IS 60 TONS PER PILE.

THE ALLOWABLE BEARING CAPACITY FOR PILES AT BENT 1 IS 60 TONS PER PILE.

DRIVE PILES AT BENT 1 TO A TIP ELEVATION NO HIGHER THAN 78FT.

THE SCOUR CRITICAL ELEVATION FOR BENT 1 IS ELEVATION 92 FT. SCOUR CRITICAL ELEVATIONS ARE USED TO MONITOR POSSIBLE SCOUR PROBLEMS DURING THE LIFE OF THE STRUCTURE.

FOR PILES, SEE SPECIAL PROVISIONS.

NORTH CAROLINA PROFESSIONAL SEAL 16301 ENGINEER TING HSIUNG FANG

1/26/09

PROJECT NO. U-2810A
CUMBERLAND COUNTY
STATION: 39+85.50 -L-

SHEET 2 OF 3

STATE OF NORTH CAROLINA
DEPARTMENT OF TRANSPORTATION
RALEIGH

GENERAL DRAWING

FOR BRIDGE OVER
BUCKHEAD CREEK ON
SR 1003 BETWEEN
SR 1133 AND SR 3019

REVISIONS						SHEET NO.
NO.	BY:	DATE:	NO.	BY:	DATE:	S-45
1			3			TOTAL SHEETS
2			4			82

DRAWN BY : E.C. LOCKLEAR DATE : 10-30-08
CHECKED BY : TING FANG DATE : 10-30-08

26-JAN-2009 12:14
R:\Structures\str2\Final Plans\U2810a_sd_fl_02.dgn
elocklear

STR 2

TOTAL BILL OF MATERIAL

	REMOVAL OF EXISTING STRUCTURE	PDA TESTING	PDA ASSISTANCE	UNCLASSFIED STRUCTURE EXCAVATION	REINFORCED CONCRETE DECK SLAB	GROOVING BRIDGE FLOORS	CLASS A CONCRETE	BRIDGE APPROACH SLABS	REINFORCING STEEL	36" PRESTRESSED CONCRETE GIRDERS		HP 12 X 53 STEEL PILES		HP 12 X 53 GALVANIZED STEEL PILES		PILE REDRIVES	THREE BAR METAL RAIL	RIP RAP CLASS II (2'-0" THICK)	FILTER FABRIC FOR DRAINAGE	ELASTOMERIC BEARINGS	EVAZOTE JOINT SEALS
	LUMP SUM	EACH	EACH	C. Y.	SQ. FT.	SQ. FT.	CU. YDS	LUMP SUM	LBS.	NO.	LIN. FT.	NO.	LIN. FT.	NO.	LIN. FT.	EACH	LIN. FT.	TONS	SQ. YDS.	LUMP SUM	LUMP SUM
SUPERSTRUCTURE					10,876	10,998				32	1,635.66						191.46			LUMP SUM	LUMP SUM
END BENT 1				795			48.7		7,405			20	800					395	440		
BENT 1							53.2		6,350					23	1,150						
END BENT 2				260			48.3		7,445			21	945					340	380		
TOTAL	LUMP SUM	1	1	1,055	10,876	10,998	150.2	LUMP SUM	21,200	32	1,635.66	41	1,745	23	1,150	15	191.46	735	820	LUMP SUM	LUMP SUM

BENCH MARK #81 : RR SPIKE IN BASE OF 20" PINE 62.31 LEFT OF STA. 46+59.15 -L-, EL 117.50'

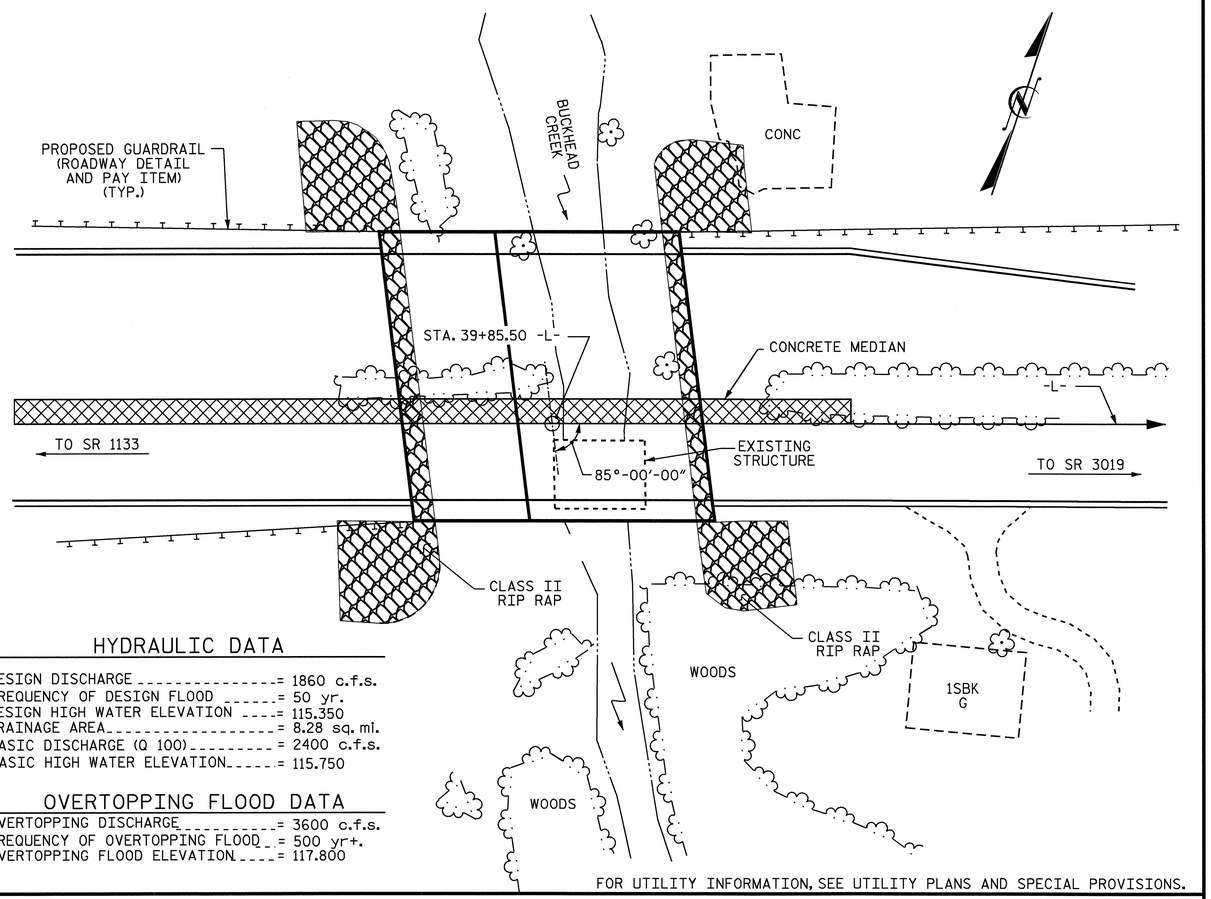

HYDRAULIC DATA

DESIGN DISCHARGE = 1860 c.f.s.
FREQUENCY OF DESIGN FLOOD = 50 yr.
DESIGN HIGH WATER ELEVATION = 115.350
DRAINAGE AREA = 8.28 sq. mi.
BASIC DISCHARGE (Q 100) = 2400 c.f.s.
BASIC HIGH WATER ELEVATION = 115.750

OVERTOPPING FLOOD DATA

OVERTOPPING DISCHARGE = 3600 c.f.s.
FREQUENCY OF OVERTOPPING FLOOD = 500 yr+.
OVERTOPPING FLOOD ELEVATION = 117.800

FOR UTILITY INFORMATION, SEE UTILITY PLANS AND SPECIAL PROVISIONS.

LOCATION SKETCH

NOTES

ASSUMED LIVE LOAD = HS20 OR ALTERNATE LOADING, EXCEPT THAT THE GIRDERS HAVE BEEN DESIGNED FOR HS25.

FOR OTHER DESIGN DATA AND GENERAL NOTES, SEE SHEET SN.

FOR EROSION CONTROL MEASURES SEE EROSION CONTROL PLANS.

THIS BRIDGE HAS BEEN DESIGNED BY THE STRENGTH DESIGN METHOD AS SPECIFIED IN AASHTO STANDARD SPECIFICATIONS.

THIS BRIDGE HAS BEEN DESIGNED IN ACCORDANCE WITH THE REQUIREMENTS OF THE AASHTO STANDARD SPECIFICATIONS FOR SEISMIC DESIGN OF HIGHWAY BRIDGES FOR SEISMIC PERFORMANCE CATEGORY A.

REMOVABLE FORMS MAY BE USED IN LIEU OF METAL STAY-IN-PLACE FORMS IN ACCORDANCE WITH ARTICLE 420-3 OF THE STANDARD SPECIFICATIONS.

REMOVAL OF THE EXISTING BRIDGE SHALL BE PERFORMED SO AS NOT TO ALLOW DEBRIS TO FALL INTO THE WATER. THE CONTRACTOR SHALL REMOVE THE BRIDGE AND SUBMIT PLANS FOR DEMOLITION IN ACCORDANCE WITH ARTICLE 402-2 OF THE STANDARD SPECIFICATIONS.

THE MATERIAL SHOWN IN THE CROSS-HATCHED AREA ON SHEETS-1 SHALL BE EXCAVATED FOR A DISTANCE OF 70 FT. LEFT AND RIGHT OF CENTERLINE ROADWAY AS DIRECTED BY THE ENGINEER. THIS WORK WILL BE PAID FOR AT THE CONTRACT LUMP SUM PRICE FOR UNCLASSIFIED STRUCTURE EXCAVATION.

THE SUBSTRUCTURE OF THE EXISTING BRIDGE INDICATED ON THE PLANS IS FROM THE BEST INFORMATION AVAILABLE. SINCE THIS INFORMATION IS SHOWN FOR THE CONVENIENCE OF THE CONTRACTOR, THE CONTRACTOR SHALL HAVE NO CLAIM WHATSOEVER AGAINST THE DEPARTMENT OF TRANSPORTATION FOR ANY DELAYS OR ADDITIONAL COST INCURRED BASED ON DIFFERENCES BETWEEN THE EXISTING BRIDGE SUBSTRUCTURE SHOWN ON THE PLANS AND THE ACTUAL CONDITIONS AT THE PROJECT SITE.

THE CONTRACTOR SHALL PROVIDE INDEPENDENT ASSURANCE SAMPLES OF REINFORCING STEEL AS FOLLOWS: FOR PROJECTS REQUIRING UP TO 400 TONS OF REINFORCING STEEL, ONE 30 INCH SAMPLE OF EACH SIZE BAR USED, AND FOR PROJECTS REQUIRING OVER 400 TONS OF REINFORCING STEEL, TWO 30 INCH SAMPLES OF EACH SIZE BAR USED. THE BARS FROM WHICH THE SAMPLES ARE TAKEN MUST THEN BE SPLICED WITH REPLACEMENT BARS OF THE SIZE AND LENGTH OF THE SAMPLE PLUS A MINIMUM LAP SPLICED OF THIRTY BAR DIAMETERS.

THE EXISTING PAVEMENT WITHIN THE AREA OF THE END BENT 1 PILES SHALL BE REMOVED AND THE ROADBED SCARIFIED TO A MINIMUM DEPTH OF 2'-0".

FOR LIMITS OF TEMPORARY SHORING FOR MAINTENANCE OF TRAFFIC, SEE TRAFFIC CONTROL PLANS. FOR PAY ITEM FOR TEMPORARY SHORING FOR MAINTENANCE OF TRAFFIC, SEE ROADWAY PLANS.

FOR PRESTRESSED CONCRETE MEMBERS, SEE SPECIAL PROVISIONS.

FOR PLACING LOAD ON STRUCTURE MEMBERS, SEE SPECIAL PROVISIONS.

THE EXISTING STRUCTURE CONSISTING OF 2 SPANS; 1 @ 15'-11", 1 @ 15'-8"; 24.0 FEET CLEAR ROADWAY WIDTH HAS A CONCRETE DECK ON 12 LINES OF STEEL I-BEAMS; CONCRETE CAP ON TIMBER PILES AT END BENTS AND INTERIOR BENTS; AND TIMBER CRUTCH BENTS, AND LOCATED AT THE SITE OF PROPOSED STRUCTURE SHALL BE REMOVED. THE EXISTING BRIDGE IS PRESENTLY NOT POSTED FOR LOAD LIMIT. SHOULD THE STRUCTURAL INTEGRITY OF THE BRIDGE DETERIORATE A LOAD LIMIT MAY BE POSTED AND MAY BE REDUCED AS FOUND NECESSARY DURING THE LIFE OF THE PROJECT.

THIS STRUCTURE HAS BEEN DESIGNED IN ACCORDANCE WITH HEC 18, "EVALUATING SCOUR AT BRIDGES", MAY, 2001.

INASMUCH AS THE PAINT SYSTEM ON THE EXISTING STRUCTURAL STEEL CONTAINS LEAD, THE CONTRACTOR'S ATTENTION IS DIRECTED TO ARTICLE 107-1 OF THE STANDARD SPECIFICATIONS. ANY COSTS RESULTING FROM COMPLIANCE WITH APPLICABLE STATE OR FEDERAL REGULATIONS PERTAINING TO HANDLING OF MATERIALS CONTAINING LEAD BASED PAINT SHALL BE INCLUDED IN THE BID PRICE FOR "REMOVAL OF EXISTING STRUCTURE AT STATION 39+85.50 -L-."

FOR SUBMITTAL OF WORKING DRAWINGS, SEE SPECIAL PROVISIONS.

FOR FALSEWORK AND FORMWORK, SEE SPECIAL PROVISIONS.

ELASTOMER IN ALL BEARINGS SHALL BE 60 DUROMETER HARDNESS.

GALVANIZE THE TOP 25 FEET OF EACH INTERIOR BENT PILE IN ACCORDANCE WITH SECTION 1076 OF THE STANDARD SPECIFICATIONS.

FOR CRANE SAFETY, SEE SPECIAL PROVISIONS.

NEEDLE BEAMS WILL NOT BE ALLOWED UNLESS OTHERWISE CALLED FOR ON THE PLANS OR APPROVED BY THE ENGINEER.

FOR GROUT FOR STRUCTURES, SEE SPECIAL PROVISIONS.

FOR CURING CONCRETE, SEE SPECIAL PROVISIONS.

PROJECT NO. U-2810A
CUMBERLAND COUNTY
STATION: 39+85.50 -L-

SHEET 3 OF 3

STATE OF NORTH CAROLINA
DEPARTMENT OF TRANSPORTATION
RALEIGH

GENERAL DRAWING

FOR BRIDGE OVER BUCKHEAD CREEK ON SR 1003 BETWEEN SR 1133 AND SR 3019

NORTH CAROLINA PROFESSIONAL SEAL 16301 ENGINEER TING HSIUNG FANG
10/19/09

REVISIONS							SHEET NO.
NO.	BY:	DATE:	NO.	BY:	DATE:		S-46
1			3				TOTAL SHEETS
2			4				83

DRAWN BY : E.C. LOCKLEAR DATE : 10/08
CHECKED BY : T.H. FANG DATE : 11/08

19-OCT-2009 08:52
z:\structures\str2\final plans\u-2810_sd_gd_02.dgn
tfang

NOTE

SEE TRAFFIC CONTROL PLANS FOR LOCATION AND PAY LIMIT OF THE ANCHORED PORTABLE CONCRETE BARRIER.

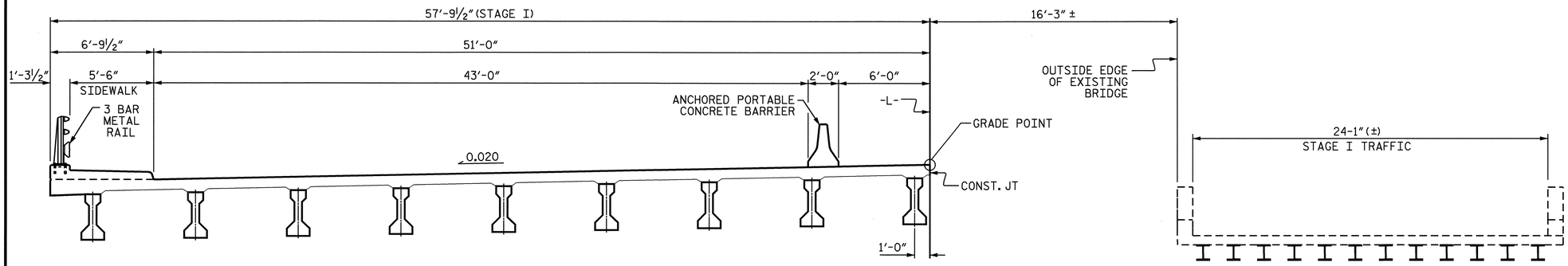

STAGE I CONSTRUCTION

CONSTRUCT LEFT SIDE OF PROPOSED BRIDGE
MAINTAIN TRAFFIC ON EXISTING STRUCTURE

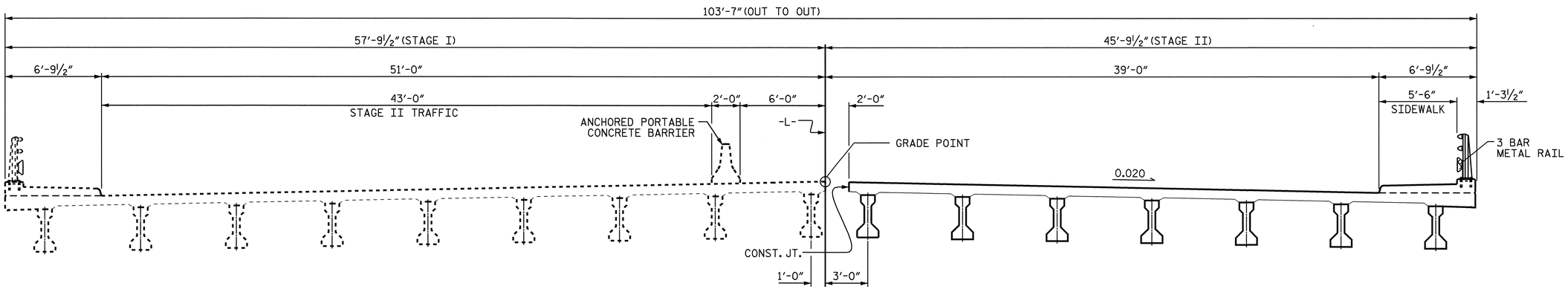

STAGE II CONSTRUCTION

MOVE TRAFFIC ONTO NEW BRIDGE, REMOVE EXISTING BRIDGE,
CONSTRUCT LEFT SIDE OF PROPOSED BRIDGE.

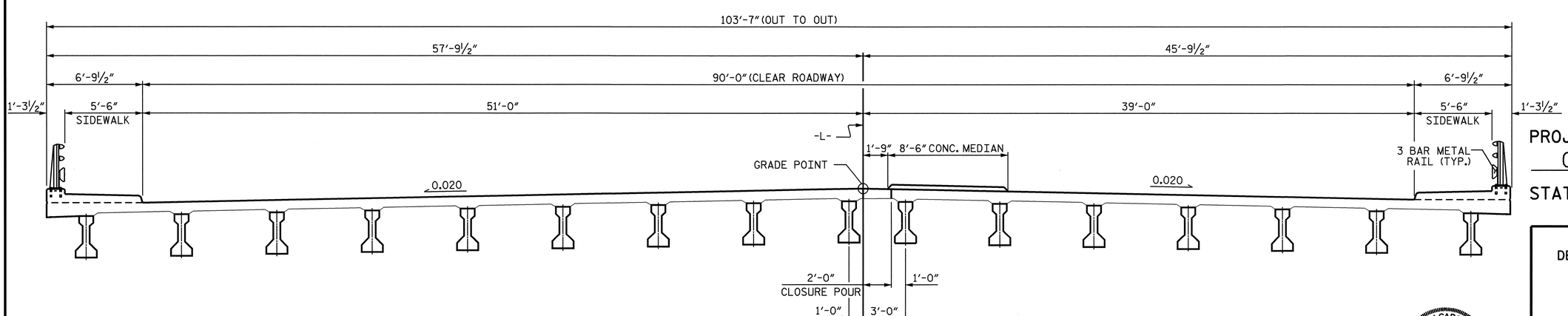

FINAL STAGE

CONSTRUCT THE CLOSURE POUR OF PROPOSED BRIDGE

PROJECT NO. U-2810A
CUMBERLAND COUNTY
STATION: 39+85.50 -L-

STATE OF NORTH CAROLINA
DEPARTMENT OF TRANSPORTATION
RALEIGH

CONSTRUCTION SEQUENCE

NORTH CAROLINA PROFESSIONAL SEAL 032492 ENGINEER JOHN A. YANNACCONE
2/16/09

REVISIONS						SHEET NO.
NO.	BY:	DATE:	NO.	BY:	DATE:	S-47
1			3			TOTAL SHEETS
2			4			83

DRAWN BY : J.L. WALTON DATE : 7-06
CHECKED BY : J.A. YANNACCONE DATE : 1-09

16-FEB-2009 14:36
G:\TIPProjects-U\U2810\Structures\str2\FinalPlans\U-2810_sd_gd_02.dgn
zhbrown

STR #2

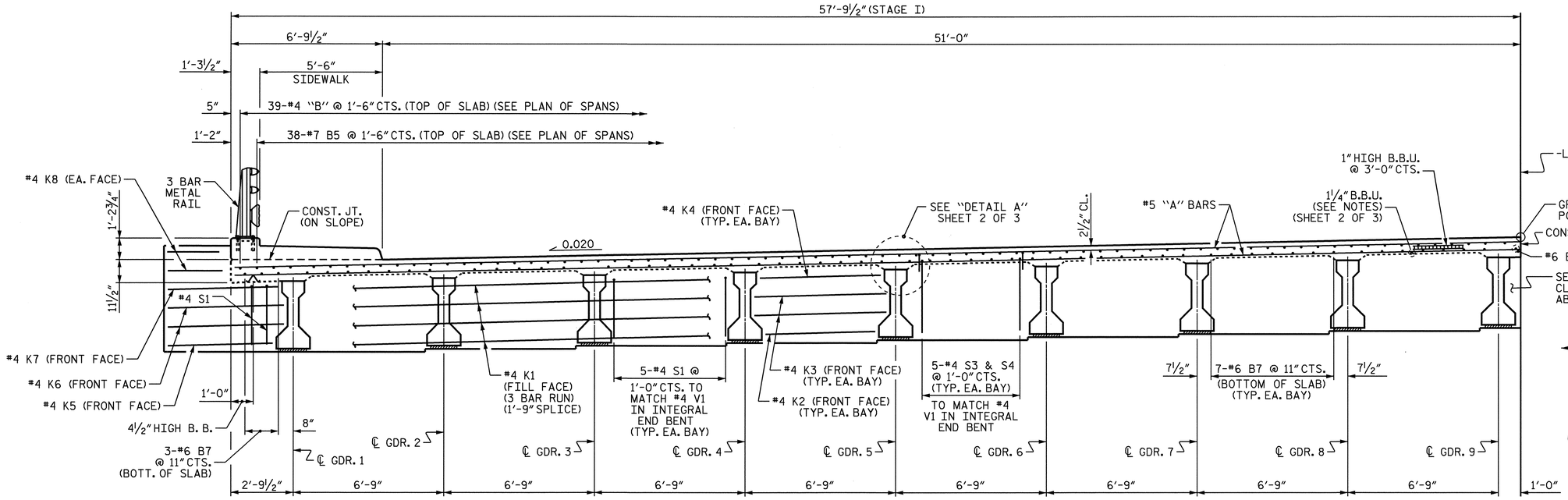

TYPICAL SECTION - STAGE I

(SHOWING ABUTMENT WALL AT END BENT)
(APPROACH SLAB BLOCKOUT & SIP FORMS NOT SHOWN FOR CLARITY.)

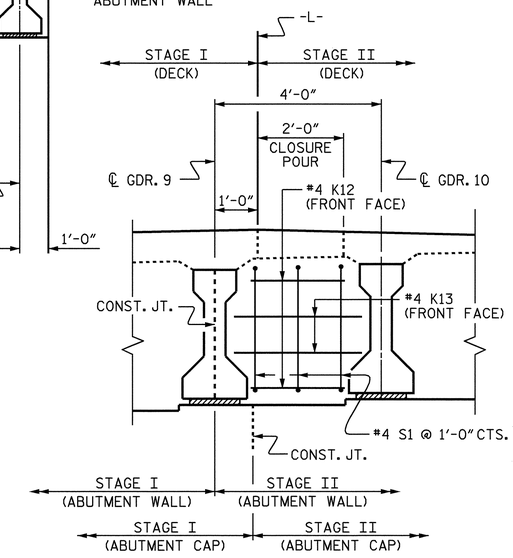

SECTION THRU CLOSURE POUR @ ABUTMENT WALL

#4 K1, K21, S3 & S4 NOT SHOWN FOR CLARITY.

CAST ABUTMENT WALLS BETWEEN GIRDERS 9 & 10 WITH STAGE II CONSTRUCTION, SEE "POUR SEQUENCE" DETAILS.

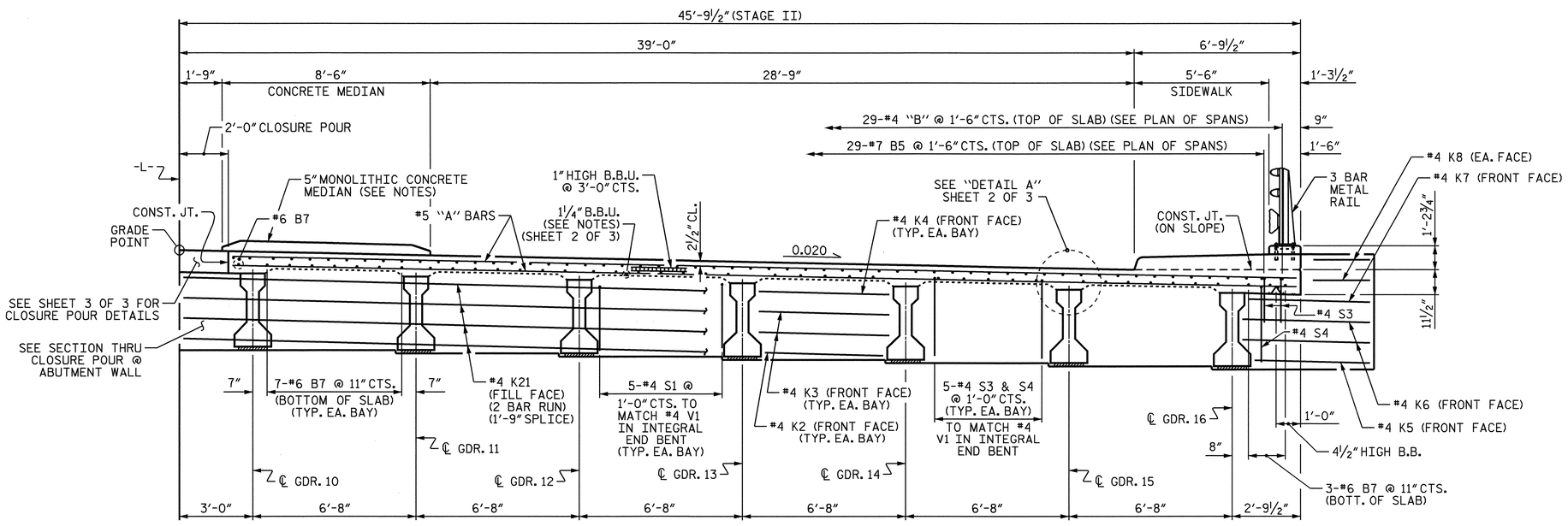

TYPICAL SECTION - STAGE II

(SHOWING ABUTMENT WALL AT END BENT)
(APPROACH SLAB BLOCKOUT & SIP FORMS NOT SHOWN FOR CLARITY.)

PROJECT NO. U-2810A
CUMBERLAND COUNTY
STATION: 39+89.50 -L-

SHEET 1 OF 3

STATE OF NORTH CAROLINA
DEPARTMENT OF TRANSPORTATION
RALEIGH

SUPERSTRUCTURE

TYPICAL SECTION

NORTH CAROLINA PROFESSIONAL SEAL 16301 ENGINEER TING HSIUNG FANG
1/16/09

REVISIONS						SHEET NO.
NO.	BY:	DATE:	NO.	BY:	DATE:	S-48
1			3			TOTAL SHEETS
2			4			83

DRAWN BY : E.C. LOCKLEAR DATE : 12-08
CHECKED BY : T.H. FANG DATE : 12-08

16-FEB-2009 14:31
G:\TIPProjects-U\U2810\Structures\str2\FinalPlans\u-2810a_sd_ts_02.dgn
zhbrown

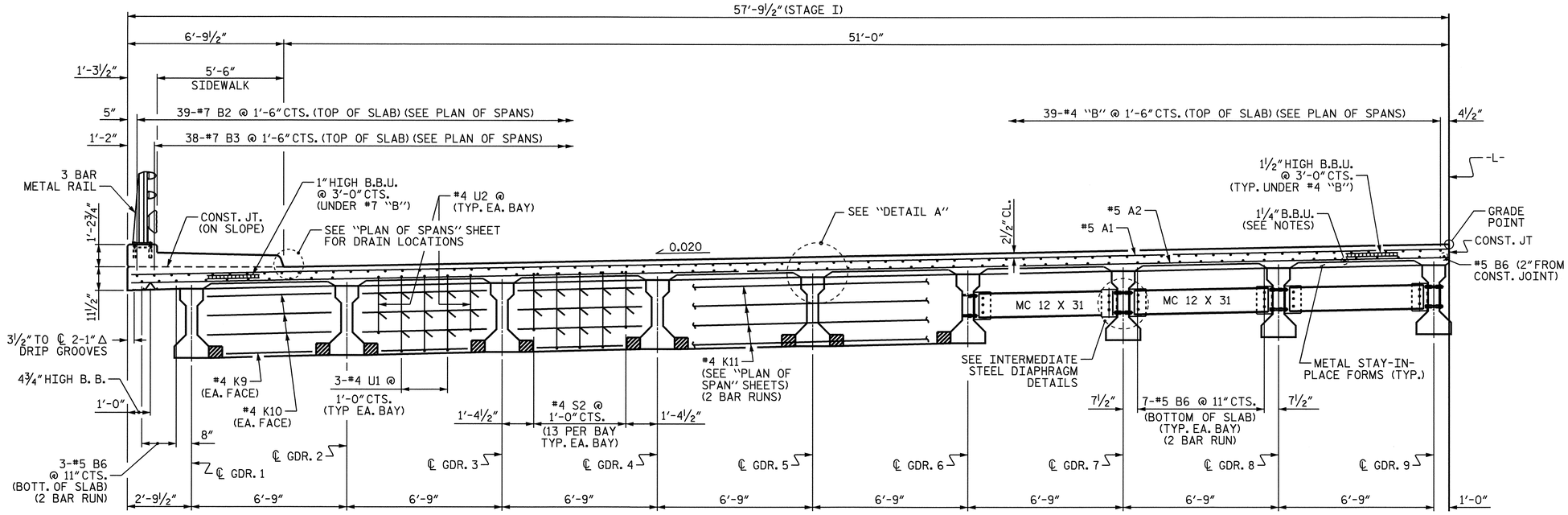

PARTIAL TYPICAL SECTION
(SHOWING BENT DIAPHRAGMS)

PARTIAL TYPICAL SECTION
(SHOWING INTERMEDIATE DIAPHRAGMS)

TYPICAL SECTION - STAGE I

DECK DRAINS NOT SHOWN FOR CLARITY.

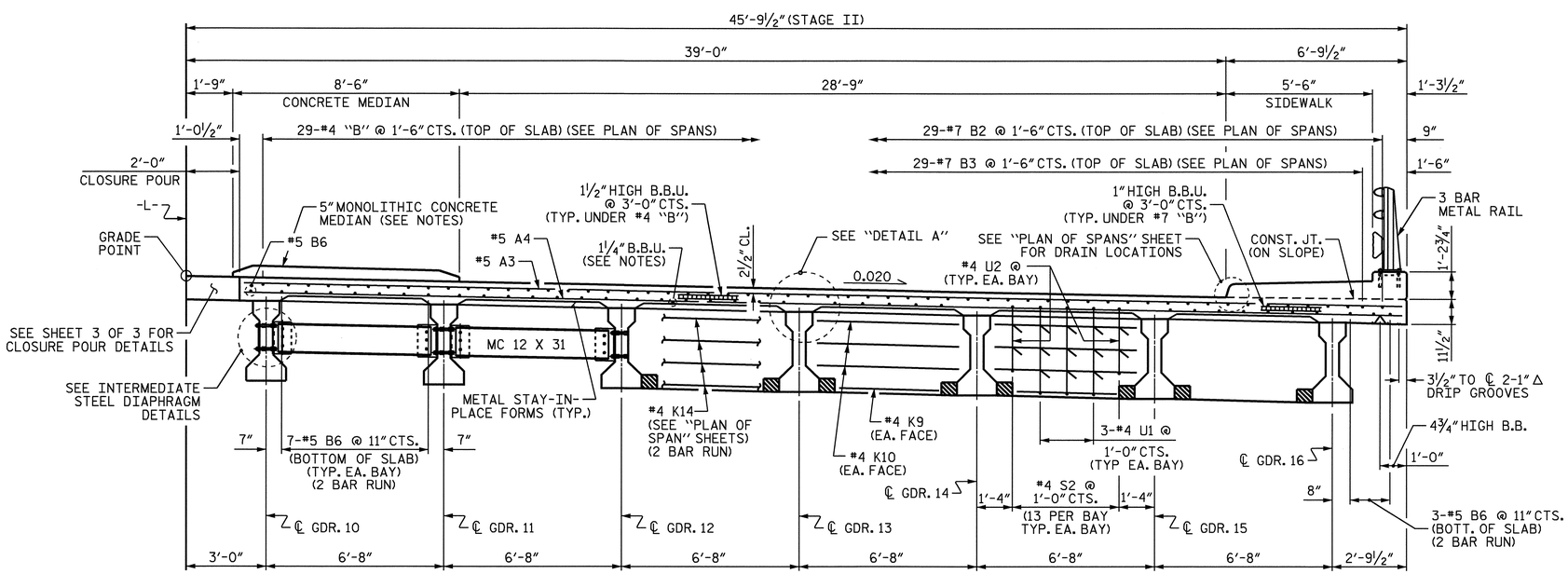

PARTIAL TYPICAL SECTION
(SHOWING INTERMEDIATE DIAPHRAGMS)

PARTIAL TYPICAL SECTION
(SHOWING BENT DIAPHRAGMS)

TYPICAL SECTION - STAGE II

DECK DRAINS NOT SHOWN FOR CLARITY.

NOTES

PROVIDE 1¼" HIGH BEAM BOLSTERS UPPER AT 4'-0" CTS. ATOP THE METAL STAY-IN-PLACE FORMS TO SUPPORT THE BOTTOM MAT OF "A" BARS. WHEN USING REMOVABLE FORMS, PROVIDE CONTINUOUS HIGH CHAIRS FOR METAL DECK (C.H.C.M.) @ 4'-0" CTS. WITH A HEIGHT TO SUPPORT THE BOTTOM MAT OF "A" BARS A CLEAR DISTANCE OF 2½" ABOVE THE TOP OF THE REMOVABLE FORM.

LONGITUDINAL STEEL MAY BE SHIFTED SLIGHTLY, AS NECESSARY, TO AVOID INTERFERENCE WITH STIRRUPS IN PRESTRESSED CONCRETE GIRDERS.

PREVIOUSLY CAST CONCRETE IN A CONTINUOUS UNIT SHALL HAVE ATTAINED A MINIMUM COMPRESSIVE STRENGTH OF 3,000 PSI BEFORE ADDITIONAL CONCRETE IS CAST IN THE UNIT.

FOR WING ELEVATIONS AND DETAILS, SEE "PLAN OF SPANS DETAILS" SHEETS.

FOR 5" MONOLITHIC CONCRETE MEDIAN REINFORCING STEEL AND DETAILS, SEE "CONCRETE MEDIAN" SHEET.

FOR SECTION THROUGH SIDEWALK AND DETAILS, SEE SHEET 3 OF 3.

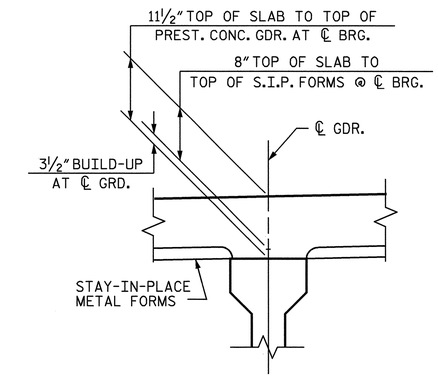

"DETAIL A"

PROJECT NO. U-2810A
CUMBERLAND COUNTY
STATION: 39+89.50 -L-

SHEET 2 OF 3

STATE OF NORTH CAROLINA
DEPARTMENT OF TRANSPORTATION
RALEIGH

SUPERSTRUCTURE

TYPICAL SECTION

NORTH CAROLINA PROFESSIONAL SEAL 16301 ENGINEER TING HSIUNG FANG
3/16/09

REVISIONS						SHEET NO.
NO.	BY:	DATE:	NO.	BY:	DATE:	S-49
1			3			TOTAL SHEETS
2			4			83

DRAWN BY : E.C. LOCKLEAR DATE : 12-08
CHECKED BY : T.H. FANG DATE : 12-08

16-FEB-2009 13:23
G:\TIPProjects-U\U2810\Structures\str2\FinalPlans\u-2810a_sd_ts_02.dgn
zhbrown

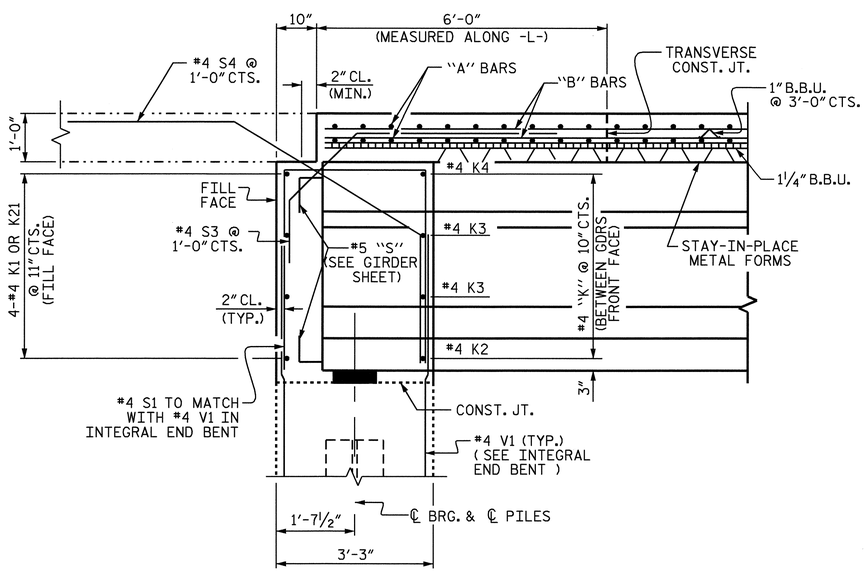

SECTION THRU INTEGRAL END BENT

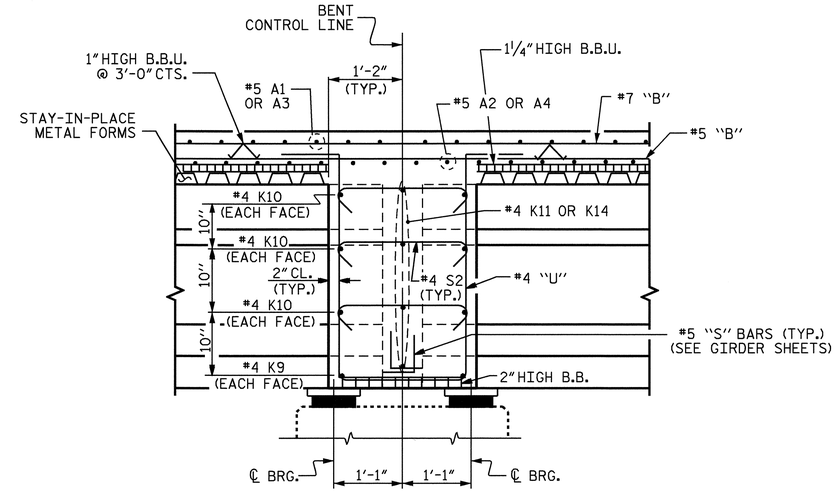

SECTION THRU BENT

NO BENT DIAPHRAGM REQUIRED IN THE CLOSURE-POUR BAY.

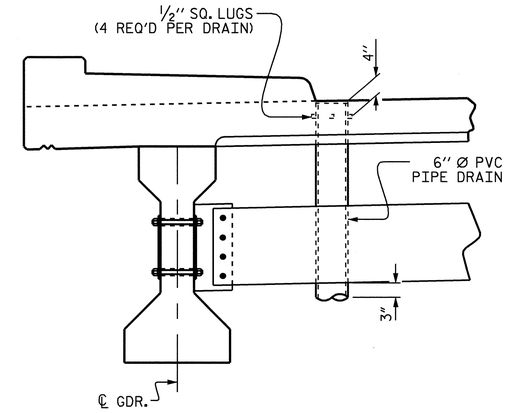

DRAIN DETAILS

TOP OF FLOOR DRAIN TO BE SET ⅜" BELOW SURFACE OF SLAB.

4 - ½" SQUARE LUGS TO BE GLUED TO THE PVC PIPE AT EQUAL SPACES AROUND THE PIPE DRAIN APPROXIMATELY 4" FROM THE TOP OF THE PIPE.

THE 6" Ø PVC PIPE AND FITTINGS SHALL BE SCHEDULE 40 AND CONFORM TO ASTM D1785.

COUPLING IN DRAIN PIPE WILL BE PERMITTED AS APPROVED BY THE ENGINEER.

SEE PLAN OF SPANS FOR LOCATION OF 6" Ø PVC PIPE DRAINS.

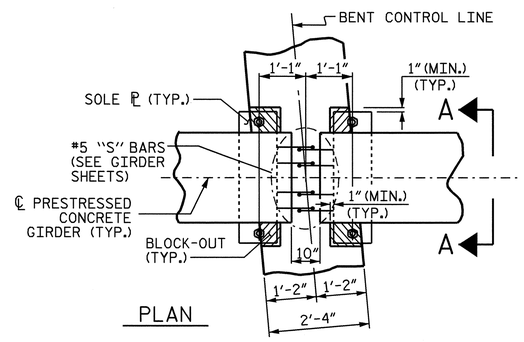

PLAN

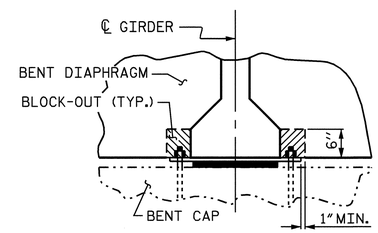

SECTION A-A

BENT DIAPHRAGM BLOCK-OUT DETAIL

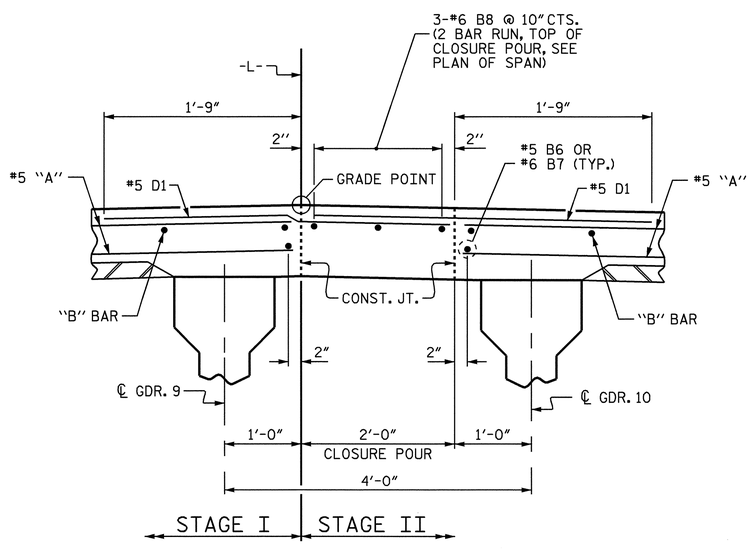

DECK CLOSURE POUR DETAIL

#5 D1 DOWELS SHALL BE PLACED IN THE SAME HORIZONTAL PLANE AS THE TOP SLAB REINFORCING STEEL.

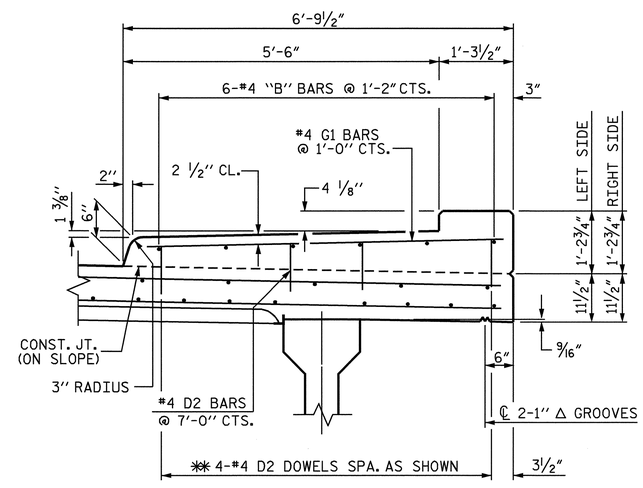

SECTION THRU SIDEWALK

✻✻ THE #4 D2 DOWELS MAY BE PUSHED INTO GREEN CONCRETE AFTER DECK OR APPROACH SLAB HAS BEEN SCREEDED OFF.

PROJECT NO. U-2810A

CUMBERLAND COUNTY

STATION: 39+85.50 -L-

SHEET 3 OF 3

STATE OF NORTH CAROLINA
DEPARTMENT OF TRANSPORTATION
RALEIGH

SUPERSTRUCTURE

TYPICAL SECTION DETAILS

NORTH CAROLINA PROFESSIONAL SEAL 16301 ENGINEER TING HSIUNG FANG

2/16/09

REVISIONS						SHEET NO.
NO.	BY:	DATE:	NO.	BY:	DATE:	S-50
1			3			TOTAL SHEETS
2			4			83

DRAWN BY : E. C. LOCKLEAR DATE : 10-08
CHECKED BY : T.H. FANG DATE : 11-08

16-FEB-2009 13:24
G:\TIPProjects-U\U2810\Structures\str2\FinalPlans\u-2810a_sd_ts_02.dgn
zhbrown

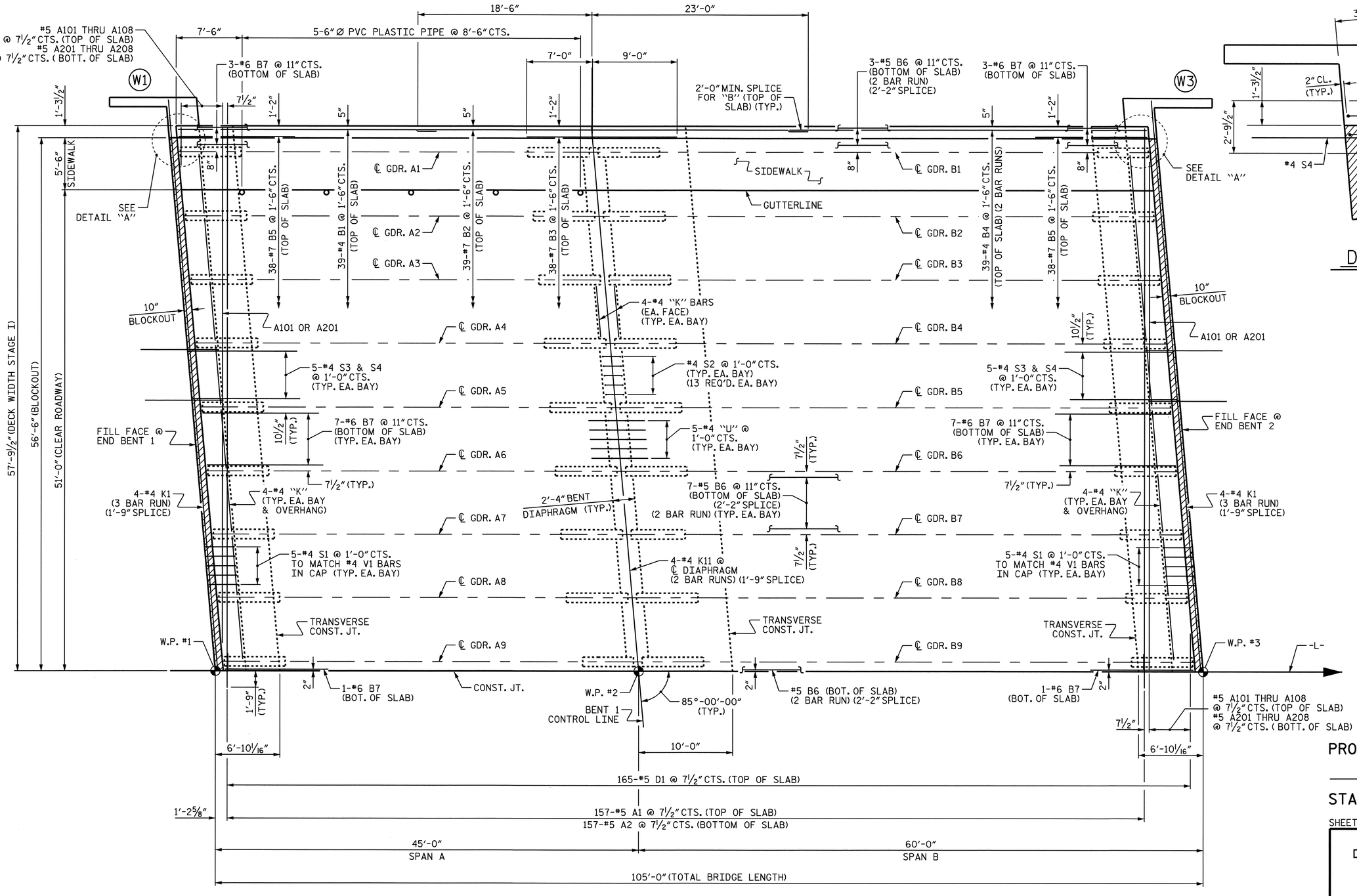

PLAN OF SPANS A & B

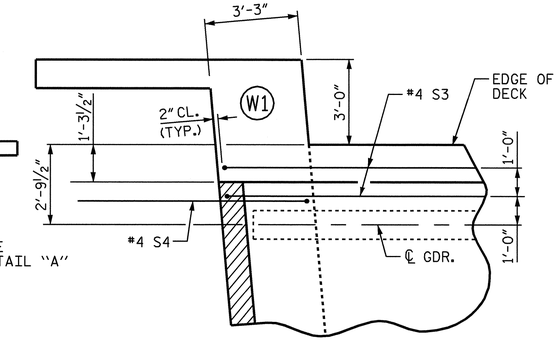

DETAIL "A"

PROJECT NO. U-2810A

CUMBERLAND COUNTY

STATION: 39+85.50 -L-

SHEET 1 OF 4

STATE OF NORTH CAROLINA
DEPARTMENT OF TRANSPORTATION
RALEIGH

SUPERSTRUCTURE

PLAN OF SPANS
SPANS A & B

STAGE I

NORTH CAROLINA PROFESSIONAL SEAL 16301 ENGINEER TING HSIUNG FANG

2/16/09

REVISIONS								SHEET NO.
NO.	BY:	DATE:	NO.	BY:	DATE:			S-51
1			3					TOTAL SHEETS
2			4					83

DRAWN BY : E.C. LOCKLEAR DATE : 11-21-08
CHECKED BY : T.H. FANG DATE : 12-30-08

16-FEB-2009 13:27
G:\TIPProjects-U\U2810\Structures\str2\FinalPlans\U2810_sd_S*_02.dgn
zhbrown

105'-0" (TOTAL BRIDGE LENGTH)

45'-0" SPAN A | 60'-0" SPAN B

7½" | 159-#5 A3 @ 7½" CTS. (TOP OF SLAB) | 1'-2½"

159-#5 A4 @ 7½" CTS. (BOTTOM OF SLAB)

165-#5 D1 @ 7½" CTS. (TOP OF SLAB)

#5 A301 THRU A306 @ 7½" CTS. (TOP OF SLAB)
#5 A401 THRU A406 @ 7½" CTS. (BOTT. OF SLAB)

BENT 1 CONTROL LINE

3-#6 B8 @ 10" CTS. IN CLOSURE POUR (2 BAR RUN) (TOP OF SLAB) (2'-7" SPLICE)

#5 B6 (BOT. OF SLAB) (2 BAR RUN) (2'-2" SPLICE)

6'-10 1/16" (TYP.)

W.P. #1 | 1-#6 B7 (BOT. OF SLAB) | CONST. JT. | 2'-0" CLOSURE POUR | W.P. #2 | 1-#6 B7 (BOT. OF SLAB) | W.P. #3 | -L-

3-#4 S3 & S4 @ 1'-0" CTS.

℄ GDR. A10 | 4-#4 K14 @ ℄ DIAPHRAGM (2 BAR RUNS) (1'-9" SPLICE) | 85°-00'-00" (TYP.) | ℄ GDR. B10

5-#4 S1 @ 1'-0" CTS. TO MATCH #4 V1 BARS IN CAP (TYP. EA. BAY)

℄ GDR. B11

4-#4 K21 (2 BAR RUNS) (1'-9" SPLICE) | 4-#4 "K" (TYP. EA. BAY & OVERHANG) | ℄ GDR. A11 | 5-#4 "U" @ 1'-0" CTS. (TYP. EA. BAY) | ℄ GDR. A12 | 7" (TYP.) | ℄ GDR. B12 | 4-#4 "K" (TYP. EA. BAY & OVERHANG) | 4-#4 K21 (2 BAR RUNS) (1'-9" SPLICE)

5-#4 S3 & S4 @ 1'-0" CTS. (TYP. EA. BAY) | TRANSVERSE CONST. JT. | 2'-4" BENT DIAPHRAGM (TYP.) | 7-#5 B6 @ 11" CTS. (BOTTOM OF SLAB) (2 BAR RUN) (TYP. EA. BAY) (2'-2" SPLICE) | TRANSVERSE CONST. JT. | 5-#4 S3 & S4 @ 1'-0" CTS. (TYP. EA. BAY)

7" | ℄ GDR. A13 | 7" (TYP.) | ℄ GDR. B13 | 7"

FILL FACE @ END BENT 1 | 7-#6 B7 @ 11" CTS. (BOTTOM OF SLAB) (TYP. EA. BAY) | #4 S2 @ 1'-0" CTS. (TYP. EA. BAY) (13 REQ'D. EA. BAY) | 7-#6 B7 @ 11" CTS. (BOTTOM OF SLAB) (TYP. EA. BAY) | FILL FACE @ END BENT 2

A301 OR A401 | ℄ GDR. B14

7" | ℄ GDR. A14 | 4-#4 "K" BARS (EA. FACE) (TYP. EA. BAY) | TRANSVERSE CONST. JT. | 7"

10" BLOCKOUT | ℄ GDR. A15 | ℄ GDR. B15 | 10" BLOCKOUT

29-#7 B5 @ 1'-6" CTS. (TOP OF SLAB) | 29-#4 B1 @ 1'-6" CTS. (TOP OF SLAB) | 29-#7 B2 @ 1'-6" CTS. (TOP OF SLAB) | 29-#7 B3 @ 1'-6" CTS. (TOP OF SLAB) | 29-#4 B4 @ 1'-6" CTS. (TOP OF SLAB) (2 BAR RUN) | 29-#7 B5 @ 1'-6" CTS. (TOP OF SLAB)

GUTTERLINE | A301 OR A401

5'-6" SIDEWALK | SEE DETAIL "B" | ℄ GDR. A16 | SIDEWALK | ℄ GDR. B16 | SEE DETAIL "B"

8" | 8" | 8" | 8"

45'-9½" (DECK WIDTH STAGE II) | 44'-6" (BLOCKOUT) | 39'-0" (CLEAR ROADWAY)

1'-3½" | 1'-6" | 9" | 2'-0" MIN. SPLICE FOR "B" (TOP OF SLAB) (TYP.) | 9" | 1'-6" | 3-#5 B6 @ 11" CTS. (BOTTOM OF SLAB) (2 BAR RUN) (2'-2" SPLICE) | 9" | 1'-6"

W2 | 3-#6 B7 @ 11" CTS. (BOTTOM OF SLAB) | 3-#6 B7 @ 11" CTS. (BOTTOM OF SLAB) | W4 | #5 A301 THRU A306 @ 7½" CTS. (TOP OF SLAB) #5 A401 THRU A406 @ 7½" CTS. (BOTT. OF SLAB) | 7½"

7'-0" | 9'-0" | 18'-6" | 23'-0"

6'-4" | 5-6" Ø PVC PLASTIC PIPE @ 8'-6" CTS. | 10'-0"

PLAN OF SPANS A & B

(CONCRETE MEDIAN NOT SHOWN FOR CLARITY.)

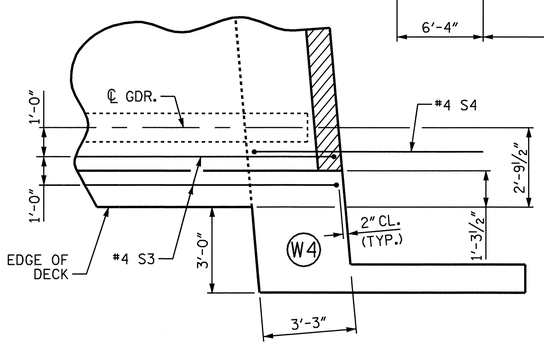

DETAIL "B"

PROJECT NO. U-2810A

CUMBERLAND COUNTY

STATION: 39+85.50 -L-

SHEET 2 OF 4

STATE OF NORTH CAROLINA
DEPARTMENT OF TRANSPORTATION
RALEIGH

SUPERSTRUCTURE

PLAN OF SPANS
SPANS A & B
STAGE II

NORTH CAROLINA PROFESSIONAL SEAL 16301 ENGINEER TING HSILUNG FANG
2/16/09

REVISIONS						SHEET NO.
NO.	BY:	DATE:	NO.	BY:	DATE:	S-52
1			3			TOTAL SHEETS
2			4			83

DRAWN BY : E.C. LOCKLEAR DATE : 11-21-08
CHECKED BY : T.H. FANG DATE : 12-30-08

16-FEB-2009 13:27
G:\TIPProjects-U\U2810\Structures\str2\FinalPlans\U2810_sd_S*_02.dgn
zhbrown

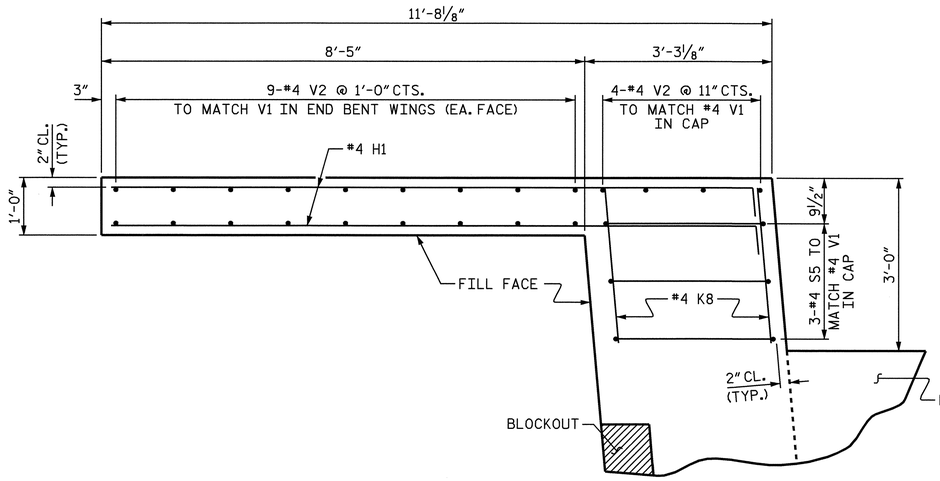

PLAN OF WING (W1)

AT END BENT 1

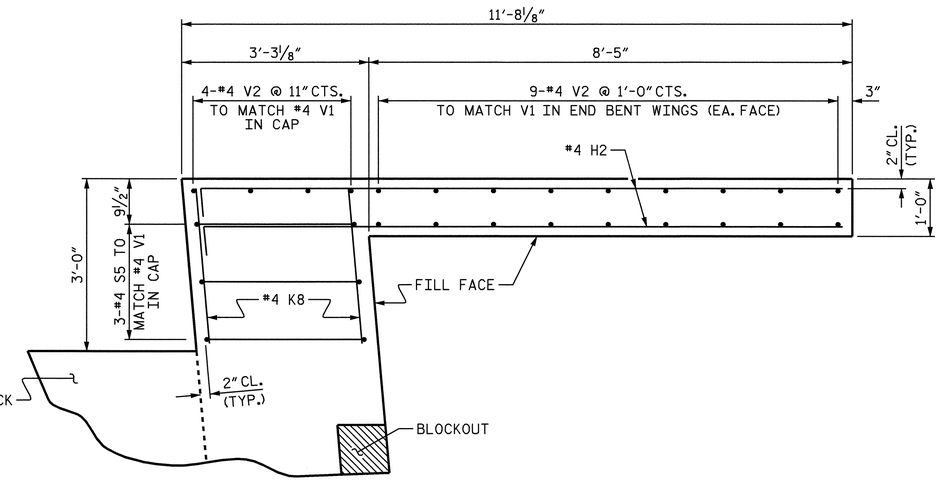

PLAN OF WING (W3)

AT END BENT 2

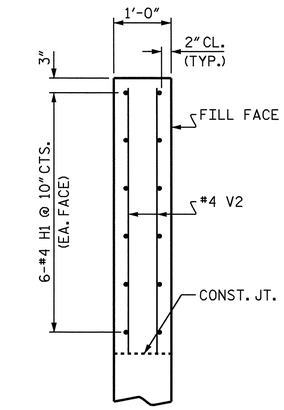

SECTION A-A

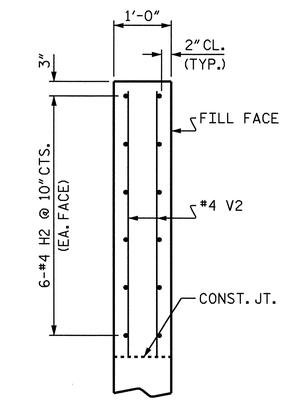

SECTION B-B

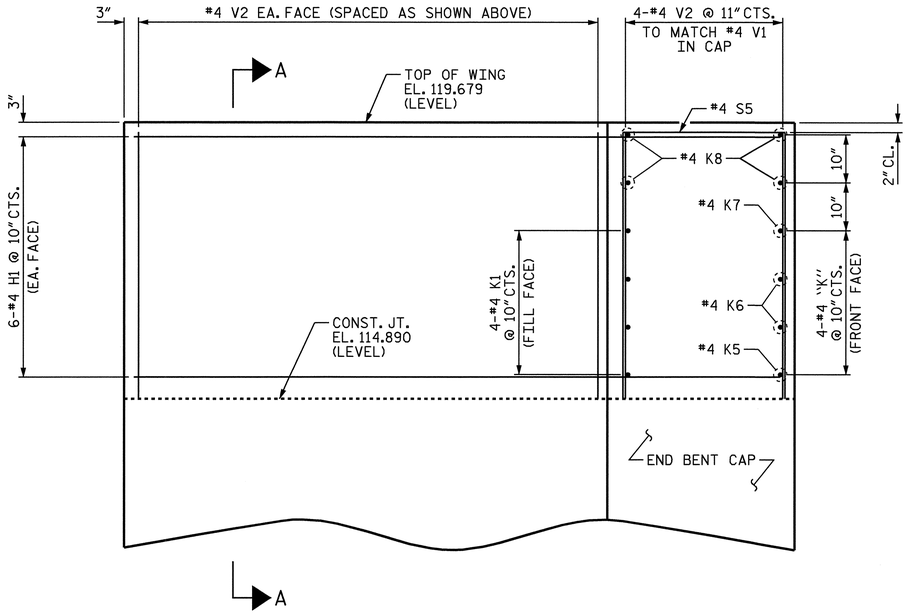

ELEVATION OF WING (W1)

AT END BENT 1

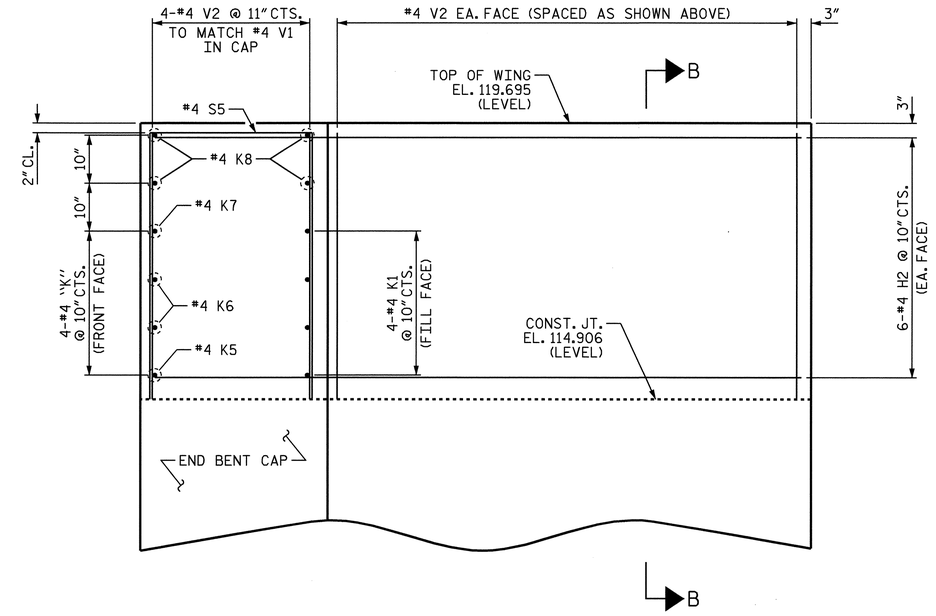

ELEVATION OF WING (W3)

AT END BENT 2

ABUTMENT WINGS

FOR END BENT REINFORCING STEEL AND DETAILS,
SEE "SUBSTRUCTURE END BENTS 1 & 2" SHEETS.

PROJECT NO. U-2810A
CUMBERLAND COUNTY
STATION: 39+85.50 -L-

SHEET 3 OF 4

STATE OF NORTH CAROLINA
DEPARTMENT OF TRANSPORTATION
RALEIGH

SUPERSTRUCTURE

PLAN OF SPAN DETAILS

STAGE I

NORTH CAROLINA PROFESSIONAL SEAL 16301 ENGINEER TING HSILUNG FANG
2/16/09

REVISIONS						SHEET NO.
NO.	BY:	DATE:	NO.	BY:	DATE:	S-53
1			3			TOTAL SHEETS
2			4			83

DRAWN BY : E.C. LOCKLEAR DATE : 10-17-08
CHECKED BY : T.H. FANG DATE : 11-08

16-FEB-2009 13:30
G:\TIPProjects-U\U2810\Structures\str2\FinalPlans\U2810_sd_S*_02.dgn
zhbrown

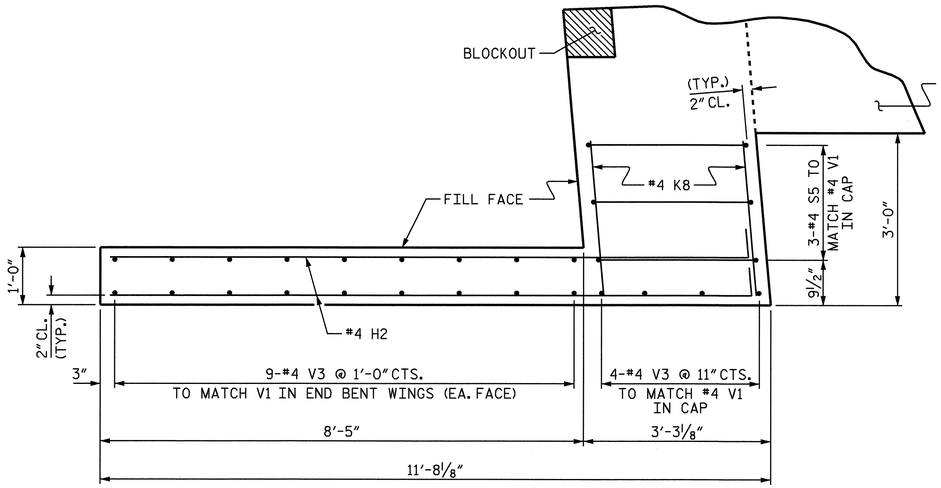

PLAN OF WING (W2)

AT END BENT 1

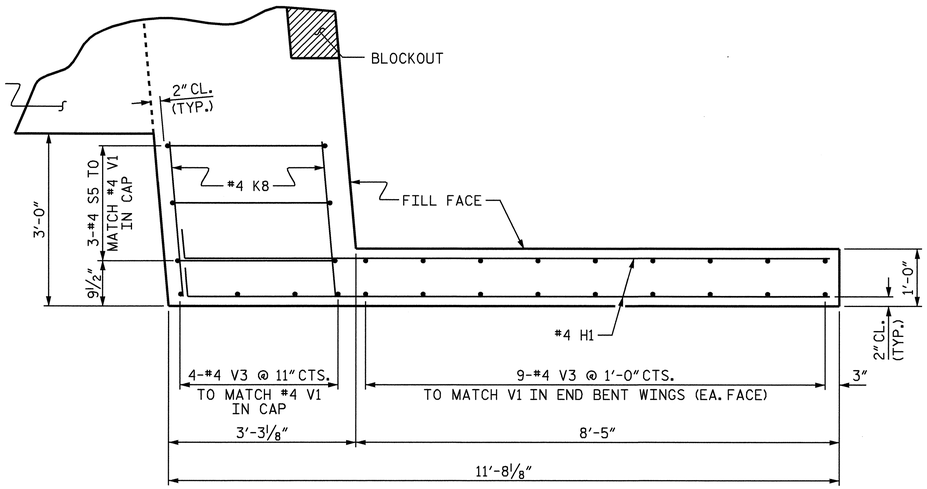

PLAN OF WING (W4)

AT END BENT 2

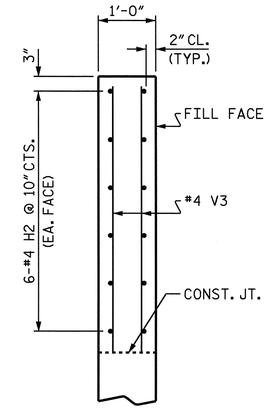

SECTION A-A

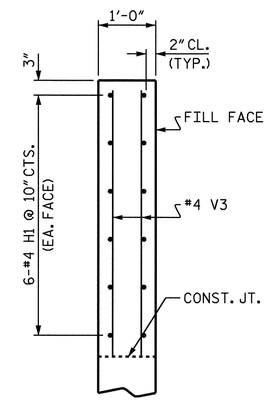

SECTION B-B

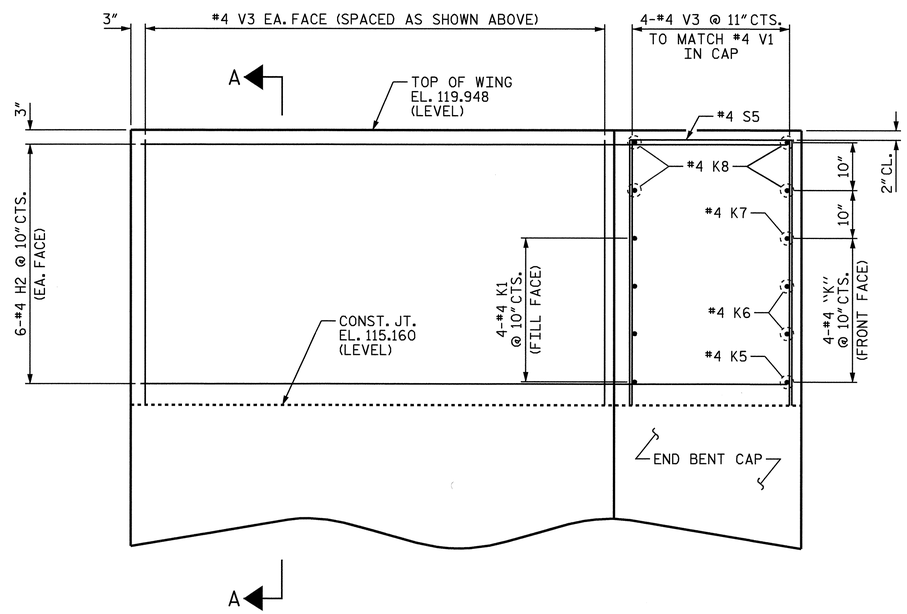

ELEVATION OF WING (W2)

AT END BENT 1

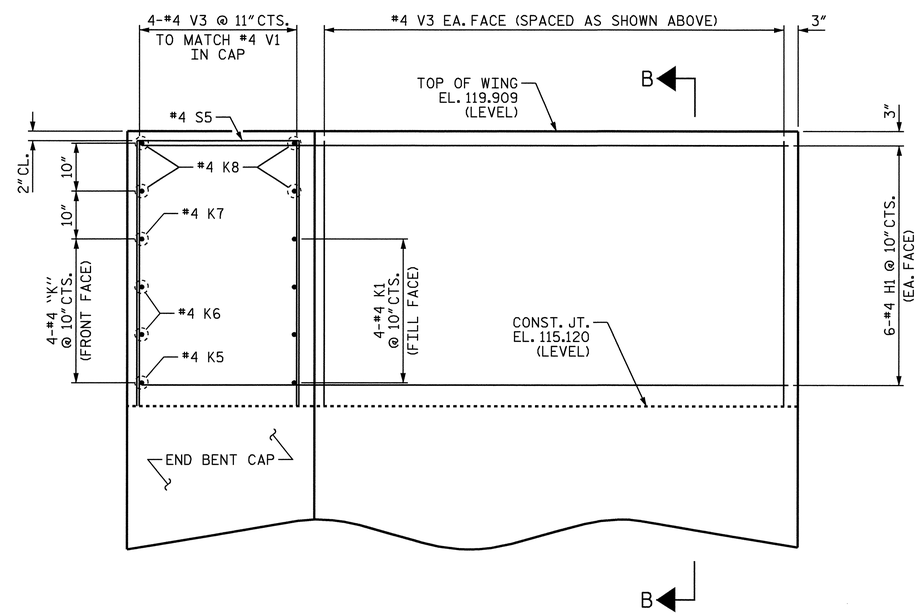

ELEVATION OF WING (W4)

AT END BENT 2

ABUTMENT WINGS

FOR END BENT REINFORCING STEEL AND DETAILS, SEE "SUBSTRUCTURE END BENTS 1 & 2" SHEETS.

PROJECT NO. U-2810A
CUMBERLAND COUNTY
STATION: 39+85.50 -L-

SHEET 4 OF 4

STATE OF NORTH CAROLINA
DEPARTMENT OF TRANSPORTATION
RALEIGH

SUPERSTRUCTURE

PLAN OF SPAN DETAILS

STAGE II

NORTH CAROLINA PROFESSIONAL SEAL 16301 ENGINEER TING HSILUNG FANG
2/16/09

REVISIONS						SHEET NO.
NO.	BY:	DATE:	NO.	BY:	DATE:	S-54
1			3			TOTAL SHEETS
2			4			83

DRAWN BY : E.C. LOCKLEAR DATE : 10-17-08
CHECKED BY : T.H. FANG DATE : 11-08

16-FEB-2009 13:31
G:\TIPProjects-U\U2810\Structures\str2\FinalPlans\U2810_sd_S*_02.dgn
zhbrown

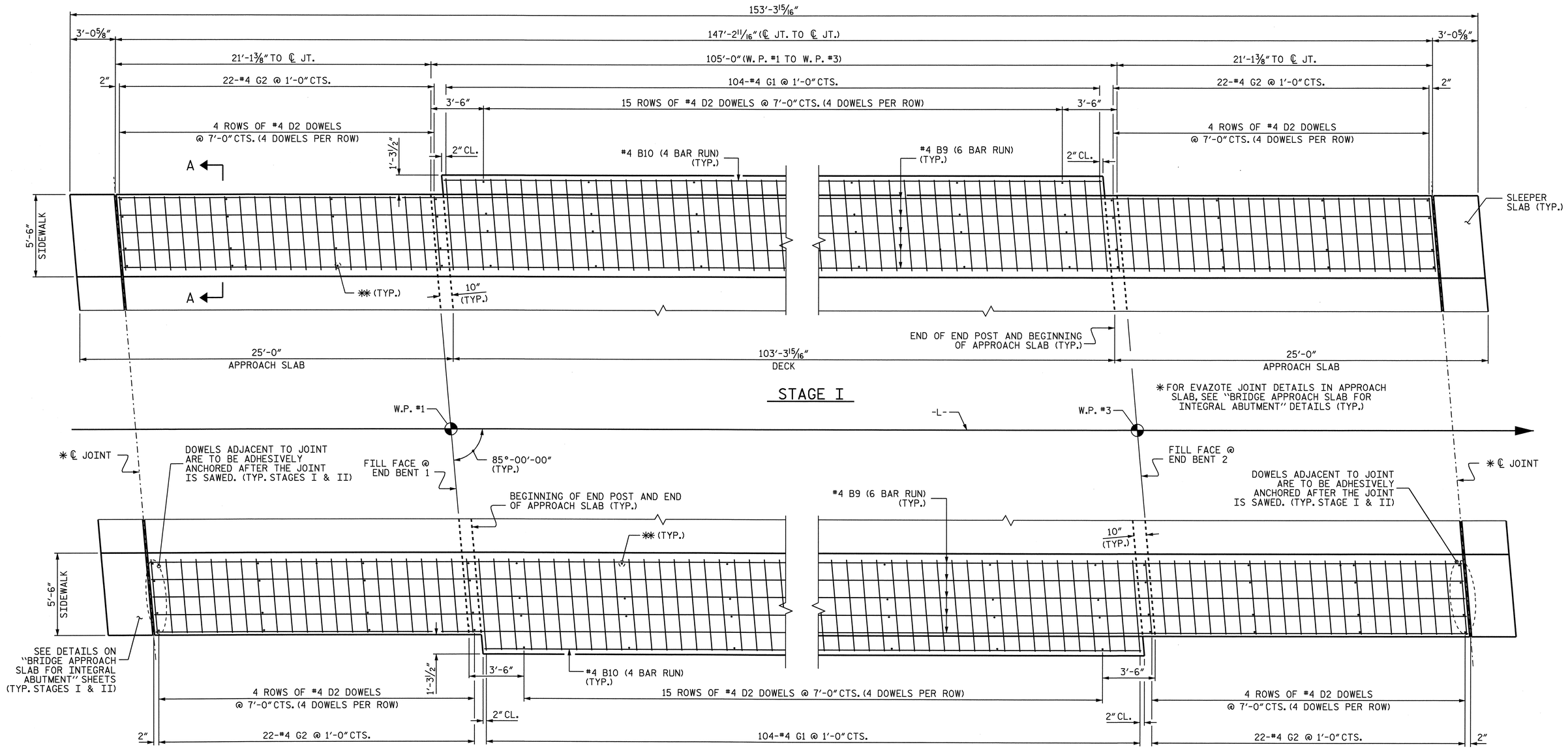

STAGE II

PLAN OF SIDEWALK

2'-0" MIN. SPLICE FOR #4 BARS

PROJECT NO. U-2810A

CUMBERLAND COUNTY

STATION: 39+85.50 -L-

NOTES FOR SIDEWALKS AND CONCRETE MEDIAN:

THE JOINTS IN THE APPROACH SLABS SHALL BE SAWED PRIOR TO THE CASTING OF THE SIDEWALK AND CONCRETE MEDIAN.

THE SIDEWALK AND CONCRETE MEDIAN ON A CONTINUOUS UNIT SHALL NOT BE CAST UNTIL ALL CONCRETE IN THE UNIT HAS BEEN CAST AND HAS REACHED A MINIMUM COMPRESSIVE STRENGTH OF 3,000 PSI.

ALL REINFORCING STEEL IN THE SIDEWALK, CONCRETE MEDIAN, AND END POSTS SHALL BE EPOXY COATED.

GROOVED CONTRACTION JOINTS, ½" IN DEPTH, SHALL BE TOOLED IN ALL EXPOSED FACES OF THE SIDEWALK AND CONCRETE MEDIAN IN ACCORDANCE WITH ARTICLE B25-10(B) OF THE STANDARD SPECIFICATIONS. THE CONTRACTION JOINTS SHALL BE LOCATED AT A SPACING OF 8 FEET TO 10 FEET BETWEEN EXPANSION JOINTS. NO CONTRACTION JOINT WILL BE REQUIRED FOR SEGMENTS LESS THAN 10 FEET IN LENGTH.

FOR SIDEWALK COVER PLATE DETAILS IN APPROACH SLABS, SEE "BRIDGE APPROACH SLAB FOR INTEGRAL ABUTMENT" SHEETS.

FOR SECTION THRU SIDEWALK ON DECK, SEE "TYPICAL SECTION DETAILS" SHEET.

FOR SIDEWALK DETAILS ON SLEEPER SLABS, SEE "BRIDGE APPROACH SLAB FOR INTEGRAL ABUTMENT" SHEETS.

SIDEWALKS AND CONCRETE MEDIAN ON THE BRIDGE EXTENDING TO THE EXPANSION JOINT ON THE APPROACH SLABS ARE INCLUDED IN THE SUPERSTRUCTURE BILL OF MATERIAL AND PAID FOR AS PART OF THE REINFORCED CONCRETE DECK PAY ITEM. SIDEWALKS AND CONCRETE MEDIAN ON THE SLEEPER SLAB ONLY ARE INCLUDED IN THE APPROACH SLAB BILL OF MATERIAL AND PAID FOR AS PART OF THE BRIDGE APPROACH SLABS PAY ITEM.

✱✱ THE #4 D2 DOWELS MAY BE PUSHED INTO GREEN CONCRETE AFTER DECK OR APPROACH SLAB HAS BEEN SCREEDED OFF, EXCEPT AS NOTED.

NORTH CAROLINA PROFESSIONAL SEAL 25492 ENGINEER P. KOREY NEWTON

1/29/2009

STATE OF NORTH CAROLINA
DEPARTMENT OF TRANSPORTATION
RALEIGH

SUPERSTRUCTURE

SIDEWALK DETAILS

REVISIONS						SHEET NO.
NO.	BY:	DATE:	NO.	BY:	DATE:	S-55
1			3			TOTAL SHEETS
2			4			83

DRAWN BY : P. K. NEWTON DATE : 12-12-08
CHECKED BY : T. H. FANG DATE : 12-15-08

26-JAN-2009 12:06
R:\Structures\str2\Final Plans\u2810_sd_sw_02.dgn
elocklear

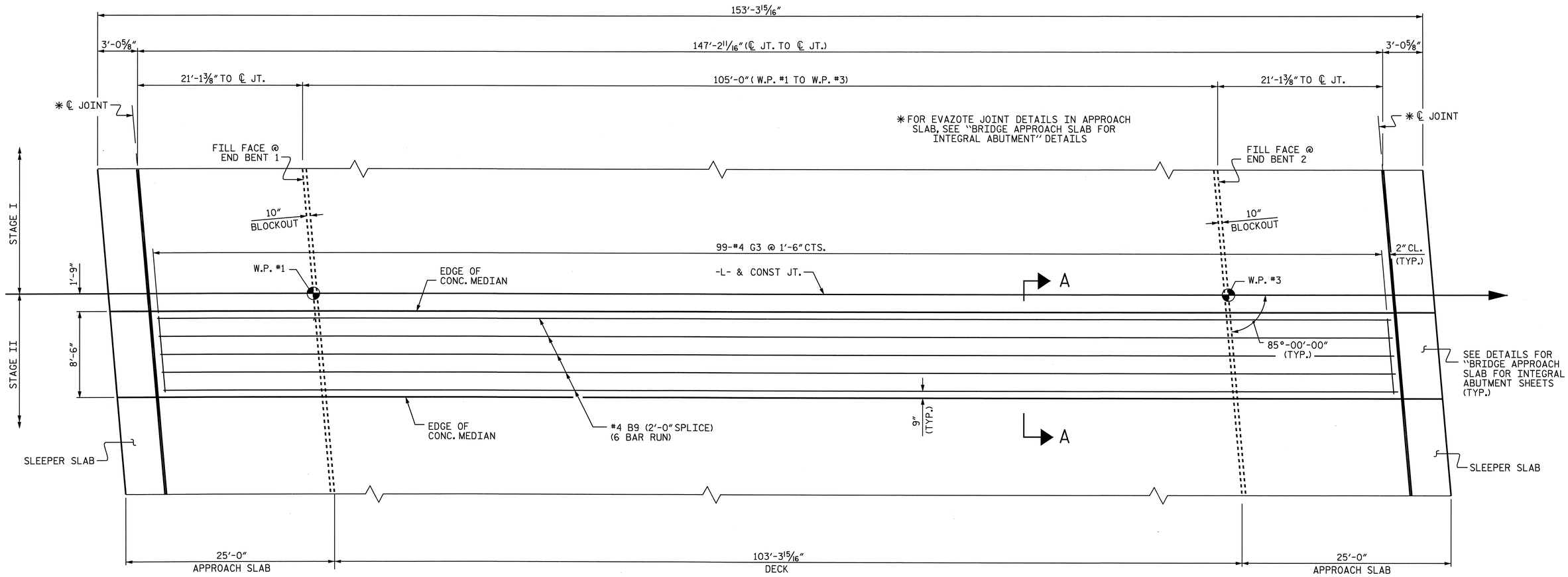

PLAN

ALL REINFORCING STEEL IN THE CONCRETE MEDIAN SHALL BE EPOXY COATED.

2'-0" MIN. SPLICE FOR #4 BARS

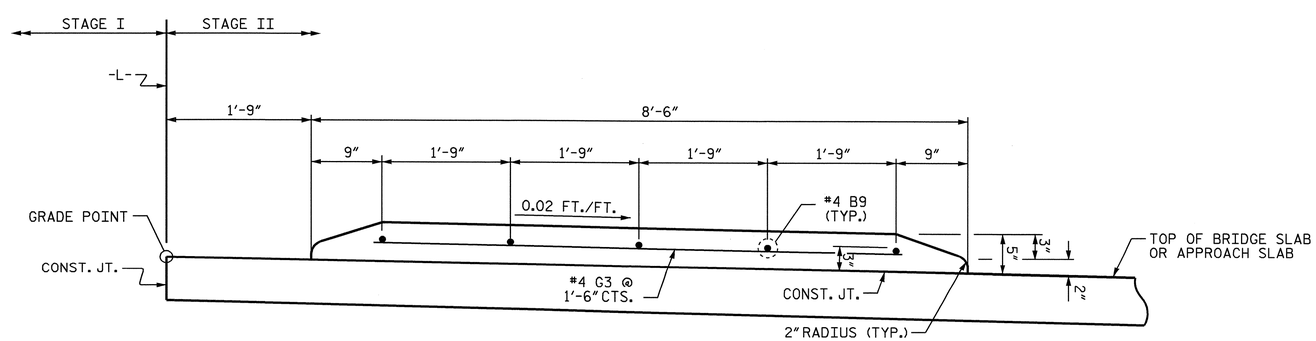

SECTION A-A

FOR CONCRETE MEDIAN ON SLEEPER SLABS, SEE "BRIDGE APPROACH SLAB FOR INTEGRAL ABUTMENT" SHEETS.

SEE NOTES ON "SIDEWALK DETAILS" SHEET.

PROJECT NO. U-2810A
CUMBERLAND COUNTY
STATION: 39+85.50 -L-

STATE OF NORTH CAROLINA
DEPARTMENT OF TRANSPORTATION
RALEIGH

SUPERSTRUCTURE

CONCRETE MEDIAN

(FOR STAGE II ONLY)

NORTH CAROLINA PROFESSIONAL SEAL 16301 ENGINEER TING HSIUNG FANG
1/26/09

REVISIONS						SHEET NO.
NO.	BY:	DATE:	NO.	BY:	DATE:	S-56
1			3			TOTAL SHEETS
2			4			83

DRAWN BY : E.C. LOCKLEAR DATE : 10-27-08
CHECKED BY : T.H. FANG DATE : 11-08

26-JAN-2009 12:06
R:\Structures\str2\FinalPlans\u2810_sd_md_02.dgn
elocklear

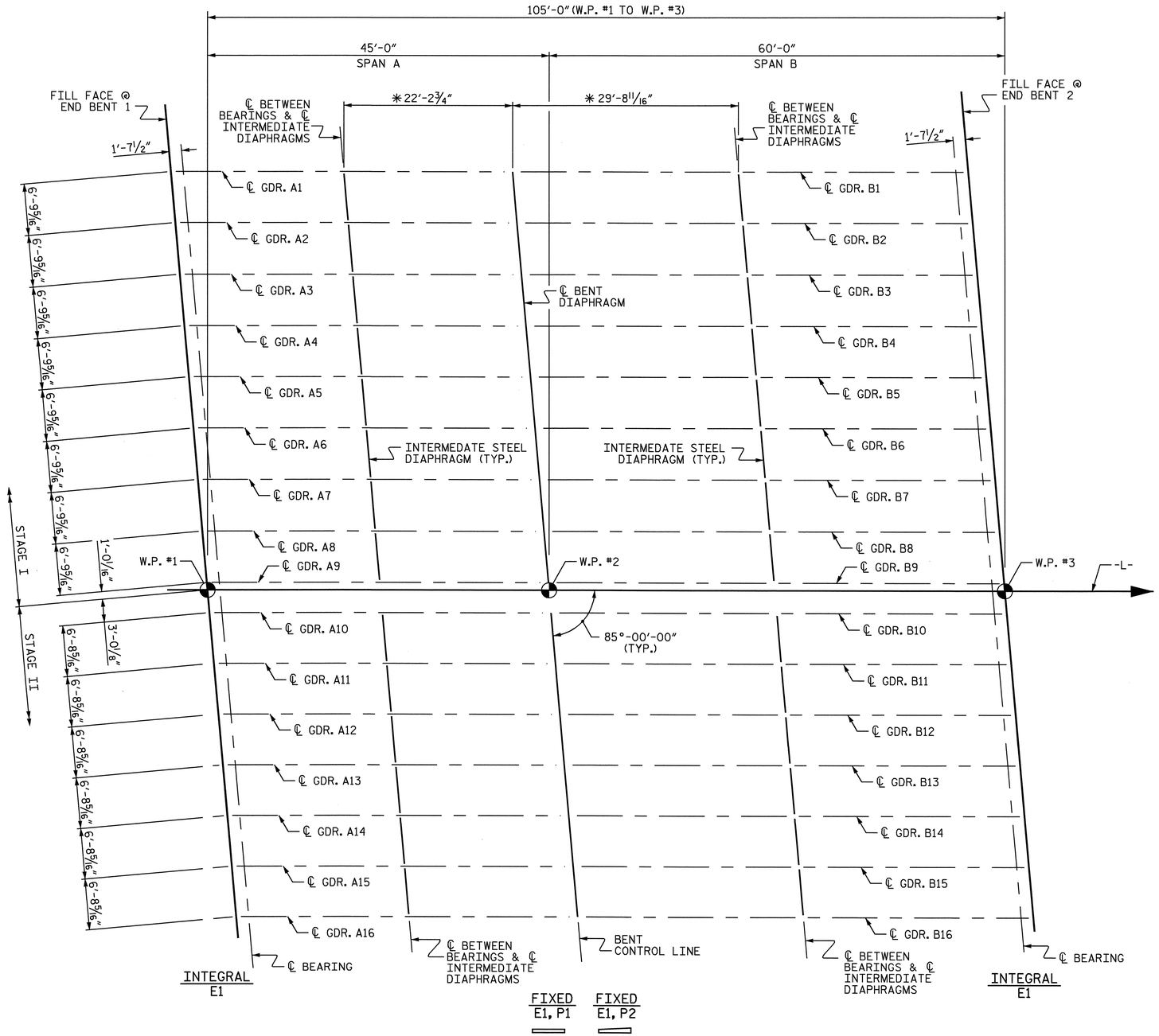

FRAMING PLAN

*DIMENSIONS MEASURING INTERMEDIATE DIAPHRAGMS ARE SHOWN TO ℄ BETWEEN BEARINGS.

PROJECT NO. U-2810A
CUMBERLAND COUNTY
STATION: 39+85.50 -L-

STATE OF NORTH CAROLINA
DEPARTMENT OF TRANSPORTATION
RALEIGH

SUPERSTRUCTURE

FRAMING PLAN

NORTH CAROLINA PROFESSIONAL SEAL 16301 ENGINEER TING HSIUNG FANG
1/26/09

REVISIONS						SHEET NO.
NO.	BY:	DATE:	NO.	BY:	DATE:	S-57
1			3			TOTAL SHEETS
2			4			83

DRAWN BY : E.C. LOCKLEAR DATE : 11-21-08
CHECKED BY : T.H. FANG DATE : 12-08

26-JAN-2009 12:06
R:\Structures\str2\Final Plans\U2810_sd_FP_02.dgn
elocklear

STR #2

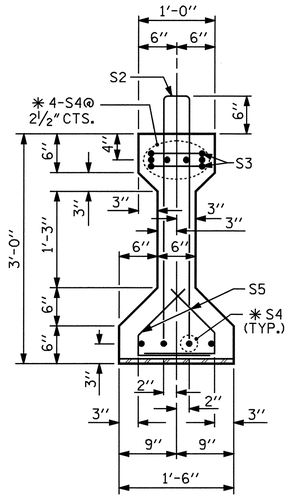

SECTION A-A

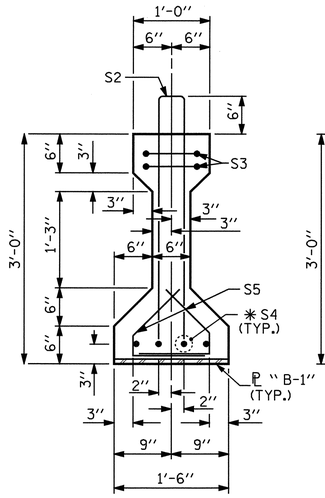

SECTION B-B

(FOR EXTENDED ℄ "B-1" DETAILS, SEE SHEET 4 OF 4.)

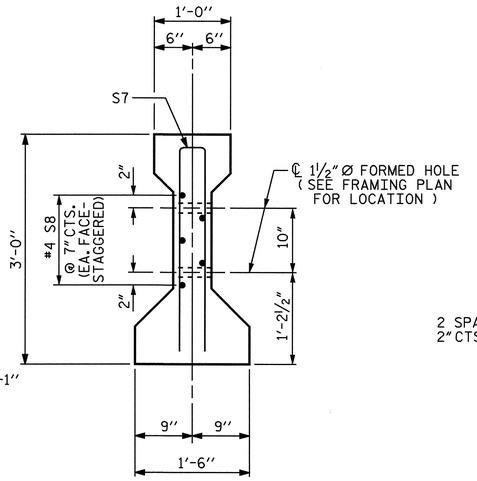

SECTION C-C

(S1 BARS NOT SHOWN)

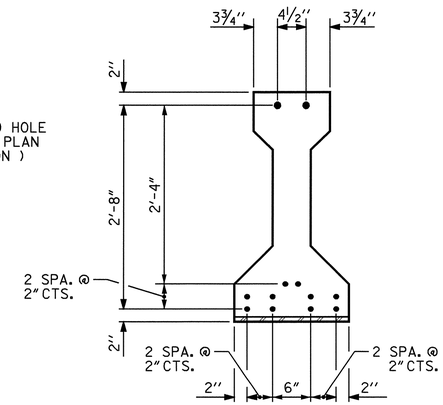

AT END OF GIRDER

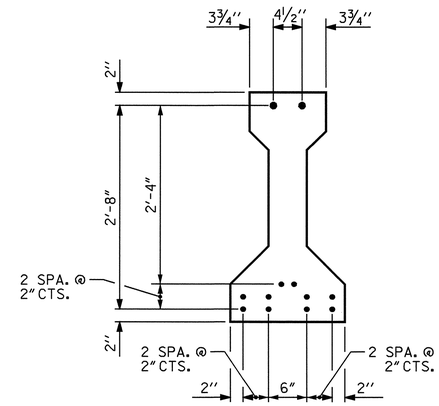

AT ℄ OF GIRDER

0.6" Ø LOW RELAXATION STRAND LAYOUT

(12 STRANDS, ALL STRAIGHT)

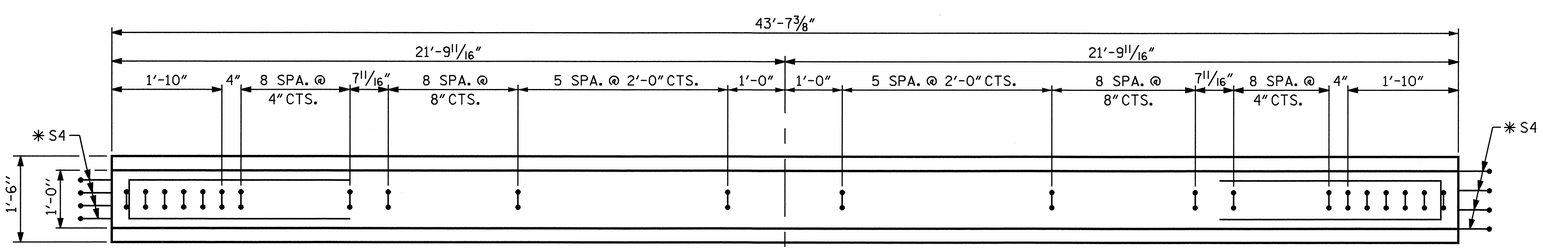

PLAN OF GIRDER

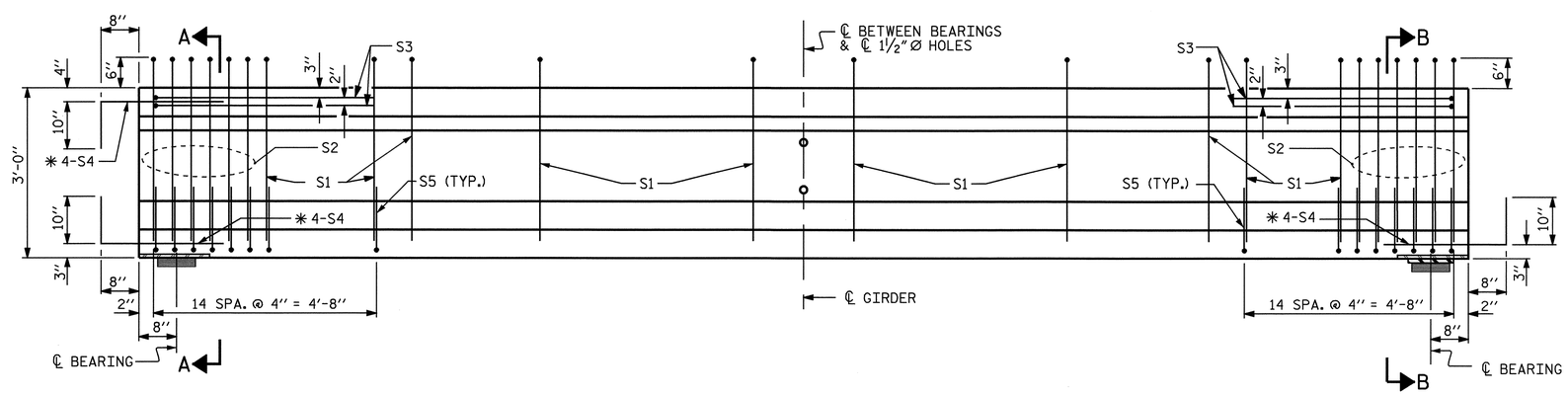

INTEGRAL END BENT

ELEVATION OF GIRDER

(SEE PARTIAL ELEVATION FOR ADDITIONAL "S" BARS IN THE INTERMEDIATE DIAPHRAM AREA.)

FIX

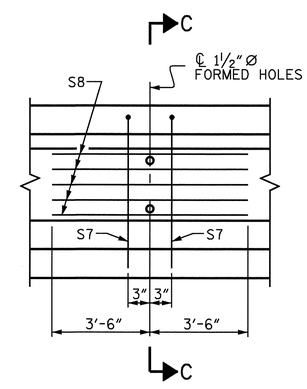

PARTIAL ELEVATION

SHOWING INTERMEDIATE DIAPHRAGM REINFORCING STEEL FOR ALL GIRDERS.

0.6" Ø L. R. GRADE 270 STRANDS

AREA (SQUARE INCHES)	ULTIMATE STRENGTH (LBS. PER STRAND)	APPLIED PRESTRESS (LBS. PER STRAND)
0.217	58,600	43,950

REINFORCING STEEL FOR ONE GIRDER

BAR	NUMBER	SIZE	TYPE	LENGTH	WEIGHT
S1	46	#4	1	6'-10"	210
S2	12	#5	1	6'-10"	86
S3	4	#4	3	8'-8"	23
✱ S4	12	#5	STR	3'-8"	46
S5	60	#4	2	2'-4"	94
S7	2	#5	3	5'-8"	12
S8	5	#4	STR	7'-0"	23
TOTAL				LBS.	494

✱ S4 BARS SHALL BE BENT BEFORE SHIPMENT. HEAT BENDING SHALL NOT BE ALLOWED.

BAR TYPES

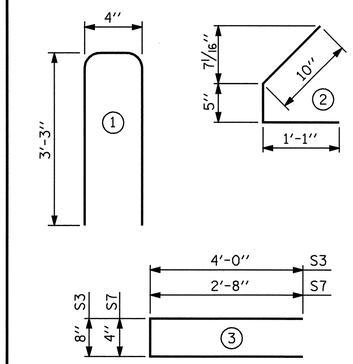

ALL BAR DIMENSIONS ARE OUT-TO-OUT

QUANTITIES FOR ONE GIRDER

	REINFORCING STEEL LB.	5500 PSI CONCRETE C.Y.	0.6" Ø L.R. STRANDS No.
	494	4.140	12

GIRDERS REQUIRED

	NUMBER	LENGTH	TOTAL LENGTH
STAGE I	9	43.61	392.53
STAGE II	7	43.61	305.30
TOTAL	16	——	697.83

PROJECT NO. U-2810A

CUMBERLAND COUNTY

STATION: 39+85.50 -L-

SHEET 1 OF 4

STATE OF NORTH CAROLINA
DEPARTMENT OF TRANSPORTATION
RALEIGH

STANDARD

AASHTO TYPE II
PRESTRESSED CONCRETE GIRDER
CONTINUOUS FOR LIVE LOAD
SPAN A

NORTH CAROLINA PROFESSIONAL SEAL 026445 ENGINEER P. KOREY NEWTON

2/16/2009

REVISIONS							SHEET NO.
NO.	BY:	DATE:	NO.	BY:	DATE:		S-58
1			3				TOTAL SHEETS
2			4				83

ASSEMBLED BY : P. K. NEWTON	DATE : 1-14-09
CHECKED BY : S. F. DOMBROWSKI	DATE : 1-14-09
DRAWN BY : ELR 8/91	REV. 8/16/99 RWW/LES
CHECKED BY : GRP 8/91	REV. 10/17/00R RWW/LES
	REV. 5/1/06 TLA/GM

16-FEB-2009 13:34
G:\TIPProjects-U\U2810\Structures\str2\FinalPlans\u2810_sd_g*_02.dgn
zhbrown

STR #2 STD. NO. PCG4

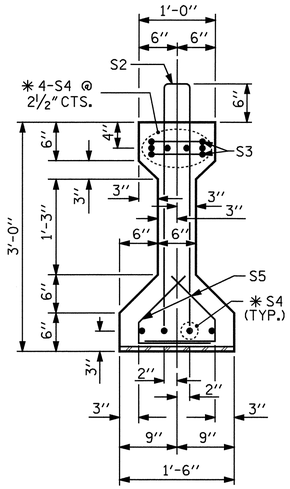

SECTION A-A

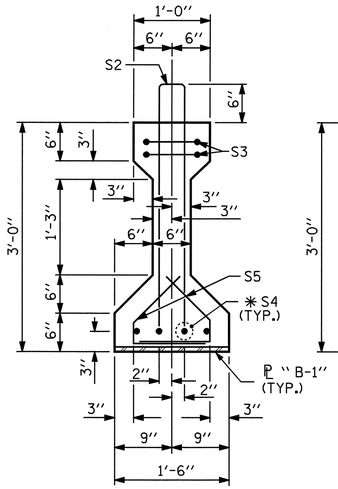

SECTION B-B

(FOR EXTENDED ℄ "B-1" DETAILS, SEE SHEET 4 OF 4.)

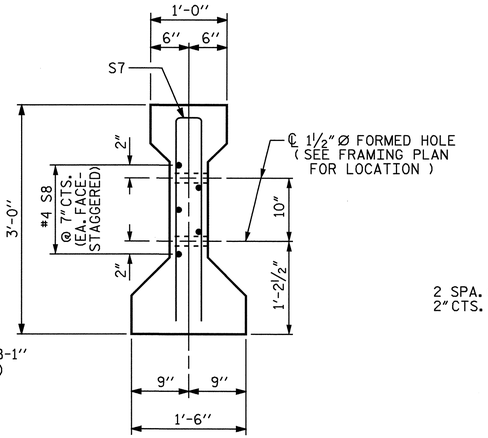

SECTION C-C

(S1 BARS NOT SHOWN)

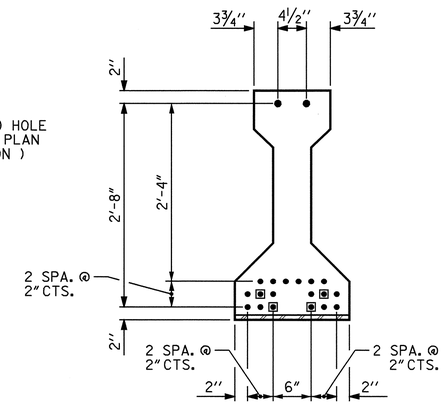

AT END OF GIRDER

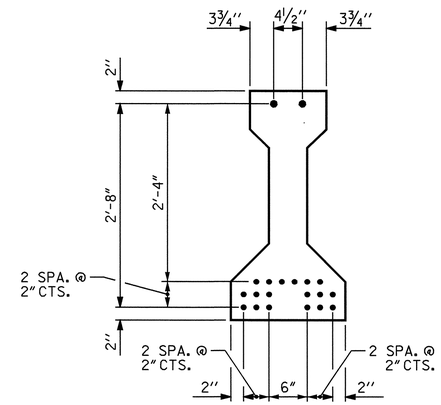

AT ℄ OF GIRDER

0.6" Ø LOW RELAXATION STRAND LAYOUT

▣ STRANDS DEBONDED FOR 12'-0" FROM END OF GIRDER
(20 STRANDS, ALL STRAIGHT, 4 DEBONDED)

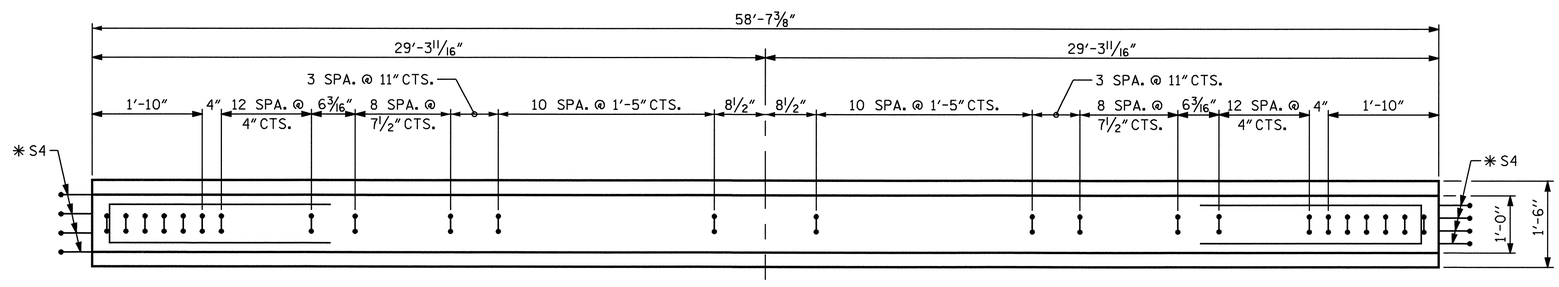

PLAN OF GIRDER

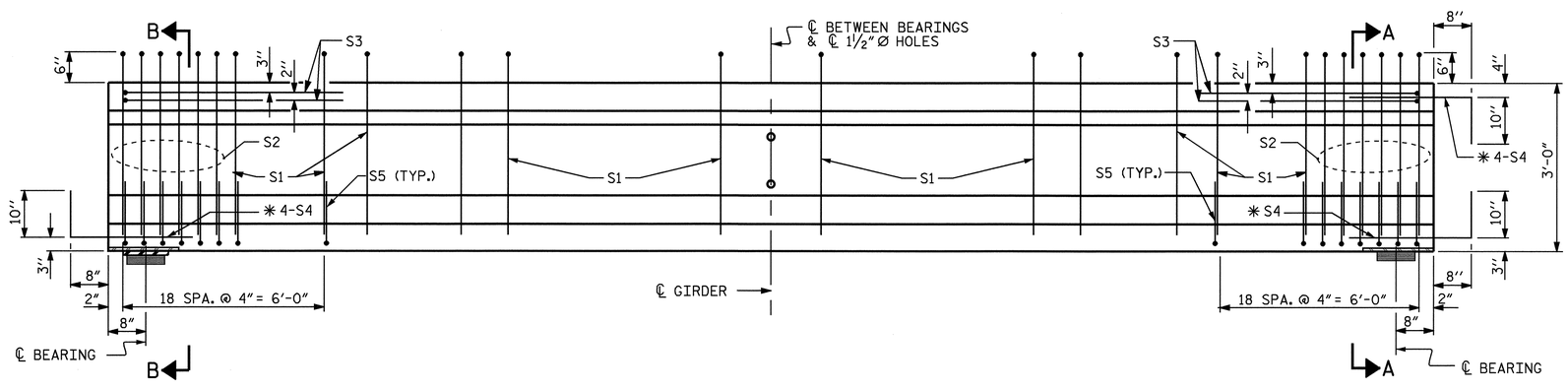

FIX

INTEGRAL END BENT

ELEVATION OF GIRDER

(SEE PARTIAL ELEVATION FOR ADDITIONAL "S" BARS IN THE INTERMEDIATE DIAPHRAM AREA.)

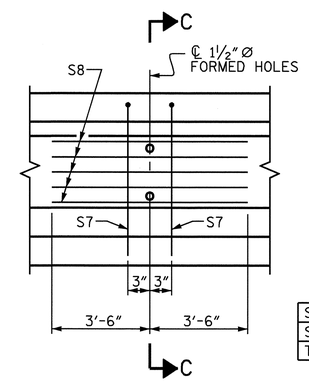

PARTIAL ELEVATION

SHOWING INTERMEDIATE DIAPHRAGM REINFORCING STEEL FOR ALL GIRDERS.

0.6" Ø L. R. GRADE 270 STRANDS

AREA (SQUARE INCHES)	ULTIMATE STRENGTH (LBS. PER STRAND)	APPLIED PRESTRESS (LBS. PER STRAND)
0.217	58,600	43,950

REINFORCING STEEL FOR ONE GIRDER

BAR	NUMBER	SIZE	TYPE	LENGTH	WEIGHT
S1	70	#4	1	6'-10"	320
S2	12	#5	1	6'-10"	86
S3	4	#4	3	8'-8"	23
✱S4	12	#5	STR	3'-8"	46
S5	76	#4	2	2'-4"	118
S7	2	#5	3	5'-8"	12
S8	5	#4	STR	7'-0"	23
TOTAL				LBS.	628

✱S4 BARS SHALL BE BENT BEFORE SHIPMENT. HEAT BENDING SHALL NOT BE ALLOWED.

BAR TYPES

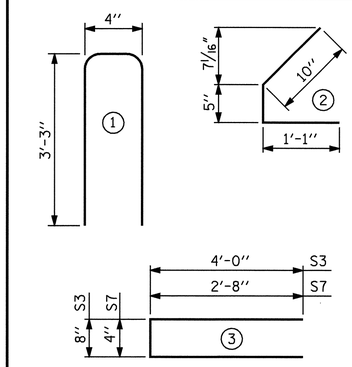

ALL BAR DIMENSIONS ARE OUT-TO-OUT

QUANTITIES FOR ONE GIRDER

	REINFORCING STEEL	8500 PSI CONCRETE	0.6" Ø L.R. STRANDS
	LB.	C.Y.	No.
	628	5.564	20

GIRDERS REQUIRED

	NUMBER	LENGTH	TOTAL LENGTH
STAGE I	9	58.61	527.53
STAGE II	7	58.61	410.30
TOTAL	16	——	937.83

PROJECT NO. U-2810A
CUMBERLAND COUNTY
STATION: 39+85.50 -L-

SHEET 2 OF 4

STATE OF NORTH CAROLINA
DEPARTMENT OF TRANSPORTATION
RALEIGH

STANDARD

AASHTO TYPE II
PRESTRESSED CONCRETE GIRDER
CONTINUOUS FOR LIVE LOAD
SPAN B

NORTH CAROLINA PROFESSIONAL SEAL 26456 ENGINEER K. KOREY NEWTON
2/16/2009

REVISIONS						SHEET NO.
NO.	BY:	DATE:	NO.	BY:	DATE:	S-59
1			3			TOTAL SHEETS
2			4			83

ASSEMBLED BY : P. K. NEWTON DATE : 1-14-09
CHECKED BY : S. F. DOMBROWSKI DATE : 1-14-09

DRAWN BY : ELR 8/91
CHECKED BY : GRP 8/91

REV. 8/16/99 RWW/LES
REV. 10/17/00R RWW/LES
REV. 5/1/06 TLA/GM

16-FEB-2009 13:36
G:\TIPProjects-U\U2810\Structures\str2\FinalPlans\u2810_sd_g*_02.dgn
zhbrown

STR #2 STD. NO. PCG4

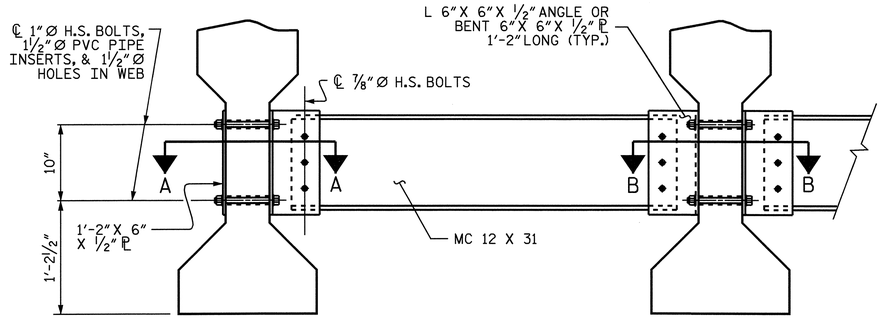

EXTERIOR GIRDER

INTERIOR GIRDER

PART SECTION AT INTERMEDIATE DIAPHRAGM

(TYPICAL FOR EACH BAY, EXCEPT CLOSURE POUR)

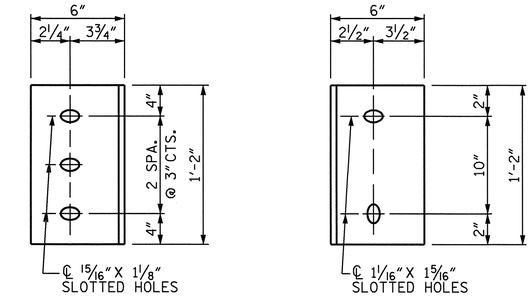

DIAPHRAGM FACE

WEB FACE

CONNECTOR PLATE DETAILS

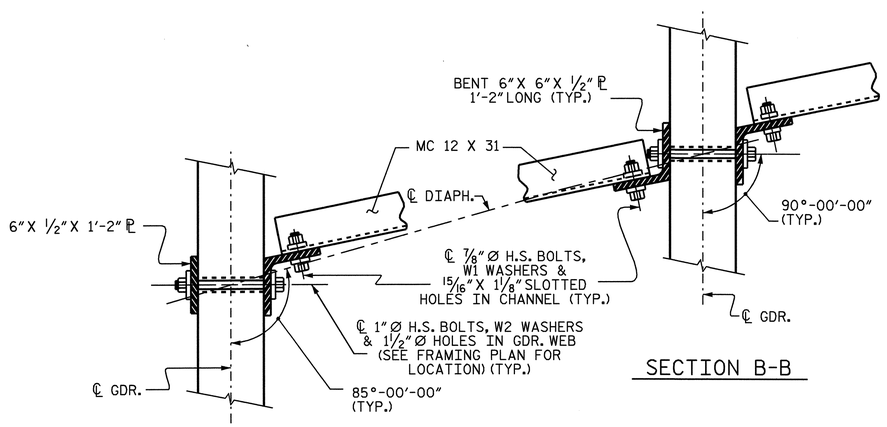

SECTION B-B

SECTION A-A

CONNECTION DETAILS

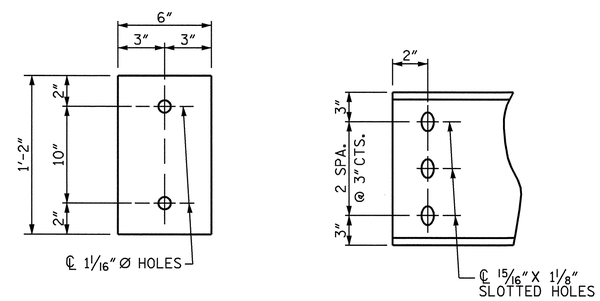

PLATE DETAILS

CHANNEL END

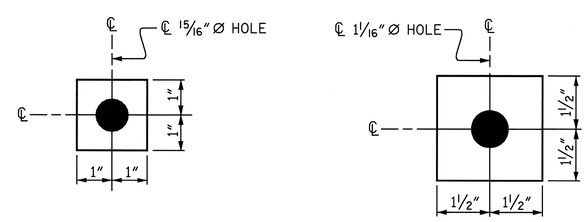

W1

ℙ 7/16" X 2" X 2"

USE WITH ⅞"Ø HVY. HEX NUTS & DIRECT TENSION INDICATOR WASHERS AT DIAPHRAGM CHANNEL TO CONNECTOR PLATE CONNECTIONS

W2

ℙ 7/16" X 3" X 3"

USE WITH 1"Ø HVY. HEX NUTS AT CONNECTOR PLATE TO GIRDER CONNECTIONS

WASHER DETAILS

STRUCTURAL STEEL NOTES

ALL INTERMEDIATE DIAPHRAGM STEEL, CONNECTOR PLATES AND PLATE WASHERS SHALL BE AASHTO M270 GRADE 50 OR APPROVED EQUAL.

TENSION ON THE AASHTO M164 BOLTS THROUGH THE CHANNEL MEMBER SHALL BE CALIBRATED USING DIRECT TENSION INDICATOR WASHERS IN ACCORDANCE WITH ARTICLE 440-8 OF THE STANDARD SPECIFICATIONS.

TENSION ON THE AASHTO M164 BOLTS THROUGH THE GIRDER WEB SHALL BE SNUG TIGHTENED FOLLOWED BY AN ADDITIONAL ¼ TURN.

THE CHANNELS, ANGLES, WASHERS, PLATE WASHERS, AND DIRECT TENSION INDICATORS SHALL BE GALVANIZED OR METALLIZED IN ACCORDANCE WITH THE STANDARD SPECIFICATIONS. FOR THERMAL SPRAYED COATINGS (METALLIZATION), SEE SPECIAL PROVISIONS.

FOR METALLIZATION, APPLY AN 8 MIL THICK 99.99 PERCENT ZINC (W-Zn-1) THERMAL SPRAYED COATING WITH A 0.5 MIL THICK SEAL COAT TO ALL STEEL DIAPHRAGM SURFACES IN ACCORDANCE WITH THE THERMAL SPRAYED COATINGS SPECIAL PROVISIONS AND SECTION 442 OF THE STANDARD SPECIFICATIONS.

GALVANIZE THE HIGH STRENGTH BOLTS, NUTS, AND WASHERS IN ACCORDANCE WITH THE STANDARD SPECIFICATIONS. FOR HIGH STRENGTH BOLTS, SEE SPECIAL PROVISIONS.

USE A MINIMUM 7/16" THICK PLATE WASHER WITH STANDARD HOLES UNDER EACH BOLT HEAD AND NUT. THE PLATE WASHERS SHALL HAVE SUFFICIENT SIZE TO COVER THE HOLES AFTER INSTALLATION. DIRECT TENSION INDICATORS ARE TO BE USED IN CONJUNCTION WITH THE PLATE WASHERS.

PROVIDE SUFFICIENT LENGTH OF ALL BOLTS TO ACCOMMODATE WASHERS, DIRECT TENSION INDICATORS, THE THICKNESS OF CONNECTING MEMBER PLUS AT LEAST ¼" PROJECTION BEYOND THE NUT.

INTERMEDIATE DIAPHRAGM ASSEMBLY SHALL COMPLY WITH SECTION 1072 OF THE STANDARD SPECIFICATIONS.

CONTRACTOR SHALL SUBMIT TWO SETS OF WORKING DRAWINGS FOR THE INTERMEDIATE DIAPHRAGM ASSEMBLY FOR REVIEW, COMMENTS AND ACCEPTANCE. AFTER REVIEW, COMMENTS, AND ACCEPTANCE, SUBMIT SEVEN SETS FOR DISTRIBUTION.

IN THE EXTERIOR BAYS, TEMPORARY STRUTS SHALL BE PLACED BETWEEN PRESTRESSED GIRDERS ADJACENT TO THE STEEL DIAPHRAGMS. STRUTS SHALL REMAIN IN PLACE 3 DAYS AFTER CONCRETE IS PLACED. ALL AASHTO M164 H.S. BOLTS SHALL BE FULLY TIGHTENED AFTER THE STRUTS HAVE BEEN REMOVED.

THE COST OF THE STEEL DIAPHRAGMS AND ASSEMBLIES SHALL BE INCLUDED IN THE UNIT PRICE BID FOR PRESTRESSED CONCRETE GIRDERS.

PROJECT NO. U-2810A

CUMBERLAND COUNTY

STATION: 39+85.50 -L-

SHEET 3 OF 4

STATE OF NORTH CAROLINA
DEPARTMENT OF TRANSPORTATION
RALEIGH

STANDARD

INTERMEDIATE STEEL DIAPHRAGMS FOR TYPE II, PRESTRESSED CONCRETE GIRDERS

NORTH CAROLINA PROFESSIONAL SEAL 16301 ENGINEER TING HSIUNG FANG

1/26/09

REVISIONS						SHEET NO.
NO.	BY:	DATE:	NO.	BY:	DATE:	S-60
1			3			TOTAL SHEETS
2			4			83

ASSEMBLED BY : E.C. LOCKLEAR	DATE : 9-04-08
CHECKED BY : T.H. FANG	DATE : 11-25-08
DRAWN BY : TLA 6/05	ADDED 10/21/05
CHECKED BY : VC 6/05	REV. 5/1/06R KMM/GM

26-JAN-2009 12:02
R:\Structures\str2\Final Plans\u2810_sd_g*_02.dgn
elocklear

STD. NO. PCG12

DEAD LOAD DEFLECTION TABLE

SPAN A

0.6"Ø LOW RELAXATION	0	.1	.2	.3	.4	.5	.6	.7	.8	.9	0
GIRDERS 1, 4-8, & 16											
TENTH POINTS	0	.1	.2	.3	.4	.5	.6	.7	.8	.9	0
CAMBER (GIRDER ALONE IN PLACE) ↑	0.0	0.028	0.052	0.071	0.084	0.088	0.084	0.071	0.052	0.028	0.0
✳ DEFLECTION DUE TO SUPERIMPOSED D.L. ↓	0.0	0.008	0.016	0.021	0.025	0.026	0.025	0.021	0.016	0.008	0.0
FINAL CAMBER ↑	0	1/4"	7/16"	5/8"	11/16"	3/4"	11/16"	5/8"	7/16"	1/4"	0
GIRDERS 2 & 3											
TENTH POINTS	0	.1	.2	.3	.4	.5	.6	.7	.8	.9	0
CAMBER (GIRDER ALONE IN PLACE) ↑	0.0	0.028	0.052	0.071	0.084	0.088	0.084	0.071	0.052	0.028	0.0
✳ DEFLECTION DUE TO SUPERIMPOSED D.L. ↓	0.0	0.009	0.017	0.023	0.027	0.028	0.027	0.023	0.017	0.009	0.0
FINAL CAMBER ↑	0	1/4"	7/16"	9/16"	11/16"	3/4"	11/16"	9/16"	7/16"	1/4"	0
GIRDERS 9 & 10											
TENTH POINTS	0	.1	.2	.3	.4	.5	.6	.7	.8	.9	0
CAMBER (GIRDER ALONE IN PLACE) ↑	0.0	0.028	0.052	0.071	0.084	0.088	0.084	0.071	0.052	0.028	0.0
✳ DEFLECTION DUE TO SUPERIMPOSED D.L. ↓	0.0	0.007	0.014	0.019	0.022	0.023	0.022	0.019	0.014	0.007	0.0
FINAL CAMBER ↑	0	1/4"	7/16"	5/8"	3/4"	3/4"	3/4"	5/8"	7/16"	1/4"	0
GIRDER 11											
TENTH POINTS	0	.1	.2	.3	.4	.5	.6	.7	.8	.9	0
CAMBER (GIRDER ALONE IN PLACE) ↑	0.0	0.028	0.052	0.071	0.084	0.088	0.084	0.071	0.052	0.028	0.0
✳ DEFLECTION DUE TO SUPERIMPOSED D.L. ↓	0.0	0.009	0.016	0.022	0.026	0.027	0.026	0.022	0.016	0.009	0.0
FINAL CAMBER ↑	0	1/4"	7/16"	9/16"	11/16"	3/4"	11/16"	9/16"	7/16"	1/4"	0
GIRDERS 12 & 13											
TENTH POINTS	0	.1	.2	.3	.4	.5	.6	.7	.8	.9	0
CAMBER (GIRDER ALONE IN PLACE) ↑	0.0	0.028	0.052	0.071	0.084	0.088	0.084	0.071	0.052	0.028	0.0
✳ DEFLECTION DUE TO SUPERIMPOSED D.L. ↓	0.0	0.008	0.015	0.021	0.025	0.026	0.025	0.021	0.015	0.008	0.0
FINAL CAMBER ↑	0	1/4"	7/16"	5/8"	11/16"	3/4"	11/16"	5/8"	7/16"	1/4"	0
GIRDERS 14 & 15											
TENTH POINTS	0	.1	.2	.3	.4	.5	.6	.7	.8	.9	0
CAMBER (GIRDER ALONE IN PLACE) ↑	0.0	0.028	0.052	0.071	0.084	0.088	0.084	0.071	0.052	0.028	0.0
✳ DEFLECTION DUE TO SUPERIMPOSED D.L. ↓	0.0	0.009	0.017	0.023	0.027	0.028	0.027	0.023	0.017	0.009	0.0
FINAL CAMBER ↑	0	1/4"	7/16"	9/16"	11/16"	3/4"	11/16"	9/16"	7/16"	1/4"	0

SPAN B

	0	.1	.2	.3	.4	.5	.6	.7	.8	.9	0
GIRDER 1											
TENTH POINTS	0	.1	.2	.3	.4	.5	.6	.7	.8	.9	0
CAMBER (GIRDER ALONE IN PLACE) ↑	0.0	0.082	0.155	0.212	0.248	0.260	0.248	0.212	0.155	0.082	0.0
✳ DEFLECTION DUE TO SUPERIMPOSED D.L. ↓	0.0	0.023	0.044	0.060	0.070	0.073	0.070	0.060	0.044	0.023	0.0
FINAL CAMBER ↑	0	11/16"	1 5/16"	1 13/16"	2 1/8"	2 1/4"	2 1/8"	1 13/16"	1 5/16"	11/16"	0
GIRDERS 2 & 3											
TENTH POINTS	0	.1	.2	.3	.4	.5	.6	.7	.8	.9	0
CAMBER (GIRDER ALONE IN PLACE) ↑	0.0	0.082	0.155	0.212	0.248	0.260	0.248	0.212	0.155	0.082	0.0
✳ DEFLECTION DUE TO SUPERIMPOSED D.L. ↓	0.0	0.024	0.046	0.063	0.073	0.077	0.073	0.063	0.046	0.024	0.0
FINAL CAMBER ↑	0	11/16"	1 5/16"	1 13/16"	2 1/8"	2 3/16"	2 1/8"	1 13/16"	1 5/16"	11/16"	0
GIRDERS 4-8											
TENTH POINTS	0	.1	.2	.3	.4	.5	.6	.7	.8	.9	0
CAMBER (GIRDER ALONE IN PLACE) ↑	0.0	0.082	0.155	0.212	0.248	0.260	0.248	0.212	0.155	0.082	0.0
✳ DEFLECTION DUE TO SUPERIMPOSED D.L. ↓	0.0	0.022	0.042	0.58	0.068	0.071	0.068	0.058	0.042	0.022	0.0
FINAL CAMBER ↑	0	3/4"	1 3/8"	1 7/8"	2 3/16"	2 1/4"	2 3/16"	1 7/8"	1 3/8"	3/4"	0
GIRDER 9											
TENTH POINTS	0	.1	.2	.3	.4	.5	.6	.7	.8	.9	0
CAMBER (GIRDER ALONE IN PLACE) ↑	0.0	0.082	0.155	0.212	0.248	0.260	0.248	0.212	0.155	0.082	0.0
✳ DEFLECTION DUE TO SUPERIMPOSED D.L. ↓	0.0	0.020	0.037	0.051	0.059	0.062	0.059	0.051	0.037	0.020	0.0
FINAL CAMBER ↑	0	3/4"	1 7/16"	1 15/16"	2 1/4"	2 3/8"	2 1/4"	1 15/16"	1 7/16"	3/4"	0
GIRDER 10											
TENTH POINTS	0	.1	.2	.3	.4	.5	.6	.7	.8	.9	0
CAMBER (GIRDER ALONE IN PLACE) ↑	0.0	0.082	0.155	0.212	0.248	0.260	0.248	0.212	0.155	0.082	0.0
✳ DEFLECTION DUE TO SUPERIMPOSED D.L. ↓	0.0	0.019	0.037	0.050	0.059	0.062	0.059	0.050	0.037	0.019	0.0
FINAL CAMBER ↑	0	3/4"	1 7/16"	1 15/16"	2 1/4"	2 3/8"	2 1/4"	1 15/16"	1 7/16"	3/4"	0
GIRDER 11											
TENTH POINTS	0	.1	.2	.3	.4	.5	.6	.7	.8	.9	0
CAMBER (GIRDER ALONE IN PLACE) ↑	0.0	0.082	0.155	0.212	0.248	0.260	0.248	0.212	0.155	0.082	0.0
✳ DEFLECTION DUE TO SUPERIMPOSED D.L. ↓	0.0	0.023	0.044	0.060	0.071	0.074	0.071	0.060	0.044	0.023	0.0
FINAL CAMBER ↑	0	11/16"	1 5/16"	1 13/16"	2 1/8"	2 1/4"	2 1/8"	1 13/16"	1 5/16"	11/16"	0
GIRDERS 12 & 13											
TENTH POINTS	0	.1	.2	.3	.4	.5	.6	.7	.8	.9	0
CAMBER (GIRDER ALONE IN PLACE) ↑	0.0	0.082	0.155	0.212	0.248	0.260	0.248	0.212	0.155	0.082	0.0
✳ DEFLECTION DUE TO SUPERIMPOSED D.L. ↓	0.0	0.022	0.042	0.057	0.067	0.070	0.067	0.057	0.042	0.022	0.0
FINAL CAMBER ↑	0	3/4"	1 3/8"	1 7/8"	2 3/16"	2 1/4"	2 3/16"	1 7/8"	1 3/8"	3/4"	0
GIRDERS 14 & 15											
TENTH POINTS	0	.1	.2	.3	.4	.5	.6	.7	.8	.9	0
CAMBER (GIRDER ALONE IN PLACE) ↑	0.0	0.082	0.155	0.212	0.248	0.260	0.248	0.212	0.155	0.082	0.0
✳ DEFLECTION DUE TO SUPERIMPOSED D.L. ↓	0.0	0.024	0.045	0.062	0.073	0.076	0.073	0.062	0.045	0.024	0.0
FINAL CAMBER ↑	0	11/16"	1 5/16"	1 13/16"	2 1/8"	2 3/16"	2 1/8"	1 13/16"	1 5/16"	11/16"	0
GIRDER 16											
TENTH POINTS	0	.1	.2	.3	.4	.5	.6	.7	.8	.9	0
CAMBER (GIRDER ALONE IN PLACE) ↑	0.0	0.082	0.155	0.212	0.248	0.260	0.248	0.212	0.155	0.082	0.0
✳ DEFLECTION DUE TO SUPERIMPOSED D.L. ↓	0.0	0.023	0.043	0.059	0.070	0.073	0.070	0.059	0.043	0.023	0.0
FINAL CAMBER ↑	0	11/16"	1 3/8"	1 13/16"	2 1/8"	2 1/4"	2 1/8"	1 13/16"	1 3/8"	11/16"	0

✳ INCLUDES FUTURE WEARING SURFACE
ALL VALUES ARE SHOWN IN FEET (DECIMAL FORM), EXCEPT " FINAL CAMBER ", WHICH IS GIVEN IN INCHES (FRACTION FORM).

NOTES:

ALL PRESTRESSING STRANDS SHALL BE 7-WIRE LOW-RELAXATION GRADE 270 STRANDS AND SHALL CONFORM TO AASHTO M203 EXCEPT FOR SAMPLING REQUIREMENTS WHICH SHALL BE IN ACCORDANCE WITH THE STANDARD SPECIFICATIONS.

ALL REINFORCING STEEL SHALL BE GRADE 60.

EMBEDDED PLATE "B-1" SHALL BE GALVANIZED IN ACCORDANCE WITH THE STANDARD SPECIFICATIONS. BEVEL EDGES OF PLATE "B-1" TO GIVE CLOSE FIT BUT NOT TIGHT FIT TO STEEL CASTING FORM.

ANCHOR STUDS SHALL CONFORM TO AASHTO M169 GRADES 1010 THROUGH 1020 OR APPROVED EQUAL, AND SHALL MEET THE TYPE "B" REQUIREMENTS OF SUBSECTION 7.3 OF THE ANSI/AASHTO/AWS D1.5 BRIDGE WELDING CODE.

PRESTRESSING STRANDS MAY EXTEND A MAXIMUM OF 2" BEYOND THE GIRDER ENDS.

THE TRANSFER OF LOAD FROM THE ANCHORAGES TO THE GIRDER SHALL BE DONE WHEN CONCRETE HAS REACHED A COMPRESSIVE STRENGTH OF NOT LESS THAN 4100 PSI IN SPAN A AND 6600 PSI IN SPAN B.

DEPENDING ON THE TYPE OF SYSTEM USED TO SUPPORT THE DECK SLAB FORMS, PRESET ANCHORS MAY BE NECESSARY IN THE PRESTRESSED CONCRETE GIRDER.

THE TOP SURFACE OF THE GIRDER, EXCLUDING THE OUTSIDE 4", SHALL BE RAKED TO A DEPTH OF 1/4".

FOR PRESTRESSED CONCRETE MEMBERS, SEE SPECIAL PROVISIONS.

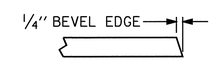

SECTION "G"

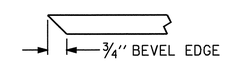

SECTION "F"
(SEE NOTES)

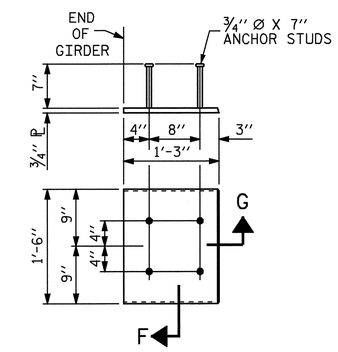

EMBEDDED PLATE "B-1" DETAILS FOR AASHTO TYPE II GIRDER

(2 REQ'D PER GIRDER)

PROJECT NO. U-2810A
CUMBERLAND COUNTY
STATION: 39+89.50 -L-

SHEET 4 OF 4

STATE OF NORTH CAROLINA
DEPARTMENT OF TRANSPORTATION
RALEIGH

STANDARD

PRESTRESSED CONCRETE GIRDER CONTINUOUS FOR LIVE LOAD DEAD LOAD DEFLECTIONS

NORTH CAROLINA PROFESSIONAL SEAL 16301 ENGINEER TING HSIUNG FANG
10/19/09

REVISIONS						SHEET NO.
NO.	BY:	DATE:	NO.	BY:	DATE:	S-61
1			3			TOTAL SHEETS
2			4			83

STD. NO. PCG11

ASSEMBLED BY : S. DOMBROWSKI DATE : 12-10-08
CHECKED BY : P. K. NEWTON DATE : 1-6-09

DRAWN BY : ELR 11/91
CHECKED BY : GRP 11/91

REV. 10/17/00 RWW/LES
REV. 7/10/01RR LES/RDR
REV. 5/1/06 TLA/GM

19-OCT-2009 09:00
z:\structures\str2\finalplans\u2810_sd_g#_02.dgn
ttfang

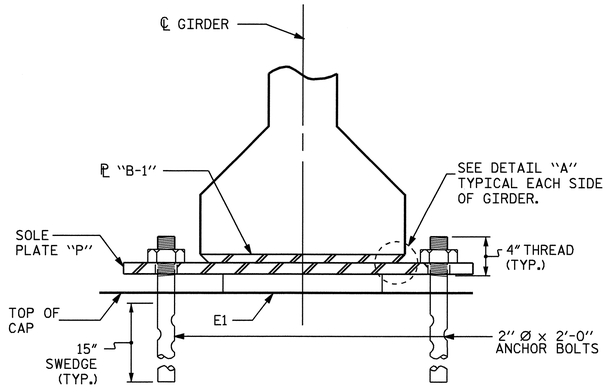

SECTION E-E
(FIXED)

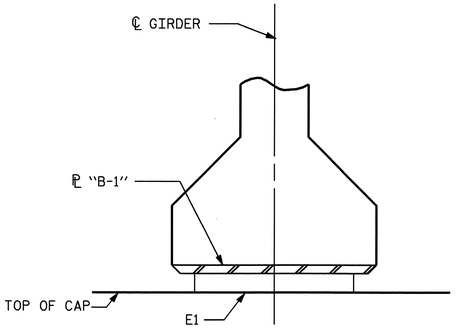

SECTION F-F
(AT INTEGRAL END BENT)

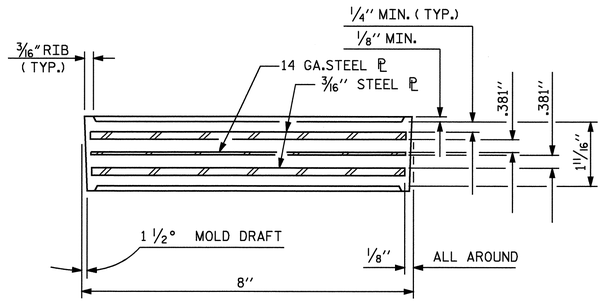

TYPICAL SECTION OF ELASTOMERIC BEARINGS

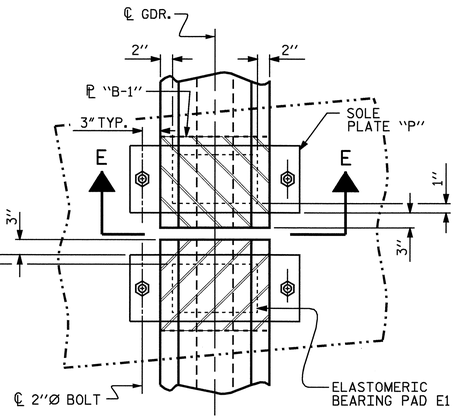

TYPICAL PLAN @ BENT

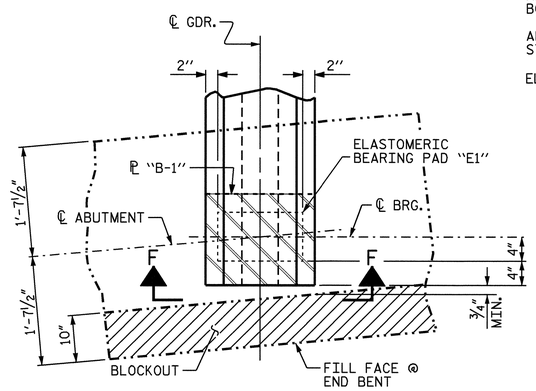

TYPICAL PLAN @ END BENT
(INTEGRAL)

NOTES

AT ALL FIXED POINTS OF SUPPORT, NUTS FOR ANCHOR BOLTS ARE TO BE TIGHTENED FINGER TIGHT AND THEN BACKED OFF 1/2 TURN. THE THREAD OF THE NUT AND BOLT SHALL THEN BE BURRED WITH A SHARP POINTED TOOL.

STEEL SOLE PLATES, ANCHOR BOLTS, AND NUTS SHALL BE GALVANIZED IN ACCORDANCE WITH THE STANDARD SPECIFICATIONS.

PRIOR TO WELDING, GRIND THE GALVANIZED SURFACE OF THE PORTION OF THE EMBEDDED PLATE AND SOLE PLATE THAT ARE TO BE WELDED. AFTER WELDING, DAMAGED GALVANIZED SURFACES SHALL BE REPAIRED IN ACCORDANCE WITH THE STANDARD SPECIFICATIONS.

WHEN WELDING THE SOLE PLATE TO THE EMBEDDED PLATE IN THE GIRDER, USE TEMPERATURE INDICATING WAX PENS, OR OTHER SUITABLE MEANS, TO ENSURE THAT THE TEMPERATURE OF THE SOLE PLATE DOES NOT EXCEED 300°F. TEMPERATURES ABOVE THIS MAY DAMAGE THE ELASTOMER.

SOLE PLATE "P", BOLTS, AND NUTS SHOULD BE INCLUDED IN THE PAY ITEM FOR PRESTRESSED CONCRETE GIRDERS.

ANCHOR BOLTS SHALL MEET THE REQUIREMENTS OF ASTM A449. NUTS SHALL MEET THE REQUIREMENTS OF AASHTO M291-DH OR AASHTO M292-2H. WASHERS SHALL MEET THE REQUIREMENTS OF AASHTO M293. SHOP DRAWINGS ARE NOT REQUIRED FOR ANCHOR BOLT, NUTS AND WASHERS. SHOP INSPECTION IS REQUIRED.

ALL SURFACES OF BEARING PLATES SHALL BE SMOOTH AND STRAIGHT.

ELASTOMER IN ALL BEARINGS SHALL BE 60 DUROMETER HARDNESS.

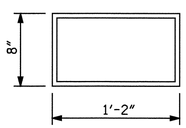

E1 (64 REQ'D)

PLAN VIEW OF ELASTOMERIC BEARING

TYPE II

— LOAD RATINGS —	
	MAX.D.L.+L.L.
36"PCG -TYPE II	82 K

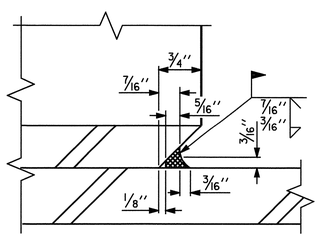

DETAIL "A"

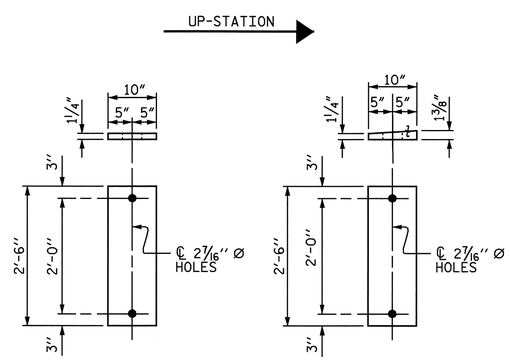

P 1
(FIXED)
(16 REQ'D)

P 2
(FIXED)
(16 REQ'D)

SOLE PLATE DETAILS ("P")

PROJECT NO. U-2810A
CUMBERLAND COUNTY
STATION: 39+89.50 -L-

STATE OF NORTH CAROLINA
DEPARTMENT OF TRANSPORTATION
RALEIGH

STANDARD

ELASTOMERIC BEARING DETAILS

PRESTRESSED CONCRETE GIRDER SUPERSTRUCTURE

NORTH CAROLINA PROFESSIONAL SEAL 16301 ENGINEER TING HSIUNG FANG
2/16/09

REVISIONS						SHEET NO.
NO.	BY:	DATE:	NO.	BY:	DATE:	S-62
1			3			TOTAL SHEETS
2			4			83

ASSEMBLED BY : H. B. SHAH		DATE : 11-08	
CHECKED BY : T. H. FANG		DATE : 11-08	
DRAWN BY : WJH 8/89	REV. 10/17/00	RWW/LES	
CHECKED BY : CRK 8/89	REV. 7/10/01	RWW/LES	
	REV. 5/1/06	TLA/GM	

STD. NO. EB3

16-FEB-2009 13:37
G:\TIPProjects-U\U2810\Structures\str2\FinalPlans\u-2810a_sd_ebp_02.dgn
zhbrown

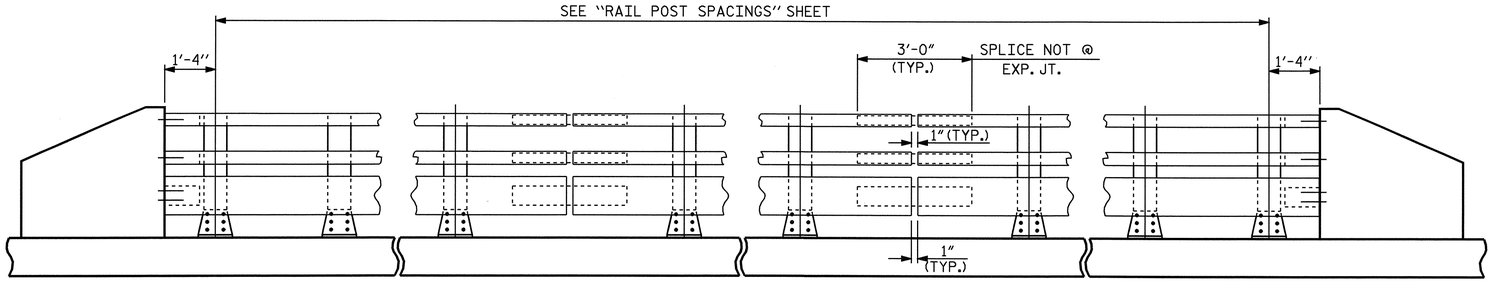

NOTE:
FOR ATTACHMENT OF METAL RAIL TO END POST, SEE STANDARD NO. BMR7 ON SHEET S-25.

ELEVATION

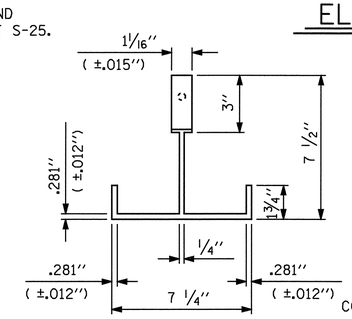

PLAN

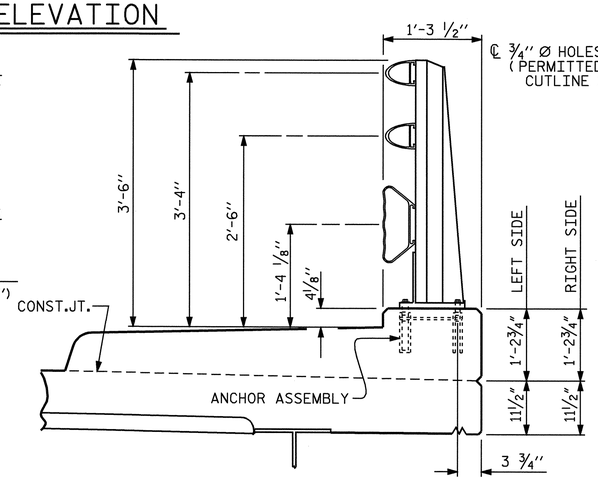

SECTION THRU RAIL

FOR ANCHOR ASSEMBLY, SEE "3 BAR METAL RAIL" STD.No.BMR6

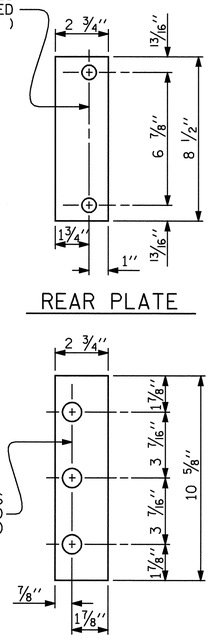

REAR PLATE

FRONT PLATE

SHIM DETAILS

NOTE :
SHIMS MAY BE CUT ALONG PERMITTED CUTLINE OR SLOTTED TO EDGE OF PLATE TO FACILITATE PLACEMENT.

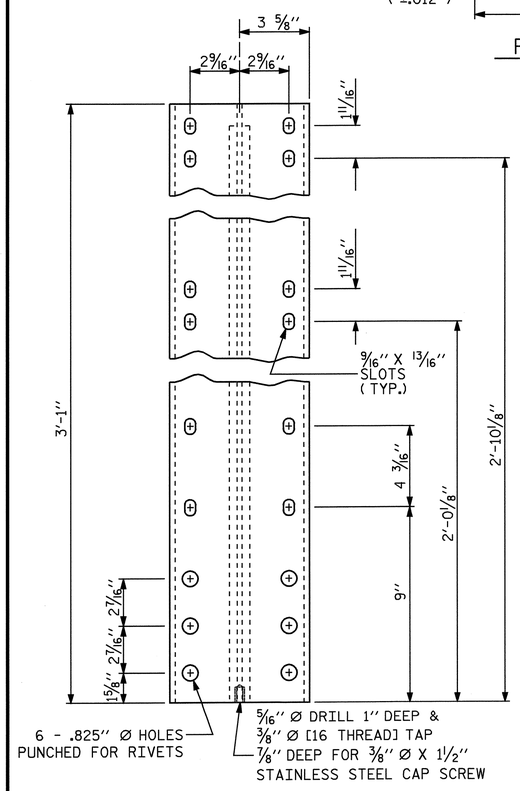

FRONT ELEVATION

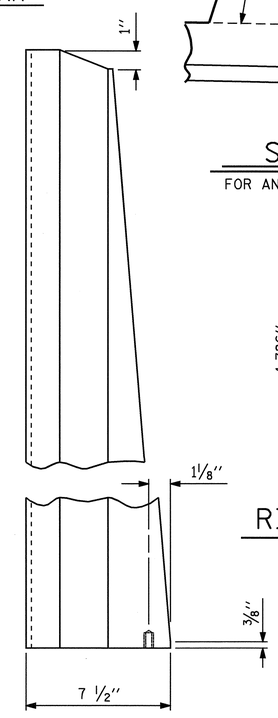

SIDE ELEVATION

DETAILS OF POST

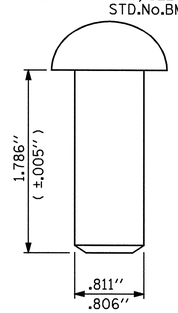

RIVET DETAIL

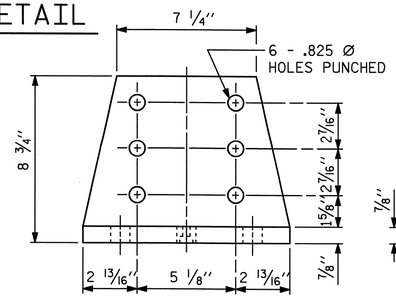

FRONT ELEVATION

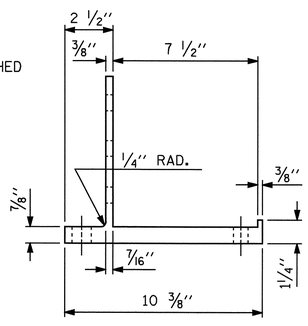

SIDE ELEVATION

POST BASE DETAILS

NOTES

AT THE CONTRACTOR'S OPTION, METAL RAIL MAY BE EITHER ALUMINUM OR GALVANIZED STEEL IN ACCORDANCE WITH THE REQUIREMENTS OF THE GENERAL NOTES AND THE FOLLOWING SPECIFICATIONS FOR THE ALTERNATE MATERIALS; HOWEVER, THE CONTRACTOR WILL BE REQUIRED TO USE THE SAME RAIL MATERIAL ON ALL STRUCTURES ON THE PROJECT FOR WHICH METAL RAIL IS DESIGNATED.

ALUMINUM RAILS

MATERIAL FOR POSTS, BASES AND RAILS, EXPANSION BARS AND CLAMP BARS SHALL BE ASTM B221 ALLOY 6061-T6.

MATERIAL FOR RIVETS SHALL BE ASTM B316 ALLOY 6061-T6. RIVETS SHALL BE STANDARD BUTTON HEAD AND CONE POINT COLD DRIVEN AS PER DRAWING.

THE BASE OF RAIL POSTS, OR ANY OTHER ALUMINUM SURFACE IN CONTACT WITH CONCRETE SHALL BE THOROUGHLY COATED WITH AN ALUMINUM IMPREGNATED CAULKING COMPOUND OF APPROVED QUALITY.

MATERIAL FOR SHIMS TO BE ASTM B209 ALLOY 6061-T6.

GALVANIZED STEEL RAILS

MATERIAL AND GALVANIZING ARE TO CONFORM TO THE FOLLOWING SPECIFICATIONS:

POST, POST BASES, RAILS, EXPANSION BARS AND CLAMP BARS : AASHTO M270 GRADE 36 STRUCTURAL STEEL - GALVANIZED TO AASHTO M111.

RIVETS: RIVETS SHALL MEET THE REQUIREMENTS OF ASTM A502 FOR GRADE 1 RIVETS.

THE CUT ENDS OF GALVANIZED STEEL RAILING, AFTER GRINDING SMOOTH SHALL BE GIVEN TWO COATS OF ZINC RICH PAINT MEETING THE REQUIREMENTS OF FEDERAL SPECIFICATION MIL-P-26915 USAF TYPE 1, OR OF FEDERAL SPECIFICATIONS TT-P-641.

SHIMS: SHIMS SHALL MEET THE REQUIREMENTS OF ASTM A570 FOR GRADE 33 OR A611 FOR GRADE C AND SHALL BE GALVANIZED IN ACCORDANCE WITH AASHTO M111.

RAIL CAPS: RAIL CAPS SHALL MEET THE REQUIREMENTS OF ASTM A570 FOR GRADE 33 OR A611 FOR GRADE C AND SHALL BE GALVANIZED IN ACCORDANCE WITH AASHTO M111.

GENERAL NOTES

RAILING SHALL BE CONTINUOUS FROM END POST TO END POST OF BRIDGE. EACH JOINT IN RAIL LENGTH SHALL BE SPLICED AS DETAILED. PANEL LENGTHS OF RAIL SHALL BE ATTACHED TO A MINIMUM OF THREE POSTS. PLACE ONE JOINT SPLICE JUST BEYOND THE 3RD RAIL POST FROM EACH END, TYPICALLY 14' FROM THE END. PLACE OTHER JOINTS AS NEEDED.

FOR END OF RAIL TO CLEAR FACE OF CONCRETE END POST DIMENSION, SEE STANDARD NO. BMR7.

CAP SCREWS SHALL BE ASTM F593 ALLOY 305 STAINLESS STEEL. WASHERS FOR RAIL ATTACHMENT SHALL MEET THE REQUIREMENTS OF ASTM F844 EXCEPT THEY SHALL BE MADE FROM ALLOY 304 STAINLESS STEEL.

CERTIFIED MILL REPORTS ARE REQUIRED FOR RAILS AND POSTS. SHOP INSPECTION IS NOT REQUIRED.

METAL RAIL POSTS SHALL BE SET NORMAL TO CURB GRADE.

METHOD OF MEASUREMENT FOR METAL RAILS: FOR LENGTH OF METAL RAILS TO BE PAID FOR, SEE THE STANDARD SPECIFICATIONS.

CURVED RAIL USAGE: WHERE RAILS ARE TO BE USED ON BRIDGES ON HORIZONTAL AND/OR VERTICAL CURVATURE THE CONTRACTOR MAY, AT HIS OPTION, HAVE THE REQUIRED CURVATURE IN THE RAIL FORMED IN THE SHOP OR IN THE FIELD. IN EITHER EVENT, THE RAIL SHALL CONFORM WITHOUT BUCKLING OR KINKING TO THE REQUIRED CURVATURE IN A UNIFORM MANNER ACCEPTABLE TO THE ENGINEER.

TO INSURE FUTURE IDENTIFICATION OF THE FABRICATOR, A PERMANENT IDENTIFYING MARK SHALL BE PLACED ON EACH POST. THE METHOD OF MARKING AND LOCATION SHALL BE SUCH THAT IT DOES NOT DETRACT FROM THE APPEARANCE OF THE POST, BUT REMAIN VISIBLE AFTER RAIL PLACEMENT.

SHIMS SHALL BE USED AS NECESSARY FOR POST ALIGNMENT.

ALLOY 6351-T5 MAY BE SUBSTITUTED FOR ALLOY 6061-T6 WHERE APPLICABLE.

MINOR VARIATIONS IN DETAILS OF METAL RAIL WILL BE CONSIDERED. DETAILS OF SUCH VARIATIONS, IF DESIRED, SHALL BE SUBMITTED FOR APPROVAL.

PAY LENGTH = 191.46 LIN.FT.

METAL RAIL PAY LENGTH	
STAGE I	95'-8 3/4"
STAGE II	95'-8 3/4"
TOTAL	191-5 1/2"

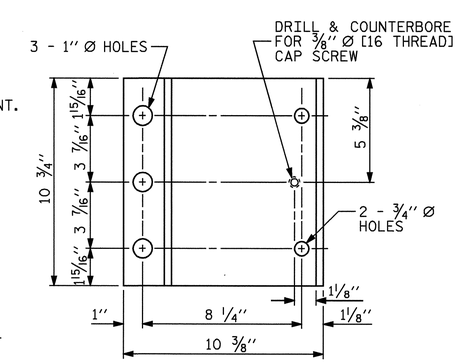

PLAN

PROJECT NO. U-2810A
CUMBERLAND COUNTY
STATION: 39+85.50 -L-

SHEET 1 OF 3

STATE OF NORTH CAROLINA
DEPARTMENT OF TRANSPORTATION
RALEIGH

STANDARD

3 BAR METAL RAIL

NORTH CAROLINA PROFESSIONAL SEAL 16301 ENGINEER TING HSIUNG FANG 1/26/09

REVISIONS							SHEET NO.
NO.	BY:	DATE:	NO.	BY:	DATE:		S-63
1			3				TOTAL SHEETS
2			4				83

ASSEMBLED BY : E. C. LOCKLEAR		DATE : 11-09-08	
CHECKED BY : T. H. FANG		DATE : 12-05-08	
DRAWN BY : JMB	1/88	REV. 10/17/00	RWW/LES
CHECKED BY : GGH	1/88	REV. 5/7/03	RWW/JTE
		REV. 5/1/06	TLA/GM

26-JAN-2009 11:59
R:\Structures\str2\Final Plans\u-2810a_sd_bmr_02.dgn
elocklear

STD. NO. BMR5

NOTES

STRUCTURAL CONCRETE ANCHOR ASSEMBLY

THE STRUCTURAL CONCRETE ANCHOR ASSEMBLY SHALL CONSIST OF THE FOLLOWING COMPONENTS:

A. FERRULES SHALL BE MADE FROM STEEL MEETING THE REQUIREMENTS OF AASHTO M169, GRADE 12L14 AND SHALL HAVE A MINIMUM LENGTH OF THREADS OF 2" FOR 3/4" FERRULES AND 1 3/4" FOR 5/8" FERRULES.

B. 3 - 3/4" Ø X 2 1/2" BOLTS WITH WASHERS. BOLTS SHALL CONFORM TO THE REQUIREMENTS OF ASTM A307. BOLTS AND WASHERS SHALL BE GALVANIZED. AT THE CONTRACTOR'S OPTION, STAINLESS STEEL BOLTS AND WASHERS MAY BE USED AS AN ALTERNATE FOR THE 3/4" Ø X 2 1/2" GALVANIZED BOLTS AND WASHERS. THEY SHALL CONFORM TO OR EXCEED THE MECHANICAL REQUIREMENTS OF ASTM A307. THE USE OF THIS ALTERNATE SHALL BE APPROVED BY THE ENGINEER.

C. 2 - 5/8" Ø X 2 1/4" BOLTS WITH WASHERS. BOLTS SHALL CONFORM TO THE REQUIREMENTS OF ASTM A307. BOLTS AND WASHERS SHALL BE GALVANIZED. AT THE CONTRACTOR'S OPTION, STAINLESS STEEL BOLTS AND WASHERS MAY BE USED AS AN ALTERNATE FOR THE 5/8" Ø X 2 1/4" GALVANIZED BOLTS AND WASHERS. THEY SHALL CONFORM TO OR EXCEED THE MECHANICAL REQUIREMENTS OF ASTM A307. THE USE OF THIS ALTERNATE SHALL BE APPROVED BY THE ENGINEER.

D. WIRE STRUT SHOWN IN THE CONCRETE ANCHOR ASSEMBLY DETAIL IS THE MINIMUM ALLOWABLE SIZE AND SHALL HAVE A MINIMUM TENSILE STRENGTH OF 100,000 PSI. AS AN OPTION, A 7/16" Ø WIRE STRUT WITH A MINIMUM TENSILE STRENGTH OF 90,000 PSI IS ACCEPTABLE.

E. THE METAL RAIL ANCHOR ASSEMBLIES TO BE HOT DIPPED GALVANIZED TO CONFORM TO REQUIREMENTS OF AASHTO M111.

F. THE COST OF THE METAL RAIL ANCHOR ASSEMBLY WITH BOLTS AND WASHERS COMPLETE IN PLACE SHALL BE INCLUDED IN THE PRICE BID FOR LINEAR FEET OF METAL RAIL.

G. BOLTS TO BE TIGHTENED ONE-HALF TURN WITH A WRENCH FROM A FINGER-TIGHT POSITION.

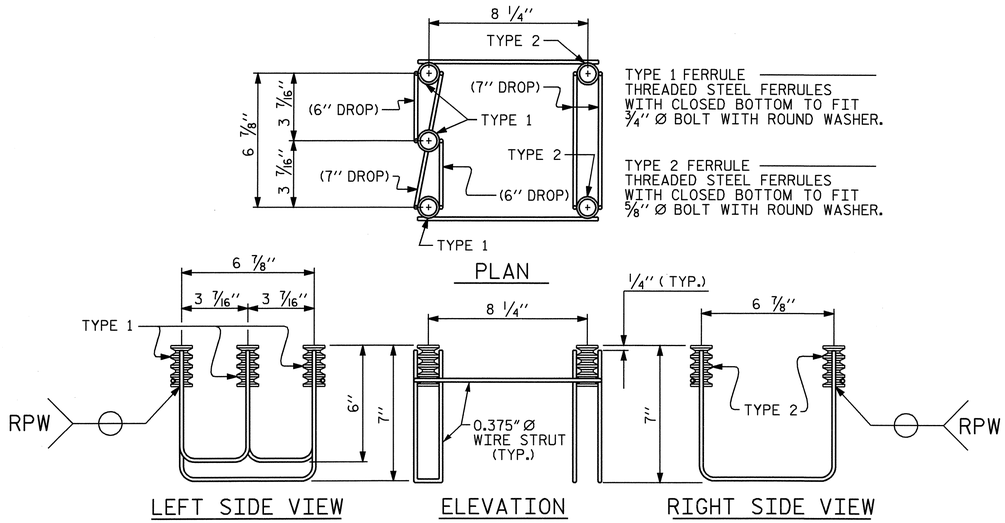

5-BOLT METAL RAIL ANCHOR ASSEMBLY

(36 ASSEMBLIES REQUIRED)

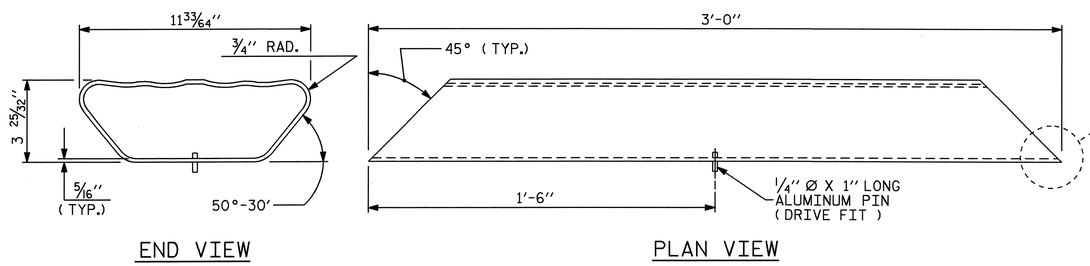

BOTTOM RAIL EXPANSION BAR

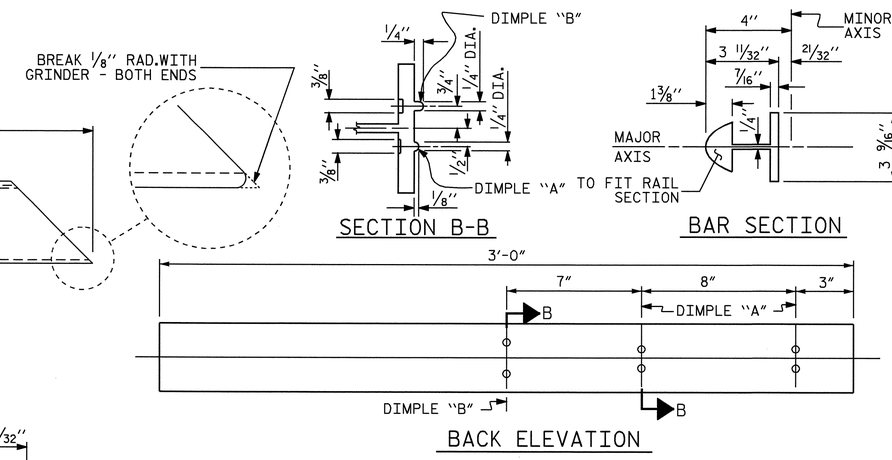

TOP & MIDDLE RAIL EXPANSION BAR

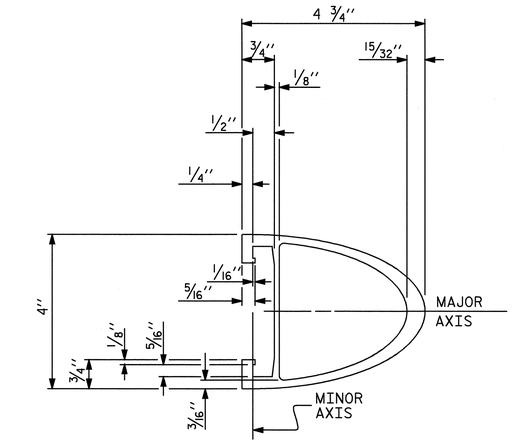

TOP & MIDDLE RAIL SECTION

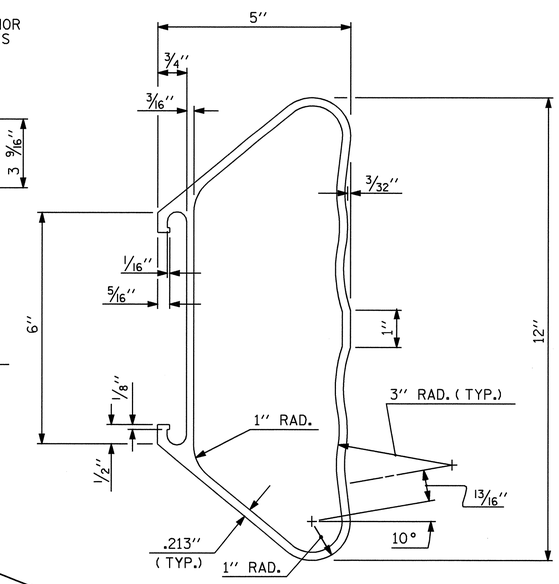

BOTTOM RAIL SECTION

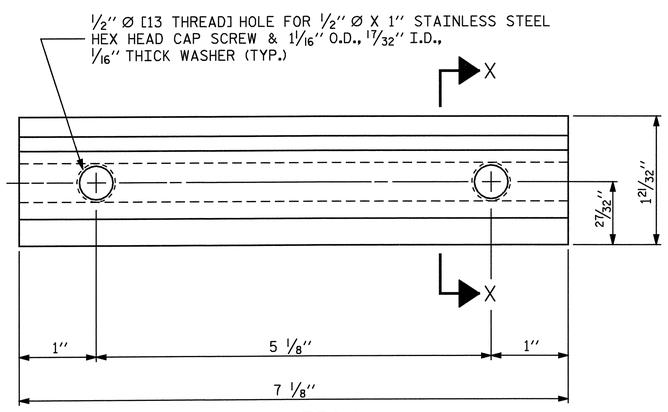

CLAMP BAR DETAIL

(6 REQUIRED PER POST)

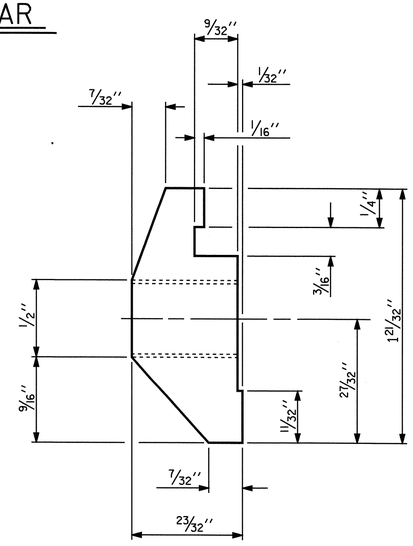

SECTION X-X

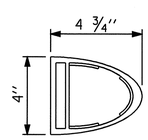

TOP & MIDDLE RAIL CAP

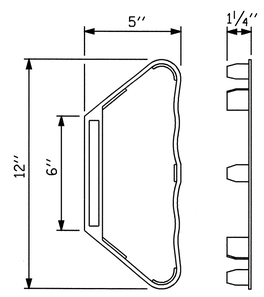

BOTTOM RAIL CAP

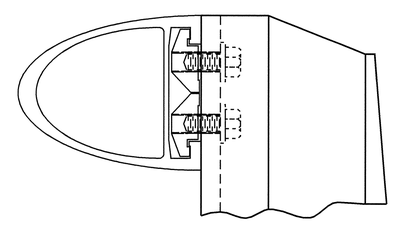

CLAMP ASSEMBLY

TOP RAIL SHOWN
(MIDDLE & BOTTOM RAIL ARE SIMILAR)

PROJECT NO. U-2810A
CUMBERLAND COUNTY
STATION: 39+85.50 -L-

SHEET 2 OF 3

STATE OF NORTH CAROLINA
DEPARTMENT OF TRANSPORTATION
RALEIGH

STANDARD

3 BAR METAL RAIL

NORTH CAROLINA PROFESSIONAL SEAL 16301 ENGINEER FANG HSIUNG FANG 1/28/09

REVISIONS						SHEET NO.
NO.	BY:	DATE:	NO.	BY:	DATE:	S-64
1			3			TOTAL SHEETS
2			4			83

ASSEMBLED BY : E. C. LOCKLEAR		DATE : 11-09-08	
CHECKED BY : T. H. FANG		DATE : 12-05-08	
DRAWN BY : JMB	1/88	REV. 7/10/01	RWW/LES
CHECKED BY : GGH	1/88	REV. 5/7/03	RWW/JTE
		REV. 5/1/06	TLA/GM

26-JAN-2009 11:59
R:\Structures\str2\Final Plans\u-2810a_sd_bmr_02.dgn
elocklear

STD. NO. BMR6

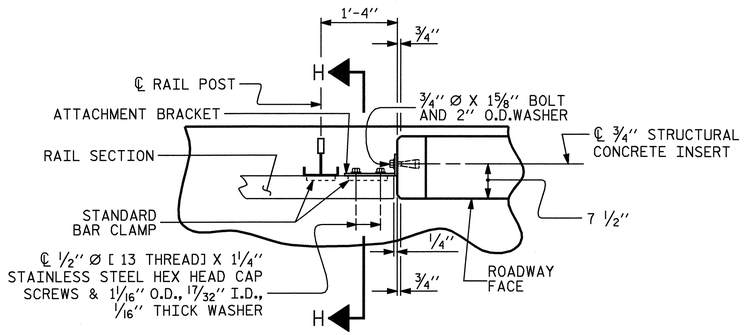

PLAN OF RAIL AND END POST

(STIFFENER ON 1/2" ℙ NOT SHOWN FOR CLARITY)

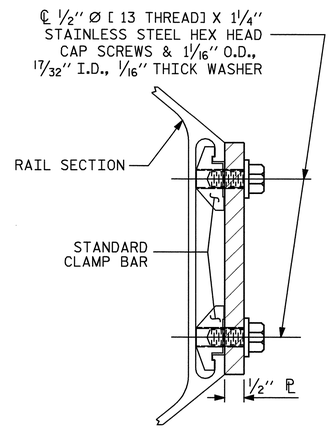

SECTION H-H

(FOR BOTTOM RAIL)

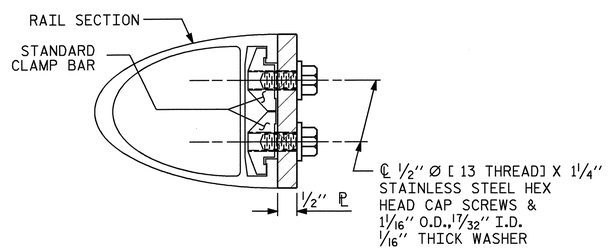

SECTION H-H

(FOR TOP & MIDDLE RAIL)

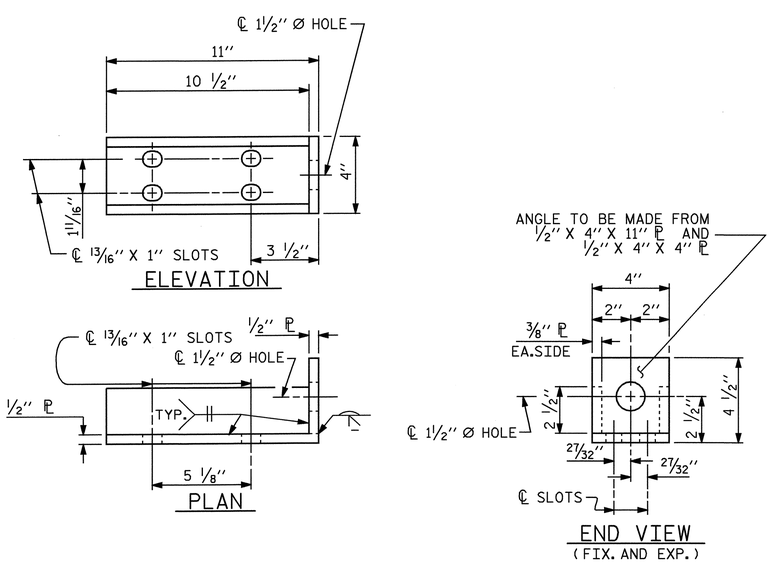

DETAILS FOR ATTACHMENT BRACKET

(TOP & MIDDLE RAIL ONLY)

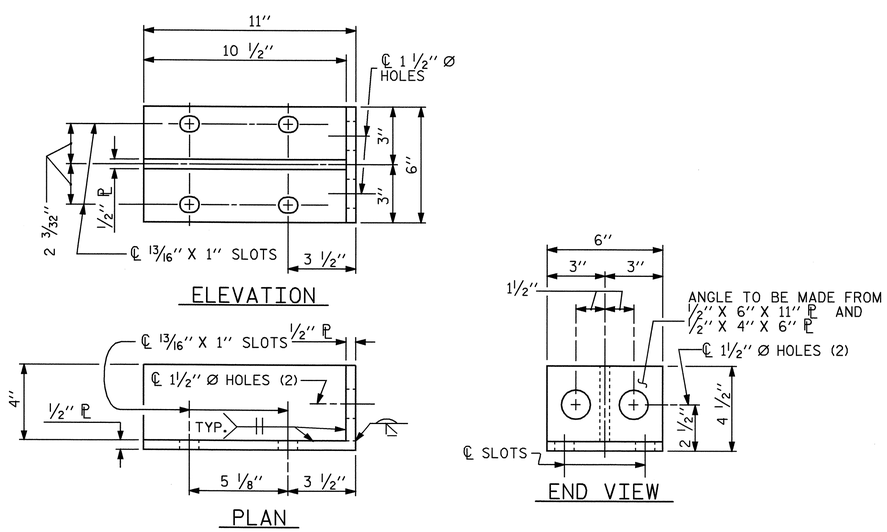

DETAILS FOR ATTACHMENT BRACKET

(BOTTOM RAIL ONLY)

NOTES

METAL RAIL TO END POST CONNECTION

THE METAL RAIL TO END POST CONNECTION SHALL CONSIST OF THE FOLLOWING COMPONENTS:

A. 1/2" PLATES SHALL CONFORM TO AASHTO M270 GRADE 36 AND SHALL BE GALVANIZED AFTER FABRICATION.

B. 3/4" STRUCTURAL CONCRETE INSERT SHALL HAVE A WORKING LOAD SHEAR CAPACITY OF 4800 LBS. THE FERRULES SHALL ENGAGE A 3/4" Ø X 1 5/8" BOLT WITH 2" O.D. WASHER IN PLACE. THE 3/4" Ø X 1 5/8" BOLT SHALL HAVE N. C. THREADS.

C. CAP SCREWS FOR RAIL ATTACHMENT TO ANGLE SHALL CONFORM TO THE REQUIREMENTS OF ASTM F593 ALLOY 305 STAINLESS STEEL. CAP SCREWS TO BE CENTERED IN SLOTS AT 60°F. WASHERS FOR RAIL ATTACHMENT SHALL MEET THE REQUIREMENTS OF ASTM F844 EXCEPT THEY SHALL BE MADE FROM ALLOY 304 STAINLESS STEEL.

D. STANDARD CLAMP BARS (STD. No. BMR6).

THE COST OF THE STANDARD CLAMP BARS AND CAP SCREWS USED IN THE METAL RAIL TO END POST CONNECTION SHALL BE INCLUDED IN THE UNIT CONTRACT PRICE BID FOR LINEAR FEET OF 3 BAR METAL RAIL.

THE 3/4" STRUCTURAL CONCRETE INSERT WITH BOLT SHALL BE ASSEMBLED IN THE SHOP.

THE COST OF THE 3/4" STRUCTURAL CONCRETE INSERT ASSEMBLY, AND THE 1/2" PLATES COMPLETE IN PLACE SHALL BE INCLUDED IN THE VARIOUS PAY ITEMS.

THE CONTRACTOR, AT HIS OPTION, MAY USE AN ADHESIVE BONDING SYSTEM IN LIEU OF THE STRUCTURAL CONCRETE INSERT EMBEDDED IN THE END POST. IF THE ADHESIVE BONDING SYSTEM IS USED, THE 3/4" Ø X 1 5/8" BOLT WITH WASHER SHALL BE REPLACED WITH A 3/4" Ø X 6 1/2" BOLT AND 2" O.D.WASHER. ALL SPECIFICATIONS THAT APPLY TO THE 3/4" Ø X 1 5/8" BOLT SHALL APPLY TO THE 3/4" Ø X 6 1/2" BOLT. FIELD TESTING OF THE ADHESIVE BONDING SYSTEM IS NOT REQUIRED.

NOTES

STRUCTURAL CONCRETE INSERT

THE STRUCTURAL CONCRETE INSERT ASSEMBLY SHALL CONSIST OF THE FOLLOWING COMPONENTS:

A. FERRULES SHALL BE MADE FROM STEEL MEETING THE REQUIREMENTS OF AASHTO M169, GRADE 12L14 AND SHALL HAVE A MINIMUM LENGTH OF THREADS OF 1 1/2".

B. 1 - 3/4" Ø X 1 5/8" BOLT WITH WASHER. BOLT SHALL CONFORM TO THE REQUIREMENTS OF ASTM A307. BOLT AND WASHER SHALL BE GALVANIZED. AT THE CONTRACTORS OPTION, STAINLESS STEEL BOLT AND WASHER MAY BE USED AS AN ALTERNATE FOR THE 3/4" Ø X 1 5/8" GALVANIZED BOLT AND WASHER. THEY SHALL CONFORM TO OR EXCEED THE MECHANICAL REQUIREMENTS OF ASTM A307. THE USE OF THIS ALTERNATE SHALL BE APPROVED BY THE ENGINEER.

C. WIRE STRUT SHOWN IN THE CONCRETE INSERT ASSEMBLY DETAIL IS THE MINIMUM ALLOWABLE SIZE AND SHALL HAVE A MINIMUM TENSILE STRENGTH OF 100,000 PSI. AS AN OPTION, A 7/16" Ø WIRE STRUT WITH A MINIMUM TENSILE STRENGTH OF 90,000 PSI IS ACCEPTABLE.

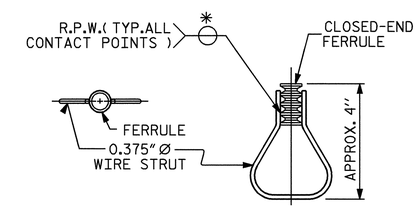

STRUCTURAL CONCRETE INSERT

* EACH WELDED ATTACHMENT OF WIRE TO FERRULE SHALL DEVELOP THE TENSILE STRENGTH OF THE WIRE.

PROJECT NO. U-2810A

CUMBERLAND COUNTY

STATION: 39+85.50 -L-

SHEET 3 OF 3

STATE OF NORTH CAROLINA
DEPARTMENT OF TRANSPORTATION
RALEIGH

STANDARD

3 BAR METAL RAIL

NORTH CAROLINA PROFESSIONAL SEAL 16301 ENGINEER TING HSIUNG FANG
1/26/09

REVISIONS						SHEET NO.
NO.	BY:	DATE:	NO.	BY:	DATE:	S-65
1			3			TOTAL SHEETS
2			4			83

STD. NO. BMR7

ASSEMBLED BY : E. C. LOCKLEAR	DATE : 11-09-08		
CHECKED BY : T. H. FANG	DATE : 12-05-08		
DRAWN BY : JMB	1/88	REV. 7/10/01	RWW/LES
CHECKED BY : GGH	1/88	REV. 5/7/03	RWW/JTE
		REV. 5/1/06	TLA/GM

26-JAN-2009 11:59
R:\Structures\str2\Final Plans\u-2810a_sd_bmr_02.dgn
elocklear

BILL OF MATERIAL					
ONE END POST (4 REQ'D)					
BAR	NO.	SIZE	TYPE	LENGTH	WEIGHT
✳E1	2	#7	1	3'-5"	14
✳E2	2	#7	1	4'-0"	16
✳E3	2	#7	1	4'-7"	19
✳E4	2	#7	1	5'-1"	21
✳F1	6	#6	STR	3'-5"	31
✳F2	2	#6	STR	3'-8"	11

✳EPOXY COATED REINFORCING STEEL = 112 LBS.

CLASS AA CONCRETE = 0.4 C.Y.

BAR TYPES

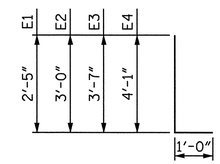

ALL BAR DIMENSIONS ARE OUT TO OUT

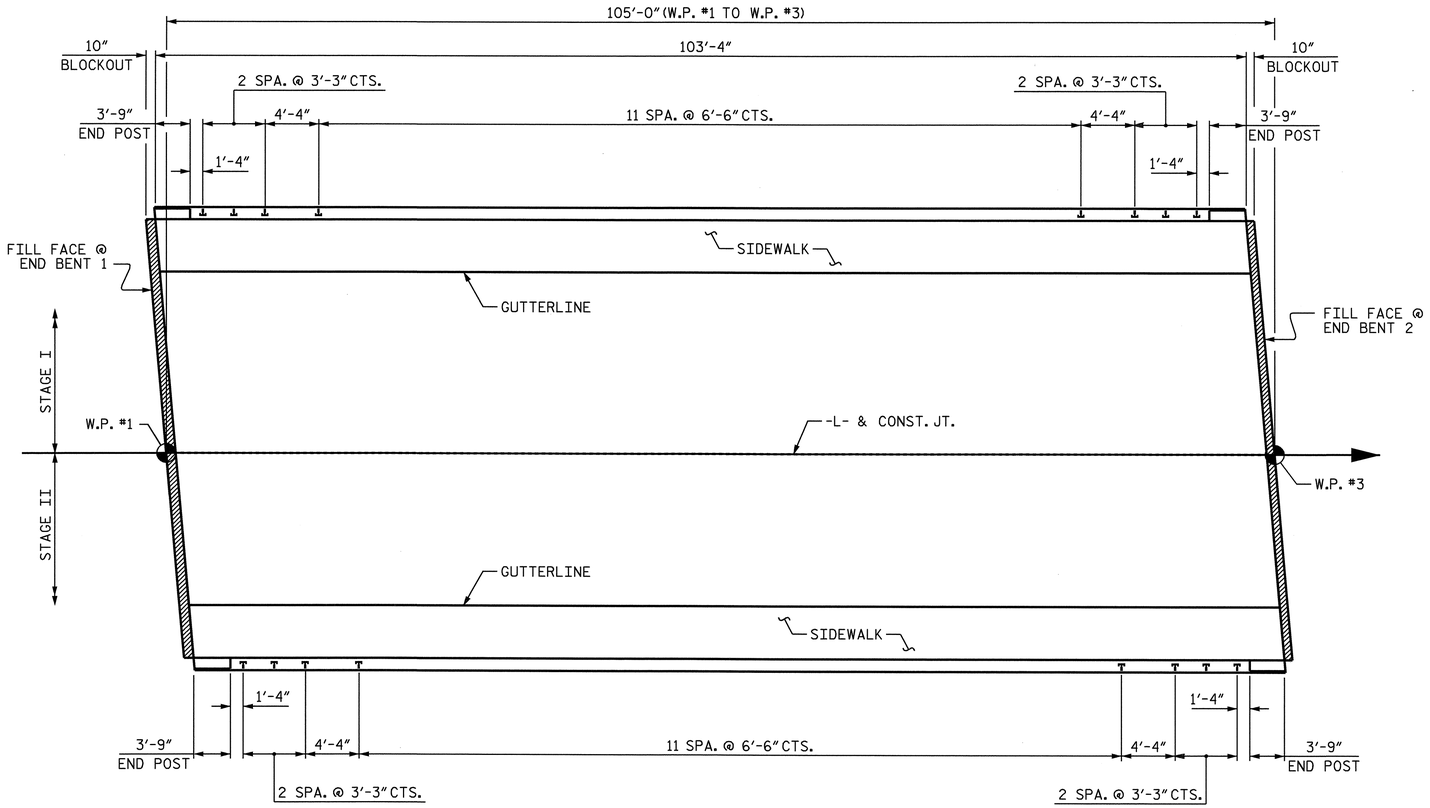

PLAN OF RAIL POST SPACING

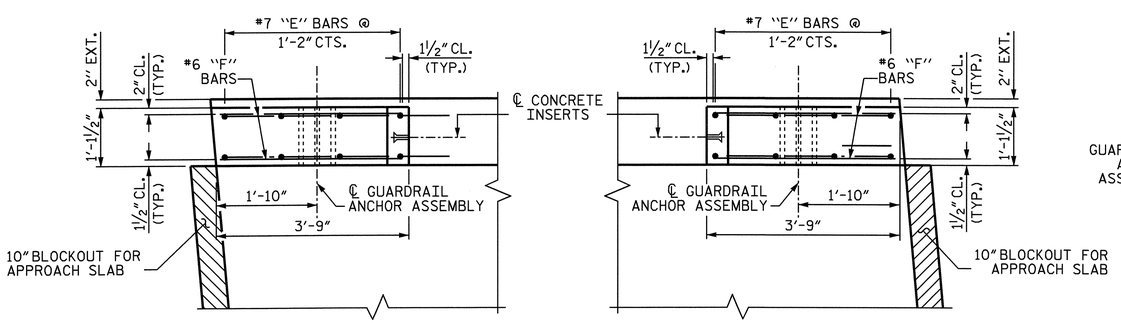

PLAN

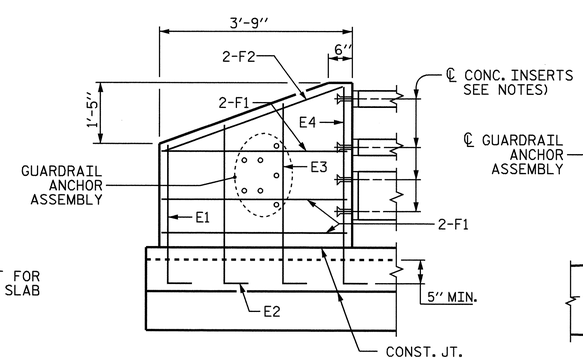

ELEVATION

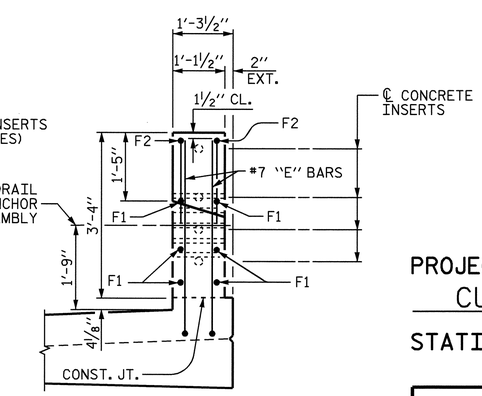

END VIEW

PROJECT NO. U-2810A

CUMBERLAND COUNTY

STATION: 39+85.50 -L-

STATE OF NORTH CAROLINA
DEPARTMENT OF TRANSPORTATION
RALEIGH

SUPERSTRUCTURE

RAIL POSTS SPACINGS & END POST DETAILS

NORTH CAROLINA PROFESSIONAL SEAL 16301 ENGINEER TING HSIUNG FANG 01/26/09

END POST DETAILS

ALL REINFORCING STEEL IN END POSTS SHALL BE EPOXY COATED.

REVISIONS							SHEET NO.
NO.	BY:	DATE:	NO.	BY:	DATE:		S-66
1			3				TOTAL SHEETS
2			4				83

DRAWN BY : E.C. LOCKLEAR DATE : 9-04-08
CHECKED BY : T. H. FANG DATE : 11-11-08

26-JAN-2009 11:54
R:\Structures\str2\Final Plans\u2810_sd_3mr_02.dgn
elocklear

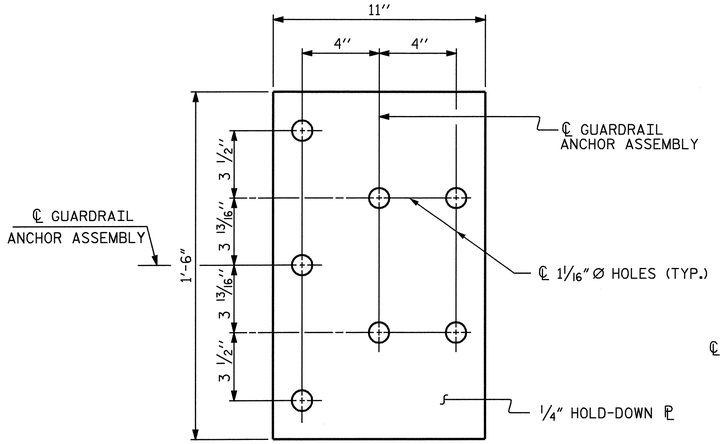

PLAN

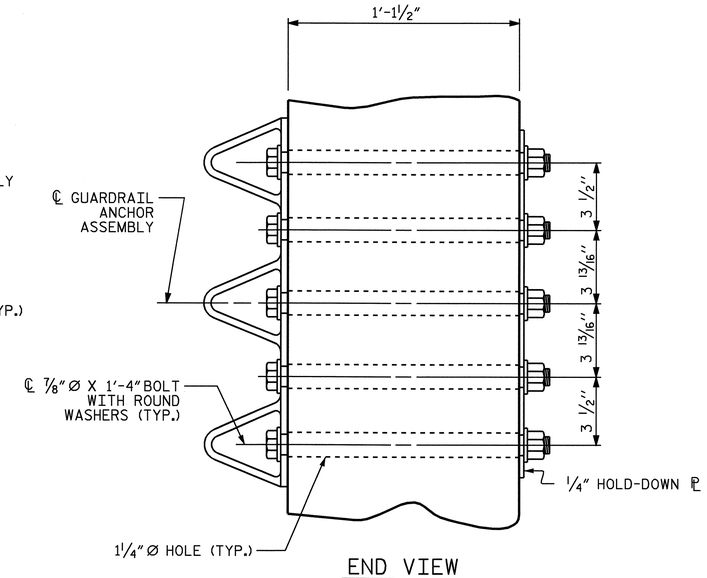

END VIEW

GUARDRAIL ANCHOR ASSEMBLY DETAILS

NOTES

THE GUARDRAIL ANCHOR ASSEMBLY SHALL CONSIST OF A 1/4″ HOLD DOWN PLATE AND 7 - 7/8″ Ø BOLTS WITH NUTS AND WASHERS.

THE HOLD-DOWN PLATE SHALL CONFORM TO AASHTO M270 GRADE 36. AFTER FABRICATION, THE HOLD-DOWN PLATE SHALL BE HOT-DIP GALVANIZED IN ACCORDANCE WITH AASHTO M111.

BOLTS SHALL CONFORM TO THE REQUIREMENTS OF ASTM A307 AND NUTS SHALL CONFORM TO THE REQUIREMENTS OF AASHTO M291. BOLTS, NUTS AND WASHERS SHALL BE GALVANIZED. AT THE CONTRACTOR'S OPTION, STAINLESS STEEL BOLTS, NUTS AND WASHERS MAY BE USED AS AN ALTERNATE FOR THE 7/8″ Ø GALVANIZED BOLTS, NUTS AND WASHERS. THEY SHALL CONFORM TO OR EXCEED THE MECHANICAL REQUIREMENTS OF ASTM A307. THE USE OF THIS ALTERNATE SHALL BE APPROVED BY THE ENGINEER.

AFTER INSTALLATION, THE EXPOSED THREAD OF THE BOLT SHALL BE BURRED WITH A SHARP POINTED TOOL.

THE COST OF THE GUARDRAIL ANCHOR ASSEMBLIES WITH BOLTS, NUTS AND WASHERS COMPLETE IN PLACE, SHALL BE INCLUDED IN THE VARIOUS PAY ITEMS.

THE VERTICAL REINFORCING BARS MAY BE SHIFTED SLIGHTLY IN THE END POST TO CLEAR ASSEMBLY BOLTS.

THE 1 1/4″ Ø HOLES SHALL BE FORMED OR DRILLED WITH A CORE BIT. IMPACT TOOLS WILL NOT BE PERMITTED. ANY CONCRETE DAMAGED BY THIS WORK SHALL BE REPAIRED TO THE SATISFACTION OF THE ENGINEER.

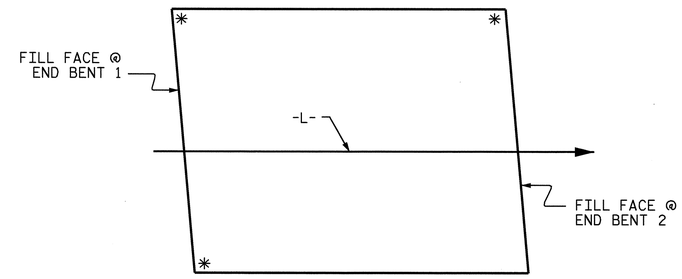

SKETCH SHOWING POINTS OF ATTACHMENT

✳ LOCATION OF GUARDRAIL ATTACHMENT.

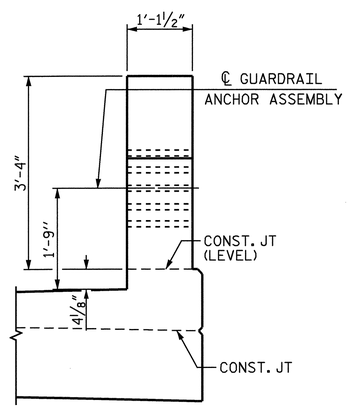

END VIEW

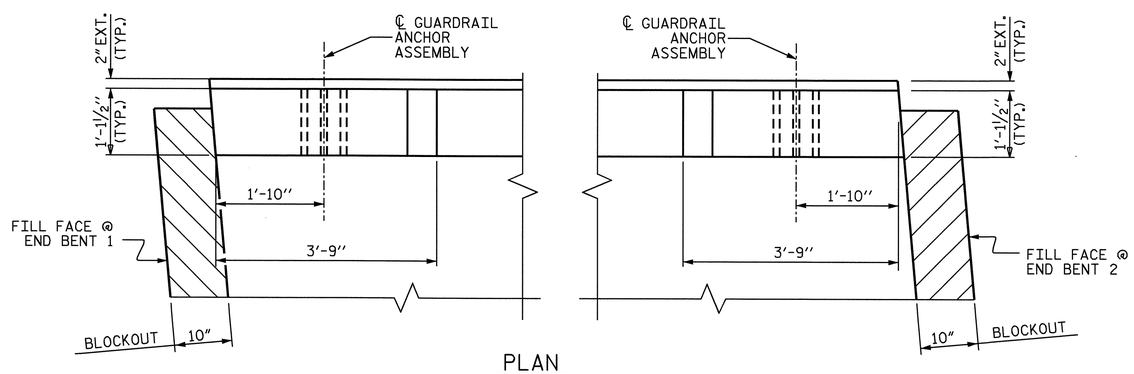

PLAN

STAGE I SIDE SHOWN, STAGE II SIMILAR

LOCATION OF GUARDRAIL ANCHOR AT END POST

PROJECT NO. U-2810A

CUMBERLAND COUNTY

STATION: 39+85.50 -L-

STATE OF NORTH CAROLINA
DEPARTMENT OF TRANSPORTATION
RALEIGH

STANDARD

GUARDRAIL ANCHORAGE DETAILS FOR METAL RAILS

NORTH CAROLINA PROFESSIONAL SEAL 16301 ENGINEER TING HSIUNG FANG

1/26/09

ASSEMBLED BY : E.C. LOCKLEAR	DATE : 10-09-08		
CHECKED BY : T. H. FANG	DATE : 11-11-08		
DRAWN BY : EEM 6/94	REV. 10/17/00	RWW/LES	
CHECKED BY : RGW 6/94	REV. 5/7/03	RWW/JTE	
	REV. 5/1/06	TLA/GM	

REVISIONS						SHEET NO.
NO.	BY:	DATE:	NO.	BY:	DATE:	S-67
1			3			TOTAL SHEETS
2			4			83

STD. NO. BMR8

26-JAN-2009 11:54
R:\Structures\str2\Final Plans\u2810_sd_3mr_02.dgn
elocklear

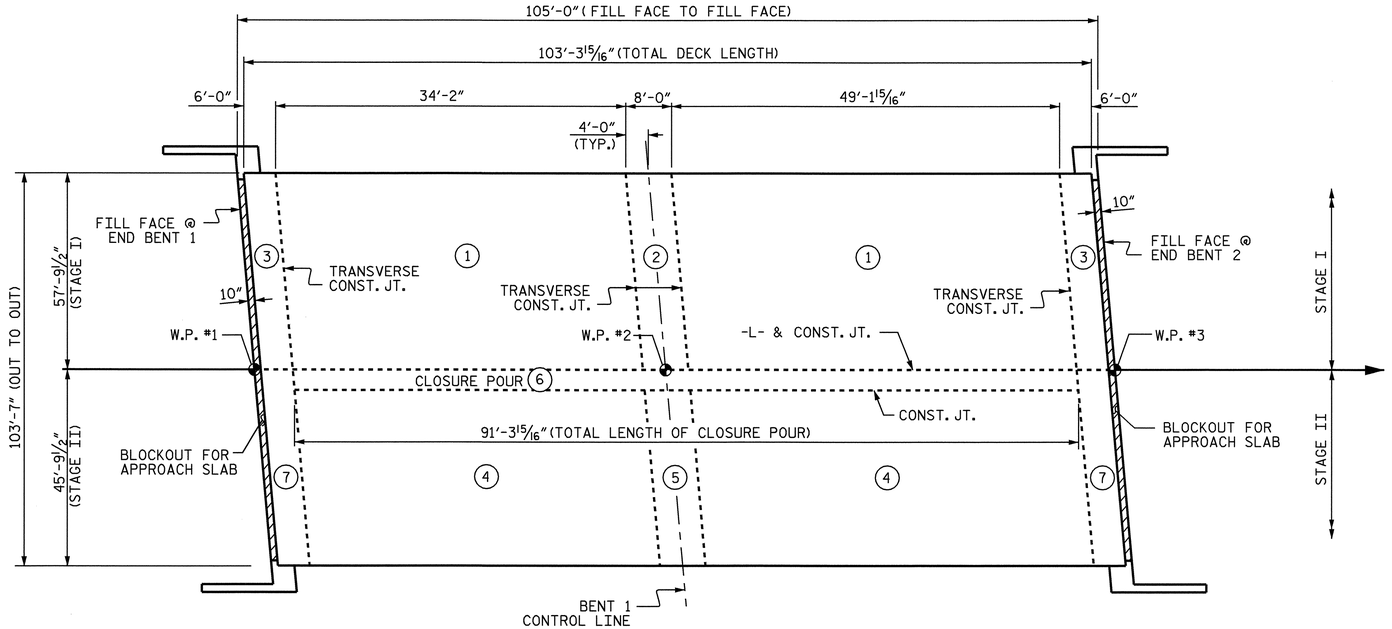

OPTIONAL POURING SEQUENCE

POUR 2 OR 5 CANNOT BE STARTED UNTIL BOTH ADJACENT POUR 1 OR 4 REACH A MINIMUM OF 3000 PSI RESPECTIVELY.

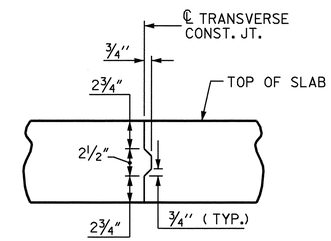

TRANSVERSE CONSTRUCTION JOINT DETAIL

NOTE: REINFORCING STEEL IN SLAB NOT SHOWN. LONGITUDINAL REINFORCING STEEL SHALL BE CONTINUOUS THRU JOINT

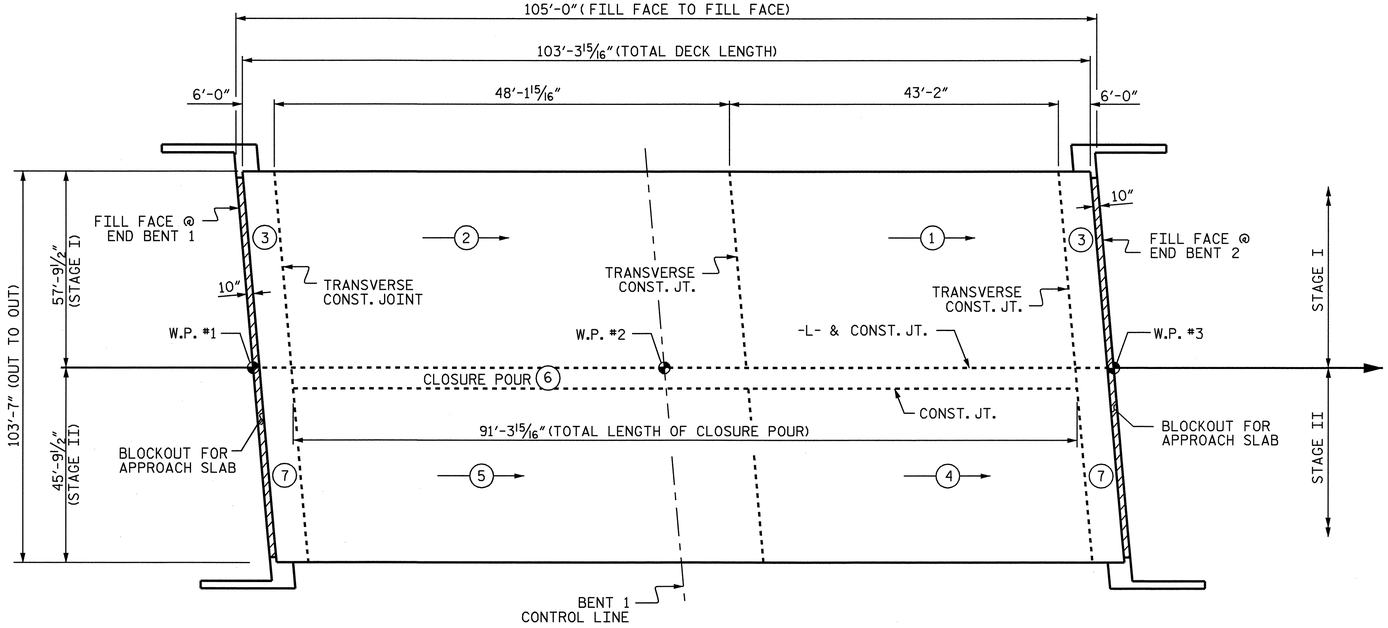

POURING SEQUENCE

SEE TRANSVERSE CONSTRUCTION JOINT DETAIL

(#) = INDICATES POUR NUMBER AND DIRECTION OF POUR

PROJECT NO. U-2810A
CUMBERLAND COUNTY
STATION: 39+85.50 -L-

NORTH CAROLINA PROFESSIONAL SEAL 16301 ENGINEER TING HSIUNG FANG
2/16/09

STATE OF NORTH CAROLINA
DEPARTMENT OF TRANSPORTATION
RALEIGH

SUPERSTRUCTURE

POUR SEQUENCE

REVISIONS						SHEET NO.
NO.	BY:	DATE:	NO.	BY:	DATE:	S-68
1			3			TOTAL SHEETS
2			4			83

ASSEMBLED BY : E. C. LOCHLEAR		DATE :	12-08
CHECKED BY : T. H. FANG		DATE :	12-08
DRAWN BY : JMB 5/87	REV. 6/1/94		EEM/GRP
CHECKED BY : SJD 9/87	REV. 8/16/99		RWW/LES
	REV. 5/1/06		TLA/GM

16-FEB-2009 13:39
G:\TIPProjects-U\U2810\Structures\str2\FinalPlans\u-2810a_sd_bm_02.dgn
zhbrown

STD. NO. BOM1

SUPERSTRUCTURE REINFORCING STEEL LENGTHS ARE BASED ON THE FOLLOWING MINIMUM SPLICE LENGTHS

BAR SIZE	SUPERSTRUCTURE EXCEPT APPROACH SLABS, PARAPET, AND BARRIER RAIL		APPROACH SLABS		PARAPET AND BARRIER RAIL
	EPOXY COATED	UNCOATED	EPOXY COATED	UNCOATED	
#4	2′-0″	1′-9″	2′-0″	1′-9″	2′-9″
#5	2′-6″	2′-2″	2′-6″	2′-2″	3′-5″
#6	3′-0″	2′-7″	3′-10″	2′-7″	4′-4″
#7	5′-3″	3′-6″			
#8	6′-10″	4′-7″			

GROOVING BRIDGE FLOORS

STAGE I		
APPROACH SLABS	2,208	SQ.FT.
BRIDGE DECK	4,960	SQ.FT.
TOTAL	7,168	SQ.FT.
STAGE II		
APPROACH SLABS	1,185	SQ.FT.
BRIDGE DECK	2,635	SQ.FT.
TOTAL	3,820	SQ.FT.
TOTAL		
APPROACH SLABS	3,393	SQ.FT.
BRIDGE DECK	7,595	SQ.FT.
TOTAL	10,988	SQ.FT.

SUPERSTRUCTURE BILL OF MATERIAL

		CLASS AA CONCRETE				REINFORCING STEEL	EPOXY COATED REINFORCING STEEL
		(CU. YD.)				(LBS)	(LBS)
STAGE I	POUR NO.	#1	#2	#3	TOTAL		
	DECK	101.10	77.26	82.65	261.01	19,429	21,428
	SIDEWALK				18.18		✻✻
STAGE II	POUR NO.	#4	#5	#7	TOTAL		
	DECK	77.76	59.86	65.74	203.36	14,920	18,179
	SIDEWALK				18.18		✻✻
	CONC. MEDIAN				18.28		✻✻
	CLOSURE POUR #6				4.51		✻✻
	TOTALS ✻✻				523.52	34,349	39,607

✻✻ QUANTITIES INCLUDED WITH SPAN TOTALS

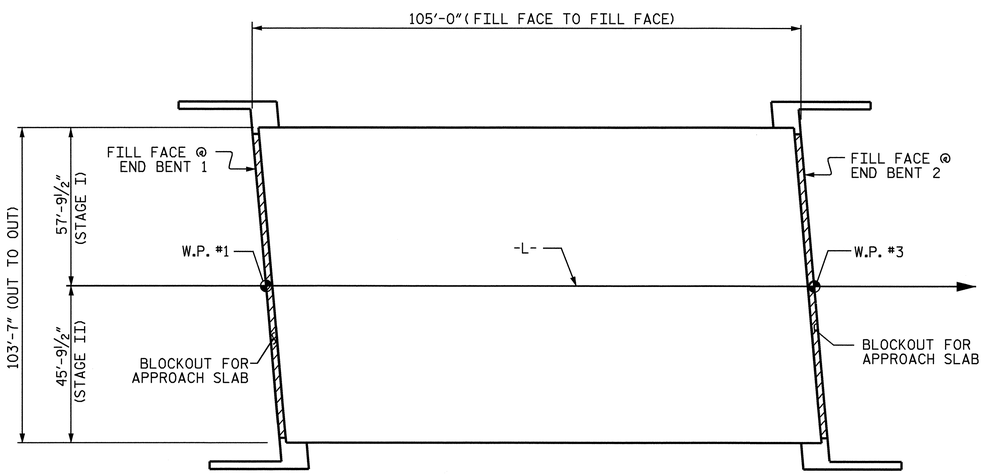

LAYOUT FOR COMPUTING AREA OF REINFORCED CONCRETE DECK SLAB (SQ. FT. = 10,876)

REINFORCING STEEL

STAGE I						STAGE II					
BAR	NO.	SIZE	TYPE	LENGTH	WEIGHT	BAR	NO.	SIZE	TYPE	LENGTH	WEIGHT
✻ A1	157	#5	STR	57′-5″	9402	✻ A3	159	#5	STR	43′-5″	7200
A2	157	#5	STR	57′-5″	9402	A4	159	#5	STR	43′-5″	7200
✻ A101	2	#5	STR	52′-9″	110	✻ A301	2	#5	STR	38′-6″	80
✻ A102	2	#5	STR	45′-7″	95	✻ A302	2	#5	STR	31′-5″	66
✻ A103	2	#5	STR	38′-6″	80	✻ A303	2	#5	STR	24′-3″	51
✻ A104	2	#5	STR	31′-4″	65	✻ A304	2	#5	STR	17′-2″	36
✻ A105	2	#5	STR	24′-2″	50	✻ A305	2	#5	STR	10′-0″	21
✻ A106	2	#5	STR	17′-0″	35	✻ A306	2	#5	STR	2′-10″	6
✻ A107	2	#5	STR	9′-10″	21						
✻ A108	2	#5	STR	2′-9″	6						
A201	2	#5	STR	52′-9″	110	A401	2	#5	STR	38′-6″	80
A202	2	#5	STR	45′-7″	95	A402	2	#5	STR	31′-5″	66
A203	2	#5	STR	38′-6″	80	A403	2	#5	STR	24′-3″	51
A204	2	#5	STR	31′-4″	65	A404	2	#5	STR	17′-2″	36
A205	2	#5	STR	24′-2″	50	A405	2	#5	STR	10′-0″	21
A206	2	#5	STR	17′-0″	35	A406	2	#5	STR	2′-10″	6
A207	2	#5	STR	9′-10″	21						
A208	2	#5	STR	2′-9″	6						
✻ B1	39	#4	STR	27′-6″	716	✻ B1	29	#4	STR	27′-6″	533
✻ B2	39	#7	STR	41′-6″	3308	✻ B2	29	#7	STR	41′-6″	2460
✻ B3	38	#7	STR	16′-0″	1243	✻ B3	29	#7	STR	16′-0″	948
✻ B4	78	#4	STR	20′-1″	1046	✻ B4	58	#4	STR	20′-1″	778
✻ B5	76	#7	STR	12′-0″	1864	✻ B5	58	#7	STR	12′-0″	1423
B6	120	#5	STR	42′-9″	5351	B6	92	#5	STR	42′-9″	4102
B7	120	#6	STR	12′-0″	2163	B7	92	#6	STR	12′-0″	1658
						✻ B8	6	#6	STR	53′-0″	478
✻ B9	30	#4	STR	26′-2″	524	✻ B9	60	#4	STR	26′-2″	1049
✻ B10	4	#4	STR	27′-3″	73	✻ B10	4	#4	STR	27′-3″	73
✻ D1	165	#5	STR	3′-7″	617	✻ D1	165	#5	STR	3′-7″	617
✻ D2	92	#4	STR	1′-0″	61	✻ D2	92	#4	STR	1′-0″	61
✻ G1	104	#4	STR	6′-4″	440	✻ G1	104	#4	STR	6′-4″	440
✻ G2	44	#4	STR	5′-0″	147	✻ G2	44	#4	STR	5′-0″	147
						✻ G3	99	#4	STR	7′-2″	474
H1	12	#4	5	11′-11″	96	H1	12	#4	5	11′-11″	96
H2	12	#4	6	11′-10″	95	H2	12	#4	6	11′-10″	95
K1	24	#4	STR	22′-0″	353	K21	16	#4	STR	25′-1″	268
K2	16	#4	STR	4′-11″	53	K2	12	#4	STR	4′-11″	39
K3	32	#4	STR	5′-11″	126	K3	24	#4	STR	5′-11″	95
K4	16	#4	STR	5′-5″	58	K4	12	#4	STR	5′-5″	43
K5	2	#4	STR	4′-9″	6	K5	2	#4	STR	4′-9″	6
K6	4	#4	STR	5′-3″	14	K6	4	#4	STR	5′-3″	14
K7	2	#4	STR	5′-0″	7	K7	2	#4	STR	5′-0″	7
K8	8	#4	STR	2′-8″	14	K8	8	#4	STR	2′-8″	14
K9	16	#4	STR	3′-9″	40	K9	12	#4	STR	3′-9″	30
K10	48	#4	STR	5′-5″	174	K10	36	#4	STR	5′-5″	130
K11	8	#4	STR	28′-1″	150	K12	4	#4	STR	2′-2″	6
						K13	4	#4	STR	3′-2″	8
						K14	8	#4	STR	21′-1″	113
S1	84	#4	3	8′-9″	491	S1	70	#4	3	8′-9″	409
S2	104	#4	2	2′-9″	191	S2	78	#4	2	2′-9″	143
✻ S3	84	#4	4	11′-8″	655	✻ S3	70	#4	4	11′-8″	546
✻ S4	82	#4	4	9′-10″	539	✻ S4	68	#4	4	9′-10″	447
S5	6	#4	3	12′-1″	48	✻ S5	6	#4	3	12′-1″	48
✻ U1	24	#4	1	13′-0″	208	✻ U1	18	#4	1	13′-0″	156
✻ U2	16	#4	1	11′-4″	121	✻ U2	12	#4	1	11′-4″	91
V2	44	#4	STR	4′-7″	135	V3	44	#4	STR	4′-7″	135
REINFORCING STEEL = 19,429 LBS						REINFORCING STEEL = 14,920 LBS					
✻ EPOXY COATED REINF. STEEL = 21,428 LBS						✻ EPOXY COATED REINF. STEEL = 18,179 LBS					

BAR TYPES

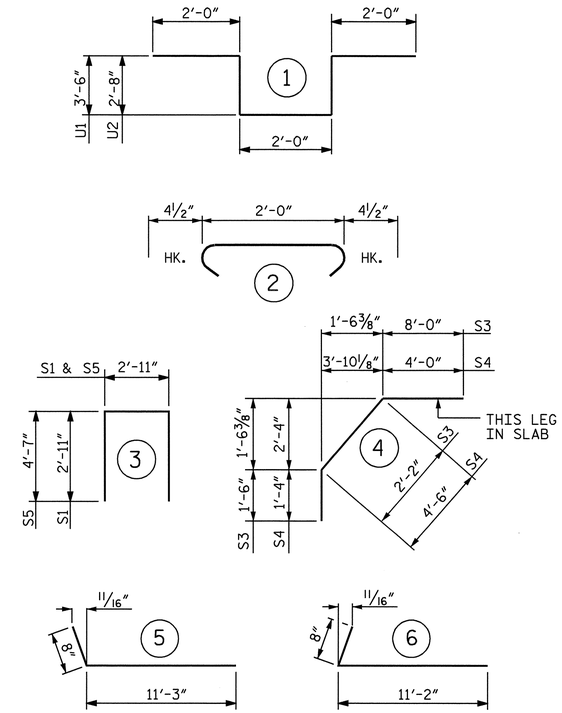

ALL BAR DIMENSIONS ARE OUT TO OUT

NORTH CAROLINA PROFESSIONAL SEAL 16301 ENGINEER TING HSIUNG FANG
2/17/09

PROJECT NO. U-2810A
CUMBERLAND COUNTY
STATION: 39+85.450 -L-

STATE OF NORTH CAROLINA
DEPARTMENT OF TRANSPORTATION
RALEIGH

STANDARD
SUPERSTRUCTURE BILL OF MATERIAL

REVISIONS						SHEET NO.
NO.	BY:	DATE:	NO.	BY:	DATE:	S-69
1			3			TOTAL SHEETS
2			4			83

STD. NO. BOM1

ASSEMBLED BY : E. C. LOCHLEAR DATE : 12-08
CHECKED BY : TING FANG DATE : 12-08

DRAWN BY : JMB 5/87
CHECKED BY : SJD 9/87

REV. 6/1/94 EEM/GRP
REV. 8/16/99 RWW/LES
REV. 5/1/06 TLA/GM

17-FEB-2009 08:56
z:\structures\str2\finalplans\u-2810a_sd_bm_02.dgn
ttfang

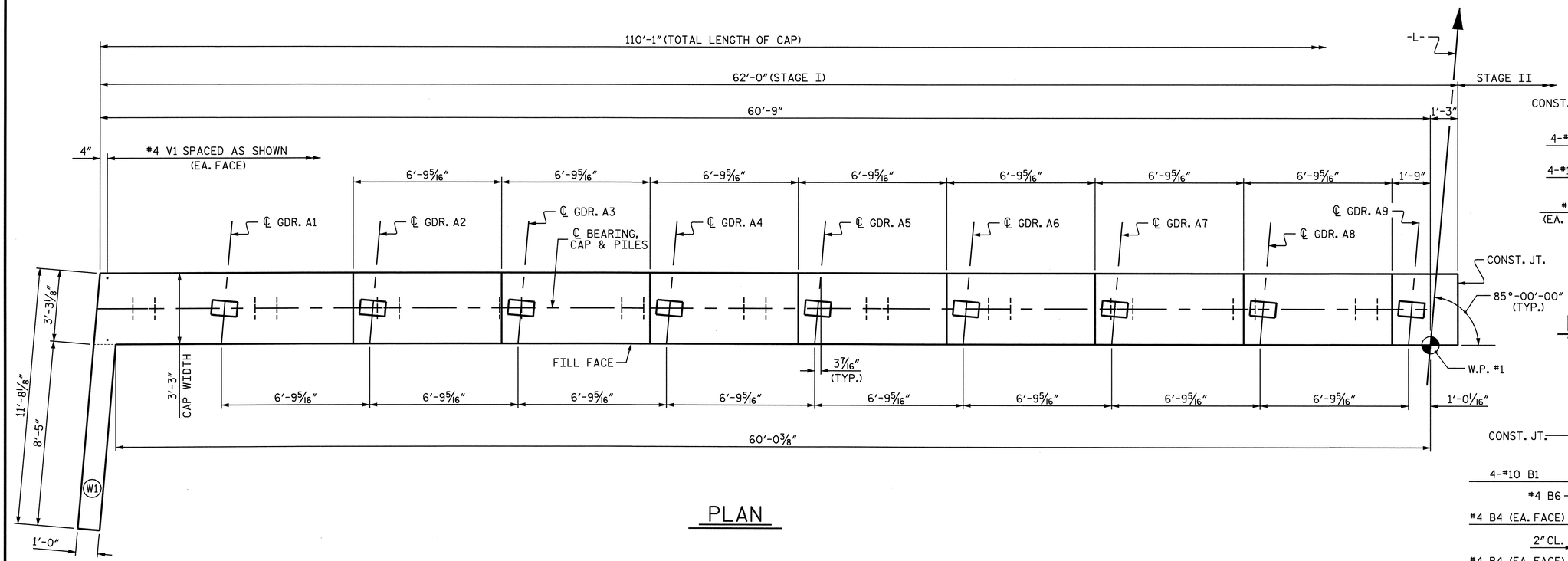

PLAN

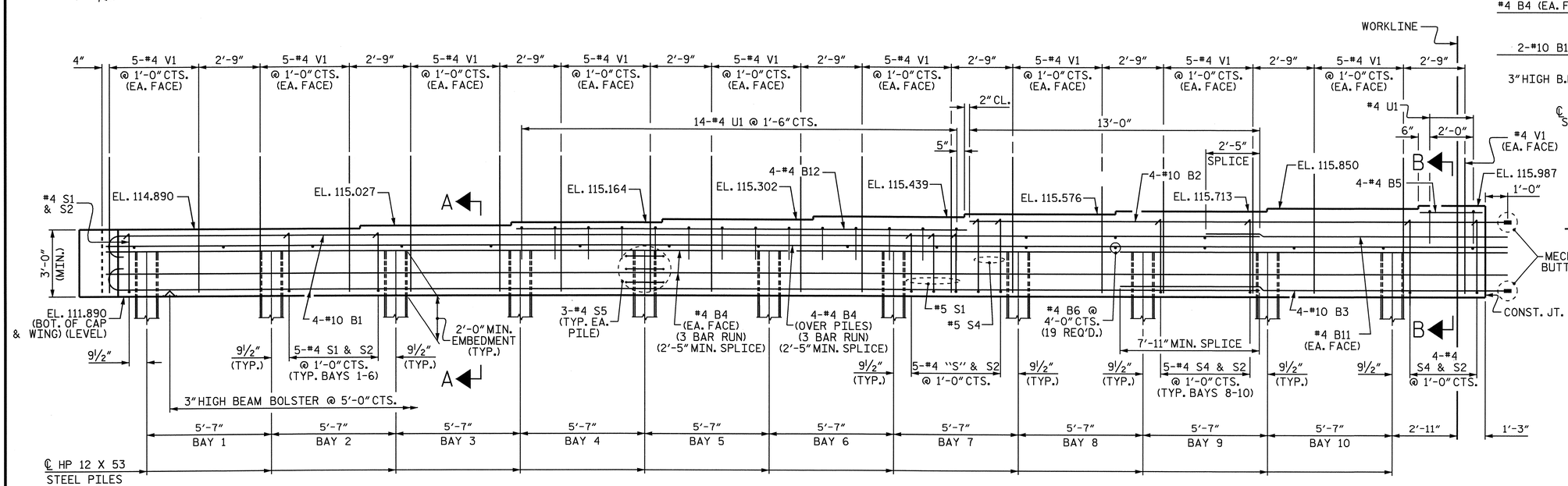

ELEVATION

LEFT WING NOT SHOWN FOR CLARITY

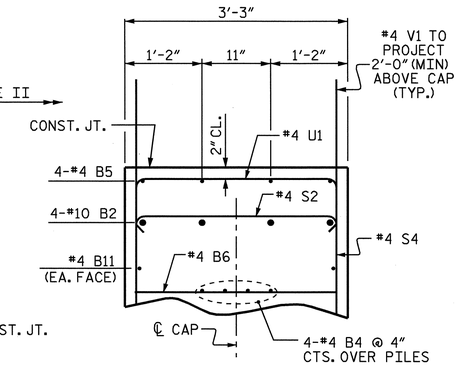

PARTIAL SECTION B-B

STAGE I

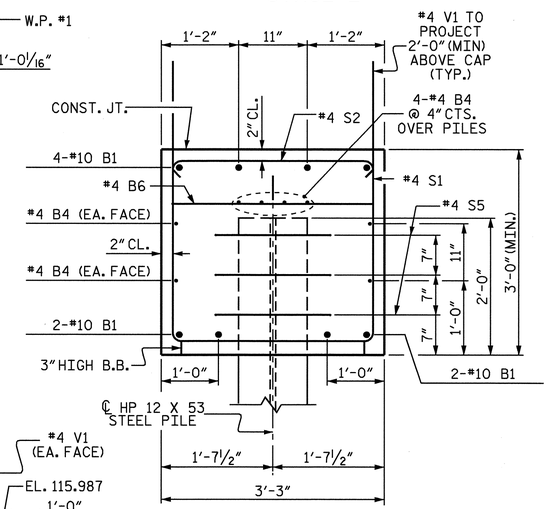

SECTION A-A

STAGE I

PROJECT NO. U-2810A

CUMBERLAND COUNTY

STATION: 39+85.50 -L-

SHEET 1 OF 3

STATE OF NORTH CAROLINA
DEPARTMENT OF TRANSPORTATION
RALEIGH

SUBSTRUCTURE

END BENT 1 (INTEGRAL)

STAGE I

REVISIONS						SHEET NO.
NO.	BY:	DATE:	NO.	BY:	DATE:	S-70
1			3			TOTAL SHEETS
2			4			83

NORTH CAROLINA PROFESSIONAL SEAL 22445 ENGINEER P. KOREY NEWTON

1/29/2009

DRAWN BY : S. DOMBROWSKI DATE : 12/08
CHECKED BY : P.K. NEWTON DATE : 1/09

26-JAN-2009 12:17
p:\structures\str2\final plans\u2810a_sd_e*.dgn
elocklear

NOTES

SEE SUPERSTRUCTURE SHEETS FOR UPPER PART OF INTEGRAL END BENT DETAILS.

FOR PILE SPLICE DETAILS, SEE SHEET 3 OF 3.

THE CONTRACTOR SHALL PROVIDE FOR INSTALLATION OF THE 4" DIAMETER DRAIN PIPE THROUGH THE WING WALL AS REQUIRED FOR REINFORCED BRIDGE APPROACH FILLS. SEE THE ROADWAY PLANS. REINFORCING STEEL IN THE WING WALL MAY BE SHIFTED AS NECESSARY TO CLEAR THE DRAIN PIPE.

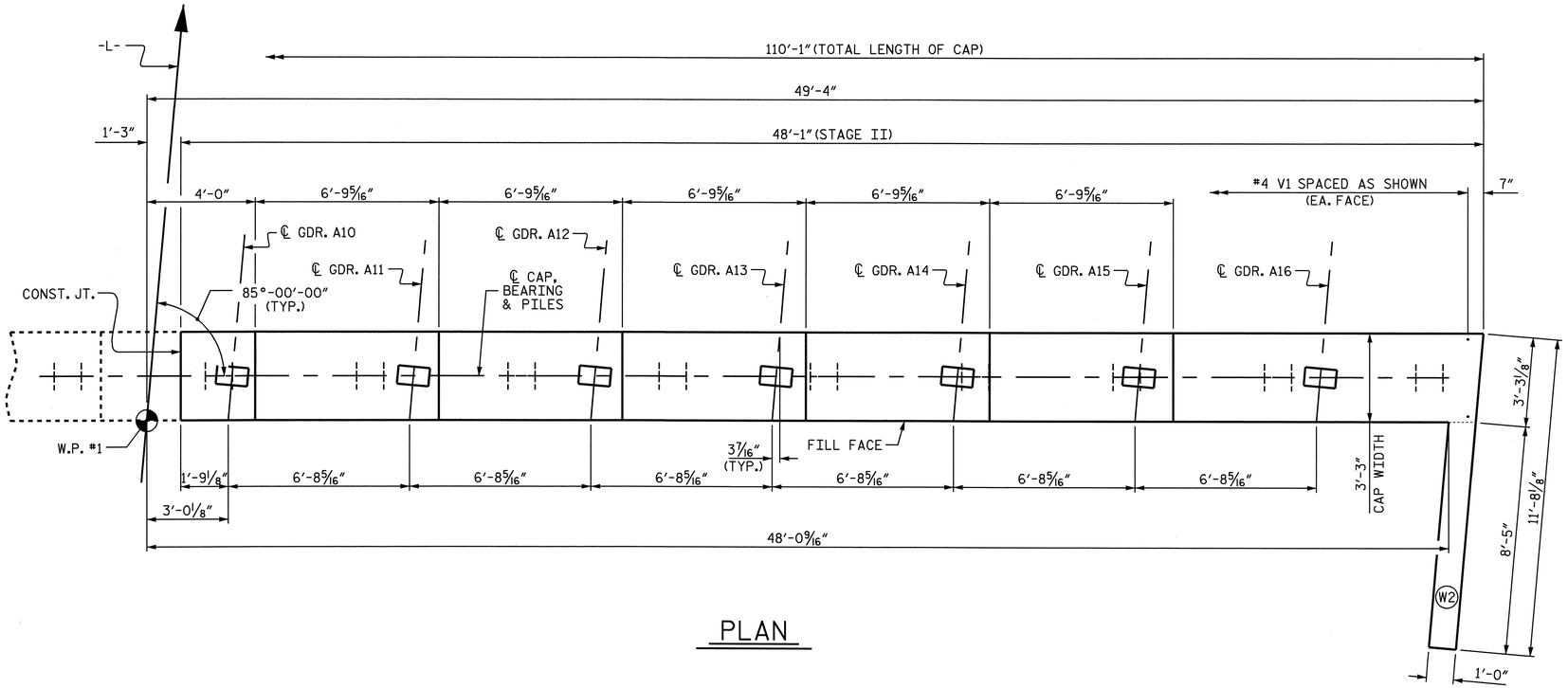

PLAN

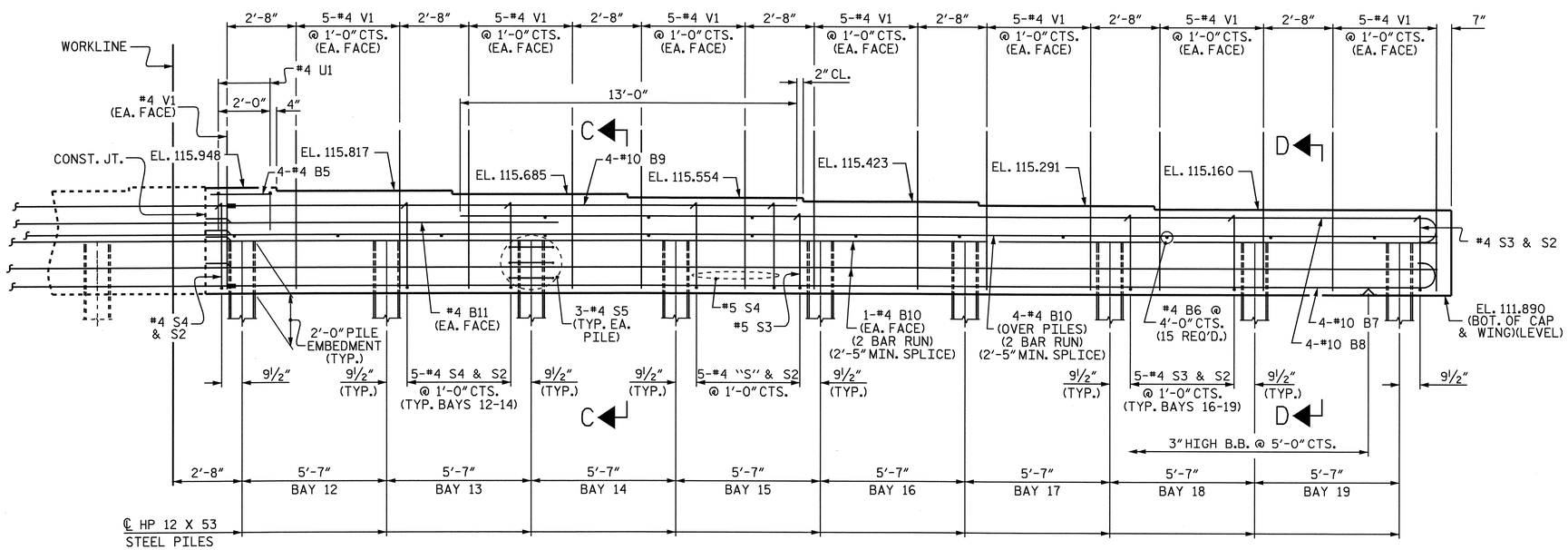

ELEVATION

RIGHT WING NOT SHOWN FOR CLARITY

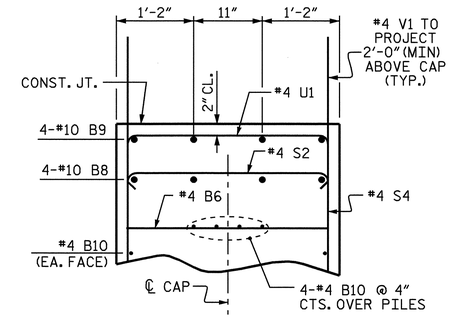

PARTIAL SECTION C-C

STAGE II

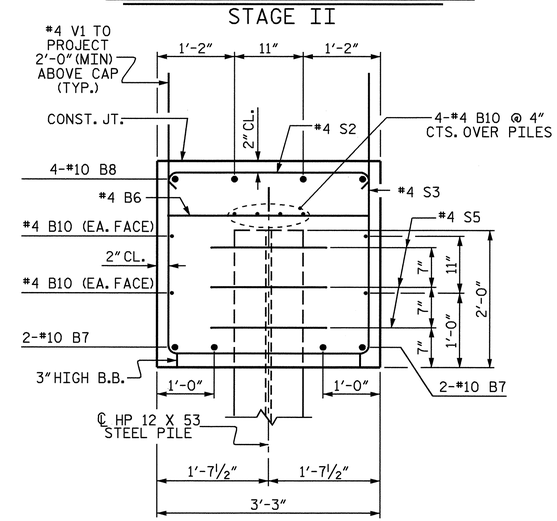

SECTION D-D

STAGE II

PROJECT NO. U-2810A

CUMBERLAND COUNTY

STATION: 39+85.50 -L-

SHEET 2 OF 3

STATE OF NORTH CAROLINA
DEPARTMENT OF TRANSPORTATION
RALEIGH

SUBSTRUCTURE

END BENT 1 (INTEGRAL)

STAGE II

NORTH CAROLINA PROFESSIONAL SEAL 28445 ENGINEER P.K. KOREY NEWTON

1/29/2009

REVISIONS						SHEET NO.
NO.	BY:	DATE:	NO.	BY:	DATE:	S-71
1			3			TOTAL SHEETS
2			4			83

DRAWN BY : S. DOMBROWSKI DATE : 12/08
CHECKED BY : P.K. NEWTON DATE : 1/09

26-JAN-2009 11:51
R:\Structures\str2\Final Plans\U2810A_sd_E*.dgn
elocklear

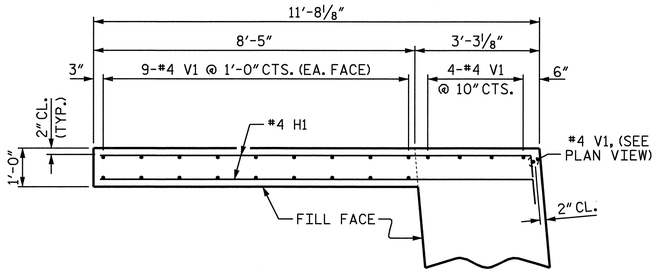

PLAN OF WING (W1)
STAGE I

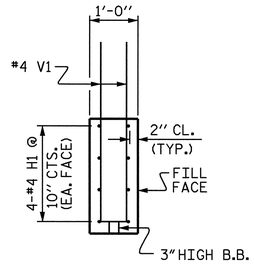

SECTION X-X

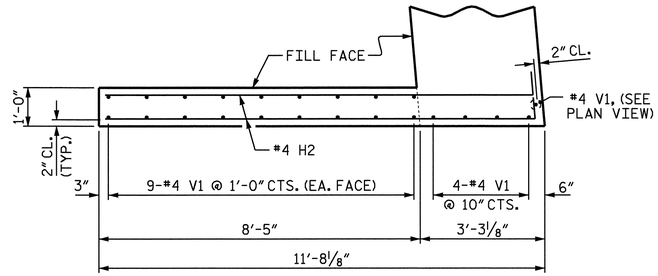

PLAN OF WING (W2)
STAGE II

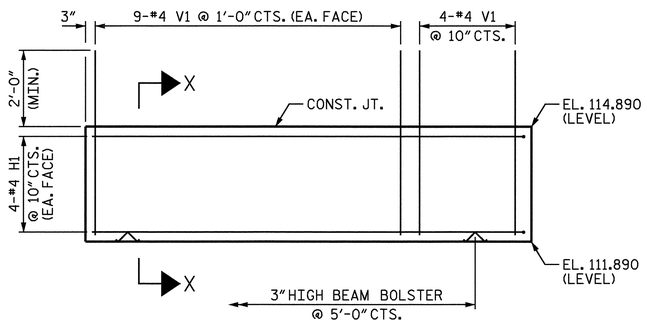

ELEVATION OF WING (W1)
STAGE I

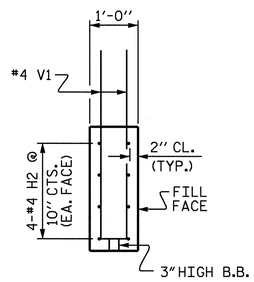

SECTION Y-Y

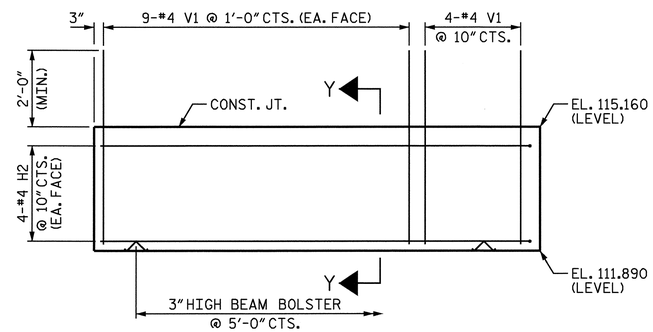

ELEVATION OF WING (W2)
STAGE II

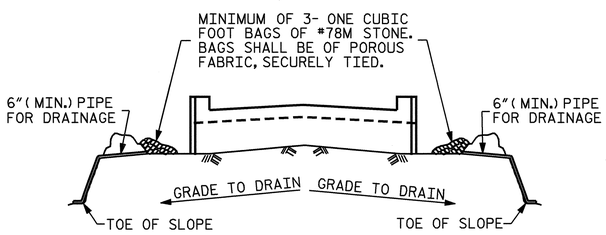

BAGGED STONE AND PIPE SHALL BE PLACED IMMEDIATELY AFTER COMPLETION OF END BENT EXCAVATION. PIPE MAY BE EITHER CONCRETE, CORRUGATED STEEL, CORRUGATED ALUMINUM ALLOY, OR CORRUGATED PLASTIC. PERFORATED PIPE WILL NOT BE ALLOWED.

BAGGED STONE SHALL REMAIN IN PLACE UNTIL THE ENGINEER DIRECTS THAT IT BE REMOVED. THE CONTRACTOR SHALL REMOVE AND DISPOSE OF SILT ACCUMULATIONS AT BAGGED STONE WHEN SO DIRECTED BY THE ENGINEER. BAGS SHALL BE REMOVED AND REPLACED WHENEVER THE ENGINEER DETERMINES THAT THEY HAVE DETERIORATED AND LOST THEIR EFFECTIVENESS.

NO SEPARATE PAYMENT WILL BE MADE FOR THIS WORK AND THE ENTIRE COST OF THIS WORK SHALL BE INCLUDED IN THE UNIT CONTRACT PRICE BID FOR THE SEVERAL PAY ITEMS.

TEMPORARY DRAINAGE AT END BENT

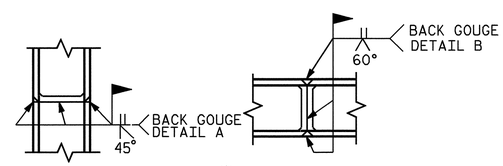

* PILE VERTICAL

* PILE HORIZONTAL OR VERTICAL

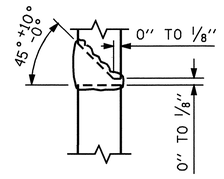

DETAIL A

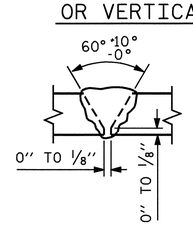

DETAIL B

* POSITION OF PILE DURING WELDING.

PILE SPLICE DETAILS

BILL OF MATERIAL
END BENT 1

STAGE I						STAGE II					
BAR	NO.	SIZE	TYPE	LENGTH	WEIGHT	BAR	NO.	SIZE	TYPE	LENGTH	WEIGHT
B1	8	#10	1	53'-3"	1833	B5	4	#4	STR	2'-7"	7
B2	4	#10	STR	24'-2"	416	B6	15	#4	STR	3'-0"	30
B3	4	#10	STR	19'-1"	328	B7	4	#10	1	48'-0"	826
B4	24	#4	STR	22'-8"	363	B8	4	#10	1	40'-4"	694
B5	4	#4	STR	2'-7"	7	B9	4	#10	STR	21'-11"	377
B6	19	#4	STR	3'-0"	38	B10	16	#4	STR	25'-2"	269
B11	2	#4	STR	13'-7"	18	B11	2	#4	STR	13'-7"	18
B12	4	#4	STR	20'-0"	53						
H1	8	#4	2	11'-11"	64	H2	8	#4	3	11'-10"	63
S1	34	#4	4	8'-11"	203	S2	42	#4	5	3'-8"	103
S2	55	#4	5	3'-8"	135	S3	22	#4	4	9'-5"	138
S4	21	#4	4	10'-3"	144	S4	20	#4	4	10'-3"	139
S5	33	#4	6	6'-6"	143	S5	27	#4	6	6'-6"	117
U1	16	#4	7	5'-11"	63	U1	2	#4	7	5'-11"	8
V1	114	#4	STR	5'-10"	444	V1	94	#4	STR	5'-10"	366
REINFORCING STEEL = 4252 LBS						REINFORCING STEEL = 3153 LBS					
CLASS A CONCRETE QUANTITIES: CAP & WINGS 26.9 C.Y.						CLASS A CONCRETE QUANTITIES: CAP & WINGS 21.8 C.Y.					
HP 12 X 53 STEEL PILES: NO. 11 LIN. FT. 440						HP 12 X 53 STEEL PILES: NO. 9 LIN. FT. 360					

BAR TYPES

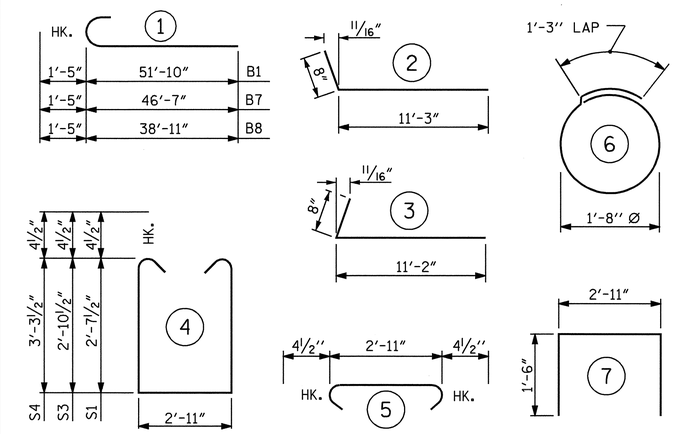

ALL BAR DIMENSIONS ARE OUT TO OUT

TOTAL BILL OF MATERIAL

REINFORCING STEEL	= 7405 LBS.
CLASS A CONCRETE	= 48.7 C.Y.
HP 12 X 53 STEEL PILES: NO. 20	LIN. FT. 800

PROJECT NO. U-2810A
CUMBERLAND COUNTY
STATION: 39+85.50 -L-

SHEET 3 OF 3

STATE OF NORTH CAROLINA
DEPARTMENT OF TRANSPORTATION
RALEIGH

SUBSTRUCTURE

END BENT 1
(INTEGRAL)

NORTH CAROLINA PROFESSIONAL SEAL 26435 ENGINEER KOREY NEWTON
2/16/2009

REVISIONS						SHEET NO.
NO.	BY:	DATE:	NO.	BY:	DATE:	S-72
1			3			TOTAL SHEETS
2			4			83

DRAWN BY : S. DOMBROWSKI DATE : 12/08
CHECKED BY : P.K. NEWTON DATE : 1/09

16-FEB-2009 13:41
G:\TIPProjects-U\U2810\Structures\str2\FinalPlans\U2810A_sd_E*.dgn
zhbrown

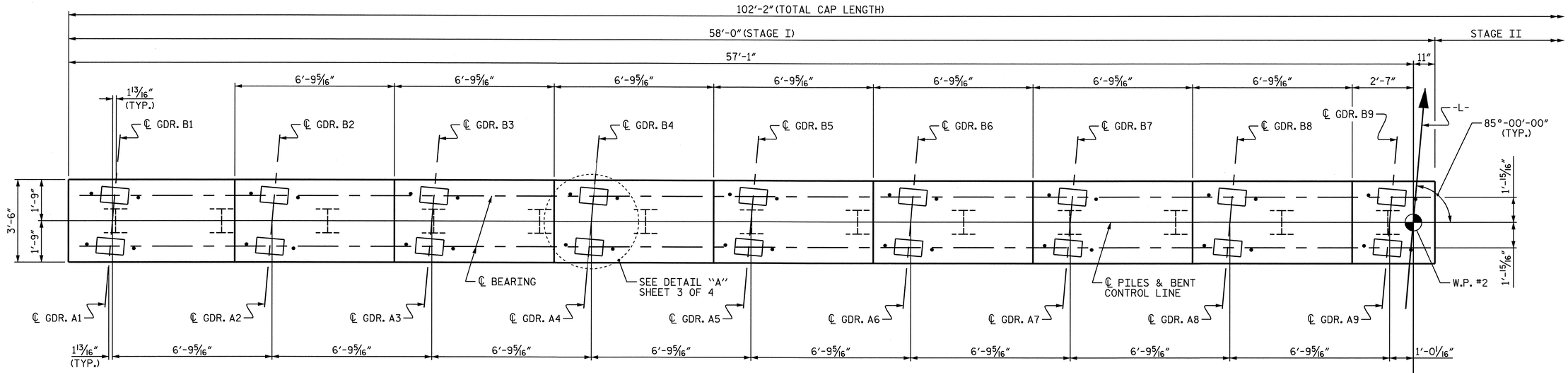

PLAN

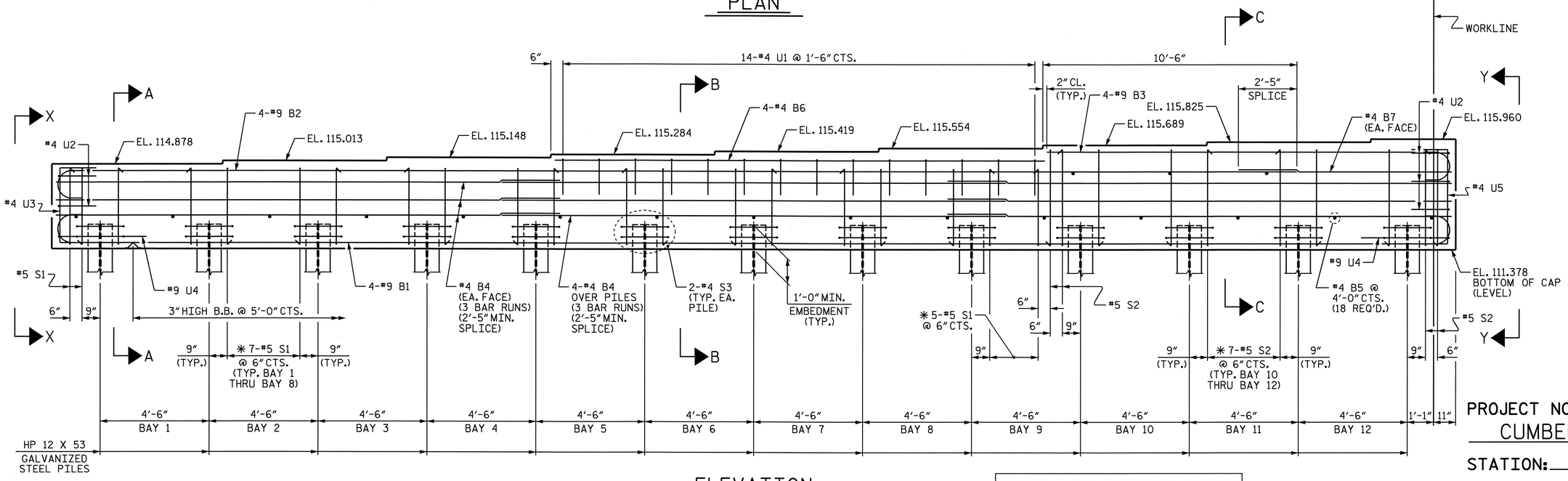

ELEVATION

✱ INVERT ALTERNATE STIRRUPS AS SHOWN.

PROJECT NO. U-2810A
CUMBERLAND COUNTY
STATION: 39+85.50 -L-

SHEET 1 OF 4

STATE OF NORTH CAROLINA
DEPARTMENT OF TRANSPORTATION
RALEIGH

SUBSTRUCTURE

BENT 1
STAGE I

NOTES:

STIRRUPS IN CAP MAY BE SHIFTED AS NECESSARY TO CLEAR ANCHOR BOLTS.

GALVANIZE THE TOP 25 FEET OF EACH INTERIOR BENT PILE IN ACCORDANCE WITH SECTION 1076 OF THE STANDARD SPECIFICATIONS.

FOR PILE SPLICE DETAILS, SEE SHEET 2 OF 4.

NORTH CAROLINA PROFESSIONAL SEAL 032492 ENGINEER JOHN A. YANNACCONE
10/19/09

REVISIONS								SHEET NO.
NO.	BY:	DATE:	NO.	BY:	DATE:			S-73
1			3					TOTAL SHEETS
2			4					83

DRAWN BY : E.C. LOCKLEAR DATE : 12-19-08
CHECKED BY : J.A. YANNACCONE DATE : 12-31-08

19-OCT-2009 09:08
z:\structures\str2\final plans\u2810_sd_b#_02.dgn
ttfang

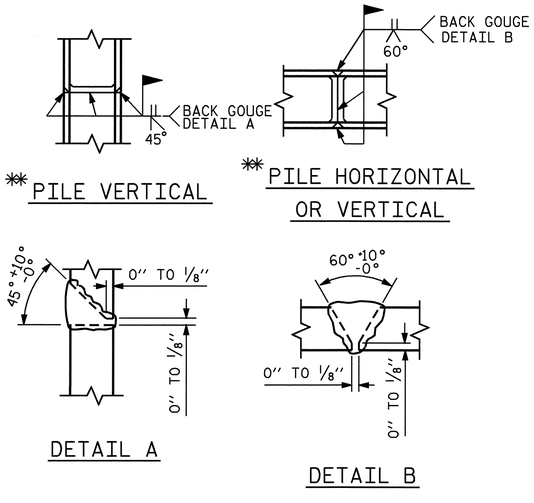

PILE SPLICE DETAILS

** POSITION OF PILE DURING WELDING.

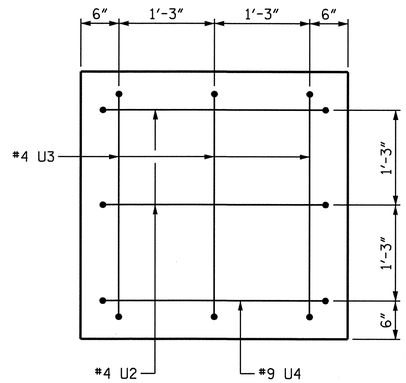

VIEW X-X

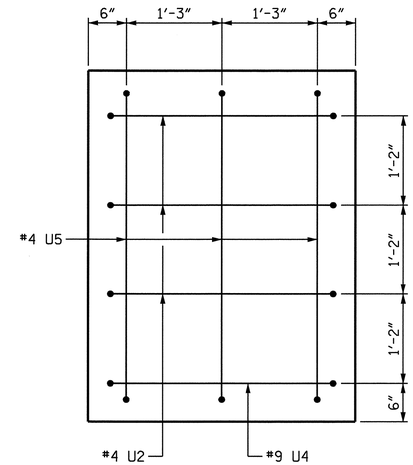

VIEW Y-Y

BAR TYPES

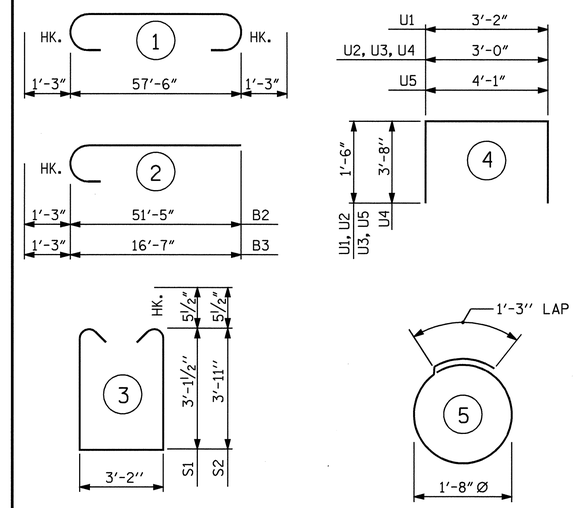

ALL BAR DIMENSIONS ARE OUT TO OUT.

BILL OF MATERIAL

BAR	NO.	SIZE	TYPE	LENGTH	WEIGHT
B1	4	#9	1	60'-0"	816
B2	4	#9	2	52'-8"	716
B3	4	#9	2	17'-10"	243
B4	30	#4	STR	20'-10"	418
B5	18	#4	STR	3'-2"	38
B6	4	#4	STR	20'-3"	54
B7	2	#4	STR	8'-9"	12
S1	63	#5	3	10'-4"	679
S2	25	#5	3	11'-11"	311
S3	26	#4	5	6'-6"	113
U1	14	#4	4	6'-2"	58
U2	5	#4	4	6'-0"	20
U3	3	#4	4	6'-0"	12
U4	2	#9	4	10'-4"	70
U5	3	#4	4	7'-1"	14

REINFORCING STEEL 3574 LBS.

CLASS A CONCRETE
CAP 30.1 C.Y.

HP 12 X 53 GALVANIZED STEEL PILES
NO. 13 650 LIN. FT.

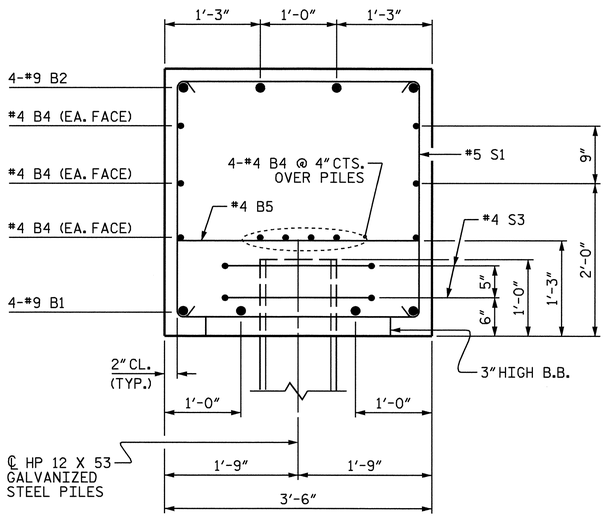

SECTION A-A

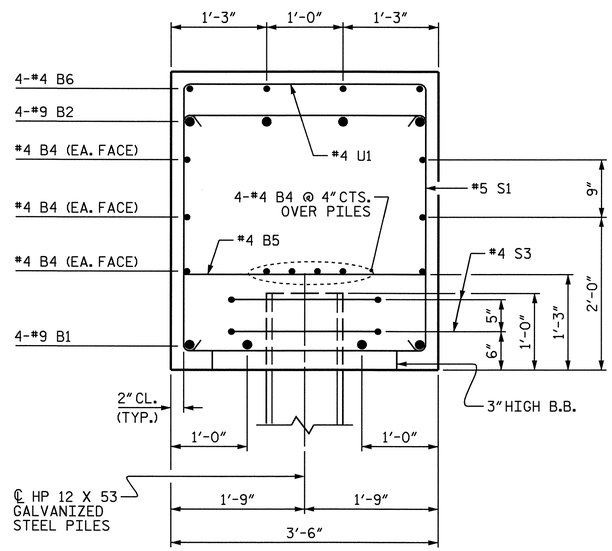

SECTION B-B

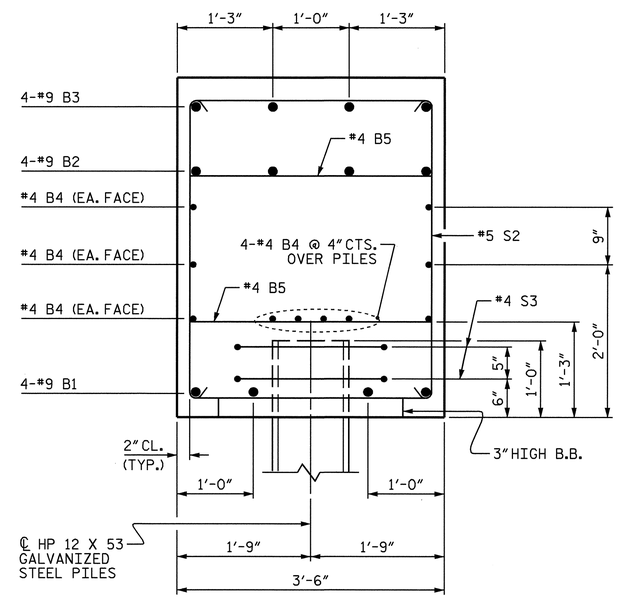

SECTION C-C

PROJECT NO. U-2810A
CUMBERLAND COUNTY
STATION: 39+85.50 -L-

SHEET 2 OF 4

STATE OF NORTH CAROLINA
DEPARTMENT OF TRANSPORTATION
RALEIGH

SUBSTRUCTURE

BENT 1
STAGE I

NORTH CAROLINA PROFESSIONAL SEAL 032492 ENGINEER JOHN A. YANNACCONE
2/17/09

REVISIONS						SHEET NO.
NO.	BY:	DATE:	NO.	BY:	DATE:	S-74
1			3			TOTAL SHEETS
2			4			83

DRAWN BY : E.C. LOCKLEAR DATE : 12-19-08
CHECKED BY : J.A. YANNACCONE DATE : 12-31-08

16-FEB-2009 13:43
G:\TIPProjects-U\U2810\Structures\str2\FinalPlans\U2810_sd_B*_02.dgn
zhbrown

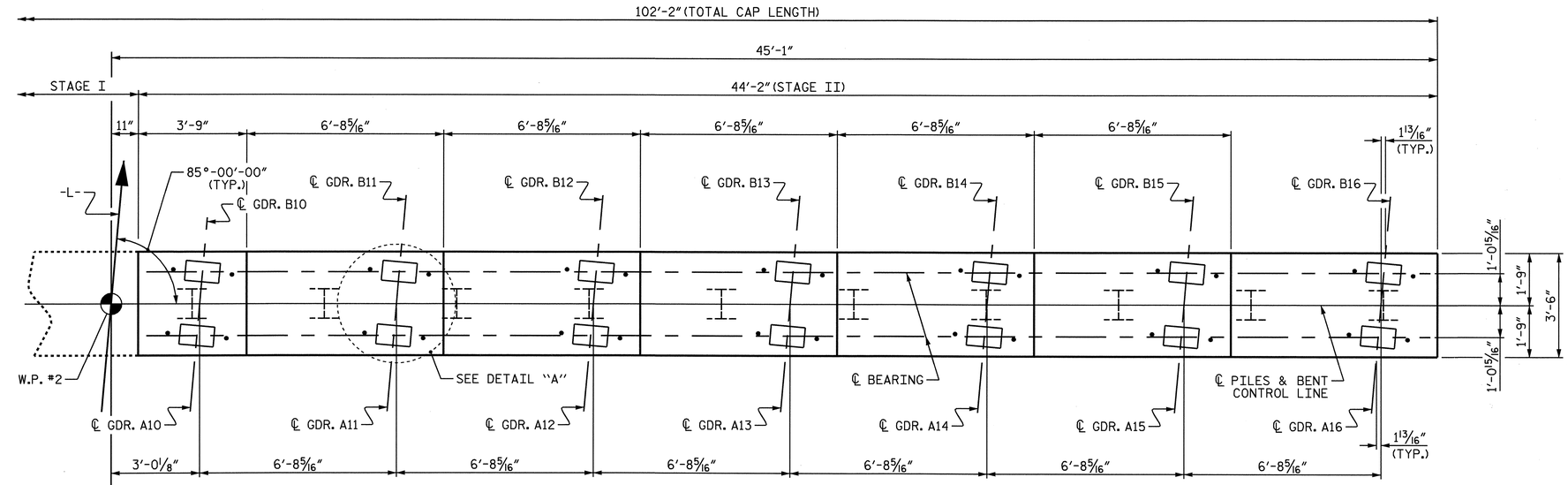

PLAN

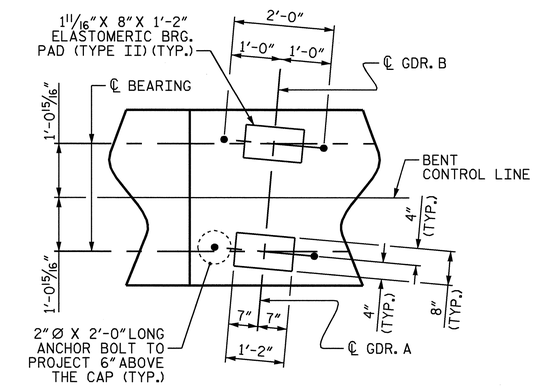

DETAIL "A"

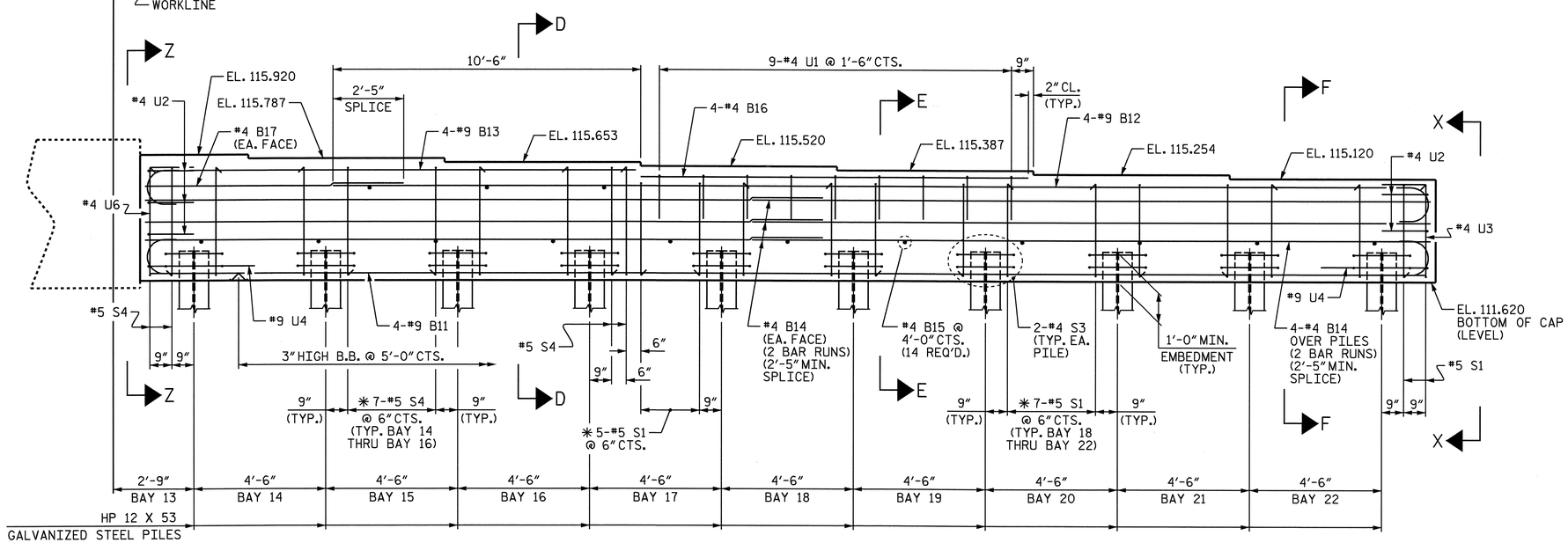

ELEVATION

✱ INVERT ALTERNATE STIRRUPS AS SHOWED.

PROJECT NO. U-2810A
CUMBERLAND COUNTY
STATION: 39+85.50 -L-

SHEET 3 OF 4

STATE OF NORTH CAROLINA
DEPARTMENT OF TRANSPORTATION
RALEIGH

SUBSTRUCTURE

BENT 1
STAGE II

NORTH CAROLINA PROFESSIONAL SEAL 032492 ENGINEER JOHN A. YANNACCONE 1/26/09

REVISIONS						SHEET NO.
NO.	BY:	DATE:	NO.	BY:	DATE:	S-75
1			3			TOTAL SHEETS
2			4			83

DRAWN BY : E.C. LOCKLEAR DATE : 12-19-08
CHECKED BY : J.A. YANNACCONE DATE : 12-31-08

26-JAN-2009 11:42
R:\Structures\str2\Final Plans\U2810_sd_B*_02.dgn
elocklear

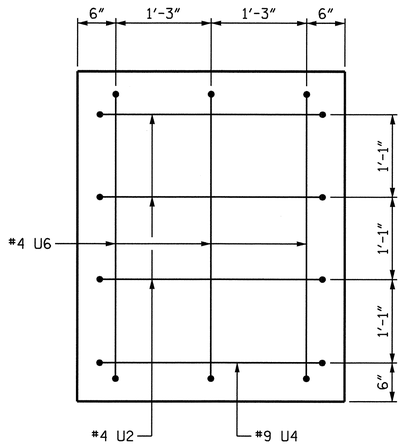

VIEW Z-Z

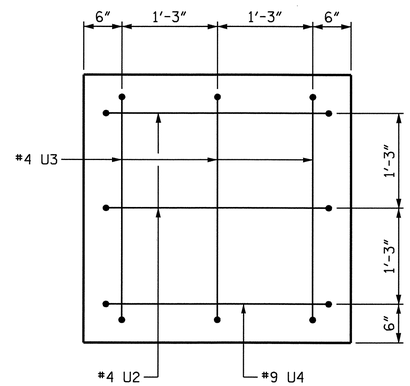

VIEW X-X

BAR TYPES

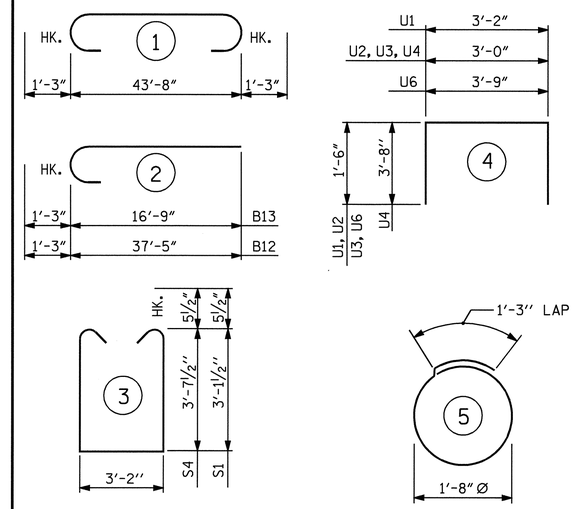

ALL BAR DIMENSIONS ARE OUT TO OUT.

BILL OF MATERIAL

BAR	NO.	SIZE	TYPE	LENGTH	WEIGHT
B11	4	#9	1	46′-2″	628
B12	4	#9	2	38′-8″	526
B13	4	#9	2	18′-0″	245
B14	20	#4	STR	23′-4″	312
B15	14	#4	STR	3′-2″	30
B16	4	#4	STR	13′-10″	35
B17	2	#4	STR	8′-9″	12
S1	42	#5	3	10′-4″	453
S3	20	#4	5	6′-6″	87
S4	25	#5	3	11′-4″	296
U1	9	#4	4	6′-2″	37
U2	5	#4	4	6′-0″	20
U3	3	#4	4	6′-0″	12
U4	2	#9	4	10′-4″	70
U6	3	#4	4	6′-9″	14

REINFORCING STEEL 2776 LBS.

CLASS A CONCRETE
CAP 23.1 C.Y.

HP 12 X 53 GALVANIZED STEEL PILES
NO. 10 500 LIN. FT.

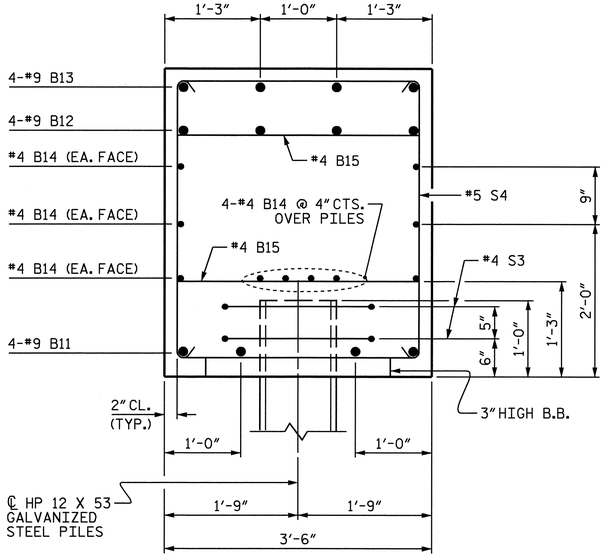

SECTION D-D

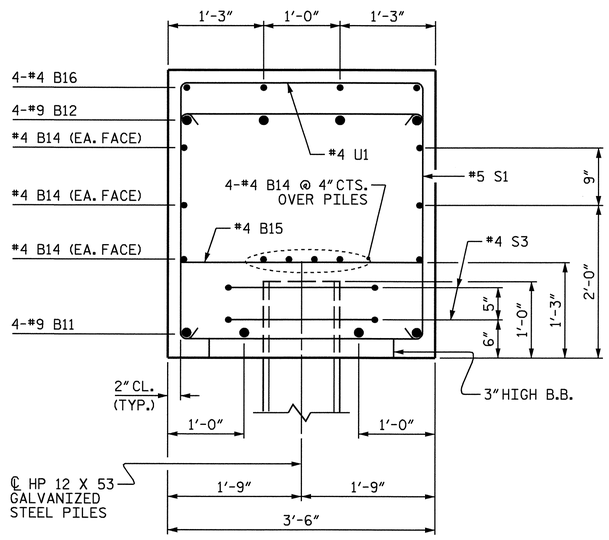

SECTION E-E

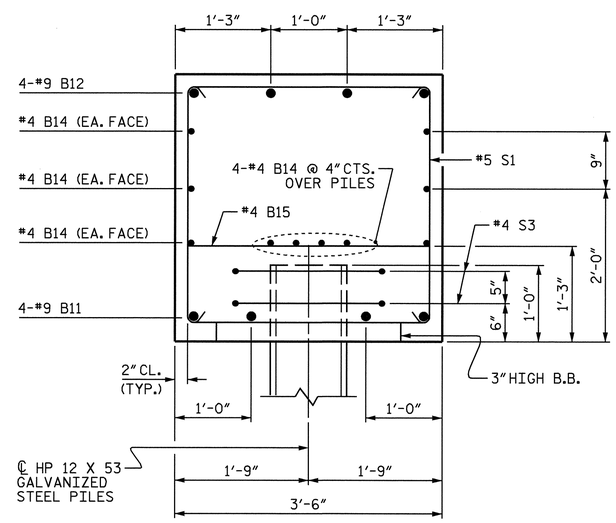

SECTION F-F

PROJECT NO. U-2810A
CUMBERLAND COUNTY
STATION: 39+85.50 -L-

SHEET 4 OF 4

STATE OF NORTH CAROLINA
DEPARTMENT OF TRANSPORTATION
RALEIGH

SUBSTRUCTURE

BENT 1
STAGE II

NORTH CAROLINA PROFESSIONAL SEAL 032492 ENGINEER JOHN A. YANNACCONE
2/17/09

REVISIONS								SHEET NO.
NO.	BY:	DATE:	NO.	BY:	DATE:			S-76
1			3					TOTAL SHEETS
2			4					83

DRAWN BY : E.C. LOCKLEAR DATE : 12-19-08
CHECKED BY : J.A. YANNACCONE DATE : 12-31-08

16-FEB-2009 13:45
G:\TIPProjects-U\U2810\Structures\str2\FinalPlans\U2810_sd_B*_02.dgn
zhbrown

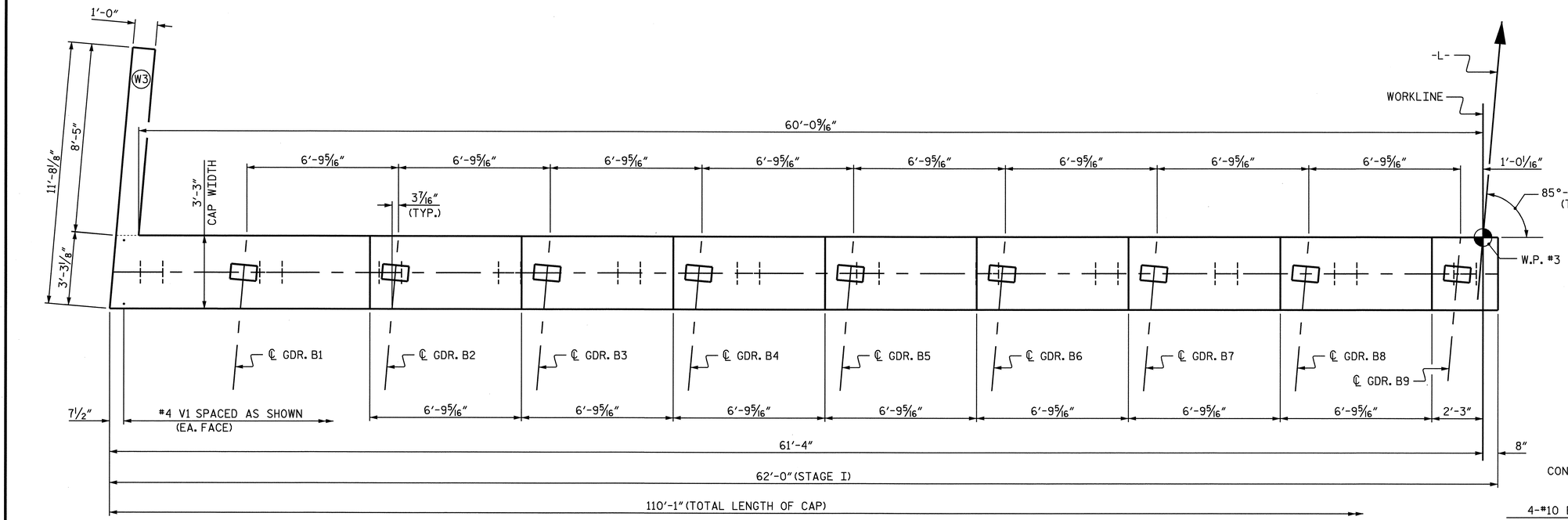

PLAN

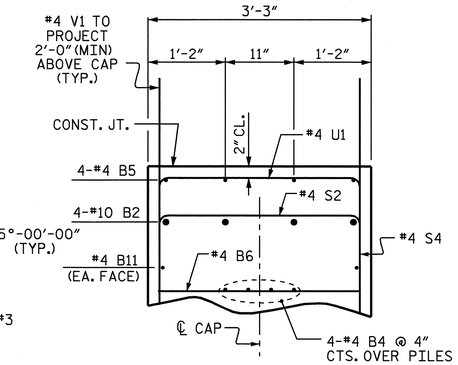

PARTIAL SECTION B-B

STAGE I

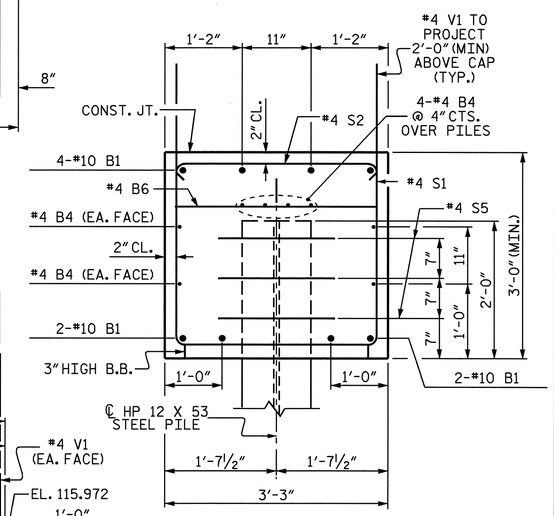

SECTION A-A

STAGE I

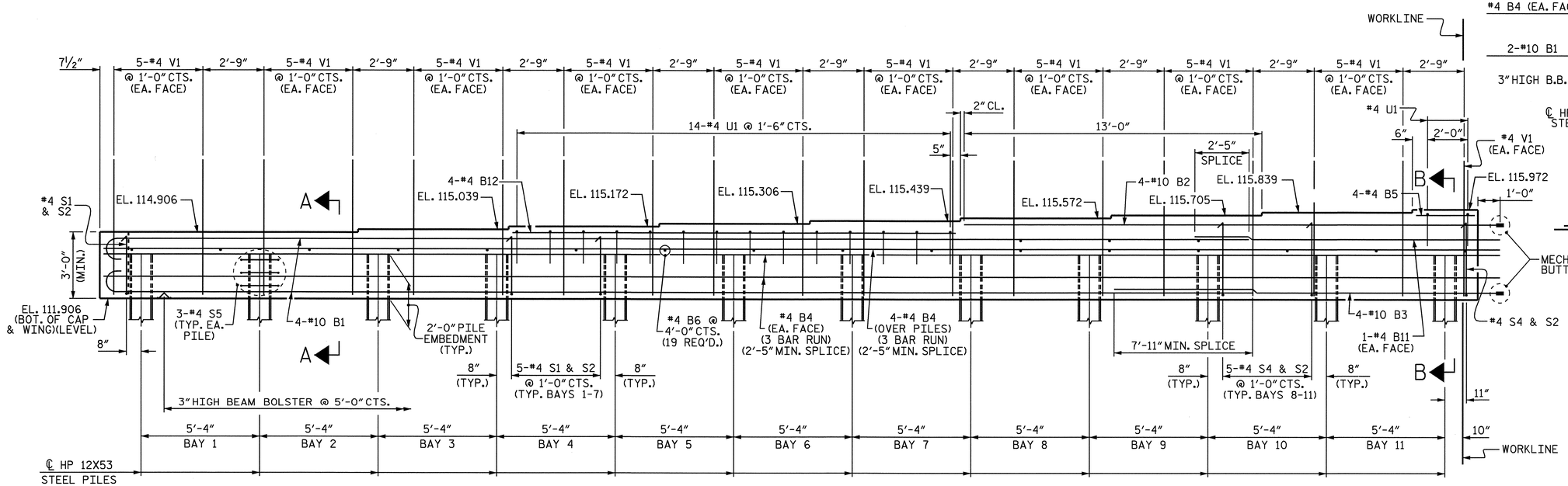

ELEVATION

LEFT WING NOT SHOWN FOR CLARITY

PROJECT NO. U-2810A

CUMBERLAND COUNTY

STATION: 39+85.50 -L-

SHEET 1 OF 3

STATE OF NORTH CAROLINA
DEPARTMENT OF TRANSPORTATION
RALEIGH

SUBSTRUCTURE

END BENT 2 (INTEGRAL)

STAGE I

NORTH CAROLINA PROFESSIONAL SEAL 28445 ENGINEER P. KOREY NEWTON

2/18/2009

REVISIONS						SHEET NO.
NO.	BY:	DATE:	NO.	BY:	DATE:	S-77
1			3			TOTAL SHEETS
2			4			83

DRAWN BY : S. DOMBROWSKI DATE : 12/08
CHECKED BY : P.K. NEWTON DATE : 1/09

18-FEB-2009 08:42
T:\Structures\str2\Final Plans\U2810A_sd_E*.dgn
kpnewton

NOTES

SEE SUPERSTRUCTURE SHEETS FOR UPPER PART OF INTEGRAL END BENT DETAILS.

FOR PILE SPLICE DETAILS, SEE SHEET 3 OF 3.

THE CONTRACTOR SHALL PROVIDE FOR INSTALLATION OF THE 4" DIAMETER DRAIN PIPE THROUGH THE WING WALL AS REQUIRED FOR REINFORCED BRIDGE APPROACH FILLS, SEE THE ROADWAY PLANS. REINFORCING STEEL IN THE WING WALL MAY BE SHIFTED AS NECESSARY TO CLEAR THE DRAIN PIPE.

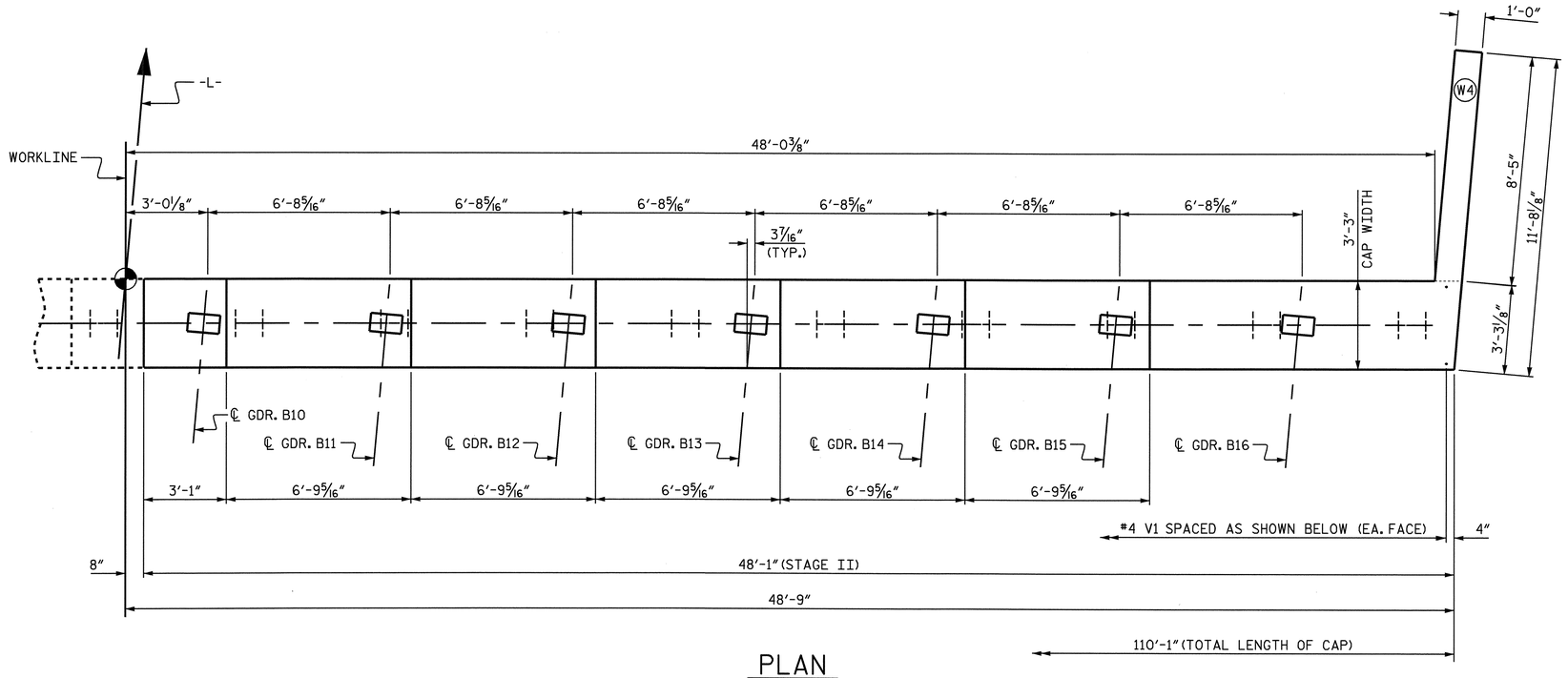

PLAN

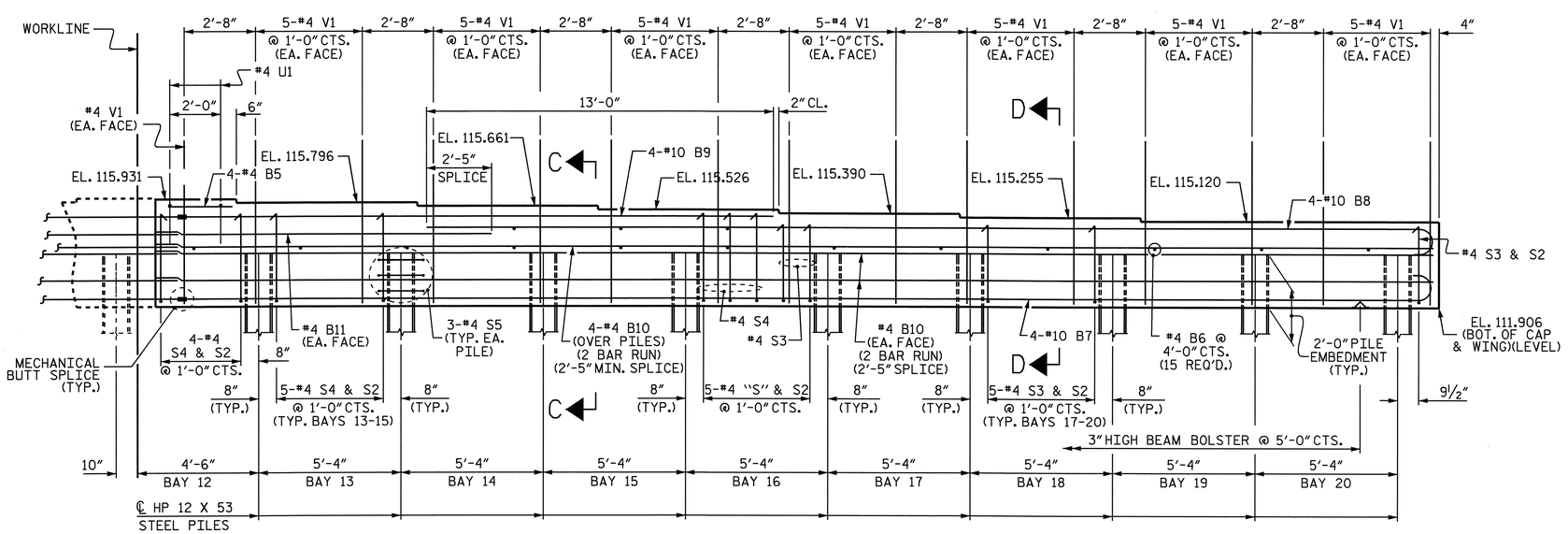

ELEVATION

RIGHT WING NOT SHOWN FOR CLARITY

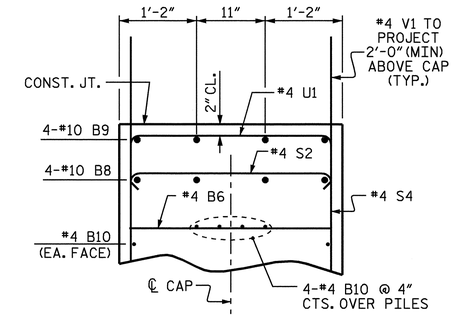

PARTIAL SECTION C-C

STAGE I

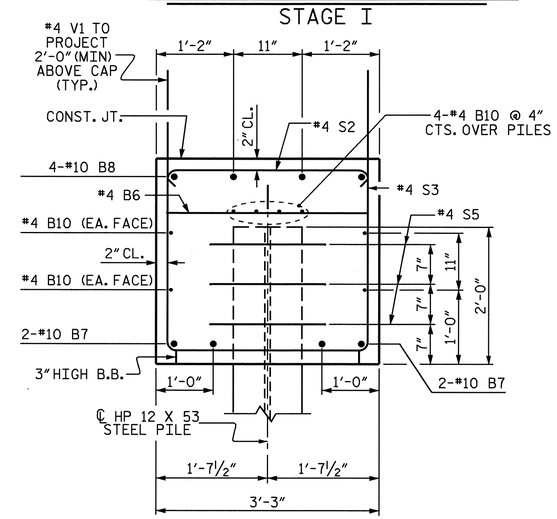

SECTION D-D

STAGE II

PROJECT NO. U-2810A

CUMBERLAND COUNTY

STATION: 39+85.50 -L-

SHEET 2 OF 3

STATE OF NORTH CAROLINA
DEPARTMENT OF TRANSPORTATION
RALEIGH

SUBSTRUCTURE

INTEGRAL END BENT 2

STAGE II

NORTH CAROLINA PROFESSIONAL SEAL 28445 ENGINEER P. KOREY NEWTON

1/29/2009

REVISIONS						SHEET NO.
NO.	BY:	DATE:	NO.	BY:	DATE:	S-78
1			3			TOTAL SHEETS
2			4			83

DRAWN BY : S. DOMBROWSKI DATE : 12/08
CHECKED BY : P.K. NEWTON DATE : 1/09

26-JAN-2009 11:42
R:\Structures\str2\Final Plans\U2810A_sd_E*.dgn
elocklear

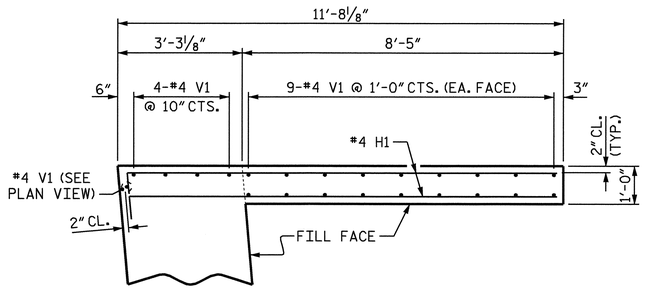

PLAN OF WING (W3)
STAGE I

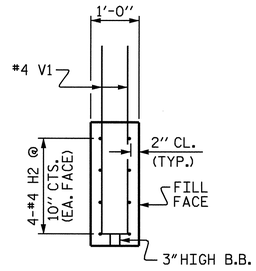

SECTION X-X

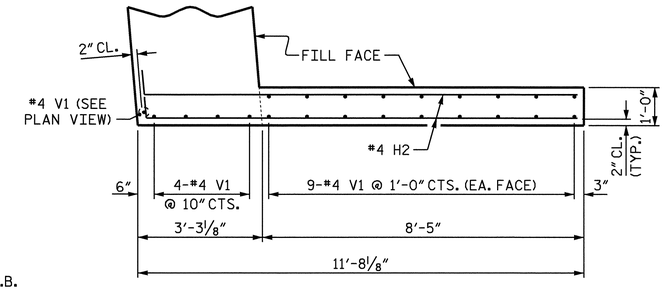

PLAN OF WING (W4)
STAGE II

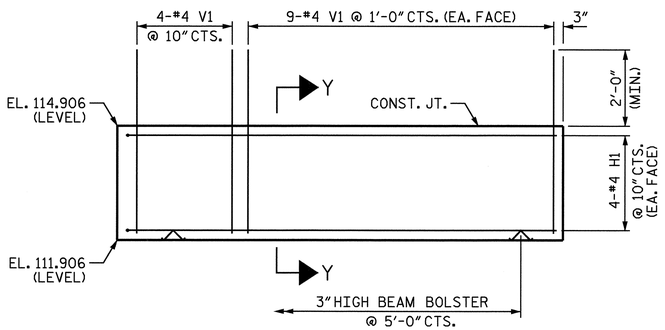

ELEVATION OF WING (W3)
STAGE I

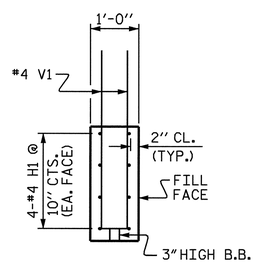

SECTION Y-Y

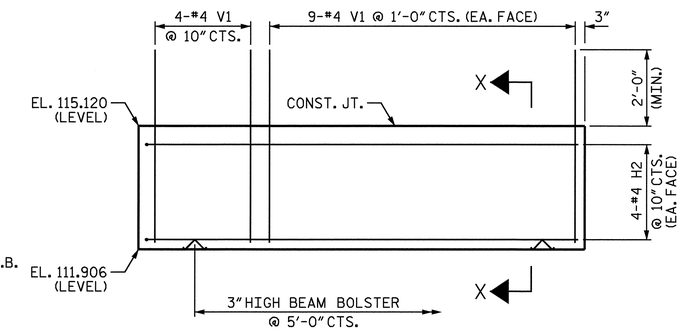

ELEVATION OF WING (W4)
STAGE II

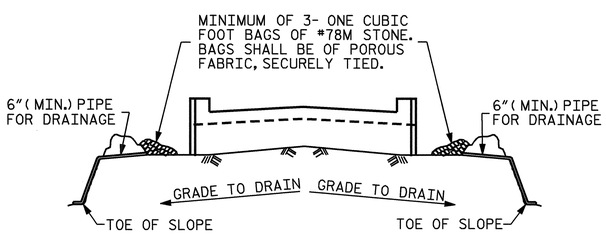

BAGGED STONE AND PIPE SHALL BE PLACED IMMEDIATELY AFTER COMPLETION OF END BENT EXCAVATION. PIPE MAY BE EITHER CONCRETE, CORRUGATED STEEL, CORRUGATED ALUMINUM ALLOY, OR CORRUGATED PLASTIC. PERFORATED PIPE WILL NOT BE ALLOWED.

BAGGED STONE SHALL REMAIN IN PLACE UNTIL THE ENGINEER DIRECTS THAT IT BE REMOVED. THE CONTRACTOR SHALL REMOVE AND DISPOSE OF SILT ACCUMULATIONS AT BAGGED STONE WHEN SO DIRECTED BY THE ENGINEER. BAGS SHALL BE REMOVED AND REPLACED WHENEVER THE ENGINEER DETERMINES THAT THEY HAVE DETERIORATED AND LOST THEIR EFFECTIVENESS.

NO SEPARATE PAYMENT WILL BE MADE FOR THIS WORK AND THE ENTIRE COST OF THIS WORK SHALL BE INCLUDED IN THE UNIT CONTRACT PRICE BID FOR THE SEVERAL PAY ITEMS.

TEMPORARY DRAINAGE AT END BENT

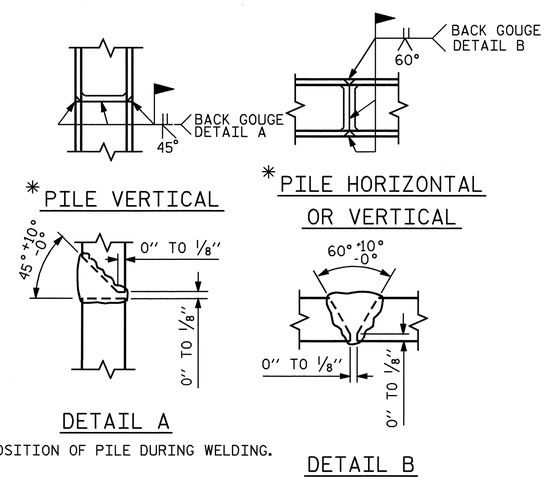

* POSITION OF PILE DURING WELDING.

PILE SPLICE DETAILS

BILL OF MATERIAL
END BENT 2

STAGE I						STAGE II					
BAR	NO.	SIZE	TYPE	LENGTH	WEIGHT	BAR	NO.	SIZE	TYPE	LENGTH	WEIGHT
B1	8	#10	1	53'-3"	1833	B5	4	#4	STR	2'-7"	7
B2	4	#10	STR	24'-1"	415	B6	15	#4	STR	3'-0"	30
B3	4	#10	STR	19'-0"	327	B7	4	#10	1	48'-3"	830
B4	24	#4	STR	22'-8"	363	B8	4	#10	1	39'-7"	681
B5	4	#4	STR	2'-7"	7	B9	4	#10	STR	21'-8"	373
B6	19	#4	STR	3'-0"	38	B10	16	#4	STR	25'-2"	269
B11	2	#4	STR	13'-6"	18	B11	2	#4	STR	13'-6"	18
B12	4	#4	STR	20'-0"	53						
H1	8	#4	2	11'-10"	63	H2	8	#4	3	11'-11"	64
S1	36	#4	4	8'-11"	214	S2	45	#4	5	3'-8"	110
S2	57	#4	5	3'-8"	140	S3	23	#4	4	9'-4"	143
S4	21	#4	4	10'-3"	144	S4	22	#4	4	10'-3"	151
S5	36	#4	6	6'-6"	156	S5	27	#4	6	6'-6"	117
U1	16	#4	7	5'-11"	63	U1	2	#4	7	5'-11"	8
V1	114	#4	STR	5'-10"	444	V1	94	#4	STR	5'-10"	366
REINFORCING STEEL = 4278 LBS						REINFORCING STEEL = 3167 LBS					
CLASS A CONCRETE QUANTITIES: CAP & WINGS 26.8 C.Y.						CLASS A CONCRETE QUANTITIES: CAP & WINGS 21.5 C.Y.					
HP 12 X 53 STEEL PILES: NO. 12 LIN. FT. 540						HP 12 X 53 STEEL PILES: NO. 9 LIN. FT. 405					

BAR TYPES

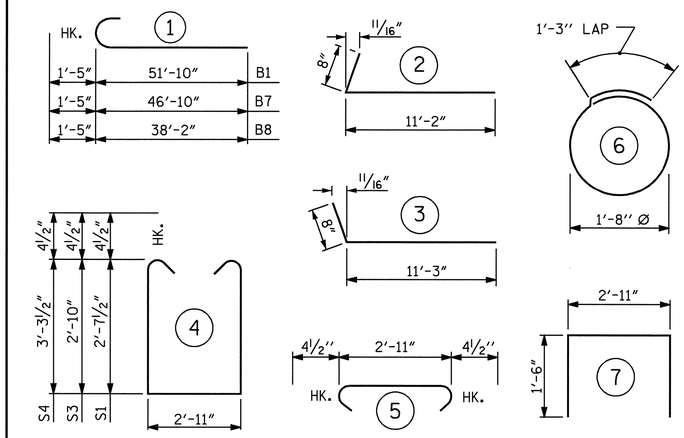

ALL BAR DIMENSIONS ARE OUT TO OUT

TOTAL BILL OF MATERIAL

REINFORCING STEEL	= 7445 LBS.
CLASS A CONCRETE	= 48.3 C.Y.
HP 12 X 53 STEEL PILES: NO. 21	LIN. FT. 945

PROJECT NO. U-2810A
CUMBERLAND COUNTY
STATION: 39+85.50 -L-

SHEET 3 OF 3

STATE OF NORTH CAROLINA
DEPARTMENT OF TRANSPORTATION
RALEIGH

SUBSTRUCTURE

END BENT 2
(INTEGRAL)

NORTH CAROLINA PROFESSIONAL SEAL 26449 ENGINEER P. KOREY NEWTON
P. Korey Newton
2/16/2009

REVISIONS						SHEET NO.
NO.	BY:	DATE:	NO.	BY:	DATE:	S-79
1			3			TOTAL SHEETS
2			4			83

DRAWN BY : E.C. LOCKLEAR DATE : 10-17-08
CHECKED BY : P. K. NEWTON DATE : 1-12-09

16-FEB-2009 13:46
G:\TIPProjects-U\U2810\Structures\str2\FinalPlans\U2810A_sd_E*.dgn
zhbrown

ESTIMATED QUANTITIES						
BRIDGE @ STA. 39+85.50 -L-	RIP RAP CLASS II (TONS)			FILTER FABRIC FOR DRAINAGE (SQ. YARDS)		
	STAGE I	STAGE II	TOTAL	STAGE I	STAGE II	TOTAL
END BENT 1	220	175	395	245	195	440
END BENT 2	165	175	340	185	195	380
TOTAL			735			820

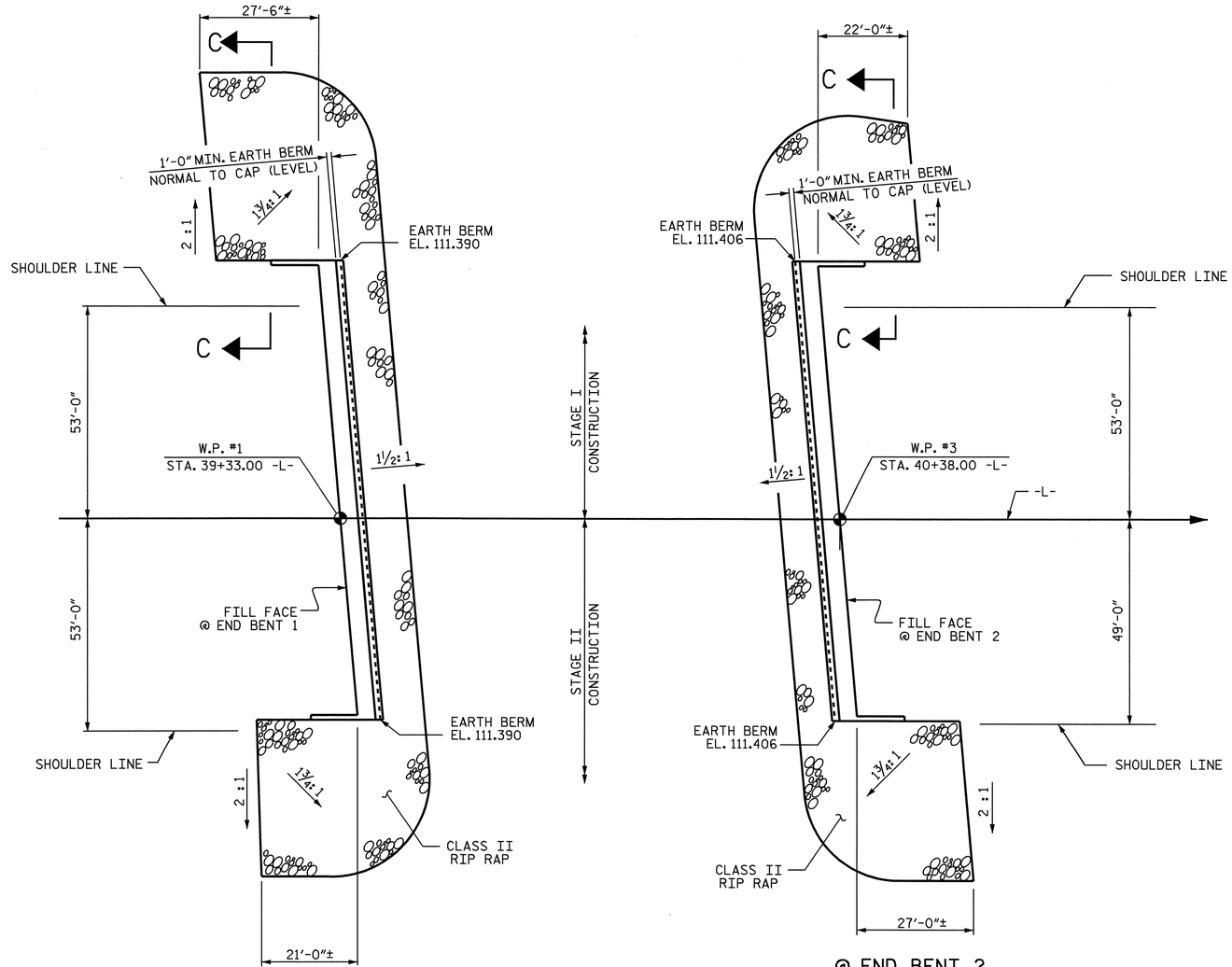

PLAN

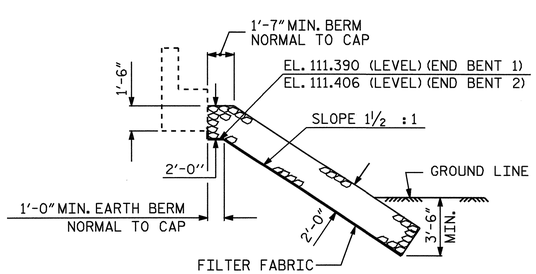

℄ SECTION

BERM RIP RAPPED

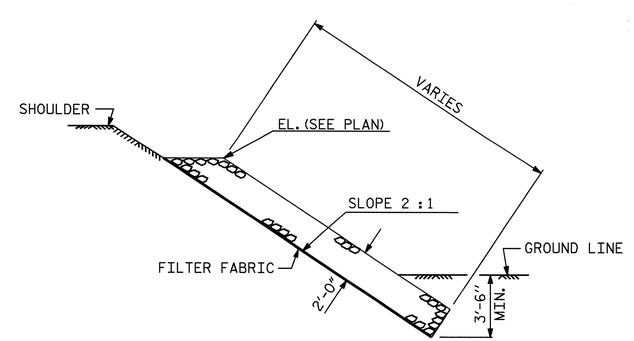

SECTION C-C

PROJECT NO. U-2810A

CUMBERLAND COUNTY

STATION: 39+85.50 -L-

STATE OF NORTH CAROLINA
DEPARTMENT OF TRANSPORTATION
RALEIGH

RIP RAP DETAILS

NORTH CAROLINA PROFESSIONAL SEAL 16301 ENGINEER TING HSIUNG FANG 01/26/09

REVISIONS						SHEET NO.
NO.	BY:	DATE:	NO.	BY:	DATE:	S-80
1			3			TOTAL SHEETS
2			4			83

DRAWN BY : HARISH SHAH DATE : 10/08
CHECKED BY : T. H. FANG DATE : 11/08

26-JAN-2009 11:42
R:\Structures\str2\Final Plans\u2810a-sd-rr_02.dgn
elocklear

STR #2

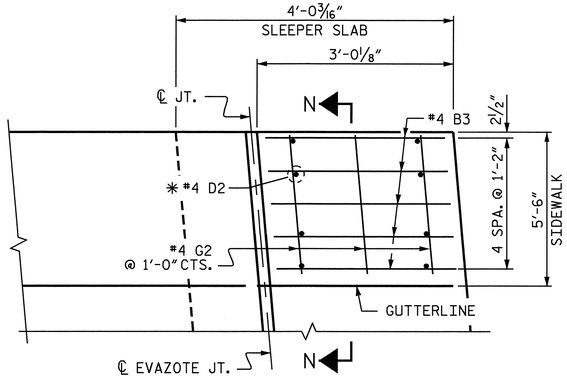

✱ THESE DOWELS ARE TO BE PLACED AFTER THE SAWING OF THE JOINT. THE HOLES SHALL BE DRILLED AND THE DOWELS GROUTED INTO PLACE.

PLAN

LEFT SIDE SHOWN, RIGHT SIDE SIMILAR.

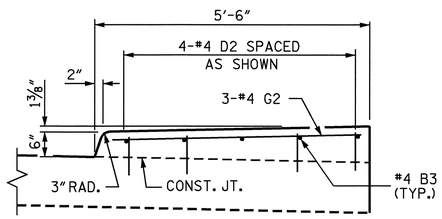

SECTION N-N

SIDEWALK DETAILS

NOTES

APPROACH SLAB SHALL NOT BE CONSTRUCTED PRIOR TO COMPLETION OF THE BRIDGE DECK.

FOR REINFORCED BRIDGE APPROACH FILL INCLUDING FABRIC, IMPERMEABLE GEOMEMBRANE, 4" Ø DRAINAGE PIPE, #78M STONE, AND SELECT MATERIAL, SEE ROADWAY PLANS.

AREA BETWEEN THE WINGWALL AND APPROACH SLAB SHALL BE GRADED TO DRAIN THE WATER AWAY FROM THE FILL FACE OF THE BRIDGE AND SHALL BE PAVED. SEE ROADWAY PLANS.

THE 6" COMP. A.B.C. SHALL BE FLUSH WITH THE SLEEPER SLAB AND SHALL EXTEND 1'-0" OUTSIDE OF EACH EDGE OF THE APPROACH SLAB.

THE CONTRACTOR MAY USE 4" TYPE B-25.0B ASPHALT CONCRETE BASE COURSE IN LIEU OF 6" COMP. A.B.C. IF THIS OPTION IS USED, THE BASE COURSE SHALL BE FLUSH WITH THE SLEEPER SLAB, AND THE WIDTH SHALL BE THE SAME AS THAT OF THE APPROACH SLAB.

THE CONTRACTOR MAY USE 5" CLASS "A" CONCRETE BASE IN LIEU OF 6" COMP. A.B.C. IF THIS OPTION IS USED, THE CONCRETE BASE SHALL BE FLUSH WITH THE SLEEPER SLAB, AND THE WIDTH SHALL BE THE SAME AS THAT OF THE APPROACH SLAB. THE CONCRETE SHALL BE FINISHED TO A SMOOTH SURFACE AND A LAYER OF 30 LB ROOFING FELT SHALL BE PLACED BETWEEN THE CONCRETE BASE AND THE APPROACH SLAB TO PREVENT BOND. THE APPROACH SLAB SHALL NOT BE CAST UNTIL THE CONCRETE BASE HAS REACHED AN AGE OF THREE CURING DAYS.

THE JOINT OPENING AT THE APPROACH SLAB/SLEEPER SLAB SHALL BE SAWED NO MORE THAN 12 HOURS AFTER THE APPROACH SLAB IS CAST. THE JOINT SHALL BE CLEANED OF ALL DEBRIS BEFORE THE SEALANT IS APPLIED. THE JOINT SEALER MATERIAL SHALL CONFORM TO THE REQUIREMENTS OF TYPE SL LOW MODULUS SILICONE SEALANT.

BAR TYPES

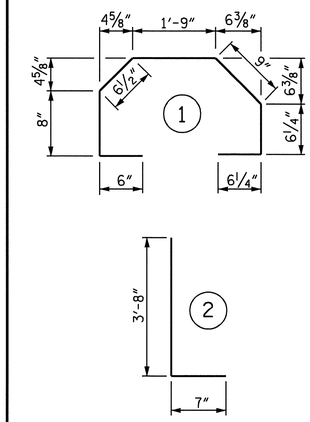

ALL BAR DIMENSIONS ARE OUT TO OUT

BILL OF MATERIAL

ONE APPROACH SLAB (2 REQ'D)

STAGE I						STAGE II					
BAR	NO.	SIZE	TYPE	LENGTH	WEIGHT	BAR	NO.	SIZE	TYPE	LENGTH	WEIGHT
✱ A1	62	#4	STR	23'-11"	991	✱ A3	62	#4	STR	20'-3"	839
A2	46	#4	STR	23'-6"	722	A4	46	#4	STR	20'-2"	620
✱ B1	113	#5	STR	21'-0"	2475	✱ B1	89	#5	STR	21'-0"	1949
B2	113	#6	STR	21'-6"	3649	B2	89	#6	STR	21'-6"	2874
✱ B3	5	#4	STR	2'-8"	9	✱ B3	10	#4	STR	2'-8"	18
✱ D2	8	#4	STR	1'-0"	5	✱ D2	8	#4	STR	1'-0"	5
✱ G2	3	#4	STR	5'-0"	10	✱ G2	3	#4	STR	5'-0"	10
						✱ G3	3	#4	STR	7'-2"	14
✱ S4	57	#4	1	5'-3"	200	✱ S4	45	#4	1	5'-3"	158
S5	57	#5	2	4'-3"	253	S5	45	#5	2	4'-3"	199
REINFORCING STEEL				LBS.	4624	REINFORCING STEEL				LBS.	3693
✱ EPOXY COATED REINFORCING STEEL				LBS.	3690	✱ EPOXY COATED REINFORCING STEEL				LBS.	2993
CLASS AA CONCRETE ✱✱						CLASS AA CONCRETE ✱✱					
POUR #1 - SLEEPER SLAB				C. Y.	7.4	POUR #1 - SLEEPER SLAB				C. Y.	6.3
POUR #2 - SLAB				C. Y.	46.0	POUR #2 - APPR. SLAB				C. Y.	36.4
TOTAL				C. Y.	53.4	TOTAL				C. Y.	42.7

✱✱ SIDEWALKS AND CONCRETE MEDIAN ON THE BRIDGE EXTENDING TO THE EXPANSION JOINT ON THE APPROACH SLABS ARE INCLUDED IN THE SUPERSTRUCTURE BILL OF MATERIAL AND PAID FOR AS PART OF THE REINFORCED CONCRETE DECK PAY ITEM. SIDEWALKS AND CONCRETE MEDIAN ON THE SLEEPER SLAB ONLY ARE INCLUDED IN THE APPROACH SLAB BILL OF MATERIAL AND PAID FOR AS PART OF THE BRIDGE APPROACH SLABS PAY ITEM.

WITH EVAZOTE JOINT SEAL

FOR EVAZOTE JOINT SEALS, SEE SPECIAL PROVISIONS.

THE NOMINAL UNCOMPRESSED SEAL WIDTH OF THE EVAZOTE JOINT SEAL SHALL BE 2 1/2".

FOR ELASTOMERIC CONCRETE, SEE SPECIAL PROVISIONS.

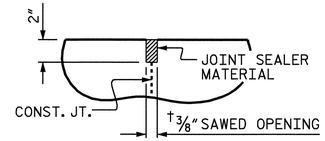

DETAIL "A"

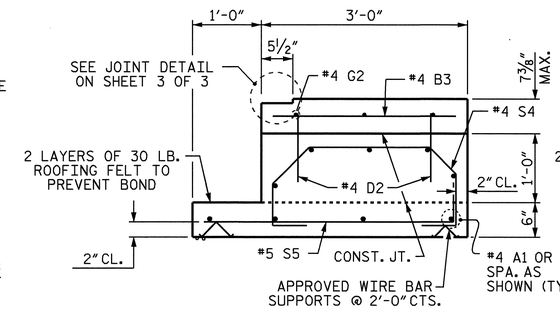

SECTION R-R

SHOWING SIDEWALK ON SLEEPER SLAB

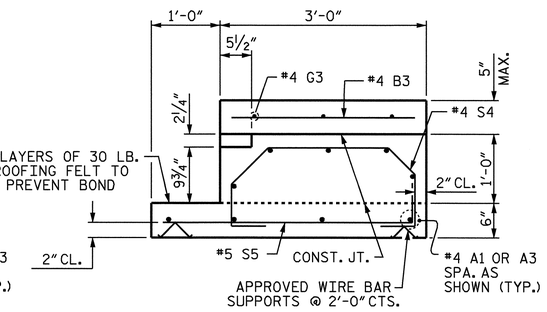

SECTION T-T

SHOWING CONCRETE MEDIAN ON SLEEPER SLAB

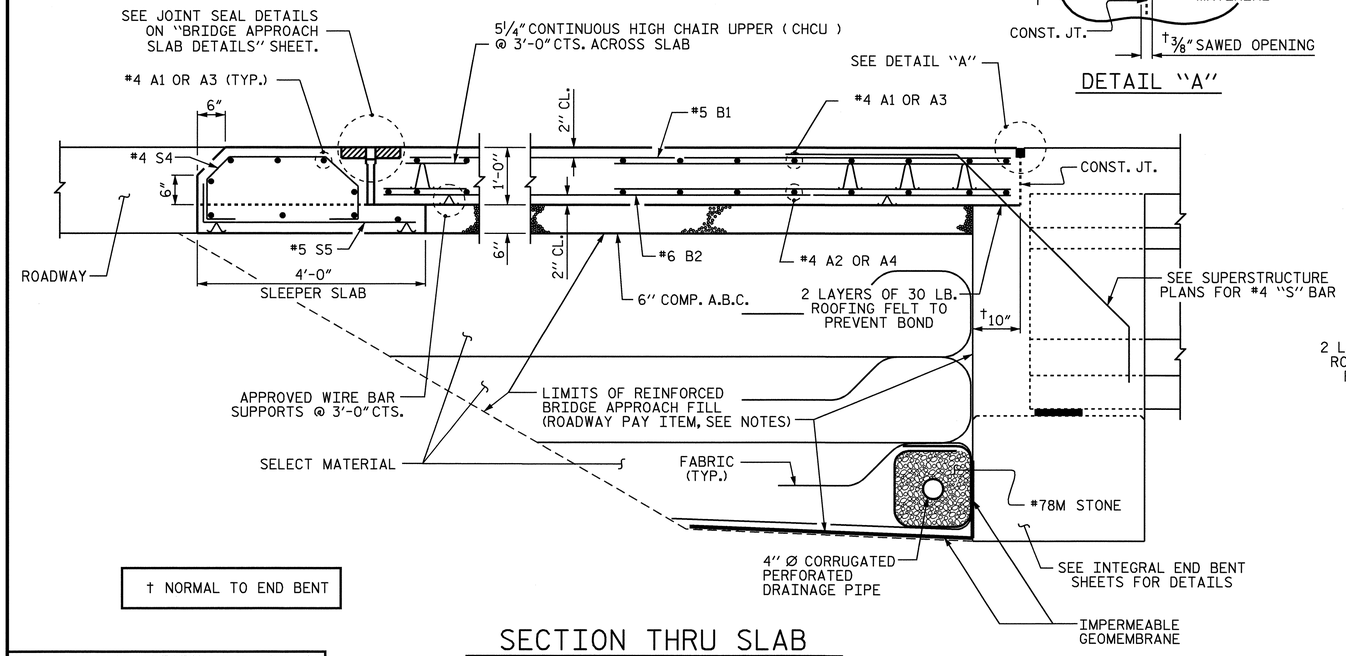

† NORMAL TO END BENT

SECTION THRU SLAB

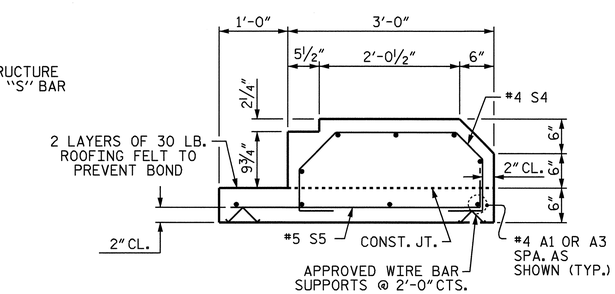

SECTION S-S

SHOWING SLEEPER SLAB

PROJECT NO. U-2810A

CUMBERLAND COUNTY

STATION: 39+85.50 -L-

SHEET 1 OF 3

STATE OF NORTH CAROLINA
DEPARTMENT OF TRANSPORTATION
RALEIGH

STANDARD

BRIDGE APPROACH SLAB FOR INTEGRAL ABUTMENT

NORTH CAROLINA PROFESSIONAL SEAL 28415 ENGINEER P. KOREY NEWTON

P. Korey Newton
2/16/2009

REVISIONS							SHEET NO.
NO.	BY:	DATE:	NO.	BY:	DATE:		S-81
1			3				TOTAL SHEETS
2			4				83

STR. #2 STD. NO. BAS11

ASSEMBLED BY : P. K. NEWTON	DATE : 12-11-08
CHECKED BY : T. H. FANG	DATE : 12-12-08
DRAWN BY : TLA 10/05	ADDED 5/1/06R KMM/GM
CHECKED BY : GM 5/06	

16-FEB-2009 13:58
G:\TIPProjects-U\U2810\Structures\str2\FinalPlans\u2810_sd_as_02.dgn
zhbrown

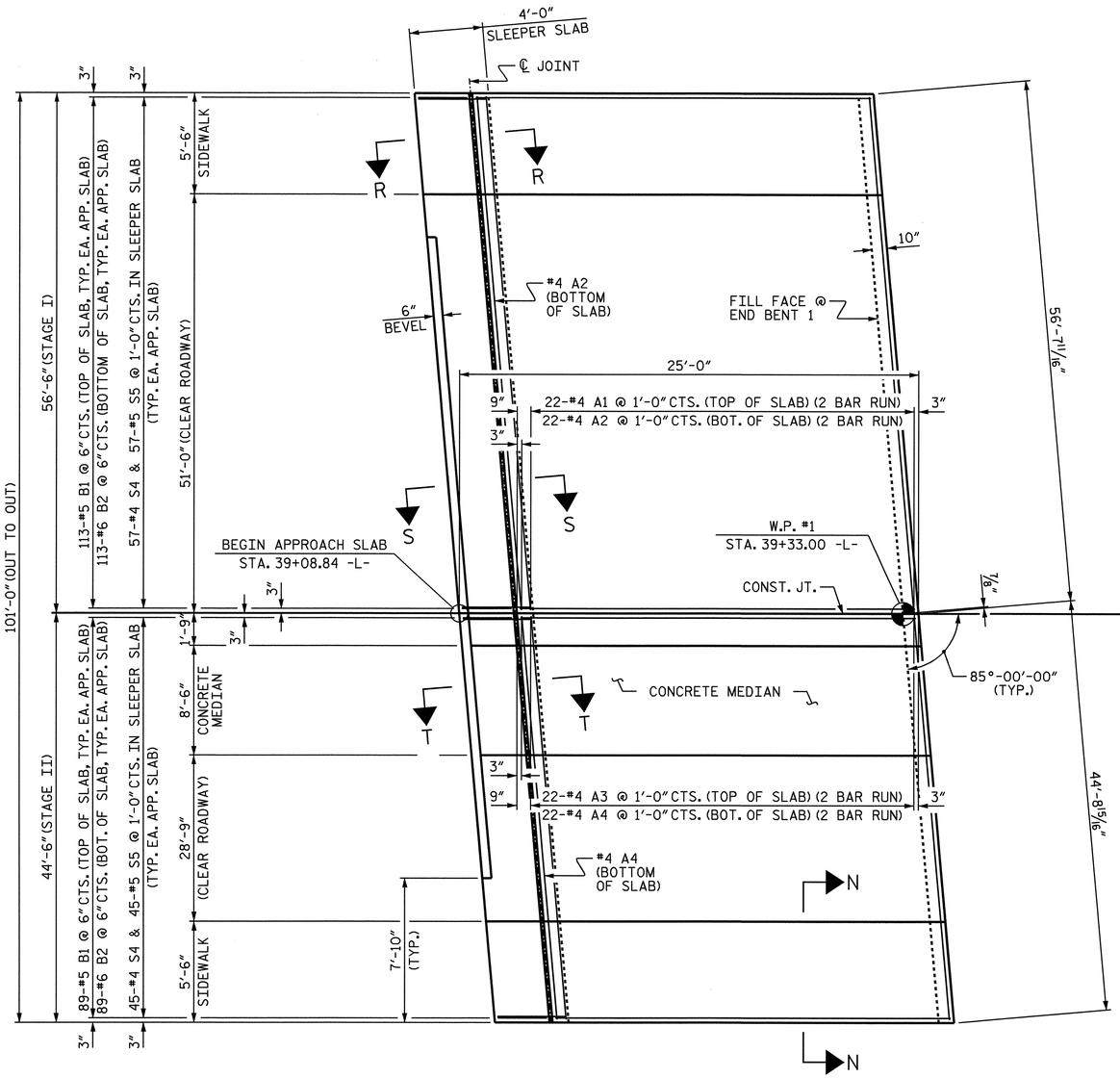

@ END BENT 1

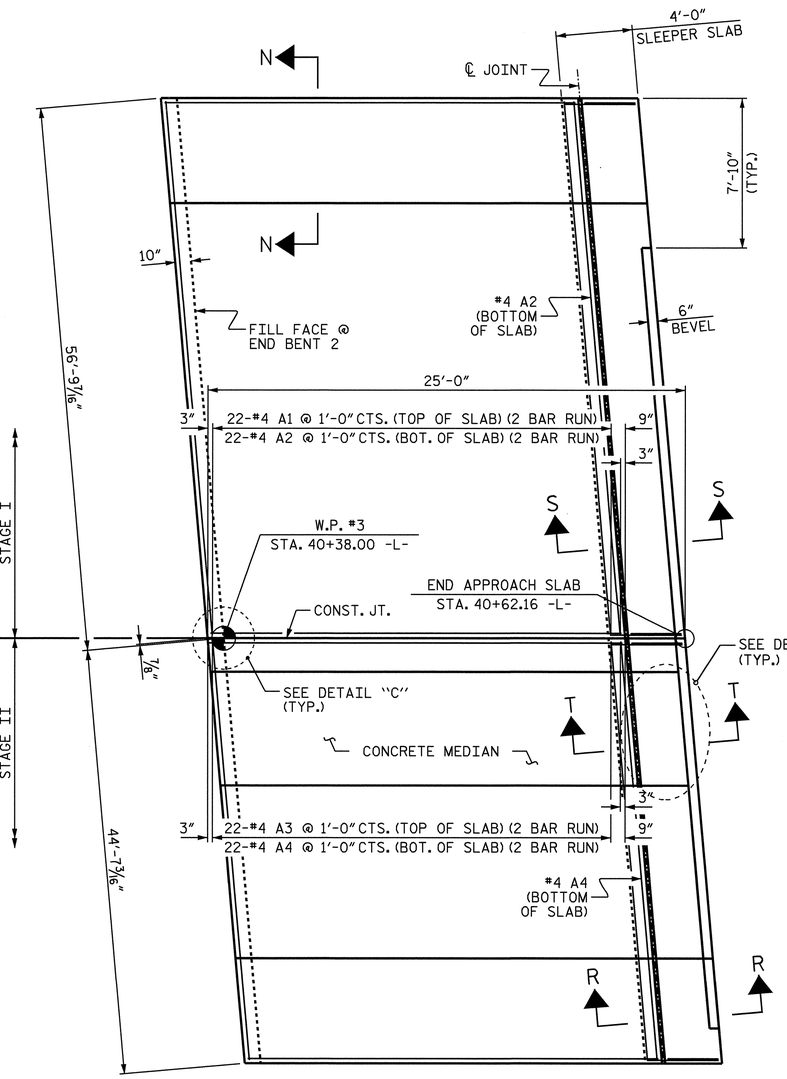

@ END BENT 2

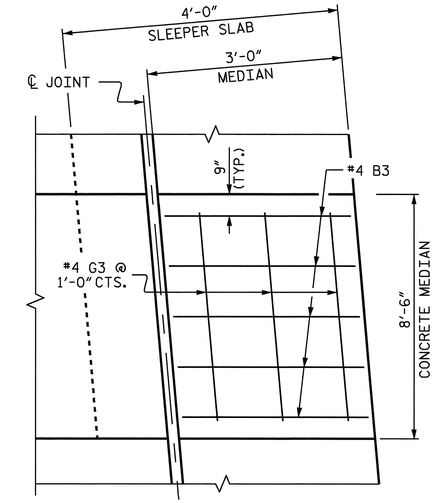

DETAIL "B"

FOR SECTION THRU CONCRETE MEDIAN, SEE "CONCRETE MEDIAN" SHEET.

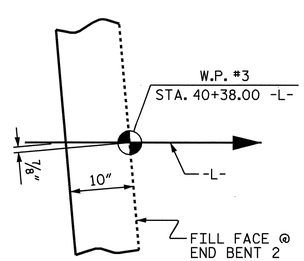

DETAIL "C"

EXTEND #4 A1 TOP BARS 2'-6" BEYOND CONSTRUCTION JOINT FOR 2'-0" SPLICE.
EXTEND #4 A2 BOTTOM BARS 1'-11" BEYOND CONSTRUCTION JOINT FOR 1'-9" SPLICE.

PLAN OF APPROACH SLABS

DIMENSIONS SHOWN ARE TYPICAL FOR BOTH APPROACH SLABS.
REINFORCING STEELS IN SIDEWALKS AND SLEEPER SLABS ARE NOT SHOWN FOR CLARITY.

NORTH CAROLINA PROFESSIONAL SEAL 16301 ENGINEER TING HSIUNG FANG

2/16/09

PROJECT NO. U-2810A
CUMBERLAND COUNTY
STATION: 39+85.50 -L-

SHEET 2 OF 3

STATE OF NORTH CAROLINA
DEPARTMENT OF TRANSPORTATION
RALEIGH

BRIDGE APPROACH SLABS

REVISIONS						SHEET NO.
NO.	BY:	DATE:	NO.	BY:	DATE:	S-82
1			3			TOTAL SHEETS
2			4			83

STR. #2

DRAWN BY : E.C. LOCKLEAR DATE : 3-07-08
CHECKED BY : T. H. FANG DATE : 1-06-09

16-FEB-2009 13:58
G:\TIPProjects-U\U2810\Structures\str2\FinalPlans\u2810_sd_as_02.dgn
zhbrown

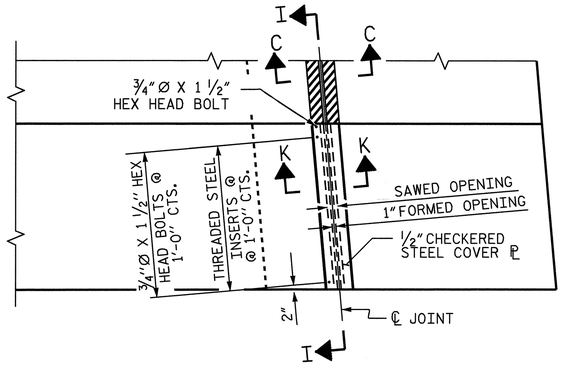

PLAN

APPROACH SLAB @ END BENT 2 SHOWN,
APPROACH SLAB END BENT 1 SIMILAR

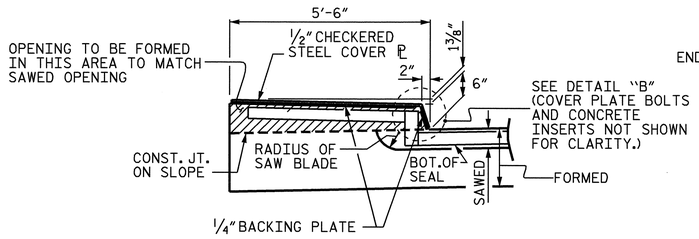

SECTION I-I

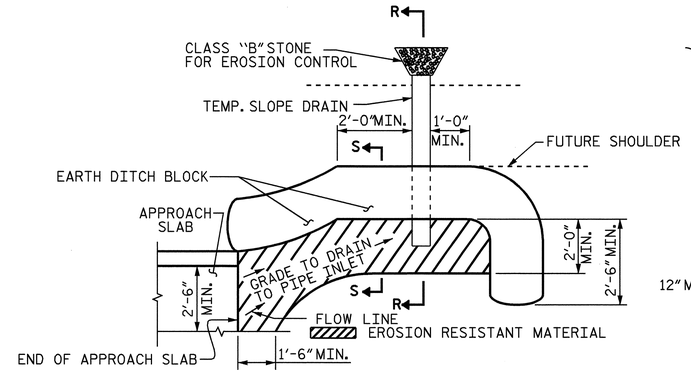

NOTE: IMMEDIATELY AFTER THE CONSTRUCTION OF THE APPROACH SLAB, THE CONTRACTOR SHALL PROVIDE TEMPORARY BERM AND SLOPE DRAIN. CONTRACTOR SHALL GRADE TO PIPE INLET AND PROVIDE EROSION RESISTANT MATERIAL AS SHOWN. THE EROSION RESISTANT MATERIAL SHALL BE EITHER 1) ASPHALT PLANT MIX, TYPE 1 OR TYPE 2, MIN. 2" DEPTH, 2) EROSION CONTROL MAT, OR 3) CONCRETE, AS DIRECTED BY THE ENGINEER. THE SLOPE DRAIN SHALL CONSIST OF A NON-PERFORATED TEMPORARY DRAINAGE PIPE, 12 INCHES IN DIAMETER.

PLAN VIEW

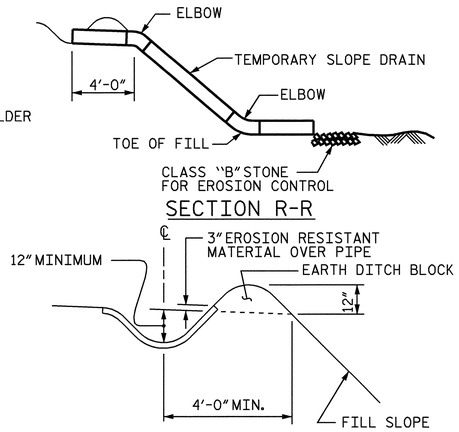

SECTION R-R

SECTION S-S

TEMPORARY BERM AND SLOPE DRAIN DETAILS

(TO BE USED WHEN SHOULDER BERM GUTTER IS REQUIRED)

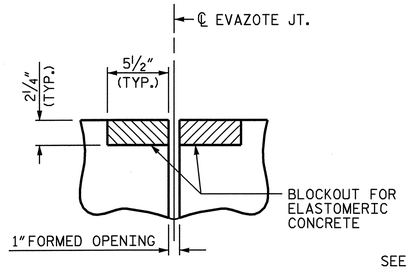

SECTION C-C

EVAZOTE JOINT SEAL
(PRE-SAWED ELASTOMERIC
CONCRETE DIMENSIONS)

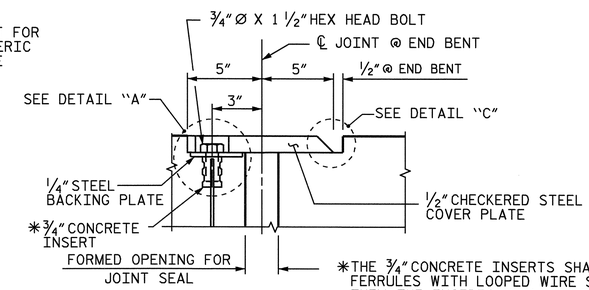

SECTION K-K

*THE 3/4" CONCRETE INSERTS SHALL BE CLOSED-END FERRULES WITH LOOPED WIRE STRUTS ATTACHED TO THEM. THE INSERTS SHALL CONFORM TO AASHTO M169, GRADE 12L14 AND SHALL HAVE A TENSILE WORKING LOAD CAPACITY OF 3000 LBS.

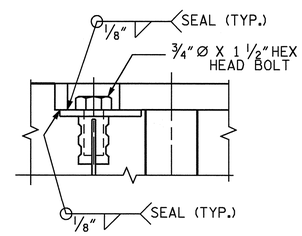

DETAIL "A"

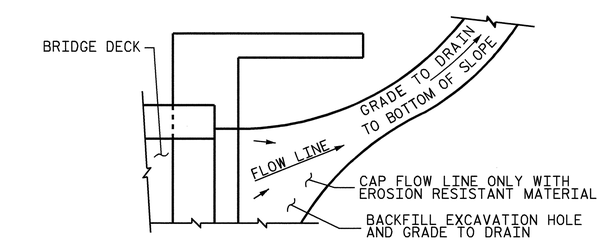

NOTE: IF THE APPROACH SLAB IS NOT CONSTRUCTED IMMEDIATELY AFTER THE BACKFILLING OF THE END BENT EXCAVATION, GRADE TO DRAIN TO THE BOTTOM OF THE SLOPE AND PROVIDE EROSION RESISTANT MATERIAL, SUCH AS FIBERGLASS ROVING OR AS DIRECTED BY THE ENGINEER TO PREVENT SOIL EROSION AND TO PROTECT THE AREA ADJACENT TO THE STRUCTURE. THE CONTRACTOR WILL BE REQUIRED TO REMOVE THESE MATERIALS PRIOR TO CONSTRUCTION OF THE APPROACH SLAB.

TEMPORARY DRAINAGE DETAIL

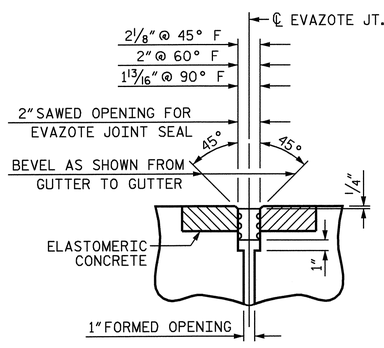

SECTION C-C

EVAZOTE JOINT SEAL IN
BOTH APPROACH SLABS

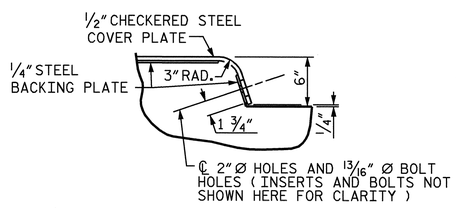

DETAIL "B"

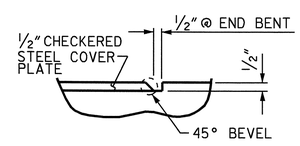

DETAIL "C"

ELASTOMERIC CONCRETE		
END BENT	ELASTOMERIC CONCRETE ** (CU. FT.)	
	STAGE I	STAGE II
1	8.8	6.7
2	8.8	6.7
TOTAL	17.6	13.4

** BASED ON THE MINIMUM BLOCKOUT SHOWN.

JOINT SEAL DETAILS @ END BENT

THE STEEL PLATES SHALL CONFORM TO AASHTO M270 GRADE 36 OR APPROVED EQUAL. AFTER FABRICATION, THE PLATES SHALL BE COMMERCIALLY BLAST CLEANED AND COATED WITH A MINIMUM THICKNESS OF 4 MILS (DRY) OF ZINC RICH PAINT IN ACCORDANCE WITH THE STANDARD SPECIFICATIONS. AT THE CONTRACTORS OPTION, THESE SURFACES MAY BE METALLIZED TO A MINIMUM THICKNESS OF 6 MILS. SEE SPECIAL PROVISIONS FOR THERMAL SPRAYED COATINGS.

THE 3/4" DIAMETER HEX HEAD BOLTS SHALL CONFORM TO ASTM F593 ALLOY 304 STAINLESS STEEL.

NO SEPARATE PAYMENT WILL BE MADE FOR FURNISHING AND INSTALLING THE COVER PLATE. THE ENTIRE COST OF THIS WORK SHALL BE INCLUDED IN THE LUMP SUM PRICE FOR "BRIDGE APPROACH SLABS".

PROJECT NO. U-2810A
CUMBERLAND COUNTY
STATION: 39+85.50 -L-

SHEET 3 OF 3

STATE OF NORTH CAROLINA
DEPARTMENT OF TRANSPORTATION
RALEIGH

STANDARD

BRIDGE APPROACH
SLAB DETAILS

NORTH CAROLINA PROFESSIONAL SEAL 16301 ENGINEER TING HSIUNG FANG

1/26/09

REVISIONS							SHEET NO.
NO.	BY:	DATE:	NO.	BY:	DATE:		S-83
1			3				TOTAL SHEETS
2			4				83

STR. #2 STD. NO. BAS10

ASSEMBLED BY : E.C. LOCKLEAR		DATE : 3-4-08	
CHECKED BY : T. H. FANG		DATE : 11-11-08	
DRAWN BY : FCJ 11/88	REV. 10/17/00	RWW/LES	
CHECKED BY : ARB 11/88	REV. 5/7/03	RWW/JTE	
	REV. 5/1/06R	MAA/KMM	

26-JAN-2009 11:39
R:\Structures\str2\Final Plans\u2810_sd_as_02.dgn
elocklear

F.A. PROJECT NO. STP-1003(68)

BM #80: EL 135.52 FT, R.R. SPIKE IN BASE OF 24" PINE, -L- STA. 7+09.00 (78.00 FT. RT.)

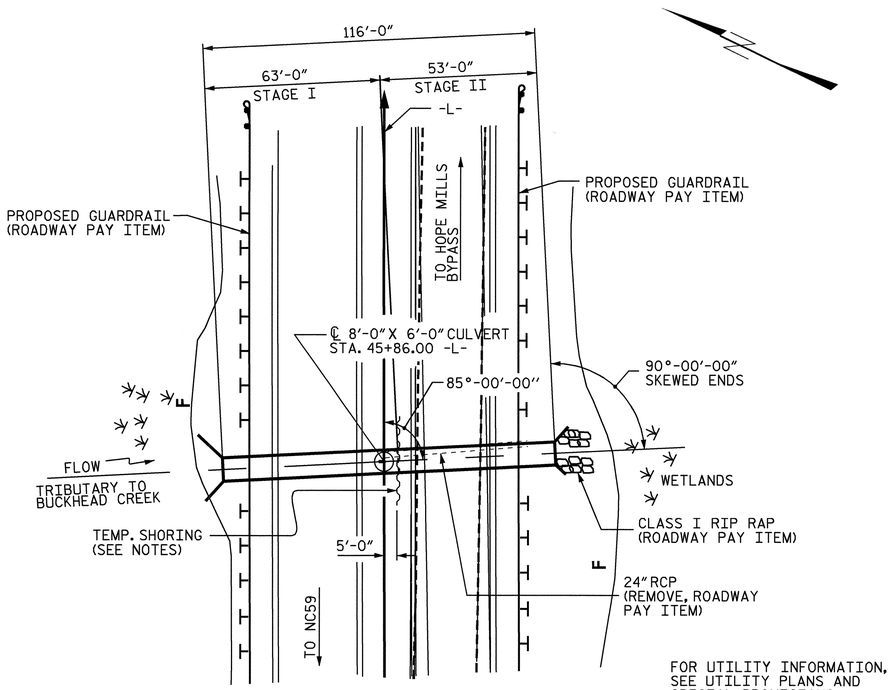

LOCATION SKETCH

ROADWAY DATA

GRADE POINT EL. @ STA. 45+86.00 -L- = 118.44
BED EL. @ STA. 45+86.00 -L- = 109.06
ROADWAY SLOPES = 2:1

HYDRAULIC DATA

DESIGN DISCHARGE = 370 CFS
FREQUENCY OF DESIGN FLOOD = 50 YR
DESIGN HIGH WATER ELEVATION = 116.76 FT
DRAINAGE AREA = 0.63 SQ. MI.
BASIC DISCHARGE (Q100) = 430 CFS
BASIC HIGH WATER ELEVATION = 117.51 FT

OVERTOPPING FLOOD DATA

OVERTOPPING DISCHARGE = 430 CFS
FREQUENCY OF OVERTOPPING FLOOD = 100 YR.
OVERTOPPING FLOOD ELEVATION @ SAG STA. 46+42.29 -L- = 117.47 FT.

TOTAL STRUCTURE QUANTITIES

CLASS A CONCRETE (C.Y.)	STAGE I	STAGE II	TOTAL
BARREL @ 0.891 CY/FT	56.1	47.2	103.3
WINGS ETC.	8.3	8.4	16.7
TOTAL CLASS A CONCRETE	64.4	55.6	120.0

REINFORCING STEEL (LB.)	STAGE I	STAGE II	TOTAL
BARREL	7,226	5,812	13,038
WINGS ETC.	396	397	793
TOTAL REINFORCING STEEL	7,622	6,209	13,831

FOUNDATION COND. MAT'L (TON)	STAGE I	STAGE II
	36	30
TOTAL	66 TONS	
CULVERT EXCAVATION	LUMP SUM	

NOTES

ASSUMED LIVE LOAD ----------HS20 OR ALTERNATE LOADING.

DESIGN FILL---------- 2.59 FT.

FOR OTHER DESIGN DATA AND NOTES SEE STANDARD NOTE SHEET.

3" Ø WEEP HOLES INDICATED TO BE IN ACCORDANCE WITH THE SPECIFICATIONS.

CONCRETE IN CULVERTS TO BE POURED IN THE FOLLOWING ORDER FOR EACH STAGE:

1. WING FOOTINGS AND FLOOR SLAB INCLUDING 4" OF ALL VERTICAL WALLS.
2. THE REMAINING PORTIONS OF THE WALLS AND WINGS FULL HEIGHT FOLLOWED BY ROOF SLAB AND HEADWALLS.

THE RESIDENT ENGINEER SHALL CHECK THE LENGTH OF CULVERT BEFORE STAKING IT OUT TO MAKE CERTAIN THAT IT WILL PROPERLY TAKE CARE OF THE FILL.

DIMENSIONS FOR WING LAYOUT AS WELL AS ADDITIONAL REINFORCING STEEL EMBEDDED IN BARREL ARE SHOWN ON WING SHEET.

AT THE CONTRACTORS OPTION, HE MAY SPLICE THE VERTICAL REINFORCING STEEL IN THE INTERIOR FACE OF EXTERIOR WALL ABOVE LOWER WALL CONSTRUCTION JOINT. THE SPLICE LENGTH SHALL BE AS PROVIDED IN THE SPLICE LENGTH CHART SHOWN ON THE PLANS. EXTRA WEIGHT OF STEEL DUE TO THE SPLICES SHALL BE PAID FOR BY THE CONTRACTOR.

FOR CULVERT DIVERSION DETAILS AND PAY ITEM, SEE EROSION CONTROLS PLANS.

A 3 FOOT STRIP OF FILTER FABRIC SHALL BE ATTACHED TO THE FILL FACE OF THE WING COVERING THE ENTIRE LENGTH OF THE EXPANSION JOINT.

FOR MAINTENANCE OF TRAFFIC, SEE TRAFFIC CONTROL PLANS.

FOR CRANE SAFETY, SEE SPECIAL PROVISIONS.

FOR SUBMITTAL OF WORKING DRAWINGS, SEE SPECIAL PROVISIONS.

FOR FALSEWORK AND FORMWORK, SEE SPECIAL PROVISIONS.

THE CONTRACTOR SHALL PROVIDE INDEPENDENT ASSURANCE SAMPLES OF REINFORCING STEEL AS FOLLOWS: FOR PROJECTS REQUIRING UP TO 400 TONS OF REINFORCING STEEL, ONE 30 INCH SAMPLE OF EACH SIZE BAR USED, AND FOR PROJECTS REQUIRING OVER 400 TONS OF REINFORCING STEEL, TWO 30 INCH SAMPLES OF EACH SIZE BAR USED. THE BARS FROM WHICH THE SAMPLES ARE TAKEN MUST THEN BE SPLICED WITH REPLACMENT BARS OF THE SIZE AND LENGTH OF THE SAMPLE, PLUS A MINIMUM LAP SPLICE OF THIRTY BAR DIAMETERS.

AT THE CONTRACTOR'S OPTION HE MAY SUBMIT, TO THE ENGINEER FOR APPROVAL, DESIGN AND DETAIL DRAWINGS FOR A PRECAST REINFORCED CONCRETE BOX CULVERT IN LIEU OF THE CAST-IN-PLACE CULVERT SHOWN ON THE PLANS. THE DESIGN SHALL PROVIDE THE SAME SIZE AND NUMBER OF BARRELS AS USED ON THE CAST-IN-PLACE DESIGN. FOR OPTIONAL PRECAST REINFORCED CONCRETE BOX CULVERT, SEE SPECIAL PROVISIONS.

FOR LIMITS OF TEMPORARY SHORING FOR MAINTENANCE OF TRAFFIC, SEE TRAFFIC CONTROL PLANS. FOR PAY ITEM FOR TEMPORARY SHORING FOR MAINTENANCE OF TRAFFIC, SEE ROADWAY PLANS.

FOR GROUT FOR STRUCTURE, SEE SPECIAL PROVISIONS.

FOR CURING CONCRETE, SEE SPECIAL PROVISIONS.

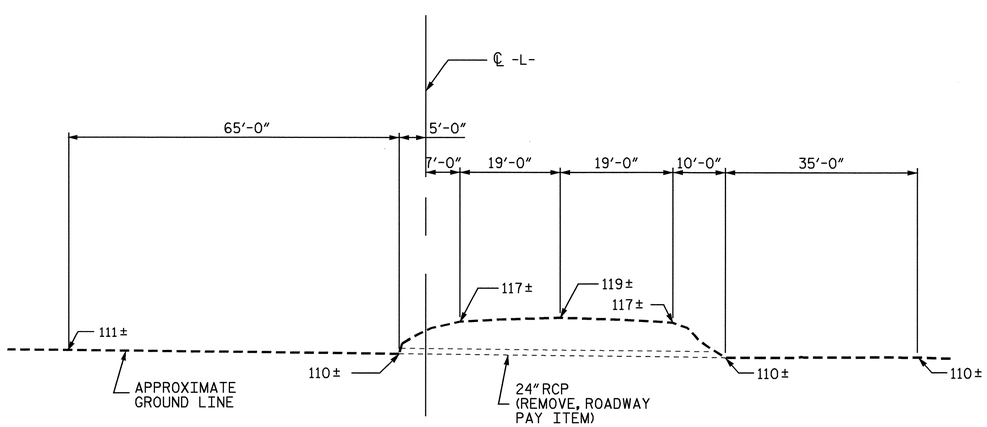

PROFILE ALONG ℄ CULVERT

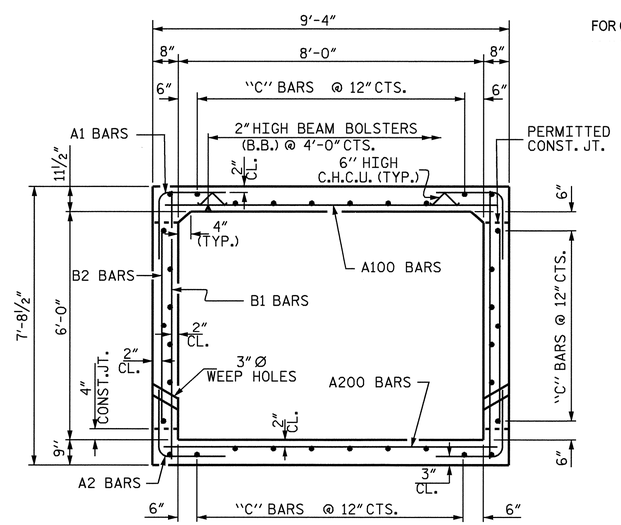

RIGHT ANGLE SECTION OF BARREL

THERE ARE 34 "C" BARS IN SECTION OF BARREL

NORTH CAROLINA PROFESSIONAL SEAL 11915 ENGINEER JOHN C. FRYE
2/12/09

PROJECT NO. U-2810A
CUMBERLAND COUNTY
STATION: 45+86.00 -L-

SHEET 1 OF 3

STATE OF NORTH CAROLINA
DEPARTMENT OF TRANSPORTATION
RALEIGH

BARREL STANDARD
SINGLE 8 FT. X 6 FT.
CONCRETE BOX CULVERT
90° SKEW

AUGUST 1989

REVISIONS						SHEET NO.
NO.	BY:	DATE:	NO.	BY:	DATE:	C-1
1			3			TOTAL SHEETS
2			4			3

ASSEMBLED BY : T.L. CLELLAND	DATE : 2/1/07	SPECIAL	
CHECKED BY : J. Frye	DATE : 10/08		
DRAWN BY : R.W. WRIGHT	DATE : AUG. 1989	STANDARD	
CHECKED BY : A.R. BISSETTE	DATE : AUG. 1989		

REVISED 11-13-91 BY E.L.R. CHECKED BY G.R.P.
ADDED 8-22-89

STD. NO. CB11A

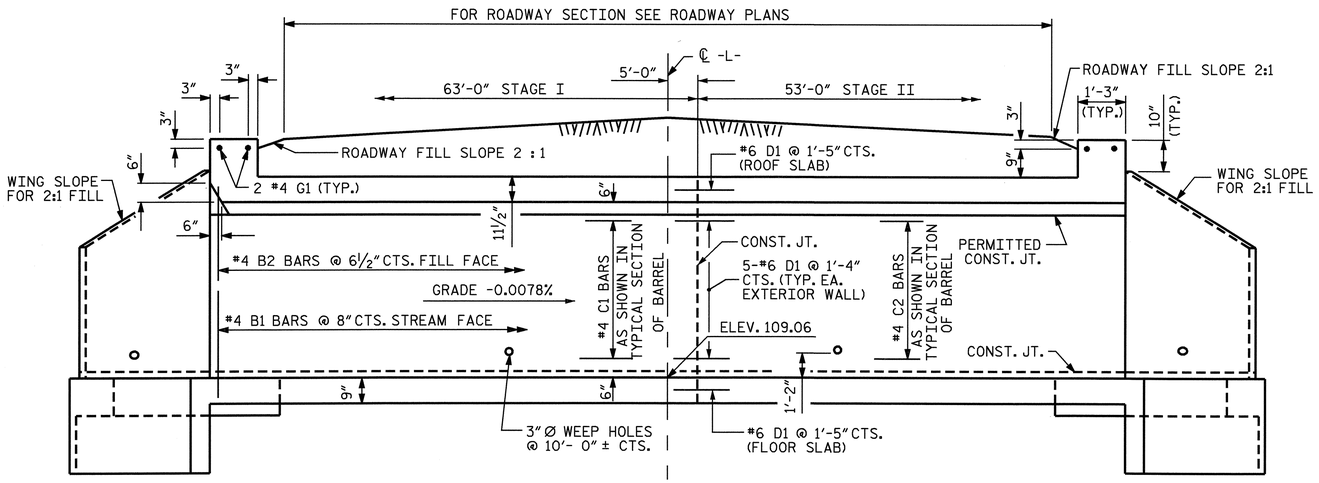

CULVERT SECTION NORMAL TO ROADWAY

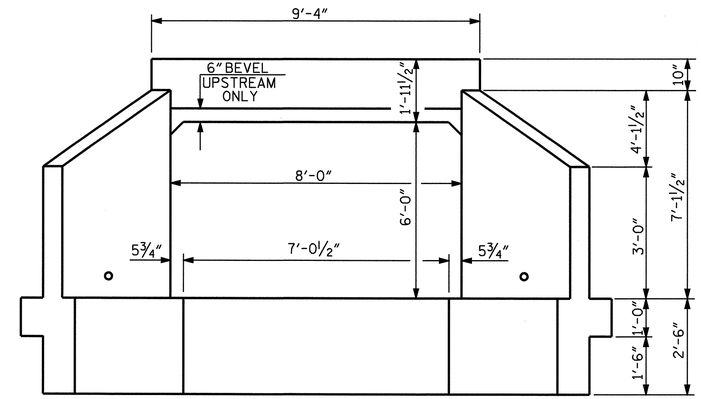

END ELEVATION

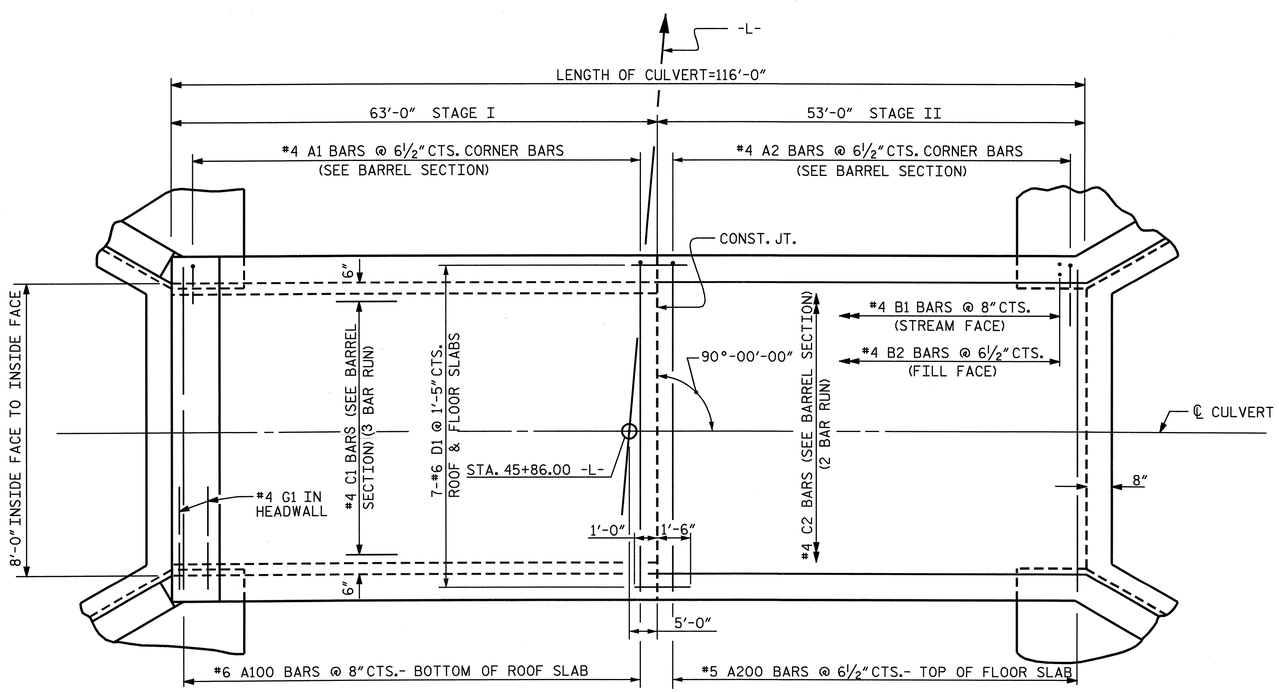

PART PLAN ROOF SLAB

PART PLAN FLOOR SLAB

BILL OF MATERIAL

STAGE I						STAGE II					
BAR	NO.	SIZE	TYPE	LENGTH	WEIGHT	BAR	NO.	SIZE	TYPE	LENGTH	WEIGHT
A100	95	#6	STR	8'-11"	1272	A100	80	#6	STR	8'-11"	1070
A200	117	#5	STR	8'-11"	1088	A200	98	#5	STR	8'-11"	911
A1	234	#4	1	4'-5"	690	A1	196	#4	1	4'-5"	578
A2	234	#4	1	4'-1"	638	A2	196	#4	1	4'-1"	535
B1	190	#4	STR	7'-2"	910	B1	160	#4	STR	7'-2"	766
B2	234	#4	STR	5'-4"	834	B2	196	#4	STR	5'-4"	698
C1	102	#4	STR	24'-10"	1692	C2	68	#4	STR	27'-4"	1242
D1	24	#6	STR	2'-6"	90	G1	2	#4	STR	9'-0"	12
G1	2	#4	STR	9'-0"	12						
REINFORCING STEEL = 7226 LBS						REINFORCING STEEL = 5812 LBS					

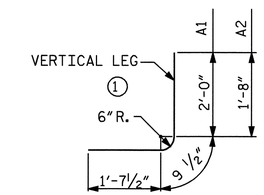

BAR TYPE

DIMENSIONS ARE OUT TO OUT

SPLICE LENGTH CHART

BAR	SIZE	SPLICE LENGTH
B1	#4	1'-9"
C1	#4	1'-11"

PROJECT NO. U-2810A
CUMBERLAND COUNTY
STATION: 45+86.00 -L-

SHEET 2 OF 3

NORTH CAROLINA PROFESSIONAL SEAL 11915 ENGINEER JOHN D. FRYE
1/15/09

STATE OF NORTH CAROLINA
DEPARTMENT OF TRANSPORTATION
RALEIGH

BARREL STANDARD SINGLE 8 FT. X 6 FT. CONCRETE BOX CULVERT 90° SKEW

1971

REVISIONS						SHEET NO.
NO.	BY:	DATE:	NO.	BY:	DATE:	C-2
1			3			TOTAL SHEETS
2			4			3

STD. NO. CB11

ASSEMBLED BY : T.L. CLELLAND	DATE : 2/1/07	SPECIAL	
CHECKED BY : J. Frye	DATE : 10/08		
DRAWN BY : R. WRIGHT	DATE : AUG. 1989	STANDARD	
CHECKED BY : A.R. BISSETTE	DATE : AUG. 1989		

REVISED 8-28-92 BY E.L.R. CHECKED BY G.R.P.
REVISED 8-22-89 BY A.R.B. CHECKED BY C.R.K.
REDRAWN 8-22-1989
REVISED 11-19-99 BY M.M. CHECKED BY R.W.W.

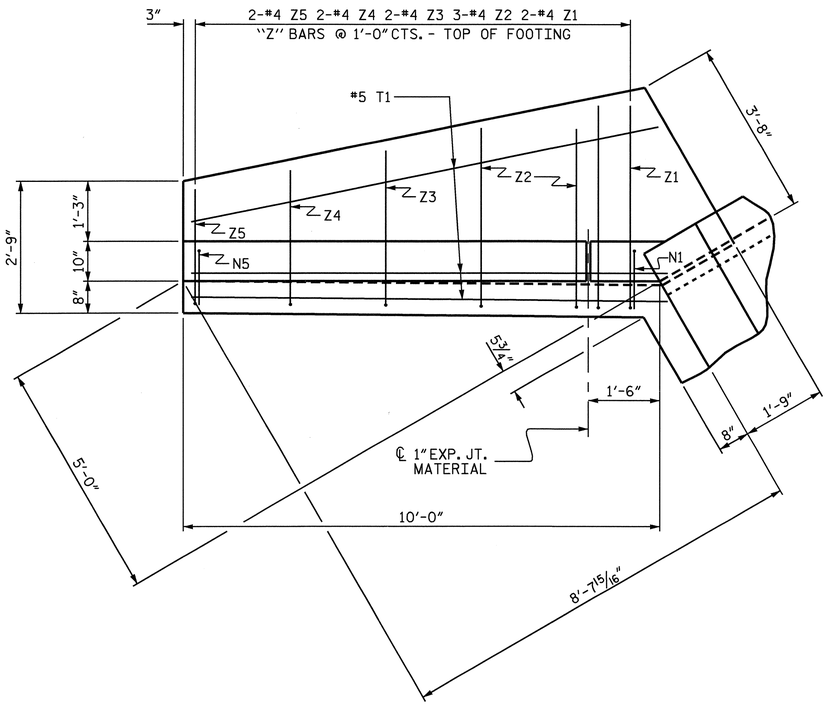

PLAN

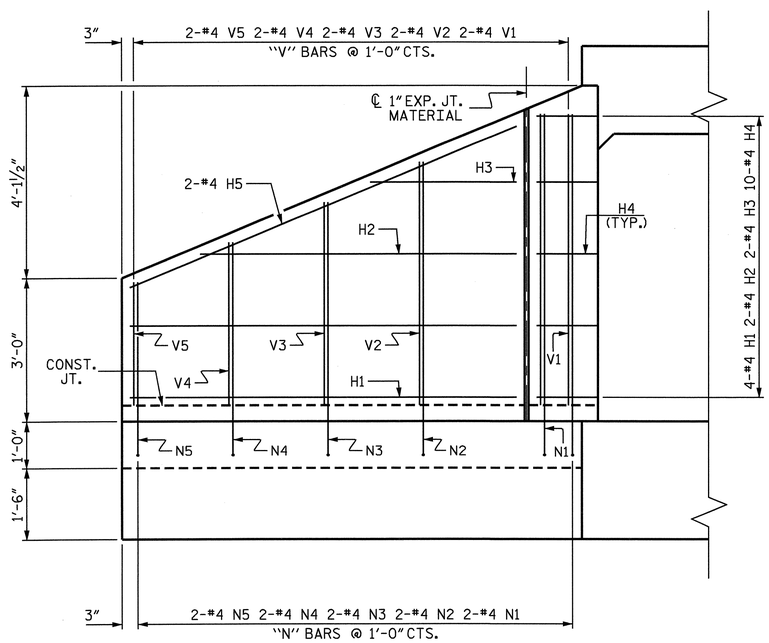

ELEVATION

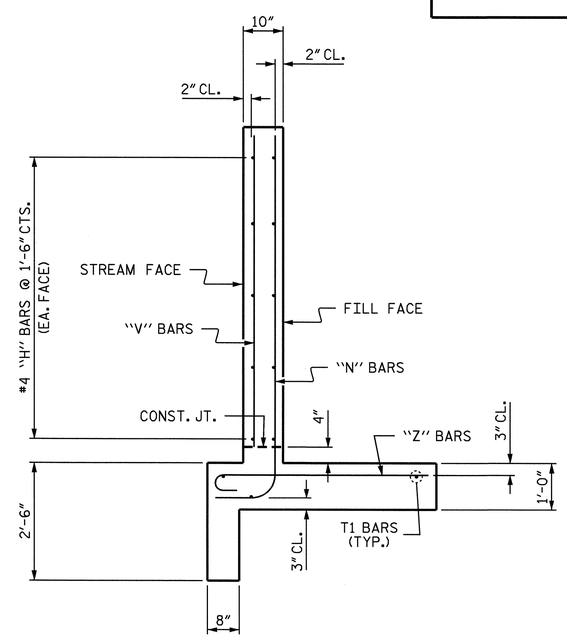

TYPICAL WING SECTION

BAR TYPES

ALL BAR DIMENSIONS ARE OUT TO OUT.

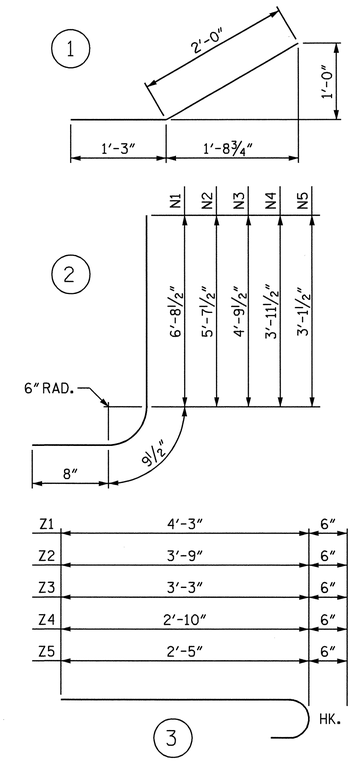

BILL OF MATERIAL

BAR	NO.	SIZE	TYPE	LENGTH	WEIGHT
H1	16	#4	STR	8'-1"	86
H2	8	#4	STR	6'-8"	36
H3	8	#4	STR	3'-1"	16
H4	40	#4	1	3'-3"	87
H5	8	#4	STR	8'-9"	47
N1	8	#4	2	8'-2"	44
N2	8	#4	2	7'-1"	38
N3	8	#4	2	6'-3"	33
N4	8	#4	2	5'-5"	29
N5	8	#4	2	4'-7"	24
T1	12	#5	STR	10'-0"	125
V1	8	#4	STR	6'-1"	33
V2	8	#4	STR	5'-1"	27
V3	8	#4	STR	4'-3"	23
V4	8	#4	STR	3'-5"	18
V5	8	#4	STR	2'-7"	14
Z1	8	#4	3	4'-9"	25
Z2	12	#4	3	4'-3"	34
Z3	8	#4	3	3'-9"	20
Z4	8	#4	3	3'-4"	18
Z5	8	#4	3	2'-11"	16

REINFORCING STEEL FOR 4 WINGS 793 LBS

CLASS A CONCRETE
- 4 WINGS 13.8 CY
- 2 HEADWALL 0.9 CY
- END CURTAIN WALLS 2.0 CY
- TOTAL 16.7 CY

PROJECT NO. U-2810A
CUMBERLAND COUNTY
STATION: 45+86.00 -L-

SHEET 3 OF 3

NORTH CAROLINA PROFESSIONAL SEAL 11915 ENGINEER
1/15/09

STATE OF NORTH CAROLINA
DEPARTMENT OF TRANSPORTATION
RALEIGH

STANDARD WINGS FOR CONCRETE BOX CULVERT

H = 6'-0" SLOPE = 2:1
90° SKEW

REVISIONS						SHEET NO.
NO.	BY:	DATE:	NO.	BY:	DATE:	C-3
1			3			TOTAL SHEETS
2			4			3

ASSEMBLED BY : T.L. CLELLAND DATE : 2/2/07
CHECKED BY : J. Frye DATE : 10/08

DRAWN BY : CCJ 10/99
CHECKED BY : RWW 03/00

STD. NO. CW9006

GEOTECHNICAL ENGINEER	ENGINEER
NORTH CAROLINA PROFESSIONAL SEAL 18899 ENGINEER JAMES R. BATTS, JR. 1-24-08	
SIGNATURE DATE	SIGNATURE DATE

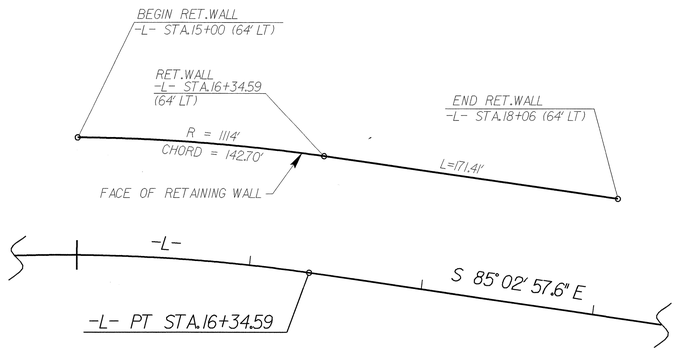

PLAN

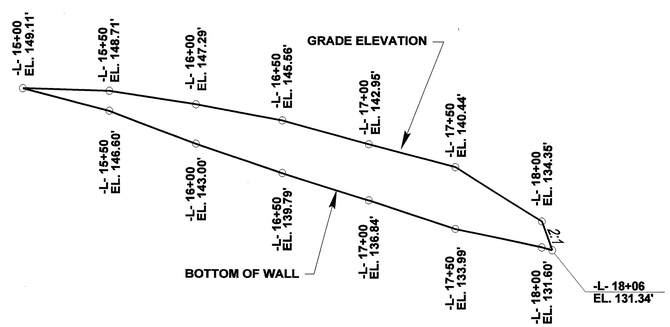

STATION -L-	OFFSET	GRADE ELEVATION	TOP OF WALL ELEV.	BOTTOM OF WALL ELEV.
15 + 00	64.00 ft LT	149.11 ft	149.61 ft	149.11 ft
15 + 50	64.00 ft LT	148.71 ft	149.21 ft	146.60 ft
16 + 00	64.00 ft LT	147.29 ft	147.79 ft	143.00 ft
16 + 50	64.00 ft LT	145.56 ft	146.06 ft	139.79 ft
17 + 00	64.00 ft LT	142.95 ft	143.45 ft	136.84 ft
17 + 50	64.00 ft LT	140.44 ft	140.94 ft	133.99 ft
18 + 00	64.00 ft LT	134.35 ft	134.85 ft	131.60 ft
18 + 06	64.00 ft LT	131.34 ft	131.84 ft	131.34 ft

ELEVATION
(WALL ENVELOPE)

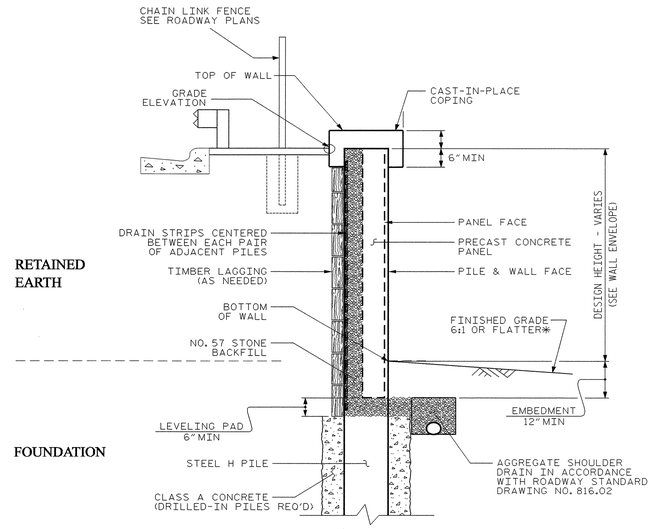

TYPICAL SECTION NTS

* see Roadway Typical sections for Finished grade details

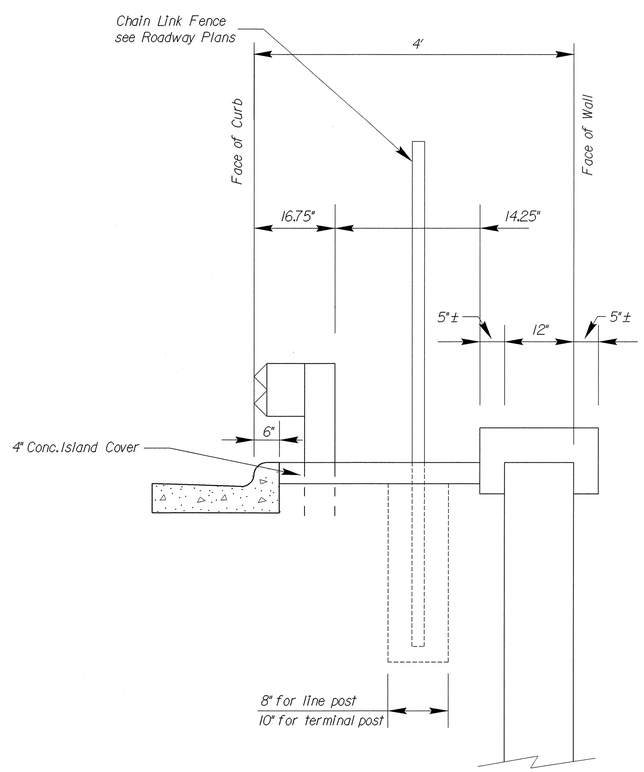

NOTES ON PLANS

FOR SOLDIER PILE RETAINING WALLS, SEE SOLDIER PILE RETAINING WALLS PROVISION.

FOR GUARDRAIL, SEE ROADWAY PLANS AND SECTION 862 OF THE STANDARD SPECIFICATIONS.

PILE EXCAVATION IS REQUIRED TO INSTALL STEEL H PILES FOR RETAINING WALL NO. 1.

USE A SOLDIER PILE RETAINING WALL WITH PRECAST CONCRETE PANELS FOR RETAINING WALL NO. 1.

BEFORE BEGINNING SOLDIER PILE WALL DESIGN FOR RETAINING WALL NO. 1, SURVEY EXISTING GROUND ELEVATIONS SHOWN ON THE WALL PROFILE VIEW (WALL ENVELOPE) AND SUBMIT A REVISED WALL ENVELOPE FOR REVIEW. DO NOT START WALL DESIGN OR CONSTRUCTION UNTIL THIS ENVELOPE IS ACCEPTED.

DESIGN RETAINING WALL NO. 1 FOR A WALL HEIGHT EQUAL TO THE DESIGN HEIGHT (DIFFERENCE BETWEEN GRADE ELEVATION AND BOTTOM OF WALL ELEVATION) PLUS EMBEDMENT (DIFFERENCE BETWEEN BOTTOM OF WALL ELEVATION AND TOP OF LEVEL PAD ELEVATION).

DESIGN RETAINING WALL NO. 1 FOR THE FOLLOWING:
1) MINIMUM SERVICE LIFE = 75 YEARS
2) IN-SITU ASSUMED MATERIAL PARAMETERS:

MATERIAL TYPE	UNIT WEIGHT (γ) PCF	FRICTION ANGLE (ϕ) DEGREES	COHESION (c) PSF
RETAINED EARTH	120	28	0
FOUNDATION	120	32	0

DESIGN RETAINING WALL NO. 1 FOR A LIVE LOAD (TRAFFIC) SURCHARGE.

DESIGN RETAINING WALL NO. 1 FOR POSSIBLE CONFLICTS WITH AN EXISTING (TO BE REMOVED) AND PROPOSED 24" DIA. PIPE NEAR THE WALL. VERIFY PIPE LOCATIONS AND ELEVATION BEFORE BEGINNING SOLDIER PILE WALL DESIGN OR CONSTRUCTION.

SEE ROADWAY PLANS FOR PIPE LOCATIONS AND ELEVATION.

TOTAL WALL AREA: 1320 SQUARE FEET

PROJECT NO.: 34866.1.1, (U-2810A)
CUMBERLAND ***COUNTY***
STATION: -L- STA. 16+34.59

PREPARED BY: JINYOUNG PARK	DATE: 11/08
REVIEWED BY: JAMES BATTS	DATE: 11/08

GEOTECHNICAL ENGINEERING UNIT
- ■ *EASTERN REGIONAL OFFICE*
- ☐ *WESTERN REGIONAL OFFICE*
- ☐ *CONTRACT OFFICE*

STATE OF NORTH CAROLINA
DEPARTMENT OF TRANSPORTATION
RALEIGH

SOLDIER PILE RETAINING WALL

REVISIONS						SHEET NO.
NO.	BY	DATE	NO.	BY	DATE	W-1
1	-	-	3	-	-	TOTAL SHEETS
2	-	-	4	-	-	1

STANDARD NOTES

DESIGN DATA:

SPECIFICATIONS	A.A.S.H.T.O. (CURRENT)
LIVE LOAD	SEE PLANS
IMPACT ALLOWANCE	SEE A.A.S.H.T.O.
STRESS IN EXTREME FIBER OF	
STRUCTURAL STEEL - AASHTO M270 GRADE 36	20,000 LBS. PER SQ. IN.
- AASHTO M270 GRADE 50W	27,000 LBS. PER SQ. IN.
- AASHTO M270 GRADE 50	27,000 LBS. PER SQ. IN.
REINFORCING STEEL IN TENSION GRADE 60	24,000 LBS. PER SQ. IN.
CONCRETE IN COMPRESSION	1,200 LBS. PER SQ. IN.
CONCRETE IN SHEAR	SEE A.A.S.H.T.O.
STRUCTURAL TIMBER - TREATED OR UNTREATED - EXTREME FIBER STRESS	1,800 LBS. PER SQ. IN.
COMPRESSION PERPENDICULAR TO GRAIN OF TIMBER	375 LBS. PER SQ. IN.
EQUIVALENT FLUID PRESSURE OF EARTH	30 LBS. PER CU. FT. (MINIMUM)

MATERIAL AND WORKMANSHIP:

EXCEPT AS MAY OTHERWISE BE SPECIFIED ON PLANS OR IN THE SPECIAL PROVISIONS, ALL MATERIAL AND WORKMANSHIP SHALL BE IN ACCORDANCE WITH THE 2006 "STANDARD SPECIFICATIONS FOR ROADS AND STRUCTURES" OF THE N. C. DEPARTMENT OF TRANSPORTATION.

STEEL SHEET PILING FOR PERMANENT OR TEMPORARY APPLICATIONS SHALL BE HOT ROLLED.

CONCRETE:

UNLESS OTHERWISE REQUIRED ON PLANS, CLASS A CONCRETE SHALL BE USED FOR ALL PORTIONS OF ALL STRUCTURES WITH THE EXCEPTION THAT: CLASS AA CONCRETE SHALL BE USED IN BRIDGE SUPERSTRUCTURES, ABUTMENT BACKWALLS, AND APPROACH SLABS; AND CLASS B CONCRETE SHALL BE USED FOR SLOPE PROTECTION AND RIP RAP.

CONCRETE CHAMFERS:

UNLESS OTHERWISE NOTED ON THE PLANS, ALL EXPOSED CORNERS ON STRUCTURES SHALL BE CHAMFERED 3/4" WITH THE FOLLOWING EXCEPTIONS: TOP CORNERS OF CURBS MAY BE ROUNDED TO 1-1/2" RADIUS WHICH IS BUILT INTO CURB FORMS; CORNERS OF TRANSVERSE FLOOR EXPANSION JOINTS SHALL BE ROUNDED WITH A 1/4" FINISHING TOOL UNLESS OTHERWISE REQUIRED ON PLANS; AND CORNERS OF EXPANSION JOINTS IN THE ROADWAY FACES AND TOPS OF CURBS AND SIDEWALKS SHALL BE ROUNDED TO A 1/4" RADIUS WITH A FINISHING STONE OR TOOL UNLESS OTHERWISE REQUIRED ON PLANS.

DOWELS:

DOWELS WHEN INDICATED ON PLANS AS FOR CULVERT EXTENSIONS, SHALL BE EMBEDDED AT LEAST 12" INTO THE OLD CONCRETE AND GROUTED INTO PLACE WITH 1:2 CEMENT MORTAR.

ALLOWANCE FOR DEAD LOAD DEFLECTION, SETTLEMENT, ETC. IN CASTING SUPERSTRUCTURES:

BRIDGES SHALL BE BUILT ON THE GRADE OR VERTICAL CURVE SHOWN ON PLANS. SLABS, CURBS AND PARAPETS SHALL CONFORM TO THE GRADE OR CURVE.

ALL DIMENSIONS WHICH ARE GIVEN IN SECTION AND ARE AFFECTED BY DEAD LOAD DEFLECTIONS ARE DIMENSIONS AT CENTER LINE OF BEARING UNLESS OTHERWISE NOTED ON PLANS. IN SETTING FORMS FOR STEEL BEAM BRIDGES AND PRESTRESSED CONCRETE GIRDER BRIDGES, ADJUSTMENTS SHALL BE MADE DUE TO THE DEAD LOAD DEFLECTIONS FOR THE ELEVATIONS SHOWN. WHERE BLOCKS ARE SHOWN OVER BEAMS FOR BUILDING UP TO THE SLAB, THE VERTICAL DIMENSIONS OF THE BLOCKS SHALL BE ADJUSTED BETWEEN BEARINGS TO COMPENSATE FOR DEAD LOAD DEFLECTIONS, VERTICAL CURVE ORDINATE, AND ACTUAL BEAM CAMBER. WHERE BOTTOM OF SLAB IS IN LINE WITH BOTTOM OF TOP FLANGES, DEPTH OF SLAB BETWEEN BEARINGS SHALL BE ADJUSTED TO COMPENSATE FOR DEAD LOAD DEFLECTION, VERTICAL CURVE ORDINATE, AND ACTUAL BEAM CAMBER.

IN SETTING FALSEWORK AND FORMS FOR REINFORCED CONCRETE SPANS, AN ALLOWANCE SHALL BE MADE FOR DEAD LOAD DEFLECTIONS, SETTLEMENT OF FALSEWORK, AND PERMANENT CAMBER WHICH SHALL BE PROVIDED FOR IN ADDITION TO THE ELEVATIONS SHOWN. AFTER REMOVAL OF THE FALSEWORK, THE FINISHED STRUCTURES SHALL CONFORM TO THE PROFILE AND ELEVATIONS SHOWN ON THE PLANS AND CONSTRUCTION ELEVATIONS FURNISHED BY THE ENGINEER.

DETAILED DRAWINGS FOR FALSEWORK OR FORMS FOR BRIDGE SUPERSTRUCTURE AND ANY STRUCTURE OR PARTS OF A STRUCTURE AS NOTED ON THE PLANS SHALL BE SUBMITTED TO THE ENGINEER FOR APPROVAL BEFORE CONSTRUCTION OF THE FALSEWORK OR FORMS IS STARTED.

REINFORCING STEEL:

ALL REINFORCING STEEL SHALL BE DEFORMED. DIMENSIONS RELATIVE TO PLACEMENT OF REINFORCING ARE TO CENTERS OF BARS UNLESS OTHERWISE INDICATED IN THE PLANS. DIMENSIONS ON BAR DETAILS ARE TO CENTERS OF BARS OR ARE OUT TO OUT AS INDICATED ON PLANS.

WIRE BAR SUPPORTS SHALL BE PROVIDED FOR REINFORCING STEEL WHERE INDICATED ON THE PLANS. WHEN BAR SUPPORT PIECES ARE PLACED IN CONTINUOUS LINES, THEY SHALL BE SO PLACED THAT THE ENDS OF THE SUPPORTING WIRES SHALL BE LAPPED TO LOCK LEGS ON ADJOINING PIECES.

STRUCTURAL STEEL:

AT THE CONTRACTOR'S OPTION, HE MAY SUBSTITUTE 7/8" Ø SHEAR STUDS FOR THE 3/4" Ø STUDS SPECIFIED ON THE PLANS. THIS SUBSTITUTION SHALL BE MADE AT THE RATE OF 3 - 7/8" Ø STUDS FOR 4 - 3/4" Ø STUDS, AND STUD SPACING CHANGES SHALL BE MADE AS NECESSARY TO PROVIDE THE SAME EQUIVALENT NUMBER OF 7/8" Ø STUDS ALONG THE BEAM AS SHOWN FOR 3/4" Ø STUDS BASED ON THE RATIO OF 3 - 7/8" Ø STUDS FOR 4 - 3/4" Ø STUDS. STUDS OF THE LENGTH SPECIFIED ON THE PLANS MUST BE PROVIDED. THE MAXIMUM SPACING SHALL BE 2'-0".

EXCEPT AT THE INTERIOR SUPPORTS OF CONTINUOUS BEAMS WHERE THE COVER PLATE IS IN CONTACT WITH BEARING PLATE, THE CONTRACTOR MAY, AT HIS OPTION, SUBSTITUTE FOR THE COVER PLATES DESIGNATED ON THE PLANS COVER PLATES OF THE EQUIVALENT AREA PROVIDED THESE PLATES ARE AT LEAST 5/16" IN THICKNESS AND DO NOT EXCEED A WIDTH EQUAL TO THE FLANGE WIDTH LESS 2" OR A THICKNESS EQUAL TO 2 TIMES THE FLANGE THICKNESS. THE SIZE OF FILLET WELDS SHALL CONFORM TO THE REQUIREMENTS OF THE CURRENT ANSI/AASHTO/AWS "BRIDGE WELDING CODE". ELECTROSLAG WELDING WILL NOT BE PERMITTED.

WITH THE SOLE EXCEPTION OF EDGES AT SURFACES WHICH BEAR ON OTHER SURFACES, ALL SHARP EDGES AND ENDS OF SHAPES AND PLATES SHALL BE SLIGHTLY ROUNDED BY SUITABLE MEANS TO A RADIUS OF APPROXIMATELY 1/16 INCH OR EQUIVALENT FLAT SURFACE AT A SUITABLE ANGLE PRIOR TO PAINTING, GALVANIZING, OR METALLIZING.

HANDRAILS AND POSTS:

METAL STANDARDS AND FACES OF THE CONCRETE END POSTS FOR THE METAL RAIL SHALL BE SET NORMAL TO THE GRADE OF THE CURB, UNLESS OTHERWISE SHOWN ON PLANS. THE METAL RAIL AND TOPS OF CONCRETE POSTS USED WITH THE ALUMINUM RAIL SHALL BE BUILT PARALLEL TO THE GRADE OF THE CURB.

METAL HANDRAILS SHALL BE IN ACCORDANCE WITH THE PLANS. RAILS SHALL BE AS MANUFACTURED FOR BRIDGE RAILING. CASTINGS SHALL BE OF A UNIFORM APPEARANCE. FINS AND OTHER DEFORMATIONS RESULTING FROM CASTING OR OTHERWISE SHALL BE REMOVED IN A MANNER SO THAT A UNIFORM COLORING OF THE COMPLETED CASTING SHALL BE OBTAINED. CASTINGS WITH DISCOLORATIONS OR OF NON-UNIFORM COLORING WILL NOT BE ACCEPTED. CERTIFIED MILL REPORTS ARE REQUIRED FOR METAL RAILS AND POSTS.

SPECIAL NOTES:

GENERALLY, IN CASE OF DISCREPANCY, THIS STANDARD SHEET OF NOTES SHALL GOVERN OVER THE SPECIFICATIONS, BUT THE REMAINDER OF THE PLANS SHALL GOVERN OVER NOTES HEREON, AND SPECIAL PROVISIONS SHALL GOVERN OVER ALL. SEE SPECIFICATIONS ARTICLE 105-4.

ENGLISH

JANUARY, 1990

STD. NO. SN