CONTRACT: C202322 TIP PROJECTS: B–5129 /B–4594

STATE	STATE PROJECT REFERENCE NO.	SHEET NO.	TOTAL SHEETS
N.C.	B-5129 / B-4594	1	185

STATE PROJECT NO.	F. A. PROJECT REF. NO.	DESCRIPTION
42287.1.1	BRZ–0304(3)	P.E.
42287.3.1	BRZ–0304(3)	CONST.
38423.1.1	BRSTP–0304(2)	P.E.
38423.3.1	BRSTP–0304(2)	CONST.

STATE OF NORTH CAROLINA
DIVISION OF HIGHWAYS
PAMLICO COUNTY

LOCATION: BRIDGE NOS. 31, 35, 40, 42 AND 44 ON NC 304

TYPE OF WORK: GRADING, DRAINAGE, PAVING, STRUCTURE AND GUARDRAIL

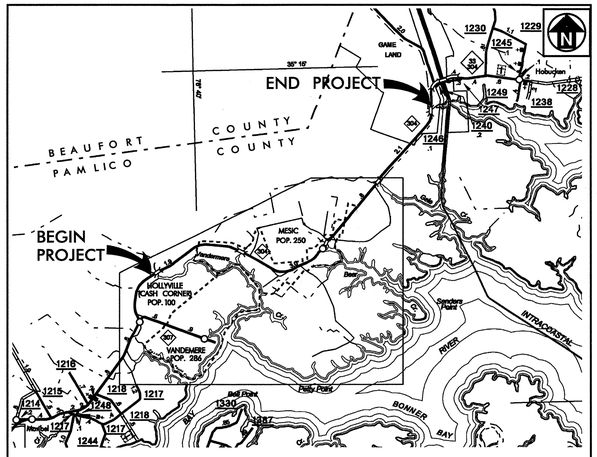

VICINITY MAP
(NOT TO SCALE)

B–5129 PART I | ***B–4594 PART II***

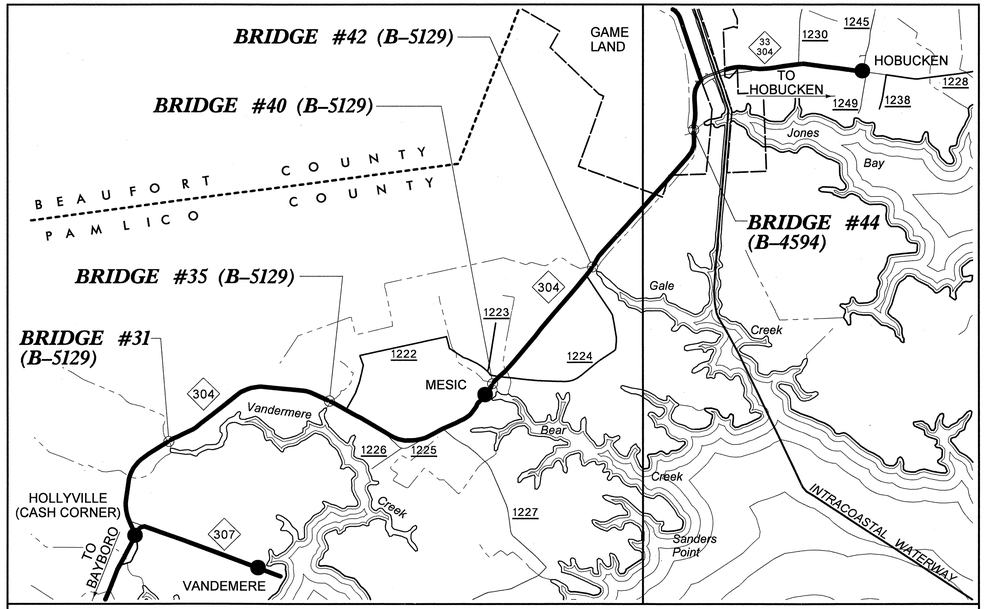

BRIDGE LOCATION MAP
(NOT TO SCALE)

GRAPHIC SCALES

20 10 0 20 40
PLANS

20 10 0 20 40
PROFILE (HORIZONTAL)

20 10 0 20 40
PROFILE (VERTICAL)

DESIGN DATA

ADT 2009 = 3264

ADT 2025 = 3980

FUNCTIONAL CLASS = MIC

PROJECT LENGTH

LENGTH ROADWAY = 0.283 MILE

LENGTH STRUCTURE = 0.095 MILE

TOTAL LENGTH = 0.378 MILE

Prepared In the Office of:
MULKEY
ENGINEERS & CONSULTANTS
FOR
NORTH CAROLINA DEPARTMENT OF TRANSPORTATION

2006 STANDARD SPECIFICATIONS

LETTING DATE:
AUGUST 18, 2009

L. KEVIN AUSTIN, PE
PROJECT ENGINEER

NCDOT CONTACT: C. E. (NEIL) LASSITER, JR., PE
DIVISION ENGINEER

STRUCTURE DESIGN

NORTH CAROLINA PROFESSIONAL SEAL 19661 ENGINEER L. KEVIN AUSTIN 6/12/09

SIGNATURE: L. Kevin Austin *PE*

DIVISION OF HIGHWAYS
STATE OF NORTH CAROLINA

PE
STATE HIGHWAY ENGINEER – DESIGN

DEPARTMENT OF TRANSPORTATION
FEDERAL HIGHWAY ADMINISTRATION

APPROVED FOR
DIVISION ADMINISTRATOR *DATE*

6/1/2009 8:07:05 AM
R:\Structures\PAMLICO_SD_TSH.dgn

MULKEY
ENGINEERS & CONSULTANTS
PO Box 33127
Raleigh, N.C. 27636
(919) 851-1918
(919) 851-1918 (FAX)
WWW.MULKEYINC.COM

PROJECT REFERENCE NO.	SHEET NO.
B-5129/B-4594	1-A

INDEX OF SHEETS

	SHEET NUMBER
TITLE SHEET	*1*
INDEX OF SHEETS	*1–A*
TEMPORARY LANE CLOSURES USING PORTABLE TRAFFIC SIGNALS	*2*
MODIFIED CONCRETE FLUME	*2–A*
GUARDRAIL PLACEMENT FOR 2' SHOULDER BREAK POINT BEHIND FACE OF GUARDRAIL	*2–B*
SUMMARY OF QUANTITIES	*3*
SUMMARY OF EARTHWORK	*3A*
B–5129 (BRIDGE #31)	*4 – 39*
B–5129 (BRIDGE #35)	*40 – 76*
B–5129 (BRIDGE #40)	*77 – 113*
B–5129 (BRIDGE #42)	*114 – 149*
B–4594 (BRIDGE #44)	*150 – 185*

6/5/2009 2:58:16 PM R:\Structures\PAMLICO_BOX_SUM.dgn

PROJ. REFERENCE NO.	SHEET NO.
B-5129/B-4594	2

STATE OF NORTH CAROLINA
DEPT. OF TRANSPORTATION
DIVISION OF HIGHWAYS
RALEIGH, N.C.

ENGLISH STANDARD DRAWING FOR

TEMPORARY LANE CLOSURES

USING PORTABLE TRAFFIC SIGNAL

SHEET 1 OF 1

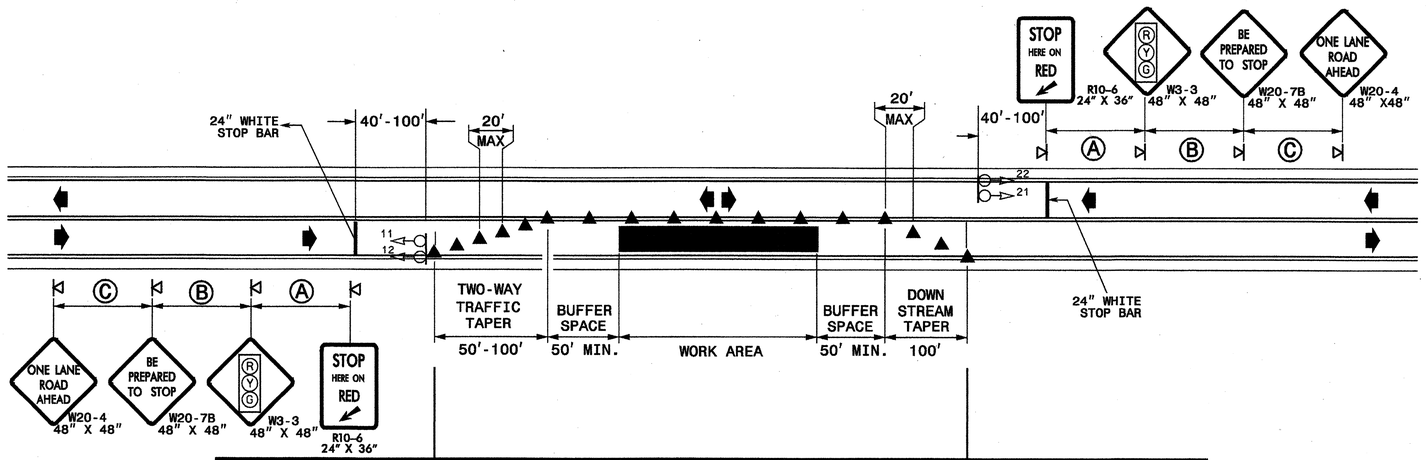

INSET FOR 2 LANE ROADWAYS WITH 2-WAY TURN LANE
ALL OTHER DEVICES ARE THE SAME AS ABOVE

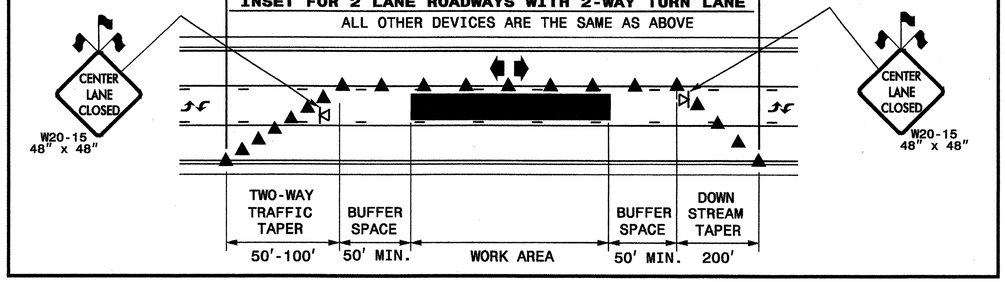

LEGEND

- WARNING FLAGS
- CONE
- TRAFFIC SIGNAL HEAD
- PORTABLE SIGN
- DIRECTION OF TRAFFIC FLOW

GENERAL NOTES

-REFER TO STD. DWG. 1101.11-SHEET 4, FOR SIGN SPACING.
-INSTALL LANE CLOSURES WITH THE TRAFFIC FLOW, BEGINNING WITH DEVICES ON THE UPSTREAM SIDE OF TRAFFIC.
-REMOVE LANE CLOSURES AGAINST THE TRAFFIC FLOW, BEGINNING WITH DEVICES ON THE DOWNSTREAM SIDE OF TRAFFIC.
-PLACE CONES THRU THE WORK AREA AT THE MAXIMUM SPACING EQUAL IN FEET TO 2 TIMES THE POSTED SPEED LIMIT.
-EXTEND LANE CLOSURES AT THE BUFFER SPACE SUCH THAT STOPPING SIGHT DISTANCE IS PROVIDED TO THE STOP BAR. (REFER TO STD. DWG. 1101.11-SHEET 2)
-DRUMS MAY BE USED IN LIEU OF CONES.
-USE STD. DWG. 1705.01 SHEET 2 OF 2 WHEN CLEARING FROM ONE PHASE TO ANOTHER.

SIGNAL FACE I.D.

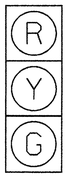

11, 12
21, 22

PHASING DIAGRAM

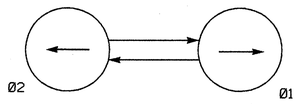

TABLE OF OPERATION			
SIGNAL FACE	PHASE 2	PHASE 1	FLASH
11 · 12	R	G	R
21 · 22	G	R	R

STATE OF
NORTH CAROLINA
DEPT. OF TRANSPORTATION
DIVISION OF HIGHWAYS
RALEIGH, N.C.

ENGLISH STANDARD DRAWING FOR

TEMPORARY LANE CLOSURES

USING PORTABLE TRAFFIC SIGNAL

SHEET 1 OF 1

APPROVED: W McDaniel DATE: 5/26/06

SEAL

NORTH CAROLINA PROFESSIONAL SEAL 025895 ENGINEER MEREDITH M. McDANIEL

TEMPORARY LANE CLOSURES
USING PORTABLE TRAFFIC SIGNALS

SCALE:	NONE
DATE:	5/25/2006
DWG. BY:	
DESIGN BY:	
REVIEWED BY:	JPG

REVISIONS	
CADD FILE	

25-MAY-2006 10:42
\\DOT\DFSROOT01\GROUPS-WZTCCC\designgroup4\squad4a\galloway\portable signal drawing052506.dgn
jgalloway
AT WZTC224247

MULKEY
ENGINEERS & CONSULTANTS
PO BOX 33127
RALEIGH, NC 27636
(919) 851-1912
(919) 851-1918 (FAX)
WWW.MULKEYINC.COM

PROJECT REFERENCE NO.	SHEET NO.
B-5129/B-4594	2-A

MODIFIED CONCRETE FLUME
WITH CONCRETE OR RIP-RAP DITCH

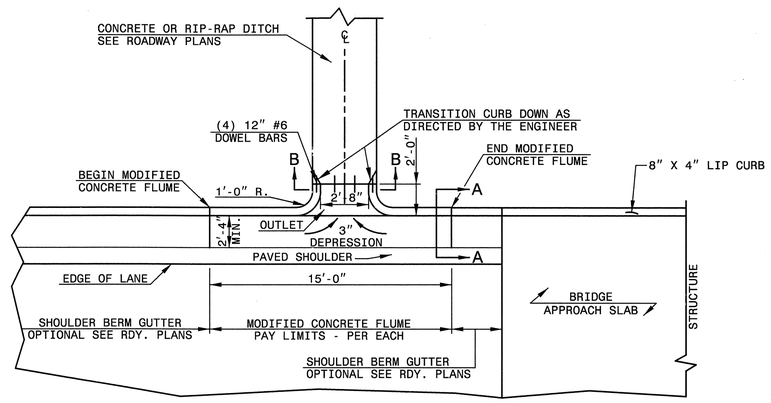

PLAN VIEW

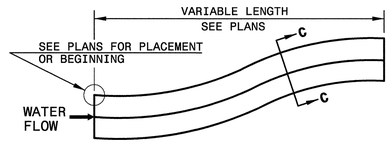

DOWNGRADE OR SAG

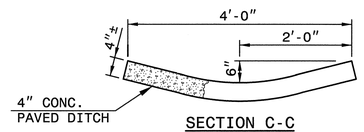

SECTION C-C

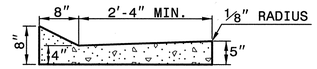

SECTION A-A

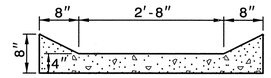

SECTION B-B

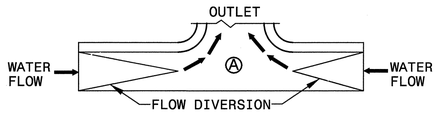

SAG

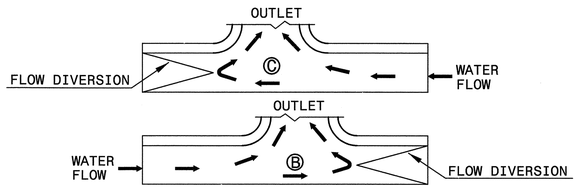

DOWN GRADE

FLOW DIVERSION EXAMPLES

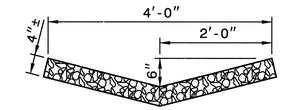

RIP-RAP LINED DITCH

NOTES:

- CONSTRUCT MODIFIED CONCRETE FLUME AND SHOULDER BERM GUTTER IN ACCORDANCE WITH THIS DETAIL.
- CONSTRUCT CONCRETE DITCH IN ACCORDANCE WITH STD. DWG. NO. 850.01.
- CONSTRUCT RIP RAP LINED DITCH IN ACCORDANCE WITH THIS DETAIL, IF CALLED FOR IN PLANS.
- CONCRETE OR RIP RAP LINED DITCH SHALL BE THE TYPE AND LENGTH SPECIFIED BY THE ROADWAY PLANS. THE DITCH SHALL TERMINATE AS SHOWN ON THE PLANS. IF NO TERMINATION IS INDICATED PLACE RIP-RAP AT THE END OF THE DITCH AS INDICATED BY STD. DWG. 876.02 FOR AN 18" PIPE. TRANSITIONS FROM THE DITCH TO TERMINATION SHALL BE AS DIRECTED BY THE ENGINEER.
- MODIFICATIONS SHALL BE AS DICTATED BY SITE CONDITIONS AND DIRECTED BY THE ENGINEER.

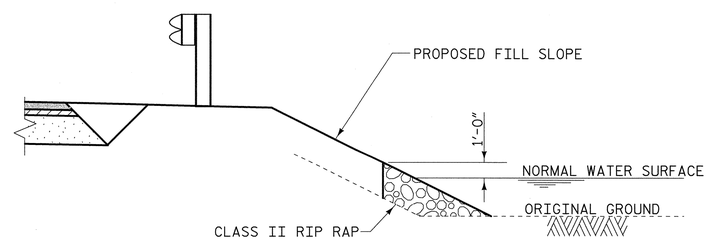

ROCK EMBANKMENT DETAIL

NOTE: FOR ROCK EMBANKMENT SEE SPECIAL PROVISIONS.

8/6/2009 2:30:13 PM G:\project\2004\224.08_Pamlico3\Structures\PAMLICO_RDY_MCF.dgn

PROJECT REFERENCE NO.	SHEET NO.
B-5129/B-4594	2-B

STATE OF
NORTH CAROLINA
DEPT. OF TRANSPORTATION
DIVISION OF HIGHWAYS
RALEIGH, N.C.

ENGLISH DETAIL DRAWING FOR

GUARDRAIL PLACEMENT FOR 2' SHOULDER
BREAK POINT BEHIND GUARDRAIL POST

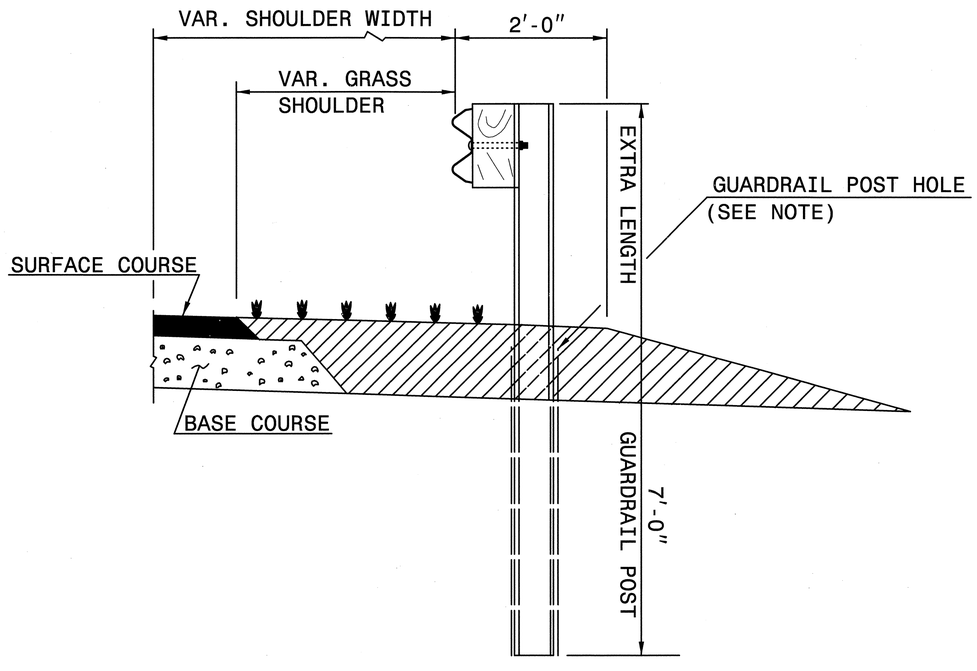

EARTH MATERIAL

NOTE:
1) USE EXTRA LENGTH GUARDRAIL POST - 7'- 0" TYPICAL

2) WHEN WOODEN GUARDRAIL POSTS ARE USED, DRILL HOLES THROUGH EARTH MATERIAL AND BASE COURSE THEN BE DRIVEN TO THE PROPER DEPTH. DRILL HOLE TO ACCOMODATE THE PARTICULAR POST BEING USED. BACKFILL AND TAMP HOLES USING THE EXCAVATED MATERIAL.

SHEET 1 OF 1

7'GRPOST

STATE OF
NORTH CAROLINA
DEPT. OF TRANSPORTATION
DIVISION OF HIGHWAYS
RALEIGH, N.C.

ENGLISH DETAIL DRAWING FOR

GUARDRAIL PLACEMENT FOR 2' SHOULDER
BREAK POINT BEHIND GUARDRAIL POST

SHEET 1 OF 1

7'GRPOST

NORTH CAROLINA PROFESSIONAL SEAL 022966 ENGINEER JOEL S. HOWERTON
6/17/09

6/9/2009 6:35:28 AM R:\Structures\B626005.dgn

MULKEY
ENGINEERS & CONSULTANTS
PO BOX 33127
RALEIGH, N.C. 27636
(919) 851-1912
(919) 851-1918 (FAX)
WWW.MULKEYINC.COM

PROJECT REFERENCE NO.	SHEET NO.
B-5129/B-4594	3

SUMMARY OF QUANTITIES

STATE OF NORTH CAROLINA
DIVISION OF HIGHWAYS
ROADWAY SUMMARY OF QUANTITIES FOR CONTRACT - C202322

ItemNumber	Sec #	Quantity	Unit	Description
0000100000-N	800	Lump Sum		MOBILIZATION
0199000000-E	SP	585	SF	TEMPORARY SHORING
0248000000-N	SP	Lump Sum		GENERIC GRADING ITEM EXCAVATION & EMBANKMENT BRIDGE #31
0248000000-N	SP	Lump Sum		GENERIC GRADING ITEM EXCAVATION & EMBANKMENT BRIDGE #35
0248000000-N	SP	Lump Sum		GENERIC GRADING ITEM EXCAVATION & EMBANKMENT BRIDGE #40
0248000000-N	SP	Lump Sum		GENERIC GRADING ITEM EXCAVATION & EMBANKMENT BRIDGE #42
0248000000-N	SP	Lump Sum		GENERIC GRADING ITEM EXCAVATION & EMBANKMENT BRIDGE #44
1489000000-E	610	710	TON	ASPHALT CONC BASE COURSE, TYPE B25.0B
1498000000-E	610	550	TON	ASPHALT CONC INTERMEDIATE COURSE, TYPE I19.0B
1519000000-E	610	1,240	TON	ASPHALT CONC SURFACE COURSE, TYPE S9.5B
1560000000-E	620	140	TON	ASPHALT BINDER FOR PLANT MIX, GRADE PG 64-22
2556000000-E	846	87	LF	SHOULDER BERM GUTTER
2570000000-N	SP	8	EA	MODIFIED CONCRETE FLUME
3030000000-E	862	1,350	LF	STEEL BM GUARDRAIL
3045000000-E	862	37.5	LF	STEEL BM GUARDRAIL, SHOP CURVED
3195000000-N	862	2	EA	GUARDRAIL ANCHOR UNITS, TYPE AT-1
3215000000-N	862	20	EA	GUARDRAIL ANCHOR UNITS, TYPE III
3270000000-N	SP	13	EA	GUARDRAIL ANCHOR UNITS, TYPE 350
3649000000-E	876	1.4	TON	RIP RAP, CLASS B
4589000000-N	SP	Lump Sum		GENERIC TRAFFIC CONTROL ITEM TRAFFIC CONTROL
6000000000-E	1605	5,500	LF	TEMPORARY SILT FENCE
6009000000-E	1610	255	TON	STONE FOR EROSION CONTROL, CLASS B
6012000000-E	1610	225	TON	SEDIMENT CONTROL STONE
6015000000-E	1615	2.5	ACR	TEMPORARY MULCHING
6018000000-E	1620	250	LB	SEED FOR TEMPORARY SEEDING
6021000000-E	1620	1.25	TON	FERTILIZER FOR TEMPORARY SEEDING
6024000000-E	1622	1,070	LF	TEMPORARY SLOPE DRAINS
6027000000-N	1622	20	EA	INLET PROTECTION AT TEMPORARY SLOPE DRAINS
6029000000-E	SP	6,204	LF	SAFETY FENCE
6030000000-E	1630	90	CY	SILT EXCAVATION
6036000000-E	1631	525	SY	MATTING FOR EROSION CONTROL
6042000000-E	1632	465	LF	1/4" HARDWARE CLOTH
6048000000-E	SP	530	SY	FLOATING TURBIDITY CURTAIN
6071010000-E	SP	65	LF	WATTLE
6071020000-E	SP	23	LB	POLYACRYLAMIDE (PAM)
6084000000-E	1660	2.5	ACR	SEEDING & MULCHING
6090000000-E	1661	250	LB	SEED FOR REPAIR SEEDING
6093000000-E	1661	1.25	TON	FERTILIZER FOR REPAIR SEEDING
6096000000-E	1662	250	LB	SEED FOR SUPPLEMENTAL SEEDING
6108000000-E	1665	1.25	TON	FERTILIZER TOPDRESSING
6123000000-E	1670	0.5	ACR	REFORESTATION

6/5/2009 2:58:38 PM R:\Structures\PAMLICO_ROY_SUM.dgn

COMPUTED BY: W. B. ALLEN DATE: 06 / 09

CHECKED BY: L. K. AUSTIN DATE: 06 / 09

NOTE: APPROXIMATE QUANTITIES ONLY. UNCLASSIFIED EXCAVATION, BORROW EXCAVATION, FINE GRADING, CLEARING AND GRUBBING, AND REMOVAL OF EXISTING PAVEMENT WILL BE PAID FOR AT THE CONTRACT LUMP SUM PRICE FOR "EXCAVATION AND EMBANKMENT". (SEE PROJECT SPECIAL PROVISIONS.)

MULKEY
ENGINEERS & CONSULTANTS
PO BOX 33127
RALEIGH, N.C. 27636
(919) 851-1912
(919) 851-1918 (FAX)
WWW.MULKEYINC.COM

PROJECT REFERENCE NO.	SHEET NO.
B-5129/B-4594	3-A

B–5129 (BRIDGE #31) SUMMARY OF EARTHWORK
IN CUBIC YARDS

SURVEY LINE	STATION	STATION	UNCLASSIFIED EXCAVATION	UNDERCUT	EMBANKMENT +30%	BORROW	WASTE
–L–	13+50.00	15+07.87	1		248	247	0
BRIDGE							
SUBTOTAL			1		248	247	0
BRIDGE							
–L–	16+30.13	17+90.00	2		250	248	0
SUBTOTAL			2		250	248	0
PROJECT TOTALS			3		498	495	0
EST. 5% FOR REPLACING TOP SOIL ON BORROW						25	
GRAND TOTAL			3			520	
SAY			5			540	

B–5129 (BRIDGE #42) SUMMARY OF EARTHWORK
IN CUBIC YARDS

SURVEY LINE	STATION	STATION	UNCLASSIFIED EXCAVATION	UNDERCUT	EMBANKMENT +30%	BORROW	WASTE
–L–	13+60.00	15+08.96	0		238	238	0
BRIDGE							
SUBTOTAL			0		238	238	0
BRIDGE							
–L–	16+21.21	17+85.00	1		205	204	0
SUBTOTAL			1		205	204	0
PROJECT TOTALS			1		443	442	0
EST. 5% FOR REPLACING TOP SOIL ON BORROW						22	
GRAND TOTAL			1			464	
SAY			5			480	

NORTH CAROLINA PROFESSIONAL SEAL 19661 ENGINEER KEVIN AUSTIN 6/12/09

B–5129 (BRIDGE #35) SUMMARY OF EARTHWORK
IN CUBIC YARDS

SURVEY LINE	STATION	STATION	UNCLASSIFIED EXCAVATION	UNDERCUT	EMBANKMENT +30%	BORROW	WASTE
–L–	13+25.00	14+83.64	28		153	125	0
BRIDGE							
SUBTOTAL			28		153	125	0
BRIDGE							
–L–	15+75.90	17+25.00	0		299	299	0
SUBTOTAL			0		299	299	0
PROJECT TOTALS			28		452	424	0
EST. 5% FOR REPLACING TOP SOIL ON BORROW						21	
GRAND TOTAL			28			445	
SAY			30			460	

B–4594 (BRIDGE #44) SUMMARY OF EARTHWORK
IN CUBIC YARDS

SURVEY LINE	STATION	STATION	UNCLASSIFIED EXCAVATION	UNDERCUT	EMBANKMENT +30%	BORROW	WASTE
–L–	14+75.00	15+65.11	1		61	60	0
BRIDGE							
SUBTOTAL			1		61	60	0
BRIDGE							
–L–	16+47.29	17+30.00	2		57	55	0
SUBTOTAL			2		57	55	0
PROJECT TOTALS			3		118	115	0
EST. 5% FOR REPLACING TOP SOIL ON BORROW						6	
GRAND TOTAL			3			121	
SAY			5			130	

B–5129 (BRIDGE #40) SUMMARY OF EARTHWORK
IN CUBIC YARDS

SURVEY LINE	STATION	STATION	UNCLASSIFIED EXCAVATION	UNDERCUT	EMBANKMENT +30%	BORROW	WASTE
–L–	12+75.00	15+09.86	8		257	249	0
BRIDGE							
SUBTOTAL			8		257	249	0
BRIDGE							
–L–	16+02.14	17+50.00	1		215	214	0
SUBTOTAL			1		215	214	0
PROJECT TOTALS			9		472	463	0
EST. 5% FOR REPLACING TOP SOIL ON BORROW						23	
GRAND TOTAL			9			486	
SAY			10			510	

TOTAL SUMMARY OF EARTHWORK FOR B–5129 & B–4594
IN CUBIC YARDS

SURVEY LINE	STATION	STATION	UNCLASSIFIED EXCAVATION	UNDERCUT	EMBANKMENT +30%	BORROW	WASTE
BRIDGE #31	13+50.00	17+90.00	3		498	495	0
BRIDGE #35	13+25.00	17+25.00	28		452	424	0
BRIDGE #40	12+75.00	17+50.00	9		472	463	0
BRIDGE #42	13+60.00	17+85.00	1		443	442	0
BRIDGE #44	14+75.00	17+30.00	3		118	115	0
PROJECT TOTALS			44		1983	1939	0
EST. 5% FOR REPLACING TOP SOIL ON BORROW						97	
GRAND TOTAL			44			2036	
SAY			55			2120	

6/12/2009 6:44:25 AM R:\Structures\PAM\CO_RDY-SUM.dgn

B-5129

#31 PAMLICO

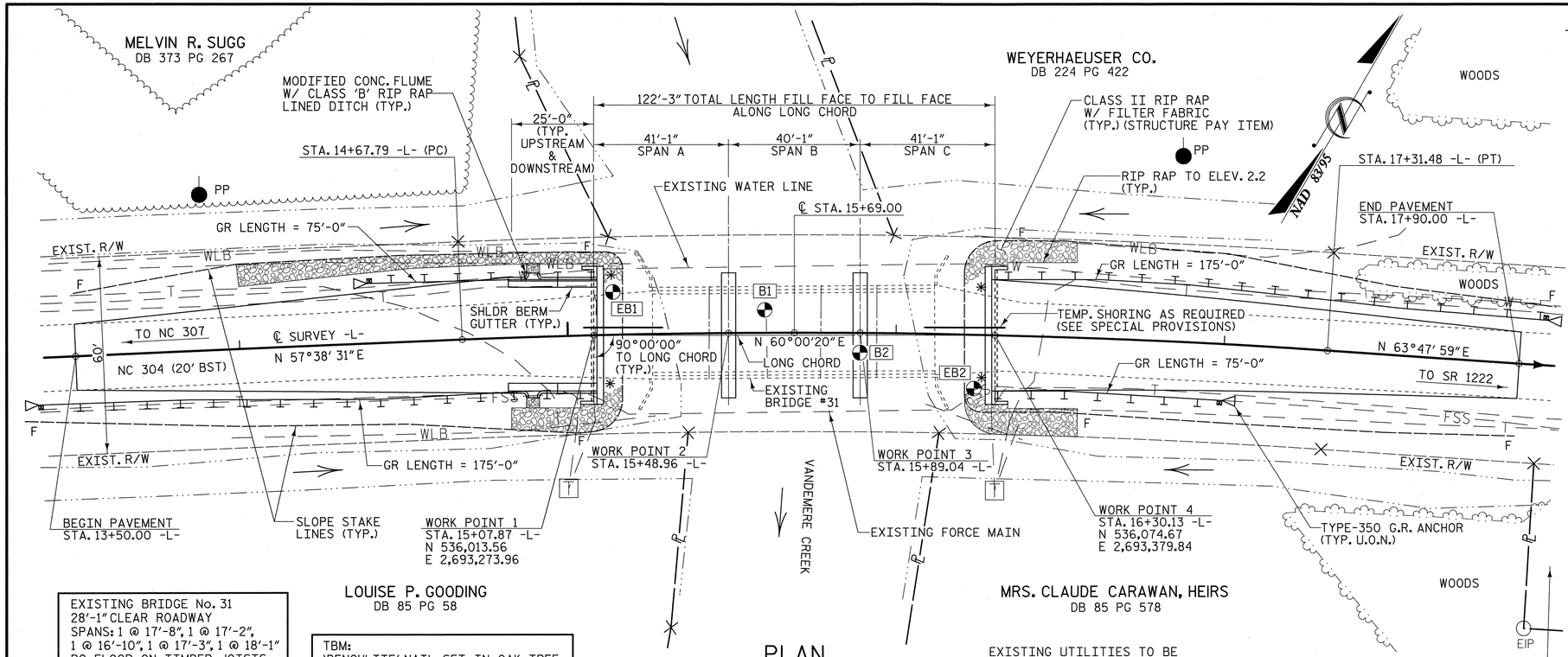

EXISTING BRIDGE No. 31
28'-1" CLEAR ROADWAY
SPANS: 1 @ 17'-8", 1 @ 17'-2", 1 @ 16'-10", 1 @ 17'-3", 1 @ 18'-1"
RC FLOOR ON TIMBER JOISTS
END BENTS & INT. BENTS-TIMBER CAPS/TIMBER PILES

TBM:
'BENCHLITE' NAIL SET IN OAK TREE
57.01' RIGHT OF -L- STA. 16+90.60
ELEV. 2.74

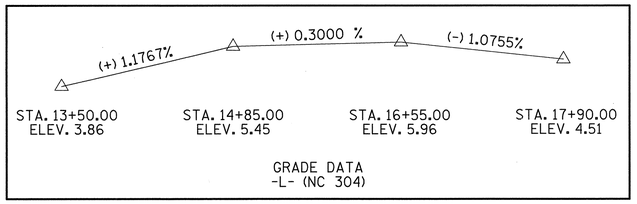

PLAN
SCALE : 1" = 20'

- DENOTES GEO-TECH BORE HOLE LOCATIONS.
- * DENOTES GUARDRAIL CONNECTION REQ'D. (TYPE III) SEE "GUARDRAIL ANCHORAGE DETAILS" SHEET.

NOTE: GUARDRAIL LENGTHS AS SHOWN INCLUDE ANCHOR UNITS.

U.O.N. - UNLESS OTHERWISE NOTED

FOR PAVEMENT LAYOUT & EASEMENT, SEE "ROADWAY DETAILS" SHEET.

EXISTING UTILITIES TO BE RELOCATED BY OTHERS PRIOR TO PROJECT LETTING

HYDROGRAPHIC DATA:

DESIGN DISCHARGE -	1600 CFS
FREQUENCY OF DESIGN FLOOD -	50 YEAR
DESIGN HIGH WATER ELEVATION -	1.2
DRAINAGE AREA -	12.4 SQ. MI.
BASIC DISCHARGE (Q 100) -	1950 CFS
BASIC HIGH WATER ELEVATION -	1.8

OVERTOPPING FLOOD DATA:

OVERTOPPING DISCHARGE -	4000 CFS
FREQUENCY OF OVERTOPPING FLOOD -	500 YEAR +
OVERTOPPING FLOOD ELEVATION -	4.1

NOTES

ASSUMED LIVE LOAD = HS 20 OR ALTERNATE LOADING, EXCEPT THAT CORED SLAB UNITS HAVE BEEN DESIGNED FOR HS 25.

FOR EROSION CONTROL MEASURES SEE EROSION CONTROL PLANS.

CLEARING ON THIS PROJECT SHALL BE PERFORMED TO THE LIMITS ESTABLISHED BY METHOD II.

REMOVAL OF EXISTING BRIDGE SHALL INCLUDE REMOVAL OF THE EXISTING ABUTMENTS AND BENTS ALONG WITH ALL EXISTING PILES. AS WELL AS REMNANT PILINGS FROM PREVIOUS BRIDGES, AS PER THE CAMA PERMIT.

THIS BRIDGE HAS BEEN DESIGNED BY THE STRENGTH DESIGN METHOD AS SPECIFIED IN AASHTO STANDARD SPECIFICATIONS.

THIS STRUCTURE CONTAINS THE FOLLOWING PRECAST CONCRETE PIECES: BENT CAPS, END BENT CAPS, BACKWALLS, WINGWALLS, AND WING FOOTINGS. EACH PRECAST CONCRETE PIECE SHALL BE STENCILED WITH ITS PIECE MARK. SEE PIECE MARKS CONTAINED IN THESE PLANS.

CLASS AA (4500 PSI) CONCRETE SHALL BE USED IN ALL PRECAST PIECES LISTED ABOVE AND SHALL CONTAIN CALCIUM NITRITE CORROSION INHIBITOR IN ACCORDANCE WITH THE STANDARD SPECIFICATIONS.

REMOVAL OF THE EXISTING BRIDGE SHALL BE PERFORMED SO AS NOT TO ALLOW DEBRIS TO FALL INTO THE WATER. THE CONTRACTOR SHALL REMOVE THE BRIDGE AND SUBMIT PLANS FOR THE DEMOLITION IN ACCORDANCE WITH ARTICLE 402-2 OF THE STANDARD SPECIFICATIONS.

THE SUBSTRUCTURE OF THE EXISTING BRIDGE INDICATED ON THE PLANS IS FROM THE BEST INFORMATION AVAILABLE. SINCE THIS INFORMATION IS SHOWN FOR THE CONVENIENCE OF THE CONTRACTOR, THE CONTRACTOR SHALL HAVE NO CLAIM WHATSOEVER AGAINST THE DEPARTMENT OF TRANSPORTATION FOR ANY DELAYS OR ADDITIONAL COST INCURRED BASED ON DIFFFERENCES BETWEEN THE EXISTING BRIDGE SUBSTRUCTURE SHOWN ON THE PLANS AND THE ACTUAL CONDITIONS AT THE PROJECT SITE.

THIS STRUCTURE HAS BEEN DESIGNED IN ACCORDANCE WITH HEC 18, "EVALUATING SCOUR AT BRIDGES", MAY 2001.

THE SCOUR CRITICAL ELEVATION FOR INTERIOR BENTS No. 1 AND 2 IS -14 FT. THE SCOUR CRITICAL ELEVATIONS ARE FOR USE BY MAINTENANCE FORCES TO MONITOR POSSIBLE SCOUR PROBLEMS DURING THE LIFE OF THE STRUCTURE.

THIS STRUCTURE HAS BEEN DESIGNED IN ACCORDANCE WITH FHWA'S TECHNICAL ADVISORY T5140.20 (SCOUR AT BRIDGES).

THIS BRIDGE HAS BEEN DESIGNED IN ACCORDANCE WITH THE REQUIREMENTS OF THE STANDARD SPECIFICATIONS FOR SEISMIC DESIGN OF HIGHWAY BRIDGES FOR SEISMIC CATEGORY A.

ADT = 1500 FOR YEAR 1999

ROADWAY APPROACH EMBANKMENT SHALL BE WIDENED AS NECESSARY FOR GUARDRAIL INSTALLATION.

THIS STRUCTURE CONTAINS THE NECESSARY CORROSION PROTECTION REQUIRED FOR A CORROSIVE SITE.

ALL BAR SUPPORTS USED IN THE PRECAST PIECES AND ALL INCIDENTAL REINFORCING STEEL SHALL BE EPOXY COATED IN ACCORDANCE WITH THE STANDARD SPECIFICATIONS.

(NOTES CONTINUED ON "FOUNDATION LAYOUT" SHEET)

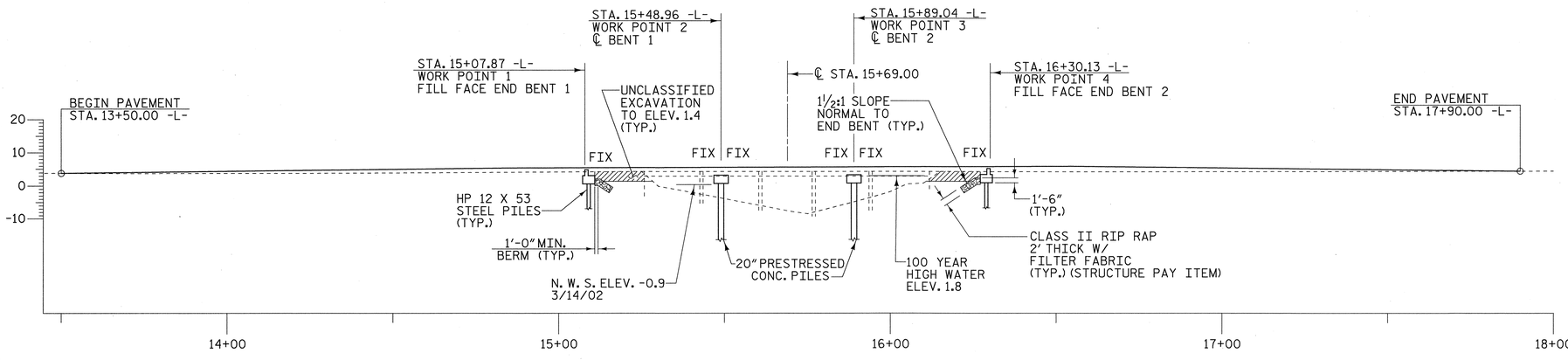

PROFILE ALONG ℄ SURVEY
SCALE : 1" = 20'

▨ DENOTES ROADWAY FILL TO BE REMOVED

NORTH CAROLINA PROFESSIONAL SEAL 19661 ENGINEER L. KEVIN AUSTIN 6/7/09

PLANS PREPARED BY:

MULKEY
ENGINEERS & CONSULTANTS
PO Box 33127
Raleigh, N.C. 27636
(919) 851-1913
(919) 851-1918 (FAX)
WWW.MULKEYINC.COM

PROJECT NO. 42287

PAMLICO COUNTY

STATION: 15+69.00 -L-

REPLACES BRIDGE NO. 31

STATE OF NORTH CAROLINA
DEPARTMENT OF TRANSPORTATION
RALEIGH

GENERAL DRAWING FOR BRIDGE ON NC 304 OVER VANDEMERE CREEK BETWEEN NC 307 & SR 1222

33'-10" CLEAR ROADWAY - 90° SKEW

REVISIONS						SHEET NO.
NO.	BY:	DATE:	NO.	BY:	DATE:	4
1			3			TOTAL SHEETS
2			4			185

DRAWN BY : W. B. ALLEN DATE : 2/05
CHECKED BY : L. K. AUSTIN DATE : 2/09

6/5/2009 2:40:53 PM R:\Structures\B5298_SD_00.0.dgn

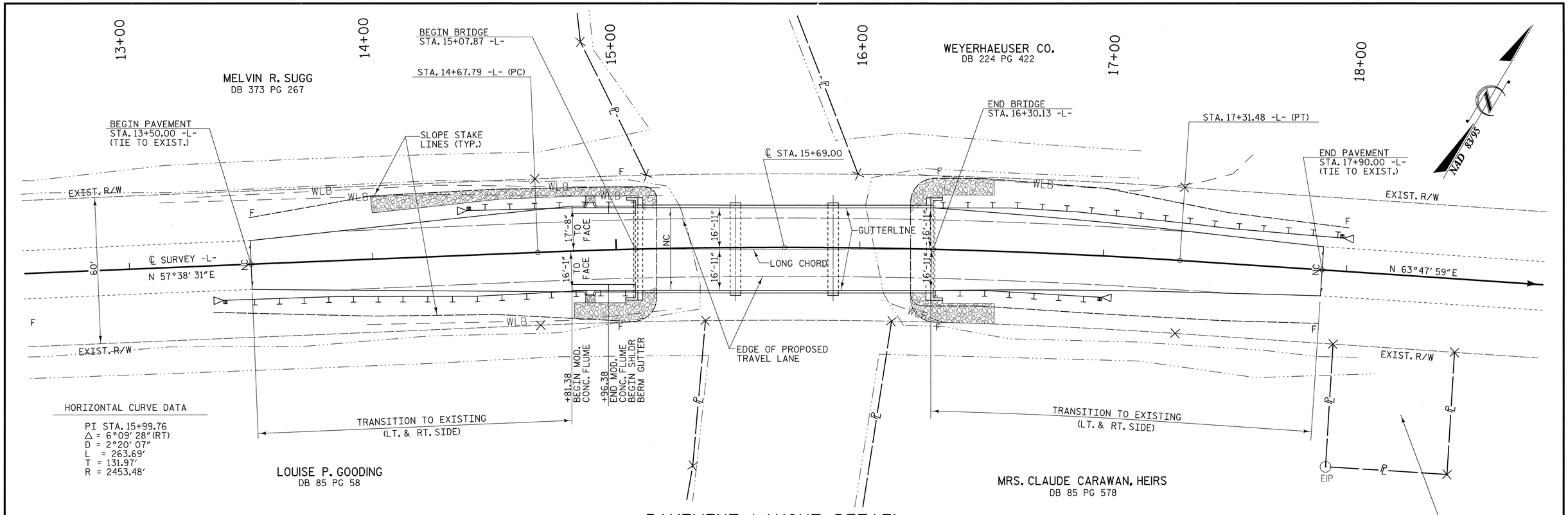

PAVEMENT LAYOUT DETAIL

SCALE : 1'' = 20'

HORIZONTAL CURVE DATA

PI STA. 15+99.76
Δ = 6°09' 28"(RT)
D = 2°20' 07"
L = 263.69'
T = 131.97'
R = 2453.48'

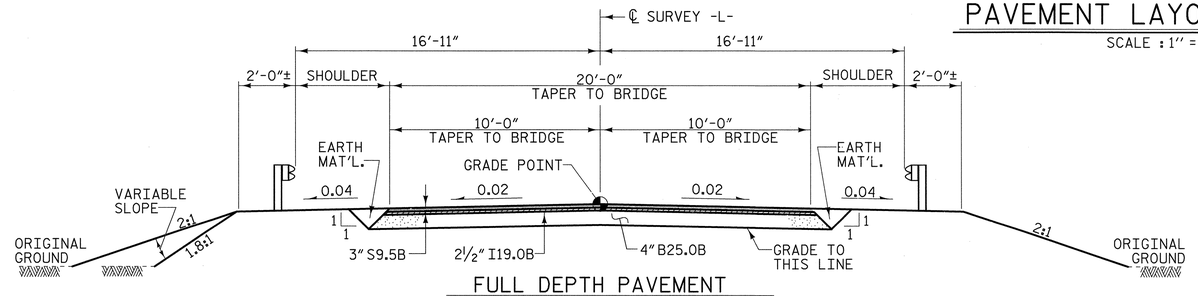

FULL DEPTH PAVEMENT

FROM -L- STA. 14+50 TO BEGIN BRIDGE
FROM END BRIDGE TO -L- STA. 17+00

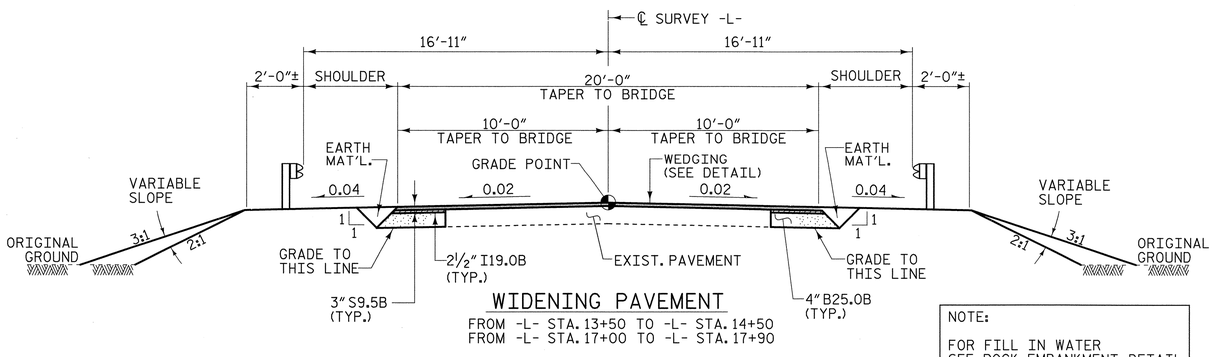

WIDENING PAVEMENT

FROM -L- STA. 13+50 TO -L- STA. 14+50
FROM -L- STA. 17+00 TO -L- STA. 17+90

NOTE:

FOR FILL IN WATER
SEE ROCK EMBANKMENT DETAIL
SHEET 2-A

TYPICAL ROADWAY SECTION

WITHIN CONSTRUCTION LIMITS

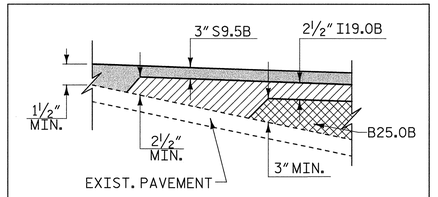

WEDGING DETAIL

DATUM DESCRIPTION

THE LOCALIZED COORDINATE SYSTEM DEVELOPED FOR THIS PROJECT IS BASED ON THE STATE PLANE COORDINATES ESTABLISHED BY OTHERS FOR MONUMENT "MA2003B-2" WITH NAD 1983/95 STATE PLANE GRID COORDINATES OF NORTHING: 535121.197(ft) EASTING: 2691929.490(ft) THE AVERAGE COMBINED GRID FACTOR USED ON THIS PROJECT (GROUND TO GRID) IS: 0.99987861 THE N.C. LAMBERT GRID BEARING AND LOCALIZED HORIZONTAL GROUND DISTANCE FROM "MA2003B-2" TO -L- STATION 14+67.79 IS N 56°23'02" E 1573.60' ALL LINEAR DIMENSIONS ARE LOCALIZED HORIZONTAL DISTANCES VERTICAL DATUM USED IS NAVD 88

THE QUANTITY OF RIP RAP TO BE PAID FOR WILL BE THE ACTUAL NUMBER OF TONS OF EACH CLASS OF RIP RAP WHICH HAS BEEN INCORPORATED INTO THE COMPLETED AND ACCEPTED WORK. THE RIP RAP WILL BE MEASURED BY BEING WEIGHED IN TRUCKS ON CERTIFIED PLATFORM SCALES OR OTHER CERTIFIED WEIGHING DEVICES. THE QUANTITY OF RIP RAP WILL BE PAID FOR AT THE CONTRACT UNIT PRICE PER TON:

RIP RAP CLASS II (2'-0'' THICK)	
END BENT No. 1	125 TONS
END BENT No. 2	90 TONS
TOTAL	215 TONS

FILTER FABRIC	
END BENT No. 1	140 SQ. YARDS
END BENT No. 2	100 SQ. YARDS
TOTAL	240 SQ. YARDS

PROJECT NO. 42287

PAMLICO COUNTY

STATION: 15+69.00 -L-

REPLACES BRIDGE NO. 31

STATE OF NORTH CAROLINA
DEPARTMENT OF TRANSPORTATION
RALEIGH

ROADWAY DETAILS

33'-10" CLEAR ROADWAY - 90° SKEW

NORTH CAROLINA PROFESSIONAL ENGINEER SEAL 19661 L. KEVIN AUSTIN 8/6/09

PLANS PREPARED BY:

MULKEY
ENGINEERS & CONSULTANTS
PO Box 33127
Raleigh, N.C. 27636
(919) 851-1918
(919) 851-1918 (FAX)
WWW.MULKEYINC.COM

REVISIONS						SHEET NO.
NO.	BY:	DATE:	NO.	BY:	DATE:	5
1			3			TOTAL SHEETS
2			4			185

DRAWN BY : W. B. ALLEN DATE : 3/05
CHECKED BY : L. K. AUSTIN DATE : 2/09

8/6/2009 10:57:57 AM G:\projects\2004\224.08_Pamlico\Structures\B5298_SD_02.dgn

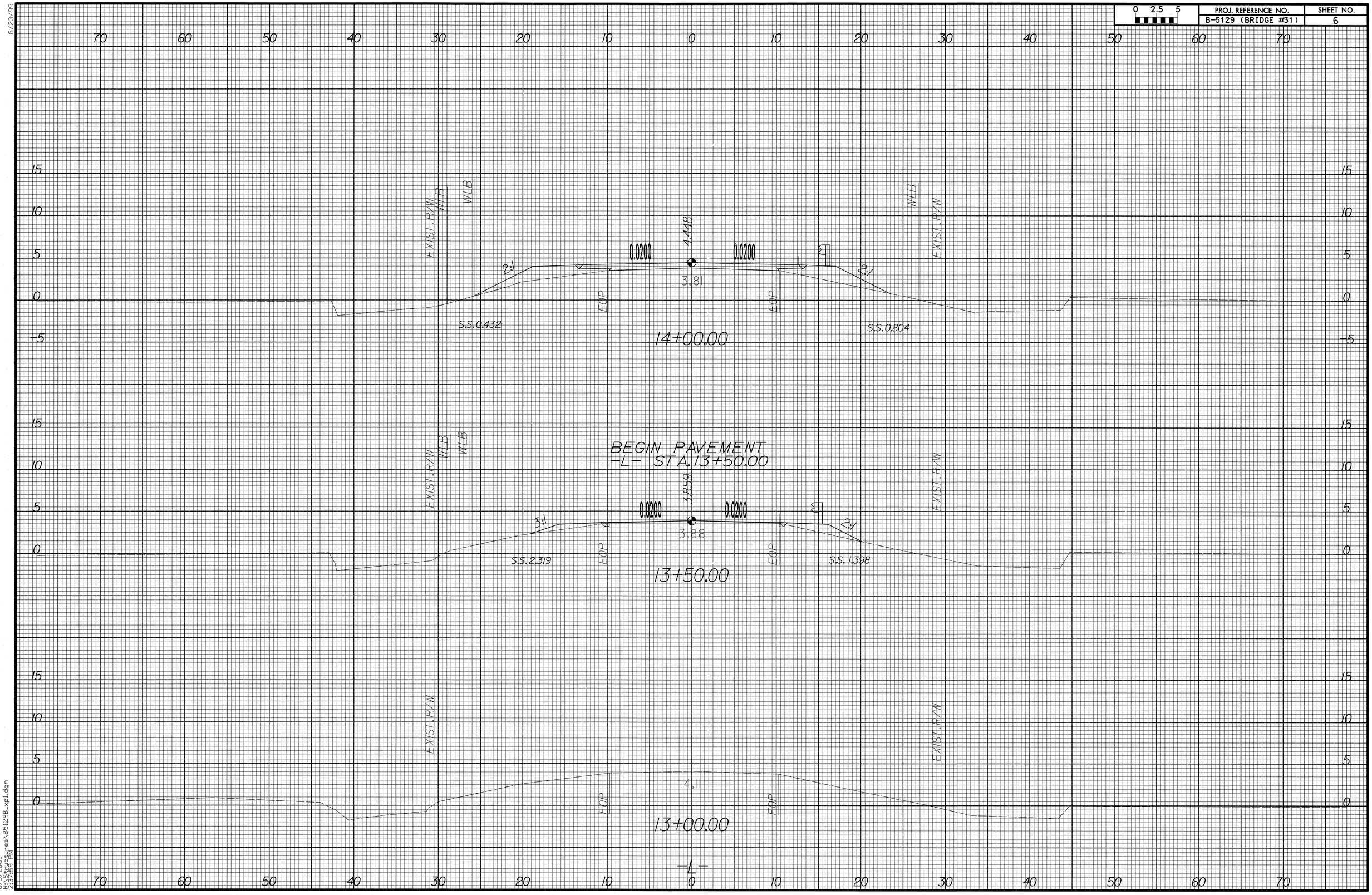

0 2.5 5
PROJ. REFERENCE NO.
B-5129 (BRIDGE #31)
SHEET NO.
6
8/23/99
EXIST. R/W
WLB
4.448
0.0200
0.0200
2:1
3.81
EOP
S.S. 0.432
S.S. 0.804
14+00.00
BEGIN PAVEMENT
-L- STA. 13+50.00
3.859
3:1
3.86
S.S. 2.319
S.S. 1.398
13+50.00
4.1
13+00.00
-L-
6/5/2009
R:\Structures\B5129B_xpl.dgn
2:37:59 PM

8/23/99

0 2.5 5	PROJ. REFERENCE NO.	SHEET NO.
	B-5129 (BRIDGE #31)	7

BEGIN BRIDGE
-L- STA 15+07.87

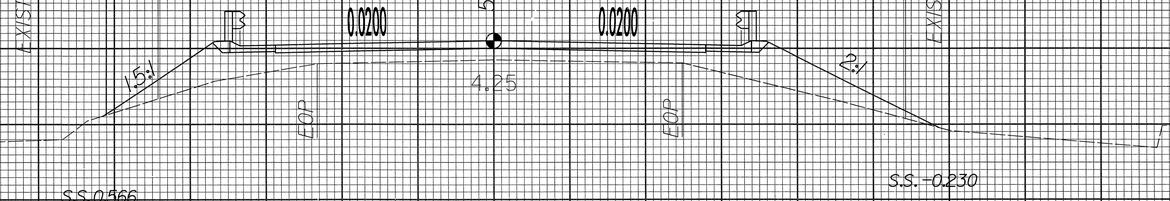

15+00.00

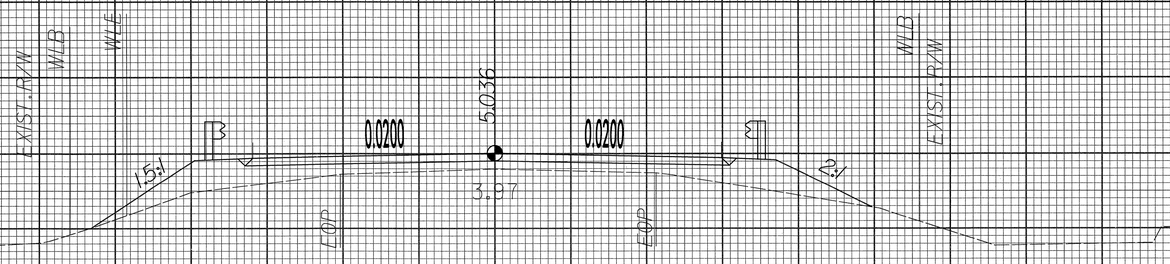

14+50.00

-L-

6/5/2009
R:\Structures\B5129B_xs1.dgn
2:37:53 PM

8/23/99

0 2.5 5	PROJ. REFERENCE NO.	SHEET NO.
	B-5129 (BRIDGE #31)	8

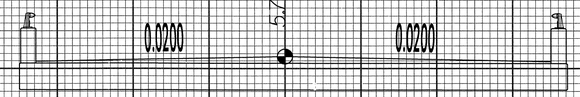

EXIST. R/W

EXIST. R/W

-1.74

16+00.00

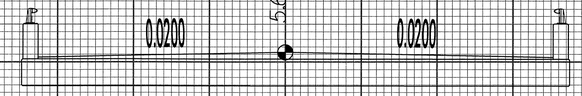

EXIST. R/W

EXIST. R/W

-3.84

15+50.00

-L-

6/5/2009
R:\Structures\B5129B_xpl.dgn
2:37:43 PM

8/23/99

0 2.5 5	PROJ. REFERENCE NO.	SHEET NO.
	B-5129 (BRIDGE #31)	9

END PAVEMENT
-L- STA 17+90.00

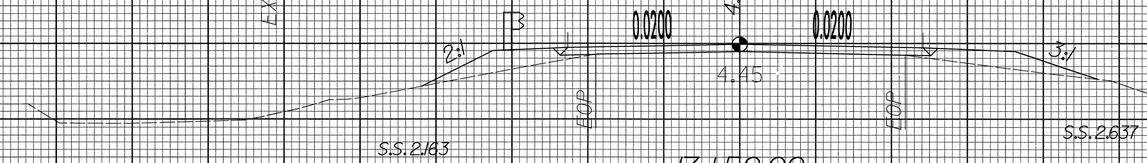

17+50.00

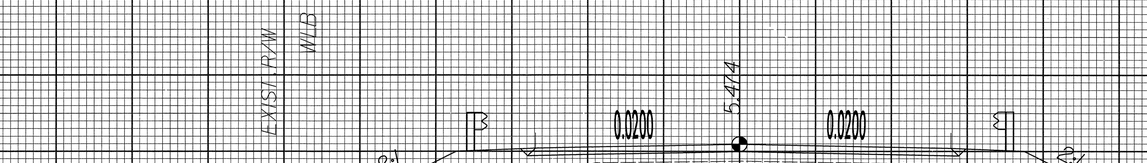

17+00.00

END BRIDGE
-L- STA 16+30.13

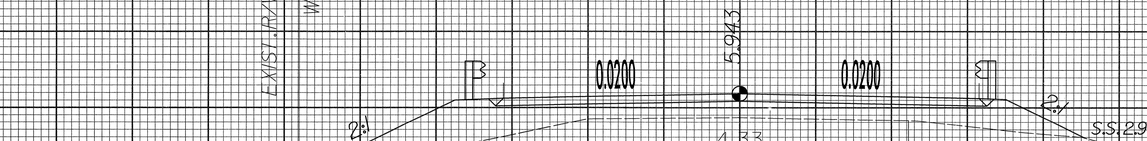

16+50.00

-L-

6/5/2009
R:\Structures\B5129B_xpl.dgn
2:37:43 PM

8/23/99

0 2.5 5	PROJ. REFERENCE NO.	SHEET NO.
	B-5129 (BRIDGE #31)	10

70 60 50 40 30 20 10 0 10 20 30 40 50 60 70

20 15 10 5 0

EXIST. R/W

EXIST. R/W

4.59

EOP

EOP

18+50.00

EXIST. R/W

EXIST. R/W

2%

4.51

EOP

EOP

S.S. 2.701

18+00.00

-L-

70 60 50 40 30 20 10 0 10 20 30 40 50 60 70

6/5/2009
R:\Structures\B5129B_xp1.dgn
1:37:28 PM

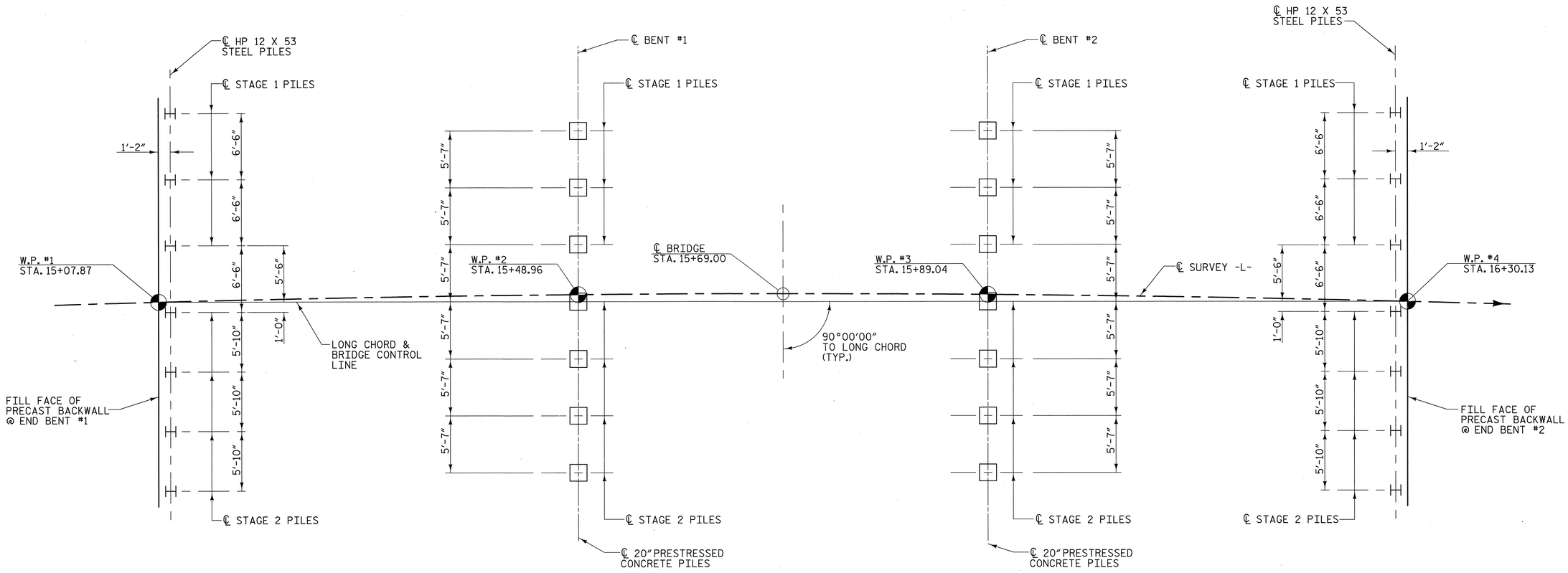

END BENT #1 | BENT #1 | BENT #2 | END BENT #2

FOUNDATION LAYOUT

(DIMENSIONS LOCATING PILES ARE TO THE CENTERLINE OF THE PILE AT THE BOTTOM OF THE CAP)

NOTES (CONTINUED FROM "GENERAL DRAWING")

THE CONCRETE IN THE PRECAST PIECES AND ALL PILES SHALL CONTAIN SILICA FUME. SILICA FUME SHALL BE SUBSTITUTED FOR 5% OF THE PORTLAND CEMENT BY WEIGHT. IF THE OPTION OF ARTICLE 1024-1 OF THE STANDARD SPECIFICATIONS TO PARTIALLY SUBSTITUTE CLASS F FLY ASH FOR PORTLAND CEMENT IS EXERCISED. THEN THE RATE OF FLY ASH SUBSTITUTION SHALL BE REDUCED TO 1.0 LB. OF FLY ASH PER 1.0 LB. OF CEMENT. NO PAYMENT WILL BE MADE FOR THIS SUBSTITUTION AS IT IS CONSIDERED INCIDENTAL TO THE VARIOUS PAY ITEMS.

PRESTRESSED CONCRETE CORED SLAB UNITS AND 20" PRESTRESSED CONCRETE PILES SHALL CONTAIN CALCIUM NITRITE CORROSION INHIBITOR IN ACCORDANCE WITH THE STANDARD SPECIFICATIONS.

THE CONTRACTOR SHALL SUBMIT WORKING DRAWINGS FOR ALL PRECAST PIECES. FOR SUBMITTAL OF WORKING DRAWINGS, SEE SPECIAL PROVISIONS.

FOR FALSEWORK AND FORMWORK, SEE SPECIAL PROVISIONS.

THIS BRIDGE SHALL BE CONSTRUCTED USING TOP-DOWN CONSTRUCTION METHODS. THE USE OF TEMPORARY CAUSEWAY OR WORK BRIDGE IS NOT PERMITTED.

FOR CRANE SAFETY, SEE SPECIAL PROVISIONS.

NOTES (FOR FOUNDATION LAYOUT)

PILES FOR END BENT NO. 1 AND 2 SHALL BE DRIVEN TO A MINIMUM BEARING CAPACITY OF 90 TONS EACH. THE BEARING CAPACITY IS EQUAL TO THE ALLOWABLE BEARING CAPACITY WITH A MINIMUM FACTOR OF SAFETY OF TWO.

THE ALLOWABLE BEARING CAPACITY FOR PILES AT END BENT NO. 1 AND 2 IS 45 TONS PER PILE.

STEEL PILE TIPS ARE REQUIRED FOR THE PRESTRESSED CONCRETE PILES AT INTERIOR BENTS NO. 1 & 2. SEE SECTION 450 OF THE STANDARD SPECIFICATIONS.

DRIVE PILES AT BENTS NO. 1 AND 2 TO A REQUIRED BEARING CAPACITY OF 120 TONS PER PILE. THE REQUIRED BEARING CAPACITY IS EQUAL TO THE ALLOWABLE BEARING CAPACITY WITH A MINIMUM FACTOR OF SAFETY OF TWO.

THE ALLOWABLE BEARING CAPACITY FOR PILES AT BENTS NO. 1 AND 2 IS 60 TONS PER PILE.

DRIVE PILES AT BENTS NO. 1 AND 2 TO A TIP ELEVATION OF NO HIGHER THAN -41 FEET.

TESTING THE FIRST PRODUCTION PILE WITH THE PILE DRIVING ANALYZER (PDA) DURING DRIVING, RESTRIKING OR REDRIVING IS REQUIRED AT BENTS NO. 1 AND 2. SEE PILE DRIVING ANALYZER SPECIAL PROVISION.

GALVANIZED STEEL PILES ARE REQUIRED IN ACCORDANCE WITH SECTION 450 OF THE STANDARD SPECIFICATIONS.

STEEL PILE POINTS (WITH TEETH) ARE REQUIRED FOR STEEL PILES AT END BENTS NO. 1 AND 2. SEE SECTION 450 OF THE STANDARD SPECIFICATIONS.

NORTH CAROLINA PROFESSIONAL SEAL 19661 ENGINEER KEVIN AUSTIN 6/7/09

PLANS PREPARED BY:

MULKEY
ENGINEERS & CONSULTANTS
PO Box 33127
Raleigh, N.C. 27636
(919) 851-1911 (TEL)
(919) 851-1912 (FAX)
WWW.MULKEYINC.COM

PROJECT NO. 42287

PAMLICO COUNTY

STATION: 15+69.00 -L-

REPLACES BRIDGE NO. 31

STATE OF NORTH CAROLINA
DEPARTMENT OF TRANSPORTATION
RALEIGH

FOUNDATION LAYOUT

33'-10" CLEAR ROADWAY - 90° SKEW

REVISIONS						SHEET NO.
NO.	BY:	DATE:	NO.	BY:	DATE:	11
1			3			TOTAL SHEETS
2			4			185

DRAWN BY : W. B. ALLEN DATE : 3/09
CHECKED BY : L. K. AUSTIN DATE : 3/09

6/5/2009 2:34:47 PM R:\Structures\B5298_SD_FL_0.dgn

SUPERSTRUCTURE SUMMARY

	40' EXTERIOR CORED SLAB	40' INTERIOR CORED SLAB (W/ 12" VOIDS)	40' INTERIOR CORED SLAB (W/ 8" VOIDS)	TYPE I ELASTOMERIC BEARING PAD	CAST-IN-PLACE CONCRETE PARAPET	ONE BAR METAL RAIL
	EACH	EACH	EACH	EACH	LIN. FT.	LIN. FT.
SUPERSTRUCTURE						
SPAN A	2	9	1	24		
SPAN B	2	9	1	24		
SPAN C	2	9	1	24		
TOTAL	6	27	3	72	244.33	225.33

SUBSTRUCTURE SUMMARY

	PIECE EB131	PIECE EB231	PIECE EB331	PIECE EB431	PIECE BW1	PIECE BW2	PIECE WW1	PIECE WF1	PIECE B131	PIECE B231	HP 12 X 53 GALVANIZED STEEL PILES		20" PRESTRESSED CONCRETE PILE	
	EACH	EACH	EACH	EACH	EACH	EACH	EACH	EACH	EACH	EACH	EA.	LIN.FT.	EA.	LIN.FT.
SUBSTRUCTURE														
END BENT #1	1	1			2	2	2	2			7	560.0		
BENT #1									1	1			7	420.0
BENT #2									1	1			7	420.0
END BENT #2			1	1	2	2	2	2			7	560.0		
TOTAL	1	1	1	1	4	4	4	4	2	2	14	1120.0	14	840.0

PROJECT NO. 42287

PAMLICO COUNTY

STATION: 15+69.00 -L-

REPLACES BRIDGE NO. 31

STATE OF NORTH CAROLINA
DEPARTMENT OF TRANSPORTATION
RALEIGH

SUPERSTRUCTURE & SUBSTRUCTURE SUMMARY

33'-10" CLEAR ROADWAY - 90° SKEW

NORTH CAROLINA PROFESSIONAL SEAL 19661 ENGINEER L. KEVIN AUSTIN 6/7/09

PLANS PREPARED BY:

MULKEY
ENGINEERS & CONSULTANTS
PO Box 33127
Raleigh, N.C. 27636
(919) 851-1912
(919) 851-1918 (FAX)
WWW.MULKEYINC.COM

REVISIONS					
NO.	BY:	DATE:	NO.	BY:	DATE:
1			3		
2			4		

SHEET NO. 12

TOTAL SHEETS 185

DRAWN BY : W. B. ALLEN DATE : 2/09
CHECKED BY : L. K. AUSTIN DATE : 3/09

6/5/2009 2:34:4 PM R:\Structures\B5298_SD_SUM_OL.dgn

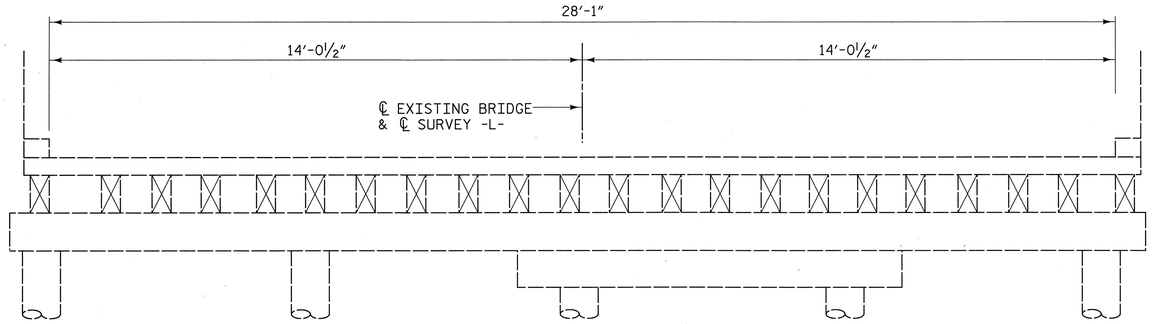

EXISTING BRIDGE

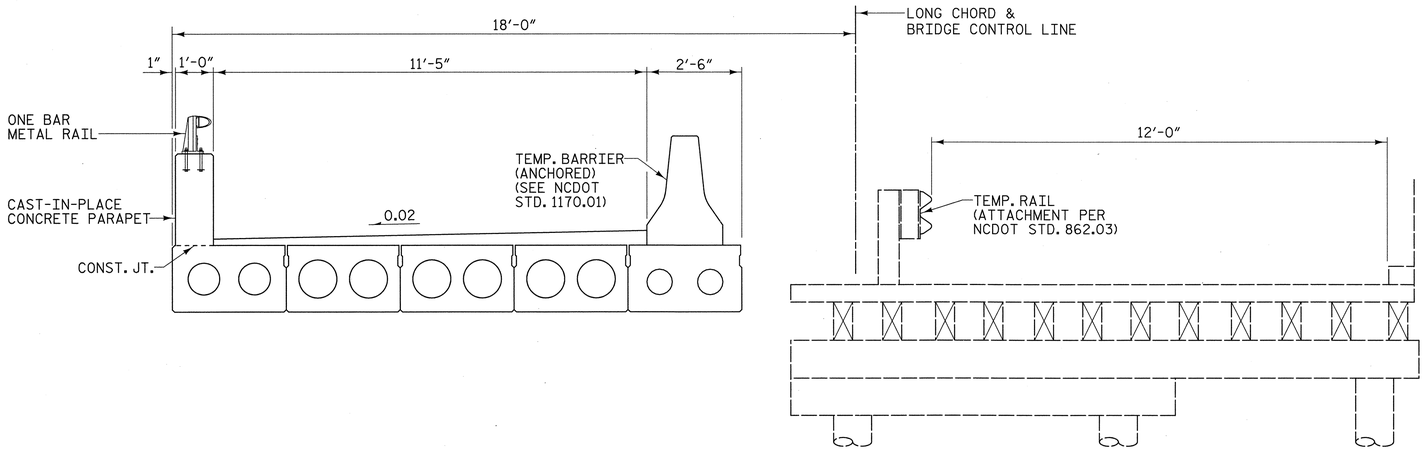

STAGE 1 CONSTRUCTION

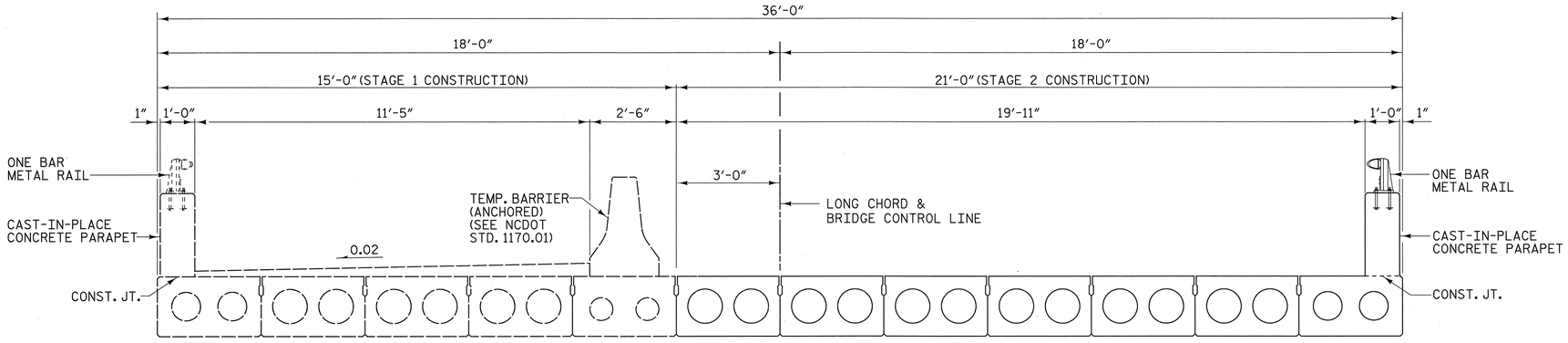

STAGE 2 CONSTRUCTION

PROJECT NO. 42287

PAMLICO COUNTY

STATION: 15+69.00 -L-

REPLACES BRIDGE NO. 31

STATE OF NORTH CAROLINA
DEPARTMENT OF TRANSPORTATION
RALEIGH

CONSTRUCTION STAGING

33′-10″ CLEAR ROADWAY - 90°SKEW

NORTH CAROLINA PROFESSIONAL SEAL 1966 ENGINEER L. KEVIN AUSTIN
6/7/09

PLANS PREPARED BY:

MULKEY
ENGINEERS & CONSULTANTS
PO Box 33127
Raleigh, N.C. 27636
(919) 851-1912
(919) 851-1918 (FAX)
WWW.MULKEYINC.COM

REVISIONS						SHEET NO.
NO.	BY:	DATE:	NO.	BY:	DATE:	13
1			3			TOTAL SHEETS
2			4			185

DRAWN BY : W. B. ALLEN DATE : 4/05
CHECKED BY : L. K. AUSTIN DATE : 3/09

6/5/2009 2:33:36 PM R:\Structures\B928B_SD_PC_OLD.DGN

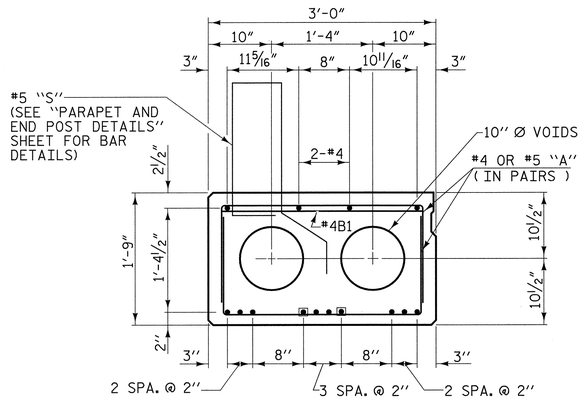

40' SPAN

12 - 0.6" Ø H.S. STRANDS
EXTERIOR SLAB SECTIONS
(CORED SLAB UNIT #1 & #12)

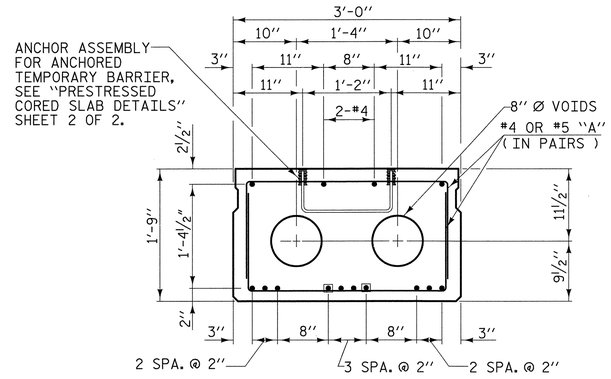

40' SPAN

12 - 0.6" Ø H.S. STRANDS
INTERIOR SLAB SECTION
(CORED SLAB UNIT #5)

■ DENOTES SHEATHED STRAND
(SEE SHEATH CHART)

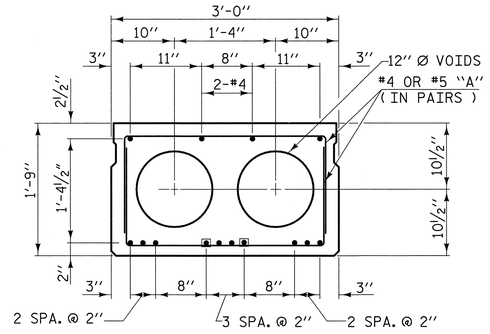

40' SPAN

12 - 0.6" Ø H.S. STRANDS
INTERIOR SLAB SECTIONS
(CORED SLAB UNITS #2 THRU #4 &
CORED SLAB UNITS #6 THRU #11)

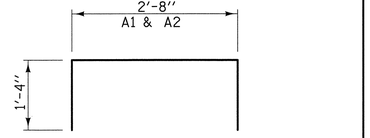

REINFORCING BAR TYPES

BAR DIMENSIONS ARE OUT TO OUT

SHEATH CHART		
SPAN LENGTH	NUMBER OF SHEATHED STRANDS PER EXTERIOR SLAB SECTIONS	NUMBER OF SHEATHED STRANDS PER INTERIOR SLAB SECTIONS
40'	2	2

BOND SHALL BE BROKEN ON THESE STRANDS
FOR A DISTANCE OF 3'-0" FROM END OF SLAB

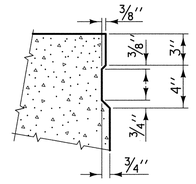

SHEAR KEY DETAIL

NOTE: OMIT SHEAR KEY ON OUTSIDE OF EXTERIOR CORED SLAB

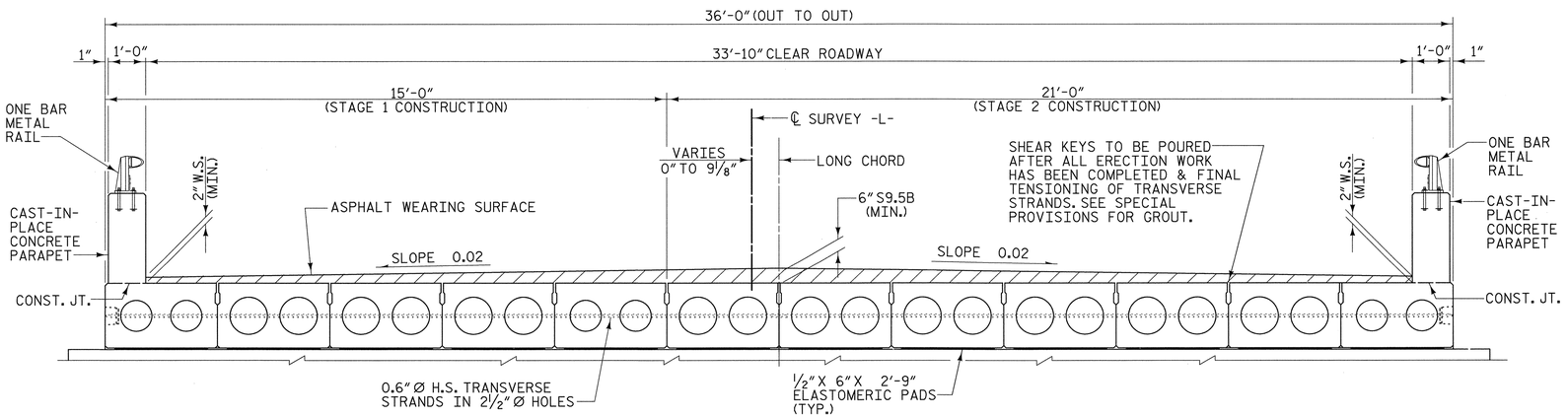

TYPICAL SECTION

GENERAL NOTES

ASSUMED LIVE LOAD = HS 25 OR ALTERNATE LOADING.

CONCRETE = f'c - 5000psi (MIN. COMP. STRENGTH @ 28 DAYS).

f'ci - 4000psi (MIN. COMP. STRENGTH @ TRANSFER OF STRESSING FORCE).

ALL PRESTRESSING STRANDS SHALL BE 7-WIRE LOW RELAXATION GRADE HIGH STRENGTH CABLES IN ACCORDANCE WITH THE STANDARD SPECIFICATIONS.

SIZE	TYPE	AREA	ULTIMATE STR.	APPLIED FORCE
0.6" Ø	HIGH STR.	0.217 SQ. IN. PER CABLE	58,600 LBS.	43,950 LBS. PER CABLE

STRUCTURAL STEEL ITEMS SHALL BE OF A GRADE CONFORMING TO EITHER ASTM A36 OR A373, EXCEPT HIGH STRENGTH BOLTS. HIGH STRENGTH BOLTS SHALL BE ASTM A325. ALL STRUCTURAL STEEL SHALL BE GALVANIZED AS PER THE SPECIFICATION.

ALL MATERIAL AND WORKMANSHIP SHALL COMPLY WITH THE APPLICABLE REQUIREMEMNTS OF THE STANDARD SPECIFICATIONS FOR ROADS AND STRUCTURES OF THE NC DEPARTMENT OF TRANSPORTATION DATED JULY 2006 AND WITH THE SPECIAL PROVISIONS.

ALL PRESTRESSING STRANDS SHALL BE 7-WIRE LOW RELAXATION GRADE 270 STRANDS AND SHALL CONFORM TO AASHTO M203 EXCEPT FOR SAMPLING REQUIREMENTS WHICH SHALL BE IN ACCORDANCE WITH THE STANDARD SPECIFICATIONS.

ALL REINFORCING STEEL CAST WITH THE CORED SLAB SECTIONS SHALL BE GRADE 60 AND SHALL BE INCLUDED IN THE UNIT PRICE BID FOR PRESTRESSED CONCRETE CORED SLABS.

RECESSES FOR TRANSVERSE STRANDS SHALL BE GROUTED AFTER THE TENSIONING OF THE STRANDS.

WHEN CORED SLABS ARE CAST, A POSITIVE HOLD-DOWN SYSTEM SHALL BE EMPLOYED TO PREVENT VOIDS FROM RISING OR MOVING SIDEWAYS. THIS SYSTEM SHALL BE DESIGNED TO BE LEFT IN PLACE UNTIL THE CONCRETE HAS REACHED RELEASE STRENGTH. AT LEAST THREE WEEKS PRIOR TO CASTING CORED SLABS, THE CONTRACTOR SHALL SUBMIT TO THE ENGINEER FOR REVIEW AND COMMENT, DETAILED DRAWINGS OF THE PROPOSED HOLD-DOWN SYSTEM. IN ADDITION TO STRUCTURAL DETAILS, LOCATION AND SPACING OF THE HOLD-DOWNS SHALL BE INDICATED.

WHEN A CONCRETE WEARING SURFACE IS DETAILED ON THE CORED SLAB BRIDGE TYPICAL SECTION, THE TOP SURFACE OF THE CORED SLAB UNITS SHALL HAVE A 3/8" RAKED FINISH.

PRESTRESSING STRANDS SHALL BE CUT FLUSH WITH THE CORED SLAB UNIT ENDS.

APPLY EPOXY PROTECTIVE COATING TO CORED SLAB UNIT ENDS.

UNLESS OTHERWISE NOTED ON THE PLANS, ALL EXPOSED CORNERS ON STRUCTURES SHALL BE CHAMFERED 3/4".

FOR DEFLECTION TABLE, SEE "PRESTRESSED CORED SLAB DETAILS" SHEET.

PROJECT NO. 42287

PAMLICO COUNTY

STATION: 15+69.00 -L-

REPLACES BRIDGE NO. 31

STATE OF NORTH CAROLINA
DEPARTMENT OF TRANSPORTATION
RALEIGH
STANDARD

PRESTRESSED CORED SLAB 40' SPAN

33'-10" CLEAR ROADWAY - 90° SKEW

NORTH CAROLINA PROFESSIONAL ENGINEER SEAL 19661 KEVIN AUSTIN 9/6/09

PLANS PREPARED BY:

MULKEY
ENGINEERS & CONSULTANTS
PO Box 33127
Raleigh, NC 27636
(919) 851-1912
(919) 851-1918 (FAX)
WWW.MULKEYINC.COM

REVISIONS						SHEET NO.
NO.	BY:	DATE:	NO.	BY:	DATE:	14
1			3			TOTAL SHEETS
2			4			185

DRAWN BY : W. B. ALLEN DATE : 3/05
CHECKED BY : L.K. AUSTIN DATE : 2/09

8/6/2009 6:03:14 AM G:\project\200A\224.08_Pamlico3\Structures\B5298_SD_TS_01.dgn

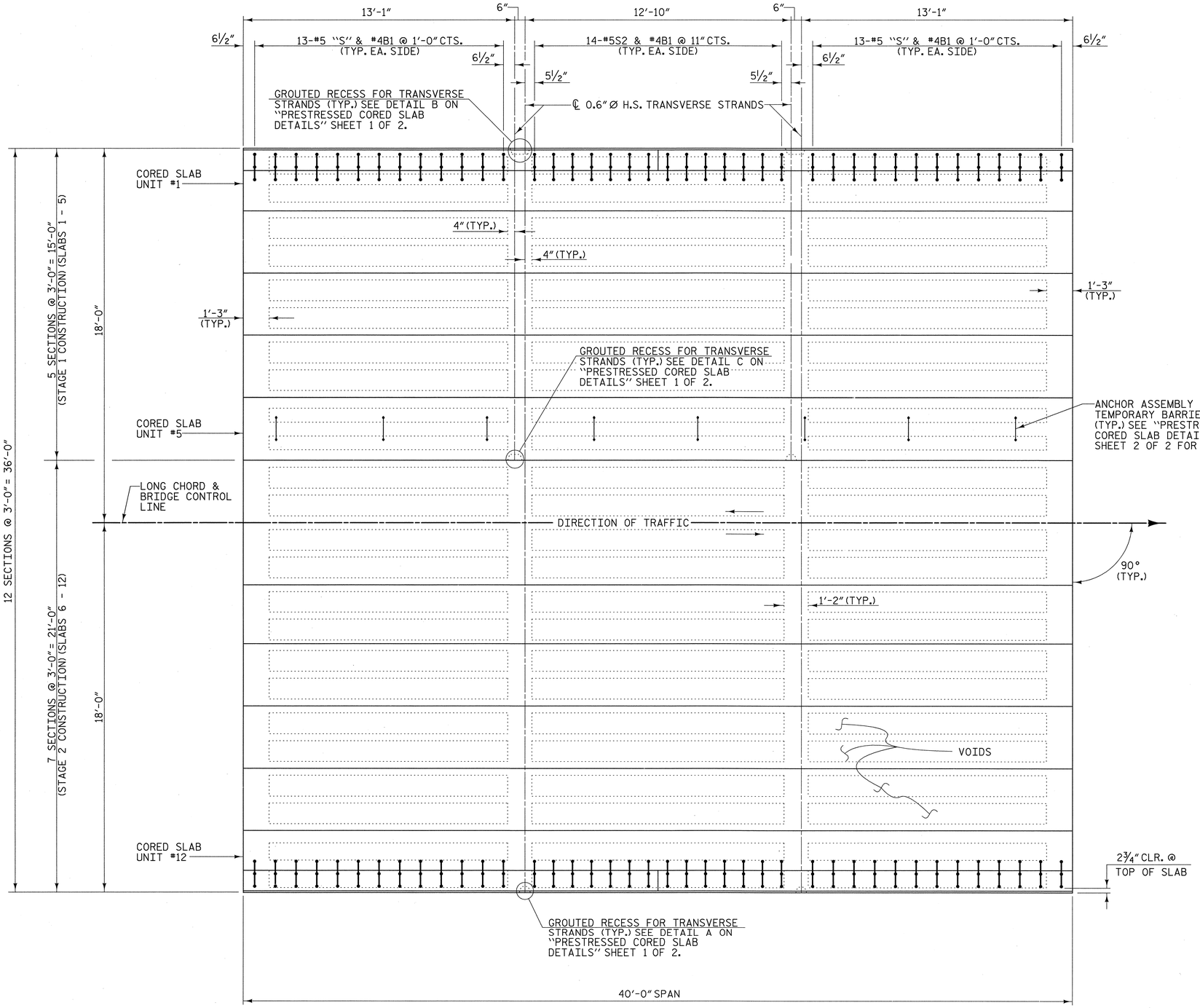

PLAN OF SPAN

NOTE:

SEE "PARAPET & END POST DETAILS" SHEET FOR "S" BAR MARKS.

FIXED END

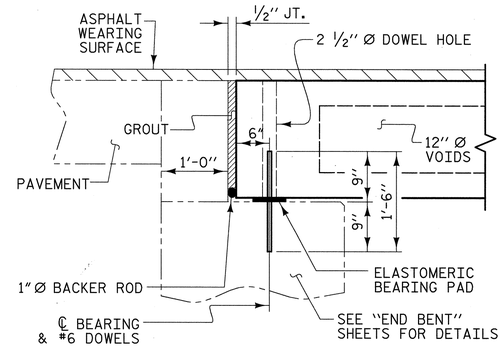

SECTION AT END BENT

FIXED END

FIXED END

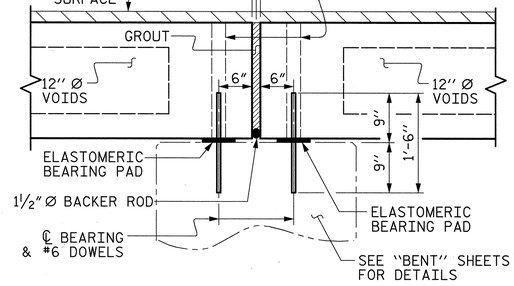

SECTION AT BENT

PROJECT NO. 42287

PAMLICO COUNTY

STATION: 15+69.00 -L-

REPLACES BRIDGE NO. 31

STATE OF NORTH CAROLINA
DEPARTMENT OF TRANSPORTATION
RALEIGH
STANDARD

PRESTRESSED CORED SLAB 40' SPAN

33'-10" CLEAR ROADWAY - 90° SKEW

NORTH CAROLINA PROFESSIONAL SEAL 19661 ENGINEER L. KEVIN AUSTIN 6/7/09

PLANS PREPARED BY:

MULKEY
ENGINEERS & CONSULTANTS
PO Box 33127
Raleigh, NC 27636
(919) 851-1982
(919) 851-1918 (FAX)
WWW.MULKEYINC.COM

REVISIONS						SHEET NO.
NO.	BY:	DATE:	NO.	BY:	DATE:	15
1			3			TOTAL SHEETS
2			4			185

DRAWN BY : W. B. ALLEN DATE : 3/05
CHECKED BY : L. K. AUSTIN DATE : 2/09

6/5/2009 2:32:06 PM R:\Structures\B3298_SD_CS_0.dgn

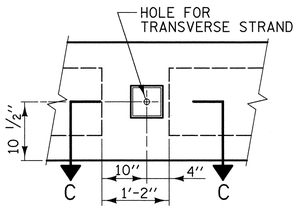

ELEVATION

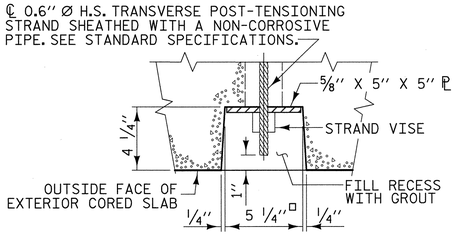

SECTION C-C

DETAIL A
GROUTED RECESS AT END OF POST-TENSIONED STRAND CORED SLAB

(CORED SLAB UNIT #12)

EXTERIOR SLAB UNIT	40′
CAMBER (SLAB UNIT ALONE IN PLACE)	1 1/16" (UP)
DEFLECTION (SUPERIMPOSED DEAD LOAD)	* 1/8" (DOWN)
FINAL DEFLECTION	15/16" (UP)
* INCLUDES FUTURE WEARING SURFACE	

INTERIOR SLAB UNIT	40′
CAMBER (SLAB UNIT ALONE IN PLACE)	1 3/16" (UP)
DEFLECTION (SUPERIMPOSED DEAD LOAD)	* 1/8" (DOWN)
FINAL DEFLECTION	1 1/16" (UP)
* INCLUDES FUTURE WEARING SURFACE	

NOTES

CONCRETE CHAMFERS:
UNLESS OTHERWISE NOTED ON THE PLANS, ALL EXPOSED CORNERS ON STRUCTURES SHALL BE CHAMFERED ¾" WITH THE FOLLOWING EXCEPTIONS: TOP CORNERS OF CURBS MAY BE ROUNDED TO 1½" RADIUS WHICH IS BUILT INTO CURB FORMS; CORNERS OF TRANSVERSE FLOOR EXPANSION JOINTS SHALL BE ROUNDED WITH A ¼" FINISHING TOOL UNLESS OTHERWISE REQUIRED ON PLANS; AND CORNERS OF EXPANSION JOINTS IN THE ROADWAY FACES AND TOPS OF CURBS AND SIDEWALKS SHALL BE ROUNDED TO A ¼" RADIUS WITH A FINISHING STONE OR TOOL UNLESS OTHERWISE ON PLANS.

DECK DRAINS ARE NOT PERMITTED.

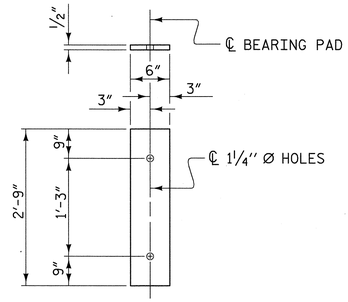

FIXED
(TYPE I - 72 REQ'D)

ELASTOMERIC BEARING DETAILS

NOTE: ELASTOMER HARDNESS SHALL BE 60 DUROMETERS.

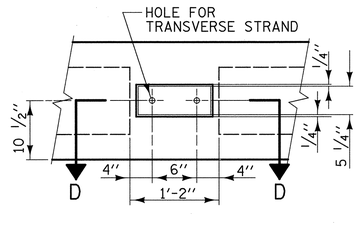

ELEVATION

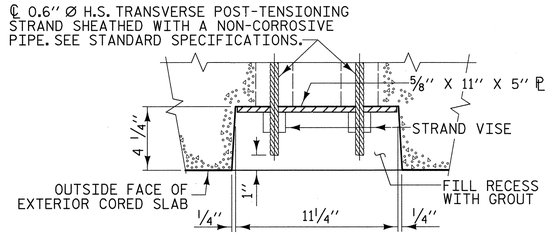

SECTION D-D

DETAIL B
GROUTED RECESS AT END OF POST-TENSIONED STRAND CORED SLAB

(CORED SLAB UNIT #1)

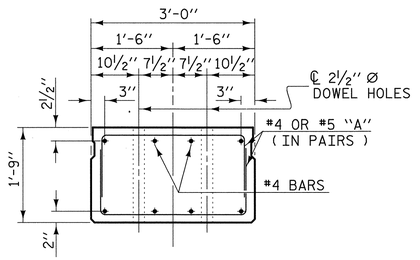

SLAB END ELEVATION

THE 2½" Ø DOWEL HOLES AT FIXED ENDS OF SLAB SECTIONS SHALL BE FILLED WITH NON-SHRINK GROUT, SEE SPECIAL PROVISIONS.

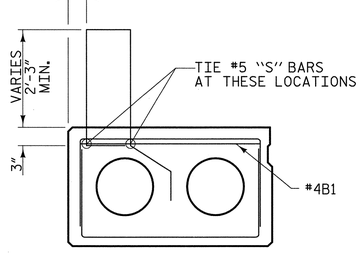

TIE LOCATION FOR #5 "S"

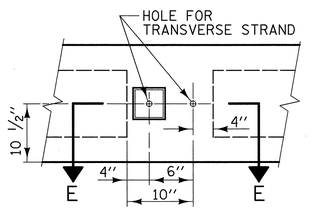

ELEVATION

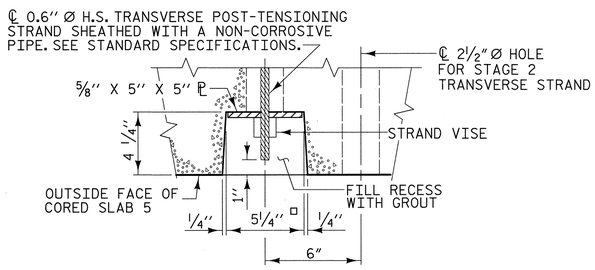

SECTION E-E

DETAIL C
GROUTED RECESS AT END OF POST-TENSIONED STRAND CORED SLAB

(CORED SLAB UNIT #5)

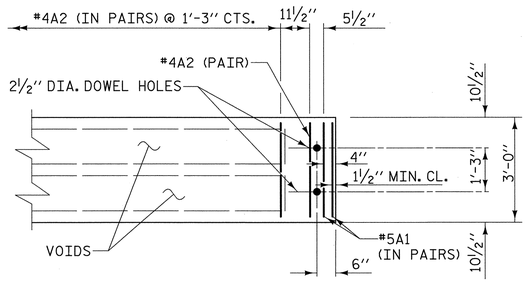

PART PLAN - SLAB SECTION

PROJECT NO. 42287

PAMLICO COUNTY

STATION: 15+69.00 -L-

REPLACES BRIDGE NO. 31 SHEET 1 OF 2

STATE OF NORTH CAROLINA
DEPARTMENT OF TRANSPORTATION
RALEIGH

PRESTRESSED CORED SLAB DETAILS

33'-10" CLEAR ROADWAY - 90°SKEW

NORTH CAROLINA PROFESSIONAL SEAL 1966 ENGINEER L. KEVIN AUSTIN 6/7/09

PLANS PREPARED BY:

MULKEY
ENGINEERS & CONSULTANTS
PO BOX 33127
RALEIGH, N.C. 27636
(919) 851-1912
(919) 851-1918 (FAX)
WWW.MULKEYINC.COM

REVISIONS						SHEET NO.
NO.	BY:	DATE:	NO.	BY:	DATE:	16
1			3			TOTAL SHEETS
2			4			185

DRAWN BY : W. B. ALLEN DATE : 3/05
CHECKED BY : L. K. AUSTIN DATE : 2/09

6/5/2009 2:39:09 PM R:\Structures\B5298_SD_CS_02.dgn

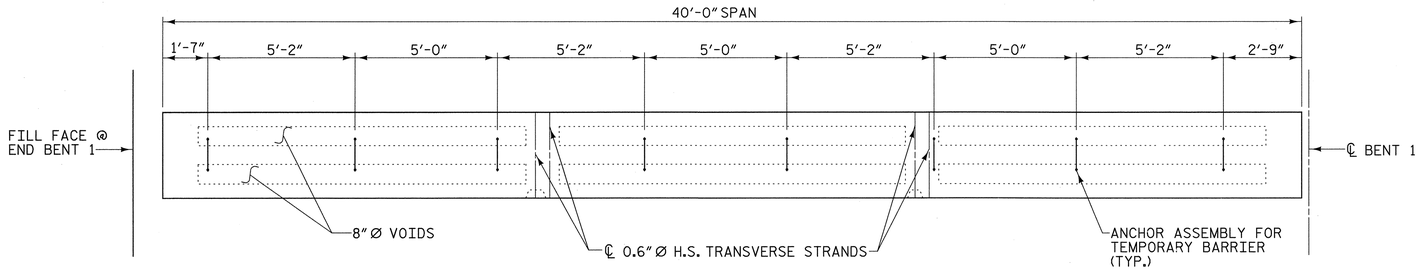

SPAN A

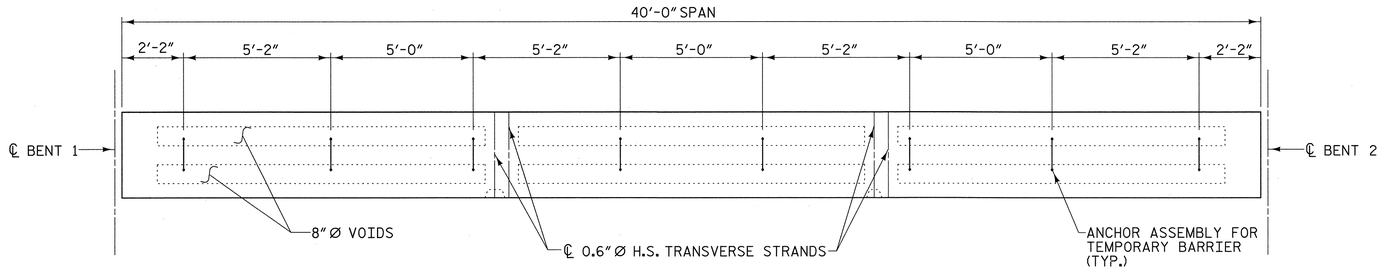

SPAN B

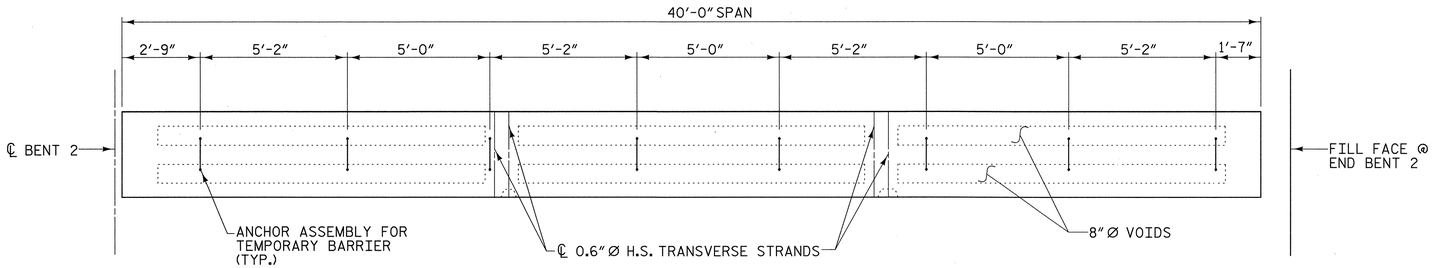

SPAN C

ANCHOR ASSEMBLY LAYOUT FOR CORED SLAB UNIT #5

NOTES

THE ANCHOR ASSEMBLY FOR TEMPORARY BARRIER SHALL CONSIST OF THE FOLLOWING COMPONENTS :

A. FERRULES SHALL BE MADE FROM STEEL MEETING THE REQUIREMENTS OF AASHTO M169, GRADE 12L14 AND SHALL HAVE A MINIMUM LENGTH OF THREADS OF 2½″.

B. 2 - ⅞″ Ø X 1′-0″ ANCHOR BOLTS SHALL CONFORM TO THE REQUIREMENTS OF ASTM A307. ANCHOR BOLTS SHALL BE GALVANIZED. (AT THE CONTRACTOR'S OPTION, STAINLESS STEEL BOLTS AND WASHERS MAY BE USED AS AN ALTERNATE FOR THE ⅞″ Ø X 1′-0″ GALVANIZED ANCHOR BOLTS. THEY SHALL CONFORM TO OR EXCEED THE MECHANICAL REQUIREMENTS OF ASTM A307. THE USE OF THIS ALTERNATE SHALL BE APPROVED BY THE ENGINEER.)

C. WIRE STRUT SHOWN IN THE ANCHOR ASSEMBLY DETAIL ARE MINIMUM ALLOWABLE SIZE AND SHALL HAVE A MINIMUM TENSILE STRENGTH OF 100,000 PSI.

ANCHOR ASSEMBLY WITH BOLTS SHALL BE ASSEMBLED IN THE SHOP. BOLT THREADS MAY BE RECUT AS NECESSARY TO INSURE FIT.

THE COST OF THE ANCHOR ASSEMBLY COMPLETE IN PLACE, SHALL BE INCLUDED, IN THE UNIT CONTRACT PRICE BID FOR CONSTRUCTION OF SUPERSTRUCTURE, SEE SPECIAL PROVISIONS.

FERRULES TO BE PLUGGED DURING CASTING OF THE CORED SLAB UNITS AS RECOMMENDED BY THE MANUFACTURER.

AT THE CONTRACTOR'S OPTION, FERRULES WITH OPEN OR CLOSED ENDS MAY BE USED.

FOR 4″ X 3¼″ X ½″ BARRIER WASHER TO BE USED WITH ANCHOR ASSEMBLY, SEE NCDOT ROADWAY STD. 1170.01.

PAYMENT FOR ANCHORED TEMPORARY BARRIER AND BARRIER WASHER ARE INCLUDED IN TRAFFIC CONTROL PAY ITEM, SEE SPECIAL PROVISIONS.

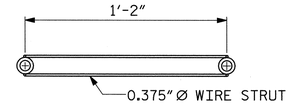

PLAN

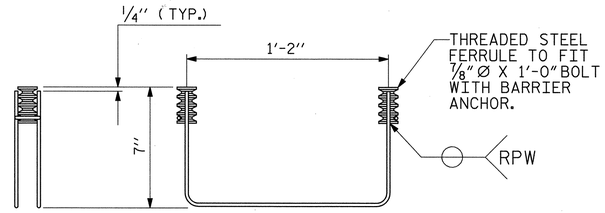

SIDE VIEW ELEVATION

MINIMUM LENGTH OF THREADS IN INSERT (FERRULE): 2½″

ANCHOR ASSEMBLY FOR TEMPORARY BARRIER

(24 ASSEMBLIES REQUIRED)

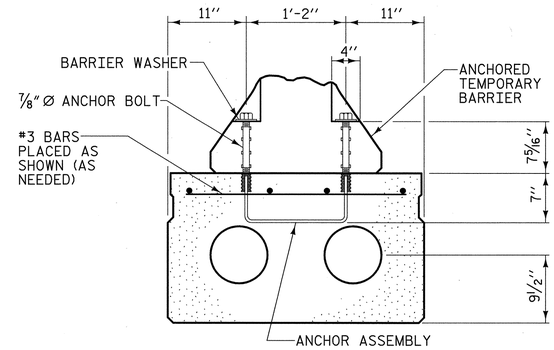

CORED SLAB UNIT #5

(SHOWING PLACEMENT OF ANCHOR ASSEMBLY)

THE #3 BARS ARE INCIDENTAL AND THEIR COST SHALL BE INCLUDED IN THE PRICE BID FOR THE PRESTRESSED CONCRETE CORED SLAB.

NORTH CAROLINA PROFESSIONAL SEAL 1966 ENGINEER L. KEVIN AUSTIN 6/7/09

PLANS PREPARED BY:

MULKEY
ENGINEERS & CONSULTANTS
PO Box 33127
Raleigh, N.C. 27636
(919) 851-1912 (FAX)
(919) 851-4951
WWW.MULKEYINC.COM

PROJECT NO. 42287

PAMLICO COUNTY

STATION: 15+69.00 -L-

REPLACES BRIDGE NO. 31 SHEET 2 OF 2

STATE OF NORTH CAROLINA
DEPARTMENT OF TRANSPORTATION
RALEIGH

PRESTRESSED CORED SLAB DETAILS

33′-10″ CLEAR ROADWAY - 90° SKEW

REVISIONS						SHEET NO.
NO.	BY:	DATE:	NO.	BY:	DATE:	17
1			3			TOTAL SHEETS
2			4			185

DRAWN BY : W. B. ALLEN DATE : 2/09
CHECKED BY : L. K. AUSTIN DATE : 2/09

6/5/2009 2:30:27 PM R:\Structures\B5298_SD_CS_03.dgn

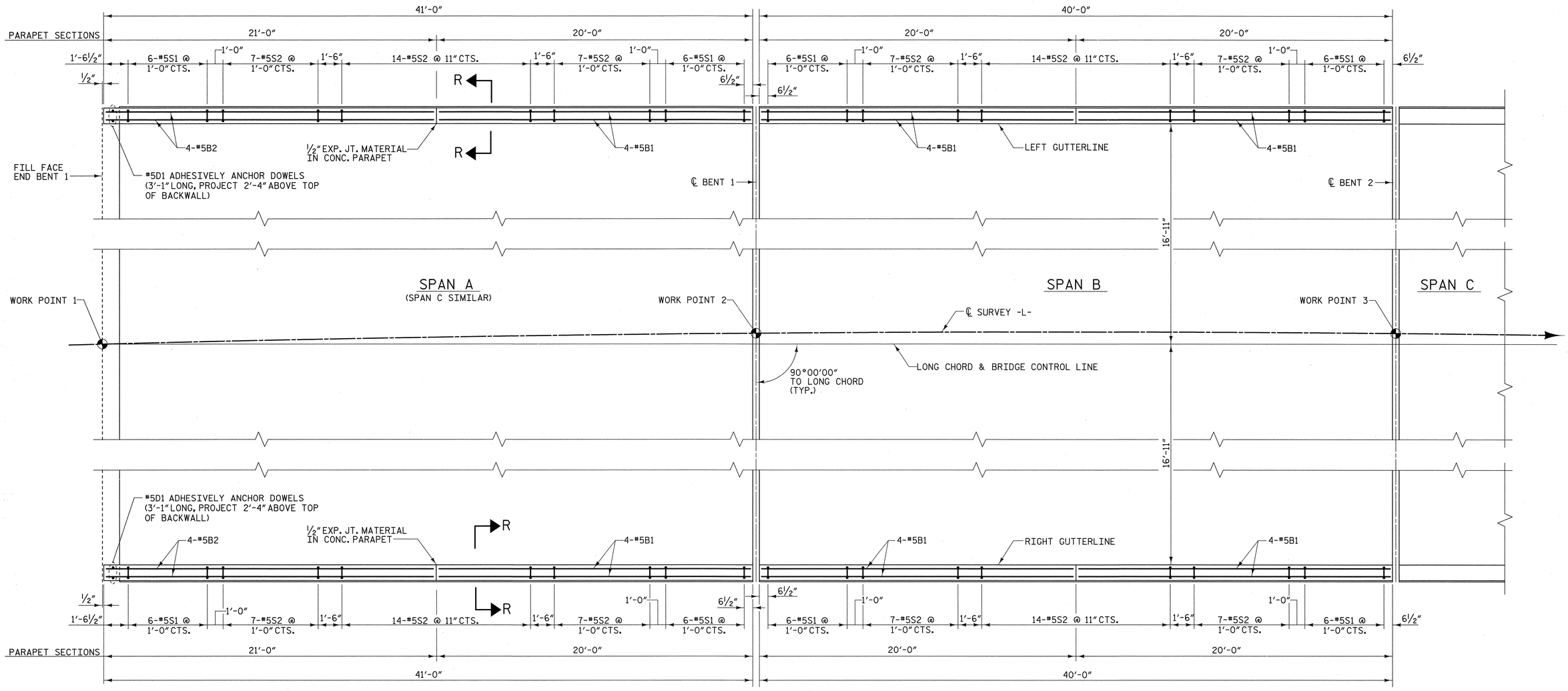

PLAN

NOTE: DISTANCES ARE ALONG OUTSIDE FACE OF PARAPET

FOR END POST DETAILS AND SECTION R-R SEE "PARAPET & END POST DETAILS" SHEET.

PROJECT NO. 42287

PAMLICO COUNTY

STATION: 15+69.00 -L-

REPLACES BRIDGE NO. 31

STATE OF NORTH CAROLINA
DEPARTMENT OF TRANSPORTATION
RALEIGH

PLAN OF PARAPET

33'-10" CLEAR ROADWAY - 90°SKEW

NORTH CAROLINA PROFESSIONAL SEAL 1966 ENGINEER L. KEVIN AUSTIN 6/7/09

PLANS PREPARED BY:

MULKEY
ENGINEERS & CONSULTANTS
PO Box 33127
RALEIGH, N.C. 27636
(919) 851-1912 (PHONE)
(919) 851-1918 (FAX)
WWW.MULKEYINC.COM

REVISIONS						SHEET NO.
NO.	BY:	DATE:	NO.	BY:	DATE:	18
1			3			TOTAL SHEETS
2			4			185

DRAWN BY : W. B. ALLEN DATE : 2/09
CHECKED BY : L. K. AUSTIN DATE : 2/09

6/5/2009 2:29:38 PM R:\Structures\B5298_SD_PRL0.dgn

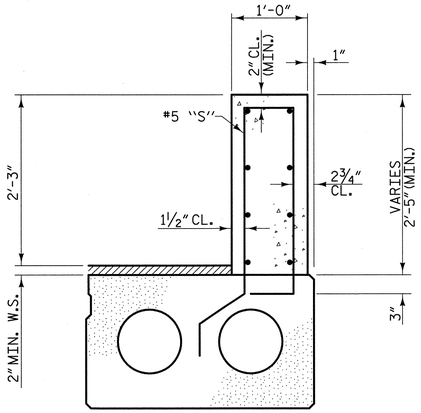

SECTION R-R

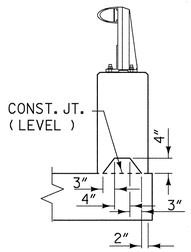

SECTION S-S

AT DAM IN OPEN JOINT
(THIS IS TO BE USED ONLY WHEN SLIP FORM IS USED)

NOTES

ALL REINFORCING STEEL IN THE PARAPET AND END POSTS SHALL BE EPOXY COATED.

#5 "S" BARS MAY BE SHIFTED SLIGHTLY AS NECESSARY TO AVOID INTERFERENCE WITH THE ONE BAR METAL RAIL POST ANCHORAGE ASSEMBLIES.

THE #5D1 DOWELS SHALL BE INSTALLED USING AN ADHESIVE ANCHORING SYSTEM. FOR ADHESIVELY ANCHORED DOWELS, SEE SPECIAL PROVISIONS. THE YIELD LOAD OF THE #5D1 BARS IS 18.6 KIPS. FIELD TESTING OF THE ADHESIVE BONDING SYSTEM IS NOT REQUIRED.

FOR DETAILS OF CONCRETE INSERT AND GUARDRAIL ANCHOR ASSEMBLY, SEE "RAIL POST SPACINGS AND END OF RAIL DETAILS" AND "GUARDRAIL ANCHORAGE" SHEETS.

BILL OF MATERIAL FOR PARAPET & END POSTS

BAR	NO.	SIZE	TYPE	LENGTH	WEIGHT
✳B1	64	#5	STR	19'-7"	1307
✳B2	32	#5	STR	20'-7"	687
✳D1	8	#5	STR	3'-1"	26
✳E1	8	#7	STR	2'-11"	48
✳E2	8	#7	STR	3'-1"	50
✳E3	8	#7	STR	3'-3"	53
✳E4	8	#7	STR	3'-5"	56
✳E5	16	#7	STR	3'-6"	114
✳F1	8	#6	2	4'-4"	52
✳F2	8	#6	STR	4'-5"	53
✳S1	72	#5	1	7'-5"	557
✳S2	168	#5	1	7'-4"	1285

✳EPOXY COATED REINFORCING STEEL LBS. =	4288
CLASS AA CONCRETE CU. YDS. =	22.9
CONCRETE PARAPET L.F. =	244'-4"

BAR TYPE

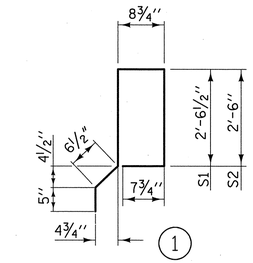

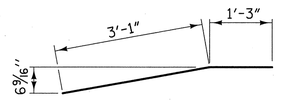

ALL BAR DIMENSIONS ARE OUT TO OUT

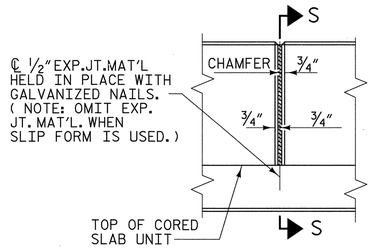

ELEVATION AT EXPANSION JOINTS

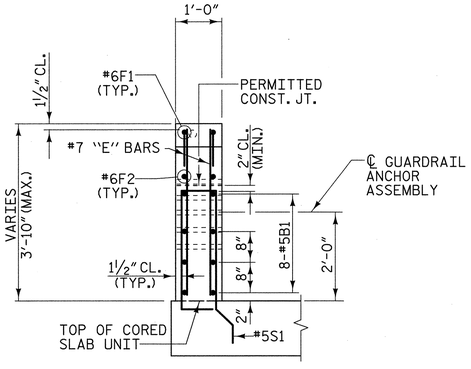

END VIEW

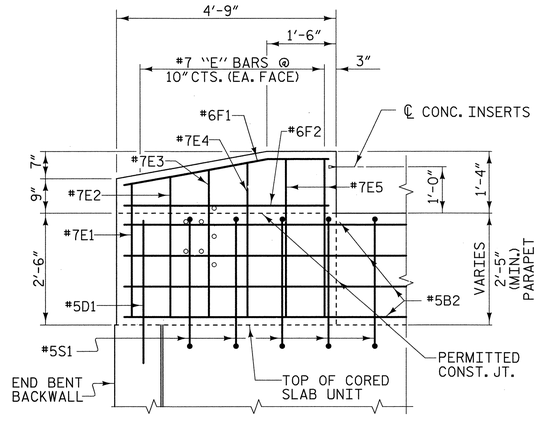

ELEVATION

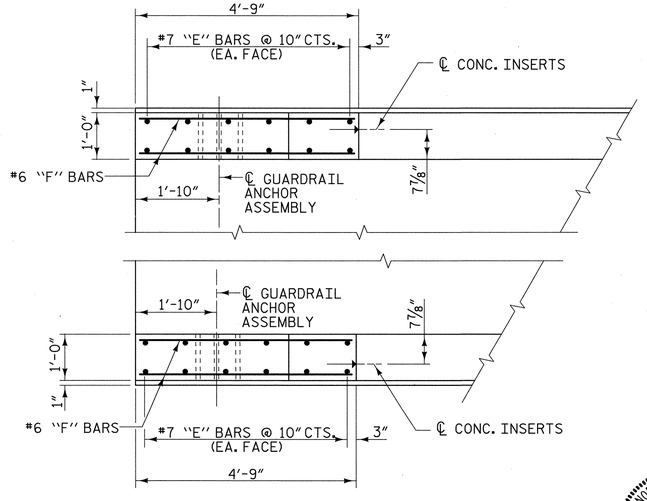

PLAN OF END POSTS

PARAPET AND END POST DETAILS

PROJECT NO. 42287

PAMLICO COUNTY

STATION: 15+69.00 -L-

REPLACES BRIDGE NO. 31

STATE OF NORTH CAROLINA
DEPARTMENT OF TRANSPORTATION
RALEIGH

PARAPET AND END POST DETAILS

33'-10" CLEAR ROADWAY - 90°SKEW

REVISIONS						SHEET NO.
NO.	BY:	DATE:	NO.	BY:	DATE:	19
1			3			TOTAL SHEETS
2			4			185

NORTH CAROLINA PROFESSIONAL ENGINEER SEAL 19661 L. KEVIN AUSTIN 6/7/09

PLANS PREPARED BY:

MULKEY
ENGINEERS & CONSULTANTS
PO Box 33127
RALEIGH, N.C. 27636
(919) 851-1912
(919) 851-1918 (FAX)
WWW.MULKEYINC.COM

DRAWN BY : W. B. ALLEN DATE : 2/09
CHECKED BY : L. K. AUSTIN DATE : 3/09

6/5/2009 2:28:59 PM R:\Structures\B5298_SD_PR_02.dgn

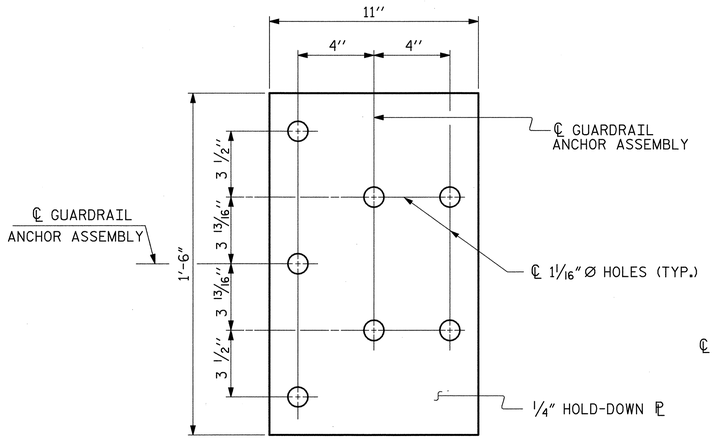

PLAN

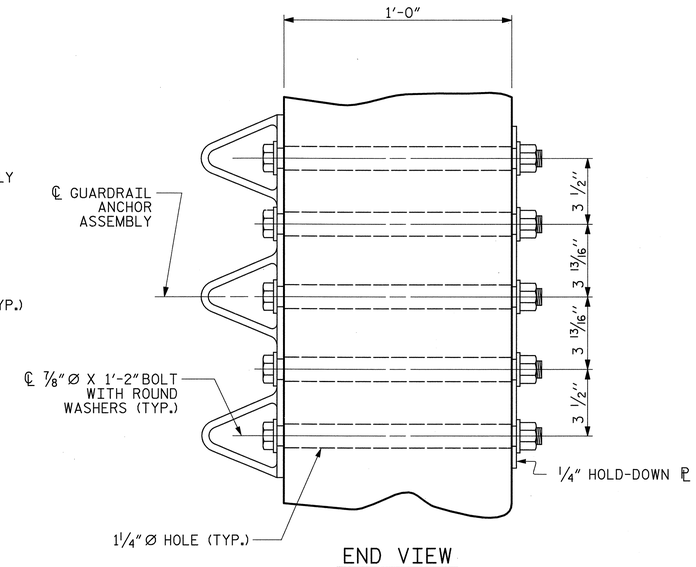

END VIEW

GUARDRAIL ANCHOR ASSEMBLY DETAILS

NOTES

THE GUARDRAIL ANCHOR ASSEMBLY SHALL CONSIST OF A 1/4'' HOLD DOWN PLATE AND 7 - 7/8'' Ø BOLTS WITH NUTS AND WASHERS.

THE HOLD-DOWN PLATE SHALL CONFORM TO AASHTO M270 GRADE 36. AFTER FABRICATION, THE HOLD-DOWN PLATE SHALL BE HOT-DIP GALVANIZED IN ACCORDANCE WITH AASHTO M111.

BOLTS SHALL CONFORM TO THE REQUIREMENTS OF ASTM A307 AND NUTS SHALL CONFORM TO THE REQUIREMENTS OF AASHTO M291. BOLTS, NUTS AND WASHERS SHALL BE GALVANIZED. AT THE CONTRACTOR'S OPTION, STAINLESS STEEL BOLTS, NUTS AND WASHERS MAY BE USED AS AN ALTERNATE FOR THE 7/8'' Ø GALVANIZED BOLTS, NUTS AND WASHERS. THEY SHALL CONFORM TO OR EXCEED THE MECHANICAL REQUIREMENTS OF ASTM A307. THE USE OF THIS ALTERNATE SHALL BE APPROVED BY THE ENGINEER.

AFTER INSTALLATION, THE EXPOSED THREAD OF THE BOLT SHALL BE BURRED WITH A SHARP POINTED TOOL.

THE COST OF THE GUARDRAIL ANCHOR ASSEMBLIES WITH BOLTS, NUTS AND WASHERS COMPLETE IN PLACE, SHALL BE INCLUDED IN THE VARIOUS PAY ITEMS.

THE VERTICAL REINFORCING BARS MAY BE SHIFTED SLIGHTLY IN THE END POST TO CLEAR ASSEMBLY BOLTS.

THE 1 1/4'' Ø HOLES SHALL BE FORMED OR DRILLED WITH A CORE BIT. IMPACT TOOLS WILL NOT BE PERMITTED. ANY CONCRETE DAMAGED BY THIS WORK SHALL BE REPAIRED TO THE SATISFACTION OF THE ENGINEER.

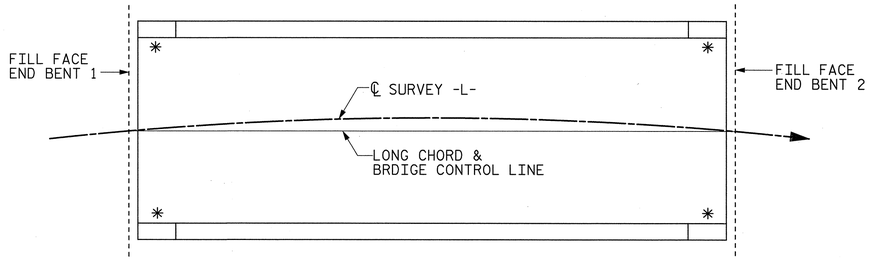

SKETCH SHOWING POINTS OF ATTACHMENT

* LOCATION OF GUARDRAIL ATTACHMENT

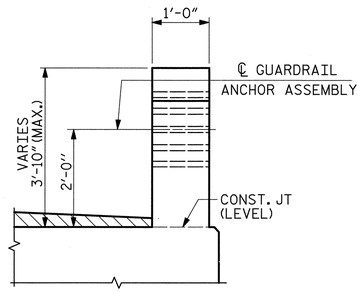

END VIEW
(ONE BAR METAL RAIL)

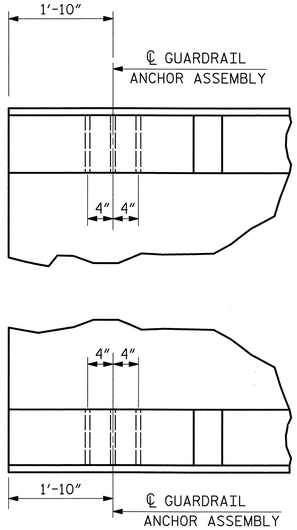

PLAN

LOCATION OF GUARDRAIL ANCHOR AT END POST

ASSEMBLED BY : W. B. ALLEN	DATE : 2/09		
CHECKED BY : L. K. AUSTIN	DATE : 2/09		
DRAWN BY : EEM 6/94	REV. 10/17/00	RWW/LES	
CHECKED BY : RGW 6/94	REV. 5/7/03	RWW/JTE	
	REV. 5/1/06	TLA/GM	

PLANS PREPARED BY:

MULKEY
ENGINEERS & CONSULTANTS
PO Box 33137
Raleigh, N.C. 27636
(919) 851-1912
(919) 851-1918 (FAX)
WWW.MULKEYINC.COM

THIS STANDARD DRAWING REVIEWED & ADOPTED FOR USE AT THE REFERENCED LOCATION BY THE UNDERSIGNED:

NORTH CAROLINA PROFESSIONAL Registration 19661 ENGINEER KEVIN AUSTIN

6/7/09

PROJECT NO. 42287

PAMLICO COUNTY

STATION: 15+69.00 -L-

REPLACES BRIDGE NO. 31

STATE OF NORTH CAROLINA
DEPARTMENT OF TRANSPORTATION
RALEIGH

STANDARD

GUARDRAIL ANCHORAGE DETAILS FOR METAL RAILS

REVISIONS						SHEET NO.
NO.	BY:	DATE:	NO.	BY:	DATE:	20
1			3			TOTAL SHEETS
2			4			185

STD. NO. BMR8

6/5/2009 2:28:13 PM R:\Structures\B5628B_SD_GR_0.dgn

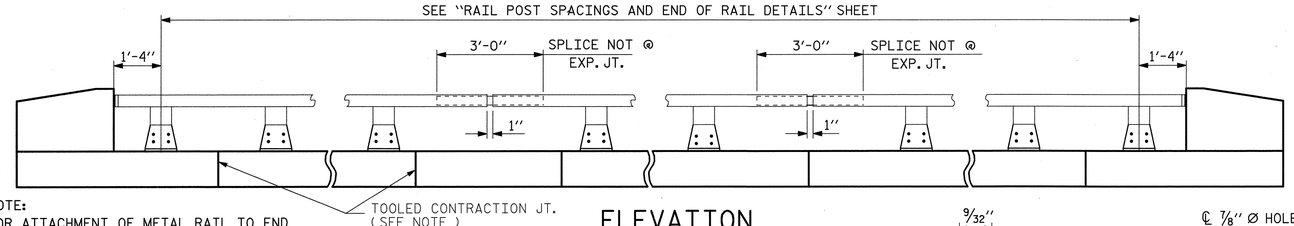

NOTE:
FOR ATTACHMENT OF METAL RAIL TO END POST, SEE STANDARD NO. BMR2.

ELEVATION

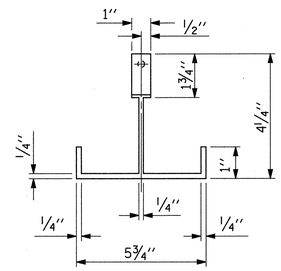

PLAN

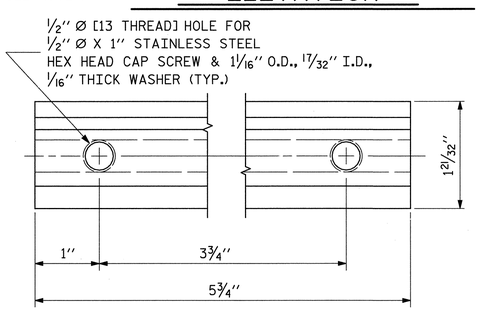

CLAMP BAR DETAIL

(2 REQUIRED PER POST)

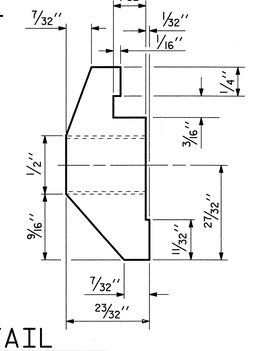

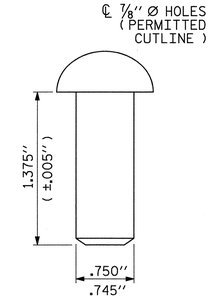

RIVET DETAIL

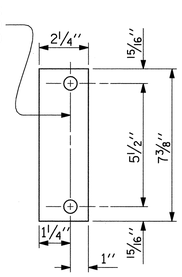

REAR PLATE

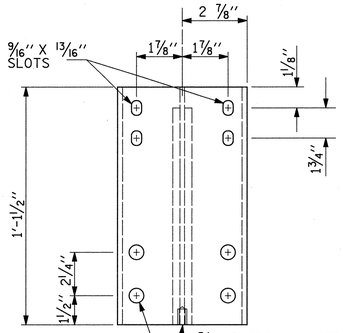

FRONT ELEVATION

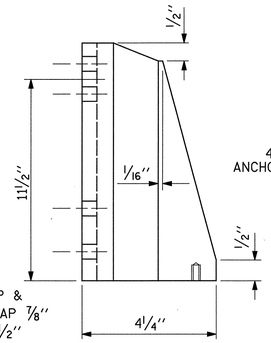

SIDE ELEVATION

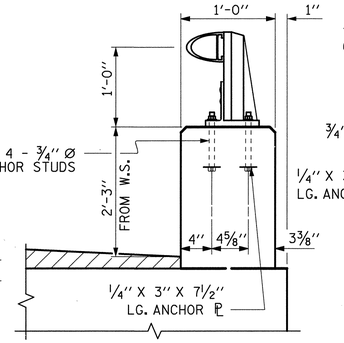

SECTION THRU PARAPET AND RAIL

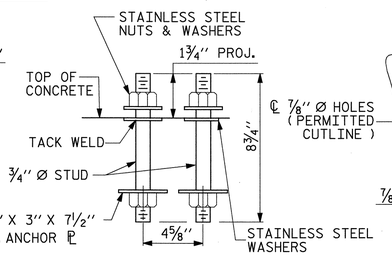

ANCHOR ASSEMBLY

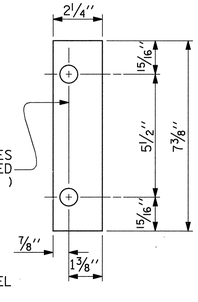

FRONT PLATE

SHIM DETAILS

NOTE : SHIMS MAY BE CUT ALONG PERMITTED CUTLINE OR SLOTTED TO EDGE OF PLATE TO FACILITATE PLACEMENT.

NOTES

AT THE CONTRACTOR'S OPTION, METAL RAIL MAY BE EITHER ALUMINUM OR GALVANIZED STEEL IN ACCORDANCE WITH THE REQUIREMENTS OF THE GENERAL NOTES AND THE FOLLOWING SPECIFICATIONS FOR THE ALTERNATE MATERIALS; HOWEVER THE CONTRACTOR WILL BE REQUIRED TO USE THE SAME RAIL MATERIAL ON ALL STRUCTURES ON THE PROJECT FOR WHICH METAL RAIL IS DESIGNATED.

ALUMINUM RAILS

MATERIAL FOR POSTS, BASES AND RAILS, EXPANSION BARS AND CLAMP BARS SHALL BE ASTM B221 ALLOY 6061-T6.

MATERIAL FOR RIVETS SHALL BE ASTM B316 ALLOY 6061-T6. RIVETS SHALL BE STANDARD BUTTON HEAD AND CONE POINT COLD DRIVEN AS PER DRAWING.

THE BASE OF RAIL POSTS, OR ANY OTHER ALUMINUM SURFACE IN CONTACT WITH CONCRETE SHALL BE THOROUGHLY COATED WITH AN ALUMINUM IMPREGNATED CAULKING COMPOUND OF APPROVED QUALITY.

MATERIAL FOR SHIMS TO BE ASTM B209 ALLOY 6061-T6.

GALVANIZED STEEL RAILS

MATERIALS AND GALVANIZING ARE TO CONFORM TO THE FOLLOWING SPECIFICATIONS:

POST, POST BASES, RAILS, EXPANSION BARS AND CLAMP BARS: AASHTO M270 GRADE 36 STRUCTURAL STEEL - GALVANIZED TO AASHTO M111.

RIVETS: RIVETS SHALL MEET THE REQUIREMENTS OF ASTM A502 FOR GRADE 1 RIVETS.

THE CUT ENDS OF GALVANIZED STEEL RAILING, AFTER GRINDING SMOOTH SHALL BE GIVEN TWO COATS OF ZINC RICH PAINT MEETING THE REQUIREMENTS OF FEDERAL SPECIFICATION MIL-P-26915 USAF TYPE 1, OR OF FEDERAL SPECIFICATIONS TT-P-641.

SHIMS: SHIMS SHALL MEET THE REQUIREMENTS OF ASTM A570 FOR GRADE 33 OR A611 FOR GRADE C AND SHALL BE GALVANIZED IN ACCORDANCE WITH AASHTO M111.

CLOSURE PLATES: CLOSURE PLATES SHALL MEET THE REQUIREMENTS OF ASTM A570 FOR GRADE 33 OR A611 FOR GRADE C AND SHALL BE GALVANIZED IN ACCORDANCE WITH AASHTO M111.

GENERAL NOTES

RAILING SHALL BE CONTINUOUS FROM END POST TO END POST OF BRIDGE. EACH JOINT IN RAIL LENGTH SHALL BE SPLICED AS DETAILED. PANEL LENGTHS OF RAIL SHALL BE ATTACHED TO A MINIMUM OF THREE POSTS.

FOR END OF RAIL TO CLEAR FACE OF CONCRETE END POST DIMENSION, SEE STANDARD NO. BMR2.

MATERIAL FOR ANCHOR STUDS SHALL BE ASTM F593 ALLOY 304 STAINLESS STEEL WITH MINIMUM 75,000 PSI ULTIMATE STRENGTH. STUDS TO BE EMBEDDED 7" IN CONCRETE. NUTS SHALL BE AMERICAN STANDARD FINISHED HEXAGON THICK, CLASS 2B THREAD, AND MEET THE REQUIREMENTS OF ASTM F594 ALLOY 304 STAINLESS STEEL. WASHERS SHALL MEET THE REQUIREMENTS OF ASTM F844 EXCEPT THEY SHALL BE MADE FROM ALLOY 304 STAINLESS STEEL. ANCHOR ℄ SHALL BE AASHTO M270 GRADE 36.

CAP SCREWS SHALL BE ASTM F593 ALLOY 305 STAINLESS STEEL.

CERTIFIED MILL REPORTS ARE REQUIRED FOR RAILS AND POSTS. SHOP INSPECTION IS NOT REQUIRED.

METAL RAIL POSTS SHALL BE SET NORMAL TO CURB GRADE.

METHOD OF MEASUREMENT FOR METAL RAILS: FOR LENGTH OF METAL RAILS TO BE PAID FOR, SEE THE STANDARD SPECIFICATIONS.

CURVED RAIL USAGE: WHERE RAILS ARE TO BE USED ON BRIDGES ON HORIZONTAL AND/OR VERTICAL CURVATURE THE CONTRACTOR MAY, AT HIS OPTION, HAVE THE REQUIRED CURVATURE IN THE RAIL FORMED IN THE SHOP OR IN THE FIELD. IN EITHER EVENT, THE RAIL SHALL CONFORM WITHOUT BUCKLING OR KINKING TO THE REQUIRED CURVATURE IN A UNIFORM MANNER ACCEPTABLE TO THE ENGINEER.

TO INSURE FUTURE IDENTIFICATION OF THE FABRICATOR, A PERMANENT IDENTIFYING MARK SHALL BE PLACED ON EACH POST. THE METHOD OF MARKING AND LOCATION SHALL BE SUCH THAT IT DOES NOT DETRACT FROM THE APPEARANCE OF THE POST.

SHIMS SHALL BE USED AS NECESSARY FOR POST ALIGNMENT.

ALLOY 6351-T5 MAY BE SUBSTITUTED FOR ALLOY 6061-T6 WHERE APPLICABLE.

MINOR VARIATIONS IN DETAILS OF METAL RAIL WILL BE CONSIDERED. DETAILS OF SUCH VARIATIONS, IF DESIRED, SHALL BE SUBMITTED FOR APPROVAL.

THE CONTRACTOR MAY USE ADHESIVELY ANCHORED ANCHOR BOLTS IN PLACE OF THE ANCHOR ASSEMBLY. LEVEL TWO FIELD TESTING IS REQUIRED, AND THE YIELD LOAD OF THE 3/4" Ø BOLT IS 10 KIPS. FOR ADHESIVELY ANCHORED ANCHOR BOLTS OR DOWELS, SEE SPECIAL PROVISIONS.

WHEN ADHESIVELY ANCHORED ANCHOR BOLTS ARE USED, BOLTS, NUTS AND WASHERS SHALL MEET THE SAME REQUIREMENTS AS THE ANCHOR STUDS, NUTS AND WASHERS FOR USE WITH THE ANCHOR ASSEMBLY.

GROOVED CONTRACTION JOINTS, 1/2" IN DEPTH, SHALL BE TOOLED IN ALL EXPOSED FACES OF THE PARAPET IN ACCORDANCE WITH ARTICLE 825-10(B) OF THE STANDARD SPECIFICATIONS. THE CONTRACTION JOINT SHALL BE LOCATED AT A SPACING OF 8FT. TO 10FT. BETWEEN EXPANSION JOINTS. NO CONTRACTION JOINTS WILL BE REQUIRED FOR SEGMENTS LESS THAN 10 FEET IN LENGTH.

DETAILS OF POST

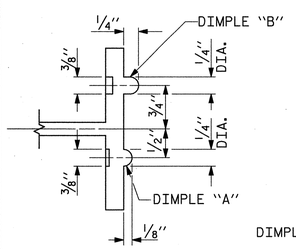

SECTION B - B

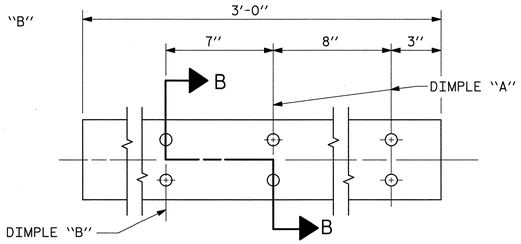

EXPANSION BAR DETAILS

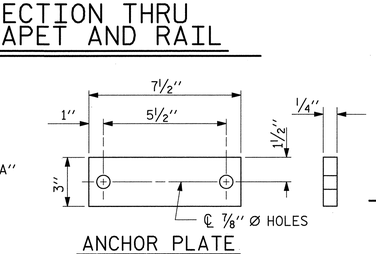

ANCHOR PLATE

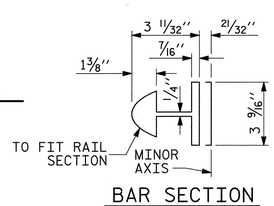

BAR SECTION

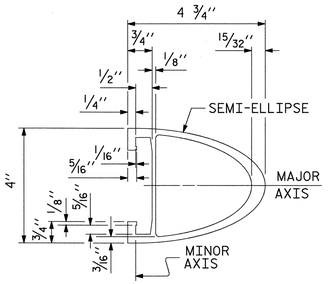

RAIL SECTION

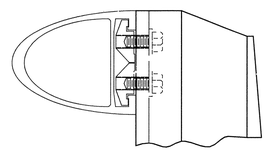

CLAMP & RAIL ASSEMBLY

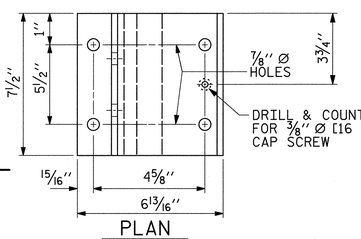

PLAN

PAY LENGTH = 225'-4" LIN. FT.

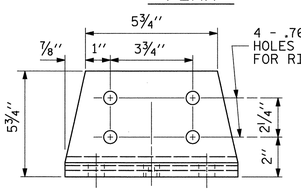

FRONT ELEVATION

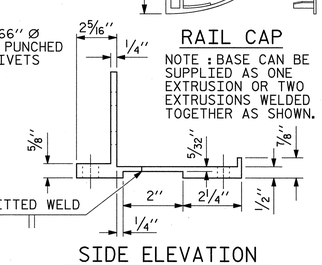

SIDE ELEVATION

NOTE : BASE CAN BE SUPPLIED AS ONE EXTRUSION OR TWO EXTRUSIONS WELDED TOGETHER AS SHOWN.

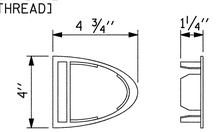

RAIL CAP

POST BASE DETAILS

PROJECT NO. 42287

PAMLICO COUNTY

STATION: 15+69.00 -L-

REPLACES BRIDGE NO. 31

STATE OF NORTH CAROLINA
DEPARTMENT OF TRANSPORTATION
RALEIGH

STANDARD

1 BAR METAL RAIL

REVISIONS						SHEET NO.
NO.	BY:	DATE:	NO.	BY:	DATE:	21
1			3			TOTAL SHEETS
2			4			185

STD. NO. BMR1

PLANS PREPARED BY:

MULKEY ENGINEERS & CONSULTANTS
PO Box 33127
Raleigh, N.C. 27636
(919) 851-1912
(919) 851-1918 (FAX)
www.mulkeyinc.com

ASSEMBLED BY :	W. B. ALLEN	DATE :	2/09
CHECKED BY :	L. K. AUSTIN	DATE :	2/09
DRAWN BY : FCJ 1/88	REV. 10/17/00		LES/RDR
CHECKED BY : CRK 3/89	REV. 5/7/03R		RWW/JTE
	REV. 5/1/06R		KMM/GM

THIS STANDARD DRAWING REVIEWED & ADOPTED FOR USE AT THE REFERENCED LOCATION BY THE UNDERSIGNED:

NORTH CAROLINA PROFESSIONAL SEAL 1966 ENGINEER L. KEVIN AUSTIN
6/7/09

6/5/2009 2:27:31 PM R:\Structures\B5298_SD_MR.dgn

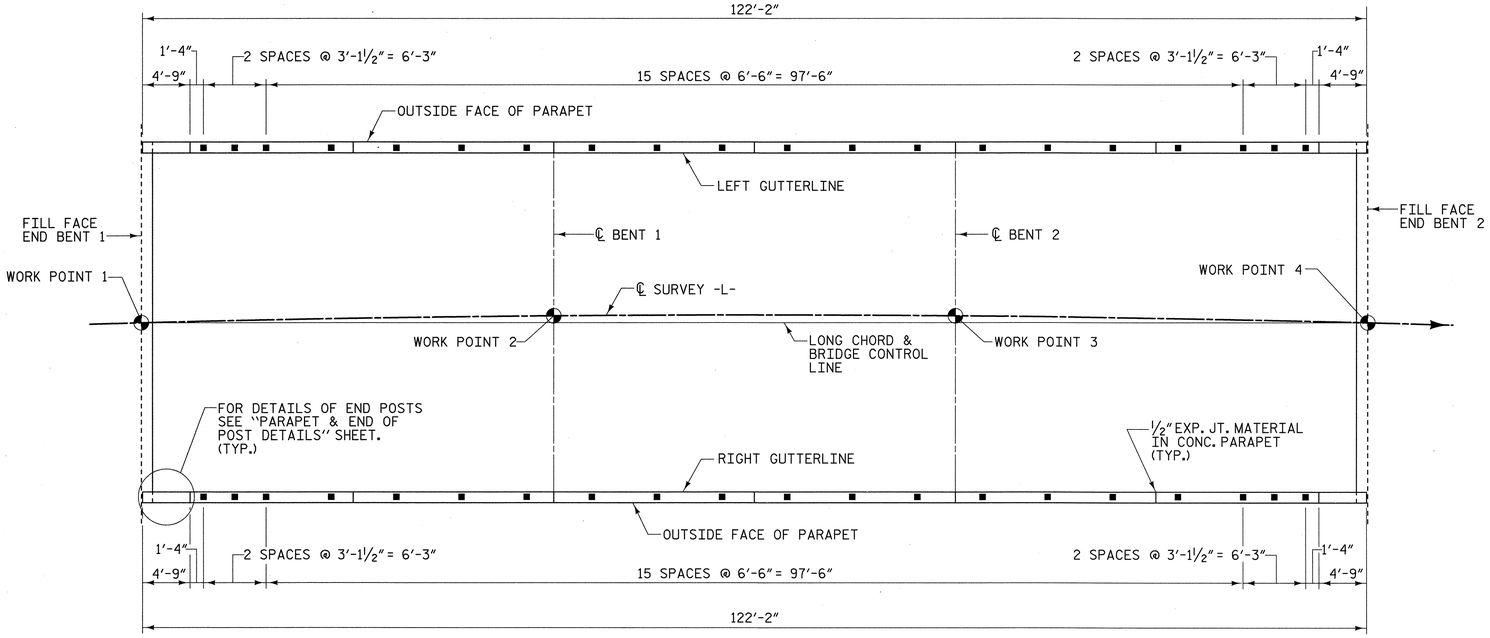

PLAN OF RAIL POST SPACINGS

NOTES

STRUCTURAL CONCRETE INSERT

THE STRUCTURAL CONCRETE INSERT ASSEMBLY SHALL CONSIST OF THE FOLLOWING COMPONENTS:

A. FERRULES SHALL BE MADE FROM STEEL MEETING THE REQUIREMENTS OF AASHTO M169, GRADE 12L14 AND SHALL HAVE A MINIMUM LENGTH OF THREADS OF 1½".

B. 1 - ¾" Ø X 1⅝" BOLT WITH WASHER. BOLT SHALL CONFORM TO THE REQUIREMENTS OF ASTM A307. BOLT AND WASHER SHALL BE GALVANIZED. (AT THE CONTRACTOR'S OPTION, STAINLESS STEEL BOLT AND WASHER MAY BE USED AS AN ALTERNATE FOR THE ¾" Ø X 1⅝" GALVANIZED BOLT AND WASHER. THEY SHALL CONFORM TO OR EXCEED THE MECHANICAL REQUIREMENTS OF ASTM A307. THE USE OF THIS ALTERNATE SHALL BE APPROVED BY THE ENGINEER.)

C. WIRE STRUT SHOWN IN THE CONCRETE INSERT ASSEMBLY DETAIL IS THE MINIMUM ALLOWABLE SIZE AND SHALL HAVE A MINIMUM TENSILE STRENGTH OF 100,000 PSI. AS AN OPTION, A 7/16" Ø WIRE STRUT WITH A MINIMUM TENSILE STRENGTH OF 90,000 PSI IS ACCEPTABLE.

NOTES

METAL RAIL TO END POST CONNECTION

THE METAL RAIL TO END POST CONNECTION SHALL CONSIST OF THE FOLLOWING COMPONENTS:

A. ½" PLATES SHALL CONFORM TO AASHTO M270 GRADE 36 AND SHALL BE GALVANIZED AFTER FABRICATION.

B. ¾" STRUCTURAL CONCRETE INSERT SHALL HAVE A WORKING LOAD SHEAR CAPACITY OF 4800 LBS. THE FERRULES SHALL ENGAGE A ¾"Ø X 1⅝" BOLT WITH 2" O.D. WASHER IN PLACE. THE ¾"Ø X 1⅝" BOLT SHALL HAVE N. C. THREADS.

C. CAP SCREWS FOR RAIL ATTACHMENT TO ANGLE SHALL CONFORM TO THE REQUIREMENTS OF ASTM F593 ALLOY 305 STAINLESS STEEL. CAP SCREWS TO BE CENTERED IN SLOTS AT 60°F.

D. STANDARD CLAMP BARS (SEE METAL RAIL SHEET).

E. ½" Ø PIPE SLEEVES (IF REQUIRED) TO BE GALVANIZED.

THE COST OF THE STANDARD CLAMP BARS AND CAP SCREWS USED IN THE METAL RAIL TO END POST CONNECTION SHALL BE INCLUDED IN THE UNIT CONTRACT PRICE BID FOR LINEAR FEET OF 1 OR 2 BAR METAL RAILS.

THE ¾" STRUCTURAL CONCRETE INSERT WITH BOLT SHALL BE ASSEMBLED IN THE SHOP.

THE COST OF THE ¾" STRUCTURAL CONCRETE INSERT ASSEMBLY, AND THE ½" PLATES COMPLETE IN PLACE SHALL BE INCLUDED IN THE VARIOUS PAY ITEMS.

THE CONTRACTOR, AT HIS OPTION, MAY USE AN ADHESIVE BONDING SYSTEM IN LIEU OF THE STRUCTURAL CONCRETE INSERT EMBEDDED IN THE END POST. IF THE ADHESIVE BONDING SYSTEM IS USED, THE ¾" Ø X 1⅝" BOLT WITH WASHER SHALL BE REPLACED WITH A ¾"Ø X 6½" BOLT AND 2" O.D. WASHER. ALL SPECIFICATIONS THAT APPLY TO THE ¾" Ø X 1⅝" BOLT SHALL APPLY TO THE ¾"Ø X 6 ½" BOLT. FIELD TESTING OF THE ADHESIVE BONDING SYSTEM IS NOT REQUIRED.

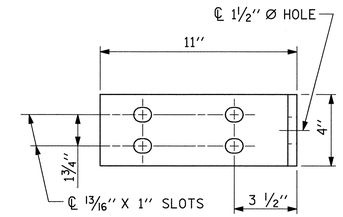

ELEVATION

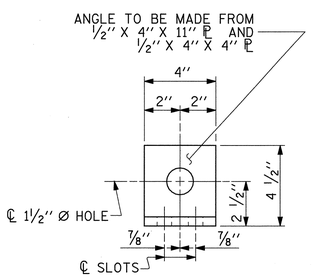

END VIEW (FIX)

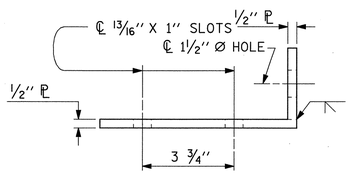

TOP VIEW

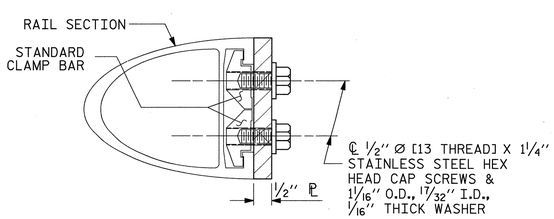

SECTION H-H (FIX)

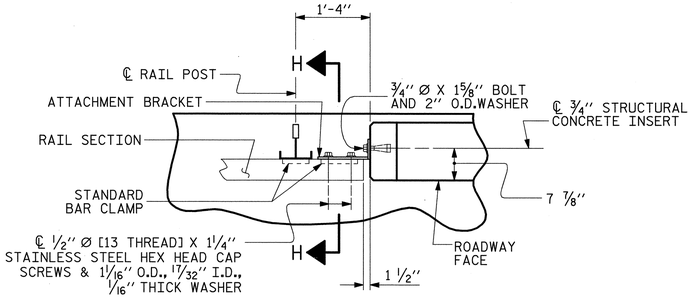

PLAN - RAIL AND END POST

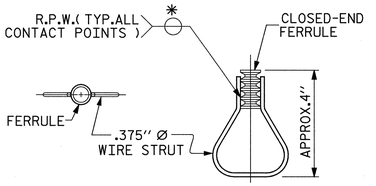

STRUCTURAL CONCRETE INSERT

*EACH WELDED ATTACHMENT OF WIRE TO FERRULE SHALL DEVELOP THE TENSILE STRENGTH OF THE WIRE.

FIXED

DETAILS FOR ATTACHING METAL RAIL TO END POST

PROJECT NO. 42287

PAMLICO COUNTY

STATION: 15+69.00 -L-

REPLACES BRIDGE NO. 31

PLANS PREPARED BY:

MULKEY
ENGINEERS & CONSULTANTS
PO Box 33127
Raleigh, NC 27636
(919) 851-1912
(919) 851-1918 (FAX)
WWW.MULKEYINC.COM

THIS STANDARD DRAWING REVIEWED & ADOPTED FOR USE AT THE REFERENCED LOCATION BY THE UNDERSIGNED:

NORTH CAROLINA PROFESSIONAL SEAL 19661 ENGINEER L. KEVIN AUSTIN 6/2/09

STATE OF NORTH CAROLINA
DEPARTMENT OF TRANSPORTATION
RALEIGH
STANDARD
RAIL POST SPACINGS AND END OF RAIL DETAILS

REVISIONS						SHEET NO.
NO.	BY:	DATE:	NO.	BY:	DATE:	22
1			3			TOTAL SHEETS
2			4			185

STD. NO. BMR2

ASSEMBLED BY :	W. B. ALLEN	DATE :	2/09
CHECKED BY :	L. K. AUSTIN	DATE :	2/09
DRAWN BY : FCJ 1/88	REV. 10/17/00		LES/RDR
CHECKED BY : CRK 3/89	REV. 5/7/03		RWW/JTE
	REV. 5/1/06		TLA/GM

6/5/2009 2:45:12 PM R:\Structures\BS298LSD_MR_02.dgn

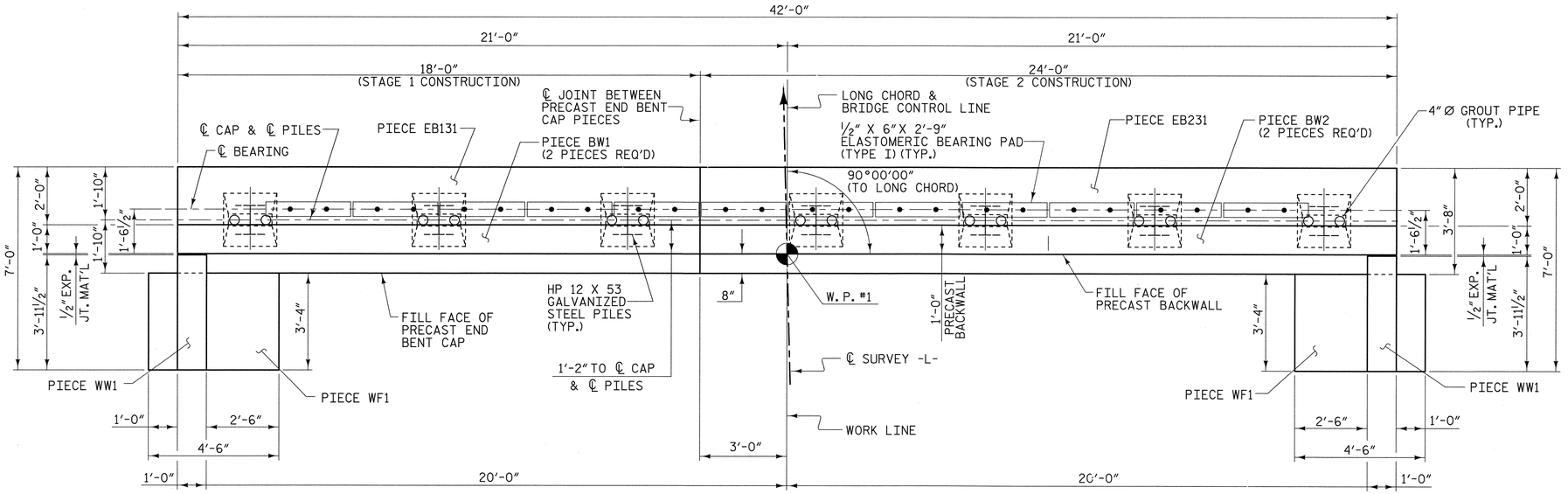

PLAN

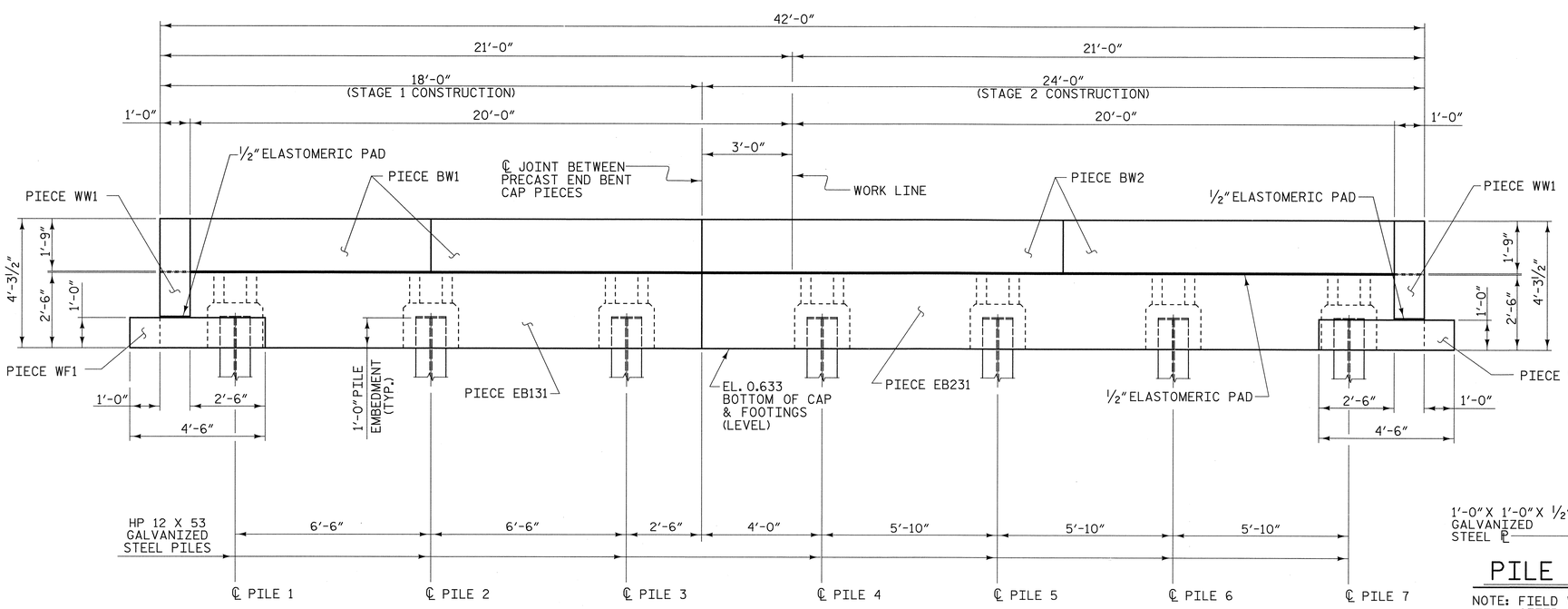

ELEVATION

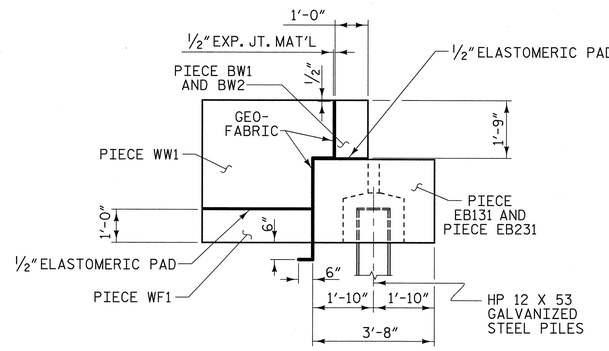

END VIEW

(WITH GEO-FABRIC DETAILS)

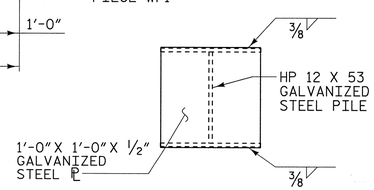

PILE PLATE DETAIL

NOTE: FIELD WELD PLATE TO TOP OF PILE AFTER PILE HAS BEEN DRIVEN AND CUT OFF TO THE PROPER ELEVATION.

NOTES

THE CONTRACTOR'S ATTENTION IS CALLED TO THE FACT THAT W.P. #1 IS LOCATED ON THE "FILL FACE OF PRECAST BACKWALL". THE "FILL FACE OF PRECAST END BENT CAP" IS LOCATED 8" BACK-STATION FROM W.P. #1.

THE FILL FACE OF THE CAP, BACKWALL, AND WINGWALL PIECES SHALL BE LINED WITH GEO-FABRIC.

SEE PIECE EB131 SHEET FOR DETAILS, NOTES, AND BILL OF MATERIAL.

SEE PIECE EB231 SHEET FOR DETAILS, NOTES, AND BILL OF MATERIAL.

SEE PIECE BW1 AND PIECE BW2 SHEET FOR DETAILS, NOTES, AND BILL OF MATERIAL.

SEE PIECE WW1 AND PIECE WF1 SHEET FOR DETAILS, NOTES, AND BILL OF MATERIAL.

THE MINIMUM REQUIRED SOIL BEARING CAPACITY FOR SOIL BENEATH CAP PIECES AND WING FOOTING PIECES SHALL BE 2000 POUNDS PER SQUARE FOOT.

THE ERECTION SUPPORT SYSTEM FOR THE PRECAST CAP SHALL NOT BE REMOVED, CORED SLAB UNITS SHALL NOT BE PLACED ON THE PRECAST CAP, BACKFILLING AGAINST THE PRECAST CAP SHALL NOT BE ALLOWED, AND VEHICLES OR CONSTRUCTION EQUIPMENT SHALL NOT BE ALLOWED ON THE PRECAST CAP UNTIL THE GROUT USED TO FILL THE PILE BLOCKOUTS HAS OBTAINED A COMPRESSIVE STRENGTH OF AT LEAST 4000 PSI. SEE PROJECT SPECIAL PROVISION, "GROUT FOR PILE BLOCKOUTS".

THE CONTRACTOR SHALL SUBMIT TO THE ENGINEER FOR APPROVAL A METHOD TO SUPPORT THE PRECAST CAP IN THE PROPER LOCATION AND ELEVATION AS SHOWN ON THE PLANS PRIOR TO PLACEMENT OF AND CURING OF THE GROUT IN THE PILE BLOCKOUTS. THE METHOD CHOSEN SHALL PROVIDE A WATERTIGHT SEAL AT THE BOTTOM OF THE CAP SO NO GROUT COMES IN CONTACT WITH THE STREAM UNTIL THE GROUT HAS HARDENED.

THE GROUT USED TO FILL THE 4" DIAMETER HOLES IN THE PRECAST BACKWALL PIECES AND IN THE PRECAST WING WALL PIECES SHALL BE NON-SHRINK, NON-METALLIC GROUT THAT IS ON THE DEPARTMENT'S APPROVAL LIST AND SHALL MEET THE APPROVAL OF THE ENGINEER. BACKFILLING AGAINST THE PRECAST BACKWALL AND THE PRECAST WING WALLS SHALL NOT BE ALLOWED, AND CONSTRUCTION EQUIPMENT SHALL NOT BE ALLOWED ON THE PRECAST BACKWALL AND THE PRECAST WING WALLS UNTIL THE GROUT HAS OBTAINED A COMPRESSIVE STRENGTH OF AT LEAST 4000 PSI.

PROJECT NO. 42287

PAMLICO COUNTY

STATION: 15+69.00 -L-

REPLACES BRIDGE NO. 31

STATE OF NORTH CAROLINA
DEPARTMENT OF TRANSPORTATION
RALEIGH

END BENT #1

33'-10" CLEAR ROADWAY - 90° SKEW

REVISIONS						SHEET NO.
NO.	BY:	DATE:	NO.	BY:	DATE:	23
1			3			TOTAL SHEETS
2			4			185

DRAWN BY : W. B. ALLEN DATE : 2/09
CHECKED BY : L. K. AUSTIN DATE : 3/09

NORTH CAROLINA PROFESSIONAL ENGINEER SEAL 19661 KEVIN AUSTIN 8/6/09

PLANS PREPARED BY:
MULKEY ENGINEERS & CONSULTANTS
PO Box 32127
Raleigh, NC 27636
(919) 851-1912
(919) 851-1918 (FAX)
WWW.MULKEYINC.COM

8/6/2009 9:27:44 AM G:\project\2004\224.08_Pamlico\STructures\B5298_SD_EBL01.dgn

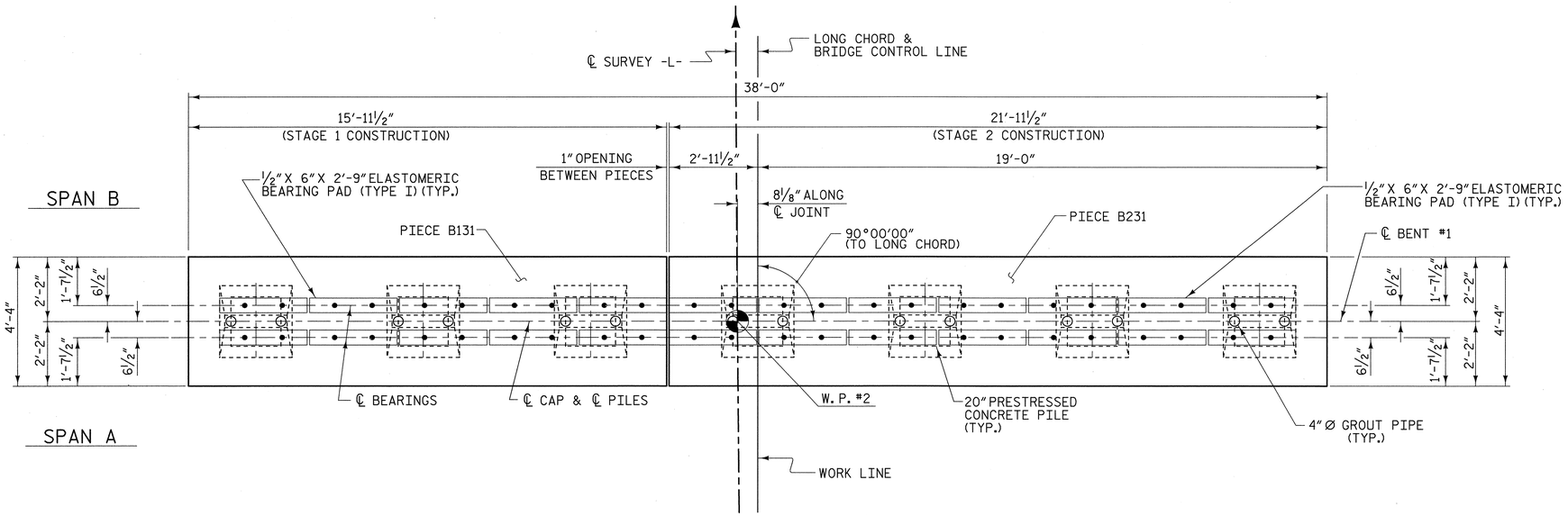

PLAN

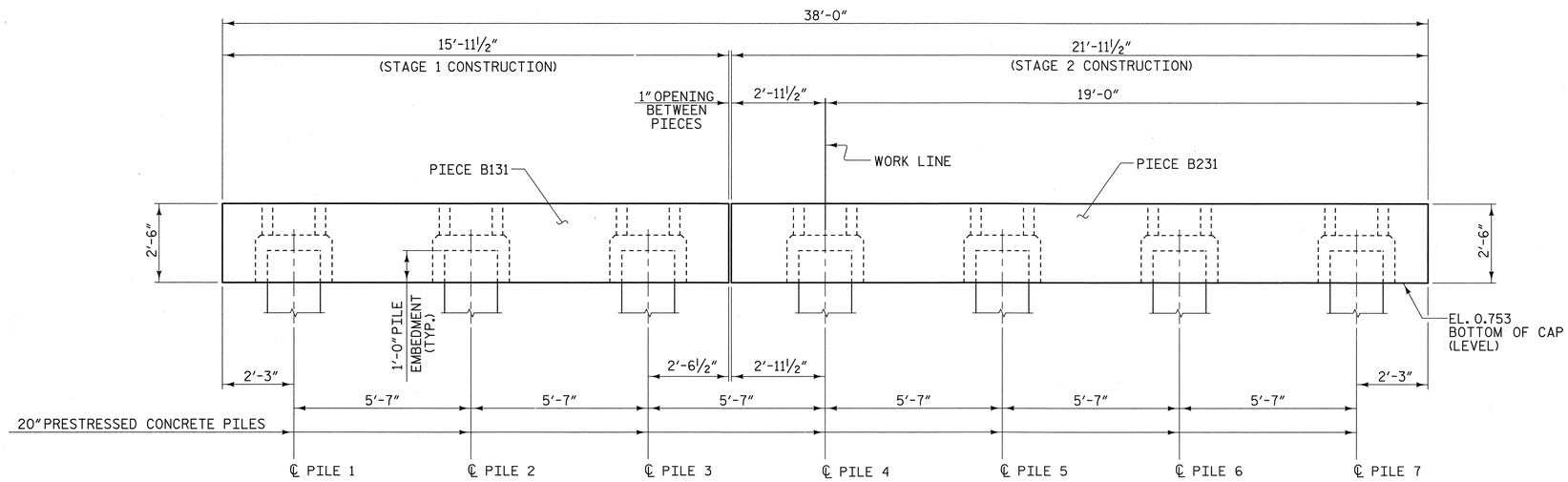

ELEVATION

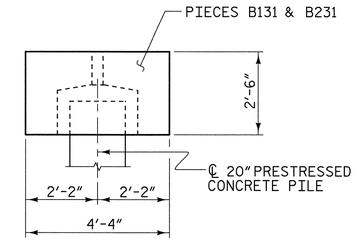

END VIEW

NOTES

SEE PIECE B131 SHEET FOR DETAILS, NOTES, AND BILL OF MATERIAL.

SEE PIECE B231 SHEET FOR DETAILS, NOTES, AND BILL OF MATERIAL.

THE ERECTION SUPPORT SYSTEM FOR THE PRECAST CAP SHALL NOT BE REMOVED, CORED SLAB UNITS SHALL NOT BE PLACED ON THE PRECAST CAP, AND VEHICLES OR CONSTRUCTION EQUIPMENT SHALL NOT BE ALLOWED ON THE PRECAST CAP UNTIL THE GROUT USED TO FILL THE PILE BLOCKOUTS HAS OBTAINED A COMPRESSIVE STRENGTH OF AT LEAST 4000 PSI. SEE PROJECT SPECIAL PROVISION, "GROUT FOR PILE BLOCKOUTS".

THE CONTRACTOR SHALL SUBMIT TO THE ENGINEER FOR APPROVAL A METHOD TO SUPPORT THE PRECAST CAP IN THE PROPER LOCATION AND ELEVATION AS SHOWN ON THE PLANS PRIOR TO PLACEMENT OF AND CURING OF THE GROUT IN THE PILE BLOCKOUTS. THE METHOD CHOSEN SHALL PROVIDE A WATERTIGHT SEAL AT THE BOTTOM OF THE CAP SO NO GROUT COMES IN CONTACT WITH THE STREAM UNTIL THE GROUT HAS HARDENED.

PROJECT NO. 42287

PAMLICO COUNTY

STATION: 15+69.00 -L-

REPLACES BRIDGE NO. 31

STATE OF NORTH CAROLINA
DEPARTMENT OF TRANSPORTATION
RALEIGH

BENT #1

33'-10" CLEAR ROADWAY - 90°SKEW

NORTH CAROLINA PROFESSIONAL SEAL 19661 ENGINEER KEVIN AUSTIN 6/7/09

PLANS PREPARED BY:

MULKEY
ENGINEERS & CONSULTANTS
PO Box 33127
RALEIGH, N.C. 27636
(919) 851-1212 (TEL.)
(919) 851-1213 (FAX)
WWW.MULKEYINC.COM

REVISIONS						SHEET NO.
NO.	BY:	DATE:	NO.	BY:	DATE:	24
1			3			TOTAL SHEETS
2			4			185

DRAWN BY : W. B. ALLEN DATE : 2/09
CHECKED BY : L. K. AUSTIN DATE : 3/09

6/5/2009 2:25:15 PM R:\Structures\B5298_SD_BL0.dgn

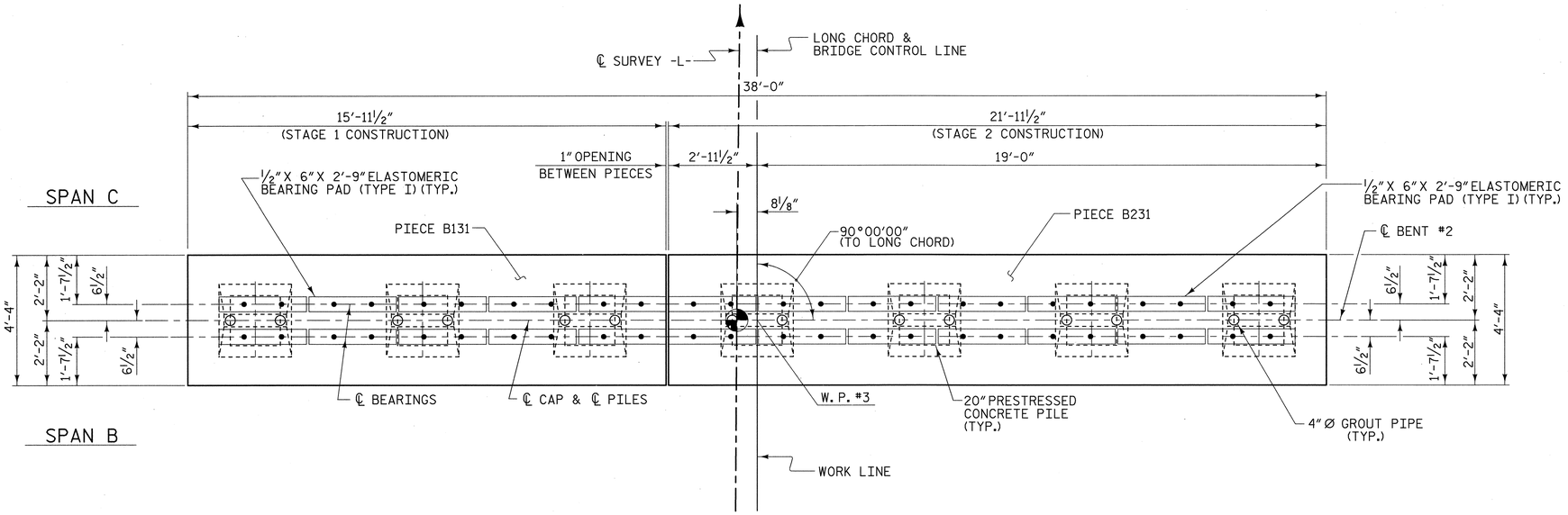

PLAN

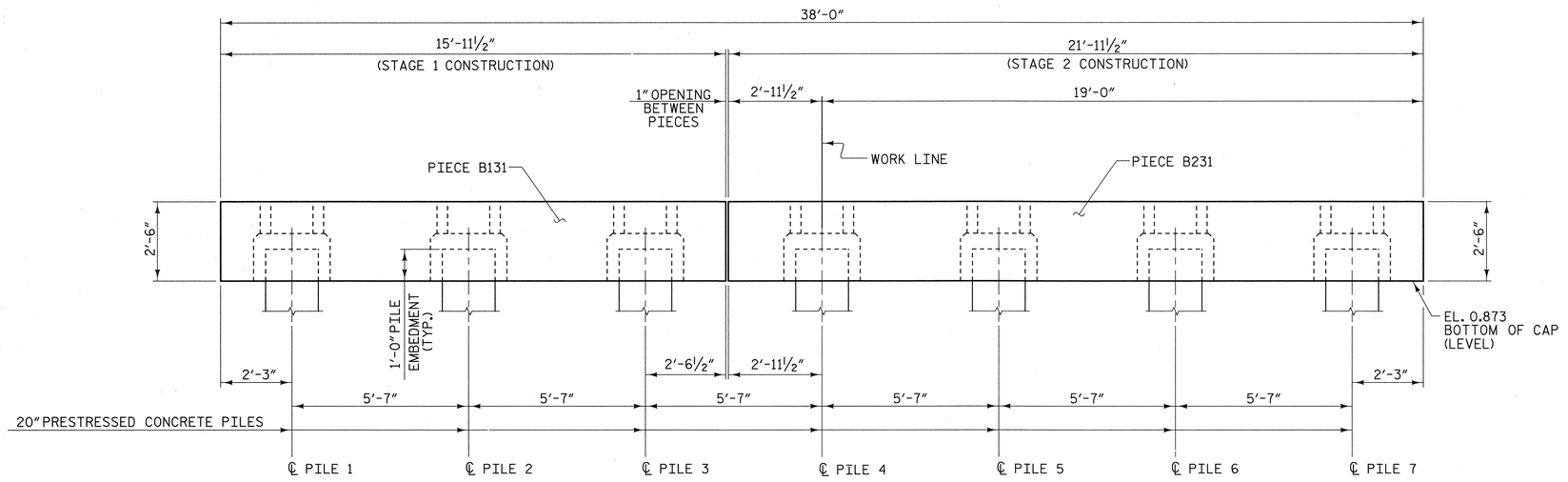

ELEVATION

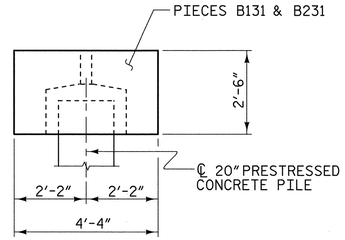

END VIEW

NOTES

SEE PIECE B131 SHEET FOR DETAILS, NOTES, AND BILL OF MATERIAL.

SEE PIECE B231 SHEET FOR DETAILS, NOTES, AND BILL OF MATERIAL.

THE ERECTION SUPPORT SYSTEM FOR THE PRECAST CAP SHALL NOT BE REMOVED, CORED SLAB UNITS SHALL NOT BE PLACED ON THE PRECAST CAP, AND VEHICLES OR CONSTRUCTION EQUIPMENT SHALL NOT BE ALLOWED ON THE PRECAST CAP UNTIL THE GROUT USED TO FILL THE PILE BLOCKOUTS HAS OBTAINED A COMPRESSIVE STRENGTH OF AT LEAST 4000 PSI. SEE PROJECT SPECIAL PROVISION, "GROUT FOR PILE BLOCKOUTS".

THE CONTRACTOR SHALL SUBMIT TO THE ENGINEER FOR APPROVAL A METHOD TO SUPPORT THE PRECAST CAP IN THE PROPER LOCATION AND ELEVATION AS SHOWN ON THE PLANS PRIOR TO PLACEMENT OF AND CURING OF THE GROUT IN THE PILE BLOCKOUTS. THE METHOD CHOSEN SHALL PROVIDE A WATERTIGHT SEAL AT THE BOTTOM OF THE CAP SO NO GROUT COMES IN CONTACT WITH THE STREAM UNTIL THE GROUT HAS HARDENED.

NORTH CAROLINA PROFESSIONAL SEAL 19661 ENGINEER L. KEVIN AUSTIN 6/7/09

PLANS PREPARED BY:

MULKEY
ENGINEERS & CONSULTANTS
PO Box 33127
RALEIGH, N.C. 27636
(919) 851-1912
(919) 851-1918 (FAX)
WWW.MULKEYINC.COM

PROJECT NO. 42287

PAMLICO COUNTY

STATION: 15+69.00 -L-

REPLACES BRIDGE NO. 31

STATE OF NORTH CAROLINA
DEPARTMENT OF TRANSPORTATION
RALEIGH

BENT #2

33'-10" CLEAR ROADWAY - 90°SKEW

REVISIONS						SHEET NO.
NO.	BY:	DATE:	NO.	BY:	DATE:	25
1			3			TOTAL SHEETS
2			4			185

DRAWN BY : W. B. ALLEN DATE : 2/09
CHECKED BY : L. K. AUSTIN DATE : 3/09

6/5/2009 2:24:37 PM R:\Structures\B5298_SD_B2_0L.dgn

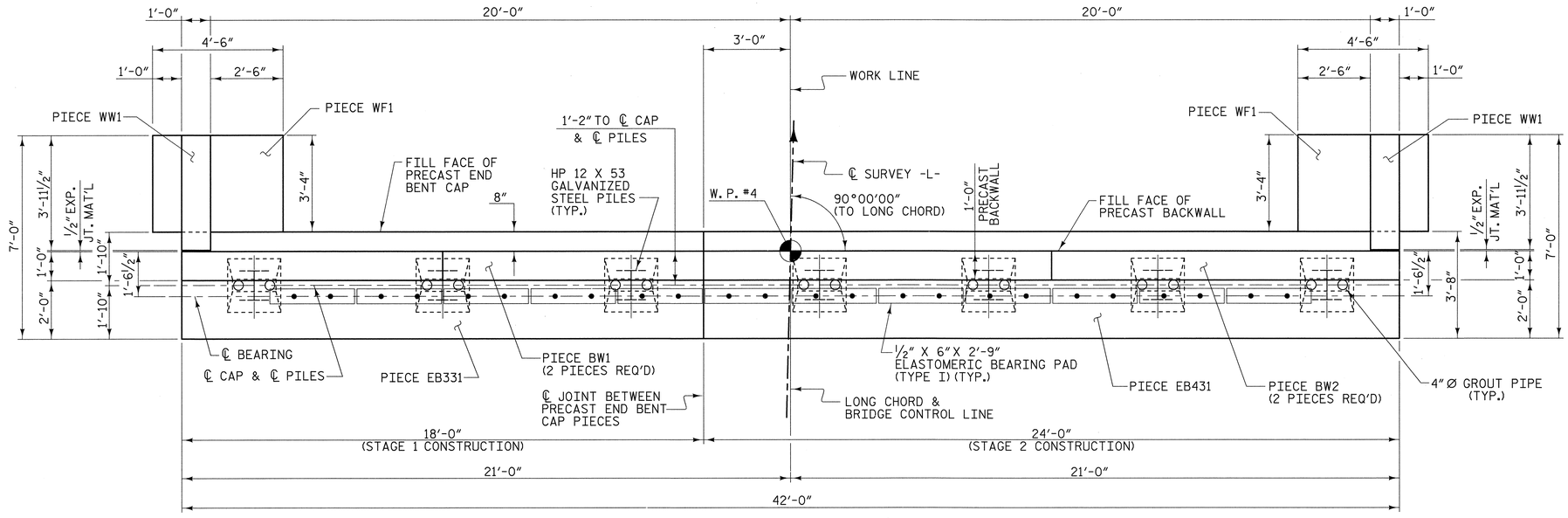

PLAN

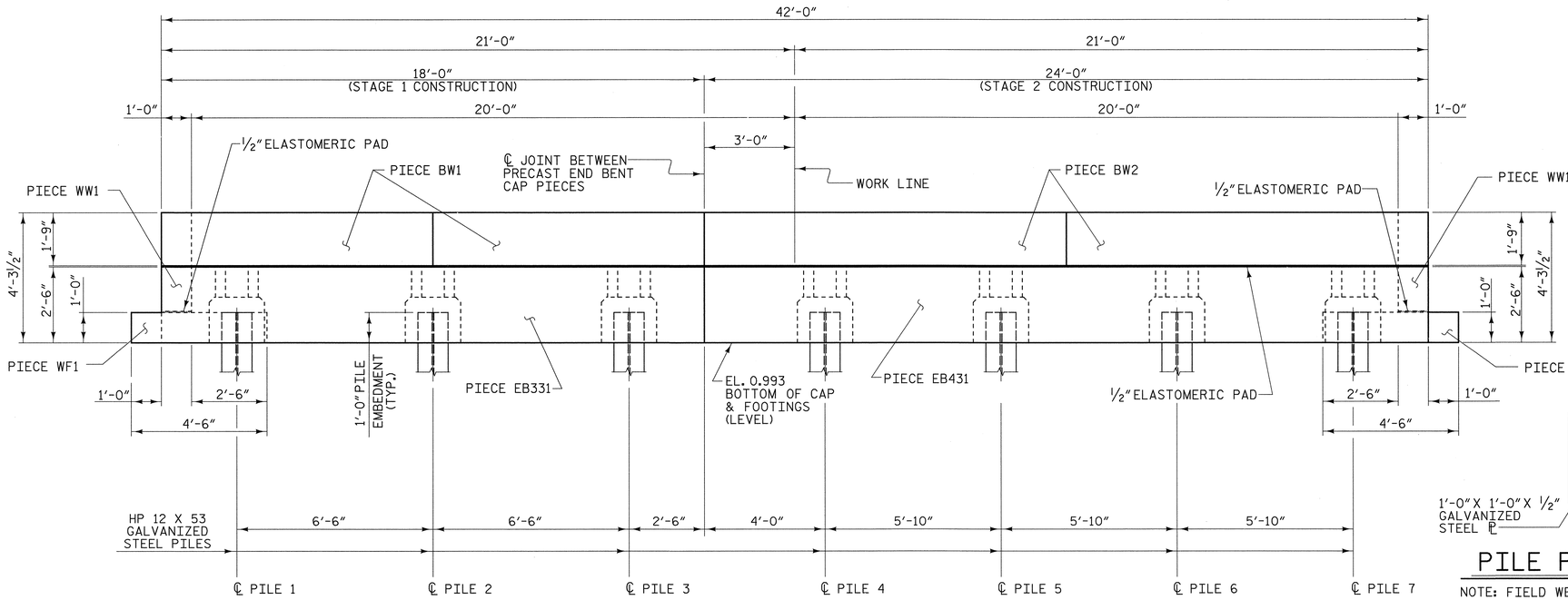

ELEVATION

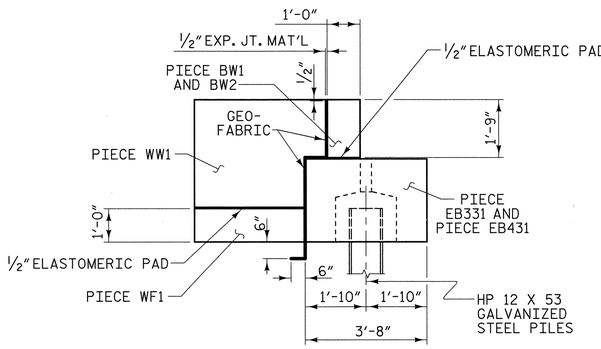

END VIEW

(WITH GEO-FABRIC DETAILS)

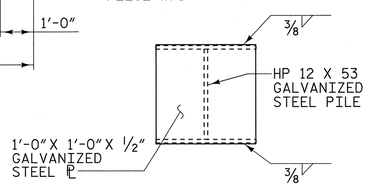

PILE PLATE DETAIL

NOTE: FIELD WELD PLATE TO TOP OF PILE AFTER PILE HAS BEEN DRIVEN AND CUT OFF TO THE PROPER ELEVATION.

NOTES

THE CONTRACTOR'S ATTENTION IS CALLED TO THE FACT THAT W.P. #4 IS LOCATED ON THE "FILL FACE OF PRECAST BACKWALL". THE "FILL FACE OF PRECAST END BENT CAP" IS LOCATED 8" AHEAD-STATION FROM W.P. #4.

THE FILL FACE OF THE CAP, BACKWALL, AND WINGWALL PIECES SHALL BE LINED WITH GEO-FABRIC.

SEE PIECE EB331 SHEET FOR DETAILS, NOTES, AND BILL OF MATERIAL.

SEE PIECE EB431 SHEET FOR DETAILS, NOTES, AND BILL OF MATERIAL.

SEE PIECE BW1 AND PIECE BW2 SHEET FOR DETAILS, NOTES, AND BILL OF MATERIAL.

SEE PIECE WW1 AND PIECE WF1 SHEET FOR DETAILS, NOTES, AND BILL OF MATERIAL.

THE MINIMUM REQUIRED SOIL BEARING CAPACITY FOR SOIL BENEATH CAP PIECES AND WING FOOTING PIECES SHALL BE 2000 POUNDS PER SQUARE FOOT.

THE ERECTION SUPPORT SYSTEM FOR THE PRECAST CAP SHALL NOT BE REMOVED, CORED SLAB UNITS SHALL NOT BE PLACED ON THE PRECAST CAP, BACKFILLING AGAINST THE PRECAST CAP SHALL NOT BE ALLOWED, AND VEHICLES OR CONSTRUCTION EQUIPMENT SHALL NOT BE ALLOWED ON THE PRECAST CAP UNTIL THE GROUT USED TO FILL THE PILE BLOCKOUTS HAS OBTAINED A COMPRESSIVE STRENGTH OF AT LEAST 4000 PSI. SEE PROJECT SPECIAL PROVISION, "GROUT FOR PILE BLOCKOUTS".

THE CONTRACTOR SHALL SUBMIT TO THE ENGINEER FOR APPROVAL A METHOD TO SUPPORT THE PRECAST CAP IN THE PROPER LOCATION AND ELEVATION AS SHOWN ON THE PLANS PRIOR TO PLACEMENT OF AND CURING OF THE GROUT IN THE PILE BLOCKOUTS. THE METHOD CHOSEN SHALL PROVIDE A WATERTIGHT SEAL AT THE BOTTOM OF THE CAP SO NO GROUT COMES IN CONTACT WITH THE STREAM UNTIL THE GROUT HAS HARDENED.

THE GROUT USED TO FILL THE 4" DIAMETER HOLES IN THE PRECAST BACKWALL PIECES AND IN THE PRECAST WING WALL PIECES SHALL BE NON-SHRINK, NON-METALLIC GROUT THAT IS ON THE DEPARTMENT'S APPROVAL LIST AND SHALL MEET THE APPROVAL OF THE ENGINEER. BACKFILLING AGAINST THE PRECAST BACKWALL AND THE PRECAST WING WALLS SHALL NOT BE ALLOWED, AND CONSTRUCTION EQUIPMENT SHALL NOT BE ALLOWED ON THE PRECAST BACKWALL AND THE PRECAST WING WALLS UNTIL THE GROUT HAS OBTAINED A COMPRESSIVE STRENGTH OF AT LEAST 4000 PSI.

PROJECT NO. 42287

PAMLICO COUNTY

STATION: 15+69.00 -L-

REPLACES BRIDGE NO. 31

STATE OF NORTH CAROLINA
DEPARTMENT OF TRANSPORTATION
RALEIGH

END BENT #2

33'-10" CLEAR ROADWAY - 90° SKEW

REVISIONS						SHEET NO.
NO.	BY:	DATE:	NO.	BY:	DATE:	26
1			3			TOTAL SHEETS
2			4			185

DRAWN BY : W. B. ALLEN DATE : 2/09
CHECKED BY : L. K. AUSTIN DATE : 3/09

NORTH CAROLINA PROFESSIONAL SEAL 19661 ENGINEER L. KEVIN AUSTIN 8/6/09

PLANS PREPARED BY:
MULKEY
ENGINEERS & CONSULTANTS
PO Box 33127
Raleigh, N.C. 27636
(919) 851-1912
(919) 851-1918 (FAX)
WWW.MULKEYINC.COM

8/6/2009 9:30:07 AM G:\project\2004\224.08_Pamlico\Structures\B5298_SD_EB2_01.dgn

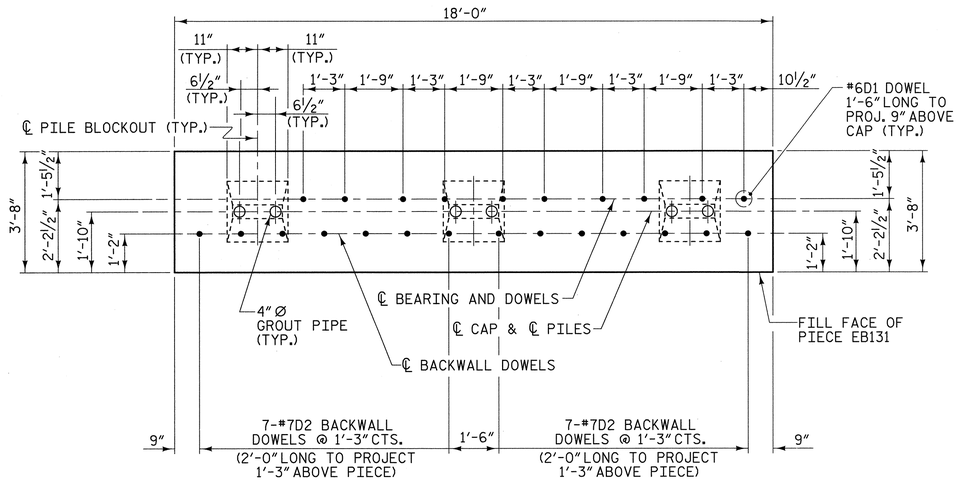

PLAN - PRECAST PIECE EB131

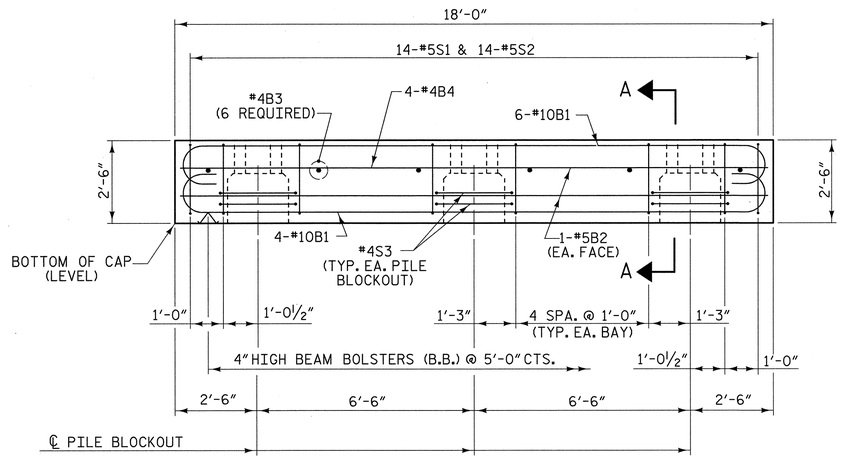

ELEVATION - PRECAST PIECE EB131

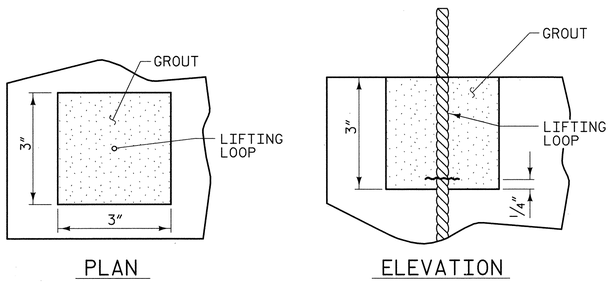

PLAN ELEVATION

GROUTED RECESS FOR LIFTING LOOPS

LIFTING LOOPS TO BE CUT ¼" ABOVE BOTTOM OF RECESS.

SECTION A-A

NOTES

STIRRUPS IN PRECAST PIECE EB131 MAY BE SHIFTED AS NECESSARY TO CLEAR DOWELS AND GROUT PIPES.

ALL REINFORCING STEEL AND BAR SUPPORTS SHALL BE EPOXY COATED ACCORDING TO THE STANDARD SPECIFICATIONS.

CLASS AA (4500 PSI) CONCRETE SHALL BE USED IN PRECAST PIECE EB131.

DOWELS SHALL BE PRESET IN THE PRECAST CAP IN THE LOCATIONS SHOWN ON THE PLANS. DRILLING AND ADHESIVE ANCHORING OF THE DOWELS AFTER CASTING MUST BE APPROVED BY THE ENGINEER.

TWO LIFTING LOOPS SHALL BE ALLOWED IN THE PRECAST PIECE IN ACCORDANCE WITH ARTICLE 1077-10 OF THE STANDARD SPECIFICATIONS WITH THE FOLLOWING ADDITIONS. THE LIFTING LOOPS SHALL BE BURNED OFF PRIOR TO PLACING THE ELASTOMERIC BEARING PADS. THE ENDS OF THE LIFTING LOOPS TO BE BURNED OFF SHALL BE RECESSED AND GROUTED. SEE DETAIL FOR GROUTED RECESS FOR LIFTING LOOPS. GROUT SHALL BE NON-METALLIC AND NON-SHRINK ACCORDING TO THE STANDARD SPECIFICATIONS. PROPOSED DEVICES FOR LIFTING LOOPS SHALL BE DETAILED IN SHOP DRAWINGS.

TWO 4 INCH Ø GROUT PIPES SHALL BE PROVIDED AT EACH PILE BLOCKOUT. THE 4 INCH Ø GROUT PIPES SHALL BE CUT FROM SCHEDULE 40 PVC PIPE AND SHALL BE FIRMLY ANCHORED OR REMOVED PRIOR TO PLACEMENT OF THE GROUT.

THE TOP OF THE PILE BLOCKOUT SHALL BE CHAMFERED 2" IN THE TRANSVERSE DIRECTION.

BAR TYPES

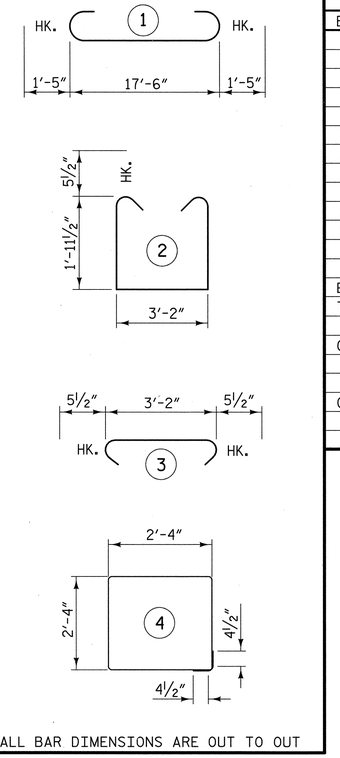

ALL BAR DIMENSIONS ARE OUT TO OUT

BILL OF MATERIAL FOR ONE PIECE EB131

BAR	NO.	SIZE	TYPE	LENGTH	WEIGHT
B1	10	#10	1	20'-4"	875
B2	4	#5	STR	17'-7"	73
B3	6	#4	STR	3'-3"	13
B4	4	#4	STR	17'-7"	47
D1	10	#6	STR	1'-6"	23
D2	14	#7	STR	2'-0"	57
S1	14	#5	2	8'-0"	117
S2	14	#5	3	4'-1"	60
S3	6	#4	4	10'-1"	40
EPOXY COATED REINFORCING STEEL					
TOTAL					1305 LBS.
CLASS AA (4500 PSI) CONCRETE					
					5.5 CU. YDS.
GROUT FOR PILE BLOCKOUTS					
					0.6 CU. YDS.

PROJECT NO. 42287

PAMLICO COUNTY

STATION: 15+69.00 -L-

REPLACES BRIDGE NO. 31

STATE OF NORTH CAROLINA
DEPARTMENT OF TRANSPORTATION
RALEIGH

PRECAST PIECE EB131

33'-10" CLEAR ROADWAY - 90° SKEW

NORTH CAROLINA PROFESSIONAL SEAL 19661 ENGINEER L. KEVIN AUSTIN 6/7/09

PLANS PREPARED BY:

MULKEY
ENGINEERS & CONSULTANTS
PO Box 33127
RALEIGH, N.C. 27636
(919) 851-1918
(919) 851-1918 (FAX)
WWW.MULKEYINC.COM

REVISIONS						SHEET NO.
NO.	BY:	DATE:	NO.	BY:	DATE:	27
1			3			TOTAL SHEETS
2			4			185

DRAWN BY : W. B. ALLEN DATE : 2/09
CHECKED BY : L. K. AUSTIN DATE : 3/09

6/5/2009 2:23:28 PM R:\Structures\BS29B_SD_EBCA_0.dgn

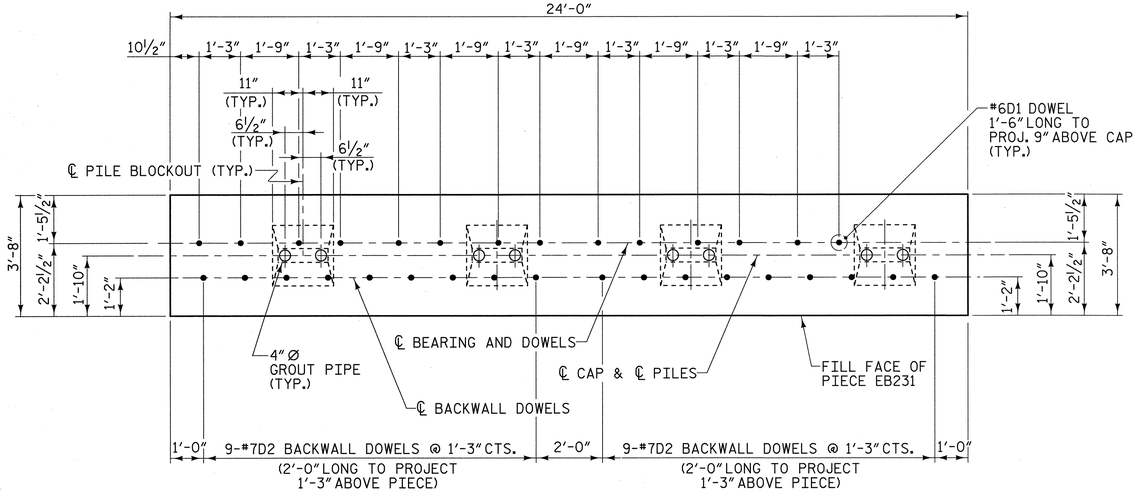

PLAN - PRECAST PIECE EB231

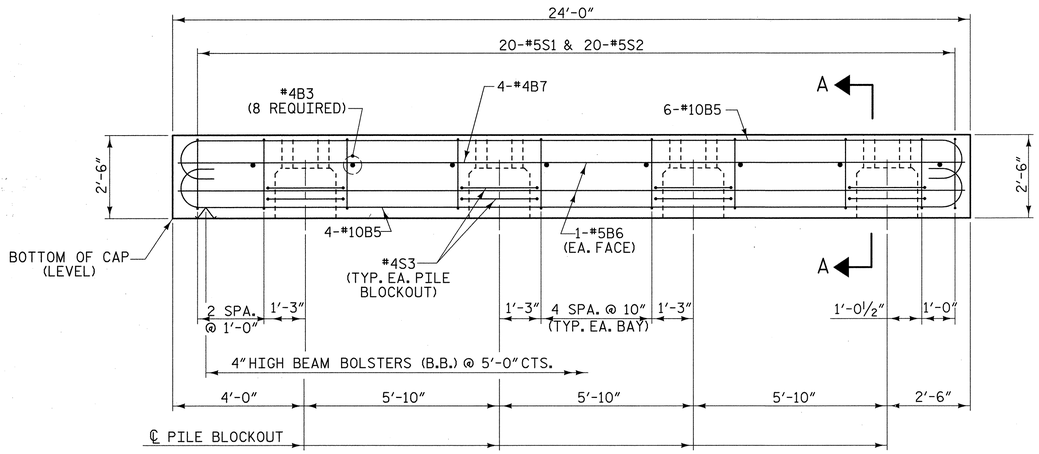

ELEVATION - PRECAST PIECE EB231

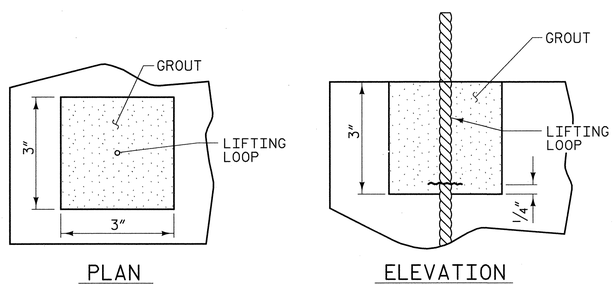

GROUTED RECESS FOR LIFTING LOOPS

LIFTING LOOPS TO BE CUT ¼" ABOVE BOTTOM OF RECESS.

NOTES

STIRRUPS IN PRECAST PIECE EB231 MAY BE SHIFTED AS NECESSARY TO CLEAR DOWELS AND GROUT PIPES.

ALL REINFORCING STEEL AND BAR SUPPORTS SHALL BE EPOXY COATED ACCORDING TO THE STANDARD SPECIFICATIONS.

CLASS AA (4500 PSI) CONCRETE SHALL BE USED IN PRECAST PIECE EB231.

DOWELS SHALL BE PRESET IN THE PRECAST CAP IN THE LOCATIONS SHOWN ON THE PLANS. DRILLING AND ADHESIVE ANCHORING OF THE DOWELS AFTER CASTING MUST BE APPROVED BY THE ENGINEER.

TWO LIFTING LOOPS SHALL BE ALLOWED IN THE PRECAST PIECE IN ACCORDANCE WITH ARTICLE 1077-10 OF THE STANDARD SPECIFICATIONS WITH THE FOLLOWING ADDITIONS. THE LIFTING LOOPS SHALL BE BURNED OFF PRIOR TO PLACING THE ELASTOMERIC BEARING PADS. THE ENDS OF THE LIFTING LOOPS TO BE BURNED OFF SHALL BE RECESSED AND GROUTED. SEE DETAIL FOR GROUTED RECESS FOR LIFTING LOOPS. GROUT SHALL BE NON-METALLIC AND NON-SHRINK ACCORDING TO THE STANDARD SPECIFICATIONS. PROPOSED DEVICES FOR LIFTING LOOPS SHALL BE DETAILED IN SHOP DRAWINGS.

TWO 4 INCH Ø GROUT PIPES SHALL BE PROVIDED AT EACH PILE BLOCKOUT. THE 4 INCH Ø GROUT PIPES SHALL BE CUT FROM SCHEDULE 40 PVC PIPE AND SHALL BE FIRMLY ANCHORED OR REMOVED PRIOR TO PLACEMENT OF THE GROUT.

THE TOP OF THE PILE BLOCKOUT SHALL BE CHAMFERED 2" IN THE TRANSVERSE DIRECTION.

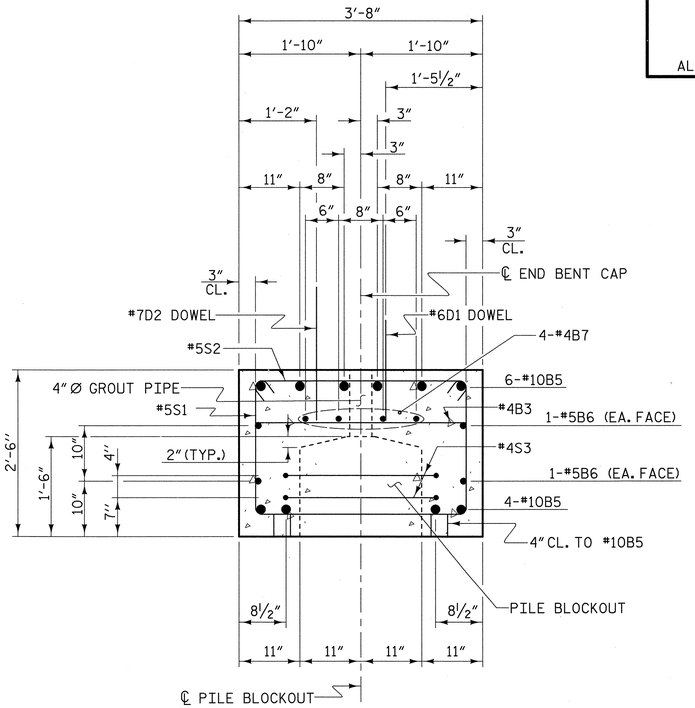

SECTION A-A

BAR TYPES

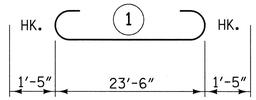

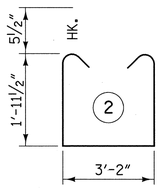

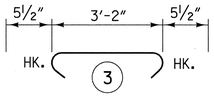

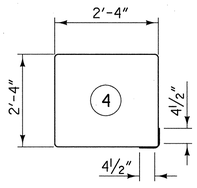

ALL BAR DIMENSIONS ARE OUT TO OUT

BILL OF MATERIAL FOR ONE PIECE EB231

BAR	NO.	SIZE	TYPE	LENGTH	WEIGHT
B3	8	#4	STR	3'-3"	17
B5	10	#10	1	26'-4"	1133
B6	4	#5	STR	23'-7"	98
B7	4	#4	STR	23'-7"	63
D1	14	#6	STR	1'-6"	32
D2	18	#7	STR	2'-0"	74
S1	20	#5	2	8'-0"	167
S2	20	#5	3	4'-1"	85
S3	8	#4	4	10'-1"	54

EPOXY COATED REINFORCING STEEL	
TOTAL	1723 LBS.
CLASS AA (4500 PSI) CONCRETE	
	7.4 CU. YDS.
GROUT FOR PILE BLOCKOUTS	
	0.8 CU. YDS.

PROJECT NO. 42287

PAMLICO COUNTY

STATION: 15+69.00 -L-

REPLACES BRIDGE NO. 31

STATE OF NORTH CAROLINA
DEPARTMENT OF TRANSPORTATION
RALEIGH

PRECAST PIECE EB231

33'-10" CLEAR ROADWAY - 90° SKEW

NORTH CAROLINA PROFESSIONAL SEAL 1966 ENGINEER L. KEVIN AUSTIN 6/7/09

PLANS PREPARED BY:

MULKEY
ENGINEERS & CONSULTANTS
PO Box 33127
RALEIGH, N.C. 27636
(919) 851-1912
(919) 851-1918 (FAX)
WWW.MULKEYINC.COM

REVISIONS						SHEET NO.
NO.	BY:	DATE:	NO.	BY:	DATE:	28
1			3			TOTAL SHEETS
2			4			185

DRAWN BY : W. B. ALLEN DATE : 2/09
CHECKED BY : L. K. AUSTIN DATE : 3/09

6/5/2009 2:22:50 PM R:\Structures\B5298_SD_EB08_0.dgn

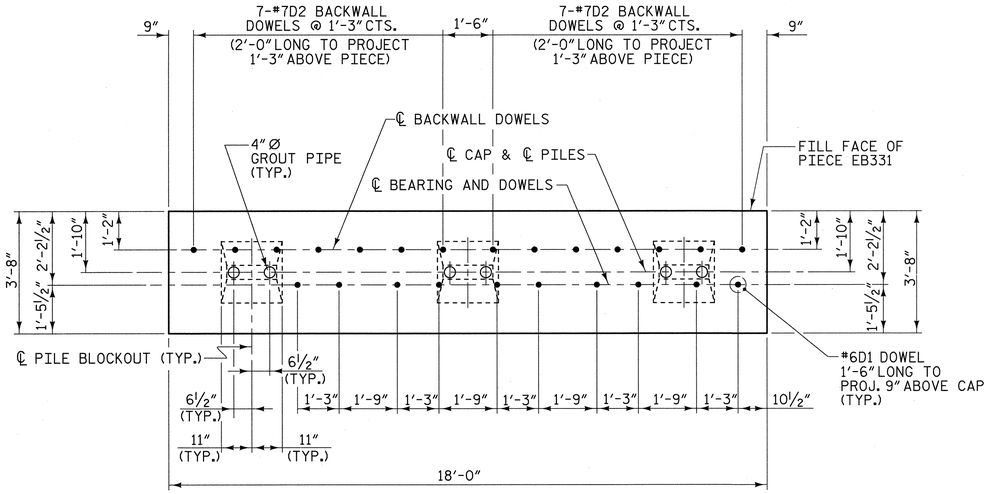

PLAN - PRECAST PIECE EB331

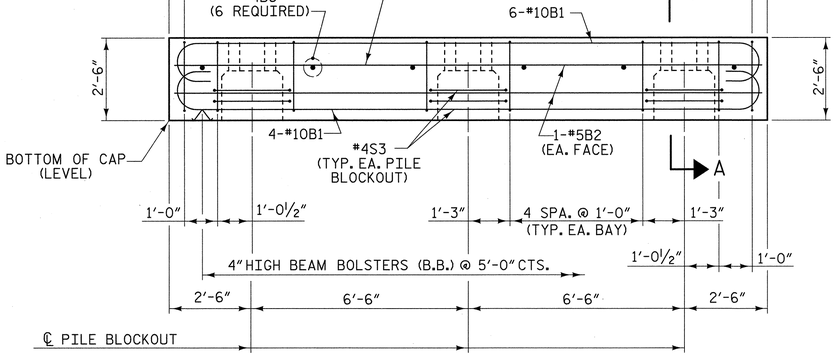

ELEVATION - PRECAST PIECE EB331

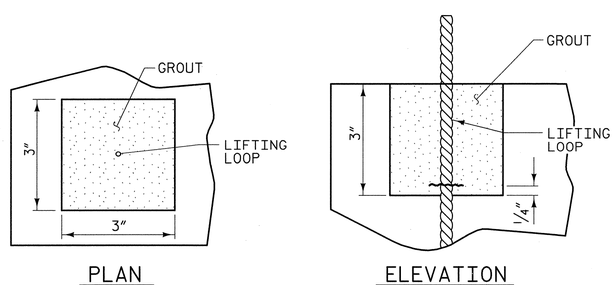

GROUTED RECESS FOR LIFTING LOOPS

LIFTING LOOPS TO BE CUT ¼″ ABOVE BOTTOM OF RECESS.

NOTES

STIRRUPS IN PRECAST PIECE EB331 MAY BE SHIFTED AS NECESSARY TO CLEAR DOWELS AND GROUT PIPES.

ALL REINFORCING STEEL AND BAR SUPPORTS SHALL BE EPOXY COATED ACCORDING TO THE STANDARD SPECIFICATIONS.

CLASS AA (4500 PSI) CONCRETE SHALL BE USED IN PRECAST PIECE EB331.

DOWELS SHALL BE PRESET IN THE PRECAST CAP IN THE LOCATIONS SHOWN ON THE PLANS. DRILLING AND ADHESIVE ANCHORING OF THE DOWELS AFTER CASTING MUST BE APPROVED BY THE ENGINEER.

TWO LIFTING LOOPS SHALL BE ALLOWED IN THE PRECAST PIECE IN ACCORDANCE WITH ARTICLE 1077-10 OF THE STANDARD SPECIFICATIONS WITH THE FOLLOWING ADDITIONS. THE LIFTING LOOPS SHALL BE BURNED OFF PRIOR TO PLACING THE ELASTOMERIC BEARING PADS. THE ENDS OF THE LIFTING LOOPS TO BE BURNED OFF SHALL BE RECESSED AND GROUTED. SEE DETAIL FOR GROUTED RECESS FOR LIFTING LOOPS. GROUT SHALL BE NON-METALLIC AND NON-SHRINK ACCORDING TO THE STANDARD SPECIFICATIONS. PROPOSED DEVICES FOR LIFTING LOOPS SHALL BE DETAILED IN SHOP DRAWINGS.

TWO 4 INCH Ø GROUT PIPES SHALL BE PROVIDED AT EACH PILE BLOCKOUT. THE 4 INCH Ø GROUT PIPES SHALL BE CUT FROM SCHEDULE 40 PVC PIPE AND SHALL BE FIRMLY ANCHORED OR REMOVED PRIOR TO PLACEMENT OF THE GROUT.

THE TOP OF THE PILE BLOCKOUT SHALL BE CHAMFERED 2″ IN THE TRANSVERSE DIRECTION.

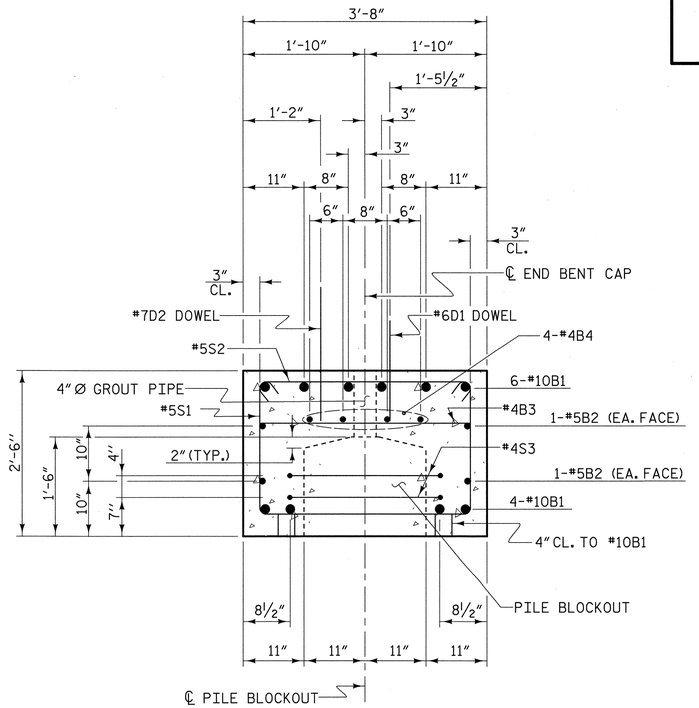

SECTION A-A

BAR TYPES

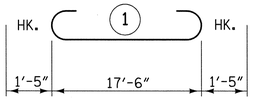

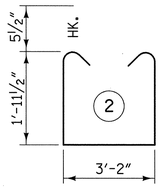

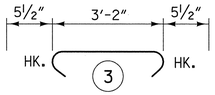

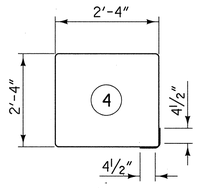

ALL BAR DIMENSIONS ARE OUT TO OUT

BILL OF MATERIAL FOR ONE PIECE EB331

BAR	NO.	SIZE	TYPE	LENGTH	WEIGHT
B1	10	#10	1	20′-4″	875
B2	4	#5	STR	17′-7″	73
B3	6	#4	STR	3′-3″	13
B4	4	#4	STR	17′-7″	47
D1	10	#6	STR	1′-6″	23
D2	14	#7	STR	2′-0″	57
S1	14	#5	2	8′-0″	117
S2	14	#5	3	4′-1″	60
S3	6	#4	4	10′-1″	40

EPOXY COATED REINFORCING STEEL
TOTAL 1305 LBS.

CLASS AA (4500 PSI) CONCRETE
5.5 CU. YDS.

GROUT FOR PILE BLOCKOUTS
0.6 CU. YDS.

PLANS PREPARED BY:

MULKEY
ENGINEERS & CONSULTANTS
PO BOX 33127
RALEIGH, NC 27636
(919) 851-1912
(919) 851-1913 (FAX)
WWW.MULKEYINC.COM

PROJECT NO. 42287
PAMLICO COUNTY
STATION: 15+69.00 -L-

REPLACES BRIDGE NO. 31

STATE OF NORTH CAROLINA
DEPARTMENT OF TRANSPORTATION
RALEIGH

PRECAST PIECE EB331

33′-10″ CLEAR ROADWAY - 90°SKEW

REVISIONS						SHEET NO.
NO.	BY:	DATE:	NO.	BY:	DATE:	29
1			3			TOTAL SHEETS
2			4			185

DRAWN BY : W. B. ALLEN DATE : 2/09
CHECKED BY : L. K. AUSTIN DATE : 3/09

6/5/2009 2:23:02 PM R:\Structures\B5298_SD_EBCC.dgn

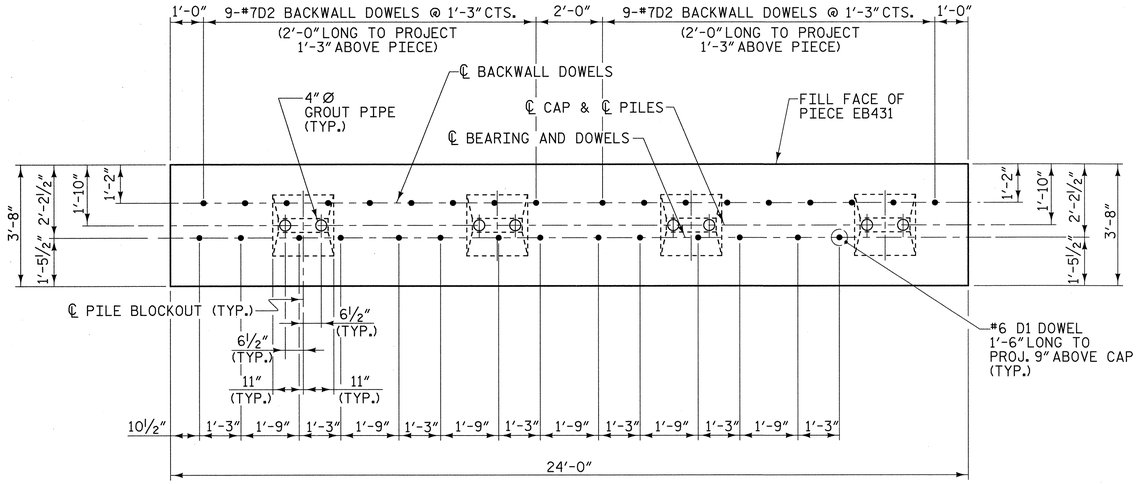

PLAN - PRECAST PIECE EB431

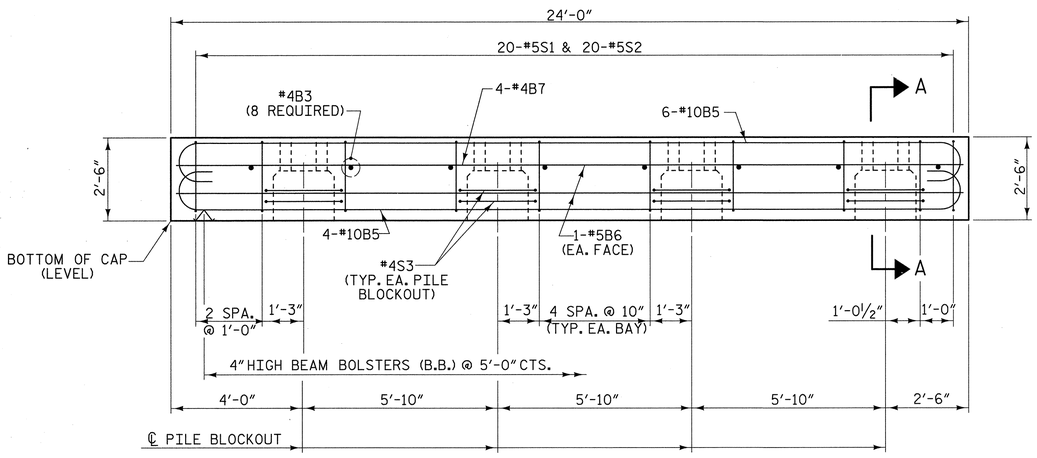

ELEVATION - PRECAST PIECE EB431

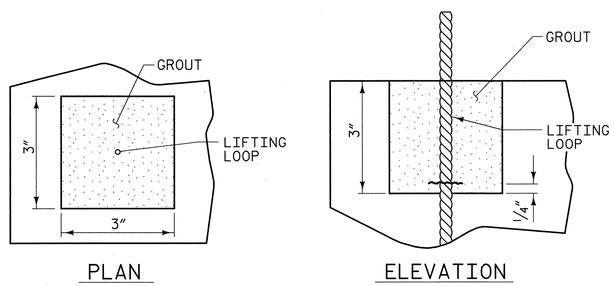

GROUTED RECESS FOR LIFTING LOOPS

LIFTING LOOPS TO BE CUT ¼" ABOVE BOTTOM OF RECESS.

NOTES

STIRRUPS IN PRECAST PIECE EB431 MAY BE SHIFTED AS NECESSARY TO CLEAR DOWELS AND GROUT PIPES.

ALL REINFORCING STEEL AND BAR SUPPORTS SHALL BE EPOXY COATED ACCORDING TO THE STANDARD SPECIFICATIONS.

CLASS AA (4500 PSI) CONCRETE SHALL BE USED IN PRECAST PIECE EB431.

DOWELS SHALL BE PRESET IN THE PRECAST CAP IN THE LOCATIONS SHOWN ON THE PLANS. DRILLING AND ADHESIVE ANCHORING OF THE DOWELS AFTER CASTING MUST BE APPROVED BY THE ENGINEER.

TWO LIFTING LOOPS SHALL BE ALLOWED IN THE PRECAST PIECE IN ACCORDANCE WITH ARTICLE 1077-10 OF THE STANDARD SPECIFICATIONS WITH THE FOLLOWING ADDITIONS. THE LIFTING LOOPS SHALL BE BURNED OFF PRIOR TO PLACING THE ELASTOMERIC BEARING PADS. THE ENDS OF THE LIFTING LOOPS TO BE BURNED OFF SHALL BE RECESSED AND GROUTED. SEE DETAIL FOR GROUTED RECESS FOR LIFTING LOOPS. GROUT SHALL BE NON-METALLIC AND NON-SHRINK ACCORDING TO THE STANDARD SPECIFICATIONS. PROPOSED DEVICES FOR LIFTING LOOPS SHALL BE DETAILED IN SHOP DRAWINGS.

TWO 4 INCH Ø GROUT PIPES SHALL BE PROVIDED AT EACH PILE BLOCKOUT. THE 4 INCH Ø GROUT PIPES SHALL BE CUT FROM SCHEDULE 40 PVC PIPE AND SHALL BE FIRMLY ANCHORED OR REMOVED PRIOR TO PLACEMENT OF THE GROUT.

THE TOP OF THE PILE BLOCKOUT SHALL BE CHAMFERED 2" IN TRANSVERSE DIRECTION.

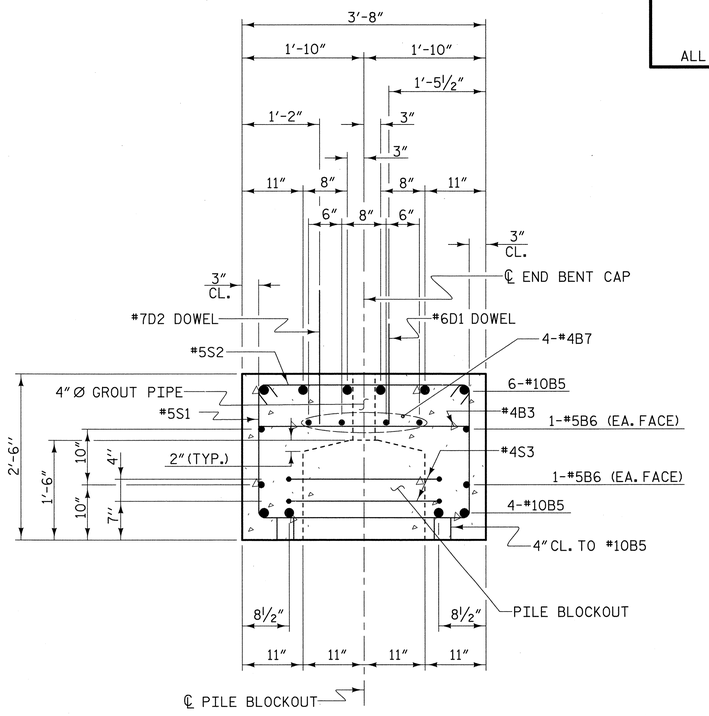

SECTION A-A

BAR TYPES

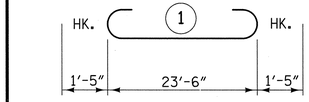

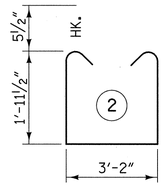

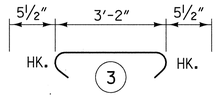

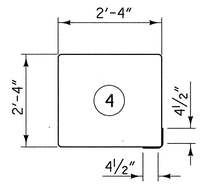

ALL BAR DIMENSIONS ARE OUT TO OUT

BILL OF MATERIAL FOR ONE PIECE EB431

BAR	NO.	SIZE	TYPE	LENGTH	WEIGHT
B3	8	#4	STR	3'-3"	17
B5	10	#10	1	26'-4"	1133
B6	4	#5	STR	23'-7"	98
B7	4	#4	STR	23'-7"	63
D1	14	#6	STR	1'-6"	32
D2	18	#7	STR	2'-0"	74
S1	20	#5	2	8'-0"	167
S2	20	#5	3	4'-1"	85
S3	8	#4	4	10'-1"	54
EPOXY COATED REINFORCING STEEL					
TOTAL					1723 LBS.
CLASS AA (4500 PSI) CONCRETE					
					7.4 CU. YDS.
GROUT FOR PILE BLOCKOUTS					
					0.8 CU. YDS.

PLANS PREPARED BY:

MULKEY
ENGINEERS & CONSULTANTS
PO Box 33127
RALEIGH, N.C. 27636
(919) 851-1912
(919) 851-1918 (FAX)
WWW.MULKEYINC.COM

PROJECT NO. 42287

PAMLICO COUNTY

STATION: 15+69.00 -L-

REPLACES BRIDGE NO. 31

STATE OF NORTH CAROLINA
DEPARTMENT OF TRANSPORTATION
RALEIGH

PRECAST PIECE EB431

33'-10" CLEAR ROADWAY - 90° SKEW

REVISIONS						SHEET NO.
NO.	BY:	DATE:	NO.	BY:	DATE:	30
1			3			TOTAL SHEETS
2			4			185

DRAWN BY : W. B. ALLEN DATE : 2/09
CHECKED BY : L. K. AUSTIN DATE : 3/09

6/5/2009 2:2:27 PM R:\Structures\B5298B_SD_EB02_00.dgn

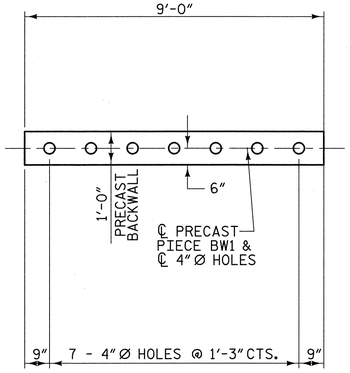

PLAN - PRECAST PIECE BW1

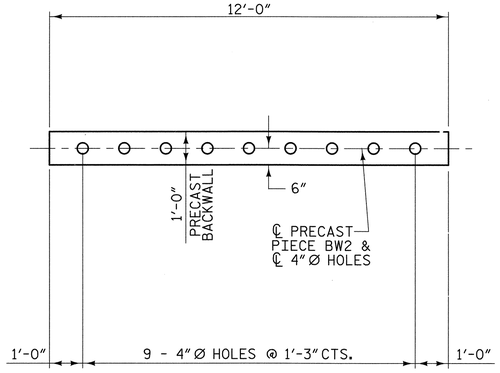

PLAN - PRECAST PIECE BW2

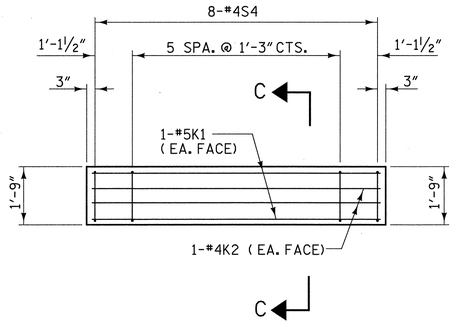

ELEVATION - PRECAST PIECE BW1

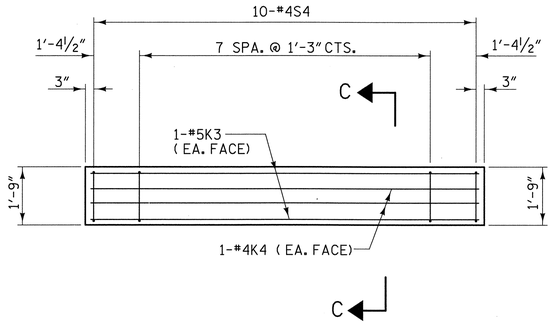

ELEVATION - PRECAST PIECE BW2

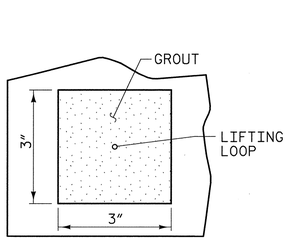

PLAN

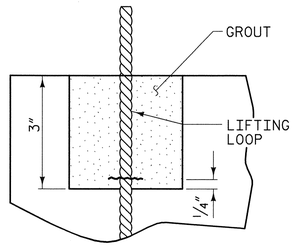

ELEVATION

GROUTED RECESS FOR LIFTING LOOPS

LIFTING LOOPS TO BE CUT ¼″ ABOVE BOTTOM OF RECESS.

NOTES

ALL REINFORCING STEEL AND BAR SUPPORTS SHALL BE EPOXY COATED ACCORDING TO THE STANDARD SPECIFICATIONS.

CLASS AA (4500 PSI) CONCRETE SHALL BE USED IN PRECAST PIECES BW1 & BW2.

TWO LIFTING LOOPS SHALL BE ALLOWED IN THE PRECAST BACKWALL IN ACCORDANCE WITH ARTICLE 1077-10 OF THE STANDARD SPECIFICATIONS WITH THE FOLLOWING ADDITIONS. THE LIFTING LOOPS TO BE BURNED OFF SHALL BE RECESSED AND GROUTED. SEE DETAIL FOR GROUTED RECESS FOR LIFTING LOOPS. GROUT SHALL BE NON-METALLIC AND NON-SHRINK ACCORDING TO THE STANDARD SPECIFICATIONS. PROPOSED DEVICES FOR LIFTING LOOPS SHALL BE DETAILED IN SHOP DRAWINGS.

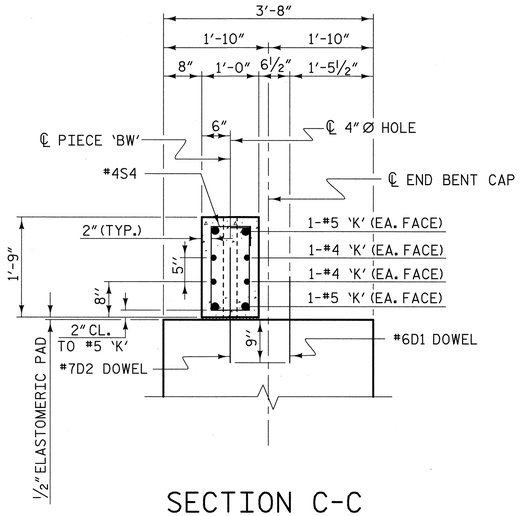

SECTION C-C

BILL OF MATERIAL FOR ONE PIECE BW1

BAR	NO.	SIZE	TYPE	LENGTH	WEIGHT
K1	4	5	STR	8′-8″	36
K2	4	4	STR	8′-8″	23
S4	8	4	1	5′-0″	27
EPOXY COATED REINFORCING STEEL					
TOTAL					86 LBS
CLASS AA (4500 PSI) CONCRETE					0.5 CU. YDS.

PIECE BW2

BAR	NO.	SIZE	TYPE	LENGTH	WEIGHT
K3	4	5	STR	11′-8″	49
K4	4	4	STR	11′-8″	31
S4	10	4	1	5′-0″	33
EPOXY COATED REINFORCING STEEL					
TOTAL					113 LBS
CLASS AA (4500 PSI) CONCRETE					0.7 CU. YDS.

BAR TYPES

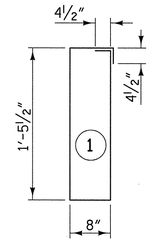

ALL BAR DIMENSIONS ARE OUT TO OUT

PROJECT NO. 42287

PAMLICO COUNTY

STATION: 15+69.00 -L-

REPLACES BRIDGE NO. 31

STATE OF NORTH CAROLINA
DEPARTMENT OF TRANSPORTATION
RALEIGH

PRECAST PIECE BW1 AND PIECE BW2

33′-10″ CLEAR ROADWAY - 90°SKEW

NORTH CAROLINA PROFESSIONAL SEAL 19661 ENGINEER L. KEVIN AUSTIN 6/7/09

PLANS PREPARED BY:

MULKEY
ENGINEERS & CONSULTANTS
PO Box 33127
Raleigh, N.C. 27636
(919) 851-1912
(919) 851-1914 (FAX)
WWW.MULKEYINC.COM

REVISIONS						SHEET NO.
NO.	BY:	DATE:	NO.	BY:	DATE:	31
1			3			TOTAL SHEETS
2			4			185

DRAWN BY : W. B. ALLEN DATE : 2/09
CHECKED BY : L. K. AUSTIN DATE : 3/09

6/5/2009 2:20:49 PM R:\Structures\B5298_SD_BW_0.dgn

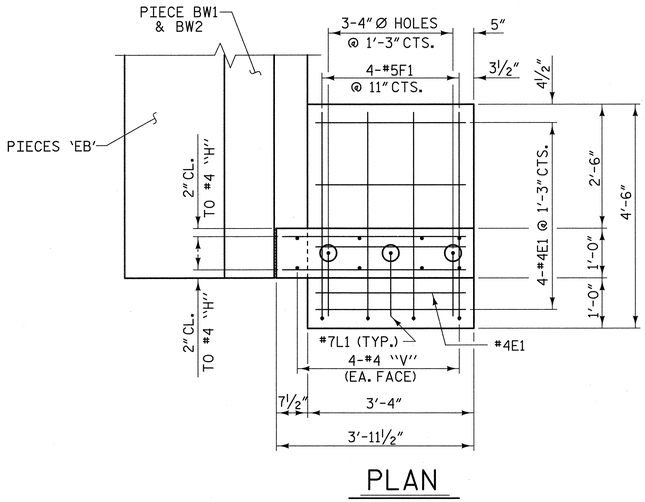

PLAN

NOTES

ALL REINFORCING STEEL AND BAR SUPPORTS SHALL BE EPOXY COATED ACCORDING TO THE STANDARD SPECIFICATIONS.

CLASS AA (4500 PSI) CONCRETE SHALL BE USED IN PRECAST PIECE WF1 AND PRECAST PIECE WW1.

TWO LIFTING LOOPS SHALL BE ALLOWED IN THE PRECAST WINGWALL AND THE PRECAST WING FOOTING IN ACCORDANCE WITH ARTICLE 1077-10 OF THE STANDARD SPECIFICATIONS WITH THE FOLLOWING ADDITIONS. THE LIFTING LOOPS TO BE BURNED OFF SHALL BE RECESSED AND GROUTED. SEE DETAIL FOR GROUTED RECESS FOR LIFTING LOOPS. GROUT SHALL BE NON-METALLIC AND NON-SHRINK ACCORDING TO THE STANDARD SPECIFICATIONS. PROPOSED DEVICES FOR LIFTING LOOPS SHALL BE DETAILED IN SHOP DRAWINGS.

BAR TYPES

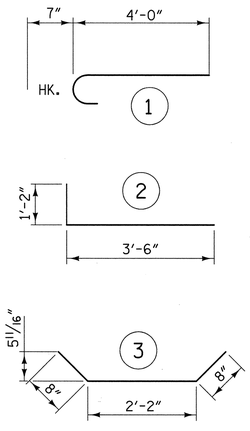

ALL BAR DIMENSIONS ARE OUT TO OUT

BILL OF MATERIAL FOR ONE PIECE WF1

BAR	NO.	SIZE	TYPE	LENGTH	WEIGHT
E1	5	4	STR	3'-0"	10
F1	4	5	1	4'-7"	19
L1	3	7	2	4'-8"	28

EPOXY COATED REINFORCING STEEL
TOTAL 57 LBS.

CLASS AA (4500 PSI) CONCRETE
0.6 CU. YDS.

PIECE WW1

BAR	NO.	SIZE	TYPE	LENGTH	WEIGHT
H1	4	4	STR	3'-0"	8
H2	4	4	STR	3'-7"	10
S1	2	4	3	3'-6"	5
V1	6	4	STR	2'-11"	12
V2	2	4	STR	1'-5"	2

EPOXY COATED REINFORCING STEEL
TOTAL 37 LBS.

CLASS AA (4500 PSI) CONCRETE
0.5 CU. YDS.

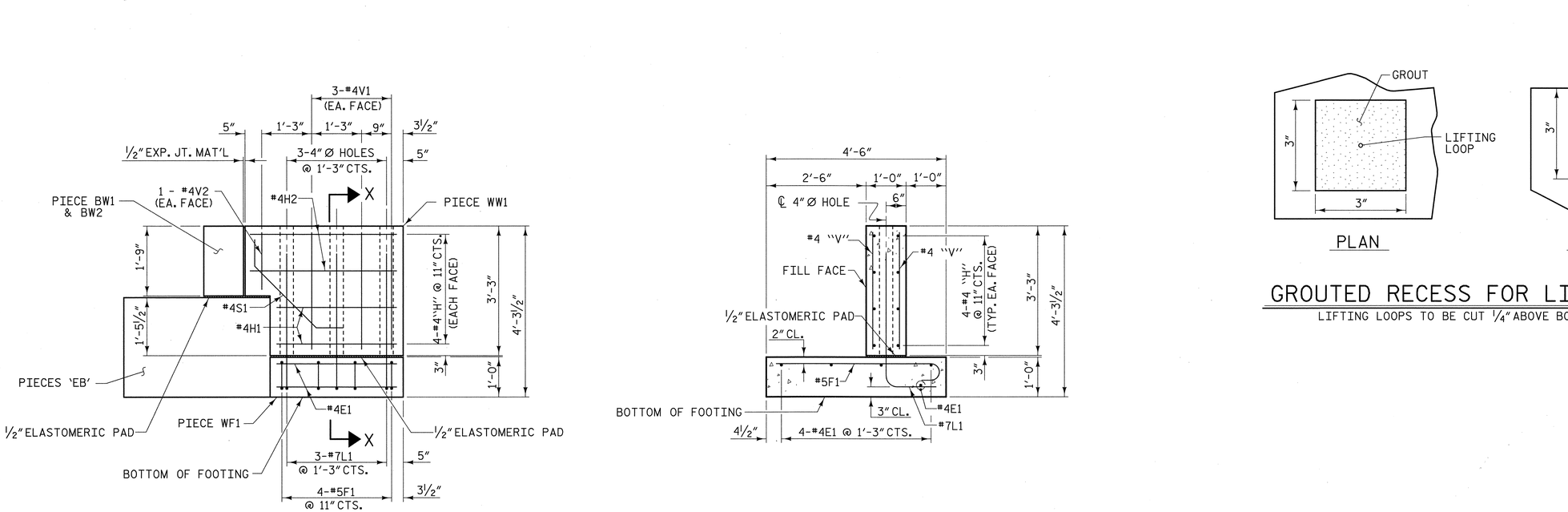

ELEVATION

SECTION X-X

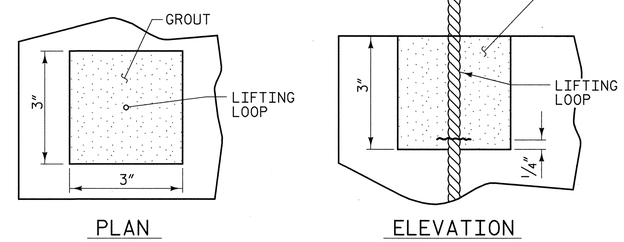

PLAN ELEVATION

GROUTED RECESS FOR LIFTING LOOPS

LIFTING LOOPS TO BE CUT ¼" ABOVE BOTTOM OF RECESS.

PROJECT NO. 42287
PAMLICO COUNTY
STATION: 15+69.00 -L-

REPLACES BRIDGE NO. 31

STATE OF NORTH CAROLINA
DEPARTMENT OF TRANSPORTATION
RALEIGH

PRECAST PIECE WW1 AND PIECE WF1

33'-10" CLEAR ROADWAY - 90°SKEW

NORTH CAROLINA PROFESSIONAL ENGINEER SEAL 19661 L. KEVIN AUSTIN 6/7/09

PLANS PREPARED BY:

MULKEY
ENGINEERS & CONSULTANTS
PO Box 33127
RALEIGH, N.C. 27636
(919) 851-1912
(919) 851-1918 (FAX)
WWW.MULKEYINC.COM

REVISIONS						SHEET NO.
NO.	BY:	DATE:	NO.	BY:	DATE:	32
1			3			TOTAL SHEETS
2			4			185

DRAWN BY : W. B. ALLEN DATE : 2/09
CHECKED BY : L. K. AUSTIN DATE : 3/09

6/5/2009 2:26:04 PM R:\Structures\B5298_SD_WW_01.dgn

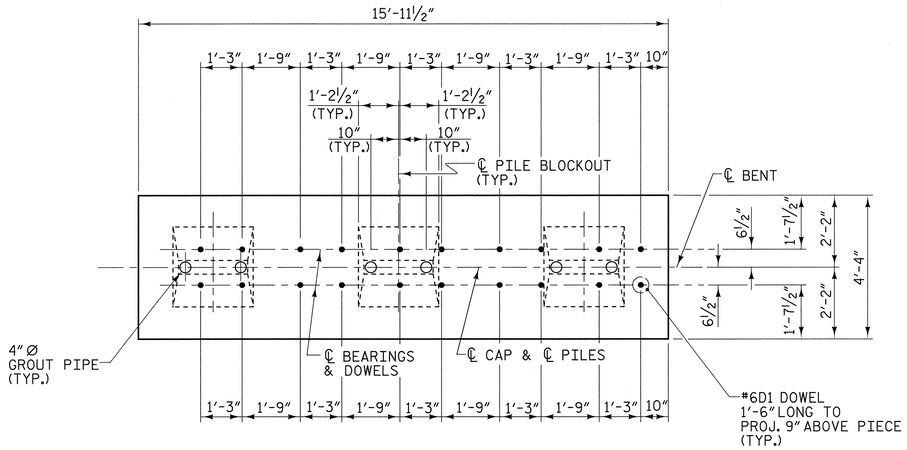

PLAN - PRECAST PIECE B131

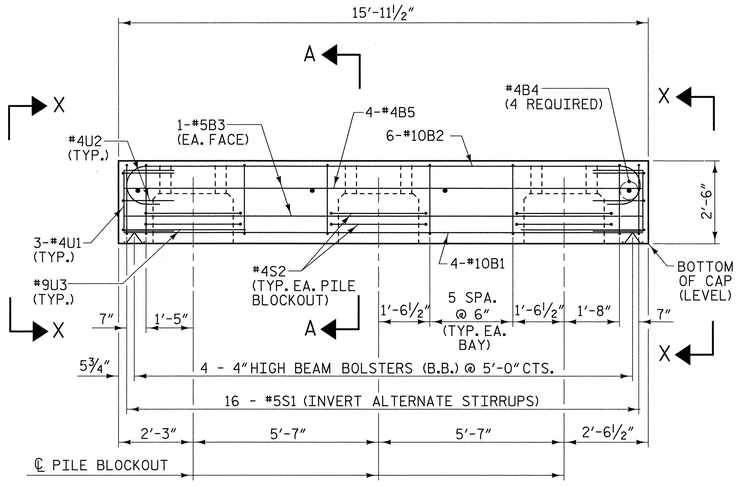

ELEVATION - PRECAST PIECE B131

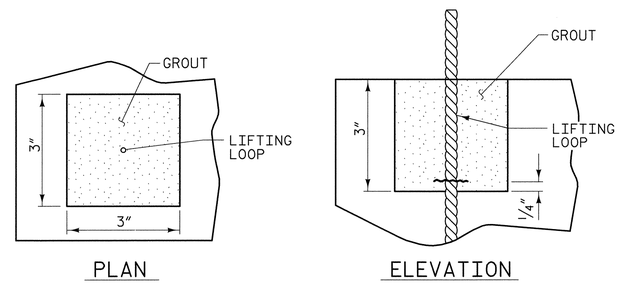

GROUTED RECESS FOR LIFTING LOOPS

LIFTING LOOPS TO BE CUT ¼" ABOVE BOTTOM OF RECESS.

NOTES

STIRRUPS IN PRECAST PIECE B131 MAY BE SHIFTED AS NECESSARY TO CLEAR DOWELS AND GROUT PIPES.

ALL REINFORCING STEEL AND BAR SUPPORTS SHALL BE EPOXY COATED ACCORDING TO THE STANDARD SPECIFICATIONS.

CLASS AA (4500 PSI) CONCRETE SHALL BE USED IN PRECAST PIECE B131.

DOWELS SHALL BE PRESET IN THE PRECAST CAP IN THE LOCATIONS SHOWN ON THE PLANS. DRILLING AND ADHESIVE ANCHORING OF THE DOWELS AFTER CASTING MUST BE APPROVED BY THE ENGINEER.

TWO LIFTING LOOPS SHALL BE ALLOWED IN THE PRECAST PIECE IN ACCORDANCE WITH ARTICLE 1077-10 OF THE STANDARD SPECIFICATIONS WITH THE FOLLOWING ADDITIONS. THE LIFTING LOOPS SHALL BE BURNED OFF PRIOR TO PLACING THE ELASTOMERIC BEARING PADS. THE ENDS OF THE LIFTING LOOPS TO BE BURNED OFF SHALL BE RECESSED AND GROUTED. SEE DETAIL FOR GROUTED RECESS FOR LIFTING LOOPS. GROUT SHALL BE NON-METALLIC AND NON-SHRINK ACCORDING TO THE STANDARD SPECIFICATIONS. PROPOSED DEVICES FOR LIFTING LOOPS SHALL BE DETAILED IN SHOP DRAWINGS.

TWO 4 INCH Ø GROUT PIPES SHALL BE PROVIDED AT EACH PILE BLOCKOUT. THE 4 INCH Ø GROUT PIPES SHALL BE CUT FROM SCHEDULE 40 PVC PIPE AND SHALL BE FIRMLY ANCHORED OR REMOVED PRIOR TO PLACEMENT OF THE GROUT.

THE TOP OF THE PILE BLOCKOUT SHALL BE CHAMFERED 2" ALL IN THE TRANSVERSE DIRECTION.

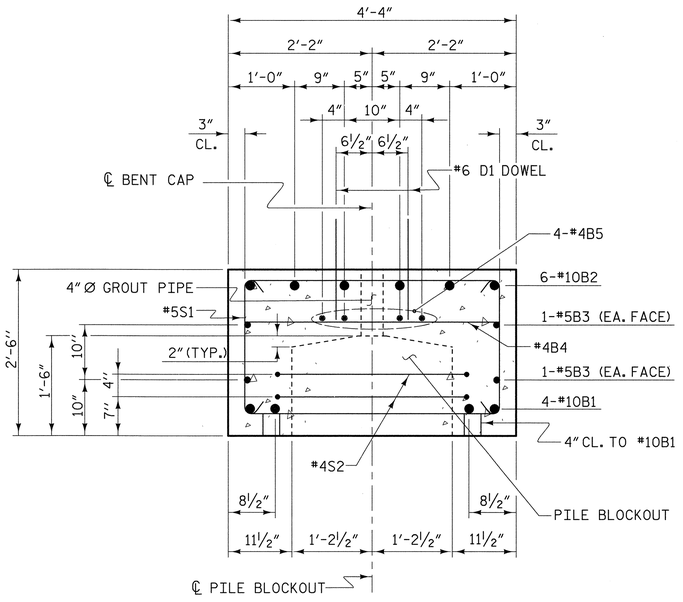

SECTION A-A

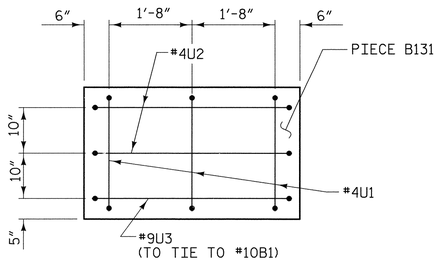

VIEW X-X

BAR TYPES

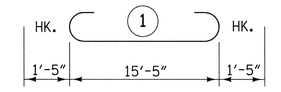

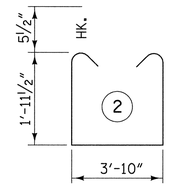

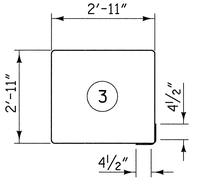

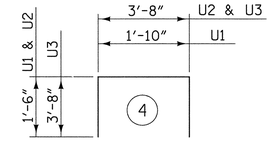

ALL BAR DIMENSIONS ARE OUT TO OUT

BILL OF MATERIAL FOR ONE PIECE B131

BAR	NO.	SIZE	TYPE	LENGTH	WEIGHT
B1	4	#10	STR	15'-5"	265
B2	6	#10	1	18'-3"	471
B3	4	#5	STR	15'-5"	64
B4	4	#4	STR	3'-11"	10
B5	4	#4	STR	15'-5"	41
D1	20	#6	STR	1'-6"	45
S1	16	#5	2	8'-8"	145
S2	6	#4	3	12'-5"	50
U1	6	#4	4	4'-10"	19
U2	4	#4	4	6'-8"	18
U3	2	#9	4	11'-0"	75

TOTAL EPOXY COATED REINFORCING STEEL 1203 LBS.

CLASS AA (4500 PSI) CONCRETE 5.4 CU. YDS.

GROUT FOR PILE BLOCKOUTS 1.0 CU. YDS.

PROJECT NO. 42287

PAMLICO COUNTY

STATION: 15+69.00 -L-

REPLACES BRIDGE NO. 31

STATE OF NORTH CAROLINA
DEPARTMENT OF TRANSPORTATION
RALEIGH

PRECAST PIECE B131

33'-10" CLEAR ROADWAY - 90° SKEW

NORTH CAROLINA PROFESSIONAL SEAL 19661 ENGINEER L. KEVIN AUSTIN 8/6/09

PLANS PREPARED BY:

MULKEY
ENGINEERS & CONSULTANTS
PO Box 33127
Raleigh, N.C. 27636
(919) 851-1982
(919) 851-1918 (FAX)
www.mulkeyinc.com

REVISIONS						SHEET NO.
NO.	BY:	DATE:	NO.	BY:	DATE:	33
1			3			TOTAL SHEETS
2			4			185

DRAWN BY : W. B. ALLEN DATE : 2/09
CHECKED BY : L. K. AUSTIN DATE : 3/09

8/6/2009 6:48:57 AM G:\project\2004\224.08. Pamlico\S\Structures\B529B_SD_BCA_01.dgn

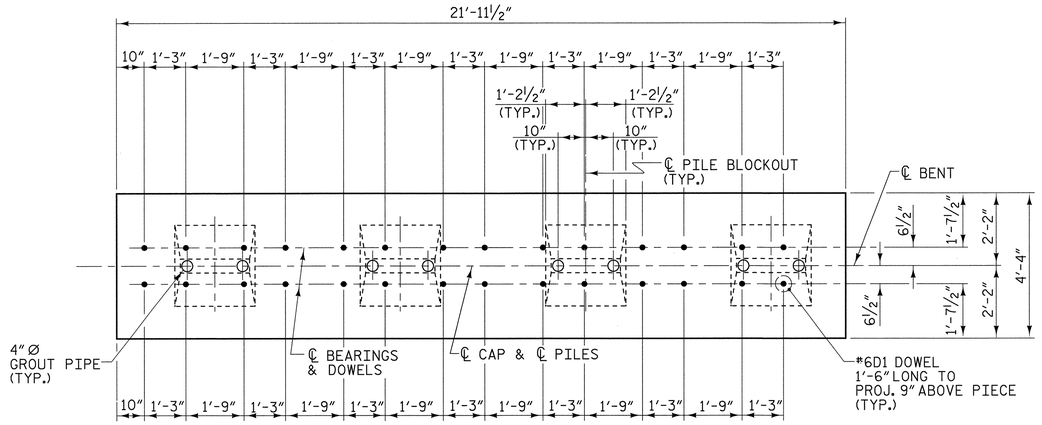

PLAN - PRECAST PIECE B231

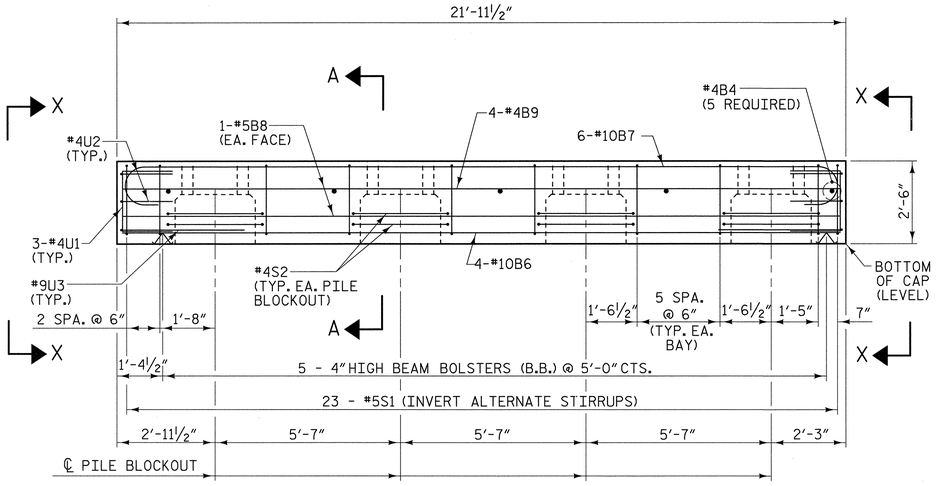

ELEVATION - PRECAST PIECE B231

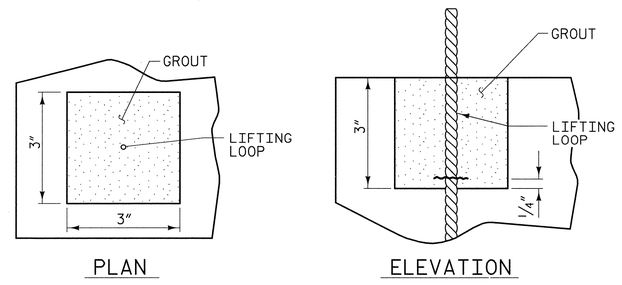

GROUTED RECESS FOR LIFTING LOOPS

LIFTING LOOPS TO BE CUT ¼" ABOVE BOTTOM OF RECESS.

NOTES

STIRRUPS IN PRECAST PIECE B231 MAY BE SHIFTED AS NECESSARY TO CLEAR DOWELS AND GROUT PIPES.

ALL REINFORCING STEEL AND BAR SUPPORTS SHALL BE EPOXY COATED ACCORDING TO THE STANDARD SPECIFICATIONS.

CLASS AA (4500 PSI) CONCRETE SHALL BE USED IN PRECAST PIECE B231.

DOWELS SHALL BE PRESET IN THE PRECAST CAP IN THE LOCATIONS SHOWN ON THE PLANS. DRILLING AND ADHESIVE ANCHORING OF THE DOWELS AFTER CASTING MUST BE APPROVED BY THE ENGINEER.

TWO LIFTING LOOPS SHALL BE ALLOWED IN THE PRECAST PIECE IN ACCORDANCE WITH ARTICLE 1077-10 OF THE STANDARD SPECIFICATIONS WITH THE FOLLOWING ADDITIONS. THE LIFTING LOOPS SHALL BE BURNED OFF PRIOR TO PLACING THE ELASTOMERIC BEARING PADS. THE ENDS OF THE LIFTING LOOPS TO BE BURNED OFF SHALL BE RECESSED AND GROUTED. SEE DETAIL FOR GROUTED RECESS FOR LIFTING LOOPS. GROUT SHALL BE NON-METALLIC AND NON-SHRINK ACCORDING TO THE STANDARD SPECIFICATIONS. PROPOSED DEVICES FOR LIFTING LOOPS SHALL BE DETAILED IN SHOP DRAWINGS.

TWO 4 INCH Ø GROUT PIPES SHALL BE PROVIDED AT EACH PILE BLOCKOUT. THE 4 INCH Ø GROUT PIPES SHALL BE CUT FROM SCHEDULE 40 PVC PIPE AND SHALL BE FIRMLY ANCHORED OR REMOVED PRIOR TO PLACEMENT OF THE GROUT.

THE TOP OF THE PILE BLOCKOUT SHALL BE CHAMFERED 2" IN THE TRANSVERSE DIRECTION.

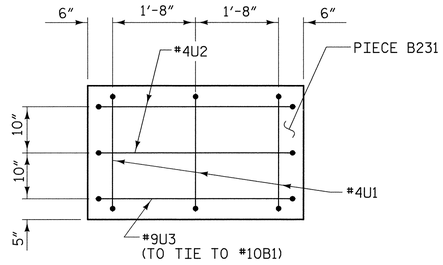

VIEW X-X

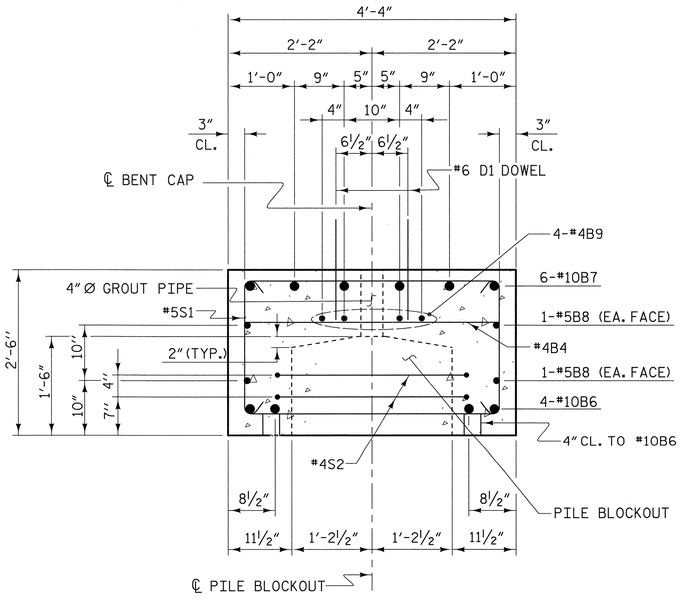

SECTION A-A

BAR TYPES

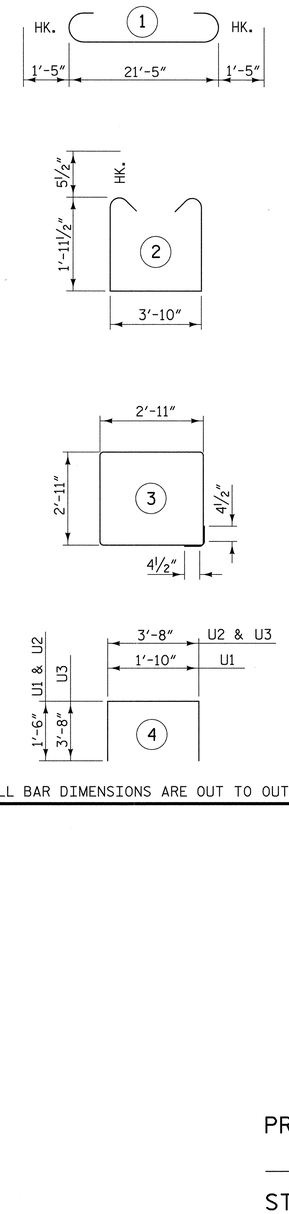

ALL BAR DIMENSIONS ARE OUT TO OUT

BILL OF MATERIAL FOR ONE PIECE B231

BAR	NO.	SIZE	TYPE	LENGTH	WEIGHT
B4	5	#4	STR	3'-11"	13
B6	4	#10	STR	21'-5"	369
B7	6	#10	1	24'-3"	626
B8	4	#5	STR	21'-5"	89
B9	4	#4	STR	21'-5"	57
D1	28	#6	STR	1'-6"	63
S1	23	#5	2	8'-8"	208
S2	8	#4	3	12'-5"	66
U1	6	#4	4	4'-10"	19
U2	4	#4	4	6'-8"	18
U3	2	#9	4	11'-0"	75

TOTAL EPOXY COATED REINFORCING STEEL 1603 LBS.

CLASS AA (4500 PSI) CONCRETE 7.5 CU. YDS.

GROUT FOR PILE BLOCKOUTS 1.3 CU. YDS.

PROJECT NO. 42287

PAMLICO COUNTY

STATION: 15+69.00 -L-

REPLACES BRIDGE NO. 31

STATE OF NORTH CAROLINA
DEPARTMENT OF TRANSPORTATION
RALEIGH

PRECAST PIECE B231

33'-10" CLEAR ROADWAY - 90° SKEW

NORTH CAROLINA PROFESSIONAL ENGINEER 1966 L. KEVIN AUSTIN 8/6/09

PLANS PREPARED BY:
MULKEY ENGINEERS & CONSULTANTS
PO Box 33127
RALEIGH, N.C. 27636
(919) 851-1918
(919) 851-1918 (FAX)
WWW.MULKEYINC.COM

REVISIONS						SHEET NO.
NO.	BY:	DATE:	NO.	BY:	DATE:	34
1			3			TOTAL SHEETS
2			4			185

DRAWN BY : W. B. ALLEN DATE : 2/09
CHECKED BY : L. K. AUSTIN DATE : 3/09

8/6/2009 6:02:44 AM G:\project\2004\224.08_Pamlico35\Structures\B5298_SD_BCB.dgn

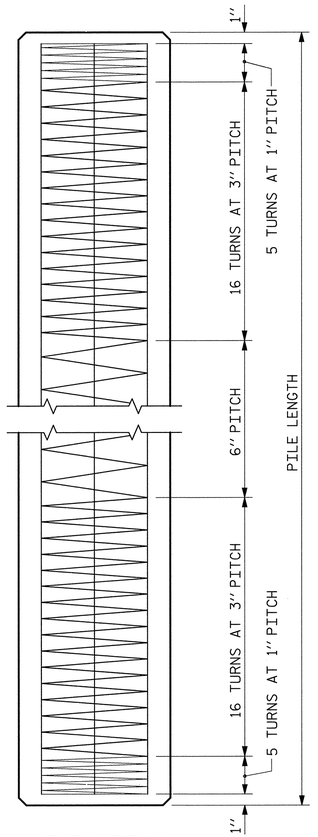

ELEVATION

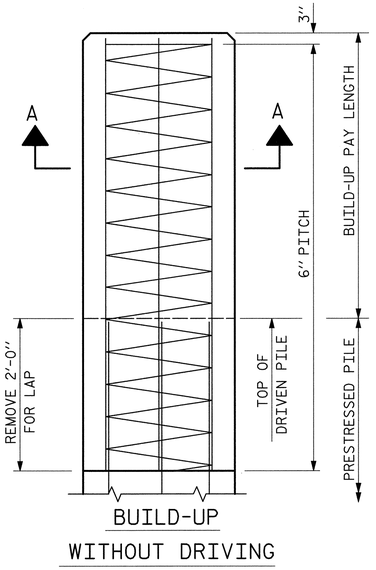

BUILD-UP
WITHOUT DRIVING

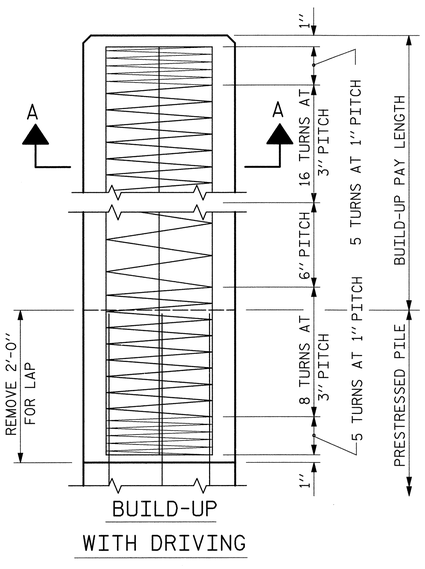

BUILD-UP
WITH DRIVING

QUANTITIES FOR ONE 20'' SQUARE PILE						
	CONCRETE	PILE WT.	ONE PICK-UP POINTS		TWO PICK-UP POINTS	
LENGTH	CU. YDS.	TONS	0.3L	0.7L	0.207L	0.586L
25'-0''	2.56	5.18	7'-6''	17'-6''		
30'-0''	3.07	6.22	9'-0''	21'-0''		
35'-0''	3.58	7.26	10'-6''	24'-6''		
40'-0''	4.09	8.29	12'-0''	28'-0''		
45'-0''	4.61	9.33	13'-6''	31'-6''		
50'-0''	5.12	10.36	15'-0''	35'-0''		
55'-0''	5.63	11.40	16'-6''	38'-6''		
60'-0''	6.14	12.44	18'-0''	42'-0''		
65'-0''	6.65	13.47			13'-5½''	38'-1''
70'-0''	7.17	14.51			14'-6''	41'-0''
75'-0''	7.68	15.55			15'-6½''	43'-11''
80'-0''	8.19	16.58			16'-6½''	46'-11''
85'-0''	8.70	17.62			17'-7''	49'-10''

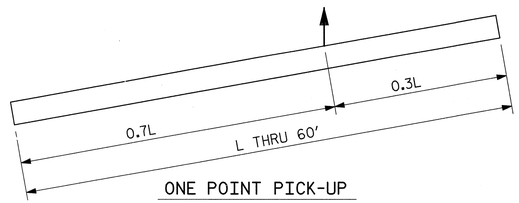

ONE POINT PICK-UP

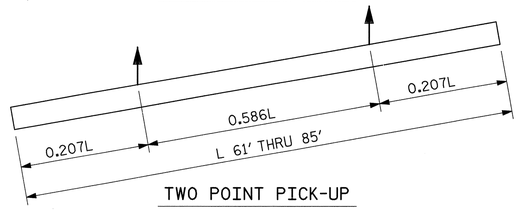

TWO POINT PICK-UP

PICK-UP POINTS

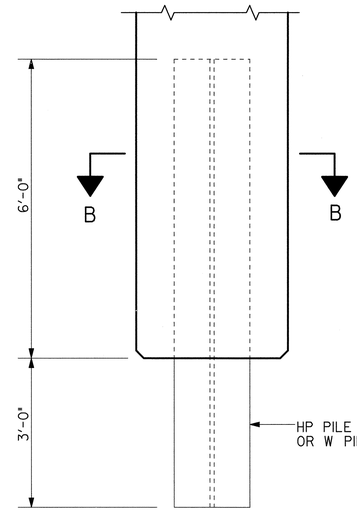

ELEVATION

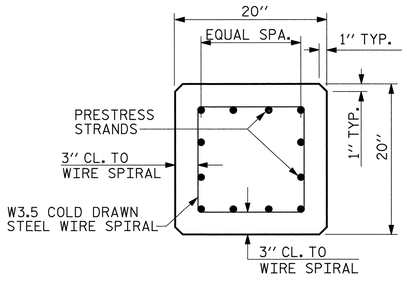

TYPICAL SECTION

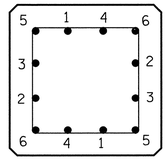

TYPICAL PATTERN FOR BURNING STRANDS

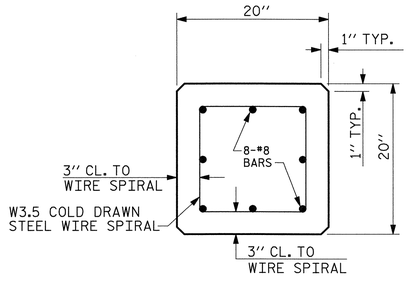

SECTION A-A

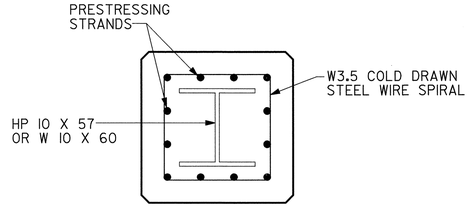

SECTION B-B

PILE TIP DETAILS

NOTES

CONCRETE DESIGN DATA : f'c= 5,000 PSI ;fc= 2,000 PSI

IMPACT IN HANDLING = 50%

IN DRIVING PILES, A METHOD APPROVED BY THE ENGINEER SHALL BE USED, WHEREBY THE HEAD OF THE PILE IS NOT DAMAGED.

PROPOSED DEVICES FOR LIFTING PILES, RECESS DETAILS, AND PATCHING MATERIAL SHALL BE DETAILED IN SHOP DRAWINGS. AFTER ATTACHMENTS HAVE BEEN REMOVED, OPENINGS SHALL BE REPAIRED SUCH THAT THE APPEARANCE OF THE PILE IS UNIFORM.

THE CONTRACTOR SHALL USE THE FOLLOWING STRAND TYPE:

SIZE	GRADE	NUMBER OF STRANDS	AREA	ULTIMATE STRENGTH	APPLIED PRESTRESS FORCE
½''	270 L.R.	12	0.153	41,300# PER STRAND	30,980# PER STRAND

STRANDS SHALL BE EQUALLY SPACED AS SHOWN IN THE ''TYPICAL SECTION''.

A CIRCULAR STRAND PATTERN SHALL NOT BE PERMITTED.

THE SLIP-FORM METHOD OF CASTING PILES WILL NOT BE PERMITTED.

IF STRAND STRESS IS RELIEVED BY BURNING, THE STRANDS SHALL BE BURNED IN OPPOSITE PAIRS AS INDICATED IN THE TYPICAL PATTERN SHOWN. FOR ANY NUMBER OF STRANDS BURN IN OPPOSITE PAIRS AND SYMMETRICAL ABOUT BOTH VERTICAL AND HORIZONTAL AXES, STRANDS 1-1 SHALL BE BURNED BEFORE 2-2, ETC. NOT MORE THAN 4 STRANDS, SAY 5-5 AND 6-6, MAY BE BURNED AT ANY ONE SECTION BEFORE THESE SAME PAIRS OF STRANDS ARE BURNED AT BOTH ENDS OF THE BED AND BETWEEN EACH PAIR OF PILES IN THE BED.

BUILD-UPS SHALL BE OF 'CLASS A' CONCRETE WITH 20% ADDITIONAL CEMENT. NO DRIVING OF THE BUILT-UP PILE WILL BE PERMITTED UNTIL THE CONCRETE HAS REACHED A COMPRESSIVE STRENGTH OF 3,000 P.S.I. AND UNTIL A PERIOD OF SEVEN DAYS HAS ELAPSED SINCE CASTING OF THE BUILD-UP.

ALL PRESTRESSING STRANDS SHALL BE 7-WIRE LOW-RELAXATION GRADE 270 STRANDS AND SHALL CONFORM TO AASHTO M203 EXCEPT FOR SAMPLING REQUIREMENTS WHICH SHALL BE IN ACCORDANCE WITH STANDARD SPECIFICATIONS.

THE TRANSFER OF LOAD FROM THE ANCHORAGES TO THE PILE SHALL BE DONE WHEN THE CONCRETE HAS REACHED A COMPRESSIVE STRENGTH OF NOT LESS THAN 3500 PSI.

THE WATER/CEMENT RATIO FOR CONCRETE PILES SHALL NOT EXCEED 0.40.

PROJECT NO. 42287

PAMLICO COUNTY

STATION: 15+69.00 -L-

REPLACES BRIDGE NO. 31 SHEET 1 OF 1

STATE OF NORTH CAROLINA
DEPARTMENT OF TRANSPORTATION
RALEIGH

STANDARD

20'' PRESTRESSED CONCRETE PILE

REVISIONS						SHEET NO.
NO.	BY:	DATE:	NO.	BY:	DATE:	35
1			3			TOTAL SHEETS
2			4			185

THIS STANDARD DRAWING REVIEWED & ADOPTED FOR USE AT THE REFERENCED LOCATION BY THE UNDERSIGNED:

NORTH CAROLINA PROFESSIONAL SEAL 19661 ENGINEER KEVIN AUSTIN

8/6/09

PLANS PREPARED BY:

MULKEY
ENGINEERS & CONSULTANTS
PO Box 33127
Raleigh, N.C. 27636
(919) 851-1912
(919) 851-1918 (FAX)
WWW.MULKEYINC.COM

ASSEMBLED BY :	W. B. ALLEN	DATE :	2/09
CHECKED BY :	L. K. AUSTIN	DATE :	3/09
DRAWN BY : WJH 1/89	REV. 6/1/94		EEM/GRP
CHECKED BY : CRK 3/89	REV. 8/16/99R		RAL/LES
	REV. 5/1/06		TLA/GM

STD. NO. PCP3

8/6/2009 6:03:38 AM G:\project\2004\24.08_Pamlico\Structures\BS29B_SD_PP_01.dgn

EROSION CONTROL PLAN

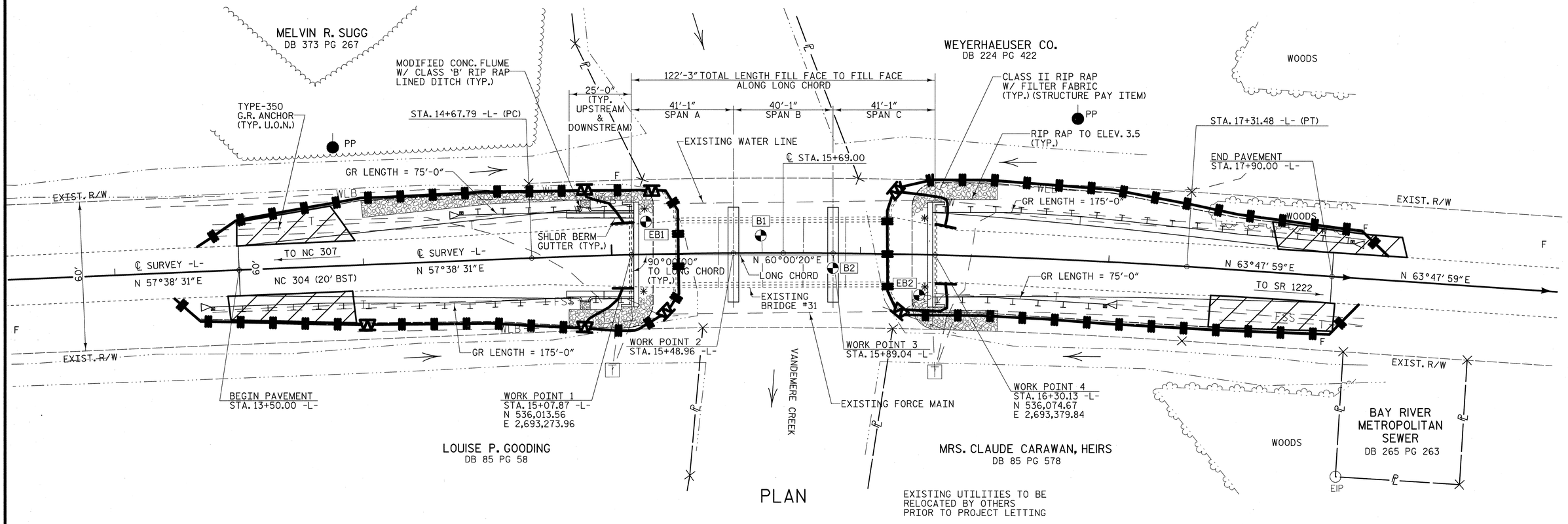

EXISTING UTILITIES TO BE RELOCATED BY OTHERS PRIOR TO PROJECT LETTING

Std. #	Description	Symbol
1605.01	Temporary Silt Fence	
1606.01	Special Sediment Control Fence	
1622.01	Temporary Berms and Slope Drains	

ENVIRONMENTALLY SENSITIVE AREA PLEASE SEE NOTE

ROADSIDE ENVIRONMENTAL UNIT
DEPARTMENT OF TRANSPORTATION
DIVISION OF HIGHWAYS
RALEIGH, N.C.

2006 STANDARD SPECIFICATIONS

NOTES: ANY DEVIATION FROM OPTIONS GIVEN WILL REQUIRE PRIOR APPROVAL BY ENGINEER.

ADDITIONAL EROSION CONTROL DEVICES MAY NEED TO BE INSTALLED AS DIRECTED BY THE ENGINEER.

PROJECT NO. 42287

PAMLICO COUNTY

STATION: 15+69.00 -L-

REPLACES BRIDGE NO. 31

STATE OF NORTH CAROLINA
DEPARTMENT OF TRANSPORTATION
RALEIGH

BRIDGE ON NC 304
OVER VANDEMERE CREEK
BETWEEN NC 307 & SR 1222

33'-10' CLEAR ROADWAY - 90°SKEW

REVISIONS						SHEET NO.
NO.	BY:	DATE:	NO.	BY:	DATE:	36
1			3			TOTAL SHEETS
2			4			185

EROSION CONTROL PLAN

STATE OF NORTH CAROLINA
DEPT. OF TRANSPORTATION
DIVISION OF HIGHWAYS
RALEIGH, N.C.

ENGLISH STANDARD DRAWING FOR
TEMPORARY SILT FENCE

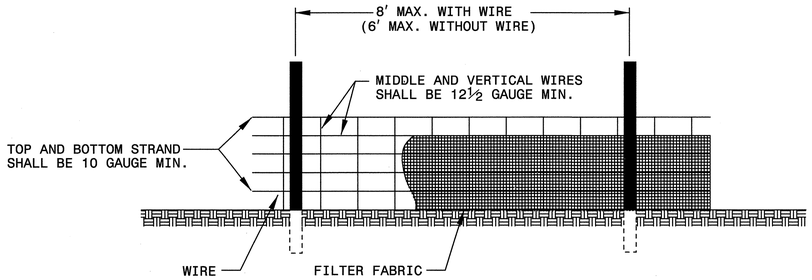

NOTES
USE WIRE A MINIMUM OF 32″ IN WIDTH AND WITH A MINIMUM OF 6 LINE WIRES WITH 12″ STAY SPACING.
USE FILTER FABRIC A MINIMUM OF 36″ IN WIDTH AND FASTEN ADEQUATELY TO THE WIRE AS DIRECTED BY THE ENGINEER.
PROVIDE 5′-0″ STEEL POST OF THE SELF-FASTENER ANGLE STEEL TYPE.

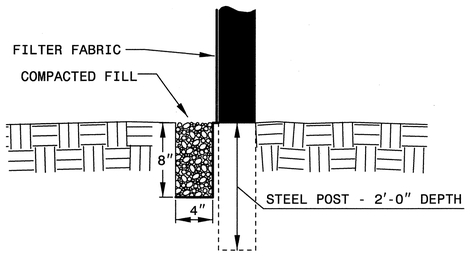

EXTENSION OF FABRIC AND WIRE INTO TRENCH

SHEET 1 OF 1
1605.01

STATE OF NORTH CAROLINA
DEPT. OF TRANSPORTATION
DIVISION OF HIGHWAYS
RALEIGH, N.C.

ENGLISH STANDARD DRAWING FOR
TEMPORARY SILT FENCE

SHEET 1 OF 1
1605.01

STATE OF NORTH CAROLINA
DEPT. OF TRANSPORTATION
DIVISION OF HIGHWAYS
RALEIGH, N.C.

1-02

ENGLISH STANDARD DRAWING FOR
GUIDE FOR TEMPORARY BERMS AND SLOPE DRAIN

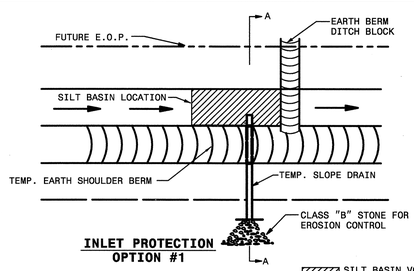

INLET PROTECTION
OPTION #1

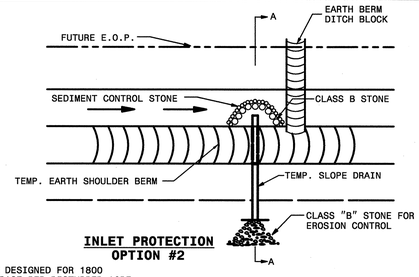

INLET PROTECTION
OPTION #2

SILT BASIN VOLUME SHALL BE DESIGNED FOR 1800 CUBIC FEET OF SEDIMENT STORAGE PER DISTURBED ACRE.

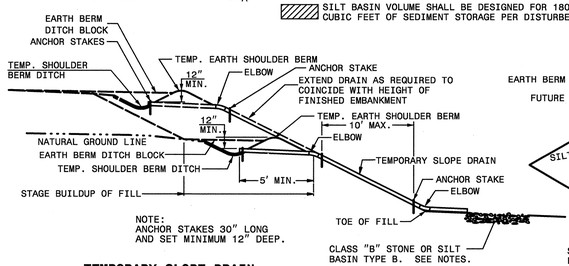

NOTE:
ANCHOR STAKES 30″ LONG
AND SET MINIMUM 12″ DEEP.

TEMPORARY SLOPE DRAIN
SECTION A-A

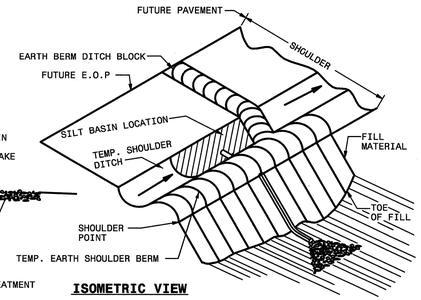

ISOMETRIC VIEW

NOTES:
1. OPEN END PIPE WITH MINIMUM SETBACK AND PROPER COMPACTION IS AN ACCEPTABLE INLET TREATMENT FOR STAGED CONSTRUCTION WHEN NOT LEFT IN PLACE FOR MORE THAN 30 DAYS.
2. DESIGN INLET PROTECTION OPTION #2 FOR 1800 CUBIC FOOT OF SEDIMENT STORAGE PER DISTURBED ACRE.
3. DESIGN SILT BASINS WITH A 2:1 LENGTH TO WIDTH RATIO MINIMUM.
4. USE CLASS B STONE FOR EROSION CONTROL AT OUTLET LOCATIONS SUBJECT TO SCOURING. SILT BASINS AND/OR OTHER EROSION CONTROL DEVICES MAY ALSO BE UTILIZED TO PREVENT SCOUR AT OUTLET LOCATIONS.
5. USE MAXIMUM SLOPE DRAIN SPACING OF 200 FT.

SHEET 1 OF 1
1622.01

STATE OF NORTH CAROLINA
DEPT. OF TRANSPORTATION
DIVISION OF HIGHWAYS
RALEIGH, N.C.

1-02

ENGLISH STANDARD DRAWING FOR
GUIDE FOR TEMPORARY BERMS AND SLOPE DRAIN

SHEET 1 OF 1
1622.01

STATE OF NORTH CAROLINA
DEPT. OF TRANSPORTATION
DIVISION OF HIGHWAYS
RALEIGH, N.C.

ENGLISH STANDARD DRAWING FOR
SPECIAL SEDIMENT CONTROL FENCE

GENERAL NOTES:

USE NO. 5 OR NO. 57 STONE FOR SEDIMENT CONTROL STONE.

USE HARDWARE CLOTH 24 GAUGE WIRE MESH WITH 1/4 INCH MESH OPENINGS.

INSTALL 5 FT. SELF FASTENER ANGLE STEEL POST 2 FT. DEEP MINIMUM.

SPACE POST A MAXIMUM OF 3 FT.

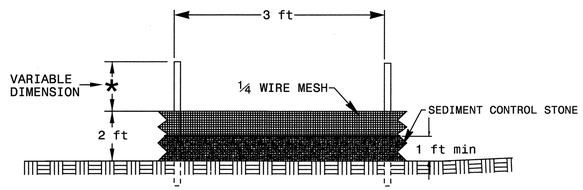

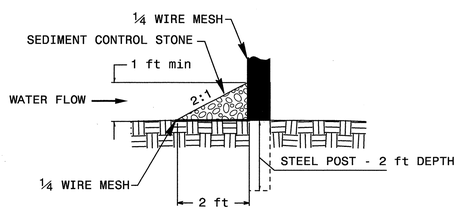

SHEET 1 OF 1
1606.01

STATE OF NORTH CAROLINA
DEPT. OF TRANSPORTATION
DIVISION OF HIGHWAYS
RALEIGH, N.C.

ENGLISH STANDARD DRAWING FOR
SPECIAL SEDIMENT CONTROL FENCE

SHEET 1 OF 1
1606.01

PROJECT NO. 42287

PAMLICO COUNTY

STATION: 15+69.00 -L-

REPLACES BRIDGE NO. 31

ROADSIDE ENVIRONMENTAL UNIT
DEPARTMENT OF TRANSPORTATION
DIVISION OF HIGHWAYS
RALEIGH, N.C.

2006 STANDARD SPECIFICATIONS

NOTES: ANY DEVIATION FROM OPTIONS GIVEN WILL REQUIRE PRIOR APPROVAL BY ENGINEER.

ADDITIONAL EROSION CONTROL DEVICES MAY NEED TO BE INSTALLED AS DIRECTED BY THE ENGINEER.

STATE OF NORTH CAROLINA
DEPARTMENT OF TRANSPORTATION
RALEIGH

BRIDGE ON NC 304
OVER VANDEMERE CREEK
BETWEEN NC 307 & SR 1222

33′-10′ CLEAR ROADWAY - 90°SKEW

REVISIONS						SHEET NO.
NO.	BY:	DATE:	NO.	BY:	DATE:	37
1			3			TOTAL SHEETS
2			4			185

EROSION CONTROL PLAN

Environmentally Sensitive Areas:

This project is located in an "Environmentally Sensitive Area." This designation requires special procedures to be used for clearing and grubbing, temporary stream crossings, and grading operations within the area identified on the plans. This also requires special procedures to be used for seeding and mulching and staged seeding within the project.

Clearing and Grubbing:

In areas identified on the erosion control plans as "Environmentally Sensitive Areas", the Contractor may perform clearing operations, but not grubbing operations until immediately prior to beginning grading operations as described in Section 200, Article 200–1, in the Standard Specifications. The "Environmentally Sensitive Area" shall be defined as a 50 foot buffer zone on both sides of the stream (or depression), measured from top of streambank, (or center of depression). Only clearing operations (not grubbing) shall be allowed in this buffer zone until immediately prior to beginning grading operations. Erosion control devices shall be installed immediately following the clearing operation.

Grading:

Once grading operations begin in identified "Environmentally Sensitive Areas", work will progress in a continuous manner until complete. All construction within these areas must progress in a continuous manner such that each phase is complete and areas permanently stabilized prior to beginning of next phase. Failure on the part of the Contractor to complete any phase of construction in a continuous manner in "Environmentally Sensitive Areas" as specified will be just cause for the Engineer to direct the suspension of work in accordance with Section 108–7 of the Standard Specifications.

Temporary Stream Crossings:

Any crossing of streams within the limits of this project must be accomplished in accordance with Section 107–13(b) of the Standard Specifications.

Seeding and Mulching:

Seeding and mulching shall be performed in accordance with Section 1660 of the Standard Specifications and vegetative cover sufficient to restrain erosion shall be installed immediately following grade establishment.

Seeding and mulching shall be performed on the areas disturbed by construction immediately following final grade establishment. No appreciable time shall lapse into the contract time without stabilization of slopes, ditches and other areas within the "Environmentally Sensitive Areas" as indicated on the erosion control plans.

Stage Seeding:

The work covered by this section shall consist of the establishment of a vegetative cover on cut and fill slopes as grading progresses. Seeding and mulching shall be done in stages on cut and fill slopes which are greater than 20 feet in height measured along the slope, or greater than 2 acres in area. Each stage shall not exceed the limits stated above.

All work described above will be paid for at the contract price for "Lump Sum for Erosion Control " established in the contract for the work involved. Additional payments will not be made for the requirements of this section as the cost for this work should be included in the contract price for "Lump Sum for Erosion Control" for the work involved.

Reforestation:

Reforestation will be planted within interchanges and along the outside borders of the road, and in other areas as directed. Reforestation is not shown on the plan sheets. See the Reforestation Detail Sheet.

All non–maintained riparian buffers impacted by the placement of temporary fill or clearing activities shall be restored to the preconstruction contours and revegetated with native woody species.

The entire Reforestation operation shall comply with the requirements of Section 1670 of the Standard Specifications.

Reforestation shall be bare root seedlings 12"–18" tall.

Reforestation shall be shall be planted as soon as practical following permanent Seeding and Mulching. The seedlings shall be planted in a 16–foot wide swath adjacent to mowing pattern line, or as directed.

Root dip: The roots of reforestation seedlings shall be coated with a slurry of water, and either a fine clay (kaolin) or a superabsorbent that is designated as a bare root dip. The type, mixture ratio, method of application, and the time of application shall be submitted to the Engineer for approval.

With the approval of the Engineer, seedlings may be coated before delivery to the job or at the time of planting, but at no time shall the roots of the seedlings be allowed to dry out. The roots shall be moistened immediately prior to planting.

Seasonal Limitations: Reforestation shall be planted from November 15 through March 15.

Payment for Reforestation will be included in the contract bid price for Lump Sum for Erosion Control.

Special Sediment Control Fence:

Description:

The work covered by this section consists of the construction, maintenance, and removal of special sediment control fence. Place special sediment control fence as shown on the plans or as directed by the Engineer.

Materials:

(A) Posts:

Steel posts shall be at least 5 feet in length, approximately 1 3⁄8 inches wide measured parallel to the fence, and have a minimum weight of 1.25 lb⁄ft of length. The post shall be equipped with an anchor plate having a minimum area of 14.0 square inches, and shall have a means of retaining wire in the desired position without displacement.

(B) 1⁄4 inch Hardware Cloth:

Hardware cloth shall have 1⁄4 inch openings constructed from #24 gauge wire. Install hardware cloth according to the detail shown on the plans.

(C) Sediment Control Stone:

Sediment control stone shall meet the requirements of Section 1005. Install stone according to the detail shown on the plans.

Maintenance and Removal:

The Contractor shall maintain the special sediment control fence until the project is accepted or until the fence is removed, and shall remove and dispose of silt accumulations at the fence when so directed by the Engineer in accordance with Section 1630.

The quantity of posts, sediment control stone and hardware cloth as measured above will be paid for at the contract price for "Lump Sum for Erosion Control". Such price and payment will be full compensation for all work covered by this provision, including but not limited to, furnishing all materials, installation, and removal and disposal of silt accumulations and materials.

SAFETY FENCE:

Description

Safety Fence shall consist of furnishing, installing and maintaining polyethylene or polypropylene fence along the outside riparian buffer, wetland, or water boundary located within the construction corridor to mark the areas that have been approved to infringe within the buffer, wetland or water. The fence shall be installed prior to any land disturbing activities.

Materials

Polyethylene or polypropylene fence shall be a highly visible preconstructed safety fence approved by the Engineer. The fence material shall have an ultraviolet coating.

Either wood posts or steel posts may be used. Wood posts shall be hardwood with a wedge or pencil tip at one end, and shall be at least 5 ft. in length with a minimum nominal 2" x 2" cross section. Steel posts shall be at least 5 ft. in length, and have a minimum weight of 0.85 lb./ft. of length.

Construction Methods

No additional clearing and grubbing is anticipated for the installation of this fence; however, if any clearing and grubbing is required, it will be the minimum required for the installation of the safety fence. Such clearing shall include satisfactory removal and disposal of all trees, brush, stumps and other objectionable material.

The fence shall be erected to conform to the general contour of the ground. When determined necessary, minor grading along the fence line shall be performed to meet this requirement provided no obstructions to proper drainage are created.

Posts shall be set and maintained in a vertical position and may be hand set or set with a post driver. If hand set, all backfill material shall be thoroughly tamped. Wood posts may be sharpened to a dull point if power driven. Posts damaged by power driving shall be removed and replaced prior to final acceptance. The tops of all wood posts shall be cut at a 30–degree angle. The wood posts may, at the option of the Contractor, be cut at this angle either before or after the posts are erected.

The fence fabric shall be attached to the wood posts with one 2" galvanized wire staple across each cable or to the steel posts with wire or other acceptable means.

The Contractor shall be required to maintain the safety fence in a satisfactory condition for the duration of the project as determined by the Engineer.

Measurement and Payment

Safety Fence will be paid for at the contract price for "Lump Sum for Erosion Control". Such payment will be full compensation including but not limited to clearing and grading, furnishing and installing fence fabric with necessary posts and post bracing, staples, tie wires, tools, equipment and incidentals necessary to complete this work.

FLOATING TURBIDITY CURTAIN:

Description

This work consists of the installation of a Floating Turbidity Curtain to deter silt suspension and movement of silt particles during construction. The floating turbidity curtain shall be constructed at locations as directed.

Materials

The curtain material shall be made of a tightly woven nylon, plastic or other non–deteriorating material meeting the following specifications:

Property	Value
Grab tensile strength	*md–370 lbs *cd–250 lbs
Mullen burst stength	480 psi
Trapezoid tear strength	*md–100 lbs *cd–60 lbs
Apparent opening size	70 US standard sieve
Percent open area	4% permittivity 0.28 sec–1

*md – machine direction
*cd – cross machine direction

In the event that more than one width of fabric is required, a 6" overlap of the material shall also be required.

The curtain material shall be supported by a flotation material having over 29 lbs⁄ft buoyancy. The floating curtain shall have a 5⁄16" galvanized chain as ballast and dual 5⁄16" galvanized wire ropes with a heavy vinyl coating as load lines.

Construction Methods

The Contractor shall maintain the Floating Turbidity Curtain in a satisfactory condition until its removal is requested by the Engineer.

Measurement and Payment

Floating Turbidity Curtain will be paid for at the contract price for "Lump Sum for Erosion Control". Such payment will be full compensation including but not limited to installation, maintenance, removal and incidentals necessary to complete this work.

ROADSIDE ENVIRONMENTAL UNIT
DEPARTMENT OF TRANSPORTATION
DIVISION OF HIGHWAYS
RALEIGH, N.C.

2006 STANDARD SPECIFICATIONS

NOTES: ANY DEVIATION FROM OPTIONS GIVEN WILL REQUIRE PRIOR APPROVAL BY ENGINEER.

ADDITIONAL EROSION CONTROL DEVICES MAY NEED TO BE INSTALLED AS DIRECTED BY THE ENGINEER.

PROJECT NO. 42287
PAMLICO COUNTY
STATION: 15+69.00 -L-

REPLACES BRIDGE NO. 31

STATE OF NORTH CAROLINA
DEPARTMENT OF TRANSPORTATION
RALEIGH

BRIDGE ON NC 304
OVER VANDEMERE CREEK
BETWEEN NC 307 & SR 1222

33'-10' CLEAR ROADWAY - 90°SKEW

REVISIONS						SHEET NO.
NO.	BY:	DATE:	NO.	BY:	DATE:	38
1			3			TOTAL SHEETS
2			4			185

STATE	STATE PROJECT REFERENCE NO.	SHEET NO.	TOTAL SHEETS
N.C.	B-5129 (BRIDGE NO. 31)	39	185
STATE PROJ. NO.	F. A. PROJ. NO.	DESCRIPTION	

PLANTING DETAILS

SEEDLING / LINER BAREROOT PLANTING DETAIL

HEALING IN

1. Locate a healing-in site in a shady, well protected area.
2. Excavate a flat bottom trench 12 inches deep and provide drainage.

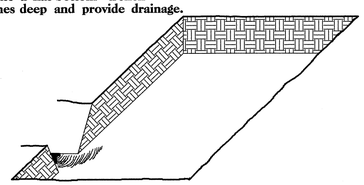

3. Backfill the trench with 2 inches well rotted sawdust. Place a 2 inch layer of well rotted sawdust at a sloping angle at one end of the trench.

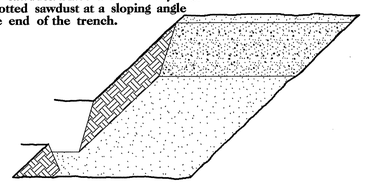

4. Place a single layer of plants against the sloping end so that the root collar is at ground level.

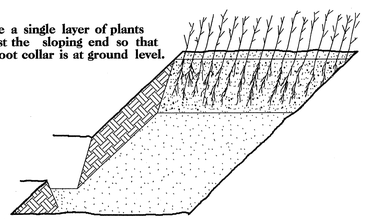

5. Place a 2 inch layer of well rotted sawdust over the roots maintaining a sloping angle.

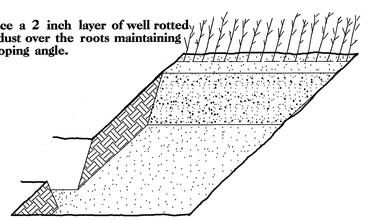

6. Repeat layers of plants and sawdust as necessary and water thoroughly.

DIBBLE PLANTING METHOD
USING THE KBC PLANTING BAR

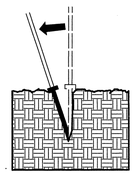

1. Insert planting bar as shown and pull handle toward planter.

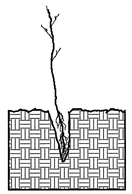

2. Remove planting bar and place seedling at correct depth.

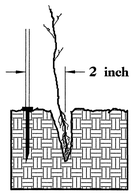

3. Insert planting bar 2 inches toward planter from seedling.

4. Pull handle of bar toward planter, firming soil at bottom.

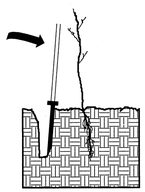

5. Push handle forward firming soil at top.

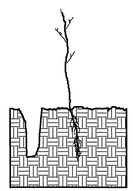

6. Leave compaction hole open. Water thoroughly.

PLANTING NOTES:

PLANTING BAG
During planting, seedlings shall be kept in a moist canvas bag or similar container to prevent the root systems from drying.

KBC PLANTING BAR
Planting bar shall have a blade with a triangular cross section, and shall be 12 inches long, 4 inches wide and 1 inch thick at center.

ROOT PRUNING
All seedlings shall be root pruned, if necessary, so that no roots extend more than 10 inches below the root collar.

REFORESTATION

☐ TREE REFORESTATION SHALL BE PLANTED 6 FT. TO 10 FT. ON CENTER, RANDOM SPACING, AVERAGING 8 FT. ON CENTER, APPROXIMATELY 680 PLANTS PER ACRE.

REFORESTATION

MIXTURE, TYPE, SIZE, AND FURNISH SHALL CONFORM TO THE FOLLOWING:

25% LIRIODENDRON TULIPIFERA	TULIP POPLAR	12 in – 18 in BR
25% QUERCUS LAURIFOLIA	LAUREL OAK	12 in – 18 in BR
25% FRAXINUS PENNSYLVANICA	GREEN ASH	12 in – 18 in BR
25% BETULA NIGRA	RIVER BIRCH	12 in – 18 in BR

REFORESTATION DETAIL SHEET

N.C.D.O.T. - ROADSIDE ENVIRONMENTAL UNIT

B-5129

#35 PAMLICO

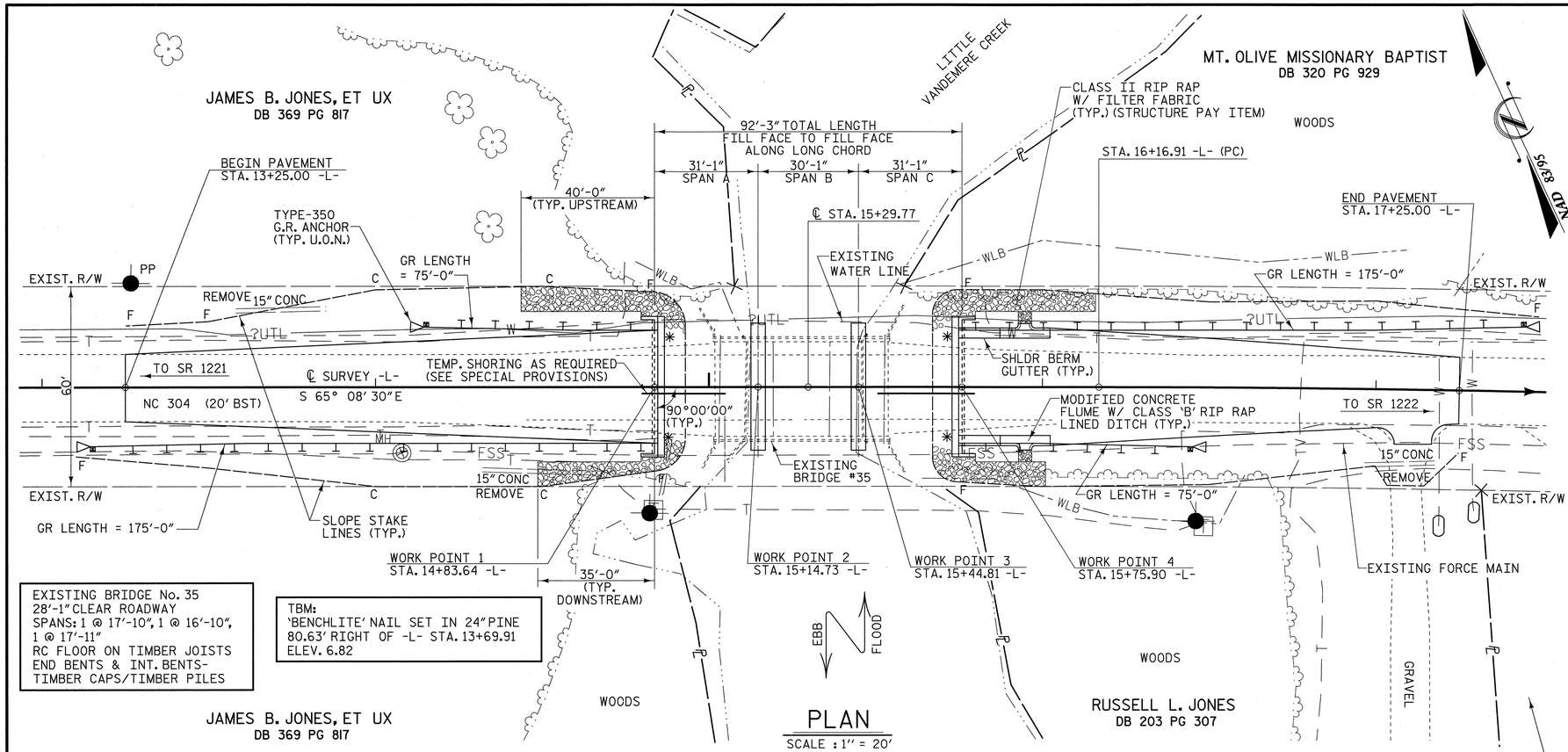

EXISTING BRIDGE No. 35
28'-1" CLEAR ROADWAY
SPANS: 1 @ 17'-10", 1 @ 16'-10", 1 @ 17'-11"
RC FLOOR ON TIMBER JOISTS
END BENTS & INT. BENTS-
TIMBER CAPS/TIMBER PILES

TBM:
'BENCHLITE' NAIL SET IN 24" PINE
80.63' RIGHT OF -L- STA. 13+69.91
ELEV. 6.82

PLAN
SCALE : 1" = 20'

DENOTES GEO-TECH BORE HOLE LOCATIONS.

* DENOTES GUARDRAIL CONNECTION REQ'D. (TYPE III) SEE "GUARDRAIL ANCHORAGE DETAILS" SHEET.

NOTE: GUARDRAIL LENGTHS AS SHOWN INCLUDE ANCHOR UNITS.

U.O.N. - UNLESS OTHERWISE NOTED

FOR PAVEMENT LAYOUT & EASEMENT, SEE "ROADWAY DETAILS" SHEET.

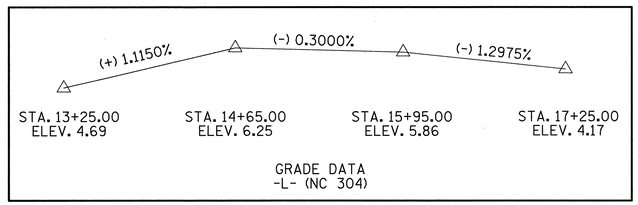

HYDROGRAPHIC DATA:

DESIGN DISCHARGE -	1600 CFS
FREQUENCY OF DESIGN FLOOD -	50 YEAR
DESIGN HIGH WATER ELEVATION -	4.3
DRAINAGE AREA -	2.7 SQ. MI.
BASIC DISCHARGE (Q 100) -	800 CFS
BASIC HIGH WATER ELEVATION -	4.8

EXISTING UTILITIES TO BE RELOCATED BY OTHERS PRIOR TO PROJECT LETTING

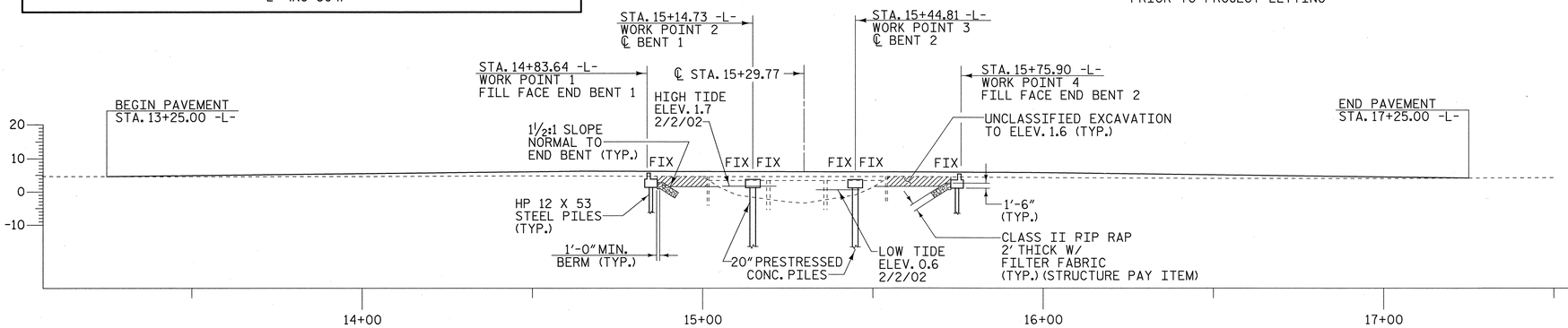

DENOTES ROADWAY FILL TO BE REMOVED

PROFILE ALONG ℄ SURVEY
SCALE : 1" = 20'

NOTES

ASSUMED LIVE LOAD = HS 20 OR ALTERNATE LOADING, EXCEPT THAT CORED SLAB UNITS HAVE BEEN DESIGNED FOR HS 25.

FOR EROSION CONTROL MEASURES SEE EROSION CONTROL PLANS.

CLEARING ON THIS PROJECT SHALL BE PERFORMED TO THE LIMITS ESTABLISHED BY METHOD II.

REMOVAL OF EXISTING BRIDGE SHALL INCLUDE REMOVAL OF THE EXISTING ABUTMENTS AND BENTS ALONG WITH ALL EXISTING PILES. AS WELL AS REMNANT PILINGS FROM PREVIOUS BRIDGES, AS PER THE CAMA PERMIT.

THIS BRIDGE HAS BEEN DESIGNED BY THE STRENGTH DESIGN METHOD AS SPECIFIED IN AASHTO STANDARD SPECIFICATIONS.

THIS STRUCTURE CONTAINS THE FOLLOWING PRECAST CONCRETE PIECES: BENT CAPS, END BENT CAPS, BACKWALLS, WINGWALLS, AND WING FOOTINGS. EACH PRECAST CONCRETE PIECE SHALL BE STENCILED WITH ITS PIECE MARK. SEE PIECE MARKS CONTAINED IN THESE PLANS.

CLASS AA (4500 PSI) CONCRETE SHALL BE USED IN ALL PRECAST PIECES LISTED ABOVE AND SHALL CONTAIN CALCIUM NITRITE CORROSION INHIBITOR IN ACCORDANCE WITH THE STANDARD SPECIFICATIONS.

REMOVAL OF THE EXISTING BRIDGE SHALL BE PERFORMED SO AS NOT TO ALLOW DEBRIS TO FALL INTO THE WATER. THE CONTRACTOR SHALL REMOVE THE BRIDGE AND SUBMIT PLANS FOR THE DEMOLITION IN ACCORDANCE WITH ARTICLE 402-2 OF THE STANDARD SPECIFICATIONS.

THE SUBSTRUCTURE OF THE EXISTING BRIDGE INDICATED ON THE PLANS IS FROM THE BEST INFORMATION AVAILABLE. SINCE THIS INFORMATION IS SHOWN FOR THE CONVENIENCE OF THE CONTRACTOR, THE CONTRACTOR SHALL HAVE NO CLAIM WHATSOEVER AGAINST THE DEPARTMENT OF TRANSPORTATION FOR ANY DELAYS OR ADDITIONAL COST INCURRED BASED ON DIFFFERENCES BETWEEN THE EXISTING BRIDGE SUBSTRUCTURE SHOWN ON THE PLANS AND THE ACTUAL CONDITIONS AT THE PROJECT SITE.

THIS STRUCTURE HAS BEEN DESIGNED IN ACCORDANCE WITH HEC 18, "EVALUATING SCOUR AT BRIDGES", MAY 2001.

THE SCOUR CRITICAL ELEVATION FOR INTERIOR BENTS No. 1 AND 2 IS -11 FT. THE SCOUR CRITICAL ELEVATIONS ARE FOR USE BY MAINTENANCE FORCES TO MONITOR POSSIBLE SCOUR PROBLEMS DURING THE LIFE OF THE STRUCTURE.

THIS STRUCTURE HAS BEEN DESIGNED IN ACCORDANCE WITH FHWA'S TECHNICAL ADVISORY T5140.20 (SCOUR AT BRIDGES).

THIS BRIDGE HAS BEEN DESIGNED IN ACCORDANCE WITH THE REQUIREMENTS OF THE STANDARD SPECIFICATIONS FOR SEISMIC DESIGN OF HIGHWAY BRIDGES FOR SEISMIC CATEGORY A.

ADT = 1600 FOR YEAR 2001

ROADWAY APPROACH EMBANKMENT SHALL BE WIDENED AS NECESSARY FOR GUARDRAIL INSTALLATION.

THIS STRUCTURE CONTAINS THE NECESSARY CORROSION PROTECTION REQUIRED FOR A CORROSIVE SITE.

ALL BAR SUPPORTS USED IN THE PRECAST PIECES AND ALL INCIDENTAL REINFORCING STEEL SHALL BE EPOXY COATED IN ACCORDANCE WITH THE STANDARD SPECIFICATIONS.

(NOTES CONTINUED ON "FOUNDATION LAYOUT" SHEET)

PROJECT NO. 42287

PAMLICO COUNTY

STATION: 15+29.77 -L-

REPLACES BRIDGE NO. 35

STATE OF NORTH CAROLINA
DEPARTMENT OF TRANSPORTATION
RALEIGH

GENERAL DRAWING FOR BRIDGE ON NC 304 OVER LITTLE VANDEMERE CREEK BETWEEN NC 307 & SR 1222

33'-10" CLEAR ROADWAY - 90° SKEW

NORTH CAROLINA PROFESSIONAL SEAL 19661 ENGINEER L. KEVIN AUSTIN 6/7/09

PLANS PREPARED BY:

MULKEY
ENGINEERS & CONSULTANTS
PO Box 33127
RALEIGH, N.C. 27636
(919) 851-1913
(919) 851-1918 (FAX)
WWW.MULKEYINC.COM

REVISIONS						SHEET NO.
NO.	BY:	DATE:	NO.	BY:	DATE:	40
1			3			TOTAL SHEETS
2			4			185

DRAWN BY : W. B. ALLEN DATE : 3/05
CHECKED BY : L. K. AUSTIN DATE : 3/09

6/5/2009 2:05:36 PM R:\Structures\B5129_SD_GD_0.dgn

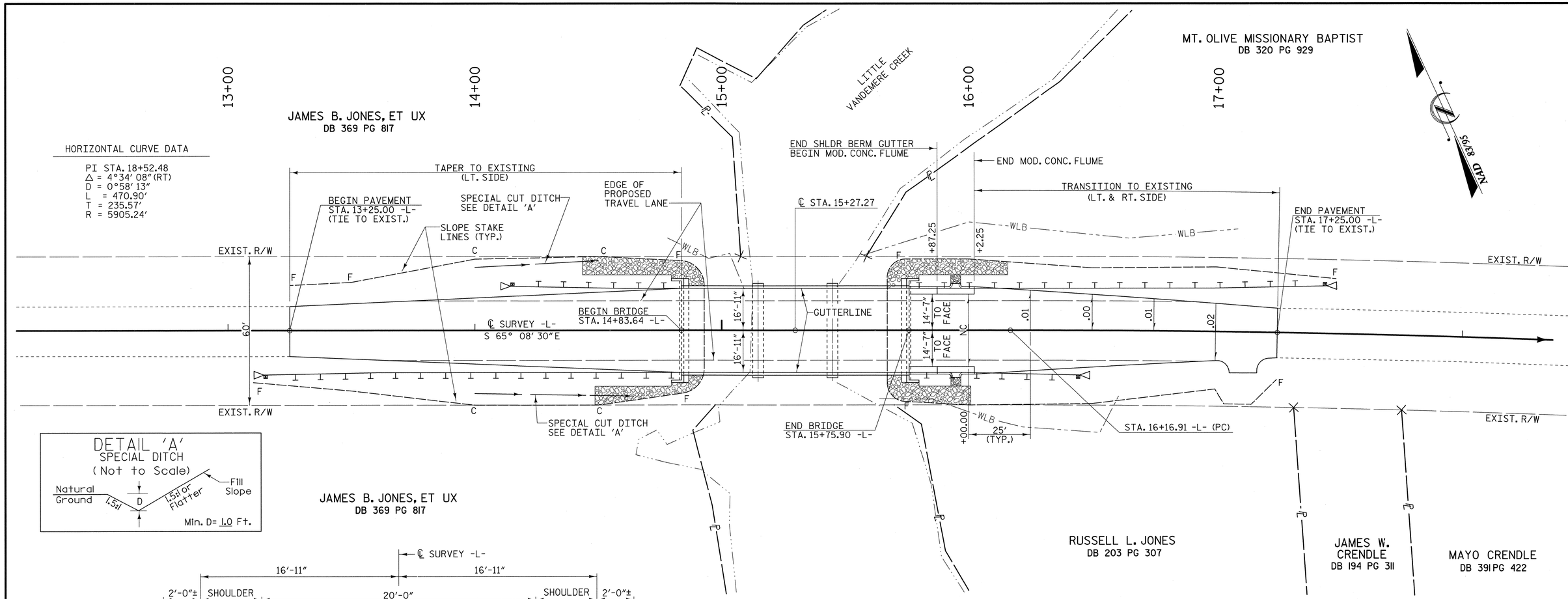

DETAIL 'A'
SPECIAL DITCH
(Not to Scale)

PAVEMENT LAYOUT DETAIL
SCALE : 1'' = 20'

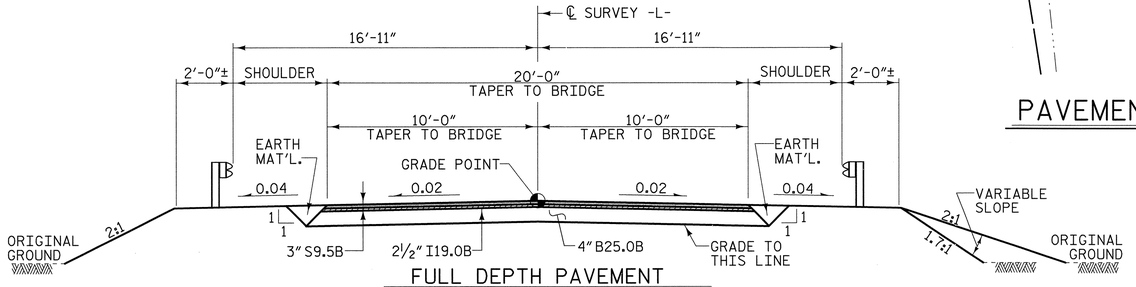

FULL DEPTH PAVEMENT
FROM -L- STA. 14+50 TO BEGIN BRIDGE
FROM END BRIDGE TO -L- STA. 17+00

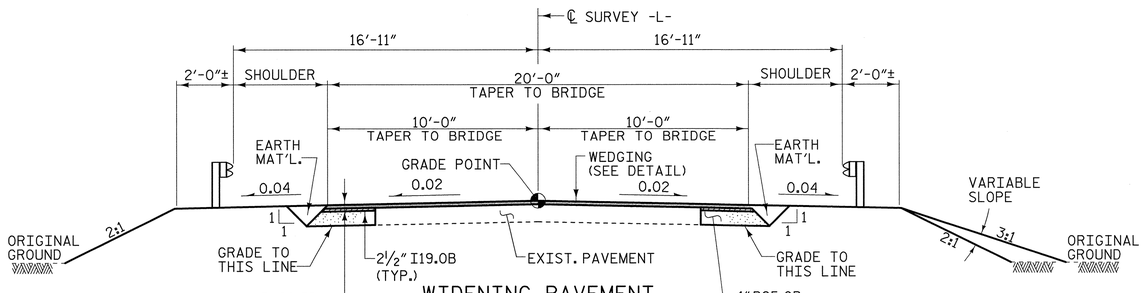

WIDENING PAVEMENT
FROM -L- STA. 13+25 TO -L- STA. 14+50
FROM -L- STA. 17+00 TO -L- STA. 17+25

NOTE:

FOR FILL IN WATER
SEE ROCK EMBANKMENT DETAIL
SHEET 2-A

TYPICAL ROADWAY SECTION
WITHIN CONSTRUCTION LIMITS

DATUM DESCRIPTION

THE LOCALIZED COORDINATE SYSTEM DEVELOPED FOR THIS PROJECT IS BASED ON THE STATE PLANE COORDINATES ESTABLISHED BY OTHERS FOR MONUMENT "MA2003B-1" WITH NAD 1983/95 STATE PLANE GRID COORDINATES OF NORTHING: 534474.447(ft) EASTING: 2691486.488(ft) THE AVERAGE COMBINED GRID FACTOR USED ON THIS PROJECT (GROUND TO GRID) IS: 0.99987861 THE N.C. LAMBERT GRID BEARING AND LOCALIZED HORIZONTAL GROUND DISTANCE FROM "MA2003B-1" TO -L- STATION 13+00.00 IS S 63°48'40" E 556.85' ALL LINEAR DIMENSIONS ARE LOCALIZED HORIZONTAL DISTANCES VERTICAL DATUM USED IS NAVD 88

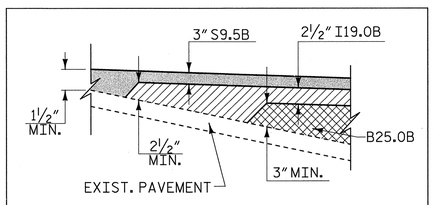

WEDGING DETAIL

THE QUANTITY OF RIP RAP TO BE PAID FOR WILL BE THE ACTUAL NUMBER OF TONS OF EACH CLASS OF RIP RAP WHICH HAS BEEN INCORPORATED INTO THE COMPLETED AND ACCEPTED WORK. THE RIP RAP WILL BE MEASURED BY BEING WEIGHED IN TRUCKS ON CERTIFIED PLATFORM SCALES OR OTHER CERTIFIED WEIGHING DEVICES. THE QUANTITY OF RIP RAP WILL BE PAID FOR AT THE CONTRACT UNIT PRICE PER TON:

RIP RAP CLASS II (2'-0'' THICK)

END BENT No. 1	95 TONS
END BENT No. 2	90 TONS
TOTAL	185 TONS

FILTER FABRIC

END BENT No. 1	110 SQ. YDS.
END BENT No. 2	100 SQ. YDS.
TOTAL	210 SQ. YDS.

PROJECT NO. 42287

PAMLICO COUNTY

STATION: 15+29.77 -L-

REPLACES BRIDGE NO. 35

NORTH CAROLINA PROFESSIONAL SEAL 1966 ENGINEER KEVIN AUSTIN 8/6/09

PLANS PREPARED BY:

MULKEY
ENGINEERS & CONSULTANTS
PO Box 33127
Raleigh, N.C. 27636
(919) 851-1012
(919) 851-1918 (FAX)
WWW.MULKEYINC.COM

STATE OF NORTH CAROLINA
DEPARTMENT OF TRANSPORTATION
RALEIGH

ROADWAY DETAILS

33'-10" CLEAR ROADWAY - 90° SKEW

REVISIONS						SHEET NO.
NO.	BY:	DATE:	NO.	BY:	DATE:	41
1			3			TOTAL SHEETS
2			4			185

DRAWN BY : W. B. ALLEN DATE : 3/05
CHECKED BY : L. K. AUSTIN DATE : 3/09

8/6/2009 10:56:44 AM G:\project\2004\274.09 Pamlico35\Structures\B5826C_SD_02.dgn

8/23/99

0 2.5 5	PROJ. REFERENCE NO.	SHEET NO.
	B-5129 (BRIDGE #35)	42

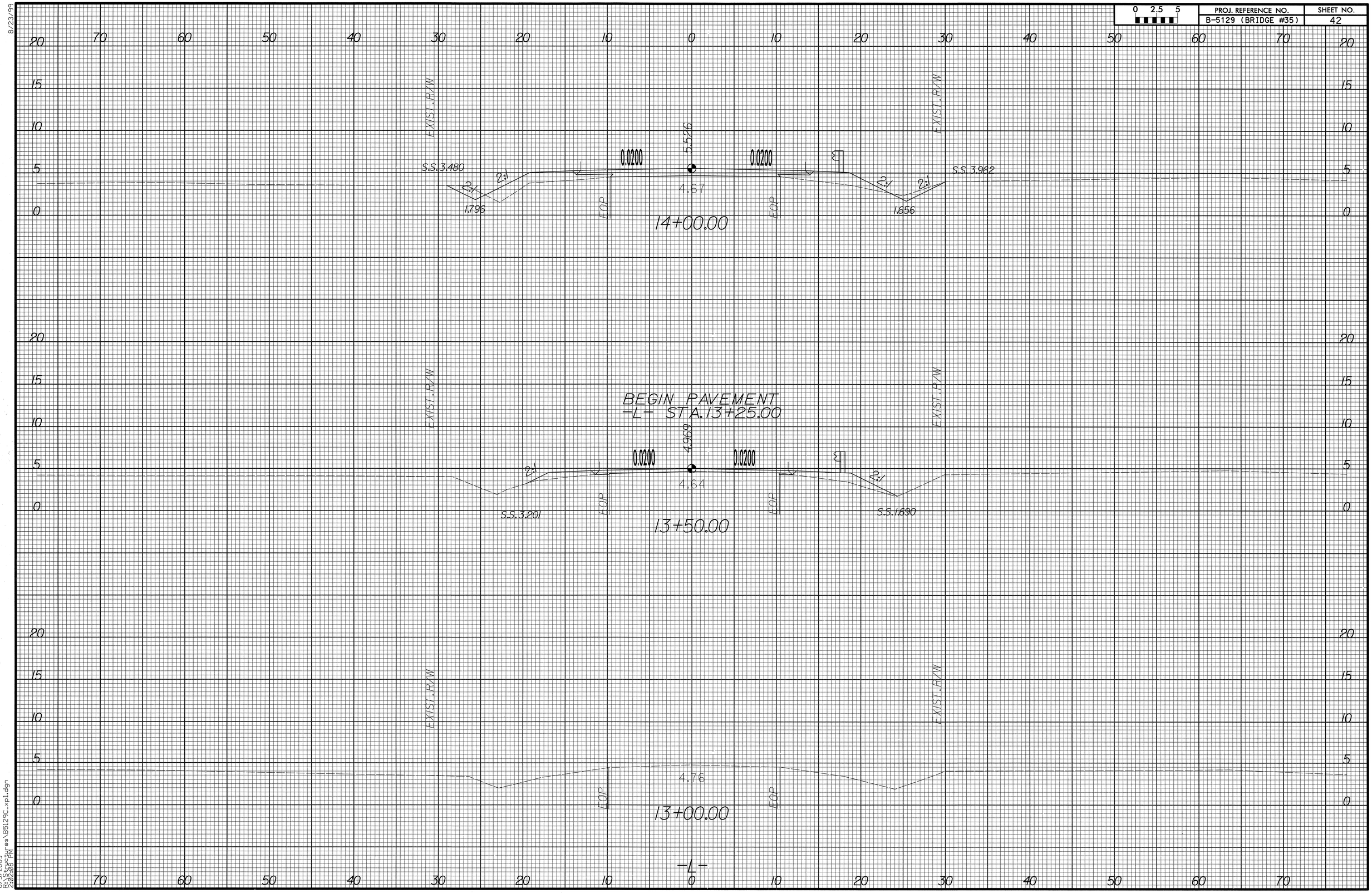

6/5/2009
R:\Structures\B5129C_xs1.dgn
2:02:08 PM

0 2.5 5	PROJ. REFERENCE NO.	SHEET NO.
	B-5129 (BRIDGE #35)	43

BEGIN BRIDGE
-L- STA 14+83.64

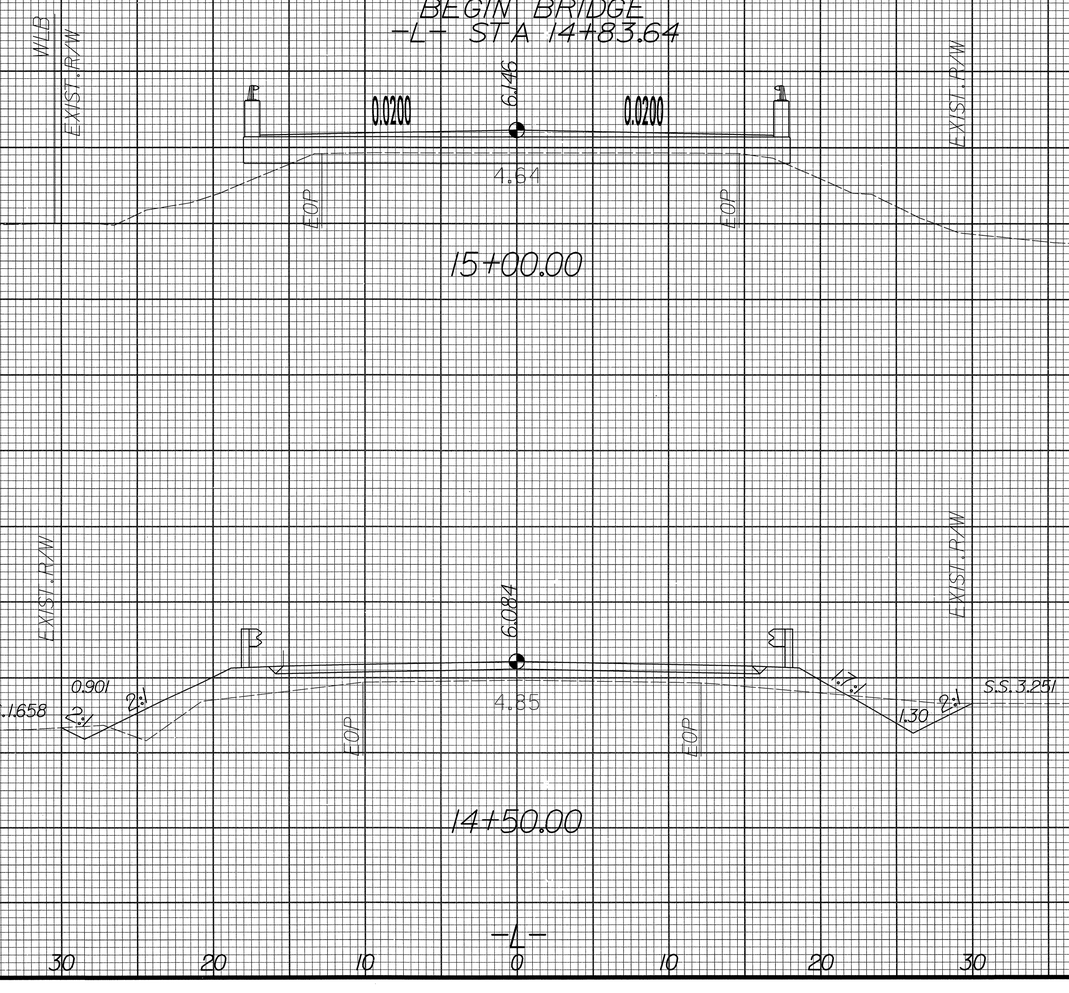

8/23/99

6/5/2009
R:\Structures\B5129C_xpl.dgn
2:02:05 PM

8/23/99

0 2.5 5	PROJ. REFERENCE NO.	SHEET NO.
	B-5129 (BRIDGE #35)	44

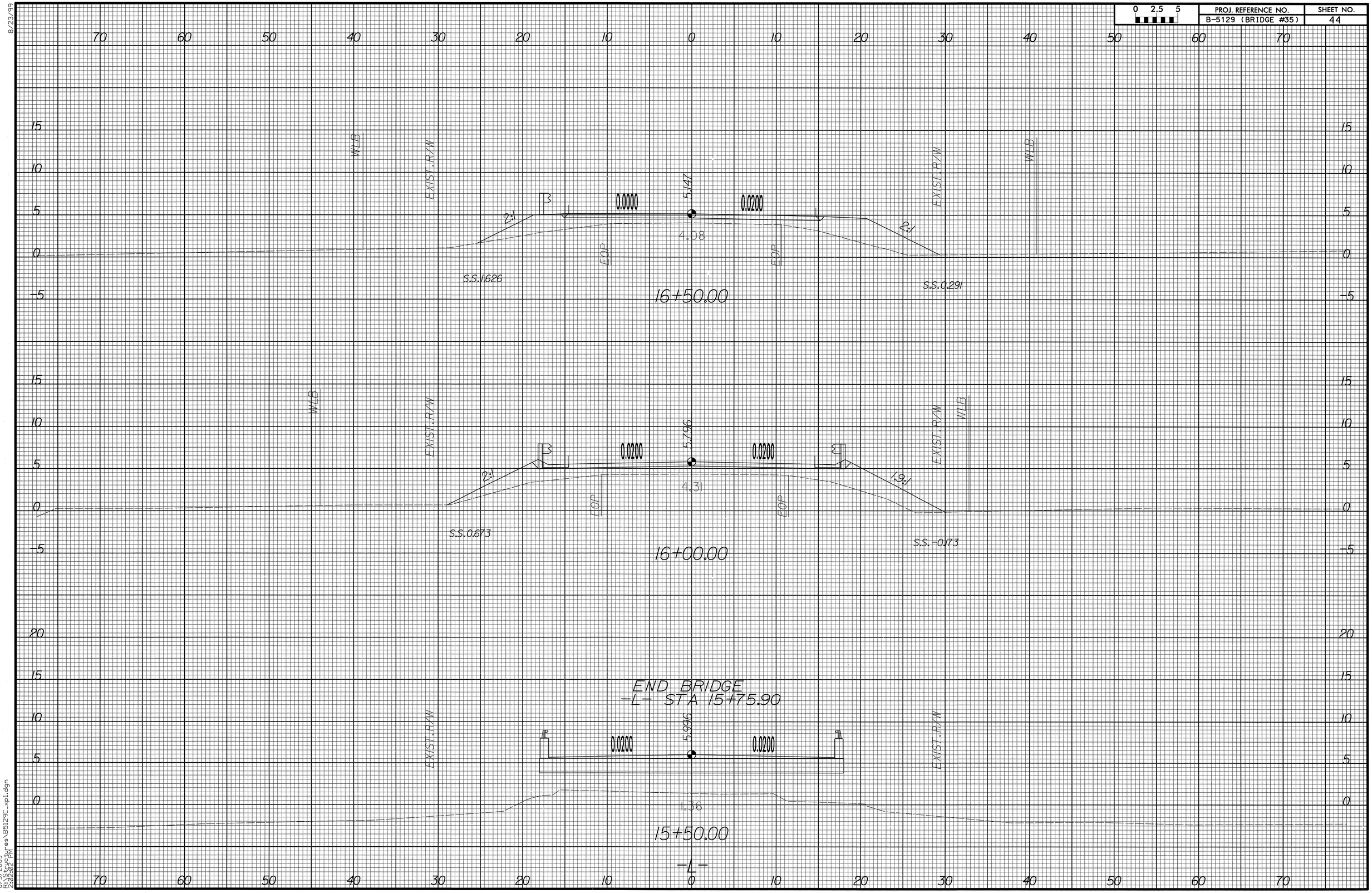

6/5/2009
R:\Structures\B5129C_xp1.dgn
2:02:02 PM

8/23/99

0 2.5 5	PROJ. REFERENCE NO.	SHEET NO.
	B-5129 (BRIDGE #35)	45

70 60 50 40 30 20 10 0 10 20 30 40 50 60 70

EXIST. R/W

EXIST. R/W

4.28

EOP

EOP

17+50.00

WLB

EXIST. R/W

EXIST. R/W

END PAVEMENT
-L- STA. 17+25.00

4.499

0.020

0.020

2:1

3:1

4.06

EOP

EOP

S.S. 0.922

S.S. 2.205

17+00.00

-L-

6/5/2009
R:\Structures\B5129C_xpl.dgn
2:01:48 PM

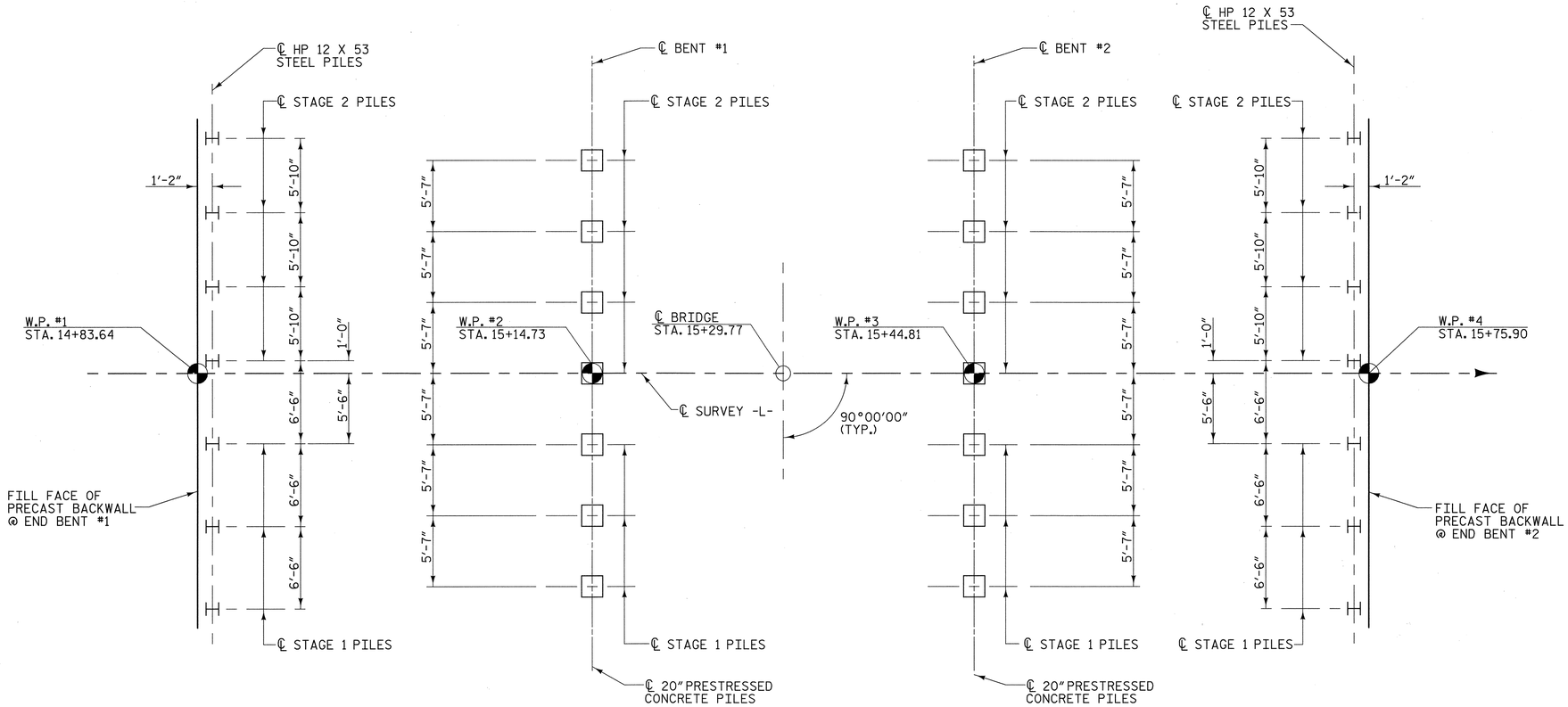

END BENT #1 | BENT #1 | BENT #2 | END BENT #2

FOUNDATION LAYOUT

(DIMENSIONS LOCATING PILES ARE TO THE CENTERLINE OF THE PILE AT THE BOTTOM OF THE CAP)

NOTES (CONTINUED FROM "GENERAL DRAWING")

THE CONCRETE IN THE PRECAST PIECES AND ALL PILES SHALL CONTAIN SILICA FUME. SILICA FUME SHALL BE SUBSTITUTED FOR 5% OF THE PORTLAND CEMENT BY WEIGHT. IF THE OPTION OF ARTICLE 1024-1 OF THE STANDARD SPECIFICATIONS TO PARTIALLY SUBSTITUTE CLASS F FLY ASH FOR PORTLAND CEMENT IS EXERCISED. THEN THE RATE OF FLY ASH SUBSTITUTION SHALL BE REDUCED TO 1.0 LB. OF FLY ASH PER 1.0 LB. OF CEMENT. NO PAYMENT WILL BE MADE FOR THIS SUBSTITUTION AS IT IS CONSIDERED INCIDENTAL TO THE VARIOUS PAY ITEMS.

PRESTRESSED CONCRETE CORED SLAB UNITS AND 20" PRESTRESSED CONCRETE PILES SHALL CONTAIN CALCIUM NITRITE CORROSION INHIBITOR IN ACCORDANCE WITH THE STANDARD SPECIFICATIONS.

THE CONTRACTOR SHALL SUBMIT WORKING DRAWINGS FOR ALL PRECAST PIECES. FOR SUBMITTAL OF WORKING DRAWINGS, SEE SPECIAL PROVISIONS.

FOR FALSEWORK AND FORMWORK, SEE SPECIAL PROVISIONS.

THIS BRIDGE SHALL BE CONSTRUCTED USING TOP-DOWN CONSTRUCTION METHODS. THE USE OF TEMPORARY CAUSEWAY OR WORK BRIDGE IS NOT PERMITTED.

FOR CRANE SAFETY, SEE SPECIAL PROVISIONS.

NOTES (FOR FOUNDATION LAYOUT)

PILES FOR END BENT NO. 1 AND 2 SHALL BE DRIVEN TO A MINIMUM BEARING CAPACITY OF 90 TONS EACH. THE BEARING CAPACITY IS EQUAL TO THE ALLOWABLE BEARING CAPACITY WITH A MINIMUM FACTOR OF SAFETY OF TWO.

THE ALLOWABLE BEARING CAPACITY FOR PILES AT END BENT NO. 1 AND 2 IS 45 TONS PER PILE.

STEEL PILE TIPS ARE REQUIRED FOR THE PRESTRESSED CONCRETE PILES AT INTERIOR BENTS NO. 1 & 2. SEE SECTION 450 OF THE STANDARD SPECIFICATIONS.

DRIVE PILES AT BENTS NO. 1 AND 2 TO A REQUIRED BEARING CAPACITY OF 120 TONS PER PILE. THE REQUIRED BEARING CAPACITY IS EQUAL TO THE ALLOWABLE BEARING CAPACITY WITH A MINIMUM FACTOR OF SAFETY OF TWO.

THE ALLOWABLE BEARING CAPACITY FOR PILES AT BENTS NO. 1 AND 2 IS 60 TONS PER PILE.

DRIVE PILES AT BENTS NO. 1 AND 2 TO A TIP ELEVATION OF NO HIGHER THAN -42 FEET.

TESTING THE FIRST PRODUCTION PILE WITH THE PILE DRIVING ANALYZER (PDA) DURING DRIVING, RESTRIKING OR REDRIVING IS REQUIRED AT BENTS NO. 1 AND 2. SEE PILE DRIVING ANALYZER SPECIAL PROVISION.

GALVANIZED STEEL PILES ARE REQUIRED IN ACCORDANCE WITH SECTION 450 OF THE STANDARD SPECIFICATIONS.

STEEL PILE POINTS (WITH TEETH) ARE REQUIRED FOR STEEL PILES AT END BENTS NO. 1 AND 2. SEE SECTION 450 OF THE STANDARD SPECIFICATIONS.

NORTH CAROLINA PROFESSIONAL ENGINEER SEAL 19661 L. KEVIN AUSTIN 6/7/09

PLANS PREPARED BY:

MULKEY
ENGINEERS & CONSULTANTS
PO Box 33127
Raleigh, N.C. 27636
(919) 851-1912
(919) 851-1913 (FAX)
www.mulkeyinc.com

PROJECT NO. 42287

PAMLICO COUNTY

STATION: 15+29.77 -L-

REPLACES BRIDGE NO. 35

STATE OF NORTH CAROLINA
DEPARTMENT OF TRANSPORTATION
RALEIGH

FOUNDATION LAYOUT

33'-10" CLEAR ROADWAY - 90° SKEW

REVISIONS						SHEET NO.
NO.	BY:	DATE:	NO.	BY:	DATE:	46
1			3			TOTAL SHEETS
2			4			185

DRAWN BY : W. B. ALLEN DATE : 3/09
CHECKED BY : L. K. AUSTIN DATE : 3/09

6/5/2009 10:59:06 PM R:\Structures\B5928C_SD_PL_04.dgn

SUPERSTRUCTURE SUMMARY

	30' EXTERIOR CORED SLAB	30' INTERIOR CORED SLAB (W/ 12" VOIDS)	30' INTERIOR CORED SLAB (W/ 8" VOIDS)	TYPE I ELASTOMERIC BEARING PAD	CAST-IN-PLACE CONCRETE PARAPET	ONE BAR METAL RAIL
	EACH	EACH	EACH	EACH	LIN. FT.	LIN. FT.
SUPERSTRUCTURE						
SPAN A	2	9	1	24		
SPAN B	2	9	1	24		
SPAN C	2	9	1	24		
TOTAL	6	27	3	72	184.33	165.33

SUBSTRUCTURE SUMMARY

	PIECE EB135	PIECE EB235	PIECE EB335	PIECE EB435	PIECE BW1	PIECE BW2	PIECE WW1	PIECE WF1	PIECE B135	PIECE B235	HP 12 X 53 GALVANIZED STEEL PILES		20" PRESTRESSED CONCRETE PILE	
	EACH	EACH	EACH	EACH	EACH	EACH	EACH	EACH	EACH	EACH	EA.	LIN.FT.	EA.	LIN.FT.
SUBSTRUCTURE														
END BENT #1	1	1			2	2	2	2			7	525.0		
BENT #1									1	1			7	490.0
BENT #2									1	1			7	490.0
END BENT #2			1	1	2	2	2	2			7	595.0		
TOTAL	1	1	1	1	4	4	4	4	2	2	14	1120.0	14	980.0

PROJECT NO. 42287

PAMLICO COUNTY

STATION: 15+29.77 -L-

REPLACES BRIDGE NO. 35

STATE OF NORTH CAROLINA
DEPARTMENT OF TRANSPORTATION
RALEIGH

SUPERSTRUCTURE & SUBSTRUCTURE SUMMARY

33'-10" CLEAR ROADWAY - 90°SKEW

NORTH CAROLINA PROFESSIONAL ENGINEER SEAL 19661 L. KEVIN AUSTIN 6/7/09

PLANS PREPARED BY:

MULKEY
ENGINEERS & CONSULTANTS
P.O. Box 33127
RALEIGH, N.C. 27636
(919) 851-1912
(919) 851-1912 (FAX)
WWW.MULKEYINC.COM

REVISIONS					
NO.	BY:	DATE:	NO.	BY:	DATE:
1			3		
2			4		

SHEET NO. 47

TOTAL SHEETS 185

DRAWN BY : W. B. ALLEN DATE : 2/09
CHECKED BY : L. K. AUSTIN DATE : 3/09

6/5/2009 12:58:32 PM R:\Structures\B5293C_SD_SUM_0.dgn

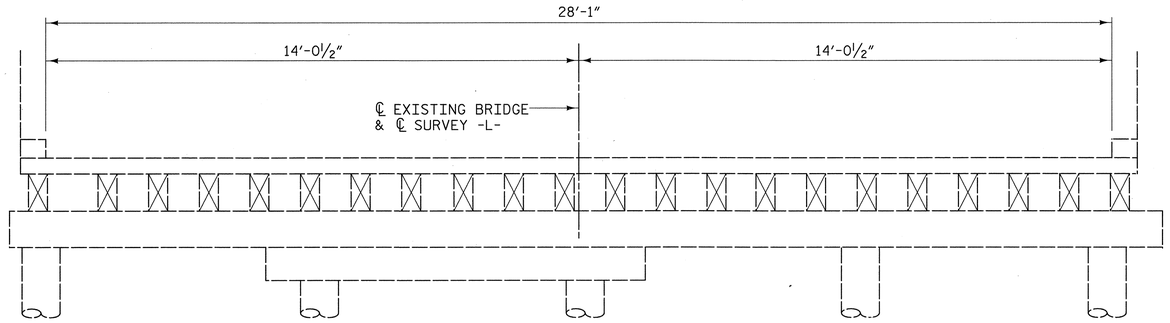

EXISTING BRIDGE

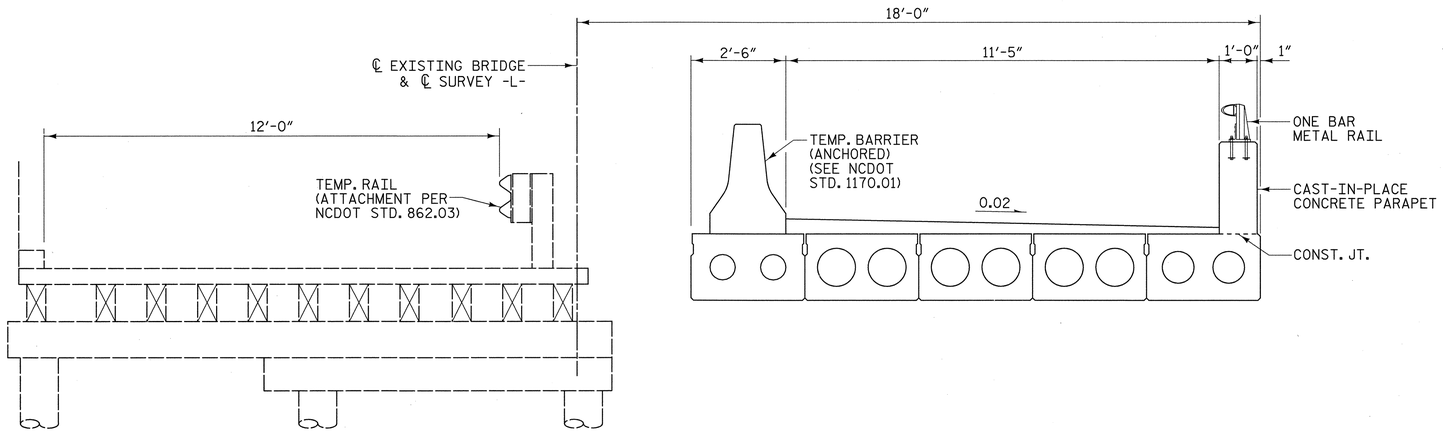

STAGE 1 CONSTRUCTION

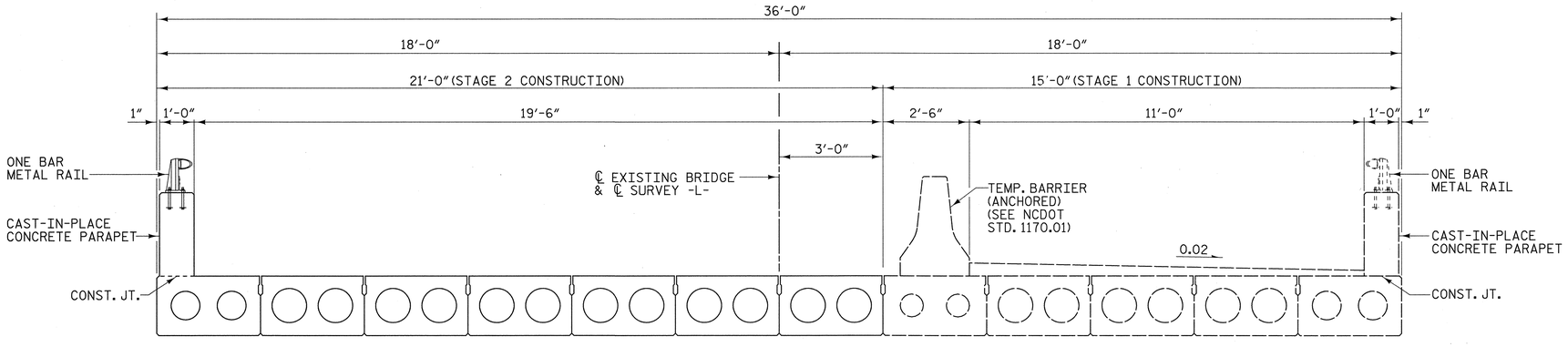

STAGE 2 CONSTRUCTION

PROJECT NO. 42287

PAMLICO COUNTY

STATION: 15+29.77 -L-

REPLACES BRIDGE NO. 35

STATE OF NORTH CAROLINA
DEPARTMENT OF TRANSPORTATION
RALEIGH

CONSTRUCTION STAGING

33'-10" CLEAR ROADWAY - 90° SKEW

NORTH CAROLINA PROFESSIONAL ENGINEER SEAL 19661 L. KEVIN AUSTIN 6/7/09

PLANS PREPARED BY:

MULKEY
ENGINEERS & CONSULTANTS
PO Box 33127
RALEIGH, N.C. 27636
(919) 851-1982
(919) 851-1918 (FAX)
WWW.MULKEYINC.COM

REVISIONS						SHEET NO.
NO.	BY:	DATE:	NO.	BY:	DATE:	48
1			3			TOTAL SHEETS
2			4			185

DRAWN BY : W. B. ALLEN DATE : 4/05
CHECKED BY : L. K. AUSTIN DATE : 3/09

6/5/2009 11:57:57 PM R:\Structures\B5028C_SD_PC_OLD.DGN

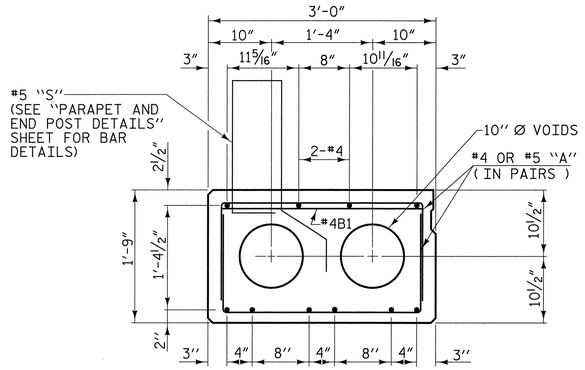

30' SPAN

8 - 0.6" Ø H.S. STRANDS
EXTERIOR SLAB SECTIONS
(CORED SLAB UNIT #1 & #12)

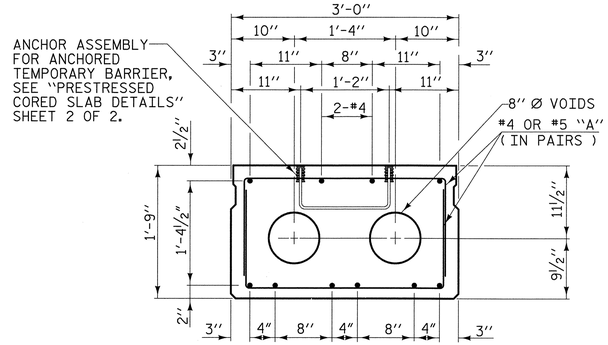

30' SPAN

8 - 0.6" Ø H.S. STRANDS
INTERIOR SLAB SECTION
(CORED SLAB UNIT #8)

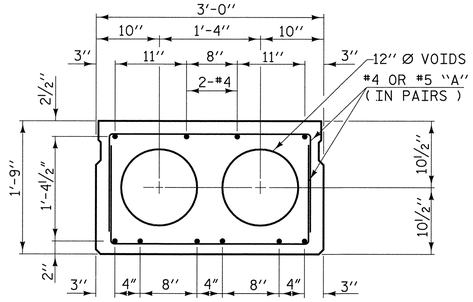

30' SPAN

8 - 0.6" Ø H.S. STRANDS
INTERIOR SLAB SECTIONS
(CORED SLAB UNITS #2 THRU #7 &
CORED SLAB UNITS #9 THRU #11)

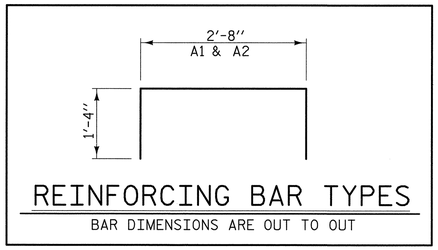

REINFORCING BAR TYPES

BAR DIMENSIONS ARE OUT TO OUT

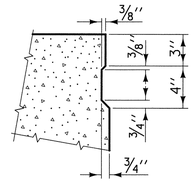

SHEAR KEY DETAIL

NOTE: OMIT SHEAR KEY ON OUTSIDE OF EXTERIOR CORED SLAB

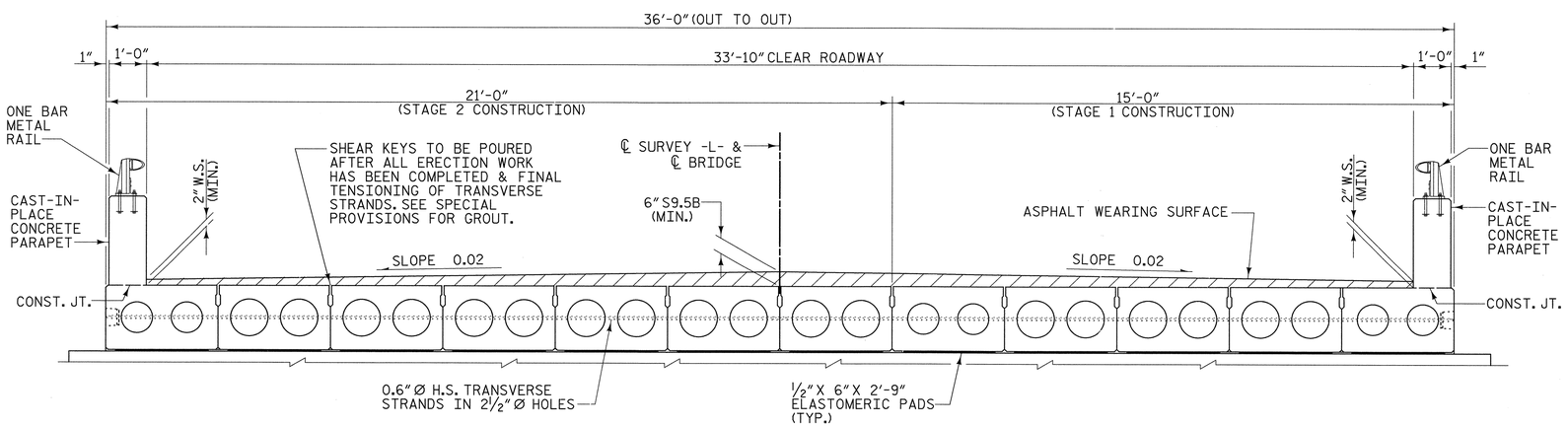

TYPICAL SECTION

GENERAL NOTES

ASSUMED LIVE LOAD = HS 25 OR ALTERNATE LOADING.

CONCRETE = f'c - 5000psi (MIN. COMP. STRENGTH @ 28 DAYS).

f'ci - 4000psi (MIN. COMP. STRENGTH @ TRANSFER OF STRESSING FORCE).

ALL PRESTRESSING STRANDS SHALL BE 7-WIRE LOW RELAXATION GRADE HIGH STRENGTH CABLES IN ACCORDANCE WITH THE STANDARD SPECIFICATIONS.

SIZE	TYPE	AREA	ULTIMATE STR.	APPLIED FORCE
0.6" Ø	HIGH STR.	0.217 SQ. IN. PER CABLE	58,600 LBS.	43,950 LBS. PER CABLE

STRUCTURAL STEEL ITEMS SHALL BE OF A GRADE CONFORMING TO EITHER ASTM A36 OR A373, EXCEPT HIGH STRENGTH BOLTS. HIGH STRENGTH BOLTS SHALL BE ASTM A325. ALL STRUCTURAL STEEL SHALL BE GALVANIZED AS PER THE SPECIFICATION.

ALL MATERIAL AND WORKMANSHIP SHALL COMPLY WITH THE APPLICABLE REQUIREMEMNTS OF THE STANDARD SPECIFICATIONS FOR ROADS AND STRUCTURES OF THE NC DEPARTMENT OF TRANSPORTATION DATED JULY 2006 AND WITH THE SPECIAL PROVISIONS.

ALL PRESTRESSING STRANDS SHALL BE 7-WIRE LOW RELAXATION GRADE 270 STRANDS AND SHALL CONFORM TO AASHTO M203 EXCEPT FOR SAMPLING REQUIREMENTS WHICH SHALL BE IN ACCORDANCE WITH THE STANDARD SPECIFICATIONS.

ALL REINFORCING STEEL CAST WITH THE CORED SLAB SECTIONS SHALL BE GRADE 60 AND SHALL BE INCLUDED IN THE UNIT PRICE BID FOR PRESTRESSED CONCRETE CORED SLABS.

RECESSES FOR TRANSVERSE STRANDS SHALL BE GROUTED AFTER THE TENSIONING OF THE STRANDS.

WHEN CORED SLABS ARE CAST, A POSITIVE HOLD-DOWN SYSTEM SHALL BE EMPLOYED TO PREVENT VOIDS FROM RISING OR MOVING SIDEWAYS. THIS SYSTEM SHALL BE DESIGNED TO BE LEFT IN PLACE UNTIL THE CONCRETE HAS REACHED RELEASE STRENGTH. AT LEAST THREE WEEKS PRIOR TO CASTING CORED SLABS, THE CONTRACTOR SHALL SUBMIT TO THE ENGINEER FOR REVIEW AND COMMENT, DETAILED DRAWINGS OF THE PROPOSED HOLD-DOWN SYSTEM. IN ADDITION TO STRUCTURAL DETAILS, LOCATION AND SPACING OF THE HOLD-DOWNS SHALL BE INDICATED.

WHEN A CONCRETE WEARING SURFACE IS DETAILED ON THE CORED SLAB BRIDGE TYPICAL SECTION, THE TOP SURFACE OF THE CORED SLAB UNITS SHALL HAVE A 3/8" RAKED FINISH.

PRESTRESSING STRANDS SHALL BE CUT FLUSH WITH THE CORED SLAB UNIT ENDS.

APPLY EPOXY PROTECTIVE COATING TO CORED SLAB UNIT ENDS.

UNLESS OTHERWISE NOTED ON THE PLANS, ALL EXPOSED CORNERS ON STRUCTURES SHALL BE CHAMFERED 3/4".

FOR DEFLECTION TABLE, SEE "PRESTRESSED CORED SLAB DETAILS" SHEET.

8/6/2009 6:05:34 AM G:\project\2004\24.08_Pamlico35\Structures\B5296_SD_TS_01.dgn

DRAWN BY : W. B. ALLEN DATE : 4/05
CHECKED BY : L. K. AUSTIN DATE : 3/09

PROJECT NO. 42287
PAMLICO COUNTY
STATION: 15+29.77 -L-

REPLACES BRIDGE NO. 35

NORTH CAROLINA PROFESSIONAL SEAL 1966 ENGINEER KEVIN AUSTIN 8/6/09

PLANS PREPARED BY:
MULKEY
ENGINEERS & CONSULTANTS
PO Box 33127
Raleigh, N.C. 27636
(919) 851-1912
(919) 851-1018 (FAX)
www.mulkeyinc.com

STATE OF NORTH CAROLINA
DEPARTMENT OF TRANSPORTATION
RALEIGH
STANDARD

PRESTRESSED CORED SLAB
30' SPAN

33'-10" CLEAR ROADWAY - 90° SKEW

REVISIONS						SHEET NO.
NO.	BY:	DATE:	NO.	BY:	DATE:	49
1			3			TOTAL SHEETS
2			4			185

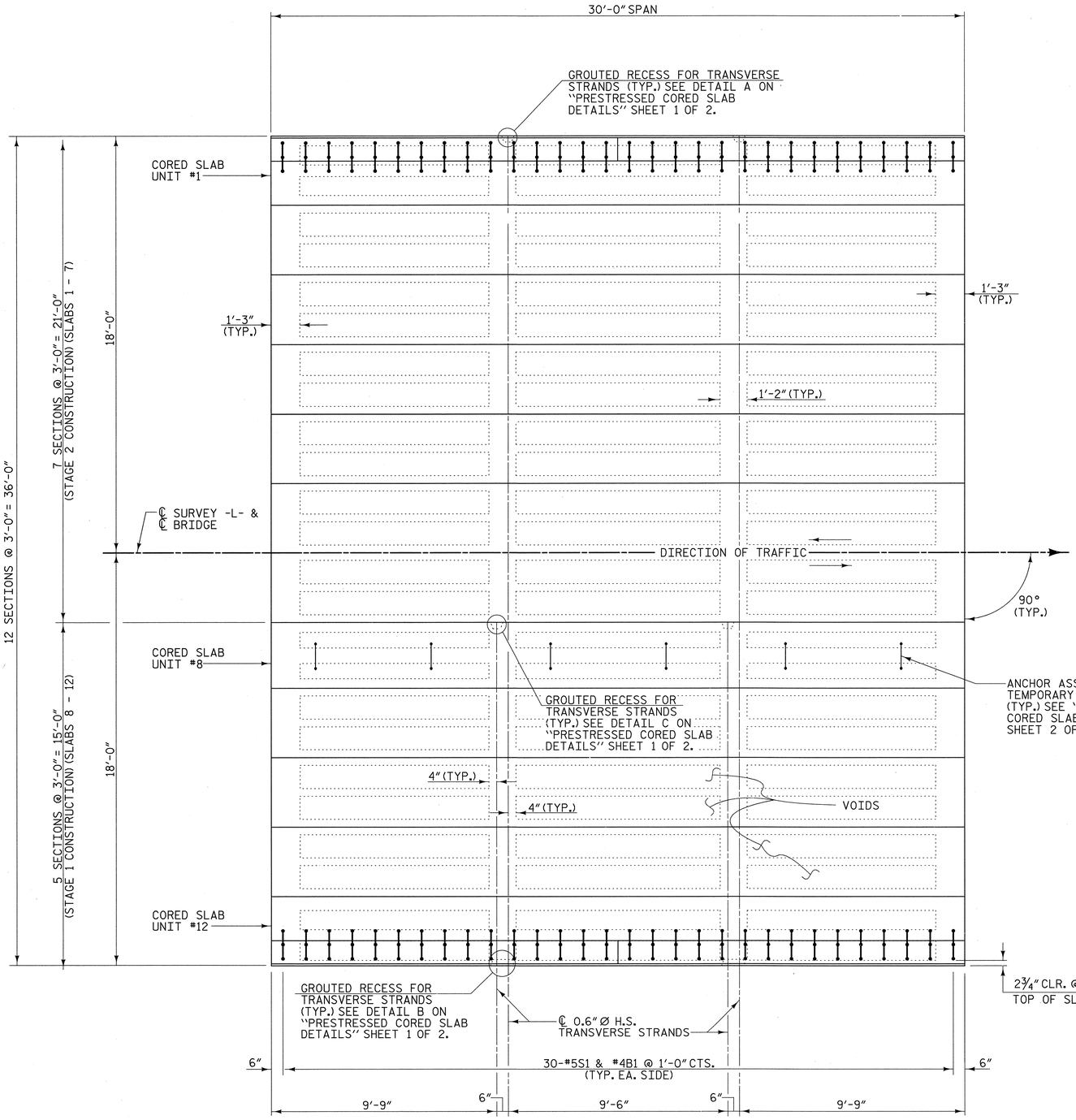

PLAN OF SPAN

NOTE:

SEE "PARAPET & END POST DETAILS" SHEET FOR "S" BAR MARKS.

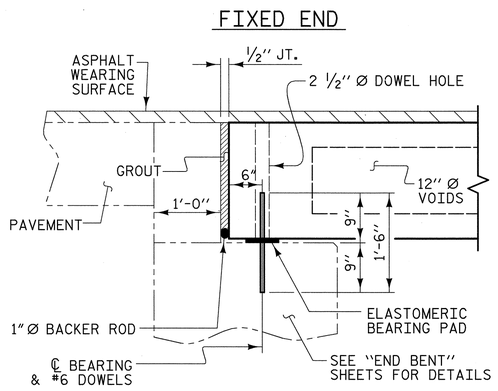

SECTION AT END BENT

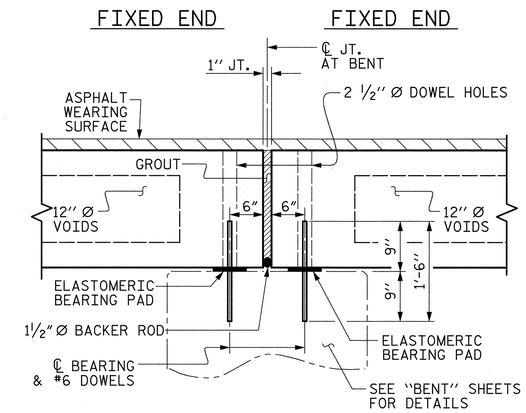

SECTION AT BENT

PROJECT NO. 42287

PAMLICO COUNTY

STATION: 15+29.77 -L-

REPLACES BRIDGE NO. 35

STATE OF NORTH CAROLINA
DEPARTMENT OF TRANSPORTATION
RALEIGH

STANDARD

PRESTRESSED CORED SLAB 30' SPAN

33'-10" CLEAR ROADWAY - 90° SKEW

NORTH CAROLINA PROFESSIONAL SEAL 19661 ENGINEER L. KEVIN AUSTIN 6/7/09

PLANS PREPARED BY:

MULKEY
ENGINEERS & CONSULTANTS
PO Box 33127
Raleigh, N.C. 27636
(919) 851-1912
(919) 851-1913 (FAX)
WWW.MULKEYINC.COM

REVISIONS						SHEET NO.
NO.	BY:	DATE:	NO.	BY:	DATE:	50
1			3			TOTAL SHEETS
2			4			185

DRAWN BY : W. B. ALLEN DATE : 3/05
CHECKED BY : L. K. AUSTIN DATE : 3/09

6/5/2009 11:56:41 PM R:\Structures\B5028c_SD_CS_0.dgn

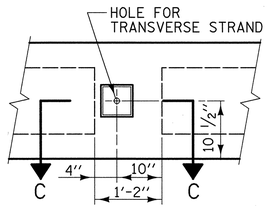

ELEVATION

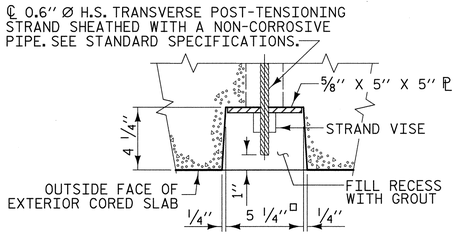

SECTION C-C

DETAIL A
GROUTED RECESS AT END OF POST-TENSIONED STRAND CORED SLAB

(CORED SLAB UNIT #1)

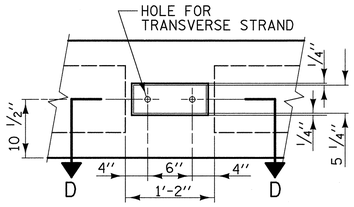

ELEVATION

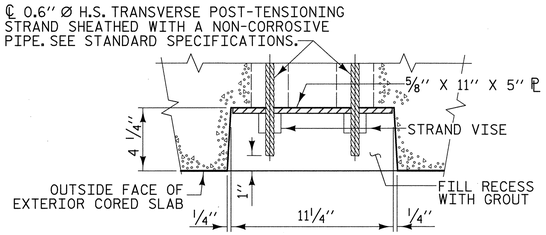

SECTION D-D

DETAIL B
GROUTED RECESS AT END OF POST-TENSIONED STRAND CORED SLAB

(CORED SLAB UNIT #12)

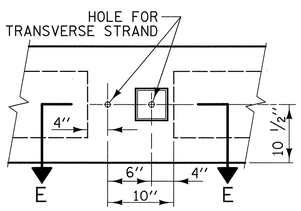

ELEVATION

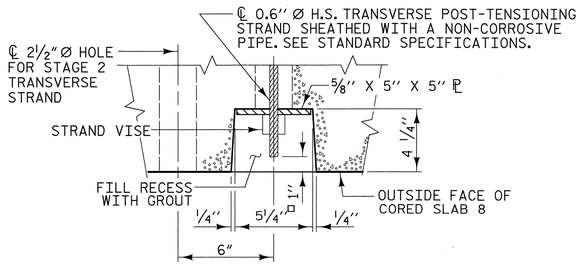

SECTION E-E

DETAIL C
GROUTED RECESS AT END OF POST-TENSIONED STRAND CORED SLAB

(CORED SLAB UNIT #8)

EXTERIOR SLAB UNIT	30'
CAMBER (SLAB UNIT ALONE IN PLACE)	5/16" (UP)
DEFLECTION (SUPERIMPOSED DEAD LOAD)	* 1/16" (DOWN)
FINAL DEFLECTION	1/4" (UP)
* INCLUDES FUTURE WEARING SURFACE	

INTERIOR SLAB UNIT	30'
CAMBER (SLAB UNIT ALONE IN PLACE)	5/16" (UP)
DEFLECTION (SUPERIMPOSED DEAD LOAD)	* 1/16" (DOWN)
FINAL DEFLECTION	1/4" (UP)
* INCLUDES FUTURE WEARING SURFACE	

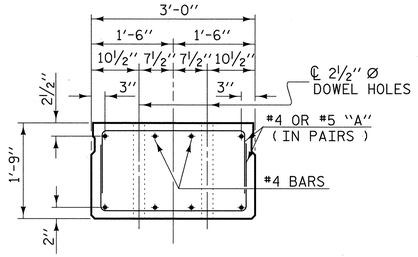

SLAB END ELEVATION

THE 2 1/2" Ø DOWEL HOLES AT FIXED ENDS OF SLAB SECTIONS SHALL BE FILLED WITH NON-SHRINK GROUT, SEE SPECIAL PROVISIONS.

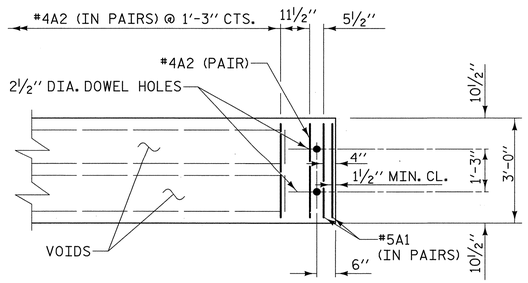

PART PLAN - SLAB SECTION

NOTES

CONCRETE CHAMFERS:
UNLESS OTHERWISE NOTED ON THE PLANS, ALL EXPOSED CORNERS ON STRUCTURES SHALL BE CHAMFERED 3/4" WITH THE FOLLOWING EXCEPTIONS: TOP CORNERS OF CURBS MAY BE ROUNDED TO 1 1/2" RADIUS WHICH IS BUILT INTO CURB FORMS; CORNERS OF TRANSVERSE FLOOR EXPANSION JOINTS SHALL BE ROUNDED WITH A 1/4" FINISHING TOOL UNLESS OTHERWISE REQUIRED ON PLANS; AND CORNERS OF EXPANSION JOINTS IN THE ROADWAY FACES AND TOPS OF CURBS AND SIDEWALKS SHALL BE ROUNDED TO A 1/4" RADIUS WITH A FINISHING STONE OR TOOL UNLESS OTHERWISE ON PLANS.

DECK DRAINS ARE NOT PERMITTED.

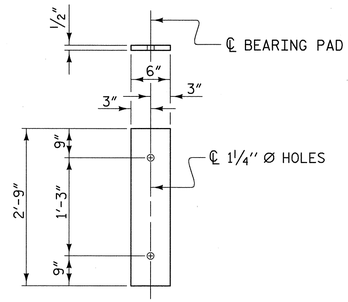

FIXED
(TYPE I - 72 REQ'D)

ELASTOMERIC BEARING DETAILS

NOTE: ELASTOMER HARDNESS SHALL BE 60 DUROMETERS.

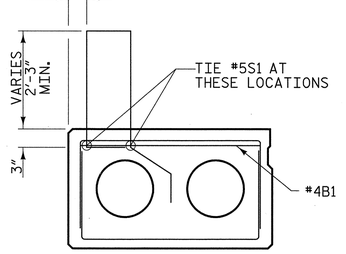

TIE LOCATION FOR #5S1

PROJECT NO. 42287
PAMLICO COUNTY
STATION: 15+29.77 -L-

REPLACES BRIDGE NO. 35 SHEET 1 OF 2

STATE OF NORTH CAROLINA
DEPARTMENT OF TRANSPORTATION
RALEIGH

PRESTRESSED CORED SLAB DETAILS

33'-10" CLEAR ROADWAY - 90° SKEW

NORTH CAROLINA PROFESSIONAL SEAL 19661 ENGINEER L. KEVIN AUSTIN 6/7/09

PLANS PREPARED BY:
MULKEY
ENGINEERS & CONSULTANTS
PO Box 33127
Raleigh, N.C. 27636
(919) 851-1913
(919) 851-1918 (FAX)
WWW.MULKEYINC.COM

REVISIONS						SHEET NO.
NO.	BY:	DATE:	NO.	BY:	DATE:	51
1			3			TOTAL SHEETS
2			4			185

DRAWN BY : W. B. ALLEN DATE : 3/05
CHECKED BY : L. K. AUSTIN DATE : 3/09

6/5/2009 11:55:56 PM R:\Structures\B5828C_SD_CS_02.dgn

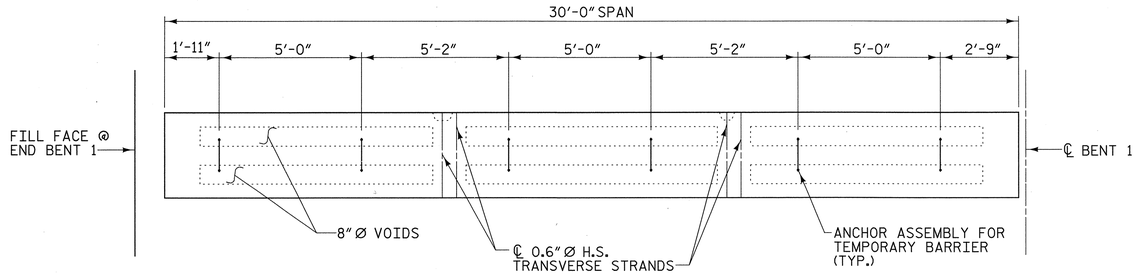

SPAN A

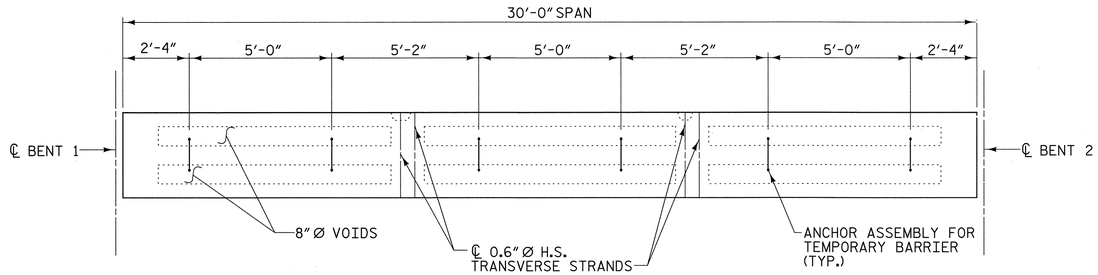

SPAN B

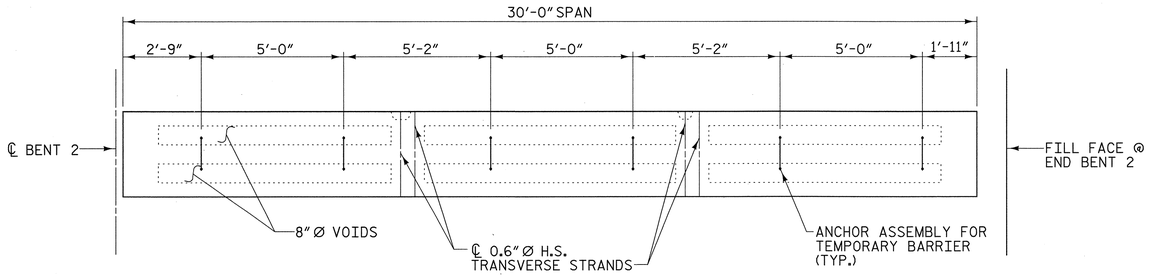

SPAN C

ANCHOR ASSEMBLY LAYOUT FOR CORED SLAB UNIT #8

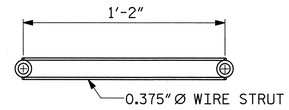

PLAN

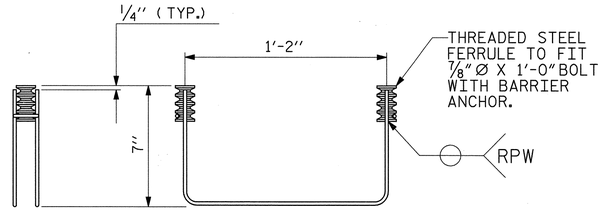

SIDE VIEW ELEVATION

MINIMUM LENGTH OF THREADS IN INSERT (FERRULE): 2 1/2''

ANCHOR ASSEMBLY FOR TEMPORARY BARRIER

(18 ASSEMBLIES REQUIRED)

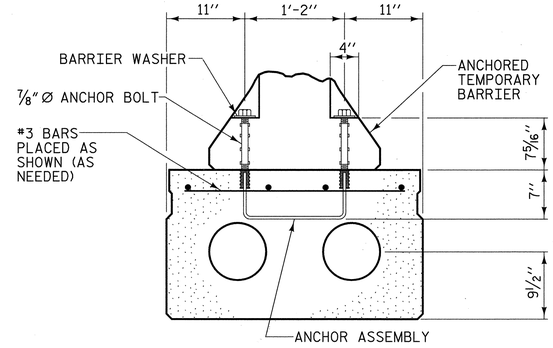

CORED SLAB UNIT #8

(SHOWING PLACEMENT OF ANCHOR ASSEMBLY)

THE #3 BARS ARE INCIDENTAL AND THEIR COST SHALL BE INCLUDED IN THE PRICE BID FOR THE PRESTRESSED CONCRETE CORED SLAB.

NOTES

THE ANCHOR ASSEMBLY FOR TEMPORARY BARRIER SHALL CONSIST OF THE FOLLOWING COMPONENTS :

A. FERRULES SHALL BE MADE FROM STEEL MEETING THE REQUIREMENTS OF AASHTO M169, GRADE 12L14 AND SHALL HAVE A MINIMUM LENGTH OF THREADS OF 2 1/2".

B. 2 - 7/8'' Ø X 1'-0'' ANCHOR BOLTS SHALL CONFORM TO THE REQUIREMENTS OF ASTM A307. ANCHOR BOLTS SHALL BE GALVANIZED. (AT THE CONTRACTOR'S OPTION, STAINLESS STEEL BOLTS AND WASHERS MAY BE USED AS AN ALTERNATE FOR THE 7/8'' Ø X 1'-0'' GALVANIZED ANCHOR BOLTS. THEY SHALL CONFORM TO OR EXCEED THE MECHANICAL REQUIREMENTS OF ASTM A307. THE USE OF THIS ALTERNATE SHALL BE APPROVED BY THE ENGINEER.)

C. WIRE STRUT SHOWN IN THE ANCHOR ASSEMBLY DETAIL ARE MINIMUM ALLOWABLE SIZE AND SHALL HAVE A MINIMUM TENSILE STRENGTH OF 100,000 PSI.

ANCHOR ASSEMBLY WITH BOLTS SHALL BE ASSEMBLED IN THE SHOP. BOLT THREADS MAY BE RECUT AS NECESSARY TO INSURE FIT.

THE COST OF THE ANCHOR ASSEMBLY COMPLETE IN PLACE, SHALL BE INCLUDED, IN THE UNIT CONTRACT PRICE BID FOR CONSTRUCTION OF SUPERSTRUCTURE, SEE SPECIAL PROVISIONS.

FERRULES TO BE PLUGGED DURING CASTING OF THE CORED SLAB UNITS AS RECOMMENDED BY THE MANUFACTURER.

AT THE CONTRACTOR'S OPTION, FERRULES WITH OPEN OR CLOSED ENDS MAY BE USED.

FOR 4" X 3 1/4" X 1/2" BARRIER WASHER TO BE USED WITH ANCHOR ASSEMBLY, SEE NCDOT ROADWAY STD. 1170.01.

PAYMENT FOR ANCHORED TEMPORARY BARRIER AND BARRIER WASHER ARE INCLUDED IN TRAFFIC CONTROL PAY ITEM, SEE SPECIAL PROVISIONS.

NORTH CAROLINA PROFESSIONAL ENGINEER SEAL 19661 L. KEVIN AUSTIN 6/7/09

PLANS PREPARED BY:

MULKEY ENGINEERS & CONSULTANTS
PO Box 33127
Raleigh, NC 27636
(919) 851-1912
(919) 851-1918 (FAX)
WWW.MULKEYINC.COM

PROJECT NO. 42287

PAMLICO COUNTY

STATION: 15+29.77 -L-

REPLACES BRIDGE NO. 35 SHEET 2 OF 2

STATE OF NORTH CAROLINA
DEPARTMENT OF TRANSPORTATION
RALEIGH

PRESTRESSED CORED SLAB DETAILS

33'-10" CLEAR ROADWAY - 90°SKEW

REVISIONS						SHEET NO.
NO.	BY:	DATE:	NO.	BY:	DATE:	52
1			3			TOTAL SHEETS
2			4			185

DRAWN BY : W. B. ALLEN DATE : 2/09
CHECKED BY : L. K. AUSTIN DATE : 2/09

6/5/2009 12:55:17 PM R:\Structures\B5929C_SD_CS_03.dgn

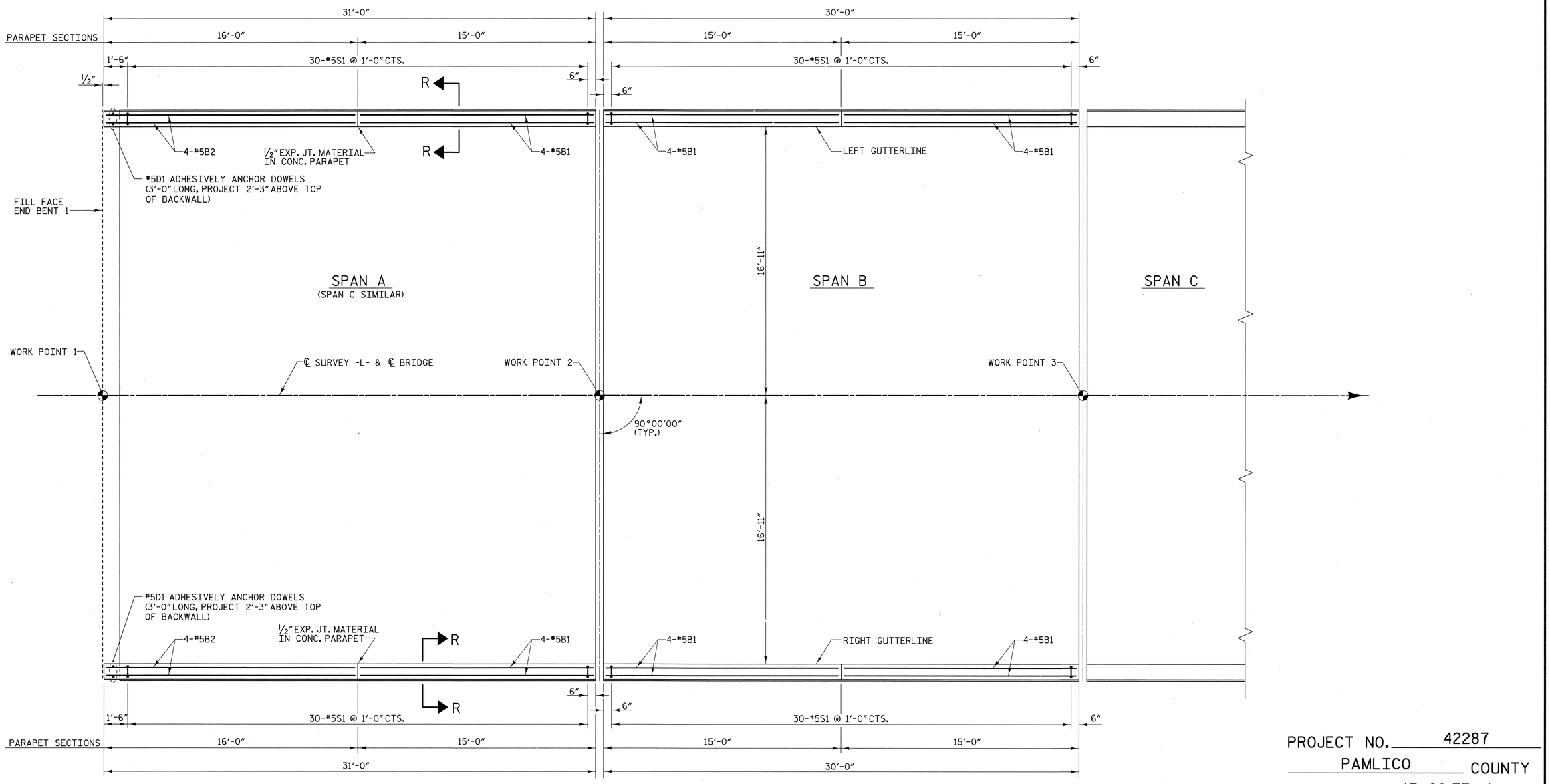

PLAN

NOTE: DISTANCES ARE ALONG OUTSIDE FACE OF PARAPET

FOR END POST DETAILS AND SECTION R-R SEE "PARAPET AND END POST DETAILS" SHEET.

PROJECT NO. 42287

PAMLICO COUNTY

STATION: 15+29.77 -L-

REPLACES BRIDGE NO. 35

STATE OF NORTH CAROLINA
DEPARTMENT OF TRANSPORTATION
RALEIGH

PLAN OF PARAPET

33'-10" CLEAR ROADWAY - 90°SKEW

NORTH CAROLINA PROFESSIONAL SEAL 19661 ENGINEER L. KEVIN AUSTIN 6/7/09

PLANS PREPARED BY:

MULKEY
ENGINEERS & CONSULTANTS
PO Box 33127
RALEIGH, N.C. 27636
(919) 851-1912
(919) 851-1918 (FAX)
WWW.MULKEYINC.COM

REVISIONS						SHEET NO.
NO.	BY:	DATE:	NO.	BY:	DATE:	53
1			3			TOTAL SHEETS
2			4			185

DRAWN BY : W. B. ALLEN DATE : 2/09
CHECKED BY : L. K. AUSTIN DATE : 2/09

6/5/2009 11:54:09 PM R:\Structures\B5939C_SD_PR_0.dgn

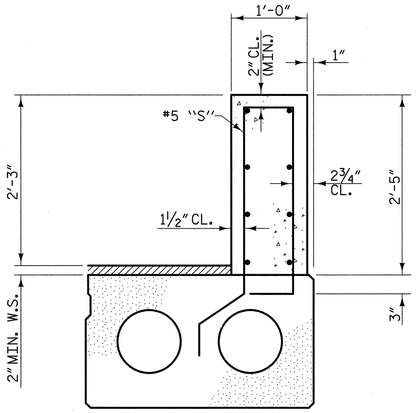

SECTION R-R

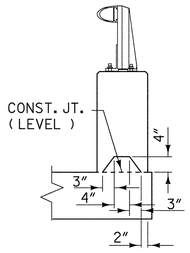

SECTION S-S

AT DAM IN OPEN JOINT
(THIS IS TO BE USED ONLY WHEN SLIP FORM IS USED)

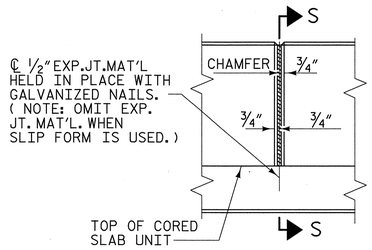

ELEVATION AT EXPANSION JOINTS

NOTES

ALL REINFORCING STEEL IN THE PARAPET AND END POSTS SHALL BE EPOXY COATED.

#5S1 BARS MAY BE SHIFTED SLIGHTLY AS NECESSARY TO AVOID INTERFERENCE WITH THE ONE BAR METAL RAIL POST ANCHORAGE ASSEMBLIES.

THE #5D1 DOWELS SHALL BE INSTALLED USING AN ADHESIVE ANCHORING SYSTEM. FOR ADHESIVELY ANCHORED DOWELS, SEE SPECIAL PROVISIONS. THE YIELD LOAD OF THE #5D1 BARS IS 18.6 KIPS. FIELD TESTING OF THE ADHESIVE BONDING SYSTEM IS NOT REQUIRED.

FOR DETAILS OF CONCRETE INSERT AND GUARDRAIL ANCHOR ASSEMBLY, SEE "RAIL POST SPACINGS AND END OF RAIL DETAILS" AND "GUARDRAIL ANCHORAGE" SHEETS.

BILL OF MATERIAL FOR PARAPET & END POSTS

BAR	NO.	SIZE	TYPE	LENGTH	WEIGHT
✳B1	64	#5	STR	14'-7"	973
✳B2	32	#5	STR	15'-7"	520
✳D1	8	#5	STR	3'-0"	25
✳E1	8	#7	STR	2'-10"	46
✳E2	8	#7	STR	3'-0"	49
✳E3	8	#7	STR	3'-2"	52
✳E4	8	#7	STR	3'-4"	55
✳E5	16	#7	STR	3'-5"	112
✳F1	8	#6	2	4'-4"	52
✳F2	8	#6	STR	4'-5"	53
✳S1	180	#5	1	7'-4"	1377

✳EPOXY COATED REINFORCING STEEL LBS. =	3314
CLASS AA CONCRETE CU. YDS. =	17.3
CONCRETE PARAPET L.F. =	184'-4"

BAR TYPE

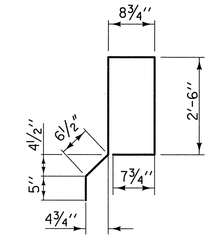

①

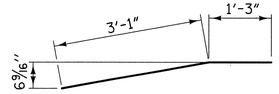

②

ALL BAR DIMENSIONS ARE OUT TO OUT

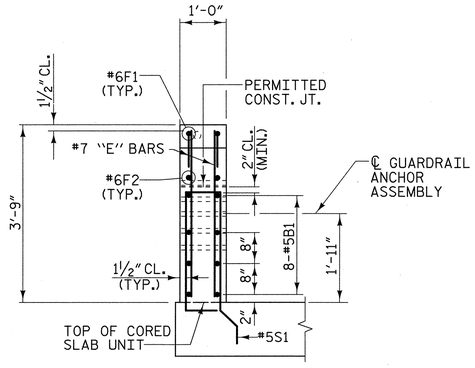

END VIEW

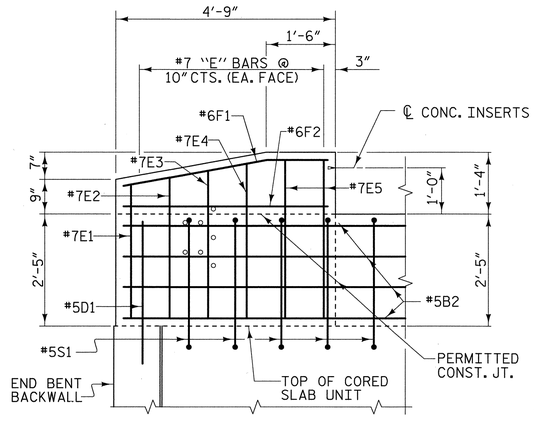

ELEVATION

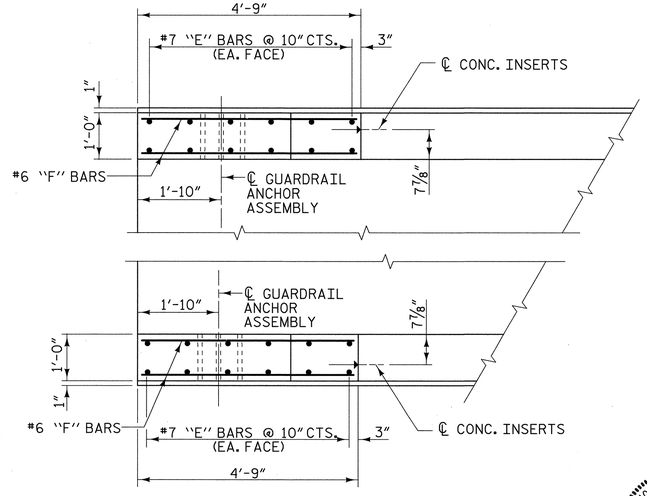

PLAN OF END POSTS

PARAPET AND END POST DETAILS

PROJECT NO. 42287

PAMLICO COUNTY

STATION: 15+29.77 -L-

REPLACES BRIDGE NO. 35

STATE OF NORTH CAROLINA
DEPARTMENT OF TRANSPORTATION
RALEIGH

PARAPET AND END POST DETAILS

33'-10" CLEAR ROADWAY - 90°SKEW

NORTH CAROLINA PROFESSIONAL ENGINEER SEAL 19661 L. KEVIN AUSTIN 6/7/09

PLANS PREPARED BY:

MULKEY
ENGINEERS & CONSULTANTS
PO Box 33127
Raleigh, N.C. 27636
(919) 851-1912
(919) 851-1918 (FAX)
WWW.MULKEYINC.COM

REVISIONS						SHEET NO.
NO.	BY:	DATE:	NO.	BY:	DATE:	54
1			3			TOTAL SHEETS
2			4			185

DRAWN BY : W. B. ALLEN DATE : 3/09
CHECKED BY : L. K. AUSTIN DATE : 3/09

6/5/2009 12:53:50 PM R:\Structures\B5829C_SD_PR_02.dgn

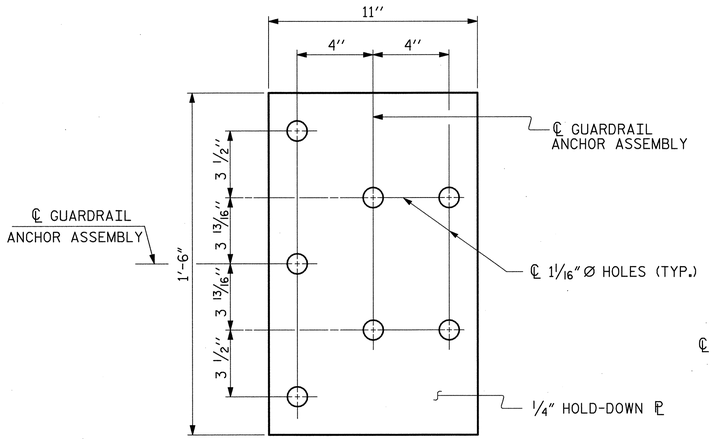

PLAN

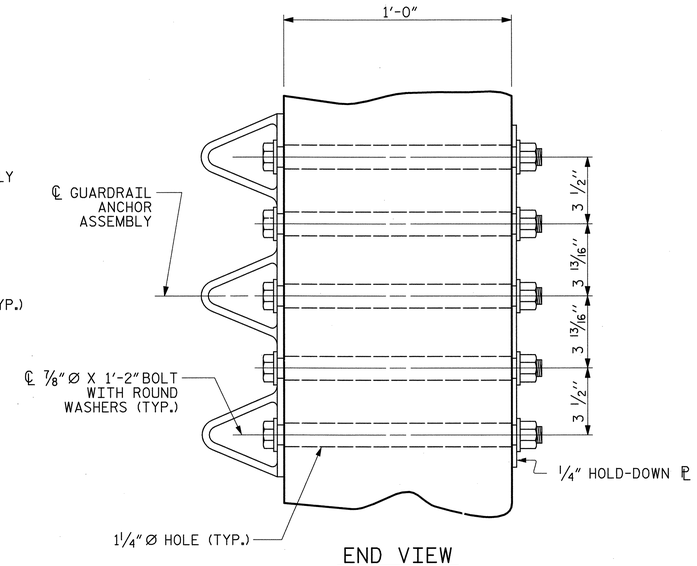

END VIEW

GUARDRAIL ANCHOR ASSEMBLY DETAILS

NOTES

THE GUARDRAIL ANCHOR ASSEMBLY SHALL CONSIST OF A 1/4'' HOLD DOWN PLATE AND 7 - 7/8'' Ø BOLTS WITH NUTS AND WASHERS.

THE HOLD-DOWN PLATE SHALL CONFORM TO AASHTO M270 GRADE 36. AFTER FABRICATION, THE HOLD-DOWN PLATE SHALL BE HOT-DIP GALVANIZED IN ACCORDANCE WITH AASHTO M111.

BOLTS SHALL CONFORM TO THE REQUIREMENTS OF ASTM A307 AND NUTS SHALL CONFORM TO THE REQUIREMENTS OF AASHTO M291. BOLTS, NUTS AND WASHERS SHALL BE GALVANIZED. AT THE CONTRACTOR'S OPTION, STAINLESS STEEL BOLTS, NUTS AND WASHERS MAY BE USED AS AN ALTERNATE FOR THE 7/8'' Ø GALVANIZED BOLTS, NUTS AND WASHERS. THEY SHALL CONFORM TO OR EXCEED THE MECHANICAL REQUIREMENTS OF ASTM A307. THE USE OF THIS ALTERNATE SHALL BE APPROVED BY THE ENGINEER.

AFTER INSTALLATION, THE EXPOSED THREAD OF THE BOLT SHALL BE BURRED WITH A SHARP POINTED TOOL.

THE COST OF THE GUARDRAIL ANCHOR ASSEMBLIES WITH BOLTS, NUTS AND WASHERS COMPLETE IN PLACE, SHALL BE INCLUDED IN THE VARIOUS PAY ITEMS.

THE VERTICAL REINFORCING BARS MAY BE SHIFTED SLIGHTLY IN THE END POST TO CLEAR ASSEMBLY BOLTS.

THE 1 1/4'' Ø HOLES SHALL BE FORMED OR DRILLED WITH A CORE BIT. IMPACT TOOLS WILL NOT BE PERMITTED. ANY CONCRETE DAMAGED BY THIS WORK SHALL BE REPAIRED TO THE SATISFACTION OF THE ENGINEER.

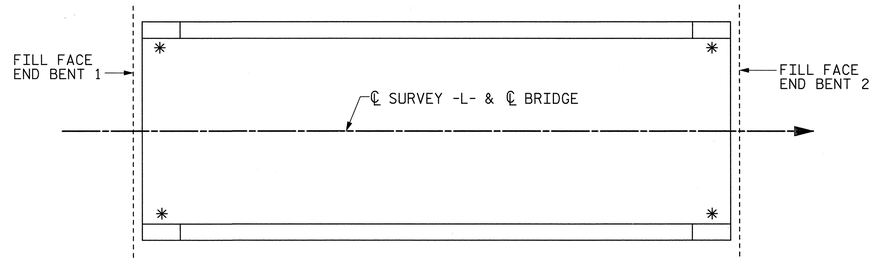

SKETCH SHOWING POINTS OF ATTACHMENT

* LOCATION OF GUARDRAIL ATTACHMENT

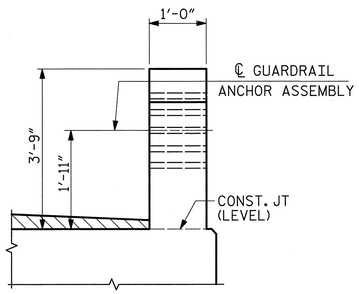

END VIEW
(ONE BAR METAL RAIL)

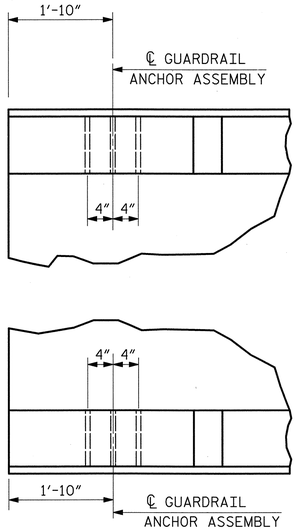

PLAN

LOCATION OF GUARDRAIL ANCHOR AT END POST

ASSEMBLED BY : W. B. ALLEN	DATE : 2/09		
CHECKED BY : L. K. AUSTIN	DATE : 3/09		
DRAWN BY : EEM 6/94	REV. 10/17/00	RWW/LES	
CHECKED BY : RGW 6/94	REV. 5/7/03	RWW/JTE	
	REV. 5/1/06	TLA/GM	

PROJECT NO. 42287

PAMLICO COUNTY

STATION: 15+29.77 -L-

REPLACES BRIDGE NO. 35

PLANS PREPARED BY:

MULKEY
ENGINEERS & CONSULTANTS
PO BOX 33127
RALEIGH, N.C. 27636
(919) 851-1918
(919) 851-1918 (FAX)
WWW.MULKEYINC.COM

THIS STANDARD DRAWING REVIEWED & ADOPTED FOR USE AT THE REFERENCED LOCATION BY THE UNDERSIGNED:

NORTH CAROLINA PROFESSIONAL 1966 ENGINEER L. KEVIN AUSTIN

6/7/09

STATE OF NORTH CAROLINA
DEPARTMENT OF TRANSPORTATION
RALEIGH

STANDARD

GUARDRAIL ANCHORAGE DETAILS FOR METAL RAILS

REVISIONS						SHEET NO.
NO.	BY:	DATE:	NO.	BY:	DATE:	55
1			3			TOTAL SHEETS
2			4			185

STD. NO. BMR8

6/5/2009 12:53:06 PM R:\Structures\B5929C_SD_GR_DL.dgn

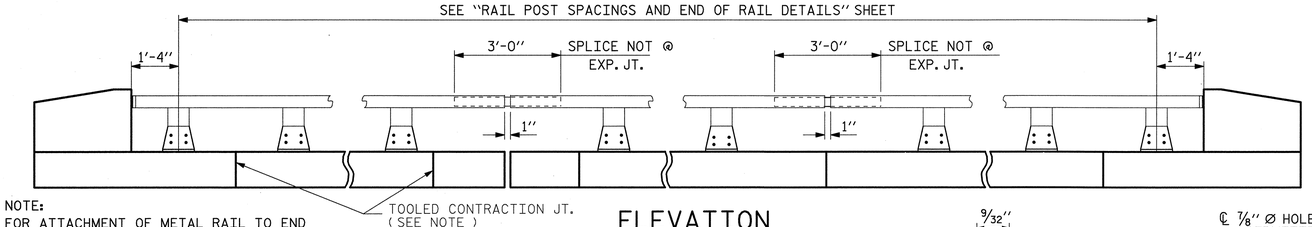

NOTE:
FOR ATTACHMENT OF METAL RAIL TO END POST, SEE STANDARD NO. BMR2.

ELEVATION

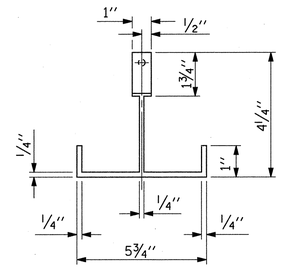

PLAN

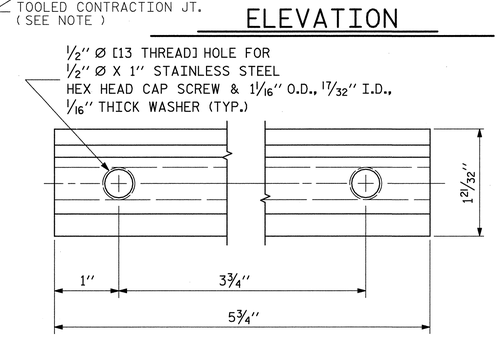

CLAMP BAR DETAIL

(2 REQUIRED PER POST)

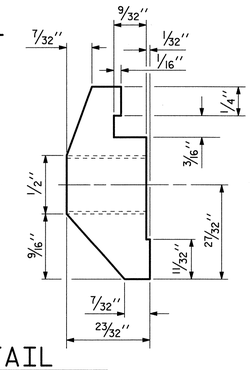

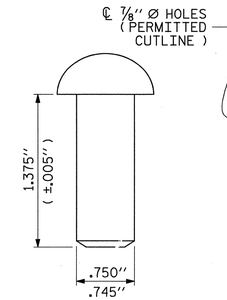

RIVET DETAIL

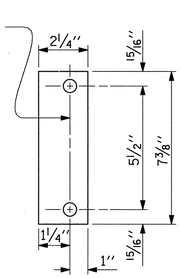

REAR PLATE

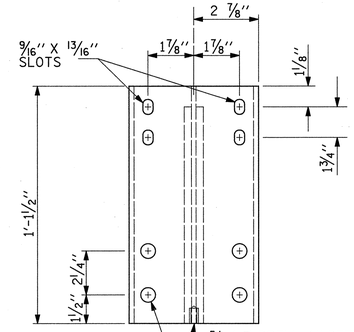

FRONT ELEVATION

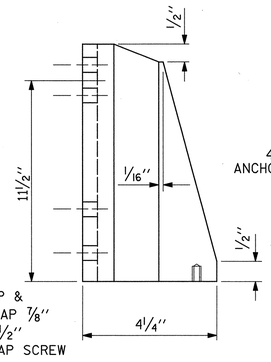

SIDE ELEVATION

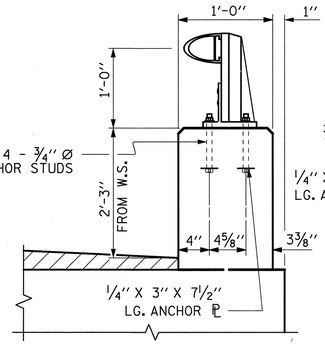

SECTION THRU PARAPET AND RAIL

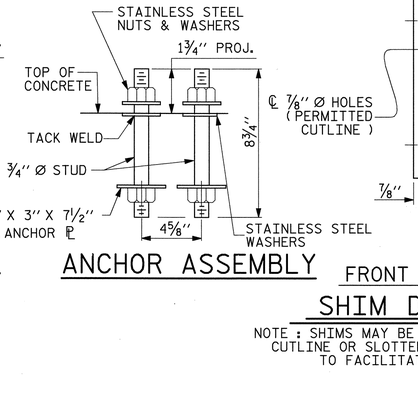

ANCHOR ASSEMBLY

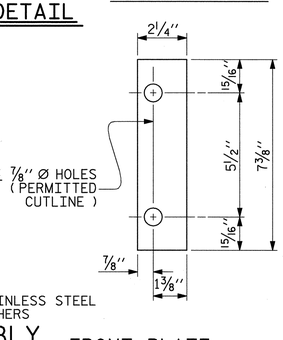

FRONT PLATE

SHIM DETAILS

NOTE : SHIMS MAY BE CUT ALONG PERMITTED CUTLINE OR SLOTTED TO EDGE OF PLATE TO FACILITATE PLACEMENT.

NOTES

AT THE CONTRACTOR'S OPTION, METAL RAIL MAY BE EITHER ALUMINUM OR GALVANIZED STEEL IN ACCORDANCE WITH THE REQUIREMENTS OF THE GENERAL NOTES AND THE FOLLOWING SPECIFICATIONS FOR THE ALTERNATE MATERIALS; HOWEVER THE CONTRACTOR WILL BE REQUIRED TO USE THE SAME RAIL MATERIAL ON ALL STRUCTURES ON THE PROJECT FOR WHICH METAL RAIL IS DESIGNATED.

ALUMINUM RAILS

MATERIAL FOR POSTS, BASES AND RAILS, EXPANSION BARS AND CLAMP BARS SHALL BE ASTM B221 ALLOY 6061-T6.

MATERIAL FOR RIVETS SHALL BE ASTM B316 ALLOY 6061-T6. RIVETS SHALL BE STANDARD BUTTON HEAD AND CONE POINT COLD DRIVEN AS PER DRAWING.

THE BASE OF RAIL POSTS, OR ANY OTHER ALUMINUM SURFACE IN CONTACT WITH CONCRETE SHALL BE THOROUGHLY COATED WITH AN ALUMINUM IMPREGNATED CAULKING COMPOUND OF APPROVED QUALITY.

MATERIAL FOR SHIMS TO BE ASTM B209 ALLOY 6061-T6.

GALVANIZED STEEL RAILS

MATERIALS AND GALVANIZING ARE TO CONFORM TO THE FOLLOWING SPECIFICATIONS:

POST, POST BASES, RAILS, EXPANSION BARS AND CLAMP BARS: AASHTO M270 GRADE 36 STRUCTURAL STEEL - GALVANIZED TO AASHTO M111.

RIVETS: RIVETS SHALL MEET THE REQUIREMENTS OF ASTM A502 FOR GRADE 1 RIVETS.

THE CUT ENDS OF GALVANIZED STEEL RAILING, AFTER GRINDING SMOOTH SHALL BE GIVEN TWO COATS OF ZINC RICH PAINT MEETING THE REQUIREMENTS OF FEDERAL SPECIFICATION MIL-P-26915 USAF TYPE 1, OR OF FEDERAL SPECIFICATIONS TT-P-641.

SHIMS: SHIMS SHALL MEET THE REQUIREMENTS OF ASTM A570 FOR GRADE 33 OR A611 FOR GRADE C AND SHALL BE GALVANIZED IN ACCORDANCE WITH AASHTO M111.

CLOSURE PLATES: CLOSURE PLATES SHALL MEET THE REQUIREMENTS OF ASTM A570 FOR GRADE 33 OR A611 FOR GRADE C AND SHALL BE GALVANIZED IN ACCORDANCE WITH AASHTO M111.

GENERAL NOTES

RAILING SHALL BE CONTINUOUS FROM END POST TO END POST OF BRIDGE. EACH JOINT IN RAIL LENGTH SHALL BE SPLICED AS DETAILED. PANEL LENGTHS OF RAIL SHALL BE ATTACHED TO A MINIMUM OF THREE POSTS.

FOR END OF RAIL TO CLEAR FACE OF CONCRETE END POST DIMENSION, SEE STANDARD NO. BMR2.

MATERIAL FOR ANCHOR STUDS SHALL BE ASTM F593 ALLOY 304 STAINLESS STEEL WITH MINIMUM 75,000 PSI ULTIMATE STRENGTH. STUDS TO BE EMBEDDED 7" IN CONCRETE. NUTS SHALL BE AMERICAN STANDARD FINISHED HEXAGON THICK, CLASS 2B THREAD, AND MEET THE REQUIREMENTS OF ASTM F594 ALLOY 304 STAINLESS STEEL. WASHERS SHALL MEET THE REQUIREMENTS OF ASTM F844 EXCEPT THEY SHALL BE MADE FROM ALLOY 304 STAINLESS STEEL. ANCHOR ℄ SHALL BE AASHTO M270 GRADE 36.

CAP SCREWS SHALL BE ASTM F593 ALLOY 305 STAINLESS STEEL.

CERTIFIED MILL REPORTS ARE REQUIRED FOR RAILS AND POSTS. SHOP INSPECTION IS NOT REQUIRED.

METAL RAIL POSTS SHALL BE SET NORMAL TO CURB GRADE.

METHOD OF MEASUREMENT FOR METAL RAILS: FOR LENGTH OF METAL RAILS TO BE PAID FOR, SEE THE STANDARD SPECIFICATIONS.

CURVED RAIL USAGE: WHERE RAILS ARE TO BE USED ON BRIDGES ON HORIZONTAL AND/OR VERTICAL CURVATURE THE CONTRACTOR MAY, AT HIS OPTION, HAVE THE REQUIRED CURVATURE IN THE RAIL FORMED IN THE SHOP OR IN THE FIELD. IN EITHER EVENT, THE RAIL SHALL CONFORM WITHOUT BUCKLING OR KINKINGTO THE REQUIRED CURVATURE IN A UNIFORM MANNER ACCEPTABLE TO THE ENGINEER.

TO INSURE FUTURE IDENTIFICATION OF THE FABRICATOR, A PERMANENT IDENTIFYING MARK SHALL BE PLACED ON EACH POST. THE METHOD OF MARKING AND LOCATION SHALL BE SUCH THAT IT DOES NOT DETRACT FROM THE APPEARANCE OF THE POST.

SHIMS SHALL BE USED AS NECESSARY FOR POST ALIGNMENT.

ALLOY 6351-T5 MAY BE SUBSTITUTED FOR ALLOY 6061-T6 WHERE APPLICABLE.

MINOR VARIATIONS IN DETAILS OF METAL RAIL WILL BE CONSIDERED. DETAILS OF SUCH VARIATIONS, IF DESIRED, SHALL BE SUBMITTED FOR APPROVAL.

THE CONTRACTOR MAY USE ADHESIVELY ANCHORED ANCHOR BOLTS IN PLACE OF THE ANCHOR ASSEMBLY. LEVEL TWO FIELD TESTING IS REQUIRED, AND THE YIELD LOAD OF THE 3/4" Ø BOLT IS 10 KIPS. FOR ADHESIVELY ANCHORED ANCHOR BOLTS OR DOWELS, SEE SPECIAL PROVISIONS.

WHEN ADHESIVELY ANCHORED ANCHOR BOLTS ARE USED, BOLTS, NUTS AND WASHERS SHALL MEET THE SAME REQUIREMENTS AS THE ANCHOR STUDS, NUTS AND WASHERS FOR USE WITH THE ANCHOR ASSEMBLY.

GROOVED CONTRACTION JOINTS, 1/2" IN DEPTH, SHALL BE TOOLED IN ALL EXPOSED FACES OF THE PARAPET IN ACCORDANCE WITH ARTICLE 825-10(B) OF THE STANDARD SPECIFICATIONS. THE CONTRACTION JOINT SHALL BE LOCATED AT A SPACING OF 8FT. TO 10FT. BETWEEN EXPANSION JOINTS. NO CONTRACTION JOINTS WILL BE REQUIRED FOR SEGMENTS LESS THAN 10 FEET IN LENGTH.

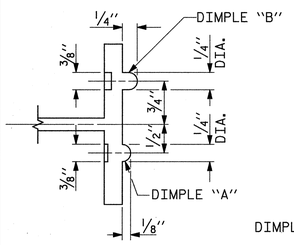

SECTION B - B

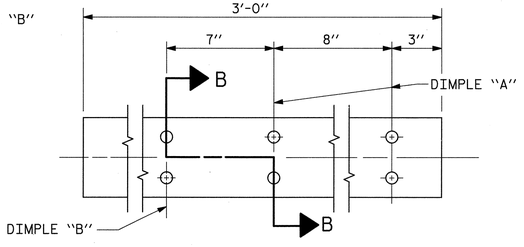

EXPANSION BAR DETAILS

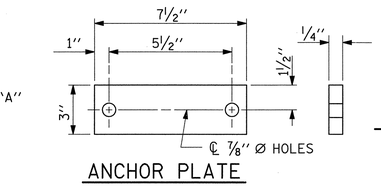

ANCHOR PLATE

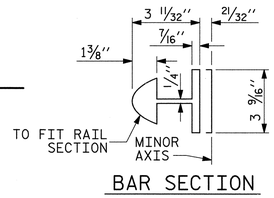

BAR SECTION

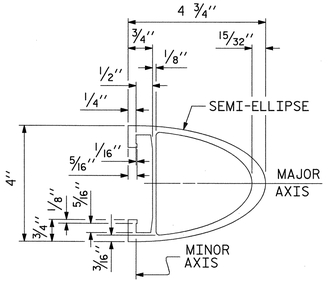

RAIL SECTION

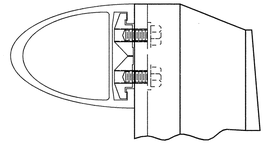

CLAMP & RAIL ASSEMBLY

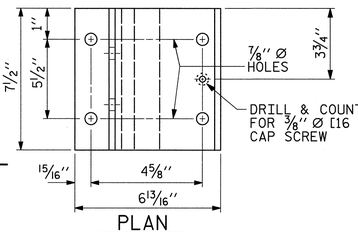

PLAN

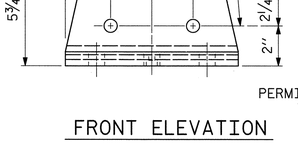

FRONT ELEVATION

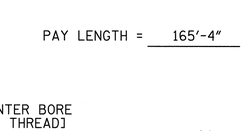

RAIL CAP

NOTE : BASE CAN BE SUPPLIED AS ONE EXTRUSION OR TWO EXTRUSIONS WELDED TOGETHER AS SHOWN.

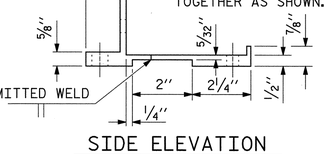

SIDE ELEVATION

POST BASE DETAILS

PAY LENGTH = 165'-4" LIN. FT.

PROJECT NO. 42287

PAMLICO COUNTY

STATION: 15+29.77 -L-

REPLACES BRIDGE NO. 35

STATE OF NORTH CAROLINA
DEPARTMENT OF TRANSPORTATION
RALEIGH

STANDARD

1 BAR METAL RAIL

REVISIONS						SHEET NO.
NO.	BY:	DATE:	NO.	BY:	DATE:	56
1			3			TOTAL SHEETS
2			4			185

STD. NO. BMR1

PLANS PREPARED BY:

MULKEY
ENGINEERS & CONSULTANTS
PO Box 33127
RALEIGH, N.C. 27636
(919) 851-1912
(919) 851-1918 (FAX)
WWW.MULKEYINC.COM

ASSEMBLED BY :	W. B. ALLEN	DATE :	2/09
CHECKED BY :	L. K. AUSTIN	DATE :	3/09
DRAWN BY : FCJ 1/88	REV. 10/17/00		LES/RDR
CHECKED BY : CRK 3/89	REV. 5/7/03R		RWW/JTE
	REV. 5/1/06R		KMM/GM

THIS STANDARD DRAWING REVIEWED & ADOPTED FOR USE AT THE REFERENCED LOCATION BY THE UNDERSIGNED:

NORTH CAROLINA PROFESSIONAL ENGINEER 19661 L. KEVIN AUSTIN 6/7/09

6/5/2009 I:\5\58 PM R:\Structures\B5929C_SD_MR.dgn

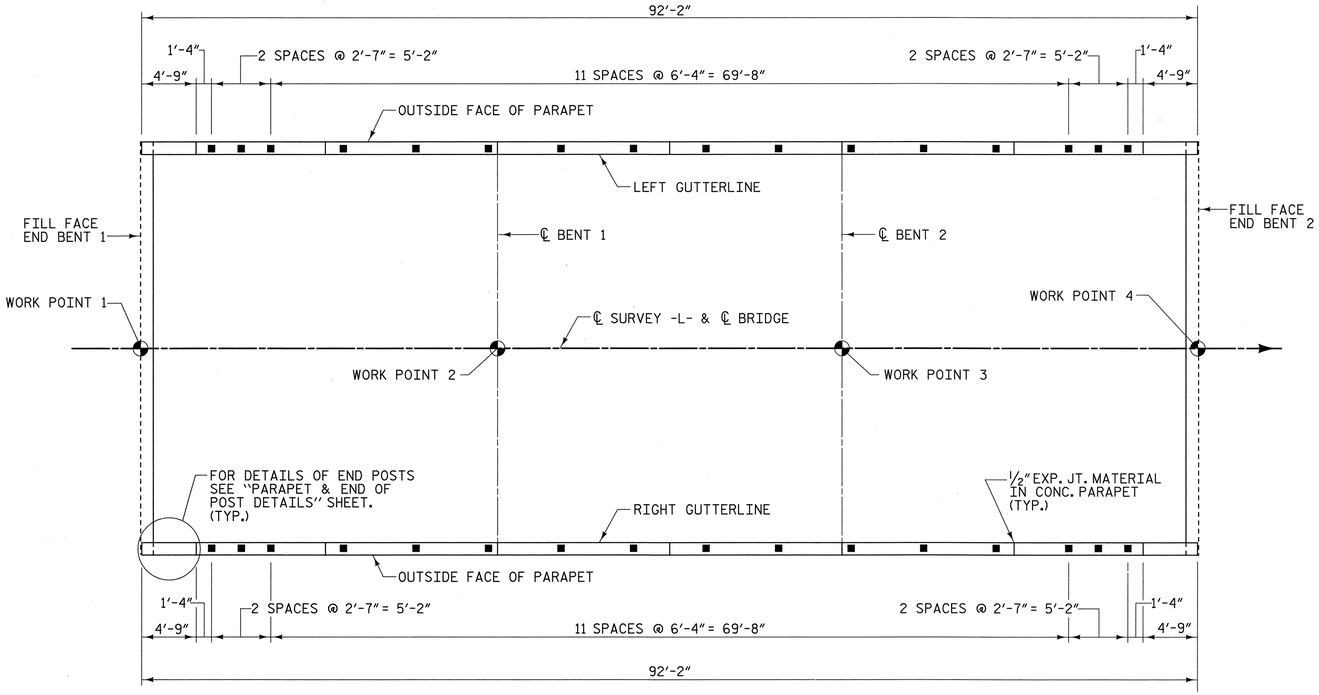

PLAN OF RAIL POST SPACINGS

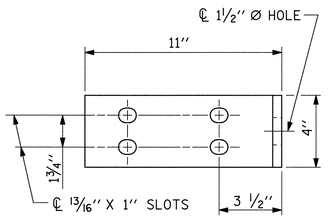

ELEVATION

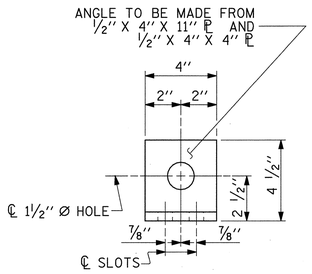

END VIEW (FIX)

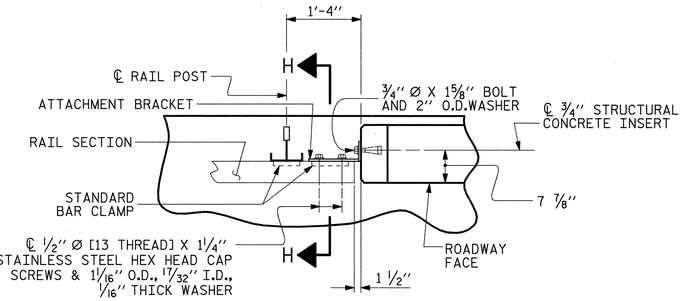

PLAN - RAIL AND END POST

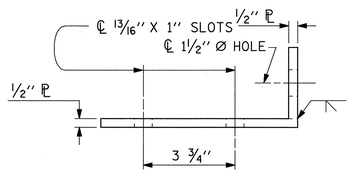

TOP VIEW

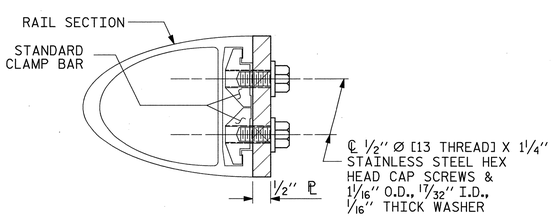

SECTION H-H (FIX)

FIXED

DETAILS FOR ATTACHING METAL RAIL TO END POST

NOTES

STRUCTURAL CONCRETE INSERT

THE STRUCTURAL CONCRETE INSERT ASSEMBLY SHALL CONSIST OF THE FOLLOWING COMPONENTS:

A. FERRULES SHALL BE MADE FROM STEEL MEETING THE REQUIREMENTS OF AASHTO M169, GRADE 12L14 AND SHALL HAVE A MINIMUM LENGTH OF THREADS OF 1½″.

B. 1 - ¾″ Ø X 1⅝″ BOLT WITH WASHER. BOLT SHALL CONFORM TO THE REQUIREMENTS OF ASTM A307. BOLT AND WASHER SHALL BE GALVANIZED. (AT THE CONTRACTOR'S OPTION, STAINLESS STEEL BOLT AND WASHER MAY BE USED AS AN ALTERNATE FOR THE ¾″ Ø X 1⅝″ GALVANIZED BOLT AND WASHER. THEY SHALL CONFORM TO OR EXCEED THE MECHANICAL REQUIREMENTS OF ASTM A307. THE USE OF THIS ALTERNATE SHALL BE APPROVED BY THE ENGINEER.)

C. WIRE STRUT SHOWN IN THE CONCRETE INSERT ASSEMBLY DETAIL IS THE MINIMUM ALLOWABLE SIZE AND SHALL HAVE A MINIMUM TENSILE STRENGTH OF 100,000 PSI. AS AN OPTION, A 7⁄16″ Ø WIRE STRUT WITH A MINIMUM TENSILE STRENGTH OF 90,000 PSI IS ACCEPTABLE.

NOTES

METAL RAIL TO END POST CONNECTION

THE METAL RAIL TO END POST CONNECTION SHALL CONSIST OF THE FOLLOWING COMPONENTS:

A. ½″ PLATES SHALL CONFORM TO AASHTO M270 GRADE 36 AND SHALL BE GALVANIZED AFTER FABRICATION.

B. ¾″ STRUCTURAL CONCRETE INSERT SHALL HAVE A WORKING LOAD SHEAR CAPACITY OF 4800 LBS. THE FERRULES SHALL ENGAGE A ¾″Ø X 1⅝″ BOLT WITH 2″ O.D. WASHER IN PLACE. THE ¾″Ø X 1⅝″ BOLT SHALL HAVE N. C. THREADS.

C. CAP SCREWS FOR RAIL ATTACHMENT TO ANGLE SHALL CONFORM TO THE REQUIREMENTS OF ASTM F593 ALLOY 305 STAINLESS STEEL. CAP SCREWS TO BE CENTERED IN SLOTS AT 60°F.

D. STANDARD CLAMP BARS (SEE METAL RAIL SHEET).

E. ½″ Ø PIPE SLEEVES (IF REQUIRED) TO BE GALVANIZED.

THE COST OF THE STANDARD CLAMP BARS AND CAP SCREWS USED IN THE METAL RAIL TO END POST CONNECTION SHALL BE INCLUDED IN THE UNIT CONTRACT PRICE BID FOR LINEAR FEET OF 1 OR 2 BAR METAL RAILS.

THE ¾″ STRUCTURAL CONCRETE INSERT WITH BOLT SHALL BE ASSEMBLED IN THE SHOP.

THE COST OF THE ¾″ STRUCTURAL CONCRETE INSERT ASSEMBLY, AND THE ½″ PLATES COMPLETE IN PLACE SHALL BE INCLUDED IN THE VARIOUS PAY ITEMS.

THE CONTRACTOR, AT HIS OPTION, MAY USE AN ADHESIVE BONDING SYSTEM IN LIEU OF THE STRUCTURAL CONCRETE INSERT EMBEDDED IN THE END POST. IF THE ADHESIVE BONDING SYSTEM IS USED, THE ¾″ Ø X 1⅝″ BOLT WITH WASHER SHALL BE REPLACED WITH A ¾″Ø X 6½″ BOLT AND 2″ O.D. WASHER. ALL SPECIFICATIONS THAT APPLY TO THE ¾″ Ø X 1⅝″ BOLT SHALL APPLY TO THE ¾″Ø X 6 ½″ BOLT. FIELD TESTING OF THE ADHESIVE BONDING SYSTEM IS NOT REQUIRED.

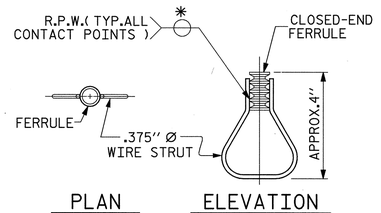

PLAN ELEVATION

STRUCTURAL CONCRETE INSERT

*EACH WELDED ATTACHMENT OF WIRE TO FERRULE SHALL DEVELOP THE TENSILE STRENGTH OF THE WIRE.

PROJECT NO. 42287

PAMLICO COUNTY

STATION: 15+29.77 -L-

REPLACES BRIDGE NO. 35

THIS STANDARD DRAWING REVIEWED & ADOPTED FOR USE AT THE REFERENCED LOCATION BY THE UNDERSIGNED:

NORTH CAROLINA PROFESSIONAL ENGINEER SEAL 19661 L. KEVIN AUSTIN

6/7/09

STATE OF NORTH CAROLINA
DEPARTMENT OF TRANSPORTATION
RALEIGH

STANDARD

RAIL POST SPACINGS AND END OF RAIL DETAILS

REVISIONS						SHEET NO.
NO.	BY:	DATE:	NO.	BY:	DATE:	57
1			3			TOTAL SHEETS
2			4			185

ASSEMBLED BY :	W. B. ALLEN	DATE :	2/09
CHECKED BY :	L. K. AUSTIN	DATE :	2/09
DRAWN BY : FCJ 1/88	REV. 10/17/00		LES/RDR
CHECKED BY : CRK 3/89	REV. 5/7/03		RWW/JTE
	REV. 5/1/06		TLA/GM

6/5/2009 I5222 PM R:\Structures\B5296_SD_MR_02.dgn

STD. NO. BMR2

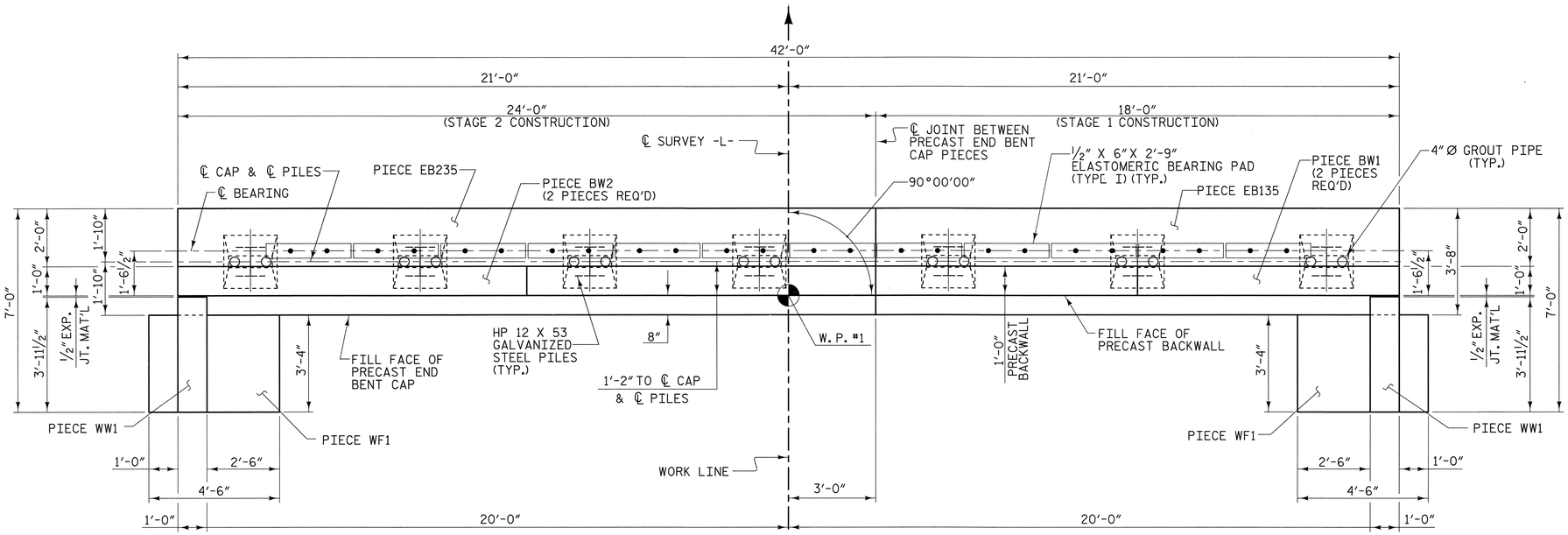

PLAN

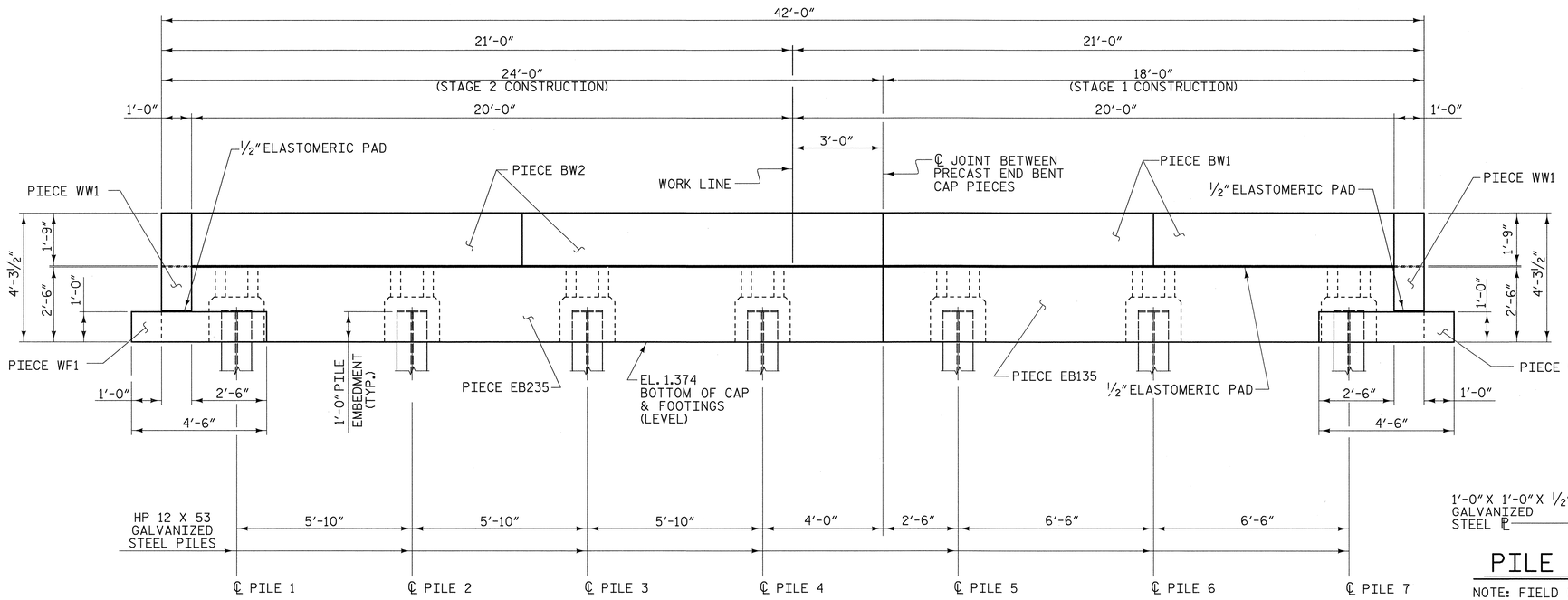

ELEVATION

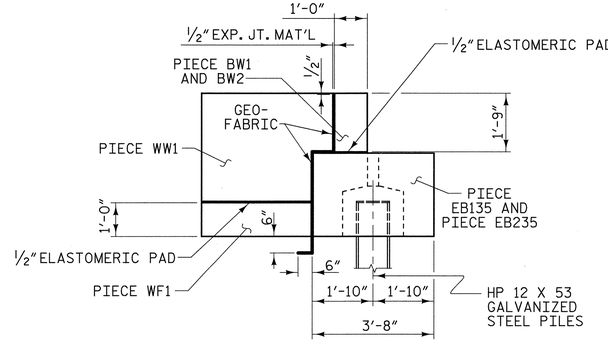

END VIEW

(WITH GEO-FABRIC DETAILS)

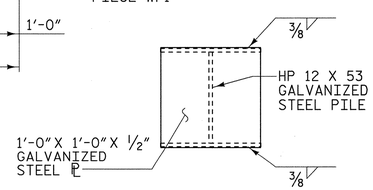

PILE PLATE DETAIL

NOTE: FIELD WELD PLATE TO TOP OF PILE AFTER PILE HAS BEEN DRIVEN AND CUT OFF TO THE PROPER ELEVATION.

NOTES

THE CONTRACTOR'S ATTENTION IS CALLED TO THE FACT THAT W.P. #1 IS LOCATED ON THE "FILL FACE OF PRECAST BACKWALL". THE "FILL FACE OF PRECAST END BENT CAP" IS LOCATED 8" BACK-STATION FROM W.P. #1.

THE FILL FACE OF THE CAP, BACKWALL, AND WINGWALL PIECES SHALL BE LINED WITH GEO-FABRIC.

SEE PIECE EB135 SHEET FOR DETAILS, NOTES, AND BILL OF MATERIAL.

SEE PIECE EB235 SHEET FOR DETAILS, NOTES, AND BILL OF MATERIAL.

SEE PIECE BW1 AND PIECE BW2 SHEET FOR DETAILS, NOTES, AND BILL OF MATERIAL.

SEE PIECE WW1 AND PIECE WF1 SHEET FOR DETAILS, NOTES, AND BILL OF MATERIAL.

THE MINIMUM REQUIRED SOIL BEARING CAPACITY FOR SOIL BENEATH CAP PIECES AND WING FOOTING PIECES SHALL BE 2000 POUNDS PER SQUARE FOOT.

THE ERECTION SUPPORT SYSTEM FOR THE PRECAST CAP SHALL NOT BE REMOVED, CORED SLAB UNITS SHALL NOT BE PLACED ON THE PRECAST CAP, BACKFILLING AGAINST THE PRECAST CAP SHALL NOT BE ALLOWED, AND VEHICLES OR CONSTRUCTION EQUIPMENT SHALL NOT BE ALLOWED ON THE PRECAST CAP UNTIL THE GROUT USED TO FILL THE PILE BLOCKOUTS HAS OBTAINED A COMPRESSIVE STRENGTH OF AT LEAST 4000 PSI. SEE PROJECT SPECIAL PROVISION, "GROUT FOR PILE BLOCKOUTS".

THE CONTRACTOR SHALL SUBMIT TO THE ENGINEER FOR APPROVAL A METHOD TO SUPPORT THE PRECAST CAP IN THE PROPER LOCATION AND ELEVATION AS SHOWN ON THE PLANS PRIOR TO PLACEMENT OF AND CURING OF THE GROUT IN THE PILE BLOCKOUTS. THE METHOD CHOSEN SHALL PROVIDE A WATERTIGHT SEAL AT THE BOTTOM OF THE CAP SO NO GROUT COMES IN CONTACT WITH THE STREAM UNTIL THE GROUT HAS HARDENED.

THE GROUT USED TO FILL THE 4" DIAMETER HOLES IN THE PRECAST BACKWALL PIECES AND IN THE PRECAST WING WALL PIECES SHALL BE NON-SHRINK, NON-METALLIC GROUT THAT IS ON THE DEPARTMENT'S APPROVAL LIST AND SHALL MEET THE APPROVAL OF THE ENGINEER. BACKFILLING AGAINST THE PRECAST BACKWALL AND THE PRECAST WING WALLS SHALL NOT BE ALLOWED, AND CONSTRUCTION EQUIPMENT SHALL NOT BE ALLOWED ON THE PRECAST BACKWALL AND THE PRECAST WING WALLS UNTIL THE GROUT HAS OBTAINED A COMPRESSIVE STRENGTH OF AT LEAST 4000 PSI.

PROJECT NO. 42287

PAMLICO COUNTY

STATION: 15+29.77 -L-

REPLACES BRIDGE NO. 35

STATE OF NORTH CAROLINA
DEPARTMENT OF TRANSPORTATION
RALEIGH

END BENT #1

33'-10" CLEAR ROADWAY - 90° SKEW

NORTH CAROLINA PROFESSIONAL ENGINEER SEAL 19661 KEVIN AUSTIN 8/6/09

PLANS PREPARED BY:
MULKEY ENGINEERS & CONSULTANTS
PO BOX 33127
RALEIGH, N.C. 27636
(919) 851-1912
(919) 851-1918 (FAX)
WWW.MULKEYINC.COM

REVISIONS						SHEET NO.
NO.	BY:	DATE:	NO.	BY:	DATE:	58
1			3			TOTAL SHEETS
2			4			185

DRAWN BY : W. B. ALLEN DATE : 2/09
CHECKED BY : L. K. AUSTIN DATE : 3/09

8/6/2009 9:33:37 AM G:\project\2004\224.09_Pamlico35\Structures\B5296_SD_EB1.dgn

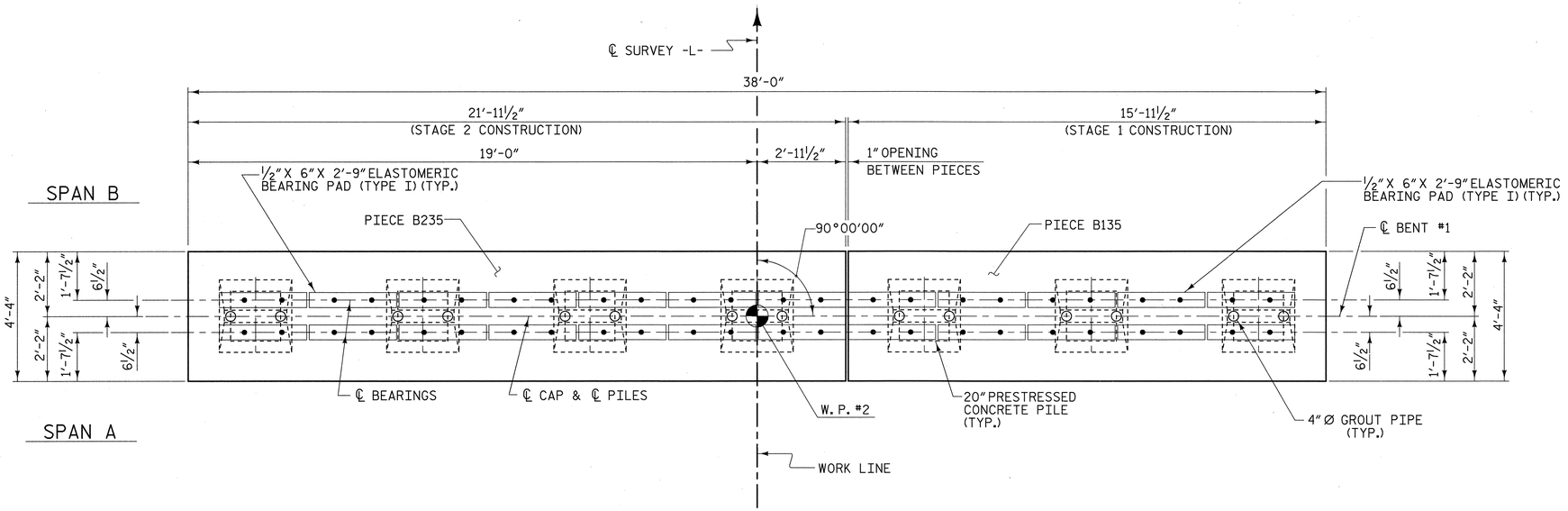

PLAN

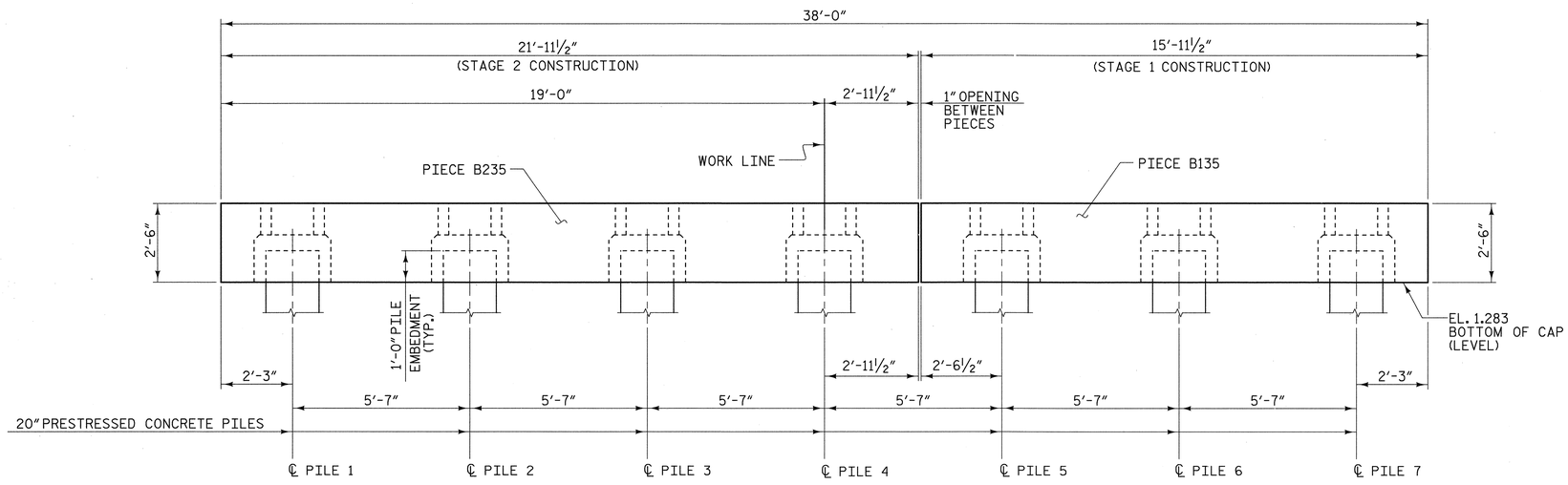

ELEVATION

NOTES

SEE PIECE B135 SHEET FOR DETAILS, NOTES, AND BILL OF MATERIAL.

SEE PIECE B235 SHEET FOR DETAILS, NOTES, AND BILL OF MATERIAL.

THE ERECTION SUPPORT SYSTEM FOR THE PRECAST CAP SHALL NOT BE REMOVED, CORED SLAB UNITS SHALL NOT BE PLACED ON THE PRECAST CAP, AND VEHICLES OR CONSTRUCTION EQUIPMENT SHALL NOT BE ALLOWED ON THE PRECAST CAP UNTIL THE GROUT USED TO FILL THE PILE BLOCKOUTS HAS OBTAINED A COMPRESSIVE STRENGTH OF AT LEAST 4000 PSI. SEE PROJECT SPECIAL PROVISION, "GROUT FOR PILE BLOCKOUTS".

THE CONTRACTOR SHALL SUBMIT TO THE ENGINEER FOR APPROVAL A METHOD TO SUPPORT THE PRECAST CAP IN THE PROPER LOCATION AND ELEVATION AS SHOWN ON THE PLANS PRIOR TO PLACEMENT OF AND CURING OF THE GROUT IN THE PILE BLOCKOUTS. THE METHOD CHOSEN SHALL PROVIDE A WATERTIGHT SEAL AT THE BOTTOM OF THE CAP SO NO GROUT COMES IN CONTACT WITH THE STREAM UNTIL THE GROUT HAS HARDENED.

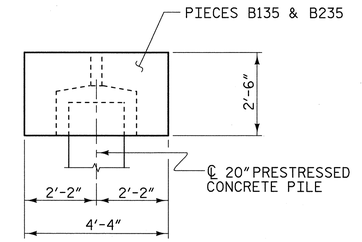

END VIEW

PROJECT NO. 42287

PAMLICO COUNTY

STATION: 15+29.77 -L-

REPLACES BRIDGE NO. 35

STATE OF NORTH CAROLINA
DEPARTMENT OF TRANSPORTATION
RALEIGH

BENT #1

33'-10" CLEAR ROADWAY - 90°SKEW

NORTH CAROLINA PROFESSIONAL SEAL 19661 ENGINEER L. KEVIN AUSTIN 6/7/09

PLANS PREPARED BY:

MULKEY
ENGINEERS & CONSULTANTS
PO BOX 33127
RALEIGH, N.C. 27636
(919) 851-1912
(919) 851-1918 (FAX)
WWW.MULKEYINC.COM

REVISIONS						SHEET NO.
NO.	BY:	DATE:	NO.	BY:	DATE:	59
1			3			TOTAL SHEETS
2			4			185

DRAWN BY : W. B. ALLEN DATE : 2/09
CHECKED BY : L. K. AUSTIN DATE : 3/09

6/5/2009 14955 PM R:\Structures\B5235C_SD_BL0.dgn

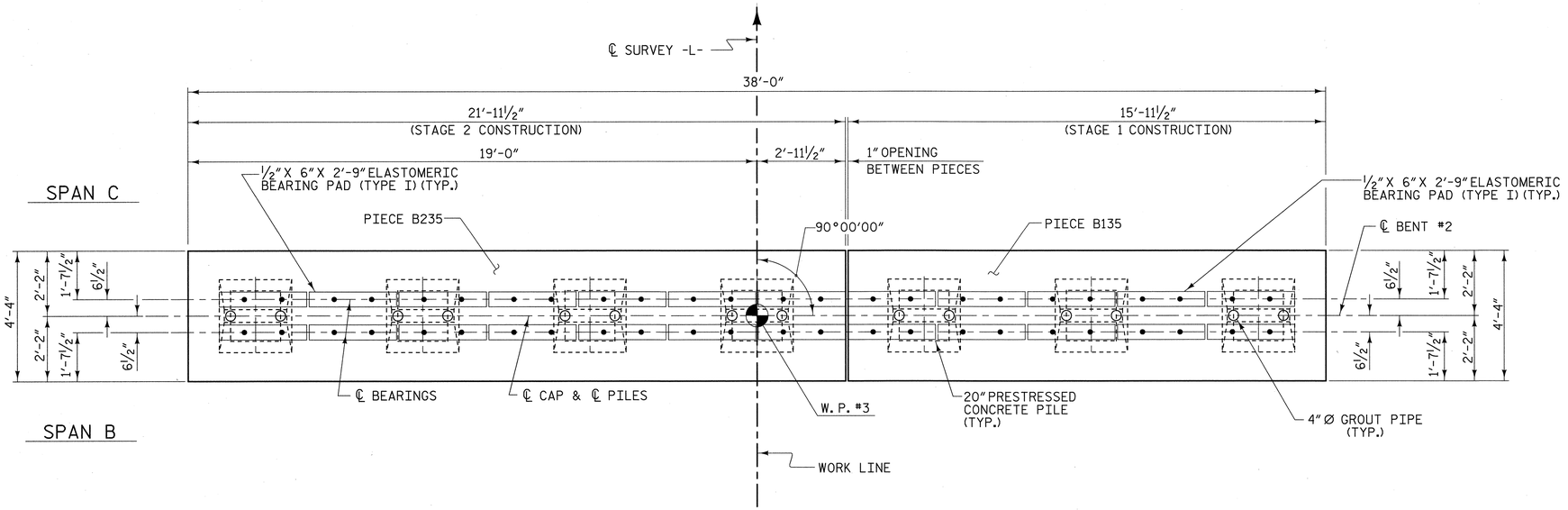

PLAN

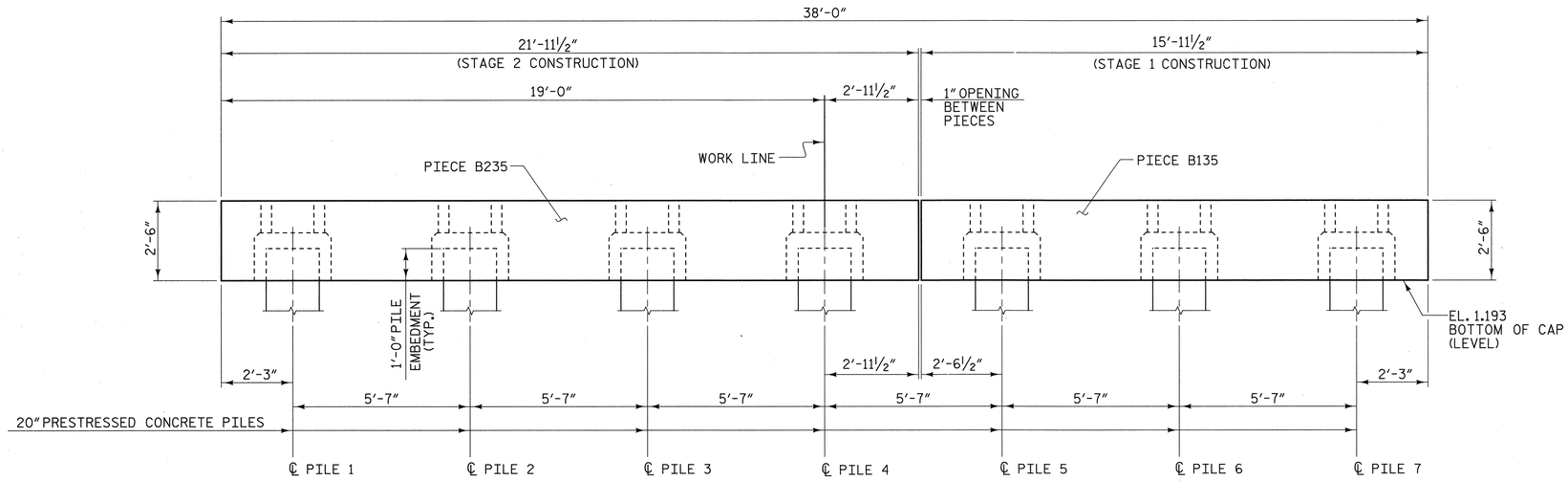

ELEVATION

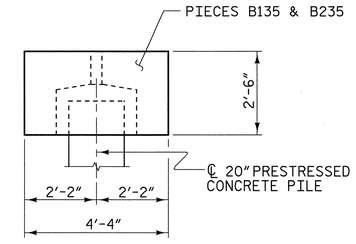

END VIEW

NOTES

SEE PIECE B135 SHEET FOR DETAILS, NOTES, AND BILL OF MATERIAL.

SEE PIECE B235 SHEET FOR DETAILS, NOTES, AND BILL OF MATERIAL.

THE ERECTION SUPPORT SYSTEM FOR THE PRECAST CAP SHALL NOT BE REMOVED, CORED SLAB UNITS SHALL NOT BE PLACED ON THE PRECAST CAP, AND VEHICLES OR CONSTRUCTION EQUIPMENT SHALL NOT BE ALLOWED ON THE PRECAST CAP UNTIL THE GROUT USED TO FILL THE PILE BLOCKOUTS HAS OBTAINED A COMPRESSIVE STRENGTH OF AT LEAST 4000 PSI. SEE PROJECT SPECIAL PROVISION, "GROUT FOR PILE BLOCKOUTS".

THE CONTRACTOR SHALL SUBMIT TO THE ENGINEER FOR APPROVAL A METHOD TO SUPPORT THE PRECAST CAP IN THE PROPER LOCATION AND ELEVATION AS SHOWN ON THE PLANS PRIOR TO PLACEMENT OF AND CURING OF THE GROUT IN THE PILE BLOCKOUTS. THE METHOD CHOSEN SHALL PROVIDE A WATERTIGHT SEAL AT THE BOTTOM OF THE CAP SO NO GROUT COMES IN CONTACT WITH THE STREAM UNTIL THE GROUT HAS HARDENED.

PROJECT NO. 42287

PAMLICO COUNTY

STATION: 15+29.77 -L-

REPLACES BRIDGE NO. 35

STATE OF NORTH CAROLINA
DEPARTMENT OF TRANSPORTATION
RALEIGH

BENT #2

33'-10" CLEAR ROADWAY - 90° SKEW

NORTH CAROLINA PROFESSIONAL SEAL 19661 ENGINEER KEVIN AUSTIN
6/7/09

PLANS PREPARED BY:

MULKEY
ENGINEERS & CONSULTANTS
PO Box 33127
RALEIGH, N.C. 27636
(919) 851-1213 (FAX)
WWW.MULKEYINC.COM

REVISIONS						SHEET NO.
NO.	BY:	DATE:	NO.	BY:	DATE:	60
1			3			TOTAL SHEETS
2			4			185

DRAWN BY : W. B. ALLEN DATE : 2/09
CHECKED BY : L. K. AUSTIN DATE : 3/09

6/5/2009 1:49:21 PM R:\Structures\B5629C_SD_B2_0.dgn

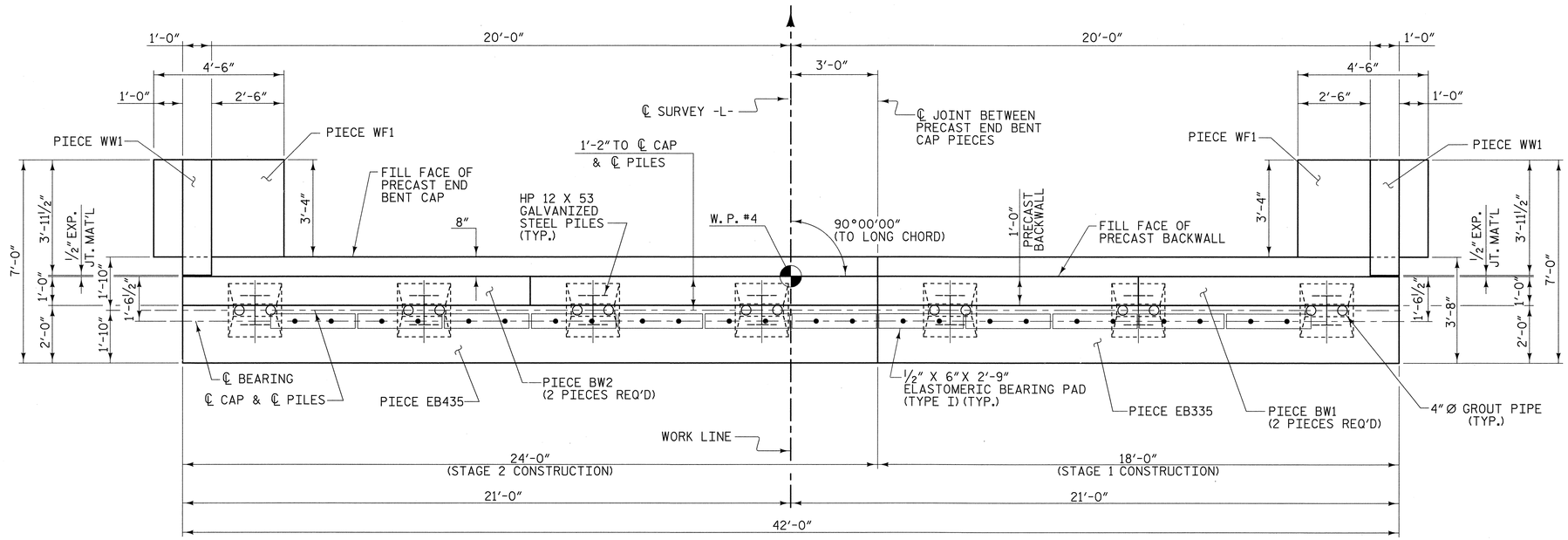

PLAN

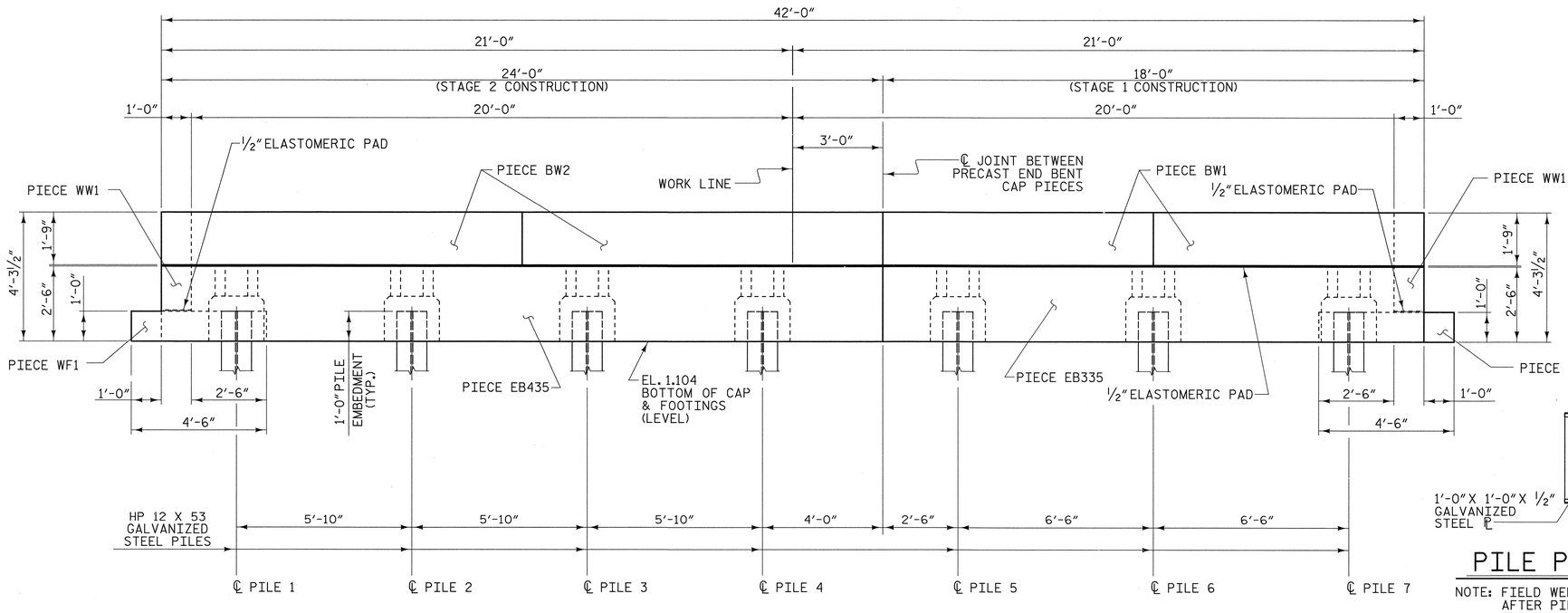

ELEVATION

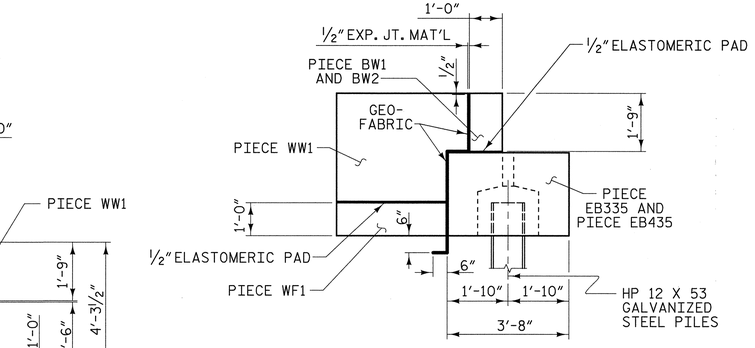

END VIEW

(WITH GEO-FABRIC DETAILS)

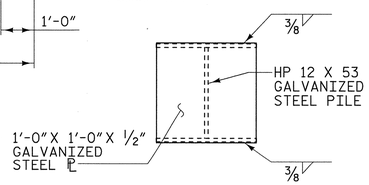

PILE PLATE DETAIL

NOTE: FIELD WELD PLATE TO TOP OF PILE AFTER PILE HAS BEEN DRIVEN AND CUT OFF TO THE PROPER ELEVATION.

NOTES

THE CONTRACTOR'S ATTENTION IS CALLED TO THE FACT THAT W.P. #4 IS LOCATED ON THE "FILL FACE OF PRECAST BACKWALL". THE "FILL FACE OF PRECAST END BENT CAP" IS LOCATED 8" AHEAD-STATION FROM W.P. #4.

THE FILL FACE OF THE CAP, BACKWALL, AND WINGWALL PIECES SHALL BE LINED WITH GEO-FABRIC.

SEE PIECE EB335 SHEET FOR DETAILS, NOTES, AND BILL OF MATERIAL.

SEE PIECE EB435 SHEET FOR DETAILS, NOTES, AND BILL OF MATERIAL.

SEE PIECE BW1 AND PIECE BW2 SHEET FOR DETAILS, NOTES, AND BILL OF MATERIAL.

SEE PIECE WW1 AND PIECE WF1 SHEET FOR DETAILS, NOTES, AND BILL OF MATERIAL.

THE MINIMUM REQUIRED SOIL BEARING CAPACITY FOR SOIL BENEATH CAP PIECES AND WING FOOTING PIECES SHALL BE 2000 POUNDS PER SQUARE FOOT.

THE ERECTION SUPPORT SYSTEM FOR THE PRECAST CAP SHALL NOT BE REMOVED, CORED SLAB UNITS SHALL NOT BE PLACED ON THE PRECAST CAP, BACKFILLING AGAINST THE PRECAST CAP SHALL NOT BE ALLOWED, AND VEHICLES OR CONSTRUCTION EQUIPMENT SHALL NOT BE ALLOWED ON THE PRECAST CAP UNTIL THE GROUT USED TO FILL THE PILE BLOCKOUTS HAS OBTAINED A COMPRESSIVE STRENGTH OF AT LEAST 4000 PSI. SEE PROJECT SPECIAL PROVISION, "GROUT FOR PILE BLOCKOUTS".

THE CONTRACTOR SHALL SUBMIT TO THE ENGINEER FOR APPROVAL A METHOD TO SUPPORT THE PRECAST CAP IN THE PROPER LOCATION AND ELEVATION AS SHOWN ON THE PLANS PRIOR TO PLACEMENT OF AND CURING OF THE GROUT IN THE PILE BLOCKOUTS. THE METHOD CHOSEN SHALL PROVIDE A WATERTIGHT SEAL AT THE BOTTOM OF THE CAP SO NO GROUT COMES IN CONTACT WITH THE STREAM UNTIL THE GROUT HAS HARDENED.

THE GROUT USED TO FILL THE 4" DIAMETER HOLES IN THE PRECAST BACKWALL PIECES AND IN THE PRECAST WING WALL PIECES SHALL BE NON-SHRINK, NON-METALLIC GROUT THAT IS ON THE DEPARTMENT'S APPROVAL LIST AND SHALL MEET THE APPROVAL OF THE ENGINEER. BACKFILLING AGAINST THE PRECAST BACKWALL AND THE PRECAST WING WALLS SHALL NOT BE ALLOWED, AND CONSTRUCTION EQUIPMENT SHALL NOT BE ALLOWED ON THE PRECAST BACKWALL AND THE PRECAST WING WALLS UNTIL THE GROUT HAS OBTAINED A COMPRESSIVE STRENGTH OF AT LEAST 4000 PSI.

PROJECT NO. 42287

PAMLICO COUNTY

STATION: 15+29.77 -L-

REPLACES BRIDGE NO. 35

STATE OF NORTH CAROLINA
DEPARTMENT OF TRANSPORTATION
RALEIGH

END BENT #2

33'-10" CLEAR ROADWAY - 90° SKEW

NORTH CAROLINA PROFESSIONAL SEAL 19661 ENGINEER L. KEVIN AUSTIN 8/6/09

PLANS PREPARED BY:
MULKEY ENGINEERS & CONSULTANTS
PO Box 33127
Raleigh, N.C. 27636
(919) 851-1918
(919) 851-1918 (FAX)
WWW.MULKEYINC.COM

REVISIONS						SHEET NO.
NO.	BY:	DATE:	NO.	BY:	DATE:	61
1			3			TOTAL SHEETS
2			4			185

DRAWN BY : W. B. ALLEN DATE : 2/09
CHECKED BY : L. K. AUSTIN DATE : 3/09

8/6/2009 10:03:56 AM G:\projects\2004\224.09_Pamlico35\Structures\B5296_SD_EB2_01.dgn

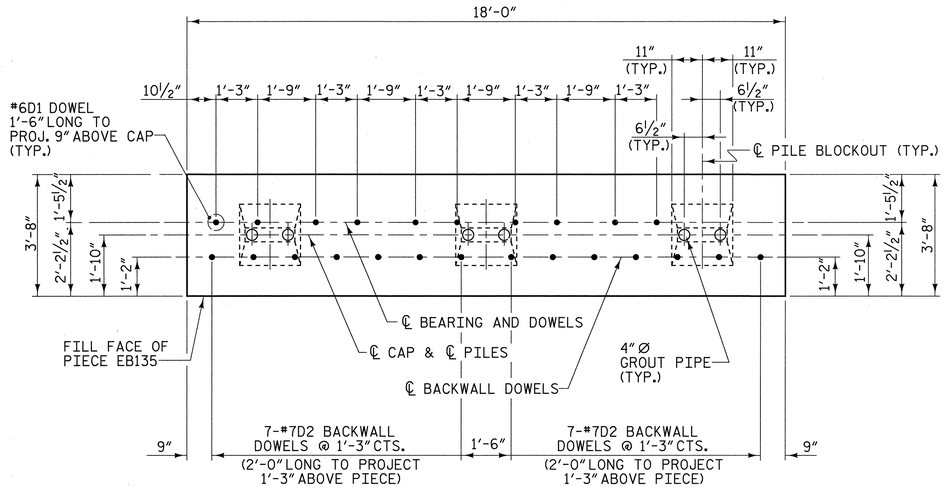

PLAN - PRECAST PIECE EB135

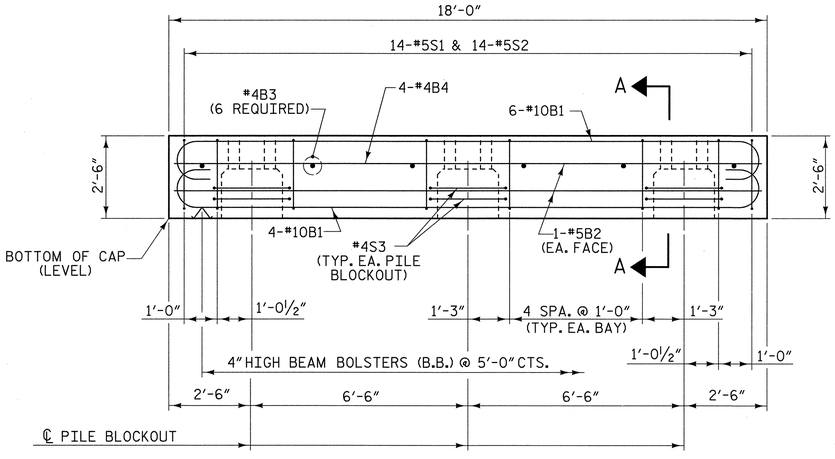

ELEVATION - PRECAST PIECE EB135

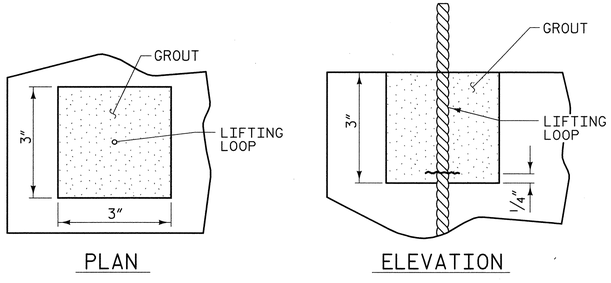

GROUTED RECESS FOR LIFTING LOOPS

LIFTING LOOPS TO BE CUT ¼" ABOVE BOTTOM OF RECESS.

NOTES

STIRRUPS IN PRECAST PIECE EB135 MAY BE SHIFTED AS NECESSARY TO CLEAR DOWELS AND GROUT PIPES.

ALL REINFORCING STEEL AND BAR SUPPORTS SHALL BE EPOXY COATED ACCORDING TO THE STANDARD SPECIFICATIONS.

CLASS AA (4500 PSI) CONCRETE SHALL BE USED IN PRECAST PIECE EB135.

DOWELS SHALL BE PRESET IN THE PRECAST CAP IN THE LOCATIONS SHOWN ON THE PLANS. DRILLING AND ADHESIVE ANCHORING OF THE DOWELS AFTER CASTING MUST BE APPROVED BY THE ENGINEER.

TWO LIFTING LOOPS SHALL BE ALLOWED IN THE PRECAST PIECE IN ACCORDANCE WITH ARTICLE 1077-10 OF THE STANDARD SPECIFICATIONS WITH THE FOLLOWING ADDITIONS. THE LIFTING LOOPS SHALL BE BURNED OFF PRIOR TO PLACING THE ELASTOMERIC BEARING PADS. THE ENDS OF THE LIFTING LOOPS TO BE BURNED OFF SHALL BE RECESSED AND GROUTED. SEE DETAIL FOR GROUTED RECESS FOR LIFTING LOOPS. GROUT SHALL BE NON-METALLIC AND NON-SHRINK ACCORDING TO THE STANDARD SPECIFICATIONS. PROPOSED DEVICES FOR LIFTING LOOPS SHALL BE DETAILED IN SHOP DRAWINGS.

TWO 4 INCH Ø GROUT PIPES SHALL BE PROVIDED AT EACH PILE BLOCKOUT. THE 4 INCH Ø GROUT PIPES SHALL BE CUT FROM SCHEDULE 40 PVC PIPE AND SHALL BE FIRMLY ANCHORED OR REMOVED PRIOR TO PLACEMENT OF THE GROUT.

THE TOP OF THE PILE BLOCKOUT SHALL BE CHAMFERED 2" IN THE TRANSVERSE DIRECTION.

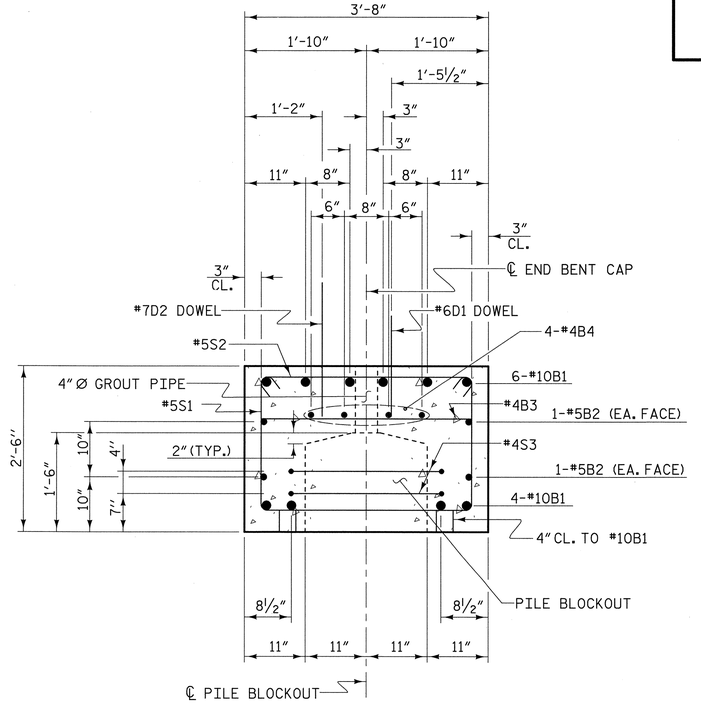

SECTION A-A

BAR TYPES

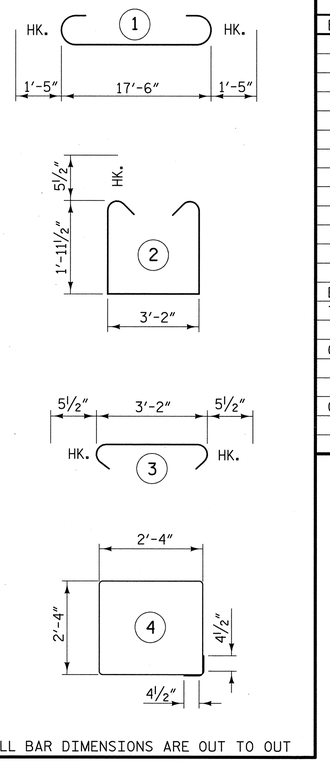

ALL BAR DIMENSIONS ARE OUT TO OUT

BILL OF MATERIAL FOR ONE PIECE EB135

BAR	NO.	SIZE	TYPE	LENGTH	WEIGHT
B1	10	#10	1	20'-4"	875
B2	4	#5	STR	17'-7"	73
B3	6	#4	STR	3'-3"	13
B4	4	#4	STR	17'-7"	47
D1	10	#6	STR	1'-6"	23
D2	14	#7	STR	2'-0"	57
S1	14	#5	2	8'-0"	117
S2	14	#5	3	4'-1"	60
S3	6	#4	4	10'-1"	40

EPOXY COATED REINFORCING STEEL
TOTAL 1305 LBS.

CLASS AA (4500 PSI) CONCRETE
5.5 CU. YDS.

GROUT FOR PILE BLOCKOUTS
0.6 CU. YDS.

PROJECT NO. 42287
PAMLICO COUNTY
STATION: 15+29.77 -L-

REPLACES BRIDGE NO. 35

STATE OF NORTH CAROLINA
DEPARTMENT OF TRANSPORTATION
RALEIGH

PRECAST PIECE EB135

33'-10" CLEAR ROADWAY - 90° SKEW

NORTH CAROLINA PROFESSIONAL SEAL 19661 ENGINEER L. KEVIN AUSTIN 6/7/09

PLANS PREPARED BY:
MULKEY ENGINEERS & CONSULTANTS
PO Box 33127
Raleigh, N.C. 27636
(919) 851-1912
(919) 851-1918 (FAX)
www.mulkeyinc.com

REVISIONS						SHEET NO.
NO.	BY:	DATE:	NO.	BY:	DATE:	62
1			3			TOTAL SHEETS
2			4			185

DRAWN BY : W. B. ALLEN DATE : 2/09
CHECKED BY : L. K. AUSTIN DATE : 3/09

6/5/2009 1:48:15 PM R:\Structures\EB329C_SD_EB0A_0.dgn

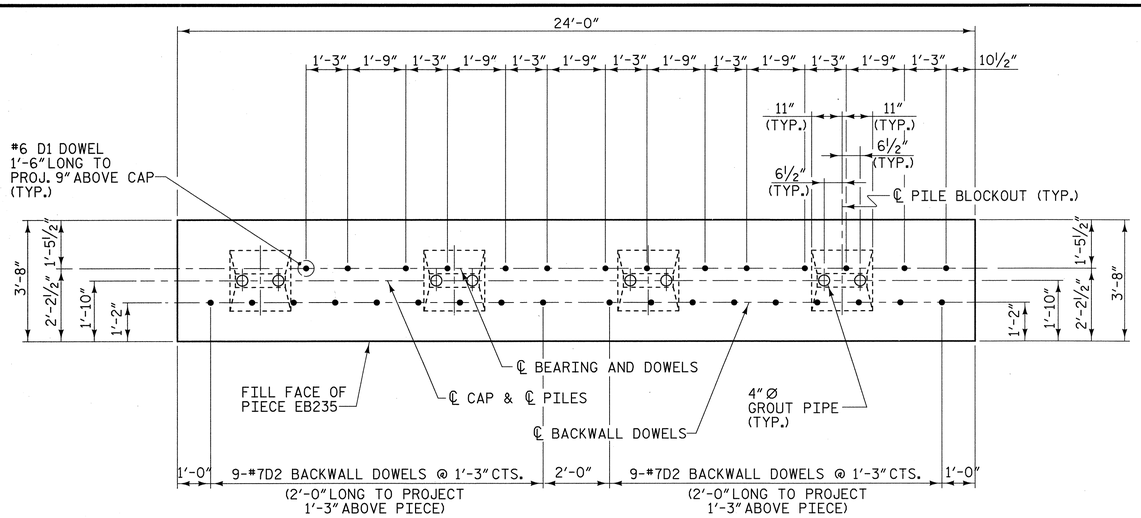

PLAN - PRECAST PIECE EB235

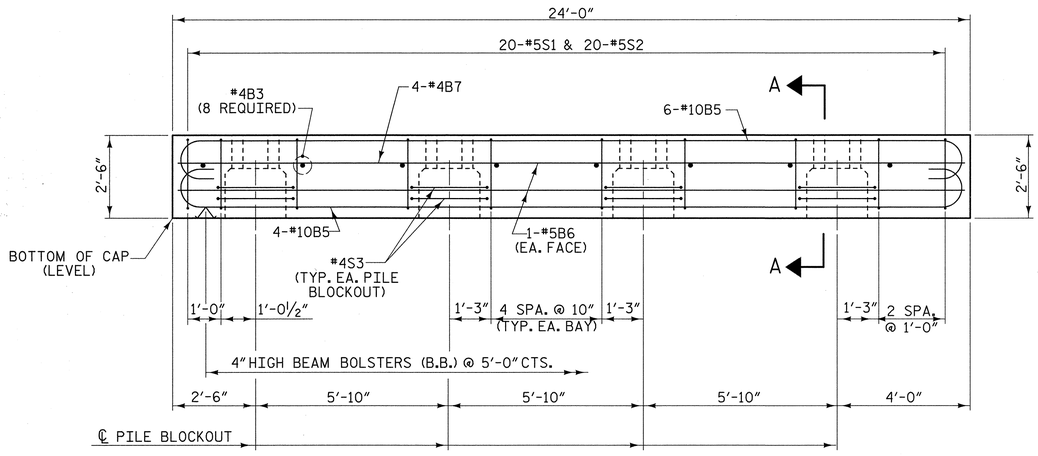

ELEVATION - PRECAST PIECE EB235

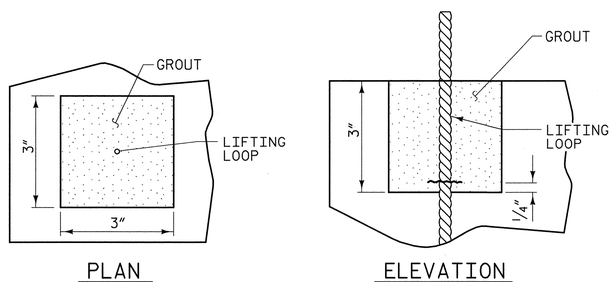

GROUTED RECESS FOR LIFTING LOOPS

LIFTING LOOPS TO BE CUT ¼" ABOVE BOTTOM OF RECESS.

NOTES

STIRRUPS IN PRECAST PIECE EB235 MAY BE SHIFTED AS NECESSARY TO CLEAR DOWELS AND GROUT PIPES.

ALL REINFORCING STEEL AND BAR SUPPORTS SHALL BE EPOXY COATED ACCORDING TO THE STANDARD SPECIFICATIONS.

CLASS AA (4500 PSI) CONCRETE SHALL BE USED IN PRECAST PIECE EB235.

DOWELS SHALL BE PRESET IN THE PRECAST CAP IN THE LOCATIONS SHOWN ON THE PLANS. DRILLING AND ADHESIVE ANCHORING OF THE DOWELS AFTER CASTING MUST BE APPROVED BY THE ENGINEER.

TWO LIFTING LOOPS SHALL BE ALLOWED IN THE PRECAST PIECE IN ACCORDANCE WITH ARTICLE 1077-10 OF THE STANDARD SPECIFICATIONS WITH THE FOLLOWING ADDITIONS. THE LIFTING LOOPS SHALL BE BURNED OFF PRIOR TO PLACING THE ELASTOMERIC BEARING PADS. THE ENDS OF THE LIFTING LOOPS TO BE BURNED OFF SHALL BE RECESSED AND GROUTED. SEE DETAIL FOR GROUTED RECESS FOR LIFTING LOOPS. GROUT SHALL BE NON-METALLIC AND NON-SHRINK ACCORDING TO THE STANDARD SPECIFICATIONS. PROPOSED DEVICES FOR LIFTING LOOPS SHALL BE DETAILED IN SHOP DRAWINGS.

TWO 4 INCH Ø GROUT PIPES SHALL BE PROVIDED AT EACH PILE BLOCKOUT. THE 4 INCH Ø GROUT PIPES SHALL BE CUT FROM SCHEDULE 40 PVC PIPE AND SHALL BE FIRMLY ANCHORED OR REMOVED PRIOR TO PLACEMENT OF THE GROUT.

THE TOP OF THE PILE BLOCKOUT SHALL BE CHAMFERED 2" IN TRANSVERSE DIRECTION.

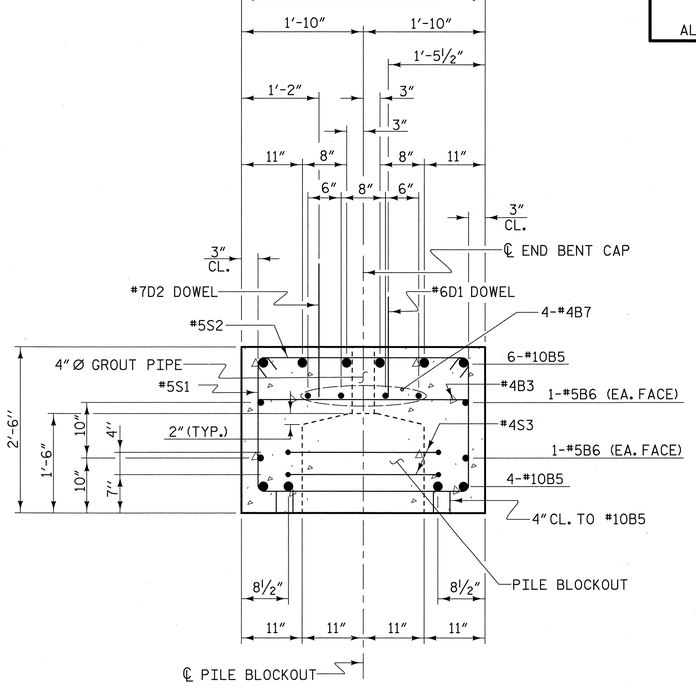

SECTION A-A

BAR TYPES

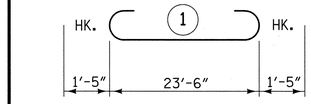

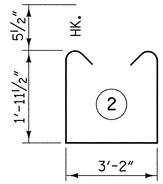

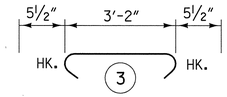

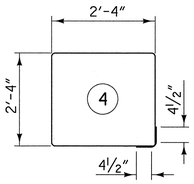

ALL BAR DIMENSIONS ARE OUT TO OUT

BILL OF MATERIAL FOR ONE PIECE EB235

BAR	NO.	SIZE	TYPE	LENGTH	WEIGHT
B3	8	#4	STR	3'-3"	17
B5	10	#10	1	26'-4"	1133
B6	4	#5	STR	23'-7"	98
B7	4	#4	STR	23'-7"	63
D1	14	#6	STR	1'-6"	32
D2	18	#7	STR	2'-0"	74
S1	20	#5	2	8'-0"	167
S2	20	#5	3	4'-1"	85
S3	8	#4	4	10'-1"	54

EPOXY COATED REINFORCING STEEL
TOTAL 1723 LBS.

CLASS AA (4500 PSI) CONCRETE
7.4 CU. YDS.

GROUT FOR PILE BLOCKOUTS
0.8 CU. YDS.

PROJECT NO. 42287
PAMLICO COUNTY
STATION: 15+29.77 -L-

REPLACES BRIDGE NO. 35

STATE OF NORTH CAROLINA
DEPARTMENT OF TRANSPORTATION
RALEIGH

PRECAST PIECE EB235

33'-10" CLEAR ROADWAY - 90° SKEW

NORTH CAROLINA PROFESSIONAL ENGINEER SEAL 19661 L. KEVIN AUSTIN 6/7/09

PLANS PREPARED BY:
MULKEY ENGINEERS & CONSULTANTS
PO Box 33127
Raleigh, NC 27636
(919) 851-1912
(919) 851-1912 (FAX)
WWW.MULKEYINC.COM

REVISIONS						SHEET NO.
NO.	BY:	DATE:	NO.	BY:	DATE:	63
1			3			TOTAL SHEETS
2			4			185

DRAWN BY : W. B. ALLEN DATE : 2/09
CHECKED BY : L. K. AUSTIN DATE : 3/09

6/5/2009 8:47:33 PM R:\Structures\EB235C_SD_EB08_01.dgn

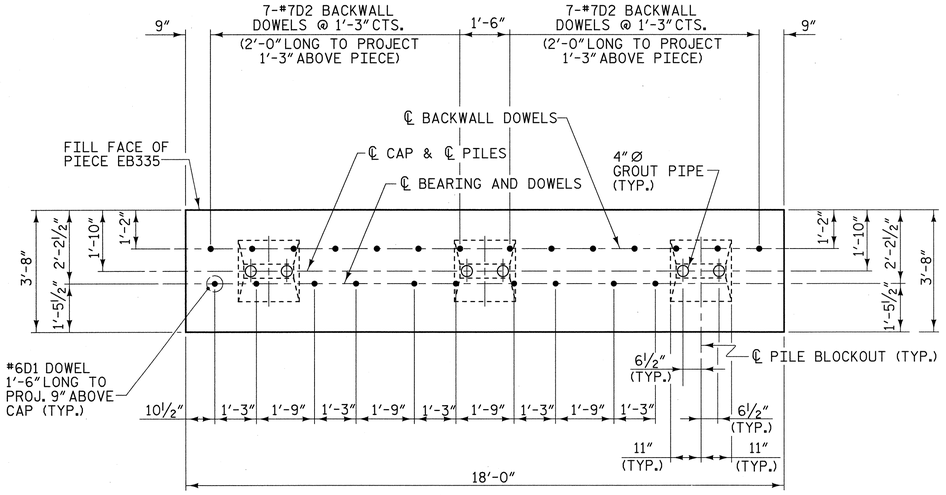

PLAN - PRECAST PIECE EB335

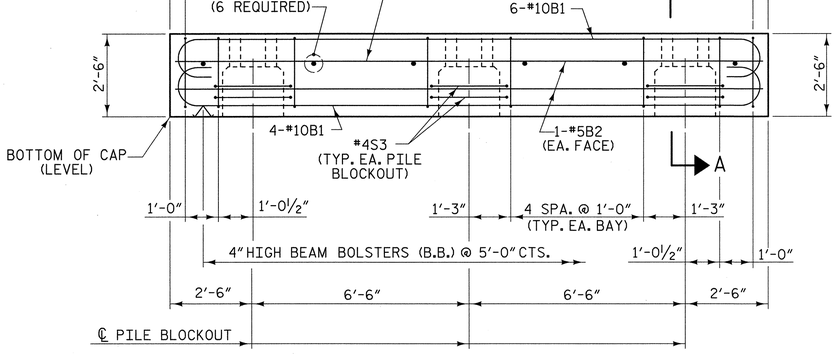

ELEVATION - PRECAST PIECE EB335

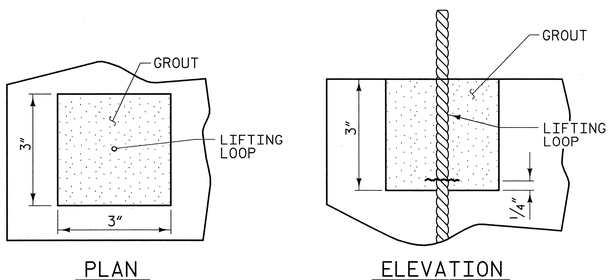

GROUTED RECESS FOR LIFTING LOOPS

LIFTING LOOPS TO BE CUT ¼″ABOVE BOTTOM OF RECESS.

NOTES

STIRRUPS IN PRECAST PIECE EB335 MAY BE SHIFTED AS NECESSARY TO CLEAR DOWELS AND GROUT PIPES.

ALL REINFORCING STEEL AND BAR SUPPORTS SHALL BE EPOXY COATED ACCORDING TO THE STANDARD SPECIFICATIONS.

CLASS AA (4500 PSI) CONCRETE SHALL BE USED IN PRECAST PIECE EB335.

DOWELS SHALL BE PRESET IN THE PRECAST CAP IN THE LOCATIONS SHOWN ON THE PLANS. DRILLING AND ADHESIVE ANCHORING OF THE DOWELS AFTER CASTING MUST BE APPROVED BY THE ENGINEER.

TWO LIFTING LOOPS SHALL BE ALLOWED IN THE PRECAST PIECE IN ACCORDANCE WITH ARTICLE 1077-10 OF THE STANDARD SPECIFICATIONS WITH THE FOLLOWING ADDITIONS. THE LIFTING LOOPS SHALL BE BURNED OFF PRIOR TO PLACING THE ELASTOMERIC BEARING PADS. THE ENDS OF THE LIFTING LOOPS TO BE BURNED OFF SHALL BE RECESSED AND GROUTED. SEE DETAIL FOR GROUTED RECESS FOR LIFTING LOOPS. GROUT SHALL BE NON-METALLIC AND NON-SHRINK ACCORDING TO THE STANDARD SPECIFICATIONS. PROPOSED DEVICES FOR LIFTING LOOPS SHALL BE DETAILED IN SHOP DRAWINGS.

TWO 4 INCH Ø GROUT PIPES SHALL BE PROVIDED AT EACH PILE BLOCKOUT. THE 4 INCH Ø GROUT PIPES SHALL BE CUT FROM SCHEDULE 40 PVC PIPE AND SHALL BE FIRMLY ANCHORED OR REMOVED PRIOR TO PLACEMENT OF THE GROUT.

THE TOP OF THE PILE BLOCKOUT SHALL BE CHAMFERED 2″IN THE TRANSVERSE DIRECTION.

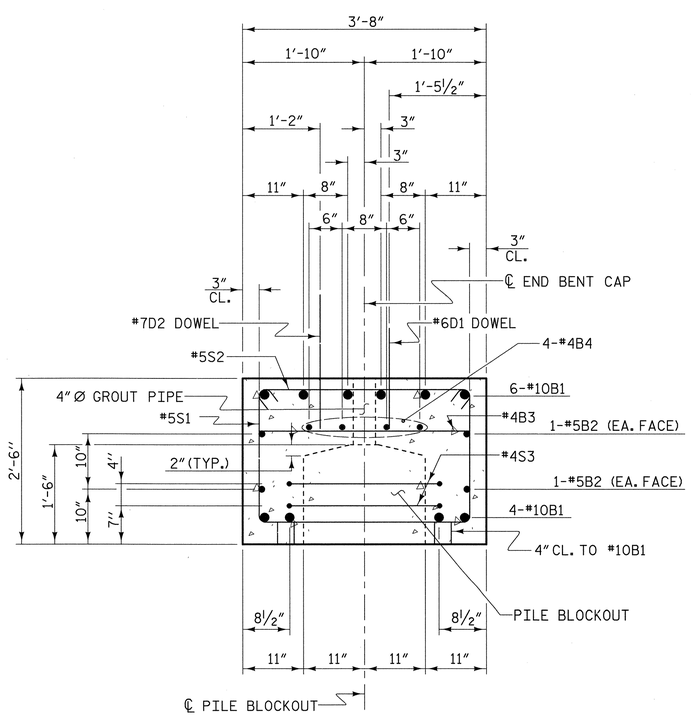

SECTION A-A

BAR TYPES

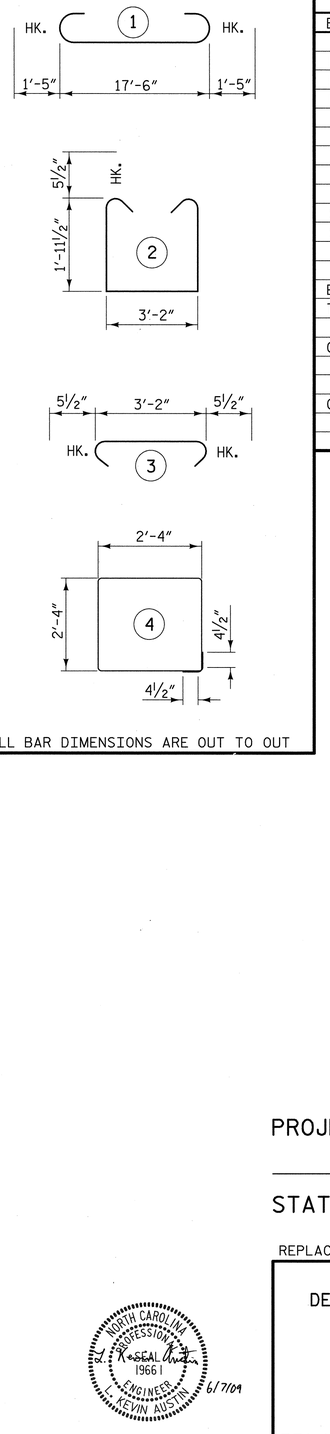

ALL BAR DIMENSIONS ARE OUT TO OUT

BILL OF MATERIAL FOR ONE PIECE EB335

BAR	NO.	SIZE	TYPE	LENGTH	WEIGHT
B1	10	#10	1	20′-4″	875
B2	4	#5	STR	17′-7″	73
B3	6	#4	STR	3′-3″	13
B4	4	#4	STR	17′-7″	47
D1	10	#6	STR	1′-6″	23
D2	14	#7	STR	2′-0″	57
S1	14	#5	2	8′-0″	117
S2	14	#5	3	4′-1″	60
S3	6	#4	4	10′-1″	40
EPOXY COATED REINFORCING STEEL TOTAL					1305 LBS.
CLASS AA (4500 PSI) CONCRETE					5.5 CU. YDS.
GROUT FOR PILE BLOCKOUTS					0.6 CU. YDS.

PROJECT NO. 42287

PAMLICO COUNTY

STATION: 15+29.77 -L-

REPLACES BRIDGE NO. 35

STATE OF NORTH CAROLINA
DEPARTMENT OF TRANSPORTATION
RALEIGH

PRECAST PIECE EB335

33′-10″CLEAR ROADWAY - 90°SKEW

NORTH CAROLINA PROFESSIONAL SEAL 19661 ENGINEER L. KEVIN AUSTIN 6/7/09

PLANS PREPARED BY:

MULKEY ENGINEERS & CONSULTANTS
PO Box 33127
RALEIGH, N.C. 27636
(919) 851-1982
(919) 851-1912 (FAX)
WWW.MULKEYINC.COM

REVISIONS						SHEET NO.
NO.	BY:	DATE:	NO.	BY:	DATE:	64
1			3			TOTAL SHEETS
2			4			185

DRAWN BY : W. B. ALLEN DATE : 2/09
CHECKED BY : L. K. AUSTIN DATE : 3/09

6/5/2009 1:46:46 PM R:\Structures\B5028C_SD_EBCC_01.dgn

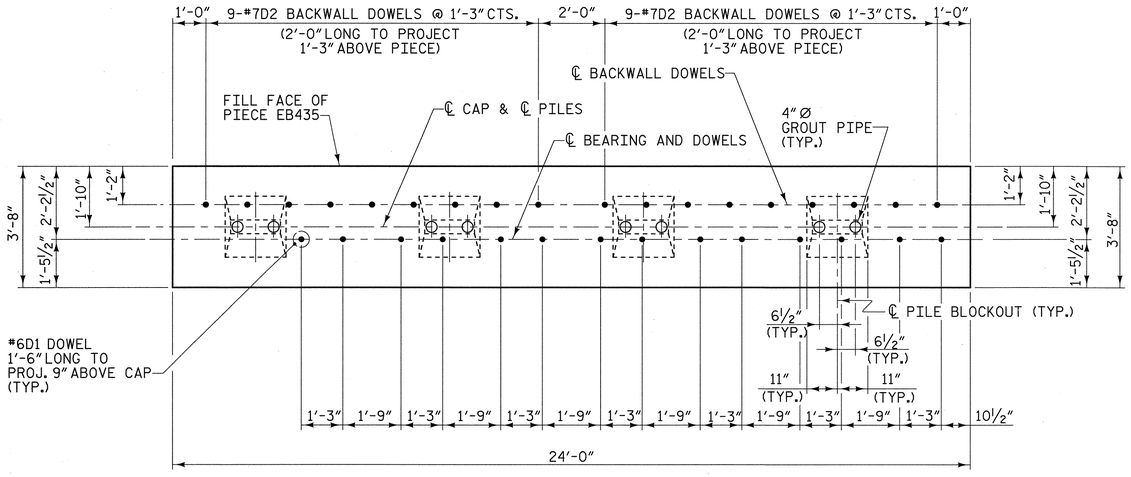

PLAN - PRECAST PIECE EB435

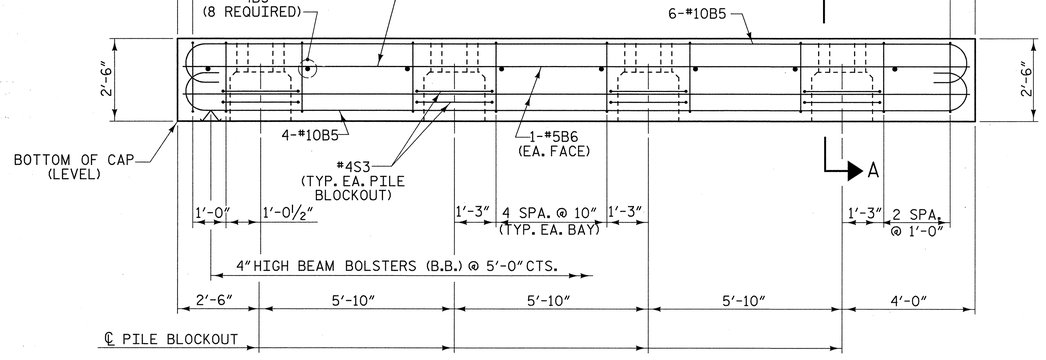

ELEVATION - PRECAST PIECE EB435

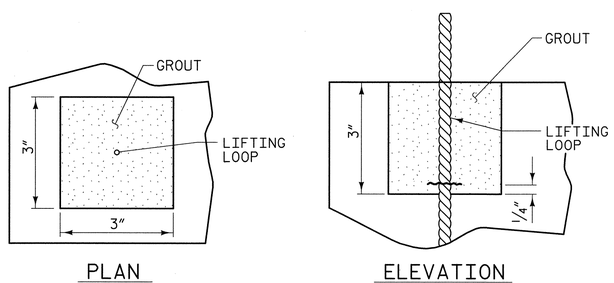

GROUTED RECESS FOR LIFTING LOOPS

LIFTING LOOPS TO BE CUT ¼" ABOVE BOTTOM OF RECESS.

NOTES

STIRRUPS IN PRECAST PIECE EB435 MAY BE SHIFTED AS NECESSARY TO CLEAR DOWELS AND GROUT PIPES.

ALL REINFORCING STEEL AND BAR SUPPORTS SHALL BE EPOXY COATED ACCORDING TO THE STANDARD SPECIFICATIONS.

CLASS AA (4500 PSI) CONCRETE SHALL BE USED IN PRECAST PIECE EB435.

DOWELS SHALL BE PRESET IN THE PRECAST CAP IN THE LOCATIONS SHOWN ON THE PLANS. DRILLING AND ADHESIVE ANCHORING OF THE DOWELS AFTER CASTING MUST BE APPROVED BY THE ENGINEER.

TWO LIFTING LOOPS SHALL BE ALLOWED IN THE PRECAST PIECE IN ACCORDANCE WITH ARTICLE 1077-10 OF THE STANDARD SPECIFICATIONS WITH THE FOLLOWING ADDITIONS. THE LIFTING LOOPS SHALL BE BURNED OFF PRIOR TO PLACING THE ELASTOMERIC BEARING PADS. THE ENDS OF THE LIFTING LOOPS TO BE BURNED OFF SHALL BE RECESSED AND GROUTED. SEE DETAIL FOR GROUTED RECESS FOR LIFTING LOOPS. GROUT SHALL BE NON-METALLIC AND NON-SHRINK ACCORDING TO THE STANDARD SPECIFICATIONS. PROPOSED DEVICES FOR LIFTING LOOPS SHALL BE DETAILED IN SHOP DRAWINGS.

TWO 4 INCH Ø GROUT PIPES SHALL BE PROVIDED AT EACH PILE BLOCKOUT. THE 4 INCH Ø GROUT PIPES SHALL BE CUT FROM SCHEDULE 40 PVC PIPE AND SHALL BE FIRMLY ANCHORED OR REMOVED PRIOR TO PLACEMENT OF THE GROUT.

THE TOP OF THE PILE BLOCKOUT SHALL BE CHAMFERED 2" IN THE TRANSVERSE DIRECTION.

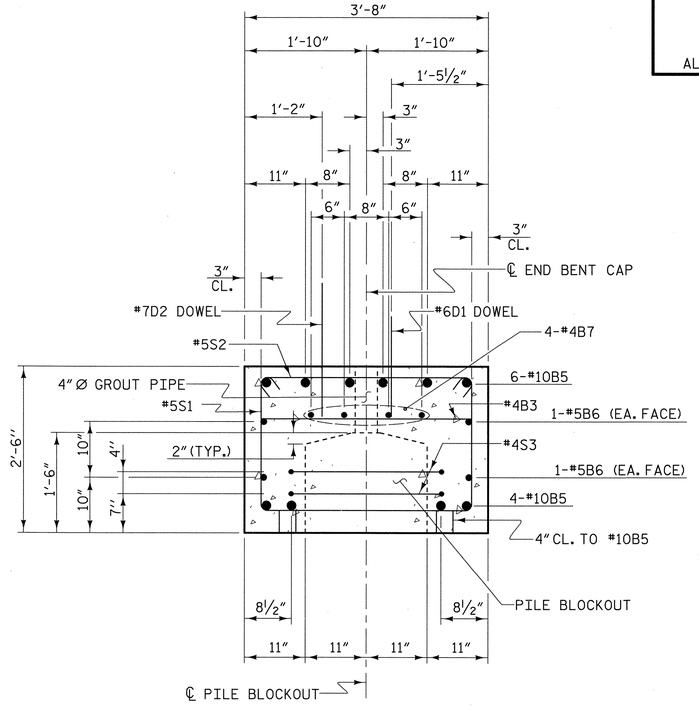

SECTION A-A

BAR TYPES

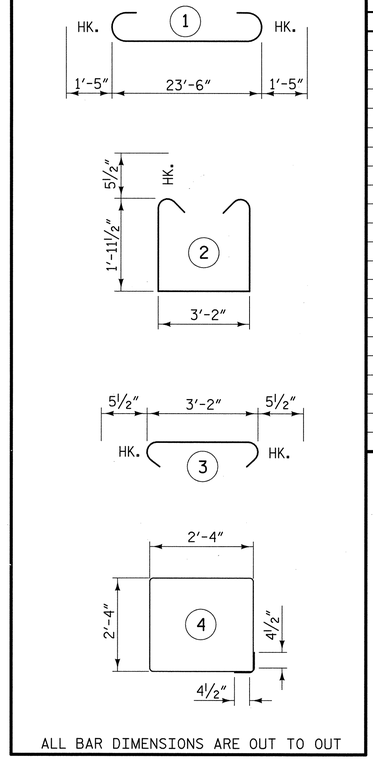

ALL BAR DIMENSIONS ARE OUT TO OUT

BILL OF MATERIAL FOR ONE PIECE EB435

BAR	NO.	SIZE	TYPE	LENGTH	WEIGHT
B3	8	#4	STR	3'-3"	17
B5	10	#10	1	26'-4"	1133
B6	4	#5	STR	23'-7"	98
B7	4	#4	STR	23'-7"	63
D1	14	#6	STR	1'-6"	32
D2	18	#7	STR	2'-0"	74
S1	20	#5	2	8'-0"	167
S2	20	#5	3	4'-1"	85
S3	8	#4	4	10'-1"	54

EPOXY COATED REINFORCING STEEL
TOTAL 1723 LBS.

CLASS AA (4500 PSI) CONCRETE
7.4 CU. YDS.

GROUT FOR PILE BLOCKOUTS
0.8 CU. YDS.

PROJECT NO. 42287
PAMLICO COUNTY
STATION: 15+29.77 -L-

REPLACES BRIDGE NO. 35

STATE OF NORTH CAROLINA
DEPARTMENT OF TRANSPORTATION
RALEIGH

PRECAST PIECE EB435

33'-10" CLEAR ROADWAY - 90° SKEW

NORTH CAROLINA PROFESSIONAL ENGINEER SEAL 19661 L. KEVIN AUSTIN 6/7/09

PLANS PREPARED BY:
MULKEY ENGINEERS & CONSULTANTS
PO Box 33127
Raleigh, N.C. 27636
(919) 851-1912
(919) 851-1916 (FAX)
WWW.MULKEYINC.COM

REVISIONS						SHEET NO.
NO.	BY:	DATE:	NO.	BY:	DATE:	65
1			3			TOTAL SHEETS
2			4			185

DRAWN BY : W. B. ALLEN DATE : 2/09
CHECKED BY : L. K. AUSTIN DATE : 3/09

6/5/2009 1:46:06 PM R:\Structures\B3236C_SD_EB03.dgn

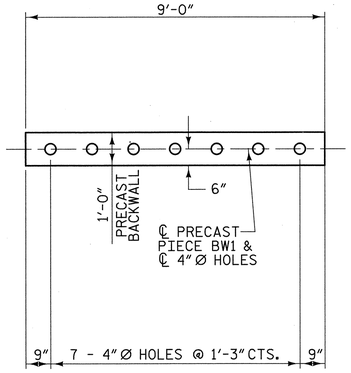

PLAN - PRECAST PIECE BW1

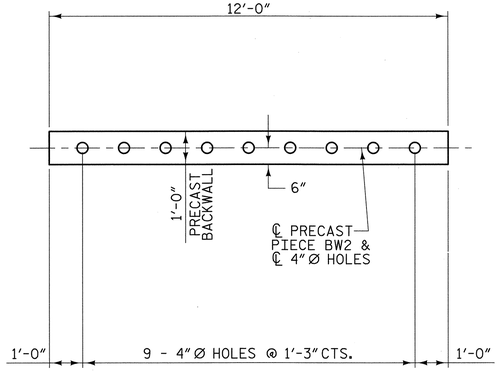

PLAN - PRECAST PIECE BW2

NOTES

ALL REINFORCING STEEL AND BAR SUPPORTS SHALL BE EPOXY COATED ACCORDING TO THE STANDARD SPECIFICATIONS.

CLASS AA (4500 PSI) CONCRETE SHALL BE USED IN PRECAST PIECES BW1 & BW2.

TWO LIFTING LOOPS SHALL BE ALLOWED IN THE PRECAST BACKWALL IN ACCORDANCE WITH ARTICLE 1077-10 OF THE STANDARD SPECIFICATIONS WITH THE FOLLOWING ADDITIONS. THE LIFTING LOOPS TO BE BURNED OFF SHALL BE RECESSED AND GROUTED. SEE DETAIL FOR GROUTED RECESS FOR LIFTING LOOPS. GROUT SHALL BE NON-METALLIC AND NON-SHRINK ACCORDING TO THE STANDARD SPECIFICATIONS. PROPOSED DEVICES FOR LIFTING LOOPS SHALL BE DETAILED IN SHOP DRAWINGS.

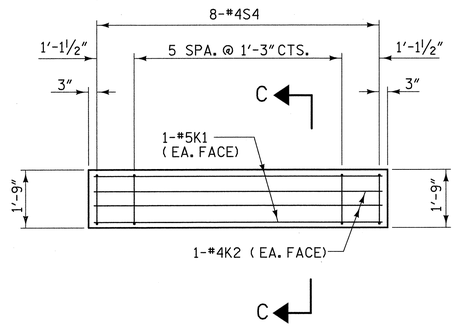

ELEVATION - PRECAST PIECE BW1

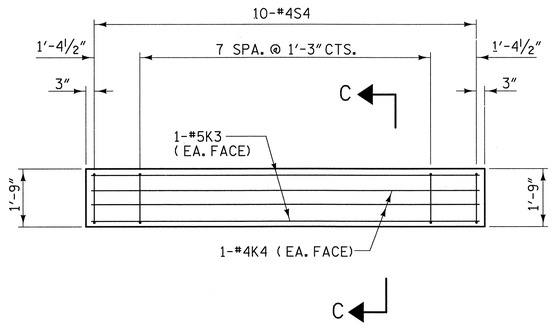

ELEVATION - PRECAST PIECE BW2

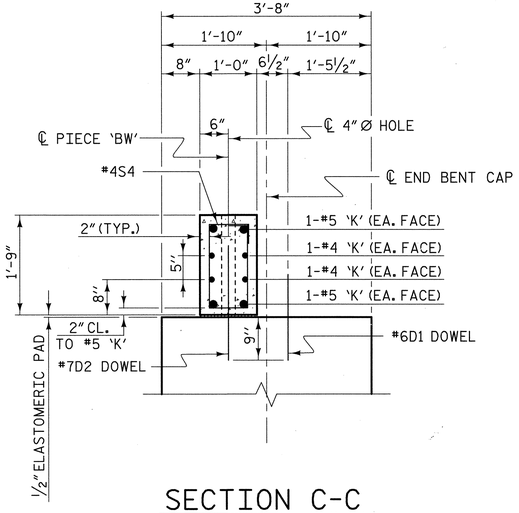

SECTION C-C

GROUTED RECESS FOR LIFTING LOOPS

LIFTING LOOPS TO BE CUT ¼″ ABOVE BOTTOM OF RECESS.

BILL OF MATERIAL FOR ONE

PIECE BW1

BAR	NO.	SIZE	TYPE	LENGTH	WEIGHT
K1	4	5	STR	8′-8″	36
K2	4	4	STR	8′-8″	23
S4	8	4	1	5′-0″	27
EPOXY COATED REINFORCING STEEL					
TOTAL					86 LBS
CLASS AA (4500 PSI) CONCRETE					0.5 CU. YDS.

PIECE BW2

BAR	NO.	SIZE	TYPE	LENGTH	WEIGHT
K3	4	5	STR	11′-8″	49
K4	4	4	STR	11′-8″	31
S4	10	4	1	5′-0″	33
EPOXY COATED REINFORCING STEEL					
TOTAL					113 LBS
CLASS AA (4500 PSI) CONCRETE					0.7 CU. YDS.

BAR TYPES

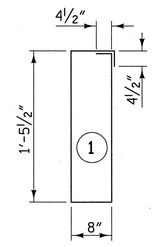

ALL BAR DIMENSIONS ARE OUT TO OUT

PROJECT NO. 42287

PAMLICO COUNTY

STATION: 15+29.77 -L-

REPLACES BRIDGE NO. 35

STATE OF NORTH CAROLINA
DEPARTMENT OF TRANSPORTATION
RALEIGH

PRECAST PIECE BW1 AND PIECE BW2

33′-10″ CLEAR ROADWAY - 90°SKEW

NORTH CAROLINA PROFESSIONAL SEAL 19661 ENGINEER L. KEVIN AUSTIN 6/7/09

PLANS PREPARED BY:

MULKEY
ENGINEERS & CONSULTANTS
PO Box 33127
Raleigh, N.C. 27636
(919) 851-1912
(919) 851-1918 (FAX)
WWW.MULKEYINC.COM

REVISIONS						SHEET NO.
NO.	BY:	DATE:	NO.	BY:	DATE:	66
1			3			TOTAL SHEETS
2			4			185

DRAWN BY : W. B. ALLEN DATE : 2/09
CHECKED BY : L. K. AUSTIN DATE : 3/09

6/5/2009 1:45:46 PM R:\Structures\BS029C_SD_BW_0.dgn

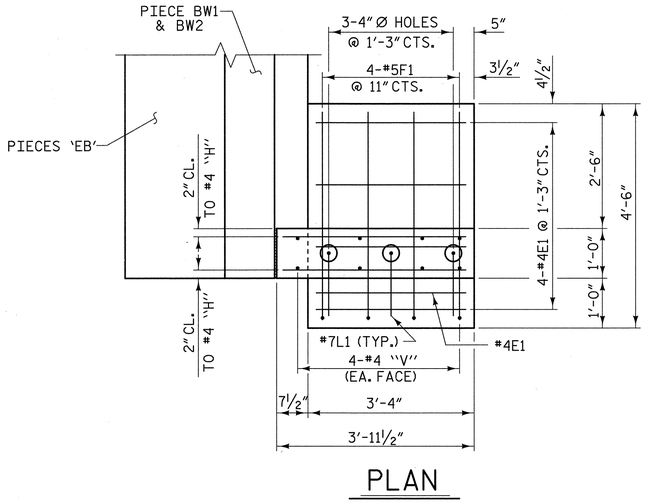

PLAN

NOTES

ALL REINFORCING STEEL AND BAR SUPPORTS SHALL BE EPOXY COATED ACCORDING TO THE STANDARD SPECIFICATIONS.

CLASS AA (4500 PSI) CONCRETE SHALL BE USED IN PRECAST PIECE WF1 AND PRECAST PIECE WW1.

TWO LIFTING LOOPS SHALL BE ALLOWED IN THE PRECAST WINGWALL AND THE PRECAST WING FOOTING IN ACCORDANCE WITH ARTICLE 1077-10 OF THE STANDARD SPECIFICATIONS WITH THE FOLLOWING ADDITIONS. THE LIFTING LOOPS TO BE BURNED OFF SHALL BE RECESSED AND GROUTED. SEE DETAIL FOR GROUTED RECESS FOR LIFTING LOOPS. GROUT SHALL BE NON-METALLIC AND NON-SHRINK ACCORDING TO THE STANDARD SPECIFICATIONS. PROPOSED DEVICES FOR LIFTING LOOPS SHALL BE DETAILED IN SHOP DRAWINGS.

BAR TYPES

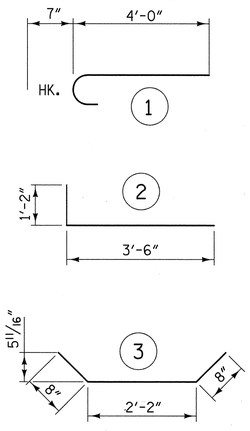

ALL BAR DIMENSIONS ARE OUT TO OUT

BILL OF MATERIAL FOR ONE

PIECE WF1

BAR	NO.	SIZE	TYPE	LENGTH	WEIGHT
E1	5	4	STR	3'-0"	10
F1	4	5	1	4'-7"	19
L1	3	7	2	4'-8"	28

EPOXY COATED REINFORCING STEEL
TOTAL 57 LBS.

CLASS AA (4500 PSI) CONCRETE
0.6 CU. YDS.

PIECE WW1

BAR	NO.	SIZE	TYPE	LENGTH	WEIGHT
H1	4	4	STR	3'-0"	8
H2	4	4	STR	3'-7"	10
S1	2	4	3	3'-6"	5
V1	6	4	STR	2'-11"	12
V2	2	4	STR	1'-5"	2

EPOXY COATED REINFORCING STEEL
TOTAL 37 LBS.

CLASS AA (4500 PSI) CONCRETE
0.5 CU. YDS.

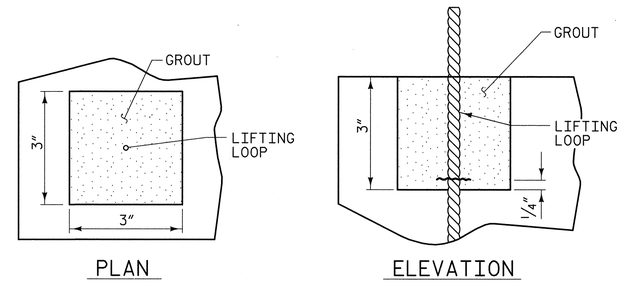

PLAN ELEVATION

GROUTED RECESS FOR LIFTING LOOPS

LIFTING LOOPS TO BE CUT ¼" ABOVE BOTTOM OF RECESS.

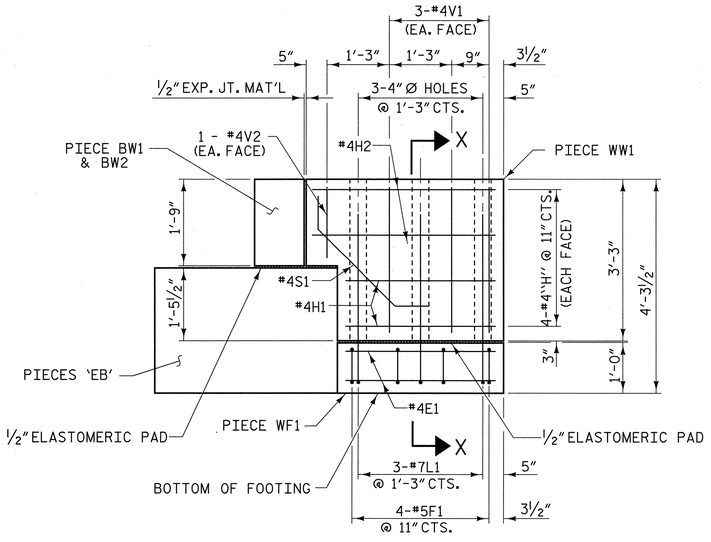

ELEVATION

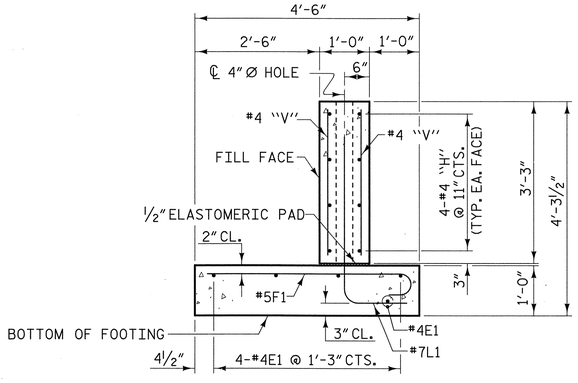

SECTION X-X

PROJECT NO. 42287
PAMLICO COUNTY
STATION: 15+29.77 -L-

REPLACES BRIDGE NO. 35

STATE OF NORTH CAROLINA
DEPARTMENT OF TRANSPORTATION
RALEIGH

PRECAST PIECE WW1 AND PIECE WF1

33'-10" CLEAR ROADWAY - 90° SKEW

NORTH CAROLINA PROFESSIONAL SEAL 19661 ENGINEER L. KEVIN AUSTIN 6/7/09

PLANS PREPARED BY:

MULKEY
ENGINEERS & CONSULTANTS
PO Box 33127
Raleigh, N.C. 27636
(919) 851-1912
(919) 851-1916 (FAX)
www.mulkeyinc.com

REVISIONS						SHEET NO.
NO.	BY:	DATE:	NO.	BY:	DATE:	67
1			3			TOTAL SHEETS
2			4			185

DRAWN BY : W. B. ALLEN DATE : 2/09
CHECKED BY : L. K. AUSTIN DATE : 3/09

6/5/2009 14434 PM R:\Structures\B5239c_SD_WW_01.dgn

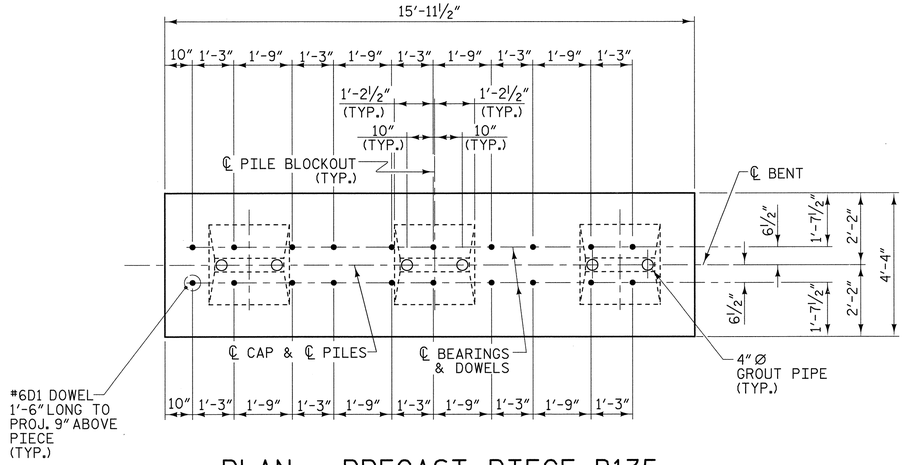

PLAN - PRECAST PIECE B135

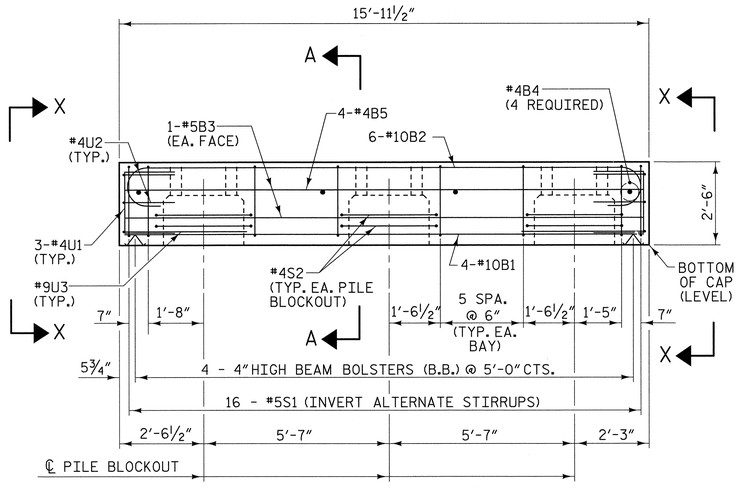

ELEVATION - PRECAST PIECE B135

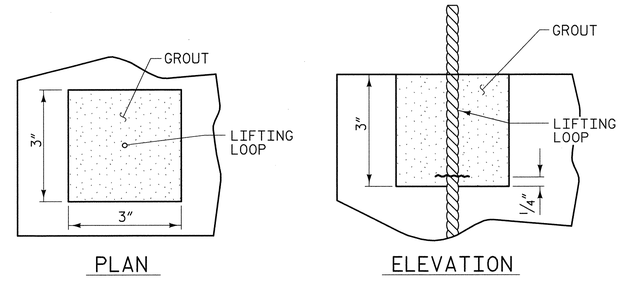

GROUTED RECESS FOR LIFTING LOOPS

LIFTING LOOPS TO BE CUT ¼" ABOVE BOTTOM OF RECESS.

NOTES

STIRRUPS IN PRECAST PIECE B135 MAY BE SHIFTED AS NECESSARY TO CLEAR DOWELS AND GROUT PIPES.

ALL REINFORCING STEEL AND BAR SUPPORTS SHALL BE EPOXY COATED ACCORDING TO THE STANDARD SPECIFICATIONS.

CLASS AA (4500 PSI) CONCRETE SHALL BE USED IN PRECAST PIECE B135.

DOWELS SHALL BE PRESET IN THE PRECAST CAP IN THE LOCATIONS SHOWN ON THE PLANS. DRILLING AND ADHESIVE ANCHORING OF THE DOWELS AFTER CASTING MUST BE APPROVED BY THE ENGINEER.

TWO LIFTING LOOPS SHALL BE ALLOWED IN THE PRECAST PIECE IN ACCORDANCE WITH ARTICLE 1077-10 OF THE STANDARD SPECIFICATIONS WITH THE FOLLOWING ADDITIONS. THE LIFTING LOOPS SHALL BE BURNED OFF PRIOR TO PLACING THE ELASTOMERIC BEARING PADS. THE ENDS OF THE LIFTING LOOPS TO BE BURNED OFF SHALL BE RECESSED AND GROUTED. SEE DETAIL FOR GROUTED RECESS FOR LIFTING LOOPS. GROUT SHALL BE NON-METALLIC AND NON-SHRINK ACCORDING TO THE STANDARD SPECIFICATIONS. PROPOSED DEVICES FOR LIFTING LOOPS SHALL BE DETAILED IN SHOP DRAWINGS.

TWO 4 INCH Ø GROUT PIPES SHALL BE PROVIDED AT EACH PILE BLOCKOUT. THE 4 INCH Ø GROUT PIPES SHALL BE CUT FROM SCHEDULE 40 PVC PIPE AND SHALL BE FIRMLY ANCHORED OR REMOVED PRIOR TO PLACEMENT OF THE GROUT.

THE TOP OF THE PILE BLOCKOUT SHALL BE CHAMFERED 2" ALL IN THE TRANSVERSE DIRECTION.

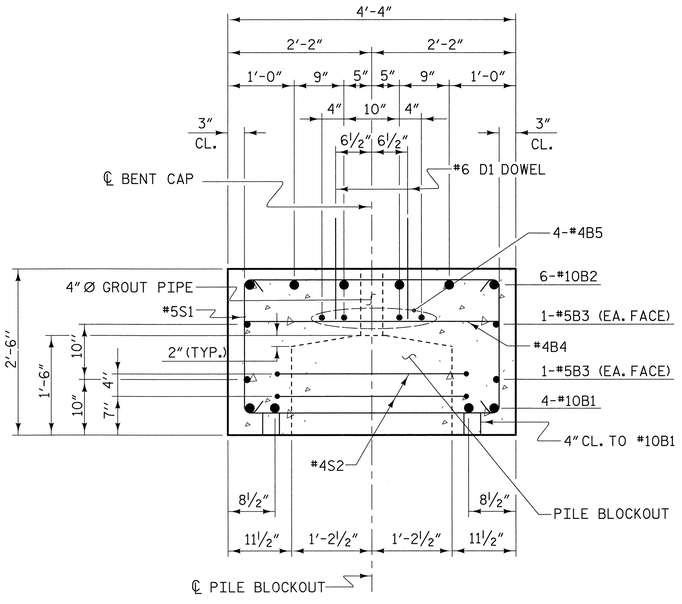

SECTION A-A

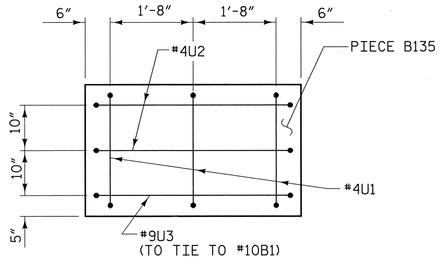

VIEW X-X

BAR TYPES

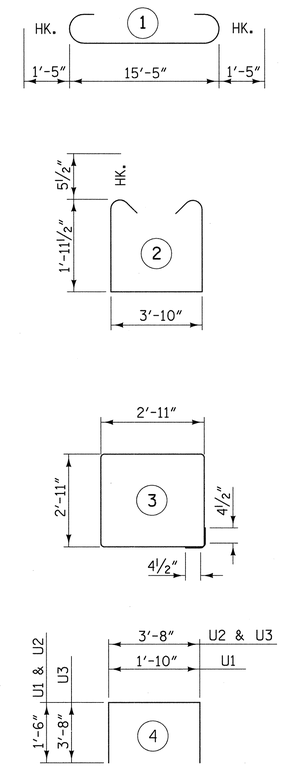

ALL BAR DIMENSIONS ARE OUT TO OUT

BILL OF MATERIAL FOR ONE PIECE B135

BAR	NO.	SIZE	TYPE	LENGTH	WEIGHT
B1	4	#10	STR	15'-5"	265
B2	6	#10	1	18'-3"	471
B3	4	#5	STR	15'-5"	64
B4	4	#4	STR	3'-11"	10
B5	4	#4	STR	15'-5"	41
D1	20	#6	STR	1'-6"	45
S1	16	#5	2	8'-8"	145
S2	6	#4	3	12'-5"	50
U1	6	#4	4	4'-10"	19
U2	4	#4	4	6'-8"	18
U3	2	#9	4	11'-0"	75

TOTAL EPOXY COATED REINFORCING STEEL 1203 LBS.

CLASS AA (4500 PSI) CONCRETE 5.4 CU. YDS.

GROUT FOR PILE BLOCKOUTS 1.0 CU. YDS.

DRAWN BY : W. B. ALLEN DATE : 2/09
CHECKED BY : L. K. AUSTIN DATE : 3/09

PROJECT NO. 42287
PAMLICO COUNTY
STATION: 15+29.77 -L-

REPLACES BRIDGE NO. 35

STATE OF NORTH CAROLINA
DEPARTMENT OF TRANSPORTATION
RALEIGH

PRECAST PIECE B135

33'-10" CLEAR ROADWAY - 90° SKEW

NORTH CAROLINA PROFESSIONAL ENGINEER SEAL 1966 L. KEVIN AUSTIN 8/6/09

PLANS PREPARED BY:
MULKEY ENGINEERS & CONSULTANTS
PO Box 33127
Raleigh, N.C. 27636
(919) 851-1912
(919) 851-1918 (FAX)
WWW.MULKEYINC.COM

REVISIONS						SHEET NO.
NO.	BY:	DATE:	NO.	BY:	DATE:	68
1			3			TOTAL SHEETS
2			4			185

8/6/2009 6:04:20 AM G:\project\2004\224.09_Pamlico35\Structures\B5296_SD_BCA_04.dgn

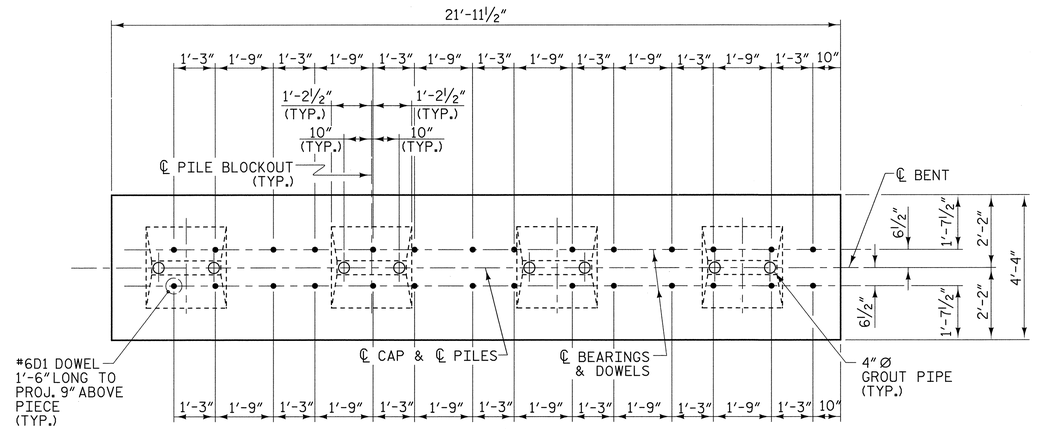

PLAN - PRECAST PIECE B235

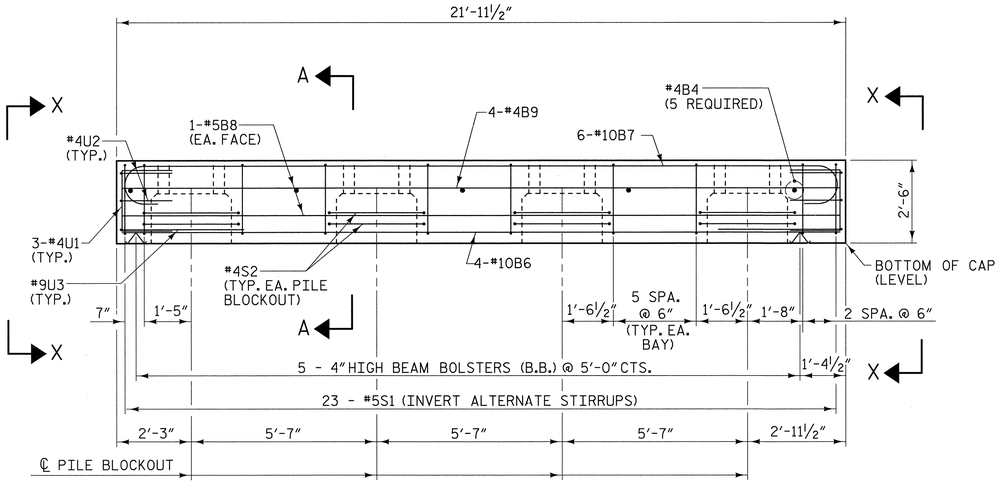

ELEVATION - PRECAST PIECE B235

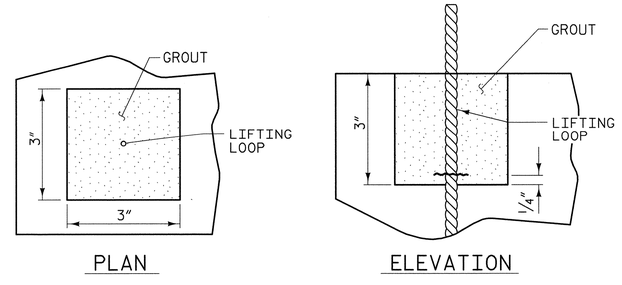

GROUTED RECESS FOR LIFTING LOOPS

LIFTING LOOPS TO BE CUT 1/4" ABOVE BOTTOM OF RECESS.

NOTES

STIRRUPS IN PRECAST PIECE B235 MAY BE SHIFTED AS NECESSARY TO CLEAR DOWELS AND GROUT PIPES.

ALL REINFORCING STEEL AND BAR SUPPORTS SHALL BE EPOXY COATED ACCORDING TO THE STANDARD SPECIFICATIONS.

CLASS AA (4500 PSI) CONCRETE SHALL BE USED IN PRECAST PIECE B235.

DOWELS SHALL BE PRESET IN THE PRECAST CAP IN THE LOCATIONS SHOWN ON THE PLANS. DRILLING AND ADHESIVE ANCHORING OF THE DOWELS AFTER CASTING MUST BE APPROVED BY THE ENGINEER.

TWO LIFTING LOOPS SHALL BE ALLOWED IN THE PRECAST PIECE IN ACCORDANCE WITH ARTICLE 1077-10 OF THE STANDARD SPECIFICATIONS WITH THE FOLLOWING ADDITIONS. THE LIFTING LOOPS SHALL BE BURNED OFF PRIOR TO PLACING THE ELASTOMERIC BEARING PADS. THE ENDS OF THE LIFTING LOOPS TO BE BURNED OFF SHALL BE RECESSED AND GROUTED. SEE DETAIL FOR GROUTED RECESS FOR LIFTING LOOPS. GROUT SHALL BE NON-METALLIC AND NON-SHRINK ACCORDING TO THE STANDARD SPECIFICATIONS. PROPOSED DEVICES FOR LIFTING LOOPS SHALL BE DETAILED IN SHOP DRAWINGS.

TWO 4 INCH Ø GROUT PIPES SHALL BE PROVIDED AT EACH PILE BLOCKOUT. THE 4 INCH Ø GROUT PIPES SHALL BE CUT FROM SCHEDULE 40 PVC PIPE AND SHALL BE FIRMLY ANCHORED OR REMOVED PRIOR TO PLACEMENT OF THE GROUT.

THE TOP OF THE PILE BLOCKOUT SHALL BE CHAMFERED 2" IN THE TRANSVERSE DIRECTION.

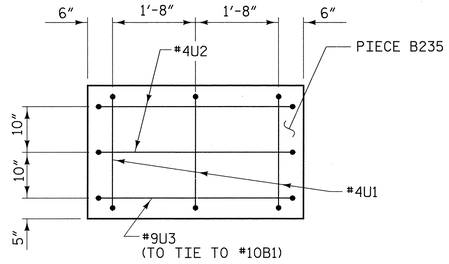

VIEW X-X

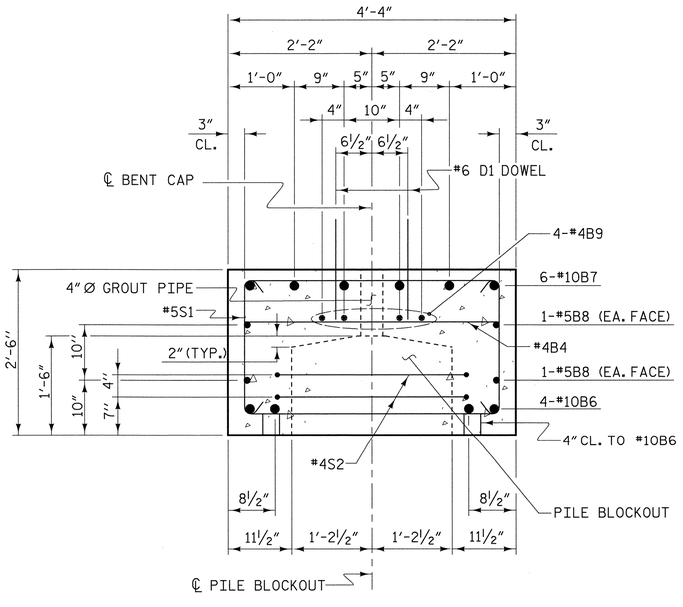

SECTION A-A

BAR TYPES

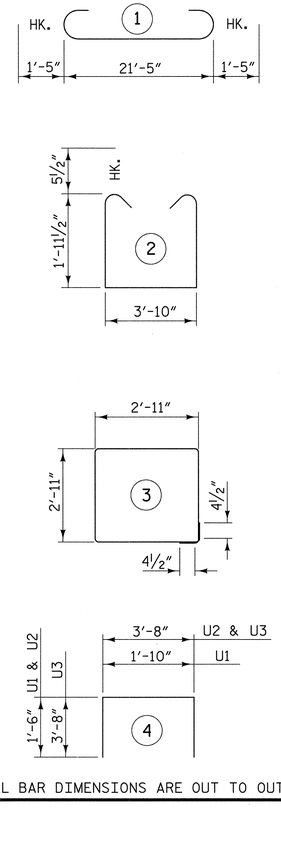

ALL BAR DIMENSIONS ARE OUT TO OUT

BILL OF MATERIAL FOR ONE PIECE B235

BAR	NO.	SIZE	TYPE	LENGTH	WEIGHT
B4	5	#4	STR	3'-11"	13
B6	4	#10	STR	21'-5"	369
B7	6	#10	1	24'-3"	626
B8	4	#5	STR	21'-5"	89
B9	4	#4	STR	21'-5"	57
D1	28	#6	STR	1'-6"	63
S1	23	#5	2	8'-8"	208
S2	8	#4	3	12'-5"	66
U1	6	#4	4	4'-10"	19
U2	4	#4	4	6'-8"	18
U3	2	#9	4	11'-0"	75

TOTAL EPOXY COATED REINFORCING STEEL	1603 LBS.
CLASS AA (4500 PSI) CONCRETE	7.5 CU. YDS.
GROUT FOR PILE BLOCKOUTS	1.3 CU. YDS.

PLANS PREPARED BY:

MULKEY
ENGINEERS & CONSULTANTS
PO Box 33127
Raleigh, NC 27636
(919) 851-1912
(919) 851-1918 (FAX)
WWW.MULKEYINC.COM

PROJECT NO. 42287

PAMLICO COUNTY

STATION: 15+29.77 -L-

REPLACES BRIDGE NO. 35

STATE OF NORTH CAROLINA
DEPARTMENT OF TRANSPORTATION
RALEIGH

PRECAST PIECE B235

33'-10" CLEAR ROADWAY - 90° SKEW

REVISIONS						SHEET NO.
NO.	BY:	DATE:	NO.	BY:	DATE:	69
1			3			TOTAL SHEETS
2			4			185

DRAWN BY : W. B. ALLEN DATE : 2/09
CHECKED BY : L. K. AUSTIN DATE : 3/09

8/6/2009 6:04:44 AM G:\project\200A\224.09_Pamlico35\Structures\B5236_SD_BCB_0.dgn

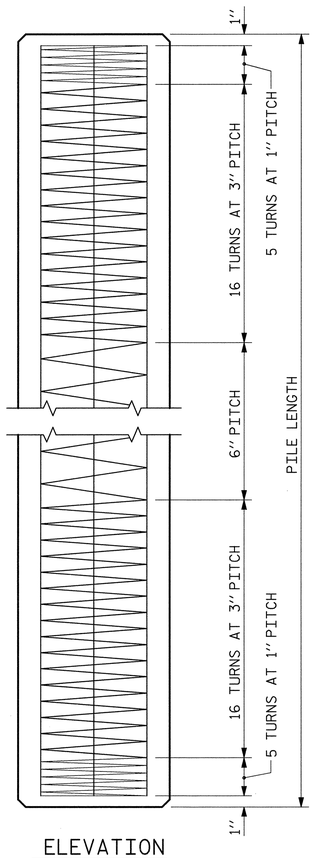

ELEVATION

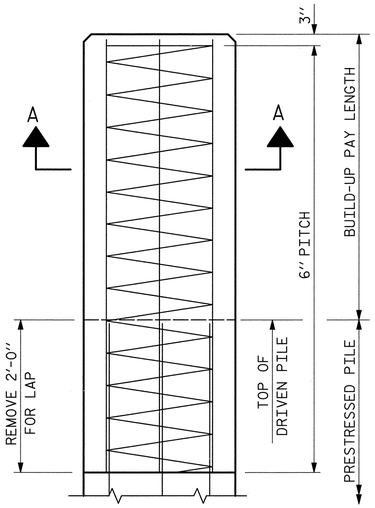

BUILD-UP
WITHOUT DRIVING

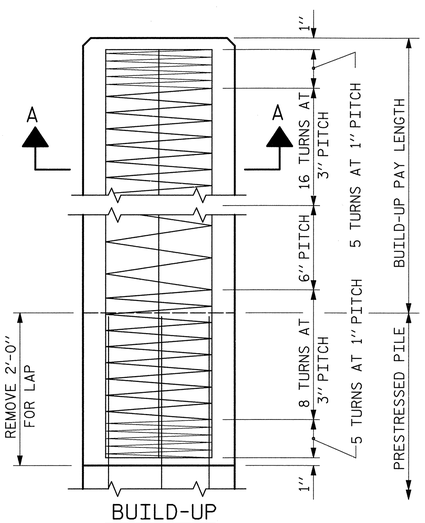

BUILD-UP
WITH DRIVING

QUANTITIES FOR ONE 20'' SQUARE PILE						
	CONCRETE	PILE WT.	ONE PICK-UP POINTS		TWO PICK-UP POINTS	
LENGTH	CU. YDS.	TONS	0.3L	0.7L	0.207L	0.586L
25'-0''	2.56	5.18	7'-6''	17'-6''		
30'-0''	3.07	6.22	9'-0''	21'-0''		
35'-0''	3.58	7.26	10'-6''	24'-6''		
40'-0''	4.09	8.29	12'-0''	28'-0''		
45'-0''	4.61	9.33	13'-6''	31'-6''		
50'-0''	5.12	10.36	15'-0''	35'-0''		
55'-0''	5.63	11.40	16'-6''	38'-6''		
60'-0''	6.14	12.44	18'-0''	42'-0''		
65'-0''	6.65	13.47			13'-5½''	38'-1''
70'-0''	7.17	14.51			14'-6''	41'-0''
75'-0''	7.68	15.55			15'-6½''	43'-11''
80'-0''	8.19	16.58			16'-6½''	46'-11''
85'-0''	8.70	17.62			17'-7''	49'-10''

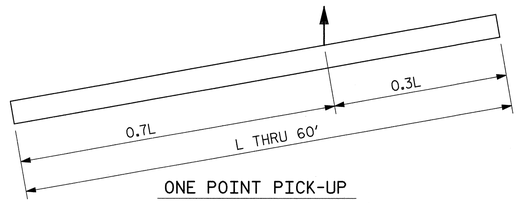

ONE POINT PICK-UP

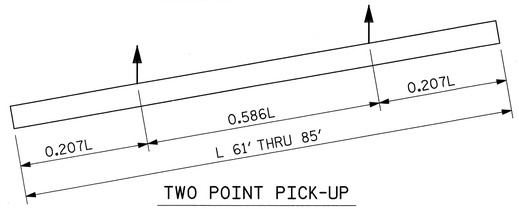

TWO POINT PICK-UP

PICK-UP POINTS

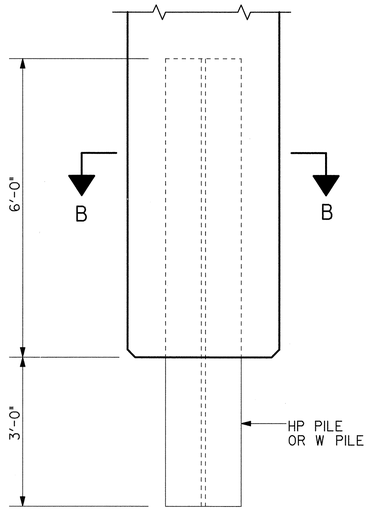

ELEVATION

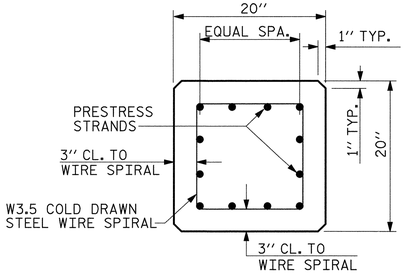

TYPICAL SECTION

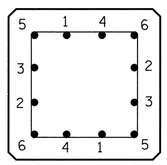

TYPICAL PATTERN
FOR
BURNING STRANDS

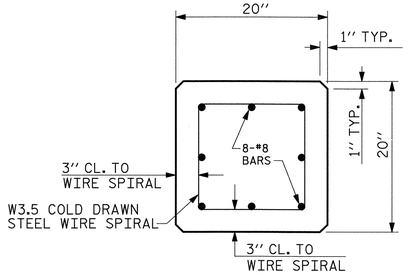

SECTION A-A

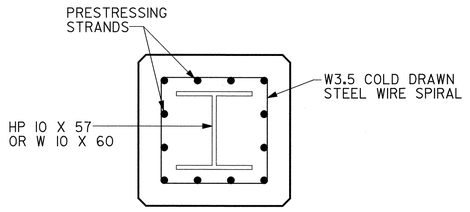

SECTION B-B

PILE TIP DETAILS

NOTES

CONCRETE DESIGN DATA : f'c= 5,000 PSI ;fc= 2,000 PSI

IMPACT IN HANDLING = 50%

IN DRIVING PILES, A METHOD APPROVED BY THE ENGINEER SHALL BE USED, WHEREBY THE HEAD OF THE PILE IS NOT DAMAGED.

PROPOSED DEVICES FOR LIFTING PILES, RECESS DETAILS, AND PATCHING MATERIAL SHALL BE DETAILED IN SHOP DRAWINGS. AFTER ATTACHMENTS HAVE BEEN REMOVED, OPENINGS SHALL BE REPAIRED SUCH THAT THE APPEARANCE OF THE PILE IS UNIFORM.

THE CONTRACTOR SHALL USE THE FOLLOWING STRAND TYPE:

SIZE	GRADE	NUMBER OF STRANDS	AREA	ULTIMATE STRENGTH	APPLIED PRESTRESS FORCE
½''	270 L.R.	12	0.153	41,300# PER STRAND	30,980# PER STRAND

STRANDS SHALL BE EQUALLY SPACED AS SHOWN IN THE ''TYPICAL SECTION''.

A CIRCULAR STRAND PATTERN SHALL NOT BE PERMITTED.

THE SLIP-FORM METHOD OF CASTING PILES WILL NOT BE PERMITTED.

IF STRAND STRESS IS RELIEVED BY BURNING, THE STRANDS SHALL BE BURNED IN OPPOSITE PAIRS AS INDICATED IN THE TYPICAL PATTERN SHOWN. FOR ANY NUMBER OF STRANDS BURN IN OPPOSITE PAIRS AND SYMMETRICAL ABOUT BOTH VERTICAL AND HORIZONTAL AXES, STRANDS 1-1 SHALL BE BURNED BEFORE 2-2, ETC. NOT MORE THAN 4 STRANDS, SAY 5-5 AND 6-6, MAY BE BURNED AT ANY ONE SECTION BEFORE THESE SAME PAIRS OF STRANDS ARE BURNED AT BOTH ENDS OF THE BED AND BETWEEN EACH PAIR OF PILES IN THE BED.

BUILD-UPS SHALL BE OF 'CLASS A' CONCRETE WITH 20% ADDITIONAL CEMENT. NO DRIVING OF THE BUILT-UP PILE WILL BE PERMITTED UNTIL THE CONCRETE HAS REACHED A COMPRESSIVE STRENGTH OF 3,000 P.S.I. AND UNTIL A PERIOD OF SEVEN DAYS HAS ELAPSED SINCE CASTING OF THE BUILD-UP.

ALL PRESTRESSING STRANDS SHALL BE 7-WIRE LOW-RELAXATION GRADE 270 STRANDS AND SHALL CONFORM TO AASHTO M203 EXCEPT FOR SAMPLING REQUIREMENTS WHICH SHALL BE IN ACCORDANCE WITH STANDARD SPECIFICATIONS.

THE TRANSFER OF LOAD FROM THE ANCHORAGES TO THE PILE SHALL BE DONE WHEN THE CONCRETE HAS REACHED A COMPRESSIVE STRENGTH OF NOT LESS THAN 3500 PSI.

THE WATER/CEMENT RATIO FOR CONCRETE PILES SHALL NOT EXCEED 0.40.

PROJECT NO. 42287

PAMLICO COUNTY

STATION: 15+29.77 -L-

REPLACES BRIDGE NO. 35 SHEET 1 OF 1

STATE OF NORTH CAROLINA
DEPARTMENT OF TRANSPORTATION
RALEIGH

STANDARD

20'' PRESTRESSED CONCRETE PILE

REVISIONS						SHEET NO.
NO.	BY:	DATE:	NO.	BY:	DATE:	70
1			3			TOTAL SHEETS
2			4			185

STD. NO. PCP3

PLANS PREPARED BY:

MULKEY
ENGINEERS & CONSULTANTS
PO Box 32127
Raleigh, N.C. 27636
(919) 851-1912
(919) 851-1918 (FAX)
WWW.MULKEYINC.COM

THIS STANDARD DRAWING REVIEWED & ADOPTED FOR USE AT THE REFERENCED LOCATION BY THE UNDERSIGNED:

NORTH CAROLINA PROFESSIONAL SEAL 1966 ENGINEER L. KEVIN AUSTIN
8/6/10

ASSEMBLED BY :	W. B. ALLEN	DATE :	2/09
CHECKED BY :	L. K. AUSTIN	DATE :	3/09
DRAWN BY : WJH 1/89	REV. 6/1/94		EEM/GRP
CHECKED BY : CRK 3/89	REV. 8/16/99R		RAL/LES
	REV. 5/1/06		TLA/GM

8/6/2009 6:05:09 AM G:\project\2004\224.09 Pamlico35\Structures\B5029C_SD_PP_OL.dgn

EROSION CONTROL PLAN

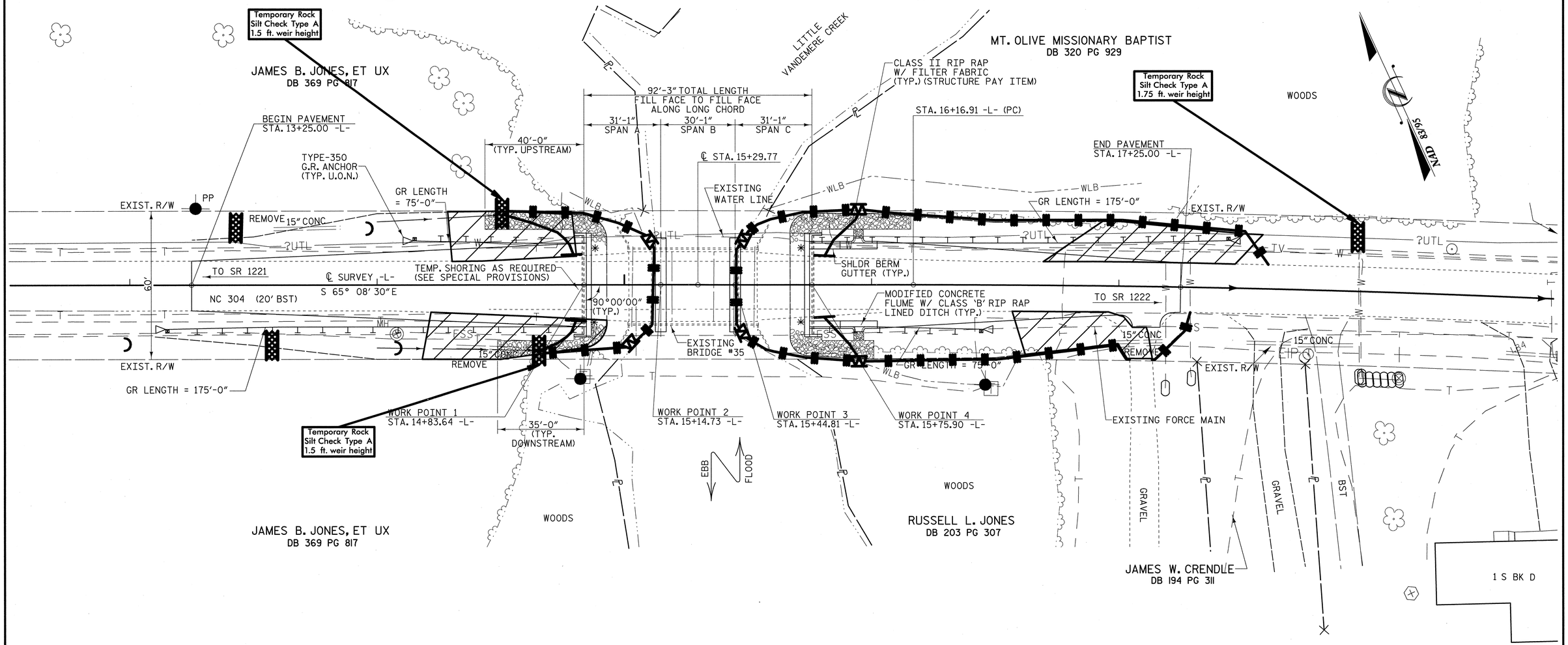

Std. #	Description	Symbol
1605.01	Temporary Silt Fence	
1606.01	Special Sediment Control Fence	
1622.01	Temporary Berms and Slope Drains	
1633.01	Temporary Rock Silt Check Type-A	
	Wattle	

ENVIRONMENTALLY SENSITIVE AREA
PLEASE SEE NOTE

ROADSIDE ENVIRONMENTAL UNIT
DEPARTMENT OF TRANSPORTATION
DIVISION OF HIGHWAYS
RALEIGH, N.C.

2006 STANDARD SPECIFICATIONS

NOTES: ANY DEVIATION FROM OPTIONS GIVEN WILL REQUIRE PRIOR APPROVAL BY ENGINEER.

ADDITIONAL EROSION CONTROL DEVICES MAY NEED TO BE INSTALLED AS DIRECTED BY THE ENGINEER.

PROJECT NO. 42287

PAMLICO COUNTY

STATION: 15+29.77 -L-

REPLACES BRIDGE NO. 35

STATE OF NORTH CAROLINA
DEPARTMENT OF TRANSPORTATION
RALEIGH

BRIDGE ON NC 304 OVER LITTLE VANDEMERE CREEK BETWEEN NC 307 & SR 1222

33'-10" CLEAR ROADWAY - 90° SKEW

REVISIONS						SHEET NO.
NO.	BY:	DATE:	NO.	BY:	DATE:	71
1			3			TOTAL SHEETS
2			4			185

EROSION CONTROL PLAN

STATE OF NORTH CAROLINA
DEPT. OF TRANSPORTATION
DIVISION OF HIGHWAYS
RALEIGH, N.C.

ENGLISH STANDARD DRAWING FOR
TEMPORARY SILT FENCE

SHEET 1 OF 1
1605.01

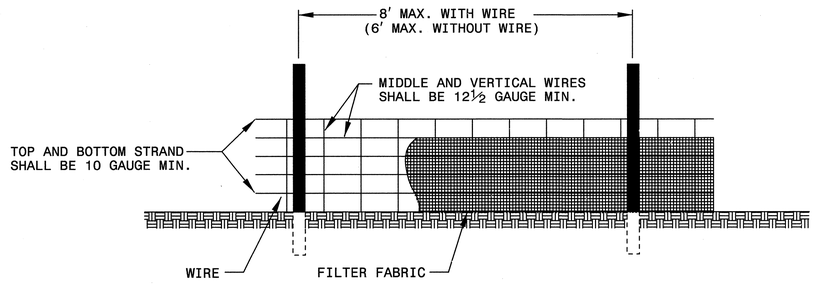

NOTES
USE WIRE A MINIMUM OF 32" IN WIDTH AND WITH A MINIMUM OF 6 LINE WIRES WITH 12" STAY SPACING.
USE FILTER FABRIC A MINIMUM OF 36" IN WIDTH AND FASTEN ADEQUATELY TO THE WIRE AS DIRECTED BY THE ENGINEER.
PROVIDE 5'-0" STEEL POST OF THE SELF-FASTENER ANGLE STEEL TYPE.

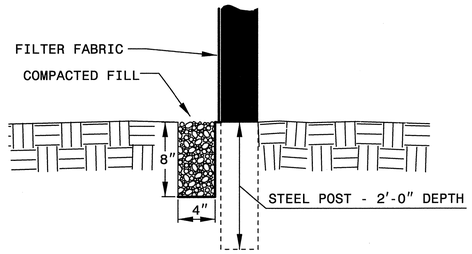

EXTENSION OF FABRIC AND WIRE INTO TRENCH

STATE OF NORTH CAROLINA
DEPT. OF TRANSPORTATION
DIVISION OF HIGHWAYS
RALEIGH, N.C.

ENGLISH STANDARD DRAWING FOR
TEMPORARY SILT FENCE

SHEET 1 OF 1
1605.01

WATTLE WITH POLYACRYLAMIDE DETAIL

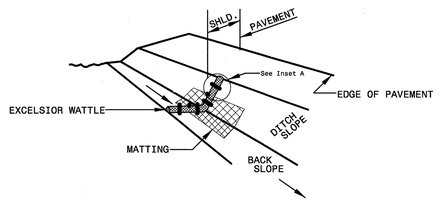

ISOMETRIC VIEW

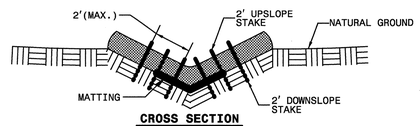

CROSS SECTION VEE DITCH

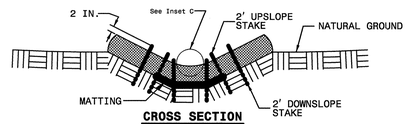

CROSS SECTION TRAPEZOIDAL DITCH

NOTES:

USE MINIMUM 12 IN. DIAMETER EXCELSIOR WATTLE.

USE 2 FT. WOODEN STAKES WITH A 2 IN. BY 2 IN. CROSS SECTION.

INSTALL A MINIMUM OF 2 UPSLOPE STAKES AND 4 DOWNSLOPE STAKES AT AN ANGLE TO WEDGE WATTLE TO BOTTOM OF DITCH.

PROVIDE STAPLES MADE OF 0.125 IN. DIAMETER STEEL WIRE FORMED INTO A U SHAPE NOT LESS THAN 12" IN LENGTH.

INSTALL STAPLES APPROXIMATELY EVERY 1 LINEAR FOOT ON BOTH SIDES OF WATTLE AND AT EACH END TO SECURE IT TO THE SOIL.

INSTALL MATTING IN ACCORDANCE WITH SECTION 1631 OF THE STANDARD SPECIFICATIONS.

PRIOR TO POLYACRYLAMIDE (PAM) APPLICATION, OBTAIN A SOIL SAMPLE FROM PROJECT LOCATION, AND FROM OFFSITE MATERIAL, AND ANALYZE FOR APPROPRIATE PAM FLOCCULANT TO BE APPLIED TO EACH WATTLE.

INITIALLY APPLY 3.5 OUNCES OF ANIONIC OR NEUTRALLY CHARGED POLYACRYLAMIDE (PAM) OVER WATTLE WHERE WATER WILL FLOW AND AFTER EVERY RAINFALL EVENT THAT IS EQUAL TO OR EXCEEDS 0.50 IN.

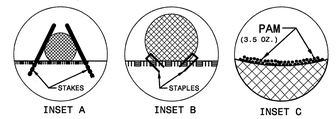

INSET A INSET B INSET C

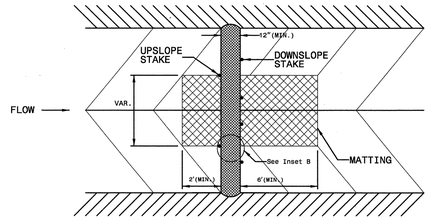

TOP VIEW

STATE OF NORTH CAROLINA
DEPT. OF TRANSPORTATION
DIVISION OF HIGHWAYS
RALEIGH, N.C.

ENGLISH STANDARD DRAWING FOR
SPECIAL SEDIMENT CONTROL FENCE

SHEET 1 OF 1
1606.01

GENERAL NOTES:

USE NO. 5 OR NO. 57 STONE FOR SEDIMENT CONTROL STONE.

USE HARDWARE CLOTH 24 GAUGE WIRE MESH WITH 1/4 INCH MESH OPENINGS.

INSTALL 5 FT. SELF FASTENER ANGLE STEEL POST 2 FT. DEEP MINIMUM.

SPACE POST A MAXIMUM OF 3 FT.

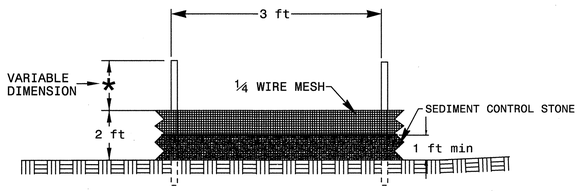

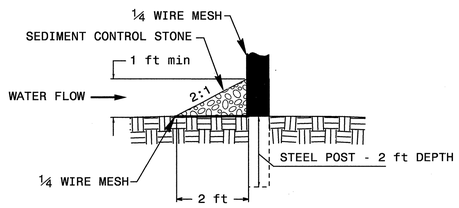

STATE OF NORTH CAROLINA
DEPT. OF TRANSPORTATION
DIVISION OF HIGHWAYS
RALEIGH, N.C.

ENGLISH STANDARD DRAWING FOR
SPECIAL SEDIMENT CONTROL FENCE

SHEET 1 OF 1
1606.01

PROJECT NO. 42287

PAMLICO COUNTY

STATION: 15+29.77 -L-

REPLACES BRIDGE NO. 35

ROADSIDE ENVIRONMENTAL UNIT
DEPARTMENT OF TRANSPORTATION
DIVISION OF HIGHWAYS
RALEIGH, N.C.

2006 STANDARD SPECIFICATIONS

NOTES: ANY DEVIATION FROM OPTIONS GIVEN WILL REQUIRE PRIOR APPROVAL BY ENGINEER.

ADDITIONAL EROSION CONTROL DEVICES MAY NEED TO BE INSTALLED AS DIRECTED BY THE ENGINEER.

STATE OF NORTH CAROLINA
DEPARTMENT OF TRANSPORTATION
RALEIGH

BRIDGE ON NC 304 OVER LITTLE VANDEMERE CREEK BETWEEN NC 307 & SR 1222

33'-10" CLEAR ROADWAY - 90°SKEW

REVISIONS						SHEET NO.
NO.	BY:	DATE:	NO.	BY:	DATE:	72
1			3			TOTAL SHEETS
2			4			185

EROSION CONTROL PLAN

STATE OF NORTH CAROLINA
DEPT. OF TRANSPORTATION
DIVISION OF HIGHWAYS
RALEIGH, N.C.

ENGLISH STANDARD DRAWING FOR

TEMPORARY ROCK SILT CHECK TYPE 'A'

SHEET 1 OF 1

1633.01

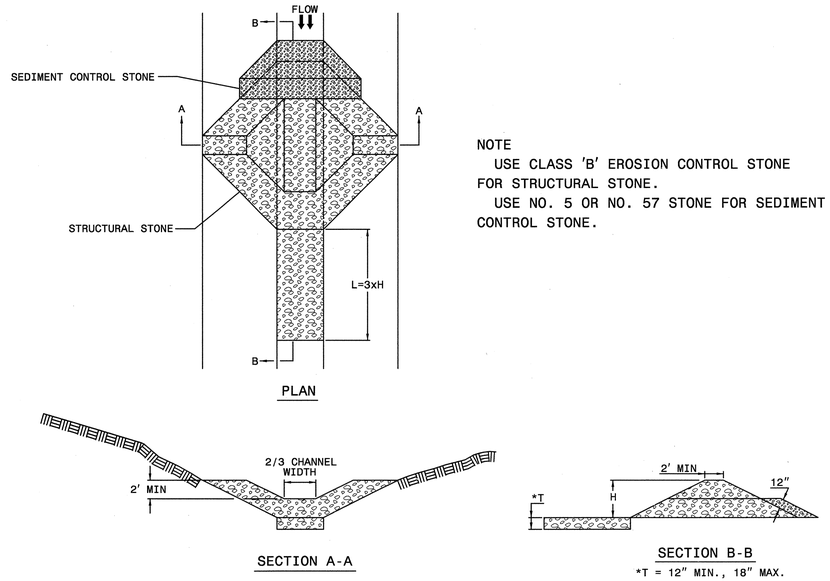

NOTE
USE CLASS 'B' EROSION CONTROL STONE FOR STRUCTURAL STONE.
USE NO. 5 OR NO. 57 STONE FOR SEDIMENT CONTROL STONE.

STATE OF NORTH CAROLINA
DEPT. OF TRANSPORTATION
DIVISION OF HIGHWAYS
RALEIGH, N.C.

ENGLISH STANDARD DRAWING FOR

TEMPORARY ROCK SILT CHECK TYPE 'A'

SHEET 1 OF 1

1633.01

FLOATING TURBIDITY CURTAIN:

Description

This work consists of the installation of a Floating Turbidity Curtain to deter silt suspension and movement of silt particles during construction. The floating turbidity curtain shall be constructed at locations as directed.

Materials

The curtain material shall be made of a tightly woven nylon, plastic or other non–deteriorating material meeting the following specifications:

Property	Value
Grab tensile strength	*md–370 lbs *cd–250 lbs
Mullen burst stength	480 psi
Trapezoid tear strength	*md–100 lbs *cd–60 lbs
Apparent opening size	70 US standard sieve
Percent open area	4% permittivity 0.28 sec–1

*md – machine direction
*cd – cross machine direction

In the event that more than one width of fabric is required, a 6" overlap of the material shall also be required.

The curtain material shall be supported by a flotation material having over 29 lbs/ft buoyancy. The floating curtain shall have a 5/16" galvanized chain as ballast and dual 5/16" galvanized wire ropes with a heavy vinyl coating as load lines.

Construction Methods

The Contractor shall maintain the Floating Turbidity Curtain in a satisfactory condition until its removal is requested by the Engineer.

Measurement and Payment

Floating Turbidity Curtain will be paid for at the contract price for "Lump Sum for Erosion Control". Such payment will be full compensation including but not limited to installation, maintenance, removal and incidentals necessary to complete this work.

STATE OF NORTH CAROLINA
DEPT. OF TRANSPORTATION
DIVISION OF HIGHWAYS
RALEIGH, N.C.
1-02

ENGLISH STANDARD DRAWING FOR

GUIDE FOR TEMPORARY BERMS AND SLOPE DRAIN

SHEET 1 OF 1

1622.01

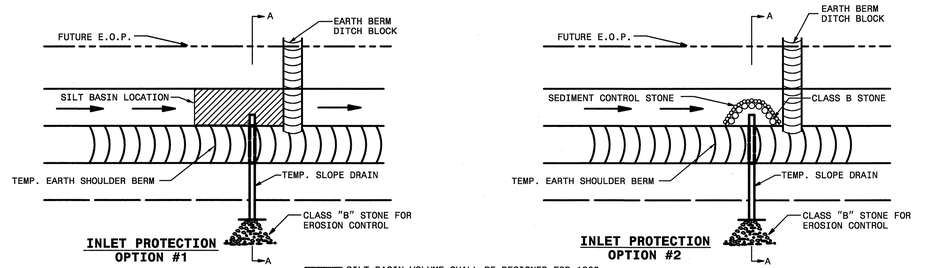

SILT BASIN VOLUME SHALL BE DESIGNED FOR 1800 CUBIC FEET OF SEDIMENT STORAGE PER DISTURBED ACRE.

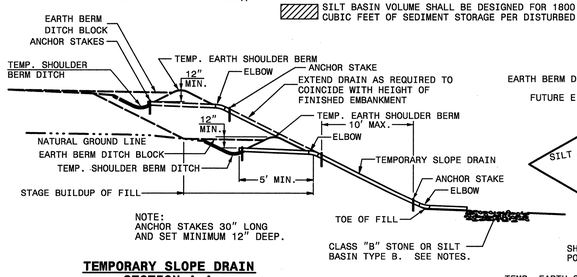

NOTE:
ANCHOR STAKES 30" LONG AND SET MINIMUM 12" DEEP.

TEMPORARY SLOPE DRAIN SECTION A-A

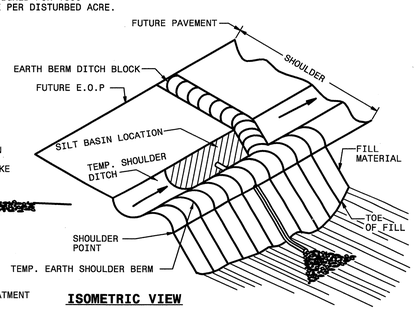

ISOMETRIC VIEW

NOTES:
1. OPEN END PIPE WITH MINIMUM SETBACK AND PROPER COMPACTION IS AN ACCEPTABLE INLET TREATMENT FOR STAGED CONSTRUCTION WHEN NOT LEFT IN PLACE FOR MORE THAN 30 DAYS.
2. DESIGN INLET PROTECTION OPTION #2 FOR 1800 CUBIC FOOT OF SEDIMENT STORAGE PER DISTURBED ACRE.
3. DESIGN SILT BASINS WITH A 2:1 LENGTH TO WIDTH RATIO MINIMUM.
4. USE CLASS B STONE FOR EROSION CONTROL AT OUTLET LOCATIONS SUBJECT TO SCOURING. SILT BASINS AND/OR OTHER EROSION CONTROL DEVICES MAY ALSO BE UTILIZED TO PREVENT SCOUR AT OUTLET LOCATIONS.
5. USE MAXIMUM SLOPE DRAIN SPACING OF 200 FT.

STATE OF NORTH CAROLINA
DEPT. OF TRANSPORTATION
DIVISION OF HIGHWAYS
RALEIGH, N.C.
1-02

ENGLISH STANDARD DRAWING FOR

GUIDE FOR TEMPORARY BERMS AND SLOPE DRAIN

SHEET 1 OF 1

1622.01

PROJECT NO. 42287

PAMLICO COUNTY

STATION: 15+29.77 -L-

REPLACES BRIDGE NO. 35

ROADSIDE ENVIRONMENTAL UNIT
DEPARTMENT OF TRANSPORTATION
DIVISION OF HIGHWAYS
RALEIGH, N.C.

2006 STANDARD SPECIFICATIONS

NOTES: ANY DEVIATION FROM OPTIONS GIVEN WILL REQUIRE PRIOR APPROVAL BY ENGINEER.

ADDITIONAL EROSION CONTROL DEVICES MAY NEED TO BE INSTALLED AS DIRECTED BY THE ENGINEER.

STATE OF NORTH CAROLINA
DEPARTMENT OF TRANSPORTATION
RALEIGH

BRIDGE ON NC 304 OVER LITTLE VANDEMERE CREEK BETWEEN NC 307 & SR 1222

33'-10" CLEAR ROADWAY - 90°SKEW

REVISIONS					
NO.	BY:	DATE:	NO.	BY:	DATE:
1			3		
2			4		

SHEET NO. 73

TOTAL SHEETS 185

EROSION CONTROL PLAN

WATTLES WITH POLYACRYLAMIDE (PAM):

Description

Wattles are tubular products consisting of excelsior fibers encased in synthetic netting. Wattles are used on slopes or channels to intercept runoff and act as a velocity break. Wattles are to be placed at locations shown on the plans or as directed. Installation shall follow the detail provided in the plans and as directed. Work includes furnishing materials, installation of wattles, matting installation, PAM application, and removing wattles.

Materials

Wattle shall meet the following specifications:

100% Curled Wood(Excelsior) Fibers
Minimum Diameter – 12 in.
Minimum Density – 2.6 lbft3 +/– 10%
Net Material – Synthetic
Net Openings – 1 in. x 1 in.
Net Configuration – Totally Encased
Minimum Weight – 20 lb. +/– 10% per 10 ft. length

Anchors: Stakes shall be used as anchors.

Wooden Stakes:

Provide hardwood stakes a minimum of 2–ft. long with a 2 in. x 2 in. nominal square cross section. One end of the stake must be sharpened or beveled to facilitate driving down into the underlying soil.

Matting shall meet the requirements of section 1060–8 of the Standard Specifications, or shall meet specifications provided elsewhere in this contract.

Provide staples made of 0.125" diameter new steel wire formed into a u shape not less than 12" in length with a throat of 1" in width.

Polyacrylamide (PAM) shall be applied in powder form and shall be anionic or neutrally charged. Soil samples shall be obtained in areas where the wattles will be placed, and from offsite material used to construct roadway, and analyzed for the appropriate PAM flocculant to be utilized with each wattle.

Construction Methods

Wattles shall be secured to the soil by wire staples approximately every 1 linear foot and at the end of each section of wattle. A minimum of 4 stakes shall be installed on the downstream side of the wattle with a maximum spacing of 2 linear feet along the wattle, and according to the detail. Install a minimum of 2 stakes on the upstream side of the wattle according to the detail provided in the plans. Stakes shall be driven into the ground a minimum of 10 in. with no more than 2 in. projecting from the top of the wattle. Drive stakes at an angle according to the detail provided in the plans.

Install wattles to the top of the ditch according to the detail provided in the plans. Overlap adjoining sections of wattles a minimum of 6 in.

Installation of matting shall be in accordance with the detail provided in the plans, and in accordance with section 1631–3(B) of the Standard Specifications, or in accordance with specifications provided elsewhere in this contract.

Apply PAM over the lower center portion of the wattle where the water is going to flow over at a rate of 3.5 ounces per wattle. PAM applications shall be done during construction activities after every rainfall event that is equal to or exceeds 0.50 in.

The Contractor shall maintain the wattles until the project is accepted or until the wattles are removed, and shall remove and dispose of silt accumulations at the wattles when so directed in accordance with the requirements of Section 1630 of the Standard Specifications.

The quantity of wattle(s), wooden stakes, staples, matting and PAM as measured above will be paid for at contract price for "Lump Sum for Erosion Control". Such price and payment will be full compensation for all work covered by this provision, including but not limted to, furnishing all materials, placing and maintaining the wattle(s), and removal and disposal of silt accumulations and wattle.

Reforestation:

Reforestation will be planted within interchanges and along the outside borders of the road, and in other areas as directed. Reforestation is not shown on the plan sheets. See the Reforestation Detail Sheet.

All non–maintained riparian buffers impacted by the placement of temporary fill or clearing activities shall be restored to the preconstruction contours and revegetated with native woody species.

The entire Reforestation operation shall comply with the requirements of Section 1670 of the Standard Specifications.

Reforestation shall be bare root seedlings 12"–18" tall.

Reforestation shall be shall be planted as soon as practical following permanent Seeding and Mulching. The seedlings shall be planted in a 16–foot wide swath adjacent to mowing pattern line, or as directed.

Root dip: The roots of reforestation seedlings shall be coated with a slurry of water, and either a fine clay (kaolin) or a superabsorbent that is designated as a bare root dip. The type, mixture ratio, method of application, and the time of application shall be submitted to the Engineer for approval.

With the approval of the Engineer, seedlings may be coated before delivery to the job or at the time of planting, but at no time shall the roots of the seedlings be allowed to dry out. The roots shall be moistened immediately prior to planting.

Seasonal Limitations: Reforestation shall be planted from November 15 through March 15.

Payment for Reforestation will be included in the contract bid price for Lump Sum for Erosion Control.

Special Sediment Control Fence:

Description:

The work covered by this section consists of the construction, maintenance, and removal of special sediment control fence. Place special sediment control fence as shown on the plans or as directed by the Engineer.

Materials:

(A) Posts:

Steel posts shall be at least 5 feet in length, approximately 1 3/8 inches wide measured parallel to the fence, and have a minimum weight of 1.25 lbft of length. The post shall be equipped with an anchor plate having a minimum area of 14.0 square inches, and shall have a means of retaining wire in the desired position without displacement.

(B) 1/4 inch Hardware Cloth:

Hardware cloth shall have 1/4 inch openings constructed from #24 gauge wire. Install hardware cloth according to the detail shown on the plans.

(C) Sediment Control Stone:

Sediment control stone shall meet the requirements of Section 1005. Install stone according to the detail shown on the plans.

Maintenance and Removal:

The Contractor shall maintain the special sediment control fence until the project is accepted or until the fence is removed, and shall remove and dispose of silt accumulations at the fence when so directed by the Engineer in accordance with Section 1630.

The quantity of posts, sediment control stone and hardware cloth as measured above will be paid for at the contract price for "Lump Sum for Erosion Control". Such price and payment will be full compensation for all work covered by this provision, including but not limited to, furnishing all materials, installation, and removal and disposal of silt accumulations and materials.

Environmentally Sensitive Areas:

This project is located in an "Environmentally Sensitive Area." This designation requires special procedures to be used for clearing and grubbing, temporary stream crossings, and grading operations within the area identified on the plans. This also requires special procedures to be used for seeding and mulching and staged seeding within the project.

Clearing and Grubbing:

In areas identified on the erosion control plans as "Environmentally Sensitive Areas", the Contractor may perform clearing operations, but not grubbing operations until immediately prior to beginning grading operations as described in Section 200, Article 200–1, in the Standard Specifications. The "Environmentally Sensitive Area" shall be defined as a 50 foot buffer zone on both sides of the stream (or depression), measured from top of streambank, (or center of depression). Only clearing operations (not grubbing) shall be allowed in this buffer zone until immediately prior to beginning grading operations. Erosion control devices shall be installed immediately following the clearing operation.

Grading:

Once grading operations begin in identified "Environmentally Sensitive Areas", work will progress in a continuous manner until complete. All construction within these areas must progress in a continuous manner such that each phase is complete and areas permanently stabilized prior to beginning of next phase. Failure on the part of the Contractor to complete any phase of construction in a continuous manner in "Environmentally Sensitive Areas" as specified will be just cause for the Engineer to direct the suspension of work in accordance with Section 108–7 of the Standard Specifications.

Temporary Stream Crossings:

Any crossing of streams within the limits of this project must be accomplished in accordance with Section 107–13(b) of the Standard Specifications.

Seeding and Mulching:

Seeding and mulching shall be performed in accordance with Section 1660 of the Standard Specifications and vegetative cover sufficient to restrain erosion shall be installed immediately following grade establishment.

Seeding and mulching shall be performed on the areas disturbed by construction immediately following final grade establishment. No appreciable time shall lapse into the contract time without stabilization of slopes, ditches and other areas within the "Environmentally Sensitive Areas" as indicated on the erosion control plans.

Stage Seeding:

The work covered by this section shall consist of the establishment of a vegetative cover on cut and fill slopes as grading progresses. Seeding and mulching shall be done in stages on cut and fill slopes which are greater than 20 feet in height measured along the slope, or greater than 2 acres in area. Each stage shall not exceed the limits stated above.

All work described above will be paid for at the contract price for "Lump Sum for Erosion Control " established in the contract for the work involved. Additional payments will not be made for the requirements of this section as the cost for this work should be included in the contract price for "Lump Sum for Erosion Control" for the work involved.

SAFETY FENCE:

Description

Safety Fence shall consist of furnishing, installing and maintaining polyethylene or polypropylene fence along the outside riparian buffer, wetland, or water boundary located within the construction corridor to mark the areas that have been approved to infringe within the buffer, wetland or water. The fence shall be installed prior to any land disturbing activities.

Materials

Polyethylene or polypropylene fence shall be a highly visible preconstructed safety fence approved by the Engineer. The fence material shall have an ultraviolet coating.

Either wood posts or steel posts may be used. Wood posts shall be hardwood with a wedge or pencil tip at one end, and shall be at least 5 ft. in length with a minimum nominal 2" x 2" cross section. Steel posts shall be at least 5 ft. in length, and have a minimum weight of 0.85 lb./ft. of length.

Construction Methods

No additional clearing and grubbing is anticipated for the installation of this fence; however, if any clearing and grubbing is required, it will be the minimum required for the installation of the safety fence. Such clearing shall include satisfactory removal and disposal of all trees, brush, stumps and other objectionable material.

The fence shall be erected to conform to the general contour of the ground. When determined necessary, minor grading along the fence line shall be performed to meet this requirement provided no obstructions to proper drainage are created.

Posts shall be set and maintained in a vertical position and may be hand set or set with a post driver. If hand set, all backfill material shall be thoroughly tamped. Wood posts may be sharpened to a dull point if power driven. Posts damaged by power driving shall be removed and replaced prior to final acceptance. The tops of all wood posts shall be cut at a 30–degree angle. The wood posts may, at the option of the Contractor, be cut at this angle either before or after the posts are erected.

The fence fabric shall be attached to the wood posts with one 2" galvanized wire staple across each cable or to the steel posts with wire or other acceptable means.

The Contractor shall be required to maintain the safety fence in a satisfactory condition for the duration of the project as determined by the Engineer.

Measurement and Payment

Safety Fence will be paid for at the contract price for "Lump Sum for Erosion Control". Such payment will be full compensation including but not limited to clearing and grading, furnishing and installing fence fabric with necessary posts and post bracing, staples, tie wires, tools, equipment and incidentals necessary to complete this work.

PROJECT NO. 42287

PAMLICO COUNTY

STATION: 15+29.77 -L-

REPLACES BRIDGE NO. 35

ROADSIDE ENVIRONMENTAL UNIT
DEPARTMENT OF TRANSPORTATION
DIVISION OF HIGHWAYS
RALEIGH, N.C.

2006 STANDARD SPECIFICATIONS

NOTES: ANY DEVIATION FROM OPTIONS GIVEN WILL REQUIRE PRIOR APPROVAL BY ENGINEER.

ADDITIONAL EROSION CONTROL DEVICES MAY NEED TO BE INSTALLED AS DIRECTED BY THE ENGINEER.

STATE OF NORTH CAROLINA
DEPARTMENT OF TRANSPORTATION
RALEIGH

BRIDGE ON NC 304 OVER LITTLE VANDEMERE CREEK BETWEEN NC 307 & SR 1222

33'-10" CLEAR ROADWAY - 90°SKEW

REVISIONS						SHEET NO.
NO.	BY:	DATE:	NO.	BY:	DATE:	74
1			3			TOTAL SHEETS
2			4			185

STATE	STATE PROJECT REFERENCE NO.	SHEET NO.	TOTAL SHEETS
N.C.	B-5129 (BRIDGE NO. 35)	75	185
STATE PROJ. NO.	F. A. PROJ. NO.	DESCRIPTION	

PLANTING DETAILS

SEEDLING / LINER BAREROOT PLANTING DETAIL

HEALING IN

1. Locate a healing-in site in a shady, well protected area.
2. Excavate a flat bottom trench 12 inches deep and provide drainage.

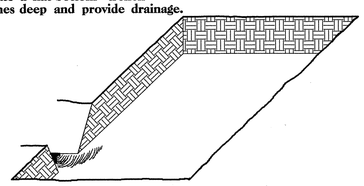

3. Backfill the trench with 2 inches well rotted sawdust. Place a 2 inch layer of well rotted sawdust at a sloping angle at one end of the trench.

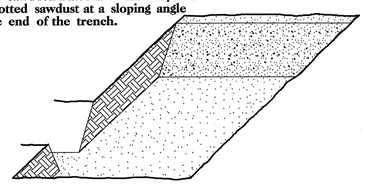

4. Place a single layer of plants against the sloping end so that the root collar is at ground level.

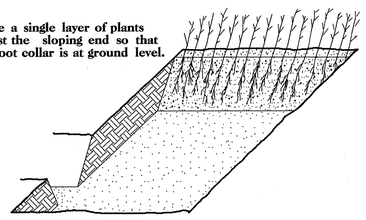

5. Place a 2 inch layer of well rotted sawdust over the roots maintaining a sloping angle.

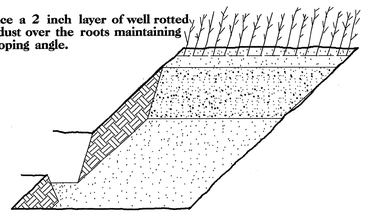

6. Repeat layers of plants and sawdust as necessary and water thoroughly.

DIBBLE PLANTING METHOD USING THE KBC PLANTING BAR

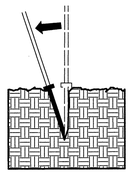

1. Insert planting bar as shown and pull handle toward planter.

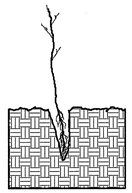

2. Remove planting bar and place seedling at correct depth.

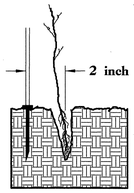

3. Insert planting bar 2 inches toward planter from seedling.

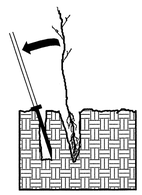

4. Pull handle of bar toward planter, firming soil at bottom.

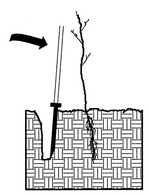

5. Push handle forward firming soil at top.

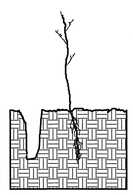

6. Leave compaction hole open. Water thoroughly.

PLANTING NOTES:

PLANTING BAG
During planting, seedlings shall be kept in a moist canvas bag or similar container to prevent the root systems from drying.

KBC PLANTING BAR
Planting bar shall have a blade with a triangular cross section, and shall be 12 inches long, 4 inches wide and 1 inch thick at center.

ROOT PRUNING
All seedlings shall be root pruned, if necessary, so that no roots extend more than 10 inches below the root collar.

REFORESTATION

☐ TREE REFORESTATION SHALL BE PLANTED 6 FT. TO 10 FT. ON CENTER, RANDOM SPACING, AVERAGING 8 FT. ON CENTER, APPROXIMATELY 680 PLANTS PER ACRE.

REFORESTATION

MIXTURE, TYPE, SIZE, AND FURNISH SHALL CONFORM TO THE FOLLOWING:

25%	LIRIODENDRON TULIPIFERA	TULIP POPLAR	12 in – 18 in BR
25%	QUERCUS LAURIFOLIA	LAUREL OAK	12 in – 18 in BR
25%	FRAXINUS PENNSYLVANICA	GREEN ASH	12 in – 18 in BR
25%	BETULA NIGRA	RIVER BIRCH	12 in – 18 in BR

REFORESTATION DETAIL SHEET

N.C.D.O.T. - ROADSIDE ENVIRONMENTAL UNIT

PROJECT REFERENCE NO.	SHEET NO.
B-5129 (BRIDGE #35)	76

DIVISION OF HIGHWAYS
STATE OF NORTH CAROLINA

SOIL STABILIZATION SUMMARY SHEET

MATTING FOR EROSION CONTROL

CONST SHEET NO.	LINE	FROM STATION	TO STATION	SIDE	ESTIMATE (SY)
1	-L-	14+00	14+50	LT	25
				SUBTOTAL	25
MISCELLANEOUS MATTING TO BE INSTALLED AS DIRECTED BY THE ENGINEER					100
				TOTAL	125
				SAY	125

MATTING FOR EROSION CONTROL

CONST SHEET NO.	LINE	FROM STATION	TO STATION	SIDE	ESTIMATE (SY)

B-5129

#40 PAMLICO

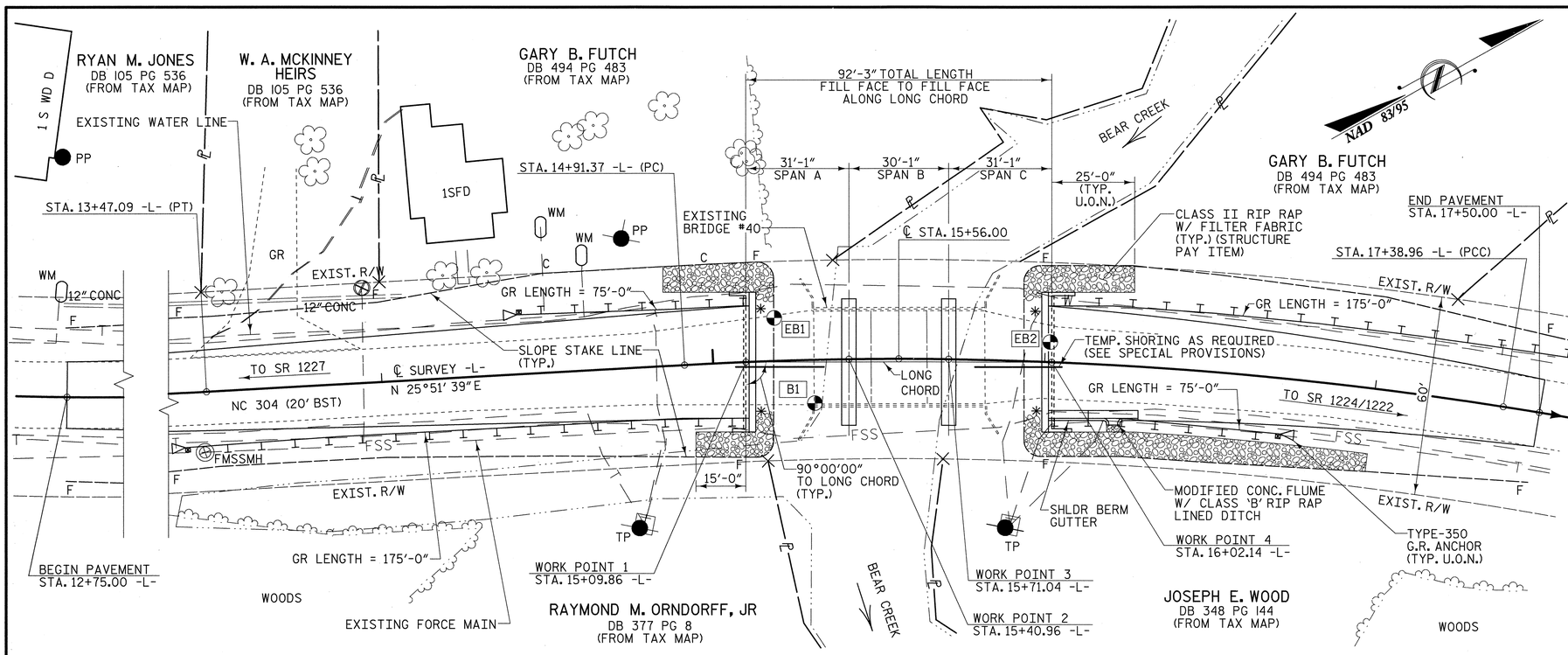

PLAN

SCALE : 1" = 20'

EXISTING BRIDGE No. 40
28'-1" CLEAR ROADWAY
SPANS: 1 @ 17'-8", 1 @ 16'-11", 1 @ 17'-9"
RC FLOOR ON TIMBER JOISTS
END BENTS & INT. BENTS-
TIMBER CAPS/TIMBER PILES

TBM:
RR SPIKE IN 21" PINE
61.61' LEFT OF -L- STA. 15+00.90
ELEV. 3.64

EXISTING UTILITIES TO BE RELOCATED BY OTHERS PRIOR TO PROJECT LETTING

DENOTES GEO-TECH BORE HOLE LOCATIONS.

* DENOTES GUARDRAIL CONNECTION REQ'D. (TYPE III) SEE "GUARDRAIL ANCHORAGE DETAILS" SHEET.

NOTE: GUARDRAIL LENGTHS AS SHOWN INCLUDE ANCHOR UNITS.

U.O.N. - UNLESS OTHERWISE NOTED

FOR PAVEMENT LAYOUT, SEE "ROADWAY DETAILS" SHEET.

HYDROGRAPHIC DATA:

DESIGN DISCHARGE -	670 CFS
FREQUENCY OF DESIGN FLOOD -	50 YEAR
DESIGN HIGH WATER ELEVATION -	2.9
DRAINAGE AREA -	2.8 SQ. MI.
BASIC DISCHARGE (Q 100) -	850 CFS
BASIC HIGH WATER ELEVATION -	3.4

OVERTOPPING FLOOD DATA:

OVERTOPPING DISCHARGE -	1150 CFS
FREQUENCY OF OVERTOPPING FLOOD -	500 YEAR (-)
OVERTOPPING FLOOD ELEVATION -	4.2

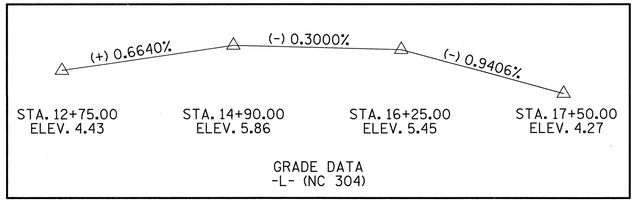

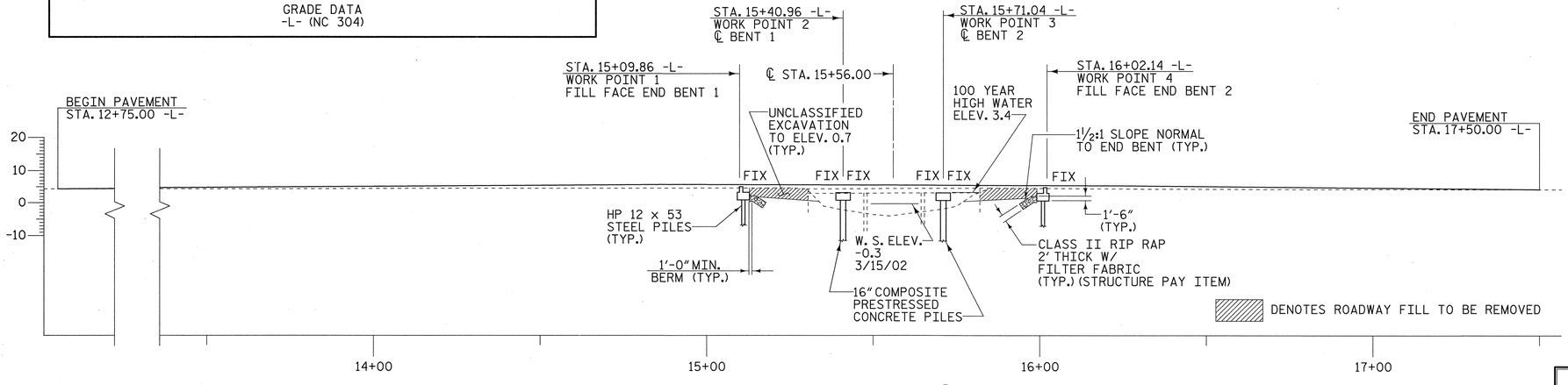

PROFILE ALONG ℄ SURVEY

SCALE : 1" = 20'

NOTES

ASSUMED LIVE LOAD = HS 20 OR ALTERNATE LOADING, EXCEPT THAT CORED SLAB UNITS HAVE BEEN DESIGNED FOR HS 25.

FOR EROSION CONTROL MEASURES SEE EROSION CONTROL PLANS.

CLEARING ON THIS PROJECT SHALL BE PERFORMED TO THE LIMITS ESTABLISHED BY METHOD II.

REMOVAL OF EXISTING BRIDGE SHALL INCLUDE REMOVAL OF THE EXISTING ABUTMENTS AND BENTS ALONG WITH ALL EXISTING PILES. AS WELL AS REMNANT PILINGS FROM PREVIOUS BRIDGES, AS PER THE CAMA PERMIT.

THIS BRIDGE HAS BEEN DESIGNED BY THE STRENGTH DESIGN METHOD AS SPECIFIED IN AASHTO STANDARD SPECIFICATIONS.

THIS STRUCTURE CONTAINS THE FOLLOWING PRECAST CONCRETE PIECES: BENT CAPS, END BENT CAPS, BACKWALLS, WINGWALLS, AND WING FOOTINGS. EACH PRECAST CONCRETE PIECE SHALL BE STENCILED WITH ITS PIECE MARK. SEE PIECE MARKS CONTAINED IN THESE PLANS.

CLASS AA (4500 PSI) CONCRETE SHALL BE USED IN ALL PRECAST PIECES LISTED ABOVE AND SHALL CONTAIN CALCIUM NITRITE CORROSION INHIBITOR IN ACCORDANCE WITH THE STANDARD SPECIFICATIONS.

REMOVAL OF THE EXISTING BRIDGE SHALL BE PERFORMED SO AS NOT TO ALLOW DEBRIS TO FALL INTO THE WATER. THE CONTRACTOR SHALL REMOVE THE BRIDGE AND SUBMIT PLANS FOR THE DEMOLITION IN ACCORDANCE WITH ARTICLE 402-2 OF THE STANDARD SPECIFICATIONS.

THE SUBSTRUCTURE OF THE EXISTING BRIDGE INDICATED ON THE PLANS IS FROM THE BEST INFORMATION AVAILABLE. SINCE THIS INFORMATION IS SHOWN FOR THE CONVENIENCE OF THE CONTRACTOR, THE CONTRACTOR SHALL HAVE NO CLAIM WHATSOEVER AGAINST THE DEPARTMENT OF TRANSPORTATION FOR ANY DELAYS OR ADDITIONAL COST INCURRED BASED ON DIFFFERENCES BETWEEN THE EXISTING BRIDGE SUBSTRUCTURE SHOWN ON THE PLANS AND THE ACTUAL CONDITIONS AT THE PROJECT SITE.

THIS STRUCTURE HAS BEEN DESIGNED IN ACCORDANCE WITH HEC 18, "EVALUATING SCOUR AT BRIDGES", MAY 2001.

THE SCOUR CRITICAL ELEVATION FOR INTERIOR BENTS No. 1 AND 2 IS -13 FT. THE SCOUR CRITICAL ELEVATIONS ARE FOR USE BY MAINTENANCE FORCES TO MONITOR POSSIBLE SCOUR PROBLEMS DURING THE LIFE OF THE STRUCTURE.

THIS STRUCTURE HAS BEEN DESIGNED IN ACCORDANCE WITH FHWA'S TECHNICAL ADVISORY T5140.20 (SCOUR AT BRIDGES).

THIS BRIDGE HAS BEEN DESIGNED IN ACCORDANCE WITH THE REQUIREMENTS OF THE STANDARD SPECIFICATIONS FOR SEISMIC DESIGN OF HIGHWAY BRIDGES FOR SEISMIC CATEGORY A.

ADT = 1600 FOR YEAR 2001

ROADWAY APPROACH EMBANKMENT SHALL BE WIDENED AS NECESSARY FOR GUARDRAIL INSTALLATION.

THIS STRUCTURE CONTAINS THE NECESSARY CORROSION PROTECTION REQUIRED FOR A CORROSIVE SITE.

ALL BAR SUPPORTS USED IN THE PRECAST PIECES AND ALL INCIDENTAL REINFORCING STEEL SHALL BE EPOXY COATED IN ACCORDANCE WITH THE STANDARD SPECIFICATIONS.

(NOTES CONTINUED ON "FOUNDATION LAYOUT" SHEET)

PROJECT NO. 42287

PAMLICO COUNTY

STATION: 15+56.00 -L-

REPLACES BRIDGE NO. 40

STATE OF NORTH CAROLINA
DEPARTMENT OF TRANSPORTATION
RALEIGH

BRIDGE ON NC 304 OVER BEAR CREEK BETWEEN SR 1227 & SR 1224/1222

33'-10" CLEAR ROADWAY - 90° SKEW

NORTH CAROLINA PROFESSIONAL SEAL 19661 ENGINEER L. KEVIN AUSTIN 6/7/09

PLANS PREPARED BY:

MULKEY
ENGINEERS & CONSULTANTS
PO Box 33127
Raleigh, N.C. 27636
(919) 851-1982
(919) 851-1918 (FAX)
WWW.MULKEYINC.COM

REVISIONS						SHEET NO.
NO.	BY:	DATE:	NO.	BY:	DATE:	77
1			3			TOTAL SHEETS
2			4			185

DRAWN BY : W. B. ALLEN DATE : 2/05
CHECKED BY : L. K. AUSTIN DATE : 11/05

6/5/2009 h3b53 PM R:\Structures\B5290_SD_GD_04.dgn

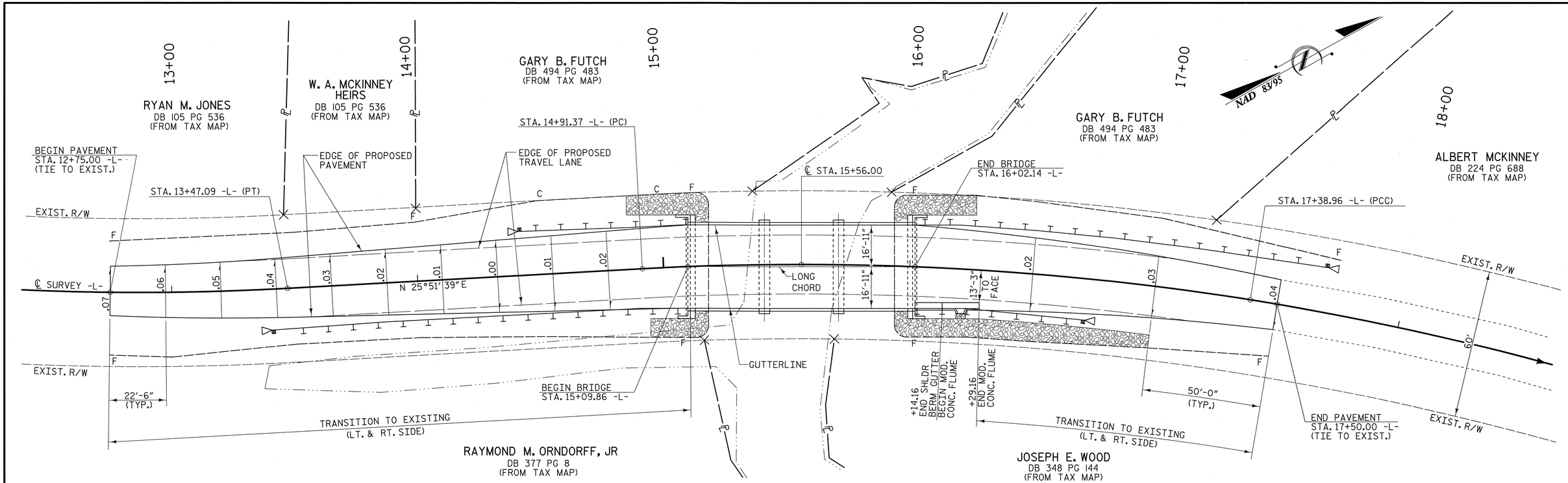

PAVEMENT LAYOUT DETAIL

SCALE : 1" = 20'

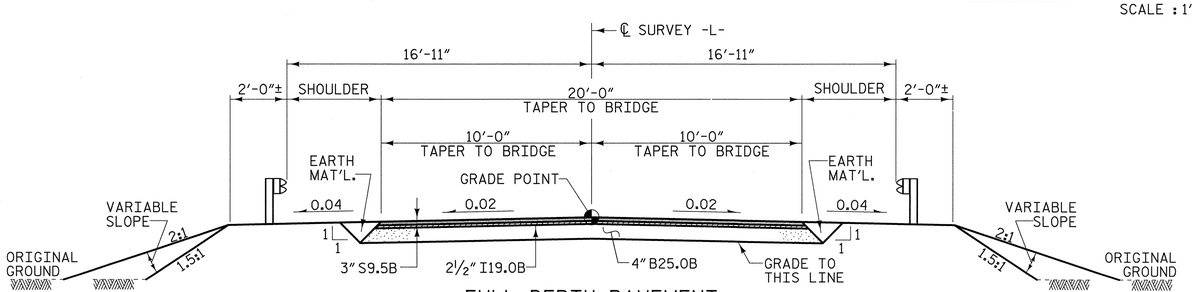

FULL DEPTH PAVEMENT

FROM -L- STA. 15+00 TO BEGIN BRIDGE
FROM END BRIDGE TO -L- STA. 16+10

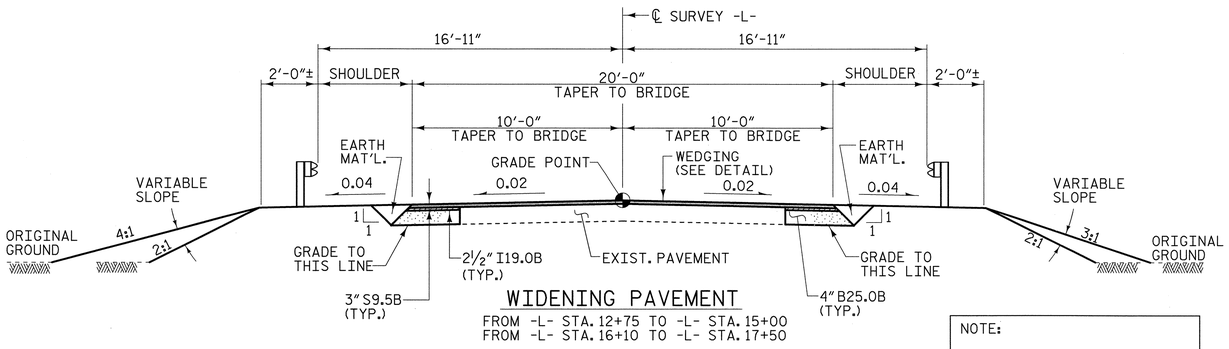

WIDENING PAVEMENT

FROM -L- STA. 12+75 TO -L- STA. 15+00
FROM -L- STA. 16+10 TO -L- STA. 17+50

TYPICAL ROADWAY SECTION

WITHIN CONSTRUCTION LIMITS

NOTE:

FOR FILL IN WATER
SEE ROCK EMBANKMENT DETAIL
SHEET 2-A

HORIZONTAL CURVE DATA

PI STA. 11+99.14	PI STA. 16+15.63	PI STA. 18+64.96
△ = 15°55' 18" (LT)	△ = 12°07' 18" (RT)	△ = 12°04' 22" (RT)
D = 5°20' 45"	D = 4°53' 45"	D = 4°48' 31"
L = 297.84'	L = 247.59'	L = 251.06'
T = 149.88'	T = 124.26'	T = 126.00'
R = 1071.80'	R = 1170.29'	R = 1191.50'

DATUM DESCRIPTION

THE LOCALIZED COORDINATE SYSTEM DEVELOPED FOR THIS PROJECT IS BASED ON THE STATE PLANE COORDINATES ESTABLISHED BY OTHERS FOR MONUMENT "MA2005B-1" WITH NAD 1983/95 STATE PLANE GRID COORDINATES OF NORTHING: 537807.476(ft) EASTING: 2707779.158(ft) THE AVERAGE COMBINED GRID FACTOR USED ON THIS PROJECT (GROUND TO GRID) IS: 0.99998786 THE N.C. LAMBERT GRID BEARING AND LOCALIZED HORIZONTAL GROUND DISTANCE FROM "MA2005B-1" TO -L- STATION 13+47.09 IS N 40°55'06" E 938.79' ALL LINEAR DIMENSIONS ARE LOCALIZED HORIZONTAL DISTANCES VERTICAL DATUM USED IS NAVD 88

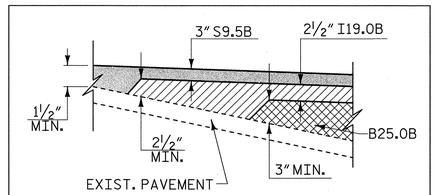

WEDGING DETAIL

THE QUANTITY OF RIP RAP TO BE PAID FOR WILL BE THE ACTUAL NUMBER OF TONS OF EACH CLASS OF RIP RAP WHICH HAS BEEN INCORPORATED INTO THE COMPLETED AND ACCEPTED WORK. THE RIP RAP WILL BE MEASURED BY BEING WEIGHED IN TRUCKS ON CERTIFIED PLATFORM SCALES OR OTHER CERTIFIED WEIGHING DEVICES. THE QUANTITY OF RIP RAP WILL BE PAID FOR AT THE CONTRACT UNIT PRICE PER TON:

RIP RAP CLASS II (2'-0" THICK)

END BENT No. 1	80 TONS
END BENT No. 2	145 TONS
TOTAL	225 TONS

FILTER FABRIC

END BENT No. 1	90 SQ. YARDS
END BENT No. 2	160 SQ. YARDS
TOTAL	250 SQ. YARDS

PROJECT NO. 42287

PAMLICO COUNTY

STATION: 15+56.00 -L-

REPLACES BRIDGE NO. 40

NORTH CAROLINA PROFESSIONAL ENGINEER SEAL 1966 KEVIN AUSTIN 8/6/09

PLANS PREPARED BY:

MULKEY
ENGINEERS & CONSULTANTS
PO Box 33127
Raleigh, N.C. 27636
(919) 851-1212
(919) 851-1918 (FAX)
WWW.MULKEYINC.COM

STATE OF NORTH CAROLINA
DEPARTMENT OF TRANSPORTATION
RALEIGH

ROADWAY DETAILS

33'-10" CLEAR ROADWAY - 90°SKEW

REVISIONS						SHEET NO.
NO.	BY:	DATE:	NO.	BY:	DATE:	78
1			3			TOTAL SHEETS
2			4			185

DRAWN BY : W. B. ALLEN DATE : 3/05
CHECKED BY : L. K. AUSTIN DATE : 2/09

8/6/2009 10:55:05 AM G:\project\2004\2240_Pamlico40\Structures\B5290_SD_GD_02.dgn

PROJ. REFERENCE NO.	SHEET NO.
B-5129 (BRIDGE #40)	79

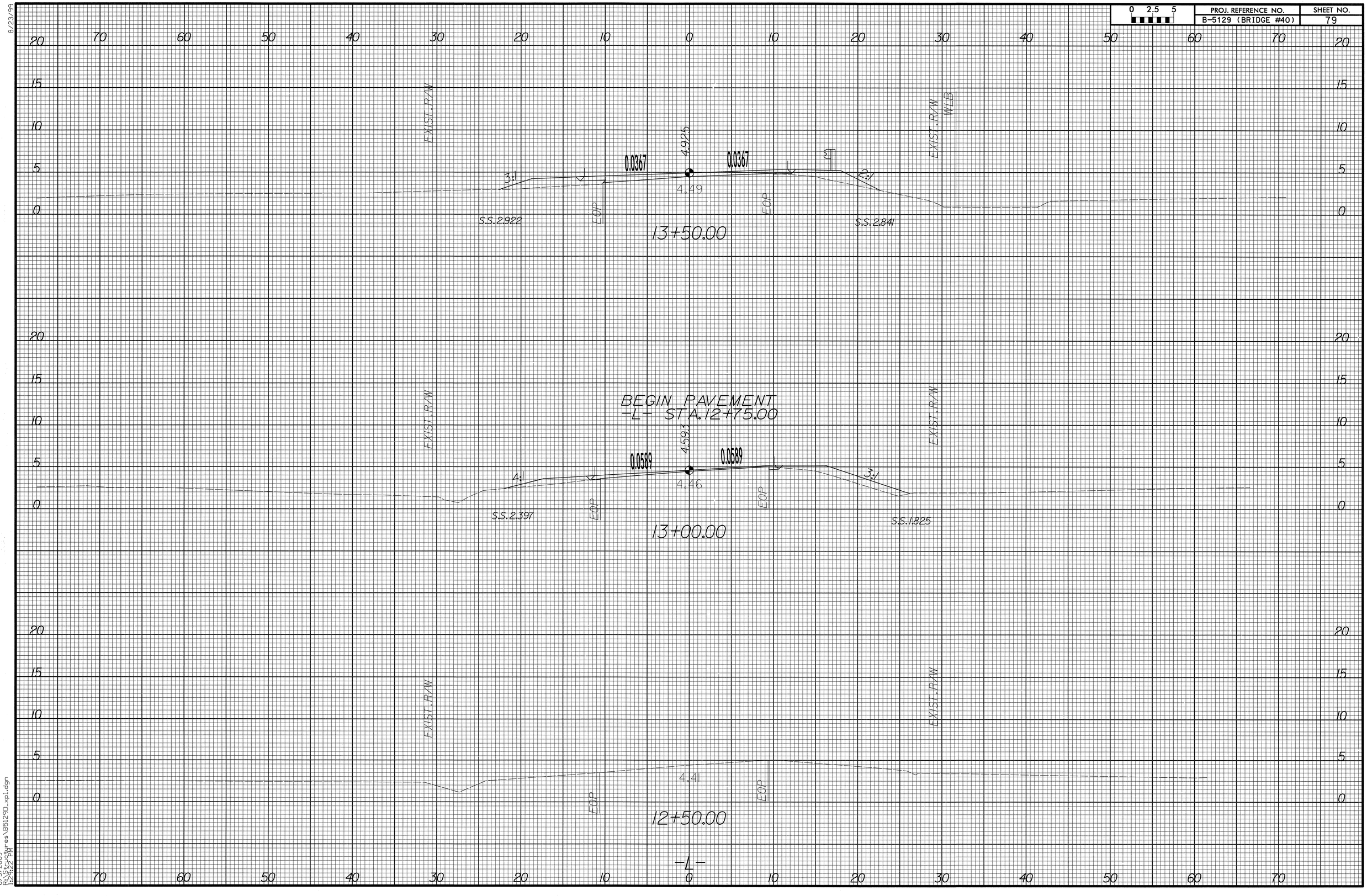

8/23/99

6/5/2009
R:\Structures\B5129D_xpl.dgn
1:29:22 PM

8/23/99

0 2.5 5	PROJ. REFERENCE NO.	SHEET NO.
	B-5129 (BRIDGE #40)	80

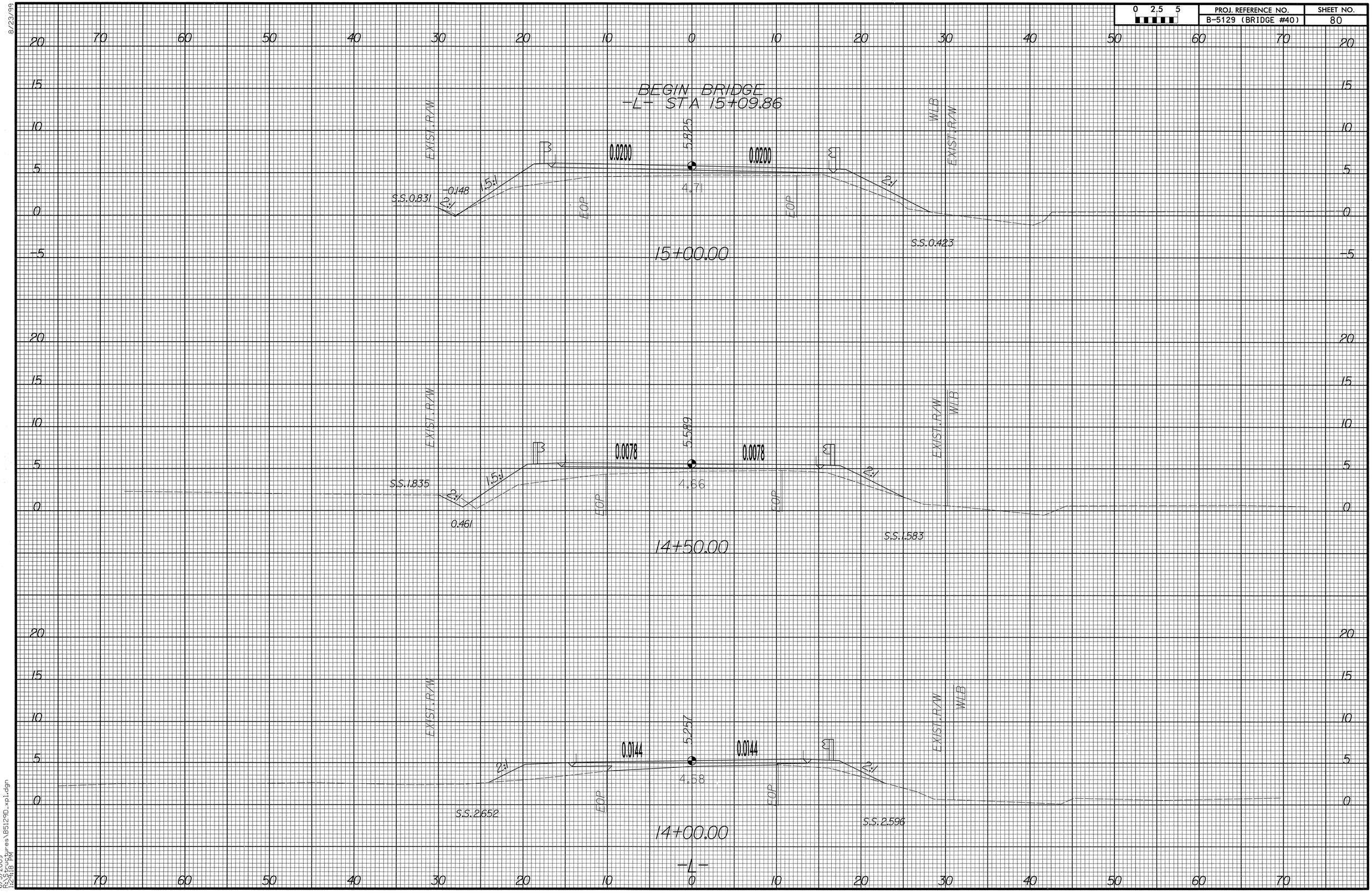

6/5/2009
R:\SUE\Projects\B5129D_xpl.dgn
11:29:18 PM

PROJ. REFERENCE NO.	SHEET NO.
B-5129 (BRIDGE #40)	81

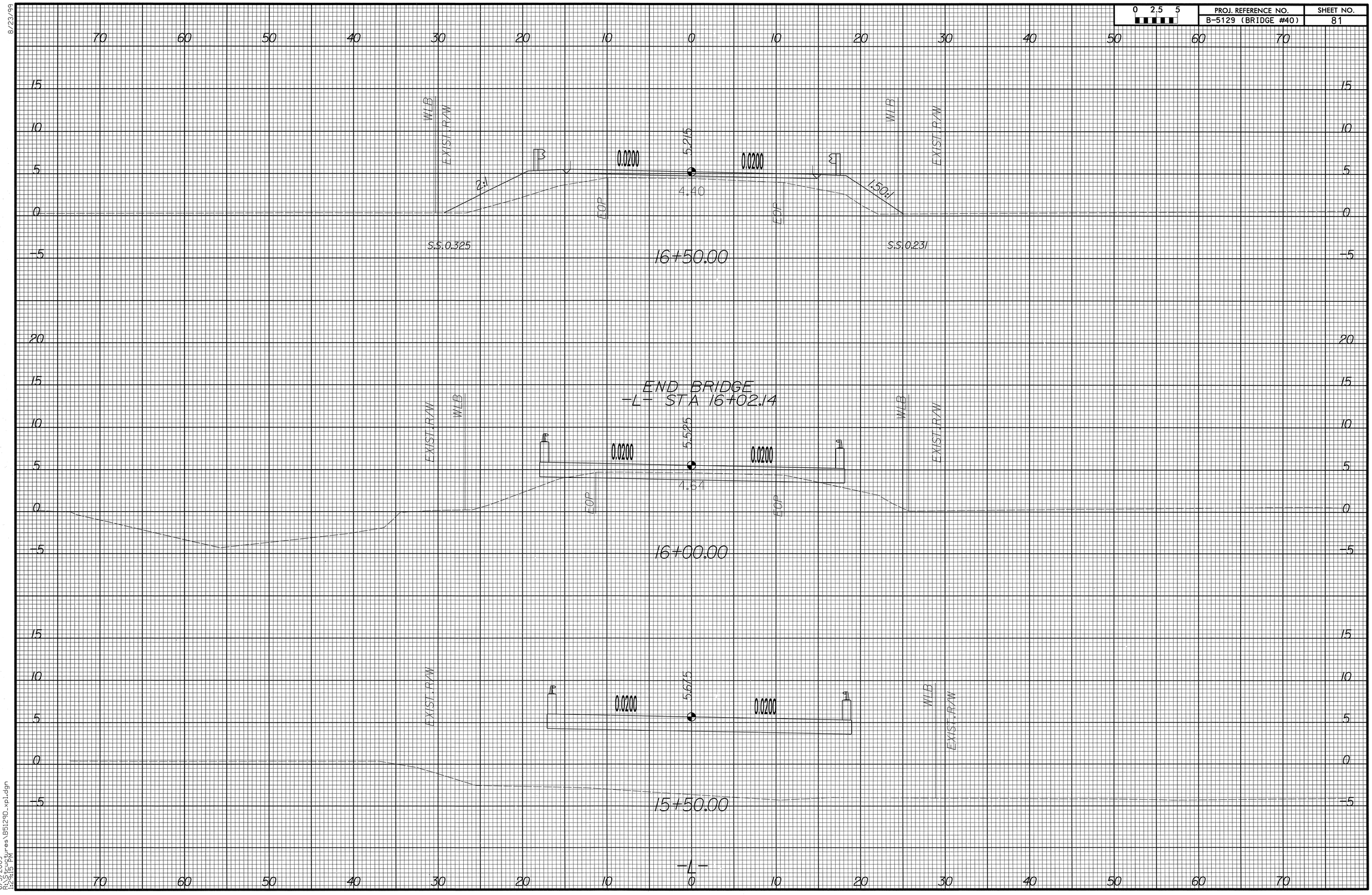

8/23/99

6/5/2009
R:\Structures\B5129D_xpl.dgn
1:29:15 PM

8/23/99

0 2.5 5	PROJ. REFERENCE NO.	SHEET NO.
	B-5129 (BRIDGE #40)	82

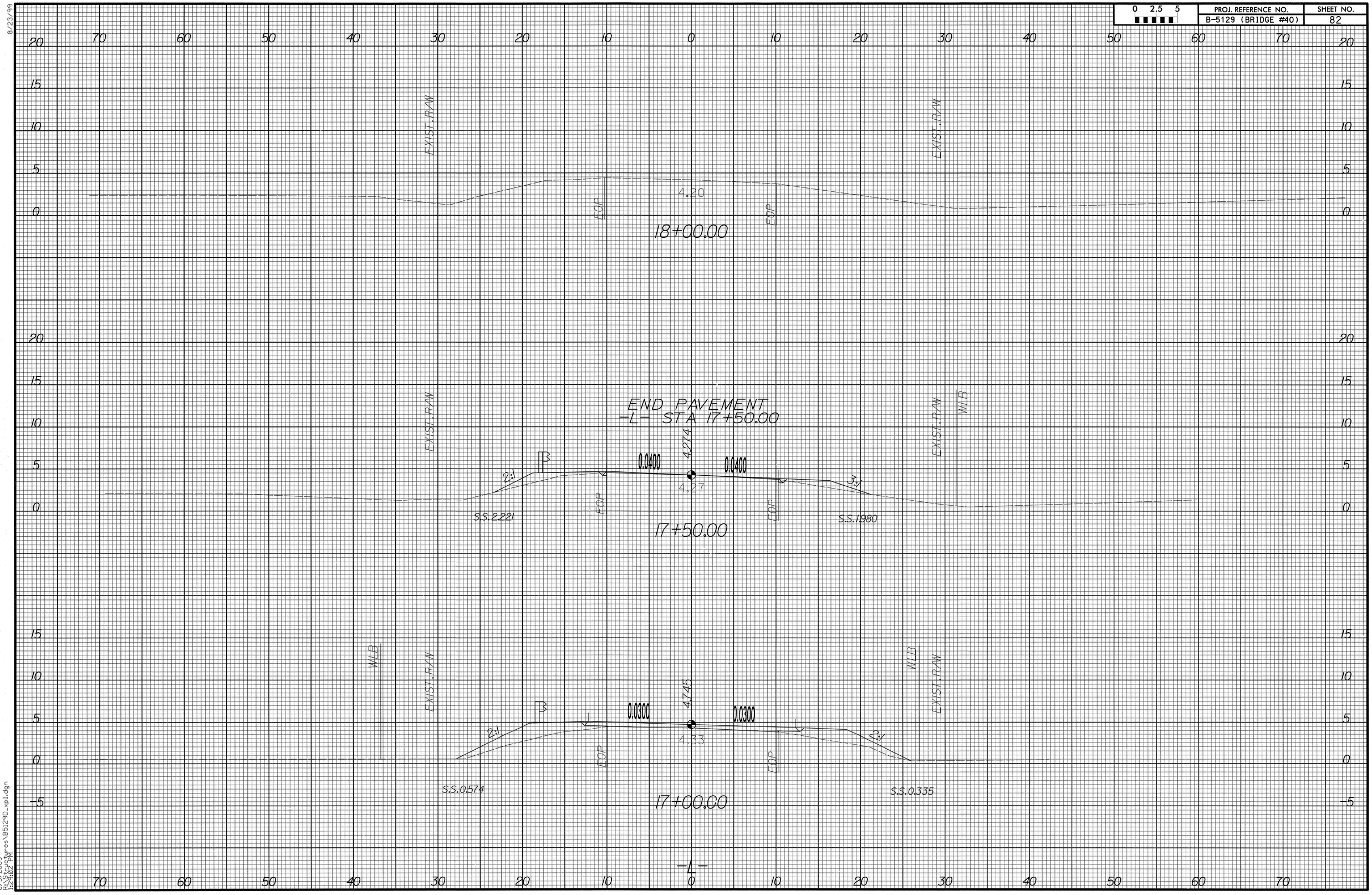

6/5/2009
R:\Structures\B5129D_xpl.dgn
1:29:02 PM

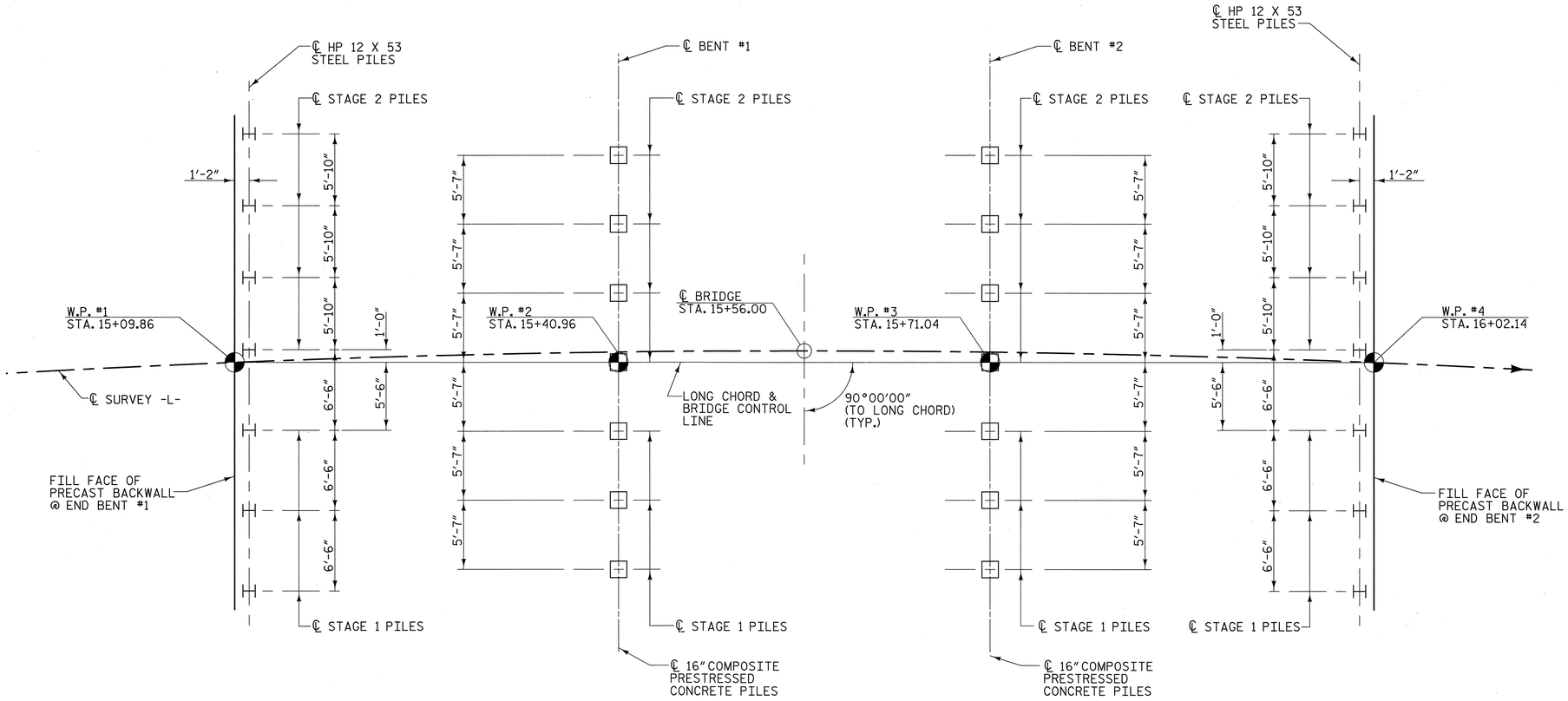

END BENT #1 | BENT #1 | BENT #2 | END BENT #2

FOUNDATION LAYOUT

(DIMENSIONS LOCATING PILES ARE TO THE CENTERLINE OF THE PILE AT THE BOTTOM OF THE CAP)

NOTES (CONTINUED FROM "GENERAL DRAWING")

THE CONCRETE IN THE PRECAST PIECES AND ALL PILES SHALL CONTAIN SILICA FUME. SILICA FUME SHALL BE SUBSTITUTED FOR 5% OF THE PORTLAND CEMENT BY WEIGHT. IF THE OPTION OF ARTICLE 1024-1 OF THE STANDARD SPECIFICATIONS TO PARTIALLY SUBSTITUTE CLASS F FLY ASH FOR PORTLAND CEMENT IS EXERCISED. THEN THE RATE OF FLY ASH SUBSTITUTION SHALL BE REDUCED TO 1.0 LB. OF FLY ASH PER 1.0 LB. OF CEMENT. NO PAYMENT WILL BE MADE FOR THIS SUBSTITUTION AS IT IS CONSIDERED INCIDENTAL TO THE VARIOUS PAY ITEMS.

PRESTRESSED CONCRETE CORED SLAB UNITS AND 20" PRESTRESSED CONCRETE PILES SHALL CONTAIN CALCIUM NITRITE CORROSION INHIBITOR IN ACCORDANCE WITH THE STANDARD SPECIFICATIONS.

THE CONTRACTOR SHALL SUBMIT WORKING DRAWINGS FOR ALL PRECAST PIECES. FOR SUBMITTAL OF WORKING DRAWINGS, SEE SPECIAL PROVISIONS.

FOR FALSEWORK AND FORMWORK, SEE SPECIAL PROVISIONS.

THIS BRIDGE SHALL BE CONSTRUCTED USING TOP-DOWN CONSTRUCTION METHODS. THE USE OF TEMPORARY CAUSEWAY OR WORK BRIDGE IS NOT PERMITTED.

FOR CRANE SAFETY, SEE SPECIAL PROVISIONS.

NOTES (FOR FOUNDATION LAYOUT)

PILES FOR END BENT NO. 1 AND 2 SHALL BE DRIVEN TO A MINIMUM BEARING CAPACITY OF 90 TONS EACH. THE BEARING CAPACITY IS EQUAL TO THE ALLOWABLE BEARING CAPACITY WITH A MINIMUM FACTOR OF SAFETY OF TWO.

THE ALLOWABLE BEARING CAPACITY FOR PILES AT END BENT NO. 1 AND 2 IS 45 TONS PER PILE.

DRIVE PILES AT BENTS NO. 1 AND 2 TO A REQUIRED BEARING CAPACITY OF 120 TONS PER PILE. THE REQUIRED BEARING CAPACITY IS EQUAL TO THE ALLOWABLE BEARING CAPACITY WITH A MINIMUM FACTOR OF SAFETY OF TWO.

THE ALLOWABLE BEARING CAPACITY FOR PILES AT BENTS NO. 1 AND 2 IS 60 TONS PER PILE.

DRIVE CONCRETE SECTIONS OF COMPOSITE PILES AT BENTS NO. 1 AND 2 TO A TIP ELEVATION OF NO HIGHER THAN -21 FEET.

TESTING THE FIRST PRODUCTION PILE WITH THE PILE DRIVING ANALYZER (PDA) DURING DRIVING, RESTRIKING OR REDRIVING IS REQUIRED AT BENTS NO. 1 AND 2. SEE PILE DRIVING ANALYZER SPECIAL PROVISION.

GALVANIZED STEEL PILES ARE REQUIRED IN ACCORDANCE WITH SECTION 450 OF THE STANDARD SPECIFICATIONS.

STEEL PILE POINTS (WITH TEETH) ARE REQUIRED FOR STEEL PILES AT END BENTS NO. 1 AND 2. SEE SECTION 450 OF THE STANDARD SPECIFICATIONS.

STEEL PILE SECTIONS, 1" THICK STEEL PLATES, NUTS, AND THREADED BARS OF THE 16" COMPOSITE PILES AT BENTS NO. 1 AND NO. 2 SHALL BE GALVANIZED IN ACCORDANCE WITH SECTION 450 AND SECTION 1076 OF THE STANDARD SPECIFICATIONS.

NORTH CAROLINA PROFESSIONAL SEAL 19661 ENGINEER L. KEVIN AUSTIN 6/7/09

PLANS PREPARED BY:

MULKEY
ENGINEERS & CONSULTANTS
PO BOX 33127
RALEIGH, N.C. 27636
(919) 851-1912
(919) 851-1918 (FAX)
WWW.MULKEYINC.COM

PROJECT NO. 42287

PAMLICO COUNTY

STATION: 15+56.00 -L-

REPLACES BRIDGE NO. 40

STATE OF NORTH CAROLINA
DEPARTMENT OF TRANSPORTATION
RALEIGH

FOUNDATION LAYOUT

33'-10" CLEAR ROADWAY - 90° SKEW

REVISIONS						SHEET NO.
NO.	BY:	DATE:	NO.	BY:	DATE:	83
1			3			TOTAL SHEETS
2			4			185

DRAWN BY : W. B. ALLEN DATE : 3/09
CHECKED BY : L. K. AUSTIN DATE : 3/09

6/5/2009 12:26:08 PM R:\Structures\B5829D_SD_FL_00.dgn

SUPERSTRUCTURE SUMMARY

	30' EXTERIOR CORED SLAB	30' INTERIOR CORED SLAB (W/ 12" VOIDS)	30' INTERIOR CORED SLAB (W/ 8" VOIDS)	TYPE I ELASTOMERIC BEARING PAD	CAST-IN-PLACE CONCRETE PARAPET	ONE BAR METAL RAIL
	EACH	EACH	EACH	EACH	LIN. FT.	LIN. FT.
SUPERSTRUCTURE						
SPAN A	2	9	1	24		
SPAN B	2	9	1	24		
SPAN C	2	9	1	24		
TOTAL	6	27	3	72	184.33	165.33

SUBSTRUCTURE SUMMARY

	PIECE EB140	PIECE EB240	PIECE EB340	PIECE EB440	PIECE BW1	PIECE BW2	PIECE WW1	PIECE WF1	PIECE WW240	PIECE WF240	PIECE B140	PIECE B240	HP 12 X 53 GALVANIZED STEEL PILES		16" COMPOSITE PRESTRESSED CONCRETE PILE	
	EACH	EACH	EACH	EACH	EACH	EACH	EACH	EACH	EACH	EACH	EACH	EACH	EA.	LIN.FT.	EA.	LIN.FT.
SUBSTRUCTURE																
END BENT #1	1	1			2	2	1	1	1	1			7	490.0		
BENT #1											1	1			7	350.0
BENT #2											1	1			7	350.0
END BENT #2			1	1	2	2	1	1	1	1			7	490.0		
TOTAL	1	1	1	1	4	4	2	2	2	2	2	2	14	980.0	14	700.0

PROJECT NO. 42287

PAMLICO COUNTY

STATION: 15+56.00 -L-

REPLACES BRIDGE NO. 40

NORTH CAROLINA PROFESSIONAL 19661 ENGINEER L. KEVIN AUSTIN 6/7/09

PLANS PREPARED BY:

MULKEY
ENGINEERS & CONSULTANTS
PO Box 33127
RALEIGH, N.C. 27636
(919) 851-1912
(919) 851-1916 (FAX)
WWW.MULKEYINC.COM

STATE OF NORTH CAROLINA
DEPARTMENT OF TRANSPORTATION
RALEIGH

SUPERSTRUCTURE & SUBSTRUCTURE SUMMARY

33'-10" CLEAR ROADWAY - 90°SKEW

REVISIONS					
NO.	BY:	DATE:	NO.	BY:	DATE:
1			3		
2			4		

SHEET NO. 84

TOTAL SHEETS 185

DRAWN BY : W. B. ALLEN DATE : 2/09
CHECKED BY : L. K. AUSTIN DATE : 3/09

6/5/2009 12:25:29 PM R:\Structures\85290_SD_SUM_01.dgn

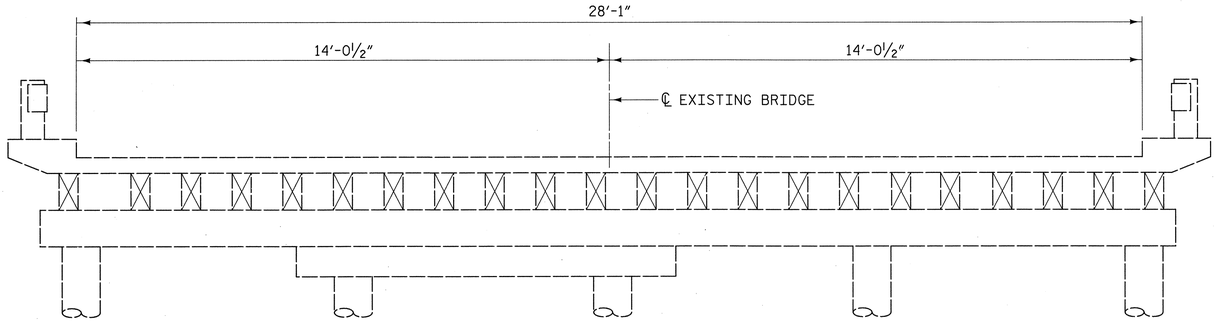

EXISTING BRIDGE

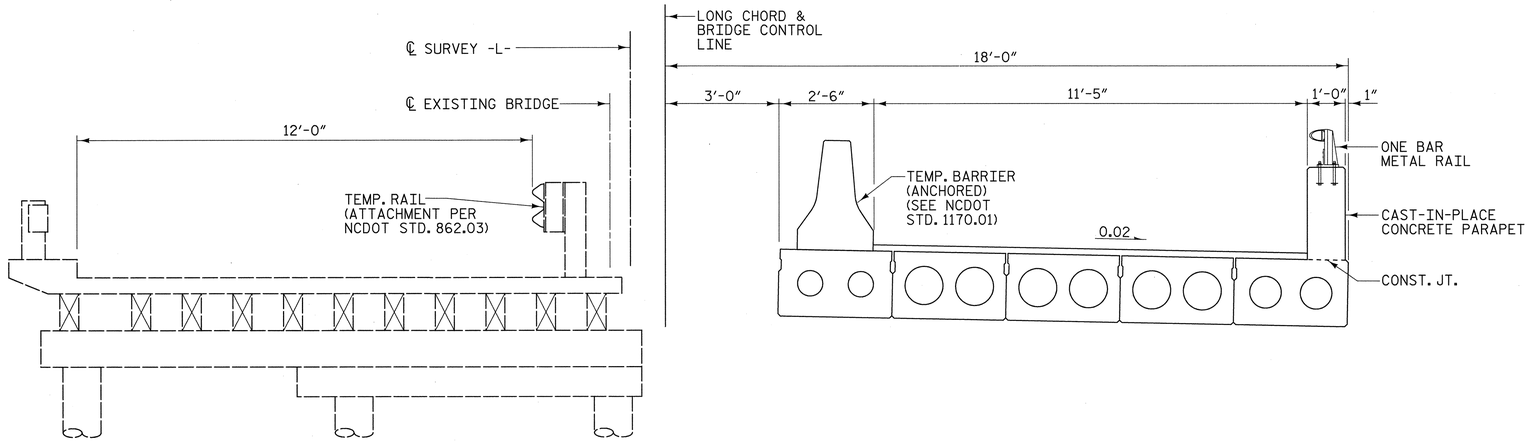

STAGE 1 CONSTRUCTION

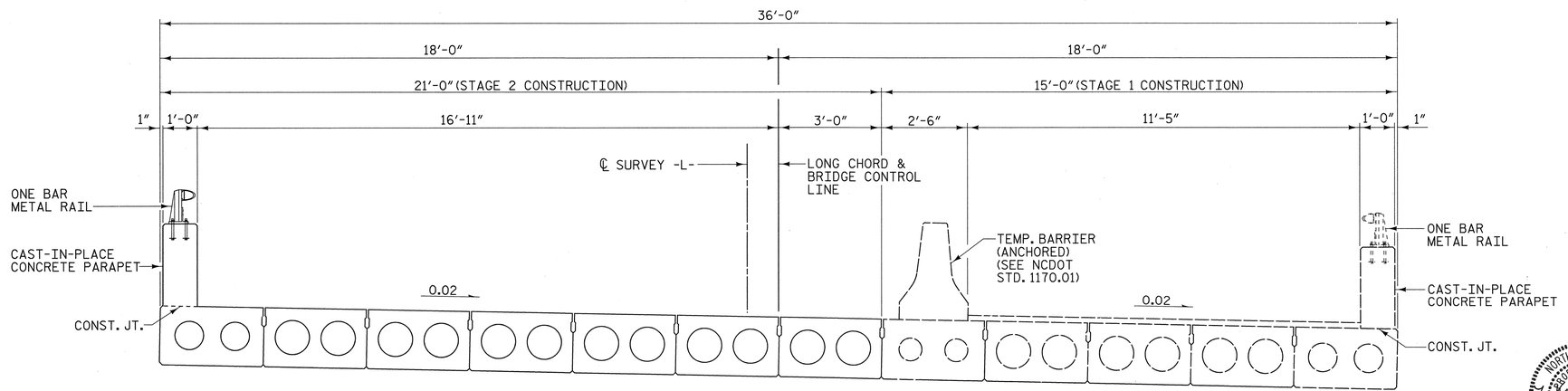

STAGE 2 CONSTRUCTION

NORTH CAROLINA PROFESSIONAL 1966 ENGINEER L. KEVIN AUSTIN 6/7/09

PLANS PREPARED BY:

MULKEY
ENGINEERS & CONSULTANTS
PO Box 33127
Raleigh, N.C. 27636
(919) 851-1912
(919) 851-1918 (FAX)
WWW.MULKEYINC.COM

PROJECT NO. 42287

PAMLICO COUNTY

STATION: 15+56.00 -L-

REPLACES BRIDGE NO. 40

STATE OF NORTH CAROLINA
DEPARTMENT OF TRANSPORTATION
RALEIGH

CONSTRUCTION STAGING

33′-10″ CLEAR ROADWAY - 90°SKEW

REVISIONS						SHEET NO.
NO.	BY:	DATE:	NO.	BY:	DATE:	85
1			3			TOTAL SHEETS
2			4			185

DRAWN BY : W. B. ALLEN DATE : 4/05
CHECKED BY : L. K. AUSTIN DATE : 11/05

6/5/2009 12:24:48 PM R:\Structures\B5239D_SD_PC_OLD.DGN

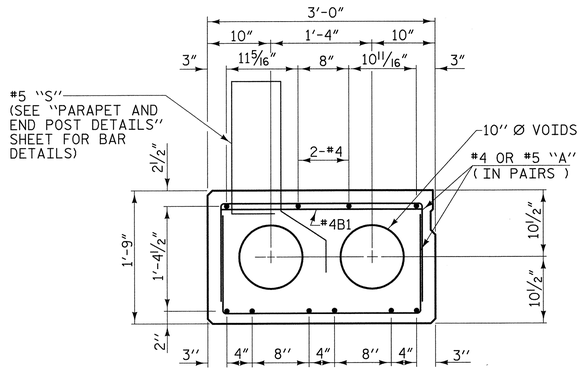

30' SPAN

8 - 0.6" Ø H.S. STRANDS
EXTERIOR SLAB SECTIONS
(CORED SLAB UNIT #1 & #12)

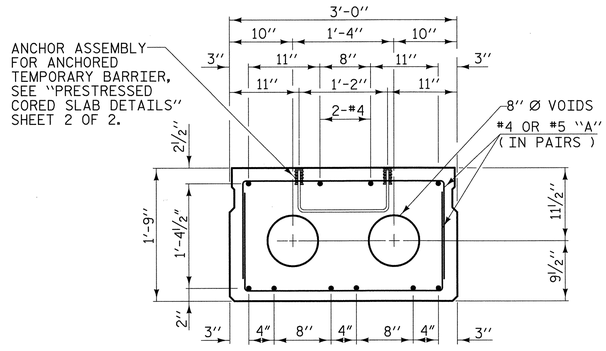

30' SPAN

8 - 0.6" Ø H.S. STRANDS
INTERIOR SLAB SECTION
(CORED SLAB UNIT #8)

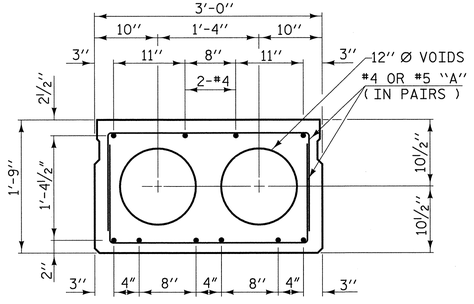

30' SPAN

8 - 0.6" Ø H.S. STRANDS
INTERIOR SLAB SECTIONS
(CORED SLAB UNITS #2 THRU #7 &
CORED SLAB UNITS #9 THRU #11)

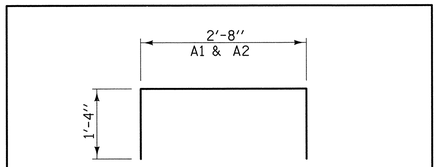

REINFORCING BAR TYPES

BAR DIMENSIONS ARE OUT TO OUT

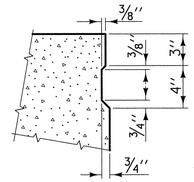

SHEAR KEY DETAIL

NOTE: OMIT SHEAR KEY ON OUTSIDE OF EXTERIOR CORED SLAB

GENERAL NOTES

ASSUMED LIVE LOAD = HS 25 OR ALTERNATE LOADING.

CONCRETE = f'c - 5000psi (MIN. COMP. STRENGTH @ 28 DAYS).

f'ci - 4000psi (MIN. COMP. STRENGTH @ TRANSFER OF STRESSING FORCE).

ALL PRESTRESSING STRANDS SHALL BE 7-WIRE LOW RELAXATION GRADE HIGH STRENGTH CABLES IN ACCORDANCE WITH THE STANDARD SPECIFICATIONS.

SIZE	TYPE	AREA	ULTIMATE STR.	APPLIED FORCE
0.6" Ø	HIGH STR.	0.217 SQ. IN. PER CABLE	58,600 LBS.	43,950 LBS. PER CABLE

STRUCTURAL STEEL ITEMS SHALL BE OF A GRADE CONFORMING TO EITHER ASTM A36 OR A373, EXCEPT HIGH STRENGTH BOLTS. HIGH STRENGTH BOLTS SHALL BE ASTM A325. ALL STRUCTURAL STEEL SHALL BE GALVANIZED AS PER THE SPECIFICATION.

ALL MATERIAL AND WORKMANSHIP SHALL COMPLY WITH THE APPLICABLE REQUIREMEMNTS OF THE STANDARD SPECIFICATIONS FOR ROADS AND STRUCTURES OF THE NC DEPARTMENT OF TRANSPORTATION DATED JULY 2006 AND WITH THE SPECIAL PROVISIONS.

ALL PRESTRESSING STRANDS SHALL BE 7-WIRE LOW RELAXATION GRADE 270 STRANDS AND SHALL CONFORM TO AASHTO M203 EXCEPT FOR SAMPLING REQUIREMENTS WHICH SHALL BE IN ACCORDANCE WITH THE STANDARD SPECIFICATIONS.

ALL REINFORCING STEEL CAST WITH THE CORED SLAB SECTIONS SHALL BE GRADE 60 AND SHALL BE INCLUDED IN THE UNIT PRICE BID FOR PRESTRESSED CONCRETE CORED SLABS.

RECESSES FOR TRANSVERSE STRANDS SHALL BE GROUTED AFTER THE TENSIONING OF THE STRANDS.

WHEN CORED SLABS ARE CAST, A POSITIVE HOLD-DOWN SYSTEM SHALL BE EMPLOYED TO PREVENT VOIDS FROM RISING OR MOVING SIDEWAYS. THIS SYSTEM SHALL BE DESIGNED TO BE LEFT IN PLACE UNTIL THE CONCRETE HAS REACHED RELEASE STRENGTH. AT LEAST THREE WEEKS PRIOR TO CASTING CORED SLABS, THE CONTRACTOR SHALL SUBMIT TO THE ENGINEER FOR REVIEW AND COMMENT, DETAILED DRAWINGS OF THE PROPOSED HOLD-DOWN SYSTEM. IN ADDITION TO STRUCTURAL DETAILS, LOCATION AND SPACING OF THE HOLD-DOWNS SHALL BE INDICATED.

WHEN A CONCRETE WEARING SURFACE IS DETAILED ON THE CORED SLAB BRIDGE TYPICAL SECTION, THE TOP SURFACE OF THE CORED SLAB UNITS SHALL HAVE A 3/8" RAKED FINISH.

PRESTRESSING STRANDS SHALL BE CUT FLUSH WITH THE CORED SLAB UNIT ENDS.

APPLY EPOXY PROTECTIVE COATING TO CORED SLAB UNIT ENDS.

UNLESS OTHERWISE NOTED ON THE PLANS, ALL EXPOSED CORNERS ON STRUCTURES SHALL BE CHAMFERED 3/4".

FOR DEFLECTION TABLE, SEE "PRESTRESSED CORED SLAB DETAILS" SHEET.

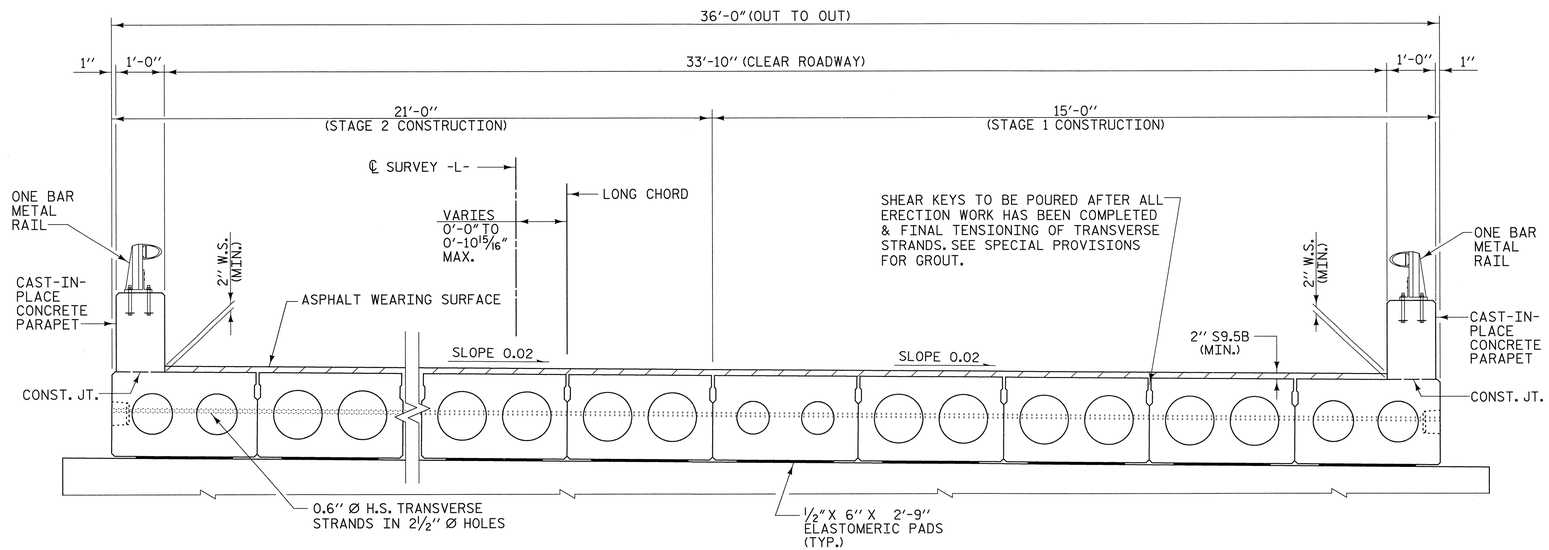

TYPICAL SECTION

PROJECT NO. 42287

PAMLICO COUNTY

STATION: 15+56.00 -L-

REPLACES BRIDGE NO. 40

STATE OF NORTH CAROLINA
DEPARTMENT OF TRANSPORTATION
RALEIGH
STANDARD

PRESTRESSED CORED SLAB 30' SPANS

33'-10" CLEAR ROADWAY - 90°SKEW

NORTH CAROLINA PROFESSIONAL SEAL 1966 ENGINEER L. KEVIN AUSTIN
8/6/09

PLANS PREPARED BY:

MULKEY
ENGINEERS & CONSULTANTS
PO Box 33127
Raleigh, N.C. 27636
(919) 851-1918
(919) 851-1918 (FAX)
www.mulkeyinc.com

REVISIONS						SHEET NO.
NO.	BY:	DATE:	NO.	BY:	DATE:	86
1			3			TOTAL SHEETS
2			4			185

DRAWN BY : W. B. ALLEN DATE : 3/05
CHECKED BY : L. K. AUSTIN DATE : 3/09

8/6/2009 6:07:20 AM G:\projects\2004\224.0_Pamlico40\Structures\B5229D_SD_TS_0.dgn

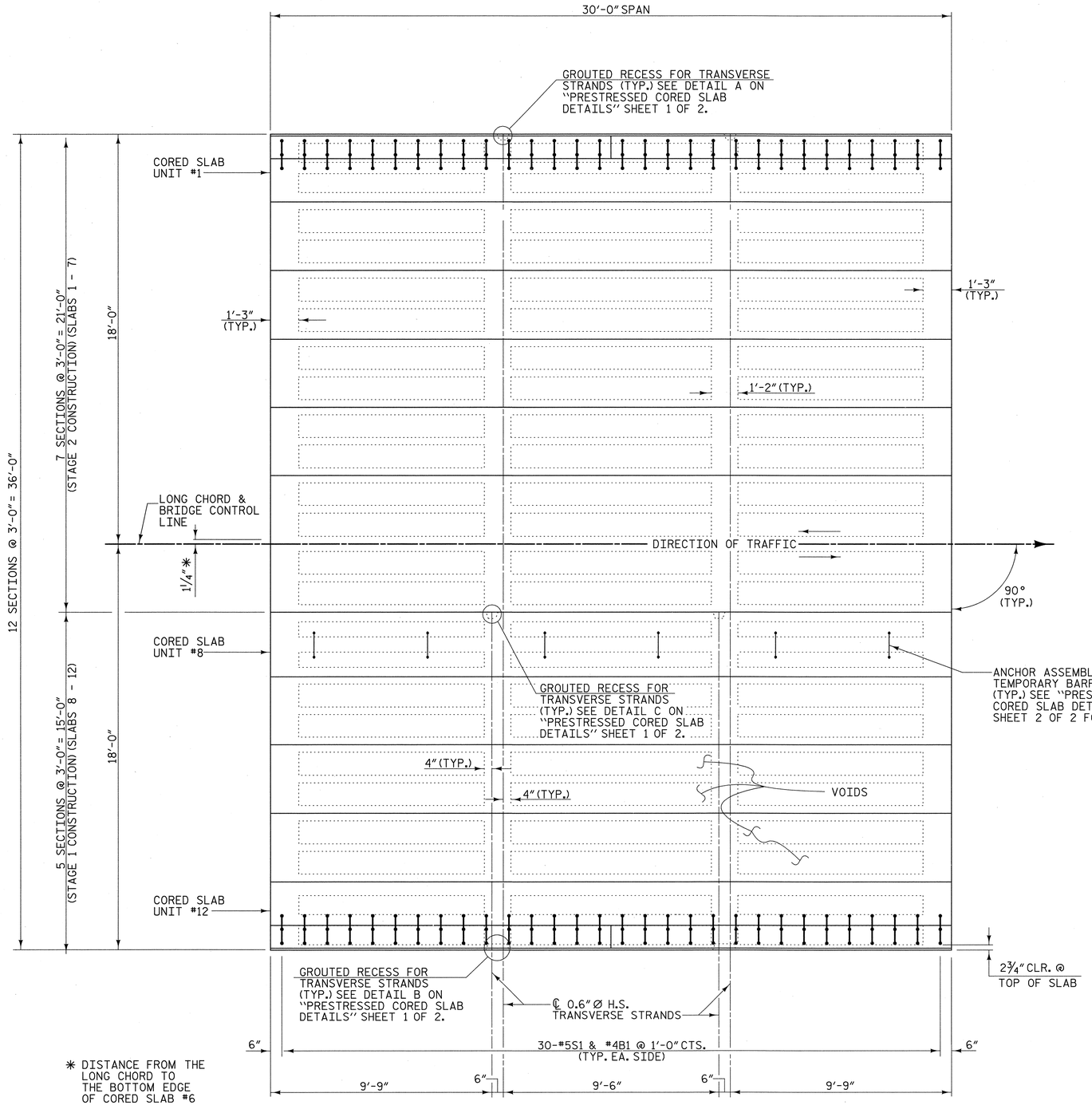

* DISTANCE FROM THE LONG CHORD TO THE BOTTOM EDGE OF CORED SLAB #6

PLAN OF SPAN

NOTE:

SEE "PARAPET & END POST DETAILS" SHEET FOR "S" BAR MARKS.

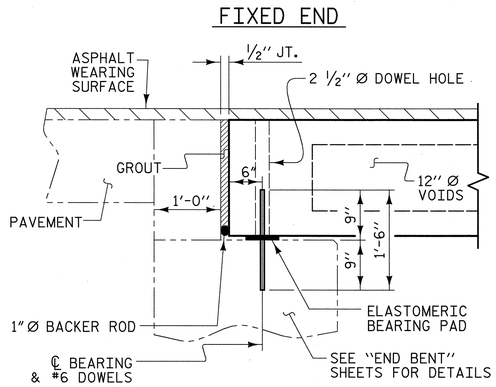

SECTION AT END BENT

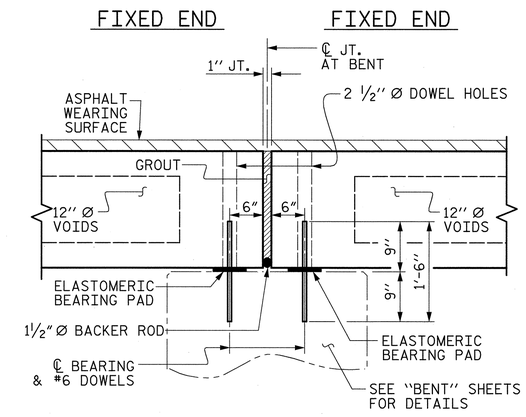

SECTION AT BENT

PROJECT NO. 42287

PAMLICO COUNTY

STATION: 15+56.00 -L-

REPLACES BRIDGE NO. 40

STATE OF NORTH CAROLINA
DEPARTMENT OF TRANSPORTATION
RALEIGH
STANDARD

PRESTRESSED CORED SLAB 30' SPAN

33'-10" CLEAR ROADWAY - 90° SKEW

NORTH CAROLINA PROFESSIONAL ENGINEER SEAL 19661 L. KEVIN AUSTIN 6/7/09

PLANS PREPARED BY:

MULKEY ENGINEERS & CONSULTANTS
PO Box 33127
RALEIGH, N.C. 27636
(919) 851-1912
(919) 851-1918 (FAX)
WWW.MULKEYINC.COM

REVISIONS						SHEET NO.
NO.	BY:	DATE:	NO.	BY:	DATE:	87
1			3			TOTAL SHEETS
2			4			185

DRAWN BY : W. B. ALLEN DATE : 3/05
CHECKED BY : L. K. AUSTIN DATE : 2/09

6/5/2009 12:04 PM R:\Structures\B5289D_SD_CS_04.dgn

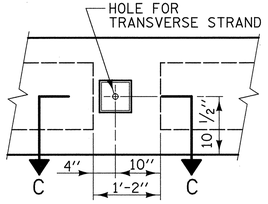

ELEVATION

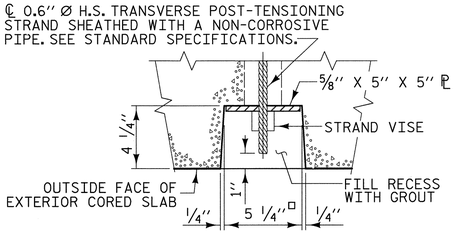

SECTION C-C

DETAIL A
GROUTED RECESS AT END OF POST-TENSIONED STRAND CORED SLAB

(CORED SLAB UNIT #1)

EXTERIOR SLAB UNIT	30′
CAMBER (SLAB UNIT ALONE IN PLACE)	5/16" (UP)
DEFLECTION (SUPERIMPOSED DEAD LOAD)	* 1/16" (DOWN)
FINAL DEFLECTION	1/4" (UP)
* INCLUDES FUTURE WEARING SURFACE	

INTERIOR SLAB UNIT	30′
CAMBER (SLAB UNIT ALONE IN PLACE)	5/16" (UP)
DEFLECTION (SUPERIMPOSED DEAD LOAD)	* 1/16" (DOWN)
FINAL DEFLECTION	1/4" (UP)
* INCLUDES FUTURE WEARING SURFACE	

NOTES

CONCRETE CHAMFERS:
UNLESS OTHERWISE NOTED ON THE PLANS, ALL EXPOSED CORNERS ON STRUCTURES SHALL BE CHAMFERED 3/4" WITH THE FOLLOWING EXCEPTIONS: TOP CORNERS OF CURBS MAY BE ROUNDED TO 1 1/2" RADIUS WHICH IS BUILT INTO CURB FORMS; CORNERS OF TRANSVERSE FLOOR EXPANSION JOINTS SHALL BE ROUNDED WITH A 1/4" FINISHING TOOL UNLESS OTHERWISE REQUIRED ON PLANS; AND CORNERS OF EXPANSION JOINTS IN THE ROADWAY FACES AND TOPS OF CURBS AND SIDEWALKS SHALL BE ROUNDED TO A 1/4" RADIUS WITH A FINISHING STONE OR TOOL UNLESS OTHERWISE ON PLANS.

DECK DRAINS ARE NOT PERMITTED.

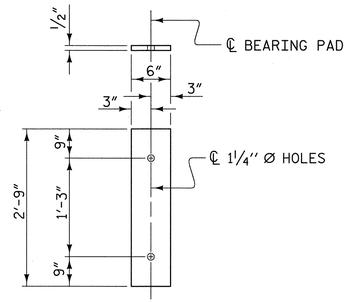

FIXED
(TYPE I - 72 REQ'D)

ELASTOMERIC BEARING DETAILS

NOTE: ELASTOMER HARDNESS SHALL BE 60 DUROMETERS.

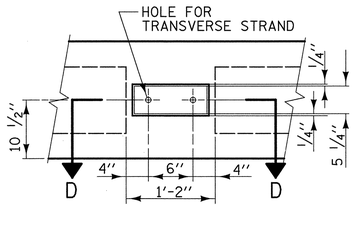

ELEVATION

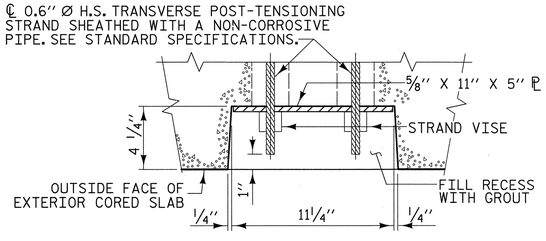

SECTION D-D

DETAIL B
GROUTED RECESS AT END OF POST-TENSIONED STRAND CORED SLAB

(CORED SLAB UNIT #12)

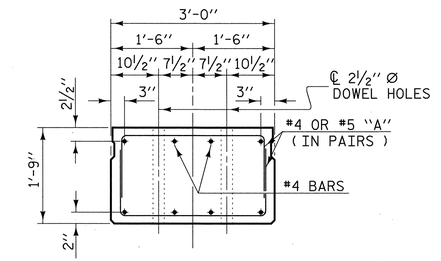

SLAB END ELEVATION

THE 2 1/2" Ø DOWEL HOLES AT FIXED ENDS OF SLAB SECTIONS SHALL BE FILLED WITH NON-SHRINK GROUT, SEE SPECIAL PROVISIONS.

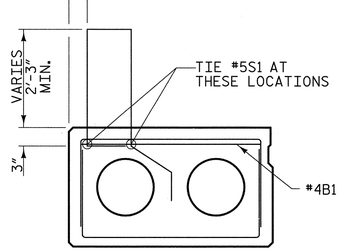

TIE LOCATION FOR #5S1

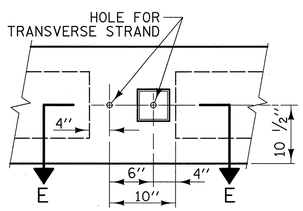

ELEVATION

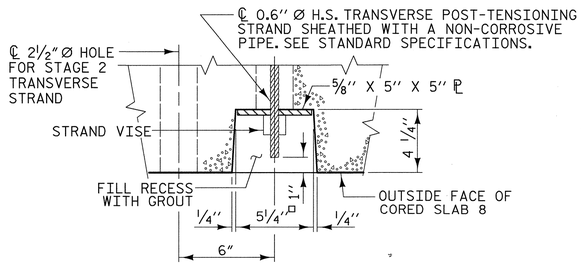

SECTION E-E

DETAIL C
GROUTED RECESS AT END OF POST-TENSIONED STRAND CORED SLAB

(CORED SLAB UNIT #8)

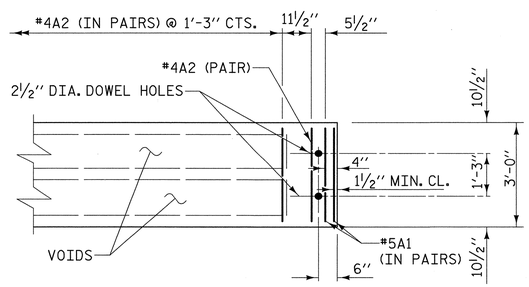

PART PLAN - SLAB SECTION

PROJECT NO. 42287

PAMLICO COUNTY

STATION: 15+56.00 -L-

REPLACES BRIDGE NO. 40 SHEET 1 OF 2

STATE OF NORTH CAROLINA
DEPARTMENT OF TRANSPORTATION
RALEIGH

PRESTRESSED CORED SLAB DETAILS

33′-10" CLEAR ROADWAY - 90°SKEW

NORTH CAROLINA PROFESSIONAL SEAL 19661 ENGINEER L. KEVIN AUSTIN 6/7/09

PLANS PREPARED BY:

MULKEY
ENGINEERS & CONSULTANTS
PO BOX 33127
RALEIGH, N.D. 27636
(919) 851-1915
(919) 851-1918 (FAX)
WWW.MULKEYINC.COM

REVISIONS						SHEET NO.
NO.	BY:	DATE:	NO.	BY:	DATE:	88
1			3			TOTAL SHEETS
2			4			185

DRAWN BY : W. B. ALLEN DATE : 3/05
CHECKED BY : L. K. AUSTIN DATE : 2/09

6/5/2009 12:26 PM R:\Structures\B5629D_SD_CS_02.dgn

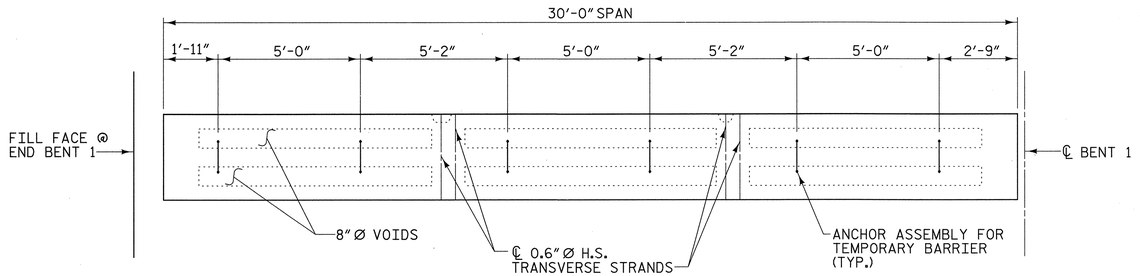

SPAN A

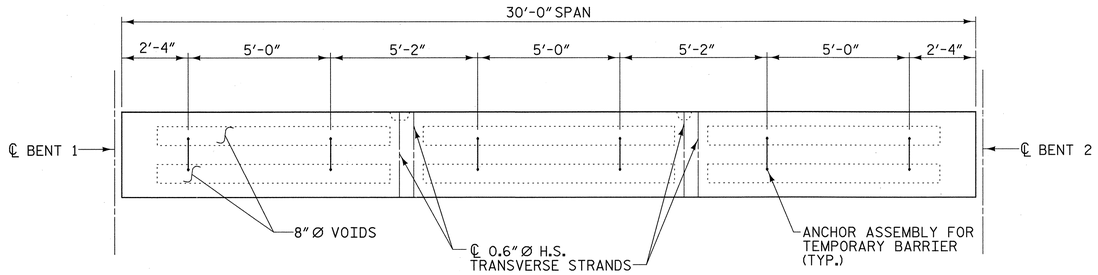

SPAN B

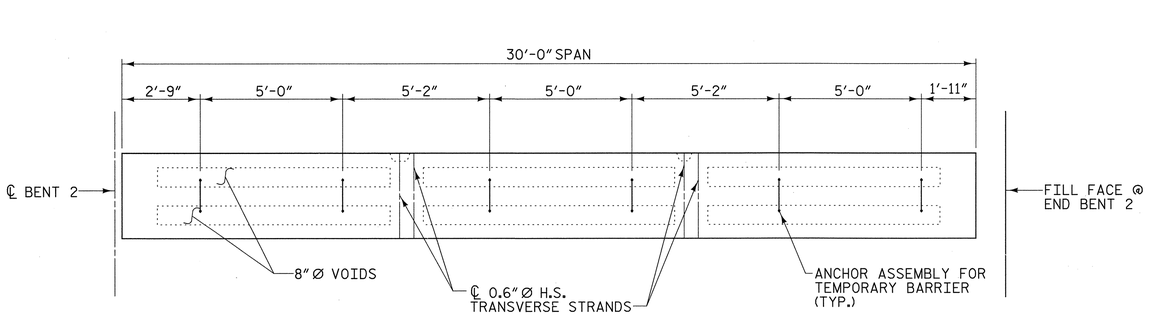

SPAN C

ANCHOR ASSEMBLY LAYOUT FOR CORED SLAB UNIT #8

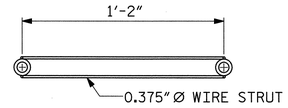

PLAN

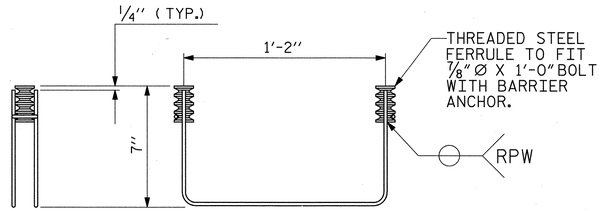

SIDE VIEW ELEVATION

MINIMUM LENGTH OF THREADS IN INSERT (FERRULE): 2 1/2"

ANCHOR ASSEMBLY FOR TEMPORARY BARRIER

(18 ASSEMBLIES REQUIRED)

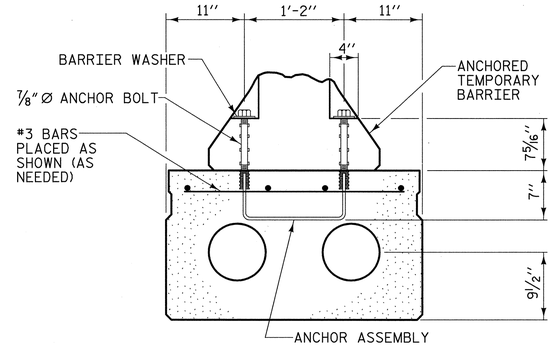

CORED SLAB UNIT #8

(SHOWING PLACEMENT OF ANCHOR ASSEMBLY)

THE #3 BARS ARE INCIDENTAL AND THEIR COST SHALL BE INCLUDED IN THE PRICE BID FOR THE PRESTRESSED CONCRETE CORED SLAB.

NOTES

THE ANCHOR ASSEMBLY FOR TEMPORARY BARRIER SHALL CONSIST OF THE FOLLOWING COMPONENTS :

A. FERRULES SHALL BE MADE FROM STEEL MEETING THE REQUIREMENTS OF AASHTO M169, GRADE 12L14 AND SHALL HAVE A MINIMUM LENGTH OF THREADS OF 2 1/2".

B. 2 - 7/8" Ø X 1'-0" ANCHOR BOLTS SHALL CONFORM TO THE REQUIREMENTS OF ASTM A307. ANCHOR BOLTS SHALL BE GALVANIZED. (AT THE CONTRACTOR'S OPTION, STAINLESS STEEL BOLTS AND WASHERS MAY BE USED AS AN ALTERNATE FOR THE 7/8" Ø X 1'-0" GALVANIZED ANCHOR BOLTS. THEY SHALL CONFORM TO OR EXCEED THE MECHANICAL REQUIREMENTS OF ASTM A307. THE USE OF THIS ALTERNATE SHALL BE APPROVED BY THE ENGINEER.)

C. WIRE STRUT SHOWN IN THE ANCHOR ASSEMBLY DETAIL ARE MINIMUM ALLOWABLE SIZE AND SHALL HAVE A MINIMUM TENSILE STRENGTH OF 100,000 PSI.

ANCHOR ASSEMBLY WITH BOLTS SHALL BE ASSEMBLED IN THE SHOP. BOLT THREADS MAY BE RECUT AS NECESSARY TO INSURE FIT.

THE COST OF THE ANCHOR ASSEMBLY COMPLETE IN PLACE, SHALL BE INCLUDED, IN THE UNIT CONTRACT PRICE BID FOR CONSTRUCTION OF SUPERSTRUCTURE, SEE SPECIAL PROVISIONS.

FERRULES TO BE PLUGGED DURING CASTING OF THE CORED SLAB UNITS AS RECOMMENDED BY THE MANUFACTURER.

AT THE CONTRACTOR'S OPTION, FERRULES WITH OPEN OR CLOSED ENDS MAY BE USED.

FOR 4" X 3 1/4" X 1/2" BARRIER WASHER TO BE USED WITH ANCHOR ASSEMBLY, SEE NCDOT ROADWAY STD. 1170.01.

PAYMENT FOR ANCHORED TEMPORARY BARRIER AND BARRIER WASHER ARE INCLUDED IN TRAFFIC CONTROL PAY ITEM, SEE SPECIAL PROVISIONS.

NORTH CAROLINA PROFESSIONAL ENGINEER SEAL 19661 L. KEVIN AUSTIN 6/7/09

PLANS PREPARED BY:

MULKEY
ENGINEERS & CONSULTANTS
PO Box 33127
Raleigh, N.C. 27636
(919) 851-1918
(919) 851-1918 (FAX)
WWW.MULKEYINC.COM

PROJECT NO. 42287

PAMLICO COUNTY

STATION: 15+56.00 -L-

REPLACES BRIDGE NO. 40 SHEET 2 OF 2

STATE OF NORTH CAROLINA
DEPARTMENT OF TRANSPORTATION
RALEIGH

PRESTRESSED CORED SLAB DETAILS

33'-10" CLEAR ROADWAY - 90° SKEW

REVISIONS						SHEET NO.
NO.	BY:	DATE:	NO.	BY:	DATE:	89
1			3			TOTAL SHEETS
2			4			185

DRAWN BY : W. B. ALLEN DATE : 2/09
CHECKED BY : L. K. AUSTIN DATE : 2/09

6/5/2009 12:52 PM R:\Structures\B5290_SD_CS_03.dgn

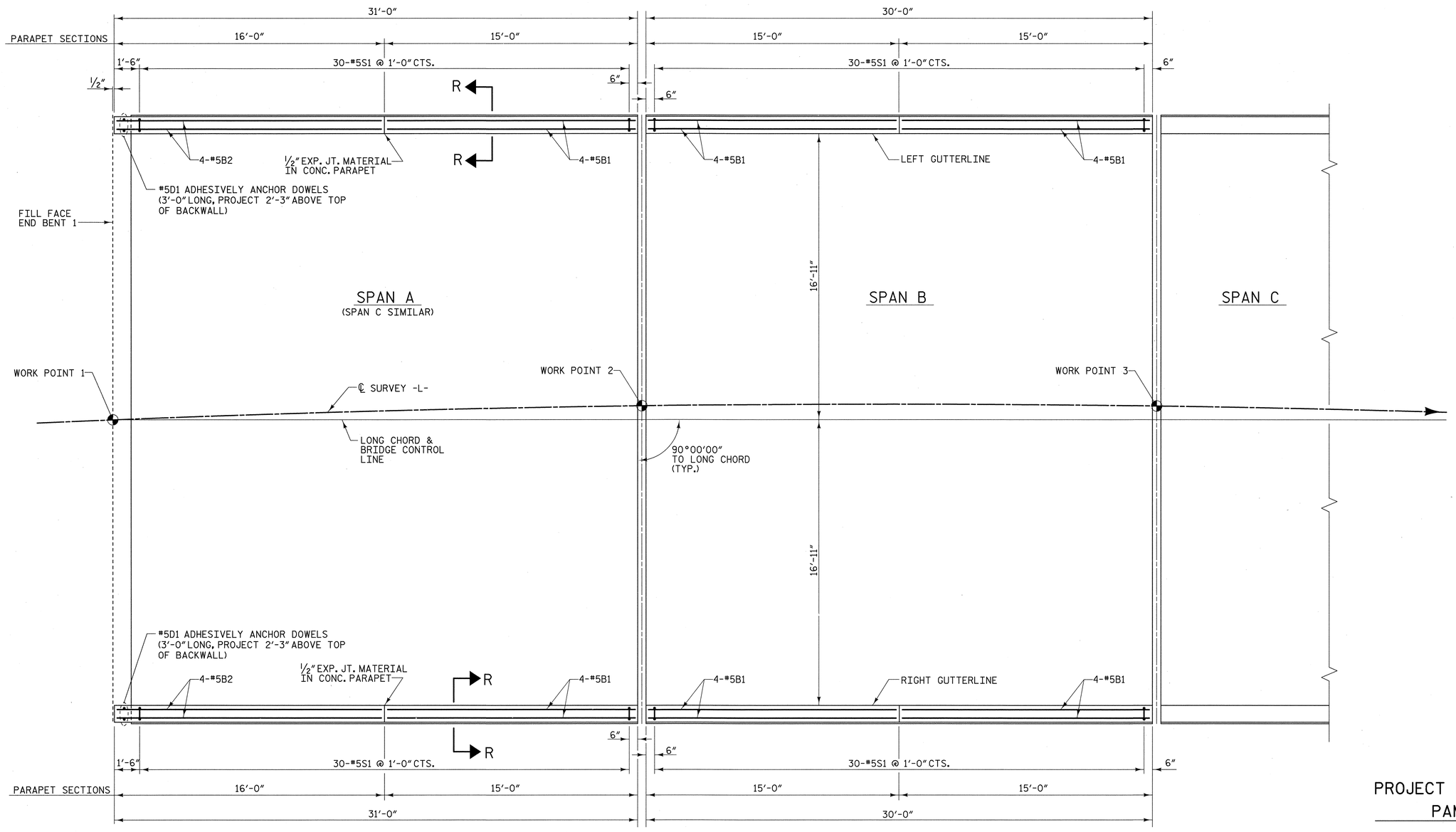

PLAN

NOTE: DISTANCES ARE ALONG OUTSIDE FACE OF PARAPET

FOR END POST DETAILS AND SECTION R-R SEE "PARAPET AND END POST DETAILS" SHEET.

NORTH CAROLINA PROFESSIONAL SEAL 19661 ENGINEER L. KEVIN AUSTIN 6/7/09

PLANS PREPARED BY:

MULKEY ENGINEERS & CONSULTANTS
PO Box 33127
RALEIGH, N.C. 27636
(919) 851-1912
(919) 851-1918 (FAX)
WWW.MULKEYINC.COM

PROJECT NO. 42287

PAMLICO COUNTY

STATION: 15+56.00 -L-

REPLACES BRIDGE NO. 40

STATE OF NORTH CAROLINA
DEPARTMENT OF TRANSPORTATION
RALEIGH

PLAN OF PARAPET

33'-10" CLEAR ROADWAY - 90° SKEW

REVISIONS						SHEET NO.
NO.	BY:	DATE:	NO.	BY:	DATE:	90
1			3			TOTAL SHEETS
2			4			185

DRAWN BY : W. B. ALLEN DATE : 2/09
CHECKED BY : L. K. AUSTIN DATE : 2/09

6/5/2009 12:08:58 PM R:\Structures\B5290_SD_PR_00.dgn

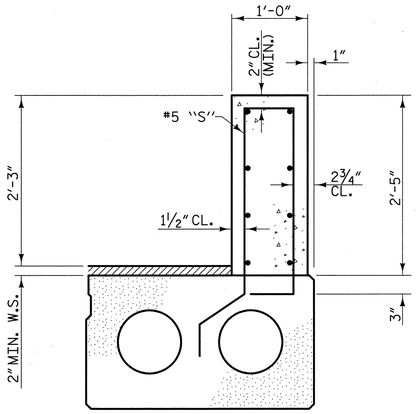

SECTION R-R

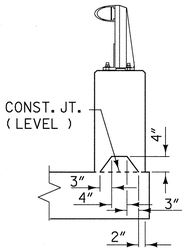

SECTION S-S

AT DAM IN OPEN JOINT
(THIS IS TO BE USED ONLY
WHEN SLIP FORM IS USED)

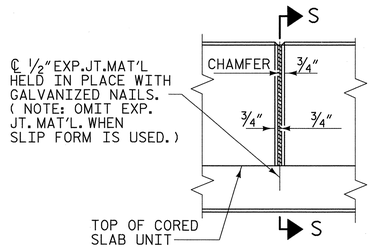

ELEVATION AT EXPANSION JOINTS

NOTES

ALL REINFORCING STEEL IN THE PARAPET AND END POSTS SHALL BE EPOXY COATED.

#5S1 BARS MAY BE SHIFTED SLIGHTLY AS NECESSARY TO AVOID INTERFERENCE WITH THE ONE BAR METAL RAIL POST ANCHORAGE ASSEMBLIES.

THE #5D1 DOWELS SHALL BE INSTALLED USING AN ADHESIVE ANCHORING SYSTEM. FOR ADHESIVELY ANCHORED DOWELS, SEE SPECIAL PROVISIONS. THE YIELD LOAD OF THE #5D1 BARS IS 18.6 KIPS. FIELD TESTING OF THE ADHESIVE BONDING SYSTEM IS NOT REQUIRED.

FOR DETAILS OF CONCRETE INSERT AND GUARDRAIL ANCHOR ASSEMBLY, SEE "RAIL POST SPACINGS AND END OF RAIL DETAILS" AND "GUARDRAIL ANCHORAGE" SHEETS.

BILL OF MATERIAL FOR PARAPET & END POSTS

BAR	NO.	SIZE	TYPE	LENGTH	WEIGHT
✳B1	64	#5	STR	14'-7"	973
✳B2	32	#5	STR	15'-7"	520
✳D1	8	#5	STR	3'-0"	25
✳E1	8	#7	STR	2'-10"	46
✳E2	8	#7	STR	3'-0"	49
✳E3	8	#7	STR	3'-2"	52
✳E4	8	#7	STR	3'-4"	55
✳E5	16	#7	STR	3'-5"	112
✳F1	8	#6	2	4'-4"	52
✳F2	8	#6	STR	4'-5"	53
✳S1	180	#5	1	7'-4"	1377

✳EPOXY COATED REINFORCING STEEL LBS. =	3314
CLASS AA CONCRETE CU. YDS. =	17.3
CONCRETE PARAPET L.F. =	184'-4"

BAR TYPE

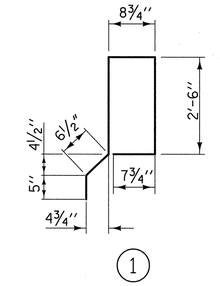

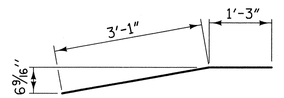

ALL BAR DIMENSIONS ARE OUT TO OUT

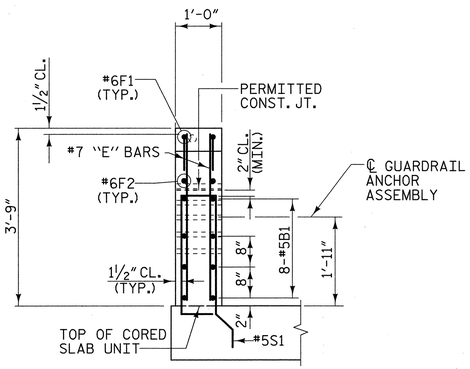

END VIEW

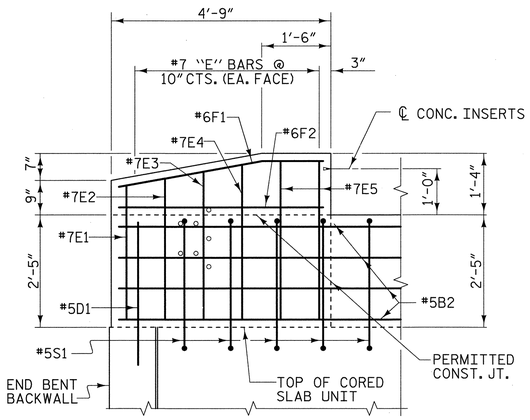

ELEVATION

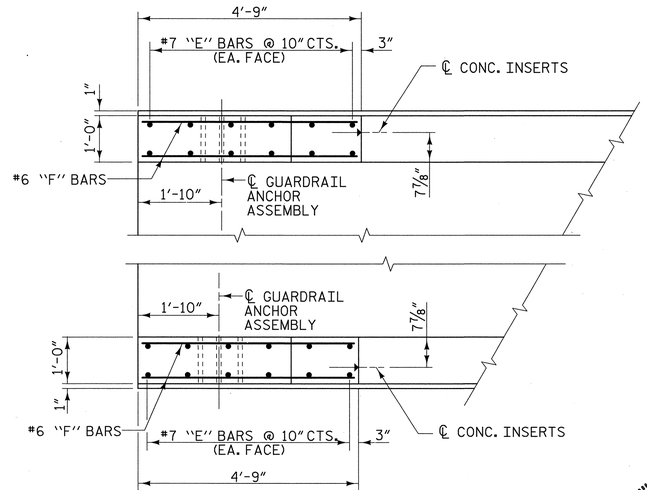

PLAN OF END POSTS

PARAPET AND END POST DETAILS

PROJECT NO. 42287

PAMLICO COUNTY

STATION: 15+56.00 -L-

REPLACES BRIDGE NO. 40

STATE OF NORTH CAROLINA
DEPARTMENT OF TRANSPORTATION
RALEIGH

PARAPET AND END POST DETAILS

33'-10" CLEAR ROADWAY - 90°SKEW

NORTH CAROLINA PROFESSIONAL SEAL 19661 ENGINEER L. KEVIN AUSTIN 6/7/09

PLANS PREPARED BY:

MULKEY
ENGINEERS & CONSULTANTS
PO Box 33127
Raleigh, N.C. 27636
(919) 851-1912
(919) 851-1918 (FAX)
www.mulkeyinc.com

REVISIONS						SHEET NO.
NO.	BY:	DATE:	NO.	BY:	DATE:	91
1			3			TOTAL SHEETS
2			4			185

DRAWN BY : W. B. ALLEN DATE : 2/09
CHECKED BY : L. K. AUSTIN DATE : 3/09

6/5/2009 12:22:22 PM R:\Structures\B5829D_SD_PR_02.dgn

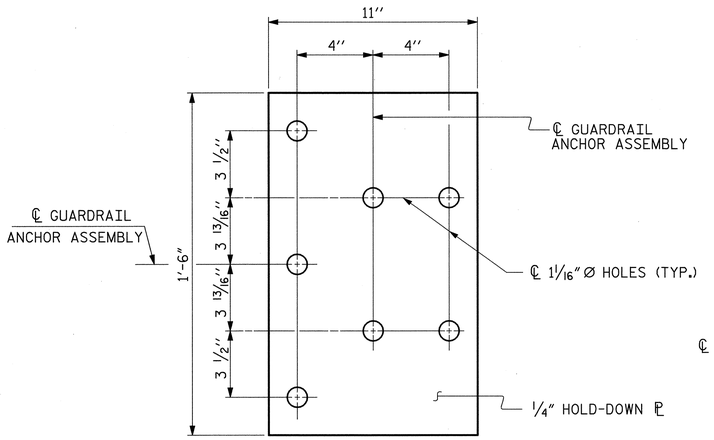

PLAN

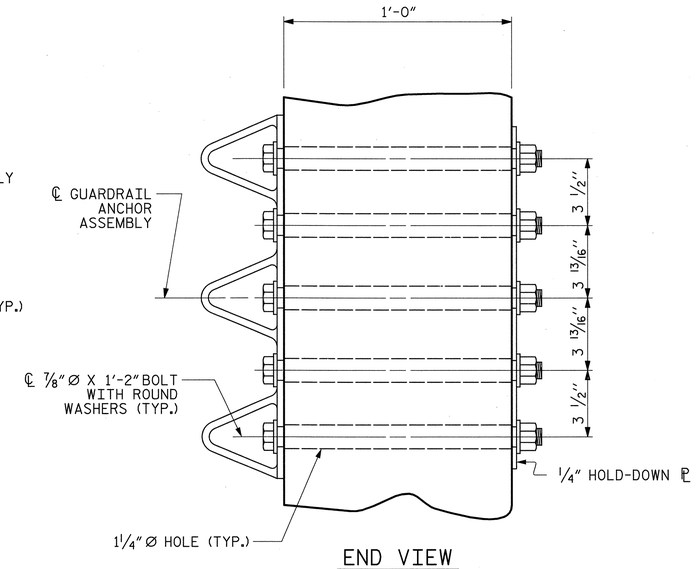

END VIEW

GUARDRAIL ANCHOR ASSEMBLY DETAILS

NOTES

THE GUARDRAIL ANCHOR ASSEMBLY SHALL CONSIST OF A 1/4'' HOLD DOWN PLATE AND 7 - 7/8'' Ø BOLTS WITH NUTS AND WASHERS.

THE HOLD-DOWN PLATE SHALL CONFORM TO AASHTO M270 GRADE 36. AFTER FABRICATION, THE HOLD-DOWN PLATE SHALL BE HOT-DIP GALVANIZED IN ACCORDANCE WITH AASHTO M111.

BOLTS SHALL CONFORM TO THE REQUIREMENTS OF ASTM A307 AND NUTS SHALL CONFORM TO THE REQUIREMENTS OF AASHTO M291. BOLTS, NUTS AND WASHERS SHALL BE GALVANIZED. AT THE CONTRACTOR'S OPTION, STAINLESS STEEL BOLTS, NUTS AND WASHERS MAY BE USED AS AN ALTERNATE FOR THE 7/8'' Ø GALVANIZED BOLTS, NUTS AND WASHERS. THEY SHALL CONFORM TO OR EXCEED THE MECHANICAL REQUIREMENTS OF ASTM A307. THE USE OF THIS ALTERNATE SHALL BE APPROVED BY THE ENGINEER.

AFTER INSTALLATION, THE EXPOSED THREAD OF THE BOLT SHALL BE BURRED WITH A SHARP POINTED TOOL.

THE COST OF THE GUARDRAIL ANCHOR ASSEMBLIES WITH BOLTS, NUTS AND WASHERS COMPLETE IN PLACE, SHALL BE INCLUDED IN THE VARIOUS PAY ITEMS.

THE VERTICAL REINFORCING BARS MAY BE SHIFTED SLIGHTLY IN THE END POST TO CLEAR ASSEMBLY BOLTS.

THE 1 1/4'' Ø HOLES SHALL BE FORMED OR DRILLED WITH A CORE BIT. IMPACT TOOLS WILL NOT BE PERMITTED. ANY CONCRETE DAMAGED BY THIS WORK SHALL BE REPAIRED TO THE SATISFACTION OF THE ENGINEER.

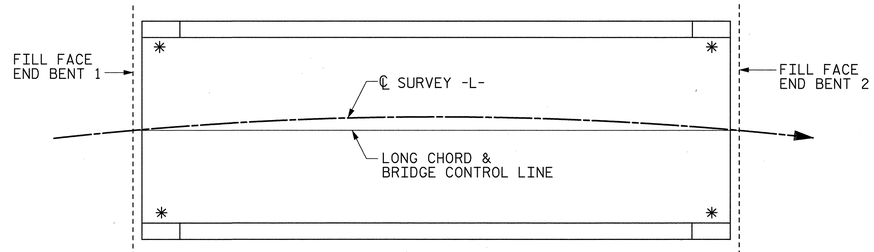

SKETCH SHOWING POINTS OF ATTACHMENT

✳ LOCATION OF GUARDRAIL ATTACHMENT

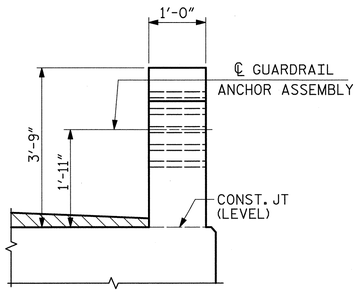

END VIEW
(ONE BAR METAL RAIL)

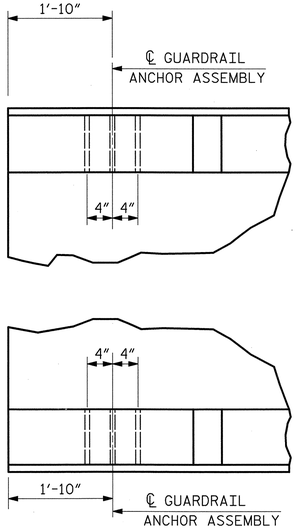

PLAN

LOCATION OF GUARDRAIL ANCHOR AT END POST

ASSEMBLED BY : W. B. ALLEN	DATE : 2/09		
CHECKED BY : L. K. AUSTIN	DATE : 3/09		
DRAWN BY : EEM 6/94	REV. 10/17/00	RWW/LES
CHECKED BY : RGW 6/94	REV. 5/7/03	RWW/JTE
	REV. 5/1/06	TLA/GM

PLANS PREPARED BY:

MULKEY
ENGINEERS & CONSULTANTS
PO BOX 33127
RALEIGH, N.C. 27636
(919) 851-1912
(919) 851-1918 (FAX)
WWW.MULKEYINC.COM

THIS STANDARD DRAWING REVIEWED & ADOPTED FOR USE AT THE REFERENCED LOCATION BY THE UNDERSIGNED:

NORTH CAROLINA PROFESSIONAL 19661 ENGINEER L. KEVIN AUSTIN 6/7/09

PROJECT NO. 42287

PAMLICO COUNTY

STATION: 15+56.00 -L-

REPLACES BRIDGE NO. 40

STATE OF NORTH CAROLINA
DEPARTMENT OF TRANSPORTATION
RALEIGH

STANDARD

GUARDRAIL ANCHORAGE DETAILS FOR METAL RAILS

REVISIONS						SHEET NO.
NO.	BY:	DATE:	NO.	BY:	DATE:	92
1			3			TOTAL SHEETS
2			4			185

STD. NO. BMR8

6/5/2009 1:59:39 PM R:\Structures\B5929D_SD_GR_01.dgn

NOTE:
FOR ATTACHMENT OF METAL RAIL TO END POST, SEE STANDARD NO. BMR2.

NOTES

AT THE CONTRACTOR'S OPTION, METAL RAIL MAY BE EITHER ALUMINUM OR GALVANIZED STEEL IN ACCORDANCE WITH THE REQUIREMENTS OF THE GENERAL NOTES AND THE FOLLOWING SPECIFICATIONS FOR THE ALTERNATE MATERIALS; HOWEVER THE CONTRACTOR WILL BE REQUIRED TO USE THE SAME RAIL MATERIAL ON ALL STRUCTURES ON THE PROJECT FOR WHICH METAL RAIL IS DESIGNATED.

ALUMINUM RAILS

MATERIAL FOR POSTS, BASES AND RAILS, EXPANSION BARS AND CLAMP BARS SHALL BE ASTM B221 ALLOY 6061-T6.

MATERIAL FOR RIVETS SHALL BE ASTM B316 ALLOY 6061-T6. RIVETS SHALL BE STANDARD BUTTON HEAD AND CONE POINT COLD DRIVEN AS PER DRAWING.

THE BASE OF RAIL POSTS, OR ANY OTHER ALUMINUM SURFACE IN CONTACT WITH CONCRETE SHALL BE THOROUGHLY COATED WITH AN ALUMINUM IMPREGNATED CAULKING COMPOUND OF APPROVED QUALITY.

MATERIAL FOR SHIMS TO BE ASTM B209 ALLOY 6061-T6.

GALVANIZED STEEL RAILS

MATERIALS AND GALVANIZING ARE TO CONFORM TO THE FOLLOWING SPECIFICATIONS:

POST, POST BASES, RAILS, EXPANSION BARS AND CLAMP BARS: AASHTO M270 GRADE 36 STRUCTURAL STEEL - GALVANIZED TO AASHTO M111.

RIVETS: RIVETS SHALL MEET THE REQUIREMENTS OF ASTM A502 FOR GRADE 1 RIVETS.

THE CUT ENDS OF GALVANIZED STEEL RAILING, AFTER GRINDING SMOOTH SHALL BE GIVEN TWO COATS OF ZINC RICH PAINT MEETING THE REQUIREMENTS OF FEDERAL SPECIFICATION MIL-P-26915 USAF TYPE 1, OR OF FEDERAL SPECIFICATIONS TT-P-641.

SHIMS: SHIMS SHALL MEET THE REQUIREMENTS OF ASTM A570 FOR GRADE 33 OR A611 FOR GRADE C AND SHALL BE GALVANIZED IN ACCORDANCE WITH AASHTO M111.

CLOSURE PLATES: CLOSURE PLATES SHALL MEET THE REQUIREMENTS OF ASTM A570 FOR GRADE 33 OR A611 FOR GRADE C AND SHALL BE GALVANIZED IN ACCORDANCE WITH AASHTO M111.

GENERAL NOTES

RAILING SHALL BE CONTINUOUS FROM END POST TO END POST OF BRIDGE. EACH JOINT IN RAIL LENGTH SHALL BE SPLICED AS DETAILED. PANEL LENGTHS OF RAIL SHALL BE ATTACHED TO A MINIMUM OF THREE POSTS.

FOR END OF RAIL TO CLEAR FACE OF CONCRETE END POST DIMENSION, SEE STANDARD NO. BMR2.

MATERIAL FOR ANCHOR STUDS SHALL BE ASTM F593 ALLOY 304 STAINLESS STEEL WITH MINIMUM 75,000 PSI ULTIMATE STRENGTH. STUDS TO BE EMBEDDED 7" IN CONCRETE. NUTS SHALL BE AMERICAN STANDARD FINISHED HEXAGON THICK, CLASS 2B THREAD, AND MEET THE REQUIREMENTS OF ASTM F594 ALLOY 304 STAINLESS STEEL. WASHERS SHALL MEET THE REQUIREMENTS OF ASTM F844 EXCEPT THEY SHALL BE MADE FROM ALLOY 304 STAINLESS STEEL. ANCHOR ℙ SHALL BE AASHTO M270 GRADE 36.

CAP SCREWS SHALL BE ASTM F593 ALLOY 305 STAINLESS STEEL.

CERTIFIED MILL REPORTS ARE REQUIRED FOR RAILS AND POSTS. SHOP INSPECTION IS NOT REQUIRED.

METAL RAIL POSTS SHALL BE SET NORMAL TO CURB GRADE.

METHOD OF MEASUREMENT FOR METAL RAILS: FOR LENGTH OF METAL RAILS TO BE PAID FOR, SEE THE STANDARD SPECIFICATIONS.

CURVED RAIL USAGE: WHERE RAILS ARE TO BE USED ON BRIDGES ON HORIZONTAL AND/OR VERTICAL CURVATURE THE CONTRACTOR MAY, AT HIS OPTION, HAVE THE REQUIRED CURVATURE IN THE RAIL FORMED IN THE SHOP OR IN THE FIELD. IN EITHER EVENT, THE RAIL SHALL CONFORM WITHOUT BUCKLING OR KINKINGTO THE REQUIRED CURVATURE IN A UNIFORM MANNER ACCEPTABLE TO THE ENGINEER.

TO INSURE FUTURE IDENTIFICATION OF THE FABRICATOR, A PERMANENT IDENTIFYING MARK SHALL BE PLACED ON EACH POST. THE METHOD OF MARKING AND LOCATION SHALL BE SUCH THAT IT DOES NOT DETRACT FROM THE APPEARANCE OF THE POST.

SHIMS SHALL BE USED AS NECESSARY FOR POST ALIGNMENT.

ALLOY 6351-T5 MAY BE SUBSTITUTED FOR ALLOY 6061-T6 WHERE APPLICABLE.

MINOR VARIATIONS IN DETAILS OF METAL RAIL WILL BE CONSIDERED. DETAILS OF SUCH VARIATIONS, IF DESIRED, SHALL BE SUBMITTED FOR APPROVAL.

THE CONTRACTOR MAY USE ADHESIVELY ANCHORED ANCHOR BOLTS IN PLACE OF THE ANCHOR ASSEMBLY. LEVEL TWO FIELD TESTING IS REQUIRED, AND THE YIELD LOAD OF THE 3/4" Ø BOLT IS 10 KIPS. FOR ADHESIVELY ANCHORED ANCHOR BOLTS OR DOWELS, SEE SPECIAL PROVISIONS.

WHEN ADHESIVELY ANCHORED ANCHOR BOLTS ARE USED, BOLTS, NUTS AND WASHERS SHALL MEET THE SAME REQUIREMENTS AS THE ANCHOR STUDS, NUTS AND WASHERS FOR USE WITH THE ANCHOR ASSEMBLY.

GROOVED CONTRACTION JOINTS, 1/2" IN DEPTH, SHALL BE TOOLED IN ALL EXPOSED FACES OF THE PARAPET IN ACCORDANCE WITH ARTICLE 825-10(B) OF THE STANDARD SPECIFICATIONS. THE CONTRACTION JOINT SHALL BE LOCATED AT A SPACING OF 8FT. TO 10FT. BETWEEN EXPANSION JOINTS. NO CONTRACTION JOINTS WILL BE REQUIRED FOR SEGMENTS LESS THAN 10 FEET IN LENGTH.

PAY LENGTH = 165'-4" LIN. FT.

PLANS PREPARED BY:
MULKEY ENGINEERS & CONSULTANTS
PO Box 33127
Raleigh, N.C. 27636
(919) 851-1912
(919) 851-1918 (FAX)
WWW.MULKEYINC.COM

THIS STANDARD DRAWING REVIEWED & ADOPTED FOR USE AT THE REFERENCED LOCATION BY THE UNDERSIGNED:

NORTH CAROLINA PROFESSIONAL SEAL 19661 ENGINEER L. KEVIN AUSTIN 6/7/09

PROJECT NO. 42287
PAMLICO COUNTY
STATION: 15+56.00 -L-
REPLACES BRIDGE NO. 40

STATE OF NORTH CAROLINA
DEPARTMENT OF TRANSPORTATION
RALEIGH

STANDARD

1 BAR METAL RAIL

REVISIONS						SHEET NO.
NO.	BY:	DATE:	NO.	BY:	DATE:	93
1			3			TOTAL SHEETS
2			4			185

STD. NO. BMR1

ASSEMBLED BY : W. B. ALLEN	DATE : 2/09		
CHECKED BY : L. K. AUSTIN	DATE : 3/09		
DRAWN BY : FCJ 1/88		REV. 10/17/00	LES/RDR
CHECKED BY : CRK 3/89		REV. 5/7/03R	RWW/JTE
		REV. 5/1/06R	KMM/GM

6/5/2009 1:18:52 PM R:\Structures\B5129D_SD_IMR_01.dgn

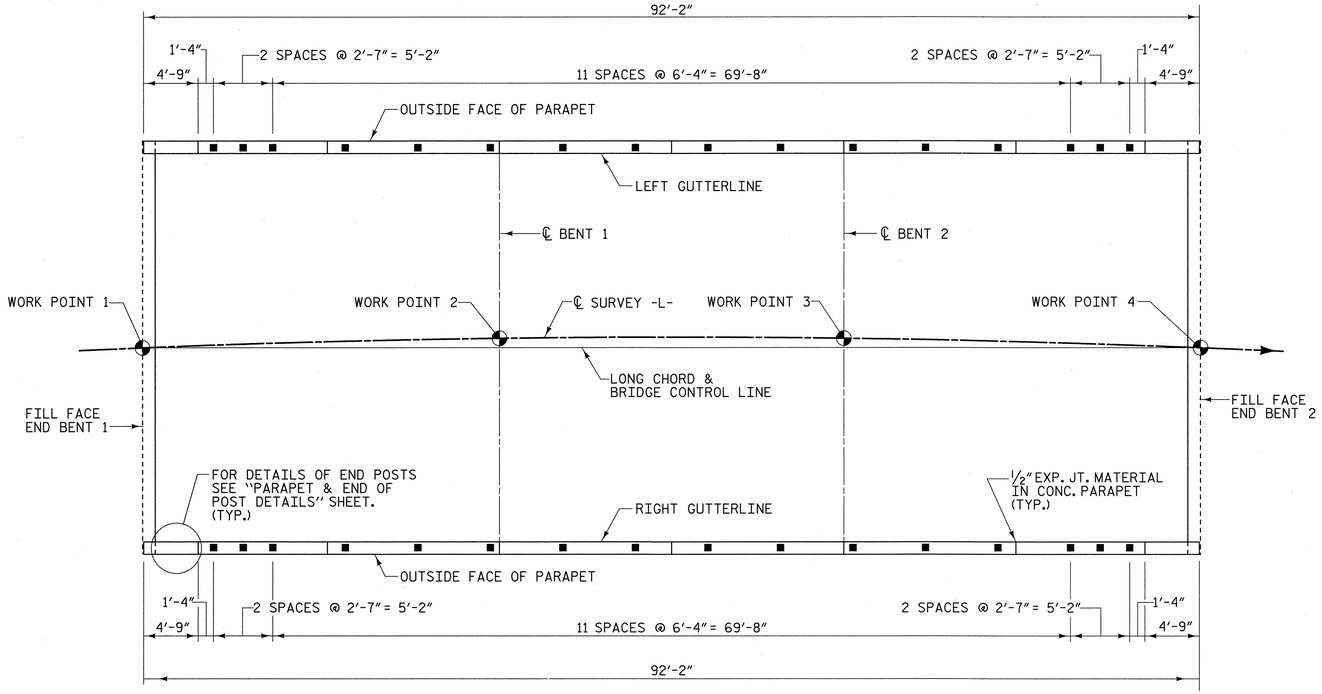

PLAN OF RAIL POST SPACINGS

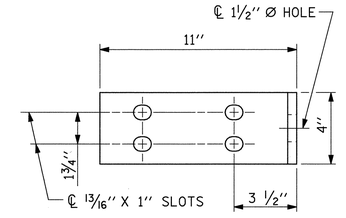

ELEVATION

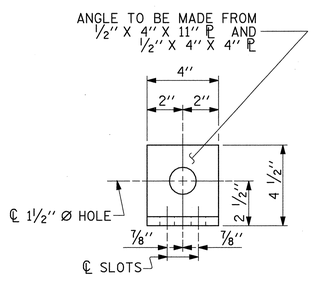

END VIEW (FIX)

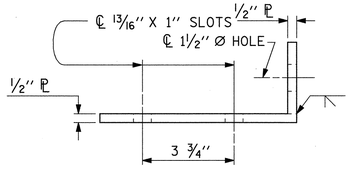

TOP VIEW

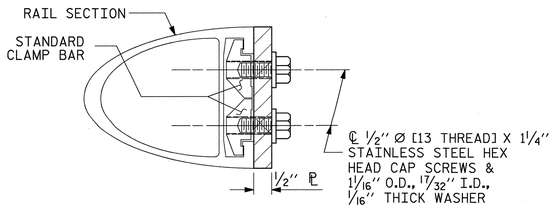

SECTION H-H (FIX)

FIXED

DETAILS FOR ATTACHING METAL RAIL TO END POST

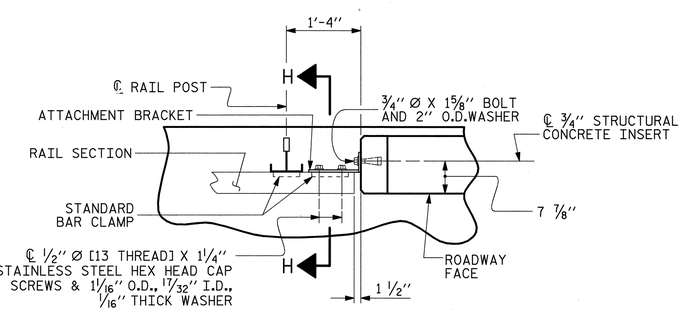

PLAN - RAIL AND END POST

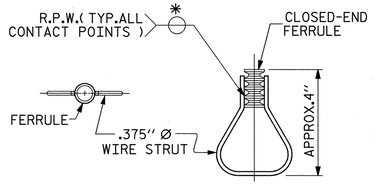

PLAN ELEVATION

STRUCTURAL CONCRETE INSERT

*EACH WELDED ATTACHMENT OF WIRE TO FERRULE SHALL DEVELOP THE TENSILE STRENGTH OF THE WIRE.

NOTES

STRUCTURAL CONCRETE INSERT

THE STRUCTURAL CONCRETE INSERT ASSEMBLY SHALL CONSIST OF THE FOLLOWING COMPONENTS:

A. FERRULES SHALL BE MADE FROM STEEL MEETING THE REQUIREMENTS OF AASHTO M169, GRADE 12L14 AND SHALL HAVE A MINIMUM LENGTH OF THREADS OF 1½".

B. 1 - ¾" Ø X 1⅝" BOLT WITH WASHER. BOLT SHALL CONFORM TO THE REQUIREMENTS OF ASTM A307. BOLT AND WASHER SHALL BE GALVANIZED. (AT THE CONTRACTOR'S OPTION, STAINLESS STEEL BOLT AND WASHER MAY BE USED AS AN ALTERNATE FOR THE ¾" Ø X 1⅝" GALVANIZED BOLT AND WASHER. THEY SHALL CONFORM TO OR EXCEED THE MECHANICAL REQUIREMENTS OF ASTM A307. THE USE OF THIS ALTERNATE SHALL BE APPROVED BY THE ENGINEER.)

C. WIRE STRUT SHOWN IN THE CONCRETE INSERT ASSEMBLY DETAIL IS THE MINIMUM ALLOWABLE SIZE AND SHALL HAVE A MINIMUM TENSILE STRENGTH OF 100,000 PSI. AS AN OPTION, A 1⁄16" Ø WIRE STRUT WITH A MINIMUM TENSILE STRENGTH OF 90,000 PSI IS ACCEPTABLE.

NOTES

METAL RAIL TO END POST CONNECTION

THE METAL RAIL TO END POST CONNECTION SHALL CONSIST OF THE FOLLOWING COMPONENTS:

A. ½" PLATES SHALL CONFORM TO AASHTO M270 GRADE 36 AND SHALL BE GALVANIZED AFTER FABRICATION.

B. ¾" STRUCTURAL CONCRETE INSERT SHALL HAVE A WORKING LOAD SHEAR CAPACITY OF 4800 LBS. THE FERRULES SHALL ENGAGE A ¾"Ø X 1⅝" BOLT WITH 2" O.D. WASHER IN PLACE. THE ¾"Ø X 1⅝" BOLT SHALL HAVE N. C. THREADS.

C. CAP SCREWS FOR RAIL ATTACHMENT TO ANGLE SHALL CONFORM TO THE REQUIREMENTS OF ASTM F593 ALLOY 305 STAINLESS STEEL. CAP SCREWS TO BE CENTERED IN SLOTS AT 60°F.

D. STANDARD CLAMP BARS (SEE METAL RAIL SHEET).

E. ½" Ø PIPE SLEEVES (IF REQUIRED) TO BE GALVANIZED.

THE COST OF THE STANDARD CLAMP BARS AND CAP SCREWS USED IN THE METAL RAIL TO END POST CONNECTION SHALL BE INCLUDED IN THE UNIT CONTRACT PRICE BID FOR LINEAR FEET OF 1 OR 2 BAR METAL RAILS.

THE ¾" STRUCTURAL CONCRETE INSERT WITH BOLT SHALL BE ASSEMBLED IN THE SHOP.

THE COST OF THE ¾" STRUCTURAL CONCRETE INSERT ASSEMBLY, AND THE ½" PLATES COMPLETE IN PLACE SHALL BE INCLUDED IN THE VARIOUS PAY ITEMS.

THE CONTRACTOR, AT HIS OPTION, MAY USE AN ADHESIVE BONDING SYSTEM IN LIEU OF THE STRUCTURAL CONCRETE INSERT EMBEDDED IN THE END POST. IF THE ADHESIVE BONDING SYSTEM IS USED, THE ¾" Ø X 1⅝" BOLT WITH WASHER SHALL BE REPLACED WITH A ¾"Ø X 6½" BOLT AND 2" O.D. WASHER. ALL SPECIFICATIONS THAT APPLY TO THE ¾" Ø X 1⅝" BOLT SHALL APPLY TO THE ¾"Ø X 6 ½" BOLT. FIELD TESTING OF THE ADHESIVE BONDING SYSTEM IS NOT REQUIRED.

PROJECT NO. 42287

PAMLICO COUNTY

STATION: 15+56.00 -L-

REPLACES BRIDGE NO. 40

STATE OF NORTH CAROLINA
DEPARTMENT OF TRANSPORTATION
RALEIGH
STANDARD
RAIL POST SPACINGS AND END OF RAIL DETAILS

ASSEMBLED BY : W. B. ALLEN	DATE : 2/09
CHECKED BY : L. K. AUSTIN	DATE : 2/09
DRAWN BY : FCJ 1/88	REV. 10/17/00 LES/RDR
CHECKED BY : CRK 3/89	REV. 5/7/03 RWW/JTE
	REV. 5/1/06 TLA/GM

PLANS PREPARED BY:
MULKEY ENGINEERS & CONSULTANTS
PO Box 33127
Raleigh, N.C. 27636
(919) 851-1912
(919) 851-1918 (FAX)
www.mulkeyinc.com

THIS STANDARD DRAWING REVIEWED & ADOPTED FOR USE AT THE REFERENCED LOCATION BY THE UNDERSIGNED:

NORTH CAROLINA PROFESSIONAL ENGINEER 19661 L. KEVIN AUSTIN
6/7/09

REVISIONS						SHEET NO.
NO.	BY:	DATE:	NO.	BY:	DATE:	94
1			3			TOTAL SHEETS
2			4			185

STD. NO. BMR2

6/5/2009 08:23 PM R:\Structures\BS6290_SD_MR_02.dgn

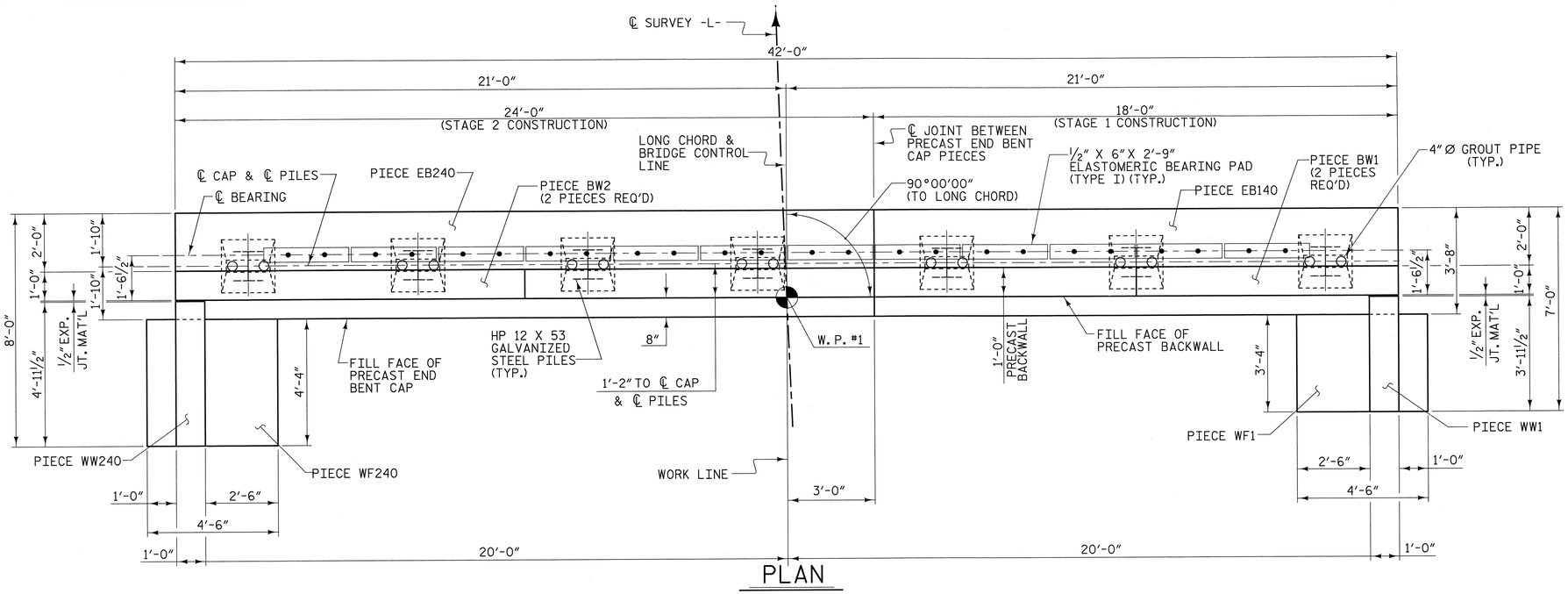

PLAN

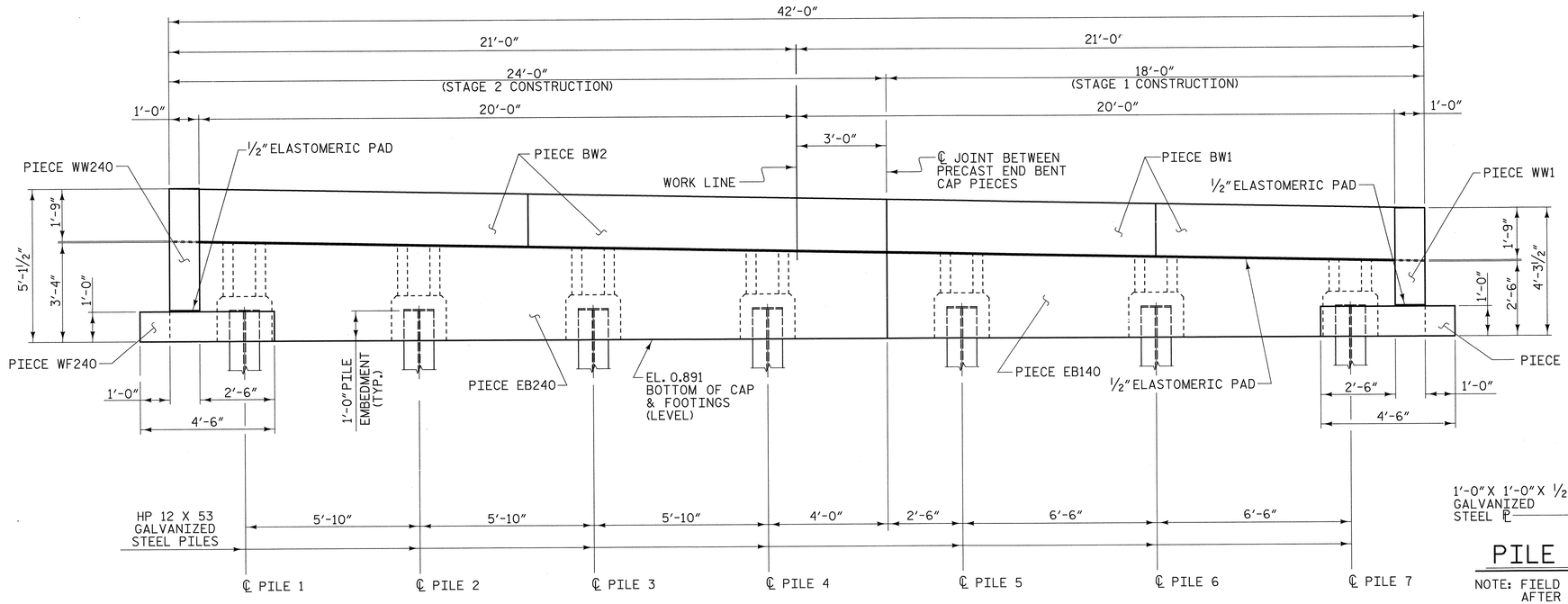

ELEVATION

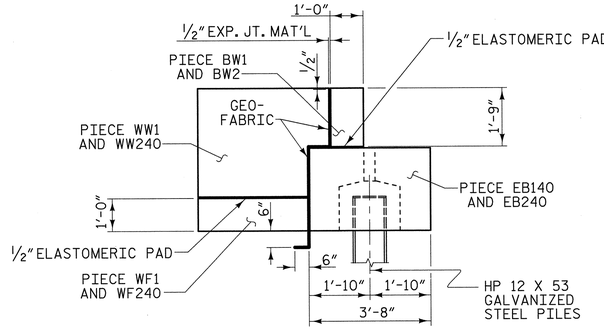

END VIEW
(WITH GEO-FABRIC DETAILS)

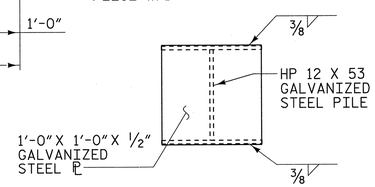

PILE PLATE DETAIL

NOTE: FIELD WELD PLATE TO TOP OF PILE AFTER PILE HAS BEEN DRIVEN AND CUT OFF TO THE PROPER ELEVATION.

NOTES

THE CONTRACTOR'S ATTENTION IS CALLED TO THE FACT THAT W.P. #1 IS LOCATED ON THE "FILL FACE OF PRECAST BACKWALL". THE "FILL FACE OF PRECAST END BENT CAP" IS LOCATED 8" BACK-STATION FROM W.P. #1.

THE FILL FACE OF THE CAP, BACKWALL, AND WINGWALL PIECES SHALL BE LINED WITH GEO-FABRIC.

SEE PIECE EB140 SHEET FOR DETAILS, NOTES, AND BILL OF MATERIAL.

SEE PIECE EB240 SHEET FOR DETAILS, NOTES, AND BILL OF MATERIAL.

SEE PIECE BW1 & BW2 SHEET FOR DETAILS, NOTES, AND BILL OF MATERIAL.

SEE PIECE WW1 AND PIECE WF1 SHEET FOR DETAILS, NOTES, AND BILL OF MATERIAL.

SEE PIECE WW240 AND PIECE WF240 SHEET FOR DETAILS, NOTES, AND BILL OF MATERIAL.

THE MINIMUM REQUIRED SOIL BEARING CAPACITY FOR SOIL BENEATH CAP PIECES AND WING FOOTING PIECES SHALL BE 2000 POUNDS PER SQUARE FOOT.

THE ERECTION SUPPORT SYSTEM FOR THE PRECAST CAP SHALL NOT BE REMOVED, CORED SLAB UNITS SHALL NOT BE PLACED ON THE PRECAST CAP, BACKFILLING AGAINST THE PRECAST CAP SHALL NOT BE ALLOWED, AND VEHICLES OR CONSTRUCTION EQUIPMENT SHALL NOT BE ALLOWED ON THE PRECAST CAP UNTIL THE GROUT USED TO FILL THE PILE BLOCKOUTS HAS OBTAINED A COMPRESSIVE STRENGTH OF AT LEAST 4000 PSI. SEE PROJECT SPECIAL PROVISION, "GROUT FOR PILE BLOCKOUTS".

THE CONTRACTOR SHALL SUBMIT TO THE ENGINEER FOR APPROVAL A METHOD TO SUPPORT THE PRECAST CAP IN THE PROPER LOCATION AND ELEVATION AS SHOWN ON THE PLANS PRIOR TO PLACEMENT OF AND CURING OF THE GROUT IN THE PILE BLOCKOUTS. THE METHOD CHOSEN SHALL PROVIDE A WATERTIGHT SEAL AT THE BOTTOM OF THE CAP SO NO GROUT COMES IN CONTACT WITH THE STREAM UNTIL THE GROUT HAS HARDENED.

THE GROUT USED TO FILL THE 4" DIAMETER HOLES IN THE PRECAST BACKWALL PIECES AND IN THE PRECAST WING WALL PIECES SHALL BE NON-SHRINK, NON-METALLIC GROUT THAT IS ON THE DEPARTMENT'S APPROVAL LIST AND SHALL MEET THE APPROVAL OF THE ENGINEER. BACKFILLING AGAINST THE PRECAST BACKWALL AND THE PRECAST WING WALLS SHALL NOT BE ALLOWED, AND CONSTRUCTION EQUIPMENT SHALL NOT BE ALLOWED ON THE PRECAST BACKWALL AND THE PRECAST WING WALLS UNTIL THE GROUT HAS OBTAINED A COMPRESSIVE STRENGTH OF AT LEAST 4000 PSI.

PROJECT NO. 42287

PAMLICO COUNTY

STATION: 15+56.00 -L-

REPLACES BRIDGE NO. 40

STATE OF NORTH CAROLINA
DEPARTMENT OF TRANSPORTATION
RALEIGH

END BENT #1

33'-10" CLEAR ROADWAY - 90° SKEW

REVISIONS						SHEET NO.
NO.	BY:	DATE:	NO.	BY:	DATE:	95
1			3			TOTAL SHEETS
2			4			185

NORTH CAROLINA PROFESSIONAL ENGINEER SEAL 19661 L. KEVIN AUSTIN 8/4/09

PLANS PREPARED BY:
MULKEY
ENGINEERS & CONSULTANTS
PO BOX 33127
RALEIGH, N.C. 27636
(919) 851-1918
(919) 851-1918 (FAX)
WWW.MULKEYINC.COM

DRAWN BY : W. B. ALLEN DATE : 2/09
CHECKED BY : L. K. AUSTIN DATE : 3/09

8/6/2009 9:38:02 AM G:\projects\2004\2410_Pamlico40\Structures\B5290_SD_EB1.dgn

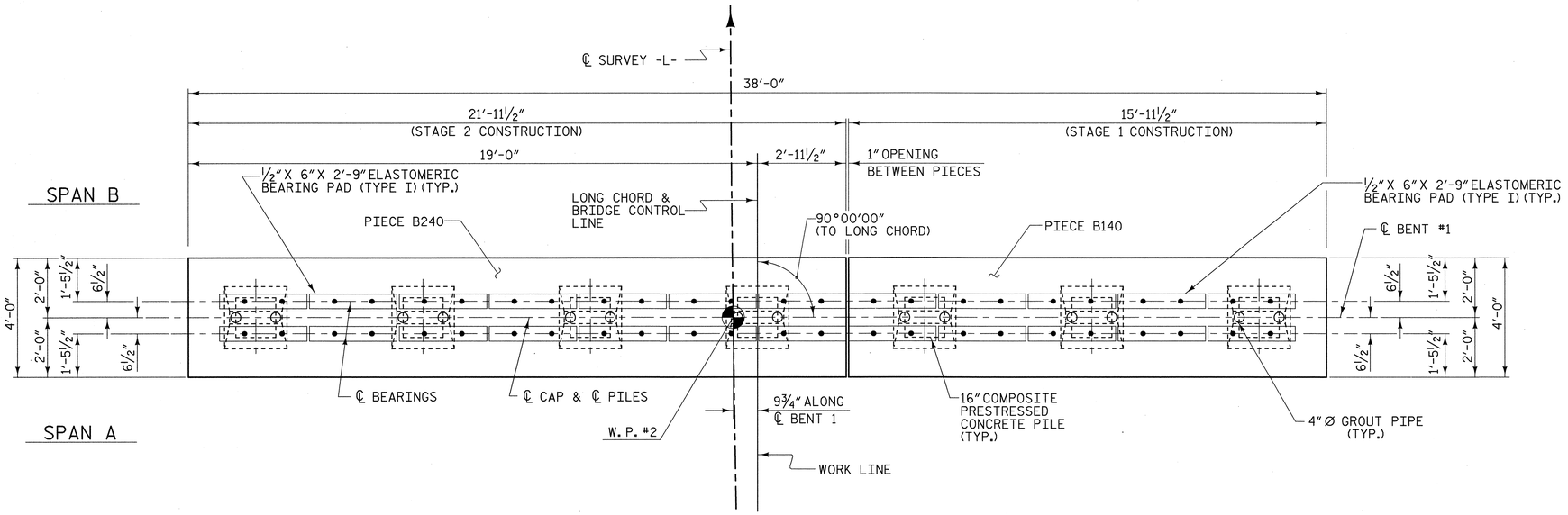

PLAN

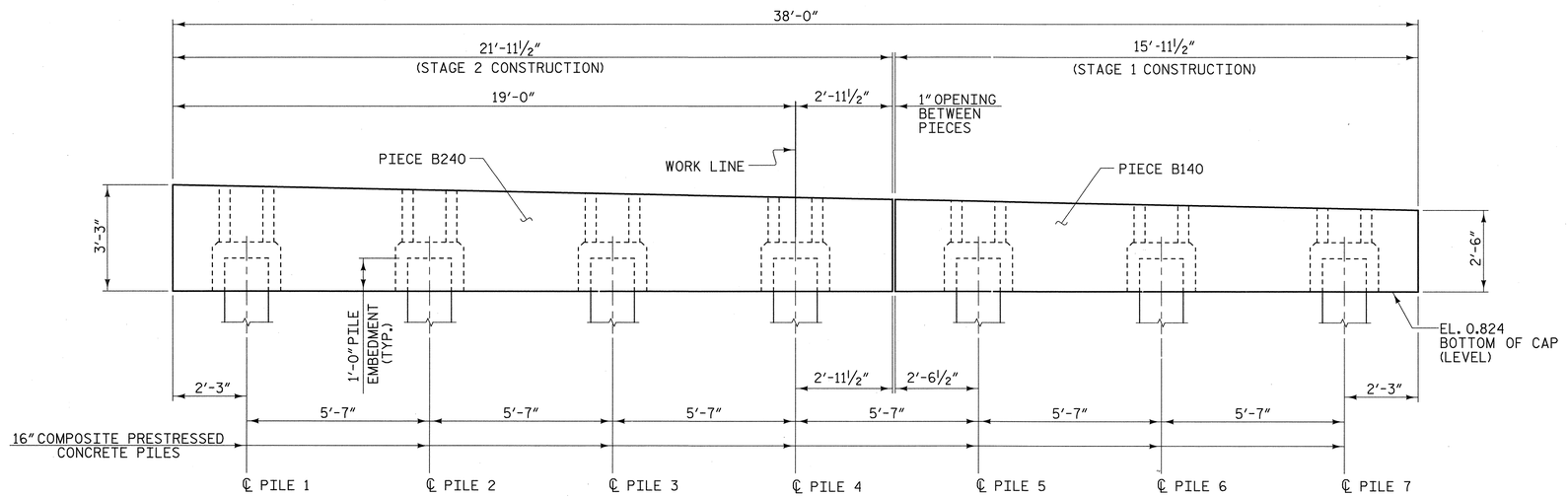

ELEVATION

NOTES

SEE PIECE B140 SHEET FOR DETAILS, NOTES, AND BILL OF MATERIAL.

SEE PIECE B240 SHEET FOR DETAILS, NOTES, AND BILL OF MATERIAL.

THE ERECTION SUPPORT SYSTEM FOR THE PRECAST CAP SHALL NOT BE REMOVED, CORED SLAB UNITS SHALL NOT BE PLACED ON THE PRECAST CAP, AND VEHICLES OR CONSTRUCTION EQUIPMENT SHALL NOT BE ALLOWED ON THE PRECAST CAP UNTIL THE GROUT USED TO FILL THE PILE BLOCKOUTS HAS OBTAINED A COMPRESSIVE STRENGTH OF AT LEAST 4000 PSI. SEE PROJECT SPECIAL PROVISION, "GROUT FOR PILE BLOCKOUTS".

THE CONTRACTOR SHALL SUBMIT TO THE ENGINEER FOR APPROVAL A METHOD TO SUPPORT THE PRECAST CAP IN THE PROPER LOCATION AND ELEVATION AS SHOWN ON THE PLANS PRIOR TO PLACEMENT OF AND CURING OF THE GROUT IN THE PILE BLOCKOUTS. THE METHOD CHOSEN SHALL PROVIDE A WATERTIGHT SEAL AT THE BOTTOM OF THE CAP SO NO GROUT COMES IN CONTACT WITH THE STREAM UNTIL THE GROUT HAS HARDENED.

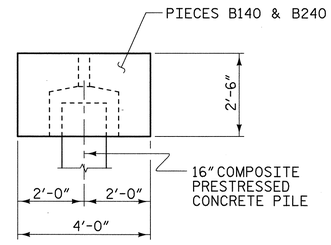

END VIEW

PROJECT NO. 42287

PAMLICO COUNTY

STATION: 15+56.00 -L-

REPLACES BRIDGE NO. 40

STATE OF NORTH CAROLINA
DEPARTMENT OF TRANSPORTATION
RALEIGH

BENT #1

33'-10" CLEAR ROADWAY - 90° SKEW

NORTH CAROLINA PROFESSIONAL 1966 ENGINEER KEVIN AUSTIN 6/7/09

PLANS PREPARED BY:

MULKEY
ENGINEERS & CONSULTANTS
PO Box 33127
RALEIGH, N.C. 27636
(919) 851-1212 (FAX)
WWW.MULKEYINC.COM

REVISIONS						SHEET NO.
NO.	BY:	DATE:	NO.	BY:	DATE:	96
1			3			TOTAL SHEETS
2			4			185

DRAWN BY : W. B. ALLEN DATE : 2/09
CHECKED BY : L. K. AUSTIN DATE : 3/09

6/5/2009 10:26:26 PM R:\Structures\B5290_SD_BL_01.dgn

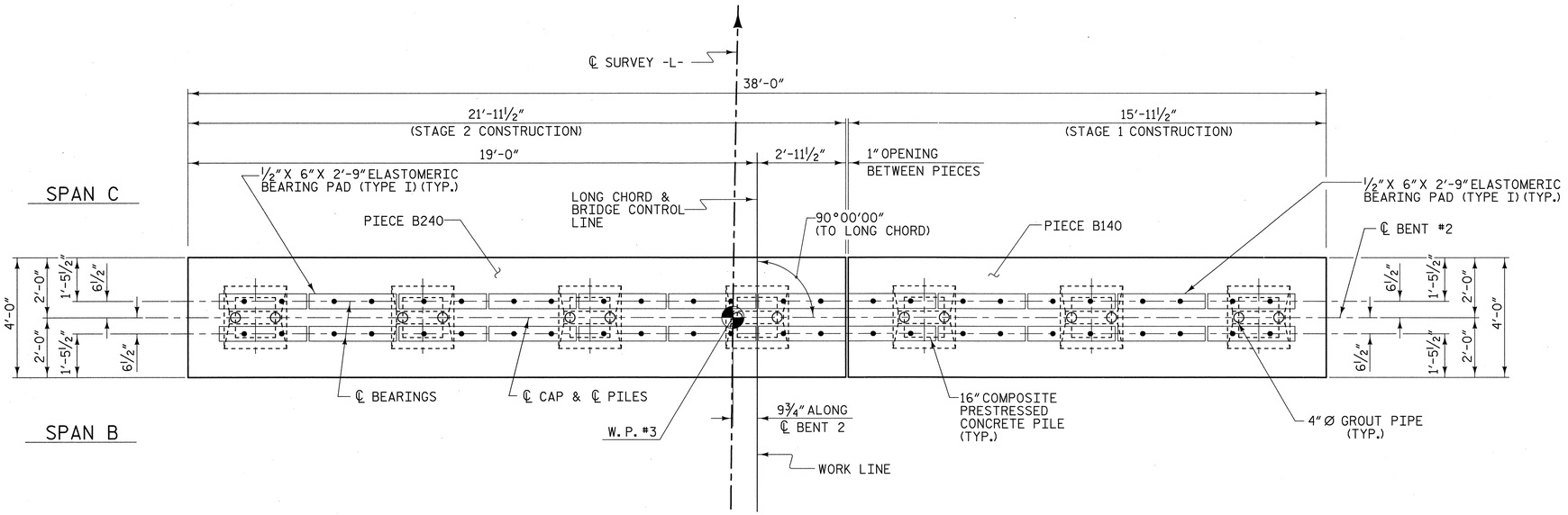

PLAN

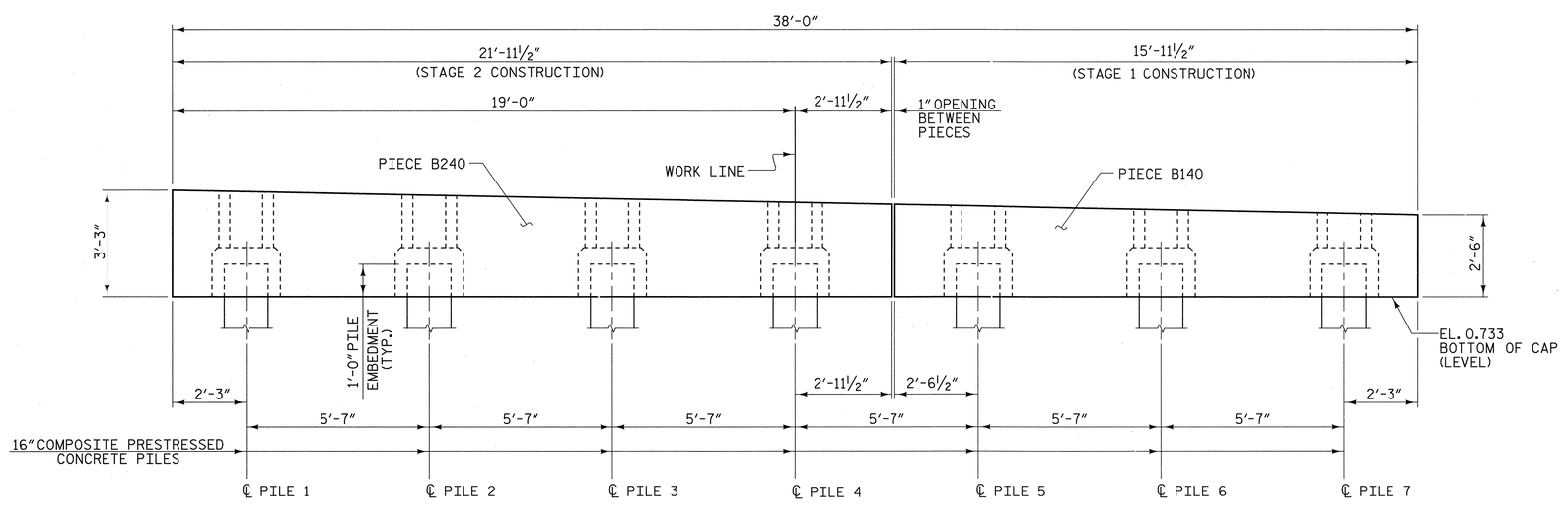

ELEVATION

NOTES

SEE PIECE B140 SHEET FOR DETAILS, NOTES, AND BILL OF MATERIAL.

SEE PIECE B240 SHEET FOR DETAILS, NOTES, AND BILL OF MATERIAL.

THE ERECTION SUPPORT SYSTEM FOR THE PRECAST CAP SHALL NOT BE REMOVED, CORED SLAB UNITS SHALL NOT BE PLACED ON THE PRECAST CAP, AND VEHICLES OR CONSTRUCTION EQUIPMENT SHALL NOT BE ALLOWED ON THE PRECAST CAP UNTIL THE GROUT USED TO FILL THE PILE BLOCKOUTS HAS OBTAINED A COMPRESSIVE STRENGTH OF AT LEAST 4000 PSI. SEE PROJECT SPECIAL PROVISION, "GROUT FOR PILE BLOCKOUTS".

THE CONTRACTOR SHALL SUBMIT TO THE ENGINEER FOR APPROVAL A METHOD TO SUPPORT THE PRECAST CAP IN THE PROPER LOCATION AND ELEVATION AS SHOWN ON THE PLANS PRIOR TO PLACEMENT OF AND CURING OF THE GROUT IN THE PILE BLOCKOUTS. THE METHOD CHOSEN SHALL PROVIDE A WATERTIGHT SEAL AT THE BOTTOM OF THE CAP SO NO GROUT COMES IN CONTACT WITH THE STREAM UNTIL THE GROUT HAS HARDENED.

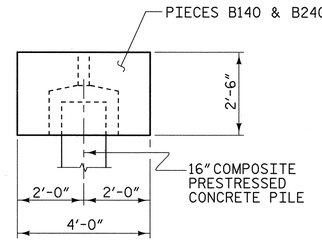

END VIEW

DRAWN BY : W. B. ALLEN DATE : 2/09
CHECKED BY : L. K. AUSTIN DATE : 3/09

NORTH CAROLINA PROFESSIONAL ENGINEER SEAL 19661 L. KEVIN AUSTIN 6/1/09

PLANS PREPARED BY:

MULKEY
ENGINEERS & CONSULTANTS
PO Box 33127
Raleigh, NC 27636
(919) 851-1912
(919) 851-1918 (FAX)
WWW.MULKEYINC.COM

PROJECT NO. 42287
PAMLICO COUNTY
STATION: 15+56.00 -L-

REPLACES BRIDGE NO. 40

STATE OF NORTH CAROLINA
DEPARTMENT OF TRANSPORTATION
RALEIGH

BENT #2

33′-10″ CLEAR ROADWAY - 90°SKEW

REVISIONS						SHEET NO.
NO.	BY:	DATE:	NO.	BY:	DATE:	97
1			3			TOTAL SHEETS
2			4			185

6/5/2009 11:51:51 PM R:\Structures\B5290_SD_B2_01.dgn

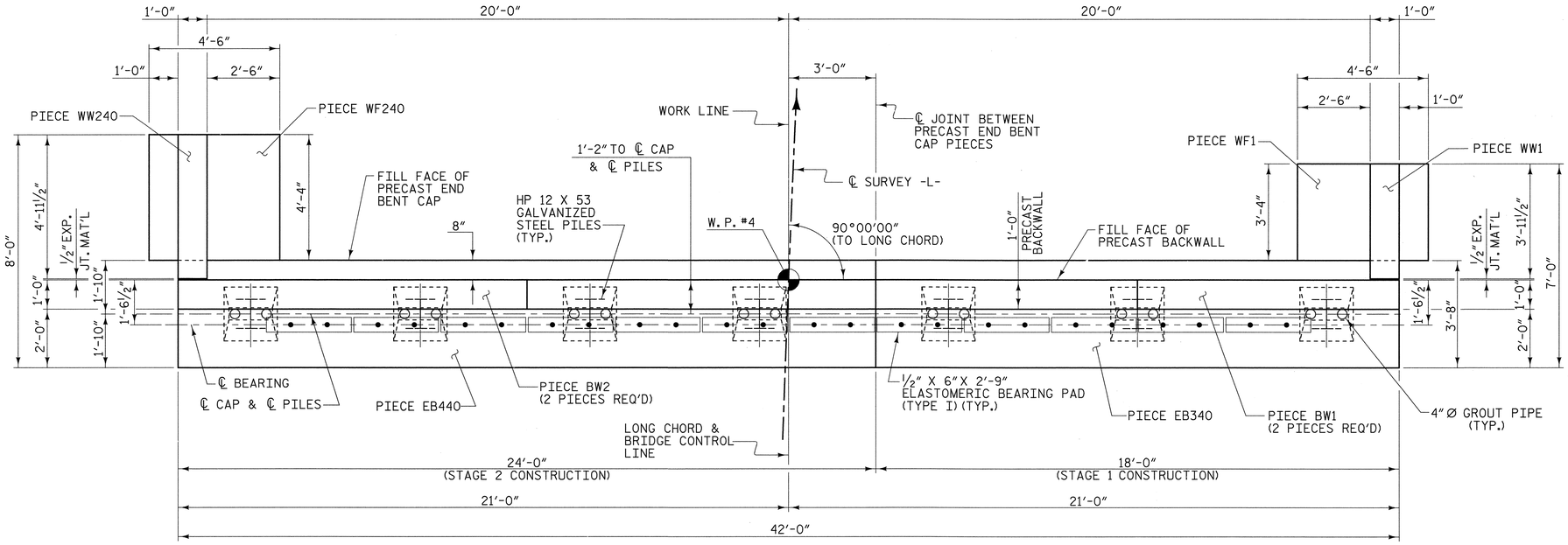

PLAN

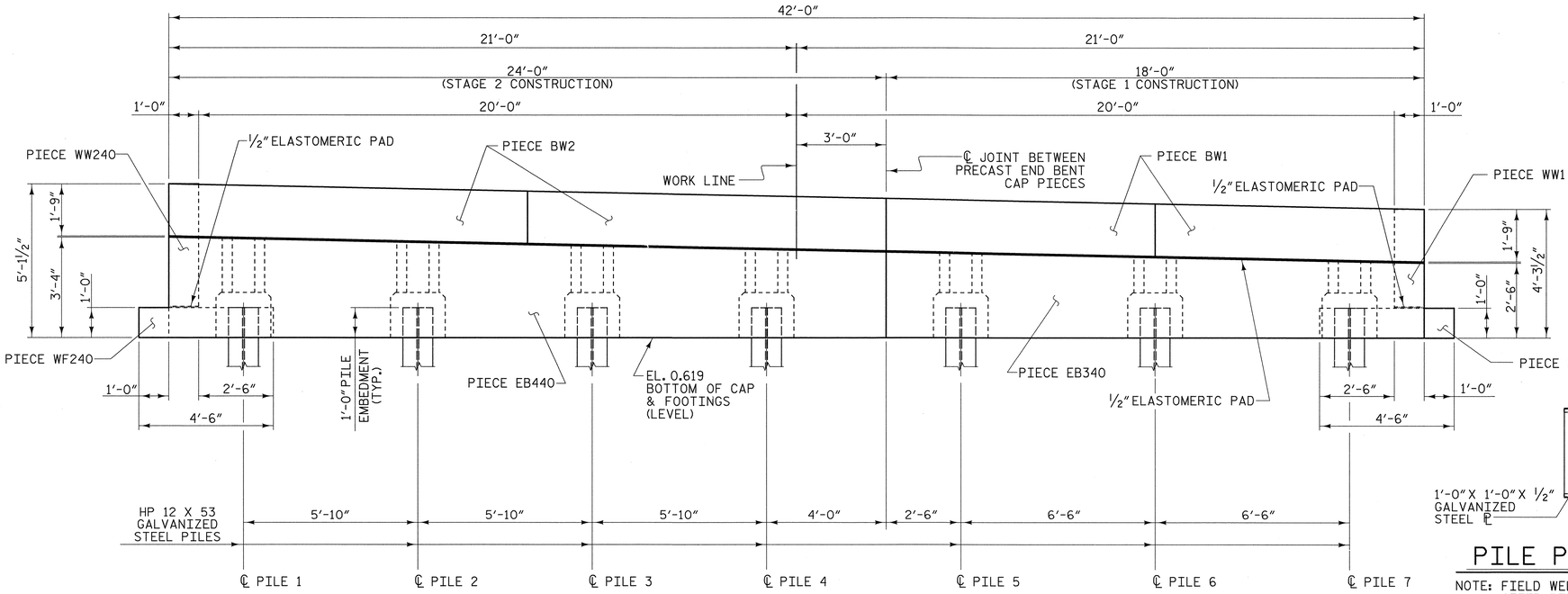

ELEVATION

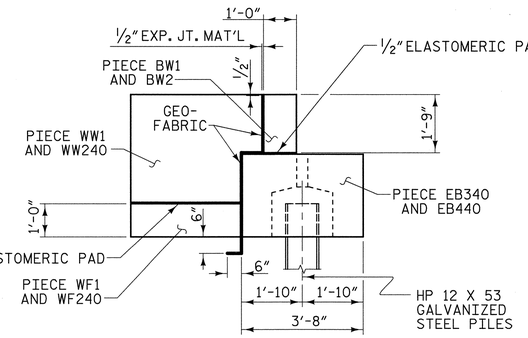

END VIEW
(WITH GEO-FABRIC DETAILS)

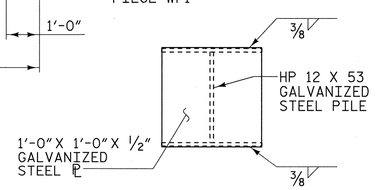

PILE PLATE DETAIL

NOTE: FIELD WELD PLATE TO TOP OF PILE AFTER PILE HAS BEEN DRIVEN AND CUT OFF TO THE PROPER ELEVATION.

NOTES

THE CONTRACTOR'S ATTENTION IS CALLED TO THE FACT THAT W.P. #4 IS LOCATED ON THE "FILL FACE OF PRECAST BACKWALL". THE "FILL FACE OF PRECAST END BENT CAP" IS LOCATED 8" AHEAD-STATION FROM W.P. #4.

THE FILL FACE OF THE CAP, BACKWALL, AND WINGWALL PIECES SHALL BE LINED WITH GEO-FABRIC.

SEE PIECE EB340 SHEET FOR DETAILS, NOTES, AND BILL OF MATERIAL.

SEE PIECE EB440 SHEET FOR DETAILS, NOTES, AND BILL OF MATERIAL.

SEE PIECE BW1 & BW2 SHEET FOR DETAILS, NOTES, AND BILL OF MATERIAL.

SEE PIECE WW1 AND PIECE WF1 SHEET FOR DETAILS, NOTES, AND BILL OF MATERIAL.

SEE PIECE WW240 AND PIECE WF240 SHEET FOR DETAILS, NOTES, AND BILL OF MATERIAL.

THE MINIMUM REQUIRED SOIL BEARING CAPACITY FOR SOIL BENEATH CAP PIECES AND WING FOOTING PIECES SHALL BE 2000 POUNDS PER SQUARE FOOT.

THE ERECTION SUPPORT SYSTEM FOR THE PRECAST CAP SHALL NOT BE REMOVED, CORED SLAB UNITS SHALL NOT BE PLACED ON THE PRECAST CAP, BACKFILLING AGAINST THE PRECAST CAP SHALL NOT BE ALLOWED, AND VEHICLES OR CONSTRUCTION EQUIPMENT SHALL NOT BE ALLOWED ON THE PRECAST CAP UNTIL THE GROUT USED TO FILL THE PILE BLOCKOUTS HAS OBTAINED A COMPRESSIVE STRENGTH OF AT LEAST 4000 PSI. SEE PROJECT SPECIAL PROVISION, "GROUT FOR PILE BLOCKOUTS".

THE CONTRACTOR SHALL SUBMIT TO THE ENGINEER FOR APPROVAL A METHOD TO SUPPORT THE PRECAST CAP IN THE PROPER LOCATION AND ELEVATION AS SHOWN ON THE PLANS PRIOR TO PLACEMENT OF AND CURING OF THE GROUT IN THE PILE BLOCKOUTS. THE METHOD CHOSEN SHALL PROVIDE A WATERTIGHT SEAL AT THE BOTTOM OF THE CAP SO NO GROUT COMES IN CONTACT WITH THE STREAM UNTIL THE GROUT HAS HARDENED.

THE GROUT USED TO FILL THE 4" DIAMETER HOLES IN THE PRECAST BACKWALL PIECES AND IN THE PRECAST WING WALL PIECES SHALL BE NON-SHRINK, NON-METALLIC GROUT THAT IS ON THE DEPARTMENT'S APPROVAL LIST AND SHALL MEET THE APPROVAL OF THE ENGINEER. BACKFILLING AGAINST THE PRECAST BACKWALL AND THE PRECAST WING WALLS SHALL NOT BE ALLOWED, AND CONSTRUCTION EQUIPMENT SHALL NOT BE ALLOWED ON THE PRECAST BACKWALL AND THE PRECAST WING WALLS UNTIL THE GROUT HAS OBTAINED A COMPRESSIVE STRENGTH OF AT LEAST 4000 PSI.

PROJECT NO. 42287

PAMLICO COUNTY

STATION: 15+56.00 -L-

REPLACES BRIDGE NO. 40

STATE OF NORTH CAROLINA
DEPARTMENT OF TRANSPORTATION
RALEIGH

END BENT #2

33'-10" CLEAR ROADWAY - 90° SKEW

REVISIONS						SHEET NO.
NO.	BY:	DATE:	NO.	BY:	DATE:	98
1			3			TOTAL SHEETS
2			4			185

NORTH CAROLINA PROFESSIONAL SEAL 1966 ENGINEER KEVIN AUSTIN 8/6/09

PLANS PREPARED BY:
MULKEY ENGINEERS & CONSULTANTS
PO Box 33127
Raleigh, N.C. 27636
(919) 851-1019
(919) 851-1918 (FAX)
WWW.MULKEYINC.COM

DRAWN BY : W. B. ALLEN DATE : 2/09
CHECKED BY : L. K. AUSTIN DATE : 3/09

8/6/2009 9:44:41 AM G:\projects\2004\224.40_Pamlico40\Structures\BS290_SD_EB2_01.dgn

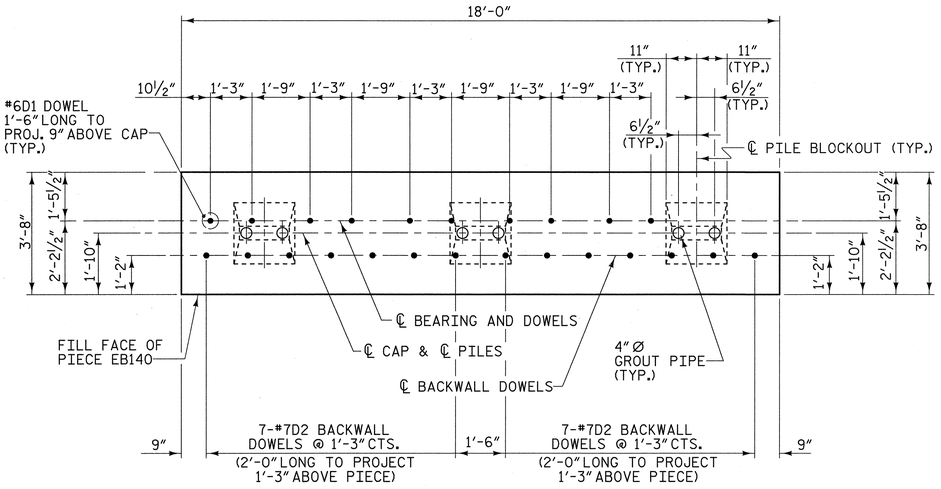

PLAN - PRECAST PIECE EB140

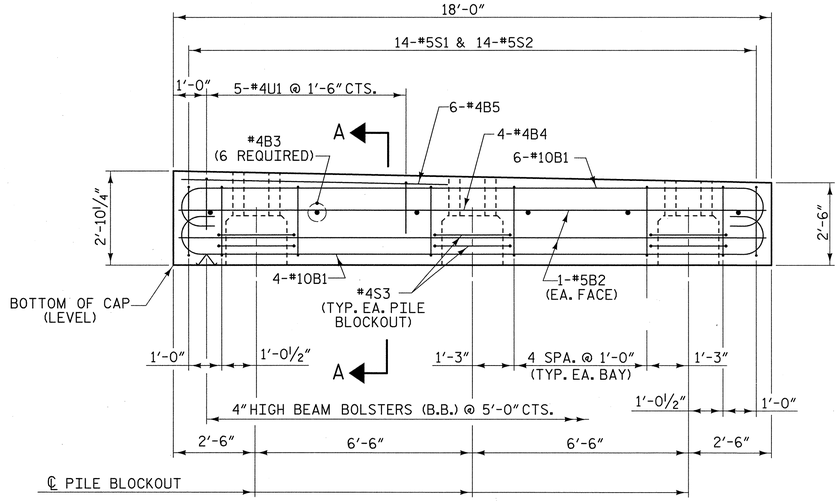

ELEVATION - PRECAST PIECE EB140

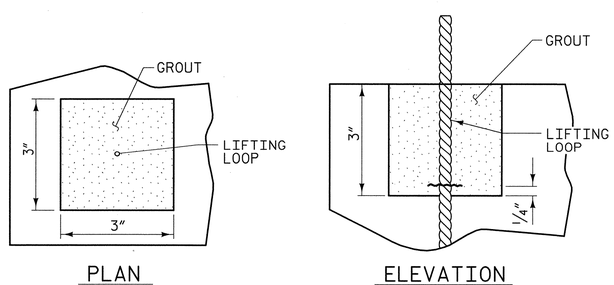

GROUTED RECESS FOR LIFTING LOOPS

LIFTING LOOPS TO BE CUT ¼" ABOVE BOTTOM OF RECESS.

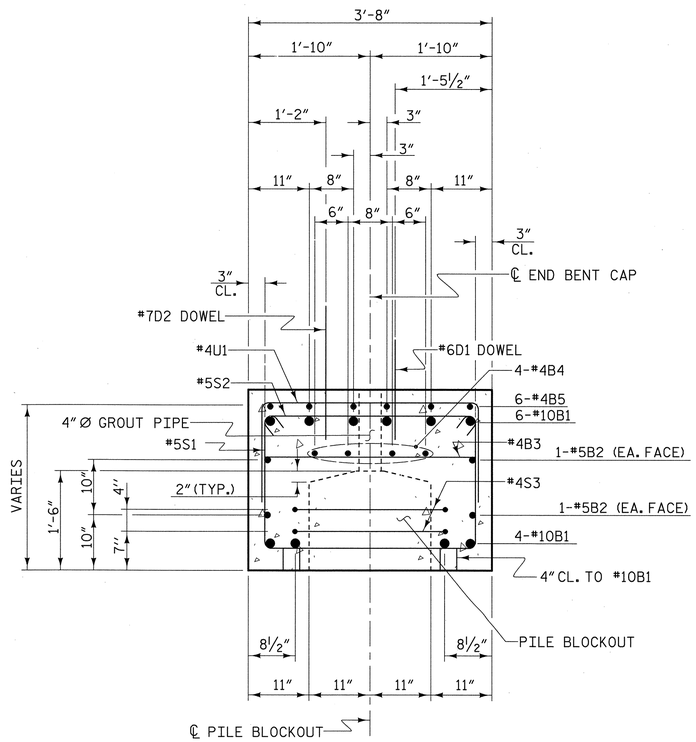

SECTION A-A

NOTES

STIRRUPS IN PRECAST PIECE EB140 MAY BE SHIFTED AS NECESSARY TO CLEAR DOWELS AND GROUT PIPES.

ALL REINFORCING STEEL AND BAR SUPPORTS SHALL BE EPOXY COATED ACCORDING TO THE STANDARD SPECIFICATIONS.

CLASS AA (4500 PSI) CONCRETE SHALL BE USED IN PRECAST PIECE EB140.

DOWELS SHALL BE PRESET IN THE PRECAST CAP IN THE LOCATIONS SHOWN ON THE PLANS. DRILLING AND ADHESIVE ANCHORING OF THE DOWELS AFTER CASTING MUST BE APPROVED BY THE ENGINEER.

TWO LIFTING LOOPS SHALL BE ALLOWED IN THE PRECAST PIECE IN ACCORDANCE WITH ARTICLE 1077-10 OF THE STANDARD SPECIFICATIONS WITH THE FOLLOWING ADDITIONS. THE LIFTING LOOPS SHALL BE BURNED OFF PRIOR TO PLACING THE ELASTOMERIC BEARING PADS. THE ENDS OF THE LIFTING LOOPS TO BE BURNED OFF SHALL BE RECESSED AND GROUTED. SEE DETAIL FOR GROUTED RECESS FOR LIFTING LOOPS. GROUT SHALL BE NON-METALLIC AND NON-SHRINK ACCORDING TO THE STANDARD SPECIFICATIONS. PROPOSED DEVICES FOR LIFTING LOOPS SHALL BE DETAILED IN SHOP DRAWINGS.

TWO 4 INCH Ø GROUT PIPES SHALL BE PROVIDED AT EACH PILE BLOCKOUT. THE 4 INCH Ø GROUT PIPES SHALL BE CUT FROM SCHEDULE 40 PVC PIPE AND SHALL BE FIRMLY ANCHORED OR REMOVED PRIOR TO PLACEMENT OF THE GROUT.

THE TOP OF THE PILE BLOCKOUT SHALL BE CHAMFERED 2" IN THE TRANSVERSE DIRECTION.

BAR TYPES

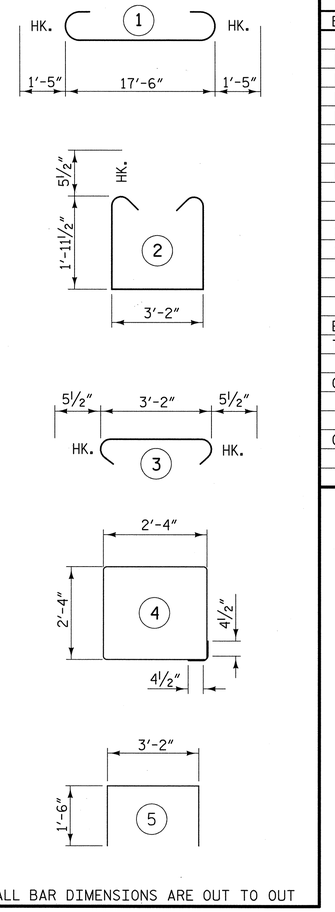

ALL BAR DIMENSIONS ARE OUT TO OUT

BILL OF MATERIAL FOR ONE PIECE EB140

BAR	NO.	SIZE	TYPE	LENGTH	WEIGHT
B1	10	#10	1	20'-4"	875
B2	4	#5	STR	17'-7"	73
B3	6	#4	STR	3'-3"	13
B4	4	#4	STR	17'-7"	47
B5	6	#4	STR	8'-0"	32
D1	10	#6	STR	1'-6"	23
D2	14	#7	STR	2'-0"	57
S1	14	#5	2	8'-0"	117
S2	14	#5	3	4'-1"	60
S3	6	#4	4	10'-1"	40
U1	5	#4	5	6'-2"	21

EPOXY COATED REINFORCING STEEL
TOTAL 1358 LBS.

CLASS AA (4500 PSI) CONCRETE
6.0 CU. YDS.

GROUT FOR PILE BLOCKOUTS
0.6 CU. YDS.

PROJECT NO. 42287
PAMLICO COUNTY
STATION: 15+56.00 -L-

REPLACES BRIDGE NO. 40

STATE OF NORTH CAROLINA
DEPARTMENT OF TRANSPORTATION
RALEIGH

PRECAST PIECE EB140

33'-10" CLEAR ROADWAY - 90° SKEW

NORTH CAROLINA PROFESSIONAL SEAL 19661 ENGINEER KEVIN AUSTIN 6/7/09

PLANS PREPARED BY:
MULKEY
ENGINEERS & CONSULTANTS
PO BOX 33127
RALEIGH, N.C. 27636
(919) 851-1001
(919) 851-1918 (FAX)
WWW.MULKEYINC.COM

REVISIONS						SHEET NO.
NO.	BY:	DATE:	NO.	BY:	DATE:	99
1			3			TOTAL SHEETS
2			4			185

DRAWN BY : W. B. ALLEN DATE : 2/09
CHECKED BY : L. K. AUSTIN DATE : 3/09

6/5/2009 14436 PM R:\Structures\B5928D_SD_EBCA_0.dgn

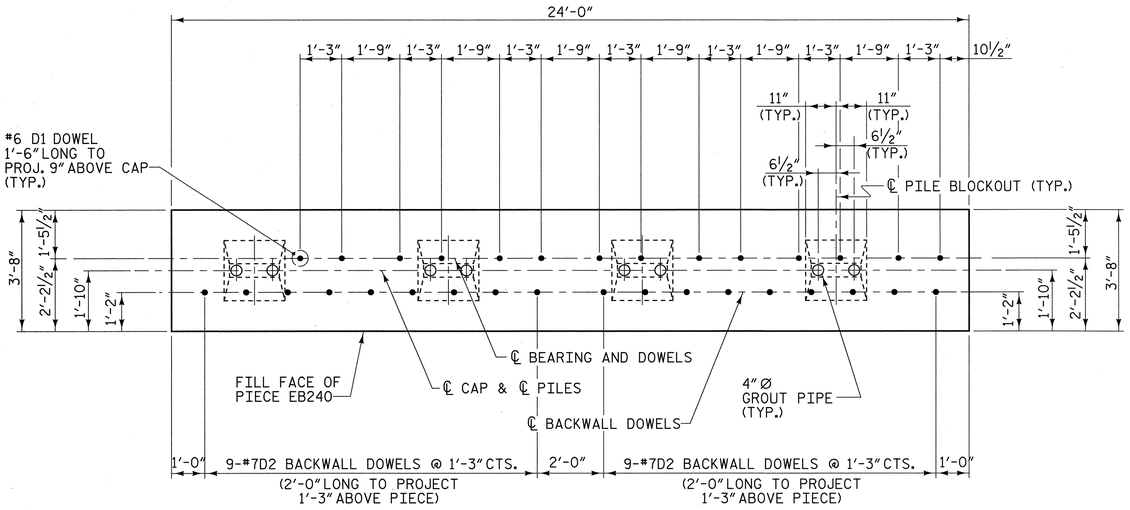

PLAN - PRECAST PIECE EB240

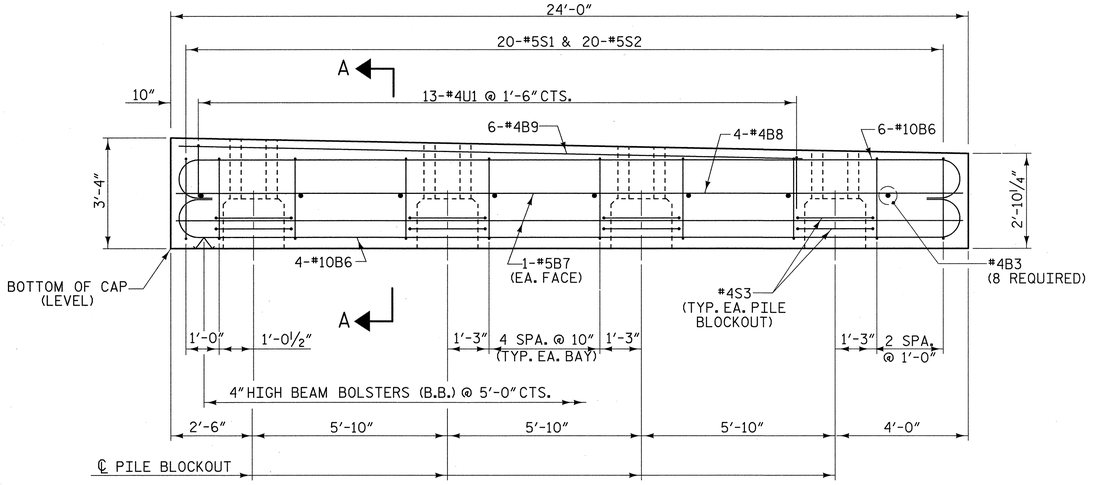

ELEVATION - PRECAST PIECE EB240

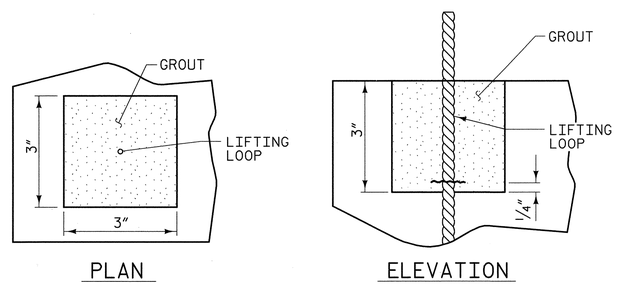

GROUTED RECESS FOR LIFTING LOOPS

LIFTING LOOPS TO BE CUT ¼" ABOVE BOTTOM OF RECESS.

NOTES

STIRRUPS IN PRECAST PIECE EB240 MAY BE SHIFTED AS NECESSARY TO CLEAR DOWELS AND GROUT PIPES.

ALL REINFORCING STEEL AND BAR SUPPORTS SHALL BE EPOXY COATED ACCORDING TO THE STANDARD SPECIFICATIONS.

CLASS AA (4500 PSI) CONCRETE SHALL BE USED IN PRECAST PIECE EB240.

DOWELS SHALL BE PRESET IN THE PRECAST CAP IN THE LOCATIONS SHOWN ON THE PLANS. DRILLING AND ADHESIVE ANCHORING OF THE DOWELS AFTER CASTING MUST BE APPROVED BY THE ENGINEER.

TWO LIFTING LOOPS SHALL BE ALLOWED IN THE PRECAST PIECE IN ACCORDANCE WITH ARTICLE 1077-10 OF THE STANDARD SPECIFICATIONS WITH THE FOLLOWING ADDITIONS. THE LIFTING LOOPS SHALL BE BURNED OFF PRIOR TO PLACING THE ELASTOMERIC BEARING PADS. THE ENDS OF THE LIFTING LOOPS TO BE BURNED OFF SHALL BE RECESSED AND GROUTED. SEE DETAIL FOR GROUTED RECESS FOR LIFTING LOOPS. GROUT SHALL BE NON-METALLIC AND NON-SHRINK ACCORDING TO THE STANDARD SPECIFICATIONS. PROPOSED DEVICES FOR LIFTING LOOPS SHALL BE DETAILED IN SHOP DRAWINGS.

TWO 4 INCH Ø GROUT PIPES SHALL BE PROVIDED AT EACH PILE BLOCKOUT. THE 4 INCH Ø GROUT PIPES SHALL BE CUT FROM SCHEDULE 40 PVC PIPE AND SHALL BE FIRMLY ANCHORED OR REMOVED PRIOR TO PLACEMENT OF THE GROUT.

THE TOP OF THE PILE BLOCKOUT SHALL BE CHAMFERED 2" IN TRANSVERSE DIRECTION.

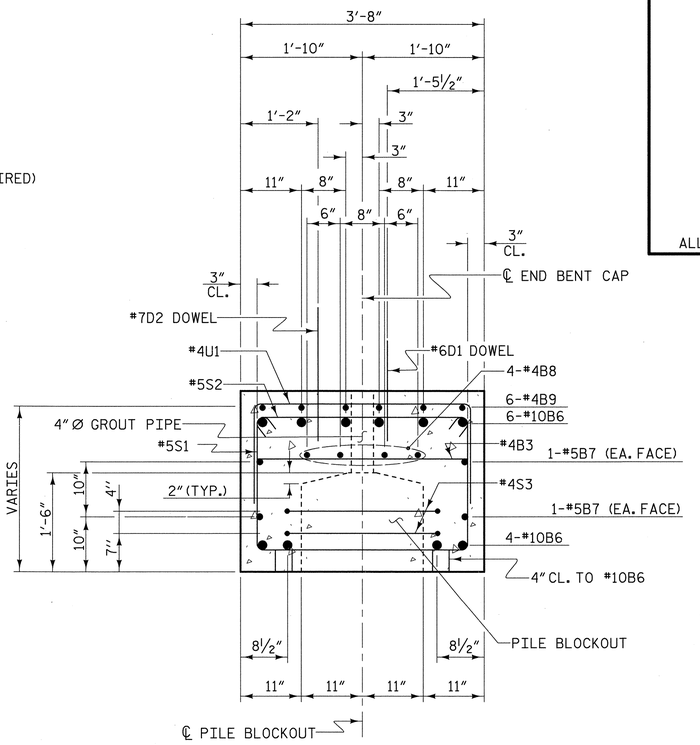

SECTION A-A

BAR TYPES

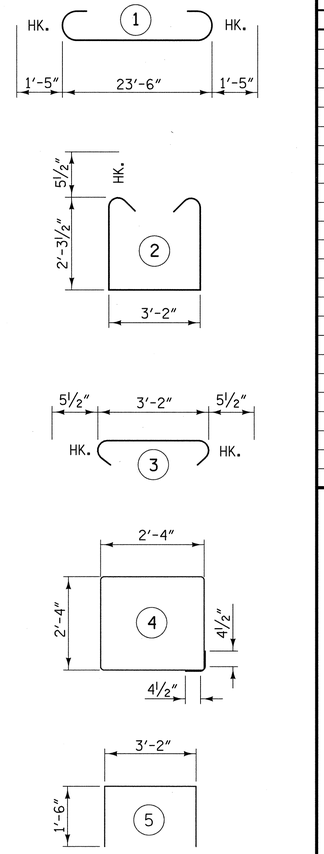

ALL BAR DIMENSIONS ARE OUT TO OUT

BILL OF MATERIAL FOR ONE PIECE EB240

BAR	NO.	SIZE	TYPE	LENGTH	WEIGHT
B3	8	#4	STR	3'-3"	17
B6	10	#10	1	26'-4"	1133
B7	4	#5	STR	23'-7"	98
B8	4	#4	STR	23'-7"	63
B9	6	#4	STR	18'-9"	75
D1	14	#6	STR	1'-6"	32
D2	18	#7	STR	2'-0"	74
S1	20	#5	2	8'-8"	181
S2	20	#5	3	4'-1"	85
S3	8	#4	4	10'-1"	54
U1	13	#4	5	6'-2"	54

EPOXY COATED REINFORCING STEEL
TOTAL 1866 LBS.

CLASS AA (4500 PSI) CONCRETE
9.3 CU. YDS.

GROUT FOR PILE BLOCKOUTS
0.8 CU. YDS.

PROJECT NO. 42287
PAMLICO COUNTY
STATION: 15+56.00 -L-

REPLACES BRIDGE NO. 40

STATE OF NORTH CAROLINA
DEPARTMENT OF TRANSPORTATION
RALEIGH

PRECAST PIECE EB240

33'-10" CLEAR ROADWAY - 90° SKEW

NORTH CAROLINA PROFESSIONAL SEAL 19661 ENGINEER KEVIN AUSTIN 6/7/09

PLANS PREPARED BY:
MULKEY
ENGINEERS & CONSULTANTS
PO Box 33127
RALEIGH, N.C. 27636
(919) 851-1912
(919) 851-1918 (FAX)
WWW.MULKEYINC.COM

REVISIONS						SHEET NO.
NO.	BY:	DATE:	NO.	BY:	DATE:	100
1			3			TOTAL SHEETS
2			4			185

DRAWN BY : W. B. ALLEN DATE : 2/09
CHECKED BY : L. K. AUSTIN DATE : 3/09

6/5/2009 11:50:50 PM R:\Structures\B5029D_SD_EB240_0.dgn

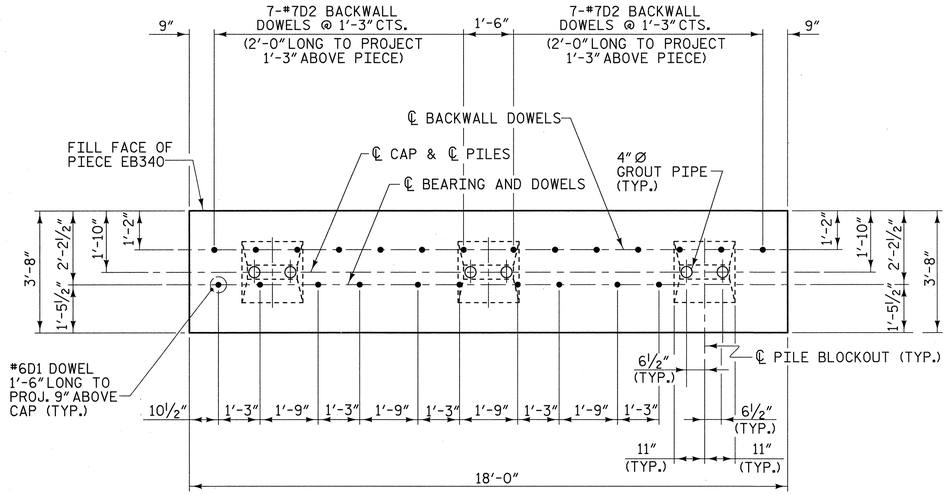

PLAN - PRECAST PIECE EB340

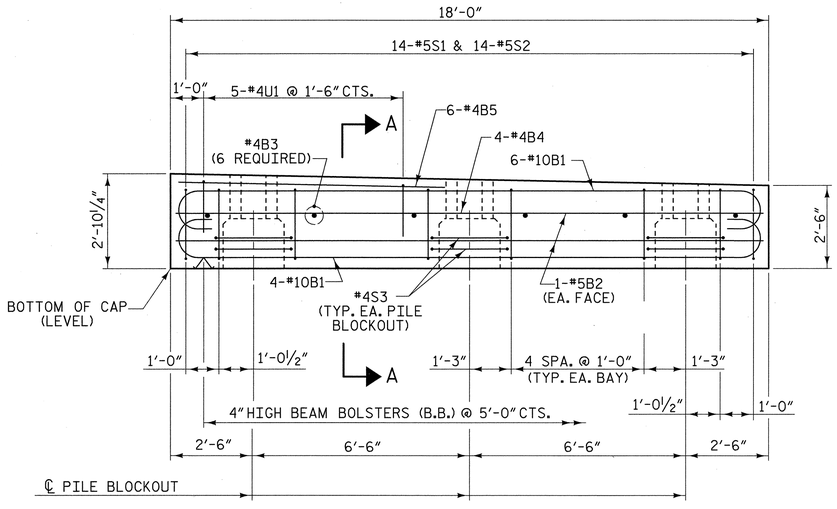

ELEVATION - PRECAST PIECE EB340

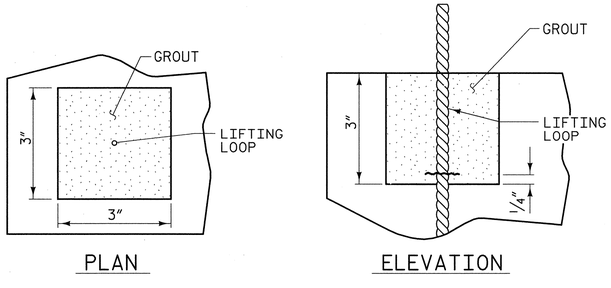

GROUTED RECESS FOR LIFTING LOOPS

LIFTING LOOPS TO BE CUT ¼″ ABOVE BOTTOM OF RECESS.

NOTES

STIRRUPS IN PRECAST PIECE EB340 MAY BE SHIFTED AS NECESSARY TO CLEAR DOWELS AND GROUT PIPES.

ALL REINFORCING STEEL AND BAR SUPPORTS SHALL BE EPOXY COATED ACCORDING TO THE STANDARD SPECIFICATIONS.

CLASS AA (4500 PSI) CONCRETE SHALL BE USED IN PRECAST PIECE EB340.

DOWELS SHALL BE PRESET IN THE PRECAST CAP IN THE LOCATIONS SHOWN ON THE PLANS. DRILLING AND ADHESIVE ANCHORING OF THE DOWELS AFTER CASTING MUST BE APPROVED BY THE ENGINEER.

TWO LIFTING LOOPS SHALL BE ALLOWED IN THE PRECAST PIECE IN ACCORDANCE WITH ARTICLE 1077-10 OF THE STANDARD SPECIFICATIONS WITH THE FOLLOWING ADDITIONS. THE LIFTING LOOPS SHALL BE BURNED OFF PRIOR TO PLACING THE ELASTOMERIC BEARING PADS. THE ENDS OF THE LIFTING LOOPS TO BE BURNED OFF SHALL BE RECESSED AND GROUTED. SEE DETAIL FOR GROUTED RECESS FOR LIFTING LOOPS. GROUT SHALL BE NON-METALLIC AND NON-SHRINK ACCORDING TO THE STANDARD SPECIFICATIONS. PROPOSED DEVICES FOR LIFTING LOOPS SHALL BE DETAILED IN SHOP DRAWINGS.

TWO 4 INCH Ø GROUT PIPES SHALL BE PROVIDED AT EACH PILE BLOCKOUT. THE 4 INCH Ø GROUT PIPES SHALL BE CUT FROM SCHEDULE 40 PVC PIPE AND SHALL BE FIRMLY ANCHORED OR REMOVED PRIOR TO PLACEMENT OF THE GROUT.

THE TOP OF THE PILE BLOCKOUT SHALL BE CHAMFERED 2″ IN THE TRANSVERSE DIRECTION.

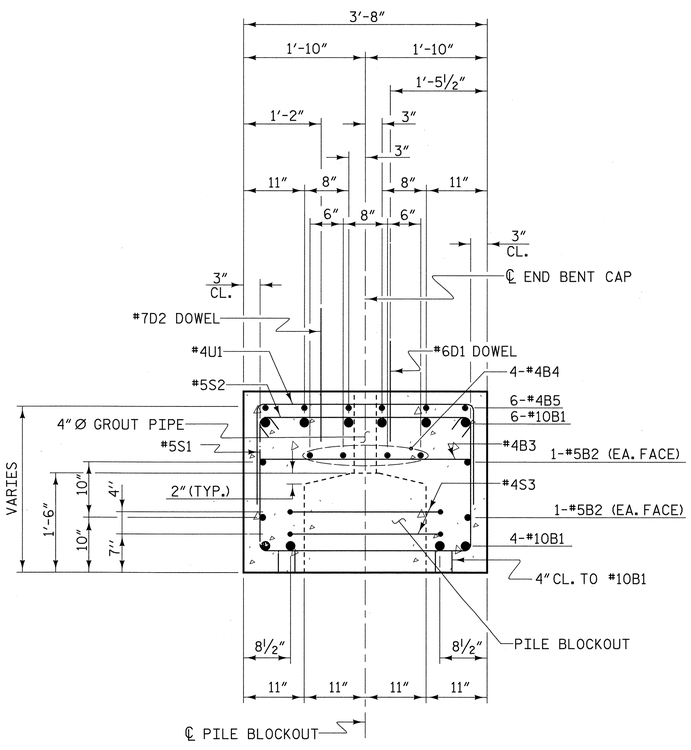

SECTION A-A

BAR TYPES

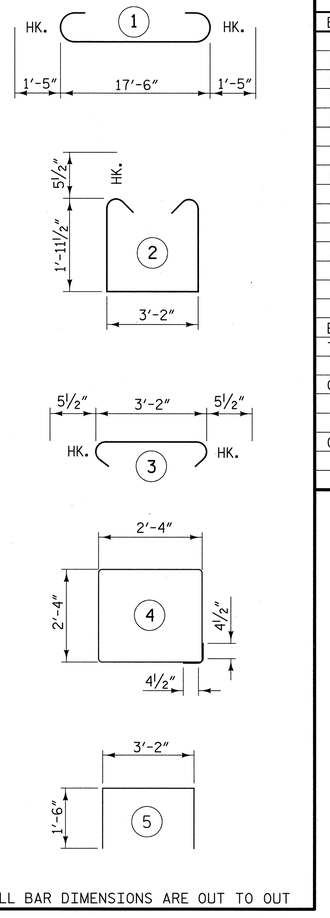

ALL BAR DIMENSIONS ARE OUT TO OUT

BILL OF MATERIAL FOR ONE PIECE EB340

BAR	NO.	SIZE	TYPE	LENGTH	WEIGHT
B1	10	#10	1	20′-4″	875
B2	4	#5	STR	17′-7″	73
B3	6	#4	STR	3′-3″	13
B4	4	#4	STR	17′-7″	47
B5	6	#4	STR	8′-0″	32
D1	10	#6	STR	1′-6″	23
D2	14	#7	STR	2′-0″	57
S1	14	#5	2	8′-0″	117
S2	14	#5	3	4′-1″	60
S3	6	#4	4	10′-1″	40
U1	5	#4	5	6′-2″	21

EPOXY COATED REINFORCING STEEL
TOTAL 1358 LBS.

CLASS AA (4500 PSI) CONCRETE
6.0 CU. YDS.

GROUT FOR PILE BLOCKOUTS
0.6 CU. YDS.

PROJECT NO. 42287
PAMLICO COUNTY
STATION: 15+56.00 -L-

REPLACES BRIDGE NO. 40

STATE OF NORTH CAROLINA
DEPARTMENT OF TRANSPORTATION
RALEIGH

PRECAST PIECE EB340

33′-10″ CLEAR ROADWAY - 90° SKEW

NORTH CAROLINA PROFESSIONAL ENGINEER SEAL 19661 L. KEVIN AUSTIN 6/7/09

PLANS PREPARED BY:
MULKEY ENGINEERS & CONSULTANTS
PO Box 33127 Raleigh, N.C. 27636
(919) 851-1912 (919) 851-1918 (FAX)
WWW.MULKEYINC.COM

REVISIONS						SHEET NO.
NO.	BY:	DATE:	NO.	BY:	DATE:	101
1			3			TOTAL SHEETS
2			4			185

DRAWN BY : W. B. ALLEN DATE : 2/09
CHECKED BY : L. K. AUSTIN DATE : 3/09

6/5/2009 11:36:06 PM R:\Structures\B5290_SD_EBC_01.dgn

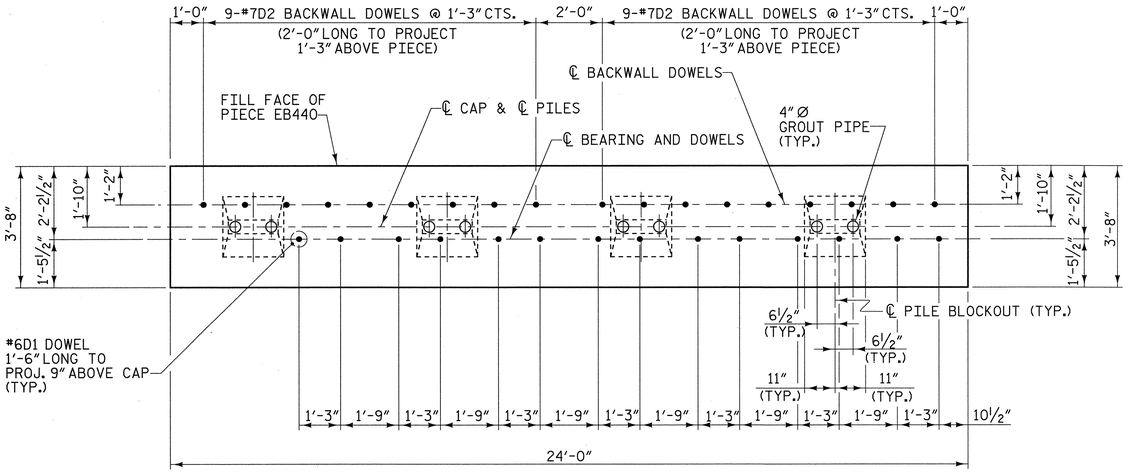

PLAN - PRECAST PIECE EB440

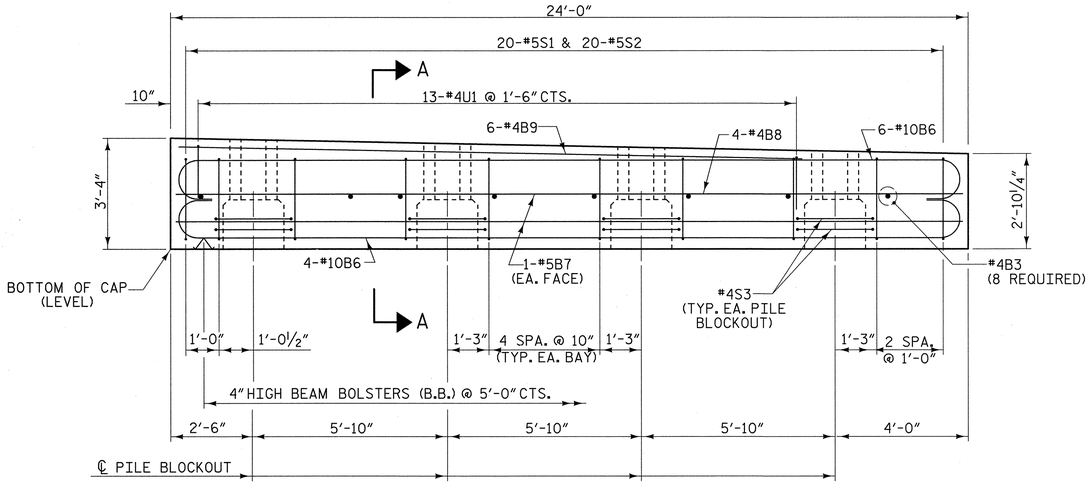

ELEVATION - PRECAST PIECE EB440

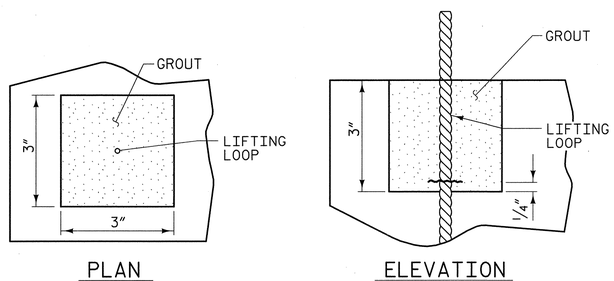

GROUTED RECESS FOR LIFTING LOOPS

LIFTING LOOPS TO BE CUT ¼" ABOVE BOTTOM OF RECESS.

NOTES

STIRRUPS IN PRECAST PIECE EB440 MAY BE SHIFTED AS NECESSARY TO CLEAR DOWELS AND GROUT PIPES.

ALL REINFORCING STEEL AND BAR SUPPORTS SHALL BE EPOXY COATED ACCORDING TO THE STANDARD SPECIFICATIONS.

CLASS AA (4500 PSI) CONCRETE SHALL BE USED IN PRECAST PIECE EB440.

DOWELS SHALL BE PRESET IN THE PRECAST CAP IN THE LOCATIONS SHOWN ON THE PLANS. DRILLING AND ADHESIVE ANCHORING OF THE DOWELS AFTER CASTING MUST BE APPROVED BY THE ENGINEER.

TWO LIFTING LOOPS SHALL BE ALLOWED IN THE PRECAST PIECE IN ACCORDANCE WITH ARTICLE 1077-10 OF THE STANDARD SPECIFICATIONS WITH THE FOLLOWING ADDITIONS. THE LIFTING LOOPS SHALL BE BURNED OFF PRIOR TO PLACING THE ELASTOMERIC BEARING PADS. THE ENDS OF THE LIFTING LOOPS TO BE BURNED OFF SHALL BE RECESSED AND GROUTED. SEE DETAIL FOR GROUTED RECESS FOR LIFTING LOOPS. GROUT SHALL BE NON-METALLIC AND NON-SHRINK ACCORDING TO THE STANDARD SPECIFICATIONS. PROPOSED DEVICES FOR LIFTING LOOPS SHALL BE DETAILED IN SHOP DRAWINGS.

TWO 4 INCH Ø GROUT PIPES SHALL BE PROVIDED AT EACH PILE BLOCKOUT. THE 4 INCH Ø GROUT PIPES SHALL BE CUT FROM SCHEDULE 40 PVC PIPE AND SHALL BE FIRMLY ANCHORED OR REMOVED PRIOR TO PLACEMENT OF THE GROUT.

THE TOP OF THE PILE BLOCKOUT SHALL BE CHAMFERED 2" IN THE TRANSVERSE DIRECTION.

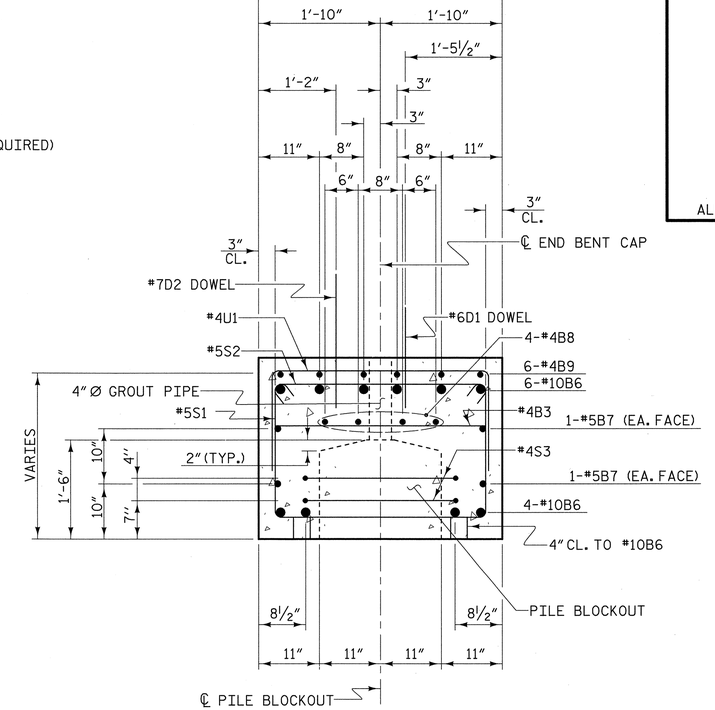

SECTION A-A

BAR TYPES

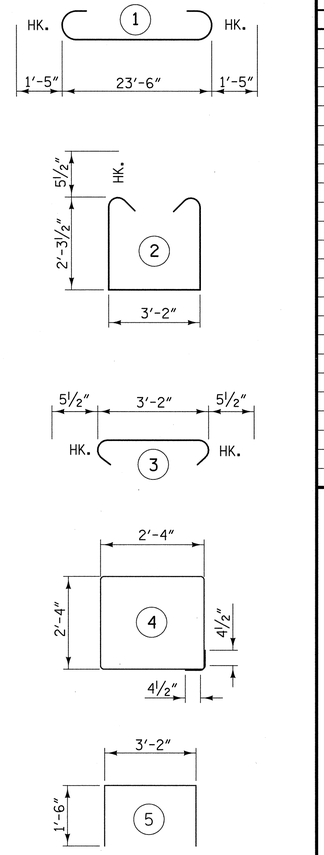

ALL BAR DIMENSIONS ARE OUT TO OUT

BILL OF MATERIAL FOR ONE PIECE EB440

BAR	NO.	SIZE	TYPE	LENGTH	WEIGHT
B3	8	#4	STR	3'-3"	17
B6	10	#10	1	26'-4"	1133
B7	4	#5	STR	23'-7"	98
B8	4	#4	STR	23'-7"	63
B9	6	#4	STR	18'-9"	75
D1	14	#6	STR	1'-6"	32
D2	18	#7	STR	2'-0"	74
S1	20	#5	2	8'-8"	181
S2	20	#5	3	4'-1"	85
S3	8	#4	4	10'-1"	54
U1	13	#4	5	6'-2"	54

EPOXY COATED REINFORCING STEEL
TOTAL 1866 LBS.

CLASS AA (4500 PSI) CONCRETE
9.3 CU. YDS.

GROUT FOR PILE BLOCKOUTS
0.8 CU. YDS.

PROJECT NO. 42287
PAMLICO COUNTY
STATION: 15+56.00 -L-

REPLACES BRIDGE NO. 40

STATE OF NORTH CAROLINA
DEPARTMENT OF TRANSPORTATION
RALEIGH

PRECAST PIECE EB440

33'-10" CLEAR ROADWAY - 90° SKEW

NORTH CAROLINA PROFESSIONAL SEAL 19661 ENGINEER KEVIN AUSTIN 6/7/09

PLANS PREPARED BY:
MULKEY
ENGINEERS & CONSULTANTS
PO Box 33127
RALEIGH N.C. 27636
(919) 851-1912
(919) 851-1918 (FAX)
WWW.MULKEYINC.COM

REVISIONS						SHEET NO.
NO.	BY:	DATE:	NO.	BY:	DATE:	102
1			3			TOTAL SHEETS
2			4			185

DRAWN BY : W. B. ALLEN DATE : 2/09
CHECKED BY : L. K. AUSTIN DATE : 3/09

6/5/2009 12:28 PM R:\Structures\B5629D_SD_EBCD_0.dgn

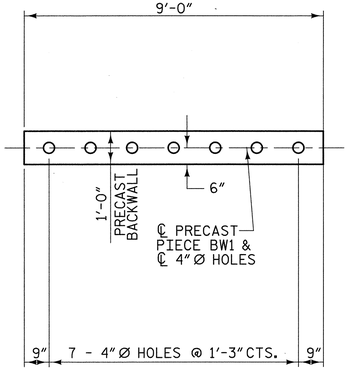

PLAN - PRECAST PIECE BW1

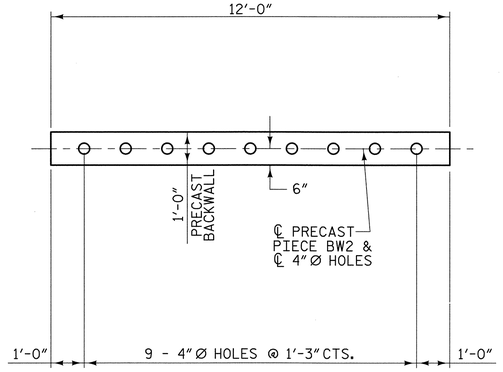

PLAN - PRECAST PIECE BW2

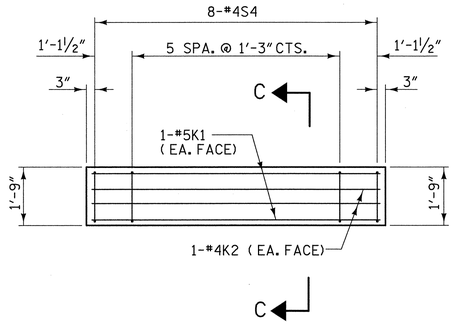

ELEVATION - PRECAST PIECE BW1

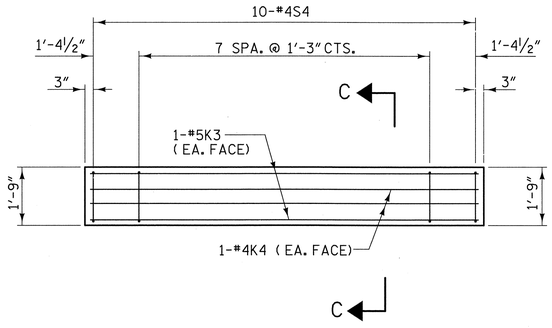

ELEVATION - PRECAST PIECE BW2

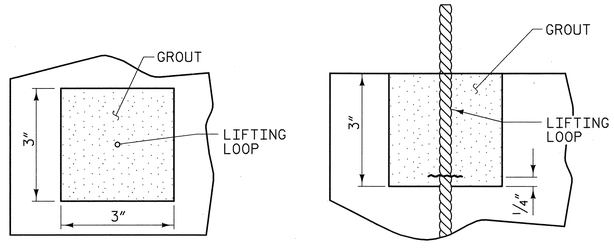

GROUTED RECESS FOR LIFTING LOOPS

LIFTING LOOPS TO BE CUT ¼″ ABOVE BOTTOM OF RECESS.

NOTES

ALL REINFORCING STEEL AND BAR SUPPORTS SHALL BE EPOXY COATED ACCORDING TO THE STANDARD SPECIFICATIONS.

CLASS AA (4500 PSI) CONCRETE SHALL BE USED IN PRECAST PIECES BW1 & BW2.

TWO LIFTING LOOPS SHALL BE ALLOWED IN THE PRECAST BACKWALL IN ACCORDANCE WITH ARTICLE 1077-10 OF THE STANDARD SPECIFICATIONS WITH THE FOLLOWING ADDITIONS. THE LIFTING LOOPS TO BE BURNED OFF SHALL BE RECESSED AND GROUTED. SEE DETAIL FOR GROUTED RECESS FOR LIFTING LOOPS. GROUT SHALL BE NON-METALLIC AND NON-SHRINK ACCORDING TO THE STANDARD SPECIFICATIONS. PROPOSED DEVICES FOR LIFTING LOOPS SHALL BE DETAILED IN SHOP DRAWINGS.

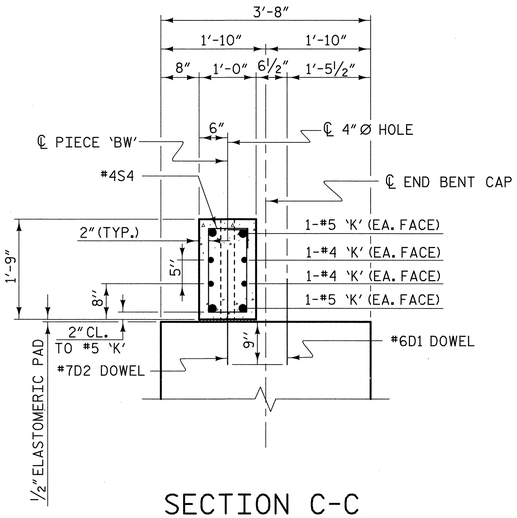

SECTION C-C

BILL OF MATERIAL FOR ONE PIECE BW1

BAR	NO.	SIZE	TYPE	LENGTH	WEIGHT
K1	4	5	STR	8′-8″	36
K2	4	4	STR	8′-8″	23
S4	8	4	1	5′-0″	27
EPOXY COATED REINFORCING STEEL					
TOTAL					86 LBS
CLASS AA (4500 PSI) CONCRETE					.
					0.5 CU. YDS.

PIECE BW2

BAR	NO.	SIZE	TYPE	LENGTH	WEIGHT
K3	4	5	STR	11′-8″	49
K4	4	4	STR	11′-8″	31
S4	10	4	1	5′-0″	33
EPOXY COATED REINFORCING STEEL					
TOTAL					113 LBS
CLASS AA (4500 PSI) CONCRETE					
					0.7 CU. YDS.

BAR TYPES

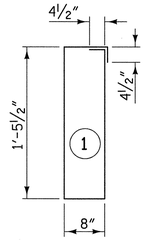

ALL BAR DIMENSIONS ARE OUT TO OUT

PROJECT NO. 42287

PAMLICO COUNTY

STATION: 15+56.00 -L-

REPLACES BRIDGE NO. 40

STATE OF NORTH CAROLINA
DEPARTMENT OF TRANSPORTATION
RALEIGH

PRECAST PIECE BW1 AND PIECE BW2

33′-10″ CLEAR ROADWAY - 90°SKEW

NORTH CAROLINA PROFESSIONAL SEAL 19661 ENGINEER L. KEVIN AUSTIN 6/7/09

PLANS PREPARED BY:

MULKEY
ENGINEERS & CONSULTANTS
PO Box 33127
RALEIGH, N.C. 27636
(919) 851-1912
(919) 851-1918 (FAX)
WWW.MULKEYINC.COM

REVISIONS						SHEET NO.
NO.	BY:	DATE:	NO.	BY:	DATE:	103
1			3			TOTAL SHEETS
2			4			185

DRAWN BY : W. B. ALLEN DATE : 2/09
CHECKED BY : L. K. AUSTIN DATE : 3/09

6/5/2009 lab46 PM R:\Structures\B5290_SD_BW_01.dgn

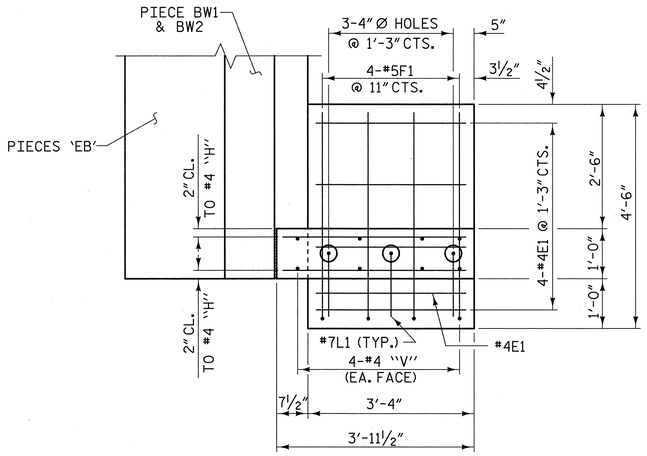

PLAN

NOTES

ALL REINFORCING STEEL AND BAR SUPPORTS SHALL BE EPOXY COATED ACCORDING TO THE STANDARD SPECIFICATIONS.

CLASS AA (4500 PSI) CONCRETE SHALL BE USED IN PRECAST PIECE WF1 AND PRECAST PIECE WW1.

TWO LIFTING LOOPS SHALL BE ALLOWED IN THE PRECAST WINGWALL AND THE PRECAST WING FOOTING IN ACCORDANCE WITH ARTICLE 1077-10 OF THE STANDARD SPECIFICATIONS WITH THE FOLLOWING ADDITIONS. THE LIFTING LOOPS TO BE BURNED OFF SHALL BE RECESSED AND GROUTED. SEE DETAIL FOR GROUTED RECESS FOR LIFTING LOOPS. GROUT SHALL BE NON-METALLIC AND NON-SHRINK ACCORDING TO THE STANDARD SPECIFICATIONS. PROPOSED DEVICES FOR LIFTING LOOPS SHALL BE DETAILED IN SHOP DRAWINGS.

BAR TYPES

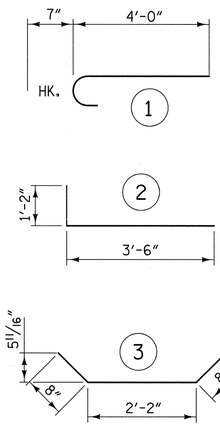

ALL BAR DIMENSIONS ARE OUT TO OUT

BILL OF MATERIAL FOR ONE PIECE WF1

BAR	NO.	SIZE	TYPE	LENGTH	WEIGHT
E1	5	4	STR	3'-0"	10
F1	4	5	1	4'-7"	19
L1	3	7	2	4'-8"	28

EPOXY COATED REINFORCING STEEL
TOTAL 57 LBS.

CLASS AA (4500 PSI) CONCRETE
0.6 CU. YDS.

PIECE WW1

BAR	NO.	SIZE	TYPE	LENGTH	WEIGHT
H1	4	4	STR	3'-0"	8
H2	4	4	STR	3'-7"	10
S1	2	4	3	3'-6"	5
V1	6	4	STR	2'-11"	12
V2	2	4	STR	1'-5"	2

EPOXY COATED REINFORCING STEEL
TOTAL 37 LBS.

CLASS AA (4500 PSI) CONCRETE
0.4 CU. YDS.

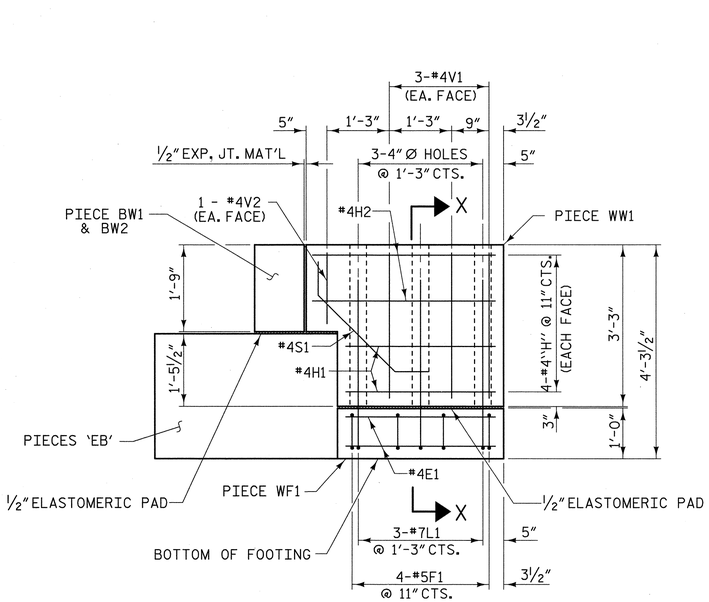

ELEVATION

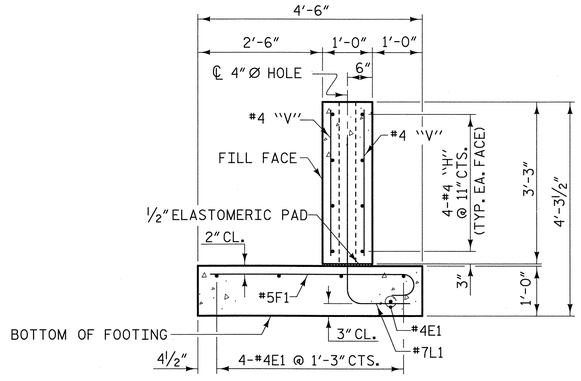

SECTION X-X

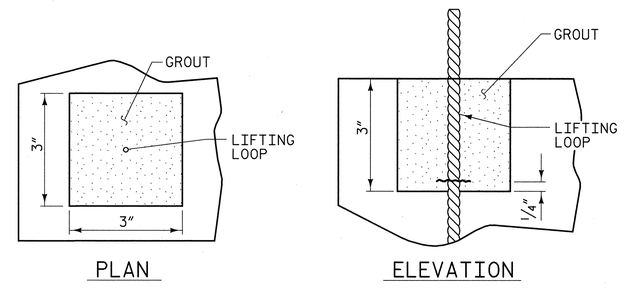

PLAN ELEVATION

GROUTED RECESS FOR LIFTING LOOPS

LIFTING LOOPS TO BE CUT ¼" ABOVE BOTTOM OF RECESS.

PROJECT NO. 42287
PAMLICO COUNTY
STATION: 15+56.00 -L-

REPLACES BRIDGE NO. 40

STATE OF NORTH CAROLINA
DEPARTMENT OF TRANSPORTATION
RALEIGH

PRECAST PIECE WW1 AND PIECE WF1

33'-10" CLEAR ROADWAY - 90° SKEW

PLANS PREPARED BY:

MULKEY
ENGINEERS & CONSULTANTS
PO Box 33127
Raleigh, N.C. 27636
(919) 851-1912
(919) 851-1913 (FAX)
WWW.MULKEYINC.COM

REVISIONS						SHEET NO.
NO.	BY:	DATE:	NO.	BY:	DATE:	104
1			3			TOTAL SHEETS
2			4			185

DRAWN BY : W. B. ALLEN DATE : 2/09
CHECKED BY : L. K. AUSTIN DATE : 3/09

6/5/2009 11:05:56 PM R:\Structures\B5929D_SD_WW_0.dgn

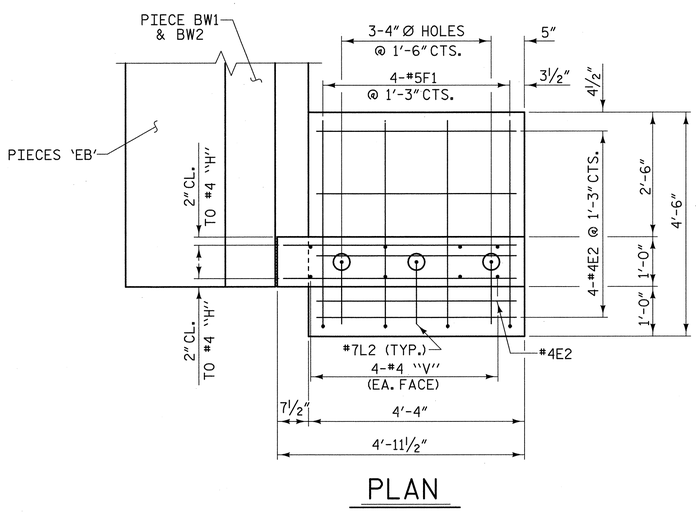

PLAN

NOTES

ALL REINFORCING STEEL AND BAR SUPPORTS SHALL BE EPOXY COATED ACCORDING TO THE STANDARD SPECIFICATIONS.

CLASS AA (4500 PSI) CONCRETE SHALL BE USED IN PRECAST PIECE WF240 AND PRECAST PIECE WW240.

TWO LIFTING LOOPS SHALL BE ALLOWED IN THE PRECAST WINGWALL AND THE PRECAST WING FOOTING IN ACCORDANCE WITH ARTICLE 1077-10 OF THE STANDARD SPECIFICATIONS WITH THE FOLLOWING ADDITIONS. THE LIFTING LOOPS TO BE BURNED OFF SHALL BE RECESSED AND GROUTED. SEE DETAIL FOR GROUTED RECESS FOR LIFTING LOOPS. GROUT SHALL BE NON-METALLIC AND NON-SHRINK ACCORDING TO THE STANDARD SPECIFICATIONS. PROPOSED DEVICES FOR LIFTING LOOPS SHALL BE DETAILED IN SHOP DRAWINGS.

BAR TYPES

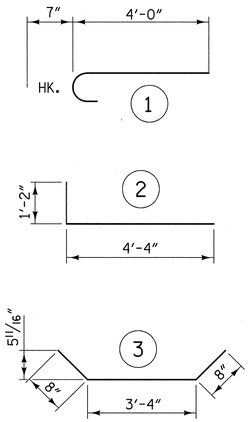

ALL BAR DIMENSIONS ARE OUT TO OUT

BILL OF MATERIAL FOR ONE PIECE WF240

BAR	NO.	SIZE	TYPE	LENGTH	WEIGHT
E2	5	4	STR	4'-0"	13
F1	4	5	1	4'-7"	19
L2	3	7	2	5'-6"	34

EPOXY COATED REINFORCING STEEL
TOTAL 66 LBS.

CLASS AA (4500 PSI) CONCRETE
0.7 CU. YDS.

PIECE WW240

BAR	NO.	SIZE	TYPE	LENGTH	WEIGHT
H3	6	4	STR	4'-0"	16
H4	4	4	STR	4'-7"	12
S2	2	4	3	4'-8"	6
V2	2	4	STR	1'-5"	2
V3	6	4	STR	3'-9"	15

EPOXY COATED REINFORCING STEEL
TOTAL 51 LBS.

CLASS AA (4500 PSI) CONCRETE
0.7 CU. YDS.

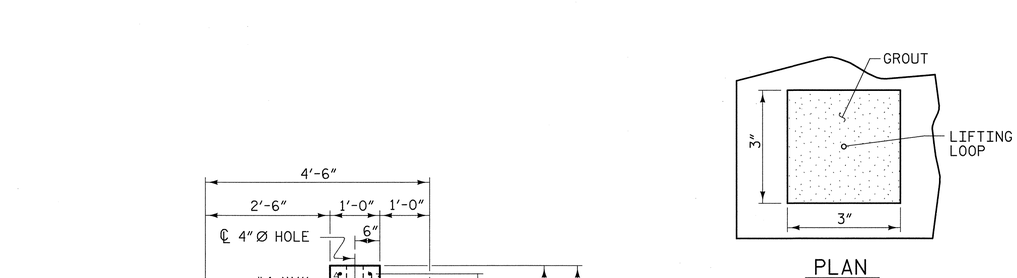

ELEVATION

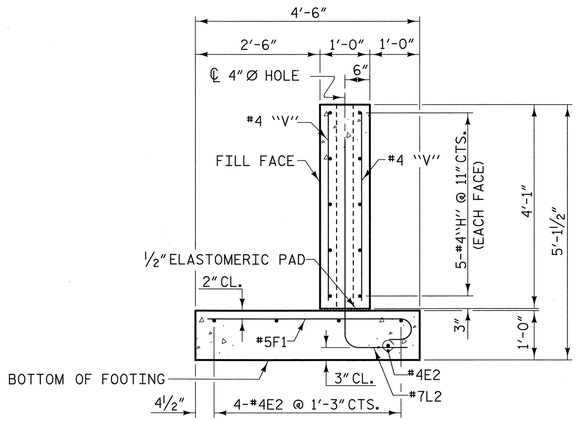

SECTION X-X

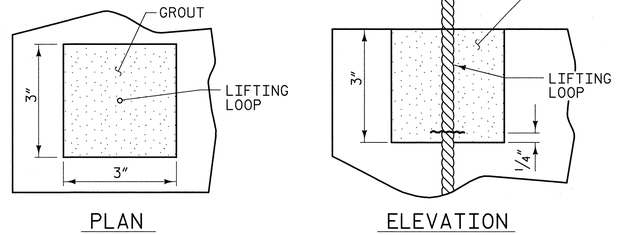

PLAN ELEVATION

GROUTED RECESS FOR LIFTING LOOPS

LIFTING LOOPS TO BE CUT ¼" ABOVE BOTTOM OF RECESS.

PROJECT NO. 42287
PAMLICO COUNTY
STATION: 15+56.00 -L-

REPLACES BRIDGE NO. 40

STATE OF NORTH CAROLINA
DEPARTMENT OF TRANSPORTATION
RALEIGH

PRECAST PIECE WW240 AND PIECE WF240

33'-10" CLEAR ROADWAY - 90° SKEW

NORTH CAROLINA PROFESSIONAL SEAL 19661 ENGINEER L. KEVIN AUSTIN 6/7/09

PLANS PREPARED BY:

MULKEY
ENGINEERS & CONSULTANTS
PO Box 33127
Raleigh, N.C. 27636
(919) 851-1912
(919) 851-1918 (FAX)
WWW.MULKEYINC.COM

REVISIONS						SHEET NO.
NO.	BY:	DATE:	NO.	BY:	DATE:	105
1			3			TOTAL SHEETS
2			4			185

DRAWN BY : W. B. ALLEN DATE : 2/09
CHECKED BY : L. K. AUSTIN DATE : 3/09

6/5/2009 10:02:21 PM R:\Structures\B5629D_SD_WW_02.dgn

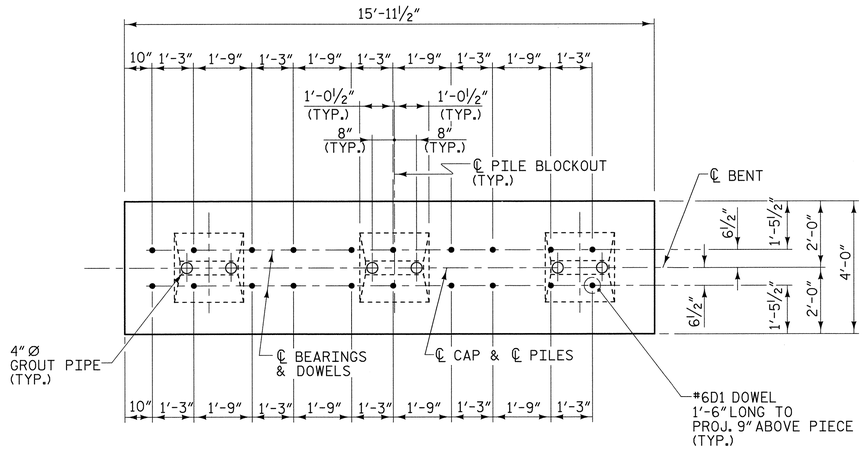

PLAN - PRECAST PIECE B140

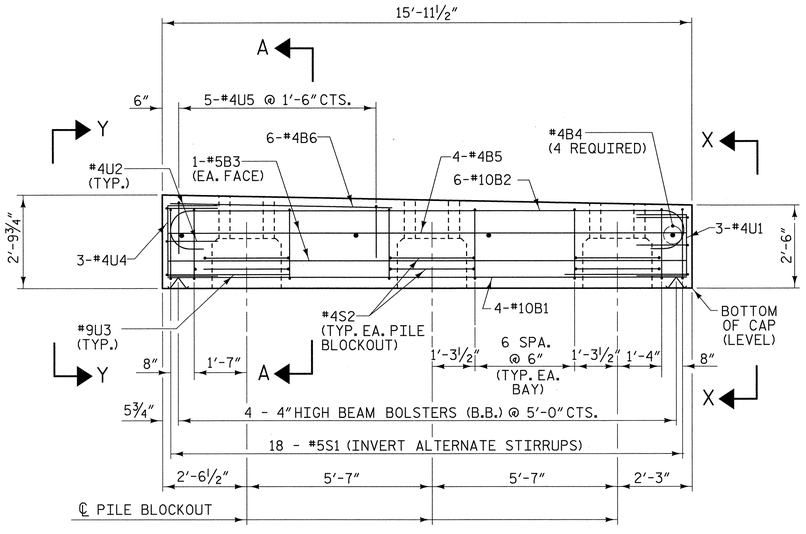

ELEVATION - PRECAST PIECE B140

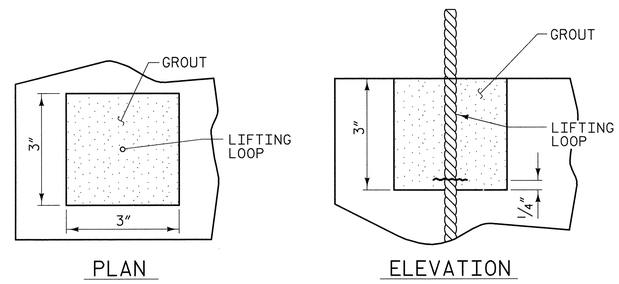

GROUTED RECESS FOR LIFTING LOOPS

LIFTING LOOPS TO BE CUT ¼" ABOVE BOTTOM OF RECESS.

NOTES

STIRRUPS IN PRECAST PIECE B140 MAY BE SHIFTED AS NECESSARY TO CLEAR DOWELS AND GROUT PIPES.

ALL REINFORCING STEEL AND BAR SUPPORTS SHALL BE EPOXY COATED ACCORDING TO THE STANDARD SPECIFICATIONS.

CLASS AA (4500 PSI) CONCRETE SHALL BE USED IN PRECAST PIECE B140.

DOWELS SHALL BE PRESET IN THE PRECAST CAP IN THE LOCATIONS SHOWN ON THE PLANS. DRILLING AND ADHESIVE ANCHORING OF THE DOWELS AFTER CASTING MUST BE APPROVED BY THE ENGINEER.

TWO LIFTING LOOPS SHALL BE ALLOWED IN THE PRECAST PIECE IN ACCORDANCE WITH ARTICLE 1077-10 OF THE STANDARD SPECIFICATIONS WITH THE FOLLOWING ADDITIONS. THE LIFTING LOOPS SHALL BE BURNED OFF PRIOR TO PLACING THE ELASTOMERIC BEARING PADS. THE ENDS OF THE LIFTING LOOPS TO BE BURNED OFF SHALL BE RECESSED AND GROUTED. SEE DETAIL FOR GROUTED RECESS FOR LIFTING LOOPS. GROUT SHALL BE NON-METALLIC AND NON-SHRINK ACCORDING TO THE STANDARD SPECIFICATIONS. PROPOSED DEVICES FOR LIFTING LOOPS SHALL BE DETAILED IN SHOP DRAWINGS.

TWO 4 INCH Ø GROUT PIPES SHALL BE PROVIDED AT EACH PILE BLOCKOUT. THE 4 INCH Ø GROUT PIPES SHALL BE CUT FROM SCHEDULE 40 PVC PIPE AND SHALL BE FIRMLY ANCHORED OR REMOVED PRIOR TO PLACEMENT OF THE GROUT.

THE TOP OF THE PILE BLOCKOUT SHALL BE CHAMFERED 2" ALL IN THE TRANSVERSE DIRECTION.

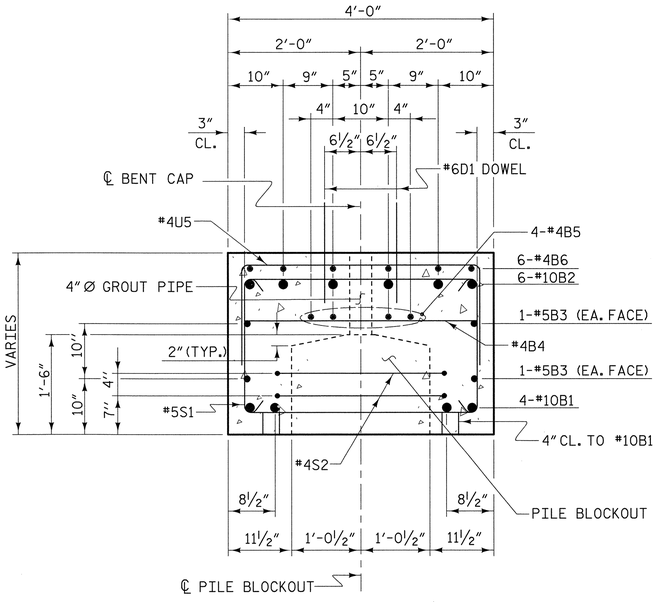

SECTION A-A

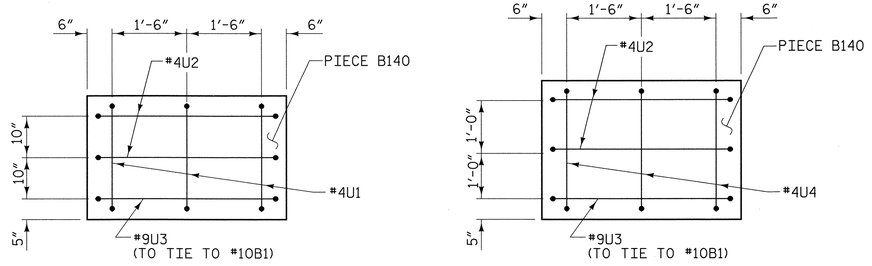

VIEW X-X

VIEW Y-Y

BAR TYPES

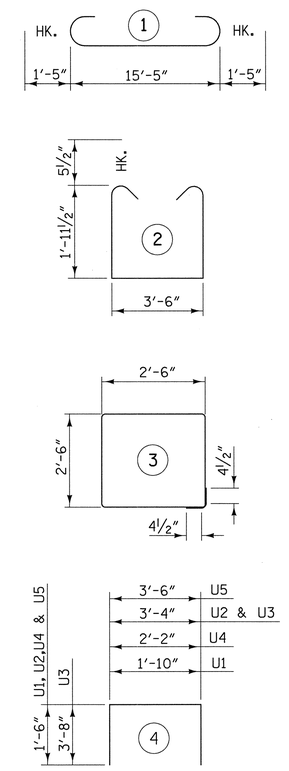

ALL BAR DIMENSIONS ARE OUT TO OUT

BILL OF MATERIAL FOR ONE PIECE B140

BAR	NO.	SIZE	TYPE	LENGTH	WEIGHT
B1	4	#10	STR	15'-5"	265
B2	6	#10	1	18'-3"	471
B3	4	#5	STR	15'-5"	64
B4	4	#4	STR	3'-7"	10
B5	4	#4	STR	15'-5"	41
B6	6	#4	STR	6'-8"	27
D1	20	#6	STR	1'-6"	45
S1	18	#5	2	8'-4"	156
S2	6	#4	3	10'-9"	43
U1	3	#4	4	4'-10"	10
U2	4	#4	4	6'-4"	17
U3	2	#9	4	10'-8"	73
U4	3	#4	4	5'-2"	10
U5	5	#4	4	6'-6"	22

TOTAL EPOXY COATED REINFORCING STEEL
1254 LBS.
CLASS AA (4500 PSI) CONCRETE
5.6 CU. YDS.
GROUT FOR PILE BLOCKOUTS
0.7 CU. YDS.

NORTH CAROLINA PROFESSIONAL ENGINEER SEAL 19661 KEVIN AUSTIN 8/6/09

PLANS PREPARED BY:

MULKEY
ENGINEERS & CONSULTANTS
PO BOX 33127
RALEIGH, N.C. 27636
(919) 851-1912
(919) 851-1914 FAX
WWW.MULKEYINC.COM

PROJECT NO. 42287

PAMLICO COUNTY

STATION: 15+56.00 -L-

REPLACES BRIDGE NO. 40

STATE OF NORTH CAROLINA
DEPARTMENT OF TRANSPORTATION
RALEIGH

PRECAST PIECE B140

33'-10" CLEAR ROADWAY - 90° SKEW

REVISIONS						SHEET NO.
NO.	BY:	DATE:	NO.	BY:	DATE:	106
1			3			TOTAL SHEETS
2			4			185

DRAWN BY : W. B. ALLEN DATE : 2/09
CHECKED BY : L. K. AUSTIN DATE : 3/09

8/6/2009 6:06:40 AM G:\project\2004\2240_Pamlico40\Structures\B5290_SD_BCA_01.dgn

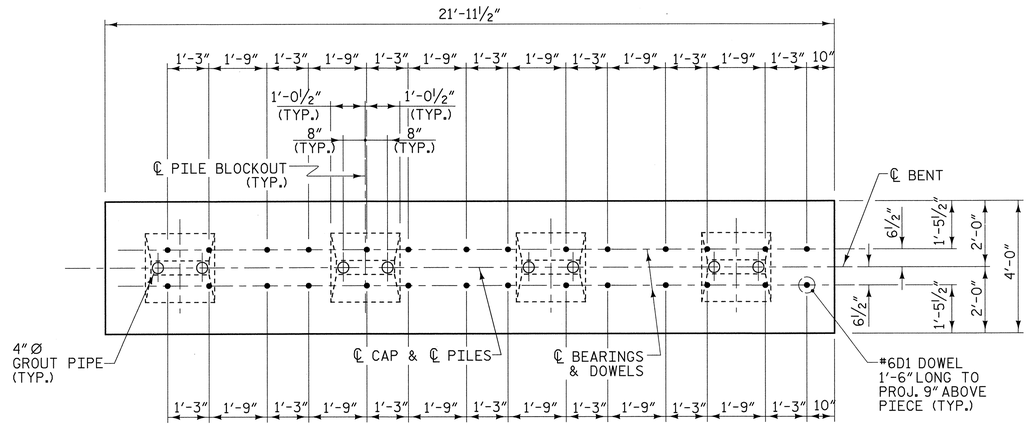

PLAN - PRECAST PIECE B240

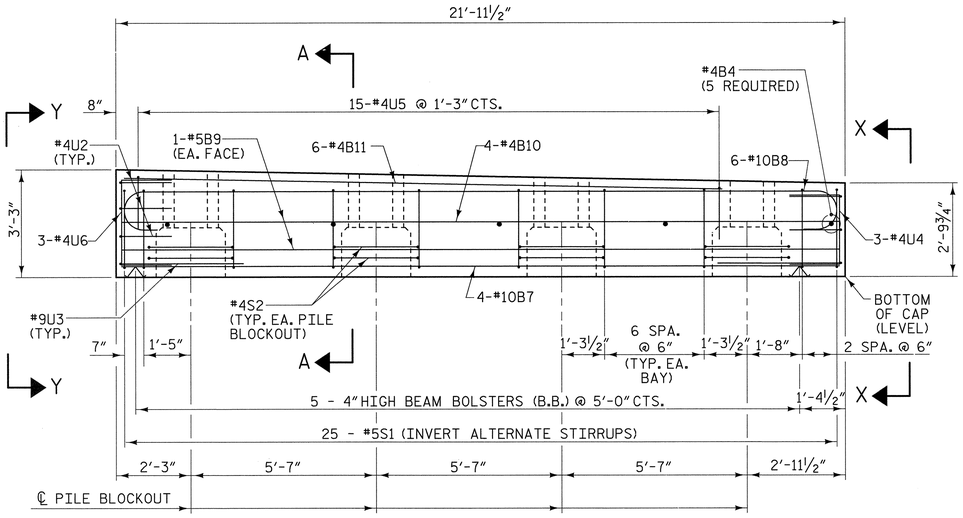

ELEVATION - PRECAST PIECE B240

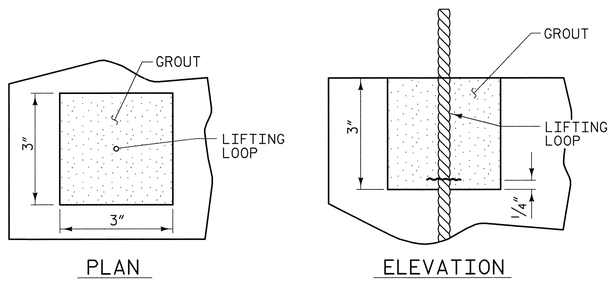

GROUTED RECESS FOR LIFTING LOOPS

LIFTING LOOPS TO BE CUT ¼" ABOVE BOTTOM OF RECESS.

NOTES

STIRRUPS IN PRECAST PIECE B240 MAY BE SHIFTED AS NECESSARY TO CLEAR DOWELS AND GROUT PIPES.

ALL REINFORCING STEEL AND BAR SUPPORTS SHALL BE EPOXY COATED ACCORDING TO THE STANDARD SPECIFICATIONS.

CLASS AA (4500 PSI) CONCRETE SHALL BE USED IN PRECAST PIECE B240.

DOWELS SHALL BE PRESET IN THE PRECAST CAP IN THE LOCATIONS SHOWN ON THE PLANS. DRILLING AND ADHESIVE ANCHORING OF THE DOWELS AFTER CASTING MUST BE APPROVED BY THE ENGINEER.

TWO LIFTING LOOPS SHALL BE ALLOWED IN THE PRECAST PIECE IN ACCORDANCE WITH ARTICLE 1077-10 OF THE STANDARD SPECIFICATIONS WITH THE FOLLOWING ADDITIONS. THE LIFTING LOOPS SHALL BE BURNED OFF PRIOR TO PLACING THE ELASTOMERIC BEARING PADS. THE ENDS OF THE LIFTING LOOPS TO BE BURNED OFF SHALL BE RECESSED AND GROUTED. SEE DETAIL FOR GROUTED RECESS FOR LIFTING LOOPS. GROUT SHALL BE NON-METALLIC AND NON-SHRINK ACCORDING TO THE STANDARD SPECIFICATIONS. PROPOSED DEVICES FOR LIFTING LOOPS SHALL BE DETAILED IN SHOP DRAWINGS.

TWO 4 INCH Ø GROUT PIPES SHALL BE PROVIDED AT EACH PILE BLOCKOUT. THE 4 INCH Ø GROUT PIPES SHALL BE CUT FROM SCHEDULE 40 PVC PIPE AND SHALL BE FIRMLY ANCHORED OR REMOVED PRIOR TO PLACEMENT OF THE GROUT.

THE TOP OF THE PILE BLOCKOUT SHALL BE CHAMFERED 2" IN THE TRANSVERSE DIRECTION.

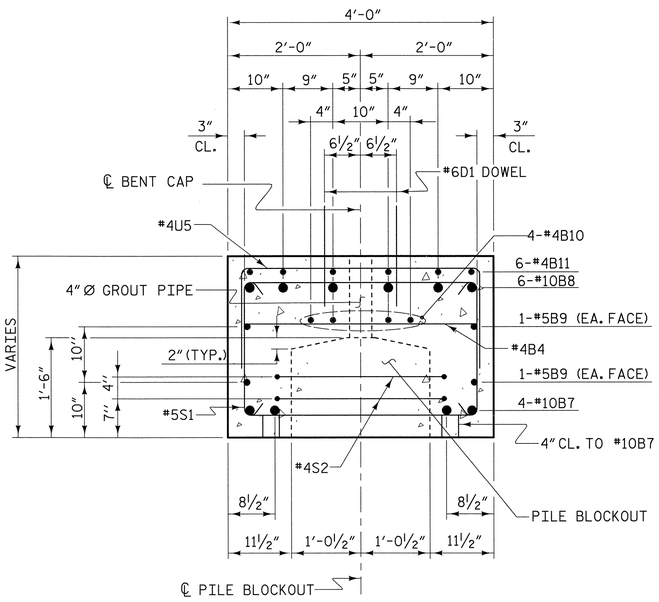

SECTION A-A

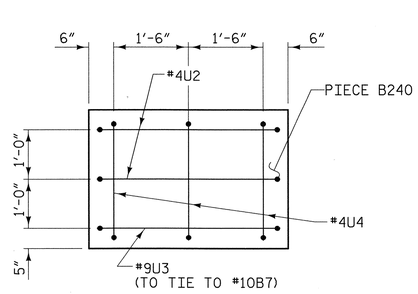

VIEW X-X

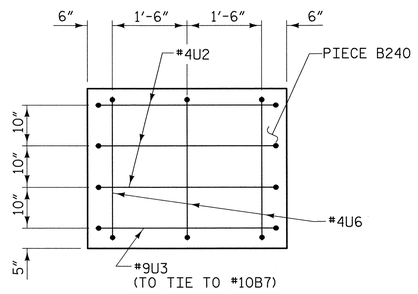

VIEW Y-Y

BAR TYPES

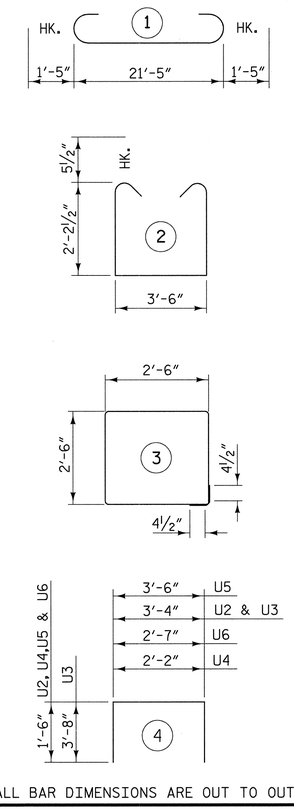

ALL BAR DIMENSIONS ARE OUT TO OUT

BILL OF MATERIAL FOR ONE PIECE B240

BAR	NO.	SIZE	TYPE	LENGTH	WEIGHT
B4	5	#4	STR	3'-7"	12
B7	4	#10	STR	21'-5"	369
B8	6	#10	1	24'-3"	626
B9	4	#5	STR	21'-5"	89
B10	4	#4	STR	21'-5"	57
B11	6	#4	STR	18'-0"	72
D1	28	#6	STR	1'-6"	63
S1	25	#5	2	8'-10"	230
S2	8	#4	3	10'-9"	57
U2	5	#4	4	6'-4"	21
U3	2	#9	4	10'-8"	73
U4	3	#4	4	5'-2"	10
U5	15	#4	4	6'-6"	65
U6	3	#4	4	5'-7"	11

TOTAL EPOXY COATED REINFORCING STEEL 1755 LBS.

CLASS AA (4500 PSI) CONCRETE 8.9 CU. YDS.

GROUT FOR PILE BLOCKOUTS 1.0 CU. YDS.

PROJECT NO. 42287

PAMLICO COUNTY

STATION: 15+56.00 -L-

REPLACES BRIDGE NO. 40

STATE OF NORTH CAROLINA
DEPARTMENT OF TRANSPORTATION
RALEIGH

PRECAST PIECE B240

33'-10" CLEAR ROADWAY - 90° SKEW

NORTH CAROLINA PROFESSIONAL SEAL 19661 ENGINEER KEVIN AUSTIN 8/6/09

PLANS PREPARED BY:

MULKEY
ENGINEERS & CONSULTANTS
PO Box 33127
Raleigh, NC 27636
(919) 851-1912
(919) 851-1918 (FAX)
WWW.MULKEYINC.COM

REVISIONS						SHEET NO.
NO.	BY:	DATE:	NO.	BY:	DATE:	107
1			3			TOTAL SHEETS
2			4			185

DRAWN BY : W. B. ALLEN DATE : 2/09
CHECKED BY : L. K. AUSTIN DATE : 3/09

8/6/2009 6:06:34 AM G:\project\2004122410_Pamlico40\Structures\B5290_SD_BCB_01.dgn

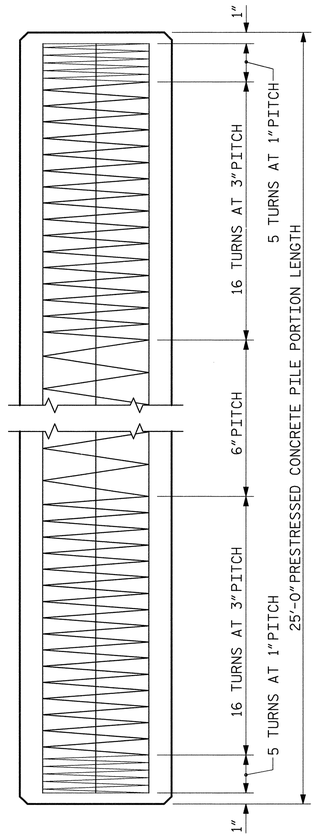

ELEVATION

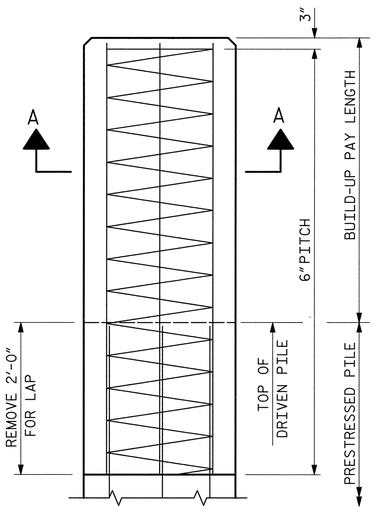

BUILD-UP
WITHOUT DRIVING

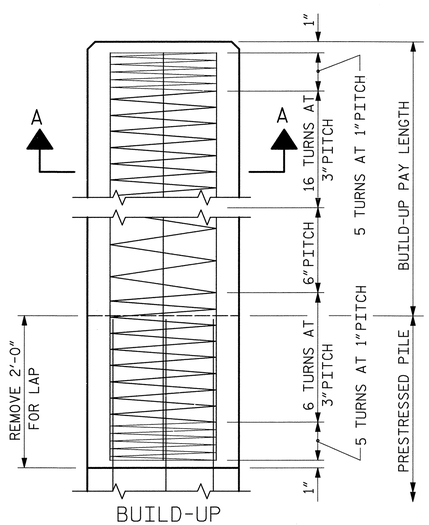

BUILD-UP
WITH DRIVING

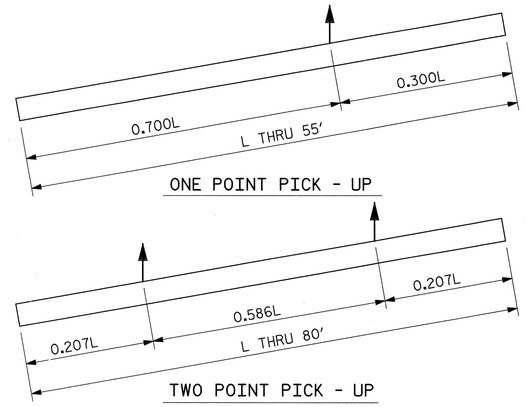

PICK - UP POINTS FOR PRESTRESSED CONCRETE PILE PORTION

QUANTITIES FOR ONE 16"PRESTRESSED PILE

LENGTH	CONCRETE CU. YDS.	PILE WT. TONS	ONE POINT PICK-UP 0.300L	ONE POINT PICK-UP 0.700L	TWO POINT PICK-UP 0.207L	TWO POINT PICK-UP 0.586L
25'-0"	1.63	3.31	7'-6"	17'-6"	5'-2"	14'-8"
30'-0"	1.96	3.97	9'-0"	21'-0"	6'-2½"	17'-7"
35'-0"	2.29	4.63	10'-6"	24'-6"	7'-3"	20'-6"
40'-0"	2.61	5.29	12'-0"	28'-0"	8'-3½"	23'-5"
45'-0"	2.94	5.95	13'-6"	31'-6"	9'-4"	26'-4"
50'-0"	3.27	6.61	15'-0"	35'-0"	10'-4"	29'-4"
55'-0"	3.59	7.28	16'-6"	38'-6"	11'-4½"	32'-3"
60'-0"	3.92	7.94			12'-5"	35'-2"
65'-0"	4.25	8.60			13'-5½"	38'-1"
70'-0"	4.57	9.26			14'-6"	41'-0"
75'-0"	4.90	9.92			15'-6½"	43'-11"
80'-0"	5.23	10.58			16'-7"	46'-10"

NOTES

CONCRETE DESIGN DATA : f'c = 6,000 PSI ; fc = 2,400 PSI

IMPACT IN HANDLING = 50%

THE TRANSFER OF LOAD FROM THE ANCHORAGES TO THE PILE SHALL BE DONE WHEN THE CONCRETE HAS REACHED A COMPRESSIVE STRENGTH OF NOT LESS THAN 3,500 PSI.

IN DRIVING PILES, A METHOD APPROVED BY THE ENGINEER SHALL BE USED, WHEREBY THE HEAD OF THE PILE IS NOT DAMAGED.

PROPOSED DEVICES FOR LIFTING PILES, RECESS DETAILS, AND PATCHING MATERIAL SHALL BE DETAILED IN SHOP DRAWINGS. AFTER ATTACHMENTS HAVE BEEN REMOVED, OPENINGS SHALL BE REPAIRED SUCH THAT THE APPEARANCE OF THE PILE IS UNIFORM.

WHERE CAST - IN - PLACE LIFTING DEVICES ARE NOT USED, PICK-UP POINTS TO BE INDICATED WITH A BLACK MARK 2"WIDE.

ALL PRESTRESSING STRANDS SHALL BE 7-WIRE LOW-RELAXATION

GRADE 270 STRANDS AND SHALL CONFORM TO AASHTO M203 EXCEPT FOR SAMPLING REQUIREMENTS WHICH SHALL BE IN ACCORDANCE WITH STANDARD SPECIFICATIONS.

THE CONTRACTOR SHALL USE THE FOLLOWING STRAND TYPE:

SIZE	GRADE	NUMBER OF STRANDS	AREA SQ. IN.	ULTIMATE STRENGTH LBS.	APPLIED PRESTRESS FORCE LBS.
½"	270 L.R.	8	0.153	41,300 PER STRAND	30,980 PER STRAND

THE SLIP-FORM METHOD OF CASTING PILES WILL NOT BE PERMITTED.

IF STRAND STRESS IS RELIEVED BY BURNING, THE STRANDS SHALL BE BURNED IN OPPOSITE PAIRS AS INDICATED IN THE TYPICAL PATTERN SHOWN. FOR ANY NUMBER OF STRANDS BURN IN OPPOSITE PAIRS AND SYMMETRICAL ABOUT BOTH VERTICAL AND HORIZONTAL AXES. STRANDS 1-1 SHALL BE BURNED BEFORE 2-2, ETC. NOT MORE THAN 4 STRANDS, SAY 3-3 AND 4-4, MAY BE BURNED AT ANY ONE SECTION BEFORE THESE SAME PAIRS OF STRANDS ARE BURNED AT BOTH ENDS OF THE BED AND BETWEEN EACH PAIR OF PILES IN THE BED.

BUILD-UPS SHALL BE 'CLASS A' CONCRETE WITH 20% ADDITIONAL CEMENT. NO DRIVING OF THE BUILT-UP PILE WILL BE PERMITTED UNTIL THE CONCRETE HAS REACHED A COMPRESSIVE STRENGTH OF 3,000 PSI AND UNTIL A PERIOD OF SEVEN DAYS HAS ELAPSED SINCE CASTING OF THE BUILD-UP.

THE WATER/CEMENT RATIO FOR CONCRETE PILES SHALL NOT EXCEED 0.40.

PRESTRESSED CONCRETE PILES SHALL CONTAIN SILICA FUME. SILICA FUME SHALL BE SUBSTITUTED FOR 5% OF THE PORTLAND CEMENT BY WEIGHT.

COMPOSITE PRESTRESSED CONCRETE PILES ARE REQUIRED AT ALL BENTS. SEE SECTION 450 OF THE STANDARD SPECIFICATIONS.

EACH 16"COMPOSITE PRESTRESSED CONCRETE PILE WILL HAVE A TOTAL LENGTH OF 50'-0"(25'-0"PRESTRESSED CONCRETE PILE PORTION AND 25'-0" STEEL HP 10 X 57 PORTION).

AT THE CONTRACTOR'S OPTION, THE COMPOSITE PILES MAY BE ASSEMBLED WHILE THE PRESTRESSED CONCRETE PILE PORTIONS AND THE STEEL HP PILE PORTIONS ARE LYING ON THE GROUND IN A HORIZONTAL POSITION. WHEN LIFTING THE ASSEMBLED COMPOSITE PILES INTO A VERTICAL POSITION, THEY SHALL BE LIFTED ONLY BY THE PRESTRESSED CONCRETE PILE PORTIONS USING TWO PICK-UP POINTS AND THE STEEL HP PILE PORTIONS SHALL NOT BE ALLOWED TO TOUCH THE GROUND. IF THIS OPTION IS CHOSEN, THE CONTRACTOR SHALL DETERMINE THE LOCATIONS OF THE TWO PICK-UP POINTS; THE TABLE SHOWN ON THIS SHEET DOES NOT APPLY.

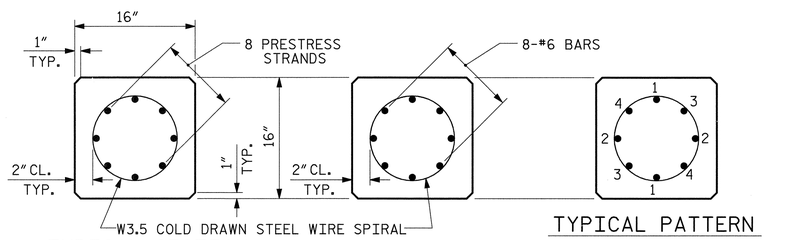

TYPICAL SECTION — SECTION "A-A" — TYPICAL PATTERN FOR BURNING STRANDS

½" Ø GRADE 270 L.R. PRESTRESS STRANDS

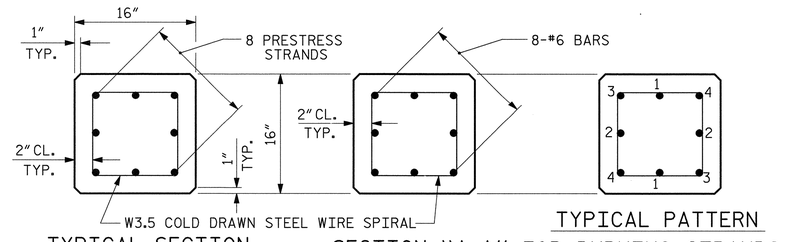

TYPICAL SECTION — SECTION "A-A" — TYPICAL PATTERN FOR BURNING STRANDS

½" Ø GRADE 270 L.R. PRESTRESS STRANDS

STEEL PILE CONNECTION DETAILS

NOTES

THE HP 10 X 57 STEEL PILE AND ALL PILE CONNECTION ELEMENTS SHALL BE GALVANIZED. SEE SPECIAL PROVISIONS.

PLATE SHALL MEET THE REQUIREMENTS OF AASHTO M270 GRADE 36.

THE 1"DIAMETER THREADED BARS SHALL BE EITHER DYWIDAG BARS OR WILLIAMS ALL-THREAD BARS (Fu = 150 KSI).

THE NUTS FOR THE THREADED BARS RETAINING THE PLATE SHALL BE TIGHTENED FINGER TIGHT AND GIVEN ONE ADDITIONAL TURN. THREADS OF THE NUTS AND THREADED BARS SHALL THEN BE BURRED AT THE FACE OF THE NUTS WITH A SHARP POINTED TOOL.

PILE SHALL BE CAST WITH THREADED BARS AND PLATE IN PLACE.

FOR SPIRAL REINFORCING AND PRESTRESSING STRAND DETAILS, SEE DETAILS ON THIS SHEET.

* EXCEPT AS NOTED BELOW, THE HP 10 X 57 SECTION SHALL BE WELDED TO THE STEEL PLATE AFTER STRAND STRESS IS RELIEVED. THE HP 10 X 57 SECTION MAY BE WELDED IN THE PRESTRESSER'S YARD OR IN THE FIELD. WHEN A CIRCULAR STRAND PATTERN AS SHOWN ON THE PLANS IS USED, THE CONTRACTOR, AT HIS OPTION, MAY WELD THE HP 10 X 57 SECTION TO THE STEEL PLATE AT THE FABRICATION PLANT PRIOR TO PLACING THE CONCRETE. THE FLANGES OF THE HP SECTION SHALL BE PARALLEL TO THE EDGES OF THE STEEL PLATE AND CONCRETE PILE.

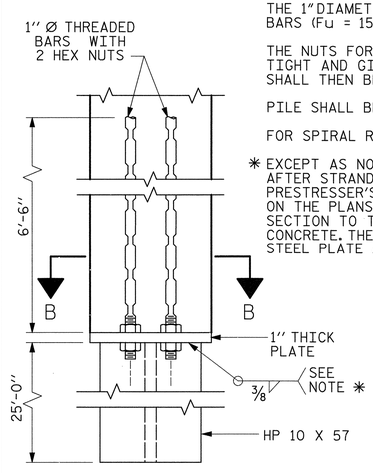

ELEVATION

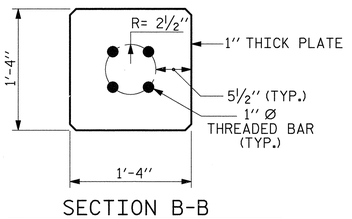

SECTION B-B
(HOLES FOR STRANDS NOT SHOWN)

PROJECT NO. 42287

PAMLICO COUNTY

STATION: 15+56.00 -L-

REPLACES BRIDGE NO. 40

STATE OF NORTH CAROLINA
DEPARTMENT OF TRANSPORTATION
RALEIGH

16" COMPOSITE PRESTRESSED CONCRETE PILE

33'-10" CLEAR ROADWAY - 90°SKEW

NORTH CAROLINA PROFESSIONAL ENGINEER SEAL 19661 KEVIN AUSTIN 8/6/09

PLANS PREPARED BY:

MULKEY
ENGINEERS & CONSULTANTS
PO Box 33127
Raleigh, N.C. 27636
(919) 851-1918
(919) 851-1918 (FAX)
WWW.MULKEYINC.COM

REVISIONS						SHEET NO.
NO.	BY:	DATE:	NO.	BY:	DATE:	108
1			3			TOTAL SHEETS
2			4			185

DRAWN BY : W. B. ALLEN DATE : 3/09
CHECKED BY : L. K. AUSTIN DATE : 3/09

8/6/2009 2:28:27 PM G:\project\2004\224\0_Pamlico40\Structures\B5290_SD_PP_0.dgn

EROSION CONTROL PLAN

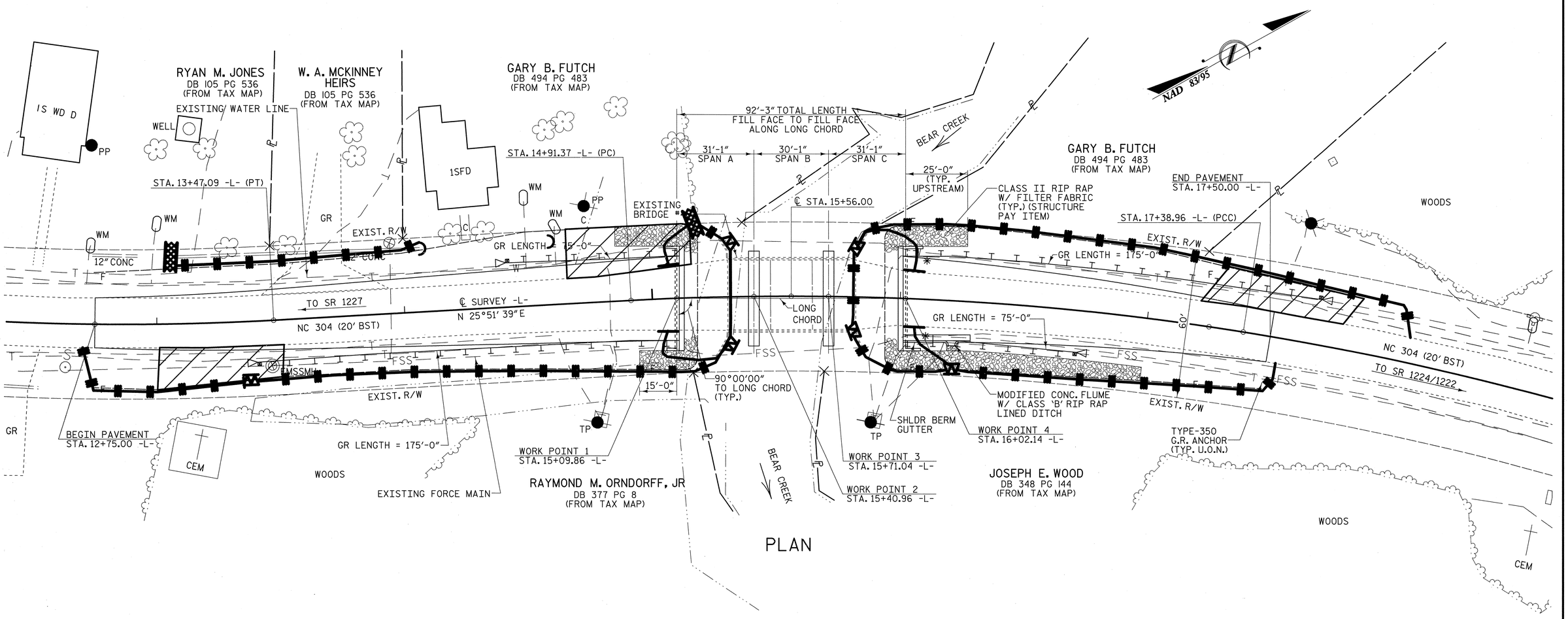

Std. #	Description	Symbol
1605.01	Temporary Silt Fence	
1606.01	Special Sediment Control Fence	
1633.01	Temporary Rock Silt Check Type-A	
	Wattle	
1622.01	Temporary Berms and Slope Drains	

ENVIRONMENTALLY SENSITIVE AREA
PLEASE SEE NOTE

ROADSIDE ENVIRONMENTAL UNIT
DEPARTMENT OF TRANSPORTATION
DIVISION OF HIGHWAYS
RALEIGH, N.C.

2006 STANDARD SPECIFICATIONS

NOTES: ANY DEVIATION FROM OPTIONS GIVEN WILL REQUIRE PRIOR APPROVAL BY ENGINEER.

ADDITIONAL EROSION CONTROL DEVICES MAY NEED TO BE INSTALLED AS DIRECTED BY THE ENGINEER.

PROJECT NO. 42287

PAMLICO COUNTY

STATION: 15+56.00 -L-

REPLACES BRIDGE NO. 40

STATE OF NORTH CAROLINA
DEPARTMENT OF TRANSPORTATION
RALEIGH

BRIDGE ON NC 304
OVER BEAR CREEK
BETWEEN SR 1227 &
SR 1224/1222

33'-10" CLEAR ROADWAY - 90°SKEW

REVISIONS						SHEET NO.
NO.	BY:	DATE:	NO.	BY:	DATE:	109
1			3			TOTAL SHEETS
2			4			185

EROSION CONTROL PLAN

STATE OF NORTH CAROLINA
DEPT. OF TRANSPORTATION
DIVISION OF HIGHWAYS
RALEIGH, N.C.

ENGLISH STANDARD DRAWING FOR
TEMPORARY SILT FENCE

SHEET 1 OF 1
1605.01

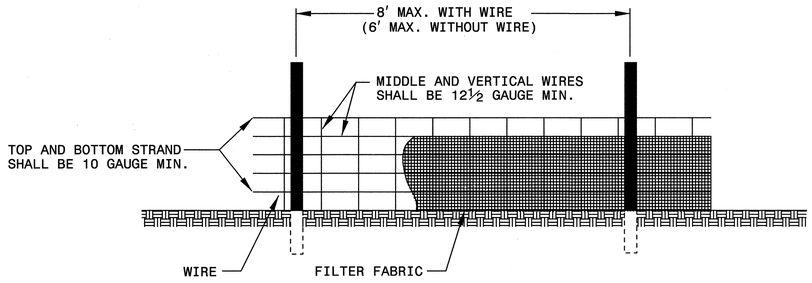

NOTES
USE WIRE A MINIMUM OF 32″ IN WIDTH AND WITH A MINIMUM OF 6 LINE WIRES WITH 12″ STAY SPACING.
USE FILTER FABRIC A MINIMUM OF 36″ IN WIDTH AND FASTEN ADEQUATELY TO THE WIRE AS DIRECTED BY THE ENGINEER.
PROVIDE 5′-0″ STEEL POST OF THE SELF-FASTENER ANGLE STEEL TYPE.

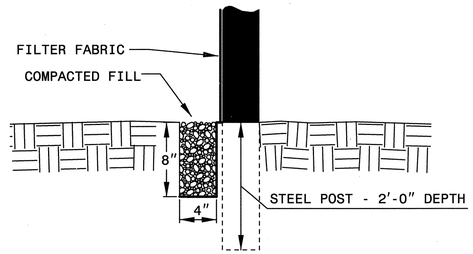

EXTENSION OF FABRIC AND WIRE INTO TRENCH

STATE OF NORTH CAROLINA
DEPT. OF TRANSPORTATION
DIVISION OF HIGHWAYS
RALEIGH, N.C.

ENGLISH STANDARD DRAWING FOR
TEMPORARY SILT FENCE

SHEET 1 OF 1
1605.01

STATE OF NORTH CAROLINA
DEPT. OF TRANSPORTATION
DIVISION OF HIGHWAYS
RALEIGH, N.C.

ENGLISH STANDARD DRAWING FOR
TEMPORARY ROCK SILT CHECK TYPE 'A'

SHEET 1 OF 1
1633.01

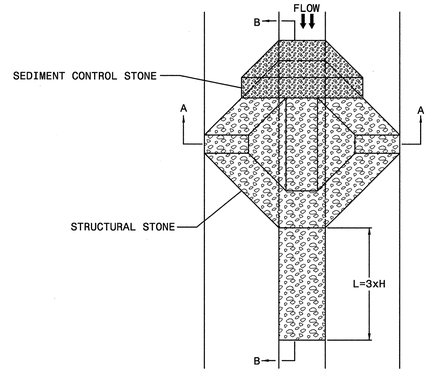

PLAN

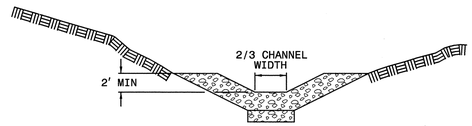

SECTION A-A

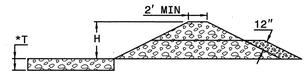

SECTION B-B
*T = 12″ MIN., 18″ MAX.

NOTE
USE CLASS 'B' EROSION CONTROL STONE FOR STRUCTURAL STONE.
USE NO. 5 OR NO. 57 STONE FOR SEDIMENT CONTROL STONE.

STATE OF NORTH CAROLINA
DEPT. OF TRANSPORTATION
DIVISION OF HIGHWAYS
RALEIGH, N.C.

ENGLISH STANDARD DRAWING FOR
TEMPORARY ROCK SILT CHECK TYPE 'A'

SHEET 1 OF 1
1633.01

STATE OF NORTH CAROLINA
DEPT. OF TRANSPORTATION
DIVISION OF HIGHWAYS
RALEIGH, N.C.

ENGLISH STANDARD DRAWING FOR
SPECIAL SEDIMENT CONTROL FENCE

SHEET 1 OF 1
1606.01

GENERAL NOTES:

USE NO. 5 OR NO. 57 STONE FOR SEDIMENT CONTROL STONE.

USE HARDWARE CLOTH 24 GAUGE WIRE MESH WITH 1/4 INCH MESH OPENINGS.

INSTALL 5 FT. SELF FASTENER ANGLE STEEL POST 2 FT. DEEP MINIMUM.

SPACE POST A MAXIMUM OF 3 FT.

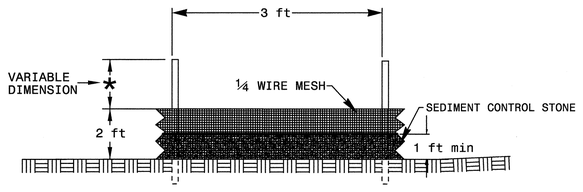

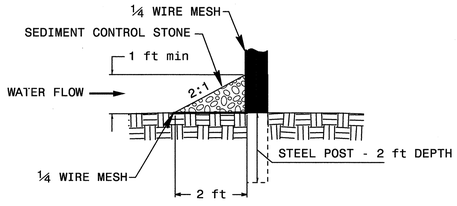

STATE OF NORTH CAROLINA
DEPT. OF TRANSPORTATION
DIVISION OF HIGHWAYS
RALEIGH, N.C.

ENGLISH STANDARD DRAWING FOR
SPECIAL SEDIMENT CONTROL FENCE

SHEET 1 OF 1
1606.01

ROADSIDE ENVIRONMENTAL UNIT
DEPARTMENT OF TRANSPORTATION
DIVISION OF HIGHWAYS
RALEIGH, N.C.

2006 STANDARD SPECIFICATIONS

NOTES: ANY DEVIATION FROM OPTIONS GIVEN WILL REQUIRE PRIOR APPROVAL BY ENGINEER.

ADDITIONAL EROSION CONTROL DEVICES MAY NEED TO BE INSTALLED AS DIRECTED BY THE ENGINEER.

PROJECT NO. 42287

PAMLICO COUNTY

STATION: 15+56.00 -L-

REPLACES BRIDGE NO. 40

STATE OF NORTH CAROLINA
DEPARTMENT OF TRANSPORTATION
RALEIGH

BRIDGE ON NC 304
OVER BEAR CREEK
BETWEEN SR 1227 &
SR 1224/1222

33′-10″ CLEAR ROADWAY - 90°SKEW

REVISIONS						SHEET NO.
NO.	BY:	DATE:	NO.	BY:	DATE:	110
2			3			TOTAL SHEETS
			4			185

EROSION CONTROL PLAN

WATTLE WITH POLYACRYLAMIDE DETAIL

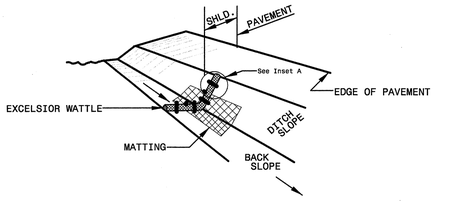

ISOMETRIC VIEW

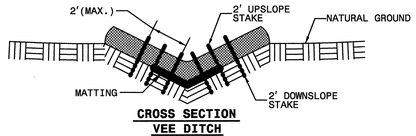

CROSS SECTION
VEE DITCH

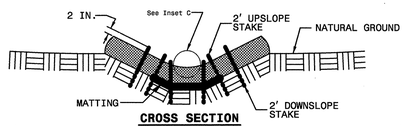

CROSS SECTION
TRAPEZOIDAL DITCH

NOTES:

USE MINIMUM 12 IN. DIAMETER EXCELSIOR WATTLE.

USE 2 FT. WOODEN STAKES WITH A 2 IN. BY 2 IN. CROSS SECTION.

INSTALL A MINIMUM OF 2 UPSLOPE STAKES AND 4 DOWNSLOPE STAKES AT AN ANGLE TO WEDGE WATTLE TO BOTTOM OF DITCH.

PROVIDE STAPLES MADE OF 0.125 IN. DIAMETER STEEL WIRE FORMED INTO A U SHAPE NOT LESS THAN 12" IN LENGTH.

INSTALL STAPLES APPROXIMATELY EVERY 1 LINEAR FOOT ON BOTH SIDES OF WATTLE AND AT EACH END TO SECURE IT TO THE SOIL.

INSTALL MATTING IN ACCORDANCE WITH SECTION 1631 OF THE STANDARD SPECIFICATIONS.

PRIOR TO POLYACRYLAMIDE (PAM) APPLICATION, OBTAIN A SOIL SAMPLE FROM PROJECT LOCATION, AND FROM OFFSITE MATERIAL, AND ANALYZE FOR APPROPRIATE PAM FLOCCULANT TO BE APPLIED TO EACH WATTLE.

INITIALLY APPLY 3.5 OUNCES OF ANIONIC OR NEUTRALLY CHARGED POLYACRYLAMIDE (PAM) OVER WATTLE WHERE WATER WILL FLOW AND AFTER EVERY RAINFALL EVENT THAT IS EQUAL TO OR EXCEEDS 0.50 IN.

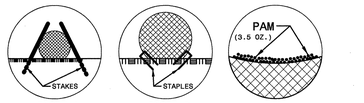

INSET A INSET B INSET C

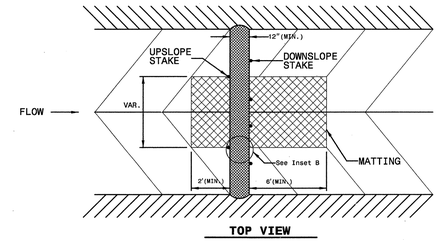

TOP VIEW

FLOATING TURBIDITY CURTAIN:

Description

This work consists of the installation of a Floating Turbidity Curtain to deter silt suspension and movement of silt particles during construction. The floating turbidity curtain shall be constructed at locations as directed.

Materials

The curtain material shall be made of a tightly woven nylon, plastic or other non–deteriorating material meeting the following specifications:

Property	Value
Grab tensile strength	*md–370 lbs *cd–250 lbs
Mullen burst stength	480 psi
Trapezoid tear strength	*md–100 lbs *cd–60 lbs
Apparent opening size	70 US standard sieve
Percent open area	4% permittivity 0.28 sec–1

*md – machine direction
*cd – cross machine direction

In the event that more than one width of fabric is required, a 6" overlap of the material shall also be required.

The curtain material shall be supported by a flotation material having over 29 lbsft buoyancy. The floating curtain shall have a 5/16" galvanized chain as ballast and dual 5/16" galvanized wire ropes with a heavy vinyl coating as load lines.

Construction Methods

The Contractor shall maintain the Floating Turbidity Curtain in a satisfactory condition until its removal is requested by the Engineer.

Measurement and Payment

Floating Turbidity Curtain will be paid for at the contract price for "Lump Sum for Erosion Control". Such payment will be full compensation including but not limited to installation, maintenance, removal and incidentals necessary to complete this work.

STATE OF NORTH CAROLINA
DEPT. OF TRANSPORTATION
DIVISION OF HIGHWAYS
RALEIGH, N.C.

1-02

ENGLISH STANDARD DRAWING FOR
GUIDE FOR TEMPORARY BERMS AND SLOPE DRAIN

SHEET 1 OF 1
1622.01

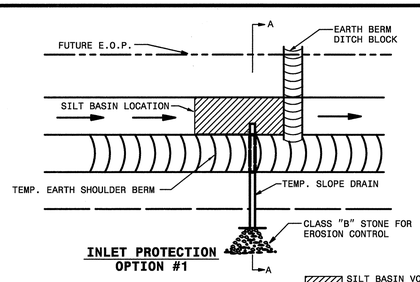

INLET PROTECTION
OPTION #1

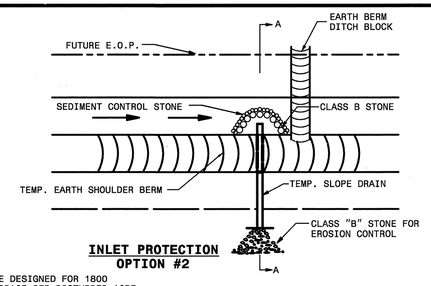

INLET PROTECTION
OPTION #2

SILT BASIN VOLUME SHALL BE DESIGNED FOR 1800 CUBIC FEET OF SEDIMENT STORAGE PER DISTURBED ACRE.

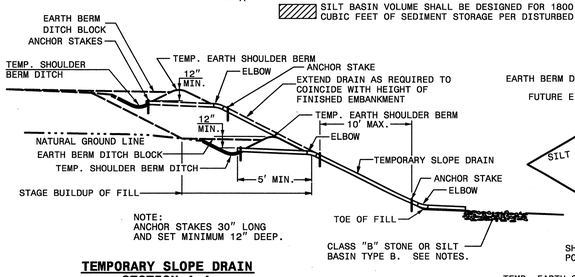

NOTE:
ANCHOR STAKES 30" LONG AND SET MINIMUM 12" DEEP.

TEMPORARY SLOPE DRAIN
SECTION A-A

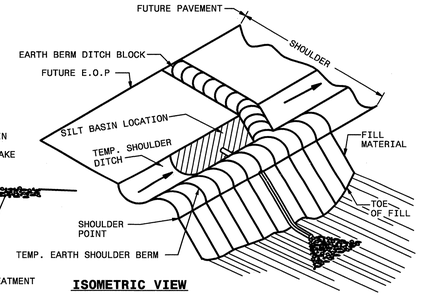

ISOMETRIC VIEW

NOTES:
1. OPEN END PIPE WITH MINIMUM SETBACK AND PROPER COMPACTION IS AN ACCEPTABLE INLET TREATMENT FOR STAGED CONSTRUCTION WHEN NOT LEFT IN PLACE FOR MORE THAN 30 DAYS.
2. DESIGN INLET PROTECTION OPTION #2 FOR 1800 CUBIC FOOT OF SEDIMENT STORAGE PER DISTURBED ACRE.
3. DESIGN SILT BASINS WITH A 2:1 LENGTH TO WIDTH RATIO MINIMUM.
4. USE CLASS B STONE FOR EROSION CONTROL AT OUTLET LOCATIONS SUBJECT TO SCOURING. SILT BASINS AND/OR OTHER EROSION CONTROL DEVICES MAY ALSO BE UTILIZED TO PREVENT SCOUR AT OUTLET LOCATIONS.
5. USE MAXIMUM SLOPE DRAIN SPACING OF 200 FT.

STATE OF NORTH CAROLINA
DEPT. OF TRANSPORTATION
DIVISION OF HIGHWAYS
RALEIGH, N.C.

1-02

ENGLISH STANDARD DRAWING FOR
GUIDE FOR TEMPORARY BERMS AND SLOPE DRAIN

SHEET 1 OF 1
1622.01

ROADSIDE ENVIRONMENTAL UNIT
DEPARTMENT OF TRANSPORTATION
DIVISION OF HIGHWAYS
RALEIGH, N.C.

2006 STANDARD SPECIFICATIONS

NOTES: ANY DEVIATION FROM OPTIONS GIVEN WILL REQUIRE PRIOR APPROVAL BY ENGINEER.

ADDITIONAL EROSION CONTROL DEVICES MAY NEED TO BE INSTALLED AS DIRECTED BY THE ENGINEER.

PROJECT NO. 42287

PAMLICO COUNTY

STATION: 15+56.00 -L-

REPLACES BRIDGE NO. 40

STATE OF NORTH CAROLINA
DEPARTMENT OF TRANSPORTATION
RALEIGH

BRIDGE ON NC 304
OVER BEAR CREEK
BETWEEN SR 1227 &
SR 1224/1222

33'-10" CLEAR ROADWAY - 90°SKEW

REVISIONS						SHEET NO.
NO.	BY:	DATE:	NO.	BY:	DATE:	111
			3			TOTAL SHEETS
2			4			185

EROSION CONTROL PLAN

WATTLES WITH POLYACRYLAMIDE (PAM):

Description

Wattles are tubular products consisting of excelsior fibers encased in synthetic netting. Wattles are used on slopes or channels to intercept runoff and act as a velocity break. Wattles are to be placed at locations shown on the plans or as directed. Installation shall follow the detail provided in the plans and as directed. Work includes furnishing materials, installation of wattles, matting installation, PAM application, and removing wattles.

Materials

Wattle shall meet the following specifications:

100% Curled Wood(Excelsior) Fibers
Minimum Diameter – 12 in.
Minimum Density – 2.6 lb/ft3 +/– 10%
Net Material – Synthetic
Net Openings – 1 in. x 1 in.
Net Configuration – Totally Encased
Minimum Weight – 20 lb. +/– 10% per 10 ft. length

Anchors: Stakes shall be used as anchors.

Wooden Stakes:

Provide hardwood stakes a minimum of 2–ft. long with a 2 in. x 2 in. nominal square cross section. One end of the stake must be sharpened or beveled to facilitate driving down into the underlying soil.

Matting shall meet the requirements of section 1060–8 of the Standard Specifications, or shall meet specifications provided elsewhere in this contract.

Provide staples made of 0.125" diameter new steel wire formed into a u shape not less than 12" in length with a throat of 1" in width.

Polyacrylamide (PAM) shall be applied in powder form and shall be anionic or neutrally charged. Soil samples shall be obtained in areas where the wattles will be placed, and from offsite material used to construct roadway, and analyzed for the appropriate PAM flocculant to be utilized with each wattle.

Construction Methods

Wattles shall be secured to the soil by wire staples approximately every 1 linear foot and at the end of each section of wattle. A minimum of 4 stakes shall be installed on the downstream side of the wattle with a maximum spacing of 2 linear feet along the wattle, and according to the detail. Install a minimum of 2 stakes on the upstream side of the wattle according to the detail provided in the plans. Stakes shall be driven into the ground a minimum of 10 in. with no more than 2 in. projecting from the top of the wattle. Drive stakes at an angle according to the detail provided in the plans.

Install wattles to the top of the ditch according to the detail provided in the plans. Overlap adjoining sections of wattles a minimum of 6 in.

Installation of matting shall be in accordance with the detail provided in the plans, and in accordance with section 1631–3(B) of the Standard Specifications, or in accordance with specifications provided elsewhere in this contract.

Apply PAM over the lower center portion of the wattle where the water is going to flow over at a rate of 3.5 ounces per wattle. PAM applications shall be done during construction activities after every rainfall event that is equal to or exceeds 0.50 in.

The Contractor shall maintain the wattles until the project is accepted or until the wattles are removed, and shall remove and dispose of silt accumulations at the wattles when so directed in accordance with the requirements of Section 1630 of the Standard Specifications.

The quantity of wattle(s), wooden stakes, staples, matting and PAM as measured above will be paid for at contract price for "Lump Sum for Erosion Control". Such price and payment will be full compensation for all work covered by this provision, including but not limted to, furnishing all materials, placing and maintaining the wattle(s), and removal and disposal of silt accumulations and wattle.

Reforestation:

Reforestation will be planted within interchanges and along the outside borders of the road, and in other areas as directed. Reforestation is not shown on the plan sheets. See the Reforestation Detail Sheet.

All non–maintained riparian buffers impacted by the placement of temporary fill or clearing activities shall be restored to the preconstruction contours and revegetated with native woody species.

The entire Reforestation operation shall comply with the requirements of Section 1670 of the Standard Specifications.

Reforestation shall be bare root seedlings 12"–18" tall.

Reforestation shall be shall be planted as soon as practical following permanent Seeding and Mulching. The seedlings shall be planted in a 16–foot wide swath adjacent to mowing pattern line, or as directed.

Root dip: The roots of reforestation seedlings shall be coated with a slurry of water, and either a fine clay (kaolin) or a superabsorbent that is designated as a bare root dip. The type, mixture ratio, method of application, and the time of application shall be submitted to the Engineer for approval.

With the approval of the Engineer, seedlings may be coated before delivery to the job or at the time of planting, but at no time shall the roots of the seedlings be allowed to dry out. The roots shall be moistened immediately prior to planting.

Seasonal Limitations: Reforestation shall be planted from November 15 through March 15.

Payment for Reforestation will be included in the contract bid price for Lump Sum for Erosion Control.

Special Sediment Control Fence:

Description:

The work covered by this section consists of the construction, maintenance, and removal of special sediment control fence. Place special sediment control fence as shown on the plans or as directed by the Engineer.

Materials:

(A) Posts:

Steel posts shall be at least 5 feet in length, approximately 1 3/8 inches wide measured parallel to the fence, and have a minimum weight of 1.25 lb/ft of length. The post shall be equipped with an anchor plate having a minimum area of 14.0 square inches, and shall have a means of retaining wire in the desired position without displacement.

(B) 1/4 inch Hardware Cloth:

Hardware cloth shall have 1/4 inch openings constructed from #24 gauge wire. Install hardware cloth according to the detail shown on the plans.

(C) Sediment Control Stone:

Sediment control stone shall meet the requirements of Section 1005. Install stone according to the detail shown on the plans.

Maintenance and Removal:

The Contractor shall maintain the special sediment control fence until the project is accepted or until the fence is removed, and shall remove and dispose of silt accumulations at the fence when so directed by the Engineer in accordance with Section 1630.

The quantity of posts, sediment control stone and hardware cloth as measured above will be paid for at the contract price for "Lump Sum for Erosion Control". Such price and payment will be full compensation for all work covered by this provision, including but not limited to, furnishing all materials, installation, and removal and disposal of silt accumulations and materials.

Environmentally Sensitive Areas:

This project is located in an "Environmentally Sensitive Area." This designation requires special procedures to be used for clearing and grubbing, temporary stream crossings, and grading operations within the area identified on the plans. This also requires special procedures to be used for seeding and mulching and staged seeding within the project.

Clearing and Grubbing:

In areas identified on the erosion control plans as "Environmentally Sensitive Areas", the Contractor may perform clearing operations, but not grubbing operations until immediately prior to beginning grading operations as described in Section 200, Article 200–1, in the Standard Specifications. The "Environmentally Sensitive Area" shall be defined as a 50 foot buffer zone on both sides of the stream (or depression), measured from top of streambank, (or center of depression). Only clearing operations (not grubbing) shall be allowed in this buffer zone until immediately prior to beginning grading operations. Erosion control devices shall be installed immediately following the clearing operation.

Grading:

Once grading operations begin in identified "Environmentally Sensitive Areas", work will progress in a continuous manner until complete. All construction within these areas must progress in a continuous manner such that each phase is complete and areas permanently stabilized prior to beginning of next phase. Failure on the part of the Contractor to complete any phase of construction in a continuous manner in "Environmentally Sensitive Areas" as specified will be just cause for the Engineer to direct the suspension of work in accordance with Section 108–7 of the Standard Specifications.

Temporary Stream Crossings:

Any crossing of streams within the limits of this project must be accomplished in accordance with Section 107–13(b) of the Standard Specifications.

Seeding and Mulching:

Seeding and mulching shall be performed in accordance with Section 1660 of the Standard Specifications and vegetative cover sufficient to restrain erosion shall be installed immediately following grade establishment.

Seeding and mulching shall be performed on the areas disturbed by construction immediately following final grade establishment. No appreciable time shall lapse into the contract time without stabilization of slopes, ditches and other areas within the "Environmentally Sensitive Areas" as indicated on the erosion control plans.

Stage Seeding:

The work covered by this section shall consist of the establishment of a vegetative cover on cut and fill slopes as grading progresses. Seeding and mulching shall be done in stages on cut and fill slopes which are greater than 20 feet in height measured along the slope, or greater than 2 acres in area. Each stage shall not exceed the limits stated above.

All work described above will be paid for at the contract price for "Lump Sum for Erosion Control" established in the contract for the work involved. Additional payments will not be made for the requirements of this section as the cost for this work should be included in the contract price for "Lump Sum for Erosion Control" for the work involved.

SAFETY FENCE:

Description

Safety Fence shall consist of furnishing, installing and maintaining polyethylene or polypropylene fence along the outside riparian buffer, wetland, or water boundary located within the construction corridor to mark the areas that have been approved to infringe within the buffer, wetland or water. The fence shall be installed prior to any land disturbing activities.

Materials

Polyethylene or polypropylene fence shall be a highly visible preconstructed safety fence approved by the Engineer. The fence material shall have an ultraviolet coating.

Either wood posts or steel posts may be used. Wood posts shall be hardwood with a wedge or pencil tip at one end, and shall be at least 5 ft. in length with a minimum nominal 2" x 2" cross section. Steel posts shall be at least 5 ft. in length, and have a minimum weight of 0.85 lb./ft. of length.

Construction Methods

No additional clearing and grubbing is anticipated for the installation of this fence; however, if any clearing and grubbing is required, it will be the minimum required for the installation of the safety fence. Such clearing shall include satisfactory removal and disposal of all trees, brush, stumps and other objectionable material.

The fence shall be erected to conform to the general contour of the ground. When determined necessary, minor grading along the fence line shall be performed to meet this requirement provided no obstructions to proper drainage are created.

Posts shall be set and maintained in a vertical position and may be hand set or set with a post driver. If hand set, all backfill material shall be thoroughly tamped. Wood posts may be sharpened to a dull point if power driven. Posts damaged by power driving shall be removed and replaced prior to final acceptance. The tops of all wood posts shall be cut at a 30–degree angle. The wood posts may, at the option of the Contractor, be cut at this angle either before or after the posts are erected.

The fence fabric shall be attached to the wood posts with one 2" galvanized wire staple across each cable or to the steel posts with wire or other acceptable means.

The Contractor shall be required to maintain the safety fence in a satisfactory condition for the duration of the project as determined by the Engineer.

Measurement and Payment

Safety Fence will be paid for at the contract price for "Lump Sum for Erosion Control". Such payment will be full compensation including but not limited to clearing and grading, furnishing and installing fence fabric with necessary posts and post bracing, staples, tie wires, tools, equipment and incidentals necessary to complete this work.

ROADSIDE ENVIRONMENTAL UNIT
DEPARTMENT OF TRANSPORTATION
DIVISION OF HIGHWAYS
RALEIGH, N.C.

2006 STANDARD SPECIFICATIONS

NOTES: ANY DEVIATION FROM OPTIONS GIVEN WILL REQUIRE PRIOR APPROVAL BY ENGINEER.

ADDITIONAL EROSION CONTROL DEVICES MAY NEED TO BE INSTALLED AS DIRECTED BY THE ENGINEER.

PROJECT NO. 42287

PAMLICO COUNTY

STATION: 15+56.00 -L-

REPLACES BRIDGE NO. 40

STATE OF NORTH CAROLINA
DEPARTMENT OF TRANSPORTATION
RALEIGH

BRIDGE ON NC 304
OVER BEAR CREEK
BETWEEN SR 1227 &
SR 1224/1222

33'-10" CLEAR ROADWAY - 90°SKEW

REVISIONS						SHEET NO.
NO.	BY:	DATE:	NO.	BY:	DATE:	112
			3			TOTAL SHEETS
2			4			185

STATE	STATE PROJECT REFERENCE NO.	SHEET NO.	TOTAL SHEETS
N.C.	B-5129 (BRIDGE NO. 40)	113	185
STATE PROJ. NO.	F. A. PROJ. NO.	DESCRIPTION	

PLANTING DETAILS

SEEDLING / LINER BAREROOT PLANTING DETAIL

HEALING IN

1. Locate a healing-in site in a shady, well protected area.
2. Excavate a flat bottom trench 12 inches deep and provide drainage.

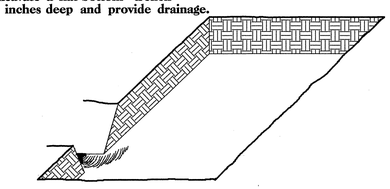

3. Backfill the trench with 2 inches well rotted sawdust. Place a 2 inch layer of well rotted sawdust at a sloping angle at one end of the trench.

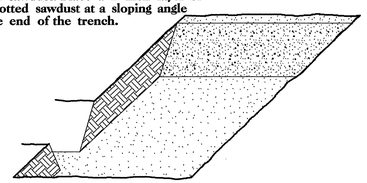

4. Place a single layer of plants against the sloping end so that the root collar is at ground level.

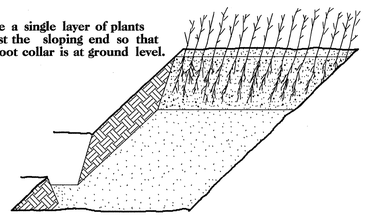

5. Place a 2 inch layer of well rotted sawdust over the roots maintaining a sloping angle.

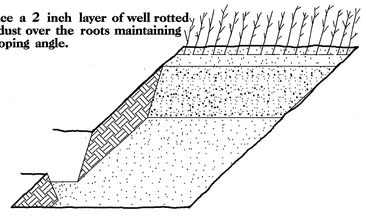

6. Repeat layers of plants and sawdust as necessary and water thoroughly.

DIBBLE PLANTING METHOD
USING THE KBC PLANTING BAR

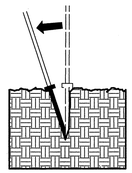

1. Insert planting bar as shown and pull handle toward planter.

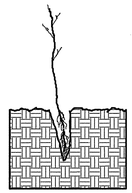

2. Remove planting bar and place seedling at correct depth.

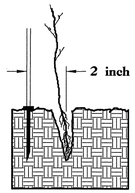

3. Insert planting bar 2 inches toward planter from seedling.

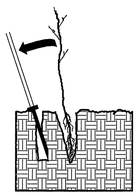

4. Pull handle of bar toward planter, firming soil at bottom.

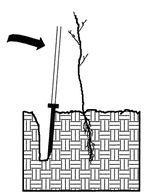

5. Push handle forward firming soil at top.

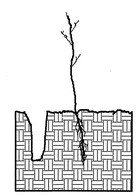

6. Leave compaction hole open. Water thoroughly.

PLANTING NOTES:

PLANTING BAG
During planting, seedlings shall be kept in a moist canvas bag or similar container to prevent the root systems from drying.

KBC PLANTING BAR
Planting bar shall have a blade with a triangular cross section, and shall be 12 inches long, 4 inches wide and 1 inch thick at center.

ROOT PRUNING
All seedlings shall be root pruned, if necessary, so that no roots extend more than 10 inches below the root collar.

REFORESTATION

☐ TREE REFORESTATION SHALL BE PLANTED 6 FT. TO 10 FT. ON CENTER, RANDOM SPACING, AVERAGING 8 FT. ON CENTER, APPROXIMATELY 680 PLANTS PER ACRE.

REFORESTATION

MIXTURE, TYPE, SIZE, AND FURNISH SHALL CONFORM TO THE FOLLOWING:

25% LIRIODENDRON TULIPIFERA	TULIP POPLAR	12 in – 18 in BR
25% QUERCUS LAURIFOLIA	LAUREL OAK	12 in – 18 in BR
25% FRAXINUS PENNSYLVANICA	GREEN ASH	12 in – 18 in BR
25% BETULA NIGRA	RIVER BIRCH	12 in – 18 in BR

REFORESTATION

MIXTURE, TYPE, SIZE, AND FURNISH SHALL CONFORM TO THE FOLLOWING:

25% LIRIODENDRON TULIPIFERA	TULIP POPLAR	12 in – 18 in BR
25% QUERCUS LAURIFOLIA	LAUREL OAK	12 in – 18 in BR
25% FRAXINUS PENNSYLVANICA	GREEN ASH	12 in – 18 in BR
25% BETULA NIGRA	RIVER BIRCH	12 in – 18 in BR

REFORESTATION DETAIL SHEET

N.C.D.O.T. - ROADSIDE ENVIRONMENTAL UNIT

B-5129

#42 PAMLICO

TBM:
RR SPIKE IN TELEPHONE POLE
54.09' RIGHT OF -L- STA. 17+56.71
ELEV. 4.42

CLASS II RIP RAP W/ FILTER FABRIC (TYP.) (STRUCTURE PAY ITEM)

112'-3" TOTAL LENGTH FILL FACE TO FILL FACE ALONG ℄ SURVEY -L- (NC 304) & EXTENDED TANGENT

31'-1" SPAN A | 50'-1" SPAN B | 31'-1" SPAN A

STANLEY L. STYRON, JR
DB 369 PG 813
(FROM TAX MAP)

CARL S. RUSS
DB 176 PG 459
(FROM TAX MAP)

NAD 83/95

BEGIN PAVEMENT
STA. 13+60.00 -L-

MODIFIED CONC. FLUME W/ CLASS 'B' RIP RAP LINED DITCH (TYP.)

STA. 15+22.48 -L- (PT)

TEMP. SHORING AS REQUIRED (SEE SPECIAL PROVISIONS)

PP

END PAVEMENT
STA. 17+85.00 -L-

EX. R/W

GR LENGTH = 150'-0" TIE TO EXISTING

ATUR

℄ STA. 15+65.09

W

STA. 16+52.95 -L- (PC)

GR LENGTH = 162'-6" TIE TO EXISTING

EX. R/W

TO SR 1224

60'

NC 304 (20' BST)

℄ SURVEY -L-

SHLDR BERM GUTTER (TYP.)

90° TO EXTENDED TANGENT

N 29°39' 40"E

90° (TYP.)

TO NC 33

FSS

EXISTING BRIDGE #42

EX. R/W

GR LENGTH = 150'-0" TIE TO EXISTING

EXTENDED TANGENT

ATUR

AT-1

GRAVEL

GR LENGTH = 43'-9" RADIUS = 10'

SLOPE STAKE LINES (TYP.)

EX. R/W

WORK POINT 1
STA. 15+08.96 -L-

WORK POINT 2
STA. 15+40.05 -L-

WORK POINT 3
STA. 15+90.13 -L-

WORK POINT 4
STA. 16+21.21 -L-

JOHN PAUL JONES
DB 371PG 880
(FROM TAX MAP)

STANLEY L. STYRON, JR
DB 369 PG 813
(FROM TAX MAP)

GALE CREEK

3 S F D

EXISTING UTILITIES TO BE RELOCATED BY OTHERS PRIOR TO PROJECT LETTING

EXISTING BRIDGE No. 42
28'-0" CLEAR ROADWAY
SPANS: 1 @ 16'-6", 1 @ 16'-11", 1 @ 16'-8", 1 @ 16'-9", 1 @ 17'-2" 1 @ 17'-6"
RC FLOOR ON TIMBER JOISTS
END BENTS & INT. BENT-
TIMBER CAPS ON TIMBER PILES

PLAN
SCALE : 1" = 20'

DENOTES GEO-TECH BORE HOLE LOCATIONS.

✳ DENOTES GUARDRAIL CONNECTION REQ'D. (TYPE III) SEE "GUARDRAIL ANCHORAGE DETAILS" SHEET.

NOTE: GUARDRAIL LENGTHS AS SHOWN INCLUDE ANCHOR UNITS.

U.O.N. - UNLESS OTHERWISE NOTED

FOR PAVEMENT LAYOUT & EASEMENT, SEE "ROADWAY DETAILS" SHEET.

(+) 1.5028% | (+) 0.3000% | (-) 1.7229%

STA. 13+60.00	STA. 14+90.00	STA. 16+40.00	STA. 17+85.00
ELEV. 3.35	ELEV. 5.30	ELEV. 5.75	ELEV. 3.25

GRADE DATA
-L- (NC 304)

HYDROGRAPHIC DATA:

DESIGN DISCHARGE -	1800 CFS
FREQUENCY OF DESIGN FLOOD -	50 YEAR
DESIGN HIGH WATER ELEVATION -	2.8
DRAINAGE AREA -	16 SQ. MI.
BASIC DISCHARGE (Q 100) -	2200 CFS
BASIC HIGH WATER ELEVATION -	3.3

NOTES

ASSUMED LIVE LOAD = HS 20 OR ALTERNATE LOADING, EXCEPT THAT CORED SLAB UNITS HAVE BEEN DESIGNED FOR HS 25.

FOR EROSION CONTROL MEASURES SEE EROSION CONTROL PLANS.

CLEARING ON THIS PROJECT SHALL BE PERFORMED TO THE LIMITS ESTABLISHED BY METHOD II.

REMOVAL OF EXISTING BRIDGE SHALL INCLUDE REMOVAL OF THE EXISTING ABUTMENTS AND BENTS ALONG WITH ALL EXISTING PILES. AS WELL AS REMNANT PILINGS FROM PREVIOUS BRIDGES, AS PER THE CAMA PERMIT.

THIS BRIDGE HAS BEEN DESIGNED BY THE STRENGTH DESIGN METHOD AS SPECIFIED IN AASHTO STANDARD SPECIFICATIONS.

THIS STRUCTURE CONTAINS THE FOLLOWING PRECAST CONCRETE PIECES: BENT CAPS, END BENT CAPS, BACKWALLS, WINGWALLS, AND WING FOOTINGS. EACH PRECAST CONCRETE PIECE SHALL BE STENCILED WITH ITS PIECE MARK. SEE PIECE MARKS CONTAINED IN THESE PLANS.

CLASS AA (4500 PSI) CONCRETE SHALL BE USED IN ALL PRECAST PIECES LISTED ABOVE AND SHALL CONTAIN CALCIUM NITRITE CORROSION INHIBITOR IN ACCORDANCE WITH THE STANDARD SPECIFICATIONS.

REMOVAL OF THE EXISTING BRIDGE SHALL BE PERFORMED SO AS NOT TO ALLOW DEBRIS TO FALL INTO THE WATER. THE CONTRACTOR SHALL REMOVE THE BRIDGE AND SUBMIT PLANS FOR THE DEMOLITION IN ACCORDANCE WITH ARTICLE 402-2 OF THE STANDARD SPECIFICATIONS.

THE SUBSTRUCTURE OF THE EXISTING BRIDGE INDICATED ON THE PLANS IS FROM THE BEST INFORMATION AVAILABLE. SINCE THIS INFORMATION IS SHOWN FOR THE CONVENIENCE OF THE CONTRACTOR, THE CONTRACTOR SHALL HAVE NO CLAIM WHATSOEVER AGAINST THE DEPARTMENT OF TRANSPORTATION FOR ANY DELAYS OR ADDITIONAL COST INCURRED BASED ON DIFFFERENCES BETWEEN THE EXISTING BRIDGE SUBSTRUCTURE SHOWN ON THE PLANS AND THE ACTUAL CONDITIONS AT THE PROJECT SITE.

THIS STRUCTURE HAS BEEN DESIGNED IN ACCORDANCE WITH HEC 18, "EVALUATING SCOUR AT BRIDGES", MAY 2001.

THE SCOUR CRITICAL ELEVATION FOR INTERIOR BENTS No. 1 AND 2 IS -24 FT. THE SCOUR CRITICAL ELEVATIONS ARE FOR USE BY MAINTENANCE FORCES TO MONITOR POSSIBLE SCOUR PROBLEMS DURING THE LIFE OF THE STRUCTURE.

THIS STRUCTURE HAS BEEN DESIGNED IN ACCORDANCE WITH FHWA'S TECHNICAL ADVISORY T5140.20 (SCOUR AT BRIDGES).

THIS BRIDGE HAS BEEN DESIGNED IN ACCORDANCE WITH THE REQUIREMENTS OF THE STANDARD SPECIFICATIONS FOR SEISMIC DESIGN OF HIGHWAY BRIDGES FOR SEISMIC CATEGORY A.

ADT = 680 FOR YEAR 2001

ROADWAY APPROACH EMBANKMENT SHALL BE WIDENED AS NECESSARY FOR GUARDRAIL INSTALLATION.

THIS STRUCTURE CONTAINS THE NECESSARY CORROSION PROTECTION REQUIRED FOR A CORROSIVE SITE.

(NOTES CONTINUED ON "FOUNDATION LAYOUT" SHEET)

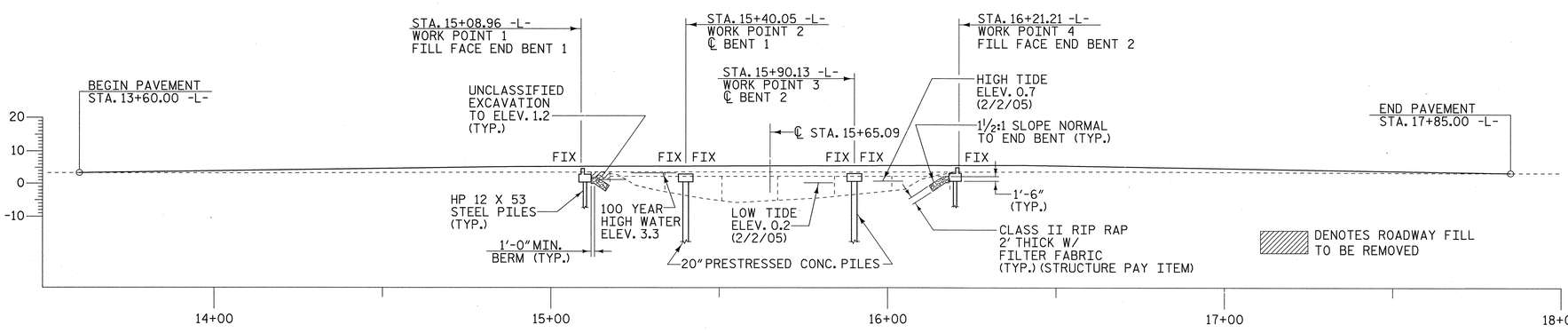

PROFILE ALONG ℄ SURVEY
SCALE : 1" = 20'

PROJECT NO. 42287

PAMLICO COUNTY

STATION: 15+65.09 -L-

REPLACES BRIDGE NO. 42

STATE OF NORTH CAROLINA
DEPARTMENT OF TRANSPORTATION
RALEIGH

GENERAL DRAWING FOR BRIDGE ON NC 304 OVER GALE CREEK BETWEEN SR 1224 & NC 33

33'-10" CLEAR ROADWAY - 90° SKEW

NORTH CAROLINA PROFESSIONAL SEAL 19661 ENGINEER L. KEVIN AUSTIN 6/7/09

PLANS PREPARED BY:
MULKEY
ENGINEERS & CONSULTANTS
PO Box 33127
RALEIGH, N.C. 27636
(919) 851-1912
(919) 851-1918 (FAX)
WWW.MULKEYINC.COM

REVISIONS						SHEET NO.
NO.	BY:	DATE:	NO.	BY:	DATE:	114
1			3			TOTAL SHEETS
2			4			185

DRAWN BY : W. B. ALLEN DATE : 3/05
CHECKED BY : L. K. AUSTIN DATE : 3/09

6/5/2009 11:54:51 AM R:\Structures\B5129E_SD_00.dgn

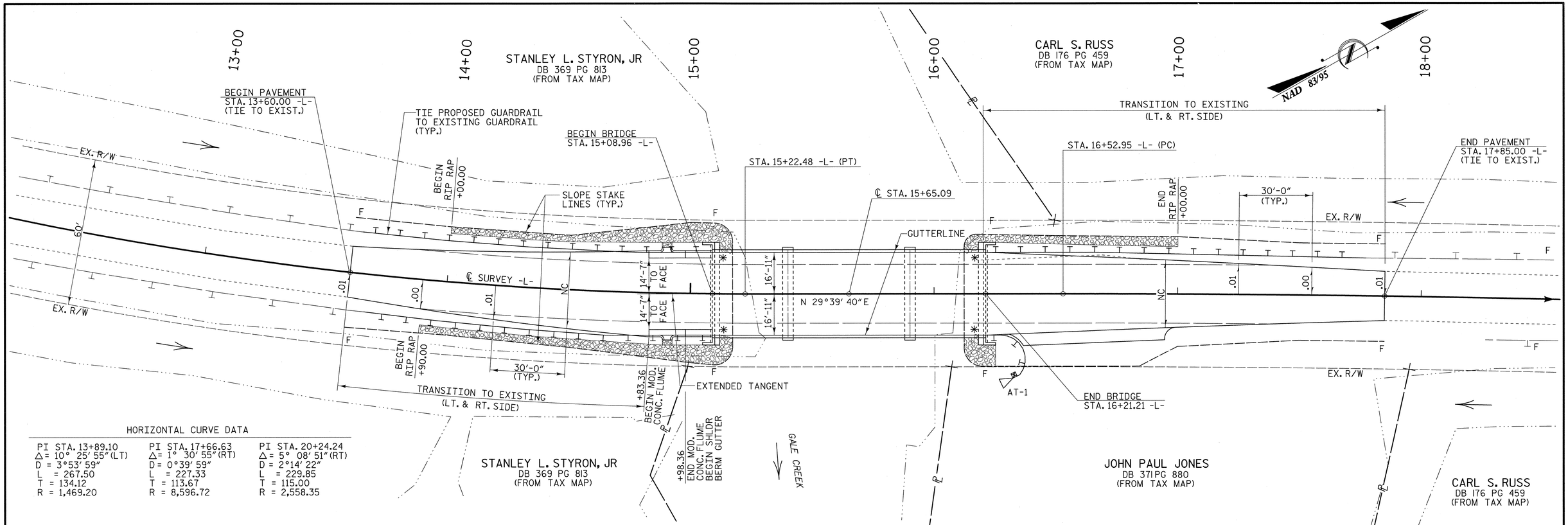

HORIZONTAL CURVE DATA

PI STA. 13+89.10	PI STA. 17+66.63	PI STA. 20+24.24
△= 10° 25' 55" (LT)	△= 1° 30' 55" (RT)	△= 5° 08' 51" (RT)
D = 3°53' 59"	D = 0°39' 59"	D = 2°14' 22"
L = 267.50	L = 227.33	L = 229.85
T = 134.12	T = 113.67	T = 115.00
R = 1,469.20	R = 8,596.72	R = 2,558.35

PAVEMENT LAYOUT DETAIL

SCALE : 1" = 20'

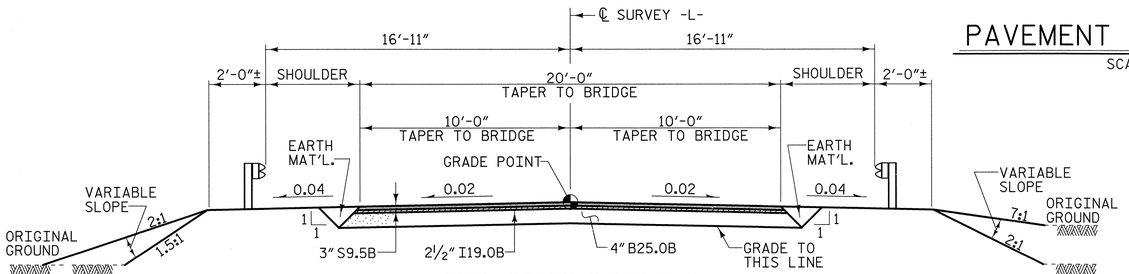

FULL DEPTH PAVEMENT

FROM -L- STA. 14+50 TO BEGIN BRIDGE
FROM END BRIDGE TO -L- STA. 17+50

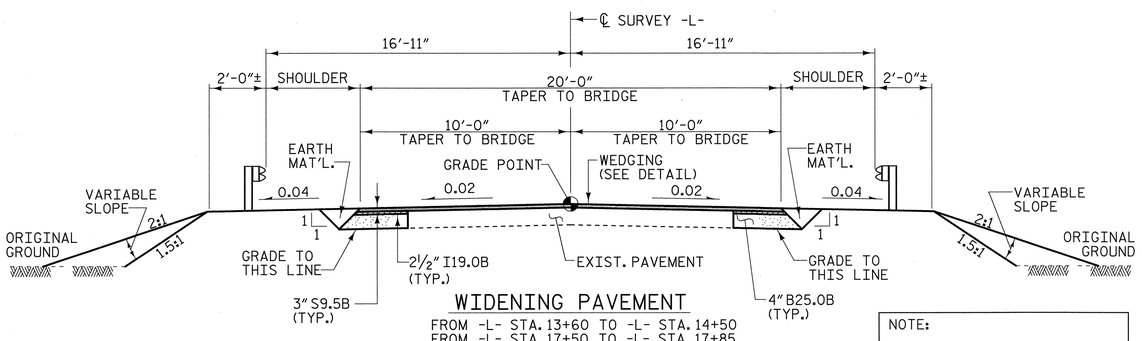

WIDENING PAVEMENT

FROM -L- STA. 13+60 TO -L- STA. 14+50
FROM -L- STA. 17+50 TO -L- STA. 17+85

TYPICAL ROADWAY SECTION

WITHIN CONSTRUCTION LIMITS

NOTE:

FOR FILL IN WATER
SEE ROCK EMBANKMENT DETAIL
SHEET 2-A

DATUM DESCRIPTION

THE LOCALIZED COORDINATE SYSTEM DEVELOPED FOR THIS PROJECT IS BASED ON THE STATE PLANE COORDINATES ESTABLISHED BY OTHERS FOR MONUMENT "MA2006B-1" WITH NAD 1983/95 STATE PLANE GRID COORDINATES OF NORTHING: 543740.225(ft) EASTING: 2712800.699(ft) THE AVERAGE COMBINED GRID FACTOR USED ON THIS PROJECT (GROUND TO GRID) IS: 0.99987861 THE N.C. LAMBERT GRID BEARING AND LOCALIZED HORIZONTAL GROUND DISTANCE FROM "MA2006B-1" TO -L- STATION 15+22.48 IS N 38°55'51" E 538.32' ALL LINEAR DIMENSIONS ARE LOCALIZED HORIZONTAL DISTANCES VERTICAL DATUM USED IS NAVD 88

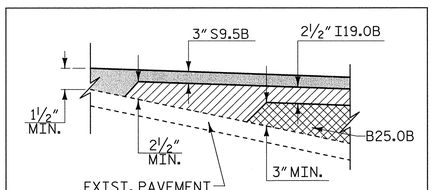

WEDGING DETAIL

THE QUANTITY OF RIP RAP TO BE PAID FOR WILL BE THE ACTUAL NUMBER OF TONS OF EACH CLASS OF RIP RAP WHICH HAS BEEN INCORPORATED INTO THE COMPLETED AND ACCEPTED WORK. THE RIP RAP WILL BE MEASURED BY BEING WEIGHED IN TRUCKS ON CERTIFIED PLATFORM SCALES OR OTHER CERTIFIED WEIGHING DEVICES. THE QUANTITY OF RIP RAP WILL BE PAID FOR AT THE CONTRACT UNIT PRICE PER TON:

RIP RAP CLASS II (2'-0'' THICK)

END BENT No. 1	165 TONS
END BENT No. 2	80 TONS
TOTAL	245 TONS

FILTER FABRIC

END BENT No. 1	185 SQ. YARDS
END BENT No. 2	90 SQ. YARDS
TOTAL	275 SQ. YARDS

PROJECT NO. 42287

PAMLICO COUNTY

STATION: 15+65.09 -L-

REPLACES BRIDGE NO. 42

NORTH CAROLINA PROFESSIONAL SEAL 19661 ENGINEER L. KEVIN AUSTIN 8/6/09

PLANS PREPARED BY:

MULKEY ENGINEERS & CONSULTANTS
PO Box 33127
RALEIGH, N.C. 27636
(919) 851-1912
(919) 851-1918 (FAX)
WWW.MULKEYINC.COM

STATE OF NORTH CAROLINA
DEPARTMENT OF TRANSPORTATION
RALEIGH

ROADWAY DETAILS

33'-10" CLEAR ROADWAY - 90° SKEW

REVISIONS						SHEET NO.
NO.	BY:	DATE:	NO.	BY:	DATE:	115
1			3			TOTAL SHEETS
2			4			185

DRAWN BY : W. B. ALLEN DATE : 3/05
CHECKED BY : L. K. AUSTIN DATE : 2/09

8/6/2009 10:53:33 AM G:\project\2004\2204_Pamlico\42\Structures\B5929E_SD_02.dgn

8/23/99

0 2.5 5	PROJ. REFERENCE NO.	SHEET NO.
	B-5129 (BRIDGE #42)	116

70 60 50 40 30 20 10 0 10 20 30 40 50 60 70

15 10 5 0 -5

EXIST. R/W

0.020 4.700 0.020

1.5:1

3.39

EOP EOP

S.S. 1.56

14+50.00

S.S. 1.01

EXIST. R/W

EXIST. R/W

0.020 3.948 0.003

2:1

3.29

EOP EOP

1.5:1

S.S. 1.42

14+00.00

S.S. 0.84

EXIST. R/W

BEGIN PAVEMENT
-L- STA. 13+60.00

3.37

EOP EOP

13+50.00

-L-

6/5/2009
R:\Structures\B5129E_xpl.dgn
11:51:49 AM

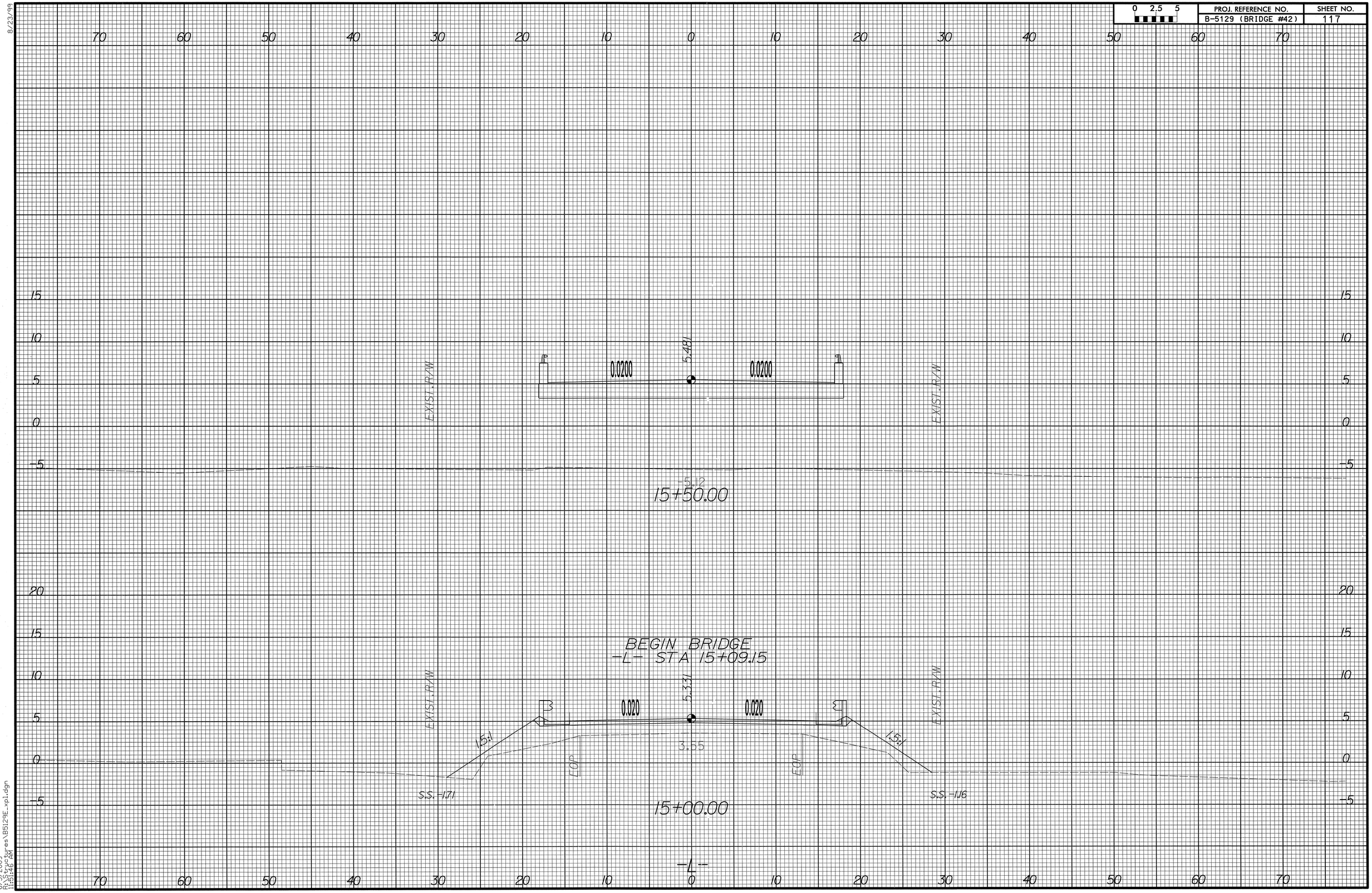

8/23/99

6/5/2009
R:\Structures\B5129E_xp1.dgn
11:51:46 AM

8/23/99

0 2.5 5	PROJ. REFERENCE NO.	SHEET NO.
	B-5129 (BRIDGE #42)	118

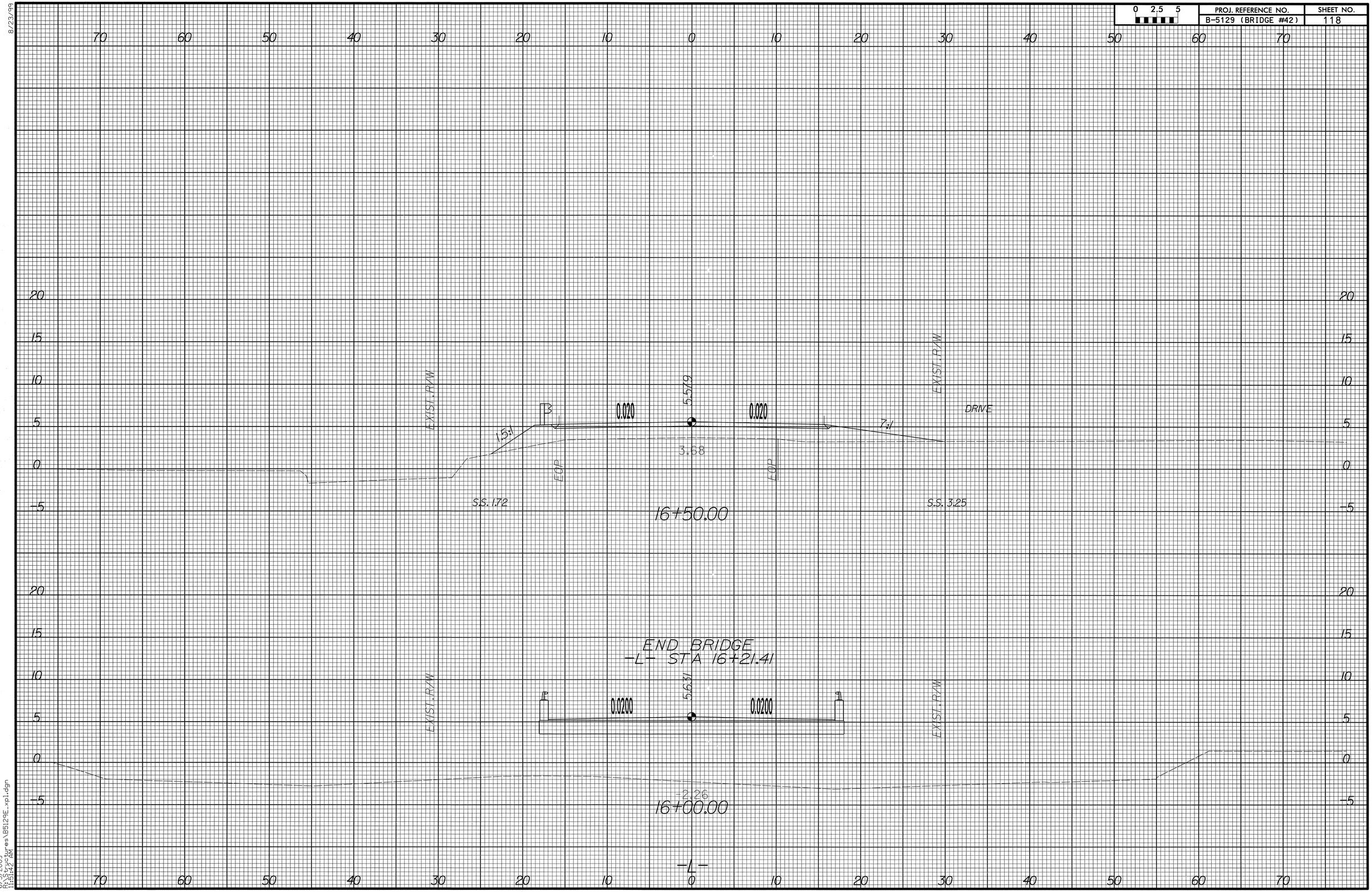

6/5/2009
R:\Structures\B5129E_xp1.dgn
11:51:42 AM

0 2.5 5	PROJ. REFERENCE NO.	SHEET NO.
	B-5129 (BRIDGE #42)	119

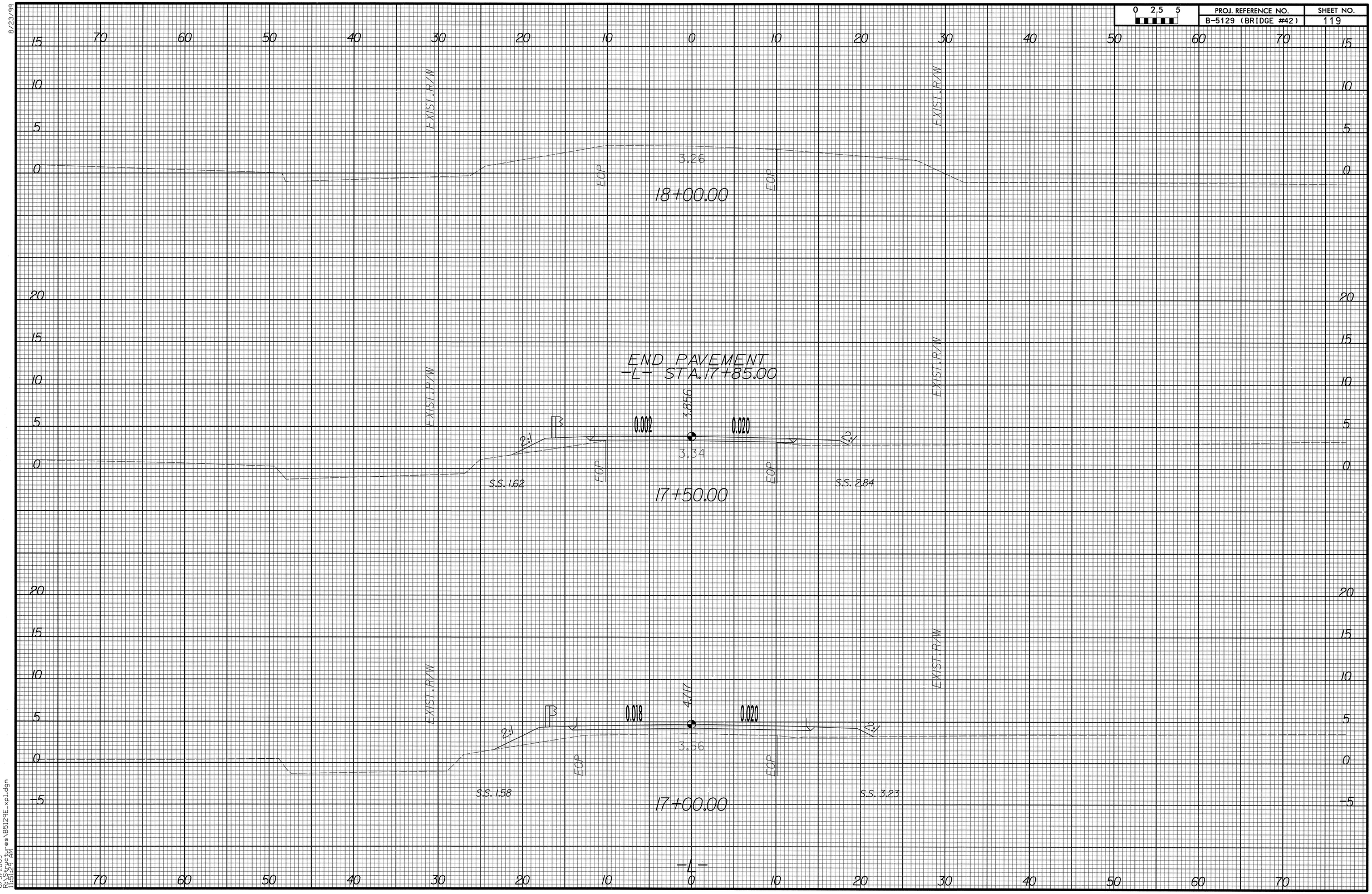

8/23/99

6/5/2009
R:\Structures\B5129E_xpl.dgn
11:51:29 AM

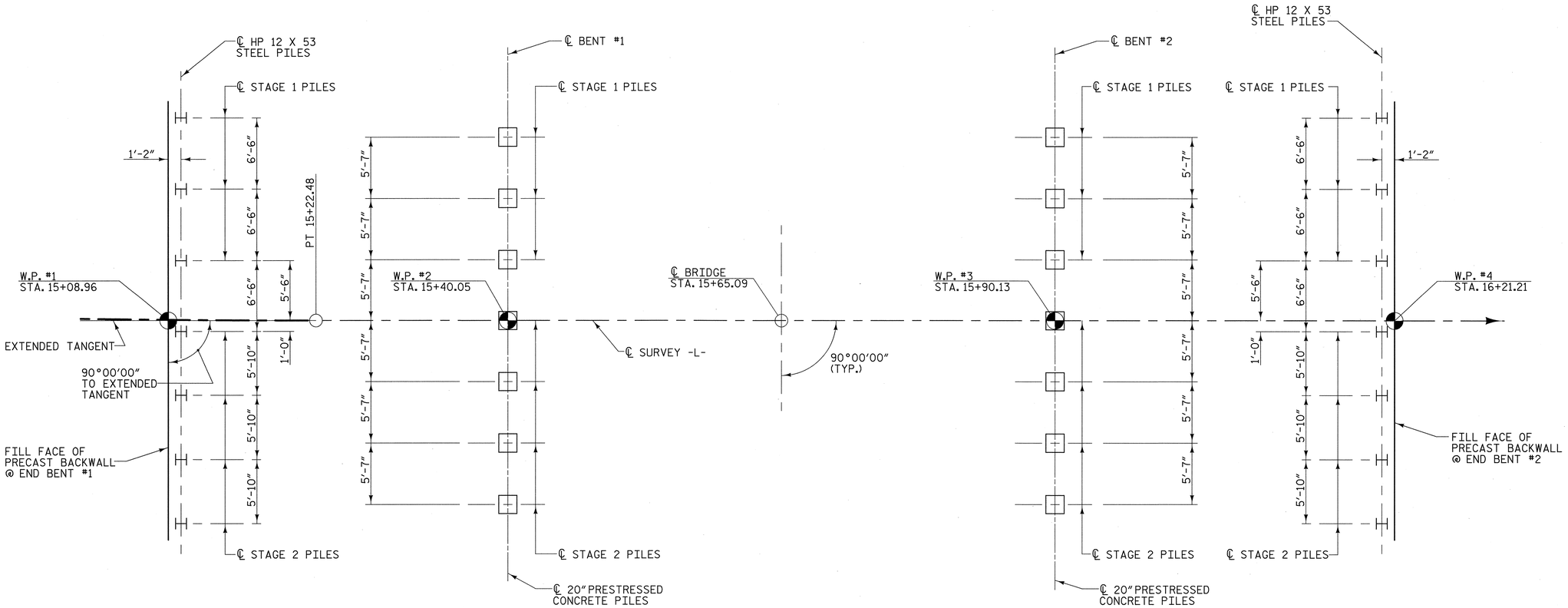

END BENT #1 | BENT #1 | BENT #2 | END BENT #2

FOUNDATION LAYOUT

(DIMENSIONS LOCATING PILES ARE TO THE CENTERLINE OF THE PILE AT THE BOTTOM OF THE CAP)

NOTES (CONTINUED FROM "GENERAL DRAWING")

ALL BAR SUPPORTS USED IN THE PRECAST PIECES AND ALL INCIDENTAL REINFORCING STEEL SHALL BE EPOXY COATED IN ACCORDANCE WITH THE STANDARD SPECIFICATIONS.

THE CONCRETE IN THE PRECAST PIECES AND ALL PILES SHALL CONTAIN SILICA FUME. SILICA FUME SHALL BE SUBSTITUTED FOR 5% OF THE PORTLAND CEMENT BY WEIGHT. IF THE OPTION OF ARTICLE 1024-1 OF THE STANDARD SPECIFICATIONS TO PARTIALLY SUBSTITUTE CLASS F FLY ASH FOR PORTLAND CEMENT IS EXERCISED. THEN THE RATE OF FLY ASH SUBSTITUTION SHALL BE REDUCED TO 1.0 LB. OF FLY ASH PER 1.0 LB. OF CEMENT. NO PAYMENT WILL BE MADE FOR THIS SUBSTITUTION AS IT IS CONSIDERED INCIDENTAL TO THE VARIOUS PAY ITEMS.

PRESTRESSED CONCRETE CORED SLAB UNITS AND 20" PRESTRESSED CONCRETE PILES SHALL CONTAIN CALCIUM NITRITE CORROSION INHIBITOR IN ACCORDANCE WITH THE STANDARD SPECIFICATIONS.

THE CONTRACTOR SHALL SUBMIT WORKING DRAWINGS FOR ALL PRECAST PIECES. FOR SUBMITTAL OF WORKING DRAWINGS, SEE SPECIAL PROVISIONS.

FOR FALSEWORK AND FORMWORK, SEE SPECIAL PROVISIONS.

THIS BRIDGE SHALL BE CONSTRUCTED USING TOP-DOWN CONSTRUCTION METHODS. THE USE OF TEMPORARY CAUSEWAY OR WORK BRIDGE IS NOT PERMITTED.

FOR CRANE SAFETY, SEE SPECIAL PROVISIONS.

NOTES (FOR FOUNDATION LAYOUT)

PILES FOR END BENT NO. 1 AND 2 SHALL BE DRIVEN TO A MINIMUM BEARING CAPACITY OF 90 TONS EACH. THE BEARING CAPACITY IS EQUAL TO THE ALLOWABLE BEARING CAPACITY WITH A MINIMUM FACTOR OF SAFETY OF TWO.

THE ALLOWABLE BEARING CAPACITY FOR PILES AT END BENT NO. 1 AND 2 IS 45 TONS PER PILE.

DRIVE PILES AT BENTS NO. 1 AND 2 TO A REQUIRED BEARING CAPACITY OF 120 TONS PER PILE. THE REQUIRED BEARING CAPACITY IS EQUAL TO THE ALLOWABLE BEARING CAPACITY WITH A MINIMUM FACTOR OF SAFETY OF TWO.

THE ALLOWABLE BEARING CAPACITY FOR PILES AT BENTS NO. 1 AND 2 IS 60 TONS PER PILE.

DRIVE PILES AT BENTS NO. 1 AND 2 TO A TIP ELEVATION OF NO HIGHER THAN -50 FEET.

TESTING THE FIRST PRODUCTION PILE WITH THE PILE DRIVING ANALYZER (PDA) DURING DRIVING, RESTRIKING OR REDRIVING IS REQUIRED AT BENTS NO. 1 AND 2. SEE PILE DRIVING ANALYZER SPECIAL PROVISION.

GALVANIZED STEEL PILES ARE REQUIRED IN ACCORDANCE WITH SECTION 450 OF THE STANDARD SPECIFICATIONS.

NORTH CAROLINA PROFESSIONAL ENGINEER SEAL 19661 L. KEVIN AUSTIN 6/7/09

PLANS PREPARED BY:

MULKEY
ENGINEERS & CONSULTANTS
PO Box 33127
Raleigh, N.C. 27636
(919) 851-1912
(919) 851-1918 (FAX)
WWW.MULKEYINC.COM

PROJECT NO. 42287

PAMLICO COUNTY

STATION: 15+65.09 -L-

REPLACES BRIDGE NO. 42

STATE OF NORTH CAROLINA
DEPARTMENT OF TRANSPORTATION
RALEIGH

FOUNDATION LAYOUT

33'-10" CLEAR ROADWAY - 90° SKEW

REVISIONS						SHEET NO.
NO.	BY:	DATE:	NO.	BY:	DATE:	120
1			3			TOTAL SHEETS
2			4			185

DRAWN BY : W. B. ALLEN DATE : 3/09
CHECKED BY : L. K. AUSTIN DATE : 3/09

6/5/2009 8:47:07 AM R:\Structures\B5629E\SD_FL_04.dgn

SUPERSTRUCTURE SUMMARY

	30' EXTERIOR CORED SLAB	30' INTERIOR CORED SLAB (W/ 12" VOIDS)	30' INTERIOR CORED SLAB (W/ 8" VOIDS)	50' EXTERIOR CORED SLAB	50' INTERIOR CORED SLAB (W/ 12" VOIDS)	50' INTERIOR CORED SLAB (W/ 8" VOIDS)	TYPE I ELASTOMERIC BEARING PAD	CAST-IN-PLACE CONCRETE PARAPET	ONE BAR METAL RAIL
	EACH	EACH	EACH	EACH	EACH	EACH	EACH	LIN. FT.	LIN. FT.
SUPERSTRUCTURE									
SPAN A	2	9	1				24		
SPAN B				2	9	1	24		
SPAN C	2	9	1				24		
TOTAL	4	18	2	2	9	1	72	224.33	205.33

SUBSTRUCTURE SUMMARY

	PIECE EB142	PIECE EB242	PIECE EB342	PIECE EB442	PIECE BW1	PIECE BW2	PIECE WW1	PIECE WF1	PIECE B142	PIECE B242	HP 12 X 53 GALVANIZED STEEL PILES		20" PRESTRESSED CONCRETE PILE	
	EACH	EACH	EACH	EACH	EACH	EACH	EACH	EACH	EACH	EACH	EA.	LIN.FT.	EA.	LIN.FT.
SUBSTRUCTURE														
END BENT #1	1	1			2	2	2	2			7	525.0		
BENT #1									1	1			7	560.0
BENT #2									1	1			7	560.0
END BENT #2			1	1	2	2	2	2			7	525.0		
TOTAL	1	1	1	1	4	4	4	4	2	2	14	1050.0	14	1120.0

PROJECT NO. 42287

PAMLICO COUNTY

STATION: 15+65.09 -L-

REPLACES BRIDGE NO. 42

STATE OF NORTH CAROLINA
DEPARTMENT OF TRANSPORTATION
RALEIGH

SUPERSTRUCTURE & SUBSTRUCTURE SUMMARY

33'-10" CLEAR ROADWAY - 90°SKEW

NORTH CAROLINA PROFESSIONAL SEAL 19661 ENGINEER L. KEVIN AUSTIN 6/7/09

PLANS PREPARED BY:

MULKEY
ENGINEERS & CONSULTANTS
PO Box 33127
RALEIGH, N.C. 27636
(919) 851-1912
(919) 851-1918 (FAX)
WWW.MULKEYINC.COM

REVISIONS					
NO.	BY:	DATE:	NO.	BY:	DATE:
1			3		
2			4		

SHEET NO. 121

TOTAL SHEETS 185

DRAWN BY : W. B. ALLEN DATE : 3/09
CHECKED BY : L. K. AUSTIN DATE : 3/09

6/5/2009 10:46:36 AM R:\Structures\B529E_SD_SUM_0.dgn

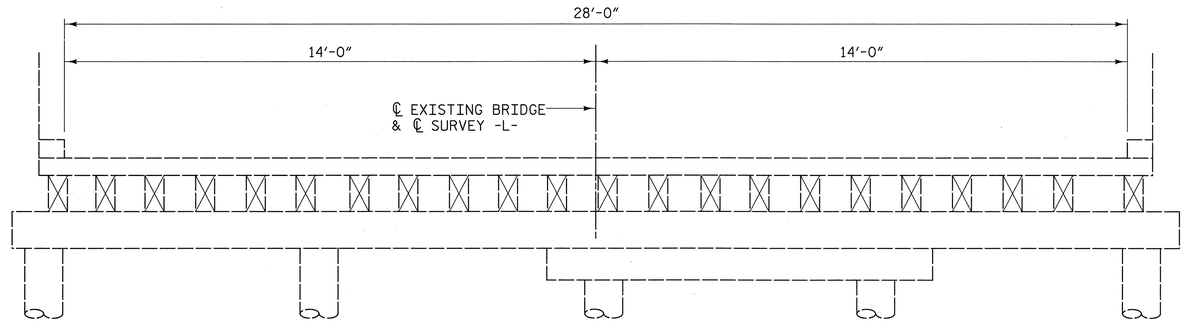

EXISTING BRIDGE

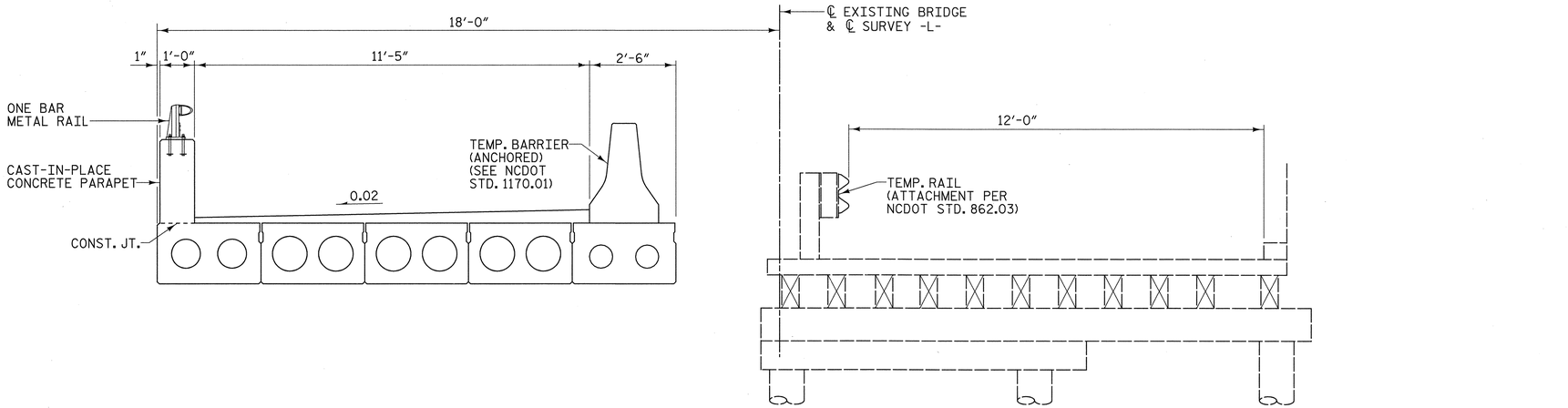

STAGE 1 CONSTRUCTION

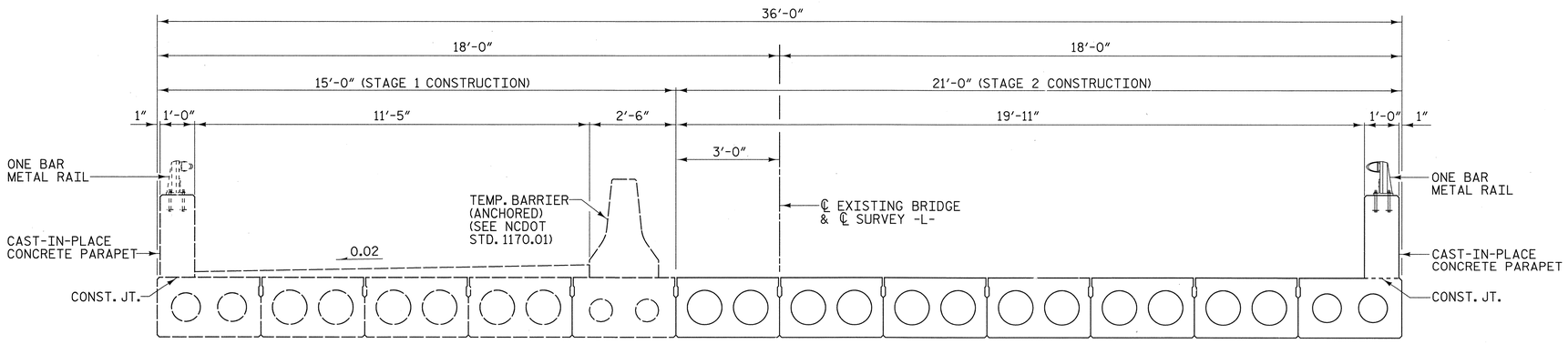

STAGE 2 CONSTRUCTION

NORTH CAROLINA PROFESSIONAL ENGINEER SEAL 19661 R. KEVIN AUSTIN 6/7/09

PLANS PREPARED BY:

MULKEY
ENGINEERS & CONSULTANTS
PO BOX 32127
RALEIGH, N.D. 27636
(919) 851-1912
(919) 851-1918 (FAX)
WWW.MULKEYINC.COM

PROJECT NO. 42287

PAMLICO COUNTY

STATION: 15+65.09 -L-

REPLACES BRIDGE NO. 42

STATE OF NORTH CAROLINA
DEPARTMENT OF TRANSPORTATION
RALEIGH

CONSTRUCTION STAGING

33′-10″ CLEAR ROADWAY - 90°SKEW

REVISIONS						SHEET NO.
NO.	BY:	DATE:	NO.	BY:	DATE:	122
1			3			TOTAL SHEETS
2			4			185

DRAWN BY : W. B. ALLEN DATE : 4/05
CHECKED BY : L. K. AUSTIN DATE : 2/09

6/5/2009 11:45:57 AM R:\Structures\B5029E_SD_PC_OLD.DGN

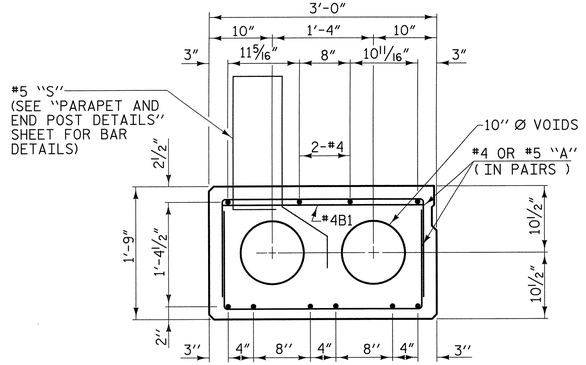

30' SPAN

8 - 0.6" Ø H.S. STRANDS
EXTERIOR SLAB SECTIONS
(CORED SLAB UNIT #1 & #12)

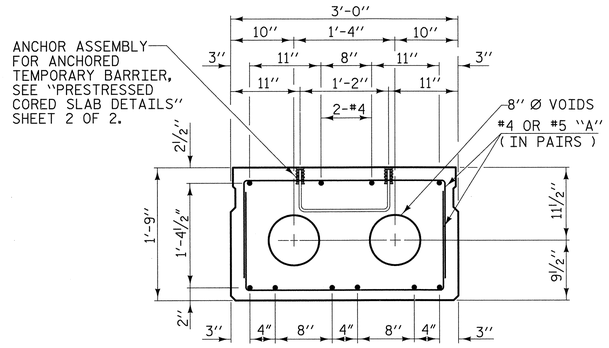

30' SPAN

8 - 0.6" Ø H.S. STRANDS
INTERIOR SLAB SECTION
(CORED SLAB UNIT #5)

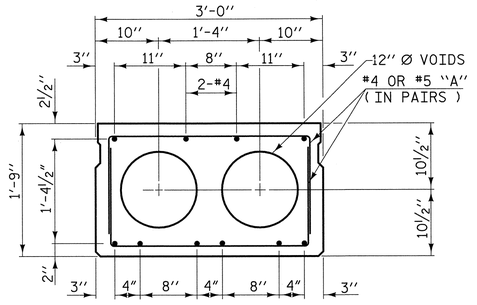

30' SPAN

8 - 0.6" Ø H.S. STRANDS
INTERIOR SLAB SECTIONS
(CORED SLAB UNITS #2 THRU #4 &
CORED SLAB UNITS #6 THRU #11)

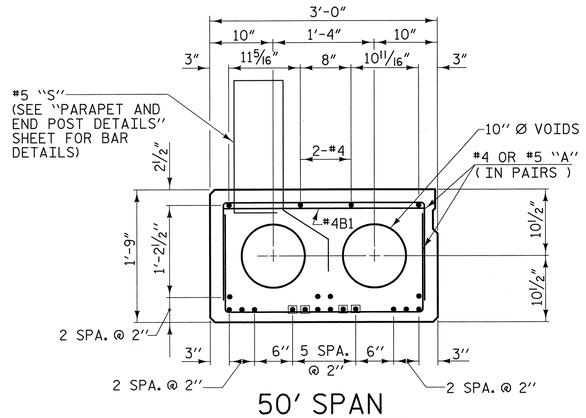

50' SPAN

18 - 0.6" Ø H.S. STRANDS
EXTERIOR SLAB SECTIONS
(CORED SLAB UNIT #1 & #12)

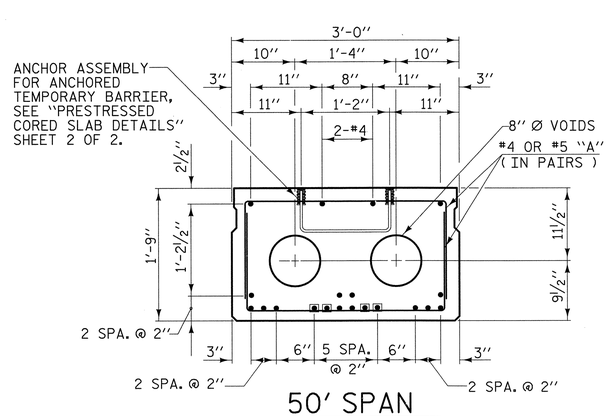

50' SPAN

18 - 0.6" Ø H.S. STRANDS
INTERIOR SLAB SECTION
(CORED SLAB UNIT #5)

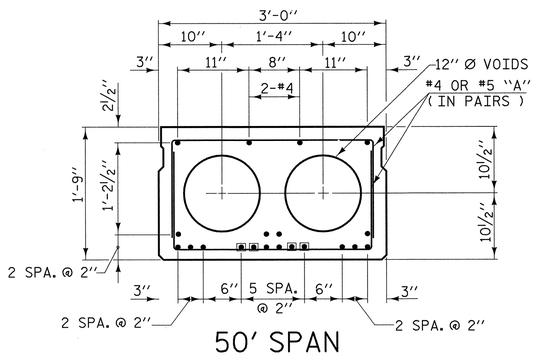

50' SPAN

18 - 0.6" Ø H.S. STRANDS
INTERIOR SLAB SECTIONS
(CORED SLAB UNITS #2 THRU #4 &
CORED SLAB UNITS #6 THRU #11)

▣ DENOTES SHEATHED STRAND
(SEE SHEATH CHART)

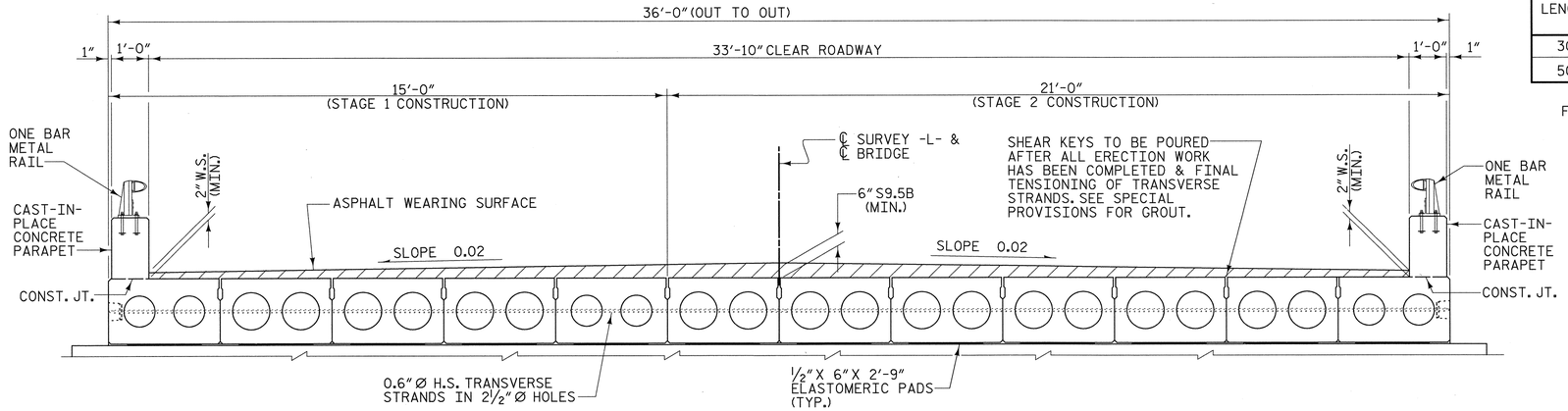

TYPICAL SECTION

SHEATH CHART		
SPAN LENGTH	NUMBER OF SHEATHED STRANDS PER EXTERIOR SLAB SECTIONS	NUMBER OF SHEATHED STRANDS PER INTERIOR SLAB SECTIONS
30'	0	0
50'	4	4

BOND SHALL BE BROKEN ON THESE STRANDS FOR A DISTANCE OF 4'-0" FROM END OF SLAB

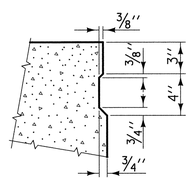

SHEAR KEY DETAIL

NOTE: OMIT SHEAR KEY ON OUTSIDE OF EXTERIOR CORED SLAB

GENERAL NOTES

ASSUMED LIVE LOAD = HS 25 OR ALTERNATE LOADING.

CONCRETE = f'c - 5000psi (MIN. COMP. STRENGTH @ 28 DAYS).

f'ci - 4000psi (MIN. COMP. STRENGTH @ TRANSFER OF STRESSING FORCE).

ALL PRESTRESSING STRANDS SHALL BE 7-WIRE LOW RELAXATION GRADE HIGH STRENGTH CABLES IN ACCORDANCE WITH THE STANDARD SPECIFICATIONS.

SIZE	TYPE	AREA	ULTIMATE STR.	APPLIED FORCE
0.6" Ø	HIGH STR.	0.217 SQ. IN. PER CABLE	58,600 LBS.	43,950 LBS. PER CABLE

STRUCTURAL STEEL ITEMS SHALL BE OF A GRADE CONFORMING TO EITHER ASTM A36 OR A373, EXCEPT HIGH STRENGTH BOLTS. HIGH STRENGTH BOLTS SHALL BE ASTM A325. ALL STRUCTURAL STEEL SHALL BE GALVANIZED AS PER THE SPECIFICATION.

ALL MATERIAL AND WORKMANSHIP SHALL COMPLY WITH THE APPLICABLE REQUIREMEMNTS OF THE STANDARD SPECIFICATIONS FOR ROADS AND STRUCTURES OF THE NC DEPARTMENT OF TRANSPORTATION DATED JULY 2006 AND WITH THE SPECIAL PROVISIONS.

ALL PRESTRESSING STRANDS SHALL BE 7-WIRE LOW RELAXATION GRADE 270 STRANDS AND SHALL CONFORM TO AASHTO M203 EXCEPT FOR SAMPLING REQUIREMENTS WHICH SHALL BE IN ACCORDANCE WITH THE STANDARD SPECIFICATIONS.

ALL REINFORCING STEEL CAST WITH THE CORED SLAB SECTIONS SHALL BE GRADE 60 AND SHALL BE INCLUDED IN THE UNIT PRICE BID FOR PRESTRESSED CONCRETE CORED SLABS.

RECESSES FOR TRANSVERSE STRANDS SHALL BE GROUTED AFTER THE TENSIONING OF THE STRANDS.

WHEN CORED SLABS ARE CAST, A POSITIVE HOLD-DOWN SYSTEM SHALL BE EMPLOYED TO PREVENT VOIDS FROM RISING OR MOVING SIDEWAYS. THIS SYSTEM SHALL BE DESIGNED TO BE LEFT IN PLACE UNTIL THE CONCRETE HAS REACHED RELEASE STRENGTH. AT LEAST THREE WEEKS PRIOR TO CASTING CORED SLABS, THE CONTRACTOR SHALL SUBMIT TO THE ENGINEER FOR REVIEW AND COMMENT, DETAILED DRAWINGS OF THE PROPOSED HOLD-DOWN SYSTEM. IN ADDITION TO STRUCTURAL DETAILS, LOCATION AND SPACING OF THE HOLD-DOWNS SHALL BE INDICATED.

WHEN A CONCRETE WEARING SURFACE IS DETAILED ON THE CORED SLAB BRIDGE TYPICAL SECTION, THE TOP SURFACE OF THE CORED SLAB UNITS SHALL HAVE A 3/8" RAKED FINISH.

PRESTRESSING STRANDS SHALL BE CUT FLUSH WITH THE CORED SLAB UNIT ENDS.

APPLY EPOXY PROTECTIVE COATING TO CORED SLAB UNIT ENDS.

UNLESS OTHERWISE NOTED ON THE PLANS, ALL EXPOSED CORNERS ON STRUCTURES SHALL BE CHAMFERED 3/4".

FOR DEFLECTION TABLE, SEE "PRESTRESSED CORED SLAB DETAILS" SHEET 1 OF 2.

PROJECT NO. 42287

PAMLICO COUNTY

STATION: 15+65.09 -L-

REPLACES BRIDGE NO. 42

STATE OF NORTH CAROLINA
DEPARTMENT OF TRANSPORTATION
RALEIGH
STANDARD

PRESTRESSED CORED SLAB 30' & 50' SPANS

33'-10" CLEAR ROADWAY - 90°SKEW

REVISIONS						SHEET NO.
NO.	BY:	DATE:	NO.	BY:	DATE:	123
1			3			TOTAL SHEETS
2			4			185

NORTH CAROLINA PROFESSIONAL SEAL 19661 ENGINEER L. KEVIN AUSTIN 8/6/09

PLANS PREPARED BY:

MULKEY
ENGINEERS & CONSULTANTS
PO BOX 33127
RALEIGH, N.C. 27636
(919) 851-1912
(919) 851-1918 (FAX)
WWW.MULKEYINC.COM

DRAWN BY : W. B. ALLEN DATE : 4/05
CHECKED BY : L. K. AUSTIN DATE : 2/09

8/6/2009 6:07:07 AM G:\project\2004\224JL Pamlico42\Structures\B5296_SD_TS_01.dgn

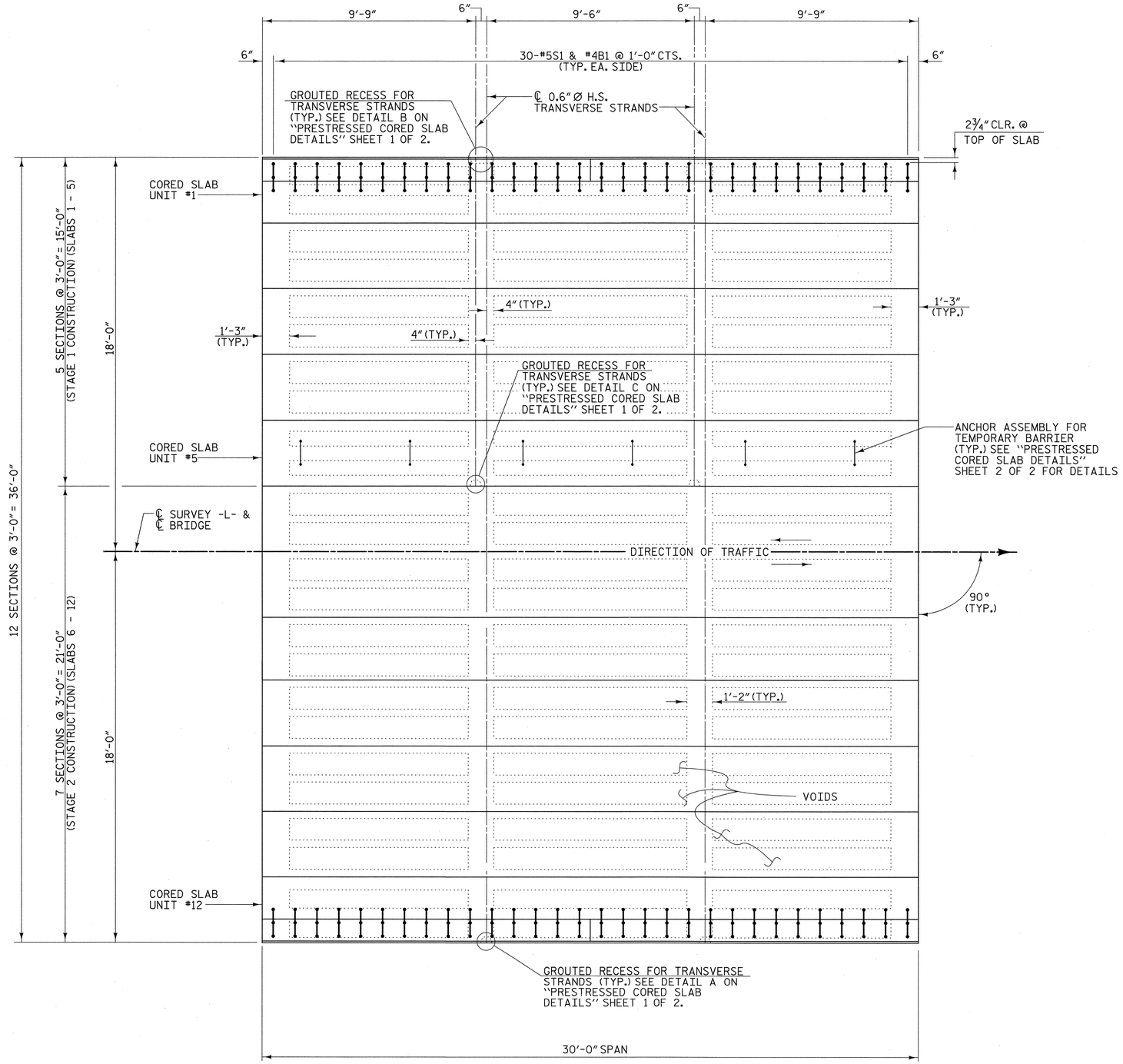

PLAN OF SPAN

NOTE:

SEE "PARAPET & END POST DETAILS" SHEET FOR "S" BAR MARKS.

FIXED END

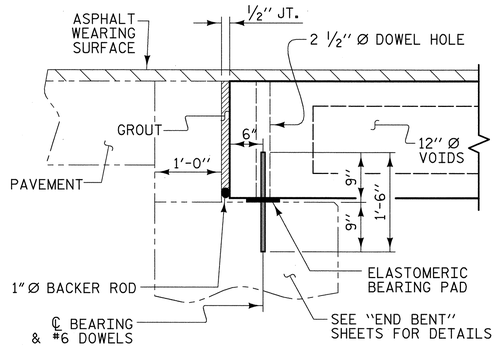

SECTION AT END BENT

FIXED END FIXED END

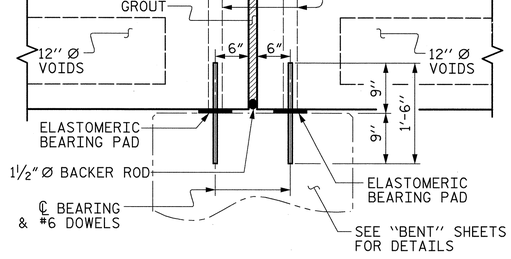

SECTION AT BENT

PROJECT NO. 42287

PAMLICO COUNTY

STATION: 15+65.09 -L-

REPLACES BRIDGE NO. 42

STATE OF NORTH CAROLINA
DEPARTMENT OF TRANSPORTATION
RALEIGH

STANDARD

PRESTRESSED CORED SLAB 30' SPAN

33'-10" CLEAR ROADWAY - 90° SKEW

NORTH CAROLINA PROFESSIONAL ENGINEER SEAL 19661 L. KEVIN AUSTIN 6/7/09

PLANS PREPARED BY:

MULKEY
ENGINEERS & CONSULTANTS
PO Box 33127
Raleigh, N.C. 27636
(919) 851-1912 (FAX)
WWW.MULKEYINC.COM

REVISIONS					
NO.	BY:	DATE:	NO.	BY:	DATE:
1			3		
2			4		

SHEET NO. 124

TOTAL SHEETS 185

DRAWN BY : W. B. ALLEN DATE : 4/05
CHECKED BY : L. K. AUSTIN DATE : 2/09

6/5/2009 11:43:44 AM R:\Structures\B5295E_SD_CS_0.dgn

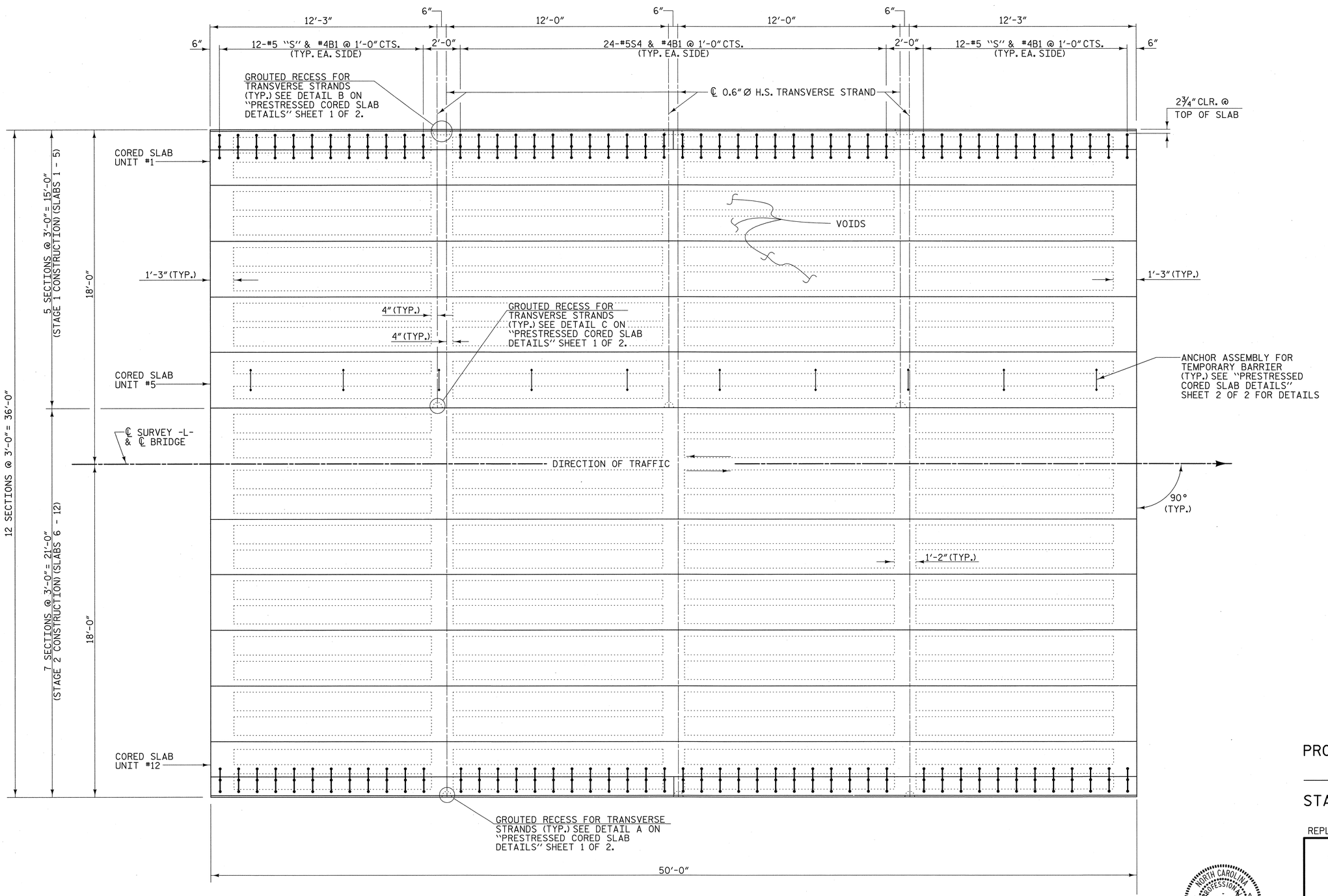

PLAN OF SPAN

NOTE:

SEE "PARAPET & END POST DETAILS" SHEET FOR "S" BAR MARKS.

PROJECT NO. 42287

PAMLICO COUNTY

STATION: 15+65.09 -L-

REPLACES BRIDGE NO. 42

STATE OF NORTH CAROLINA
DEPARTMENT OF TRANSPORTATION
RALEIGH

STANDARD

PRESTRESSED CORED SLAB 50' SPAN

33'-10" CLEAR ROADWAY - 90° SKEW

NORTH CAROLINA PROFESSIONAL ENGINEER SEAL 19661 L. KEVIN AUSTIN 6/7/09

PLANS PREPARED BY:

MULKEY ENGINEERS & CONSULTANTS
PO Box 33127
RALEIGH, N.C. 27636
(919) 851-1912
(919) 851-1910 (FAX)
WWW.MULKEYINC.COM

REVISIONS						SHEET NO.
NO.	BY:	DATE:	NO.	BY:	DATE:	125
1			3			TOTAL SHEETS
2			4			185

DRAWN BY : W. B. ALLEN DATE : 4/05
CHECKED BY : L. K. AUSTIN DATE : 2/09

6/5/2009 1:42:58 AM R:\Structures\B928E_SD_CS_02.dgn

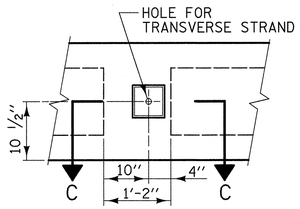

ELEVATION

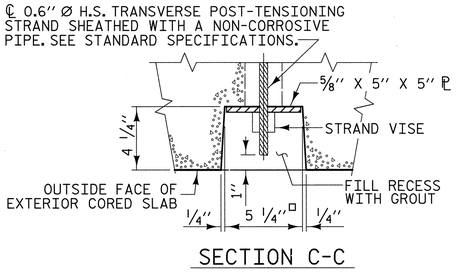

SECTION C-C

DETAIL A
GROUTED RECESS AT END OF POST-TENSIONED STRAND CORED SLAB

(CORED SLAB UNIT #12)

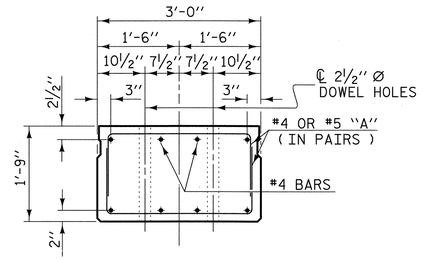

SLAB END ELEVATION

THE 2½" Ø DOWEL HOLES AT FIXED ENDS OF SLAB SECTIONS SHALL BE FILLED WITH NON-SHRINK GROUT. SEE SPECIAL PROVISIONS.

EXTERIOR SLAB UNIT	30'	50'
CAMBER (SLAB UNIT ALONE IN PLACE)	5/16" (UP)	2 7/16" (UP)
DEFLECTION (SUPERIMPOSED DEAD LOAD)	* 1/16" (DOWN)	* 5/16" (DOWN)
FINAL DEFLECTION	1/4" (UP)	2 1/8" (UP)
* INCLUDES FUTURE WEARING SURFACE		

INTERIOR SLAB UNIT	30'	50'
CAMBER (SLAB UNIT ALONE IN PLACE)	5/16" (UP)	2 11/16" (UP)
DEFLECTION (SUPERIMPOSED DEAD LOAD)	* 1/16" (DOWN)	* 5/16" (DOWN)
FINAL DEFLECTION	1/4" (UP)	2 3/8" (UP)
* INCLUDES FUTURE WEARING SURFACE		

NOTES

CONCRETE CHAMFERS:
UNLESS OTHERWISE NOTED ON THE PLANS, ALL EXPOSED CORNERS ON STRUCTURES SHALL BE CHAMFERED ¾" WITH THE FOLLOWING EXCEPTIONS: TOP CORNERS OF CURBS MAY BE ROUNDED TO 1½" RADIUS WHICH IS BUILT INTO CURB FORMS; CORNERS OF TRANSVERSE FLOOR EXPANSION JOINTS SHALL BE ROUNDED WITH A ¼" FINISHING TOOL UNLESS OTHERWISE REQUIRED ON PLANS; AND CORNERS OF EXPANSION JOINTS IN THE ROADWAY FACES AND TOPS OF CURBS AND SIDEWALKS SHALL BE ROUNDED TO A ¼" RADIUS WITH A FINISHING STONE OR TOOL UNLESS OTHERWISE ON PLANS.

DECK DRAINS ARE NOT PERMITTED.

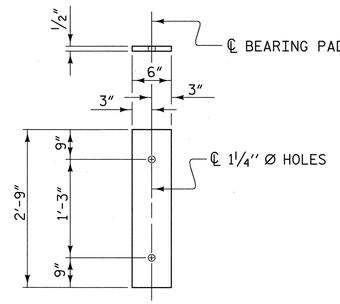

FIXED
(TYPE I - 72 REQ'D)

ELASTOMERIC BEARING DETAILS

NOTE: ELASTOMER HARDNESS SHALL BE 60 DUROMETERS.

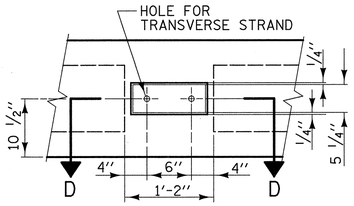

ELEVATION

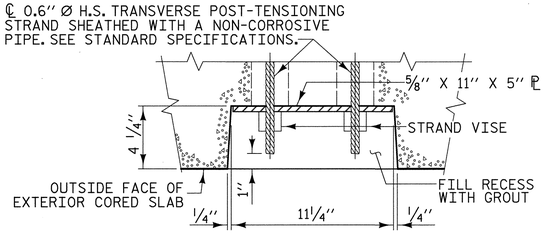

SECTION D-D

DETAIL B
GROUTED RECESS AT END OF POST-TENSIONED STRAND CORED SLAB

(CORED SLAB UNIT #1)

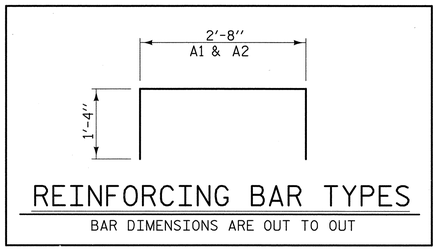

REINFORCING BAR TYPES

BAR DIMENSIONS ARE OUT TO OUT

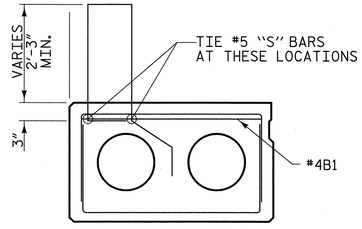

TIE LOCATION FOR #5 "S"

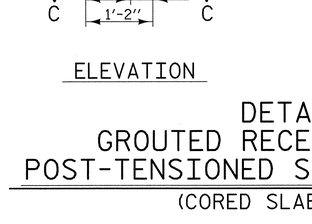

ELEVATION

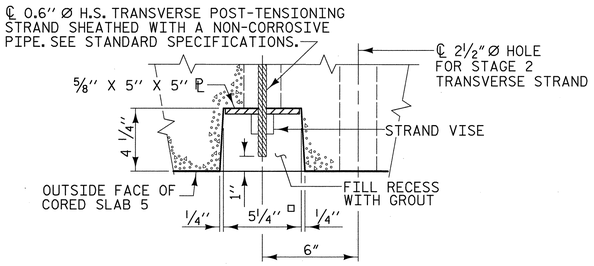

SECTION E-E

DETAIL C
GROUTED RECESS AT END OF POST-TENSIONED STRAND CORED SLAB

(CORED SLAB UNIT #5)

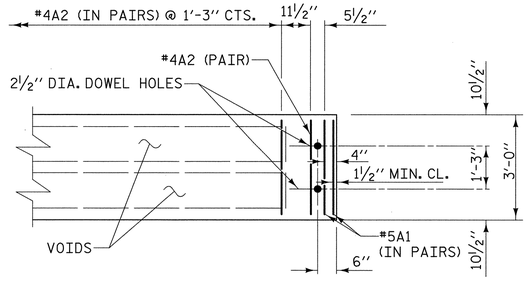

PART PLAN - SLAB SECTION

PROJECT NO. 42287

PAMLICO COUNTY

STATION: 15+65.09 -L-

REPLACES BRIDGE NO. 42 SHEET 1 OF 2

STATE OF NORTH CAROLINA
DEPARTMENT OF TRANSPORTATION
RALEIGH

PRESTRESSED CORED SLAB DETAILS

33'-10" CLEAR ROADWAY - 90° SKEW

REVISIONS						SHEET NO.
NO.	BY:	DATE:	NO.	BY:	DATE:	126
1			3			TOTAL SHEETS
2			4			185

NORTH CAROLINA PROFESSIONAL ENGINEER SEAL 19661 L. KEVIN AUSTIN 6/7/09

PLANS PREPARED BY:

MULKEY
ENGINEERS & CONSULTANTS
PO Box 33127
Raleigh, NC 27636
(919) 851-1918
(919) 851-1918 (FAX)
WWW.MULKEYINC.COM

DRAWN BY : W. B. ALLEN DATE : 3/05
CHECKED BY : L. K. AUSTIN DATE : 2/09

6/5/2009 11:42:17 AM R:\Structures\BS28E_SD_CS_03.dgn

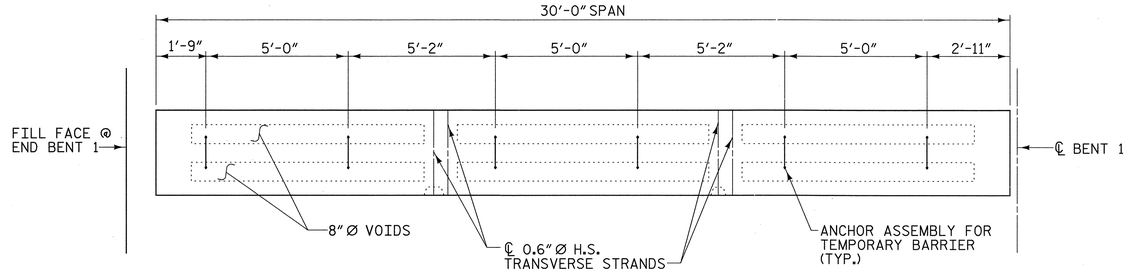

SPAN A

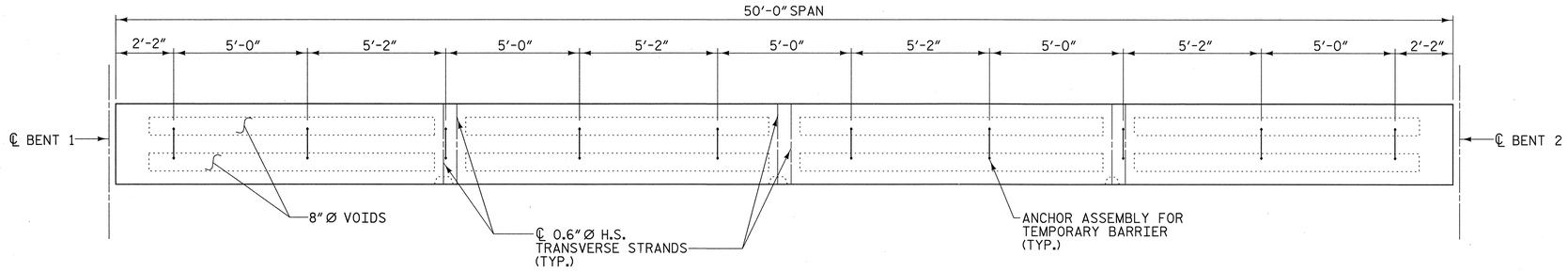

SPAN B

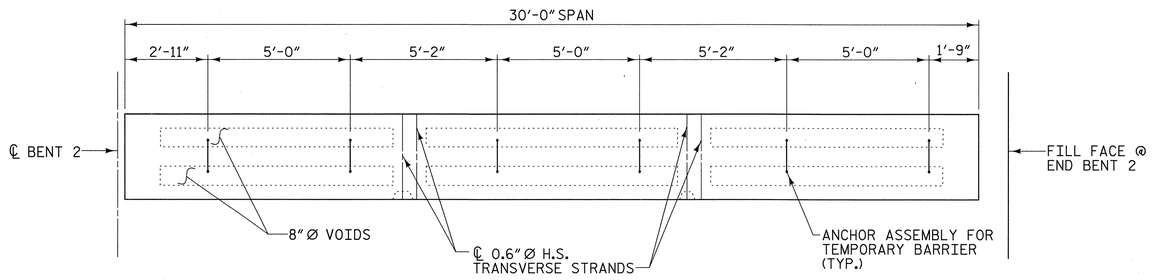

SPAN C

ANCHOR ASSEMBLY LAYOUT FOR CORED SLAB UNIT #5

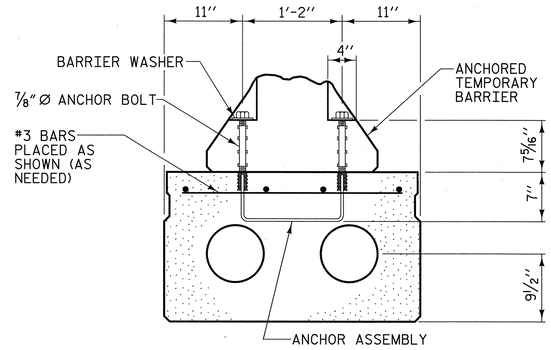

CORED SLAB UNIT #5

(SHOWING PLACEMENT OF ANCHOR ASSEMBLY)

THE #3 BARS ARE INCIDENTAL AND THEIR COST SHALL BE INCLUDED IN THE PRICE BID FOR THE PRESTRESSED CONCRETE CORED SLAB.

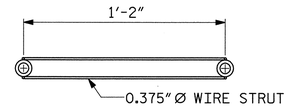

PLAN

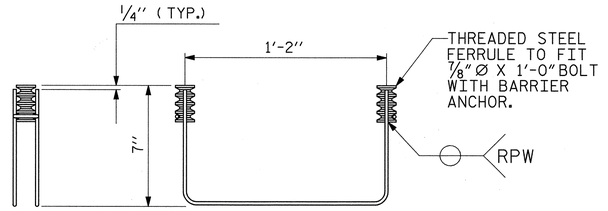

SIDE VIEW ELEVATION

MINIMUM LENGTH OF THREADS IN INSERT (FERRULE): 2 1/2''

ANCHOR ASSEMBLY FOR TEMPORARY BARRIER

(22 ASSEMBLIES REQUIRED)

NOTES

THE ANCHOR ASSEMBLY FOR TEMPORARY BARRIER SHALL CONSIST OF THE FOLLOWING COMPONENTS :

A. FERRULES SHALL BE MADE FROM STEEL MEETING THE REQUIREMENTS OF AASHTO M169, GRADE 12L14 AND SHALL HAVE A MINIMUM LENGTH OF THREADS OF 2 1/2".

B. 2 - 7/8'' Ø X 1'-0'' ANCHOR BOLTS SHALL CONFORM TO THE REQUIREMENTS OF ASTM A307. ANCHOR BOLTS SHALL BE GALVANIZED. (AT THE CONTRACTOR'S OPTION, STAINLESS STEEL BOLTS AND WASHERS MAY BE USED AS AN ALTERNATE FOR THE 7/8'' Ø X 1'-0'' GALVANIZED ANCHOR BOLTS. THEY SHALL CONFORM TO OR EXCEED THE MECHANICAL REQUIREMENTS OF ASTM A307. THE USE OF THIS ALTERNATE SHALL BE APPROVED BY THE ENGINEER.)

C. WIRE STRUT SHOWN IN THE ANCHOR ASSEMBLY DETAIL ARE MINIMUM ALLOWABLE SIZE AND SHALL HAVE A MINIMUM TENSILE STRENGTH OF 100,000 PSI.

ANCHOR ASSEMBLY WITH BOLTS SHALL BE ASSEMBLED IN THE SHOP. BOLT THREADS MAY BE RECUT AS NECESSARY TO INSURE FIT.

THE COST OF THE ANCHOR ASSEMBLY COMPLETE IN PLACE, SHALL BE INCLUDED, IN THE UNIT CONTRACT PRICE BID FOR CONSTRUCTION OF SUPERSTRUCTURE, SEE SPECIAL PROVISIONS.

FERRULES TO BE PLUGGED DURING CASTING OF THE CORED SLAB UNITS AS RECOMMENDED BY THE MANUFACTURER.

AT THE CONTRACTOR'S OPTION, FERRULES WITH OPEN OR CLOSED ENDS MAY BE USED.

FOR 4" X 3 1/4" X 1/2" BARRIER WASHER TO BE USED WITH ANCHOR ASSEMBLY, SEE NCDOT ROADWAY STD. 1170.01.

PAYMENT FOR ANCHORED TEMPORARY BARRIER AND BARRIER WASHER ARE INCLUDED IN TRAFFIC CONTROL PAY ITEM, SEE SPECIAL PROVISIONS.

NORTH CAROLINA PROFESSIONAL ENGINEER SEAL 19661 ENGINEER KEVIN AUSTIN 6/7/09

PLANS PREPARED BY:

MULKEY
ENGINEERS & CONSULTANTS
PO Box 33127
RALEIGH, N.C. 27636
(919) 851-1813
(919) 851-1815 (FAX)
WWW.MULKEYINC.COM

DRAWN BY : W. B. ALLEN DATE : 2/09
CHECKED BY : L. K. AUSTIN DATE : 2/09

PROJECT NO. 42287

PAMLICO COUNTY

STATION: 15+65.09 -L-

REPLACES BRIDGE NO. 42 SHEET 2 OF 2

STATE OF NORTH CAROLINA
DEPARTMENT OF TRANSPORTATION
RALEIGH

PRESTRESSED CORED SLAB DETAILS

33'-10" CLEAR ROADWAY - 90° SKEW

REVISIONS						SHEET NO.
NO.	BY:	DATE:	NO.	BY:	DATE:	127
1			3			TOTAL SHEETS
2			4			185

6/5/2009 11:41:27 AM R:\Structures\B5629E_SD_CS_04.dgn

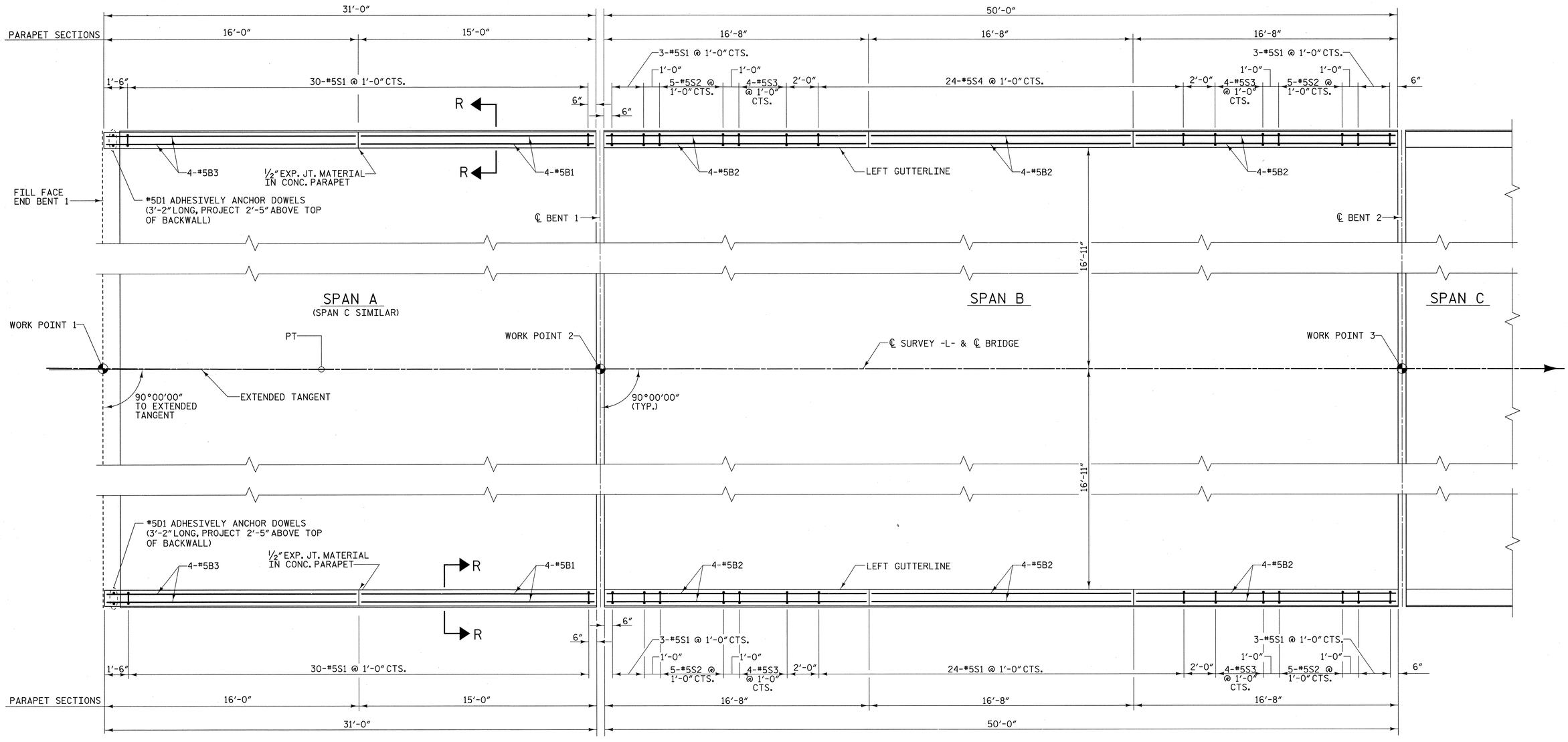

PLAN

NOTE: DISTANCES ARE ALONG OUTSIDE FACE OF PARAPET.

FOR END POST DETAILS AND SECTION R-R SEE "PARAPET AND END POST DETAILS" SHEET.

PROJECT NO. 42287

PAMLICO COUNTY

STATION: 15+65.09 -L-

REPLACES BRIDGE NO. 42

STATE OF NORTH CAROLINA
DEPARTMENT OF TRANSPORTATION
RALEIGH

PLAN OF PARAPET

33'-10" CLEAR ROADWAY - 90° SKEW

NORTH CAROLINA PROFESSIONAL SEAL 19661 ENGINEER L. KEVIN AUSTIN 6/7/09

PLANS PREPARED BY:

MULKEY
ENGINEERS & CONSULTANTS
PO Box 33127
RALEIGH, N.C. 27636
(919) 851-1912
(919) 851-1918 (FAX)
WWW.MULKEYINC.COM

REVISIONS						SHEET NO.
NO.	BY:	DATE:	NO.	BY:	DATE:	128
1			3			TOTAL SHEETS
2			4			185

DRAWN BY : W. B. ALLEN DATE : 2/09
CHECKED BY : L. K. AUSTIN DATE : 2/09

6/5/2009 11:40:21 AM R:\Structures\B8296_SD_PR_01.dgn

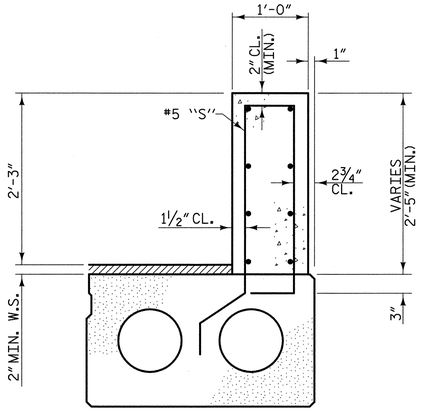

SECTION R-R

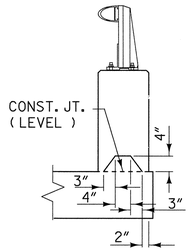

SECTION S-S

AT DAM IN OPEN JOINT
(THIS IS TO BE USED ONLY WHEN SLIP FORM IS USED)

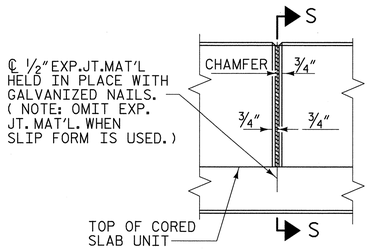

ELEVATION AT EXPANSION JOINTS

NOTES

ALL REINFORCING STEEL IN THE PARAPET AND END POSTS SHALL BE EPOXY COATED.

#5 "S" BARS MAY BE SHIFTED SLIGHTLY AS NECESSARY TO AVOID INTERFERENCE WITH THE ONE BAR METAL RAIL POST ANCHORAGE ASSEMBLIES.

THE #5D1 DOWELS SHALL BE INSTALLED USING AN ADHESIVE ANCHORING SYSTEM. FOR ADHESIVELY ANCHORED DOWELS, SEE SPECIAL PROVISIONS. THE YIELD LOAD OF THE #5D1 BARS IS 18.6 KIPS. FIELD TESTING OF THE ADHESIVE BONDING SYSTEM IS NOT REQUIRED.

FOR DETAILS OF CONCRETE INSERT AND GUARDRAIL ANCHOR ASSEMBLY, SEE "RAIL POST SPACINGS AND END OF RAIL DETAILS" AND "GUARDRAIL ANCHORAGE" SHEETS.

BILL OF MATERIAL FOR PARAPET & END POSTS

BAR	NO.	SIZE	TYPE	LENGTH	WEIGHT
✳B1	32	#5	STR	14'-7"	487
✳B2	48	#5	STR	16'-3"	814
✳B3	32	#5	STR	15'-7"	520
✳D1	8	#5	STR	3'-2"	26
✳E1	8	#7	STR	2'-11"	48
✳E2	8	#7	STR	3'-1"	50
✳E3	8	#7	STR	3'-3"	53
✳E4	8	#7	STR	3'-5"	56
✳E5	16	#7	STR	3'-6"	114
✳F1	8	#6	2	4'-4"	52
✳F2	8	#6	STR	4'-5"	53
✳S1	132	#5	1	7'-7"	1044
✳S2	20	#5	1	7'-6"	156
✳S3	16	#5	1	7'-5"	124
✳S4	48	#5	1	7'-4"	367

✳EPOXY COATED REINFORCING STEEL LBS. =	3964
CLASS AA CONCRETE CU. YDS. =	21.8
CONCRETE PARAPET L.F. =	224'-4"

BAR TYPE

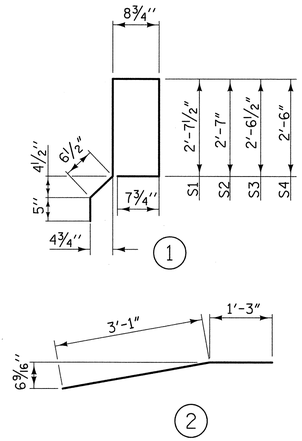

ALL BAR DIMENSIONS ARE OUT TO OUT

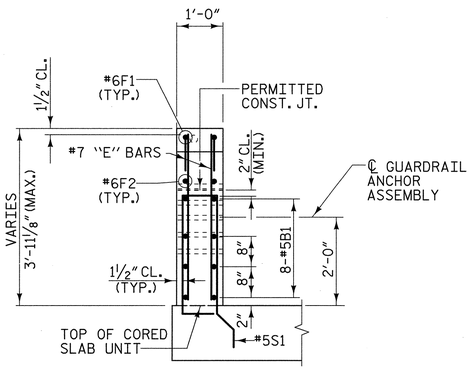

END VIEW

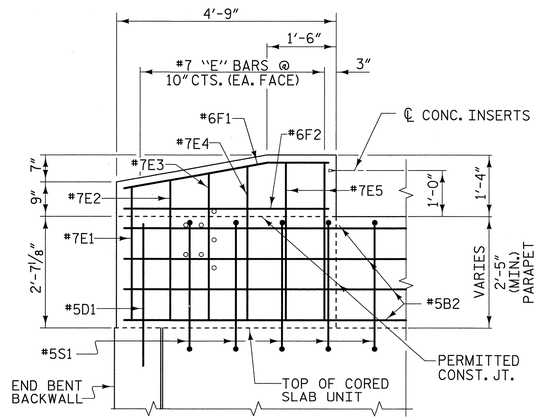

ELEVATION

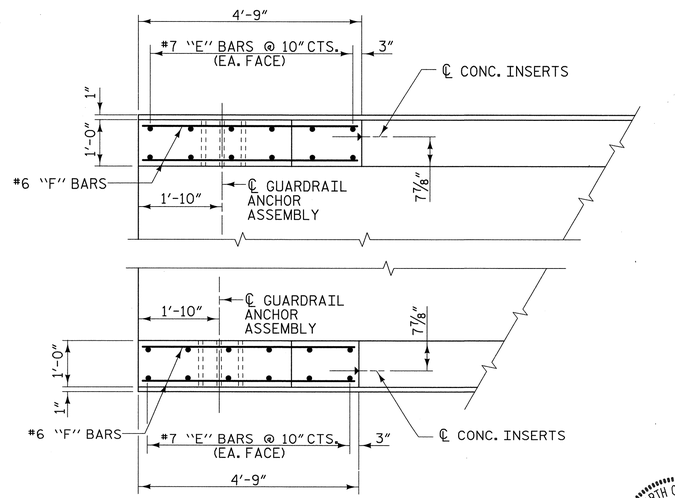

PLAN OF END POSTS

PARAPET AND END POST DETAILS

PROJECT NO. 42287

PAMLICO COUNTY

STATION: 15+65.09 -L-

REPLACES BRIDGE NO. 42

STATE OF NORTH CAROLINA
DEPARTMENT OF TRANSPORTATION
RALEIGH

PARAPET AND END POST DETAILS

33'-10" CLEAR ROADWAY - 90° SKEW

NORTH CAROLINA PROFESSIONAL SEAL 19661 ENGINEER L. KEVIN AUSTIN 6/7/09

PLANS PREPARED BY:

MULKEY
ENGINEERS & CONSULTANTS
PO Box 33127
Raleigh, NC 27636
(919) 851-1912
(919) 851-1918 (FAX)
www.mulkeyinc.com

REVISIONS						SHEET NO.
NO.	BY:	DATE:	NO.	BY:	DATE:	129
1			3			TOTAL SHEETS
2			4			185

DRAWN BY : W. B. ALLEN DATE : 2/09
CHECKED BY : L. K. AUSTIN DATE : 2/09

6/5/2009 11:39:36 AM R:\Structures\B5829E_SD_PR_02.dgn

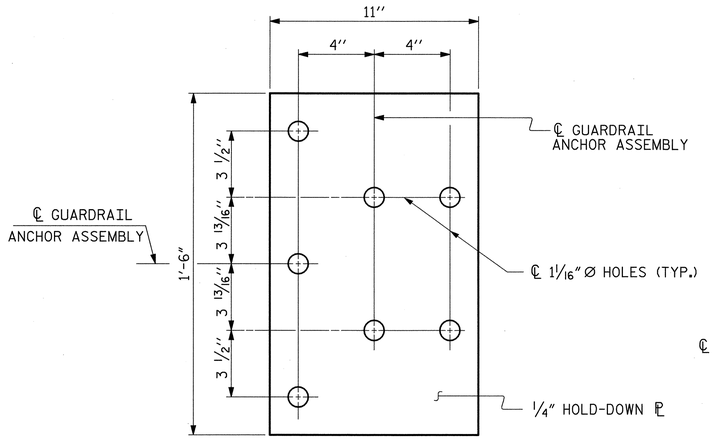

PLAN

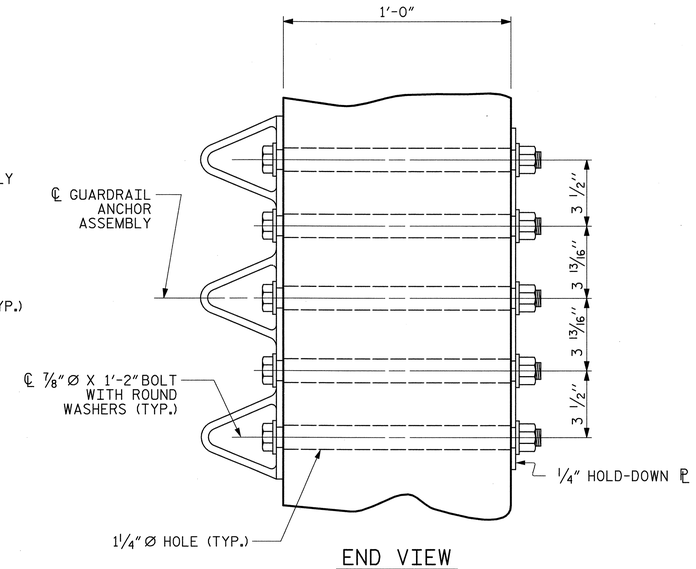

END VIEW

GUARDRAIL ANCHOR ASSEMBLY DETAILS

NOTES

THE GUARDRAIL ANCHOR ASSEMBLY SHALL CONSIST OF A 1/4'' HOLD DOWN PLATE AND 7 - 7/8'' Ø BOLTS WITH NUTS AND WASHERS.

THE HOLD-DOWN PLATE SHALL CONFORM TO AASHTO M270 GRADE 36. AFTER FABRICATION, THE HOLD-DOWN PLATE SHALL BE HOT-DIP GALVANIZED IN ACCORDANCE WITH AASHTO M111.

BOLTS SHALL CONFORM TO THE REQUIREMENTS OF ASTM A307 AND NUTS SHALL CONFORM TO THE REQUIREMENTS OF AASHTO M291. BOLTS, NUTS AND WASHERS SHALL BE GALVANIZED. AT THE CONTRACTOR'S OPTION, STAINLESS STEEL BOLTS, NUTS AND WASHERS MAY BE USED AS AN ALTERNATE FOR THE 7/8'' Ø GALVANIZED BOLTS, NUTS AND WASHERS. THEY SHALL CONFORM TO OR EXCEED THE MECHANICAL REQUIREMENTS OF ASTM A307. THE USE OF THIS ALTERNATE SHALL BE APPROVED BY THE ENGINEER.

AFTER INSTALLATION, THE EXPOSED THREAD OF THE BOLT SHALL BE BURRED WITH A SHARP POINTED TOOL.

THE COST OF THE GUARDRAIL ANCHOR ASSEMBLIES WITH BOLTS, NUTS AND WASHERS COMPLETE IN PLACE, SHALL BE INCLUDED IN THE VARIOUS PAY ITEMS.

THE VERTICAL REINFORCING BARS MAY BE SHIFTED SLIGHTLY IN THE END POST TO CLEAR ASSEMBLY BOLTS.

THE 1 1/4'' Ø HOLES SHALL BE FORMED OR DRILLED WITH A CORE BIT. IMPACT TOOLS WILL NOT BE PERMITTED. ANY CONCRETE DAMAGED BY THIS WORK SHALL BE REPAIRED TO THE SATISFACTION OF THE ENGINEER.

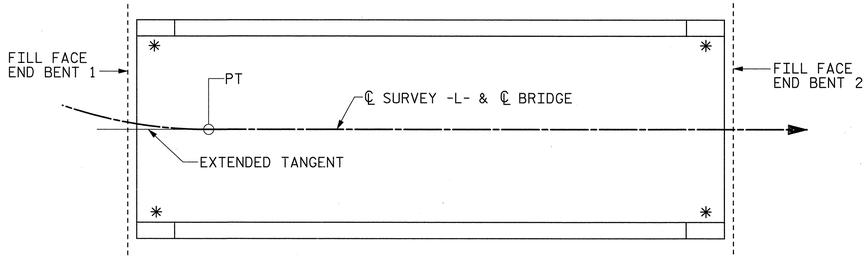

SKETCH SHOWING POINTS OF ATTACHMENT

* LOCATION OF GUARDRAIL ATTACHMENT

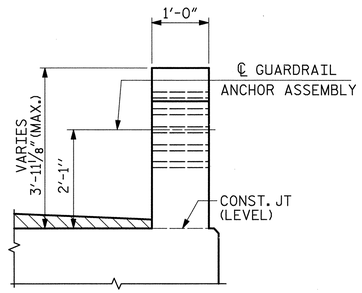

END VIEW
(ONE BAR METAL RAIL)

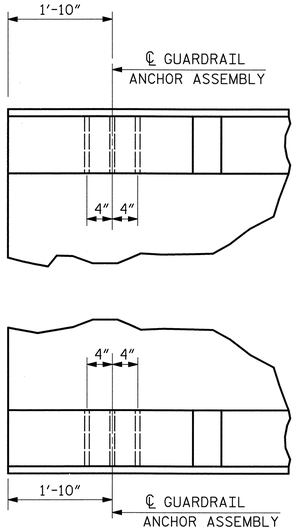

PLAN

LOCATION OF GUARDRAIL ANCHOR AT END POST

ASSEMBLED BY : W. B. ALLEN	DATE : 2/09		
CHECKED BY : L. K. AUSTIN	DATE : 2/09		
DRAWN BY : EEM 6/94	REV. 10/17/00	RWW/LES	
CHECKED BY : RGW 6/94	REV. 5/7/03	RWW/JTE	
	REV. 5/1/06	TLA/GM	

PLANS PREPARED BY:
MULKEY
ENGINEERS & CONSULTANTS
PO Box 33127
Raleigh, N.C. 27636
(919) 851-1912
(919) 851-1918 (FAX)
WWW.MULKEYINC.COM

THIS STANDARD DRAWING REVIEWED & ADOPTED FOR USE AT THE REFERENCED LOCATION BY THE UNDERSIGNED:

NORTH CAROLINA PROFESSIONAL ENGINEER SEAL 19661 L. KEVIN AUSTIN
6/7/09

PROJECT NO. 42287
PAMLICO COUNTY
STATION: 15+65.09 -L-
REPLACES BRIDGE NO. 42

STATE OF NORTH CAROLINA
DEPARTMENT OF TRANSPORTATION
RALEIGH
STANDARD
GUARDRAIL ANCHORAGE DETAILS FOR METAL RAILS

REVISIONS						SHEET NO.
NO.	BY:	DATE:	NO.	BY:	DATE:	130
1			3			TOTAL SHEETS
2			4			185

STD. NO. BMR8

6/5/2009 12:59:57 PM R:\Structures\B5929E_SD_GR_DL.dgn

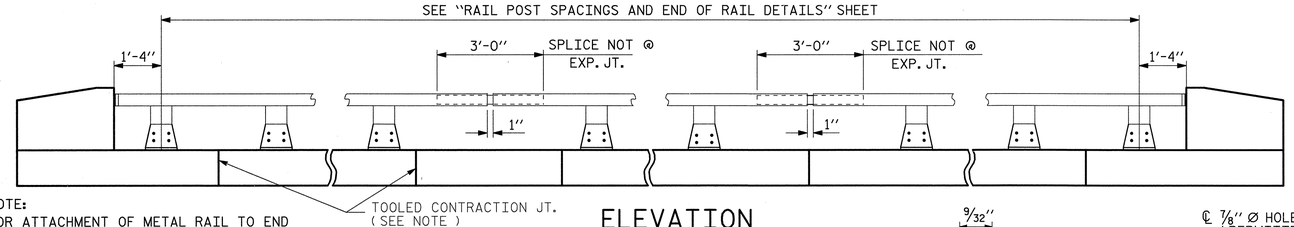

NOTE:
FOR ATTACHMENT OF METAL RAIL TO END POST, SEE STANDARD NO. BMR2.

ELEVATION

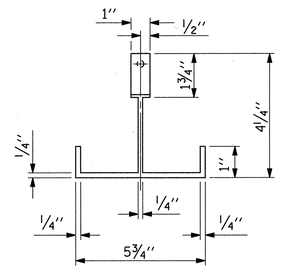

PLAN

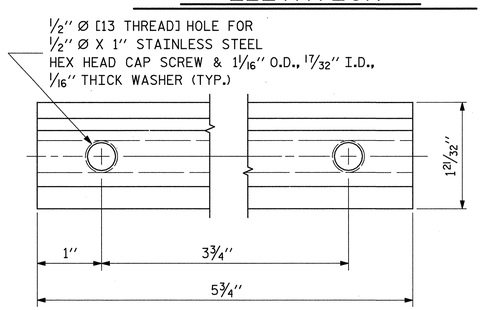

CLAMP BAR DETAIL

(2 REQUIRED PER POST)

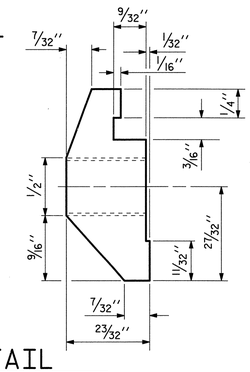

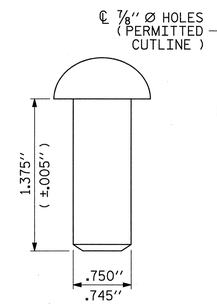

RIVET DETAIL

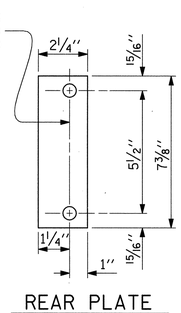

REAR PLATE

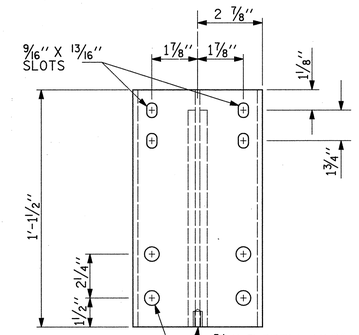

FRONT ELEVATION

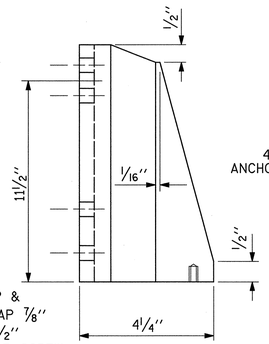

SIDE ELEVATION

DETAILS OF POST

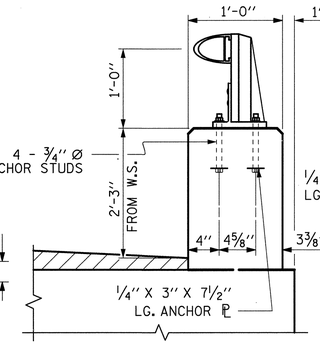

SECTION THRU PARAPET AND RAIL

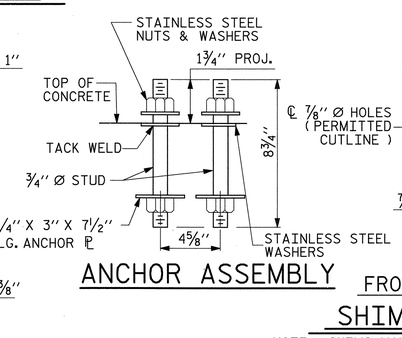

ANCHOR ASSEMBLY

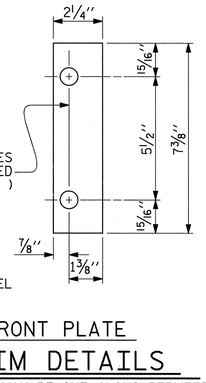

FRONT PLATE

SHIM DETAILS

NOTE : SHIMS MAY BE CUT ALONG PERMITTED CUTLINE OR SLOTTED TO EDGE OF PLATE TO FACILITATE PLACEMENT.

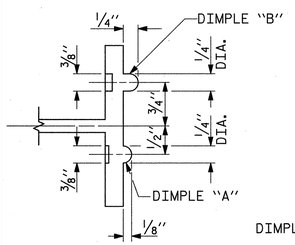

SECTION B - B

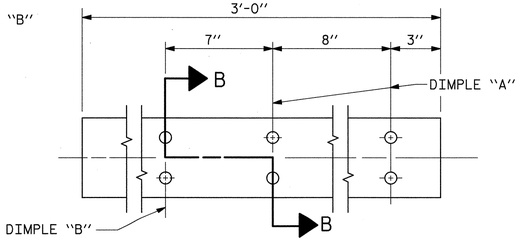

EXPANSION BAR DETAILS

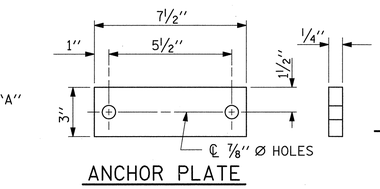

ANCHOR PLATE

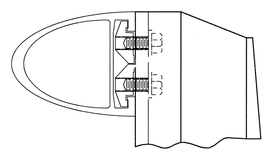

CLAMP & RAIL ASSEMBLY

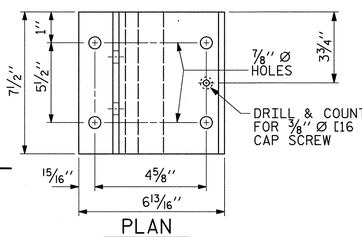

PLAN

PAY LENGTH = 205'-4" LIN. FT.

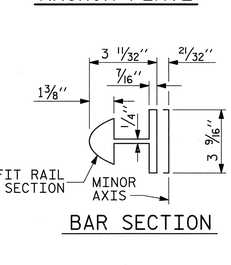

BAR SECTION

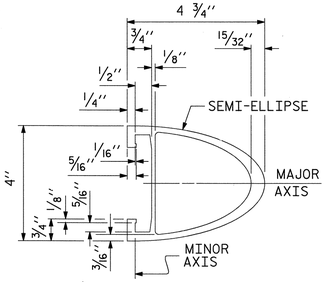

RAIL SECTION

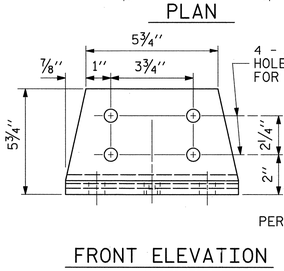

FRONT ELEVATION

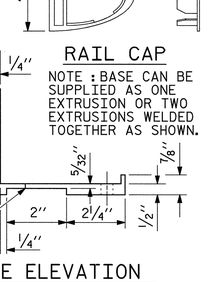

RAIL CAP

NOTE : BASE CAN BE SUPPLIED AS ONE EXTRUSION OR TWO EXTRUSIONS WELDED TOGETHER AS SHOWN.

SIDE ELEVATION

POST BASE DETAILS

RAIL CAP

NOTES

AT THE CONTRACTOR'S OPTION, METAL RAIL MAY BE EITHER ALUMINUM OR GALVANIZED STEEL IN ACCORDANCE WITH THE REQUIREMENTS OF THE GENERAL NOTES AND THE FOLLOWING SPECIFICATIONS FOR THE ALTERNATE MATERIALS; HOWEVER THE CONTRACTOR WILL BE REQUIRED TO USE THE SAME RAIL MATERIAL ON ALL STRUCTURES ON THE PROJECT FOR WHICH METAL RAIL IS DESIGNATED.

ALUMINUM RAILS

MATERIAL FOR POSTS, BASES AND RAILS, EXPANSION BARS AND CLAMP BARS SHALL BE ASTM B221 ALLOY 6061-T6.

MATERIAL FOR RIVETS SHALL BE ASTM B316 ALLOY 6061-T6. RIVETS SHALL BE STANDARD BUTTON HEAD AND CONE POINT COLD DRIVEN AS PER DRAWING.

THE BASE OF RAIL POSTS, OR ANY OTHER ALUMINUM SURFACE IN CONTACT WITH CONCRETE SHALL BE THOROUGHLY COATED WITH AN ALUMINUM IMPREGNATED CAULKING COMPOUND OF APPROVED QUALITY.

MATERIAL FOR SHIMS TO BE ASTM B209 ALLOY 6061-T6.

GALVANIZED STEEL RAILS

MATERIALS AND GALVANIZING ARE TO CONFORM TO THE FOLLOWING SPECIFICATIONS:

POST, POST BASES, RAILS, EXPANSION BARS AND CLAMP BARS: AASHTO M270 GRADE 36 STRUCTURAL STEEL - GALVANIZED TO AASHTO M111.

RIVETS: RIVETS SHALL MEET THE REQUIREMENTS OF ASTM A502 FOR GRADE 1 RIVETS.

THE CUT ENDS OF GALVANIZED STEEL RAILING, AFTER GRINDING SMOOTH SHALL BE GIVEN TWO COATS OF ZINC RICH PAINT MEETING THE REQUIREMENTS OF FEDERAL SPECIFICATION MIL-P-26915 USAF TYPE 1, OR OF FEDERAL SPECIFICATIONS TT-P-641.

SHIMS: SHIMS SHALL MEET THE REQUIREMENTS OF ASTM A570 FOR GRADE 33 OR A611 FOR GRADE C AND SHALL BE GALVANIZED IN ACCORDANCE WITH AASHTO M111.

CLOSURE PLATES: CLOSURE PLATES SHALL MEET THE REQUIREMENTS OF ASTM A570 FOR GRADE 33 OR A611 FOR GRADE C AND SHALL BE GALVANIZED IN ACCORDANCE WITH AASHTO M111.

GENERAL NOTES

RAILING SHALL BE CONTINUOUS FROM END POST TO END POST OF BRIDGE. EACH JOINT IN RAIL LENGTH SHALL BE SPLICED AS DETAILED. PANEL LENGTHS OF RAIL SHALL BE ATTACHED TO A MINIMUM OF THREE POSTS.

FOR END OF RAIL TO CLEAR FACE OF CONCRETE END POST DIMENSION, SEE STANDARD NO. BMR2.

MATERIAL FOR ANCHOR STUDS SHALL BE ASTM F593 ALLOY 304 STAINLESS STEEL WITH MINIMUM 75,000 PSI ULTIMATE STRENGTH. STUDS TO BE EMBEDDED 7" IN CONCRETE. NUTS SHALL BE AMERICAN STANDARD FINISHED HEXAGON THICK, CLASS 2B THREAD, AND MEET THE REQUIREMENTS OF ASTM F594 ALLOY 304 STAINLESS STEEL. WASHERS SHALL MEET THE REQUIREMENTS OF ASTM F844 EXCEPT THEY SHALL BE MADE FROM ALLOY 304 STAINLESS STEEL. ANCHOR ℄ SHALL BE AASHTO M270 GRADE 36.

CAP SCREWS SHALL BE ASTM F593 ALLOY 305 STAINLESS STEEL.

CERTIFIED MILL REPORTS ARE REQUIRED FOR RAILS AND POSTS. SHOP INSPECTION IS NOT REQUIRED.

METAL RAIL POSTS SHALL BE SET NORMAL TO CURB GRADE.

METHOD OF MEASUREMENT FOR METAL RAILS: FOR LENGTH OF METAL RAILS TO BE PAID FOR, SEE THE STANDARD SPECIFICATIONS.

CURVED RAIL USAGE: WHERE RAILS ARE TO BE USED ON BRIDGES ON HORIZONTAL AND/OR VERTICAL CURVATURE THE CONTRACTOR MAY, AT HIS OPTION, HAVE THE REQUIRED CURVATURE IN THE RAIL FORMED IN THE SHOP OR IN THE FIELD. IN EITHER EVENT, THE RAIL SHALL CONFORM WITHOUT BUCKLING OR KINKING TO THE REQUIRED CURVATURE IN A UNIFORM MANNER ACCEPTABLE TO THE ENGINEER.

TO INSURE FUTURE IDENTIFICATION OF THE FABRICATOR, A PERMANENT IDENTIFYING MARK SHALL BE PLACED ON EACH POST. THE METHOD OF MARKING AND LOCATION SHALL BE SUCH THAT IT DOES NOT DETRACT FROM THE APPEARANCE OF THE POST.

SHIMS SHALL BE USED AS NECESSARY FOR POST ALIGNMENT.

ALLOY 6351-T5 MAY BE SUBSTITUTED FOR ALLOY 6061-T6 WHERE APPLICABLE.

MINOR VARIATIONS IN DETAILS OF METAL RAIL WILL BE CONSIDERED. DETAILS OF SUCH VARIATIONS, IF DESIRED, SHALL BE SUBMITTED FOR APPROVAL.

THE CONTRACTOR MAY USE ADHESIVELY ANCHORED ANCHOR BOLTS IN PLACE OF THE ANCHOR ASSEMBLY. LEVEL TWO FIELD TESTING IS REQUIRED, AND THE YIELD LOAD OF THE 3/4" Ø BOLT IS 10 KIPS. FOR ADHESIVELY ANCHORED ANCHOR BOLTS OR DOWELS, SEE SPECIAL PROVISIONS.

WHEN ADHESIVELY ANCHORED ANCHOR BOLTS ARE USED, BOLTS, NUTS AND WASHERS SHALL MEET THE SAME REQUIREMENTS AS THE ANCHOR STUDS, NUTS AND WASHERS FOR USE WITH THE ANCHOR ASSEMBLY.

GROOVED CONTRACTION JOINTS, 1/2" IN DEPTH, SHALL BE TOOLED IN ALL EXPOSED FACES OF THE PARAPET IN ACCORDANCE WITH ARTICLE 825-10(B) OF THE STANDARD SPECIFICATIONS. THE CONTRACTION JOINT SHALL BE LOCATED AT A SPACING OF 8FT. TO 10FT. BETWEEN EXPANSION JOINTS. NO CONTRACTION JOINTS WILL BE REQUIRED FOR SEGMENTS LESS THAN 10 FEET IN LENGTH.

PROJECT NO. 42287

PAMLICO COUNTY

STATION: 15+65.09 -L-

REPLACES BRIDGE NO. 42

STATE OF NORTH CAROLINA
DEPARTMENT OF TRANSPORTATION
RALEIGH

STANDARD

1 BAR METAL RAIL

PLANS PREPARED BY:

MULKEY
ENGINEERS & CONSULTANTS
PO Box 33127
RALEIGH, N.C. 27636
(919) 851-1912
(919) 851-1918 (FAX)
WWW.MULKEYINC.COM

ASSEMBLED BY :	W. B. ALLEN	DATE :	2/09
CHECKED BY :	L. K. AUSTIN	DATE :	2/09
DRAWN BY :	FCJ 1/88	REV. 10/17/00	LES/RDR
CHECKED BY :	CRK 3/89	REV. 5/7/03R	RWW/JTE
		REV. 5/1/06R	KMM/GM

THIS STANDARD DRAWING REVIEWED & ADOPTED FOR USE AT THE REFERENCED LOCATION BY THE UNDERSIGNED:

NORTH CAROLINA PROFESSIONAL SEAL 19661 ENGINEER L. KEVIN AUSTIN
6/7/09

REVISIONS						SHEET NO.
NO.	BY:	DATE:	NO.	BY:	DATE:	131
1			3			TOTAL SHEETS
2			4			185

STD. NO. BMR1

6/5/2009 11:37:44 AM R:\Structures\B528E_SD_MR.dgn

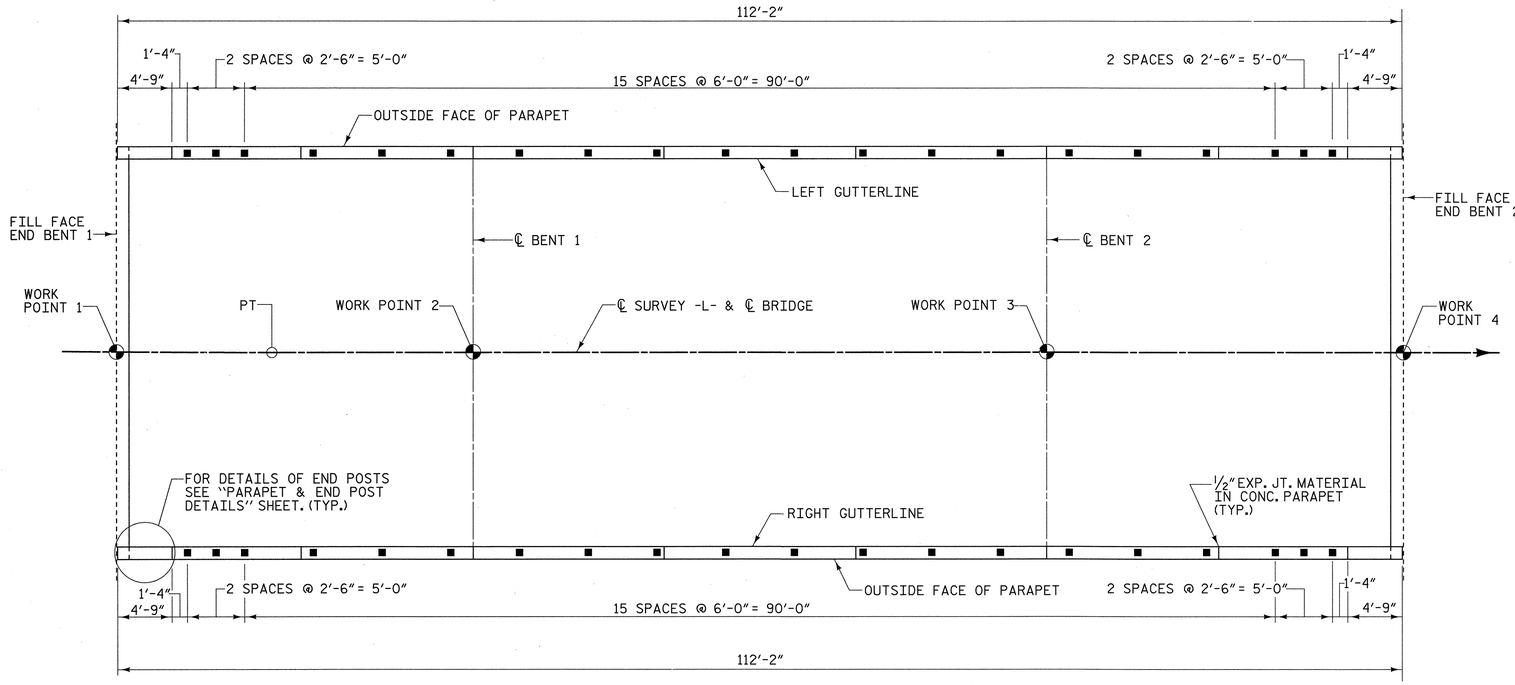

PLAN OF RAIL POST SPACINGS

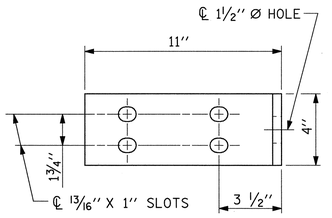

ELEVATION

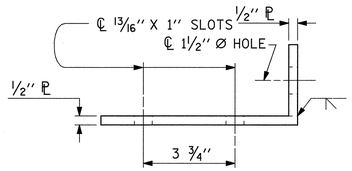

TOP VIEW

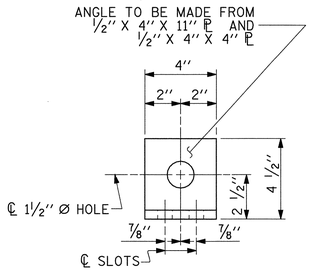

END VIEW (FIX AND EXP.)

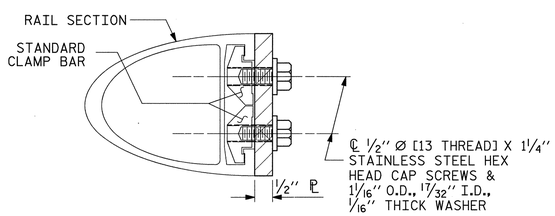

SECTION H-H (FIX)

FIXED

DETAILS FOR ATTACHING METAL RAIL TO END POST

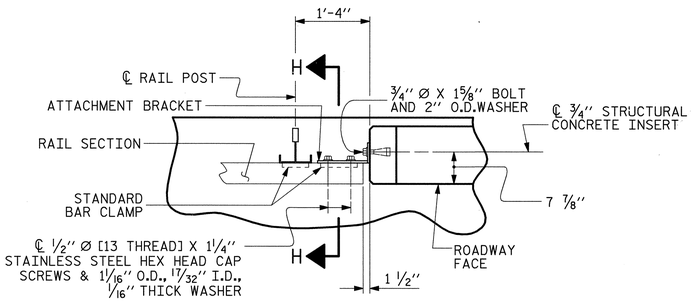

PLAN - RAIL AND END POST

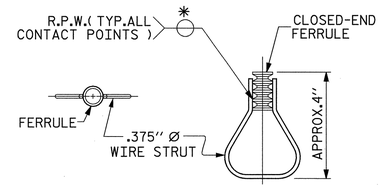

PLAN ELEVATION

STRUCTURAL CONCRETE INSERT

*EACH WELDED ATTACHMENT OF WIRE TO FERRULE SHALL DEVELOP THE TENSILE STRENGTH OF THE WIRE.

NOTES

STRUCTURAL CONCRETE INSERT

THE STRUCTURAL CONCRETE INSERT ASSEMBLY SHALL CONSIST OF THE FOLLOWING COMPONENTS:

A. FERRULES SHALL BE MADE FROM STEEL MEETING THE REQUIREMENTS OF AASHTO M169, GRADE 12L14 AND SHALL HAVE A MINIMUM LENGTH OF THREADS OF 1½".

B. 1 - ¾" Ø X 1⅝" BOLT WITH WASHER. BOLT SHALL CONFORM TO THE REQUIREMENTS OF ASTM A307. BOLT AND WASHER SHALL BE GALVANIZED. (AT THE CONTRACTOR'S OPTION, STAINLESS STEEL BOLT AND WASHER MAY BE USED AS AN ALTERNATE FOR THE ¾" Ø X 1⅝" GALVANIZED BOLT AND WASHER. THEY SHALL CONFORM TO OR EXCEED THE MECHANICAL REQUIREMENTS OF ASTM A307. THE USE OF THIS ALTERNATE SHALL BE APPROVED BY THE ENGINEER.)

C. WIRE STRUT SHOWN IN THE CONCRETE INSERT ASSEMBLY DETAIL IS THE MINIMUM ALLOWABLE SIZE AND SHALL HAVE A MINIMUM TENSILE STRENGTH OF 100,000 PSI. AS AN OPTION, A 7/16" Ø WIRE STRUT WITH A MINIMUM TENSILE STRENGTH OF 90,000 PSI IS ACCEPTABLE.

NOTES

METAL RAIL TO END POST CONNECTION

THE METAL RAIL TO END POST CONNECTION SHALL CONSIST OF THE FOLLOWING COMPONENTS:

A. ½" PLATES SHALL CONFORM TO AASHTO M270 GRADE 36 AND SHALL BE GALVANIZED AFTER FABRICATION.

B. ¾" STRUCTURAL CONCRETE INSERT SHALL HAVE A WORKING LOAD SHEAR CAPACITY OF 4800 LBS. THE FERRULES SHALL ENGAGE A ¾"Ø X 1⅝" BOLT WITH 2" O.D. WASHER IN PLACE. THE ¾"Ø X 1⅝" BOLT SHALL HAVE N. C. THREADS.

C. CAP SCREWS FOR RAIL ATTACHMENT TO ANGLE SHALL CONFORM TO THE REQUIREMENTS OF ASTM F593 ALLOY 305 STAINLESS STEEL. CAP SCREWS TO BE CENTERED IN SLOTS AT 60°F.

D. STANDARD CLAMP BARS (SEE METAL RAIL SHEET).

E. ½" Ø PIPE SLEEVES (IF REQUIRED) TO BE GALVANIZED.

THE COST OF THE STANDARD CLAMP BARS AND CAP SCREWS USED IN THE METAL RAIL TO END POST CONNECTION SHALL BE INCLUDED IN THE UNIT CONTRACT PRICE BID FOR LINEAR FEET OF 1 OR 2 BAR METAL RAILS.

THE ¾" STRUCTURAL CONCRETE INSERT WITH BOLT SHALL BE ASSEMBLED IN THE SHOP.

THE COST OF THE ¾" STRUCTURAL CONCRETE INSERT ASSEMBLY, AND THE ½" PLATES COMPLETE IN PLACE SHALL BE INCLUDED IN THE VARIOUS PAY ITEMS.

THE CONTRACTOR, AT HIS OPTION, MAY USE AN ADHESIVE BONDING SYSTEM IN LIEU OF THE STRUCTURAL CONCRETE INSERT EMBEDDED IN THE END POST. IF THE ADHESIVE BONDING SYSTEM IS USED, THE ¾" Ø X 1⅝" BOLT WITH WASHER SHALL BE REPLACED WITH A ¾"Ø X 6½" BOLT AND 2" O.D. WASHER. ALL SPECIFICATIONS THAT APPLY TO THE ¾" Ø X 1⅝" BOLT SHALL APPLY TO THE ¾"Ø X 6 ½" BOLT. FIELD TESTING OF THE ADHESIVE BONDING SYSTEM IS NOT REQUIRED.

PROJECT NO. 42287

PAMLICO COUNTY

STATION: 15+65.09 -L-

REPLACES BRIDGE NO. 42

STATE OF NORTH CAROLINA
DEPARTMENT OF TRANSPORTATION
RALEIGH

STANDARD

RAIL POST SPACINGS AND END OF RAIL DETAILS

REVISIONS						SHEET NO.
NO.	BY:	DATE:	NO.	BY:	DATE:	132
1			3			TOTAL SHEETS
2			4			185

THIS STANDARD DRAWING REVIEWED & ADOPTED FOR USE AT THE REFERENCED LOCATION BY THE UNDERSIGNED:

NORTH CAROLINA PROFESSIONAL SEAL 19661 ENGINEER KEVIN AUSTIN
6/7/09

PLANS PREPARED BY:
MULKEY
ENGINEERS & CONSULTANTS
PO Box 33127
Raleigh, NC 27636
(919) 851-1912
(919) 851-1918 (FAX)
WWW.MULKEYINC.COM

ASSEMBLED BY :	W. B. ALLEN	DATE :	2/09
CHECKED BY :	L. K. AUSTIN	DATE :	2/09
DRAWN BY :	FCJ 1/88	REV. 10/17/00	LES/RDR
CHECKED BY :	CRK 3/89	REV. 5/7/03	RWW/JTE
		REV. 5/1/06	TLA/GM

STD. NO. BMR2

6/5/2009 11:36:50 AM R:\Structures\B5298E_SD_MR_02.dgn

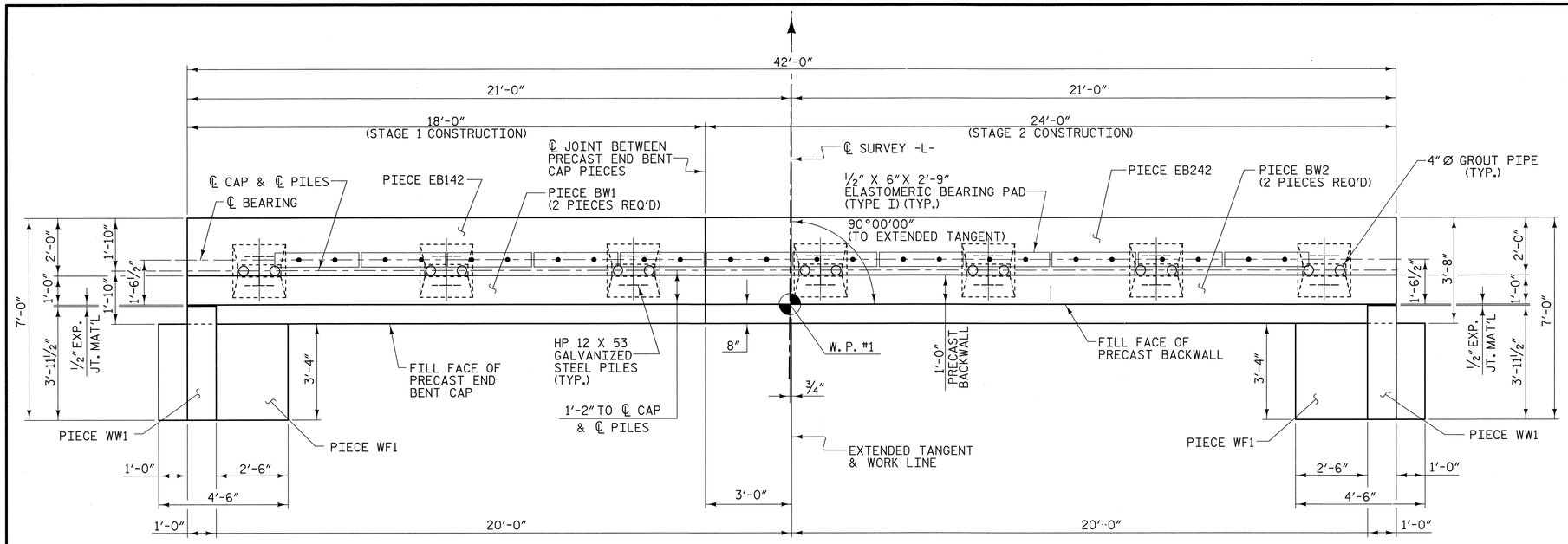

PLAN

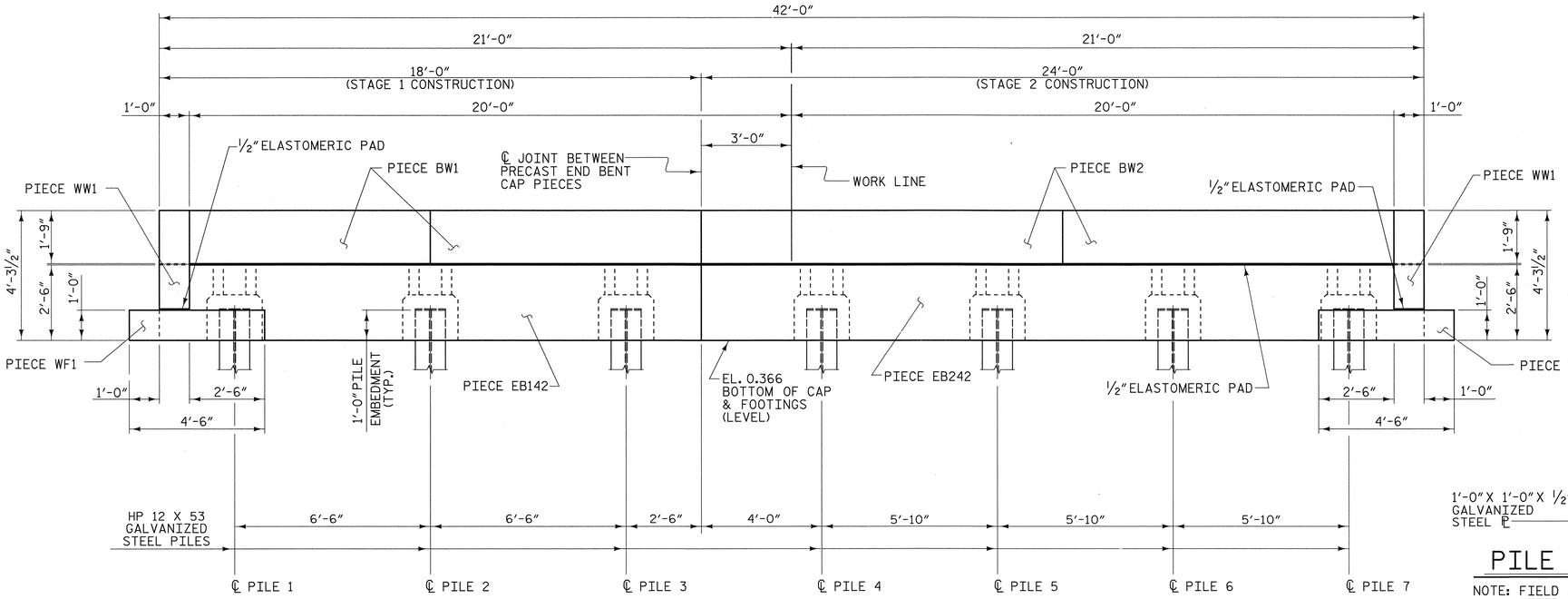

ELEVATION

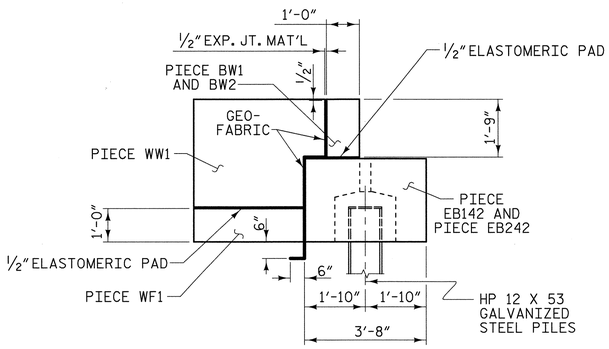

END VIEW
(WITH GEO-FABRIC DETAILS)

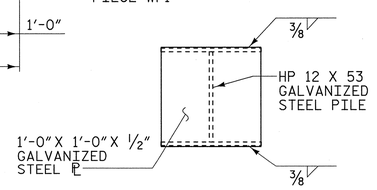

PILE PLATE DETAIL

NOTE: FIELD WELD PLATE TO TOP OF PILE AFTER PILE HAS BEEN DRIVEN AND CUT OFF TO THE PROPER ELEVATION.

NOTES

THE CONTRACTOR'S ATTENTION IS CALLED TO THE FACT THAT W.P. #1 IS LOCATED ON THE "FILL FACE OF PRECAST BACKWALL". THE "FILL FACE OF PRECAST END BENT CAP" IS LOCATED 8" BACK-STATION FROM W.P. #1.

THE FILL FACE OF THE CAP, BACKWALL, AND WINGWALL PIECES SHALL BE LINED WITH GEO-FABRIC.

SEE PIECE EB142 SHEET FOR DETAILS, NOTES, AND BILL OF MATERIAL.

SEE PIECE EB242 SHEET FOR DETAILS, NOTES, AND BILL OF MATERIAL.

SEE PIECE BW1 AND PIECE BW2 SHEET FOR DETAILS, NOTES, AND BILL OF MATERIAL.

SEE PIECE WW1 AND PIECE WF1 SHEET FOR DETAILS, NOTES, AND BILL OF MATERIAL.

THE MINIMUM REQUIRED SOIL BEARING CAPACITY FOR SOIL BENEATH CAP PIECES AND WING FOOTING PIECES SHALL BE 2000 POUNDS PER SQUARE FOOT.

THE ERECTION SUPPORT SYSTEM FOR THE PRECAST CAP SHALL NOT BE REMOVED, CORED SLAB UNITS SHALL NOT BE PLACED ON THE PRECAST CAP, BACKFILLING AGAINST THE PRECAST CAP SHALL NOT BE ALLOWED, AND VEHICLES OR CONSTRUCTION EQUIPMENT SHALL NOT BE ALLOWED ON THE PRECAST CAP UNTIL THE GROUT USED TO FILL THE PILE BLOCKOUTS HAS OBTAINED A COMPRESSIVE STRENGTH OF AT LEAST 4000 PSI. SEE PROJECT SPECIAL PROVISION, "GROUT FOR PILE BLOCKOUTS".

THE CONTRACTOR SHALL SUBMIT TO THE ENGINEER FOR APPROVAL A METHOD TO SUPPORT THE PRECAST CAP IN THE PROPER LOCATION AND ELEVATION AS SHOWN ON THE PLANS PRIOR TO PLACEMENT OF AND CURING OF THE GROUT IN THE PILE BLOCKOUTS. THE METHOD CHOSEN SHALL PROVIDE A WATERTIGHT SEAL AT THE BOTTOM OF THE CAP SO NO GROUT COMES IN CONTACT WITH THE STREAM UNTIL THE GROUT HAS HARDENED.

THE GROUT USED TO FILL THE 4" DIAMETER HOLES IN THE PRECAST BACKWALL PIECES AND IN THE PRECAST WING WALL PIECES SHALL BE NON-SHRINK, NON-METALLIC GROUT THAT IS ON THE DEPARTMENT'S APPROVAL LIST AND SHALL MEET THE APPROVAL OF THE ENGINEER. BACKFILLING AGAINST THE PRECAST BACKWALL AND THE PRECAST WING WALLS SHALL NOT BE ALLOWED, AND CONSTRUCTION EQUIPMENT SHALL NOT BE ALLOWED ON THE PRECAST BACKWALL AND THE PRECAST WING WALLS UNTIL THE GROUT HAS OBTAINED A COMPRESSIVE STRENGTH OF AT LEAST 4000 PSI.

PROJECT NO. 42287

PAMLICO COUNTY

STATION: 15+65.09 -L-

REPLACES BRIDGE NO. 42

STATE OF NORTH CAROLINA
DEPARTMENT OF TRANSPORTATION
RALEIGH

END BENT #1

33'-10" CLEAR ROADWAY - 90°SKEW

REVISIONS						SHEET NO.
NO.	BY:	DATE:	NO.	BY:	DATE:	133
1			3			TOTAL SHEETS
2			4			185

NORTH CAROLINA PROFESSIONAL SEAL 19661 ENGINEER KEVIN AUSTIN 8/6/09

PLANS PREPARED BY:
MULKEY ENGINEERS & CONSULTANTS
PO Box 33127
Raleigh, N.C. 27636
(919) 851-1912
(919) 851-1918 (FAX)
www.mulkeyinc.com

DRAWN BY : W. B. ALLEN DATE : 2/09
CHECKED BY : L. K. AUSTIN DATE : 3/09

8/6/2009 9:48:05 AM G:\projects\2004\2214.1_Pamlico42\Structures\B5029E_SD_EB1.dgn

NOTES

SEE PIECE B142 SHEET FOR DETAILS, NOTES, AND BILL OF MATERIAL.

SEE PIECE B242 SHEET FOR DETAILS, NOTES, AND BILL OF MATERIAL.

THE ERECTION SUPPORT SYSTEM FOR THE PRECAST CAP SHALL NOT BE REMOVED, CORED SLAB UNITS SHALL NOT BE PLACED ON THE PRECAST CAP, AND VEHICLES OR CONSTRUCTION EQUIPMENT SHALL NOT BE ALLOWED ON THE PRECAST CAP UNTIL THE GROUT USED TO FILL THE PILE BLOCKOUTS HAS OBTAINED A COMPRESSIVE STRENGTH OF AT LEAST 4000 PSI. SEE PROJECT SPECIAL PROVISION, "GROUT FOR PILE BLOCKOUTS".

THE CONTRACTOR SHALL SUBMIT TO THE ENGINEER FOR APPROVAL A METHOD TO SUPPORT THE PRECAST CAP IN THE PROPER LOCATION AND ELEVATION AS SHOWN ON THE PLANS PRIOR TO PLACEMENT OF AND CURING OF THE GROUT IN THE PILE BLOCKOUTS. THE METHOD CHOSEN SHALL PROVIDE A WATERTIGHT SEAL AT THE BOTTOM OF THE CAP SO NO GROUT COMES IN CONTACT WITH THE STREAM UNTIL THE GROUT HAS HARDENED.

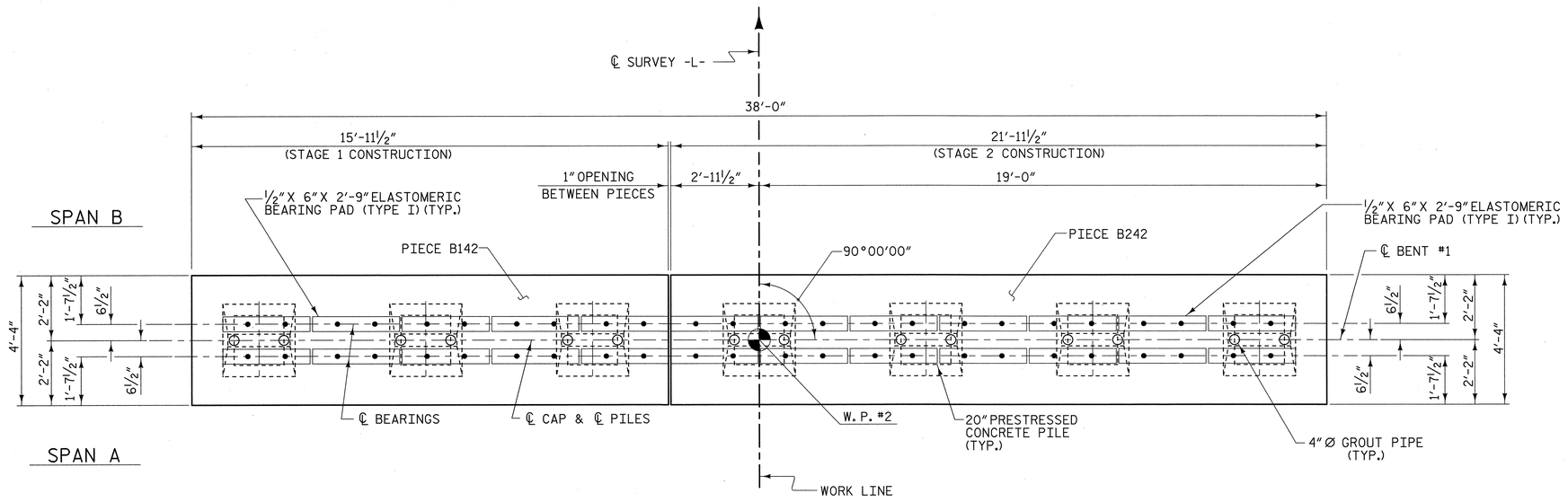

PLAN

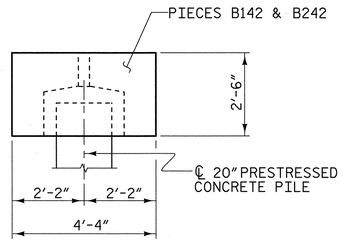

END VIEW

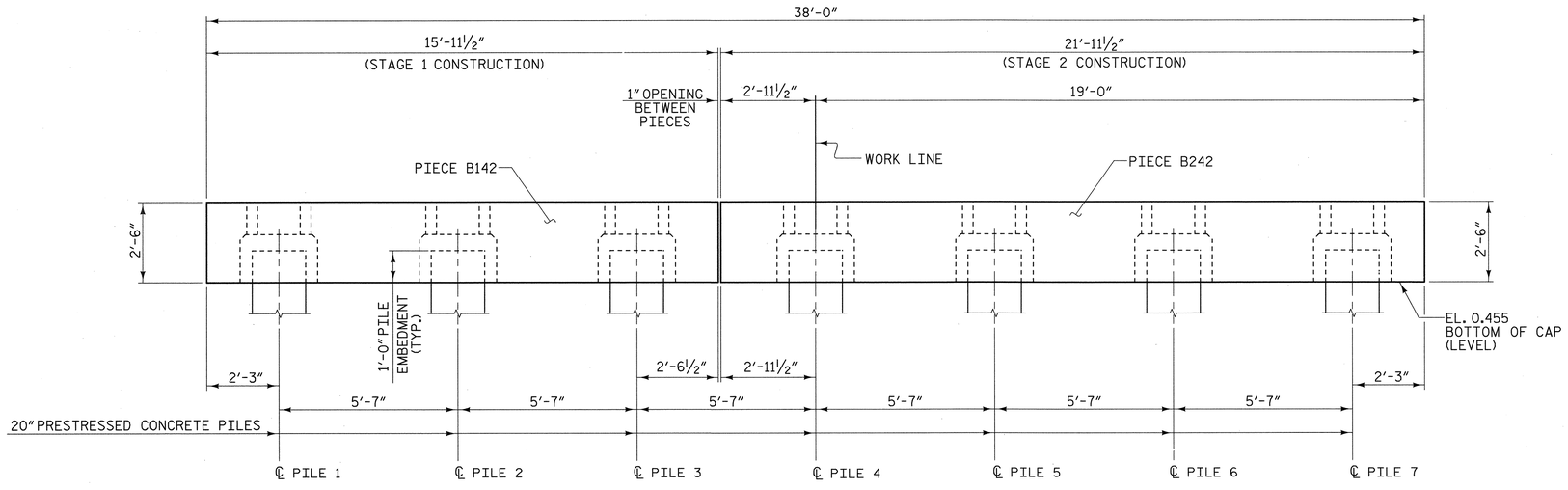

ELEVATION

PROJECT NO. 42287

PAMLICO COUNTY

STATION: 15+65.09 -L-

REPLACES BRIDGE NO. 42

STATE OF NORTH CAROLINA
DEPARTMENT OF TRANSPORTATION
RALEIGH

BENT #1

33'-10" CLEAR ROADWAY - 90°SKEW

NORTH CAROLINA PROFESSIONAL SEAL 19661 ENGINEER L. KEVIN AUSTIN
6/7/09

PLANS PREPARED BY:

MULKEY
ENGINEERS & CONSULTANTS
PO Box 33127
RALEIGH, N.C. 27636
(919) 851-1912
(919) 851-1912 (FAX)
WWW.MULKEYINC.COM

REVISIONS						SHEET NO.
NO.	BY:	DATE:	NO.	BY:	DATE:	134
1			3			TOTAL SHEETS
2			4			185

DRAWN BY : W. B. ALLEN DATE : 2/09
CHECKED BY : L. K. AUSTIN DATE : 3/09

6/5/2009 11:34:59 AM R:\Structures\B5629E_SD_BL_0t.dgn

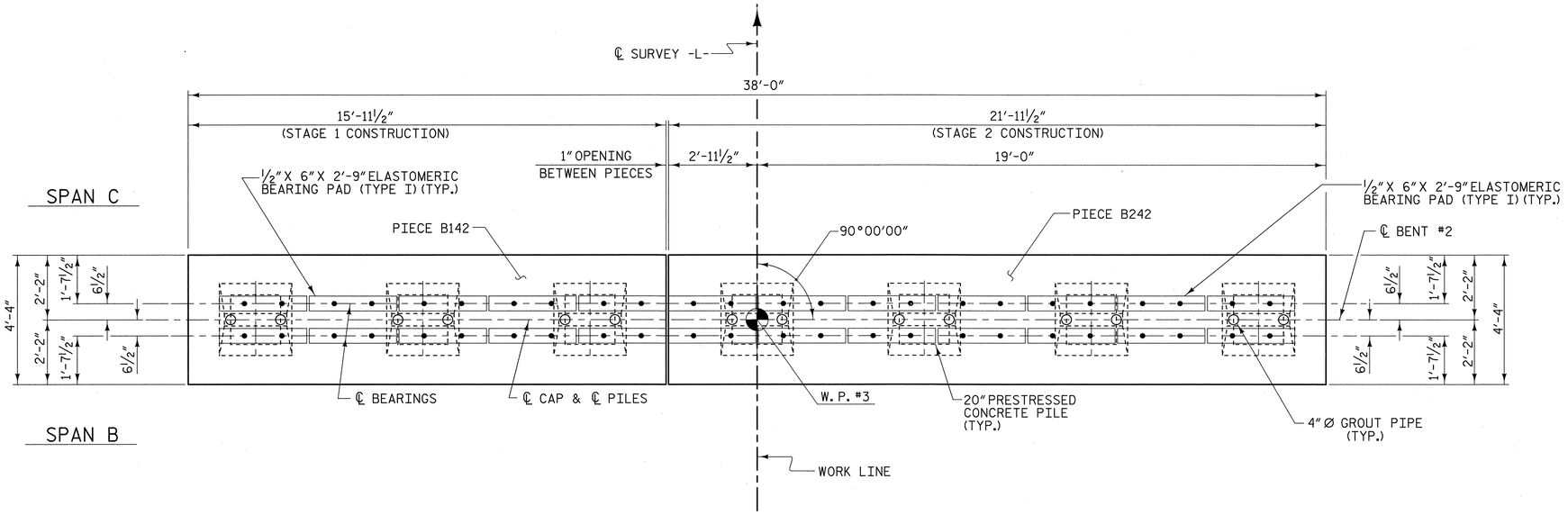

PLAN

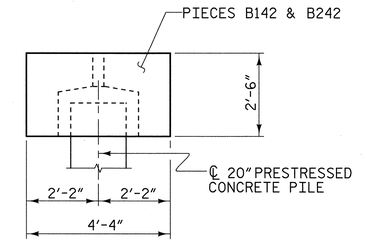

END VIEW

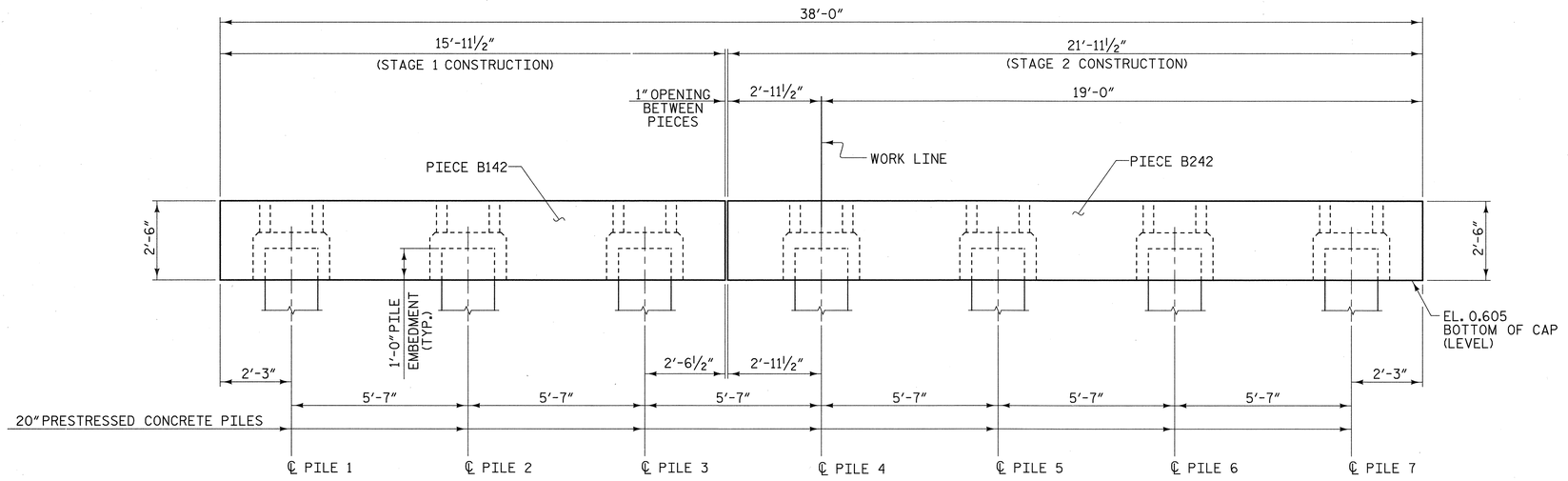

ELEVATION

NOTES

SEE PIECE B142 SHEET FOR DETAILS, NOTES, AND BILL OF MATERIAL.

SEE PIECE B242 SHEET FOR DETAILS, NOTES, AND BILL OF MATERIAL.

THE ERECTION SUPPORT SYSTEM FOR THE PRECAST CAP SHALL NOT BE REMOVED, CORED SLAB UNITS SHALL NOT BE PLACED ON THE PRECAST CAP, AND VEHICLES OR CONSTRUCTION EQUIPMENT SHALL NOT BE ALLOWED ON THE PRECAST CAP UNTIL THE GROUT USED TO FILL THE PILE BLOCKOUTS HAS OBTAINED A COMPRESSIVE STRENGTH OF AT LEAST 4000 PSI. SEE PROJECT SPECIAL PROVISION, "GROUT FOR PILE BLOCKOUTS".

THE CONTRACTOR SHALL SUBMIT TO THE ENGINEER FOR APPROVAL A METHOD TO SUPPORT THE PRECAST CAP IN THE PROPER LOCATION AND ELEVATION AS SHOWN ON THE PLANS PRIOR TO PLACEMENT OF AND CURING OF THE GROUT IN THE PILE BLOCKOUTS. THE METHOD CHOSEN SHALL PROVIDE A WATERTIGHT SEAL AT THE BOTTOM OF THE CAP SO NO GROUT COMES IN CONTACT WITH THE STREAM UNTIL THE GROUT HAS HARDENED.

PROJECT NO. 42287

PAMLICO COUNTY

STATION: 15+65.09 -L-

REPLACES BRIDGE NO. 42

STATE OF NORTH CAROLINA
DEPARTMENT OF TRANSPORTATION
RALEIGH

BENT #2

33'-10" CLEAR ROADWAY - 90°SKEW

NORTH CAROLINA PROFESSIONAL SEAL 19661 ENGINEER L. KEVIN AUSTIN 6/7/09

PLANS PREPARED BY:

MULKEY
ENGINEERS & CONSULTANTS
PO Box 33127
Raleigh, N.C. 27636
(919) 851-1912
(919) 851-1918 (FAX)
www.mulkeyinc.com

REVISIONS						SHEET NO.
NO.	BY:	DATE:	NO.	BY:	DATE:	135
1			3			TOTAL SHEETS
2			4			185

DRAWN BY : W. B. ALLEN DATE : 2/09
CHECKED BY : L. K. AUSTIN DATE : 3/09

6/5/2009 1:34:05 AM R:\Structures\B5928E_SD_B2_04.dgn

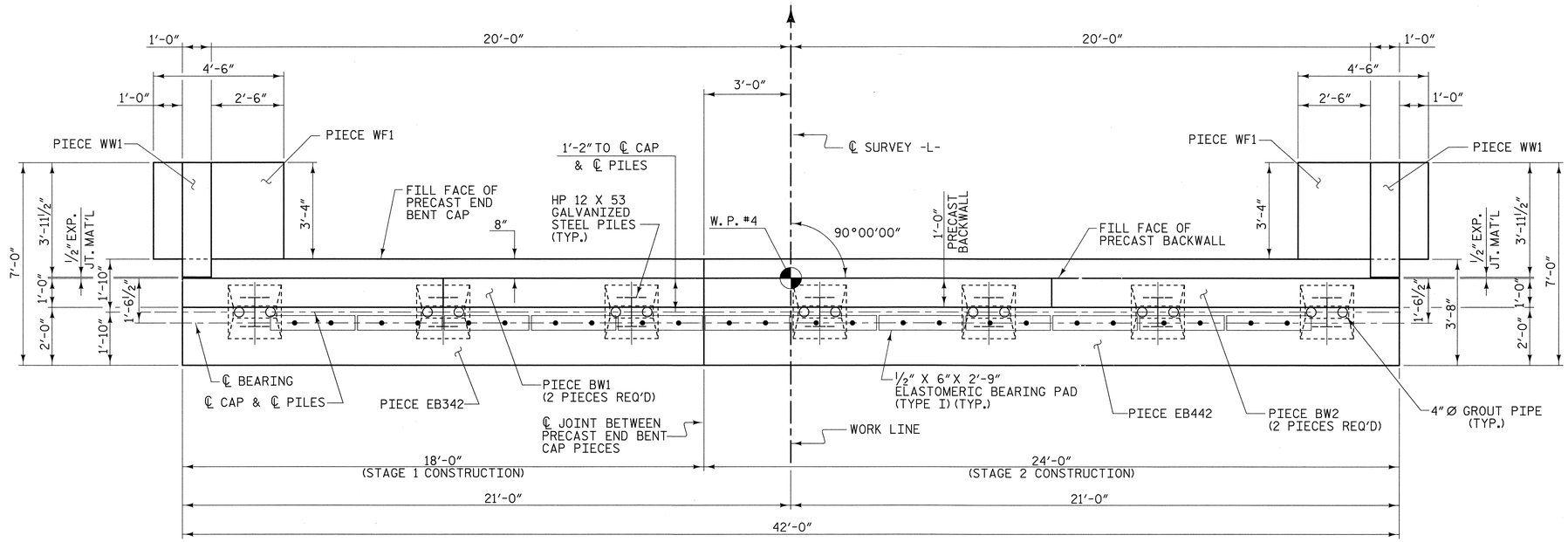

PLAN

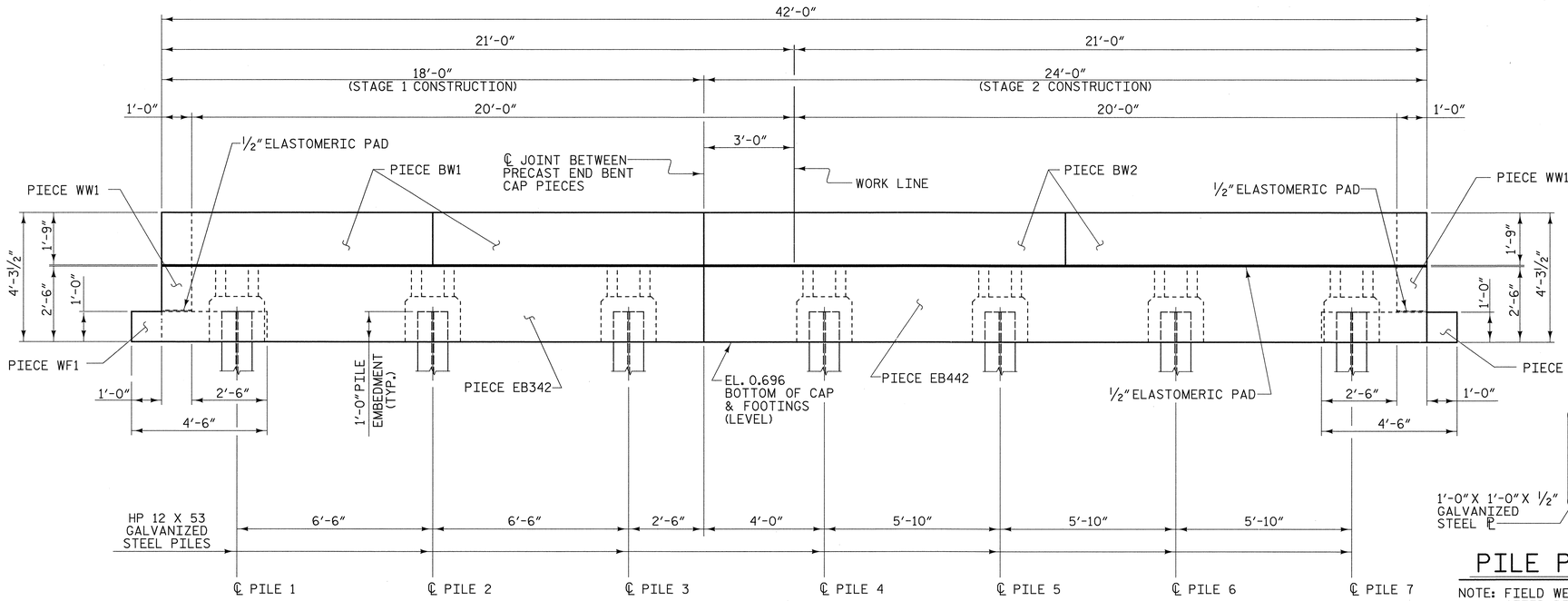

ELEVATION

NOTES

THE CONTRACTOR'S ATTENTION IS CALLED TO THE FACT THAT W.P. #4 IS LOCATED ON THE "FILL FACE OF PRECAST BACKWALL". THE "FILL FACE OF PRECAST END BENT CAP" IS LOCATED 8" AHEAD-STATION FROM W.P. #4.

THE FILL FACE OF THE CAP, BACKWALL, AND WINGWALL PIECES SHALL BE LINED WITH GEO-FABRIC.

SEE PIECE EB342 SHEET FOR DETAILS, NOTES, AND BILL OF MATERIAL.

SEE PIECE EB442 SHEET FOR DETAILS, NOTES, AND BILL OF MATERIAL.

SEE PIECE BW1 AND PIECE BW2 SHEET FOR DETAILS, NOTES, AND BILL OF MATERIAL.

SEE PIECE WW1 AND PIECE WF1 SHEET FOR DETAILS, NOTES, AND BILL OF MATERIAL.

THE MINIMUM REQUIRED SOIL BEARING CAPACITY FOR SOIL BENEATH CAP PIECES AND WING FOOTING PIECES SHALL BE 2000 POUNDS PER SQUARE FOOT.

THE ERECTION SUPPORT SYSTEM FOR THE PRECAST CAP SHALL NOT BE REMOVED, CORED SLAB UNITS SHALL NOT BE PLACED ON THE PRECAST CAP, BACKFILLING AGAINST THE PRECAST CAP SHALL NOT BE ALLOWED, AND VEHICLES OR CONSTRUCTION EQUIPMENT SHALL NOT BE ALLOWED ON THE PRECAST CAP UNTIL THE GROUT USED TO FILL THE PILE BLOCKOUTS HAS OBTAINED A COMPRESSIVE STRENGTH OF AT LEAST 4000 PSI. SEE PROJECT SPECIAL PROVISION, "GROUT FOR PILE BLOCKOUTS".

THE CONTRACTOR SHALL SUBMIT TO THE ENGINEER FOR APPROVAL A METHOD TO SUPPORT THE PRECAST CAP IN THE PROPER LOCATION AND ELEVATION AS SHOWN ON THE PLANS PRIOR TO PLACEMENT OF AND CURING OF THE GROUT IN THE PILE BLOCKOUTS. THE METHOD CHOSEN SHALL PROVIDE A WATERTIGHT SEAL AT THE BOTTOM OF THE CAP SO NO GROUT COMES IN CONTACT WITH THE STREAM UNTIL THE GROUT HAS HARDENED.

THE GROUT USED TO FILL THE 4" DIAMETER HOLES IN THE PRECAST BACKWALL PIECES AND IN THE PRECAST WING WALL PIECES SHALL BE NON-SHRINK, NON-METALLIC GROUT THAT IS ON THE DEPARTMENT'S APPROVAL LIST AND SHALL MEET THE APPROVAL OF THE ENGINEER. BACKFILLING AGAINST THE PRECAST BACKWALL AND THE PRECAST WING WALLS SHALL NOT BE ALLOWED, AND CONSTRUCTION EQUIPMENT SHALL NOT BE ALLOWED ON THE PRECAST BACKWALL AND THE PRECAST WING WALLS UNTIL THE GROUT HAS OBTAINED A COMPRESSIVE STRENGTH OF AT LEAST 4000 PSI.

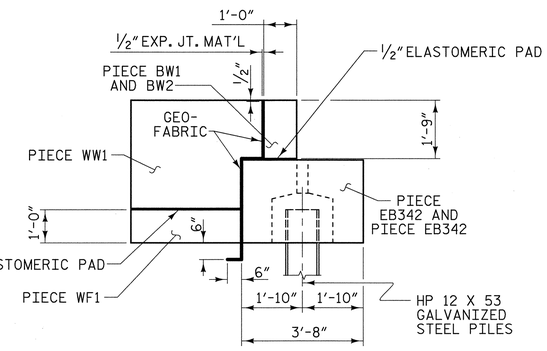

END VIEW

(WITH GEO-FABRIC DETAILS)

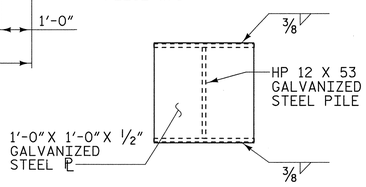

PILE PLATE DETAIL

NOTE: FIELD WELD PLATE TO TOP OF PILE AFTER PILE HAS BEEN DRIVEN AND CUT OFF TO THE PROPER ELEVATION.

PROJECT NO. 42287

PAMLICO COUNTY

STATION: 15+65.09 -L-

REPLACES BRIDGE NO. 42

STATE OF NORTH CAROLINA
DEPARTMENT OF TRANSPORTATION
RALEIGH

END BENT #2

33'-10" CLEAR ROADWAY - 90° SKEW

REVISIONS						SHEET NO.
NO.	BY:	DATE:	NO.	BY:	DATE:	136
1			3			TOTAL SHEETS
2			4			185

PLANS PREPARED BY:

MULKEY
ENGINEERS & CONSULTANTS
PO Box 33127
Raleigh, N.C. 27636
(919) 851-1918
(919) 851-1918 (FAX)
WWW.MULKEYINC.COM

NORTH CAROLINA PROFESSIONAL SEAL 19661 ENGINEER KEVIN AUSTIN 8/6/09

DRAWN BY : W. B. ALLEN DATE : 2/09
CHECKED BY : L. K. AUSTIN DATE : 3/09

8/6/2009 9:52:26 AM G:\project\2004\224\Pamlico42\Structures\BS29E_SD_EB2_0.dgn

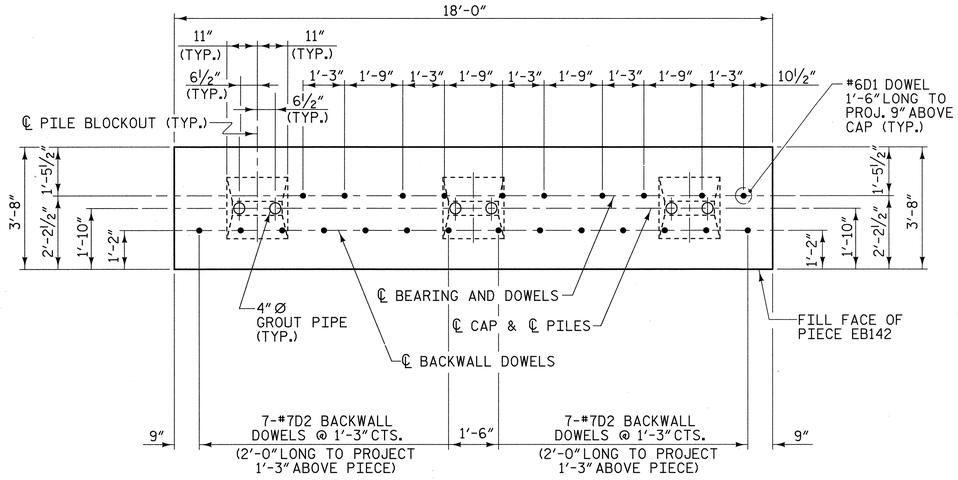

PLAN - PRECAST PIECE EB142

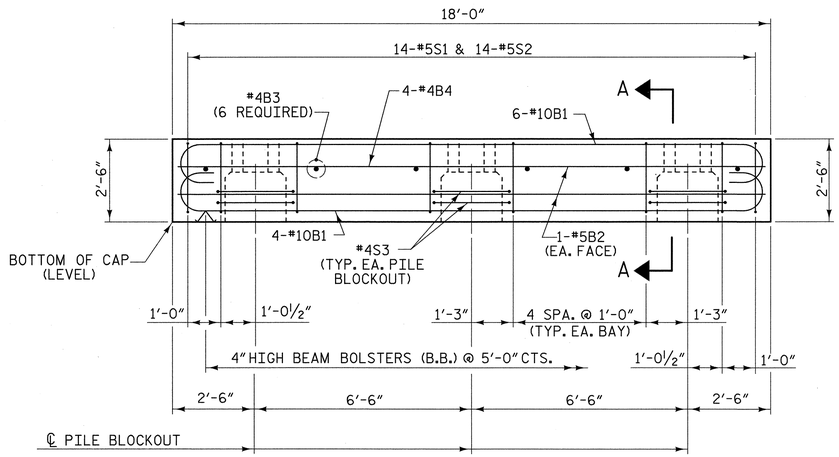

ELEVATION - PRECAST PIECE EB142

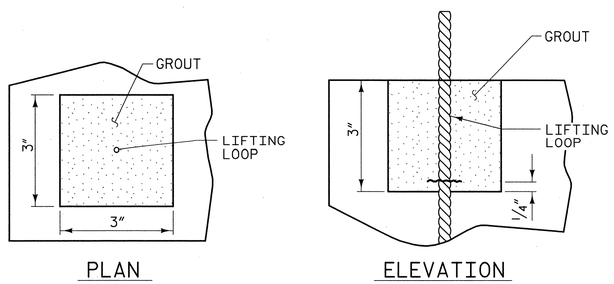

GROUTED RECESS FOR LIFTING LOOPS

LIFTING LOOPS TO BE CUT ¼" ABOVE BOTTOM OF RECESS.

SECTION A-A

NOTES

STIRRUPS IN PRECAST PIECE EB142 MAY BE SHIFTED AS NECESSARY TO CLEAR DOWELS AND GROUT PIPES.

ALL REINFORCING STEEL AND BAR SUPPORTS SHALL BE EPOXY COATED ACCORDING TO THE STANDARD SPECIFICATIONS.

CLASS AA (4500 PSI) CONCRETE SHALL BE USED IN PRECAST PIECE EB142.

DOWELS SHALL BE PRESET IN THE PRECAST CAP IN THE LOCATIONS SHOWN ON THE PLANS. DRILLING AND ADHESIVE ANCHORING OF THE DOWELS AFTER CASTING MUST BE APPROVED BY THE ENGINEER.

TWO LIFTING LOOPS SHALL BE ALLOWED IN THE PRECAST PIECE IN ACCORDANCE WITH ARTICLE 1077-10 OF THE STANDARD SPECIFICATIONS WITH THE FOLLOWING ADDITIONS. THE LIFTING LOOPS SHALL BE BURNED OFF PRIOR TO PLACING THE ELASTOMERIC BEARING PADS. THE ENDS OF THE LIFTING LOOPS TO BE BURNED OFF SHALL BE RECESSED AND GROUTED. SEE DETAIL FOR GROUTED RECESS FOR LIFTING LOOPS. GROUT SHALL BE NON-METALLIC AND NON-SHRINK ACCORDING TO THE STANDARD SPECIFICATIONS. PROPOSED DEVICES FOR LIFTING LOOPS SHALL BE DETAILED IN SHOP DRAWINGS.

TWO 4 INCH Ø GROUT PIPES SHALL BE PROVIDED AT EACH PILE BLOCKOUT. THE 4 INCH Ø GROUT PIPES SHALL BE CUT FROM SCHEDULE 40 PVC PIPE AND SHALL BE FIRMLY ANCHORED OR REMOVED PRIOR TO PLACEMENT OF THE GROUT.

THE TOP OF THE PILE BLOCKOUT SHALL BE CHAMFERED 2" IN THE TRANSVERSE DIRECTION.

BAR TYPES

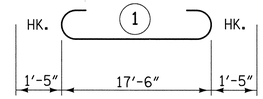

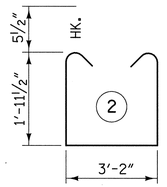

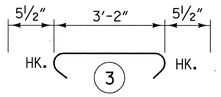

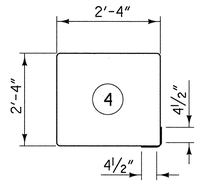

ALL BAR DIMENSIONS ARE OUT TO OUT

BILL OF MATERIAL FOR ONE PIECE EB142

BAR	NO.	SIZE	TYPE	LENGTH	WEIGHT
B1	10	#10	1	20'-4"	875
B2	4	#5	STR	17'-7"	73
B3	6	#4	STR	3'-3"	13
B4	4	#4	STR	17'-7"	47
D1	10	#6	STR	1'-6"	23
D2	14	#7	STR	2'-0"	57
S1	14	#5	2	8'-0"	117
S2	14	#5	3	4'-1"	60
S3	6	#4	4	10'-1"	40

EPOXY COATED REINFORCING STEEL
TOTAL 1305 LBS.

CLASS AA (4500 PSI) CONCRETE
5.5 CU. YDS.

GROUT FOR PILE BLOCKOUTS
0.6 CU. YDS.

PROJECT NO. 42287
PAMLICO COUNTY
STATION: 15+65.09 -L-

REPLACES BRIDGE NO. 42

STATE OF NORTH CAROLINA
DEPARTMENT OF TRANSPORTATION
RALEIGH

PRECAST PIECE EB142

33'-10" CLEAR ROADWAY - 90° SKEW

NORTH CAROLINA PROFESSIONAL ENGINEER SEAL 19661 L. KEVIN AUSTIN 6/7/09

PLANS PREPARED BY:
MULKEY ENGINEERS & CONSULTANTS
PO BOX 33127
RALEIGH, N.C. 27636
(919) 851-1913
(919) 851-1918 (FAX)
WWW.MULKEYINC.COM

REVISIONS						SHEET NO.
NO.	BY:	DATE:	NO.	BY:	DATE:	137
1			3			TOTAL SHEETS
2			4			185

DRAWN BY : W. B. ALLEN DATE : 2/09
CHECKED BY : L. K. AUSTIN DATE : 3/09

6/5/2009 8:32:46 AM R:\Structures\EB142E_SD_EB0A_04.dgn

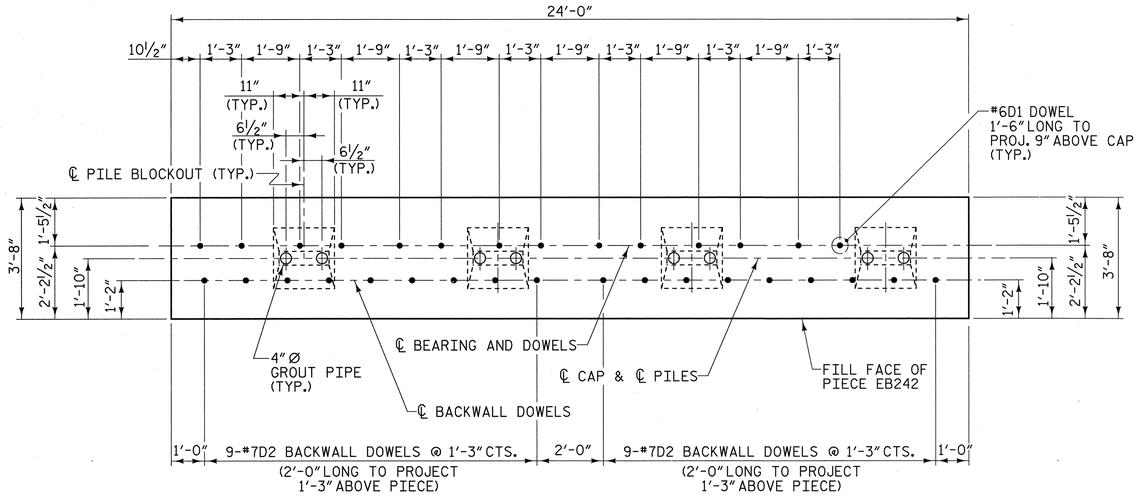

PLAN - PRECAST PIECE EB242

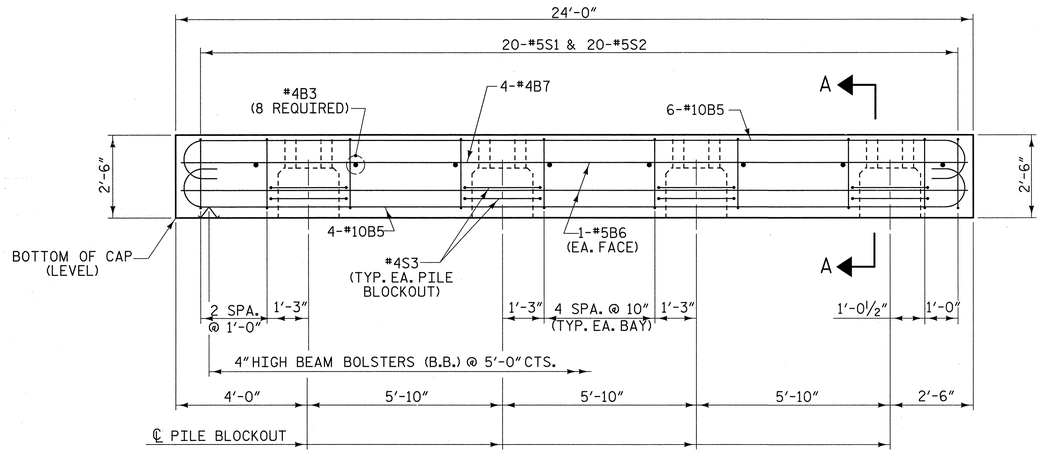

ELEVATION - PRECAST PIECE EB242

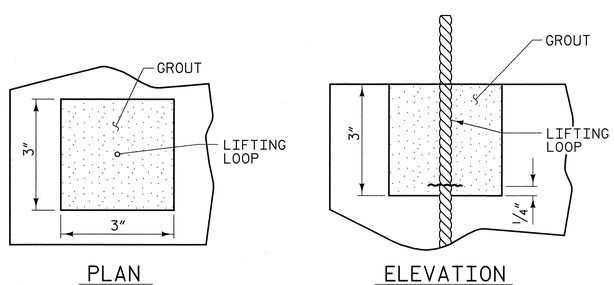

GROUTED RECESS FOR LIFTING LOOPS

LIFTING LOOPS TO BE CUT ¼" ABOVE BOTTOM OF RECESS.

NOTES

STIRRUPS IN PRECAST PIECE EB242 MAY BE SHIFTED AS NECESSARY TO CLEAR DOWELS AND GROUT PIPES.

ALL REINFORCING STEEL AND BAR SUPPORTS SHALL BE EPOXY COATED ACCORDING TO THE STANDARD SPECIFICATIONS.

CLASS AA (4500 PSI) CONCRETE SHALL BE USED IN PRECAST PIECE EB242.

DOWELS SHALL BE PRESET IN THE PRECAST CAP IN THE LOCATIONS SHOWN ON THE PLANS. DRILLING AND ADHESIVE ANCHORING OF THE DOWELS AFTER CASTING MUST BE APPROVED BY THE ENGINEER.

TWO LIFTING LOOPS SHALL BE ALLOWED IN THE PRECAST PIECE IN ACCORDANCE WITH ARTICLE 1077-10 OF THE STANDARD SPECIFICATIONS WITH THE FOLLOWING ADDITIONS. THE LIFTING LOOPS SHALL BE BURNED OFF PRIOR TO PLACING THE ELASTOMERIC BEARING PADS. THE ENDS OF THE LIFTING LOOPS TO BE BURNED OFF SHALL BE RECESSED AND GROUTED. SEE DETAIL FOR GROUTED RECESS FOR LIFTING LOOPS. GROUT SHALL BE NON-METALLIC AND NON-SHRINK ACCORDING TO THE STANDARD SPECIFICATIONS. PROPOSED DEVICES FOR LIFTING LOOPS SHALL BE DETAILED IN SHOP DRAWINGS.

TWO 4 INCH Ø GROUT PIPES SHALL BE PROVIDED AT EACH PILE BLOCKOUT. THE 4 INCH Ø GROUT PIPES SHALL BE CUT FROM SCHEDULE 40 PVC PIPE AND SHALL BE FIRMLY ANCHORED OR REMOVED PRIOR TO PLACEMENT OF THE GROUT.

THE TOP OF THE PILE BLOCKOUT SHALL BE CHAMFERED 2" IN THE TRANSVERSE DIRECTION.

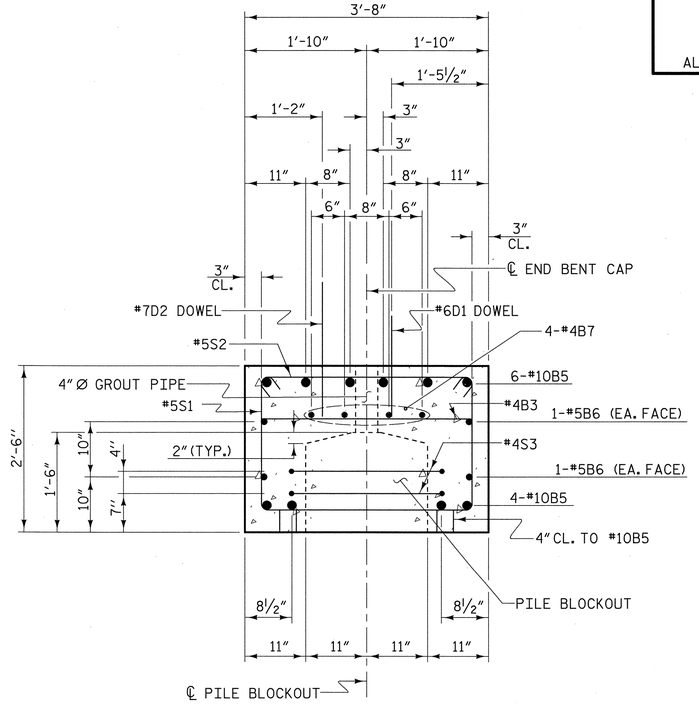

SECTION A-A

BAR TYPES

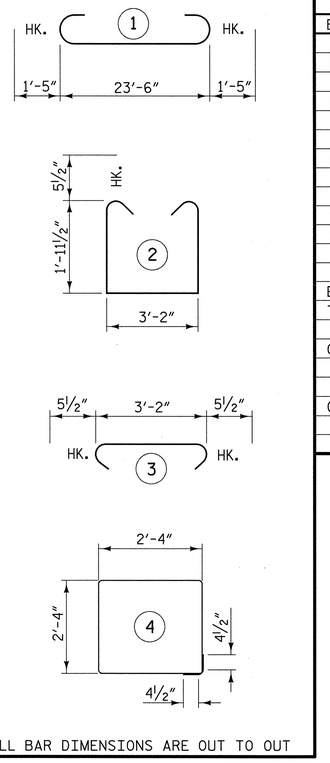

ALL BAR DIMENSIONS ARE OUT TO OUT

BILL OF MATERIAL FOR ONE PIECE EB242

BAR	NO.	SIZE	TYPE	LENGTH	WEIGHT
B3	8	#4	STR	3'-3"	17
B5	10	#10	1	26'-4"	1133
B6	4	#5	STR	23'-7"	98
B7	4	#4	STR	23'-7"	63
D1	14	#6	STR	1'-6"	32
D2	18	#7	STR	2'-0"	74
S1	20	#5	2	8'-0"	167
S2	20	#5	3	4'-1"	85
S3	8	#4	4	10'-1"	54

EPOXY COATED REINFORCING STEEL
TOTAL 1723 LBS.

CLASS AA (4500 PSI) CONCRETE
7.4 CU. YDS.

GROUT FOR PILE BLOCKOUTS
0.8 CU. YDS.

PLANS PREPARED BY:
MULKEY
ENGINEERS & CONSULTANTS
PO Box 33127
Raleigh, N.C. 27636
(919) 851-1918
(919) 851-1918 (FAX)
WWW.MULKEYINC.COM

PROJECT NO. 42287
PAMLICO COUNTY
STATION: 15+65.09 -L-

REPLACES BRIDGE NO. 42

STATE OF NORTH CAROLINA
DEPARTMENT OF TRANSPORTATION
RALEIGH

PRECAST PIECE EB242

33'-10" CLEAR ROADWAY - 90° SKEW

REVISIONS						SHEET NO.
NO.	BY:	DATE:	NO.	BY:	DATE:	138
1			3			TOTAL SHEETS
2			4			185

DRAWN BY : W. B. ALLEN DATE : 2/09
CHECKED BY : L. K. AUSTIN DATE : 3/09

6/5/2009 11:32:01 AM R:\Structures\B5295E_SD_EB242_00.dgn

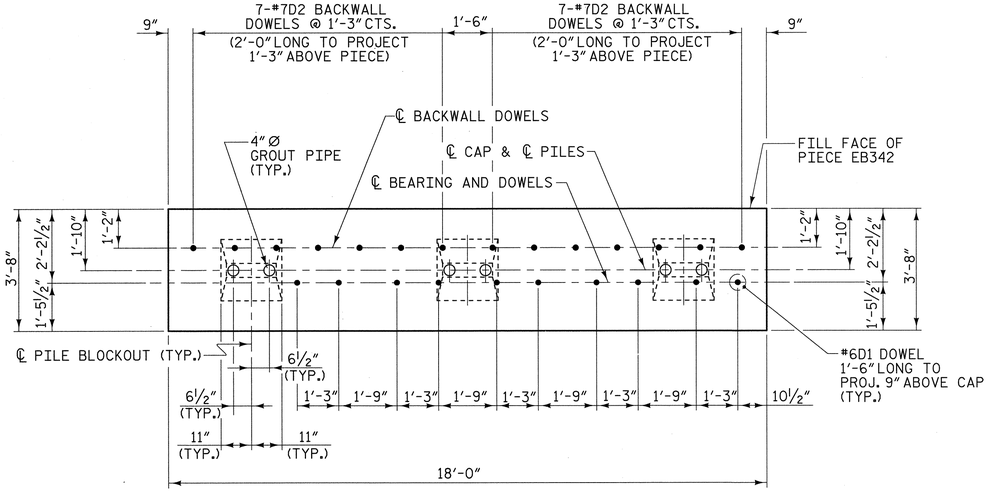

PLAN - PRECAST PIECE EB342

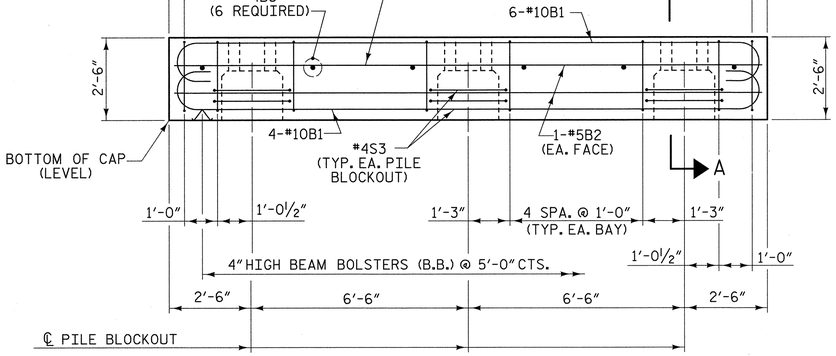

ELEVATION - PRECAST PIECE EB342

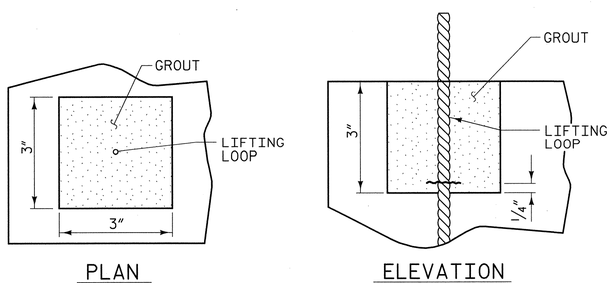

GROUTED RECESS FOR LIFTING LOOPS

LIFTING LOOPS TO BE CUT ¼" ABOVE BOTTOM OF RECESS.

NOTES

STIRRUPS IN PRECAST PIECE EB342 MAY BE SHIFTED AS NECESSARY TO CLEAR DOWELS AND GROUT PIPES.

ALL REINFORCING STEEL AND BAR SUPPORTS SHALL BE EPOXY COATED ACCORDING TO THE STANDARD SPECIFICATIONS.

CLASS AA (4500 PSI) CONCRETE SHALL BE USED IN PRECAST PIECE EB342.

DOWELS SHALL BE PRESET IN THE PRECAST CAP IN THE LOCATIONS SHOWN ON THE PLANS. DRILLING AND ADHESIVE ANCHORING OF THE DOWELS AFTER CASTING MUST BE APPROVED BY THE ENGINEER.

TWO LIFTING LOOPS SHALL BE ALLOWED IN THE PRECAST PIECE IN ACCORDANCE WITH ARTICLE 1077-10 OF THE STANDARD SPECIFICATIONS WITH THE FOLLOWING ADDITIONS. THE LIFTING LOOPS SHALL BE BURNED OFF PRIOR TO PLACING THE ELASTOMERIC BEARING PADS. THE ENDS OF THE LIFTING LOOPS TO BE BURNED OFF SHALL BE RECESSED AND GROUTED. SEE DETAIL FOR GROUTED RECESS FOR LIFTING LOOPS. GROUT SHALL BE NON-METALLIC AND NON-SHRINK ACCORDING TO THE STANDARD SPECIFICATIONS. PROPOSED DEVICES FOR LIFTING LOOPS SHALL BE DETAILED IN SHOP DRAWINGS.

TWO 4 INCH Ø GROUT PIPES SHALL BE PROVIDED AT EACH PILE BLOCKOUT. THE 4 INCH Ø GROUT PIPES SHALL BE CUT FROM SCHEDULE 40 PVC PIPE AND SHALL BE FIRMLY ANCHORED OR REMOVED PRIOR TO PLACEMENT OF THE GROUT.

THE TOP OF THE PILE BLOCKOUT SHALL BE CHAMFERED 2" IN THE TRANSVERSE DIRECTION.

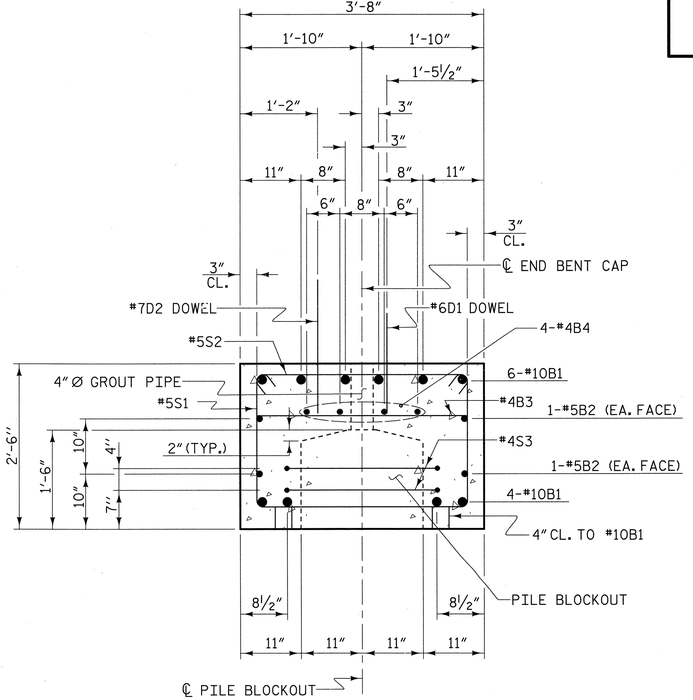

SECTION A-A

BAR TYPES

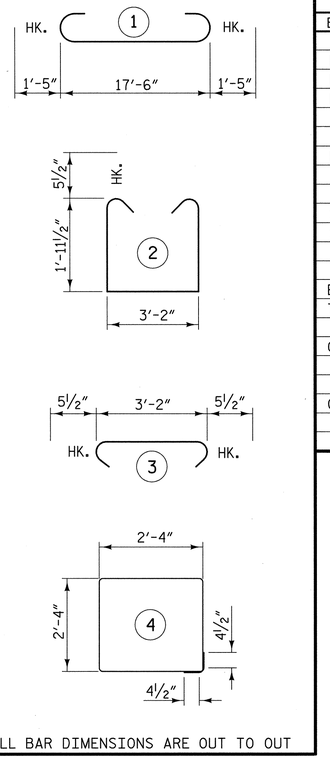

ALL BAR DIMENSIONS ARE OUT TO OUT

BILL OF MATERIAL FOR ONE PIECE EB342

BAR	NO.	SIZE	TYPE	LENGTH	WEIGHT
B1	10	#10	1	20'-4"	875
B2	4	#5	STR	17'-7"	73
B3	6	#4	STR	3'-3"	13
B4	4	#4	STR	17'-7"	47
D1	10	#6	STR	1'-6"	23
D2	14	#7	STR	2'-0"	57
S1	14	#5	2	8'-0"	117
S2	14	#5	3	4'-1"	60
S3	6	#4	4	10'-1"	40

EPOXY COATED REINFORCING STEEL TOTAL 1305 LBS.

CLASS AA (4500 PSI) CONCRETE 5.5 CU. YDS.

GROUT FOR PILE BLOCKOUTS 0.6 CU. YDS.

PROJECT NO. 42287

PAMLICO COUNTY

STATION: 15+65.09 -L-

REPLACES BRIDGE NO. 42

STATE OF NORTH CAROLINA
DEPARTMENT OF TRANSPORTATION
RALEIGH

PRECAST PIECE EB342

33'-10" CLEAR ROADWAY - 90° SKEW

NORTH CAROLINA PROFESSIONAL ENGINEER SEAL 19661 L. KEVIN AUSTIN 6/7/09

PLANS PREPARED BY:

MULKEY ENGINEERS & CONSULTANTS
PO Box 33127
RALEIGH, N.C. 27636
(919) 851-1912
(919) 851-1918 (FAX)
WWW.MULKEYINC.COM

REVISIONS						SHEET NO.
NO.	BY:	DATE:	NO.	BY:	DATE:	139
1			3			TOTAL SHEETS
2			4			185

DRAWN BY : W. B. ALLEN DATE : 2/09
CHECKED BY : L. K. AUSTIN DATE : 3/09

6/5/2009 11:39:13 AM R:\Structures\EB\29E_SD_EBCC.dgn

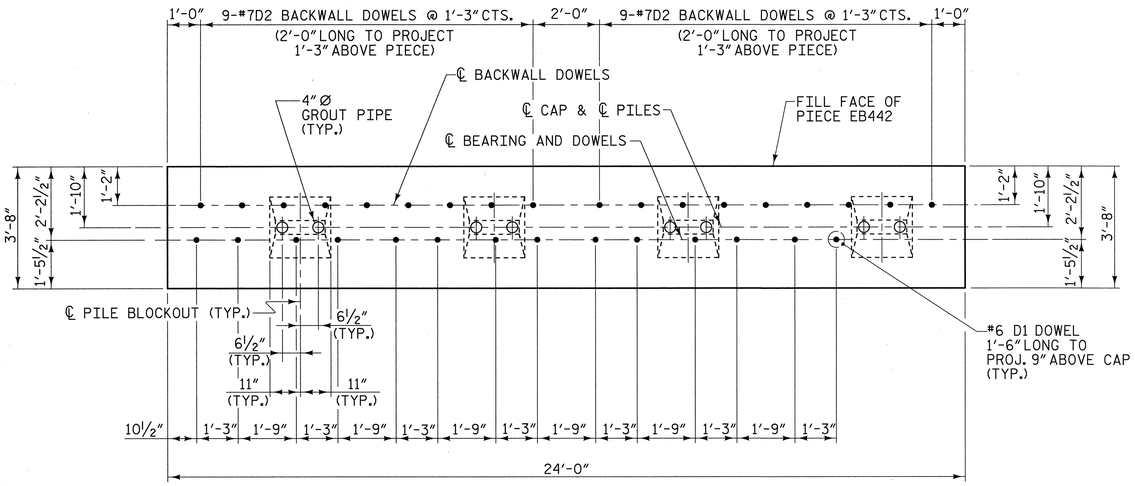

PLAN - PRECAST PIECE EB442

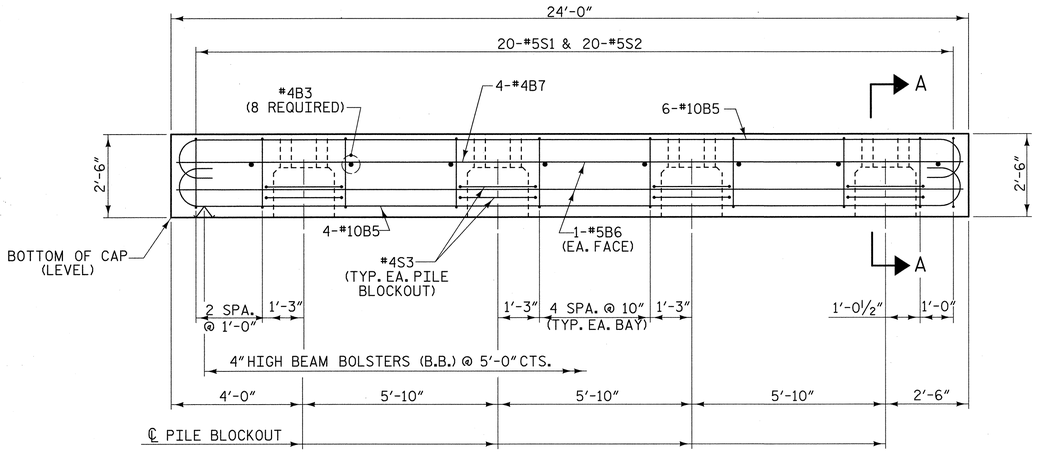

ELEVATION - PRECAST PIECE EB442

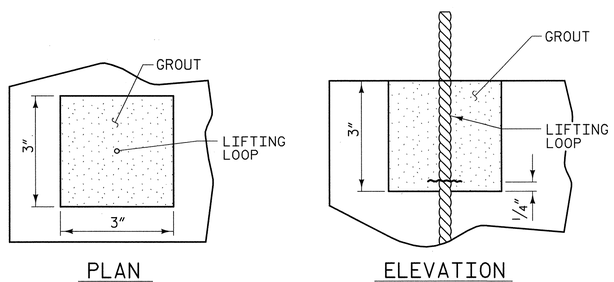

GROUTED RECESS FOR LIFTING LOOPS

LIFTING LOOPS TO BE CUT ¼" ABOVE BOTTOM OF RECESS.

NOTES

STIRRUPS IN PRECAST PIECE EB442 MAY BE SHIFTED AS NECESSARY TO CLEAR DOWELS AND GROUT PIPES.

ALL REINFORCING STEEL AND BAR SUPPORTS SHALL BE EPOXY COATED ACCORDING TO THE STANDARD SPECIFICATIONS.

CLASS AA (4500 PSI) CONCRETE SHALL BE USED IN PRECAST PIECE EB442.

DOWELS SHALL BE PRESET IN THE PRECAST CAP IN THE LOCATIONS SHOWN ON THE PLANS. DRILLING AND ADHESIVE ANCHORING OF THE DOWELS AFTER CASTING MUST BE APPROVED BY THE ENGINEER.

TWO LIFTING LOOPS SHALL BE ALLOWED IN THE PRECAST PIECE IN ACCORDANCE WITH ARTICLE 1077-10 OF THE STANDARD SPECIFICATIONS WITH THE FOLLOWING ADDITIONS. THE LIFTING LOOPS SHALL BE BURNED OFF PRIOR TO PLACING THE ELASTOMERIC BEARING PADS. THE ENDS OF THE LIFTING LOOPS TO BE BURNED OFF SHALL BE RECESSED AND GROUTED. SEE DETAIL FOR GROUTED RECESS FOR LIFTING LOOPS. GROUT SHALL BE NON-METALLIC AND NON-SHRINK ACCORDING TO THE STANDARD SPECIFICATIONS. PROPOSED DEVICES FOR LIFTING LOOPS SHALL BE DETAILED IN SHOP DRAWINGS.

TWO 4 INCH Ø GROUT PIPES SHALL BE PROVIDED AT EACH PILE BLOCKOUT. THE 4 INCH Ø GROUT PIPES SHALL BE CUT FROM SCHEDULE 40 PVC PIPE AND SHALL BE FIRMLY ANCHORED OR REMOVED PRIOR TO PLACEMENT OF THE GROUT.

THE TOP OF THE PILE BLOCKOUT SHALL BE CHAMFERED 2" IN TRANSVERSE DIRECTION.

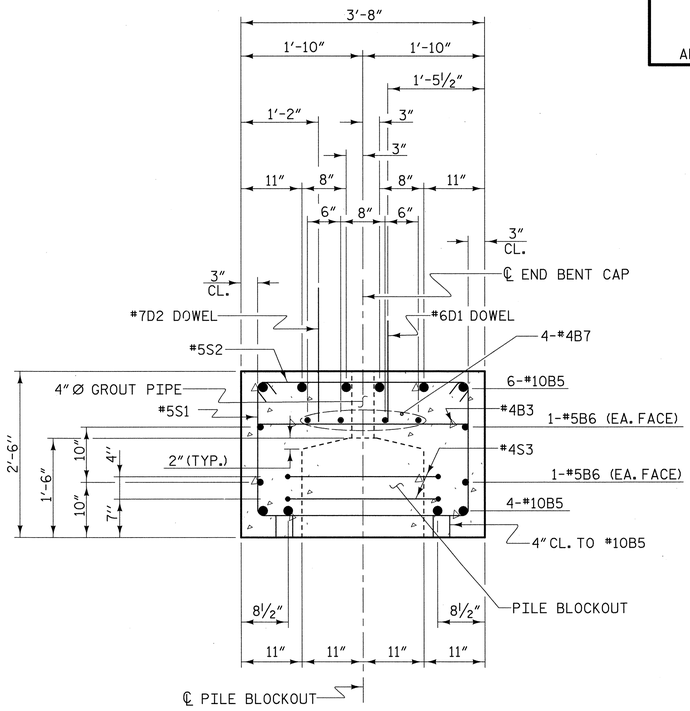

SECTION A-A

BAR TYPES

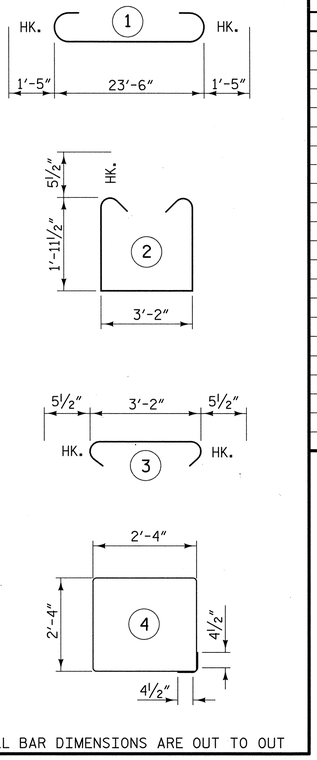

ALL BAR DIMENSIONS ARE OUT TO OUT

BILL OF MATERIAL FOR ONE PIECE EB442

BAR	NO.	SIZE	TYPE	LENGTH	WEIGHT
B3	8	#4	STR	3'-3"	17
B5	10	#10	1	26'-4"	1133
B6	4	#5	STR	23'-7"	98
B7	4	#4	STR	23'-7"	63
D1	14	#6	STR	1'-6"	32
D2	18	#7	STR	2'-0"	74
S1	20	#5	2	8'-0"	167
S2	20	#5	3	4'-1"	85
S3	8	#4	4	10'-1"	54
EPOXY COATED REINFORCING STEEL					
TOTAL					1723 LBS.
CLASS AA (4500 PSI) CONCRETE					
				7.4 CU. YDS.	
GROUT FOR PILE BLOCKOUTS					
				0.8 CU. YDS.	

PROJECT NO. 42287

PAMLICO COUNTY

STATION: 15+65.09 -L-

REPLACES BRIDGE NO. 42

STATE OF NORTH CAROLINA
DEPARTMENT OF TRANSPORTATION
RALEIGH

PRECAST PIECE EB442

33'-10" CLEAR ROADWAY - 90° SKEW

NORTH CAROLINA PROFESSIONAL SEAL 19661 ENGINEER L. KEVIN AUSTIN 6/7/09

PLANS PREPARED BY:

MULKEY
ENGINEERS & CONSULTANTS
PO Box 33127
RALEIGH, N.C. 27636
(919) 851-1913
(919) 851-1918 (FAX)
WWW.MULKEYINC.COM

REVISIONS					
NO.	BY:	DATE:	NO.	BY:	DATE:
1			3		
2			4		

SHEET NO. 140

TOTAL SHEETS 185

DRAWN BY : W. B. ALLEN DATE : 2/09
CHECKED BY : L. K. AUSTIN DATE : 3/09

6/5/2009 11:30:39 AM R:\Structures\B5929E_SD_EB02_01.dgn

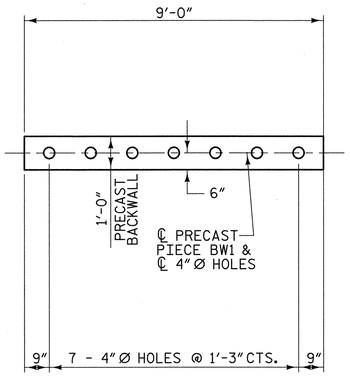

PLAN - PRECAST PIECE BW1

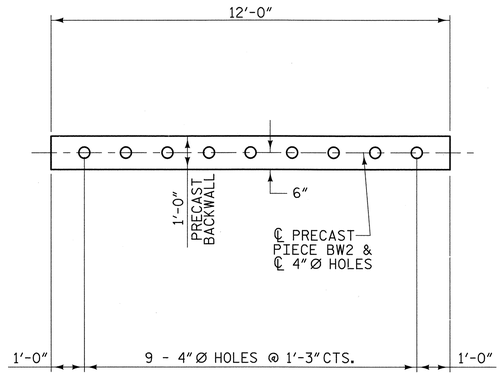

PLAN - PRECAST PIECE BW2

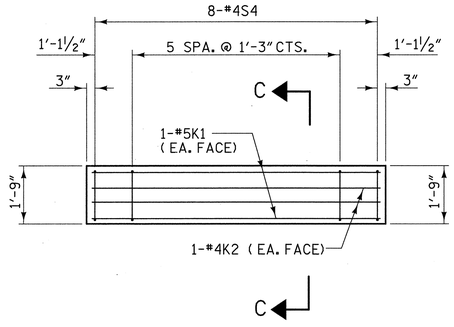

ELEVATION - PRECAST PIECE BW1

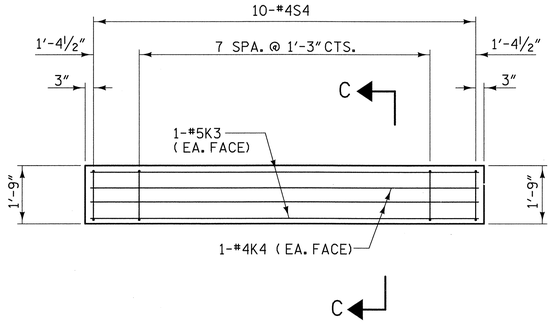

ELEVATION - PRECAST PIECE BW2

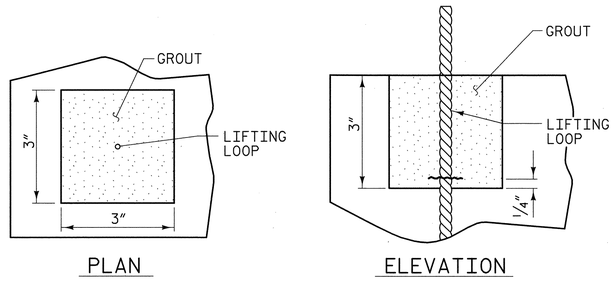

GROUTED RECESS FOR LIFTING LOOPS

LIFTING LOOPS TO BE CUT ¼″ ABOVE BOTTOM OF RECESS.

NOTES

ALL REINFORCING STEEL AND BAR SUPPORTS SHALL BE EPOXY COATED ACCORDING TO THE STANDARD SPECIFICATIONS.

CLASS AA (4500 PSI) CONCRETE SHALL BE USED IN PRECAST PIECES BW1 & BW2.

TWO LIFTING LOOPS SHALL BE ALLOWED IN THE PRECAST BACKWALL IN ACCORDANCE WITH ARTICLE 1077-10 OF THE STANDARD SPECIFICATIONS WITH THE FOLLOWING ADDITIONS. THE LIFTING LOOPS TO BE BURNED OFF SHALL BE RECESSED AND GROUTED. SEE DETAIL FOR GROUTED RECESS FOR LIFTING LOOPS. GROUT SHALL BE NON-METALLIC AND NON-SHRINK ACCORDING TO THE STANDARD SPECIFICATIONS. PROPOSED DEVICES FOR LIFTING LOOPS SHALL BE DETAILED IN SHOP DRAWINGS.

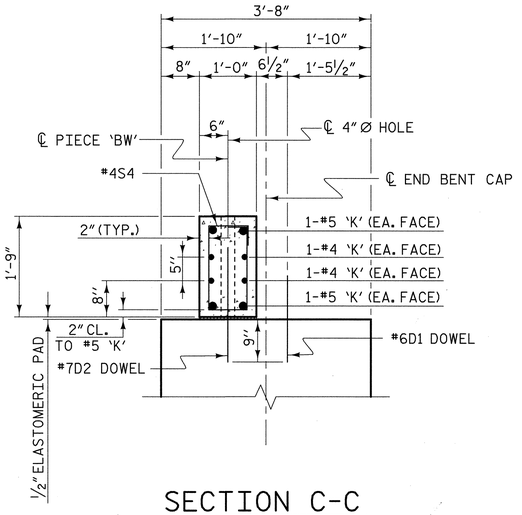

SECTION C-C

BILL OF MATERIAL FOR ONE PIECE BW1

BAR	NO.	SIZE	TYPE	LENGTH	WEIGHT
K1	4	5	STR	8′-8″	36
K2	4	4	STR	8′-8″	23
S4	8	4	1	5′-0″	27
EPOXY COATED REINFORCING STEEL TOTAL					86 LBS
CLASS AA (4500 PSI) CONCRETE					0.5 CU. YDS.

PIECE BW2

BAR	NO.	SIZE	TYPE	LENGTH	WEIGHT
K3	4	5	STR	11′-8″	49
K4	4	4	STR	11′-8″	31
S4	10	4	1	5′-0″	33
EPOXY COATED REINFORCING STEEL TOTAL					113 LBS
CLASS AA (4500 PSI) CONCRETE					0.7 CU. YDS.

BAR TYPES

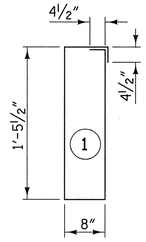

ALL BAR DIMENSIONS ARE OUT TO OUT

PROJECT NO. 42287

PAMLICO COUNTY

STATION: 15+65.09 -L-

REPLACES BRIDGE NO. 42

STATE OF NORTH CAROLINA
DEPARTMENT OF TRANSPORTATION
RALEIGH

PRECAST PIECE BW1 AND PIECE BW2

33′-10″ CLEAR ROADWAY - 90°SKEW

NORTH CAROLINA PROFESSIONAL ENGINEER SEAL 19661 L. KEVIN AUSTIN 6/7/09

PLANS PREPARED BY:

MULKEY ENGINEERS & CONSULTANTS
PO Box 33127
RALEIGH, N.C. 27636
(919) 851-1982
(919) 851-1918 (FAX)
WWW.MULKEYINC.COM

REVISIONS						SHEET NO.
NO.	BY:	DATE:	NO.	BY:	DATE:	141
1			3			TOTAL SHEETS
2			4			185

DRAWN BY : W. B. ALLEN DATE : 2/09
CHECKED BY : L. K. AUSTIN DATE : 3/09

6/5/2009 11:29:48 AM R:\Structures\B5298_SD_BW_0.dgn

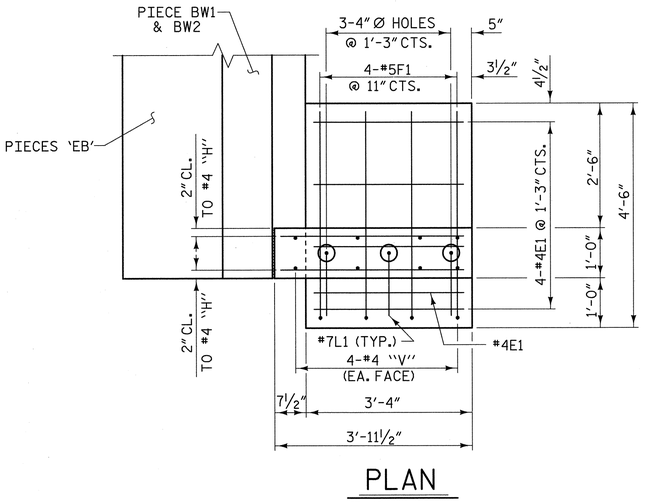

PLAN

NOTES

ALL REINFORCING STEEL AND BAR SUPPORTS SHALL BE EPOXY COATED ACCORDING TO THE STANDARD SPECIFICATIONS.

CLASS AA (4500 PSI) CONCRETE SHALL BE USED IN PRECAST PIECE WF1 AND PRECAST PIECE WW1.

TWO LIFTING LOOPS SHALL BE ALLOWED IN THE PRECAST WINGWALL AND THE PRECAST WING FOOTING IN ACCORDANCE WITH ARTICLE 1077-10 OF THE STANDARD SPECIFICATIONS WITH THE FOLLOWING ADDITIONS. THE LIFTING LOOPS TO BE BURNED OFF SHALL BE RECESSED AND GROUTED. SEE DETAIL FOR GROUTED RECESS FOR LIFTING LOOPS. GROUT SHALL BE NON-METALLIC AND NON-SHRINK ACCORDING TO THE STANDARD SPECIFICATIONS. PROPOSED DEVICES FOR LIFTING LOOPS SHALL BE DETAILED IN SHOP DRAWINGS.

BAR TYPES

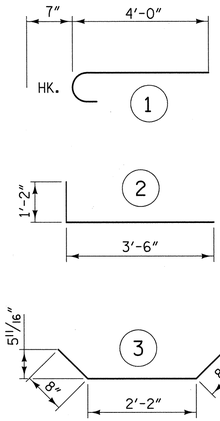

ALL BAR DIMENSIONS ARE OUT TO OUT

BILL OF MATERIAL FOR ONE PIECE WF1

BAR	NO.	SIZE	TYPE	LENGTH	WEIGHT
E1	5	4	STR	3'-0"	10
F1	4	5	1	4'-7"	19
L1	3	7	2	4'-8"	28
EPOXY COATED REINFORCING STEEL TOTAL					57 LBS.
CLASS AA (4500 PSI) CONCRETE					0.6 CU. YDS.

PIECE WW1

BAR	NO.	SIZE	TYPE	LENGTH	WEIGHT
H1	4	4	STR	3'-0"	8
H2	4	4	STR	3'-7"	10
S1	2	4	3	3'-6"	5
V1	6	4	STR	2'-11"	12
V2	2	4	STR	1'-5"	2
EPOXY COATED REINFORCING STEEL TOTAL					37 LBS.
CLASS AA (4500 PSI) CONCRETE					0.5 CU. YDS.

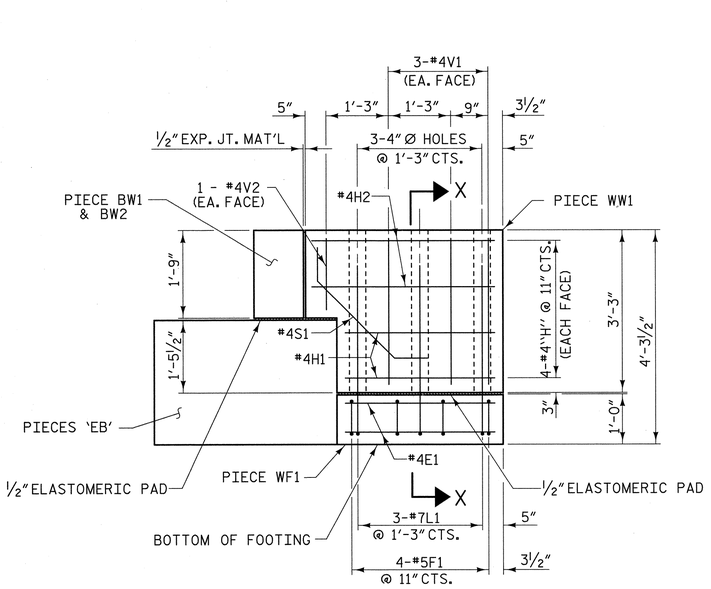

ELEVATION

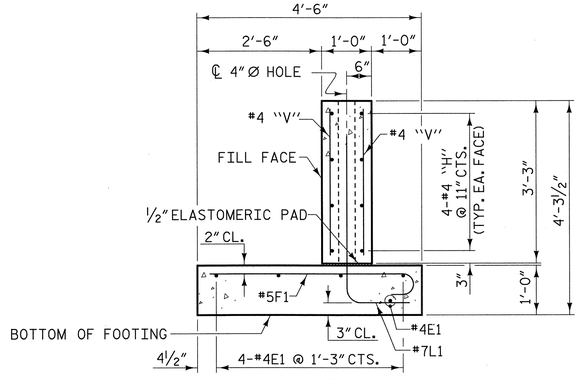

SECTION X-X

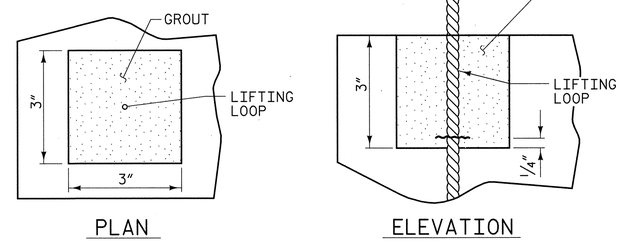

PLAN ELEVATION

GROUTED RECESS FOR LIFTING LOOPS

LIFTING LOOPS TO BE CUT ¼" ABOVE BOTTOM OF RECESS.

PROJECT NO. 42287

PAMLICO COUNTY

STATION: 15+65.09 -L-

REPLACES BRIDGE NO. 42

STATE OF NORTH CAROLINA
DEPARTMENT OF TRANSPORTATION
RALEIGH

PRECAST PIECE WW1 AND PIECE WF1

33'-10" CLEAR ROADWAY - 90° SKEW

NORTH CAROLINA PROFESSIONAL ENGINEER SEAL 19661 L. KEVIN AUSTIN 6/7/09

PLANS PREPARED BY:

MULKEY
ENGINEERS & CONSULTANTS
P.O. Box 33127
Raleigh, N.C. 27636
(919) 851-1912
(919) 851-1918 (FAX)
www.mulkeyinc.com

REVISIONS						SHEET NO.
NO.	BY:	DATE:	NO.	BY:	DATE:	142
1			3			TOTAL SHEETS
2			4			185

DRAWN BY : W. B. ALLEN DATE : 2/09
CHECKED BY : L. K. AUSTIN DATE : 3/09

6/5/2009 lis29d09 AM R:\Structures\B5929E_SD_WW_01.dgn

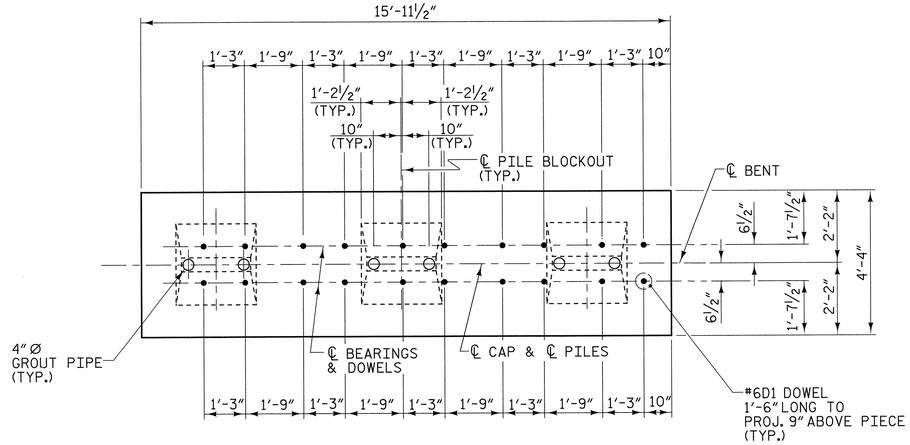

PLAN - PRECAST PIECE B142

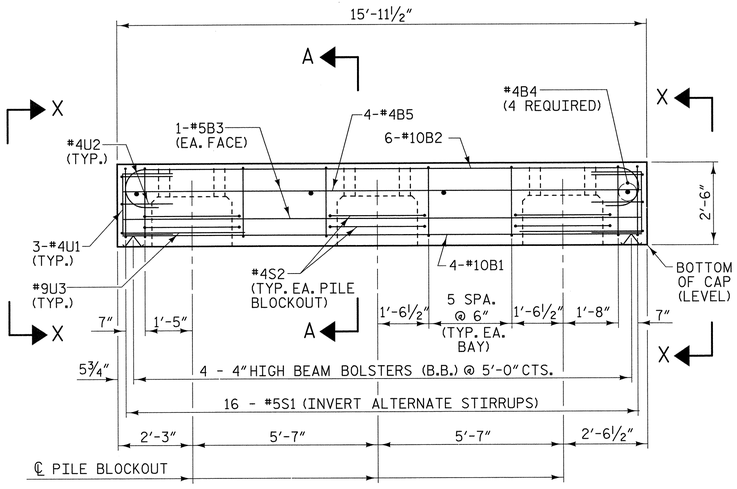

ELEVATION - PRECAST PIECE B142

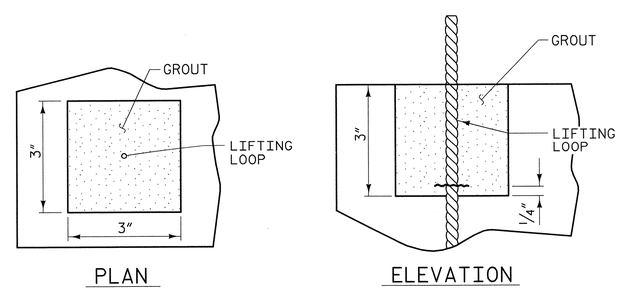

GROUTED RECESS FOR LIFTING LOOPS

LIFTING LOOPS TO BE CUT ¼" ABOVE BOTTOM OF RECESS.

NOTES

STIRRUPS IN PRECAST PIECE B142 MAY BE SHIFTED AS NECESSARY TO CLEAR DOWELS AND GROUT PIPES.

ALL REINFORCING STEEL AND BAR SUPPORTS SHALL BE EPOXY COATED ACCORDING TO THE STANDARD SPECIFICATIONS.

CLASS AA (4500 PSI) CONCRETE SHALL BE USED IN PRECAST PIECE B142.

DOWELS SHALL BE PRESET IN THE PRECAST CAP IN THE LOCATIONS SHOWN ON THE PLANS. DRILLING AND ADHESIVE ANCHORING OF THE DOWELS AFTER CASTING MUST BE APPROVED BY THE ENGINEER.

TWO LIFTING LOOPS SHALL BE ALLOWED IN THE PRECAST PIECE IN ACCORDANCE WITH ARTICLE 1077-10 OF THE STANDARD SPECIFICATIONS WITH THE FOLLOWING ADDITIONS. THE LIFTING LOOPS SHALL BE BURNED OFF PRIOR TO PLACING THE ELASTOMERIC BEARING PADS. THE ENDS OF THE LIFTING LOOPS TO BE BURNED OFF SHALL BE RECESSED AND GROUTED. SEE DETAIL FOR GROUTED RECESS FOR LIFTING LOOPS. GROUT SHALL BE NON-METALLIC AND NON-SHRINK ACCORDING TO THE STANDARD SPECIFICATIONS. PROPOSED DEVICES FOR LIFTING LOOPS SHALL BE DETAILED IN SHOP DRAWINGS.

TWO 4 INCH Ø GROUT PIPES SHALL BE PROVIDED AT EACH PILE BLOCKOUT. THE 4 INCH Ø GROUT PIPES SHALL BE CUT FROM SCHEDULE 40 PVC PIPE AND SHALL BE FIRMLY ANCHORED OR REMOVED PRIOR TO PLACEMENT OF THE GROUT.

THE TOP OF THE PILE BLOCKOUT SHALL BE CHAMFERED 2" ALL IN THE TRANSVERSE DIRECTION.

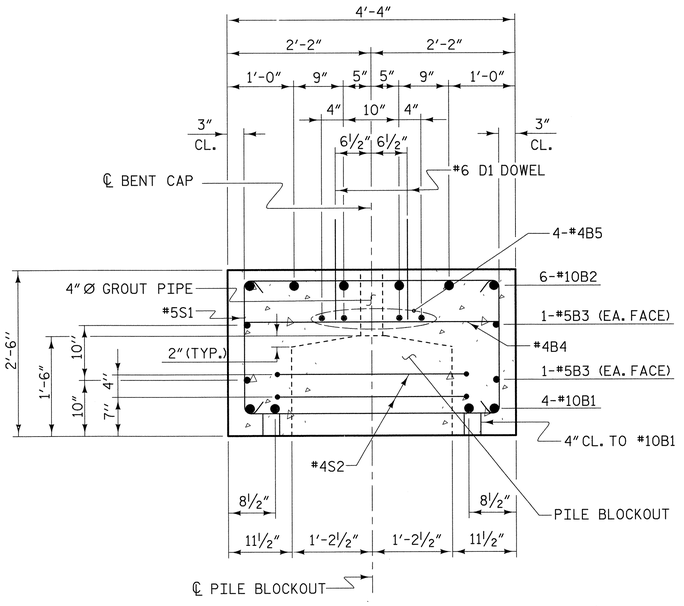

SECTION A-A

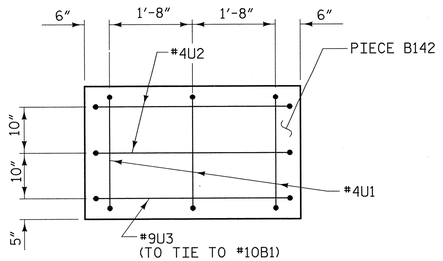

VIEW X-Y

BAR TYPES

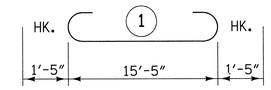

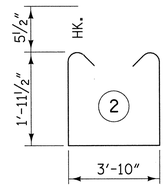

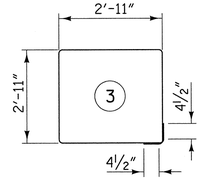

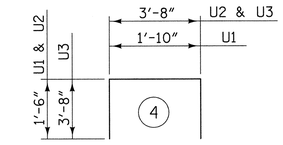

ALL BAR DIMENSIONS ARE OUT TO OUT

BILL OF MATERIAL FOR ONE PIECE B142

BAR	NO.	SIZE	TYPE	LENGTH	WEIGHT
B1	4	#10	STR	15'-5"	265
B2	6	#10	1	18'-3"	471
B3	4	#5	STR	15'-5"	64
B4	4	#4	STR	3'-11"	10
B5	4	#4	STR	15'-5"	41
D1	20	#6	STR	1'-6"	45
S1	16	#5	2	8'-8"	145
S2	6	#4	3	12'-5"	50
U1	6	#4	4	4'-10"	19
U2	4	#4	4	6'-8"	18
U3	2	#9	4	11'-0"	75

TOTAL EPOXY COATED REINFORCING STEEL 1203 LBS.

CLASS AA (4500 PSI) CONCRETE 5.4 CU. YDS.

GROUT FOR PILE BLOCKOUTS 1.0 CU. YDS.

PROJECT NO. 42287

PAMLICO COUNTY

STATION: 15+65.09 -L-

REPLACES BRIDGE NO. 42

STATE OF NORTH CAROLINA
DEPARTMENT OF TRANSPORTATION
RALEIGH

PRECAST PIECE B142

33'-10" CLEAR ROADWAY - 90°SKEW

NORTH CAROLINA PROFESSIONAL SEAL 1966 ENGINEER L. KEVIN AUSTIN 8/6/09

PLANS PREPARED BY:

MULKEY
ENGINEERS & CONSULTANTS
PO Box 33127
Raleigh, N.C. 27636
(919) 851-1918
(919) 851-1918 (FAX)
WWW.MULKEYINC.COM

REVISIONS						SHEET NO.
NO.	BY:	DATE:	NO.	BY:	DATE:	143
1			3			TOTAL SHEETS
2			4			185

DRAWN BY : W. B. ALLEN DATE : 2/09
CHECKED BY : L. K. AUSTIN DATE : 3/09

8/6/2009 6:07:57 AM G:\projects\2004\224\LP_Pamlico42\Structures\B529E_SD_BCA_0.dgn

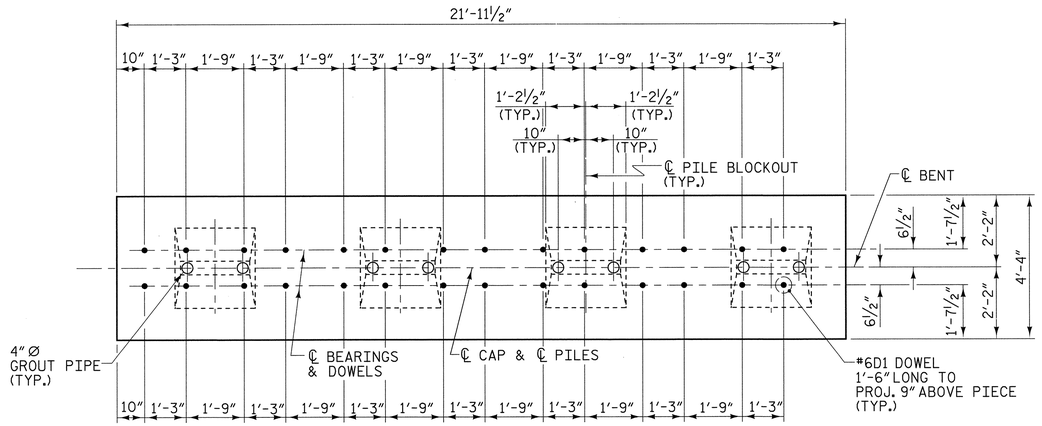

PLAN - PRECAST PIECE B242

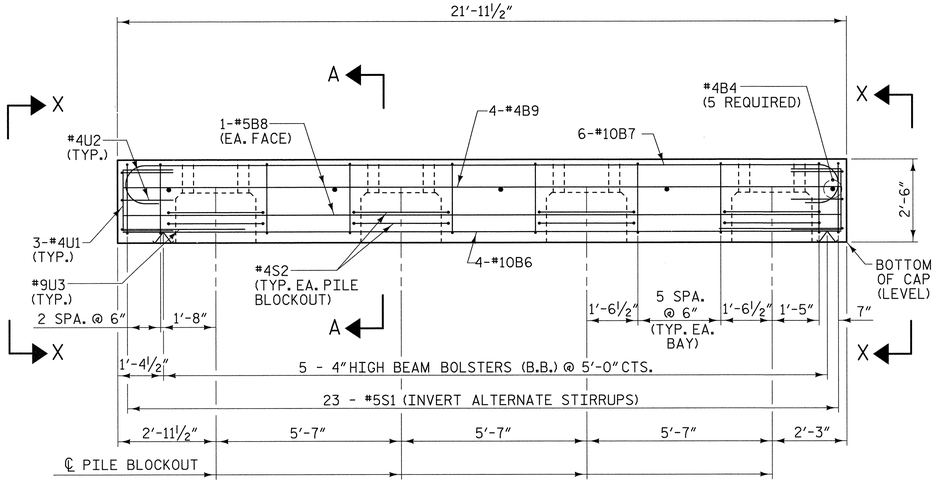

ELEVATION - PRECAST PIECE B242

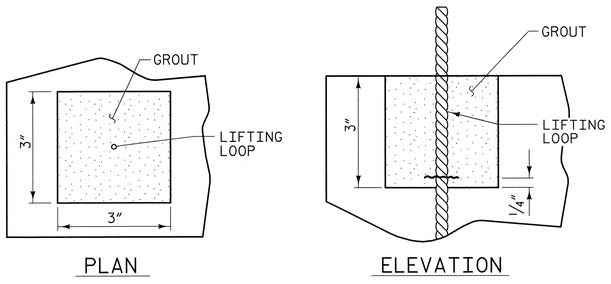

GROUTED RECESS FOR LIFTING LOOPS

LIFTING LOOPS TO BE CUT ¼" ABOVE BOTTOM OF RECESS.

NOTES

STIRRUPS IN PRECAST PIECE B242 MAY BE SHIFTED AS NECESSARY TO CLEAR DOWELS AND GROUT PIPES.

ALL REINFORCING STEEL AND BAR SUPPORTS SHALL BE EPOXY COATED ACCORDING TO THE STANDARD SPECIFICATIONS.

CLASS AA (4500 PSI) CONCRETE SHALL BE USED IN PRECAST PIECE B242.

DOWELS SHALL BE PRESET IN THE PRECAST CAP IN THE LOCATIONS SHOWN ON THE PLANS. DRILLING AND ADHESIVE ANCHORING OF THE DOWELS AFTER CASTING MUST BE APPROVED BY THE ENGINEER.

TWO LIFTING LOOPS SHALL BE ALLOWED IN THE PRECAST PIECE IN ACCORDANCE WITH ARTICLE 1077-10 OF THE STANDARD SPECIFICATIONS WITH THE FOLLOWING ADDITIONS. THE LIFTING LOOPS SHALL BE BURNED OFF PRIOR TO PLACING THE ELASTOMERIC BEARING PADS. THE ENDS OF THE LIFTING LOOPS TO BE BURNED OFF SHALL BE RECESSED AND GROUTED. SEE DETAIL FOR GROUTED RECESS FOR LIFTING LOOPS. GROUT SHALL BE NON-METALLIC AND NON-SHRINK ACCORDING TO THE STANDARD SPECIFICATIONS. PROPOSED DEVICES FOR LIFTING LOOPS SHALL BE DETAILED IN SHOP DRAWINGS.

TWO 4 INCH Ø GROUT PIPES SHALL BE PROVIDED AT EACH PILE BLOCKOUT. THE 4 INCH Ø GROUT PIPES SHALL BE CUT FROM SCHEDULE 40 PVC PIPE AND SHALL BE FIRMLY ANCHORED OR REMOVED PRIOR TO PLACEMENT OF THE GROUT.

THE TOP OF THE PILE BLOCKOUT SHALL BE CHAMFERED 2" IN THE TRANSVERSE DIRECTION.

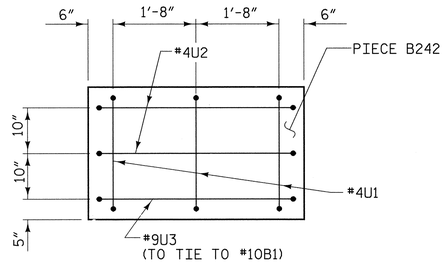

VIEW X-X

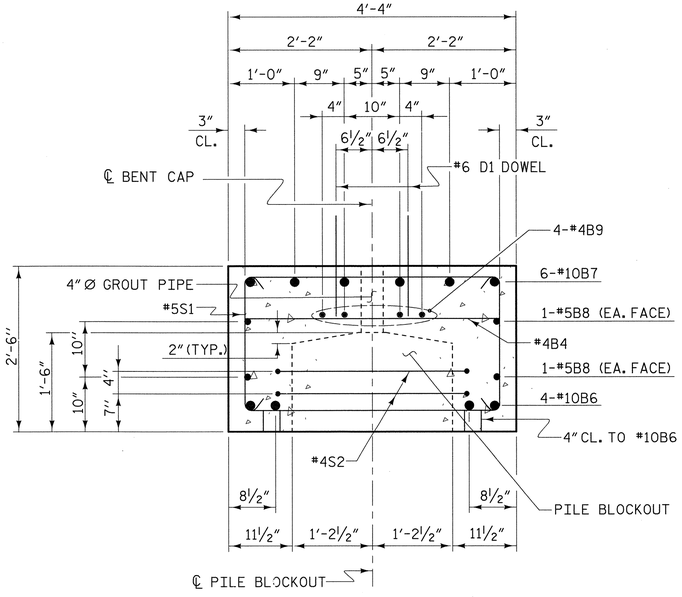

SECTION A-A

BAR TYPES

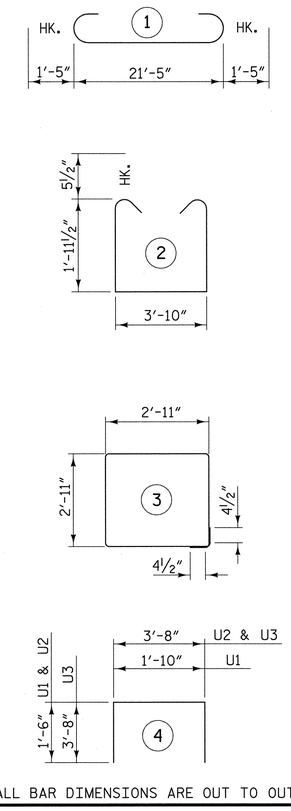

ALL BAR DIMENSIONS ARE OUT TO OUT

BILL OF MATERIAL FOR ONE PIECE B242

BAR	NO.	SIZE	TYPE	LENGTH	WEIGHT
B4	5	#4	STR	3'-11"	13
B6	4	#10	STR	21'-5"	369
B7	6	#10	1	24'-3"	626
B8	4	#5	STR	21'-5"	89
B9	4	#4	STR	21'-5"	57
D1	28	#6	STR	1'-6"	63
S1	23	#5	2	8'-8"	208
S2	8	#4	3	12'-5"	66
U1	6	#4	4	4'-10"	19
U2	4	#4	4	6'-8"	18
U3	2	#9	4	11'-0"	75

TOTAL EPOXY COATED REINFORCING STEEL 1603 LBS.

CLASS AA (4500 PSI) CONCRETE 7.5 CU. YDS.

GROUT FOR PILE BLOCKOUTS 1.3 CU. YDS.

PROJECT NO. 42287

PAMLICO COUNTY

STATION: 15+65.09 -L-

REPLACES BRIDGE NO. 42

STATE OF NORTH CAROLINA
DEPARTMENT OF TRANSPORTATION
RALEIGH

PRECAST PIECE B242

33'-10" CLEAR ROADWAY - 90°SKEW

NORTH CAROLINA PROFESSIONAL SEAL 1966 ENGINEER KEVIN AUSTIN 8/6/09

PLANS PREPARED BY:

MULKEY
ENGINEERS & CONSULTANTS
PO Box 33127
Raleigh, N.C. 27636
(919) 851-1912
(919) 851-1918 (FAX)
WWW.MULKEYINC.COM

REVISIONS						SHEET NO.
NO.	BY:	DATE:	NO.	BY:	DATE:	144
1			3			TOTAL SHEETS
2			4			185

DRAWN BY : W. B. ALLEN DATE : 2/09
CHECKED BY : L. K. AUSTIN DATE : 3/09

8/6/2009 6:09:25 AM G:\project\2004\224\B_Pamlico42\Structures\B5096_SD_BCB_04.dgn

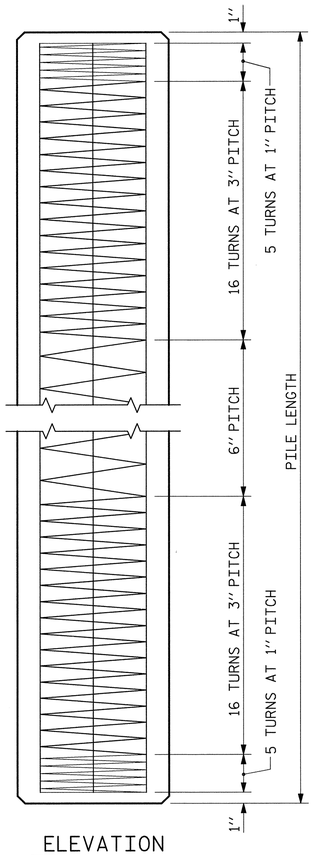

ELEVATION

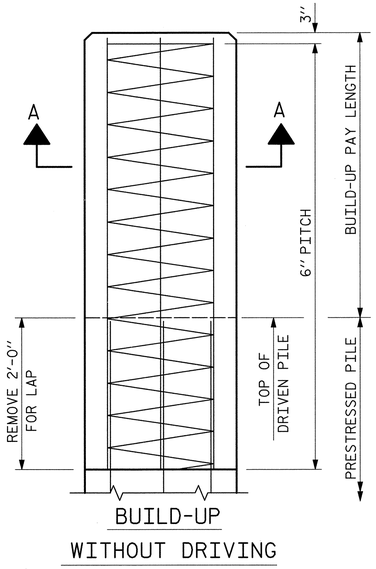

BUILD-UP
WITHOUT DRIVING

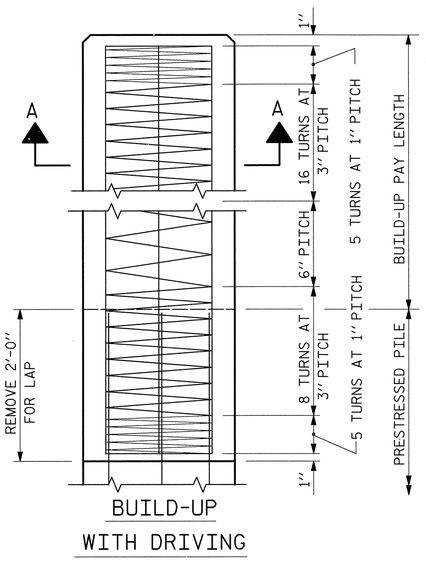

BUILD-UP
WITH DRIVING

QUANTITIES FOR ONE 20'' SQUARE PILE						
	CONCRETE	PILE WT.	ONE PICK-UP POINTS		TWO PICK-UP POINTS	
LENGTH	CU. YDS.	TONS	0.3L	0.7L	0.207L	0.586L
25'-0''	2.56	5.18	7'-6''	17'-6''		
30'-0''	3.07	6.22	9'-0''	21'-0''		
35'-0''	3.58	7.26	10'-6''	24'-6''		
40'-0''	4.09	8.29	12'-0''	28'-0''		
45'-0''	4.61	9.33	13'-6''	31'-6''		
50'-0''	5.12	10.36	15'-0''	35'-0''		
55'-0''	5.63	11.40	16'-6''	38'-6''		
60'-0''	6.14	12.44	18'-0''	42'-0''		
65'-0''	6.65	13.47			13'-5½''	38'-1''
70'-0''	7.17	14.51			14'-6''	41'-0''
75'-0''	7.68	15.55			15'-6½''	43'-11''
80'-0''	8.19	16.58			16'-6½''	46'-11''
85'-0''	8.70	17.62			17'-7''	49'-10''

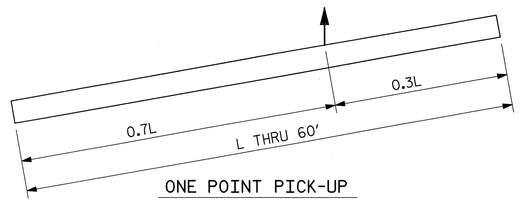

ONE POINT PICK-UP

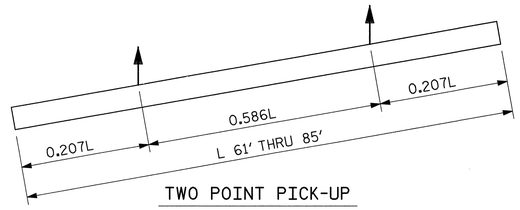

TWO POINT PICK-UP

PICK-UP POINTS

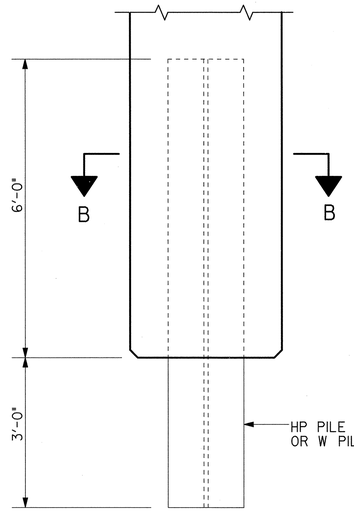

ELEVATION

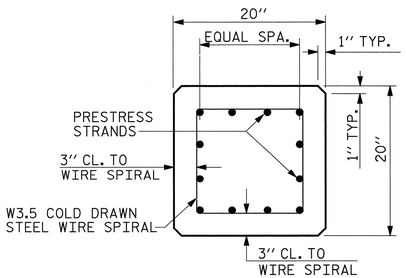

TYPICAL SECTION

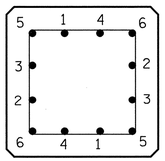

TYPICAL PATTERN
FOR
BURNING STRANDS

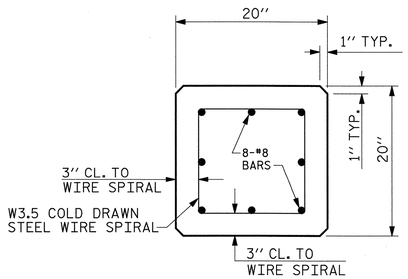

SECTION A-A

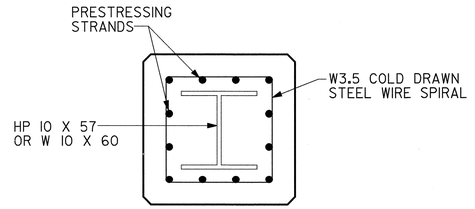

SECTION B-B

PILE TIP DETAILS

NOTES

CONCRETE DESIGN DATA : f'c= 5,000 PSI ;fc= 2,000 PSI

IMPACT IN HANDLING = 50%

IN DRIVING PILES, A METHOD APPROVED BY THE ENGINEER SHALL BE USED, WHEREBY THE HEAD OF THE PILE IS NOT DAMAGED.

PROPOSED DEVICES FOR LIFTING PILES, RECESS DETAILS, AND PATCHING MATERIAL SHALL BE DETAILED IN SHOP DRAWINGS. AFTER ATTACHMENTS HAVE BEEN REMOVED, OPENINGS SHALL BE REPAIRED SUCH THAT THE APPEARANCE OF THE PILE IS UNIFORM.

THE CONTRACTOR SHALL USE THE FOLLOWING STRAND TYPE:

SIZE	GRADE	NUMBER OF STRANDS	AREA	ULTIMATE STRENGTH	APPLIED PRESTRESS FORCE
½''	270 L.R.	12	0.153	41,300# PER STRAND	30,980# PER STRAND

STRANDS SHALL BE EQUALLY SPACED AS SHOWN IN THE "TYPICAL SECTION".

A CIRCULAR STRAND PATTERN SHALL NOT BE PERMITTED.

THE SLIP-FORM METHOD OF CASTING PILES WILL NOT BE PERMITTED.

IF STRAND STRESS IS RELIEVED BY BURNING, THE STRANDS SHALL BE BURNED IN OPPOSITE PAIRS AS INDICATED IN THE TYPICAL PATTERN SHOWN. FOR ANY NUMBER OF STRANDS BURN IN OPPOSITE PAIRS AND SYMMETRICAL ABOUT BOTH VERTICAL AND HORIZONTAL AXES, STRANDS 1-1 SHALL BE BURNED BEFORE 2-2, ETC. NOT MORE THAN 4 STRANDS, SAY 5-5 AND 6-6, MAY BE BURNED AT ANY ONE SECTION BEFORE THESE SAME PAIRS OF STRANDS ARE BURNED AT BOTH ENDS OF THE BED AND BETWEEN EACH PAIR OF PILES IN THE BED.

BUILD-UPS SHALL BE OF 'CLASS A' CONCRETE WITH 20% ADDITIONAL CEMENT. NO DRIVING OF THE BUILT-UP PILE WILL BE PERMITTED UNTIL THE CONCRETE HAS REACHED A COMPRESSIVE STRENGTH OF 3,000 P.S.I. AND UNTIL A PERIOD OF SEVEN DAYS HAS ELAPSED SINCE CASTING OF THE BUILD-UP.

ALL PRESTRESSING STRANDS SHALL BE 7-WIRE LOW-RELAXATION GRADE 270 STRANDS AND SHALL CONFORM TO AASHTO M203 EXCEPT FOR SAMPLING REQUIREMENTS WHICH SHALL BE IN ACCORDANCE WITH STANDARD SPECIFICATIONS.

THE TRANSFER OF LOAD FROM THE ANCHORAGES TO THE PILE SHALL BE DONE WHEN THE CONCRETE HAS REACHED A COMPRESSIVE STRENGTH OF NOT LESS THAN 3500 PSI.

THE WATER/CEMENT RATIO FOR CONCRETE PILES SHALL NOT EXCEED 0.40.

PROJECT NO. 42287

PAMLICO COUNTY

STATION: 15+65.09 -L-

REPLACES BRIDGE NO. 42 SHEET 1 OF 1

STATE OF NORTH CAROLINA
DEPARTMENT OF TRANSPORTATION
RALEIGH

STANDARD

20'' PRESTRESSED CONCRETE PILE

REVISIONS						SHEET NO.
NO.	BY:	DATE:	NO.	BY:	DATE:	145
1			3			TOTAL SHEETS
2			4			185

STD. NO. PCP3

THIS STANDARD DRAWING REVIEWED & ADOPTED FOR USE AT THE REFERENCED LOCATION BY THE UNDERSIGNED:

NORTH CAROLINA PROFESSIONAL ENGINEER SEAL 19661 L. KEVIN AUSTIN 8/6/09

PLANS PREPARED BY:

MULKEY
ENGINEERS & CONSULTANTS
PO Box 33127
RALEIGH, N.C. 27636
(919) 851-1912
(919) 851-1918 (FAX)
WWW.MULKEYINC.COM

ASSEMBLED BY :	W. B. ALLEN	DATE :	2/09
CHECKED BY :	L. K. AUSTIN	DATE :	3/09
DRAWN BY : WJH 1/89	REV. 6/1/94		EEM/GRP
CHECKED BY : CRK 3/89	REV. 8/16/99R		RAL/LES
	REV. 5/1/06		TLA/GM

8/6/2009 6:09:46 AM G:\project\2004\224.1_Pamlico42\Structures\B509E_SD_PP_0.dgn

EROSION CONTROL PLAN

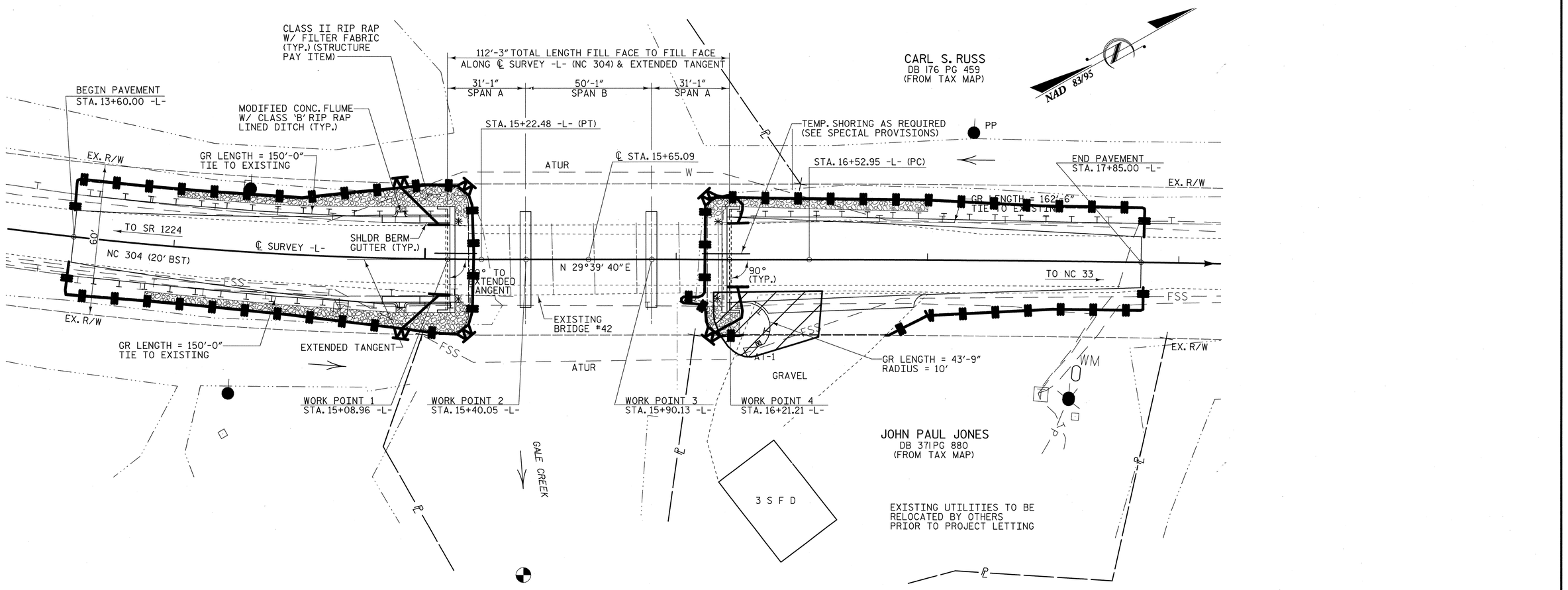

Std. #	Description	Symbol
1605.01	Temporary Silt Fence	
1606.01	Special Sediment Control Fence	
1622.01	Temporary Berms and Slope Drains	

ENVIRONMENTALLY SENSITIVE AREA
PLEASE SEE NOTE

ROADSIDE ENVIRONMENTAL UNIT
DEPARTMENT OF TRANSPORTATION
DIVISION OF HIGHWAYS
RALEIGH, N.C.

2006 STANDARD SPECIFICATIONS

NOTES: ANY DEVIATION FROM OPTIONS GIVEN WILL REQUIRE PRIOR APPROVAL BY ENGINEER.

ADDITIONAL EROSION CONTROL DEVICES MAY NEED TO BE INSTALLED AS DIRECTED BY THE ENGINEER.

PROJECT NO. 42287

PAMLICO COUNTY

STATION: 15+65.09 -L-

REPLACES BRIDGE NO. 42

STATE OF NORTH CAROLINA
DEPARTMENT OF TRANSPORTATION
RALEIGH

BRIDGE ON NC 304
OVER GALE CREEK
BETWEEN SR 1224 & NC 33

33'-10" CLEAR ROADWAY - 90° SKEW

REVISIONS						SHEET NO.
NO.	BY:	DATE:	NO.	BY:	DATE:	146
1			3			TOTAL SHEETS
2			4			185

EROSION CONTROL PLAN

STATE OF NORTH CAROLINA
DEPT. OF TRANSPORTATION
DIVISION OF HIGHWAYS
RALEIGH, N.C.

ENGLISH STANDARD DRAWING FOR
TEMPORARY SILT FENCE

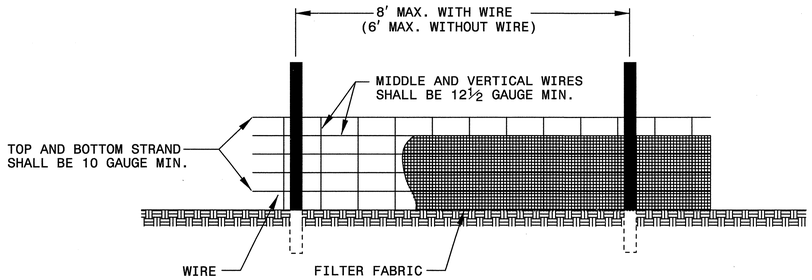

NOTES
USE WIRE A MINIMUM OF 32″ IN WIDTH AND WITH A MINIMUM OF 6 LINE WIRES WITH 12″ STAY SPACING.
USE FILTER FABRIC A MINIMUM OF 36″ IN WIDTH AND FASTEN ADEQUATELY TO THE WIRE AS DIRECTED BY THE ENGINEER.
PROVIDE 5′-0″ STEEL POST OF THE SELF-FASTENER ANGLE STEEL TYPE.

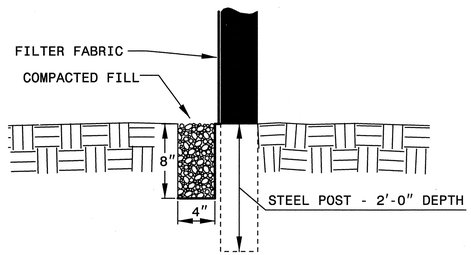

EXTENSION OF FABRIC AND WIRE INTO TRENCH

STATE OF NORTH CAROLINA
DEPT. OF TRANSPORTATION
DIVISION OF HIGHWAYS
RALEIGH, N.C.

ENGLISH STANDARD DRAWING FOR
TEMPORARY SILT FENCE

SHEET 1 OF 1
1605.01

STATE OF NORTH CAROLINA
DEPT. OF TRANSPORTATION
DIVISION OF HIGHWAYS
RALEIGH, N.C.

1-02

ENGLISH STANDARD DRAWING FOR
GUIDE FOR TEMPORARY BERMS AND SLOPE DRAIN

SHEET 1 OF 1
1622.01

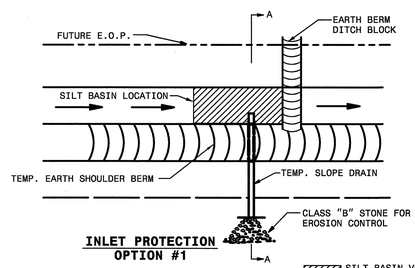

INLET PROTECTION
OPTION #1

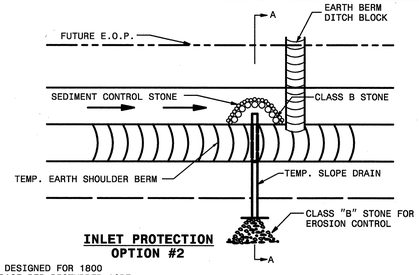

INLET PROTECTION
OPTION #2

SILT BASIN VOLUME SHALL BE DESIGNED FOR 1800 CUBIC FEET OF SEDIMENT STORAGE PER DISTURBED ACRE.

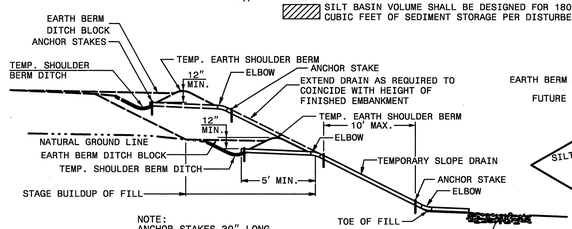

NOTE:
ANCHOR STAKES 30″ LONG
AND SET MINIMUM 12″ DEEP.

TEMPORARY SLOPE DRAIN
SECTION A-A

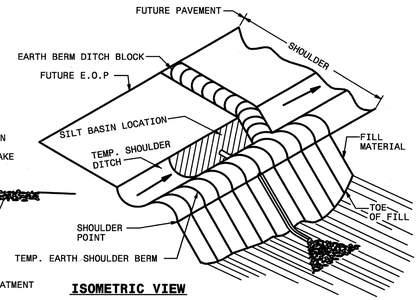

ISOMETRIC VIEW

NOTES:
1. OPEN END PIPE WITH MINIMUM SETBACK AND PROPER COMPACTION IS AN ACCEPTABLE INLET TREATMENT FOR STAGED CONSTRUCTION WHEN NOT LEFT IN PLACE FOR MORE THAN 30 DAYS.
2. DESIGN INLET PROTECTION OPTION #2 FOR 1800 CUBIC FOOT OF SEDIMENT STORAGE PER DISTURBED ACRE.
3. DESIGN SILT BASINS WITH A 2:1 LENGTH TO WIDTH RATIO MINIMUM.
4. USE CLASS B STONE FOR EROSION CONTROL AT OUTLET LOCATIONS SUBJECT TO SCOURING. SILT BASINS AND/OR OTHER EROSION CONTROL DEVICES MAY ALSO BE UTILIZED TO PREVENT SCOUR AT OUTLET LOCATIONS.
5. USE MAXIMUM SLOPE DRAIN SPACING OF 200 FT.

STATE OF NORTH CAROLINA
DEPT. OF TRANSPORTATION
DIVISION OF HIGHWAYS
RALEIGH, N.C.

ENGLISH STANDARD DRAWING FOR
GUIDE FOR TEMPORARY BERMS AND SLOPE DRAIN

SHEET 1 OF 1
1622.01

STATE OF NORTH CAROLINA
DEPT. OF TRANSPORTATION
DIVISION OF HIGHWAYS
RALEIGH, N.C.

ENGLISH STANDARD DRAWING FOR
SPECIAL SEDIMENT CONTROL FENCE

GENERAL NOTES:

USE NO. 5 OR NO. 57 STONE FOR SEDIMENT CONTROL STONE.

USE HARDWARE CLOTH 24 GAUGE WIRE MESH WITH 1/4 INCH MESH OPENINGS.

INSTALL 5 FT. SELF FASTENER ANGLE STEEL POST 2 FT. DEEP MINIMUM.

SPACE POST A MAXIMUM OF 3 FT.

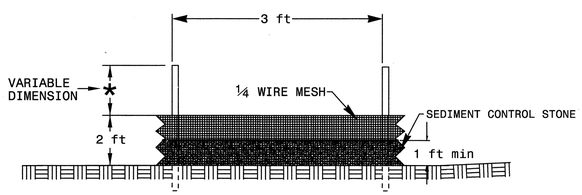

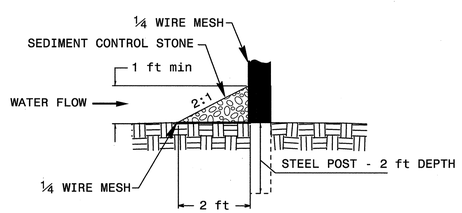

STATE OF NORTH CAROLINA
DEPT. OF TRANSPORTATION
DIVISION OF HIGHWAYS
RALEIGH, N.C.

ENGLISH STANDARD DRAWING FOR
SPECIAL SEDIMENT CONTROL FENCE

SHEET 1 OF 1
1606.01

ROADSIDE ENVIRONMENTAL UNIT
DEPARTMENT OF TRANSPORTATION
DIVISION OF HIGHWAYS
RALEIGH, N.C.

2006 STANDARD SPECIFICATIONS

NOTES: ANY DEVIATION FROM OPTIONS GIVEN WILL REQUIRE PRIOR APPROVAL BY ENGINEER.

ADDITIONAL EROSION CONTROL DEVICES MAY NEED TO BE INSTALLED AS DIRECTED BY THE ENGINEER.

PROJECT NO. 42287
PAMLICO COUNTY
STATION: 15+65.09 -L-

REPLACES BRIDGE NO. 42

STATE OF NORTH CAROLINA
DEPARTMENT OF TRANSPORTATION
RALEIGH

BRIDGE ON NC 304
OVER GALE CREEK
BETWEEN SR 1224 & NC 33

33′-10″ CLEAR ROADWAY - 90°SKEW

REVISIONS						SHEET NO.
NO.	BY:	DATE:	NO.	BY:	DATE:	147
1			3			TOTAL SHEETS
2			4			185

EROSION CONTROL PLAN

Environmentally Sensitive Areas:

This project is located in an "Environmentally Sensitive Area." This designation requires special procedures to be used for clearing and grubbing, temporary stream crossings, and grading operations within the area identified on the plans. This also requires special procedures to be used for seeding and mulching and staged seeding within the project.

Clearing and Grubbing:

In areas identified on the erosion control plans as "Environmentally Sensitive Areas", the Contractor may perform clearing operations, but not grubbing operations until immediately prior to beginning grading operations as described in Section 200, Article 200–1, in the Standard Specifications. The "Environmentally Sensitive Area" shall be defined as a 50 foot buffer zone on both sides of the stream (or depression), measured from top of streambank, (or center of depression). Only clearing operations (not grubbing) shall be allowed in this buffer zone until immediately prior to beginning grading operations. Erosion control devices shall be installed immediately following the clearing operation.

Grading:

Once grading operations begin in identified "Environmentally Sensitive Areas", work will progress in a continuous manner until complete. All construction within these areas must progress in a continuous manner such that each phase is complete and areas permanently stabilized prior to beginning of next phase. Failure on the part of the Contractor to complete any phase of construction in a continuous manner in "Environmentally Sensitive Areas" as specified will be just cause for the Engineer to direct the suspension of work in accordance with Section 108–7 of the Standard Specifications.

Temporary Stream Crossings:

Any crossing of streams within the limits of this project must be accomplished in accordance with Section 107–13(b) of the Standard Specifications.

Seeding and Mulching:

Seeding and mulching shall be performed in accordance with Section 1660 of the Standard Specifications and vegetative cover sufficient to restrain erosion shall be installed immediately following grade establishment.

Seeding and mulching shall be performed on the areas disturbed by construction immediately following final grade establishment. No appreciable time shall lapse into the contract time without stabilization of slopes, ditches and other areas within the "Environmentally Sensitive Areas" as indicated on the erosion control plans.

Stage Seeding:

The work covered by this section shall consist of the establishment of a vegetative cover on cut and fill slopes as grading progresses. Seeding and mulching shall be done in stages on cut and fill slopes which are greater than 20 feet in height measured along the slope, or greater than 2 acres in area. Each stage shall not exceed the limits stated above.

All work described above will be paid for at the contract price for "Lump Sum for Erosion Control " established in the contract for the work involved. Additional payments will not be made for the requirements of this section as the cost for this work should be included in the contract price for "Lump Sum for Erosion Control" for the work involved.

Reforestation:

Reforestation will be planted within interchanges and along the outside borders of the road, and in other areas as directed. Reforestation is not shown on the plan sheets. See the Reforestation Detail Sheet.

All non–maintained riparian buffers impacted by the placement of temporary fill or clearing activities shall be restored to the preconstruction contours and revegetated with native woody species.

The entire Reforestation operation shall comply with the requirements of Section 1670 of the Standard Specifications.

Reforestation shall be bare root seedlings 12"–18" tall.

Reforestation shall be shall be planted as soon as practical following permanent Seeding and Mulching. The seedlings shall be planted in a 16–foot wide swath adjacent to mowing pattern line, or as directed.

Root dip: The roots of reforestation seedlings shall be coated with a slurry of water, and either a fine clay (kaolin) or a superabsorbent that is designated as a bare root dip. The type, mixture ratio, method of application, and the time of application shall be submitted to the Engineer for approval.

With the approval of the Engineer, seedlings may be coated before delivery to the job or at the time of planting, but at no time shall the roots of the seedlings be allowed to dry out. The roots shall be moistened immediately prior to planting.

Seasonal Limitations: Reforestation shall be planted from November 15 through March 15.

Payment for Reforestation will be included in the contract bid price for Lump Sum for Erosion Control.

Special Sediment Control Fence:

Description:

The work covered by this section consists of the construction, maintenance, and removal of special sediment control fence. Place special sediment control fence as shown on the plans or as directed by the Engineer.

Materials:

(A) Posts:

Steel posts shall be at least 5 feet in length, approximately 1 3⁄8 inches wide measured parallel to the fence, and have a minimum weight of 1.25 lb⁄ft of length. The post shall be equipped with an anchor plate having a minimum area of 14.0 square inches, and shall have a means of retaining wire in the desired position without displacement.

(B) 1⁄4 inch Hardware Cloth:

Hardware cloth shall have 1⁄4 inch openings constructed from #24 gauge wire. Install hardware cloth according to the detail shown on the plans.

(C) Sediment Control Stone:

Sediment control stone shall meet the requirements of Section 1005. Install stone according to the detail shown on the plans.

Maintenance and Removal:

The Contractor shall maintain the special sediment control fence until the project is accepted or until the fence is removed, and shall remove and dispose of silt accumulations at the fence when so directed by the Engineer in accordance with Section 1630.

The quantity of posts, sediment control stone and hardware cloth as measured above will be paid for at the contract price for "Lump Sum for Erosion Control". Such price and payment will be full compensation for all work covered by this provision, including but not limited to, furnishing all materials, installation, and removal and disposal of silt accumulations and materials.

SAFETY FENCE:

Description

Safety Fence shall consist of furnishing, installing and maintaining polyethylene or polypropylene fence along the outside riparian buffer, wetland, or water boundary located within the construction corridor to mark the areas that have been approved to infringe within the buffer, wetland or water. The fence shall be installed prior to any land disturbing activities.

Materials

Polyethylene or polypropylene fence shall be a highly visible preconstructed safety fence approved by the Engineer. The fence material shall have an ultraviolet coating.

Either wood posts or steel posts may be used. Wood posts shall be hardwood with a wedge or pencil tip at one end, and shall be at least 5 ft. in length with a minimum nominal 2" x 2" cross section. Steel posts shall be at least 5 ft. in length, and have a minimum weight of 0.85 lb./ft. of length.

Construction Methods

No additional clearing and grubbing is anticipated for the installation of this fence; however, if any clearing and grubbing is required, it will be the minimum required for the installation of the safety fence. Such clearing shall include satisfactory removal and disposal of all trees, brush, stumps and other objectionable material.

The fence shall be erected to conform to the general contour of the ground. When determined necessary, minor grading along the fence line shall be performed to meet this requirement provided no obstructions to proper drainage are created.

Posts shall be set and maintained in a vertical position and may be hand set or set with a post driver. If hand set, all backfill material shall be thoroughly tamped. Wood posts may be sharpened to a dull point if power driven. Posts damaged by power driving shall be removed and replaced prior to final acceptance. The tops of all wood posts shall be cut at a 30–degree angle. The wood posts may, at the option of the Contractor, be cut at this angle either before or after the posts are erected.

The fence fabric shall be attached to the wood posts with one 2" galvanized wire staple across each cable or to the steel posts with wire or other acceptable means.

The Contractor shall be required to maintain the safety fence in a satisfactory condition for the duration of the project as determined by the Engineer.

Measurement and Payment

Safety Fence will be paid for at the contract price for "Lump Sum for Erosion Control". Such payment will be full compensation including but not limited to clearing and grading, furnishing and installing fence fabric with necessary posts and post bracing, staples, tie wires, tools, equipment and incidentals necessary to complete this work.

FLOATING TURBIDITY CURTAIN:

Description

This work consists of the installation of a Floating Turbidity Curtain to deter silt suspension and movement of silt particles during construction. The floating turbidity curtain shall be constructed at locations as directed.

Materials

The curtain material shall be made of a tightly woven nylon, plastic or other non–deteriorating material meeting the following specifications:

Property	Value
Grab tensile strength	*md–370 lbs *cd–250 lbs
Mullen burst stength	480 psi
Trapezoid tear strength	*md–100 lbs *cd–60 lbs
Apparent opening size	70 US standard sieve
Percent open area	4% permittivity 0.28 sec–1

*md – machine direction
*cd – cross machine direction

In the event that more than one width of fabric is required, a 6" overlap of the material shall also be required.

The curtain material shall be supported by a flotation material having over 29 lbs⁄ft buoyancy. The floating curtain shall have a 5⁄16" galvanized chain as ballast and dual 5⁄16" galvanized wire ropes with a heavy vinyl coating as load lines.

Construction Methods

The Contractor shall maintain the Floating Turbidity Curtain in a satisfactory condition until its removal is requested by the Engineer.

Measurement and Payment

Floating Turbidity Curtain will be paid for at the contract price for "Lump Sum for Erosion Control". Such payment will be full compensation including but not limited to installation, maintenance, removal and incidentals necessary to complete this work.

PROJECT NO. 42287

PAMLICO COUNTY

STATION: 15+65.09 -L-

REPLACES BRIDGE NO. 42

ROADSIDE ENVIRONMENTAL UNIT
DEPARTMENT OF TRANSPORTATION
DIVISION OF HIGHWAYS
RALEIGH, N.C.

2006 STANDARD SPECIFICATIONS

NOTES: ANY DEVIATION FROM OPTIONS GIVEN WILL REQUIRE PRIOR APPROVAL BY ENGINEER.

ADDITIONAL EROSION CONTROL DEVICES MAY NEED TO BE INSTALLED AS DIRECTED BY THE ENGINEER.

STATE OF NORTH CAROLINA
DEPARTMENT OF TRANSPORTATION
RALEIGH

BRIDGE ON NC 304
OVER GALE CREEK
BETWEEN SR 1224 & NC 33

33'-10" CLEAR ROADWAY - 90°SKEW

REVISIONS						SHEET NO.
NO.	BY:	DATE:	NO.	BY:	DATE:	148
1			3			TOTAL SHEETS
2			4			185

STATE	STATE PROJECT REFERENCE NO.	SHEET NO.	TOTAL SHEETS
N.C.	B-5129 (BRIDGE NO. 42)	149	185
STATE PROJ. NO.	F. A. PROJ. NO.	DESCRIPTION	

PLANTING DETAILS

SEEDLING / LINER BAREROOT PLANTING DETAIL

HEALING IN

1. Locate a healing-in site in a shady, well protected area.
2. Excavate a flat bottom trench 12 inches deep and provide drainage.

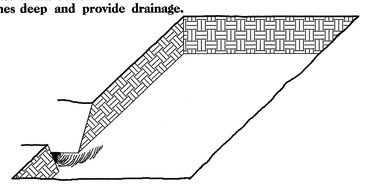

3. Backfill the trench with 2 inches well rotted sawdust. Place a 2 inch layer of well rotted sawdust at a sloping angle at one end of the trench.

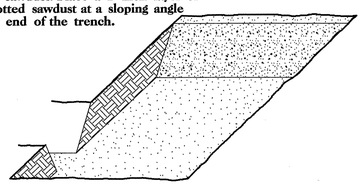

4. Place a single layer of plants against the sloping end so that the root collar is at ground level.

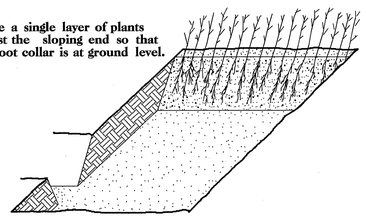

5. Place a 2 inch layer of well rotted sawdust over the roots maintaining a sloping angle.

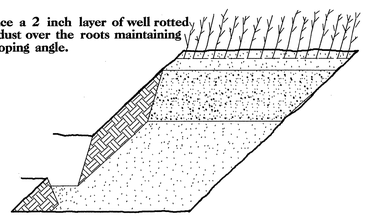

6. Repeat layers of plants and sawdust as necessary and water thoroughly.

DIBBLE PLANTING METHOD USING THE KBC PLANTING BAR

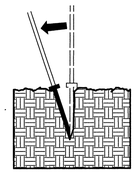

1. Insert planting bar as shown and pull handle toward planter.

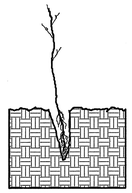

2. Remove planting bar and place seedling at correct depth.

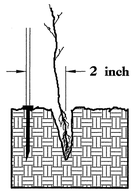

3. Insert planting bar 2 inches toward planter from seedling.

4. Pull handle of bar toward planter, firming soil at bottom.

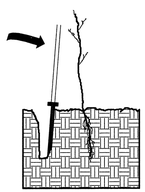

5. Push handle forward firming soil at top.

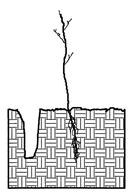

6. Leave compaction hole open. Water thoroughly.

PLANTING NOTES:

PLANTING BAG
During planting, seedlings shall be kept in a moist canvas bag or similar container to prevent the root systems from drying.

KBC PLANTING BAR
Planting bar shall have a blade with a triangular cross section, and shall be 12 inches long, 4 inches wide and 1 inch thick at center.

ROOT PRUNING
All seedlings shall be root pruned, if necessary, so that no roots extend more than 10 inches below the root collar.

REFORESTATION

☐ TREE REFORESTATION SHALL BE PLANTED 6 FT. TO 10 FT. ON CENTER, RANDOM SPACING, AVERAGING 8 FT. ON CENTER, APPROXIMATELY 680 PLANTS PER ACRE.

REFORESTATION

MIXTURE, TYPE, SIZE, AND FURNISH SHALL CONFORM TO THE FOLLOWING:

25% LIRIODENDRON TULIPIFERA	TULIP POPLAR	12 in – 18 in BR
25% QUERCUS LAURIFOLIA	LAUREL OAK	12 in – 18 in BR
25% FRAXINUS PENNSYLVANICA	GREEN ASH	12 in – 18 in BR
25% BETULA NIGRA	RIVER BIRCH	12 in – 18 in BR

REFORESTATION DETAIL SHEET

N.C.D.O.T. - ROADSIDE ENVIRONMENTAL UNIT

TIP PROJECT: B-4594

CONTRACT: C202151

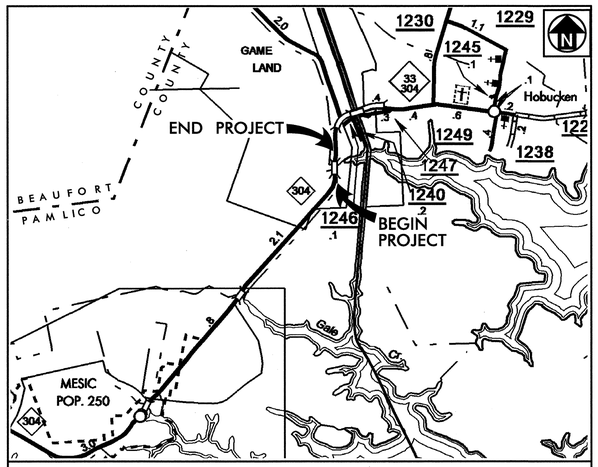

VICINITY MAP
(NOT TO SCALE)

STATE OF NORTH CAROLINA
DIVISION OF HIGHWAYS

PAMLICO COUNTY

STATE	STATE PROJECT REFERENCE NO.	SHEET NO.	TOTAL SHEETS
N.C.	B-4594	150	185

STATE PROJECT NO.	F.A. PROJECT REF. NO.	DESCRIPTION
38423.1.1	BRSTP-0304(2)	P.E.
38423.3.1	BRSTP-0304(2)	CONST.

LOCATION: BRIDGE NO. 44 ON NC 304

TYPE OF WORK: GRADING, DRAINAGE, PAVING, STRUCTURE AND GUARDRAIL

NAD 83

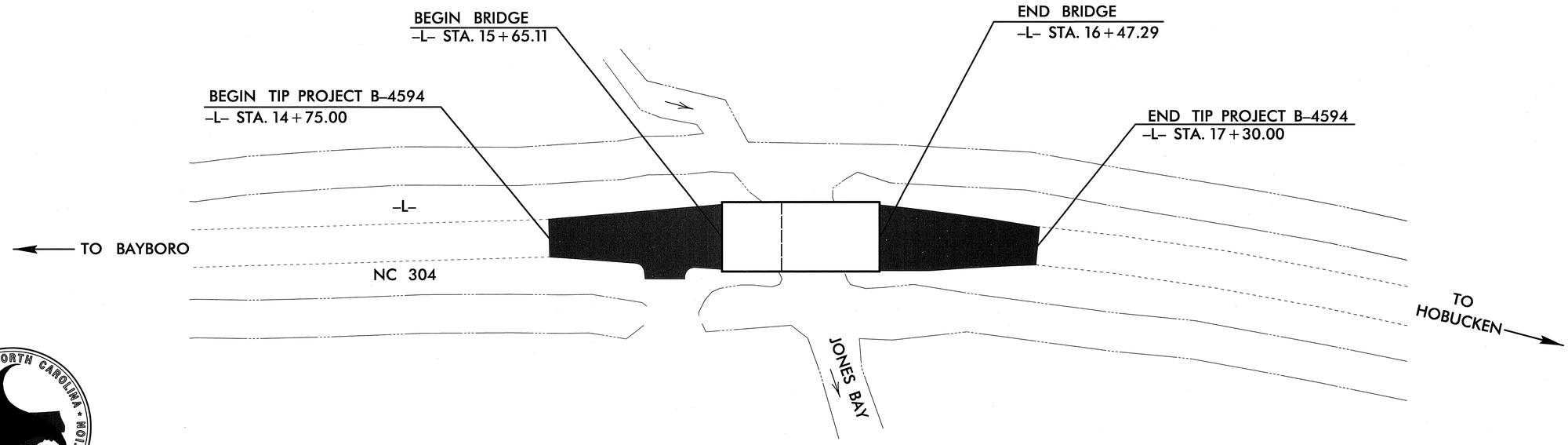

STATE OF NORTH CAROLINA · DEPARTMENT OF TRANSPORTATION ·

GRAPHIC SCALES

20 10 0 20 40
PLANS

20 10 0 20 40
PROFILE (HORIZONTAL)

20 10 0 20 40
PROFILE (VERTICAL)

DESIGN DATA

ADT 2009 = 3264

ADT 2025 = 3980

FUNCTIONAL CLASS = MIC

PROJECT LENGTH

LENGTH ROADWAY = 0.032 MILE

LENGTH STRUCTURE = 0.016 MILE

TOTAL LENGTH = 0.048 MILE

Prepared In the Office of:

MULKEY
ENGINEERS & CONSULTANTS

FOR
NORTH CAROLINA DEPARTMENT OF TRANSPORTATION

2006 STANDARD SPECIFICATIONS

LETTING DATE:
AUGUST 18, 2009

L. KEVIN AUSTIN, PE
PROJECT ENGINEER

NCDOT CONTACT: C. E. (NEIL) LASSITER, JR., PE
DIVISION ENGINEER

STRUCTURE DESIGN

NORTH CAROLINA PROFESSIONAL SEAL 19661 ENGINEER KEVIN AUSTIN 6/7/09

L. Kevin Austin PE
SIGNATURE:

DIVISION OF HIGHWAYS
STATE OF NORTH CAROLINA

PE
STATE HIGHWAY ENGINEER - DESIGN

DEPARTMENT OF TRANSPORTATION
FEDERAL HIGHWAY ADMINISTRATION

APPROVED FOR
DIVISION ADMINISTRATOR *DATE*

6/8/2009 7:41:32 AM
R:\Structures\B4594_SD_TSH.dgn

B-4594

#44 PAMLICO

EXISTING BRIDGE No. 44
28'-1" CLEAR ROADWAY
SPANS: 1 @ 17'-11", 1 @ 16'-10", 1 @ 17'-8"
RC FLOOR ON TIMBER JOISTS
END BENTS & INT. BENTS-
TIMBER CAPS/TIMBER PILES

TBM:
REBAR W/ CAP (B4594-1)
18.24' RIGHT OF -L- STA. 15+25.48
ELEV. 4.52

EXISTING UTILITIES TO BE
RELOCATED BY OTHERS
PRIOR TO PROJECT LETTING

NAD 83

STATE OF NORTH CAROLINA
1321 MSC
RALEIGH, NC 27699
DB 121 PG 277

STATE OF NORTH CAROLINA
1321 MSC
RALEIGH, NC 27699
DB 121 PG 277

STATE OF NORTH CAROLINA
1321 MSC
RALEIGH, NC 27699
DB 121 PG 277

LAURA AND WARREN MAYO
308 BURLAGE CIRCLE
CHAPEL HILL, NC 27514
DB 334 PG 756

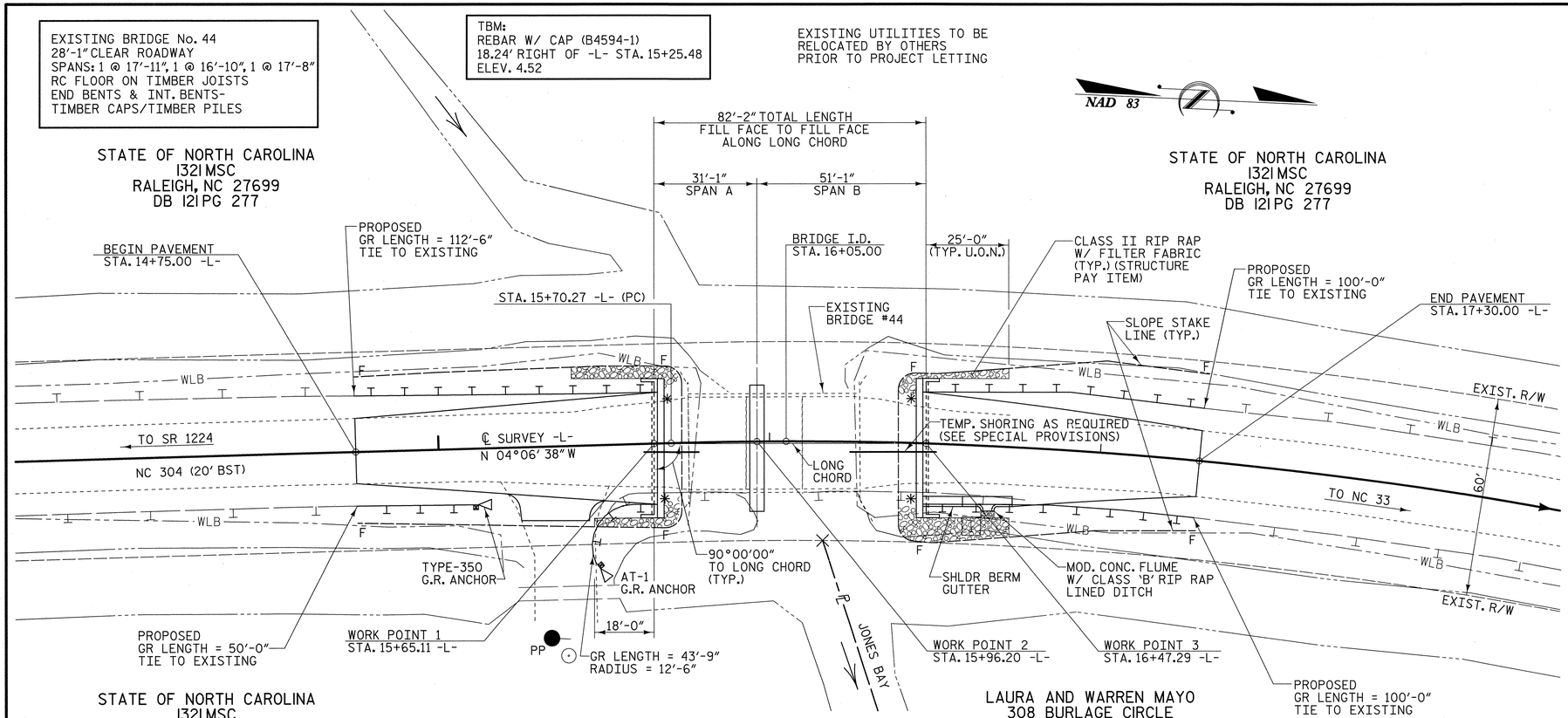

PLAN
SCALE : 1" = 20'

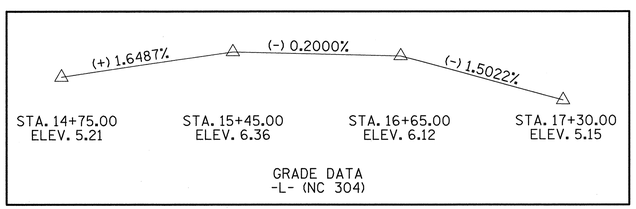

DENOTES GEO-TECH BORE HOLE LOCATIONS.

DENOTES GUARDRAIL CONNECTION REQ'D.
(TYPE III) SEE "GUARDRAIL ANCHORAGE DETAILS" SHEET.

NOTE: GUARDRAIL LENGTHS AS SHOWN INCLUDE
ANCHOR UNITS.

U.O.N. - UNLESS OTHERWISE NOTED

FOR PAVEMENT LAYOUT & , SEE "ROADWAY DETAILS" SHEET.

HYDROGRAPHIC DATA:

DESIGN DISCHARGE -	760 CFS
FREQUENCY OF DESIGN FLOOD -	50 YEAR
DESIGN HIGH WATER ELEVATION -	2.5
DRAINAGE AREA -	3.5 SQ. MI.
BASIC DISCHARGE (Q 100) -	950 CFS
BASIC HIGH WATER ELEVATION -	2.8

OVERTOPPING FLOOD DATA:

OVERTOPPING DISCHARGE -	2300 CFS
FREQUENCY OF OVERTOPPING FLOOD -	500 YEAR (-)
OVERTOPPING FLOOD ELEVATION -	4.9

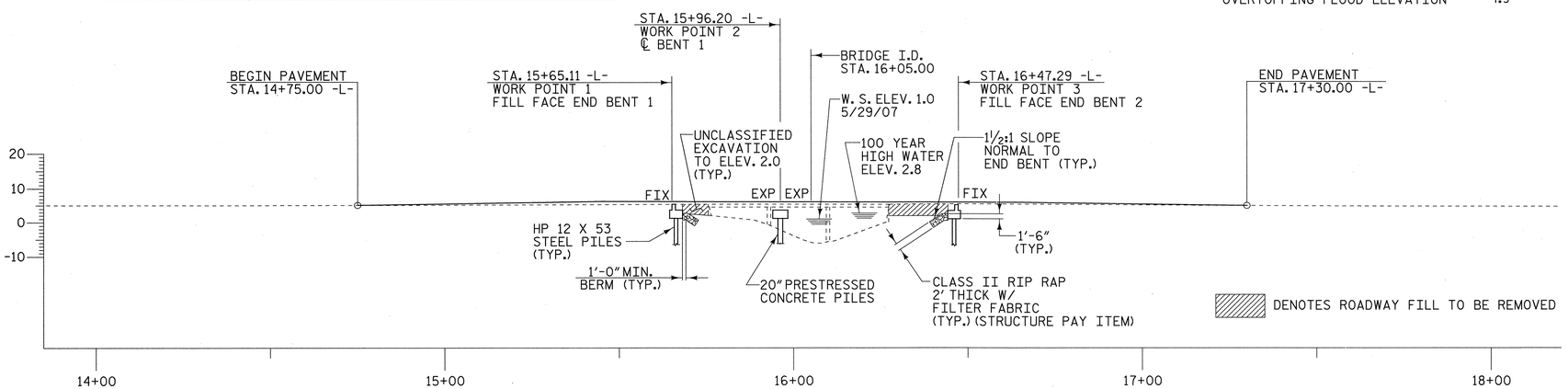

PROFILE ALONG ℄ -L-
SCALE : 1" = 20'

NOTES

ASSUMED LIVE LOAD = HS 20 OR ALTERNATE LOADING, EXCEPT THAT CORED SLAB UNITS HAVE BEEN DESIGNED FOR HS 25.

FOR EROSION CONTROL MEASURES SEE EROSION CONTROL PLANS.

CLEARING ON THIS PROJECT SHALL BE PERFORMED TO THE LIMITS ESTABLISHED BY METHOD II.

REMOVAL OF EXISTING BRIDGE SHALL INCLUDE REMOVAL OF THE EXISTING ABUTMENTS AND BENTS ALONG WITH ALL EXISTING PILES. AS WELL AS REMNANT PILINGS FROM PREVIOUS BRIDGES, AS PER THE CAMA PERMIT.

THIS BRIDGE HAS BEEN DESIGNED BY THE STRENGTH DESIGN METHOD AS SPECIFIED IN AASHTO STANDARD SPECIFICATIONS.

THIS STRUCTURE CONTAINS THE FOLLOWING PRECAST CONCRETE PIECES: BENT CAPS, END BENT CAPS, BACKWALLS, WINGWALLS, AND WING FOOTINGS. EACH PRECAST CONCRETE PIECE SHALL BE STENCILED WITH ITS PIECE MARK. SEE PIECE MARKS CONTAINED IN THESE PLANS.

CLASS AA (4500 PSI) CONCRETE SHALL BE USED IN ALL PRECAST PIECES LISTED ABOVE AND SHALL CONTAIN CALCIUM NITRITE CORROSION INHIBITOR IN ACCORDANCE WITH THE STANDARD SPECIFICATIONS.

REMOVAL OF THE EXISTING BRIDGE SHALL BE PERFORMED SO AS NOT TO ALLOW DEBRIS TO FALL INTO THE WATER. THE CONTRACTOR SHALL REMOVE THE BRIDGE AND SUBMIT PLANS FOR THE DEMOLITION IN ACCORDANCE WITH ARTICLE 402-2 OF THE STANDARD SPECIFICATIONS.

THE SUBSTRUCTURE OF THE EXISTING BRIDGE INDICATED ON THE PLANS IS FROM THE BEST INFORMATION AVAILABLE. SINCE THIS INFORMATION IS SHOWN FOR THE CONVENIENCE OF THE CONTRACTOR, THE CONTRACTOR SHALL HAVE NO CLAIM WHATSOEVER AGAINST THE DEPARTMENT OF TRANSPORTATION FOR ANY DELAYS OR ADDITIONAL COST INCURRED BASED ON DIFFFERENCES BETWEEN THE EXISTING BRIDGE SUBSTRUCTURE SHOWN ON THE PLANS AND THE ACTUAL CONDITIONS AT THE PROJECT SITE.

THIS STRUCTURE HAS BEEN DESIGNED IN ACCORDANCE WITH HEC 18, "EVALUATING SCOUR AT BRIDGES", MAY 2001.

THE SCOUR CRITICAL ELEVATION FOR INTERIOR BENTS No. 1 AND 2 IS -10 FT. THE SCOUR CRITICAL ELEVATIONS ARE FOR USE BY MAINTENANCE FORCES TO MONITOR POSSIBLE SCOUR PROBLEMS DURING THE LIFE OF THE STRUCTURE.

THIS STRUCTURE HAS BEEN DESIGNED IN ACCORDANCE WITH FHWA'S TECHNICAL ADVISORY T5140.20 (SCOUR AT BRIDGES).

THIS BRIDGE HAS BEEN DESIGNED IN ACCORDANCE WITH THE REQUIREMENTS OF THE STANDARD SPECIFICATIONS FOR SEISMIC DESIGN OF HIGHWAY BRIDGES FOR SEISMIC CATEGORY A.

ADT = 1600 FOR YEAR 2001

ROADWAY APPROACH EMBANKMENT SHALL BE WIDENED AS NECESSARY FOR GUARDRAIL INSTALLATION.

THIS STRUCTURE CONTAINS THE NECESSARY CORROSION PROTECTION REQUIRED FOR A CORROSIVE SITE.

ALL BAR SUPPORTS USED IN THE PRECAST PIECES AND ALL INCIDENTAL REINFORCING STEEL SHALL BE EPOXY COATED IN ACCORDANCE WITH THE STANDARD SPECIFICATIONS.

(NOTES CONTINUED ON "FOUNDATION LAYOUT" SHEET)

PROJECT NO. 38243
PAMLICO COUNTY
STATION: 16+05.00 -L-

REPLACES BRIDGE NO. 44

STATE OF NORTH CAROLINA
DEPARTMENT OF TRANSPORTATION
RALEIGH

BRIDGE ON NC 304 OVER JONES BAY BETWEEN SR 1227 & NC 33

33'-10" CLEAR ROADWAY - 90° SKEW

NORTH CAROLINA PROFESSIONAL SEAL 19661 ENGINEER L. KEVIN AUSTIN 6/7/09

PLANS PREPARED BY:
MULKEY
ENGINEERS & CONSULTANTS
PO Box 33127
Raleigh, N.C. 27636
(919) 851-1912
(919) 851-1918 (FAX)
WWW.MULKEYINC.COM

REVISIONS						SHEET NO.
NO.	BY:	DATE:	NO.	BY:	DATE:	151
1			3			TOTAL SHEETS
2			4			185

DRAWN BY : W. B. ALLEN DATE : 2/09
CHECKED BY : L. K. AUSTIN DATE : 2/09

6/5/2009 11:34:34 AM R:\Structures\B4594_SD_00_0.dgn

13+00 14+00 15+00 16+00 17+00 18+00 19+00

STATE OF NORTH CAROLINA
1321 MSC
RALEIGH, NC 27699
DB 1211 PG 277

STATE OF NORTH CAROLINA
1321 MSC
RALEIGH, NC 27699
DB 1211 PG 277

NAD 83

EDGE OF PROPOSED PAVEMENT

BEGIN PAVEMENT
STA. 14+75.00 -L-
(TIE TO EXIST.)

STA. 15+70.27 -L- (PC)

BRIDGE I.D.
STA. 16+05.00

END BRIDGE
STA. 16+47.29 -L-

EDGE OF PROPOSED TRAVEL LANE

END PAVEMENT
STA. 17+30.00 -L-
(TIE TO EXIST.)

STA. 18+74.94 -L- (PT)

EXIST. R/W

WLB

F

℄ -L-
N 04°06' 38" W

N 09°19' 03" E

15'-5"

18'-5"

LONG CHORD

14'-11¾"

60'

25'-0" (TYP.)

BEGIN BRIDGE
STA. 15+65.11 -L-

GUTTERLINE

TIE PROPOSED GUARDRAIL TO EXISTING GUARDRAIL (TYP.)

TRANSITION TO EXISTING
(LT. & RT. SIDE)

25'-0"

30'-0"

SLOPE STAKE LINE (TYP.)

JONES BAY

+59.07
END SHLDR
BERM GUTTER
BEGIN MOD.
CONC. FLUME

+74.07
END MOD.
CONC. FLUME

TRANSITION TO EXISTING
(LT. & RT. SIDE)

STATE OF NORTH CAROLINA
1321 MSC
RALEIGH, NC 27699
DB 1211 PG 277

PAVEMENT LAYOUT DETAIL

SCALE : 1" = 20'

LAURA AND WARREN MAYO
308 BURLAGE CIRCLE
CHAPEL HILL, NC 27514
DB 334 PG 756

HORIZONTAL CURVE DATA

PI STA. 17+23.31
△ = 13°25' 41" (RT)
D = 4°24' 27"
L = 304.67'
T = 153.04'
R = 1300.00'

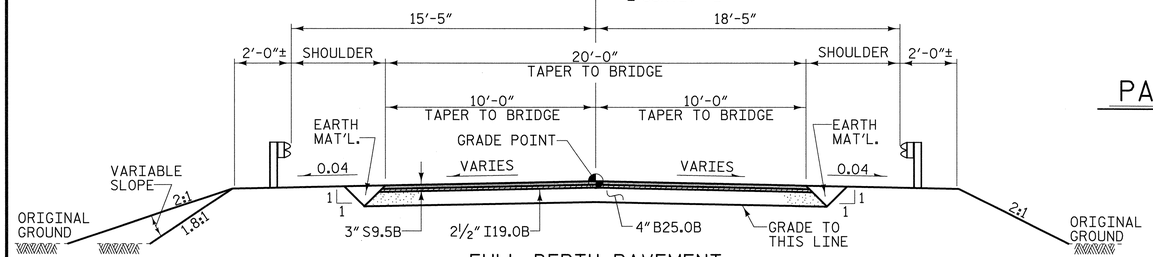

FULL DEPTH PAVEMENT

FROM -L- STA. 15+50 TO BEGIN BRIDGE
FROM END BRIDGE TO -L- STA. 16+55

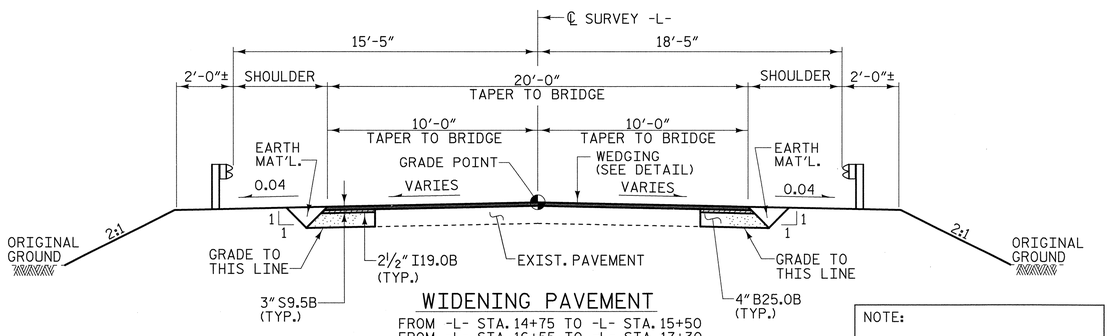

WIDENING PAVEMENT

FROM -L- STA. 14+75 TO -L- STA. 15+50
FROM -L- STA. 16+55 TO -L- STA. 17+30

TYPICAL ROADWAY SECTION

WITHIN CONSTRUCTION LIMITS

NOTE:

FOR FILL IN WATER
SEE ROCK EMBANKMENT DETAIL
SHEET 2-A

DATUM DESCRIPTION

THE LOCALIZED COORDINATE SYSTEM DEVELOPED FOR THIS PROJECT IS BASED ON THE STATE PLANE COORDINATES ESTABLISHED BY NCDOT FOR MONUMENT ""B4594-1"" WITH NAD 83 STATE PLANE GRID COORDINATES OF NORTHING: 550,446.580(ft) EASTING: 2,717,896.838(ft) THE AVERAGE COMBINED GRID FACTOR USED ON THIS PROJECT (GROUND TO GRID) IS: 0.999878300 THE N.C. LAMBERT GRID BEARING AND LOCALIZED HORIZONTAL GROUND DISTANCE FROM ""B4594-1"" TO -L- STATION 14+75 IS S 15°45'03"W 53.6758 ALL LINEAR DIMENSIONS ARE LOCALIZED HORIZONTAL DISTANCES VERTICAL DATUM USED IS NGVD 29

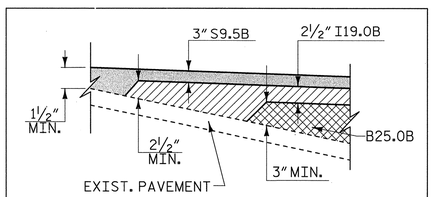

WEDGING DETAIL

THE QUANTITY OF RIP RAP TO BE PAID FOR WILL BE THE ACTUAL NUMBER OF TONS OF EACH CLASS OF RIP RAP WHICH HAS BEEN INCORPORATED INTO THE COMPLETED AND ACCEPTED WORK. THE RIP RAP WILL BE MEASURED BY BEING WEIGHED IN TRUCKS ON CERTIFIED PLATFORM SCALES OR OTHER CERTIFIED WEIGHING DEVICES. THE QUANTITY OF RIP RAP WILL BE PAID FOR AT THE CONTRACT UNIT PRICE PER TON:

RIP RAP CLASS II (2'-0" THICK)

END BENT No. 1	45 TONS
END BENT No. 2	60 TONS
TOTAL	105 TONS

FILTER FABRIC

END BENT No. 1	50 SQ. YDS.
END BENT No. 2	70 SQ. YDS.
TOTAL	120 SQ. YDS.

PROJECT NO. 38243

PAMLICO COUNTY

STATION: 16+05.00 -L-

REPLACES BRIDGE NO. 44

STATE OF NORTH CAROLINA
DEPARTMENT OF TRANSPORTATION
RALEIGH

ROADWAY DETAILS

33'-10" CLEAR ROADWAY - 90° SKEW

NORTH CAROLINA PROFESSIONAL ENGINEER SEAL 19661 KEVIN AUSTIN 8/6/09

PLANS PREPARED BY:

MULKEY
ENGINEERS & CONSULTANTS
PO Box 33127
Raleigh, N.C. 27636
(919) 851-1912
(919) 851-1918 (FAX)
www.mulkeyinc.com

REVISIONS						SHEET NO.
NO.	BY:	DATE:	NO.	BY:	DATE:	152
1			3			TOTAL SHEETS
2			4			185

DRAWN BY : W. B. ALLEN DATE : 6/08
CHECKED BY : L. K. AUSTIN DATE : 2/09

8/6/2009 10:51:45 AM G:\project\2004\224.25.Pamlico44\Structures\B4594_SD_02.dgn

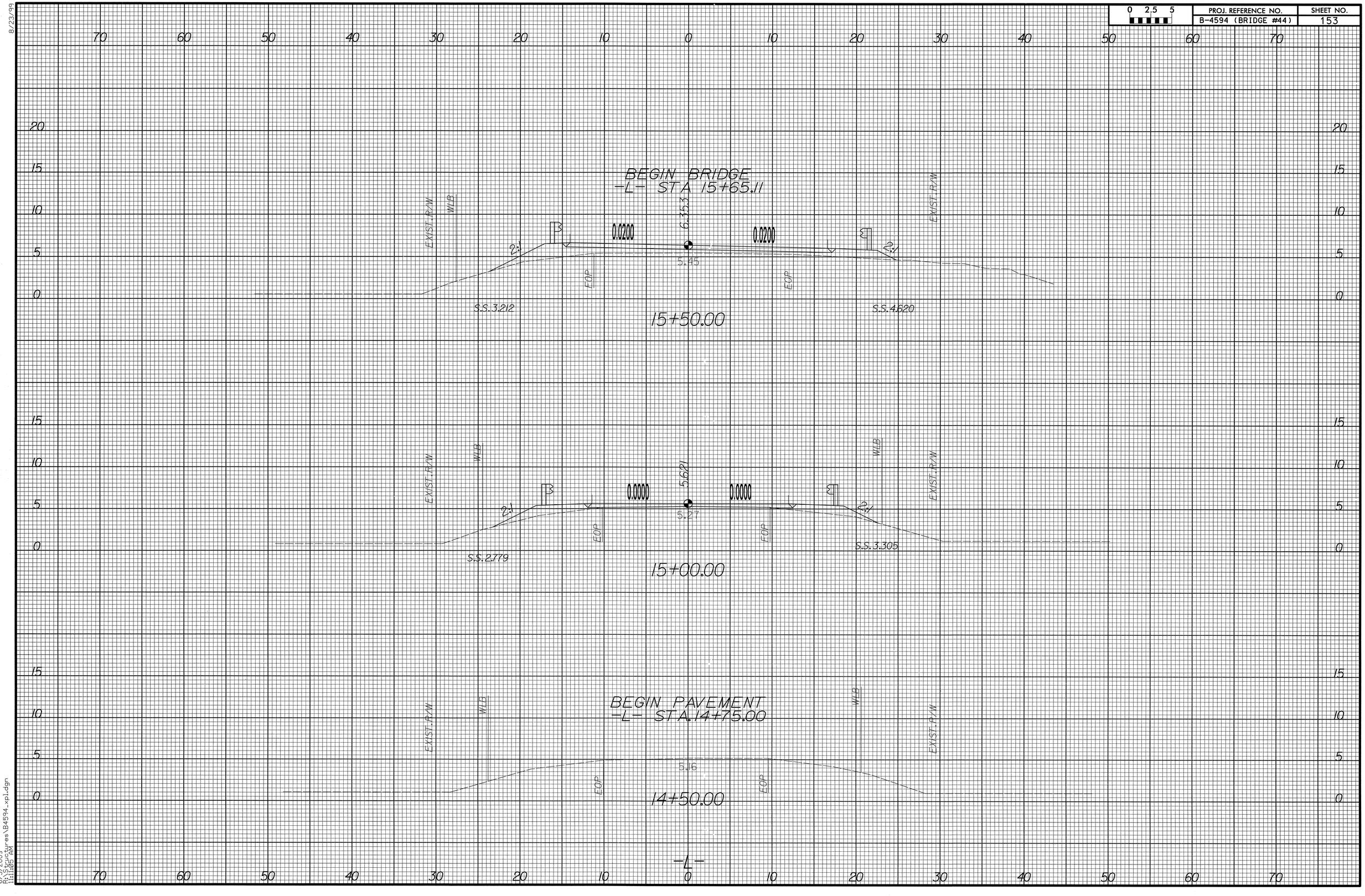

8/23/99

6/5/2009
R:\Structures\B4594_xpl.dgn
11:11:05 AM

8/23/99

0 2.5 5	PROJ. REFERENCE NO.	SHEET NO.
	B-4594 (BRIDGE #44)	154

END PAVEMENT
-L- STA 17+30.00

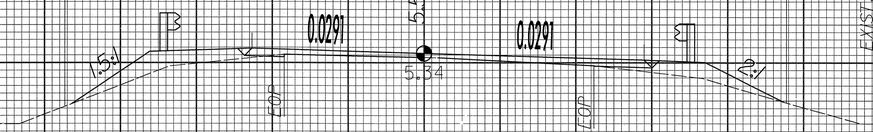

17+00.00

END BRIDGE
-L- STA 16+47.29

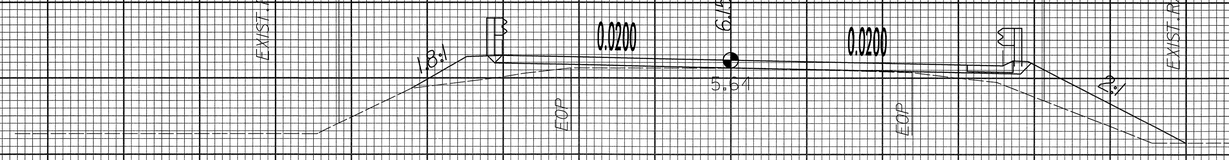

16+50.00

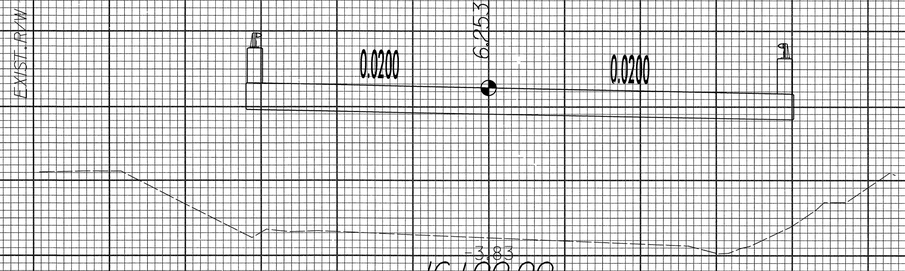

16+00.00

-L-

6/5/2009
R:\Structures\B4594_xpl.dgn
11:11:00 AM

8/23/99

0 2.5 5	PROJ. REFERENCE NO.	SHEET NO.
	B-4594 (BRIDGE #44)	155

70 60 50 40 30 20 10 0 10 20 30 40 50 60 70

15
10
5
0

EXIST. R/W
WLB
EOP
5.05
17+50.00
EOP
WLB
EXIST. R/W

-L-

70 60 50 40 30 20 10 0 10 20 30 40 50 60 70

6/5/2009
R:\Scdata\es\B4594_xp1.dgn
11:08:01 AM

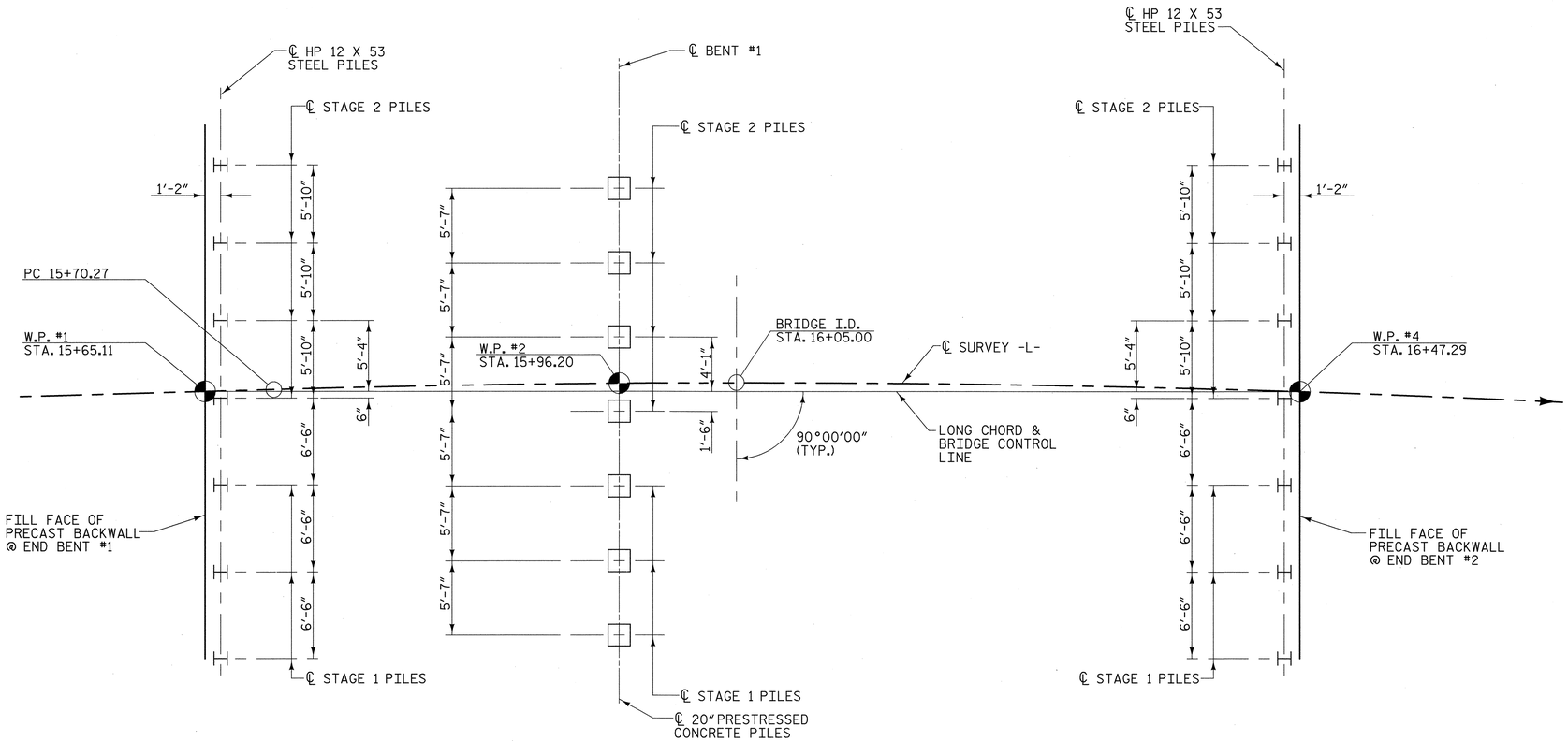

END BENT #1 | BENT #1 | END BENT #2

FOUNDATION LAYOUT

(DIMENSIONS LOCATING PILES ARE TO THE CENTERLINE OF THE PILE AT THE BOTTOM OF THE CAP)

NOTES (CONTINUED FROM "GENERAL DRAWING")

THE CONCRETE IN THE PRECAST PIECES AND ALL PILES SHALL CONTAIN SILICA FUME. SILICA FUME SHALL BE SUBSTITUTED FOR 5% OF THE PORTLAND CEMENT BY WEIGHT. IF THE OPTION OF ARTICLE 1024-1 OF THE STANDARD SPECIFICATIONS TO PARTIALLY SUBSTITUTE CLASS F FLY ASH FOR PORTLAND CEMENT IS EXERCISED. THEN THE RATE OF FLY ASH SUBSTITUTION SHALL BE REDUCED TO 1.0 LB. OF FLY ASH PER 1.0 LB. OF CEMENT. NO PAYMENT WILL BE MADE FOR THIS SUBSTITUTION AS IT IS CONSIDERED INCIDENTAL TO THE VARIOUS PAY ITEMS.

PRESTRESSED CONCRETE CORED SLAB UNITS AND 20" PRESTRESSED CONCRETE PILES SHALL CONTAIN CALCIUM NITRITE CORROSION INHIBITOR IN ACCORDANCE WITH THE STANDARD SPECIFICATIONS.

THE CONTRACTOR SHALL SUBMIT WORKING DRAWINGS FOR ALL PRECAST PIECES. FOR SUBMITTAL OF WORKING DRAWINGS, SEE SPECIAL PROVISIONS.

FOR FALSEWORK AND FORMWORK, SEE SPECIAL PROVISIONS.

THIS BRIDGE SHALL BE CONSTRUCTED USING TOP-DOWN CONSTRUCTION METHODS. THE USE OF TEMPORARY CAUSEWAY OR WORK BRIDGE IS NOT PERMITTED.

FOR CRANE SAFETY, SEE SPECIAL PROVISIONS.

NOTES (FOR FOUNDATION LAYOUT)

PILES FOR END BENT NO. 1 AND 2 SHALL BE DRIVEN TO A MINIMUM BEARING CAPACITY OF 90 TONS EACH. THE BEARING CAPACITY IS EQUAL TO THE ALLOWABLE BEARING CAPACITY WITH A MINIMUM FACTOR OF SAFETY OF TWO.

THE ALLOWABLE BEARING CAPACITY FOR PILES AT END BENT NO. 1 AND 2 IS 45 TONS PER PILE.

STEEL PILE TIPS ARE REQUIRED FOR THE PRESTRESSED CONCRETE PILES AT BENT NO. 1. SEE SECTION 450 OF THE STANDARD SPECIFICATIONS.

DRIVE PILES AT BENT NO. 1 TO A REQUIRED BEARING CAPACITY OF 120 TONS PER PILE. THE REQUIRED BEARING CAPACITY IS EQUAL TO THE ALLOWABLE BEARING CAPACITY WITH A MINIMUM FACTOR OF SAFETY OF TWO.

THE ALLOWABLE BEARING CAPACITY FOR PILES AT BENT NO. 1 IS 60 TONS PER PILE.

DRIVE PILES AT BENT NO. 1 TO A TIP ELEVATION OF NO HIGHER THAN -27 FEET.

TESTING THE FIRST PRODUCTION PILE WITH THE PILE DRIVING ANALYZER (PDA) DURING DRIVING, RESTRIKING OR REDRIVING IS REQUIRED AT BENT NO. 1. SEE PILE DRIVING ANALYZER SPECIAL PROVISION.

GALVANIZED STEEL PILES ARE REQUIRED IN ACCORDANCE WITH SECTION 450 OF THE STANDARD SPECIFICATIONS.

STEEL PILE POINTS (WITH TEETH) ARE REQUIRED FOR STEEL PILES AT END BENTS NO. 1 AND 2. SEE SECTION 450 OF THE STANDARD SPECIFICATIONS.

NORTH CAROLINA PROFESSIONAL SEAL 19661 ENGINEER L. KEVIN AUSTIN 6/7/09

PLANS PREPARED BY:

MULKEY
ENGINEERS & CONSULTANTS
PO Box 33127
Raleigh, N.C. 27636
(919) 851-1918 (PHONE)
(919) 851-1918 (FAX)
WWW.MULKEYINC.COM

PROJECT NO. 38243

PAMLICO COUNTY

STATION: 16+05.00 -L-

REPLACES BRIDGE NO. 44

STATE OF NORTH CAROLINA
DEPARTMENT OF TRANSPORTATION
RALEIGH

FOUNDATION LAYOUT

33'-10" CLEAR ROADWAY - 90° SKEW

REVISIONS						SHEET NO.
NO.	BY:	DATE:	NO.	BY:	DATE:	156
1			3			TOTAL SHEETS
2			4			185

DRAWN BY : W. B. ALLEN DATE : 3/09
CHECKED BY : L. K. AUSTIN DATE : 3/09

6/5/2009 10:50:26 AM R:\Structures\B4594_SD_FL_04.dgn

SUPERSTRUCTURE SUMMARY

	30' EXTERIOR CORED SLAB	30' INTERIOR CORED SLAB (W/ 12" VOIDS)	30' INTERIOR CORED SLAB (W/ 8" VOIDS)	50' EXTERIOR CORED SLAB	50' INTERIOR CORED SLAB (W/ 12" VOIDS)	50' INTERIOR CORED SLAB (W/ 8" VOIDS)	TYPE I ELASTOMERIC BEARING PAD	CAST-IN-PLACE CONCRETE PARAPET	ONE BAR METAL RAIL
	EACH	EACH	EACH	EACH	EACH	EACH	EACH	LIN. FT.	LIN. FT.
SUPERSTRUCTURE									
SPAN A	2	9	1				24		
SPAN B				2	9	1	24		
TOTAL	2	9	1	2	9	1	48	164.17	145.17

SUBSTRUCTURE SUMMARY

	PIECE EB144	PIECE EB244	PIECE EB344	PIECE EB444	PIECE BW1	PIECE BW2	PIECE WW1	PIECE WF1	PIECE WW244	PIECE WF244	PIECE B144	PIECE B244	HP 12 X 53 GALVANIZED STEEL PILES		20" PRESTRESSED CONCRETE PILE	
	EACH	EACH	EACH	EACH	EACH	EACH	EACH	EACH	EACH	EACH	EACH	EACH	EA.	LIN.FT.	EA.	LIN.FT.
SUBSTRUCTURE																
END BENT #1	1	1			2	2	1	1	1	1			7	525.0		
BENT #1											1	1			7	245.0
END BENT #2			1	1	2	2	1	1	1	1			7	490.0		
TOTAL	1	1	1	1	4	4	2	2	2	2	1	1	14	1015.0	7	245.0

PROJECT NO. 38243

PAMLICO COUNTY

STATION: 16+05.00 -L-

REPLACES BRIDGE NO. 44

STATE OF NORTH CAROLINA
DEPARTMENT OF TRANSPORTATION
RALEIGH

SUPERSTRUCTURE & SUBSTRUCTURE SUMMARY

33'-10" CLEAR ROADWAY - 90°SKEW

NORTH CAROLINA PROFESSIONAL SEAL 19661 ENGINEER L. KEVIN AUSTIN
L. Kevin Austin 8/6/09

PLANS PREPARED BY:

MULKEY
ENGINEERS & CONSULTANTS
PO Box 33127
Raleigh, N.C. 27636
(919) 851-1912
(919) 851-1918 (FAX)
www.mulkeyinc.com

REVISIONS						SHEET NO.
NO.	BY:	DATE:	NO.	BY:	DATE:	157
1			3			TOTAL SHEETS
2			4			185

DRAWN BY : W. B. ALLEN DATE : 2/09
CHECKED BY : L. K. AUSTIN DATE : 3/09

8/6/2009 6:20:35 AM G:\project\2004\224.25_Pamlico44\Structures\B4594_SD_SUM_00.dgn

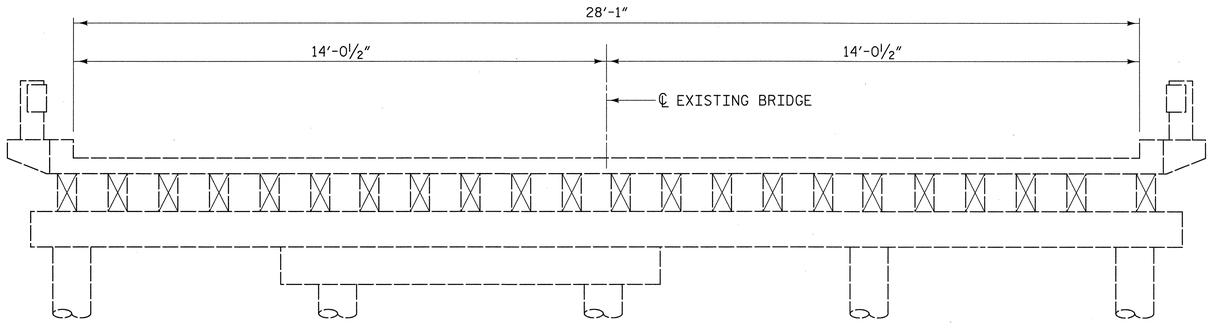

EXISTING BRIDGE

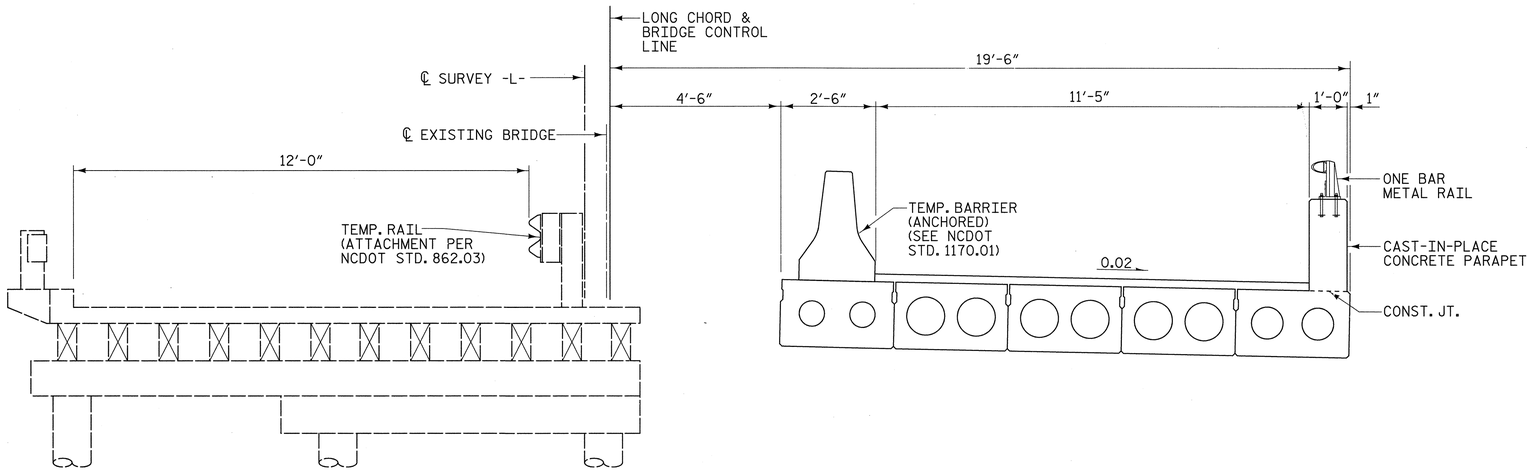

STAGE 1 CONSTRUCTION

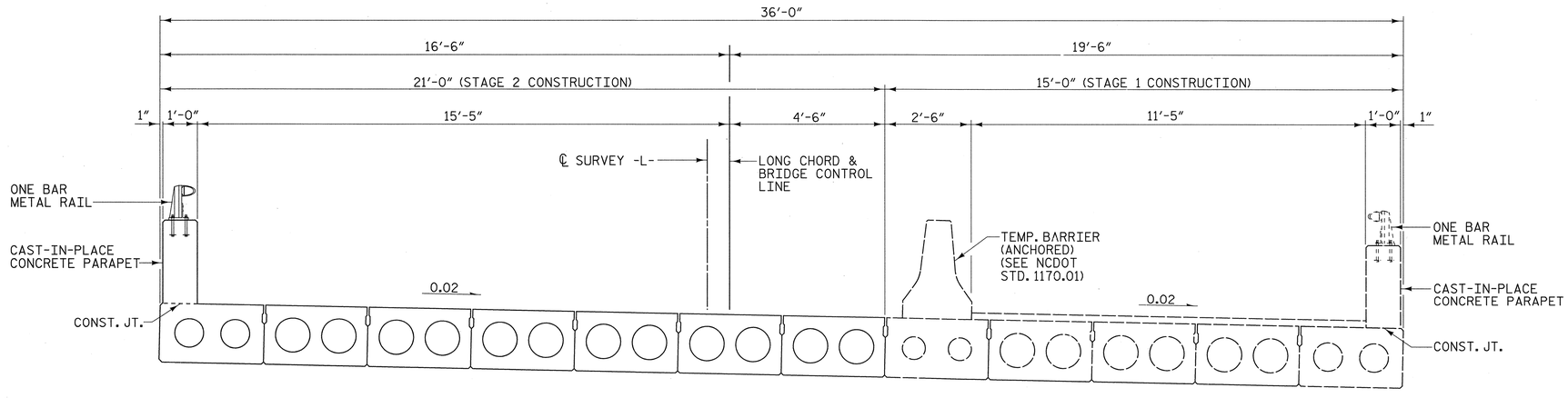

STAGE 2 CONSTRUCTION

NORTH CAROLINA PROFESSIONAL ENGINEER SEAL 19661 L. KEVIN AUSTIN 6/7/09

PLANS PREPARED BY:

MULKEY
ENGINEERS & CONSULTANTS
PO Box 33127
Raleigh, N.C. 27636
(919) 851-1912
(919) 851-1918 (FAX)
WWW.MULKEYINC.COM

PROJECT NO. 38243

PAMLICO COUNTY

STATION: 16+05.00 -L-

REPLACES BRIDGE NO. 44

STATE OF NORTH CAROLINA
DEPARTMENT OF TRANSPORTATION
RALEIGH

CONSTRUCTION STAGING

33'-10" CLEAR ROADWAY - 90°SKEW

REVISIONS						SHEET NO.
NO.	BY:	DATE:	NO.	BY:	DATE:	158
1			3			TOTAL SHEETS
2			4			185

DRAWN BY : W. B. ALLEN DATE : 2/09
CHECKED BY : L. K. AUSTIN DATE : 3/09

6/5/2009 10:49:09 AM R:\Structures\B4594_SD_PC_0L.dgn

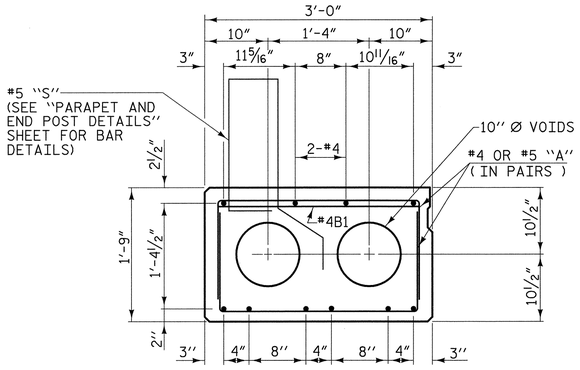

30' SPAN

8 - 0.6" Ø H.S. STRANDS
EXTERIOR SLAB SECTIONS
(CORED SLAB UNIT #1 & #12)

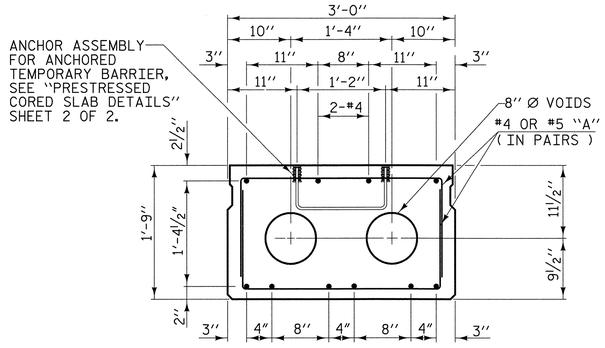

30' SPAN

8 - 0.6" Ø H.S. STRANDS
INTERIOR SLAB SECTION
(CORED SLAB UNIT #8)

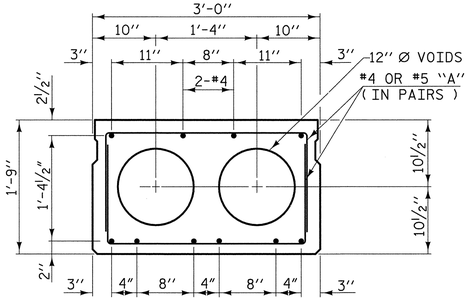

30' SPAN

8 - 0.6" Ø H.S. STRANDS
INTERIOR SLAB SECTIONS
(CORED SLAB UNITS #2 THRU #7 &
CORED SLAB UNITS #9 THRU #11)

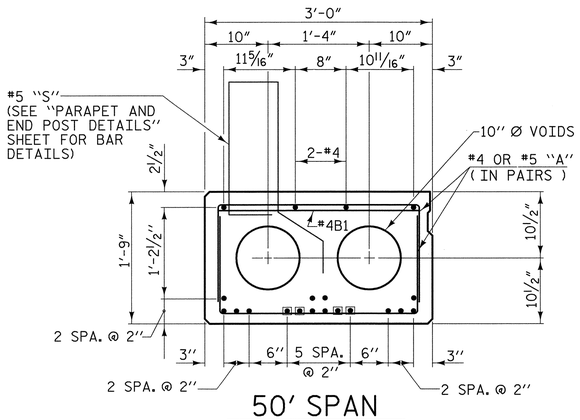

50' SPAN

18 - 0.6" Ø H.S. STRANDS
EXTERIOR SLAB SECTIONS
(CORED SLAB UNIT #1 & #12)

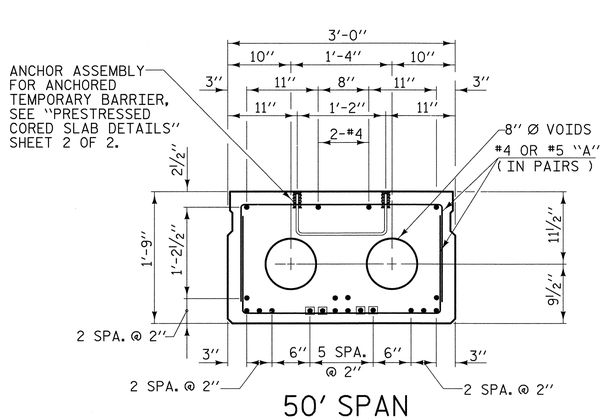

50' SPAN

18 - 0.6" Ø H.S. STRANDS
INTERIOR SLAB SECTION
(CORED SLAB UNIT #8)

◙ DENOTES SHEATHED STRAND
(SEE SHEATH CHART)

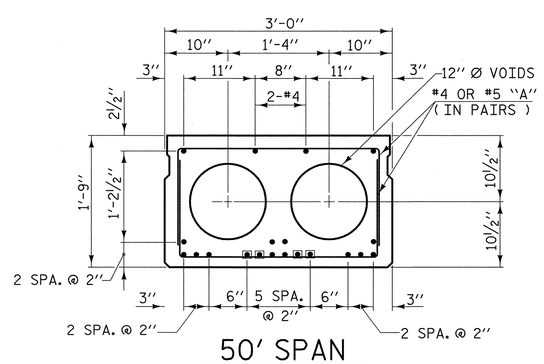

50' SPAN

18 - 0.6" Ø H.S. STRANDS
INTERIOR SLAB SECTIONS
(CORED SLAB UNITS #2 THRU #7 &
CORED SLAB UNITS #9 THRU #11)

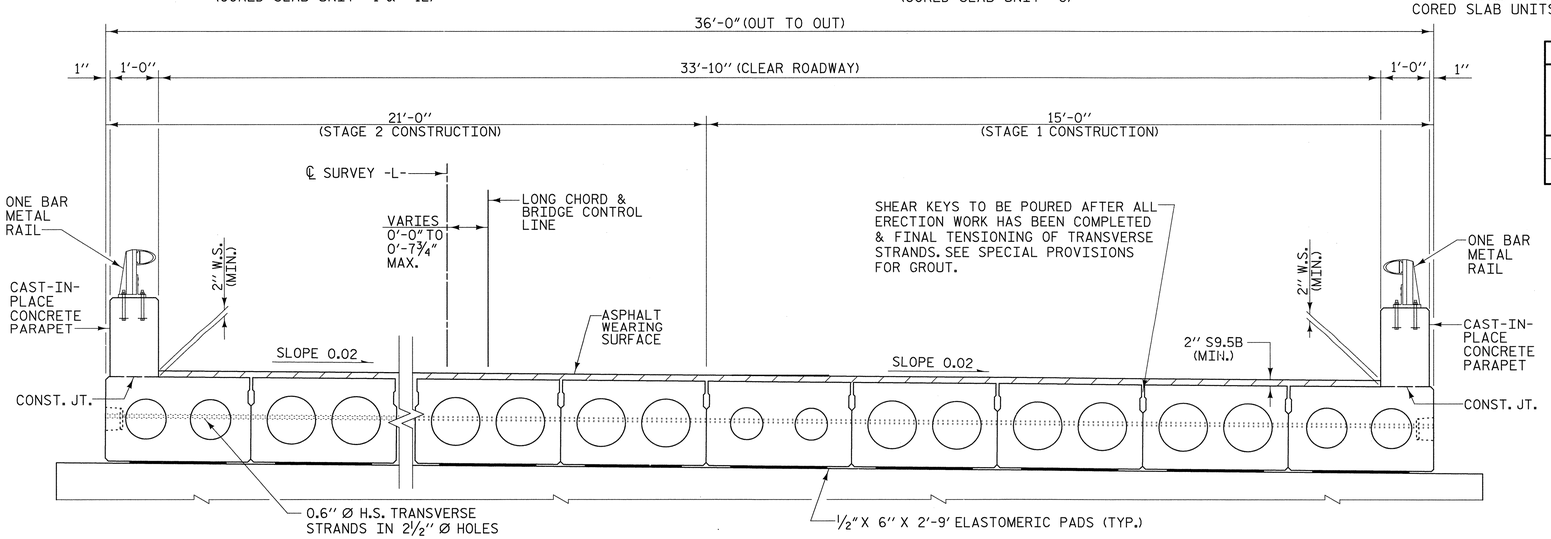

TYPICAL SECTION

SHEATH CHART		
SPAN LENGTH	NUMBER OF SHEATHED STRANDS PER EXTERIOR SLAB SECTIONS	NUMBER OF SHEATHED STRANDS PER INTERIOR SLAB SECTIONS
30'	0	0
50'	4	4

BOND SHALL BE BROKEN ON THESE STRANDS FOR A DISTANCE OF 4'-0" FROM END OF SLAB

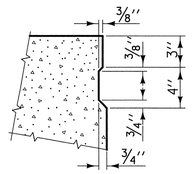

SHEAR KEY DETAIL

NOTE: OMIT SHEAR KEY ON OUTSIDE OF EXTERIOR CORED SLAB

GENERAL NOTES

ASSUMED LIVE LOAD = HS 25 OR ALTERNATE LOADING.

CONCRETE = f'c - 5000psi (MIN. COMP. STRENGTH @ 28 DAYS).

f'ci - 4000psi (MIN. COMP. STRENGTH @ TRANSFER OF STRESSING FORCE).

ALL PRESTRESSING STRANDS SHALL BE 7-WIRE LOW RELAXATION GRADE HIGH STRENGTH CABLES IN ACCORDANCE WITH THE STANDARD SPECIFICATIONS.

SIZE	TYPE	AREA	ULTIMATE STR.	APPLIED FORCE
0.6" Ø	HIGH STR.	0.217 SQ. IN. PER CABLE	58,600 LBS.	43,950 LBS. PER CABLE

STRUCTURAL STEEL ITEMS SHALL BE OF A GRADE CONFORMING TO EITHER ASTM A36 OR A373, EXCEPT HIGH STRENGTH BOLTS. HIGH STRENGTH BOLTS SHALL BE ASTM A325. ALL STRUCTURAL STEEL SHALL BE GALVANIZED AS PER THE SPECIFICATION.

ALL MATERIAL AND WORKMANSHIP SHALL COMPLY WITH THE APPLICABLE REQUIREMEMNTS OF THE STANDARD SPECIFICATIONS FOR ROADS AND STRUCTURES OF THE NC DEPARTMENT OF TRANSPORTATION DATED JULY 2006 AND WITH THE SPECIAL PROVISIONS.

ALL PRESTRESSING STRANDS SHALL BE 7-WIRE LOW RELAXATION GRADE 270 STRANDS AND SHALL CONFORM TO AASHTO M203 EXCEPT FOR SAMPLING REQUIREMENTS WHICH SHALL BE IN ACCORDANCE WITH THE STANDARD SPECIFICATIONS.

ALL REINFORCING STEEL CAST WITH THE CORED SLAB SECTIONS SHALL BE GRADE 60 AND SHALL BE INCLUDED IN THE UNIT PRICE BID FOR PRESTRESSED CONCRETE CORED SLABS.

RECESSES FOR TRANSVERSE STRANDS SHALL BE GROUTED AFTER THE TENSIONING OF THE STRANDS.

WHEN CORED SLABS ARE CAST, A POSITIVE HOLD-DOWN SYSTEM SHALL BE EMPLOYED TO PREVENT VOIDS FROM RISING OR MOVING SIDEWAYS. THIS SYSTEM SHALL BE DESIGNED TO BE LEFT IN PLACE UNTIL THE CONCRETE HAS REACHED RELEASE STRENGTH. AT LEAST THREE WEEKS PRIOR TO CASTING CORED SLABS, THE CONTRACTOR SHALL SUBMIT TO THE ENGINEER FOR REVIEW AND COMMENT, DETAILED DRAWINGS OF THE PROPOSED HOLD-DOWN SYSTEM. IN ADDITION TO STRUCTURAL DETAILS, LOCATION AND SPACING OF THE HOLD-DOWNS SHALL BE INDICATED.

WHEN A CONCRETE WEARING SURFACE IS DETAILED ON THE CORED SLAB BRIDGE TYPICAL SECTION, THE TOP SURFACE OF THE CORED SLAB UNITS SHALL HAVE A ⅜" RAKED FINISH.

PRESTRESSING STRANDS SHALL BE CUT FLUSH WITH THE CORED SLAB UNIT ENDS.

APPLY EPOXY PROTECTIVE COATING TO CORED SLAB UNIT ENDS.

UNLESS OTHERWISE NOTED ON THE PLANS, ALL EXPOSED CORNERS ON STRUCTURES SHALL BE CHAMFERED ¾".

FOR DEFLECTION TABLE, SEE "PRESTRESSED CORED SLAB DETAILS" SHEET 1 OF 2.

PROJECT NO. 38243

PAMLICO COUNTY

STATION: 16+05.00 -L-

REPLACES BRIDGE NO. 44

STATE OF NORTH CAROLINA
DEPARTMENT OF TRANSPORTATION
RALEIGH
STANDARD

PRESTRESSED CORED SLAB 30' & 50' SPANS

33'-10" CLEAR ROADWAY - 90°SKEW

REVISIONS						SHEET NO.
NO.	BY:	DATE:	NO.	BY:	DATE:	159
1			3			TOTAL SHEETS
2			4			185

DRAWN BY : W. B. ALLEN DATE : 2/09
CHECKED BY : L. K. AUSTIN DATE : 3/09

NORTH CAROLINA PROFESSIONAL ENGINEER SEAL 1966 L. KEVIN AUSTIN 8/6/09

PLANS PREPARED BY:

MULKEY ENGINEERS & CONSULTANTS
PO BOX 33127
RALEIGH, N.C. 27636
(919) 851-1912
(919) 851-1918 (FAX)
WWW.MULKEYINC.COM

8/6/2009 6:03:05 AM G:\project\2004\224.25_Pamlico44\Structures\84594_SD_TS_0u.dgn

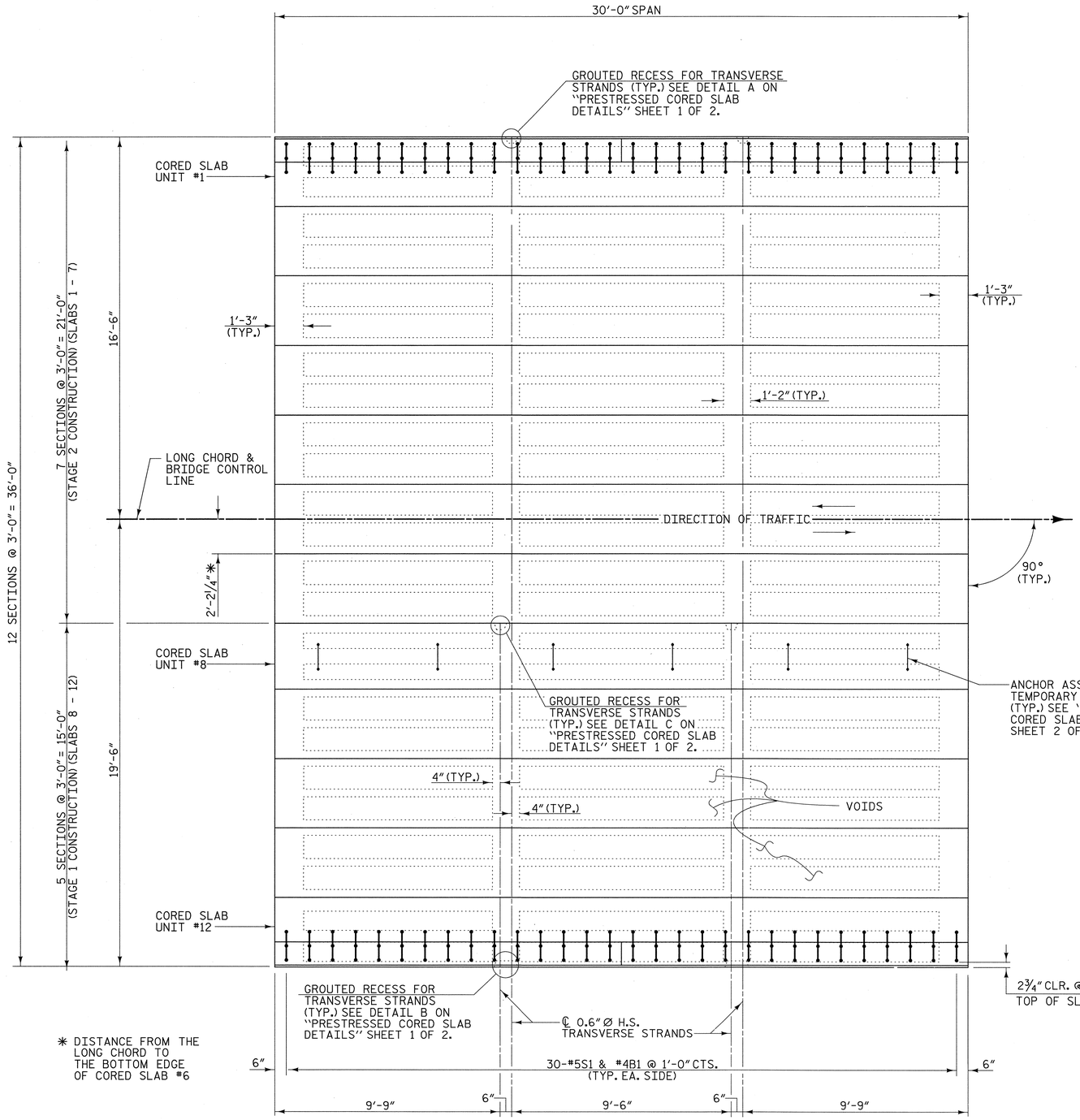

* DISTANCE FROM THE LONG CHORD TO THE BOTTOM EDGE OF CORED SLAB #6

PLAN OF SPAN

NOTE:

SEE "PARAPET & END POST DETAILS" SHEET FOR "S" BAR MARKS.

FIXED END

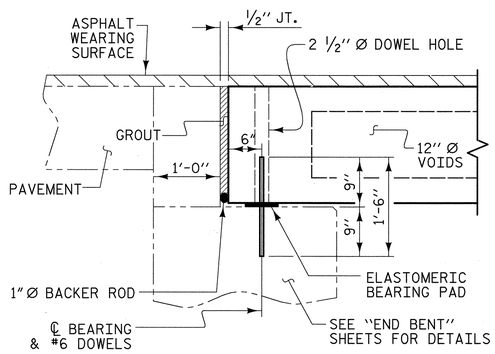

SECTION AT END BENT

FIXED END FIXED END

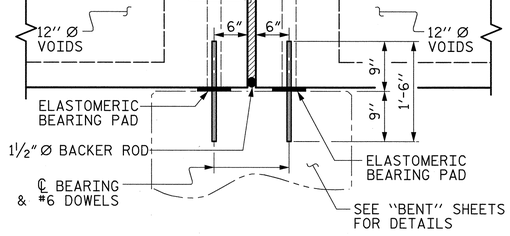

SECTION AT BENT

PROJECT NO. 38243

PAMLICO COUNTY

STATION: 16+05.00 -L-

REPLACES BRIDGE NO. 44

STATE OF NORTH CAROLINA
DEPARTMENT OF TRANSPORTATION
RALEIGH

STANDARD

PRESTRESSED CORED SLAB 30' SPAN

33'-10" CLEAR ROADWAY - 90° SKEW

NORTH CAROLINA PROFESSIONAL SEAL 19661 ENGINEER L. KEVIN AUSTIN 6/7/09

PLANS PREPARED BY:

MULKEY ENGINEERS & CONSULTANTS
PO Box 33127
Raleigh, NC 27636
(919) 851-1212
(919) 851-1918 (FAX)
WWW.MULKEYINC.COM

REVISIONS						SHEET NO.
NO.	BY:	DATE:	NO.	BY:	DATE:	160
1			3			TOTAL SHEETS
2			4			185

DRAWN BY : W. B. ALLEN DATE : 3/05
CHECKED BY : L. K. AUSTIN DATE : 3/09

6/5/2009 10:47:34 AM R:\Structures\B4594_SD_CS_0d.dgn

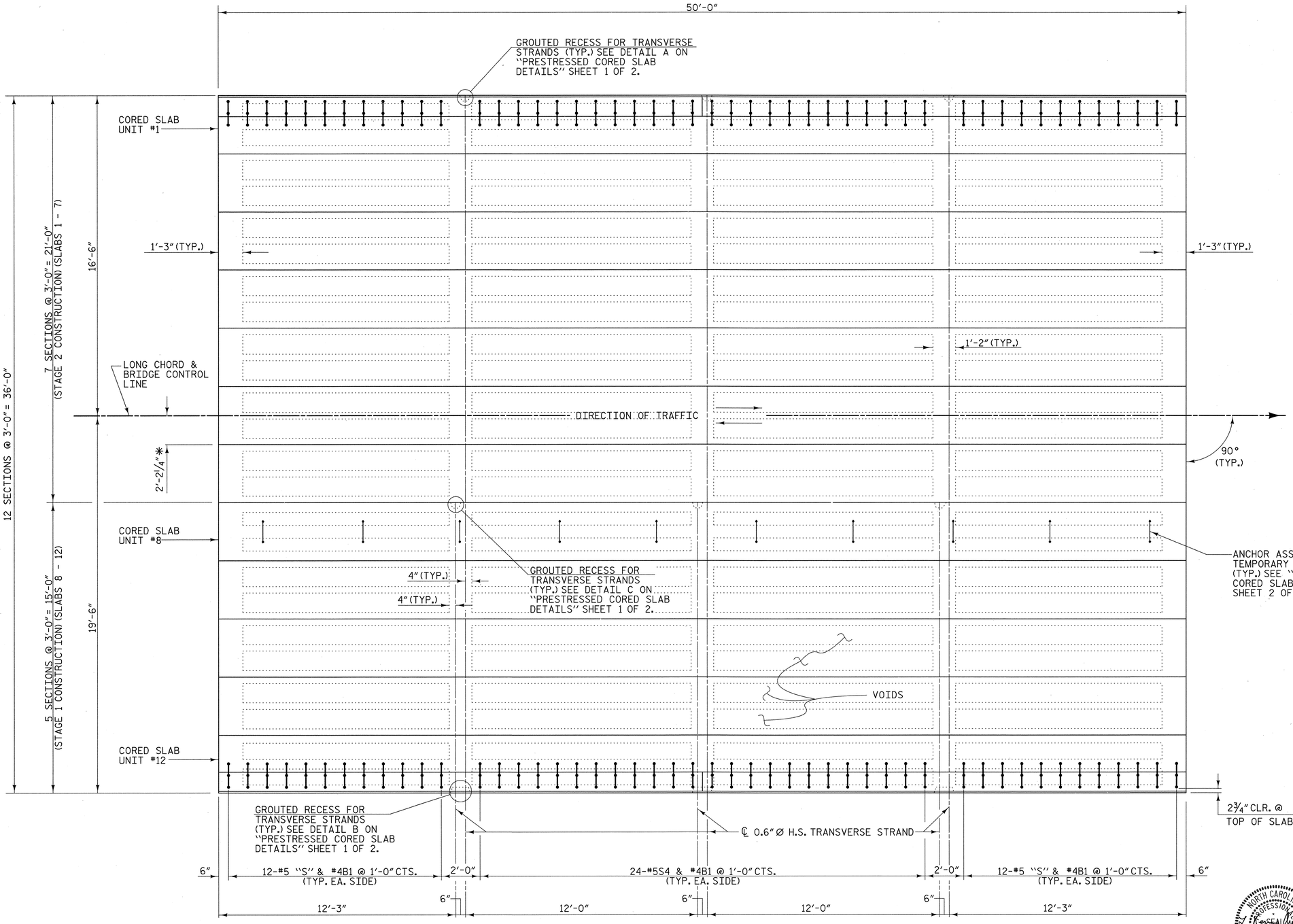

PLAN OF SPAN

NOTE:

SEE "PARAPET & END POST DETAILS" SHEET FOR "S" BAR MARKS.

PROJECT NO. 38243

PAMLICO COUNTY

STATION: 16+05.00 -L-

REPLACES BRIDGE NO. 44

STATE OF NORTH CAROLINA
DEPARTMENT OF TRANSPORTATION
RALEIGH

STANDARD

PRESTRESSED CORED SLAB 50' SPAN

33'-10" CLEAR ROADWAY - 90° SKEW

NORTH CAROLINA PROFESSIONAL SEAL 19661 ENGINEER L. KEVIN AUSTIN 6/7/09

PLANS PREPARED BY:

MULKEY
ENGINEERS & CONSULTANTS
PO BOX 33127
RALEIGH, N.C. 27636
(919) 851-1918
(919) 851-1918 (FAX)
WWW.MULKEYINC.COM

REVISIONS					
NO.	BY:	DATE:	NO.	BY:	DATE:
1			3		
2			4		

SHEET NO. 161

TOTAL SHEETS 185

DRAWN BY : W. B. ALLEN DATE : 3/05
CHECKED BY : L. K. AUSTIN DATE : 3/09

6/5/2009 10:46:56 AM R:\Structures\38494_SD_CS_02.dgn

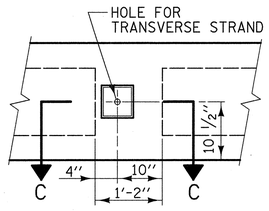

ELEVATION

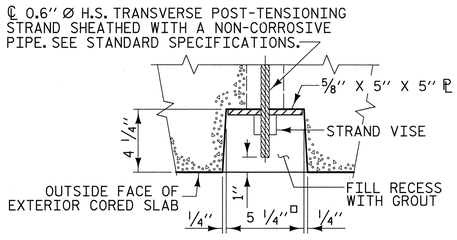

SECTION C-C

DETAIL A
GROUTED RECESS AT END OF POST-TENSIONED STRAND CORED SLAB

(CORED SLAB UNIT #1)

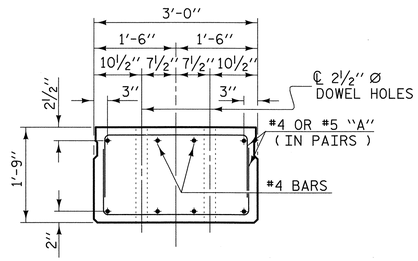

SLAB END ELEVATION

THE 2 1/2" Ø DOWEL HOLES AT FIXED ENDS OF SLAB SECTIONS SHALL BE FILLED WITH NON-SHRINK GROUT, SEE SPECIAL PROVISIONS.

EXTERIOR SLAB UNIT	30'	50'
CAMBER (SLAB UNIT ALONE IN PLACE)	5/16" (UP)	2 7/16" (UP)
DEFLECTION (SUPERIMPOSED DEAD LOAD)	* 1/16" (DOWN)	* 5/16" (DOWN)
FINAL DEFLECTION	1/4" (UP)	2 1/8" (UP)
* INCLUDES FUTURE WEARING SURFACE		

INTERIOR SLAB UNIT	30'	50'
CAMBER (SLAB UNIT ALONE IN PLACE)	5/16" (UP)	2 11/16" (UP)
DEFLECTION (SUPERIMPOSED DEAD LOAD)	* 1/16" (DOWN)	* 5/16" (DOWN)
FINAL DEFLECTION	1/4" (UP)	2 3/8" (UP)
* INCLUDES FUTURE WEARING SURFACE		

NOTES

CONCRETE CHAMFERS:
UNLESS OTHERWISE NOTED ON THE PLANS, ALL EXPOSED CORNERS ON STRUCTURES SHALL BE CHAMFERED 3/4" WITH THE FOLLOWING EXCEPTIONS: TOP CORNERS OF CURBS MAY BE ROUNDED TO 1 1/2" RADIUS WHICH IS BUILT INTO CURB FORMS; CORNERS OF TRANSVERSE FLOOR EXPANSION JOINTS SHALL BE ROUNDED WITH A 1/4" FINISHING TOOL UNLESS OTHERWISE REQUIRED ON PLANS; AND CORNERS OF EXPANSION JOINTS IN THE ROADWAY FACES AND TOPS OF CURBS AND SIDEWALKS SHALL BE ROUNDED TO A 1/4" RADIUS WITH A FINISHING STONE OR TOOL UNLESS OTHERWISE ON PLANS.

DECK DRAINS ARE NOT PERMITTED.

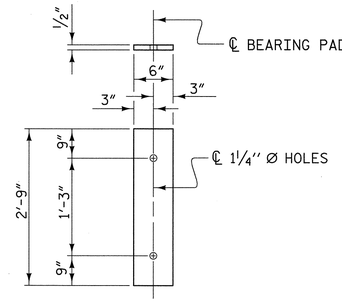

FIXED
(TYPE I - 72 REQ'D)

ELASTOMERIC BEARING DETAILS

NOTE: ELASTOMER HARDNESS SHALL BE 60 DUROMETERS.

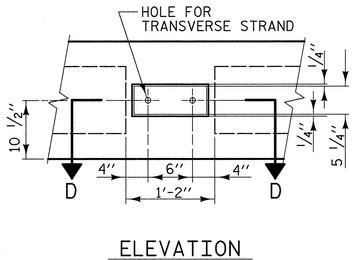

ELEVATION

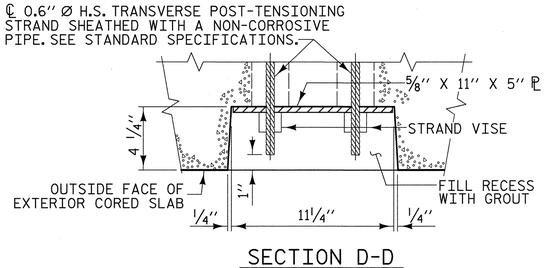

SECTION D-D

DETAIL B
GROUTED RECESS AT END OF POST-TENSIONED STRAND CORED SLAB

(CORED SLAB UNIT #12)

REINFORCING BAR TYPES

BAR DIMENSIONS ARE OUT TO OUT

TIE LOCATION FOR #5 "S"

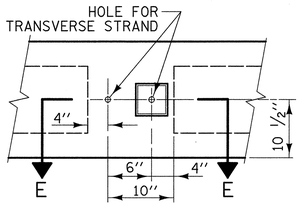

ELEVATION

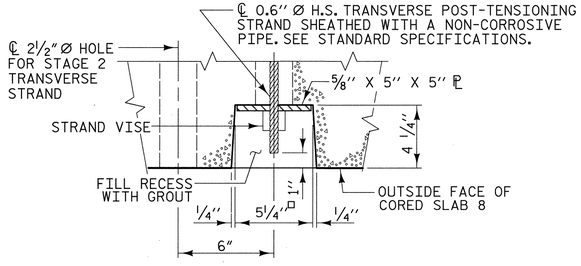

SECTION E-E

DETAIL C
GROUTED RECESS AT END OF POST-TENSIONED STRAND CORED SLAB

(CORED SLAB UNIT #8)

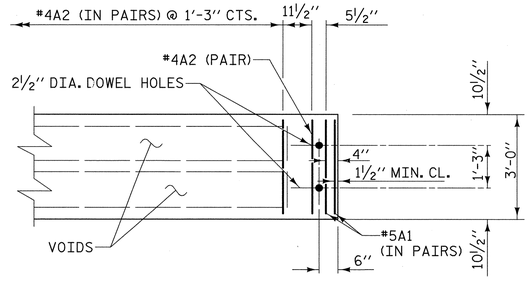

PART PLAN - SLAB SECTION

PROJECT NO. 38243

PAMLICO COUNTY

STATION: 16+05.00 -L-

REPLACES BRIDGE NO. 44 SHEET 1 OF 2

STATE OF NORTH CAROLINA
DEPARTMENT OF TRANSPORTATION
RALEIGH

PRESTRESSED CORED SLAB DETAILS

33'-10" CLEAR ROADWAY - 90° SKEW

NORTH CAROLINA PROFESSIONAL SEAL 19661 ENGINEER L. KEVIN AUSTIN 6/7/01

PLANS PREPARED BY:

MULKEY
ENGINEERS & CONSULTANTS
PO BOX 33127
RALEIGH, N.C. 27636
(919) 851-1912
(919) 851-1918 (FAX)
WWW.MULKEYINC.COM

REVISIONS						SHEET NO.
NO.	BY:	DATE:	NO.	BY:	DATE:	162
1			3			TOTAL SHEETS
2			4			185

DRAWN BY : W. B. ALLEN DATE : 3/05
CHECKED BY : L. K. AUSTIN DATE : 2/09

6/5/2009 10:46:10 AM R:\Structures\B4594_SD_CS_03.dgn

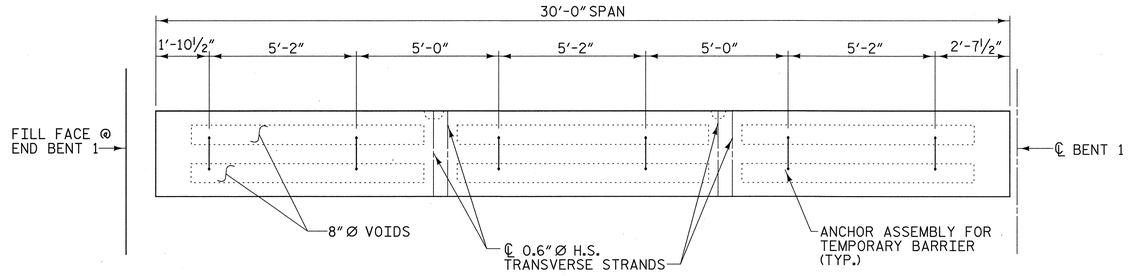

SPAN A

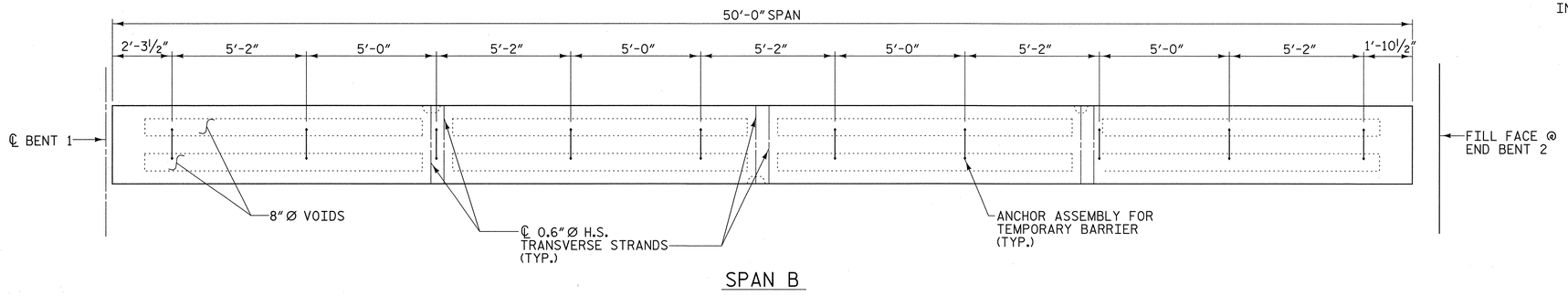

SPAN B

ANCHOR ASSEMBLY LAYOUT FOR CORED SLAB UNIT #8

NOTES

THE ANCHOR ASSEMBLY FOR TEMPORARY BARRIER SHALL CONSIST OF THE FOLLOWING COMPONENTS :

A. FERRULES SHALL BE MADE FROM STEEL MEETING THE REQUIREMENTS OF AASHTO M169, GRADE 12L14 AND SHALL HAVE A MINIMUM LENGTH OF THREADS OF 2½".

B. 2 - ⅞" Ø X 1'-0" ANCHOR BOLTS SHALL CONFORM TO THE REQUIREMENTS OF ASTM A307. ANCHOR BOLTS SHALL BE GALVANIZED. (AT THE CONTRACTOR'S OPTION, STAINLESS STEEL BOLTS AND WASHERS MAY BE USED AS AN ALTERNATE FOR THE ⅞" Ø X 1'-0" GALVANIZED ANCHOR BOLTS. THEY SHALL CONFORM TO OR EXCEED THE MECHANICAL REQUIREMENTS OF ASTM A307. THE USE OF THIS ALTERNATE SHALL BE APPROVED BY THE ENGINEER.)

C. WIRE STRUT SHOWN IN THE ANCHOR ASSEMBLY DETAIL ARE MINIMUM ALLOWABLE SIZE AND SHALL HAVE A MINIMUM TENSILE STRENGTH OF 100,000 PSI.

ANCHOR ASSEMBLY WITH BOLTS SHALL BE ASSEMBLED IN THE SHOP. BOLT THREADS MAY BE RECUT AS NECESSARY TO INSURE FIT.

THE COST OF THE ANCHOR ASSEMBLY COMPLETE IN PLACE, SHALL BE INCLUDED, IN THE UNIT CONTRACT PRICE BID FOR CONSTRUCTION OF SUPERSTRUCTURE, SEE SPECIAL PROVISIONS.

FERRULES TO BE PLUGGED DURING CASTING OF THE CORED SLAB UNITS AS RECOMMENDED BY THE MANUFACTURER.

AT THE CONTRACTOR'S OPTION, FERRULES WITH OPEN OR CLOSED ENDS MAY BE USED.

FOR 4" X 3¼" X ½" BARRIER WASHER TO BE USED WITH ANCHOR ASSEMBLY, SEE NCDOT ROADWAY STD. 1170.01.

PAYMENT FOR ANCHORED TEMPORARY BARRIER AND BARRIER WASHER ARE INCLUDED IN TRAFFIC CONTROL PAY ITEM, SEE SPECIAL PROVISIONS.

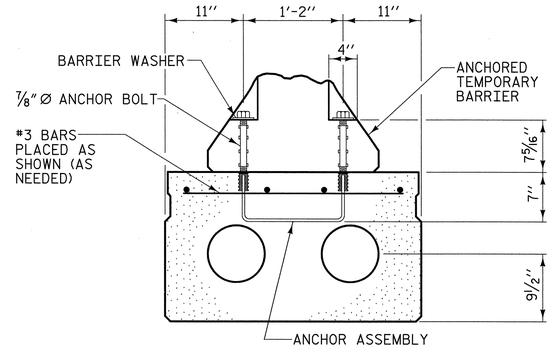

CORED SLAB UNIT #8

(SHOWING PLACEMENT OF ANCHOR ASSEMBLY)

THE #3 BARS ARE INCIDENTAL AND THEIR COST SHALL BE INCLUDED IN THE PRICE BID FOR THE PRESTRESSED CONCRETE CORED SLAB.

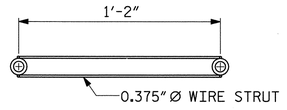

PLAN

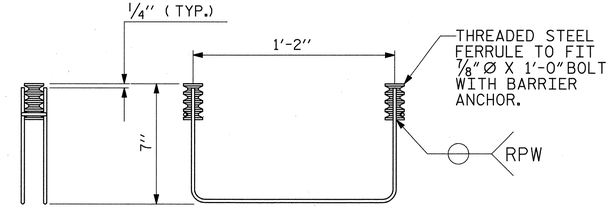

SIDE VIEW ELEVATION

MINIMUM LENGTH OF THREADS IN INSERT (FERRULE): 2½"

ANCHOR ASSEMBLY FOR TEMPORARY BARRIER

(16 ASSEMBLIES REQUIRED)

PROJECT NO. 38243

PAMLICO COUNTY

STATION: 16+05.00 -L-

REPLACES BRIDGE NO. 44 SHEET 2 OF 2

STATE OF NORTH CAROLINA
DEPARTMENT OF TRANSPORTATION
RALEIGH

PRESTRESSED CORED SLAB DETAILS

33'-10" CLEAR ROADWAY - 90° SKEW

NORTH CAROLINA PROFESSIONAL SEAL 1966 ENGINEER L. KEVIN AUSTIN
6/7/09

PLANS PREPARED BY:

MULKEY
ENGINEERS & CONSULTANTS
PO Box 33127
Raleigh, N.C. 27636
(919) 851-1313
(919) 851-7918 (FAX)
WWW.MULKEYINC.COM

REVISIONS						SHEET NO.
NO.	BY:	DATE:	NO.	BY:	DATE:	163
1			3			TOTAL SHEETS
2			4			185

DRAWN BY : W. B. ALLEN DATE : 2/09
CHECKED BY : L. K. AUSTIN DATE : 2/09

6/5/2009 10:45:28 AM R:\Structures\B4594_SD_CS_04.dgn

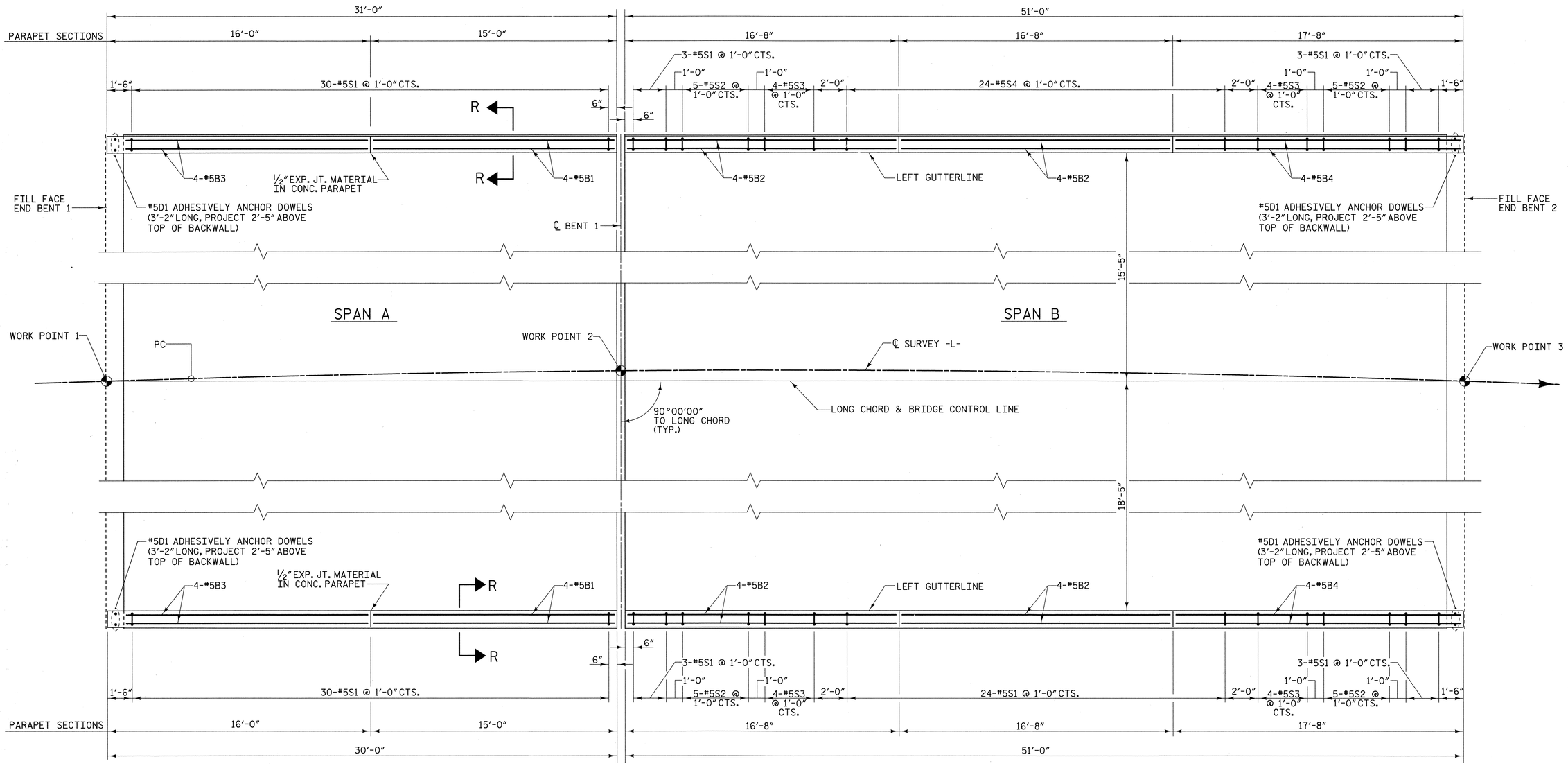

PLAN

NOTE: DISTANCES ARE ALONG OUTSIDE FACE OF PARAPET.

FOR END POST DETAILS AND SECTION R-R SEE "PARAPET AND END POST DETAILS" SHEET.

PROJECT NO. 38243

PAMLICO COUNTY

STATION: 16+05.00 -L-

REPLACES BRIDGE NO. 44

STATE OF NORTH CAROLINA
DEPARTMENT OF TRANSPORTATION
RALEIGH

PLAN OF PARAPET

33'-10" CLEAR ROADWAY - 90° SKEW

PLANS PREPARED BY:

MULKEY
ENGINEERS & CONSULTANTS
PO Box 33127
Raleigh, N.C. 27636
(919) 851-1912
(919) 851-1918 (FAX)
www.mulkeyinc.com

REVISIONS						SHEET NO.
NO.	BY:	DATE:	NO.	BY:	DATE:	164
1			3			TOTAL SHEETS
2			4			185

DRAWN BY : W. B. ALLEN DATE : 2/09
CHECKED BY : L. K. AUSTIN DATE : 2/09

6/5/2009 10:44:38 AM R:\Structures\38494_SD_PR_01.dgn

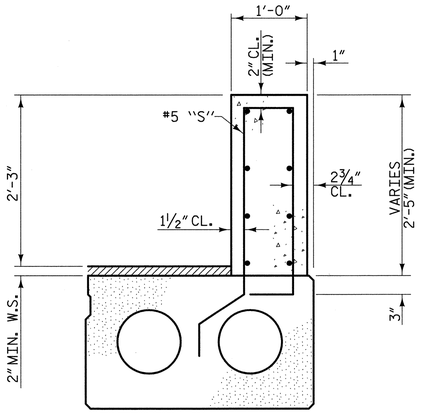

SECTION R-R

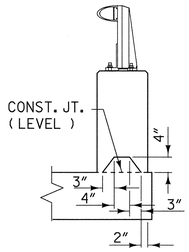

SECTION S-S

AT DAM IN OPEN JOINT
(THIS IS TO BE USED ONLY WHEN SLIP FORM IS USED)

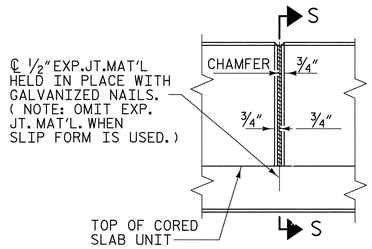

ELEVATION AT EXPANSION JOINTS

NOTES

ALL REINFORCING STEEL IN THE PARAPET AND END POSTS SHALL BE EPOXY COATED.

#5 "S" BARS MAY BE SHIFTED SLIGHTLY AS NECESSARY TO AVOID INTERFERENCE WITH THE ONE BAR METAL RAIL POST ANCHORAGE ASSEMBLIES.

THE #5D1 DOWELS SHALL BE INSTALLED USING AN ADHESIVE ANCHORING SYSTEM. FOR ADHESIVELY ANCHORED DOWELS, SEE SPECIAL PROVISIONS. THE YIELD LOAD OF THE #5D1 BARS IS 18.6 KIPS. FIELD TESTING OF THE ADHESIVE BONDING SYSTEM IS NOT REQUIRED.

FOR DETAILS OF CONCRETE INSERT AND GUARDRAIL ANCHOR ASSEMBLY, SEE "RAIL POST SPACINGS AND END OF RAIL DETAILS" AND "GUARDRAIL ANCHORAGE" SHEETS.

BILL OF MATERIAL FOR PARAPET & END POSTS

BAR	NO.	SIZE	TYPE	LENGTH	WEIGHT
✳B1	16	#5	STR	14'-7"	243
✳B2	32	#5	STR	16'-3"	542
✳B3	16	#5	STR	15'-7"	260
✳B4	16	#5	STR	17'-3"	288
✳D1	8	#5	STR	3'-2"	26
✳E1	8	#7	STR	2'-11"	48
✳E2	8	#7	STR	3'-1"	50
✳E3	8	#7	STR	3'-3"	53
✳E4	8	#7	STR	3'-5"	56
✳E5	16	#7	STR	3'-6"	114
✳F1	8	#6	2	4'-4"	52
✳F2	8	#6	STR	4'-5"	53
✳S1	72	#5	1	7'-7"	569
✳S2	20	#5	1	7'-6"	156
✳S3	16	#5	1	7'-5"	124
✳S4	48	#5	1	7'-4"	367

✳EPOXY COATED REINFORCING STEEL LBS. =	3001
CLASS AA CONCRETE CU. YDS. =	16.0
CONCRETE PARAPET L.F. =	164'-2"

BAR TYPE

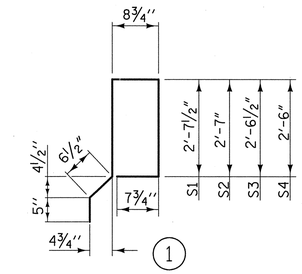

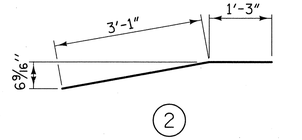

ALL BAR DIMENSIONS ARE OUT TO OUT

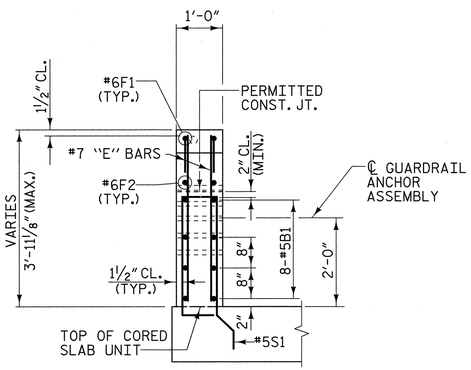

END VIEW

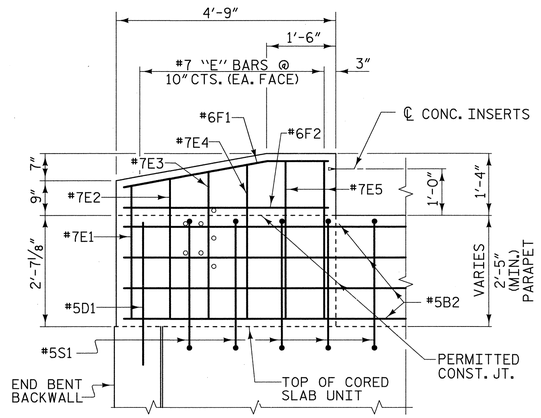

ELEVATION

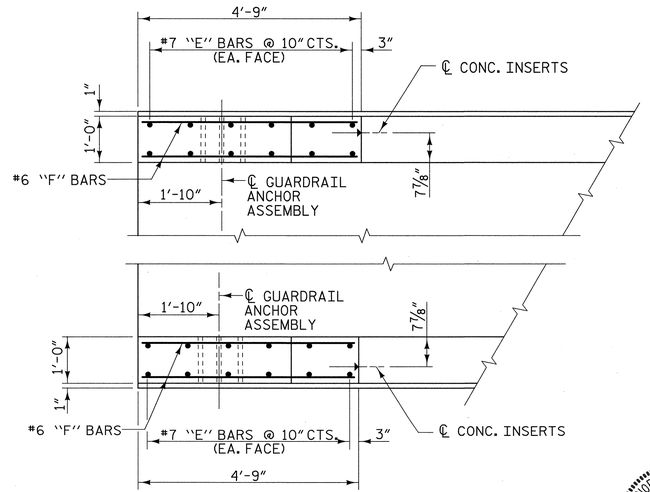

PLAN OF END POSTS

PARAPET AND END POST DETAILS

PROJECT NO. 38243

PAMLICO COUNTY

STATION: 16+05.00 -L-

REPLACES BRIDGE NO. 44

STATE OF NORTH CAROLINA
DEPARTMENT OF TRANSPORTATION
RALEIGH

PARAPET AND END POST DETAILS

33'-10" CLEAR ROADWAY - 90° SKEW

NORTH CAROLINA PROFESSIONAL ENGINEER SEAL 19661 ENGINEER L. KEVIN AUSTIN 6/7/09

PLANS PREPARED BY:

MULKEY
ENGINEERS & CONSULTANTS
PO BOX 33127
RALEIGH, N.C. 27636
(919) 851-1912
(919) 851-1918 (FAX)
WWW.MULKEYINC.COM

REVISIONS					
NO.	BY:	DATE:	NO.	BY:	DATE:
1			3		
2			4		

SHEET NO. 165

TOTAL SHEETS 185

DRAWN BY : W. B. ALLEN DATE : 2/09
CHECKED BY : L. K. AUSTIN DATE : 3/09

6/5/2009 10:43:44 AM R:\Structures\B4594_SD_PR_02.dgn

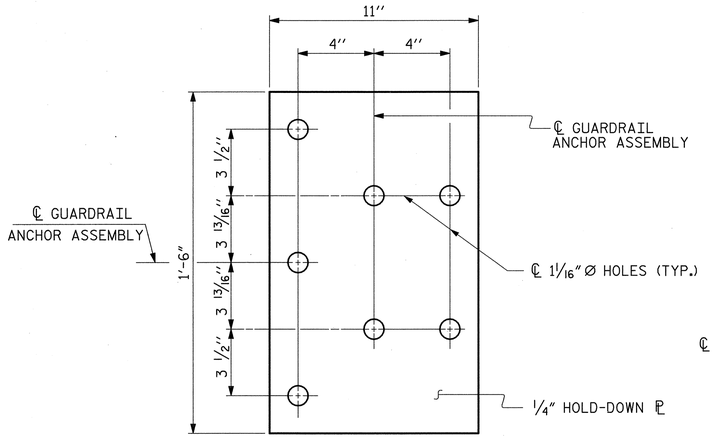

PLAN

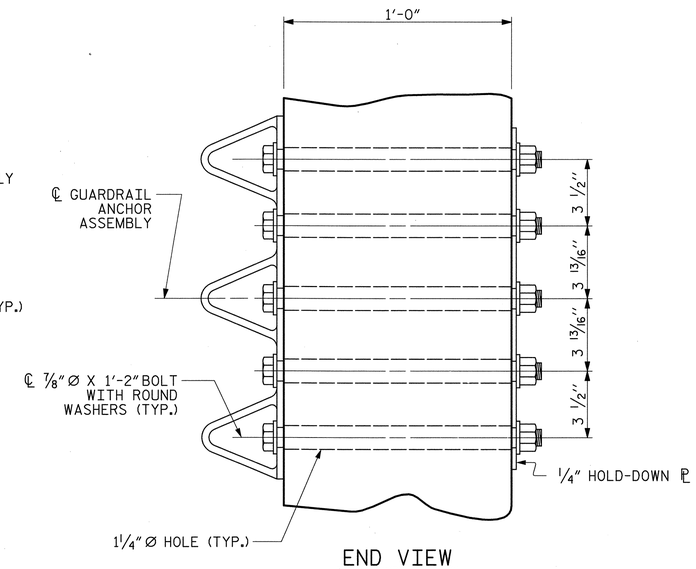

END VIEW

GUARDRAIL ANCHOR ASSEMBLY DETAILS

NOTES

THE GUARDRAIL ANCHOR ASSEMBLY SHALL CONSIST OF A 1/4'' HOLD DOWN PLATE AND 7 - 7/8'' Ø BOLTS WITH NUTS AND WASHERS.

THE HOLD-DOWN PLATE SHALL CONFORM TO AASHTO M270 GRADE 36. AFTER FABRICATION, THE HOLD-DOWN PLATE SHALL BE HOT-DIP GALVANIZED IN ACCORDANCE WITH AASHTO M111.

BOLTS SHALL CONFORM TO THE REQUIREMENTS OF ASTM A307 AND NUTS SHALL CONFORM TO THE REQUIREMENTS OF AASHTO M291. BOLTS, NUTS AND WASHERS SHALL BE GALVANIZED. AT THE CONTRACTOR'S OPTION, STAINLESS STEEL BOLTS, NUTS AND WASHERS MAY BE USED AS AN ALTERNATE FOR THE 7/8'' Ø GALVANIZED BOLTS, NUTS AND WASHERS. THEY SHALL CONFORM TO OR EXCEED THE MECHANICAL REQUIREMENTS OF ASTM A307. THE USE OF THIS ALTERNATE SHALL BE APPROVED BY THE ENGINEER.

AFTER INSTALLATION, THE EXPOSED THREAD OF THE BOLT SHALL BE BURRED WITH A SHARP POINTED TOOL.

THE COST OF THE GUARDRAIL ANCHOR ASSEMBLIES WITH BOLTS, NUTS AND WASHERS COMPLETE IN PLACE, SHALL BE INCLUDED IN THE VARIOUS PAY ITEMS.

THE VERTICAL REINFORCING BARS MAY BE SHIFTED SLIGHTLY IN THE END POST TO CLEAR ASSEMBLY BOLTS.

THE 1 1/4'' Ø HOLES SHALL BE FORMED OR DRILLED WITH A CORE BIT. IMPACT TOOLS WILL NOT BE PERMITTED. ANY CONCRETE DAMAGED BY THIS WORK SHALL BE REPAIRED TO THE SATISFACTION OF THE ENGINEER.

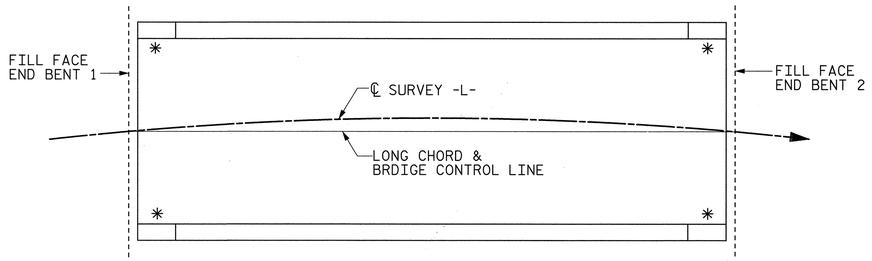

SKETCH SHOWING POINTS OF ATTACHMENT

✳ LOCATION OF GUARDRAIL ATTACHMENT

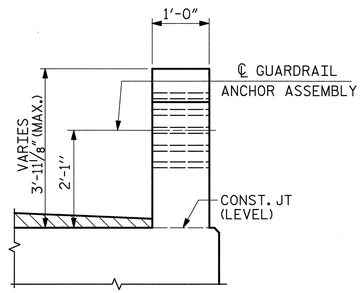

END VIEW
(ONE BAR METAL RAIL)

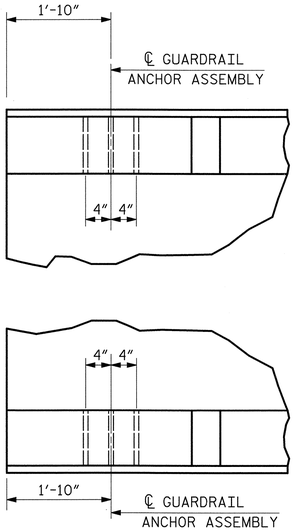

PLAN

LOCATION OF GUARDRAIL ANCHOR AT END POST

ASSEMBLED BY : W. B. ALLEN		DATE :	2/09
CHECKED BY : L. K. AUSTIN		DATE :	2/09
DRAWN BY : EEM	6/94	REV. 10/17/00	RWW/LES
CHECKED BY : RGW	6/94	REV. 5/7/03	RWW/JTE
		REV. 5/1/06	TLA/GM

PLANS PREPARED BY:
MULKEY ENGINEERS & CONSULTANTS
PO Box 33127
Raleigh, N.C. 27636
(919) 851-1912
(919) 851-1918 (FAX)
www.mulkeyinc.com

THIS STANDARD DRAWING REVIEWED & ADOPTED FOR USE AT THE REFERENCED LOCATION BY THE UNDERSIGNED:

NORTH CAROLINA PROFESSIONAL SEAL 19661 ENGINEER KEVIN AUSTIN 6/7/09

PROJECT NO. 38243

PAMLICO COUNTY

STATION: 16+05.00 -L-

REPLACES BRIDGE NO. 44

STATE OF NORTH CAROLINA
DEPARTMENT OF TRANSPORTATION
RALEIGH

STANDARD
GUARDRAIL ANCHORAGE DETAILS FOR METAL RAILS

REVISIONS						SHEET NO.
NO.	BY:	DATE:	NO.	BY:	DATE:	166
1			3			TOTAL SHEETS
2			4			185

STD. NO. BMR8

6/5/2009 10:42:49 AM R:\Structures\B4594_SD_GR_DD.dgn

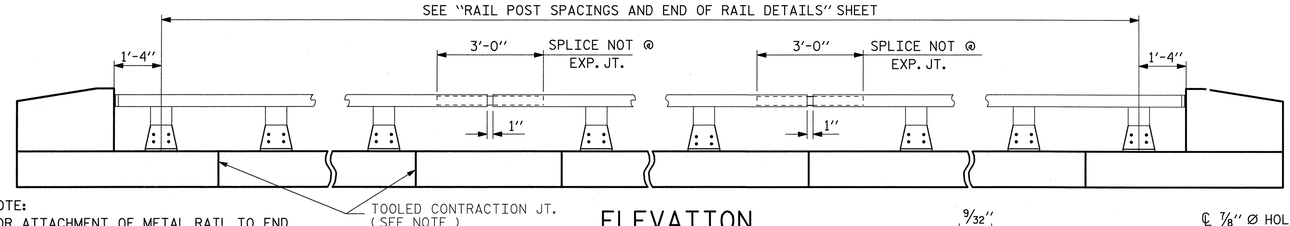

NOTE:
FOR ATTACHMENT OF METAL RAIL TO END POST, SEE STANDARD NO. BMR2.

ELEVATION

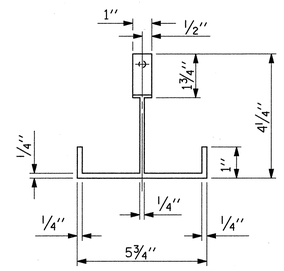

PLAN

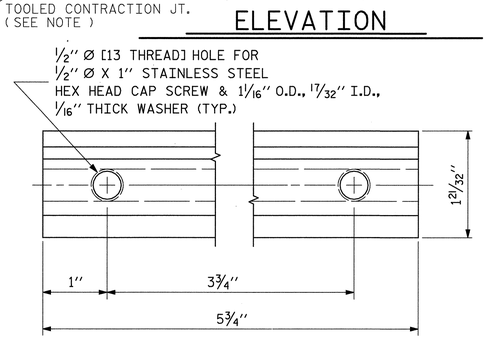

CLAMP BAR DETAIL

(2 REQUIRED PER POST)

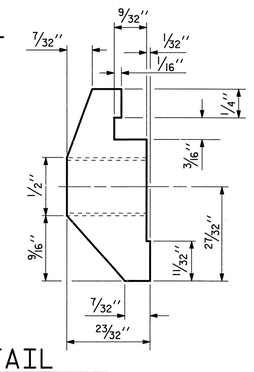

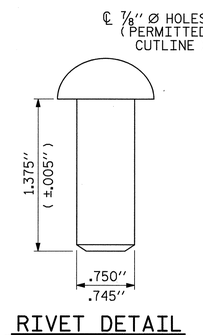

RIVET DETAIL

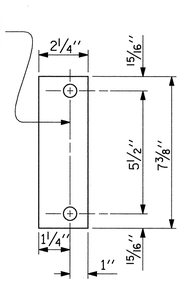

REAR PLATE

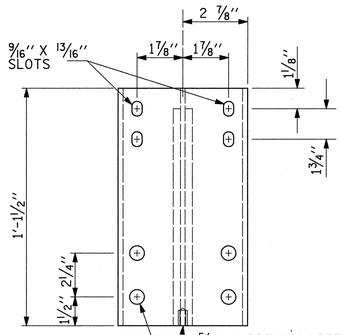

FRONT ELEVATION

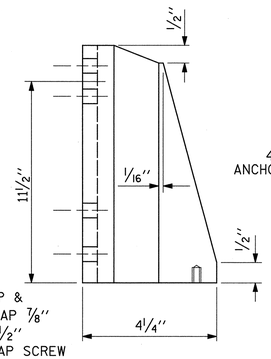

SIDE ELEVATION

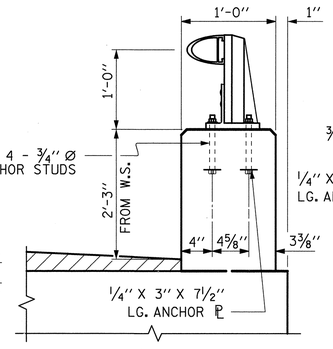

SECTION THRU PARAPET AND RAIL

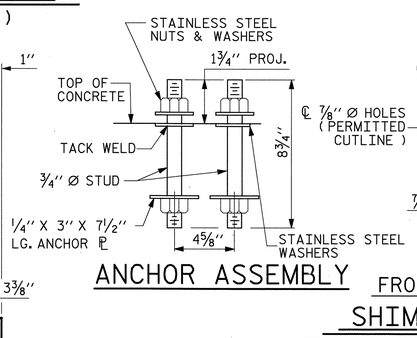

ANCHOR ASSEMBLY

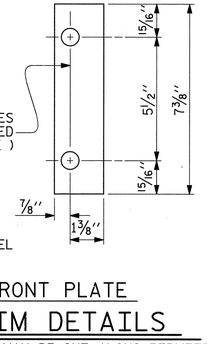

FRONT PLATE

SHIM DETAILS

NOTE : SHIMS MAY BE CUT ALONG PERMITTED CUTLINE OR SLOTTED TO EDGE OF PLATE TO FACILITATE PLACEMENT.

NOTES

AT THE CONTRACTOR'S OPTION, METAL RAIL MAY BE EITHER ALUMINUM OR GALVANIZED STEEL IN ACCORDANCE WITH THE REQUIREMENTS OF THE GENERAL NOTES AND THE FOLLOWING SPECIFICATIONS FOR THE ALTERNATE MATERIALS; HOWEVER THE CONTRACTOR WILL BE REQUIRED TO USE THE SAME RAIL MATERIAL ON ALL STRUCTURES ON THE PROJECT FOR WHICH METAL RAIL IS DESIGNATED.

ALUMINUM RAILS

MATERIAL FOR POSTS, BASES AND RAILS, EXPANSION BARS AND CLAMP BARS SHALL BE ASTM B221 ALLOY 6061-T6.

MATERIAL FOR RIVETS SHALL BE ASTM B316 ALLOY 6061-T6. RIVETS SHALL BE STANDARD BUTTON HEAD AND CONE POINT COLD DRIVEN AS PER DRAWING.

THE BASE OF RAIL POSTS, OR ANY OTHER ALUMINUM SURFACE IN CONTACT WITH CONCRETE SHALL BE THOROUGHLY COATED WITH AN ALUMINUM IMPREGNATED CAULKING COMPOUND OF APPROVED QUALITY.

MATERIAL FOR SHIMS TO BE ASTM B209 ALLOY 6061-T6.

GALVANIZED STEEL RAILS

MATERIALS AND GALVANIZING ARE TO CONFORM TO THE FOLLOWING SPECIFICATIONS:

POST, POST BASES, RAILS, EXPANSION BARS AND CLAMP BARS: AASHTO M270 GRADE 36 STRUCTURAL STEEL - GALVANIZED TO AASHTO M111.

RIVETS: RIVETS SHALL MEET THE REQUIREMENTS OF ASTM A502 FOR GRADE 1 RIVETS.

THE CUT ENDS OF GALVANIZED STEEL RAILING, AFTER GRINDING SMOOTH SHALL BE GIVEN TWO COATS OF ZINC RICH PAINT MEETING THE REQUIREMENTS OF FEDERAL SPECIFICATION MIL-P-26915 USAF TYPE 1, OR OF FEDERAL SPECIFICATIONS TT-P-641.

SHIMS: SHIMS SHALL MEET THE REQUIREMENTS OF ASTM A570 FOR GRADE 33 OR A611 FOR GRADE C AND SHALL BE GALVANIZED IN ACCORDANCE WITH AASHTO M111.

CLOSURE PLATES: CLOSURE PLATES SHALL MEET THE REQUIREMENTS OF ASTM A570 FOR GRADE 33 OR A611 FOR GRADE C AND SHALL BE GALVANIZED IN ACCORDANCE WITH AASHTO M111.

GENERAL NOTES

RAILING SHALL BE CONTINUOUS FROM END POST TO END POST OF BRIDGE. EACH JOINT IN RAIL LENGTH SHALL BE SPLICED AS DETAILED. PANEL LENGTHS OF RAIL SHALL BE ATTACHED TO A MINIMUM OF THREE POSTS.

FOR END OF RAIL TO CLEAR FACE OF CONCRETE END POST DIMENSION, SEE STANDARD NO. BMR2.

MATERIAL FOR ANCHOR STUDS SHALL BE ASTM F593 ALLOY 304 STAINLESS STEEL WITH MINIMUM 75,000 PSI ULTIMATE STRENGTH. STUDS TO BE EMBEDDED 7" IN CONCRETE. NUTS SHALL BE AMERICAN STANDARD FINISHED HEXAGON THICK, CLASS 2B THREAD, AND MEET THE REQUIREMENTS OF ASTM F594 ALLOY 304 STAINLESS STEEL. WASHERS SHALL MEET THE REQUIREMENTS OF ASTM F844 EXCEPT THEY SHALL BE MADE FROM ALLOY 304 STAINLESS STEEL. ANCHOR ℄ SHALL BE AASHTO M270 GRADE 36.

CAP SCREWS SHALL BE ASTM F593 ALLOY 305 STAINLESS STEEL.

CERTIFIED MILL REPORTS ARE REQUIRED FOR RAILS AND POSTS. SHOP INSPECTION IS NOT REQUIRED.

METAL RAIL POSTS SHALL BE SET NORMAL TO CURB GRADE.

METHOD OF MEASUREMENT FOR METAL RAILS: FOR LENGTH OF METAL RAILS TO BE PAID FOR, SEE THE STANDARD SPECIFICATIONS.

CURVED RAIL USAGE: WHERE RAILS ARE TO BE USED ON BRIDGES ON HORIZONTAL AND/OR VERTICAL CURVATURE THE CONTRACTOR MAY, AT HIS OPTION, HAVE THE REQUIRED CURVATURE IN THE RAIL FORMED IN THE SHOP OR IN THE FIELD. IN EITHER EVENT, THE RAIL SHALL CONFORM WITHOUT BUCKLING OR KINKINGTO THE REQUIRED CURVATURE IN A UNIFORM MANNER ACCEPTABLE TO THE ENGINEER.

TO INSURE FUTURE IDENTIFICATION OF THE FABRICATOR, A PERMANENT IDENTIFYING MARK SHALL BE PLACED ON EACH POST. THE METHOD OF MARKING AND LOCATION SHALL BE SUCH THAT IT DOES NOT DETRACT FROM THE APPEARANCE OF THE POST.

SHIMS SHALL BE USED AS NECESSARY FOR POST ALIGNMENT.

ALLOY 6351-T5 MAY BE SUBSTITUTED FOR ALLOY 6061-T6 WHERE APPLICABLE.

MINOR VARIATIONS IN DETAILS OF METAL RAIL WILL BE CONSIDERED. DETAILS OF SUCH VARIATIONS, IF DESIRED, SHALL BE SUBMITTED FOR APPROVAL.

THE CONTRACTOR MAY USE ADHESIVELY ANCHORED ANCHOR BOLTS IN PLACE OF THE ANCHOR ASSEMBLY. LEVEL TWO FIELD TESTING IS REQUIRED, AND THE YIELD LOAD OF THE 3/4" Ø BOLT IS 10 KIPS. FOR ADHESIVELY ANCHORED ANCHOR BOLTS OR DOWELS, SEE SPECIAL PROVISIONS.

WHEN ADHESIVELY ANCHORED ANCHOR BOLTS ARE USED, BOLTS, NUTS AND WASHERS SHALL MEET THE SAME REQUIREMENTS AS THE ANCHOR STUDS, NUTS AND WASHERS FOR USE WITH THE ANCHOR ASSEMBLY.

GROOVED CONTRACTION JOINTS, 1/2" IN DEPTH, SHALL BE TOOLED IN ALL EXPOSED FACES OF THE PARAPET IN ACCORDANCE WITH ARTICLE 825-10(B) OF THE STANDARD SPECIFICATIONS. THE CONTRACTION JOINT SHALL BE LOCATED AT A SPACING OF 8FT. TO 10FT. BETWEEN EXPANSION JOINTS. NO CONTRACTION JOINTS WILL BE REQUIRED FOR SEGMENTS LESS THAN 10 FEET IN LENGTH.

DETAILS OF POST

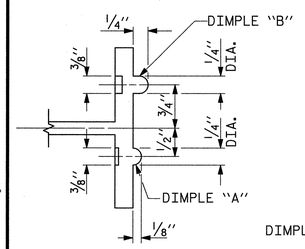

SECTION B - B

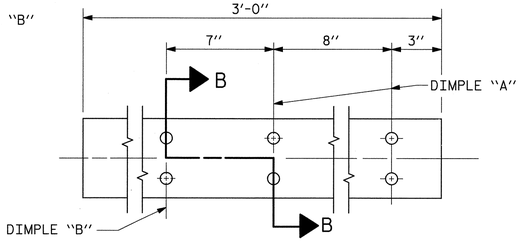

EXPANSION BAR DETAILS

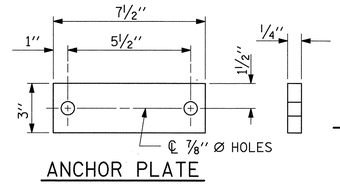

ANCHOR PLATE

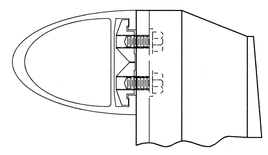

CLAMP & RAIL ASSEMBLY

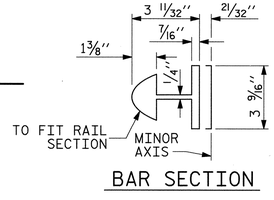

BAR SECTION

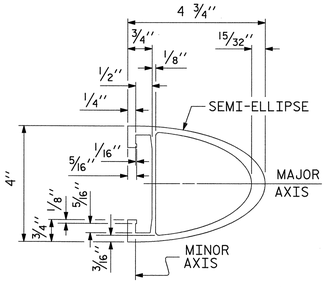

RAIL SECTION

PAY LENGTH = 145'-2" LIN. FT.

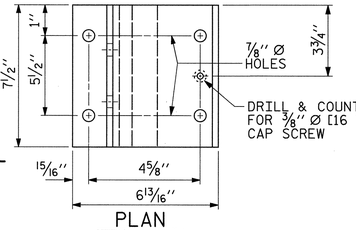

PLAN

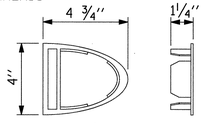

RAIL CAP

NOTE : BASE CAN BE SUPPLIED AS ONE EXTRUSION OR TWO EXTRUSIONS WELDED TOGETHER AS SHOWN.

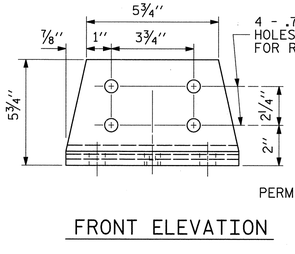

FRONT ELEVATION

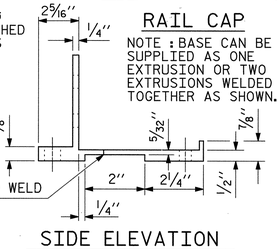

SIDE ELEVATION

POST BASE DETAILS

PROJECT NO. 38243

PAMLICO COUNTY

STATION: 16+05.00 -L-

REPLACES BRIDGE NO. 44

STATE OF NORTH CAROLINA
DEPARTMENT OF TRANSPORTATION
RALEIGH

STANDARD

1 BAR METAL RAIL

PLANS PREPARED BY:

MULKEY
ENGINEERS & CONSULTANTS
PO Box 33127
RALEIGH, N.C. 27636
(919) 851-1191
(919) 851-1178 (FAX)
WWW.MULKEYINC.COM

THIS STANDARD DRAWING REVIEWED & ADOPTED FOR USE AT THE REFERENCED LOCATION BY THE UNDERSIGNED:

NORTH CAROLINA PROFESSIONAL ENGINEER SEAL 19661 L. KEVIN AUSTIN
6/7/09

ASSEMBLED BY :	W. B. ALLEN	DATE :	2/09
CHECKED BY :	L. K. AUSTIN	DATE :	3/09
DRAWN BY : FCJ 1/88	REV. 10/17/00		LES/RDR
CHECKED BY : CRK 3/89	REV. 5/7/03R		RWW/JTE
	REV. 5/11/06R		KMM/GM

REVISIONS						SHEET NO.
NO.	BY:	DATE:	NO.	BY:	DATE:	167
1			3			TOTAL SHEETS
2			4			185

STD. NO. BMR1

6/5/2009 10:41:49 AM R:\Structures\B4594_SD_MR_0.dgn

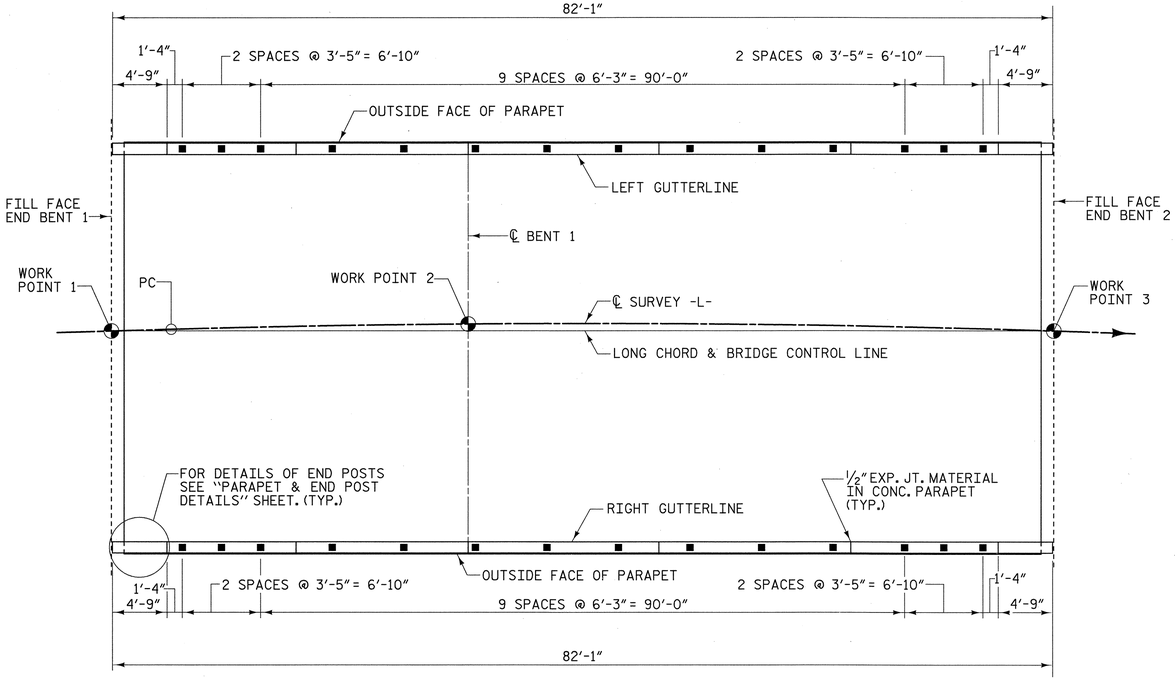

PLAN OF RAIL POST SPACINGS

ELEVATION

TOP VIEW

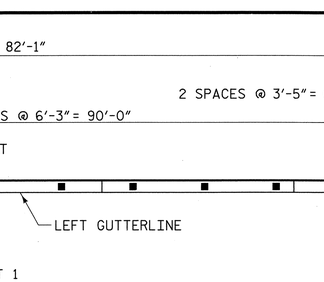

END VIEW (FIX AND EXP.)

SECTION H-H (FIX)

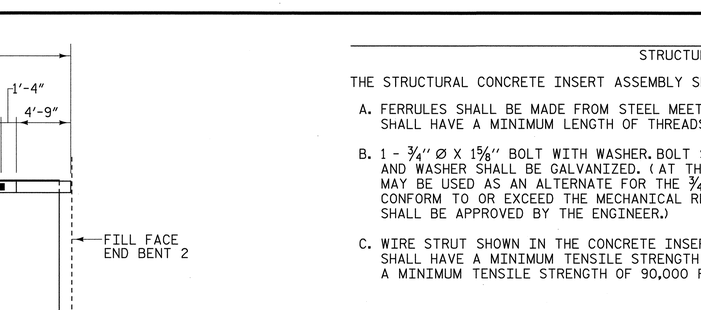

PLAN - RAIL AND END POST

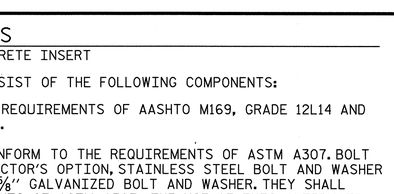

PLAN ELEVATION

STRUCTURAL CONCRETE INSERT

* EACH WELDED ATTACHMENT OF WIRE TO FERRULE SHALL DEVELOP THE TENSILE STRENGTH OF THE WIRE.

NOTES

STRUCTURAL CONCRETE INSERT

THE STRUCTURAL CONCRETE INSERT ASSEMBLY SHALL CONSIST OF THE FOLLOWING COMPONENTS:

A. FERRULES SHALL BE MADE FROM STEEL MEETING THE REQUIREMENTS OF AASHTO M169, GRADE 12L14 AND SHALL HAVE A MINIMUM LENGTH OF THREADS OF 1½".

B. 1 - ¾" Ø X 1⅝" BOLT WITH WASHER. BOLT SHALL CONFORM TO THE REQUIREMENTS OF ASTM A307. BOLT AND WASHER SHALL BE GALVANIZED. (AT THE CONTRACTOR'S OPTION, STAINLESS STEEL BOLT AND WASHER MAY BE USED AS AN ALTERNATE FOR THE ¾" Ø X 1⅝" GALVANIZED BOLT AND WASHER. THEY SHALL CONFORM TO OR EXCEED THE MECHANICAL REQUIREMENTS OF ASTM A307. THE USE OF THIS ALTERNATE SHALL BE APPROVED BY THE ENGINEER.)

C. WIRE STRUT SHOWN IN THE CONCRETE INSERT ASSEMBLY DETAIL IS THE MINIMUM ALLOWABLE SIZE AND SHALL HAVE A MINIMUM TENSILE STRENGTH OF 100,000 PSI. AS AN OPTION, A 7/16" Ø WIRE STRUT WITH A MINIMUM TENSILE STRENGTH OF 90,000 PSI IS ACCEPTABLE.

NOTES

METAL RAIL TO END POST CONNECTION

THE METAL RAIL TO END POST CONNECTION SHALL CONSIST OF THE FOLLOWING COMPONENTS:

A. ½" PLATES SHALL CONFORM TO AASHTO M270 GRADE 36 AND SHALL BE GALVANIZED AFTER FABRICATION.

B. ¾" STRUCTURAL CONCRETE INSERT SHALL HAVE A WORKING LOAD SHEAR CAPACITY OF 4800 LBS. THE FERRULES SHALL ENGAGE A ¾"Ø X 1⅝" BOLT WITH 2" O.D. WASHER IN PLACE. THE ¾"Ø X 1⅝" BOLT SHALL HAVE N. C. THREADS.

C. CAP SCREWS FOR RAIL ATTACHMENT TO ANGLE SHALL CONFORM TO THE REQUIREMENTS OF ASTM F593 ALLOY 305 STAINLESS STEEL. CAP SCREWS TO BE CENTERED IN SLOTS AT 60°F.

D. STANDARD CLAMP BARS (SEE METAL RAIL SHEET).

E. ½" Ø PIPE SLEEVES (IF REQUIRED) TO BE GALVANIZED.

THE COST OF THE STANDARD CLAMP BARS AND CAP SCREWS USED IN THE METAL RAIL TO END POST CONNECTION SHALL BE INCLUDED IN THE UNIT CONTRACT PRICE BID FOR LINEAR FEET OF 1 OR 2 BAR METAL RAILS.

THE ¾" STRUCTURAL CONCRETE INSERT WITH BOLT SHALL BE ASSEMBLED IN THE SHOP.

THE COST OF THE ¾" STRUCTURAL CONCRETE INSERT ASSEMBLY, AND THE ½" PLATES COMPLETE IN PLACE SHALL BE INCLUDED IN THE VARIOUS PAY ITEMS.

THE CONTRACTOR, AT HIS OPTION, MAY USE AN ADHESIVE BONDING SYSTEM IN LIEU OF THE STRUCTURAL CONCRETE INSERT EMBEDDED IN THE END POST. IF THE ADHESIVE BONDING SYSTEM IS USED, THE ¾" Ø X 1⅝" BOLT WITH WASHER SHALL BE REPLACED WITH A ¾"Ø X 6½" BOLT AND 2" O.D. WASHER. ALL SPECIFICATIONS THAT APPLY TO THE ¾" Ø X 1⅝" BOLT SHALL APPLY TO THE ¾"Ø X 6 ½" BOLT. FIELD TESTING OF THE ADHESIVE BONDING SYSTEM IS NOT REQUIRED.

FIXED

DETAILS FOR ATTACHING METAL RAIL TO END POST

ASSEMBLED BY : W. B. ALLEN	DATE : 2/09		
CHECKED BY : L. K. AUSTIN	DATE : 2/09		
DRAWN BY : FCJ 1/88	REV. 10/17/00	LES/RDR	
CHECKED BY : CRK 3/89	REV. 5/7/03	RWW/JTE	
	REV. 5/1/06	TLA/GM	

PLANS PREPARED BY:

MULKEY
ENGINEERS & CONSULTANTS
PO Box 33127
RALEIGH, N.C. 27636
(919) 851-1912
(919) 851-1918 (FAX)
WWW.MULKEYINC.COM

THIS STANDARD DRAWING REVIEWED & ADOPTED FOR USE AT THE REFERENCED LOCATION BY THE UNDERSIGNED:

NORTH CAROLINA PROFESSIONAL ENGINEER SEAL 19661 KEVIN AUSTIN

6/7/09

PROJECT NO. 38243

PAMLICO COUNTY

STATION: 16+05.00 -L-

REPLACES BRIDGE NO. 44

STATE OF NORTH CAROLINA
DEPARTMENT OF TRANSPORTATION
RALEIGH

STANDARD

RAIL POST SPACINGS AND END OF RAIL DETAILS

REVISIONS						SHEET NO.
NO.	BY:	DATE:	NO.	BY:	DATE:	168
1			3			TOTAL SHEETS
2			4			185

STD. NO. BMR2

6/5/2009 10:40:07 AM R:\Structures\B4594_SD_JMF_02.dgn

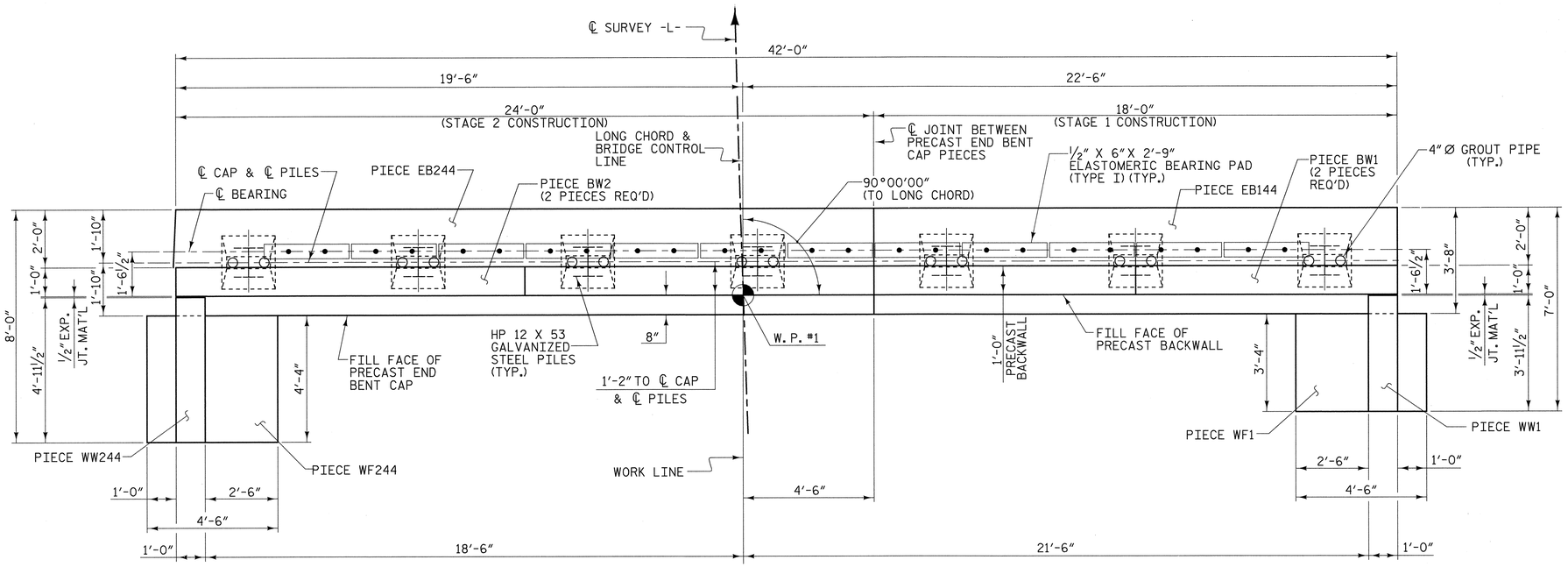

PLAN

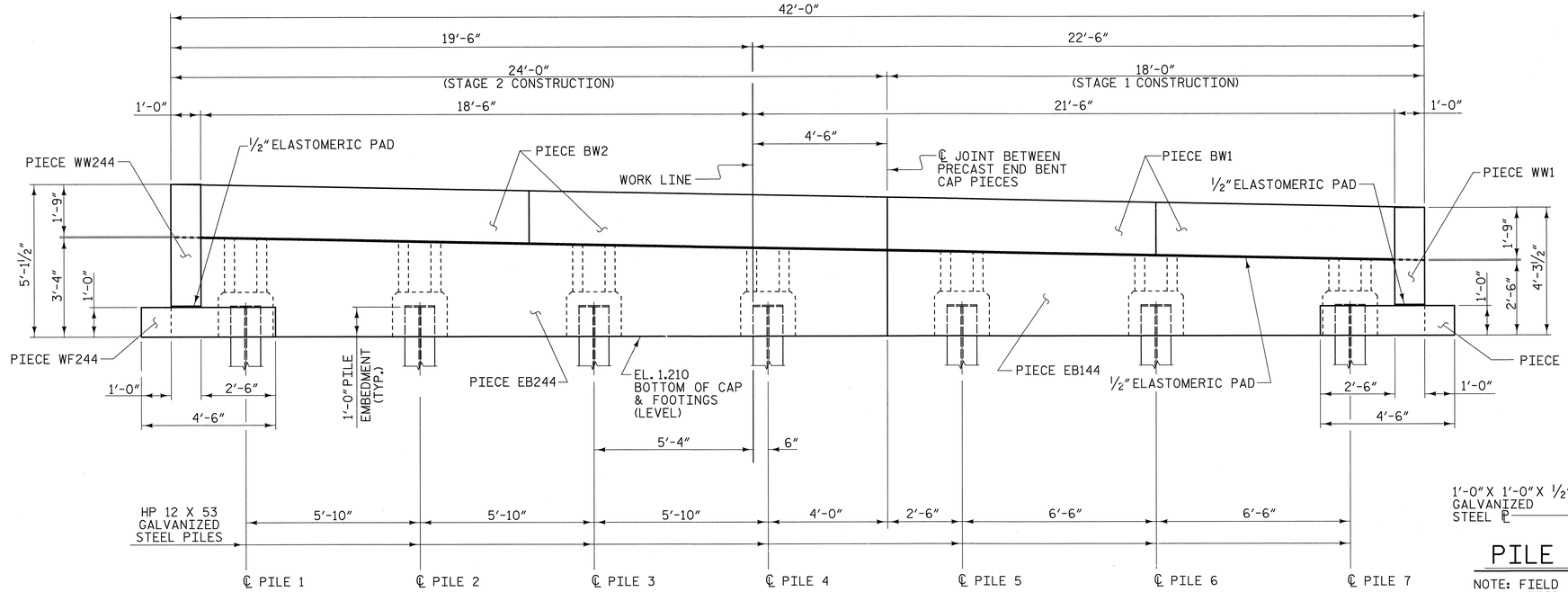

ELEVATION

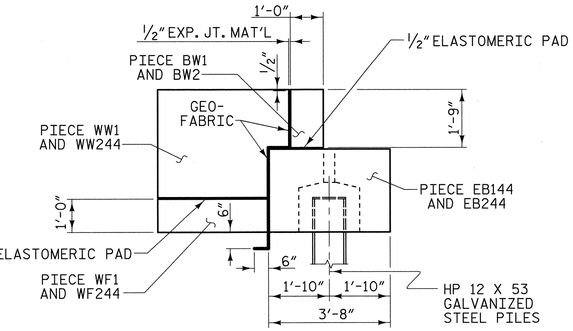

END VIEW
(WITH GEO-FABRIC DETAILS)

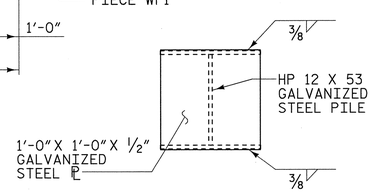

PILE PLATE DETAIL

NOTE: FIELD WELD PLATE TO TOP OF PILE AFTER PILE HAS BEEN DRIVEN AND CUT OFF TO THE PROPER ELEVATION.

NOTES

THE CONTRACTOR'S ATTENTION IS CALLED TO THE FACT THAT W.P. #1 IS LOCATED ON THE "FILL FACE OF PRECAST BACKWALL". THE "FILL FACE OF PRECAST END BENT CAP" IS LOCATED 8″BACK-STATION FROM W.P. #1.

THE FILL FACE OF THE CAP, BACKWALL, AND WINGWALL PIECES SHALL BE LINED WITH GEO-FABRIC.

SEE PIECE EB144 SHEET FOR DETAILS, NOTES, AND BILL OF MATERIAL.

SEE PIECE EB244 SHEET FOR DETAILS, NOTES, AND BILL OF MATERIAL.

SEE PIECE BW1 & BW2 SHEET FOR DETAILS, NOTES, AND BILL OF MATERIAL.

SEE PIECE WW1 AND PIECE WF1 SHEET FOR DETAILS, NOTES, AND BILL OF MATERIAL.

SEE PIECE WW244 AND PIECE WF244 SHEET FOR DETAILS, NOTES, AND BILL OF MATERIAL.

THE MINIMUM REQUIRED SOIL BEARING CAPACITY FOR SOIL BENEATH CAP PIECES AND WING FOOTING PIECES SHALL BE 2000 POUNDS PER SQUARE FOOT.

THE ERECTION SUPPORT SYSTEM FOR THE PRECAST CAP SHALL NOT BE REMOVED, CORED SLAB UNITS SHALL NOT BE PLACED ON THE PRECAST CAP, BACKFILLING AGAINST THE PRECAST CAP SHALL NOT BE ALLOWED, AND VEHICLES OR CONSTRUCTION EQUIPMENT SHALL NOT BE ALLOWED ON THE PRECAST CAP UNTIL THE GROUT USED TO FILL THE PILE BLOCKOUTS HAS OBTAINED A COMPRESSIVE STRENGTH OF AT LEAST 4000 PSI. SEE PROJECT SPECIAL PROVISION, "GROUT FOR PILE BLOCKOUTS".

THE CONTRACTOR SHALL SUBMIT TO THE ENGINEER FOR APPROVAL A METHOD TO SUPPORT THE PRECAST CAP IN THE PROPER LOCATION AND ELEVATION AS SHOWN ON THE PLANS PRIOR TO PLACEMENT OF AND CURING OF THE GROUT IN THE PILE BLOCKOUTS. THE METHOD CHOSEN SHALL PROVIDE A WATERTIGHT SEAL AT THE BOTTOM OF THE CAP SO NO GROUT COMES IN CONTACT WITH THE STREAM UNTIL THE GROUT HAS HARDENED.

THE GROUT USED TO FILL THE 4″DIAMETER HOLES IN THE PRECAST BACKWALL PIECES AND IN THE PRECAST WING WALL PIECES SHALL BE NON-SHRINK, NON-METALLIC GROUT THAT IS ON THE DEPARTMENT'S APPROVAL LIST AND SHALL MEET THE APPROVAL OF THE ENGINEER. BACKFILLING AGAINST THE PRECAST BACKWALL AND THE PRECAST WING WALLS SHALL NOT BE ALLOWED, AND CONSTRUCTION EQUIPMENT SHALL NOT BE ALLOWED ON THE PRECAST BACKWALL AND THE PRECAST WING WALLS UNTIL THE GROUT HAS OBTAINED A COMPRESSIVE STRENGTH OF AT LEAST 4000 PSI.

PROJECT NO. 38243

PAMLICO COUNTY

STATION: 16+05.00 -L-

REPLACES BRIDGE NO. 44

STATE OF NORTH CAROLINA
DEPARTMENT OF TRANSPORTATION
RALEIGH

END BENT #1

33′-10″CLEAR ROADWAY - 90°SKEW

NORTH CAROLINA PROFESSIONAL ENGINEER SEAL 19661 KEVIN AUSTIN 8/6/09

PLANS PREPARED BY:
MULKEY
ENGINEERS & CONSULTANTS
PO Box 33127
Raleigh, N.C. 27636
(919) 851-1912
(919) 851-1918 (FAX)
www.mulkeyinc.com

REVISIONS						SHEET NO.
NO.	BY:	DATE:	NO.	BY:	DATE:	169
1			3			TOTAL SHEETS
2			4			185

DRAWN BY : W. B. ALLEN DATE : 2/09
CHECKED BY : L. K. AUSTIN DATE : 3/09

8/6/2009 9:55:27 AM G:\project\2004\224.25 Pamlico44\Structures\B4594_SD_EB_01.dgn

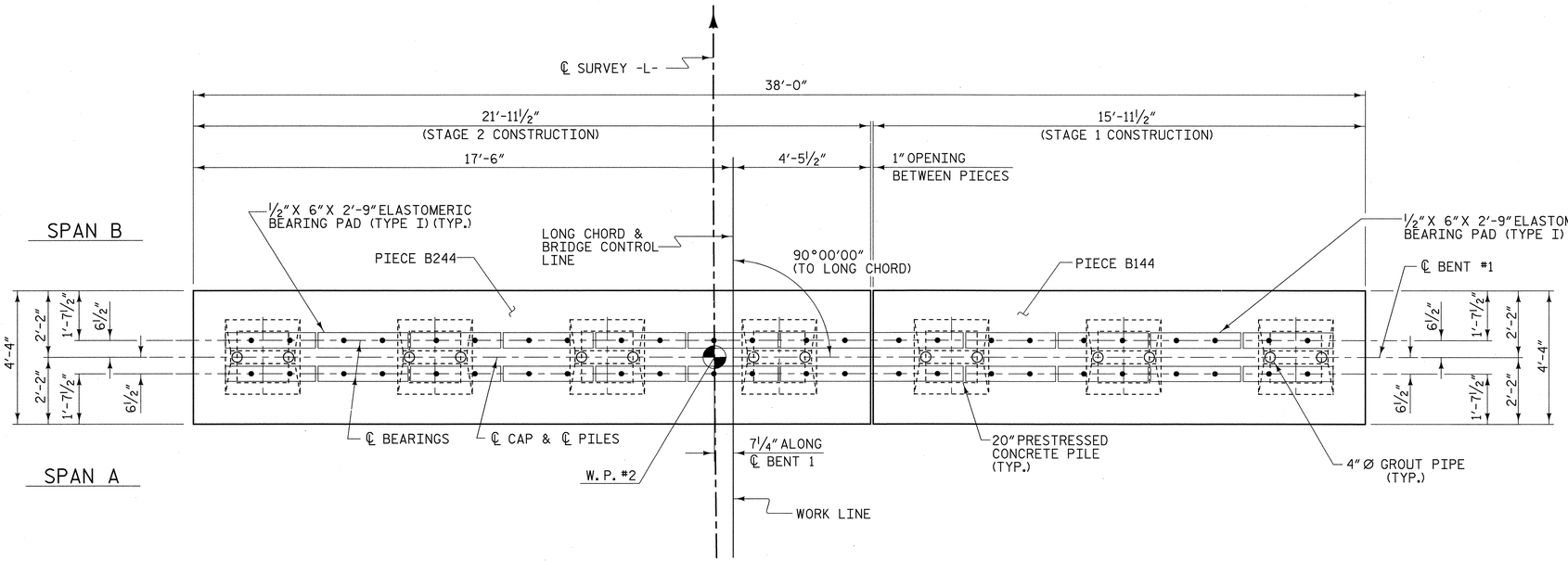

PLAN

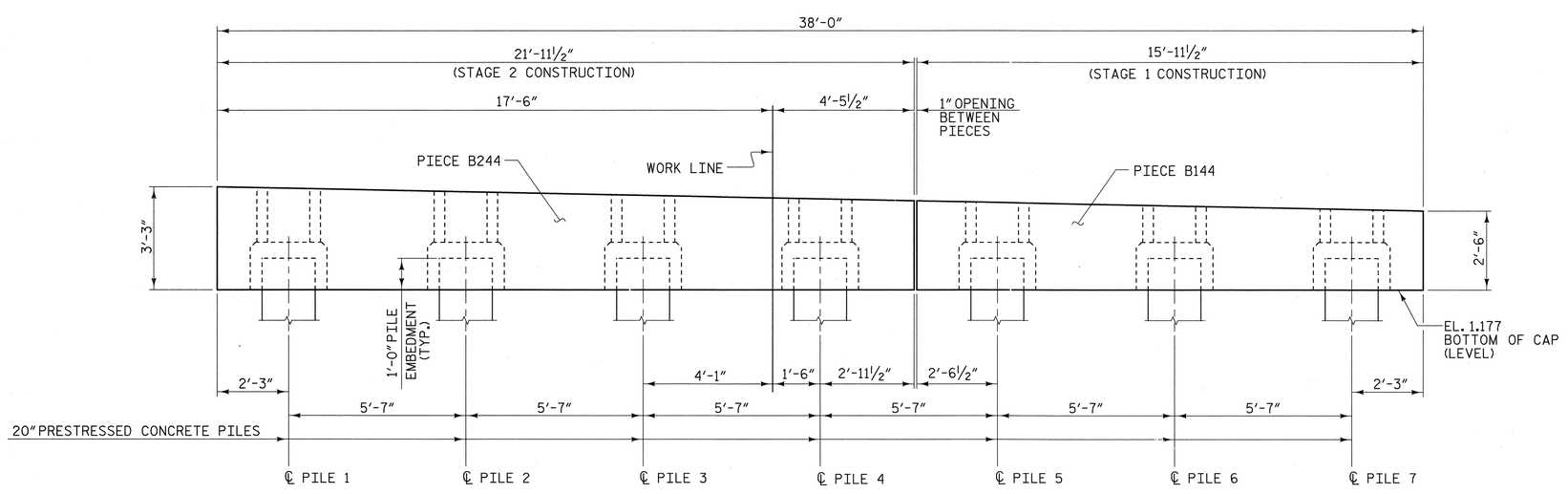

ELEVATION

NOTES

SEE PIECE B144 SHEET FOR DETAILS, NOTES, AND BILL OF MATERIAL.

SEE PIECE B244 SHEET FOR DETAILS, NOTES, AND BILL OF MATERIAL.

THE ERECTION SUPPORT SYSTEM FOR THE PRECAST CAP SHALL NOT BE REMOVED, CORED SLAB UNITS SHALL NOT BE PLACED ON THE PRECAST CAP, AND VEHICLES OR CONSTRUCTION EQUIPMENT SHALL NOT BE ALLOWED ON THE PRECAST CAP UNTIL THE GROUT USED TO FILL THE PILE BLOCKOUTS HAS OBTAINED A COMPRESSIVE STRENGTH OF AT LEAST 4000 PSI. SEE PROJECT SPECIAL PROVISION, "GROUT FOR PILE BLOCKOUTS".

THE CONTRACTOR SHALL SUBMIT TO THE ENGINEER FOR APPROVAL A METHOD TO SUPPORT THE PRECAST CAP IN THE PROPER LOCATION AND ELEVATION AS SHOWN ON THE PLANS PRIOR TO PLACEMENT OF AND CURING OF THE GROUT IN THE PILE BLOCKOUTS. THE METHOD CHOSEN SHALL PROVIDE A WATERTIGHT SEAL AT THE BOTTOM OF THE CAP SO NO GROUT COMES IN CONTACT WITH THE STREAM UNTIL THE GROUT HAS HARDENED.

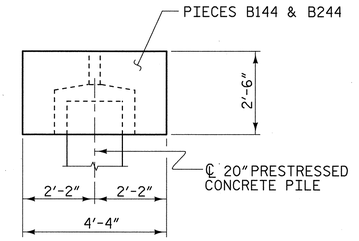

END VIEW

PROJECT NO. 38243

PAMLICO COUNTY

STATION: 16+05.00 -L-

REPLACES BRIDGE NO. 44

STATE OF NORTH CAROLINA
DEPARTMENT OF TRANSPORTATION
RALEIGH

BENT #1

33'-10" CLEAR ROADWAY - 90° SKEW

NORTH CAROLINA PROFESSIONAL SEAL 19661 ENGINEER KEVIN AUSTIN 6/7/09

PLANS PREPARED BY:

MULKEY
ENGINEERS & CONSULTANTS
PO Box 33127
Raleigh, N.D. 27636
(919) 851-1912
(919) 851-1918 (FAX)
WWW.MULKEYINC.COM

REVISIONS					
NO.	BY:	DATE:	NO.	BY:	DATE:
1			3		
2			4		

SHEET NO. 170

TOTAL SHEETS 185

DRAWN BY : W. B. ALLEN DATE : 2/09
CHECKED BY : L. K. AUSTIN DATE : 3/09

6/5/2009 10:39:27 AM R:\Structures\B4594_SD_BL0.dgn

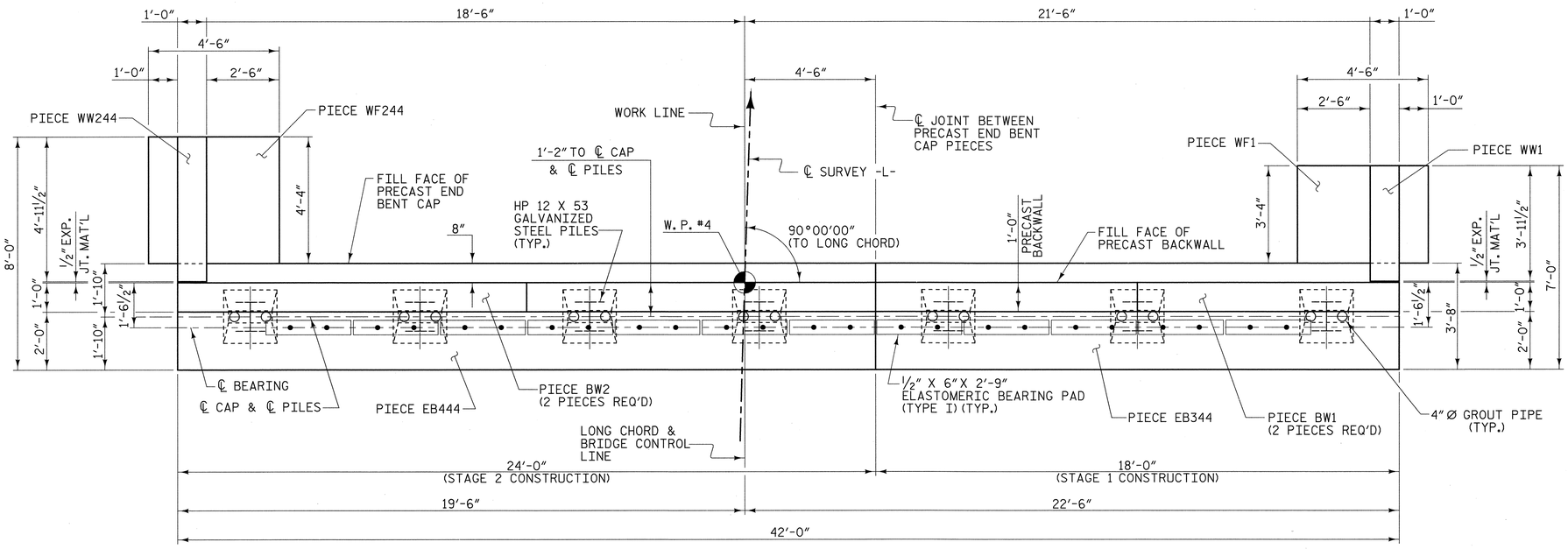

PLAN

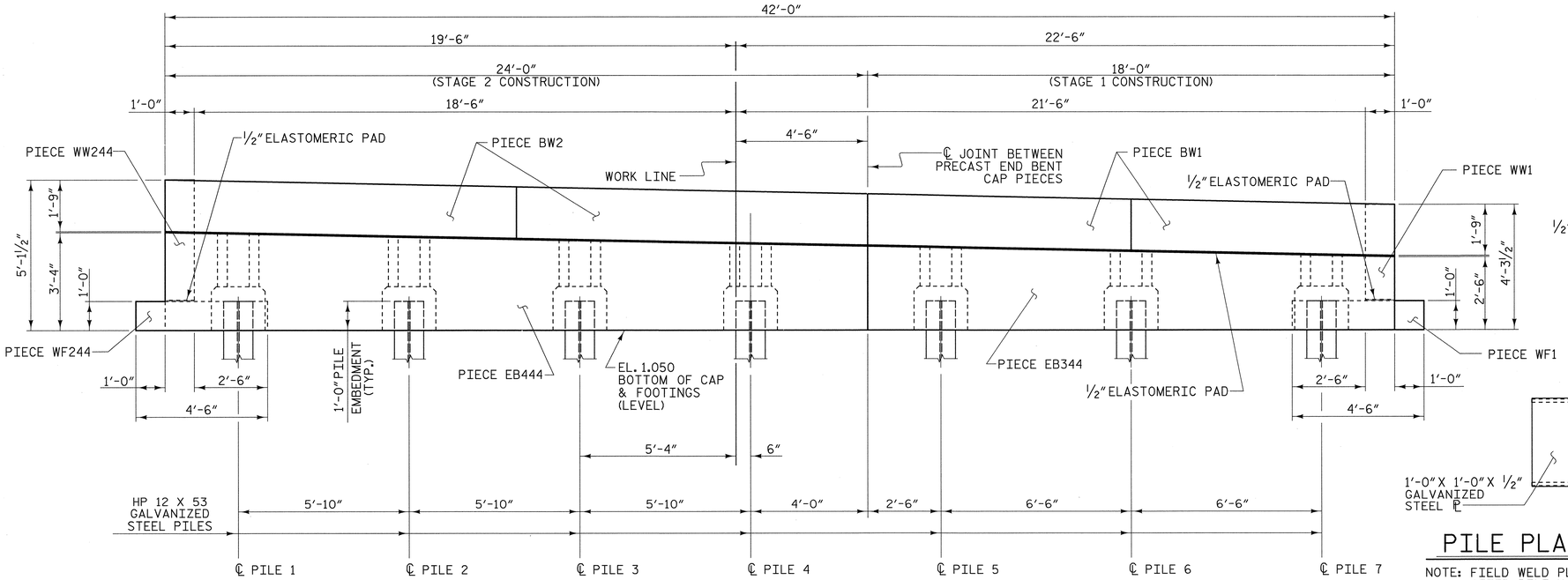

ELEVATION

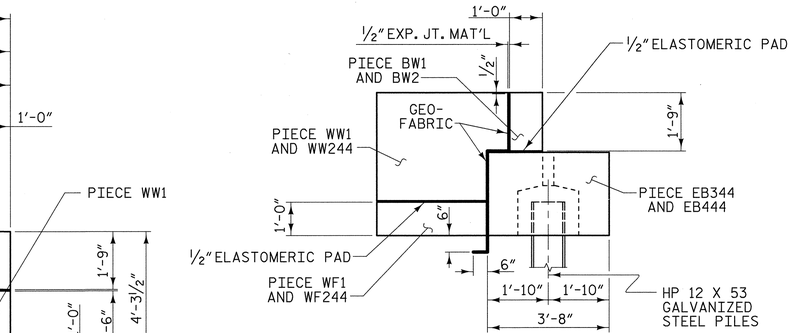

END VIEW

(WITH GEO-FABRIC DETAILS)

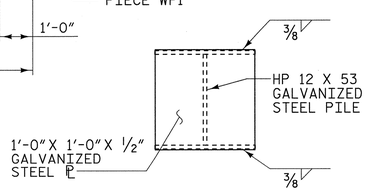

PILE PLATE DETAIL

NOTE: FIELD WELD PLATE TO TOP OF PILE AFTER PILE HAS BEEN DRIVEN AND CUT OFF TO THE PROPER ELEVATION.

NOTES

THE CONTRACTOR'S ATTENTION IS CALLED TO THE FACT THAT W.P. #4 IS LOCATED ON THE "FILL FACE OF PRECAST BACKWALL". THE "FILL FACE OF PRECAST END BENT CAP" IS LOCATED 8" AHEAD-STATION FROM W.P. #4.

THE FILL FACE OF THE CAP, BACKWALL, AND WINGWALL PIECES SHALL BE LINED WITH GEO-FABRIC.

SEE PIECE EB344 SHEET FOR DETAILS, NOTES, AND BILL OF MATERIAL.

SEE PIECE EB444 SHEET FOR DETAILS, NOTES, AND BILL OF MATERIAL.

SEE PIECE BW1 & BW2 SHEET FOR DETAILS, NOTES, AND BILL OF MATERIAL.

SEE PIECE WW1 AND PIECE WF1 SHEET FOR DETAILS, NOTES, AND BILL OF MATERIAL.

SEE PIECE WW244 AND PIECE WF244 SHEET FOR DETAILS, NOTES, AND BILL OF MATERIAL.

THE MINIMUM REQUIRED SOIL BEARING CAPACITY FOR SOIL BENEATH CAP PIECES AND WING FOOTING PIECES SHALL BE 2000 POUNDS PER SQUARE FOOT.

THE ERECTION SUPPORT SYSTEM FOR THE PRECAST CAP SHALL NOT BE REMOVED, CORED SLAB UNITS SHALL NOT BE PLACED ON THE PRECAST CAP, BACKFILLING AGAINST THE PRECAST CAP SHALL NOT BE ALLOWED, AND VEHICLES OR CONSTRUCTION EQUIPMENT SHALL NOT BE ALLOWED ON THE PRECAST CAP UNTIL THE GROUT USED TO FILL THE PILE BLOCKOUTS HAS OBTAINED A COMPRESSIVE STRENGTH OF AT LEAST 4000 PSI. SEE PROJECT SPECIAL PROVISION, "GROUT FOR PILE BLOCKOUTS".

THE CONTRACTOR SHALL SUBMIT TO THE ENGINEER FOR APPROVAL A METHOD TO SUPPORT THE PRECAST CAP IN THE PROPER LOCATION AND ELEVATION AS SHOWN ON THE PLANS PRIOR TO PLACEMENT OF AND CURING OF THE GROUT IN THE PILE BLOCKOUTS. THE METHOD CHOSEN SHALL PROVIDE A WATERTIGHT SEAL AT THE BOTTOM OF THE CAP SO NO GROUT COMES IN CONTACT WITH THE STREAM UNTIL THE GROUT HAS HARDENED.

THE GROUT USED TO FILL THE 4" DIAMETER HOLES IN THE PRECAST BACKWALL PIECES AND IN THE PRECAST WING WALL PIECES SHALL BE NON-SHRINK, NON-METALLIC GROUT THAT IS ON THE DEPARTMENT'S APPROVAL LIST AND SHALL MEET THE APPROVAL OF THE ENGINEER. BACKFILLING AGAINST THE PRECAST BACKWALL AND THE PRECAST WING WALLS SHALL NOT BE ALLOWED, AND CONSTRUCTION EQUIPMENT SHALL NOT BE ALLOWED ON THE PRECAST BACKWALL AND THE PRECAST WING WALLS UNTIL THE GROUT HAS OBTAINED A COMPRESSIVE STRENGTH OF AT LEAST 4000 PSI.

PROJECT NO. 38243

PAMLICO COUNTY

STATION: 16+05.00 -L-

REPLACES BRIDGE NO. 44

STATE OF NORTH CAROLINA
DEPARTMENT OF TRANSPORTATION
RALEIGH

END BENT #2

33'-10" CLEAR ROADWAY - 90° SKEW

REVISIONS						SHEET NO.
NO.	BY:	DATE:	NO.	BY:	DATE:	171
1			3			TOTAL SHEETS
2			4			185

DRAWN BY : W. B. ALLEN DATE : 2/09
CHECKED BY : L. K. AUSTIN DATE : 3/09

NORTH CAROLINA PROFESSIONAL ENGINEER SEAL 19661 L. KEVIN AUSTIN 8/6/09

PLANS PREPARED BY:
MULKEY
ENGINEERS & CONSULTANTS
PO Box 33127
Raleigh, N.C. 27636
(919) 851-1912
(919) 851-1918 (FAX)
WWW.MULKEYINC.COM

8/6/2009 9:58:05 AM G:\project\2004\224.25_Pamlico44\Structures\B4594_SD_EB2_D.dgn

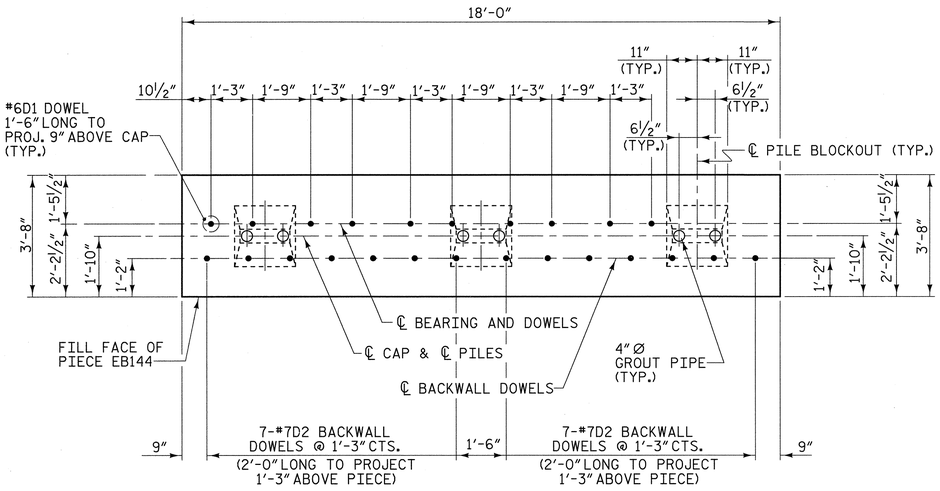

PLAN - PRECAST PIECE EB144

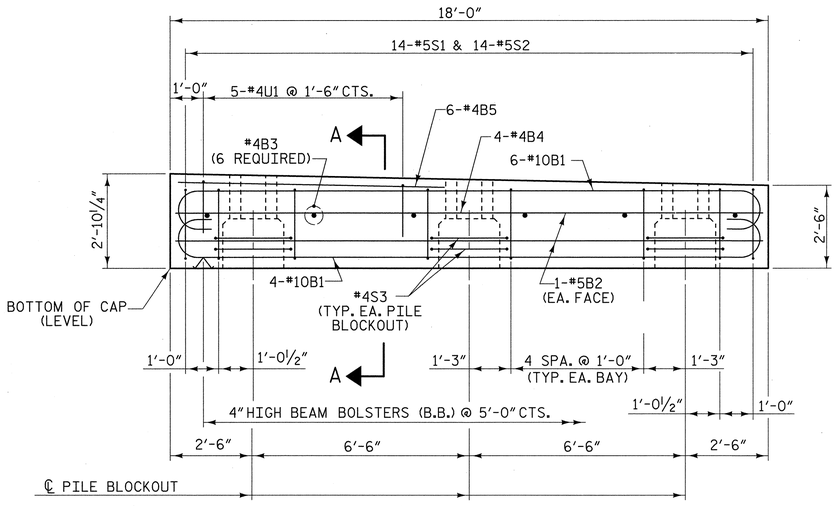

ELEVATION - PRECAST PIECE EB144

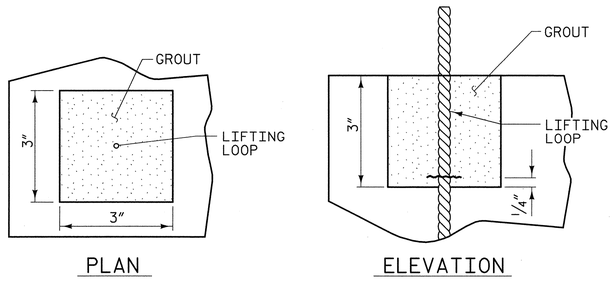

GROUTED RECESS FOR LIFTING LOOPS

LIFTING LOOPS TO BE CUT ¼" ABOVE BOTTOM OF RECESS.

NOTES

STIRRUPS IN PRECAST PIECE EB144 MAY BE SHIFTED AS NECESSARY TO CLEAR DOWELS AND GROUT PIPES.

ALL REINFORCING STEEL AND BAR SUPPORTS SHALL BE EPOXY COATED ACCORDING TO THE STANDARD SPECIFICATIONS.

CLASS AA (4500 PSI) CONCRETE SHALL BE USED IN PRECAST PIECE EB144.

DOWELS SHALL BE PRESET IN THE PRECAST CAP IN THE LOCATIONS SHOWN ON THE PLANS. DRILLING AND ADHESIVE ANCHORING OF THE DOWELS AFTER CASTING MUST BE APPROVED BY THE ENGINEER.

TWO LIFTING LOOPS SHALL BE ALLOWED IN THE PRECAST PIECE IN ACCORDANCE WITH ARTICLE 1077-10 OF THE STANDARD SPECIFICATIONS WITH THE FOLLOWING ADDITIONS. THE LIFTING LOOPS SHALL BE BURNED OFF PRIOR TO PLACING THE ELASTOMERIC BEARING PADS. THE ENDS OF THE LIFTING LOOPS TO BE BURNED OFF SHALL BE RECESSED AND GROUTED. SEE DETAIL FOR GROUTED RECESS FOR LIFTING LOOPS. GROUT SHALL BE NON-METALLIC AND NON-SHRINK ACCORDING TO THE STANDARD SPECIFICATIONS. PROPOSED DEVICES FOR LIFTING LOOPS SHALL BE DETAILED IN SHOP DRAWINGS.

TWO 4 INCH Ø GROUT PIPES SHALL BE PROVIDED AT EACH PILE BLOCKOUT. THE 4 INCH Ø GROUT PIPES SHALL BE CUT FROM SCHEDULE 40 PVC PIPE AND SHALL BE FIRMLY ANCHORED OR REMOVED PRIOR TO PLACEMENT OF THE GROUT.

THE TOP OF THE PILE BLOCKOUT SHALL BE CHAMFERED 2" IN THE TRANSVERSE DIRECTION.

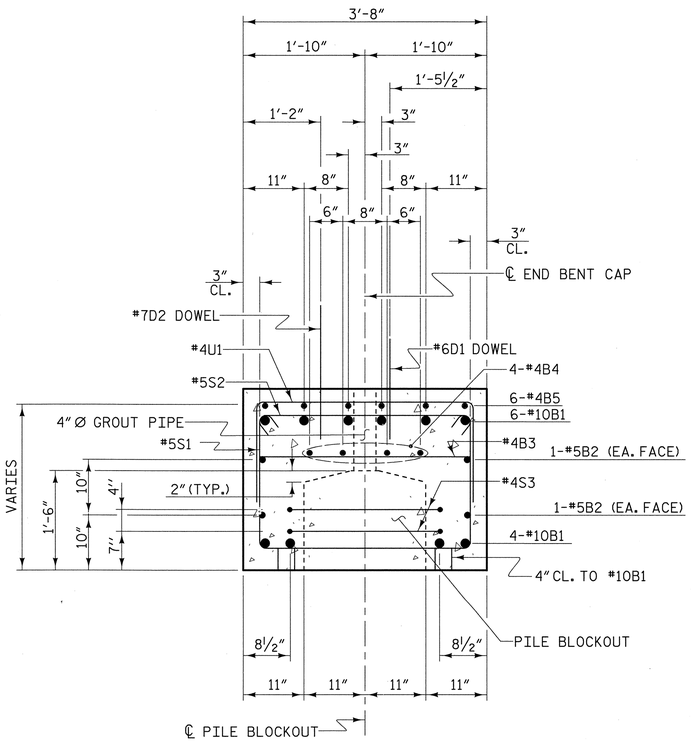

SECTION A-A

BAR TYPES

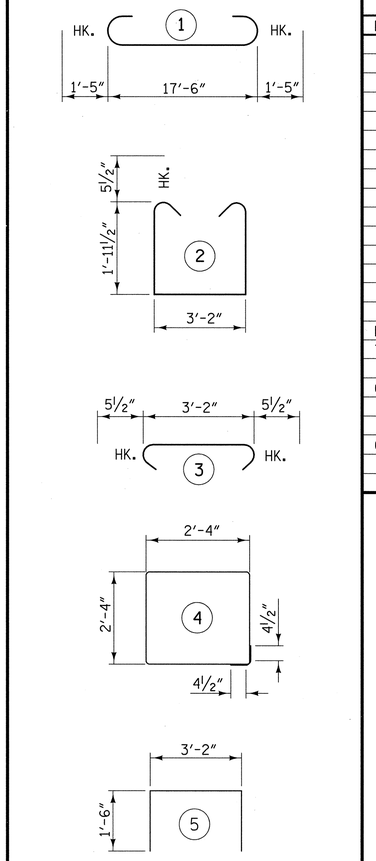

ALL BAR DIMENSIONS ARE OUT TO OUT

BILL OF MATERIAL FOR ONE PIECE EB144

BAR	NO.	SIZE	TYPE	LENGTH	WEIGHT
B1	10	#10	1	20'-4"	875
B2	4	#5	STR	17'-7"	73
B3	6	#4	STR	3'-3"	13
B4	4	#4	STR	17'-7"	47
B5	6	#4	STR	8'-0"	32
D1	10	#6	STR	1'-6"	23
D2	14	#7	STR	2'-0"	57
S1	14	#5	2	8'-0"	117
S2	14	#5	3	4'-1"	60
S3	6	#4	4	10'-1"	40
U1	5	#4	5	6'-2"	21

EPOXY COATED REINFORCING STEEL
TOTAL 1358 LBS.

CLASS AA (4500 PSI) CONCRETE
6.0 CU. YDS.

GROUT FOR PILE BLOCKOUTS
0.6 CU. YDS.

PROJECT NO. 38243
PAMLICO COUNTY
STATION: 16+05.00 -L-

REPLACES BRIDGE NO. 44

STATE OF NORTH CAROLINA
DEPARTMENT OF TRANSPORTATION
RALEIGH

PRECAST PIECE EB144

33'-10" CLEAR ROADWAY - 90° SKEW

NORTH CAROLINA PROFESSIONAL SEAL 19661 ENGINEER KEVIN AUSTIN 6/7/09

PLANS PREPARED BY:
MULKEY
ENGINEERS & CONSULTANTS
PO Box 33127
Raleigh, N.D. 27636
(919) 851-1912
(919) 851-1918 (FAX)
www.mulkeyinc.com

REVISIONS						SHEET NO.
NO.	BY:	DATE:	NO.	BY:	DATE:	172
1			3			TOTAL SHEETS
2			4			185

DRAWN BY : W. B. ALLEN DATE : 2/09
CHECKED BY : L. K. AUSTIN DATE : 3/09

6/5/2009 10:37:46 AM R:\Structures\B4594_SD_EBCAL01.dgn

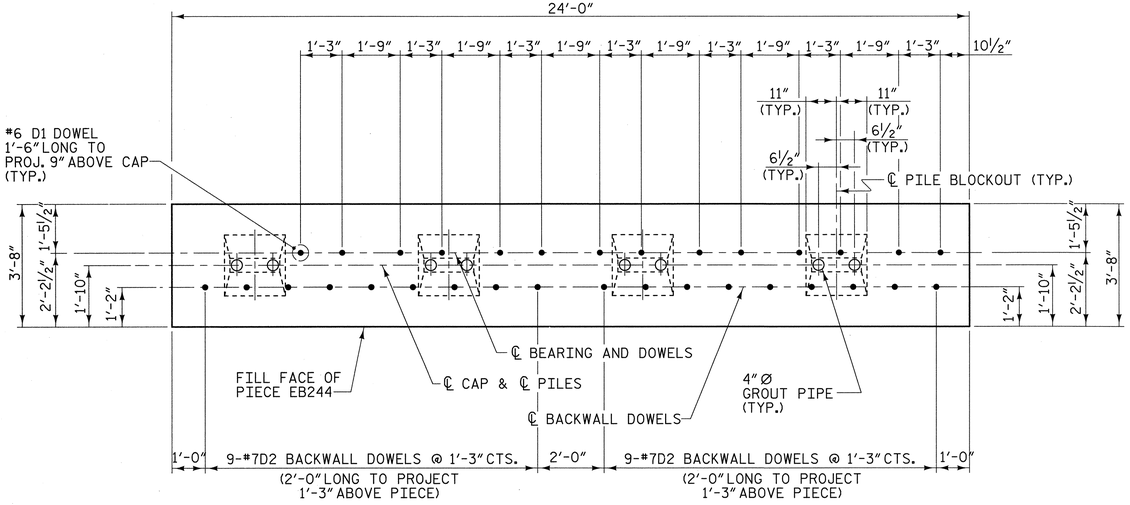

PLAN - PRECAST PIECE EB244

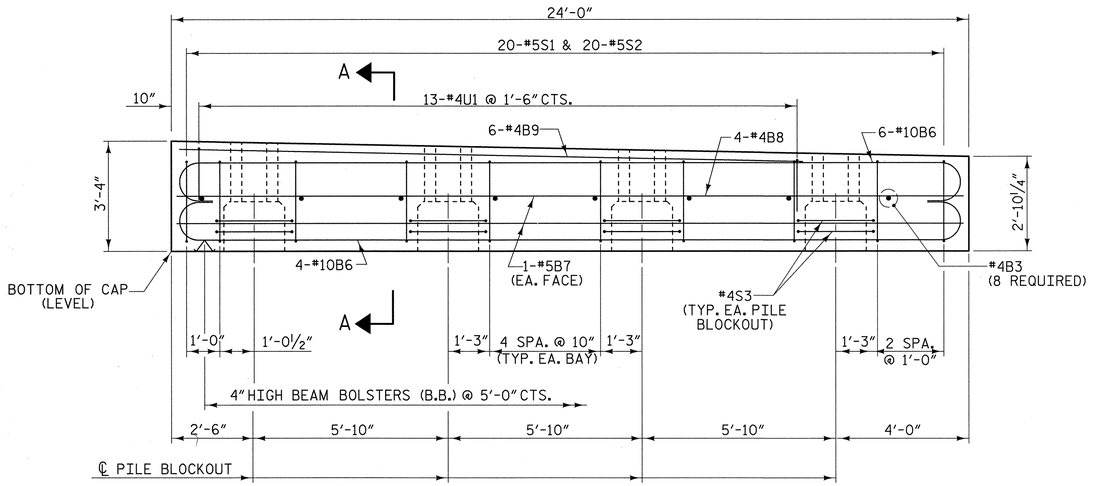

ELEVATION - PRECAST PIECE EB244

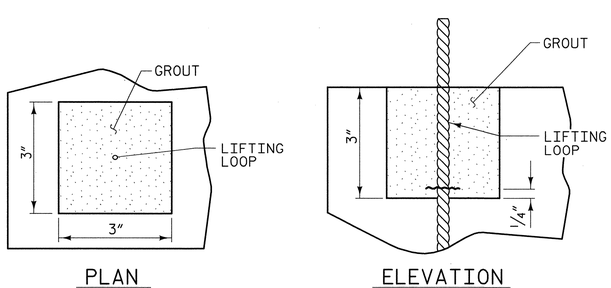

GROUTED RECESS FOR LIFTING LOOPS

LIFTING LOOPS TO BE CUT ¼" ABOVE BOTTOM OF RECESS.

NOTES

STIRRUPS IN PRECAST PIECE EB244 MAY BE SHIFTED AS NECESSARY TO CLEAR DOWELS AND GROUT PIPES.

ALL REINFORCING STEEL AND BAR SUPPORTS SHALL BE EPOXY COATED ACCORDING TO THE STANDARD SPECIFICATIONS.

CLASS AA (4500 PSI) CONCRETE SHALL BE USED IN PRECAST PIECE EB244.

DOWELS SHALL BE PRESET IN THE PRECAST CAP IN THE LOCATIONS SHOWN ON THE PLANS. DRILLING AND ADHESIVE ANCHORING OF THE DOWELS AFTER CASTING MUST BE APPROVED BY THE ENGINEER.

TWO LIFTING LOOPS SHALL BE ALLOWED IN THE PRECAST PIECE IN ACCORDANCE WITH ARTICLE 1077-10 OF THE STANDARD SPECIFICATIONS WITH THE FOLLOWING ADDITIONS. THE LIFTING LOOPS SHALL BE BURNED OFF PRIOR TO PLACING THE ELASTOMERIC BEARING PADS. THE ENDS OF THE LIFTING LOOPS TO BE BURNED OFF SHALL BE RECESSED AND GROUTED. SEE DETAIL FOR GROUTED RECESS FOR LIFTING LOOPS. GROUT SHALL BE NON-METALLIC AND NON-SHRINK ACCORDING TO THE STANDARD SPECIFICATIONS. PROPOSED DEVICES FOR LIFTING LOOPS SHALL BE DETAILED IN SHOP DRAWINGS.

TWO 4 INCH Ø GROUT PIPES SHALL BE PROVIDED AT EACH PILE BLOCKOUT. THE 4 INCH Ø GROUT PIPES SHALL BE CUT FROM SCHEDULE 40 PVC PIPE AND SHALL BE FIRMLY ANCHORED OR REMOVED PRIOR TO PLACEMENT OF THE GROUT.

THE TOP OF THE PILE BLOCKOUT SHALL BE CHAMFERED 2" IN TRANSVERSE DIRECTION.

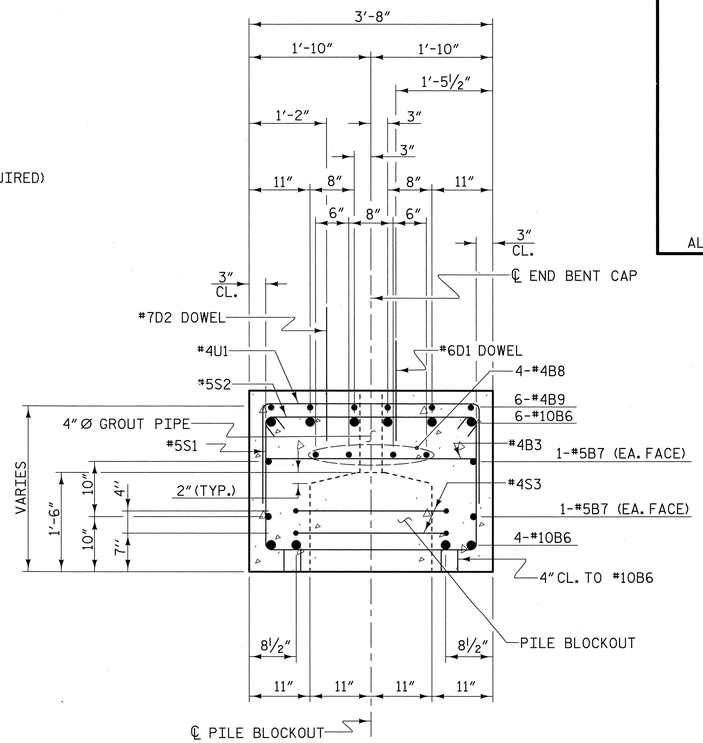

SECTION A-A

BAR TYPES

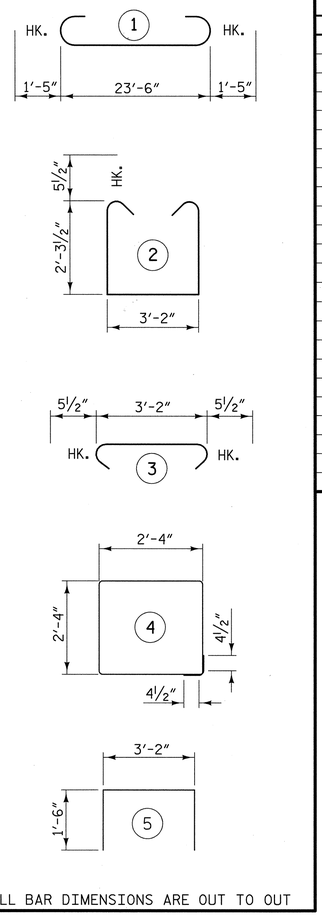

ALL BAR DIMENSIONS ARE OUT TO OUT

BILL OF MATERIAL FOR ONE PIECE EB244

BAR	NO.	SIZE	TYPE	LENGTH	WEIGHT
B3	8	#4	STR	3'-3"	17
B6	10	#10	1	26'-4"	1133
B7	4	#5	STR	23'-7"	98
B8	4	#4	STR	23'-7"	63
B9	6	#4	STR	18'-9"	75
D1	14	#6	STR	1'-6"	32
D2	18	#7	STR	2'-0"	74
S1	20	#5	2	8'-8"	181
S2	20	#5	3	4'-1"	85
S3	8	#4	4	10'-1"	54
U1	13	#4	5	6'-2"	54

EPOXY COATED REINFORCING STEEL
TOTAL 1866 LBS.

CLASS AA (4500 PSI) CONCRETE
9.3 CU. YDS.

GROUT FOR PILE BLOCKOUTS
0.8 CU. YDS.

PROJECT NO. 38243
PAMLICO COUNTY
STATION: 16+05.00 -L-

REPLACES BRIDGE NO. 44

STATE OF NORTH CAROLINA
DEPARTMENT OF TRANSPORTATION
RALEIGH

PRECAST PIECE EB244

33'-10" CLEAR ROADWAY - 90° SKEW

NORTH CAROLINA PROFESSIONAL SEAL 19661 ENGINEER L. KEVIN AUSTIN 6/7/09

PLANS PREPARED BY:
MULKEY
ENGINEERS & CONSULTANTS
PO Box 33127
RALEIGH, N.C. 27636
(919) 851-1912
(919) 851-1918 (FAX)
WWW.MULKEYINC.COM

REVISIONS						SHEET NO.
NO.	BY:	DATE:	NO.	BY:	DATE:	173
1			3			TOTAL SHEETS
2			4			185

DRAWN BY : W. B. ALLEN DATE : 2/09
CHECKED BY : L. K. AUSTIN DATE : 3/09

6/5/2009 10:37:09 AM R:\Structures\38494_SD_EBCB_01.dgn

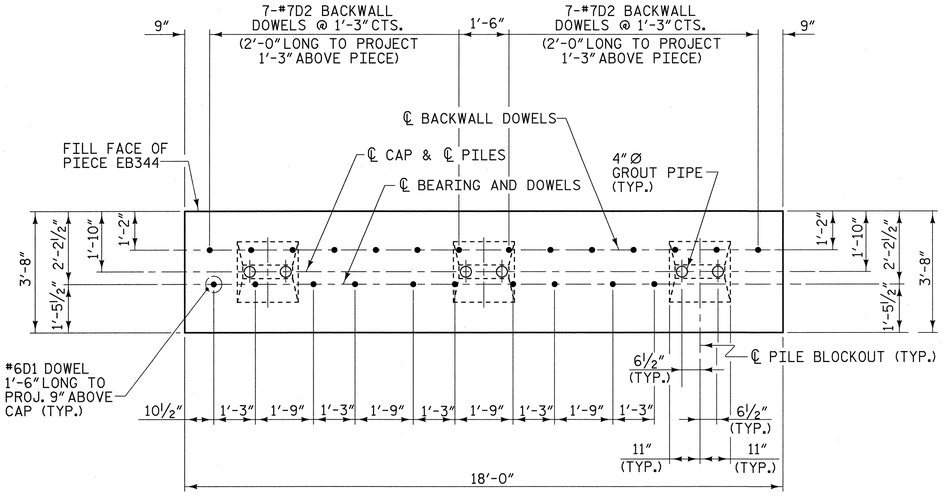

PLAN - PRECAST PIECE EB344

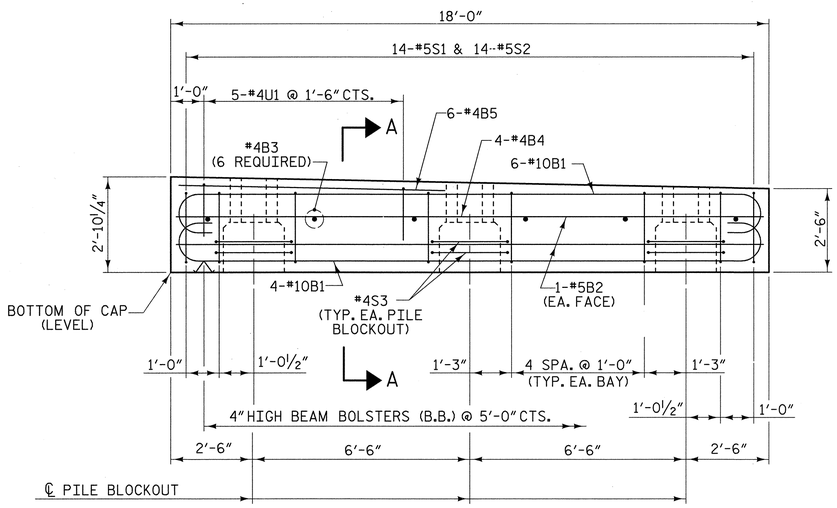

ELEVATION - PRECAST PIECE EB344

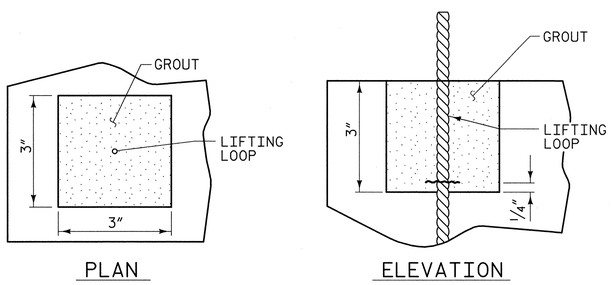

GROUTED RECESS FOR LIFTING LOOPS

LIFTING LOOPS TO BE CUT ¼″ ABOVE BOTTOM OF RECESS.

NOTES

STIRRUPS IN PRECAST PIECE EB344 MAY BE SHIFTED AS NECESSARY TO CLEAR DOWELS AND GROUT PIPES.

ALL REINFORCING STEEL AND BAR SUPPORTS SHALL BE EPOXY COATED ACCORDING TO THE STANDARD SPECIFICATIONS.

CLASS AA (4500 PSI) CONCRETE SHALL BE USED IN PRECAST PIECE EB344.

DOWELS SHALL BE PRESET IN THE PRECAST CAP IN THE LOCATIONS SHOWN ON THE PLANS. DRILLING AND ADHESIVE ANCHORING OF THE DOWELS AFTER CASTING MUST BE APPROVED BY THE ENGINEER.

TWO LIFTING LOOPS SHALL BE ALLOWED IN THE PRECAST PIECE IN ACCORDANCE WITH ARTICLE 1077-10 OF THE STANDARD SPECIFICATIONS WITH THE FOLLOWING ADDITIONS. THE LIFTING LOOPS SHALL BE BURNED OFF PRIOR TO PLACING THE ELASTOMERIC BEARING PADS. THE ENDS OF THE LIFTING LOOPS TO BE BURNED OFF SHALL BE RECESSED AND GROUTED. SEE DETAIL FOR GROUTED RECESS FOR LIFTING LOOPS. GROUT SHALL BE NON-METALLIC AND NON-SHRINK ACCORDING TO THE STANDARD SPECIFICATIONS. PROPOSED DEVICES FOR LIFTING LOOPS SHALL BE DETAILED IN SHOP DRAWINGS.

TWO 4 INCH Ø GROUT PIPES SHALL BE PROVIDED AT EACH PILE BLOCKOUT. THE 4 INCH Ø GROUT PIPES SHALL BE CUT FROM SCHEDULE 40 PVC PIPE AND SHALL BE FIRMLY ANCHORED OR REMOVED PRIOR TO PLACEMENT OF THE GROUT.

THE TOP OF THE PILE BLOCKOUT SHALL BE CHAMFERED 2″ IN THE TRANSVERSE DIRECTION.

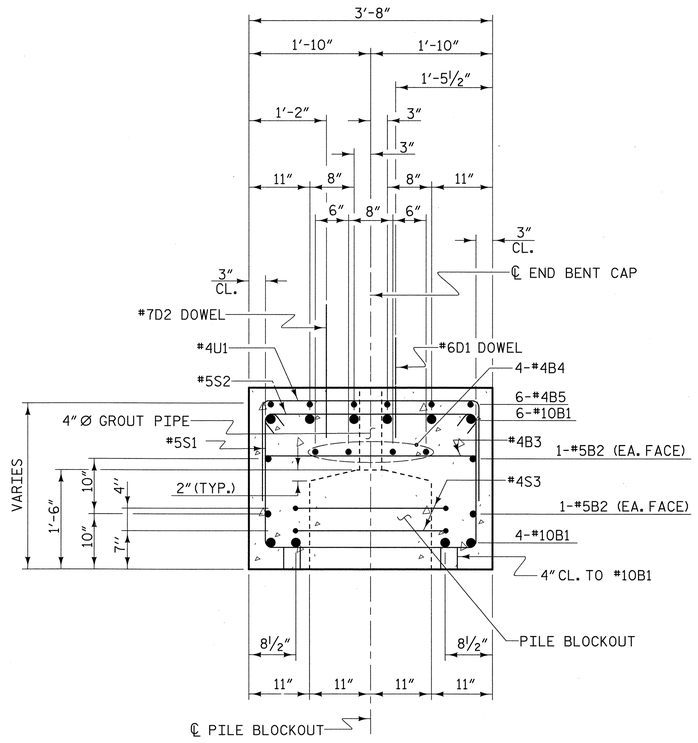

SECTION A-A

BAR TYPES

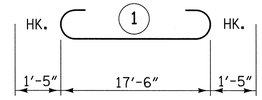

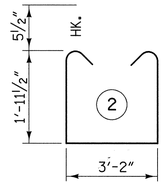

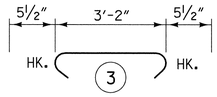

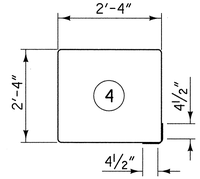

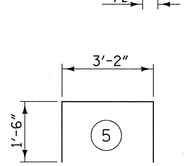

ALL BAR DIMENSIONS ARE OUT TO OUT

BILL OF MATERIAL FOR ONE PIECE EB344

BAR	NO.	SIZE	TYPE	LENGTH	WEIGHT
B1	10	#10	1	20′-4″	875
B2	4	#5	STR	17′-7″	73
B3	6	#4	STR	3′-3″	13
B4	4	#4	STR	17′-7″	47
B5	6	#4	STR	8′-0″	32
D1	10	#6	STR	1′-6″	23
D2	14	#7	STR	2′-0″	57
S1	14	#5	2	8′-0″	117
S2	14	#5	3	4′-1″	60
S3	6	#4	4	10′-1″	40
U1	5	#4	5	6′-2″	21

EPOXY COATED REINFORCING STEEL
TOTAL 1358 LBS.

CLASS AA (4500 PSI) CONCRETE
6.0 CU. YDS.

GROUT FOR PILE BLOCKOUTS
0.6 CU. YDS.

PROJECT NO. 38243
PAMLICO COUNTY
STATION: 16+05.00 -L-

REPLACES BRIDGE NO. 44

STATE OF NORTH CAROLINA
DEPARTMENT OF TRANSPORTATION
RALEIGH

PRECAST PIECE EB344

33′-10″ CLEAR ROADWAY - 90° SKEW

NORTH CAROLINA PROFESSIONAL ENGINEER SEAL 19661 L. KEVIN AUSTIN 6/7/09

PLANS PREPARED BY:
MULKEY ENGINEERS & CONSULTANTS
PO Box 33127
Raleigh, N.C. 27636
(919) 851-1912
(919) 851-1918 (FAX)
WWW.MULKEYINC.COM

REVISIONS						SHEET NO.
NO.	BY:	DATE:	NO.	BY:	DATE:	174
1			3			TOTAL SHEETS
2			4			185

DRAWN BY : W. B. ALLEN DATE : 2/09
CHECKED BY : L. K. AUSTIN DATE : 3/09

6/5/2009 10:55:02 AM R:\Structures\B4594_SD_EBCC_0.dgn

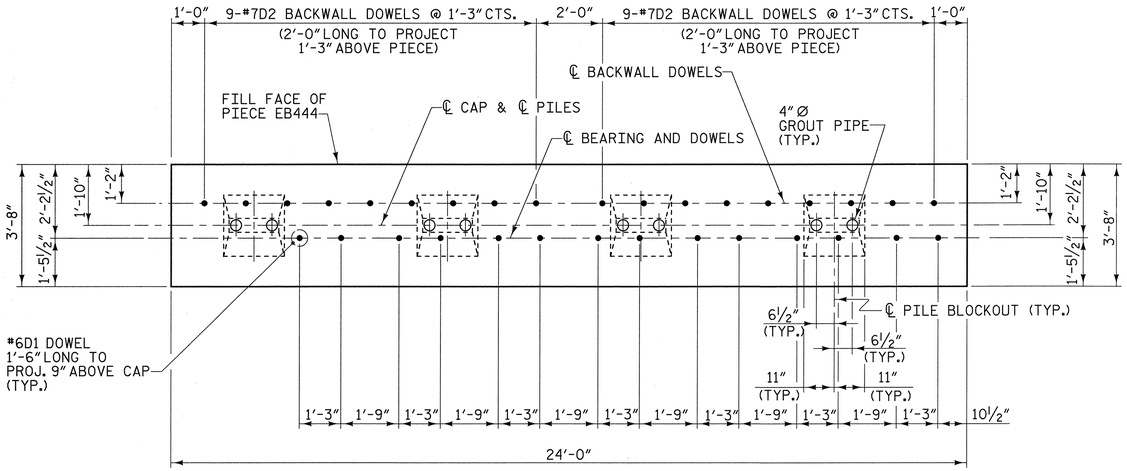

PLAN - PRECAST PIECE EB444

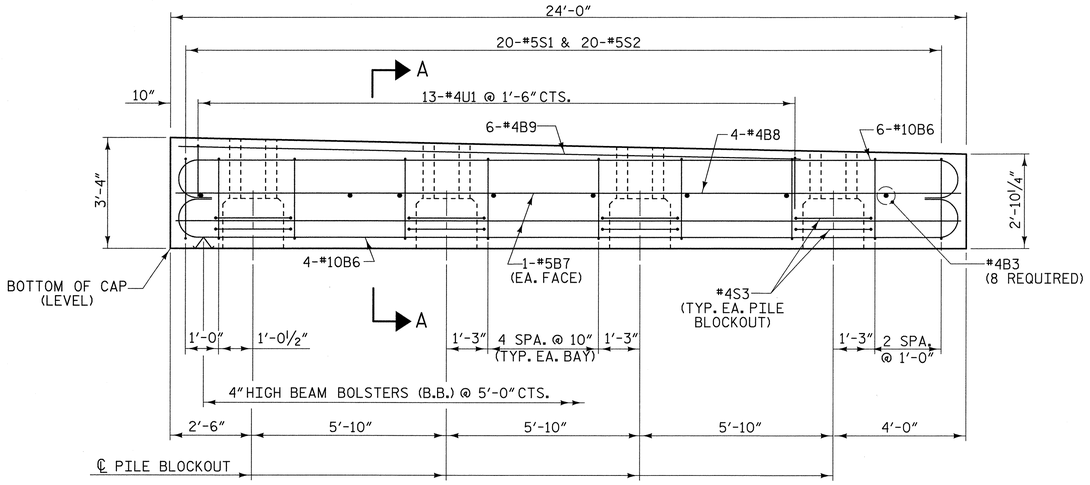

ELEVATION - PRECAST PIECE EB444

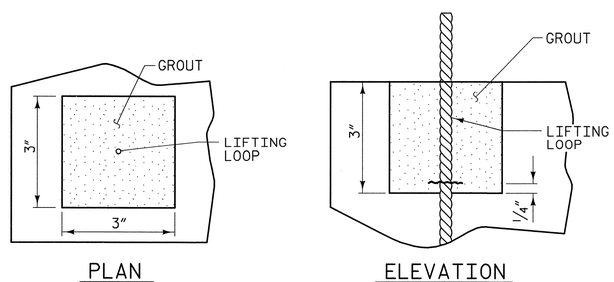

GROUTED RECESS FOR LIFTING LOOPS

LIFTING LOOPS TO BE CUT ¼" ABOVE BOTTOM OF RECESS.

NOTES

STIRRUPS IN PRECAST PIECE EB444 MAY BE SHIFTED AS NECESSARY TO CLEAR DOWELS AND GROUT PIPES.

ALL REINFORCING STEEL AND BAR SUPPORTS SHALL BE EPOXY COATED ACCORDING TO THE STANDARD SPECIFICATIONS.

CLASS AA (4500 PSI) CONCRETE SHALL BE USED IN PRECAST PIECE EB444.

DOWELS SHALL BE PRESET IN THE PRECAST CAP IN THE LOCATIONS SHOWN ON THE PLANS. DRILLING AND ADHESIVE ANCHORING OF THE DOWELS AFTER CASTING MUST BE APPROVED BY THE ENGINEER.

TWO LIFTING LOOPS SHALL BE ALLOWED IN THE PRECAST PIECE IN ACCORDANCE WITH ARTICLE 1077-10 OF THE STANDARD SPECIFICATIONS WITH THE FOLLOWING ADDITIONS. THE LIFTING LOOPS SHALL BE BURNED OFF PRIOR TO PLACING THE ELASTOMERIC BEARING PADS. THE ENDS OF THE LIFTING LOOPS TO BE BURNED OFF SHALL BE RECESSED AND GROUTED. SEE DETAIL FOR GROUTED RECESS FOR LIFTING LOOPS. GROUT SHALL BE NON-METALLIC AND NON-SHRINK ACCORDING TO THE STANDARD SPECIFICATIONS. PROPOSED DEVICES FOR LIFTING LOOPS SHALL BE DETAILED IN SHOP DRAWINGS.

TWO 4 INCH Ø GROUT PIPES SHALL BE PROVIDED AT EACH PILE BLOCKOUT. THE 4 INCH Ø GROUT PIPES SHALL BE CUT FROM SCHEDULE 40 PVC PIPE AND SHALL BE FIRMLY ANCHORED OR REMOVED PRIOR TO PLACEMENT OF THE GROUT.

THE TOP OF THE PILE BLOCKOUT SHALL BE CHAMFERED 2" IN THE TRANSVERSE DIRECTION.

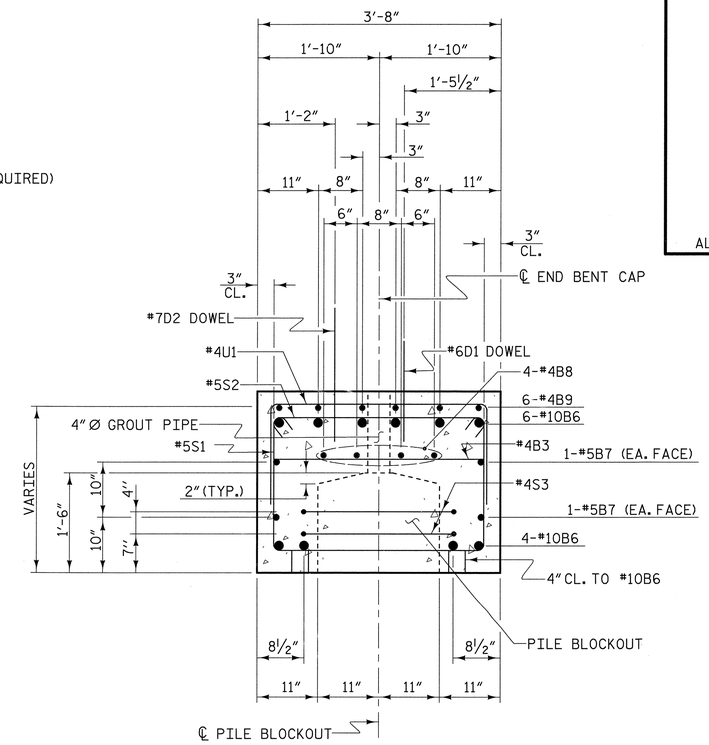

SECTION A-A

BAR TYPES

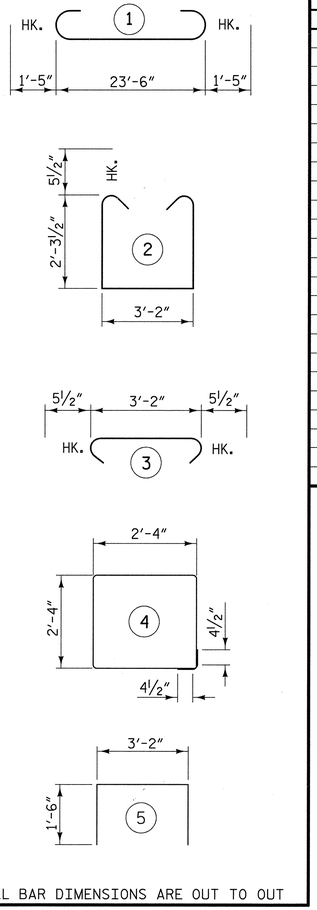

ALL BAR DIMENSIONS ARE OUT TO OUT

BILL OF MATERIAL FOR ONE PIECE EB444

BAR	NO.	SIZE	TYPE	LENGTH	WEIGHT
B3	8	#4	STR	3'-3"	17
B6	10	#10	1	26'-4"	1133
B7	4	#5	STR	23'-7"	98
B8	4	#4	STR	23'-7"	63
B9	6	#4	STR	18'-9"	75
D1	14	#6	STR	1'-6"	32
D2	18	#7	STR	2'-0"	74
S1	20	#5	2	8'-8"	181
S2	20	#5	3	4'-1"	85
S3	8	#4	4	10'-1"	54
U1	13	#4	5	6'-2"	54

EPOXY COATED REINFORCING STEEL
TOTAL 1866 LBS.

CLASS AA (4500 PSI) CONCRETE
9.3 CU. YDS.

GROUT FOR PILE BLOCKOUTS
0.8 CU. YDS.

PROJECT NO. 38243
PAMLICO COUNTY
STATION: 16+05.00 -L-

REPLACES BRIDGE NO. 44

STATE OF NORTH CAROLINA
DEPARTMENT OF TRANSPORTATION
RALEIGH

PRECAST PIECE EB444

33'-10" CLEAR ROADWAY - 90° SKEW

NORTH CAROLINA PROFESSIONAL ENGINEER SEAL 19661 KEVIN AUSTIN 6/7/09

PLANS PREPARED BY:
MULKEY
ENGINEERS & CONSULTANTS
PO BOX 33127
RALEIGH, N.C. 27636
(919) 851-1912
(919) 851-1918 (FAX)
WWW.MULKEYINC.COM

REVISIONS						SHEET NO.
NO.	BY:	DATE:	NO.	BY:	DATE:	175
1			3			TOTAL SHEETS
2			4			185

DRAWN BY : W. B. ALLEN DATE : 2/09
CHECKED BY : L. K. AUSTIN DATE : 3/09

6/5/2009 10:35:37 AM R:\Structures\B4694_SD_EB02_0.dgn

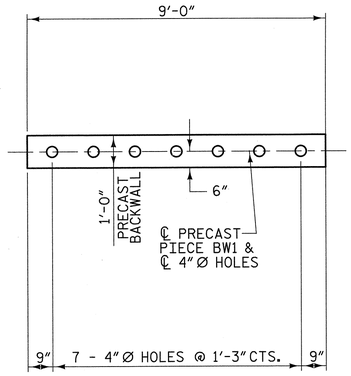

PLAN - PRECAST PIECE BW1

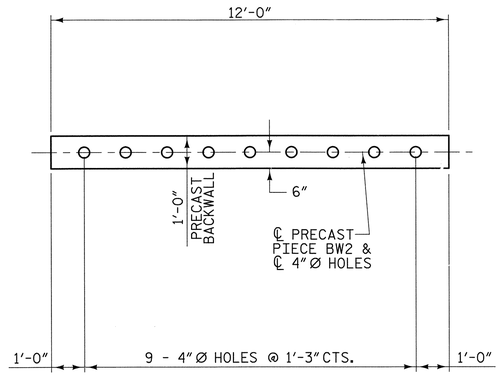

PLAN - PRECAST PIECE BW2

NOTES

ALL REINFORCING STEEL AND BAR SUPPORTS SHALL BE EPOXY COATED ACCORDING TO THE STANDARD SPECIFICATIONS.

CLASS AA (4500 PSI) CONCRETE SHALL BE USED IN PRECAST PIECES BW1 & BW2.

TWO LIFTING LOOPS SHALL BE ALLOWED IN THE PRECAST BACKWALL IN ACCORDANCE WITH ARTICLE 1077-10 OF THE STANDARD SPECIFICATIONS WITH THE FOLLOWING ADDITIONS. THE LIFTING LOOPS TO BE BURNED OFF SHALL BE RECESSED AND GROUTED. SEE DETAIL FOR GROUTED RECESS FOR LIFTING LOOPS. GROUT SHALL BE NON-METALLIC AND NON-SHRINK ACCORDING TO THE STANDARD SPECIFICATIONS. PROPOSED DEVICES FOR LIFTING LOOPS SHALL BE DETAILED IN SHOP DRAWINGS.

BILL OF MATERIAL FOR ONE PIECE BW1

BAR	NO.	SIZE	TYPE	LENGTH	WEIGHT
K1	4	5	STR	8'-8"	36
K2	4	4	STR	8'-8"	23
S4	8	4	1	5'-0"	27
EPOXY COATED REINFORCING STEEL TOTAL					86 LBS
CLASS AA (4500 PSI) CONCRETE					0.5 CU. YDS.

PIECE BW2

BAR	NO.	SIZE	TYPE	LENGTH	WEIGHT
K3	4	5	STR	11'-8"	49
K4	4	4	STR	11'-8"	31
S4	10	4	1	5'-0"	33
EPOXY COATED REINFORCING STEEL TOTAL					113 LBS
CLASS AA (4500 PSI) CONCRETE					0.7 CU. YDS.

BAR TYPES

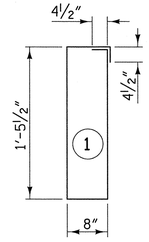

ALL BAR DIMENSIONS ARE OUT TO OUT

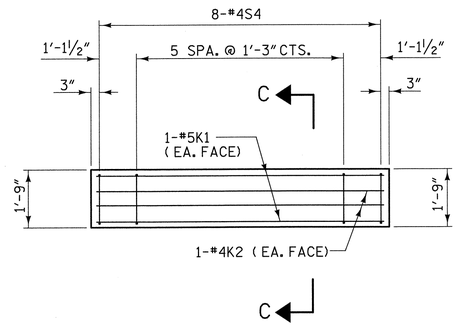

ELEVATION - PRECAST PIECE BW1

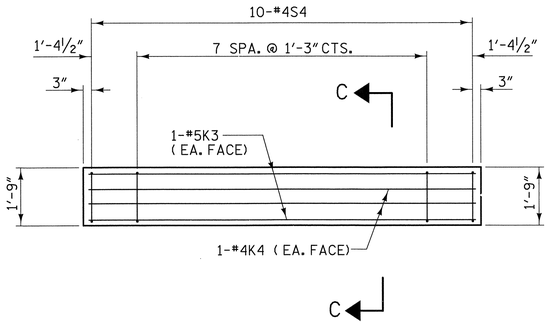

ELEVATION - PRECAST PIECE BW2

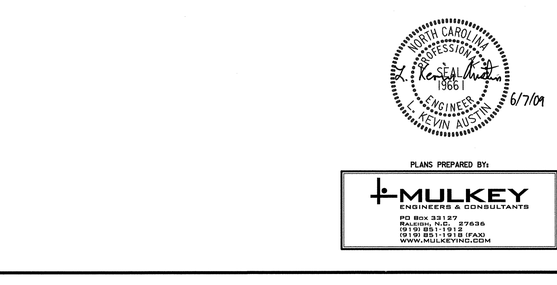

SECTION C-C

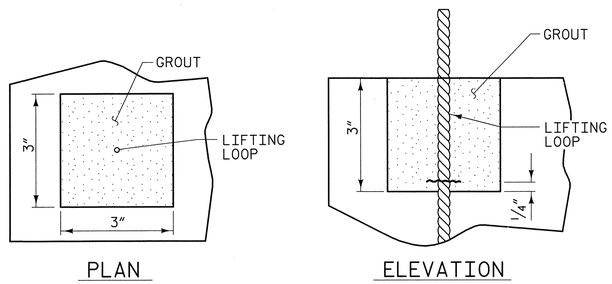

GROUTED RECESS FOR LIFTING LOOPS

LIFTING LOOPS TO BE CUT ¼" ABOVE BOTTOM OF RECESS.

PROJECT NO. 38243

PAMLICO COUNTY

STATION: 16+05.00 -L-

REPLACES BRIDGE NO. 44

STATE OF NORTH CAROLINA
DEPARTMENT OF TRANSPORTATION
RALEIGH

PRECAST PIECE BW1 AND PIECE BW2

33'-10" CLEAR ROADWAY - 90° SKEW

NORTH CAROLINA PROFESSIONAL SEAL 1966 ENGINEER L. KEVIN AUSTIN 6/7/09

PLANS PREPARED BY:

MULKEY
ENGINEERS & CONSULTANTS
PO Box 33127
Raleigh, N.C. 27636
(919) 851-1912
(919) 851-1912 (FAX)
WWW.MULKEYINC.COM

REVISIONS						SHEET NO.
NO.	BY:	DATE:	NO.	BY:	DATE:	176
1			3			TOTAL SHEETS
2			4			185

DRAWN BY : W. B. ALLEN DATE : 2/09
CHECKED BY : L. K. AUSTIN DATE : 3/09

6/5/2009 10:34:51 AM R:\Structures\B4594_SD_BW_01.dgn

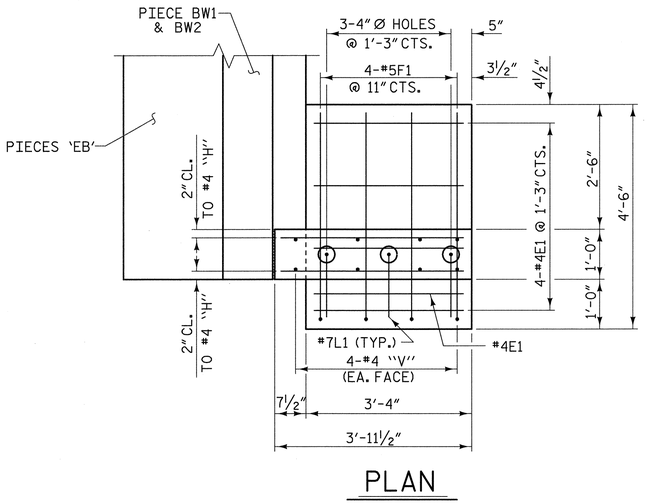

PLAN

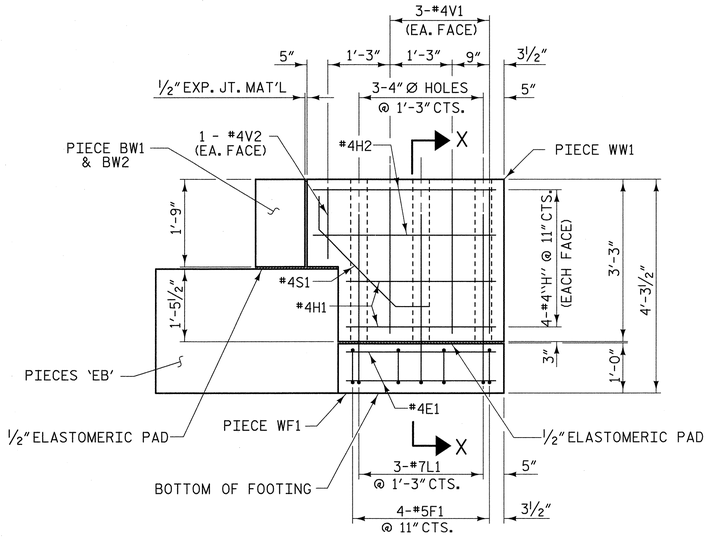

ELEVATION

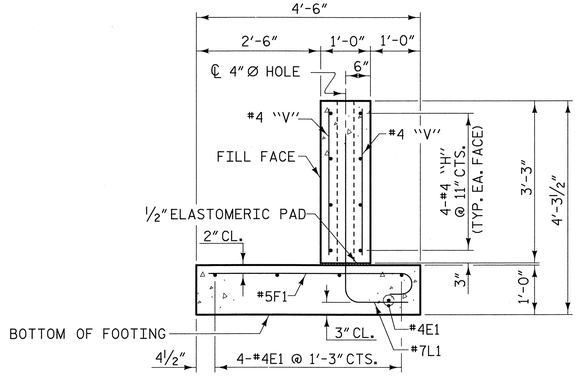

SECTION X-X

NOTES

ALL REINFORCING STEEL AND BAR SUPPORTS SHALL BE EPOXY COATED ACCORDING TO THE STANDARD SPECIFICATIONS.

CLASS AA (4500 PSI) CONCRETE SHALL BE USED IN PRECAST PIECE WF1 AND PRECAST PIECE WW1.

TWO LIFTING LOOPS SHALL BE ALLOWED IN THE PRECAST WINGWALL AND THE PRECAST WING FOOTING IN ACCORDANCE WITH ARTICLE 1077-10 OF THE STANDARD SPECIFICATIONS WITH THE FOLLOWING ADDITIONS. THE LIFTING LOOPS TO BE BURNED OFF SHALL BE RECESSED AND GROUTED. SEE DETAIL FOR GROUTED RECESS FOR LIFTING LOOPS. GROUT SHALL BE NON-METALLIC AND NON-SHRINK ACCORDING TO THE STANDARD SPECIFICATIONS. PROPOSED DEVICES FOR LIFTING LOOPS SHALL BE DETAILED IN SHOP DRAWINGS.

BAR TYPES

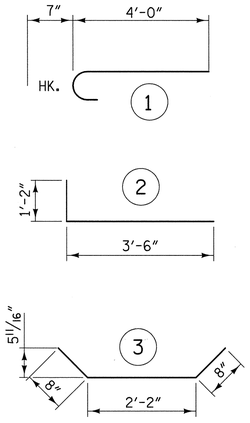

ALL BAR DIMENSIONS ARE OUT TO OUT

BILL OF MATERIAL FOR ONE PIECE WF1

BAR	NO.	SIZE	TYPE	LENGTH	WEIGHT
E1	5	4	STR	3'-0"	10
F1	4	5	1	4'-7"	19
L1	3	7	2	4'-8"	28

EPOXY COATED REINFORCING STEEL
TOTAL 57 LBS.

CLASS AA (4500 PSI) CONCRETE
0.6 CU. YDS.

PIECE WW1

BAR	NO.	SIZE	TYPE	LENGTH	WEIGHT
H1	4	4	STR	3'-0"	8
H2	4	4	STR	3'-7"	10
S1	2	4	3	3'-6"	5
V1	6	4	STR	2'-11"	12
V2	2	4	STR	1'-5"	2

EPOXY COATED REINFORCING STEEL
TOTAL 37 LBS.

CLASS AA (4500 PSI) CONCRETE
0.4 CU. YDS.

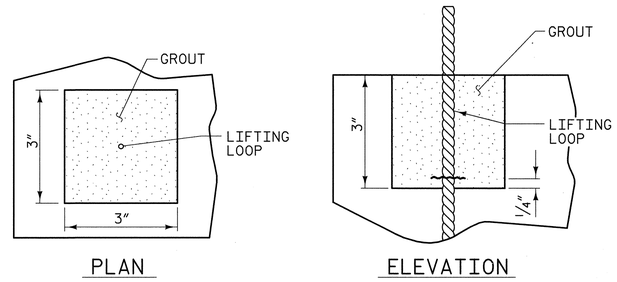

GROUTED RECESS FOR LIFTING LOOPS

LIFTING LOOPS TO BE CUT ¼" ABOVE BOTTOM OF RECESS.

PROJECT NO. 38243

PAMLICO COUNTY

STATION: 16+05.00 -L-

REPLACES BRIDGE NO. 44

NORTH CAROLINA PROFESSIONAL SEAL 19661 ENGINEER L. KEVIN AUSTIN 6/7/09

PLANS PREPARED BY:

MULKEY
ENGINEERS & CONSULTANTS
PO Box 33127
Raleigh, N.C. 27636
(919) 851-1912
(919) 851-1914 (FAX)
WWW.MULKEYINC.COM

STATE OF NORTH CAROLINA
DEPARTMENT OF TRANSPORTATION
RALEIGH

PRECAST PIECE WW1 AND PIECE WF1

33'-10" CLEAR ROADWAY - 90°SKEW

REVISIONS						SHEET NO.
NO.	BY:	DATE:	NO.	BY:	DATE:	177
1			3			TOTAL SHEETS
2			4			185

DRAWN BY : W. B. ALLEN DATE : 2/09
CHECKED BY : L. K. AUSTIN DATE : 3/09

6/5/2009 10:34:13 AM R:\Structures\38594_SD_WW_D.dgn

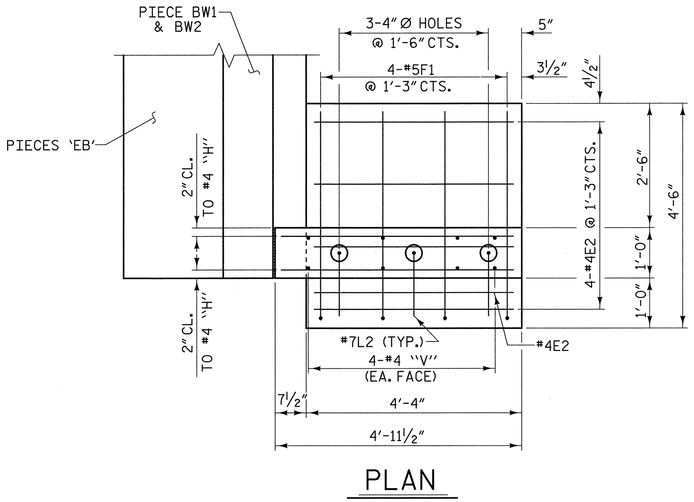

PLAN

NOTES

ALL REINFORCING STEEL AND BAR SUPPORTS SHALL BE EPOXY COATED ACCORDING TO THE STANDARD SPECIFICATIONS.

CLASS AA (4500 PSI) CONCRETE SHALL BE USED IN PRECAST PIECE WF244 AND PRECAST PIECE WW244.

TWO LIFTING LOOPS SHALL BE ALLOWED IN THE PRECAST WINGWALL AND THE PRECAST WING FOOTING IN ACCORDANCE WITH ARTICLE 1077-10 OF THE STANDARD SPECIFICATIONS WITH THE FOLLOWING ADDITIONS. THE LIFTING LOOPS TO BE BURNED OFF SHALL BE RECESSED AND GROUTED. SEE DETAIL FOR GROUTED RECESS FOR LIFTING LOOPS. GROUT SHALL BE NON-METALLIC AND NON-SHRINK ACCORDING TO THE STANDARD SPECIFICATIONS. PROPOSED DEVICES FOR LIFTING LOOPS SHALL BE DETAILED IN SHOP DRAWINGS.

BAR TYPES

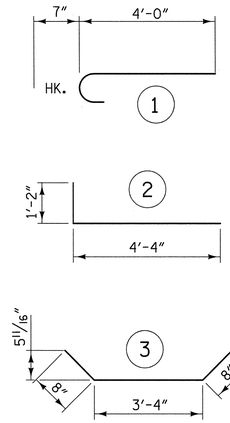

ALL BAR DIMENSIONS ARE OUT TO OUT

BILL OF MATERIAL FOR ONE PIECE WF244

BAR	NO.	SIZE	TYPE	LENGTH	WEIGHT
E2	5	4	STR	4'-0"	13
F1	4	5	1	4'-7"	19
L2	3	7	2	5'-6"	34
EPOXY COATED REINFORCING STEEL					
TOTAL					66 LBS.
CLASS AA (4500 PSI) CONCRETE					
					0.7 CU. YDS.

PIECE WW244

BAR	NO.	SIZE	TYPE	LENGTH	WEIGHT
H3	6	4	STR	4'-0"	16
H4	4	4	STR	4'-7"	12
S2	2	4	3	4'-8"	6
V2	2	4	STR	1'-5"	2
V3	6	4	STR	3'-9"	15
EPOXY COATED REINFORCING STEEL					
TOTAL					51 LBS.
CLASS AA (4500 PSI) CONCRETE					
					0.7 CU. YDS.

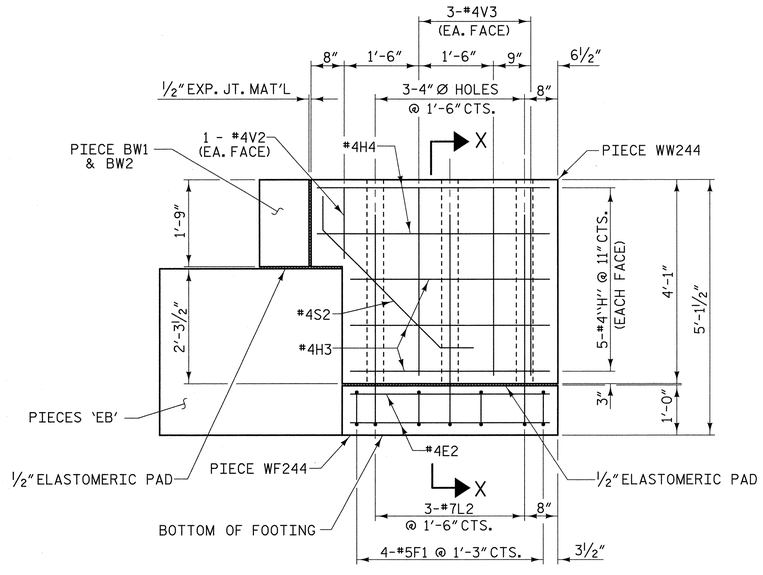

ELEVATION

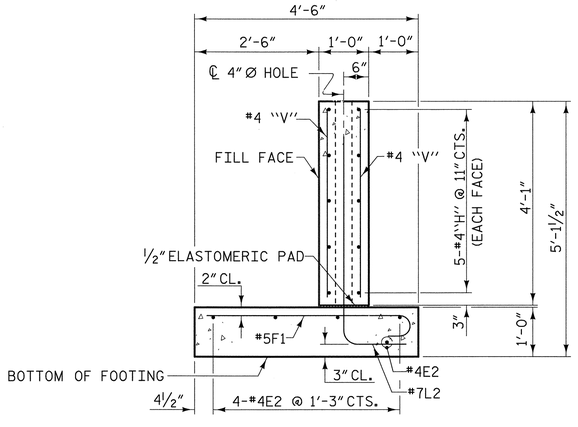

SECTION X-X

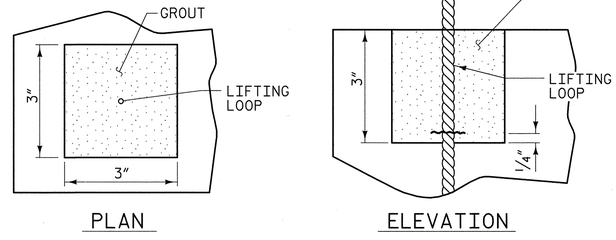

GROUTED RECESS FOR LIFTING LOOPS

LIFTING LOOPS TO BE CUT ¼" ABOVE BOTTOM OF RECESS.

PROJECT NO. 38243

PAMLICO COUNTY

STATION: 16+05.00 -L-

REPLACES BRIDGE NO. 44

NORTH CAROLINA PROFESSIONAL SEAL 19661 ENGINEER KEVIN AUSTIN 6/7/09

PLANS PREPARED BY:

MULKEY
ENGINEERS & CONSULTANTS
PO BOX 33127
RALEIGH, NC 27636
(919) 851-1912
(919) 851-1918 (FAX)
WWW.MULKEYINC.COM

STATE OF NORTH CAROLINA
DEPARTMENT OF TRANSPORTATION
RALEIGH

PRECAST PIECE WW244 AND PIECE WF244

33'-10" CLEAR ROADWAY - 90° SKEW

REVISIONS						SHEET NO.
NO.	BY:	DATE:	NO.	BY:	DATE:	178
1			3			TOTAL SHEETS
2			4			185

DRAWN BY : W. B. ALLEN DATE : 2/09
CHECKED BY : L. K. AUSTIN DATE : 3/09

6/5/2009 10:33:37 AM R:\Structures\B4594_SD_WW_02.dgn

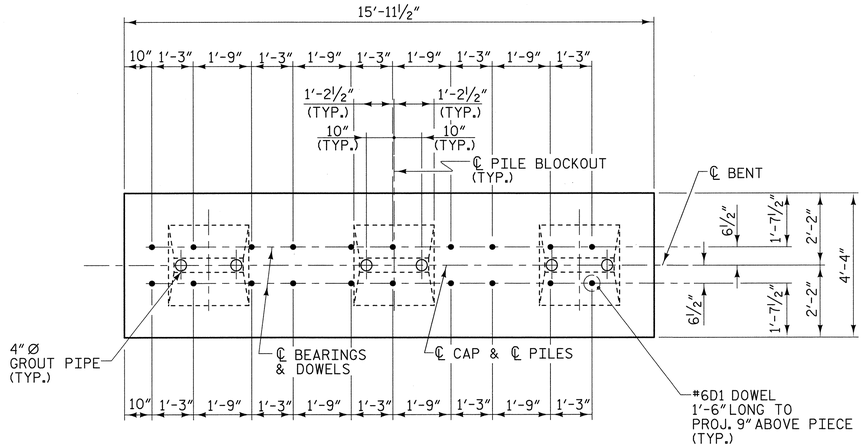

PLAN - PRECAST PIECE B144

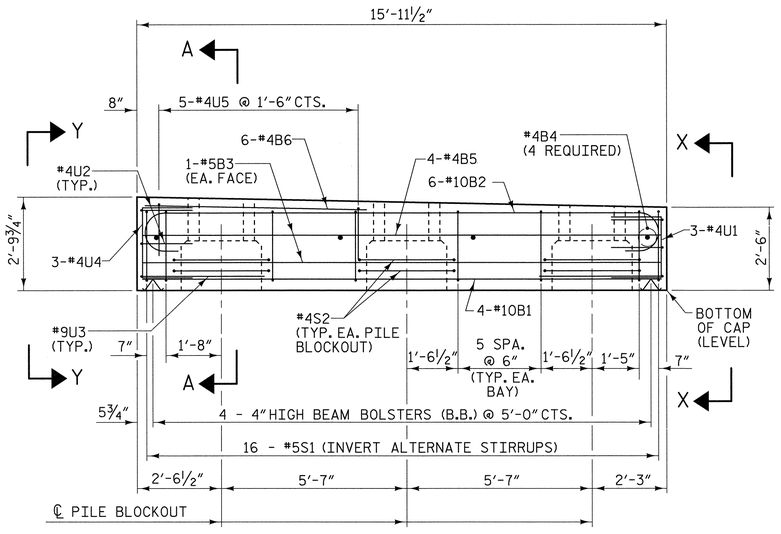

ELEVATION - PRECAST PIECE B144

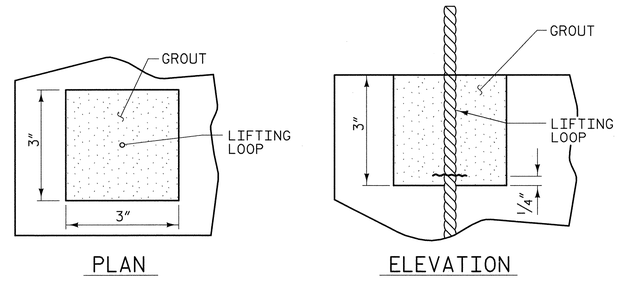

GROUTED RECESS FOR LIFTING LOOPS

LIFTING LOOPS TO BE CUT ¼" ABOVE BOTTOM OF RECESS.

NOTES

STIRRUPS IN PRECAST PIECE B144 MAY BE SHIFTED AS NECESSARY TO CLEAR DOWELS AND GROUT PIPES.

ALL REINFORCING STEEL AND BAR SUPPORTS SHALL BE EPOXY COATED ACCORDING TO THE STANDARD SPECIFICATIONS.

CLASS AA (4500 PSI) CONCRETE SHALL BE USED IN PRECAST PIECE B144.

DOWELS SHALL BE PRESET IN THE PRECAST CAP IN THE LOCATIONS SHOWN ON THE PLANS. DRILLING AND ADHESIVE ANCHORING OF THE DOWELS AFTER CASTING MUST BE APPROVED BY THE ENGINEER.

TWO LIFTING LOOPS SHALL BE ALLOWED IN THE PRECAST PIECE IN ACCORDANCE WITH ARTICLE 1077-10 OF THE STANDARD SPECIFICATIONS WITH THE FOLLOWING ADDITIONS. THE LIFTING LOOPS SHALL BE BURNED OFF PRIOR TO PLACING THE ELASTOMERIC BEARING PADS. THE ENDS OF THE LIFTING LOOPS TO BE BURNED OFF SHALL BE RECESSED AND GROUTED. SEE DETAIL FOR GROUTED RECESS FOR LIFTING LOOPS. GROUT SHALL BE NON-METALLIC AND NON-SHRINK ACCORDING TO THE STANDARD SPECIFICATIONS. PROPOSED DEVICES FOR LIFTING LOOPS SHALL BE DETAILED IN SHOP DRAWINGS.

TWO 4 INCH Ø GROUT PIPES SHALL BE PROVIDED AT EACH PILE BLOCKOUT. THE 4 INCH Ø GROUT PIPES SHALL BE CUT FROM SCHEDULE 40 PVC PIPE AND SHALL BE FIRMLY ANCHORED OR REMOVED PRIOR TO PLACEMENT OF THE GROUT.

THE TOP OF THE PILE BLOCKOUT SHALL BE CHAMFERED 2" ALL IN THE TRANSVERSE DIRECTION.

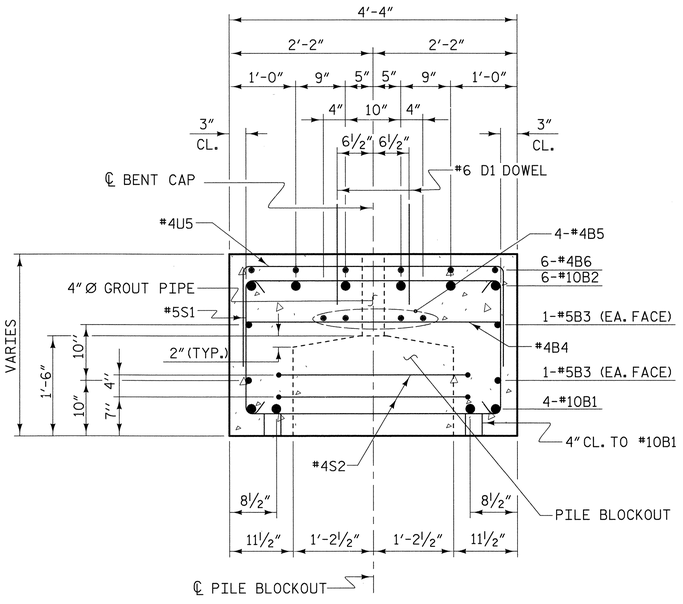

SECTION A-A

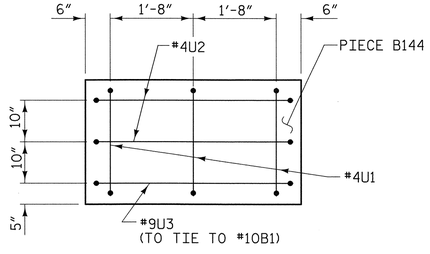

VIEW X-X

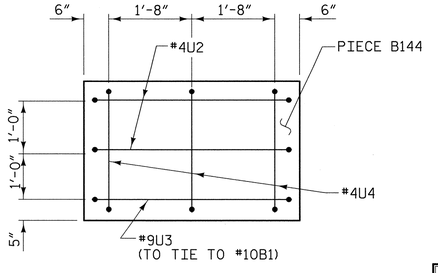

VIEW Y-Y

BAR TYPES

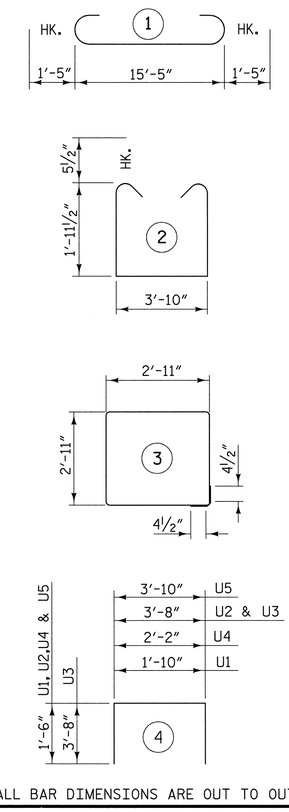

ALL BAR DIMENSIONS ARE OUT TO OUT

BILL OF MATERIAL FOR ONE PIECE B144

BAR	NO.	SIZE	TYPE	LENGTH	WEIGHT
B1	4	#10	STR	15'-5"	265
B2	6	#10	1	18'-3"	471
B3	4	#5	STR	15'-5"	64
B4	4	#4	STR	3'-11"	10
B5	4	#4	STR	15'-5"	41
B6	6	#4	STR	6'-8"	27
D1	20	#6	STR	1'-6"	45
S1	16	#5	2	8'-8"	145
S2	6	#4	3	12'-5"	50
U1	3	#4	4	4'-10"	10
U2	4	#4	4	6'-8"	18
U3	2	#9	4	11'-0"	75
U4	3	#4	4	5'-2"	10
U5	5	#4	4	6'-10"	23

TOTAL EPOXY COATED REINFORCING STEEL 1254 LBS.

CLASS AA (4500 PSI) CONCRETE 5.8 CU. YDS.

GROUT FOR PILE BLOCKOUTS 1.0 CU. YDS.

PROJECT NO. 38243

PAMLICO COUNTY

STATION: 16+05.00 -L-

REPLACES BRIDGE NO. 44

STATE OF NORTH CAROLINA
DEPARTMENT OF TRANSPORTATION
RALEIGH

PRECAST PIECE B144

33'-10" CLEAR ROADWAY - 90° SKEW

NORTH CAROLINA PROFESSIONAL ENGINEER SEAL 19661 L. KEVIN AUSTIN 8/6/09

PLANS PREPARED BY:

MULKEY
ENGINEERS & CONSULTANTS
PO Box 33127
Raleigh, N.C. 27636
(919) 851-1912
(919) 851-1918 (FAX)
www.mulkeyinc.com

REVISIONS						SHEET NO.
NO.	BY:	DATE:	NO.	BY:	DATE:	179
1			3			TOTAL SHEETS
2			4			185

DRAWN BY : W. B. ALLEN DATE : 2/09
CHECKED BY : L. K. AUSTIN DATE : 3/09

8/6/2009 6:48:17 AM G:\project\2004\224.25_Pamlico41\Structures\B4594_SD_BCA_01.dgn

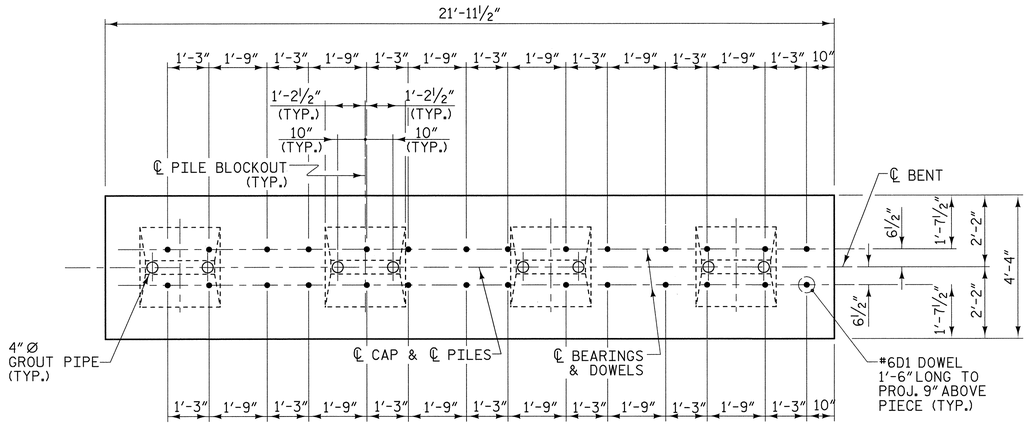

PLAN - PRECAST PIECE B244

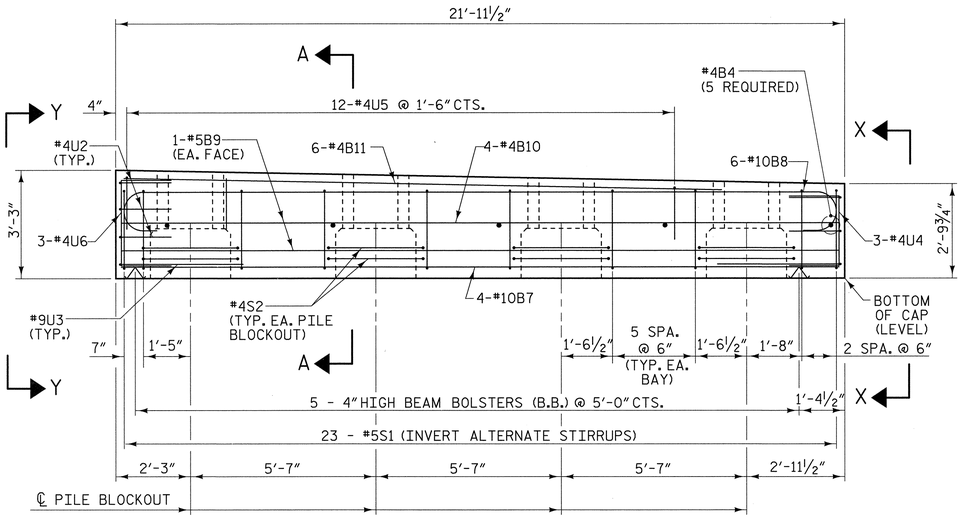

ELEVATION - PRECAST PIECE B244

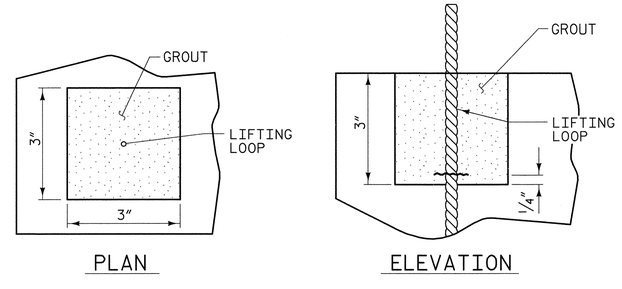

GROUTED RECESS FOR LIFTING LOOPS

LIFTING LOOPS TO BE CUT ¼″ ABOVE BOTTOM OF RECESS.

NOTES

STIRRUPS IN PRECAST PIECE B244 MAY BE SHIFTED AS NECESSARY TO CLEAR DOWELS AND GROUT PIPES.

ALL REINFORCING STEEL AND BAR SUPPORTS SHALL BE EPOXY COATED ACCORDING TO THE STANDARD SPECIFICATIONS.

CLASS AA (4500 PSI) CONCRETE SHALL BE USED IN PRECAST PIECE B244.

DOWELS SHALL BE PRESET IN THE PRECAST CAP IN THE LOCATIONS SHOWN ON THE PLANS. DRILLING AND ADHESIVE ANCHORING OF THE DOWELS AFTER CASTING MUST BE APPROVED BY THE ENGINEER.

TWO LIFTING LOOPS SHALL BE ALLOWED IN THE PRECAST PIECE IN ACCORDANCE WITH ARTICLE 1077-10 OF THE STANDARD SPECIFICATIONS WITH THE FOLLOWING ADDITIONS. THE LIFTING LOOPS SHALL BE BURNED OFF PRIOR TO PLACING THE ELASTOMERIC BEARING PADS. THE ENDS OF THE LIFTING LOOPS TO BE BURNED OFF SHALL BE RECESSED AND GROUTED. SEE DETAIL FOR GROUTED RECESS FOR LIFTING LOOPS. GROUT SHALL BE NON-METALLIC AND NON-SHRINK ACCORDING TO THE STANDARD SPECIFICATIONS. PROPOSED DEVICES FOR LIFTING LOOPS SHALL BE DETAILED IN SHOP DRAWINGS.

TWO 4 INCH Ø GROUT PIPES SHALL BE PROVIDED AT EACH PILE BLOCKOUT. THE 4 INCH Ø GROUT PIPES SHALL BE CUT FROM SCHEDULE 40 PVC PIPE AND SHALL BE FIRMLY ANCHORED OR REMOVED PRIOR TO PLACEMENT OF THE GROUT.

THE TOP OF THE PILE BLOCKOUT SHALL BE CHAMFERED 2″ IN THE TRANSVERSE DIRECTION.

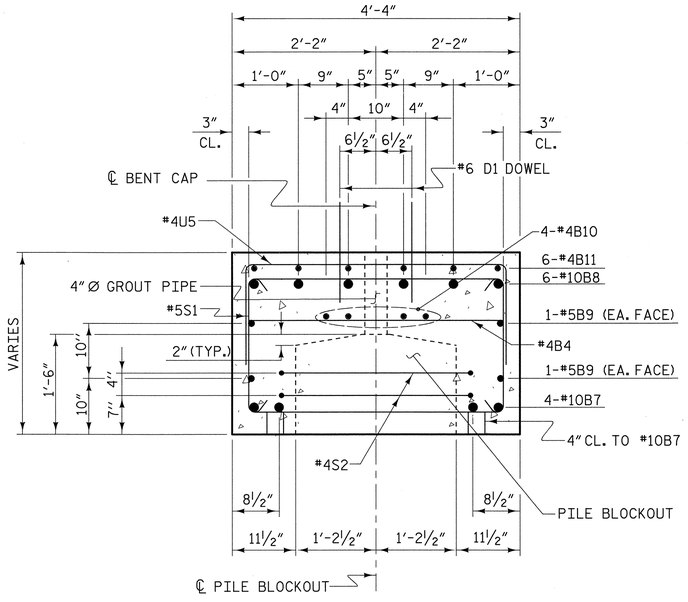

SECTION A-A

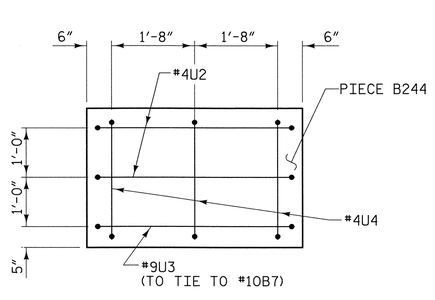

VIEW X-X

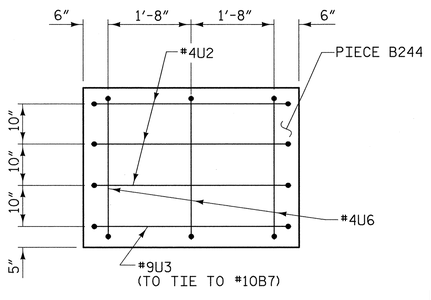

VIEW Y-Y

BAR TYPES

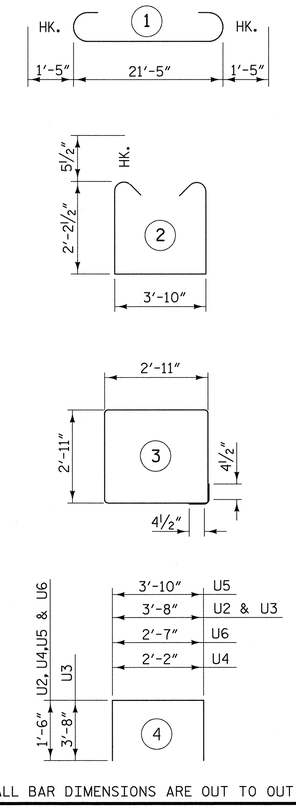

ALL BAR DIMENSIONS ARE OUT TO OUT

BILL OF MATERIAL FOR ONE PIECE B244

BAR	NO.	SIZE	TYPE	LENGTH	WEIGHT
B4	5	#4	STR	3′-11″	13
B7	4	#10	STR	21′-5″	369
B8	6	#10	1	24′-3″	626
B9	4	#5	STR	21′-5″	89
B10	4	#4	STR	21′-5″	57
B11	6	#4	STR	18′-0″	72
D1	28	#6	STR	1′-6″	63
S1	23	#5	2	9′-2″	220
S2	8	#4	3	12′-5″	66
U2	5	#4	4	6′-8″	22
U3	2	#9	4	11′-0″	75
U4	3	#4	4	5′-2″	10
U5	12	#4	4	6′-10″	55
U6	3	#4	4	5′-7″	11

TOTAL EPOXY COATED REINFORCING STEEL 1748 LBS.

CLASS AA (4500 PSI) CONCRETE 9.4 CU. YDS.

GROUT FOR PILE BLOCKOUTS 1.3 CU. YDS.

PROJECT NO. 38243

PAMLICO COUNTY

STATION: 16+05.00 -L-

REPLACES BRIDGE NO. 44

STATE OF NORTH CAROLINA
DEPARTMENT OF TRANSPORTATION
RALEIGH

PRECAST PIECE B244

33′-10″ CLEAR ROADWAY - 90° SKEW

REVISIONS						SHEET NO.
NO.	BY:	DATE:	NO.	BY:	DATE:	180
1			3			TOTAL SHEETS
2			4			185

NORTH CAROLINA PROFESSIONAL SEAL 19661 ENGINEER L. KEVIN AUSTIN 8/6/09

PLANS PREPARED BY:

MULKEY
ENGINEERS & CONSULTANTS
PO Box 33127
Raleigh, N.C. 27636
(919) 851-1912
(919) 851-1918 (FAX)
WWW.MULKEYINC.COM

DRAWN BY : W. B. ALLEN DATE : 2/09
CHECKED BY : L. K. AUSTIN DATE : 3/09

8/6/2009 6:45 AM G:\projects\2004\224.25_Pamlico44\Structures\B4594_SD_BCB_01.dgn

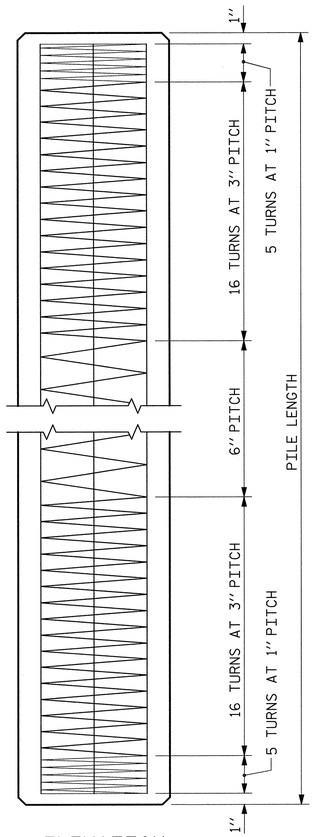

ELEVATION

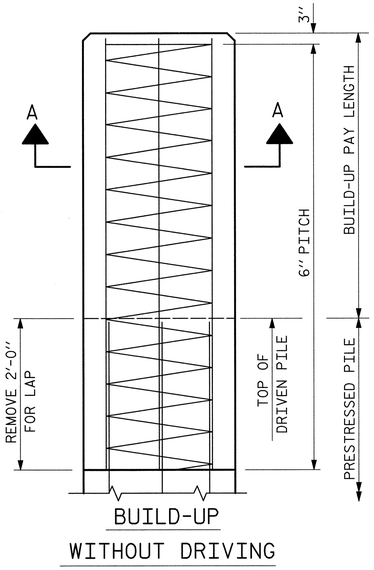

BUILD-UP
WITHOUT DRIVING

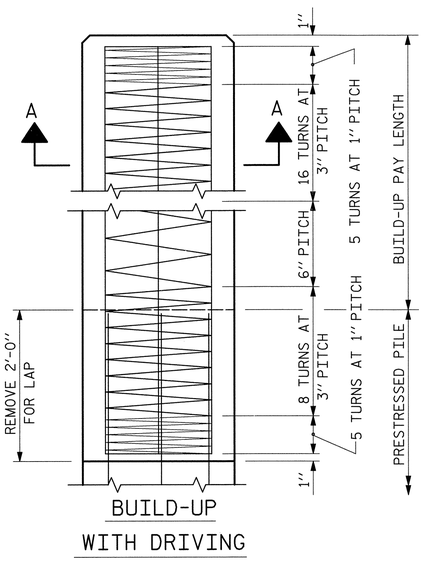

BUILD-UP
WITH DRIVING

QUANTITIES FOR ONE 20'' SQUARE PILE						
	CONCRETE	PILE WT.	ONE PICK-UP POINTS		TWO PICK-UP POINTS	
LENGTH	CU. YDS.	TONS	0.3L	0.7L	0.207L	0.586L
25'-0''	2.56	5.18	7'-6''	17'-6''		
30'-0''	3.07	6.22	9'-0''	21'-0''		
35'-0''	3.58	7.26	10'-6''	24'-6''		
40'-0''	4.09	8.29	12'-0''	28'-0''		
45'-0''	4.61	9.33	13'-6''	31'-6''		
50'-0''	5.12	10.36	15'-0''	35'-0''		
55'-0''	5.63	11.40	16'-6''	38'-6''		
60'-0''	6.14	12.44	18'-0''	42'-0''		
65'-0''	6.65	13.47			13'-5½''	38'-1''
70'-0''	7.17	14.51			14'-6''	41'-0''
75'-0''	7.68	15.55			15'-6½''	43'-11''
80'-0''	8.19	16.58			16'-6½''	46'-11''
85'-0''	8.70	17.62			17'-7''	49'-10''

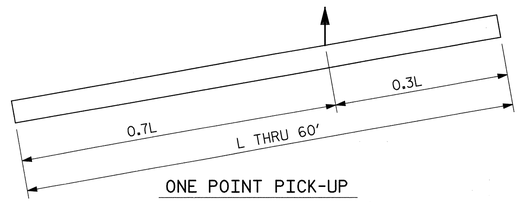

ONE POINT PICK-UP

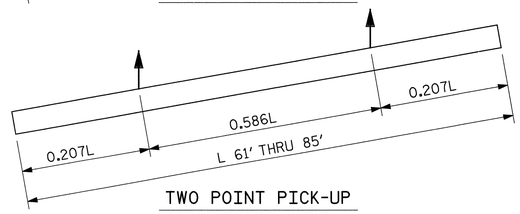

TWO POINT PICK-UP

PICK-UP POINTS

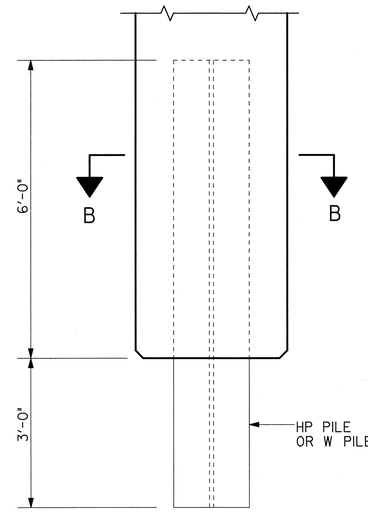

ELEVATION

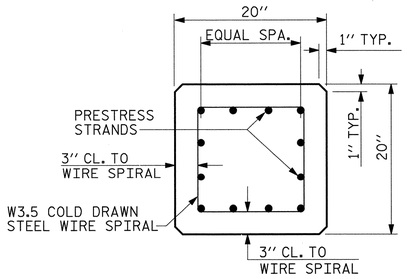

TYPICAL SECTION

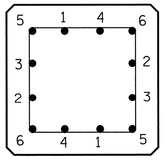

TYPICAL PATTERN FOR BURNING STRANDS

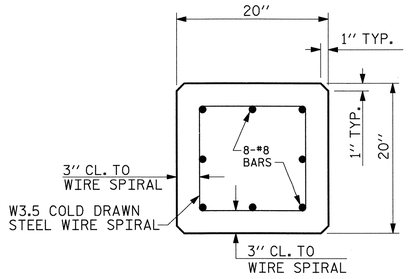

SECTION A-A

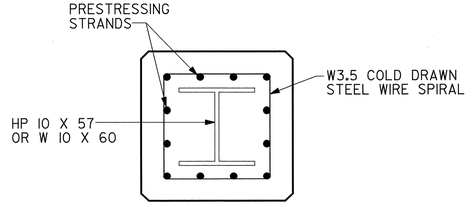

SECTION B-B

PILE TIP DETAILS

NOTES

CONCRETE DESIGN DATA : f'c= 5,000 PSI ;fc= 2,000 PSI

IMPACT IN HANDLING = 50%

IN DRIVING PILES, A METHOD APPROVED BY THE ENGINEER SHALL BE USED, WHEREBY THE HEAD OF THE PILE IS NOT DAMAGED.

PROPOSED DEVICES FOR LIFTING PILES, RECESS DETAILS, AND PATCHING MATERIAL SHALL BE DETAILED IN SHOP DRAWINGS. AFTER ATTACHMENTS HAVE BEEN REMOVED, OPENINGS SHALL BE REPAIRED SUCH THAT THE APPEARANCE OF THE PILE IS UNIFORM.

THE CONTRACTOR SHALL USE THE FOLLOWING STRAND TYPE:

SIZE	GRADE	NUMBER OF STRANDS	AREA	ULTIMATE STRENGTH	APPLIED PRESTRESS FORCE
½''	270 L.R.	12	0.153	41,300# PER STRAND	30,980# PER STRAND

STRANDS SHALL BE EQUALLY SPACED AS SHOWN IN THE "TYPICAL SECTION".

A CIRCULAR STRAND PATTERN SHALL NOT BE PERMITTED.

THE SLIP-FORM METHOD OF CASTING PILES WILL NOT BE PERMITTED.

IF STRAND STRESS IS RELIEVED BY BURNING, THE STRANDS SHALL BE BURNED IN OPPOSITE PAIRS AS INDICATED IN THE TYPICAL PATTERN SHOWN. FOR ANY NUMBER OF STRANDS BURN IN OPPOSITE PAIRS AND SYMMETRICAL ABOUT BOTH VERTICAL AND HORIZONTAL AXES, STRANDS 1-1 SHALL BE BURNED BEFORE 2-2, ETC. NOT MORE THAN 4 STRANDS, SAY 5-5 AND 6-6, MAY BE BURNED AT ANY ONE SECTION BEFORE THESE SAME PAIRS OF STRANDS ARE BURNED AT BOTH ENDS OF THE BED AND BETWEEN EACH PAIR OF PILES IN THE BED.

BUILD-UPS SHALL BE OF 'CLASS A' CONCRETE WITH 20% ADDITIONAL CEMENT. NO DRIVING OF THE BUILT-UP PILE WILL BE PERMITTED UNTIL THE CONCRETE HAS REACHED A COMPRESSIVE STRENGTH OF 3,000 P.S.I. AND UNTIL A PERIOD OF SEVEN DAYS HAS ELAPSED SINCE CASTING OF THE BUILD-UP.

ALL PRESTRESSING STRANDS SHALL BE 7-WIRE LOW-RELAXATION GRADE 270 STRANDS AND SHALL CONFORM TO AASHTO M203 EXCEPT FOR SAMPLING REQUIREMENTS WHICH SHALL BE IN ACCORDANCE WITH STANDARD SPECIFICATIONS.

THE TRANSFER OF LOAD FROM THE ANCHORAGES TO THE PILE SHALL BE DONE WHEN THE CONCRETE HAS REACHED A COMPRESSIVE STRENGTH OF NOT LESS THAN 3500 PSI.

THE WATER/CEMENT RATIO FOR CONCRETE PILES SHALL NOT EXCEED 0.40.

PROJECT NO. 38243

PAMLICO COUNTY

STATION: 16+05.00 -L-

REPLACES BRIDGE NO. 44 SHEET 1 OF 1

STATE OF NORTH CAROLINA
DEPARTMENT OF TRANSPORTATION
RALEIGH

STANDARD

20'' PRESTRESSED CONCRETE PILE

REVISIONS						SHEET NO.
NO.	BY:	DATE:	NO.	BY:	DATE:	181
1			3			TOTAL SHEETS
2			4			185

STD. NO. PCP3

PLANS PREPARED BY:

MULKEY
ENGINEERS & CONSULTANTS
PO BOX 33127
RALEIGH, NC 27636
(919) 851-1912
(919) 851-1918 (FAX)
WWW.MULKEYINC.COM

THIS STANDARD DRAWING REVIEWED & ADOPTED FOR USE AT THE REFERENCED LOCATION BY THE UNDERSIGNED:

NORTH CAROLINA PROFESSIONAL SEAL 19661 ENGINEER KEVIN AUSTIN
9/6/09

ASSEMBLED BY :	W. B. ALLEN	DATE :	2/09
CHECKED BY :	L. K. AUSTIN	DATE :	2/09
DRAWN BY :	WJH 1/89	REV. 6/1/94	EEM/GRP
CHECKED BY :	CRK 3/89	REV. 8/16/99R	RAL/LES
		REV. 5/1/06	TLA/GM

8/6/2009 6:12:08 AM G:\projects\2004\224.25_Pamlico44\Structures\B4694_SD_PP_01.dgn

EROSION CONTROL PLAN

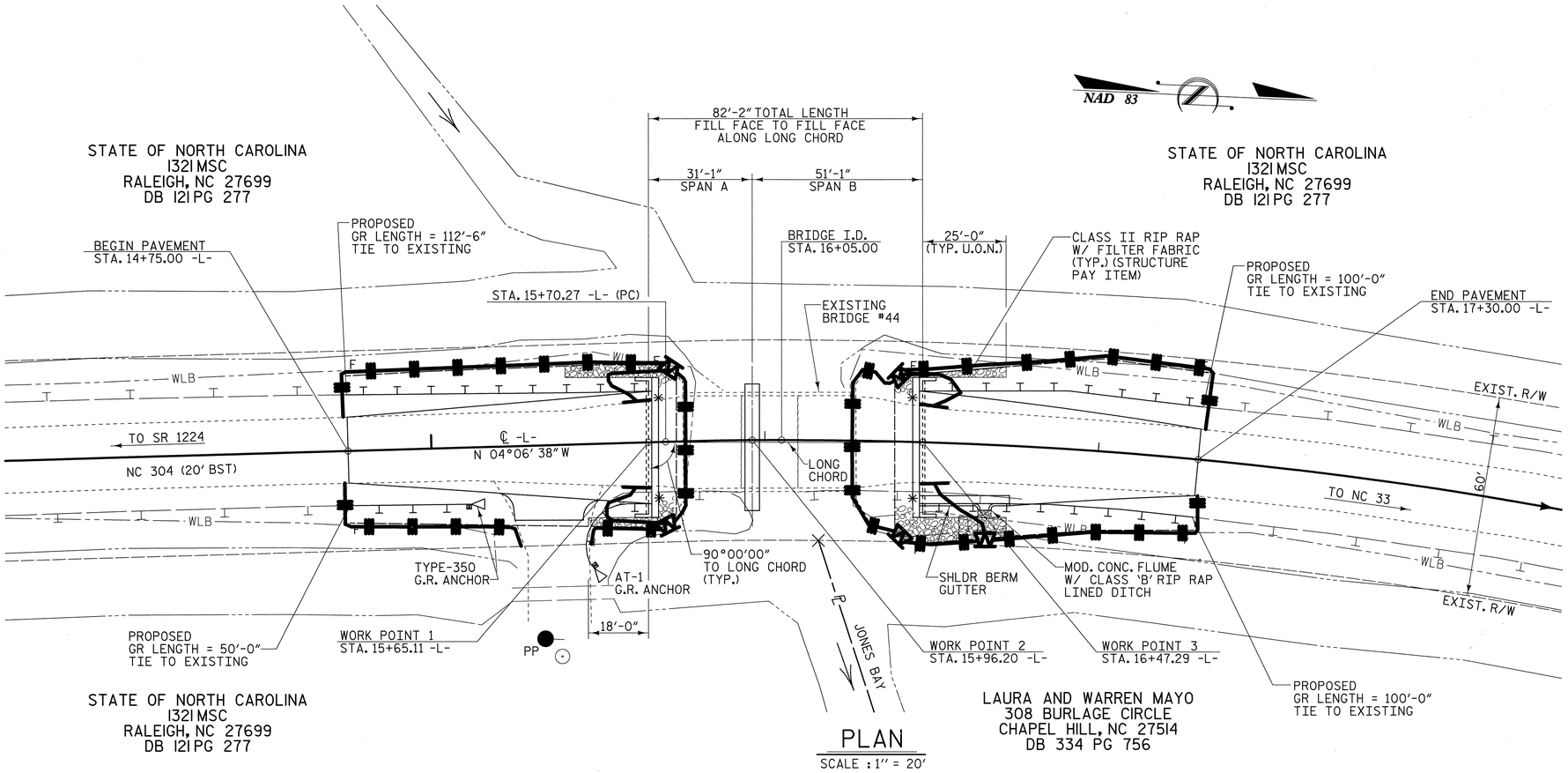

PLAN

SCALE : 1" = 20'

Std. #	Description	Symbol
1605.01	Temporary Silt Fence	
1606.01	Special Sediment Control Fence	
1622.01	Temporary Berms and Slope Drains	

ROADSIDE ENVIRONMENTAL UNIT
DEPARTMENT OF TRANSPORTATION
DIVISION OF HIGHWAYS
RALEIGH, N.C.

2006 STANDARD SPECIFICATIONS

NOTES: ANY DEVIATION FROM OPTIONS GIVEN WILL REQUIRE PRIOR APPROVAL BY ENGINEER.

ADDITIONAL EROSION CONTROL DEVICES MAY NEED TO BE INSTALLED AS DIRECTED BY THE ENGINEER.

PROJECT NO. 38243

PAMLICO COUNTY

STATION: 16+05.00 -L-

REPLACES BRIDGE NO. 44

STATE OF NORTH CAROLINA
DEPARTMENT OF TRANSPORTATION
RALEIGH

BRIDGE ON NC 304
OVER JONES BAY
BETWEEN SR 1227 & NC 33

33'-10" CLEAR ROADWAY - 90°SKEW

REVISIONS						SHEET NO.
NO.	BY:	DATE:	NO.	BY:	DATE:	182
1			3			TOTAL SHEETS
2			4			185

EROSION CONTROL PLAN

STATE OF NORTH CAROLINA
DEPT. OF TRANSPORTATION
DIVISION OF HIGHWAYS
RALEIGH, N.C.

ENGLISH STANDARD DRAWING FOR
TEMPORARY SILT FENCE

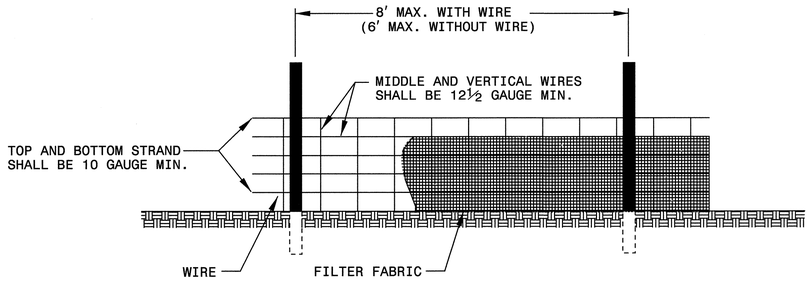

NOTES
USE WIRE A MINIMUM OF 32″ IN WIDTH AND WITH A MINIMUM OF 6 LINE WIRES WITH 12″ STAY SPACING.
USE FILTER FABRIC A MINIMUM OF 36″ IN WIDTH AND FASTEN ADEQUATELY TO THE WIRE AS DIRECTED BY THE ENGINEER.
PROVIDE 5′-0″ STEEL POST OF THE SELF-FASTENER ANGLE STEEL TYPE.

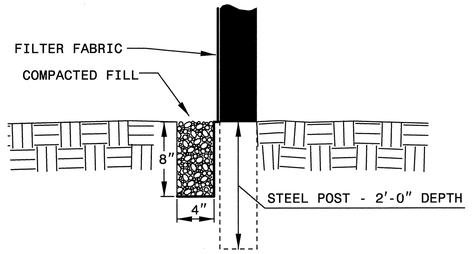

EXTENSION OF FABRIC AND WIRE INTO TRENCH

SHEET 1 OF 1
1605.01

STATE OF NORTH CAROLINA
DEPT. OF TRANSPORTATION
DIVISION OF HIGHWAYS
RALEIGH, N.C.

ENGLISH STANDARD DRAWING FOR
TEMPORARY SILT FENCE

SHEET 1 OF 1
1605.01

STATE OF NORTH CAROLINA
DEPT. OF TRANSPORTATION
DIVISION OF HIGHWAYS
RALEIGH, N.C.

1-02

ENGLISH STANDARD DRAWING FOR
GUIDE FOR TEMPORARY BERMS AND SLOPE DRAIN

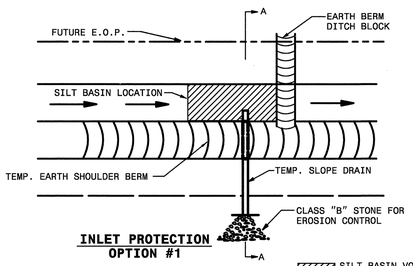

INLET PROTECTION OPTION #1

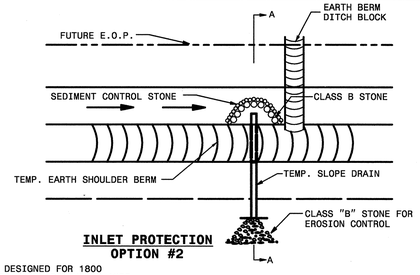

INLET PROTECTION OPTION #2

SILT BASIN VOLUME SHALL BE DESIGNED FOR 1800 CUBIC FEET OF SEDIMENT STORAGE PER DISTURBED ACRE.

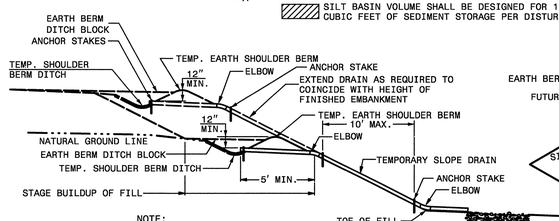

NOTE:
ANCHOR STAKES 30″ LONG AND SET MINIMUM 12″ DEEP.

TEMPORARY SLOPE DRAIN SECTION A-A

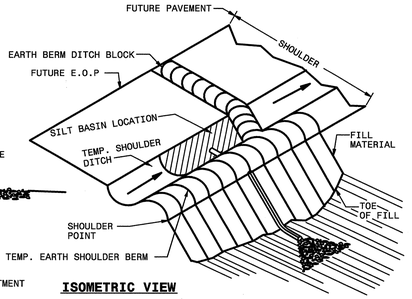

ISOMETRIC VIEW

NOTES:
1. OPEN END PIPE WITH MINIMUM SETBACK AND PROPER COMPACTION IS AN ACCEPTABLE INLET TREATMENT FOR STAGED CONSTRUCTION WHEN NOT LEFT IN PLACE FOR MORE THAN 30 DAYS.
2. DESIGN INLET PROTECTION OPTION #2 FOR 1800 CUBIC FOOT OF SEDIMENT STORAGE PER DISTURBED ACRE.
3. DESIGN SILT BASINS WITH A 2:1 LENGTH TO WIDTH RATIO MINIMUM.
4. USE CLASS B STONE FOR EROSION CONTROL AT OUTLET LOCATIONS SUBJECT TO SCOURING. SILT BASINS AND/OR OTHER EROSION CONTROL DEVICES MAY ALSO BE UTILIZED TO PREVENT SCOUR AT OUTLET LOCATIONS.
5. USE MAXIMUM SLOPE DRAIN SPACING OF 200 FT.

SHEET 1 OF 1
1622.01

STATE OF NORTH CAROLINA
DEPT. OF TRANSPORTATION
DIVISION OF HIGHWAYS
RALEIGH, N.C.

ENGLISH STANDARD DRAWING FOR
GUIDE FOR TEMPORARY BERMS AND SLOPE DRAIN

SHEET 1 OF 1
1622.01

STATE OF NORTH CAROLINA
DEPT. OF TRANSPORTATION
DIVISION OF HIGHWAYS
RALEIGH, N.C.

ENGLISH STANDARD DRAWING FOR
SPECIAL SEDIMENT CONTROL FENCE

GENERAL NOTES:

USE NO. 5 OR NO. 57 STONE FOR SEDIMENT CONTROL STONE.

USE HARDWARE CLOTH 24 GAUGE WIRE MESH WITH 1/4 INCH MESH OPENINGS.

INSTALL 5 FT. SELF FASTENER ANGLE STEEL POST 2 FT. DEEP MINIMUM.

SPACE POST A MAXIMUM OF 3 FT.

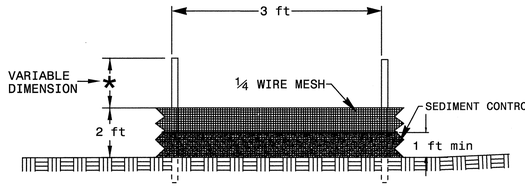

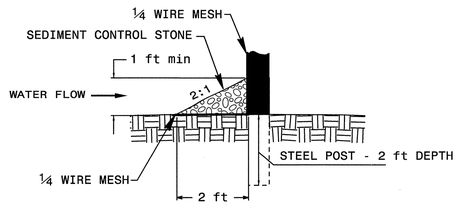

SHEET 1 OF 1
1606.01

STATE OF NORTH CAROLINA
DEPT. OF TRANSPORTATION
DIVISION OF HIGHWAYS
RALEIGH, N.C.

ENGLISH STANDARD DRAWING FOR
SPECIAL SEDIMENT CONTROL FENCE

SHEET 1 OF 1
1606.01

ROADSIDE ENVIRONMENTAL UNIT
DEPARTMENT OF TRANSPORTATION
DIVISION OF HIGHWAYS
RALEIGH, N.C.

2006 STANDARD SPECIFICATIONS

NOTES: ANY DEVIATION FROM OPTIONS GIVEN WILL REQUIRE PRIOR APPROVAL BY ENGINEER.

ADDITIONAL EROSION CONTROL DEVICES MAY NEED TO BE INSTALLED AS DIRECTED BY THE ENGINEER.

PROJECT NO. 38243

PAMLICO COUNTY

STATION: 16+05.00 -L-

REPLACES BRIDGE NO. 44

STATE OF NORTH CAROLINA
DEPARTMENT OF TRANSPORTATION
RALEIGH

BRIDGE ON NC 304
OVER JONES BAY
BETWEEN SR 1227 & NC 33

33′-10″ CLEAR ROADWAY - 90°SKEW

REVISIONS						SHEET NO.
NO.	BY:	DATE:	NO.	BY:	DATE:	183
1			3			TOTAL SHEETS
2			4			185

EROSION CONTROL PLAN

Special Sediment Control Fence:

Description:

The work covered by this section consists of the construction, maintenance, and removal of special sediment control fence. Place special sediment control fence as shown on the plans or as directed by the Engineer.

Materials:

(A) Posts:

Steel posts shall be at least 5 feet in length, approximately 1 3/8 inches wide measured parallel to the fence, and have a minimum weight of 1.25 lb/ft of length. The post shall be equipped with an anchor plate having a minimum area of 14.0 square inches, and shall have a means of retaining wire in the desired position without displacement.

(B) 1/4 inch Hardware Cloth:

Hardware cloth shall have 1/4 inch openings constructed from #24 gauge wire. Install hardware cloth according to the detail shown on the plans.

(C) Sediment Control Stone:

Sediment control stone shall meet the requirements of Section 1005. Install stone according to the detail shown on the plans.

Maintenance and Removal:

The Contractor shall maintain the special sediment control fence until the project is accepted or until the fence is removed, and shall remove and dispose of silt accumulations at the fence when so directed by the Engineer in accordance with Section 1630.

The quantity of posts, sediment control stone and hardware cloth as measured above will be paid for at the contract price for "Lump Sum for Erosion Control". Such price and payment will be full compensation for all work covered by this provision, including but not limited to, furnishing all materials, installation, and removal and disposal of silt accumulations and materials.

Reforestation:

Reforestation will be planted within interchanges and along the outside borders of the road, and in other areas as directed. Reforestation is not shown on the plan sheets. See the Reforestation Detail Sheet.

All non–maintained riparian buffers impacted by the placement of temporary fill or clearing activities shall be restored to the preconstruction contours and revegetated with native woody species.

The entire Reforestation operation shall comply with the requirements of Section 1670 of the Standard Specifications.

Reforestation shall be bare root seedlings 12"–18" tall.

Reforestation shall be shall be planted as soon as practical following permanent Seeding and Mulching. The seedlings shall be planted in a 16–foot wide swath adjacent to mowing pattern line, or as directed.

Root dip: The roots of reforestation seedlings shall be coated with a slurry of water, and either a fine clay (kaolin) or a superabsorbent that is designated as a bare root dip. The type, mixture ratio, method of application, and the time of application shall be submitted to the Engineer for approval.

With the approval of the Engineer, seedlings may be coated before delivery to the job or at the time of planting, but at no time shall the roots of the seedlings be allowed to dry out. The roots shall be moistened immediately prior to planting.

Seasonal Limitations: Reforestation shall be planted from November 15 through March 15.

Payment for Reforestation will be included in the contract bid price for Lump Sum for Erosion Control.

SAFETY FENCE:

Description

Safety Fence shall consist of furnishing, installing and maintaining polyethylene or polypropylene fence along the outside riparian buffer, wetland, or water boundary located within the construction corridor to mark the areas that have been approved to infringe within the buffer, wetland or water. The fence shall be installed prior to any land disturbing activities.

Materials

Polyethylene or polypropylene fence shall be a highly visible preconstructed safety fence approved by the Engineer.

Either wood posts or steel posts may be used. Wood posts shall be nominal 2" x 4" or 4" x 4" lengths as required, structural light framing, grade No. 2, Southern Pine. Steel posts shall be at least 5 ft. in length, approximately 1 3/8" wide measured parallel to the fence, and have a minimum weight of 1.25 lb./ft. of length. The steel post shall be equipped with an anchor plate having a minimum area of 14 square inches.

Construction Methods

No additional clearing and grubbing is anticipated for the installation of this fence; however, if any clearing and grubbing is required, it will be the minimum required for the installation of the safety fence. Such clearing shall include satisfactory removal and disposal of all trees, brush, stumps and other objectionable material.

The fence shall be erected to conform to the general contour of the ground. When determined necessary, minor grading along the fence line shall be performed to meet this requirement provided no obstructions to proper drainage are created.

Posts shall be set and maintained in a vertical position and may be hand set or set with a post driver. If hand set, all backfill material shall be thoroughly tamped. Wood posts may be sharpened to a dull point if power driven. Posts damaged by power driving shall be removed and replaced prior to final acceptance. The tops of all wood posts shall be cut at a 30–degree angle. The wood posts may, at the option of the Contractor, be cut at this angle either before or after the posts are erected.

The fence fabric shall be attached to the wood posts with one 2" galvanized wire staple across each cable or to the steel posts with wire or other acceptable means.

The Contractor shall be required to maintain the safety fence in a satisfactory condition for the duration of the project as determined by the Engineer.

Measurement and Payment

Safety Fence will be paid for at the contract price for "Lump Sum for Erosion Control". Such payment will be full compensation including but not limited to clearing and grading, furnishing and installing fence fabric with necessary posts and post bracing, staples, tie wires, tools, equipment and incidentals necessary to complete this work.

FLOATING TURBIDITY CURTAIN:

Description

This work consists of the installation of a Floating Turbidity Curtain to deter silt suspension and movement of silt particles during construction. The floating turbidity curtain shall be constructed at locations as directed.

Materials

The curtain material shall be made of a tightly woven nylon, plastic or other non–deteriorating material meeting the following specifications:

Property	Value
Grab tensile strength	*md–370 lbs *cd–250 lbs
Mullen burst stength	480 psi
Trapezoid tear strength	*md–100 lbs *cd–60 lbs
Apparent opening size	70 US standard sieve
Percent open area	4% permittivity 0.28 sec–1

*md – machine direction
*cd – cross machine direction

In the event that more than one width of fabric is required, a 6" overlap of the material shall also be required.

The curtain material shall be supported by a flotation material having over 29 lbs/ft buoyancy. The floating curtain shall have a 5/16" galvanized chain as ballast and dual 5/16" galvanized wire ropes with a heavy vinyl coating as load lines.

Construction Methods

The Contractor shall maintain the Floating Turbidity Curtain in a satisfactory condition until its removal is requested by the Engineer.

Measurement and Payment

Floating Turbidity Curtain will be paid for at the contract price for "Lump Sum for Erosion Control". Such payment will be full compensation including but not limited to installation, maintenance, removal and incidentals necessary to complete this work.

ROADSIDE ENVIRONMENTAL UNIT
DEPARTMENT OF TRANSPORTATION
DIVISION OF HIGHWAYS
RALEIGH, N.C.

2006 STANDARD SPECIFICATIONS

NOTES: ANY DEVIATION FROM OPTIONS GIVEN WILL REQUIRE PRIOR APPROVAL BY ENGINEER.

ADDITIONAL EROSION CONTROL DEVICES MAY NEED TO BE INSTALLED AS DIRECTED BY THE ENGINEER.

PROJECT NO. 38243

PAMLICO COUNTY

STATION: 16+05.00 -L-

REPLACES BRIDGE NO. 44

STATE OF NORTH CAROLINA
DEPARTMENT OF TRANSPORTATION
RALEIGH

BRIDGE ON NC 304
OVER JONES BAY
BETWEEN SR 1227 & NC 33

33'-10" CLEAR ROADWAY - 90°SKEW

REVISIONS						SHEET NO.
NO.	BY:	DATE:	NO.	BY:	DATE:	184
1			3			TOTAL SHEETS
2			4			185

STATE	STATE PROJECT REFERENCE NO.	SHEET NO.	TOTAL SHEETS
N.C.	B-4594 (BRIDGE NO. 44)	185	185
STATE PROJ. NO.	F. A. PROJ. NO.	DESCRIPTION	

PLANTING DETAILS

SEEDLING / LINER BAREROOT PLANTING DETAIL

HEALING IN

1. Locate a healing-in site in a shady, well protected area.
2. Excavate a flat bottom trench 12 inches deep and provide drainage.

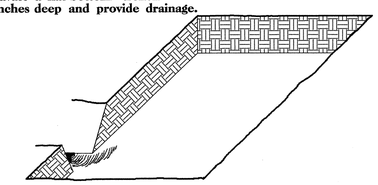

3. Backfill the trench with 2 inches well rotted sawdust. Place a 2 inch layer of well rotted sawdust at a sloping angle at one end of the trench.

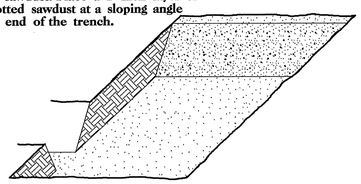

4. Place a single layer of plants against the sloping end so that the root collar is at ground level.

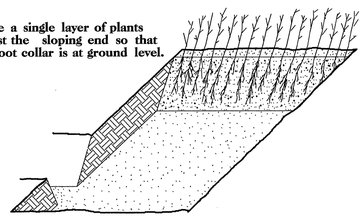

5. Place a 2 inch layer of well rotted sawdust over the roots maintaining a sloping angle.

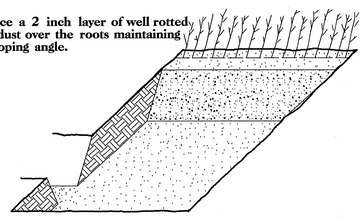

6. Repeat layers of plants and sawdust as necessary and water thoroughly.

DIBBLE PLANTING METHOD
USING THE KBC PLANTING BAR

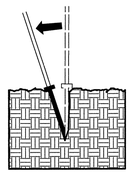

1. Insert planting bar as shown and pull handle toward planter.

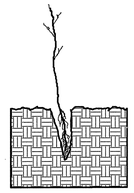

2. Remove planting bar and place seedling at correct depth.

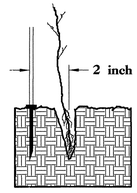

3. Insert planting bar 2 inches toward planter from seedling.

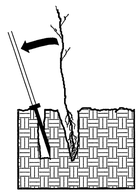

4. Pull handle of bar toward planter, firming soil at bottom.

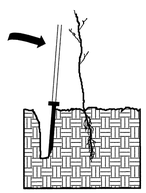

5. Push handle forward firming soil at top.

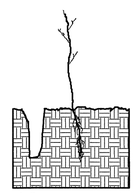

6. Leave compaction hole open. Water thoroughly.

PLANTING NOTES:

PLANTING BAG
During planting, seedlings shall be kept in a moist canvas bag or similar container to prevent the root systems from drying.

KBC PLANTING BAR
Planting bar shall have a blade with a triangular cross section, and shall be 12 inches long, 4 inches wide and 1 inch thick at center.

ROOT PRUNING
All seedlings shall be root pruned, if necessary, so that no roots extend more than 10 inches below the root collar.

REFORESTATION

☐ TREE REFORESTATION SHALL BE PLANTED 6 FT. TO 10 FT. ON CENTER, RANDOM SPACING, AVERAGING 8 FT. ON CENTER, APPROXIMATELY 680 PLANTS PER ACRE.

REFORESTATION

MIXTURE, TYPE, SIZE, AND FURNISH SHALL CONFORM TO THE FOLLOWING:

25%	LIRIODENDRON TULIPIFERA	TULIP POPLAR	12 in – 18 in BR
25%	QUERCUS LAURIFOLIA	LAUREL OAK	12 in – 18 in BR
25%	FRAXINUS PENNSYLVANICA	GREEN ASH	12 in – 18 in BR
25%	BETULA NIGRA	RIVER BIRCH	12 in – 18 in BR

REFORESTATION DETAIL SHEET

N.C.D.O.T. - ROADSIDE ENVIRONMENTAL UNIT