CONTRACT: C201976 TIP PROJECT: R-2301A

STATE	STATE PROJECT REFERENCE NO.	SHEET NO.	TOTAL SHEETS
N.C.	R-2301A		

STATE PROJ. NO.	F.A. PROJ. NO.	DESCRIPTION
34414.1.1		P.E.
34414.2.3		R/W, UTIL
34414.3.GV1	NHF-0017(80)	CONST.

METRIC

STATE OF NORTH CAROLINA
DIVISION OF HIGHWAYS

JONES & CRAVEN COUNTIES

LOCATION: US 17 NEW BERN BYPASS FROM US 17 SOUTH OF NEW BERN TO US 70

TYPE OF WORK: DRAINAGE, GRADING, PAVING, STRUCTURES, SIGNALS, AND SIGNING

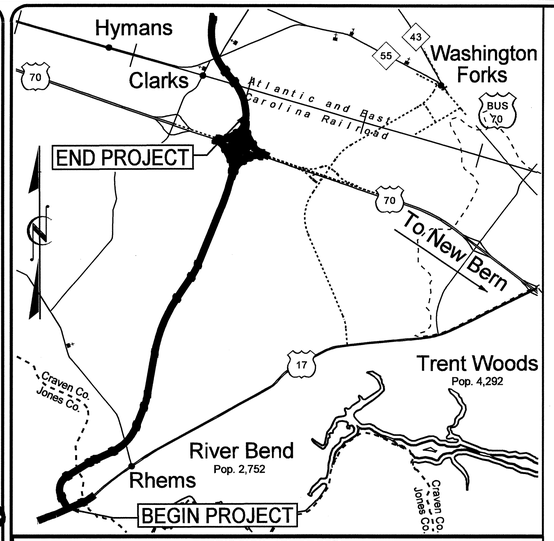

VICINITY MAP
NOT TO SCALE

NEAREST SHIPPING POINT: NEW BERN ON EAST CAROLINA RAILROAD 13.5 KM FROM SITE

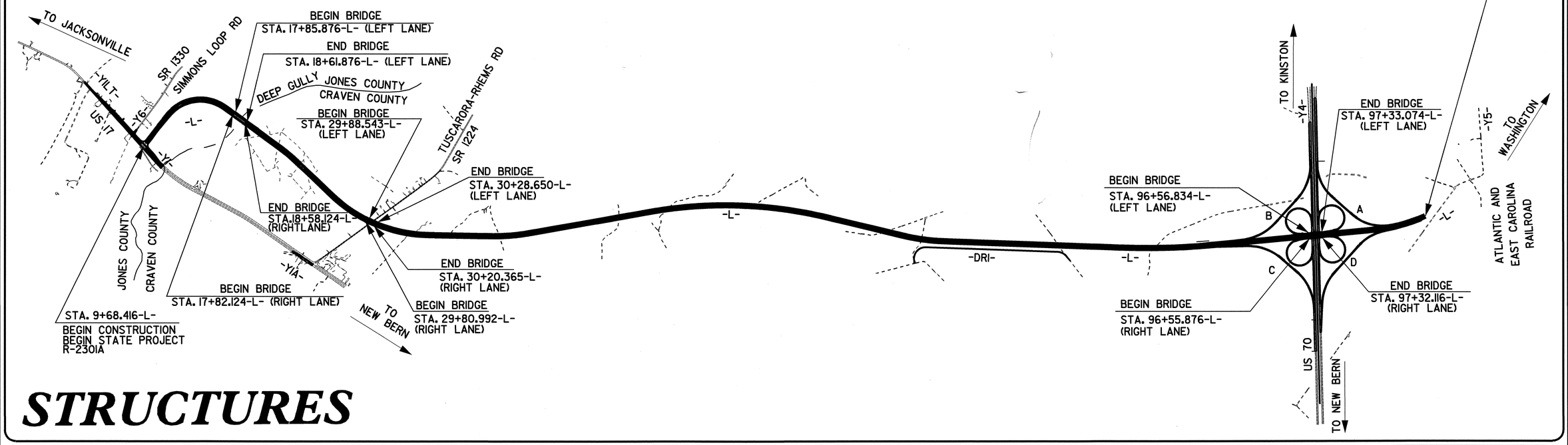

STRUCTURES

STATE OF NORTH CAROLINA DEPARTMENT OF TRANSPORTATION

DESIGN DATA

ADT 2008 = 23,300
ADT 2028 = 40,300
DHV = 10 %
D = 60 %
T = 12 %
(6% TTST + 6% DUAL)
V = 110 km/h
FUNCTIONAL CLASSIFICATION: FREEWAY

PROJECT LENGTH

LENGTH ROADWAY STATE PROJECT 34414.2.3 = 9.337 KILOMETERS
LENGTH STRUCTURE STATE PROJECT 34414.2.3 = 0.192 KILOMETERS
TOTAL LENGTH STATE PROJECT 34414.2.3 = 9.529 KILOMETERS

Prepared In the Office of:
DIVISION OF HIGHWAYS

2006 STANDARD SPECIFICATIONS

LETTING DATE:
May 19, 2009

Q.H. NGUYEN, P.E. /
J. M. BAILEY, P.E.
PROJECT ENGINEERS

M.G. CHEEK, P.E/
D.A. DAVENPORT, P.E.
PROJECT DESIGN ENGINEERS

STRUCTURE DESIGN UNIT
1000 BIRCH RIDGE DRIVE
RALEIGH, N.C. 27610

DIVISION OF HIGHWAYS
STATE OF NORTH CAROLINA

P.E.
STATE DESIGN ENGINEER
DEPARTMENT OF TRANSPORTAION
FEDERAL HIGHWAY ADMINISTRATION

APPROVED
DIVISION ADMINISTRATOR *DATE*

INDEX

STATION	DESCRIPTION	SHEET NUMBERS
(1) STA. 18+22.000-L-	LEFT LANE BRIDGE ON US 17 BYPASS OVER DEEP GULLY	S-1 THROUGH S-33
(2) STA. 18+22.000-L-	RIGHT LANE BRIDGE ON US 17 BYPASS OVER DEEP GULLY	S-34 THROUGH S-66
(3) STA. 30+04.517-L- STA. 18+11.478-EY3-	LEFT LANE BRIDGE ON US 17 BYPASS OVER SR 1224	S-67 THROUGH S-92
(4) STA. 30+04.517-L- STA. 18+11.478-EY3-	RIGHT LANE BRIDGE ON US 17 BYPASS OVER SR 1224	S-93 THROUGH S-118
(5) STA. 96+94.475-L- STA. 13+67.809-Y4-	LEFT LANE BRIDGE ON US 17 BYPASS OVER US 70 BYPASS	S-119 THROUGH S-147
(6) STA. 96+94.475-L- STA. 13+67.809-Y4-	RIGHT LANE BRIDGE ON US 17 BYPASS OVER US 70 BYPASS	S-148 THROUGH S-176

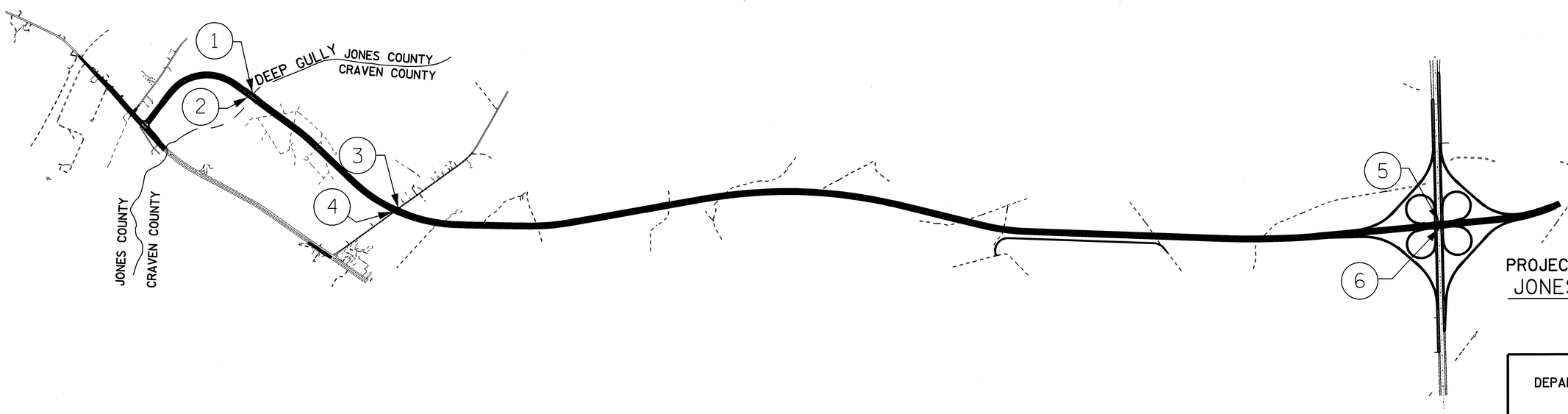

PROJECT NO. R-2301A
JONES / CRAVEN COUNTY

NORTH CAROLINA PROFESSIONAL SEAL 20125 ENGINEER MARSHALL G. WEEK, JR.
9-5-08

STATE OF NORTH CAROLINA
DEPARTMENT OF TRANSPORTATION
RALEIGH

INDEX SHEET

REVISIONS						SHEET NO.
NO.	BY:	DATE:	NO.	BY:	DATE:	
1			3			TOTAL SHEETS
2			4			

DRAWN BY : D.A. DAVENPORT DATE : 06-08
CHECKED BY : H.T. BARBOUR DATE : 07-08

11-AUG-2008 10:11
f:\structures\addavenport\R-2301A_sd_TSH.dgn
addavenport

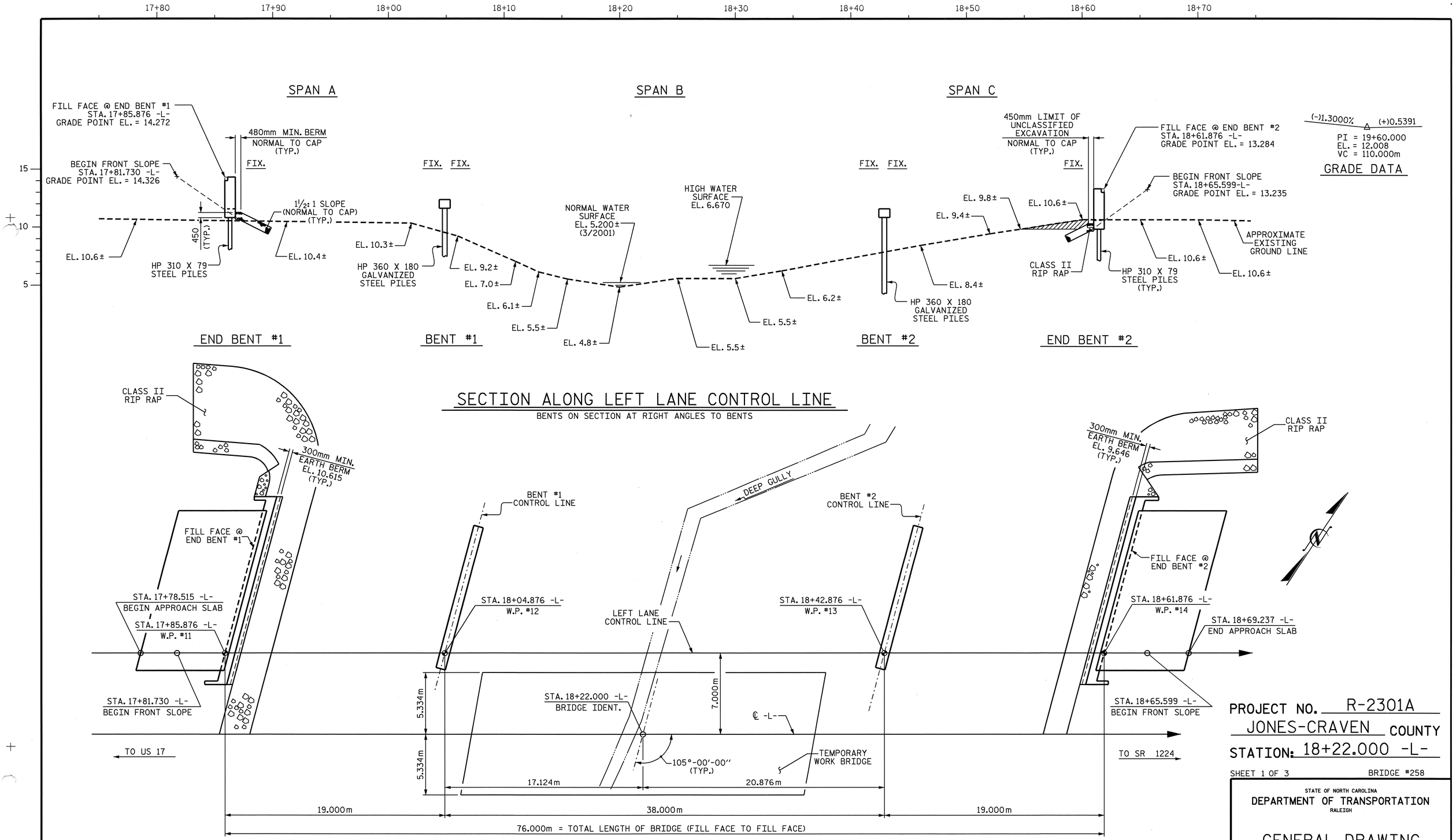

PROJECT NO. R-2301A

JONES-CRAVEN COUNTY

STATION: 18+22.000 -L-

SHEET 1 OF 3 BRIDGE #258

STATE OF NORTH CAROLINA
DEPARTMENT OF TRANSPORTATION
RALEIGH

GENERAL DRAWING
FOR BRIDGE OVER DEEP GULLY
ON US 17 NEW BERN BYPASS
BETWEEN US 17 AND SR 1224
(LEFT LANE)

NORTH CAROLINA PROFESSIONAL SEAL 022506 ENGINEER JESSE MARTHUR BAILEY
9/8/08

NORTH CAROLINA PROFESSIONAL SEAL 10730 ENGINEER D. ANDREW DAVENPORT, JR.

REVISIONS						SHEET NO.
NO.	BY:	DATE:	NO.	BY:	DATE:	S-1
1			3			TOTAL SHEETS
2			4			170

DRAWN BY : D. A. DAVENPORT DATE : 07-08
CHECKED BY : H.T. BARBOUR DATE : 07-08

13-AUG-2008 12:00
f:\structures\asorsenglnh\r-2301a_sd_gd-#1.dgn
ddavenport

STR.#1

r:\structures\asorsenglnh\R-2301A_sd_GD-*1.dgn
tbarbour

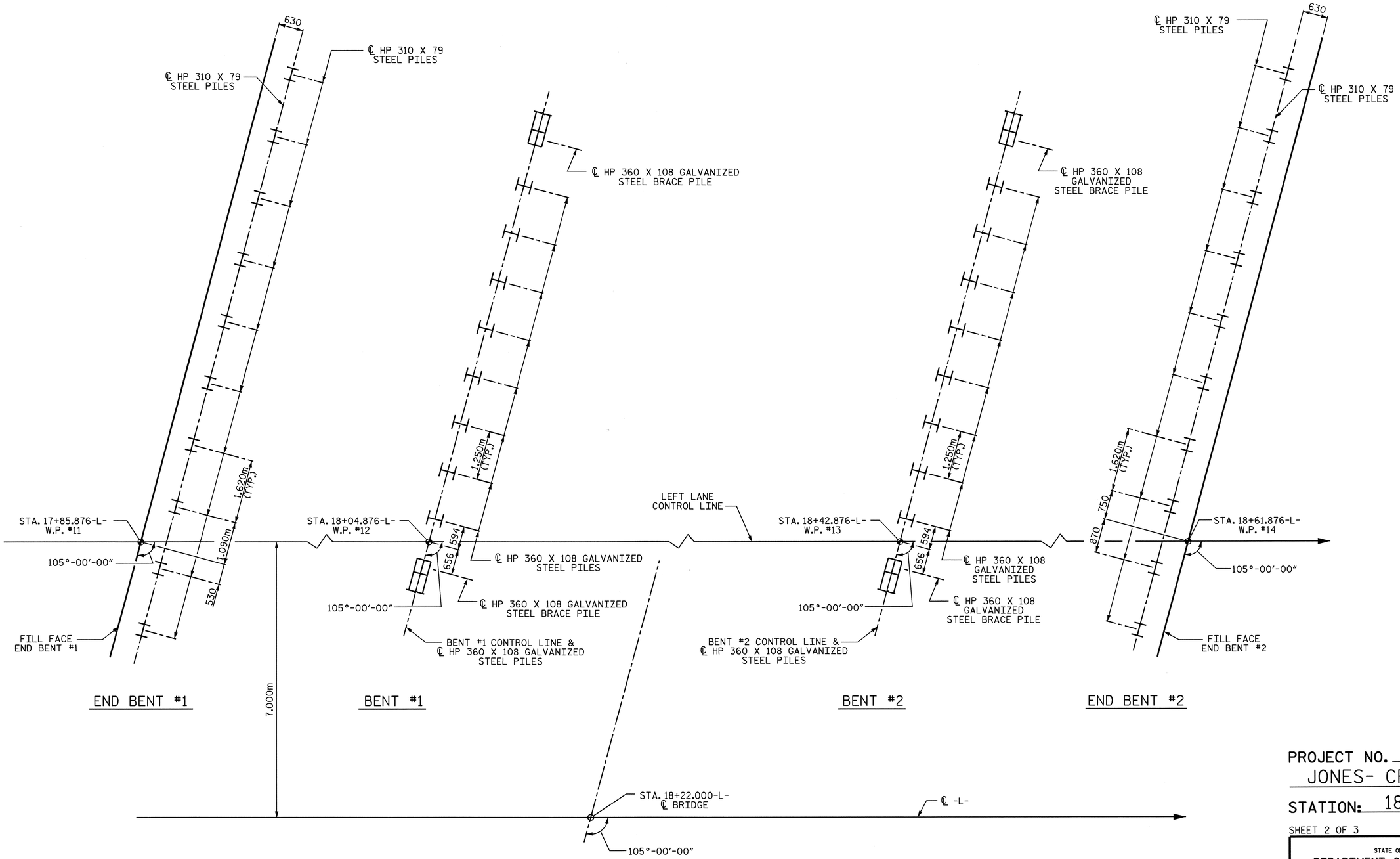

FOUNDATION LAYOUT

DIMENSIONS LOCATING PILES ARE TO THE PILE CENTERLINES
BRACE PILES AT BENTS ARE BATTERED AT 125:1000

PROJECT NO. R-2301A
JONES- CRAVEN COUNTY
STATION: 18+22.000-L-

SHEET 2 OF 3

STATE OF NORTH CAROLINA
DEPARTMENT OF TRANSPORTATION
RALEIGH

GENERAL DRAWING
FOR BRIDGE OVER DEEP GULLY
ON US 17 NEW BERN BYPASS
BETWEEN US 17 AND SR 1224
(LEFT LANE)

NORTH CAROLINA PROFESSIONAL SEAL 10730 ENGINEER D. ANDREW DAVENPORT, JR.

REVISIONS						SHEET NO.
NO.	BY:	DATE:	NO.	BY:	DATE:	S-2
1			3			TOTAL SHEETS
2			4			176

DRAWN BY : D.A. DAVENPORT DATE : 07-08
CHECKED BY : H.T. BARBOUR DATE : 07-08

STR. #1

BENCH MARK #2: RAIL ROAD SPIKE IN 0.43m Ø OAK AT STA. 17+89.097 -L-, 45.225 LEFT, EL. 11.019

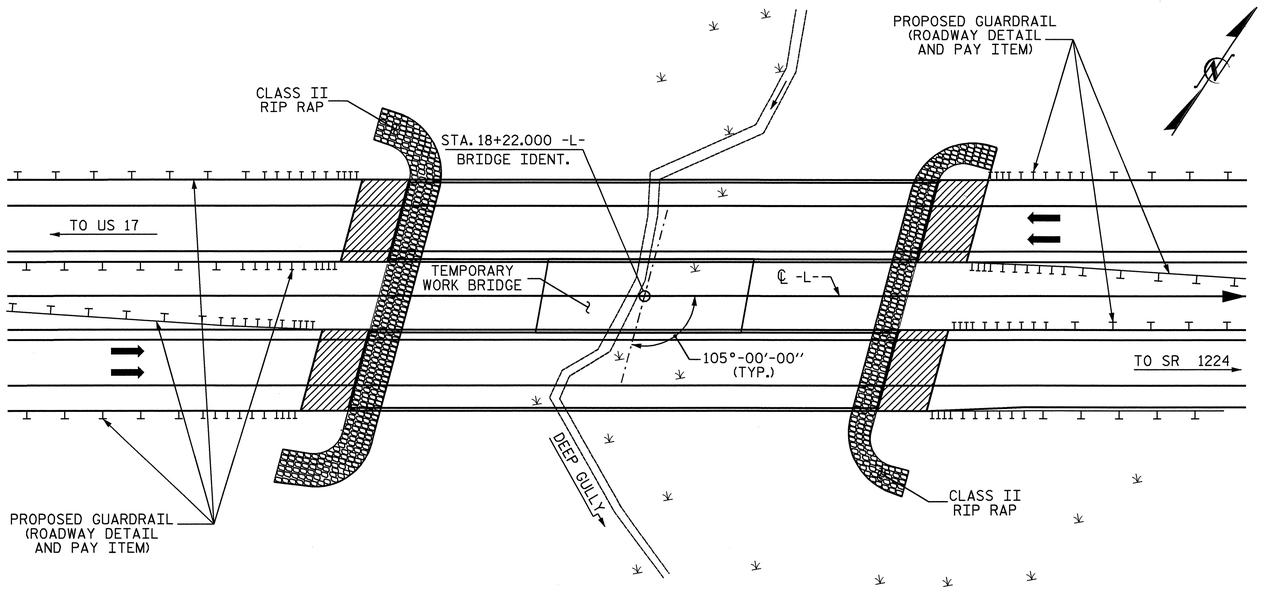

LOCATION SKETCH

NOTE: FOR UTILITY INFORMATION, SEE UTILITY PLANS AND SPECIAL PROVISIONS.

NOTES

ALL DIMENSIONS ARE IN MILLIMETERS UNLESS OTHERWISE NOTED.

ALL ELEVATIONS ARE IN METERS.

FOR OTHER DESIGN DATA AND GENERAL NOTES, SEE SHEET SNSM.

REMOVABLE FORMS MAY BE USED IN LIEU OF METAL STAY-IN-PLACE FORMS IN ACCORDANCE WITH ARTICLE 420-3 OF THE STANDARD SPECIFICATIONS.

NEEDLE BEAMS WILL NOT BE ALLOWED UNLESS OTHERWISE CALLED FOR ON THE PLANS OR APPROVED BY THE ENGINEER.

FOR SUBMITTAL OF WORKING DRAWINGS, SEE SPECIAL PROVISIONS.

FOR PRESTRESSED CONCRETE MEMBERS, SEE SPECIAL PROVISIONS.

FOR FALSEWORK AND FORMWORK, SEE SPECIAL PROVISIONS.

ASSUMED LIVE LOAD = MS18 OR ALTERNATE LOADING, EXCEPT THAT THE GIRDERS HAVE BEEN DESIGNED FOR MS22.5.

THIS BRIDGE HAS BEEN DESIGNED BY THE STRENGTH DESIGN METHOD AS SPECIFIED IN AASHTO STANDARD SPECIFICATIONS.

THIS BRIDGE HAS BEEN DESIGNED IN ACCORDANCE WITH THE REQUIREMENTS OF THE AASHTO STANDARD SPECIFICATIONS FOR SEISMIC DESIGN OF HIGHWAY BRIDGES FOR SEISMIC PERFORMANCE CATEGORY A.

FOR GROUT FOR STRUCTURES, SEE SPECIAL PROVISIONS.

FOR EROSION CONTROL MEASURES SEE EROSION CONTROL PLANS.

THE SCOUR CRITICAL ELEVATION FOR BENT NO. 1 IS ELEVATION 4.0 METERS. SCOUR CRITICAL ELEVATIONS ARE USED TO MONITOR POSSIBLE SCOUR PROBLEMS DURING THE LIFE OF THE STRUCTURE.

FOR TEMPORARY WORK BRIDGE, SEE SPECIAL PROVISIONS FOR CONSTRUCTION, MAINTENANCE AND REMOVAL OF TEMPORARY ACCESS AT STATION 18+22.000-L-.

THE MATERIAL SHOWN IN THE CROSS-HATCHED AREA ON SHEET S-1 SHALL BE EXCAVATED FOR A DISTANCE OF 16m LEFT AND 6m RIGHT OF THE LEFT LANE CONTROL LINE AS DIRECTED BY THE ENGINEER. THIS WORK WILL BE PAID FOR AT THE CONTRACT LUMP SUM PRICE FOR UNCLASSIFIED STRUCTURE EXCAVATION.

THIS STRUCTURE HAS BEEN DESIGNED IN ACCORDANCE WITH HEC 18, 'EVALUATING SCOUR AT BRIDGES', MAY, 2001.

THE ALLOWABLE BEARING CAPACITY FOR PILES AT END BENT NO. 1 AND END BENT NO. 2 IS 630 KILONEWTONS PER PILE.

DRIVE PILES AT END BENT NO. 1 AND END BENT NO. 2 TO A REQUIRED BEARING CAPACITY OF 1260 KILONEWTONS PER PILE. THE REQUIRED BEARING CAPACITY IS EQUAL TO THE ALLOWABLE BEARING CAPACITY WITH A MINIMUM FACTOR OF SAFETY OF TWO.

FOR CRANE SAFETY, SEE SPECIAL PROVISIONS.

THE ALLOWABLE BEARING CAPACITY FOR PILES AT BENT NO. 1 AND BENT NO. 2 IS 720 KILONEWTONS PER PILE.

INSTALL PILES AT BENT NO. 1 TO A TIP ELEVATION NO HIGHER THAN -1.5 METERS.

INSTALL PILES AT BENT NO. 2 TO A TIP ELEVATION NO HIGHER THAN 0.5 METERS.

DRIVE PILES AT BENT NO. 1 TO A REQUIRED BEARING CAPACITY OF 1720 KILONEWTONS PER PILE. THE REQUIRED BEARING CAPACITY IS EQUAL TO THE ALLOWABLE BEARING CAPACITY WITH A MINIMUM FACTOR OF SAFETY OF TWO PLUS ANY ADDITIONAL CAPACITY TO ACCOUNT FOR DOWNDRAG OR NEGATIVE SKIN FRICTION AND SCOUR.

DRIVE PILES AT BENT NO. 2 TO A REQUIRED BEARING CAPACITY OF 1440 KILONEWTONS PER PILE. THE REQUIRED BEARING CAPACITY IS EQUAL TO THE ALLOWABLE BEARING CAPACITY WITH A MINIMUM FACTOR OF SAFETY OF TWO.

OBSERVE A ONE MONTH WAITING PERIOD AFTER CONSTRUCTING THE EMBANKMENT, TO THE BOTTOM OF THE CAP ELEVATION, BEFORE BEGINNING END BENT CONSTRUCTION AT END BENT NO. 1 AND END BENT NO. 2.

THE CONTRACTOR SHALL PROVIDE INDEPENDENT ASSURANCE SAMPLES OF REINFORCING STEEL AS FOLLOWS: FOR PROJECTS REQUIRING UP TO 360,000 kg OF REINFORCING STEEL, ONE 760mm SAMPLE OF EACH SIZE BAR USED, AND FOR PROJECTS REQUIRING OVER 360,000 kg OF REINFORCING STEEL, TWO 760mm SAMPLES OF EACH SIZE BAR USED. THE BARS FROM WHICH THE SAMPLES ARE TAKEN MUST THEN BE SPLICED WITH REPLACEMENT BARS OF THE SIZE AND LENGTH OF THE SAMPLE PLUS A MINIMUM LAP SPLICE OF THIRTY BAR DIAMETERS.

HYDRAULIC DATA

DESIGN DISCHARGE	= 12.6 CMS.
FREQUENCY OF DESIGN FLOOD	= 50 YRS.
DESIGN HIGH WATER ELEVATION	= 6.530
DRAINAGE AREA	= 1.58 SQ. MI.
BASIC DISCHARGE (Q100)	= 16.0 CMS.
BASIC HIGH WATER ELEVATION	= 6.670

OVERTOPPING FLOOD DATA

OVERTOPPING DISCHARGE	= 80.0 CMS.
FREQUENCY OF OVERTOPPING FLOOD	= 500+ YRS.
OVERTOPPING FLOOD ELEVATION	= 12.220

NORTH CAROLINA PROFESSIONAL SEAL 10730 ENGINEER D. ANDREW DAVENPORT, JR.

TOTAL BILL OF MATERIAL

	CONST. MAINT. & REMOVAL OF TEMP. ACCESS	UNCLASSIFIED STRUCTURE EXCAVATION	REINFORCED CONCRETE DECK SLAB	GROOVING BRIDGE FLOORS	CLASS A CONCRETE	BRIDGE APPROACH SLABS	REINFORCING STEEL	MODIFIED 1829mm PRESTRESSED CONCRETE GIRDERS		HP 310 X 79 STEEL PILES		HP 360 X 108 GALVANIZED STEEL PILES		PILE REDRIVES	CONCRETE BARRIER RAIL	RIP RAP CLASS II (600mm THICK)	FILTER FABRIC FOR DRAINAGE	ELASTOMERIC BEARINGS	EVAZOTE JOINT SEALS
	LUMP SUM	LUMP SUM	SQ. METERS	SQ. METERS	CU. METERS	LUMP SUM	kg	NO.	METERS	NO.	METERS	NO.	METERS	EACH	METERS	METRIC TONS	SQ. METERS	LUMP SUM	LUMP SUM
SUPERSTRUCTURE	LUMP SUM	LUMP SUM	987.200	987.500		LUMP SUM		15	373.080						150.964			LUMP SUM	LUMP SUM
END BENT NO. 1					23.2		2299			10	230			4		150	153		
BENT NO. 1					14.6		1466					10	210	5					
BENT NO. 2					14.6		1466					10	230	5					
END BENT NO. 2					23.3		2288			10	230			5		74	75		
TOTAL	LUMP SUM	LUMP SUM	987.200	987.500	75.7	LUMP SUM	7519	15	373.080	20	460	20	440	19	150.964	224	228	LUMP SUM	LUMP SUM

PROJECT NO. R-2301A
JONES-CRAVEN COUNTY
STATION: 18+22.000 -L-

SHEET 3 OF 3

STATE OF NORTH CAROLINA
DEPARTMENT OF TRANSPORTATION
RALEIGH

GENERAL DRAWING
FOR BRIDGE OVER DEEP GULLY
ON US 17 NEW BERN BYPASS
BETWEEN US 17 AND SR 1224
(LEFT LANE)

REVISIONS						SHEET NO.
NO.	BY:	DATE:	NO.	BY:	DATE:	S-3
1			3			TOTAL SHEETS
2			4			176

DRAWN BY : D. A. DAVENPORT DATE : 07-08
CHECKED BY : H.T. BARBOUR DATE : 07-08

08-SEP-2008 09:38
f:\Structures\asorsenginh\R-2301A_sd_GD-#1.dgn
ddavenport

STR.#1

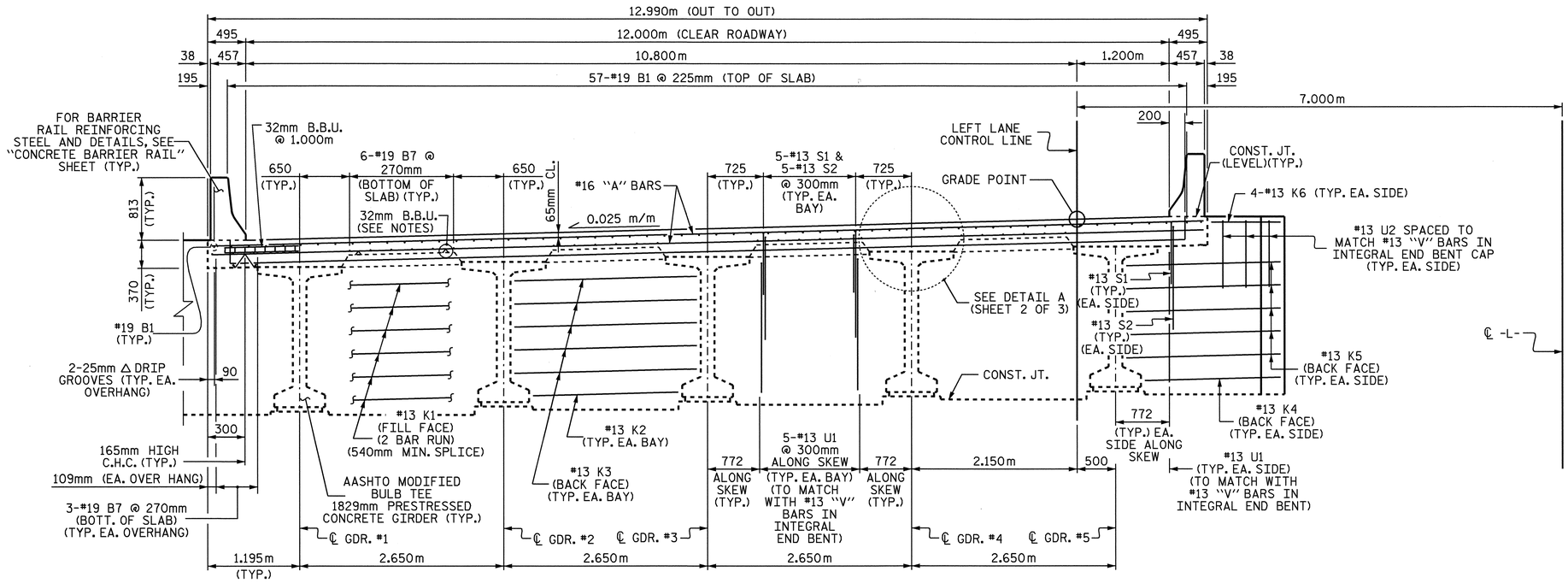

TYPICAL SECTION @ INTEGRAL END BENT

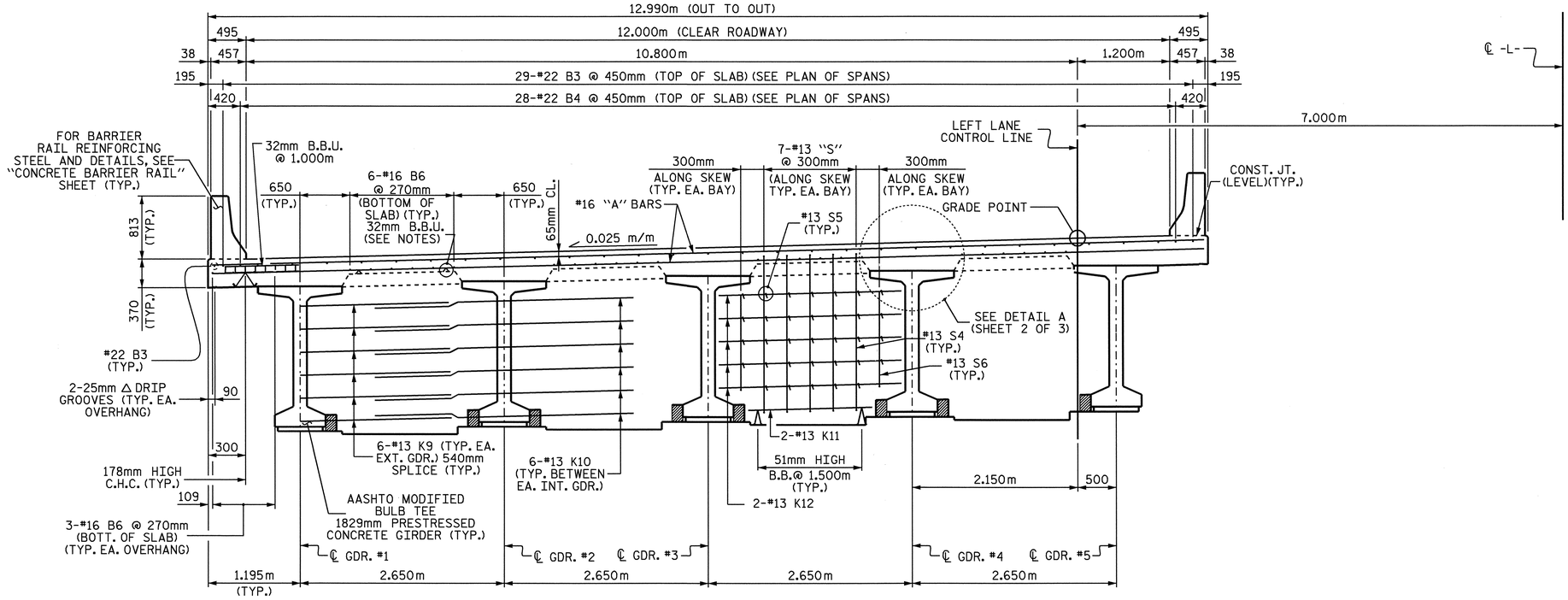

TYPICAL SECTION @ CONTINUOUS BENT DIAPHRAGM

NOTES

PROVIDE 32mm HIGH BEAM BOLSTERS UPPER AT 1.200m CTS. ATOP THE METAL STAY-IN-PLACE FORMS TO SUPPORT THE BOTTOM MAT OF 'A' BARS. WHEN USING REMOVABLE FORMS, PROVIDE CONTINUOUS HIGH CHAIRS FOR METAL DECK (C.H.C.M.) @ 1.2m CTS. WITH A HEIGHT TO SUPPORT THE BOTTOM MAT OF 'A' BARS A CLEAR DISTANCE OF 65mm ABOVE THE TOP OF THE REMOVABLE FORM.

LONGITUDINAL STEEL MAY BE SHIFTED SLIGHTLY, AS NECESSARY, TO AVOID INTERFERENCE WITH STIRRUPS IN PRESTRESSED CONCRETE GIRDERS.

BARRIER RAIL IN A CONTINUOUS UNIT SHALL NOT BE CAST UNTIL ALL SLAB CONCRETE IN THE UNIT HAS BEEN CAST AND HAS REACHED A MINIMUM COMPRESSIVE STRENGTH OF 20.7 MPa.

CONCRETE IN INTERMEDIATE DIAPHRAGMS MAY BE CLASS A IN LIEU OF CLASS AA. PAYMENT SHALL BE MADE UNDER THE UNIT CONTRACT PRICE FOR REINFORCED CONCRETE DECK SLAB.

ALL REINFORCING STEEL IN BARRIER RAILS SHALL BE EPOXY COATED.

TEMPORARY STRUTS SHALL BE PLACED BETWEEN PRESTRESSED GIRDERS ADJACENT TO THE DIAPHRAGMS AND THE NUTS ON THE 31.75mm DIA. TIE RODS SHALL BE FULLY TIGHTENED BEFORE THE DIAPHRAGMS ARE CAST. STRUTS SHALL REMAIN IN PLACE 3 DAYS AFTER CONCRETE IS PLACED. THE TIE RODS SHALL BE RE-TIGHTENED AFTER THE STRUTS HAVE BEEN REMOVED.

PREVIOUSLY CAST CONCRETE IN A CONTINUOUS UNIT SHALL HAVE ATTAINED A MINIMUM COMPRESSIVE STRENGTH OF 20.7 MPa BEFORE ADDITIONAL CONCRETE IS CAST IN THE UNIT.

PROJECT NO. R-2301A
JONES-CRAVEN COUNTY
STATION: 18+22.000 -L-

SHEET 1 OF 3

STATE OF NORTH CAROLINA
DEPARTMENT OF TRANSPORTATION
RALEIGH

SUPERSTRUCTURE TYPICAL SECTIONS LEFT LANE

NORTH CAROLINA PROFESSIONAL SEAL 10730 ENGINEER D. ANDREW BAYENPORT, JR.
9-16-08

REVISIONS						SHEET NO.
NO.	BY:	DATE:	NO.	BY:	DATE:	S-4
1			3			TOTAL SHEETS
2			4			176

DRAWN BY : A. SORSENGINH DATE : 2/11/08
CHECKED BY : H. T. BARBOUR DATE : 3/31/08

STR. #1

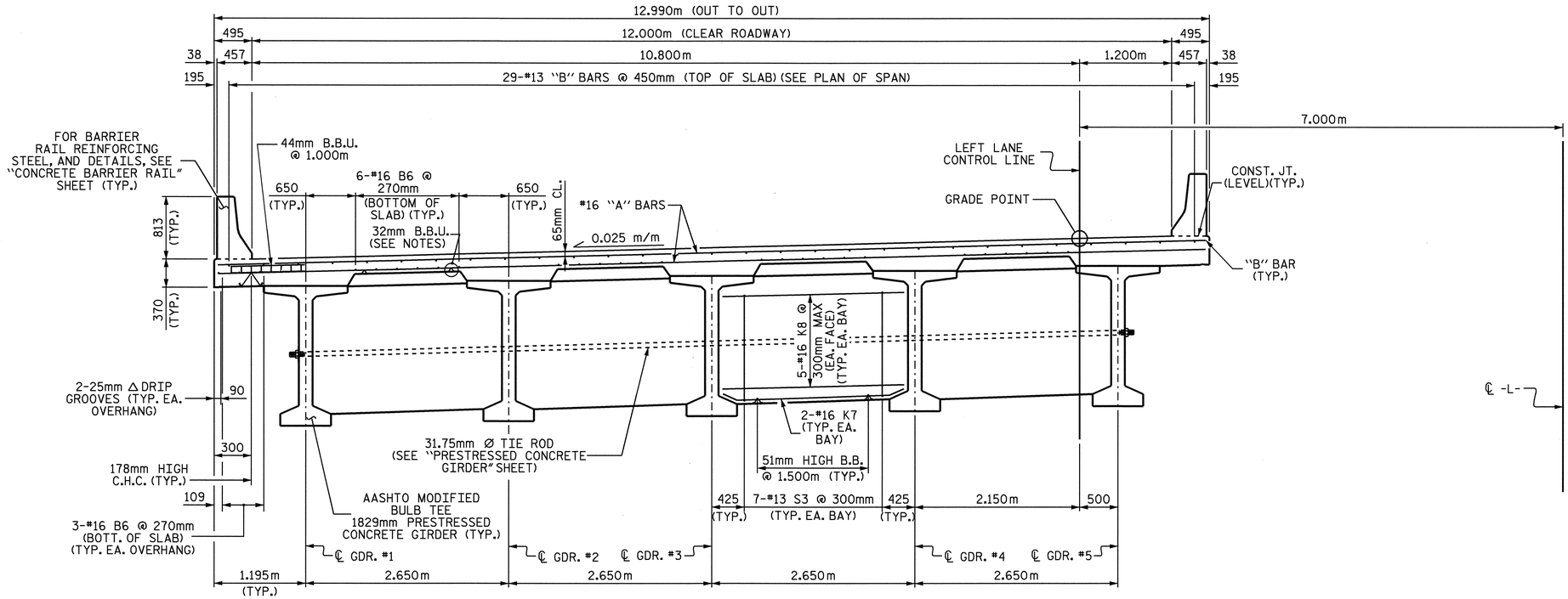

TYPICAL SECTION @ INTERMEDIATE DIAPHRAGM

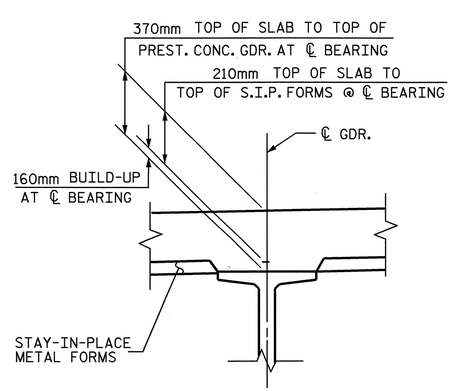

DETAIL A

PROJECT NO. R-2301A
JONES-CRAVEN COUNTY
STATION: 18+22.000 -L-

SHEET 2 OF 3

STATE OF NORTH CAROLINA
DEPARTMENT OF TRANSPORTATION
RALEIGH

SUPERSTRUCTURE TYPICAL SECTIONS LEFT LANE

NORTH CAROLINA PROFESSIONAL SEAL 10730 ENGINEER D. ANDRE' DAVENPORT, JR.

REVISIONS						SHEET NO.
NO.	BY:	DATE:	NO.	BY:	DATE:	S-5
1			3			TOTAL SHEETS
2			4			176

DRAWN BY : A. SORSENGINH DATE : 2/11/08
CHECKED BY : H. T. BARBOUR DATE : 3/31/08

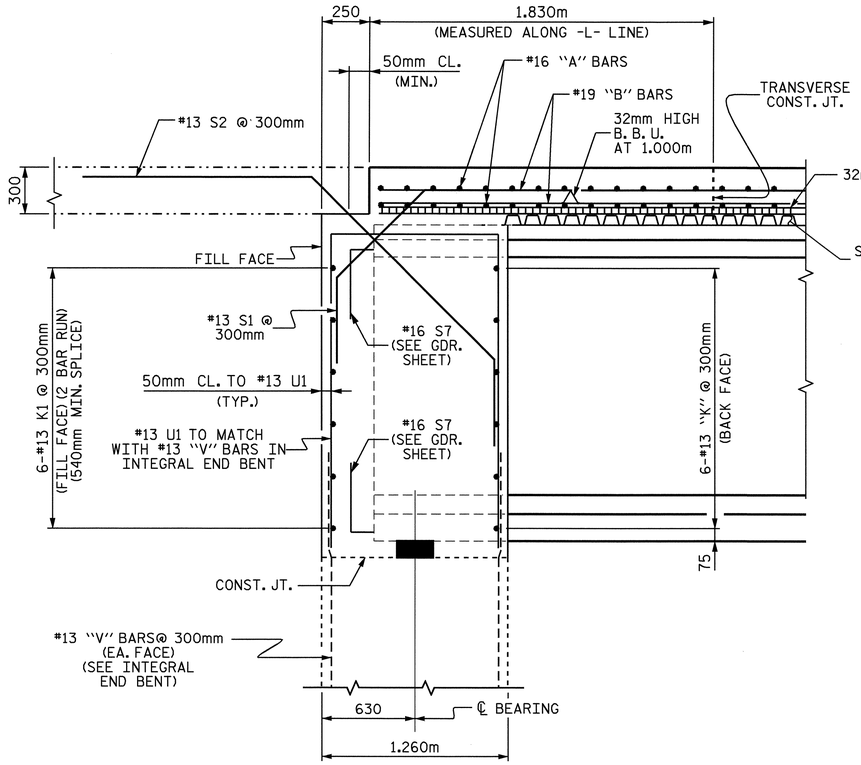

SECTION THROUGH INTEGRAL END BENT

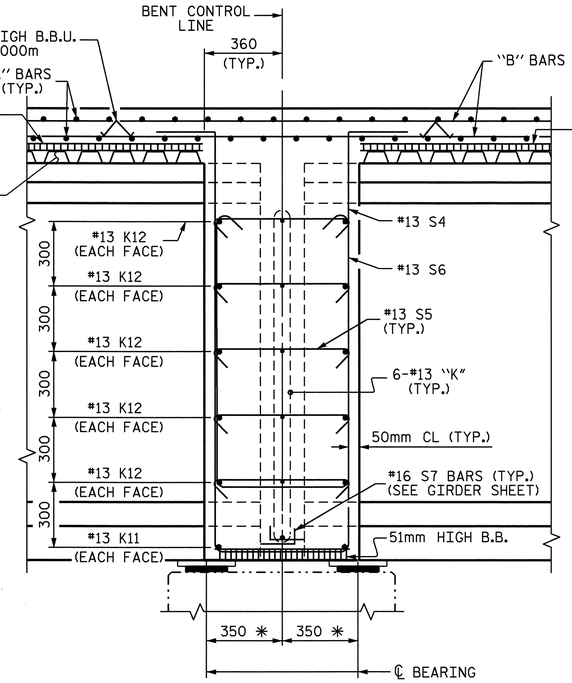

SECTION THROUGH
CONTINUOUS BENT DIAPHRAGM

✱ MEASURED ALONG ℄ GIRDER

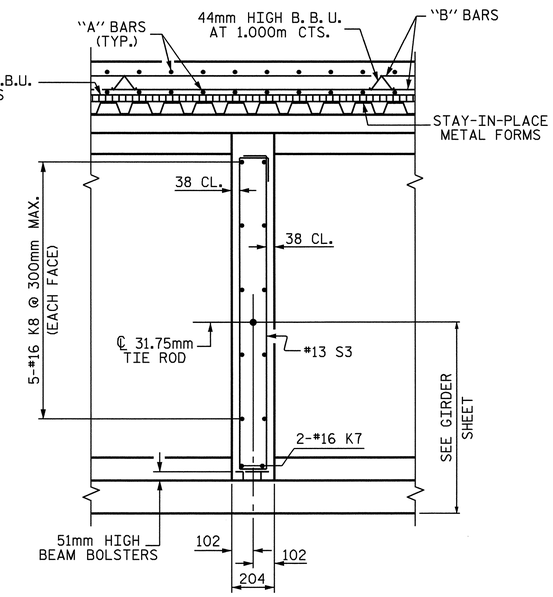

SECTION THROUGH
INTERMEDIATE DIAPHRAGM

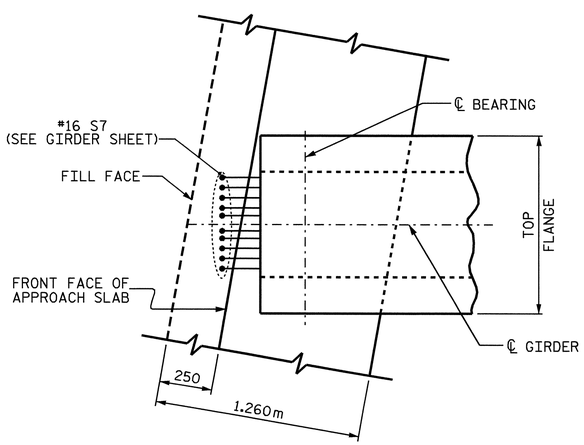

PLAN OF GIRDER @ INTEGRAL END BENT

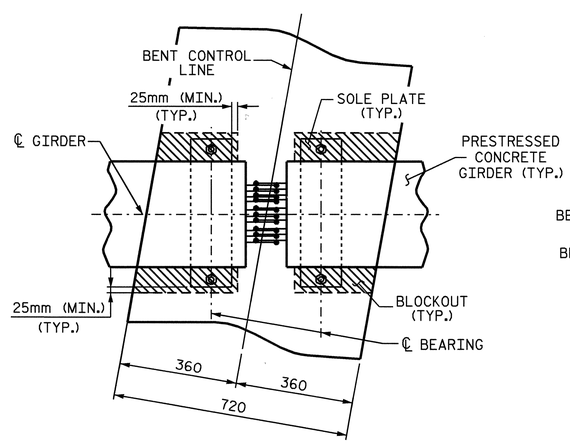

PLAN

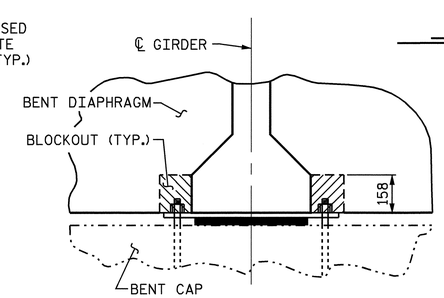

SECTION

BENT DIAPHRAGM BLOCK-OUT DETAIL

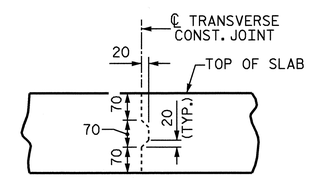

TRANSVERSE CONSTRUCTION
JOINT DETAIL

NOTE: REINFORCING STEEL IN SLAB NOT SHOWN.
LONGITUDINAL REINFORCING STEEL SHALL
BE CONTINUOUS THROUGH JOINT.

PROJECT NO. R-2301A
JONES-CRAVEN COUNTY
STATION: 18+22.000 -L-

SHEET 3 OF 3

STATE OF NORTH CAROLINA
DEPARTMENT OF TRANSPORTATION
RALEIGH

SUPERSTRUCTURE
TYPICAL SECTION
DETAILS
LEFT LANE

NORTH CAROLINA PROFESSIONAL SEAL 10730 ENGINEER D. ANDRE DAVENPORT, JR.
9-16-08

REVISIONS						SHEET NO.
NO.	BY:	DATE:	NO.	BY:	DATE:	S-6
1			3			TOTAL SHEETS
2			4			176

DRAWN BY : A. SORSENGINH DATE : 2/11/08
CHECKED BY : H. T. BARBOUR DATE : 3/31/08

STR. #1

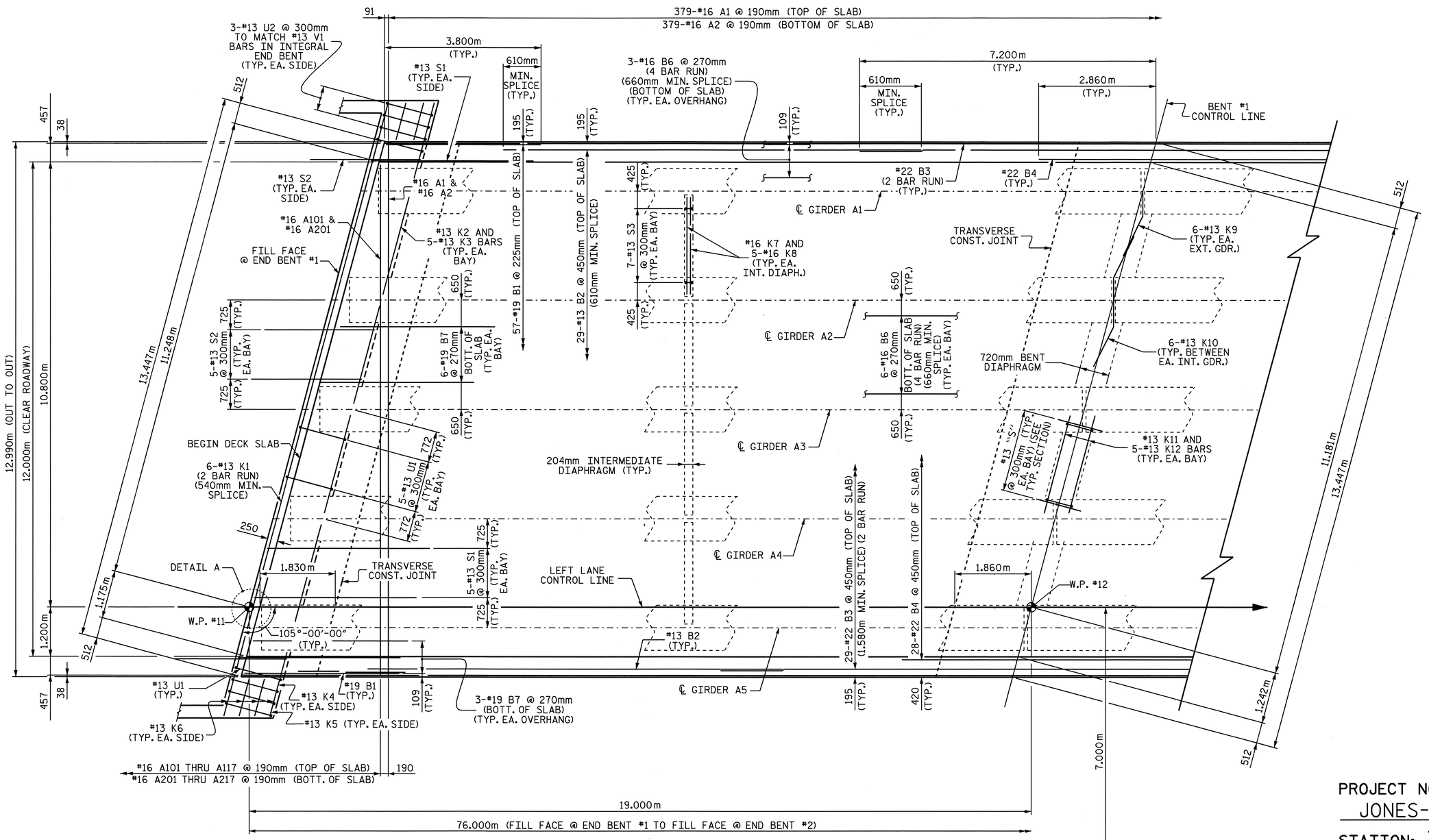

PLAN OF SPAN A

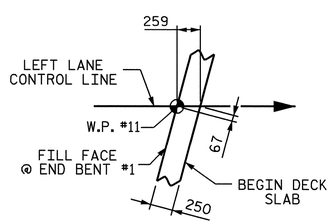

DETAIL A

PROJECT NO. R-2301A
JONES-CRAVEN COUNTY
STATION: 18+22.000 -L-

SHEET 1 OF 3

STATE OF NORTH CAROLINA
DEPARTMENT OF TRANSPORTATION
RALEIGH

SUPERSTRUCTURE PLAN OF SPAN A LEFT LANE

NORTH CAROLINA PROFESSIONAL SEAL 10730 ENGINEER DANIEL A. DAVENPORT, JR.

REVISIONS						SHEET NO.
NO.	BY:	DATE:	NO.	BY:	DATE:	S-7
1			3			TOTAL SHEETS
2			4			176

DRAWN BY : A. SORSENGINH DATE : 2/12/08
CHECKED BY : H. T. BARBOUR DATE : 3/31/08

STR. #1

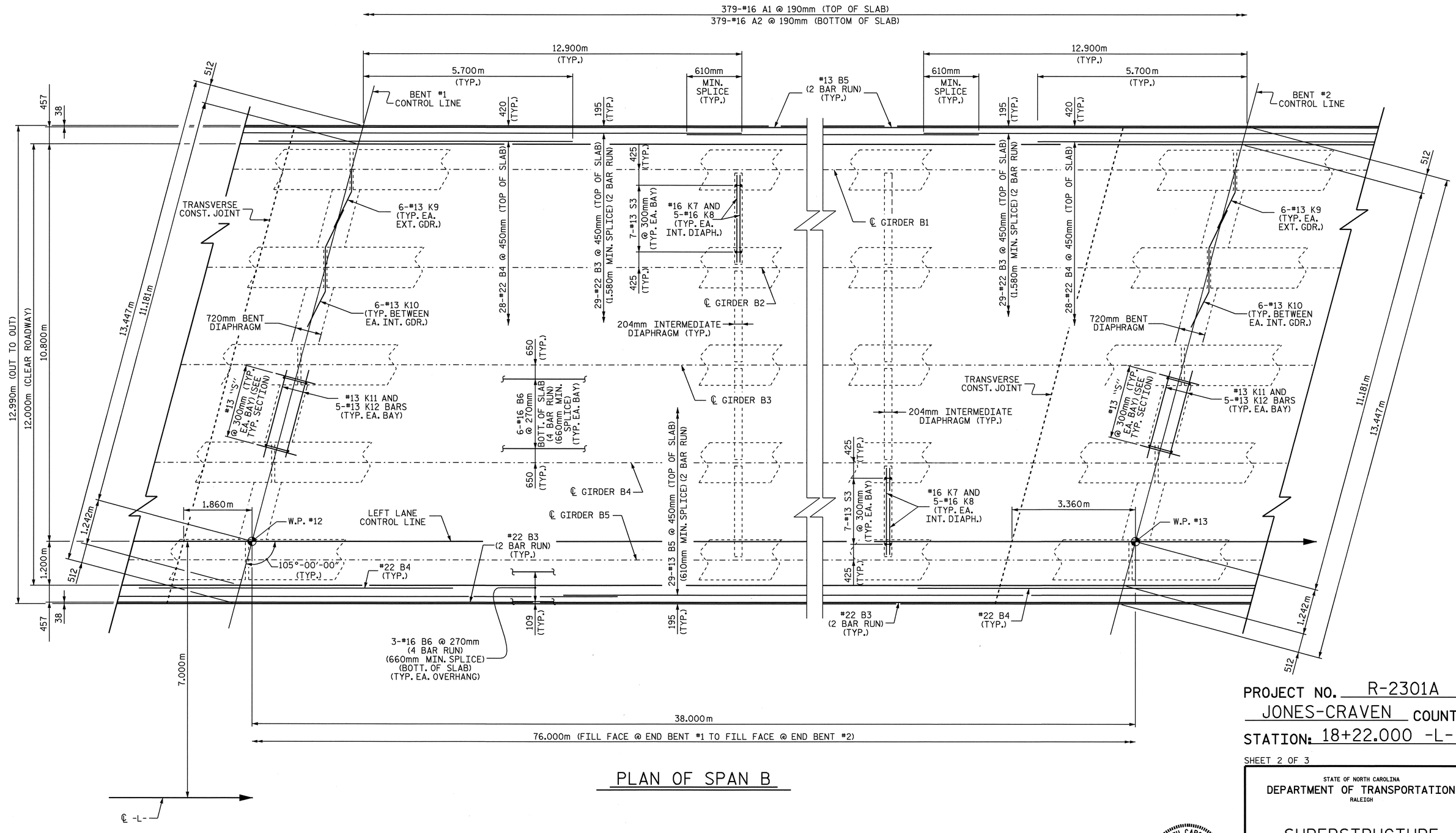

PLAN OF SPAN B

PROJECT NO. R-2301A
JONES-CRAVEN COUNTY
STATION: 18+22.000 -L-

SHEET 2 OF 3

STATE OF NORTH CAROLINA
DEPARTMENT OF TRANSPORTATION
RALEIGH

SUPERSTRUCTURE
PLAN OF SPAN B
LEFT LANE

NORTH CAROLINA PROFESSIONAL SEAL 10730 ENGINEER D. ANDREW DAVENPORT, JR.
9-8-08

REVISIONS						SHEET NO.
NO.	BY:	DATE:	NO.	BY:	DATE:	S-8
1			3			TOTAL SHEETS
2			4			176

DRAWN BY : A. SORSENGINH DATE : 2/12/08
CHECKED BY : H. T. BARBOUR DATE : 3/31/08

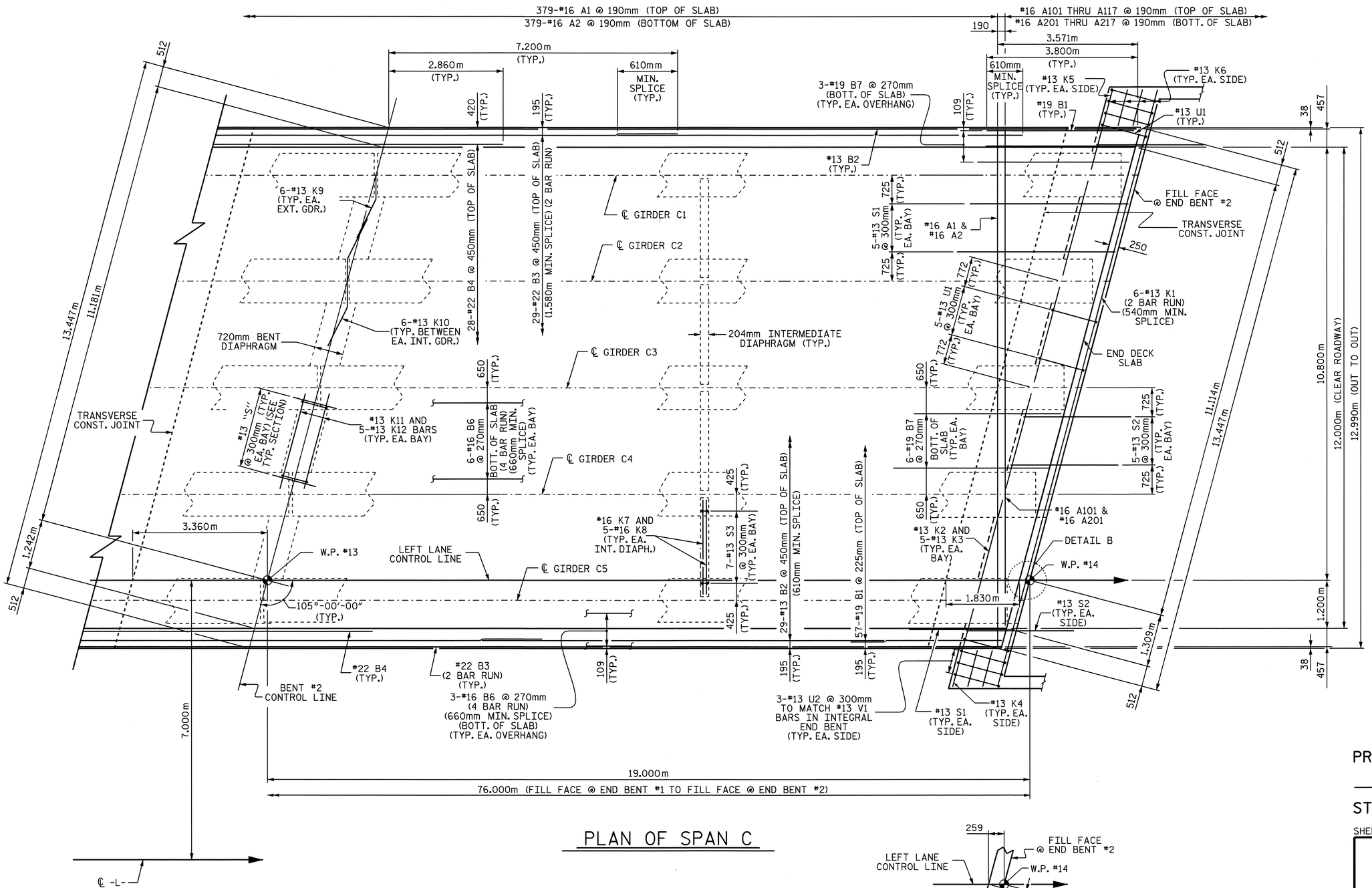

PLAN OF SPAN C

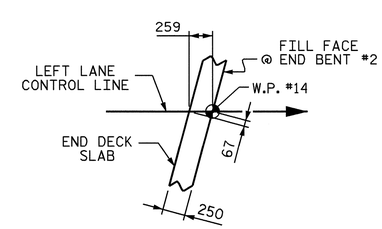

DETAIL B

PROJECT NO. R-2301A
JONES-CRAVEN COUNTY
STATION: 18+22.000 -L-

SHEET 3 OF 3

STATE OF NORTH CAROLINA
DEPARTMENT OF TRANSPORTATION
RALEIGH

SUPERSTRUCTURE PLAN OF SPAN C LEFT LANE

NORTH CAROLINA PROFESSIONAL SEAL 10730 ENGINEER D. ANDREW DAVENPORT, JR.

REVISIONS						SHEET NO.
NO.	BY:	DATE:	NO.	BY:	DATE:	S-9
1			3			TOTAL SHEETS
2			4			176

DRAWN BY : A. SORSENGINH DATE : 2/21/08
CHECKED BY : H. T. BARBOUR DATE : 3/31/08

STR. #1

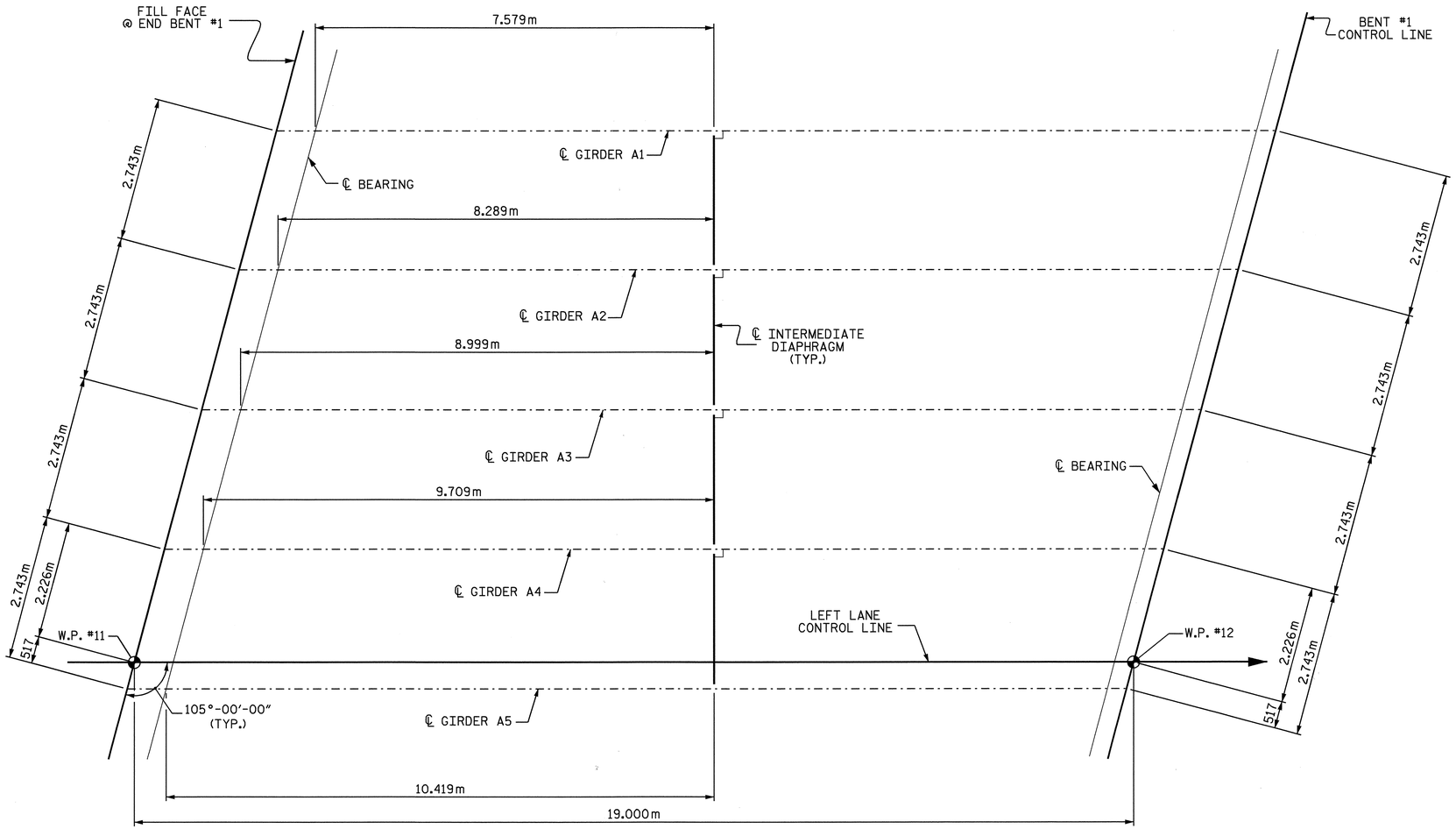

FRAMING PLAN SPAN A

PROJECT NO. R-2301A
JONES-CRAVEN COUNTY
STATION: 18+22.000 -L-

SHEET 1 OF 3

STATE OF NORTH CAROLINA
DEPARTMENT OF TRANSPORTATION
RALEIGH

SUPERSTRUCTURE FRAMING PLAN SPAN A LEFT LANE

NORTH CAROLINA PROFESSIONAL SEAL 10730 ENGINEER D. ANDREW DAVENPORT, JR.

REVISIONS								SHEET NO.
NO.	BY:	DATE:	NO.	BY:	DATE:			S-10
1			3					TOTAL SHEETS
2			4					176

DRAWN BY : A. SORSENGINH DATE : 2/21/08
CHECKED BY : H. T. BARBOUR DATE : 3/31/08

STR. #1

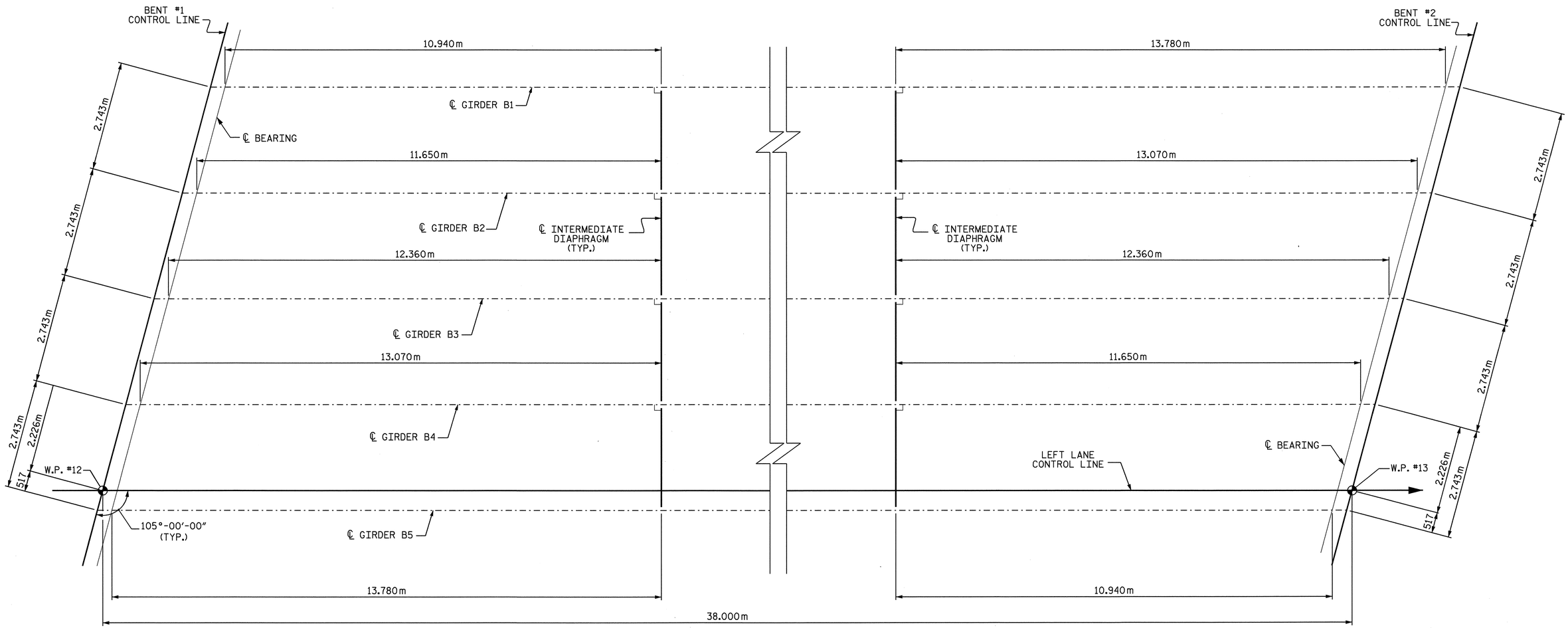

FIXED (E1, P1) FIXED (E2, P2)

FIXED (E2, P3) FIXED (E1, P4)

FRAMING PLAN SPAN B

PROJECT NO. R-2301A
JONES-CRAVEN COUNTY
STATION: 18+22.000 -L-

SHEET 2 OF 3

STATE OF NORTH CAROLINA
DEPARTMENT OF TRANSPORTATION
RALEIGH

SUPERSTRUCTURE
FRAMING PLAN
SPAN B
LEFT LANE

NORTH CAROLINA PROFESSIONAL SEAL 10730 ENGINEER D. ANDREW DAVENPORT, JR.
7-8-08

REVISIONS							SHEET NO.
NO.	BY:	DATE:	NO.	BY:	DATE:		S-11
1			3				TOTAL SHEETS
2			4				176

DRAWN BY : A. SORSENGINH DATE : 2/21/08
CHECKED BY : H. T. BARBOUR DATE : 3/31/08

STR. #1

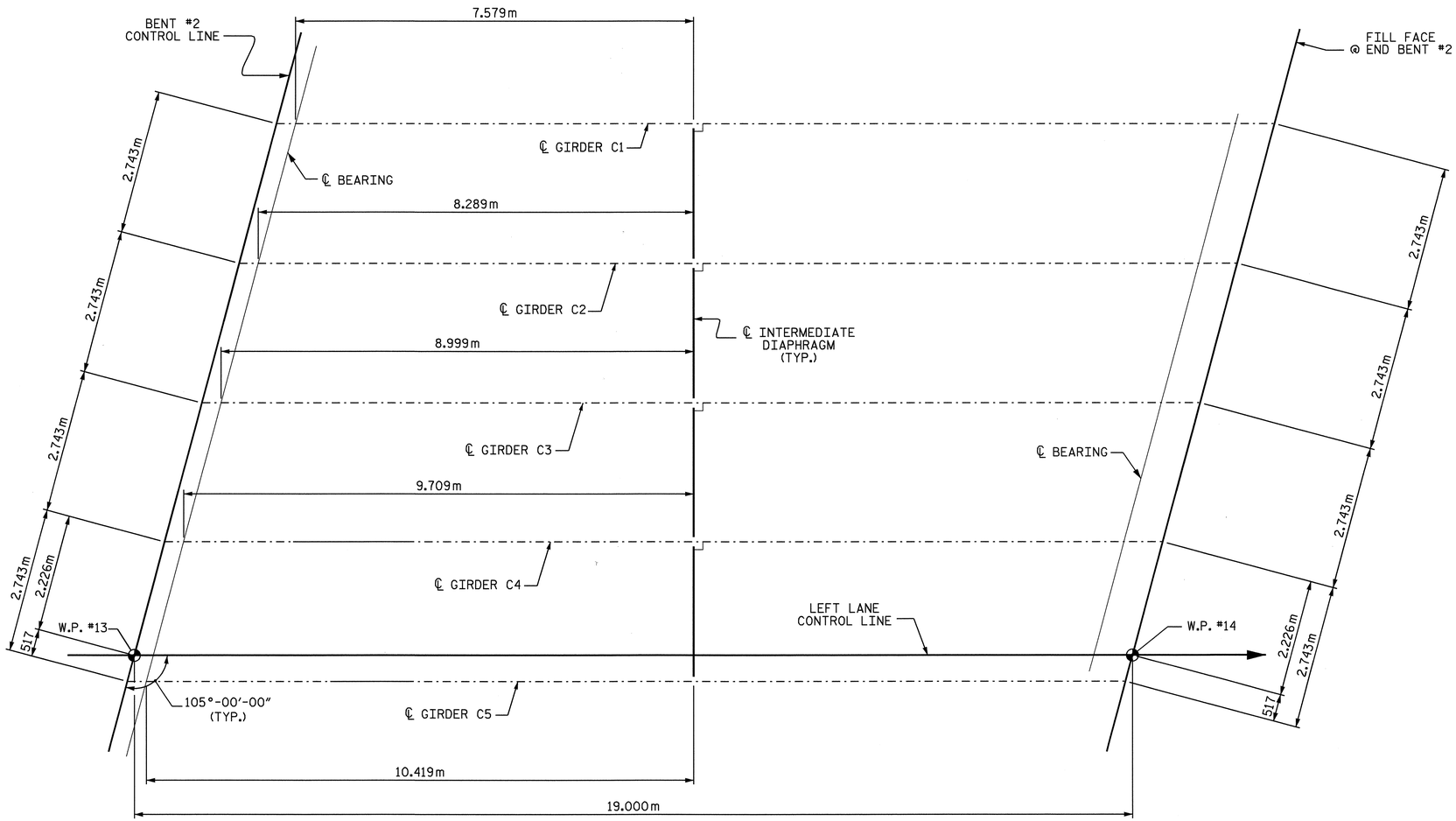

FIXED (E2, P3) FIXED (E1, P4)

FIXED E1

FRAMING PLAN SPAN C

PROJECT NO. R-2301A
JONES-CRAVEN COUNTY
STATION: 18+22.000 -L-

SHEET 3 OF 3

STATE OF NORTH CAROLINA
DEPARTMENT OF TRANSPORTATION
RALEIGH

SUPERSTRUCTURE
FRAMING PLAN
SPAN C
LEFT LANE

NORTH CAROLINA PROFESSIONAL SEAL 10730 ENGINEER D. ANDRE DAVENPORT, JR.
9-8-08

REVISIONS						SHEET NO.
NO.	BY:	DATE:	NO.	BY:	DATE:	S-12
1			3			TOTAL SHEETS
2			4			176

DRAWN BY : A. SORSENGINH DATE : 2/21/08
CHECKED BY : H. T. BARBOUR DATE : 3/31/08

STR. #1

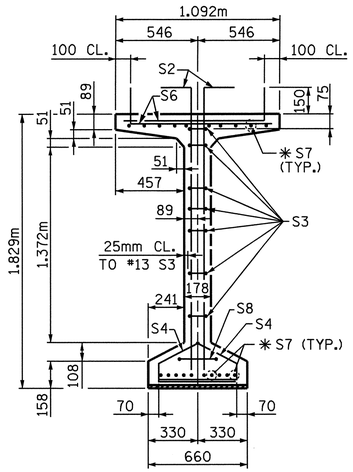

SECTION A-A

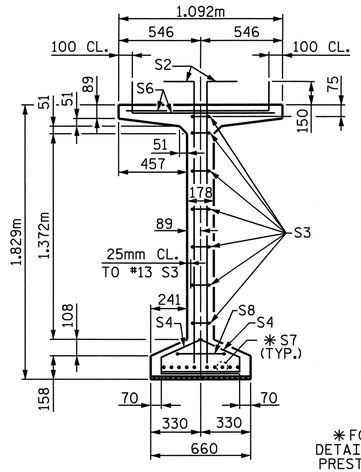

SECTION B-B

✱FOR S7 BARS, SEE DETAIL C SHEET 3 OF 3 PRESTRESSED CONCRETE GIRDER CONTINUOUS FOR LIVE LOAD DETAILS SHEET

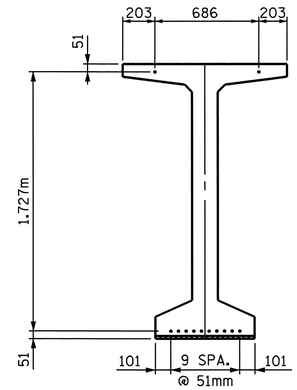

AT END OF GIRDER

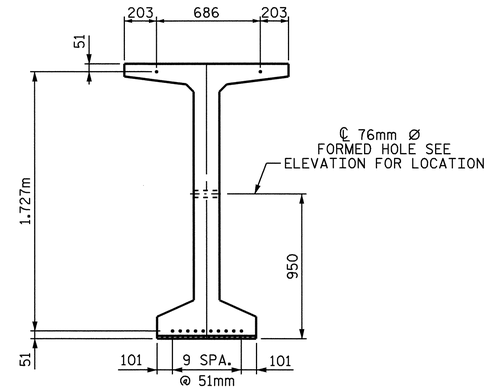

AT ℄ OF GIRDER

15.24mm Ø LOW RELAXATION STRAND LAYOUT

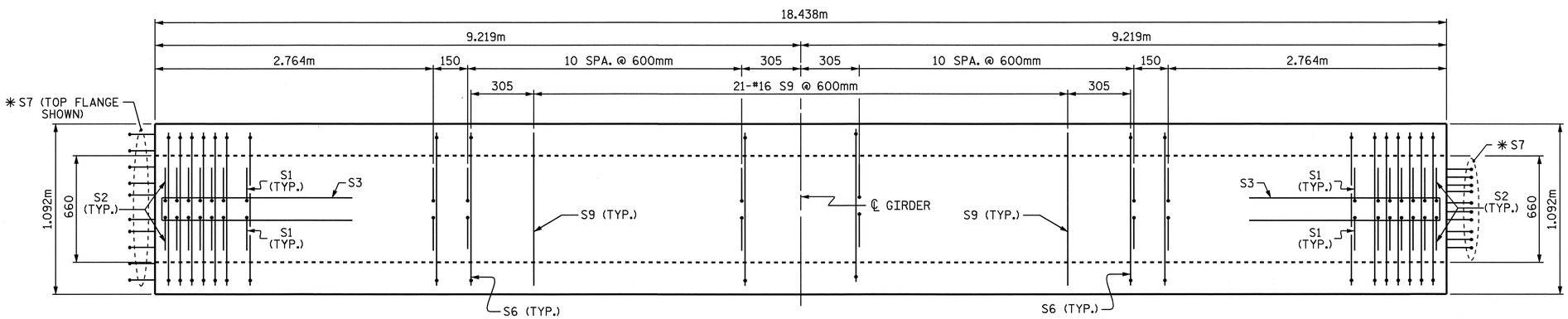

PLAN OF GIRDER

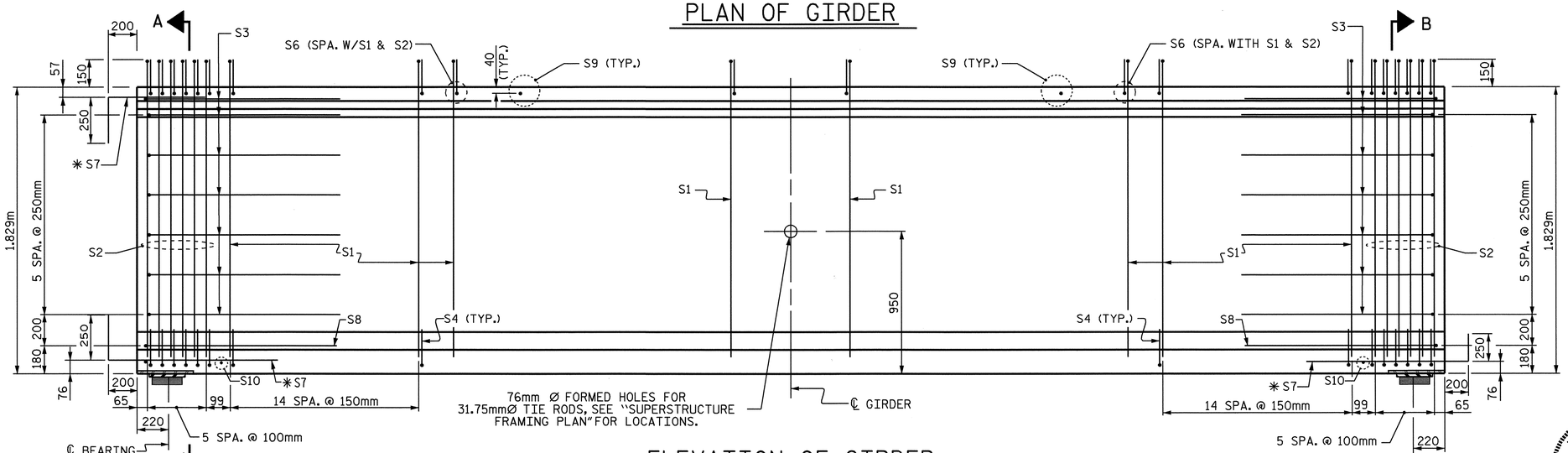

ELEVATION OF GIRDER

INTEGRAL END BENT

CONTINUOUS BENT

15.24mm Ø L.R GRADE 270 STRANDS		
AREA (mm^2)	ULTIMATE STRENGTH (kN PER STRAND)	APPLIED PRESTRESS (kN PER STRAND)
140.0	260.7	195.5

REINFORCING STEEL FOR ONE GIRDER

BAR	NUMBER	SIZE	TYPE	LENGTH	WEIGHT
S1	104	#13	1	2100	217
S2	24	#16	1	2100	78
S3	14	#13	2	2560	36
S4	84	#13	3	920	77
S6	128	#16	1	1120	222
✱S7	30	#16	STR	1120	52
S8	2	#16	2	2740	9
S9	21	#16	STR	980	32
S10	2	#10	STR	560	1

✱NOTE: S7 BARS SHALL BE BENT BEFORE SHIPMENT. HEAT BENDING SHALL NOT BE ALLOWED.

BAR TYPES

ALL BAR DIMENSIONS ARE OUT-TO-OUT

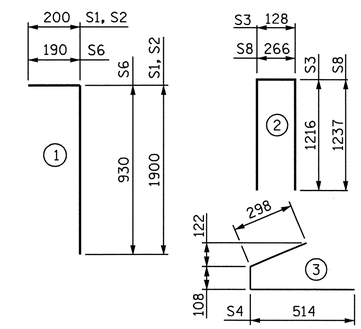

QUANTITIES FOR ONE GIRDER

	REINFORCING STEEL	34.5 MPa CONCRETE	15.24 Ø L.R STRAND
	kg	m^3	No.
	724	9.9	12

GIRDERS REQUIRED

NUMBER	LENGTH	TOTAL LENGTH
10	18.438	184.380

PROJECT NO. R-2301A
JONES-CRAVEN COUNTY
STATION: 18+22.000 -L-

SHEET 1 OF 3

STATE OF NORTH CAROLINA
DEPARTMENT OF TRANSPORTATION
RALEIGH

1829mm PRESTRESSED CONCRETE MODIFIED BULB TEE GIRDER SPANS A & C LEFT LANE

NORTH CAROLINA PROFESSIONAL SEAL 10730 ENGINEER D. ANDREW DAVENPORT, JR.

ASSEMBLED BY :	A. SORSENGINH	DATE :	2/21/08
CHECKED BY :	H. T. BARBOUR	DATE :	3/31/08
DRAWN BY :	EEM 2/97	REV. 8/16/99	RWW/LES
CHECKED BY :	VAP 2/97		

REVISIONS						SHEET NO.
NO.	BY:	DATE:	NO.	BY:	DATE:	S-13
1			3			TOTAL SHEETS
2			4			176

STR. #1

STD. NO. PCG10M

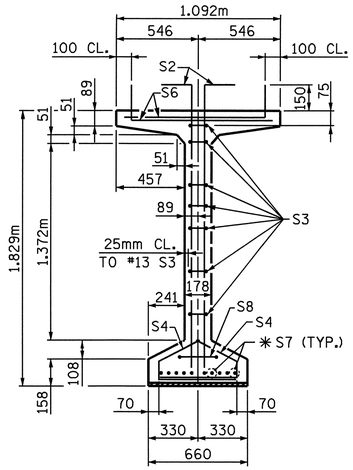

SECTION A-A

✱FOR S7 BARS, SEE DETAIL C SHEET 3 OF 3 PRESTRESSED CONCRETE GIRDER CONTINUOUS FOR LIVE LOAD DETAILS SHEET

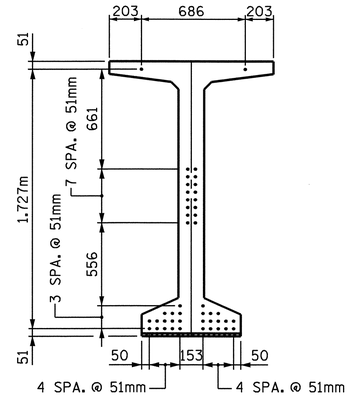

AT END OF GIRDER

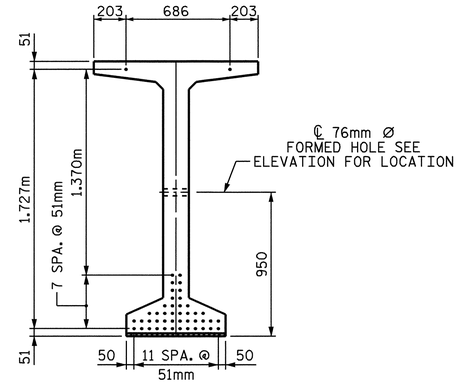

AT ℄ OF GIRDER

15.240mm Ø LOW RELAXATION STRAND LAYOUT

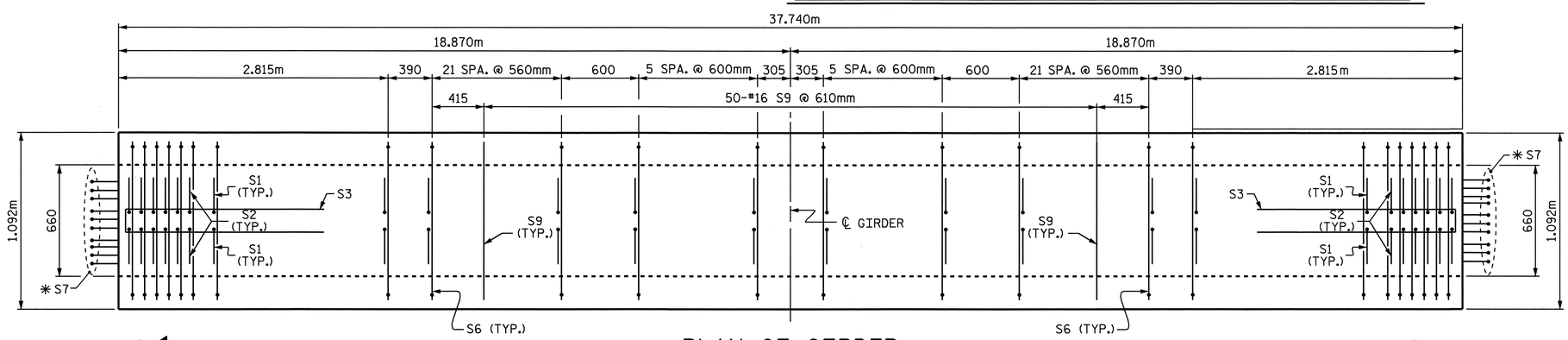

PLAN OF GIRDER

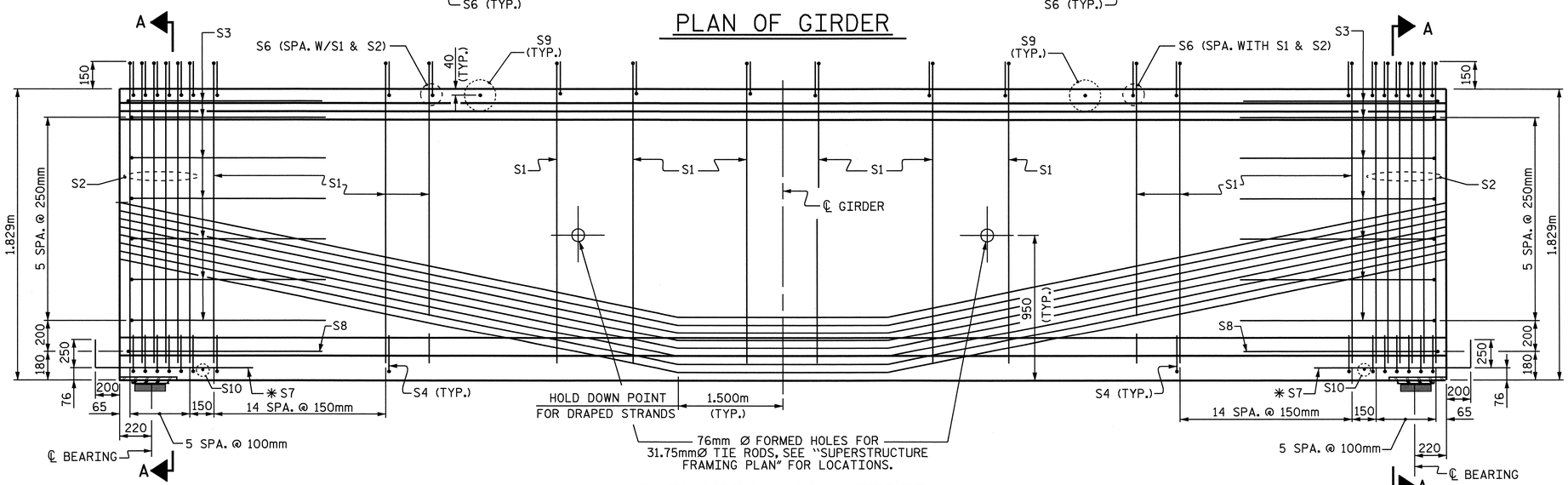

CONTINUOUS BENT

ELEVATION OF GIRDER

CONTINUOUS BENT

15.24 Ø L.R GRADE 270 STRANDS

AREA (mm^2)	ULTIMATE STRENGTH (kN PER STRAND)	APPLIED PRESTRESS (kN PER STRAND)
140.0	260.7	195.5

REINFORCING STEEL FOR ONE GIRDER

BAR	NUMBER	SIZE	TYPE	LENGTH	WEIGHT
S1	172	#13	1	2100	359
S2	24	#16	1	2100	78
S3	14	#13	2	2560	36
S4	84	#13	3	920	77
S6	196	#16	1	1120	341
✱ S7	20	#16	STR	1120	35
S8	2	#16	2	2740	9
S9	50	#16	STR	980	76
S10	2	#10	STR	560	1

✱NOTE: S7 BARS SHALL BE BENT BEFORE SHIPMENT. HEAT BENDING SHALL NOT BE ALLOWED.

BAR TYPES

ALL BAR DIMENSIONS ARE OUT-TO-OUT

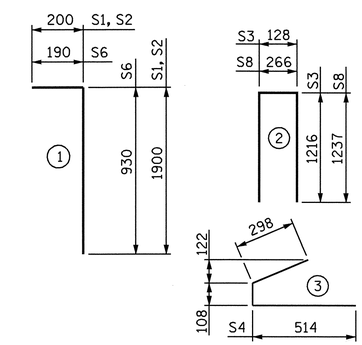

QUANTITIES FOR ONE GIRDER

	REINFORCING STEEL	65.5 MPa CONCRETE	15.24 Ø L.R. STRANDS
	kg	m^3	No.
	1012	20.3	46

GIRDERS REQUIRED

NUMBER	LENGTH	TOTAL LENGTH
5	37.740	188.700

PROJECT NO. R-2301A

JONES-CRAVEN COUNTY

STATION: 18+22.000 -L-

SHEET 2 OF 3

STATE OF NORTH CAROLINA
DEPARTMENT OF TRANSPORTATION
RALEIGH

1829mm PRESTRESSED CONCRETE MODIFIED BULB TEE GIRDER SPAN B LEFT LANE

NORTH CAROLINA PROFESSIONAL SEAL 10730 ENGINEER D. ANDREW DAVENPORT, JR.

ASSEMBLED BY :	A. SORSENGINH	DATE :	2/22/08
CHECKED BY :	H. T. BARBOUR	DATE :	3/31/08
DRAWN BY :	EEM 2/97	REV. 8/16/99	RWW/LES
CHECKED BY :	VAP 2/97		

REVISIONS						SHEET NO.
NO.	BY:	DATE:	NO.	BY:	DATE:	S-14
1			3			TOTAL SHEETS
2			4			176

STR. #1

STD. NO. PCG10M

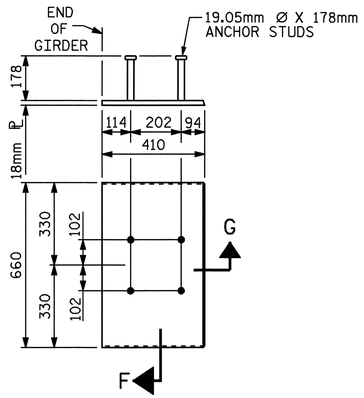

EMBEDDED PLATE "B-1" DETAILS FOR AASHTO TYPE IV GIRDER 1829mm MODIFIED BULB TEES

(2 REQ'D PER GIRDER)

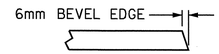

SECTION "G"

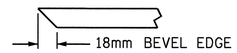

SECTION "F"

(SEE NOTES)

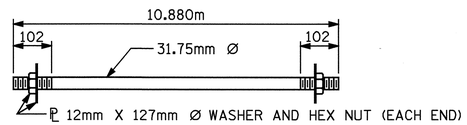

31.75mm Ø TIE ROD ASSEMBLY

(4 COMPLETE ASSEMBLIES REQUIRED)

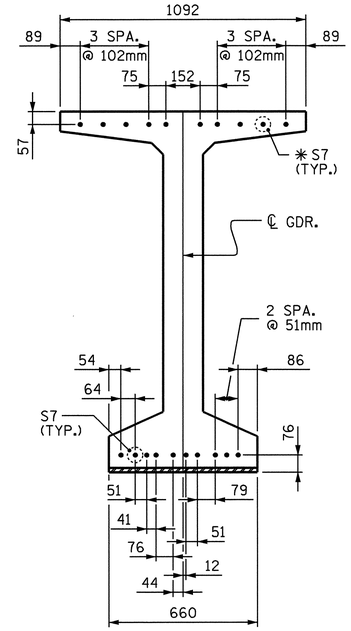

DETAIL C

NOTES

ALL PRESTRESSING STRANDS SHALL BE 7-WIRE LOW-RELAXATION GRADE 270 STRANDS AND SHALL CONFORM TO AASHTO M203M EXCEPT FOR SAMPLING REQUIREMENTS WHICH SHALL BE IN ACCORDANCE WITH THE STANDARD SPECIFICATIONS.

TIE ROD ASSEMBLY SHALL BE AASHTO M270 GRADE 250 STRUCTURAL STEEL.

ALL REINFORCING STEEL SHALL BE GRADE 420.

EMBEDDED PLATE "B-1" SHALL BE GALVANIZED IN ACCORDANCE WITH THE SPECIFICATIONS. BEVEL EDGES OF PLATE "B-1" TO GIVE CLOSE FIT BUT NOT TIGHT FIT TO STEEL CASTING FORM.

ANCHOR STUDS SHALL CONFORM TO AASHTO M169 GRADES 1010 THROUGH 1020 OR APPROVED EQUAL, AND SHALL MEET THE TYPE "B" REQUIREMENTS OF SUBSECTION 7.3 OF THE ANSI/AASHTO/AWS D1.5 BRIDGE WELDING CODE.

AT ENDS OF GIRDERS TO BE EMBEDDED IN CONCRETE DIAPHRAGMS OR END WALLS, PRESTRESSING STRANDS MAY EXTEND A MAXIMUM OF 50mm BEYOND THE GIRDER ENDS. OTHERWISE, PRESTRESSING STRANDS SHALL BE CUT FLUSH WITH THE GIRDER ENDS.

THE TRANSFER OF LOAD FROM THE ANCHORAGES TO THE GIRDER SHALL BE DONE WHEN CONCRETE HAS REACHED A COMPRESSIVE STRENGTH OF NOT LESS THAN 27.57 MPa FOR SPANS A & C AND 49.64 MPa FOR SPAN B.

DEPENDING ON THE TYPE OF SYSTEM USED TO SUPPORT THE DECK SLAB FORMS, PRESET ANCHORS MAY BE NECESSARY IN THE PRESTRESSED CONCRETE GIRDER.

THE TOP SURFACE OF THE GIRDER, EXCLUDING THE OUTSIDE 100mm, SHALL BE RAKED TO A DEPTH OF 6mm.

WHEN DRAPED STRANDS ARE DETAILED, THE LONGITUDINAL LOCATION OF THE HOLD DOWN DEVICES SHALL BE WITHIN 150mm OF THE LOCATION SHOWN AND THE CENTER OF GRAVITY OF THE GROUP OF DRAPED STRANDS SHALL BE LOCATED WITHIN 13mm OF THE THEORETICAL LOCATION SHOWN.

A 51mm × 51mm CHAMFER IS ALLOWED AT THE INTERSECTION OF THE WEB AND THE BOTTOM FLANGE OF THE 1600mm AND 1829mm MODIFIED BULB TEES ONLY.

THE CONTRACTOR HAS THE OPTION TO PROVIDE, AT NO ADDITIONAL COST TO THE DEPARTMENT, 2 ADDITIONAL STRANDS AT THE TOP OF THE GIRDER TO FACILITATE TYING OF THE REINFORCING STEEL. THESE STRANDS SHALL BE PULLED TO A LOAD OF 20 Kn.

FOR CRACK REPAIR OF PRESTRESSED CONCRETE GIRDERS, SEE SPECIAL PROVISIONS.

THE UPLIFT FORCE DUE TO DRAPED STRANDS IS 127.9 KN.

DEAD LOAD DEFLECTION TABLE

15.24mm Ø LOW RELAXATION	SPANS A & C										
	GIRDERS 1 - 5										
TENTH POINTS	℄ BRG.	.1	.2	.3	.4	.5	.6	.7	.8	.9	℄ BRG.
CAMBER (GIRDER ALONE IN PLACE) ↑	0.000	0.004	0.008	0.012	0.014	0.014	0.014	0.012	0.008	0.004	0.000
*DEFLECTION DUE TO SUPERIMPOSED D.L. ↓	0.000	0.001	0.002	0.003	0.004	0.004	0.004	0.003	0.002	0.001	0.000
FINAL CAMBER ↑	0	3	6	9	10	10	10	9	6	3	0

DEAD LOAD DEFLECTION TABLE

15.24mm Ø LOW RELAXATION	SPAN B																																		
	GIRDER 1											GIRDERS 2, 3 & 4											GIRDER 5												
TENTH POINTS	℄ BRG.	.1	.2	.3	.4	.5	.6	.7	.8	.9	℄ BRG.	℄ BRG.	.1	.2	.3	.4	.5	.6	.7	.8	.9	℄ BRG.	℄ BRG.	.1	.2	.3	.4	.5	.6	.7	.8	.9	℄ BRG.
CAMBER (GIRDER ALONE IN PLACE) ↑	0.000	0.053	0.099	0.136	0.159	0.167	0.159	0.136	0.099	0.053	0.000	0.000	0.053	0.099	0.136	0.159	0.167	0.159	0.136	0.099	0.053	0.000	0.000	0.053	0.099	0.136	0.159	0.167	0.159	0.136	0.099	0.053	0.000
*DEFLECTION DUE TO SUPERIMPOSED D.L. ↓	0.000	0.019	0.037	0.051	0.060	0.063	0.060	0.051	0.037	0.019	0.000	0.000	0.019	0.036	0.049	0.058	0.061	0.058	0.049	0.036	0.019	0.000	0.000	0.020	0.038	0.052	0.061	0.065	0.061	0.052	0.038	0.020	0.000
FINAL CAMBER ↑	0	34	62	85	99	104	99	85	62	34	0	0	34	63	87	101	106	101	87	63	34	0	0	33	61	84	98	102	98	84	61	33	0

*INCLUDES FUTURE WEARING SURFACE
ALL VALUES ARE SHOWN IN METERS, EXCEPT "FINAL CAMBER" WHICH IS SHOWN IN MILLIMETERS.

PROJECT NO. R-2301A
JONES-CRAVEN COUNTY
STATION: 18+22.000 -L-

SHEET 3 OF 3

STATE OF NORTH CAROLINA
DEPARTMENT OF TRANSPORTATION
RALEIGH

PRESTRESSED CONCRETE GIRDER CONTINUOUS FOR LIVE LOAD DETAILS LEFT LANE

NORTH CAROLINA PROFESSIONAL SEAL 10730 ENGINEER D. ANDREW DAVENPORT, JR.

REVISIONS						SHEET NO.
NO.	BY:	DATE:	NO.	BY:	DATE:	S-15
1			3			TOTAL SHEETS
2			4			176

STR. #1

STD. NO. PCG11SM

ASSEMBLED BY : A. SORSENGINH		DATE : 2/25/08	
CHECKED BY : H. T. BARBOUR		DATE : 3/31/08	
DRAWN BY : ELR 11/91	REV. 10/17/00 RWW/LES		
CHECKED BY : GRP 11/91	REV. 7/10/01RR LES/RDR		
	REV. 5/1/06 TLA/GM		

08-AUG-2008 09:21
r:\structures\asorsenginh\R-2301A_sd_S*1.dgn
tbarbour

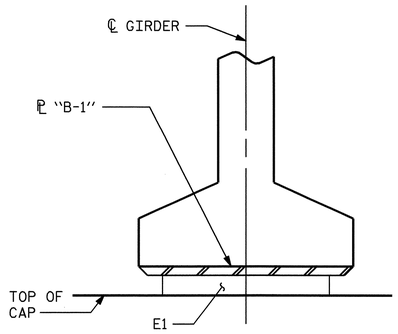

SECTION D-D
AT END BENT

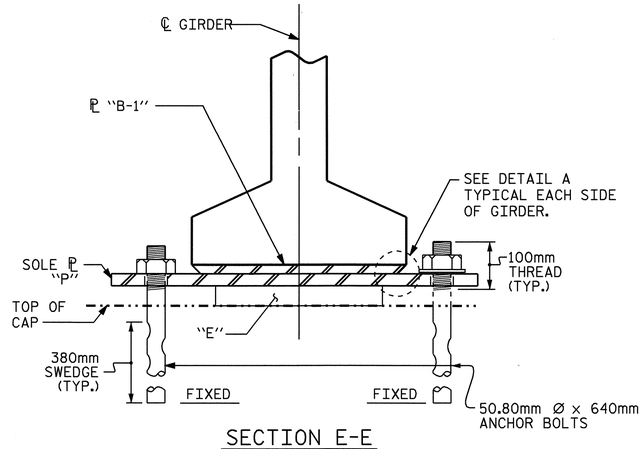

SECTION E-E
AT BENT

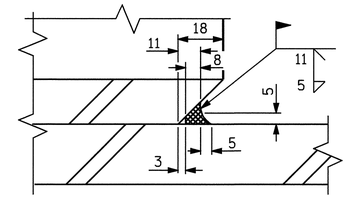

DETAIL A

NOTES

AT ALL FIXED POINTS OF SUPPORT, NUTS FOR ANCHOR BOLTS ARE TO BE TIGHTENED FINGER TIGHT AND THEN BACKED OFF ½ TURN. THE THREAD OF THE NUT AND BOLT SHALL THEN BE BURRED WITH A SHARP POINTED TOOL.

STEEL SOLE PLATES, ANCHOR BOLTS, NUTS, AND WASHERS SHALL BE GALVANIZED IN ACCORDANCE WITH THE STANDARD SPECIFICATIONS.

PRIOR TO WELDING, GRIND THE GALVANIZED SURFACE OF THE PORTION OF THE EMBEDDED PLATE AND SOLE PLATE THAT ARE TO BE WELDED. AFTER WELDING, DAMAGED GALVANIZED SURFACES SHALL BE REPAIRED IN ACCORDANCE WITH THE STANDARD SPECIFICATIONS.

WHEN WELDING THE SOLE PLATE TO THE EMBEDDED PLATE IN THE GIRDER, USE TEMPERATURE INDICATING WAX PENS, OR OTHER SUITABLE MEANS, TO ENSURE THAT THE TEMPERATURE OF THE SOLE PLATE DOES NOT EXCEED 149°C. TEMPERATURES ABOVE THIS MAY DAMAGE THE ELASTOMER.

SOLE PLATE "P", BOLTS, NUTS, WASHERS, AND PIPE SLEEVE SHALL BE INCLUDED IN THE PAY ITEM FOR PRESTRESSED CONCRETE GIRDERS.

ANCHOR BOLTS SHALL MEET THE REQUIREMENTS OF ASTM A449. NUTS SHALL MEET THE REQUIREMENTS OF AASHTO M291M-12 OR AASHTO M292M-2H. WASHERS SHALL MEET THE REQUIREMENTS OF AASHTO M293M. SHOP DRAWINGS ARE NOT REQUIRED FOR ANCHOR BOLTS, NUTS AND WASHERS. SHOP INSPECTION IS REQUIRED.

ALL SURFACES OF BEARING PLATES SHALL BE SMOOTH AND STRAIGHT.

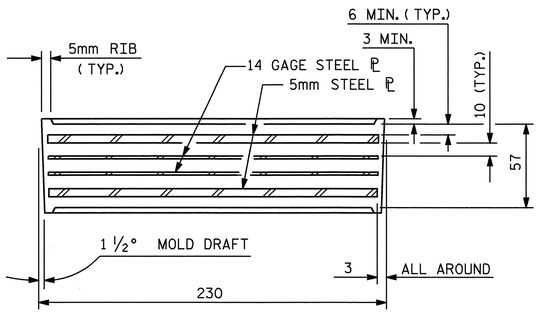

TYPICAL SECTION OF ELASTOMERIC BEARINGS

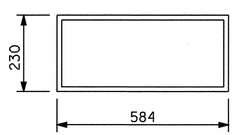

E1 (20 REQ'D)

PLAN VIEW OF ELASTOMERIC BEARING

TYPE V

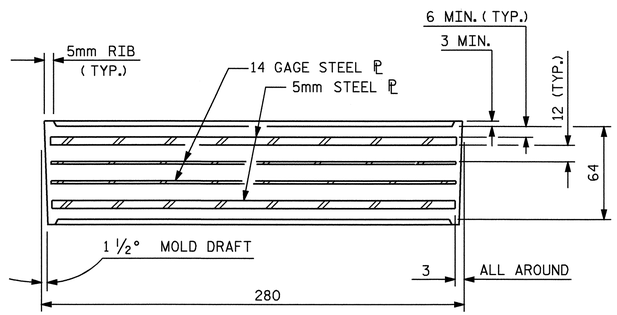

TYPICAL SECTION OF ELASTOMERIC BEARINGS

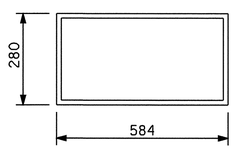

E2 (10 REQ'D)

PLAN VIEW OF ELASTOMERIC BEARING

TYPE VI

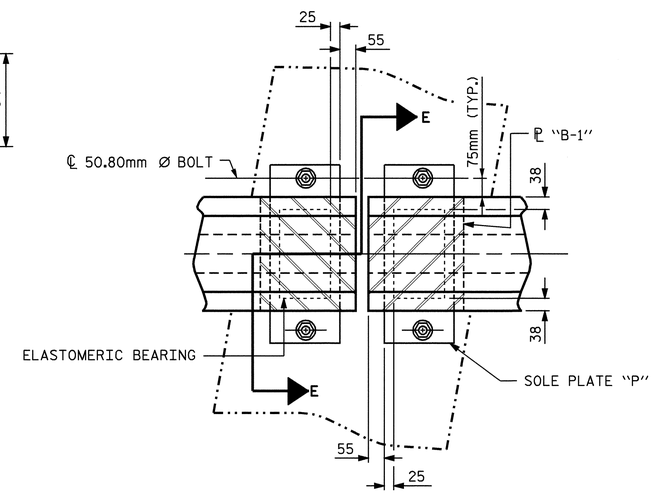

TYPICAL BENT PLAN

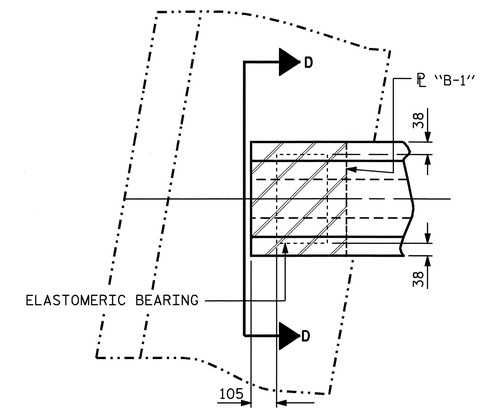

TYPICAL END BENT PLAN

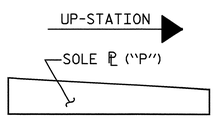

SOLE ℘ PLACEMENT DETAIL

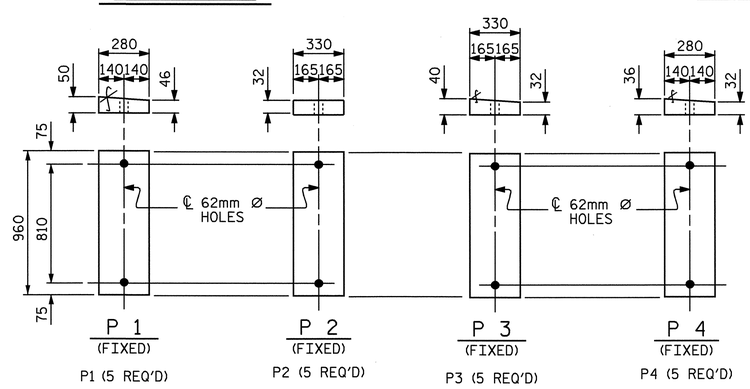

SOLE PLATE DETAILS ("P")

— LOAD RATINGS —	
	MAX.D.L.+L.L.
TYPE V	801 kN
TYPE VI	936 kN

PROJECT NO. R-2301A
JONES-CRAVEN COUNTY
STATION: 18+22.000 -L-

STATE OF NORTH CAROLINA
DEPARTMENT OF TRANSPORTATION
RALEIGH

ELASTOMERIC BEARING DETAILS
PRESTRESSED CONCRETE GIRDER SUPERSTRUCTURE
LEFT LANE

NORTH CAROLINA PROFESSIONAL SEAL 10730 ENGINEER D. ANDREW DAVENPORT, JR.

REVISIONS								SHEET NO.
NO.	BY:	DATE:	NO.	BY:	DATE:			S-16
1			3					TOTAL SHEETS
2			4					170

ASSEMBLED BY : A. SORSENGINH		DATE : 2/25/08	
CHECKED BY : H. T. BARBOUR		DATE : 3/31/08	
DRAWN BY : WJH 8/89	REV. 8/16/99	RWW/LES	
CHECKED BY : CRK 8/89	REV. 10/17/00	RWW/LES	
	REV. 5/1/06	TLA/GM	

08-SEP-2008 09:22
f:\Structures\asorsenginh\R-2301A_sd_S#1.dgn
adavenport

STR. #1

STD. NO. EB4SM

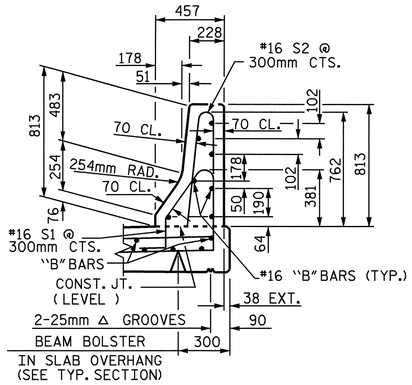

SECTION THRU RAIL

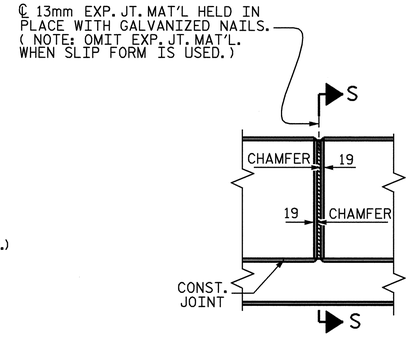

ELEVATION AT EXPANSION JOINTS

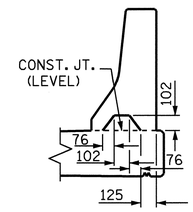

SECTION S-S

AT DAM IN OPEN JOINT
(THIS IS TO BE USED ONLY
WHEN SLIP FORM IS USED)

BARRIER RAIL DETAILS

NOTES

BARRIER RAIL IN A CONTINUOUS UNIT SHALL NOT BE CAST UNTIL ALL SLAB CONCRETE IN THE UNIT HAS BEEN CAST AND HAS REACHED A MINIMUM COMPRESSIVE STRENGTH OF 20.7 MPa.

ALL REINFORCING STEEL IN BARRIER RAILS SHALL BE EPOXY COATED.

VERTICAL GROOVED CONTRACTION JOINTS, 12mm IN DEPTH, SHALL BE TOOLED IN ALL EXPOSED FACES OF THE BARRIER RAIL AND IN ACCORDANCE WITH ARTICLE 825-10(B) OF THE STANDARD SPECIFICATIONS. THE CONTRACTION JOINT SHALL BE LOCATED AT EACH THIRD POINT BETWEEN BARRIER RAIL EXPANSION JOINTS. ONLY ONE CONTRACTION JOINT IS REQUIRED AT MIDPOINT OF BARRIER RAIL SEGMENTS LESS THAN 6.1m IN LENGTH AND NO CONTRACTION JOINTS ARE REQUIRED FOR THOSE SEGMENTS LESS THAN 3.5m IN LENGTH.

BAR TYPES

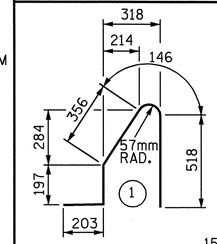

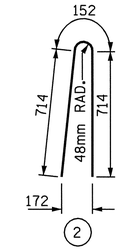

ALL BAR DIMENSIONS ARE OUT TO OUT

BILL OF MATERIAL

FOR CONCRETE BARRIER RAIL ONLY

BAR	NO.	SIZE	TYPE	LENGTH	WEIGHT
* B1	98	#16	STR	7480	1138
* B2	28	#16	STR	5460	237
* B3	56	#16	STR	3320	289
* S1	502	#16	1	1420	1106
* S2	502	#16	2	1580	1231

* EPOXY COATED
REINFORCING STEEL 4001 kg

CLASS AA CONCRETE 37.9 CU. METER

CONCRETE BARRIER RAIL 150.964 METERS

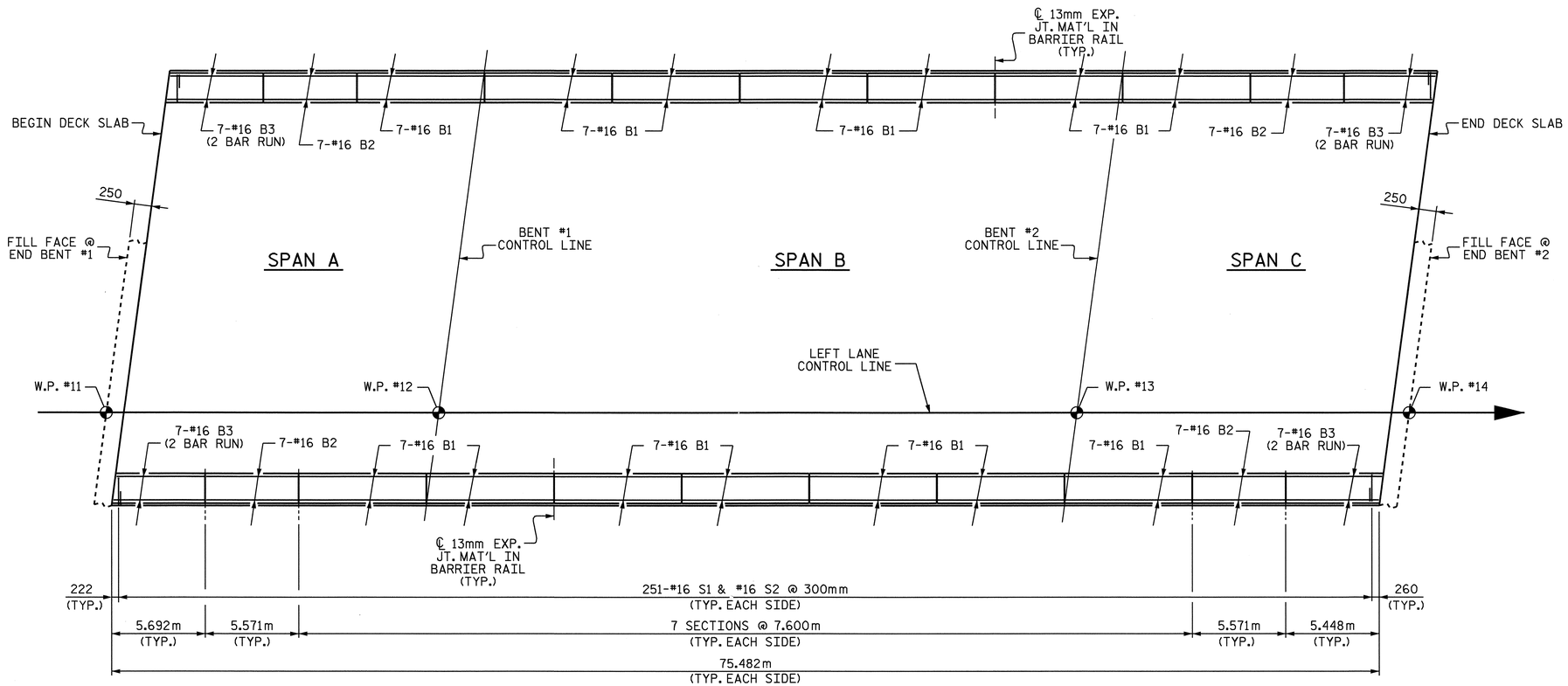

PLAN

PROJECT NO. R-2301A
JONES-CRAVEN COUNTY
STATION: 18+22.000 -L-

STATE OF NORTH CAROLINA
DEPARTMENT OF TRANSPORTATION
RALEIGH

CONCRETE
BARRIER RAIL
LEFT LANE

NORTH CAROLINA PROFESSIONAL SEAL 10730 ENGINEER D. ANDREW DAVENPORT, JR.

REVISIONS						SHEET NO.
NO.	BY:	DATE:	NO.	BY:	DATE:	S-17
1			3			TOTAL SHEETS
2			4			176

ASSEMBLED BY : A. SORSENGINH	DATE : 2/25/08		
CHECKED BY : H. T. BARBOUR	DATE : 3/31/08		
DRAWN BY : ARB 5/87	REV. 10/17/00	RWW/LES	
CHECKED BY : SJD 9/87	REV. 5/7/03R	RWW/JTE	
	REV. 5/1/06	TLA/GM	

04-SEP-2008 09:34
r:\structures\asorsenginh\R-2301A_sd_S#1.dgn
tbarbour

STR. #1

STD. No. CBR1SM

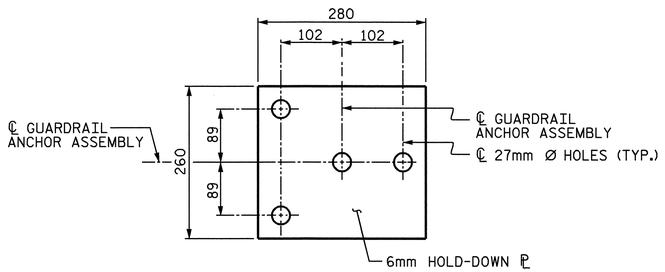

PLAN

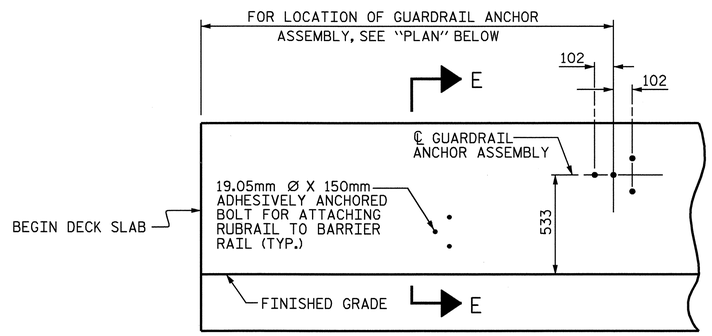

ELEVATION

FOR LOCATION OF RUBRAIL, SEE ROADWAY STD. 862.03

NOTES

THE GUARDRAIL ANCHOR ASSEMBLY SHALL CONSIST OF A 6mm HOLD DOWN PLATE AND 4 - 22.23mm Ø BOLTS WITH NUTS AND WASHERS, RUBRAIL, AND ADHESIVELY ANCHORED BOLTS.

THE HOLD-DOWN PLATE SHALL CONFORM TO AASHTO M270 GRADE 36. AFTER FABRICATION, THE HOLD-DOWN PLATE SHALL BE HOT-DIP GALVANIZED IN ACCORDANCE WITH AASHTO M111.

BOLTS SHALL CONFORM TO THE REQUIREMENTS OF ASTM A307 AND NUTS SHALL CONFORM TO THE REQUIREMENTS OF AASHTO M291. BOLTS, NUTS AND WASHERS SHALL BE GALVANIZED. (AT THE CONTRACTOR'S OPTION, STAINLESS STEEL BOLTS, NUTS AND WASHERS MAY BE USED AS AN ALTERNATE FOR THE 22.23mm Ø GALVANIZED BOLTS, NUTS AND WASHERS. THEY SHALL CONFORM TO OR EXCEED THE MECHANICAL REQUIREMENTS OF ASTM A307. THE USE OF THIS ALTERNATE SHALL BE APPROVED BY THE ENGINEER.)

THE GUARDRAIL ANCHOR ASSEMBLY IS REQUIRED AT ALL POINTS WHERE APPROACH GUARDRAIL IS TO BE ATTACHED TO THE END OF BARRIER RAIL. FOR POINTS OF ATTACHMENT, SEE SKETCH.

AFTER INSTALLATION, THE EXPOSED THREAD OF THE BOLT SHALL BE BURRED WITH A SHARP POINTED TOOL.

THE COST OF THE GUARDRAIL ANCHOR ASSEMBLY SHALL BE INCLUDED IN THE UNIT CONTRACT PRICE BID FOR CONCRETE BARRIER RAIL.

THE 32mm Ø HOLES SHALL BE FORMED OR DRILLED WITH A CORE BIT. IMPACT TOOLS WILL NOT BE PERMITTED. ANY CONCRETE DAMAGED BY THIS WORK SHALL BE REPAIRED TO THE SATISFACTION OF THE ENGINEER.

THE C150 X 12 RUBRAIL IS TO BE ADHESIVELY ANCHORED TO THE RAIL USING THREE 19.05mm Ø X 150mm BOLTS WITH WASHERS. LEVEL ONE FIELD TESTING IF REQUIRED, AND THE YIELD LOAD OF THE 19.05mm Ø BOLTS IS 53.4KN. FOR ADHESIVELY ANCHORED ANCHOR BOLTS OR DOWELS, SEE SPECIAL PROVISIONS. SEE ROADWAY STANDARD 862.03 FOR DETAILS AND LOCATION OF THE RUBRAIL.

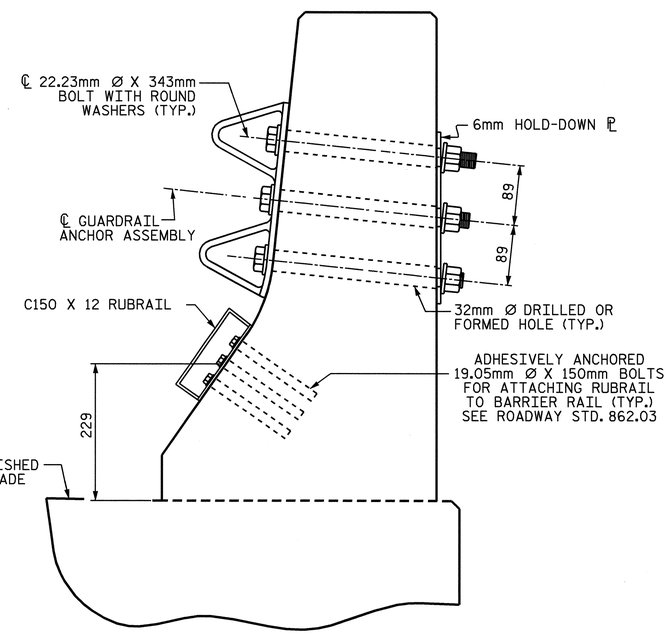

SECTION E-E

GUARDRAIL ANCHOR ASSEMBLY DETAILS

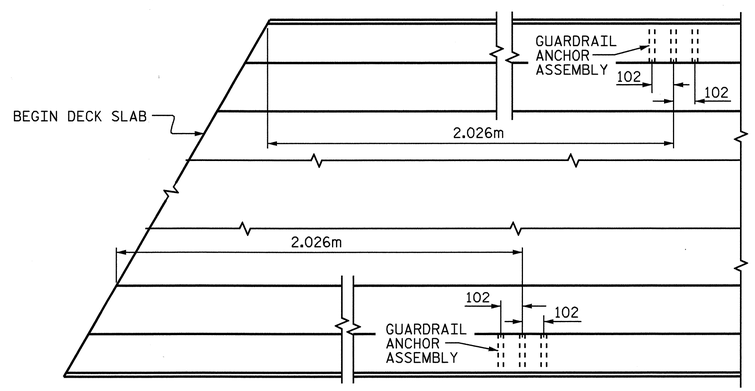

PLAN

LOCATION OF ANCHORS FOR GUARDRAIL

END BENT #1 SHOWN, END BENT #2 SIMILAR.

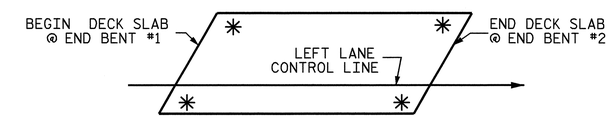

SKETCH SHOWING POINTS OF ATTACHMENTS

✳ DENOTES GUARDRAIL ANCHOR ASSEMBLY

PROJECT NO. R-2301A

JONES-CRAVEN COUNTY

STATION: 18+22.000 -L-

STATE OF NORTH CAROLINA
DEPARTMENT OF TRANSPORTATION
RALEIGH

GUARDRAIL ANCHORAGE FOR BARRIER RAIL LEFT LANE

NORTH CAROLINA PROFESSIONAL SEAL 10730 ENGINEER D. ANDREW DAVENPORT, JR.

REVISIONS							SHEET NO.
NO.	BY:	DATE:	NO.	BY:	DATE:		S-18
1			3				TOTAL SHEETS
2			4				176

STR. #1

STD. NO. GRA2SM

ASSEMBLED BY : A. SORSENGINH		DATE : 2/26/08	
CHECKED BY : H. T. BARBOUR		DATE : 3/31/08	
DRAWN BY : TLA 5/06	ADDED 5/1/06		
CHECKED BY : GM 5/06			

08-AUG-2008 09:22
r:\structures\asorsenginh\R-2301A_sd_S*1.dgn
tbarbour

SUPERSTRUCTURE BILL OF MATERIAL

	CLASS AA CONCRETE	REINFORCING STEEL	** EPOXY COATED REINFORCING STEEL
	(cu. m)	(kg)	(kg)
POUR #1	63.3		
POUR #2	166.4		
POUR #3	98.3		
POUR #4	60.4		
TOTALS	388.4	14,054	16,001

** QUANTITIES FOR BARRIER RAIL ARE NOT INCLUDED

GROOVING BRIDGE FLOORS

BRIDGE DECK	835.2	SQ.METER
APPROACH SLAB	152.3	SQ.METER
TOTAL	987.5	SQ.METER

REINFORCING BAR SCHEDULE

SPANS A-C

BAR	NO.	SIZE	TYPE	LENGTH	WEIGHT
* A1	379	#16	STR	12880	7576
A2	379	#16	STR	12880	7576
* A101	2	#16	STR	12360	38
* A102	2	#16	STR	11660	36
* A103	2	#16	STR	10940	34
* A104	2	#16	STR	10240	32
* A105	2	#16	STR	9540	30
* A106	2	#16	STR	8820	27
* A107	2	#16	STR	8120	25
* A108	2	#16	STR	7400	23
* A109	2	#16	STR	6700	21
* A110	2	#16	STR	5980	19
* A111	2	#16	STR	5280	16
* A112	2	#16	STR	4560	14
* A113	2	#16	STR	3860	12
* A114	2	#16	STR	3140	10
* A115	2	#16	STR	2440	8
* A116	2	#16	STR	1740	5
* A117	2	#16	STR	1020	3

BAR	NO.	SIZE	TYPE	LENGTH	WEIGHT
A201	2	#16	STR	12360	38
A202	2	#16	STR	11660	36
A203	2	#16	STR	10940	34
A204	2	#16	STR	10240	32
A205	2	#16	STR	9540	30
A206	2	#16	STR	8820	27
A207	2	#16	STR	8120	25
A208	2	#16	STR	7400	23
A209	2	#16	STR	6700	21
A210	2	#16	STR	5980	19
A211	2	#16	STR	5280	16
A212	2	#16	STR	4560	14
A213	2	#16	STR	3860	12
A214	2	#16	STR	3140	10
A215	2	#16	STR	2440	8
A216	2	#16	STR	1740	5
A217	2	#16	STR	1020	3
* B1	118	#19	STR	3760	992
* B2	62	#13	STR	8980	553
* B3	124	#22	STR	10840	4089
* B4	56	#22	STR	8560	1458
* B5	62	#13	STR	7020	433
B6	120	#16	STR	17800	3315
B7	60	#19	STR	3760	504
K1	24	#13	STR	7980	190
K2	8	#13	STR	1940	15
K3	40	#13	STR	2440	97
K4	4	#13	STR	1820	7
K5	20	#13	STR	2060	41
K6	16	#13	STR	920	15
K7	32	#16	7	2260	112
K8	160	#16	STR	2360	586
K9	24	#13	2	1680	40
K10	36	#13	3	3360	120
K11	16	#13	STR	1580	25
K12	80	#13	STR	2440	194
* S1	44	#13	1	3560	156
* S2	44	#13	1	3620	158
S3	112	#13	8	3460	385
S4	40	#13	5	5060	201
S5	264	#13	4	860	226
S6	16	#13	9	3260	52
* U1	44	#13	6	4540	199
* U2	12	#13	6	2840	34
REINFORCING STEEL					14,054
* EPOXY COATED REINFORCING STEEL					16,001

BAR TYPES

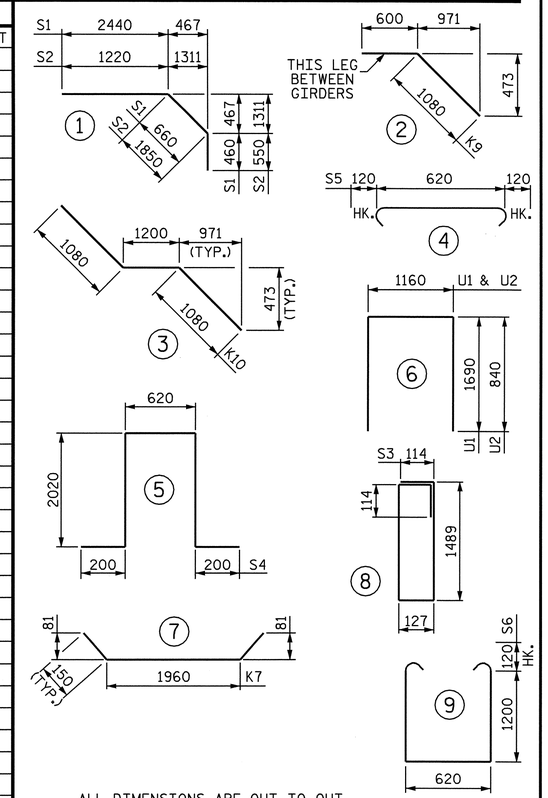

SUPERSTRUCTURE REINFORCING STEEL LENGTHS ARE BASED ON THE FOLLOWING MINIMUM SPLICE LENGTHS

BAR SIZE	SUPERSTRUCTURE EXCEPT APPROACH SLABS, PARAPET, AND BARRIER RAIL		APPROACH SLABS		PARAPET AND BARRIER RAIL
	EPOXY COATED	UNCOATED	EPOXY COATED	UNCOATED	
#13	610	540	610	540	840
#16	770	660	770	660	1050
#19	920	790	1190	790	1330
#22	1580	1060			
#25	2080	1390			

ALL DIMENSIONS ARE IN MILLIMETERS

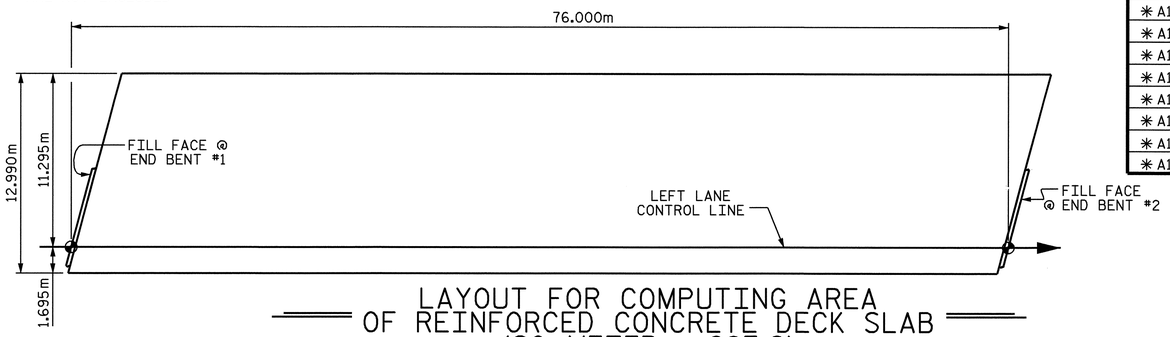

LAYOUT FOR COMPUTING AREA OF REINFORCED CONCRETE DECK SLAB (SQ. METER = 987.2)

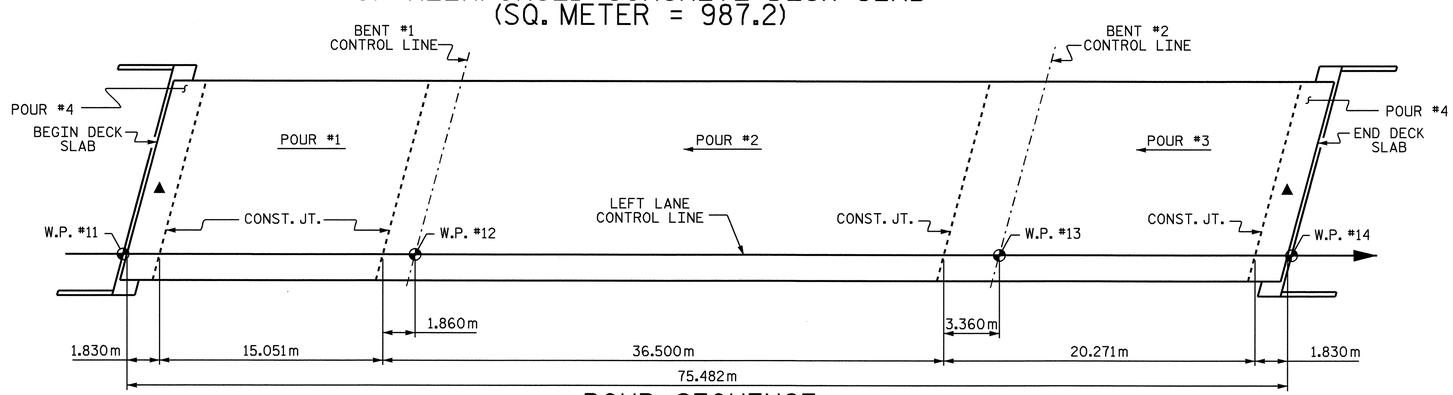

POUR SEQUENCE

▲ POUR #4 IN THIS AREA INCLUDES THE UPPER PART OF THE END BENT WINGS, UPPER PART OF THE INTEGRAL END BENT, AND 1.830m SECTION OF THE BRIDGE DECK.

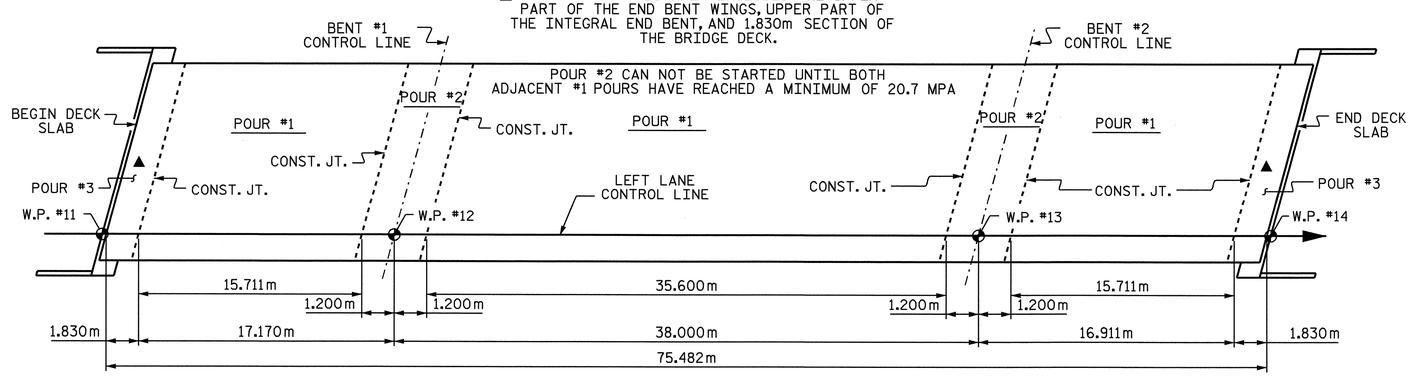

OPTIONAL POUR SEQUENCE

▲ POUR#3 IN THIS AREA INCLUDES THE UPPER PART OF THE END BENT WINGS, UPPER PART OF THE INTEGRAL END BENT, AND 1.830m SECTION OF THE BRIDGE DECK.

PROJECT NO. R-2301A
JONES-CRAVEN COUNTY
STATION: 18+22.000 -L-

STATE OF NORTH CAROLINA
DEPARTMENT OF TRANSPORTATION
RALEIGH

SUPERSTRUCTURE BILL OF MATERIAL LEFT LANE

NORTH CAROLINA PROFESSIONAL SEAL 10730 ENGINEER D. ANDREW DAVENPORT, JR.

REVISIONS								SHEET NO.
NO.	BY:	DATE:	NO.	BY:	DATE:			S-19
1			3					TOTAL SHEETS
2			4					176

DRAWN BY : A. SORSENGINH DATE : 2/26/08
CHECKED BY : H. T. BARBOUR DATE : 3/31/08

NOTES

SEE SUPERSTRUCTURE SHEETS FOR UPPER PART OF INTEGRAL END BENT DETAILS.

THE CONTRACTOR SHALL PROVIDE FOR INSTALLATION OF THE 102mm DIAMETER DRAIN PIPE THROUGH THE WING WALL AS REQUIRED FOR REINFORCED BRIDGE APPROACH FILLS, SEE THE ROADWAY PLANS. REINFORCING STEEL IN THE WING WALL MAY BE SHIFTED AS NECESSARY TO CLEAR THE DRAIN PIPE.

THE CONTRACTOR'S ATTENTION IS CALLED TO THE FACT THAT THE UPPER PART OF THE END BENT WINGS ARE TO BE POURED WITH POUR #4 OF THE SUPERSTRUCTURE.

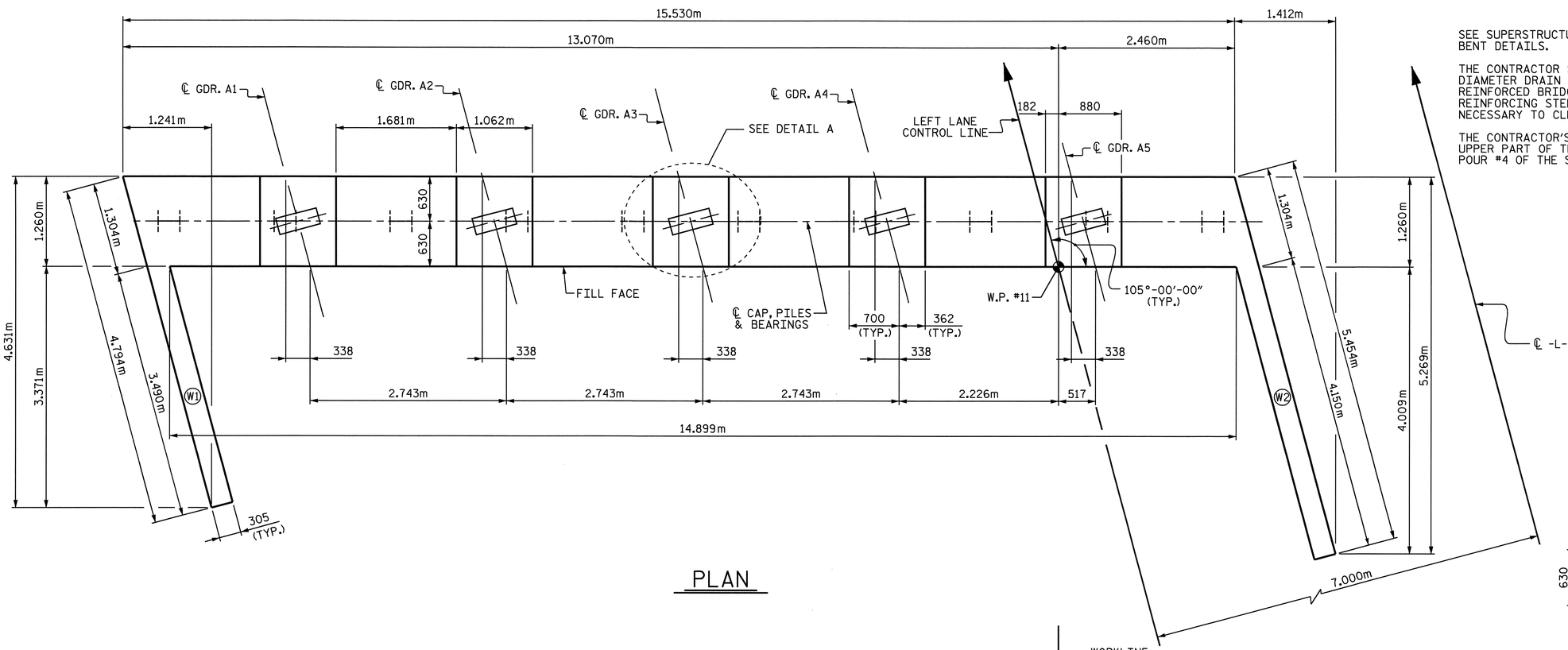

PLAN

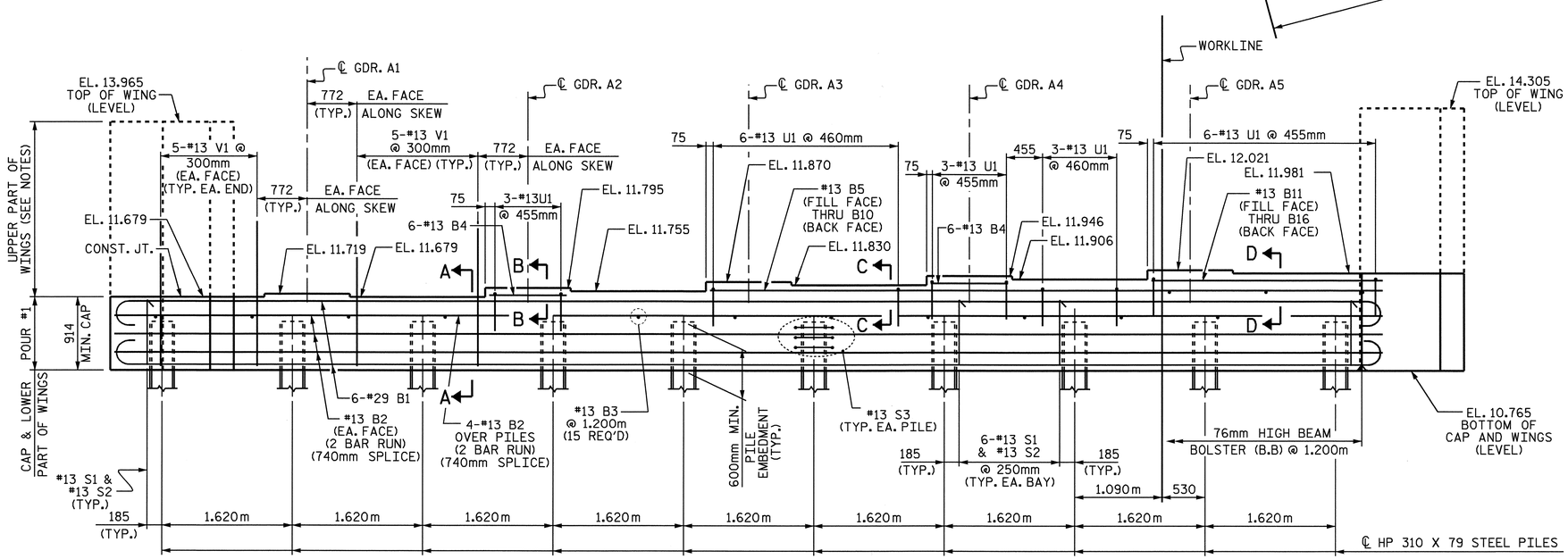

ELEVATION

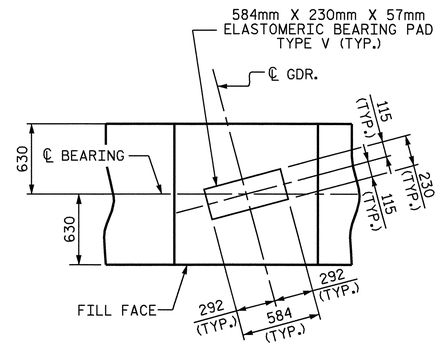

DETAIL A

PILES NOT SHOWN FOR CLARITY

PROJECT NO. R-2301A

JONES-CRAVEN COUNTY

STATION: 18+22.000 -L-

SHEET 1 OF 3

STATE OF NORTH CAROLINA
DEPARTMENT OF TRANSPORTATION
RALEIGH

SUBSTRUCTURE INTEGRAL END BENT #1 (LEFT LANE)

NORTH CAROLINA PROFESSIONAL SEAL 10730 ENGINEER D. ANDREW DAVENPORT, JR.
9-8-06

REVISIONS						SHEET NO. S-20
NO.	BY:	DATE:	NO.	BY:	DATE:	TOTAL SHEETS 176
1			3			
2			4			

STR. #1

DRAWN BY : M. G. SHAIKH DATE : 07-01-08
CHECKED BY : H. T. BARBOUR DATE : 07-29-08

04-SEP-2008 11:36
r:\structures\mshaikh\R-2301a\Microstation\LEFT LANE STR #1\R-2301A_sd_E*.dgn
tbarbour

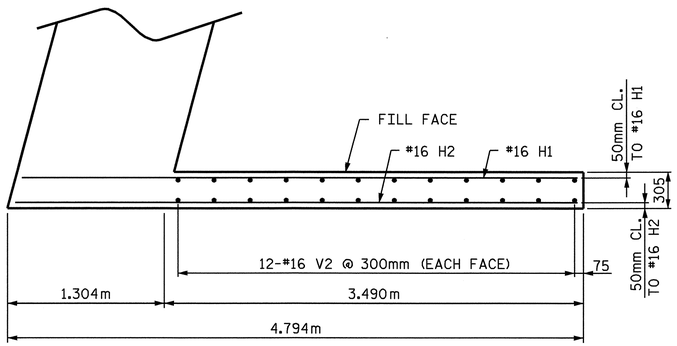

PLAN OF LEFT WING (W1)

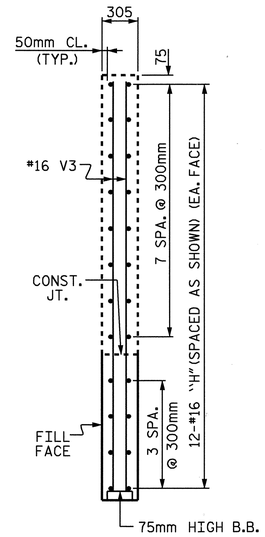

SECTION Y-Y

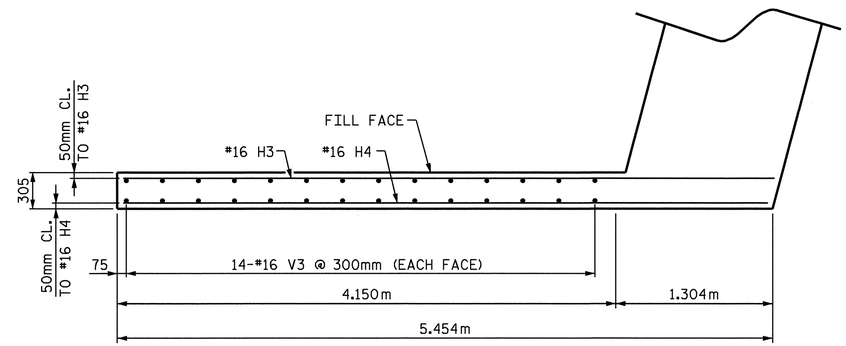

PLAN OF RIGHT RIGHT (W2)

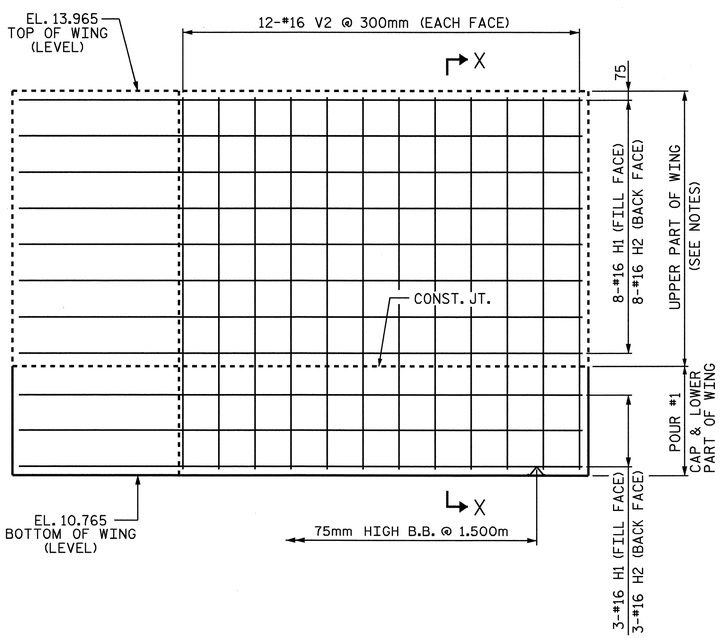

ELEVATION OF LEFT WING (W1)

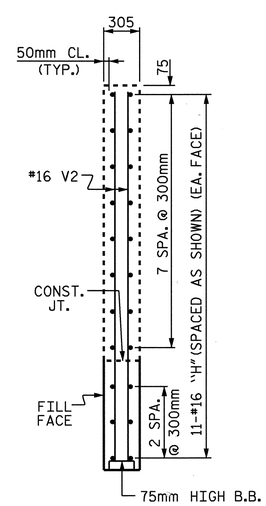

SECTION X-X

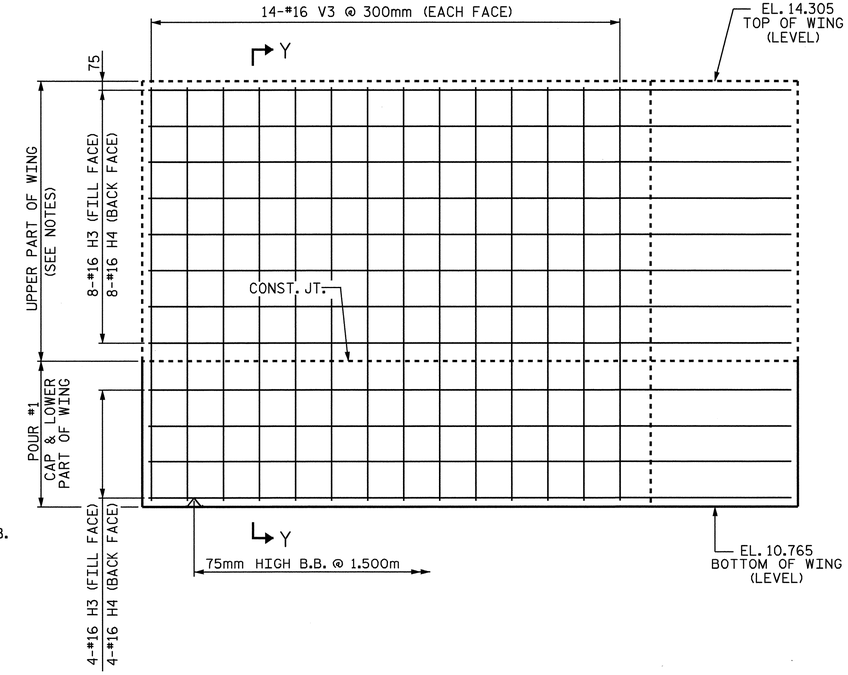

ELEVATION OF RIGHT WING (W2)

PROJECT NO. R-2301A
JONES-CRAVEN COUNTY
STATION: 18+22.000 -L-

SHEET 2 OF 3

STATE OF NORTH CAROLINA
DEPARTMENT OF TRANSPORTATION
RALEIGH

SUBSTRUCTURE INTEGRAL END BENT #1 (LEFT LANE)

NORTH CAROLINA PROFESSIONAL SEAL 10730 ENGINEER D. ANDREW DAVENPORT, JR.

REVISIONS						SHEET NO.
NO.	BY:	DATE:	NO.	BY:	DATE:	S-21
1			3			TOTAL SHEETS
2			4			176

DRAWN BY : M. G. SHAIKH DATE : 07-01-08
CHECKED BY : H. T. BARBOUR DATE : 07-29-08

12-AUG-2008 08:59
f:\structures\mshaikh\Microstation\LEFT LANE STR #1\R-2301A_sd_E*.dgn
addavenport

STR #1

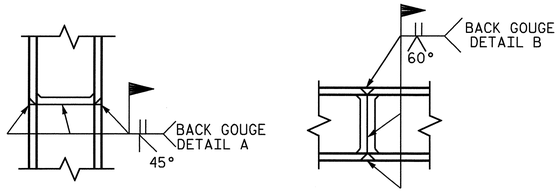

** PILE VERTICAL

** PILE HORIZONTAL OR VERTICAL

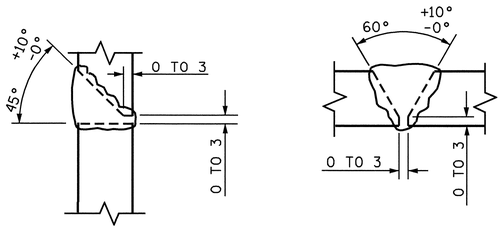

DETAIL A

DETAIL B

PILE SPLICE DETAILS

** POSITION OF PILE DURING WELDING.

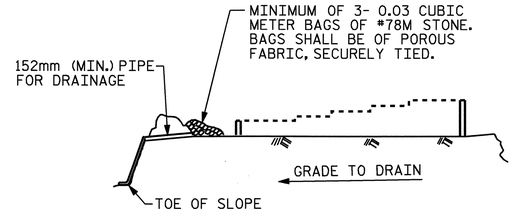

BAGGED STONE AND PIPE SHALL BE PLACED IMMEDIATELY AFTER COMPLETION OF END BENT EXCAVATION. PIPE MAY BE EITHER CONCRETE, CORRUGATED STEEL, CORRUGATED ALUMINUM ALLOY, OR CORRUGATED PLASTIC. PERFORATED PIPE WILL NOT BE ALLOWED.

BAGGED STONE SHALL REMAIN IN PLACE UNTIL THE ENGINEER DIRECTS THAT IT BE REMOVED. THE CONTRACTOR SHALL REMOVE AND DISPOSE OF SILT ACCUMULATIONS AT BAGGED STONE WHEN SO DIRECTED BY THE ENGINEER. BAGS SHALL BE REMOVED AND REPLACED WHENEVER THE ENGINEER DETERMINES THAT THEY HAVE DETERIORATED AND LOST THEIR EFFECTIVENESS.

NO SEPARATE PAYMENT WILL BE MADE FOR THIS WORK AND THE ENTIRE COST OF THIS WORK SHALL BE INCLUDED IN THE UNIT CONTRACT PRICE BID FOR THE SEVERAL PAY ITEMS.

TEMPORARY DRAINAGE AT END BENT

BAR TYPES

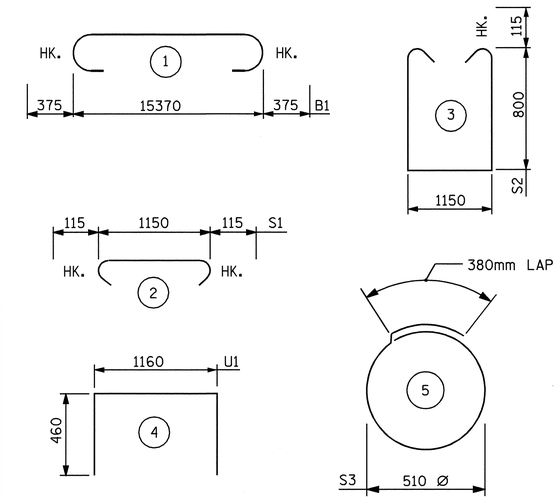

ALL BAR DIMENSIONS ARE OUT TO OUT.

BILL OF MATERIAL

END BENT #1

BAR	NO.	SIZE	TYPE	LENGTH	WEIGHT
B1	12	#29	1	16120	979
B2	20	#13	STR	8080	161
B3	6	#13	STR	960	6
B4	15	#13	STR	1160	17
B5	1	#13	STR	8340	8
B6	1	#13	STR	8280	8
B7	1	#13	STR	8240	8
B8	1	#13	STR	8140	8
B9	1	#13	STR	8080	8
B10	1	#13	STR	8040	8
B11	1	#13	STR	2840	3
B12	1	#13	STR	2800	3
B13	1	#13	STR	2740	3
B14	1	#13	STR	2660	3
B15	1	#13	STR	2600	3
B16	1	#13	STR	2560	3
H1	11	#16	STR	4820	82
H2	11	#16	STR	4760	81
H3	12	#16	STR	5120	95
H4	12	#16	STR	5060	94
S1	56	#13	2	1380	77
S2	56	#13	3	2980	166
S3	30	#13	5	1980	59
U1	21	#13	4	2080	43
V1	60	#13	STR	1820	109
V2	24	#16	STR	3100	115
V3	28	#16	STR	3440	149

REINFORCING STEEL = 2299 KG

CLASS A CONCRETE

* POUR #1 (CAP & LOWER PART OF WINGS)
CU. METERS 23.2
TOTAL CU. METERS 23.2

HP 310 X 79 STEEL PILES
NO. 10 METERS 230.000

PILE REDRIVES
EACH 4

* CONCRETE QUANTITY FOR UPPER PART OF WINGS IN POUR #4 ON SUPERSTRUCTURE.

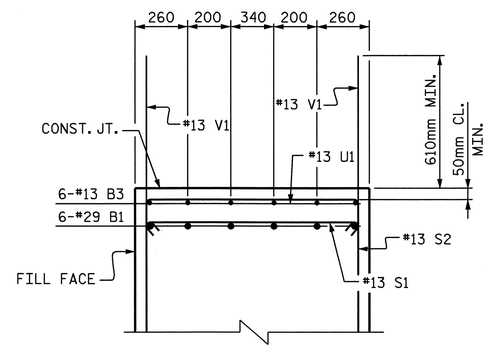

SECTION B-B

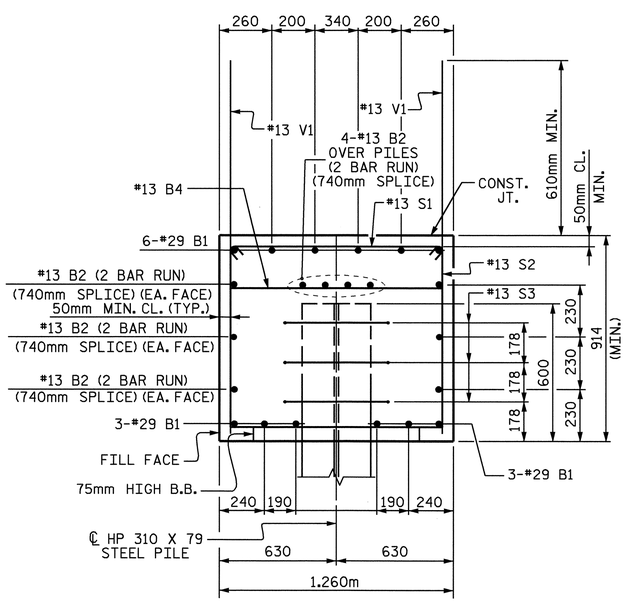

SECTION A-A

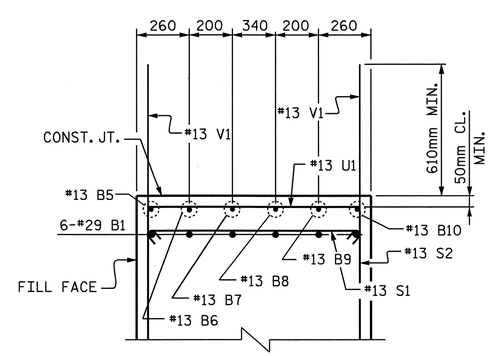

SECTION C-C

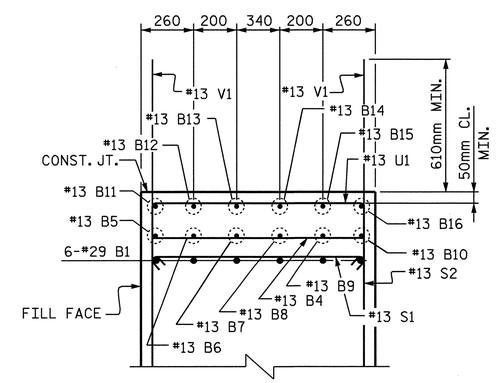

SECTION D-D

PROJECT NO. R-2301A
JONES-CRAVEN COUNTY
STATION: 18+22.000 -L-

SHEET 3 OF 3

STATE OF NORTH CAROLINA
DEPARTMENT OF TRANSPORTATION
RALEIGH

SUBSTRUCTURE
INTEGRAL
END BENT #1
(LEFT LANE)

NORTH CAROLINA PROFESSIONAL SEAL 10730 ENGINEER
ANDREW DAVENPORT, JR.
9-8-08

REVISIONS							SHEET NO.
NO.	BY:	DATE:	NO.	BY:	DATE:		S-22
1			3				TOTAL SHEETS
2			4				176

DRAWN BY : M. G. SHAIKH DATE : 07-02-08
CHECKED BY : H. T. BARBOUR DATE : 07-29-08

STR. #1

NOTES

STIRRUPS AND "U" BARS IN CAP MAY BE SHIFTED AS NECESSARY TO CLEAR ANCHOR BOLTS.

GALVANIZE THE TOP 10 METERS MINIMUM OF EACH PILE IN ACCORDANCE WITH SECTION 1076 OF THE STANDARD SPECIFICATIONS.

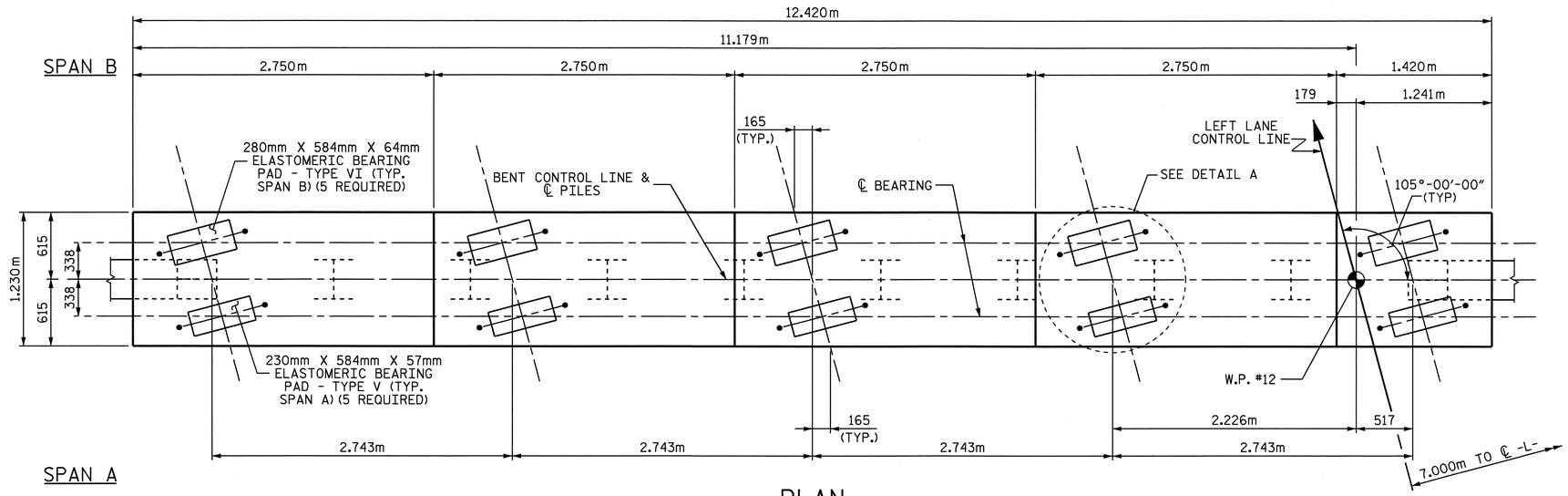

PLAN

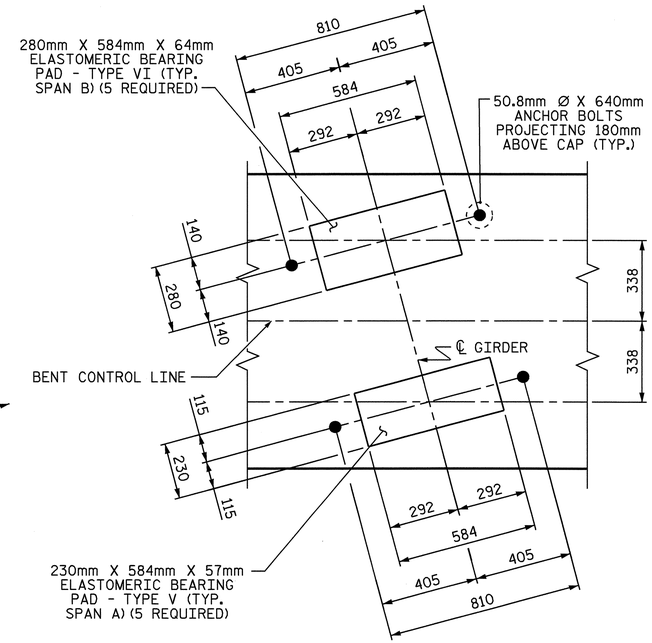

DETAIL A

PILE NOT SHOWN FOR CLARITY

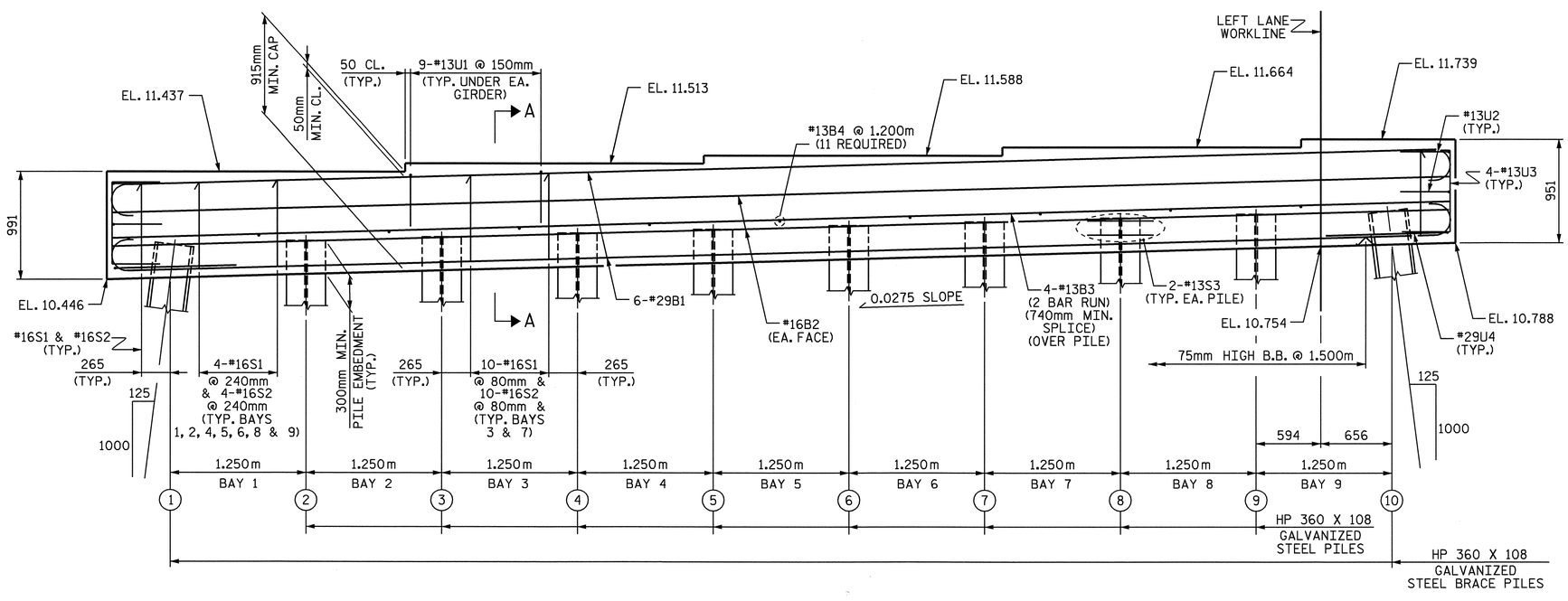

ELEVATION

PILE #	TOP OF PILE ELEVATION
1	EL. 10.766
2	EL. 10.801
3	EL. 10.835
4	EL. 10.869
5	EL. 10.904
6	EL. 10.938
7	EL. 10.973
8	EL. 11.007
9	EL. 11.041
10	EL. 11.076

PROJECT NO. R-2301A
JONES-CRAVEN COUNTY
STATION: 18+22.000-L-

SHEET 1 OF 2

STATE OF NORTH CAROLINA
DEPARTMENT OF TRANSPORTATION
RALEIGH

SUBSTRUCTURE BENT #1 (LEFT LANE)

NORTH CAROLINA PROFESSIONAL SEAL 10730 ENGINEER D. ANDREW DAVENPORT
9-16-08

REVISIONS							SHEET NO. S-23
NO.	BY:	DATE:	NO.	BY:	DATE:		TOTAL SHEETS 1-76
1			3				
2			4				

DRAWN BY : H. T. BARBOUR DATE : 7-18-08
CHECKED BY : D. A. DAVENPORT DATE : 7-08

05-SEP-2008 09:43
r:\structures\tbarbour\Microstation\STR.1\R-2301A_sd_B*.dgn
tbarbour

STR. #1

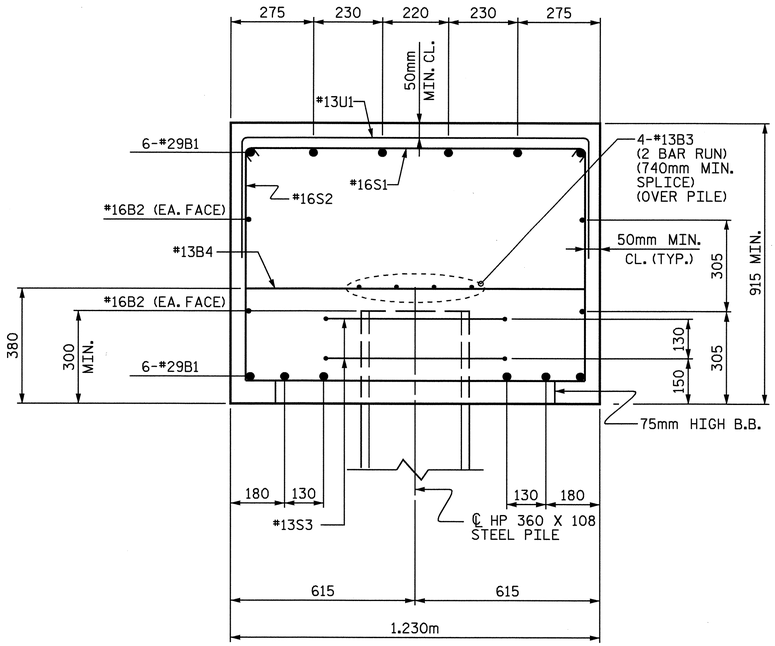

SECTION A-A

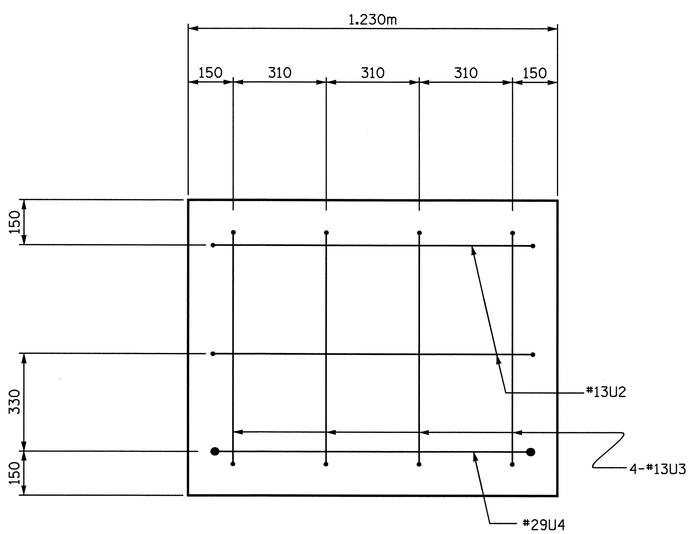

END VIEW

BAR TYPES

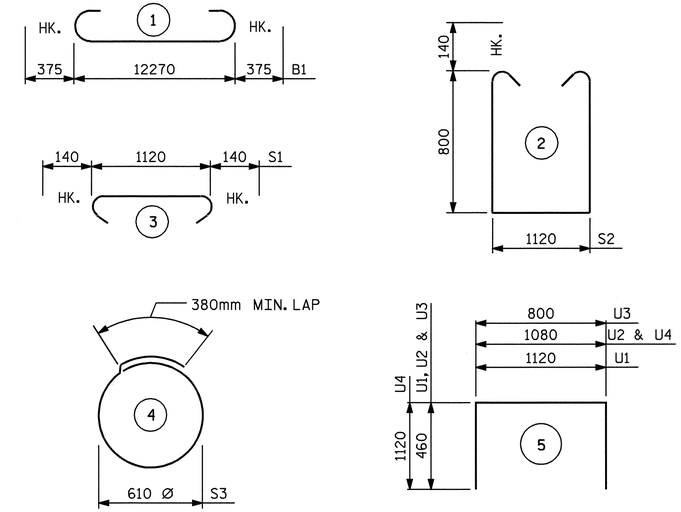

ALL BAR DIMENSIONS ARE OUT TO OUT.

BILL OF MATERIAL

BENT #1

BAR	NO.	SIZE	TYPE	LENGTH	WEIGHT
B1	12	29	1	13020	791
B2	4	16	STR	12320	76
B3	8	13	STR	6540	52
B4	11	13	STR	1120	12
S1	50	16	3	1400	109
S2	50	16	2	3000	233
S3	20	13	4	2300	46
U1	45	13	5	2040	91
U2	4	13	5	2000	8
U3	8	13	5	1720	14
U4	2	29	5	3320	34

REINFORCING STEEL 1466 kg.

CLASS A CONCRETE BREAKDOWN

POUR 1 (CAP) 14.6 C.M.

TOTAL CLASS A CONCRETE 14.6 C.M.

℄ HP 360 X 108 GALVANIZED STEEL PILES

NO. = 10 210.000m

PILE REDRIVES

EACH 5

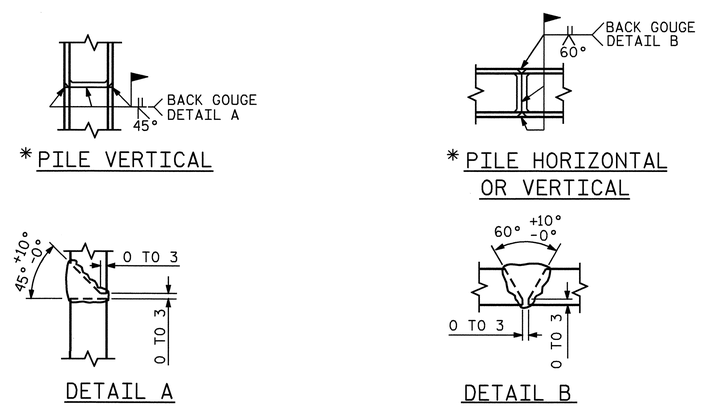

PILE SPLICE DETAILS

*POSITION OF PILE DURING WELDING.

PROJECT NO. R-2301A

JONES-CRAVEN COUNTY

STATION: 18+22.000-L-

SHEET 2 OF 2

STATE OF NORTH CAROLINA
DEPARTMENT OF TRANSPORTATION
RALEIGH

SUBSTRUCTURE
BENT #1
(LEFT LANE)

NORTH CAROLINA PROFESSIONAL SEAL 10730 ENGINEER D. ANDREW DAVENPORT, JR.
9-8-08

REVISIONS						SHEET NO. S-24
NO.	BY:	DATE:	NO.	BY:	DATE:	TOTAL SHEETS 176
1			3			
2			4			

STR. #1

DRAWN BY : H. T. BARBOUR DATE : 7-18-08
CHECKED BY : D. A. DAVENPORT DATE : 7-08

05-SEP-2008 09:25
r:\structures\tbarbour\microstation\str.l\r-2301a_sd_b*.dgn
tbarbour

NOTES

STIRRUPS AND "U" BARS IN CAP MAY BE SHIFTED AS NECESSARY TO CLEAR ANCHOR BOLTS.

GALVANIZE THE TOP 10 METERS MINIMUM OF EACH PILE IN ACCORDANCE WITH SECTION 1076 OF THE STANDARD SPECIFICATIONS.

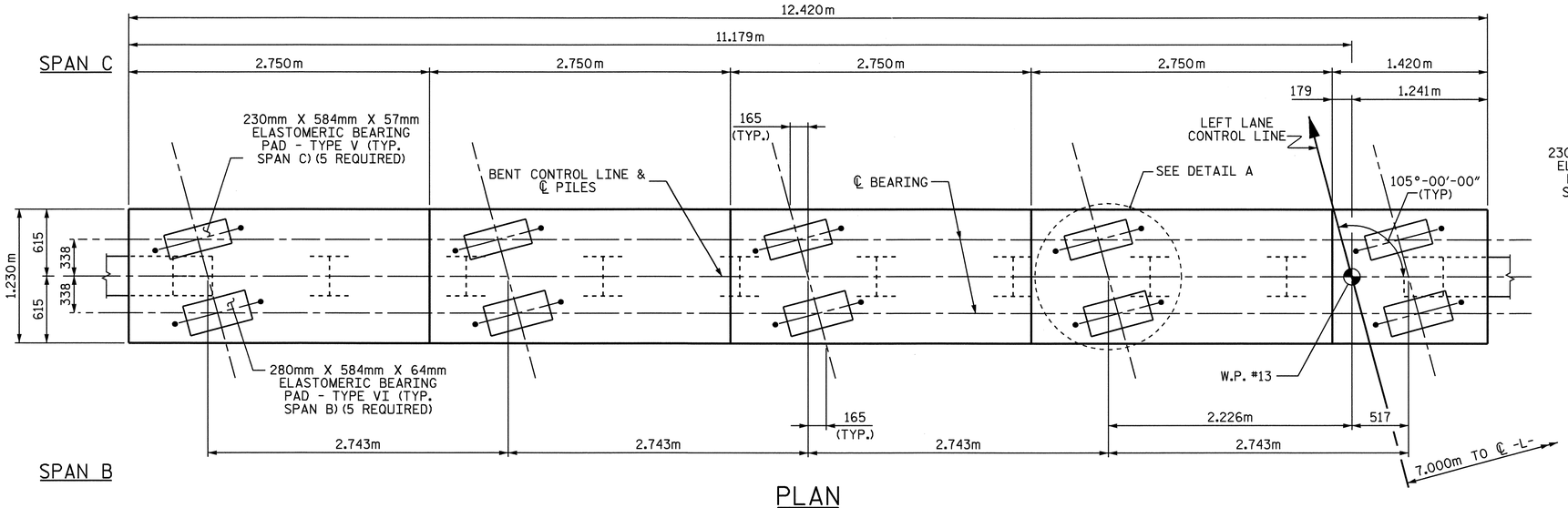

PLAN

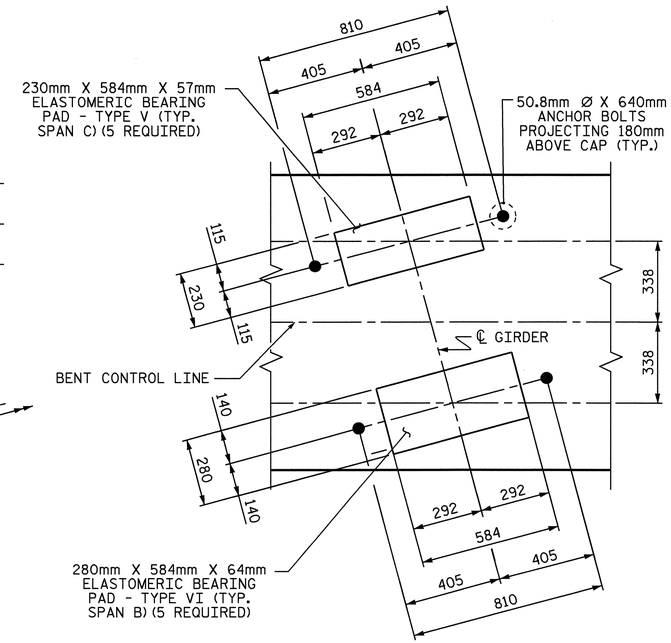

DETAIL A

PILE NOT SHOWN FOR CLARITY

PILE #	TOP OF PILE ELEVATION
1	EL. 10.277
2	EL. 10.312
3	EL. 10.346
4	EL. 10.380
5	EL. 10.415
6	EL. 10.449
7	EL. 10.484
8	EL. 10.518
9	EL. 10.552
10	EL. 10.587

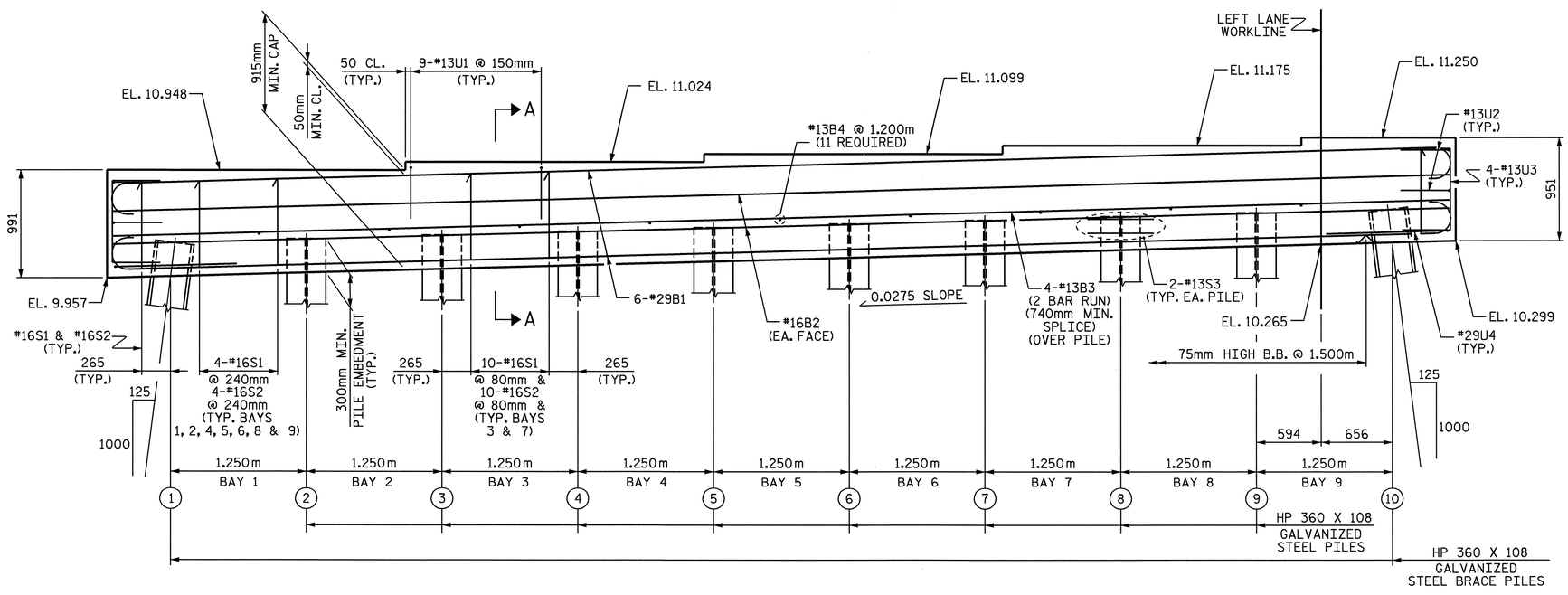

ELEVATION

PROJECT NO. R-2301A

JONES-CRAVEN COUNTY

STATION: 18+22.000-L-

SHEET 1 OF 2

STATE OF NORTH CAROLINA
DEPARTMENT OF TRANSPORTATION
RALEIGH

SUBSTRUCTURE BENT #2 (LEFT LANE)

NORTH CAROLINA PROFESSIONAL SEAL 10730 ENGINEER D. ANDREW DAVENPORT

REVISIONS								SHEET NO. S-25
NO.	BY:	DATE:	NO.	BY:	DATE:			TOTAL SHEETS 176
1			3					
2			4					

DRAWN BY : H. T. BARBOUR DATE : 7-18-08
CHECKED BY : D. A. DAVENPORT DATE : 7-08

05-SEP-2008 09:43
r:\structures\tbarbour\Microstation\STR.I\R-2301A_sd_B*.dgn
tbarbour

STR. #1

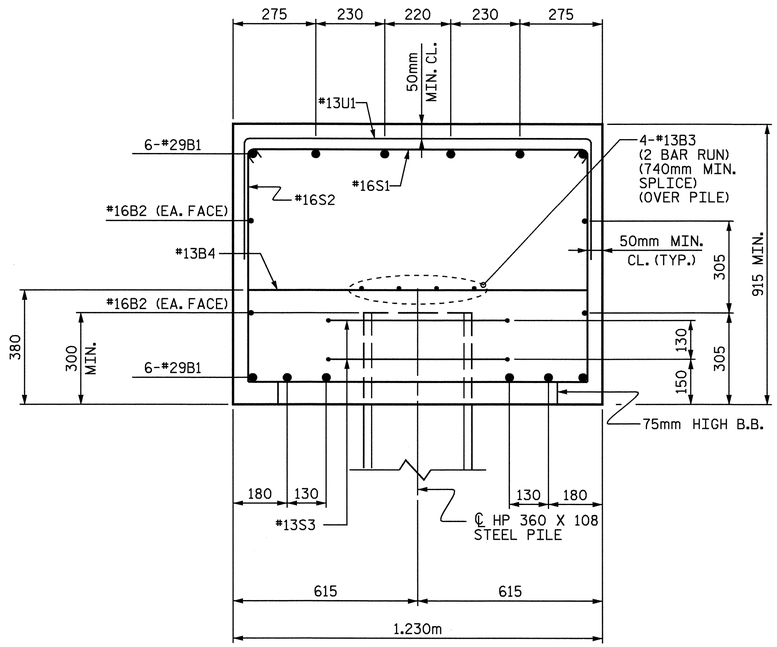

SECTION A-A

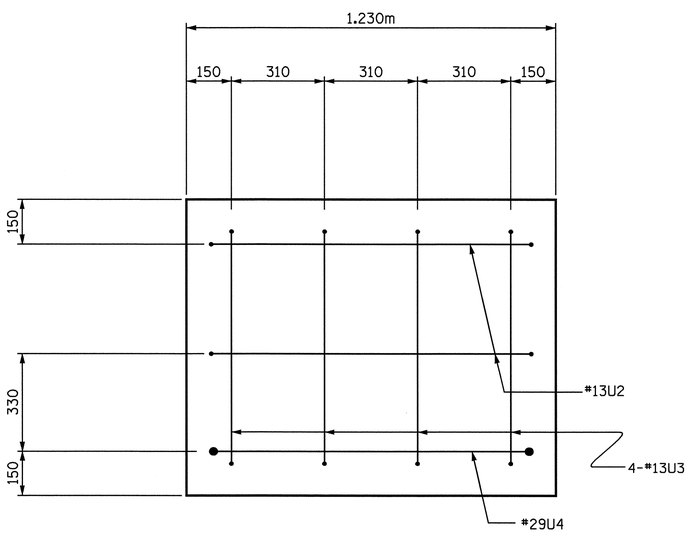

END VIEW

BAR TYPES

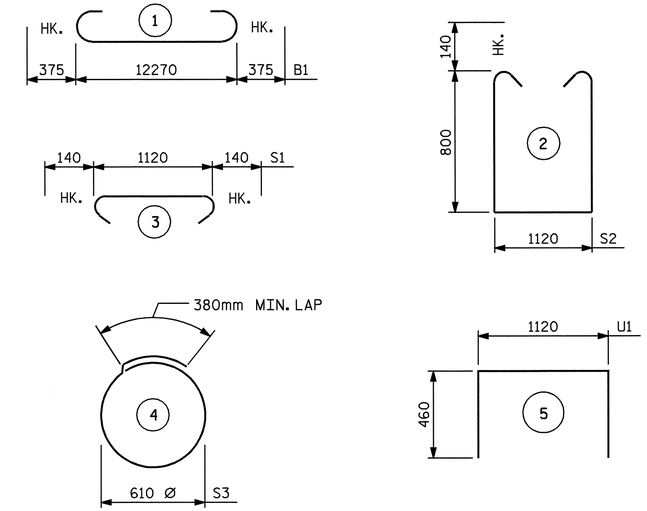

ALL BAR DIMENSIONS ARE OUT TO OUT.

BILL OF MATERIAL
BENT #2

BAR	NO.	SIZE	TYPE	LENGTH	WEIGHT
B1	12	29	1	13020	791
B2	4	16	STR	12320	76
B3	8	13	STR	6540	52
B4	11	13	STR	1120	12
S1	50	16	3	1400	109
S2	50	16	2	3000	233
S3	20	13	4	2300	46
U1	45	13	5	2040	91
U2	4	13	5	2000	8
U3	8	13	5	1720	14
U4	2	29	5	3320	34

REINFORCING STEEL 1466 kg.

CLASS A CONCRETE BREAKDOWN

POUR 1 (CAP) 14.6 C.M.

TOTAL CLASS A CONCRETE 14.6 C.M.

℄ HP 360 X 108 GALVANIZED STEEL PILES

NO. = 10 230.000m

PILE REDRIVES

EACH 5

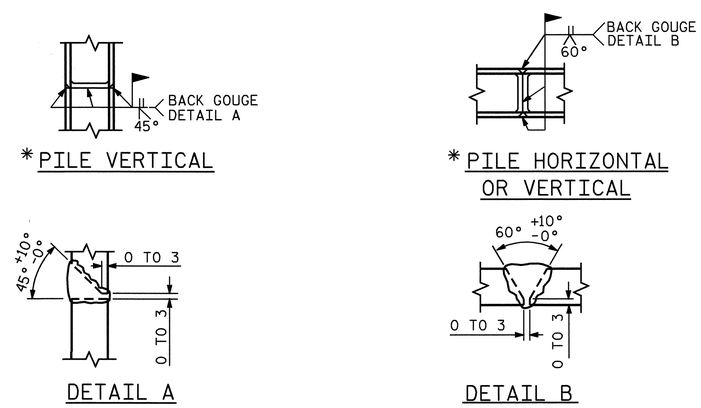

*PILE VERTICAL

*PILE HORIZONTAL OR VERTICAL

DETAIL A

DETAIL B

PILE SPLICE DETAILS

*POSITION OF PILE DURING WELDING.

PROJECT NO. R-2301A

JONES-CRAVEN COUNTY

STATION: 18+22.000-L-

SHEET 2 OF 2

STATE OF NORTH CAROLINA
DEPARTMENT OF TRANSPORTATION
RALEIGH

SUBSTRUCTURE
BENT #2
(LEFT LANE)

NORTH CAROLINA PROFESSIONAL SEAL 10730 ENGINEER D. ANDREW DAVENPORT, JR.

REVISIONS						SHEET NO. S-26
NO.	BY:	DATE:	NO.	BY:	DATE:	TOTAL SHEETS 176
1			3			
2			4			

DRAWN BY : H. T. BARBOUR DATE : 7-18-08
CHECKED BY : D. A. DAVENPORT DATE : 7-08

05-SEP-2008 09:26
r:\structures\tbarbour\microstation\str.1\r-2301a_sd_b*.dgn
tbarbour

STR. #1

NOTES

SEE SUPERSTRUCTURE SHEETS FOR UPPER PART OF INTEGRAL END BENT DETAILS.

THE CONTRACTOR SHALL PROVIDE FOR INSTALLATION OF THE 102mm DIAMETER DRAIN PIPE THROUGH THE WING WALL AS REQUIRED FOR REINFORCED BRIDGE APPROACH FILLS, SEE THE ROADWAY PLANS. REINFORCING STEEL IN THE WING WALL MAY BE SHIFTED AS NECESSARY TO CLEAR THE DRAIN PIPE.

THE CONTRACTOR'S ATTENTION IS CALLED TO THE FACT THAT THE UPPER PART OF THE END BENT WINGS ARE TO BE POURED WITH POUR #4 OF THE SUPERSTRUCTURE.

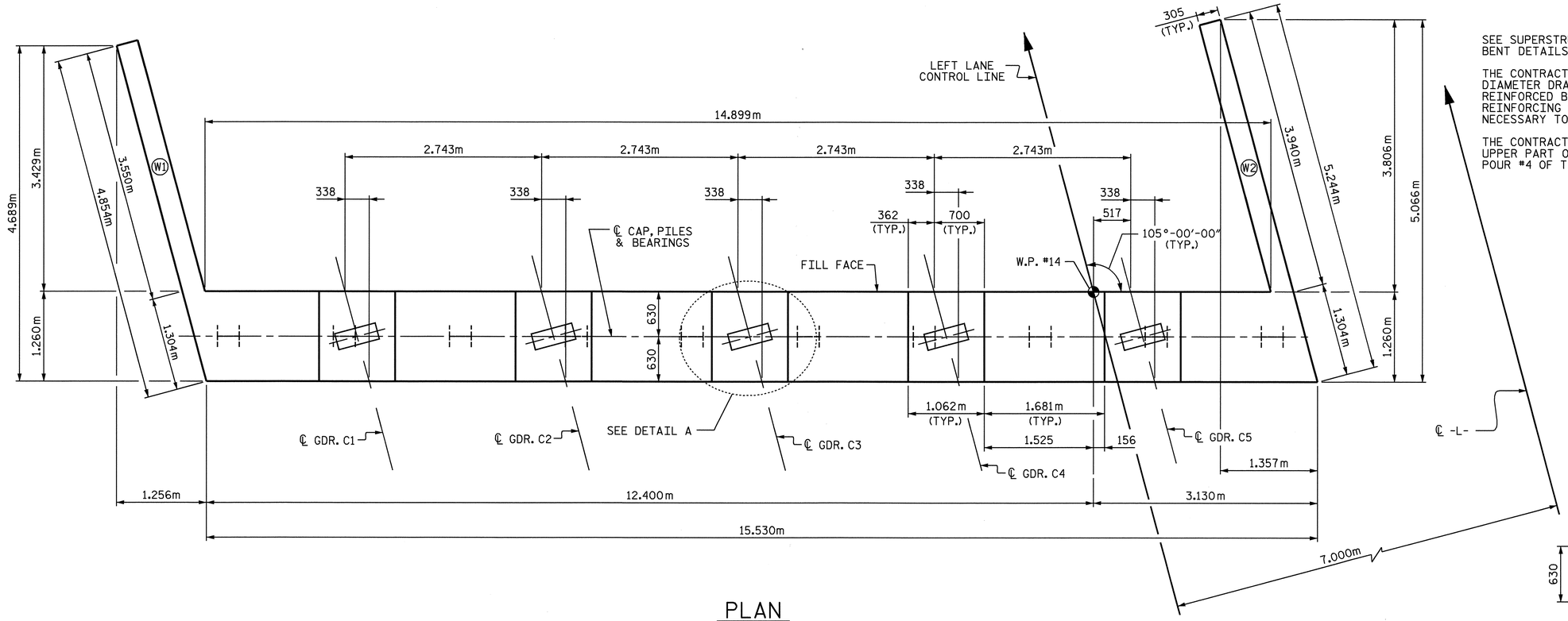

PLAN

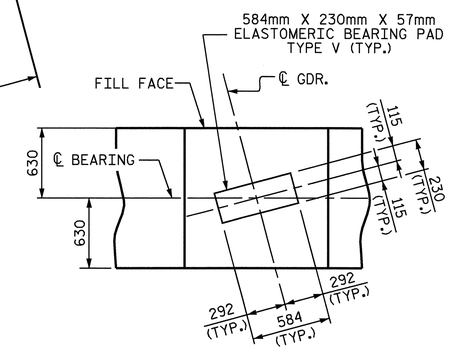

DETAIL A

PILES NOT SHOWN FOR CLARITY

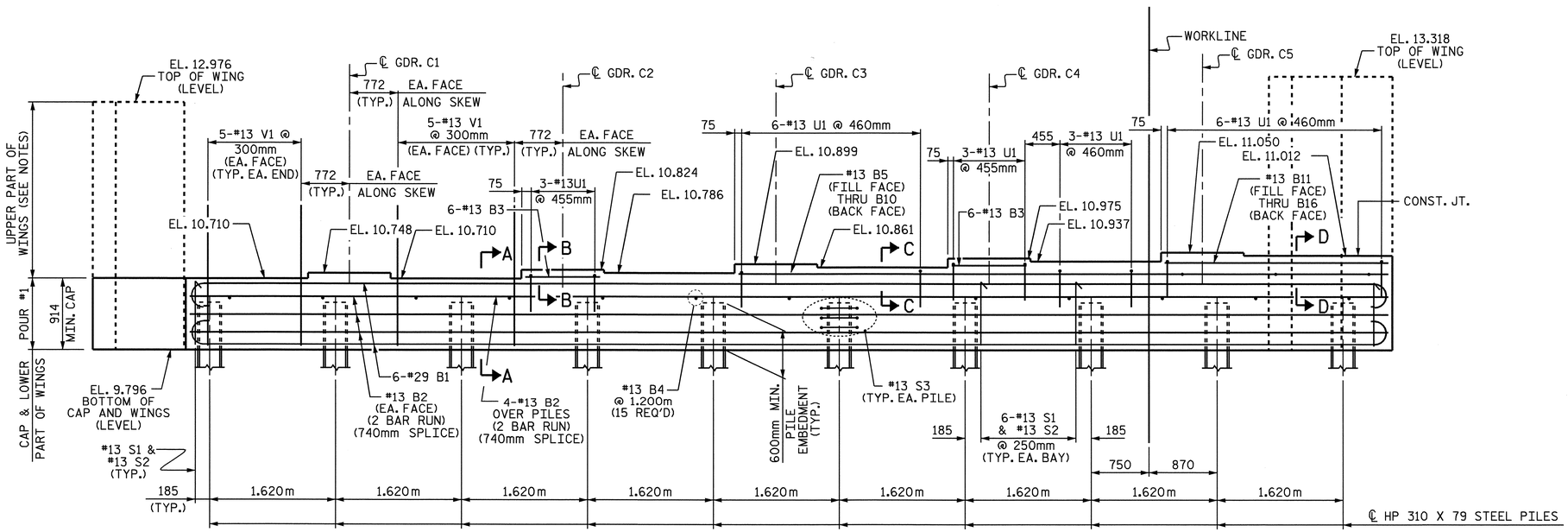

ELEVATION

PROJECT NO. R-2301A

JONES-CRAVEN COUNTY

STATION: 18+22.000 -L-

SHEET 1 OF 3

STATE OF NORTH CAROLINA
DEPARTMENT OF TRANSPORTATION
RALEIGH

SUBSTRUCTURE INTEGRAL END BENT #2 (LEFT LANE)

NORTH CAROLINA PROFESSIONAL SEAL 10730 ENGINEER D. ANDRE DAVENPORT, JR.

REVISIONS						SHEET NO.
NO.	BY:	DATE:	NO.	BY:	DATE:	S-27
1			3			TOTAL SHEETS
2			4			176

STR. #1

DRAWN BY : M. G. SHAIKH DATE : 07-03-08
CHECKED BY : H. T. BARBOUR DATE : 07-29-08

04-SEP-2008 11:40
r:\structures\mshaikh\R-2301a\Microstation\LEFT LANE STR #1\R-2301A_sd_E*.dgn
tbarbour

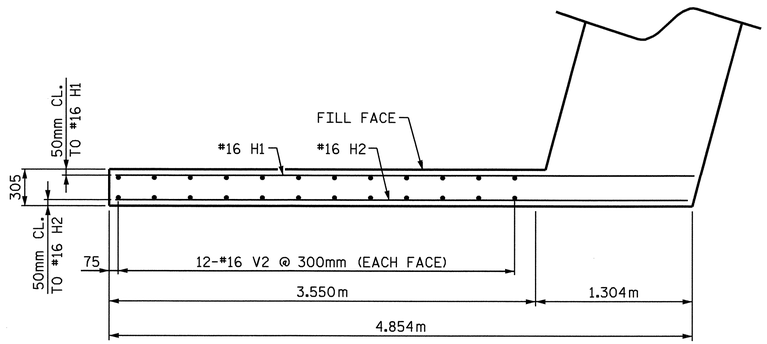

PLAN OF LEFT WING (W1)

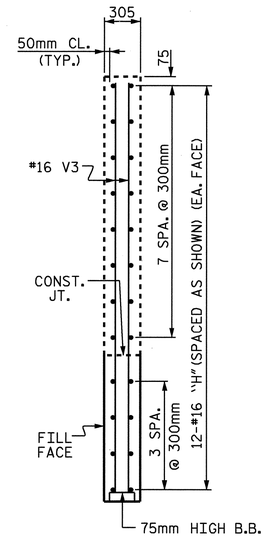

SECTION Y-Y

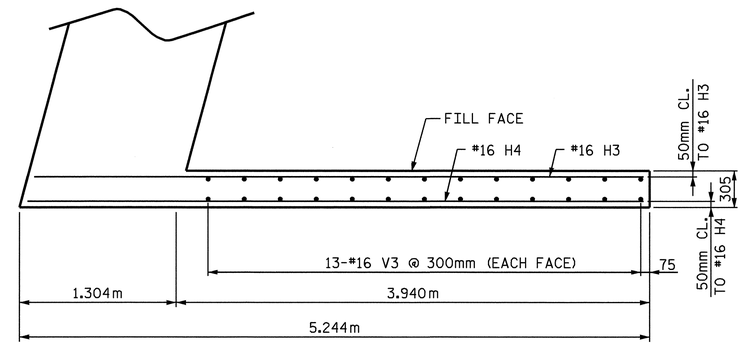

PLAN OF RIGHT RIGHT (W2)

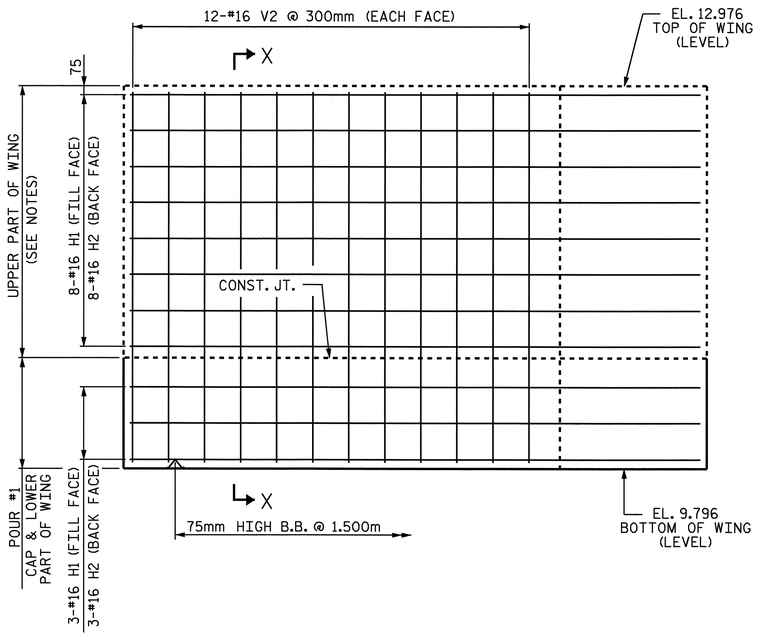

ELEVATION OF LEFT WING (W1)

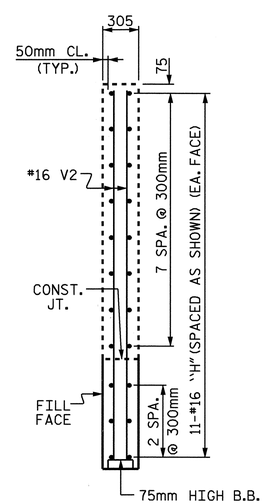

SECTION X-X

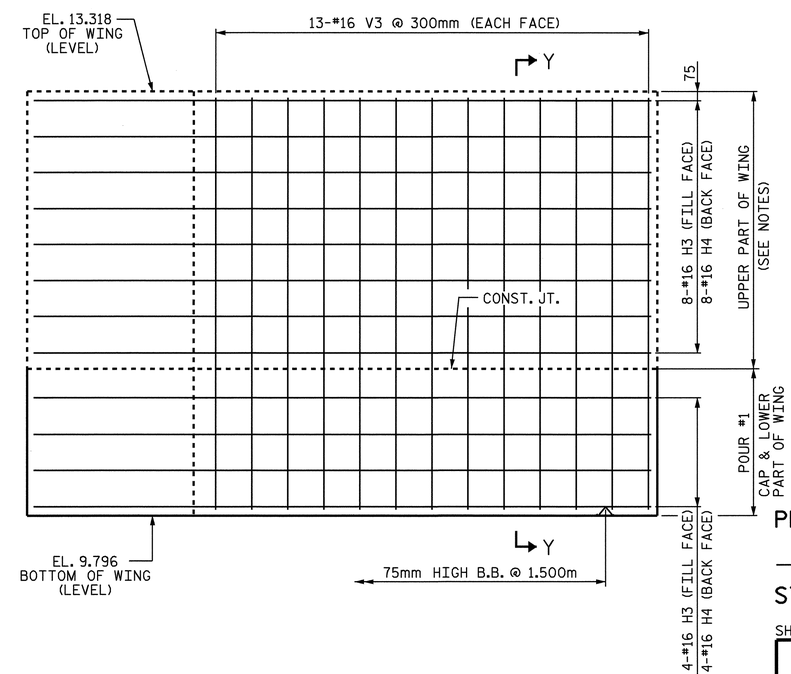

ELEVATION OF RIGHT WING (W2)

PROJECT NO. R-2301A

JONES-CRAVEN COUNTY

STATION: 18+22.000 -L-

SHEET 2 OF 3

STATE OF NORTH CAROLINA
DEPARTMENT OF TRANSPORTATION
RALEIGH

SUBSTRUCTURE
INTEGRAL
END BENT #2
(LEFT LANE)

NORTH CAROLINA PROFESSIONAL SEAL 10730 ENGINEER D. ANDRE DAVENPORT, JR.

REVISIONS						SHEET NO.
NO.	BY:	DATE:	NO.	BY:	DATE:	S-28
1			3			TOTAL SHEETS
2			4			176

DRAWN BY : M. G. SHAIKH DATE : 07-07-08
CHECKED BY : H. T. BARBOUR DATE : 07-29-08

12-AUG-2008 08:59
f:\structures\mshaikh\Microstation\LEFT LANE STR #1\R-2301A_sd_E*.dgn
addavenport

STR #1

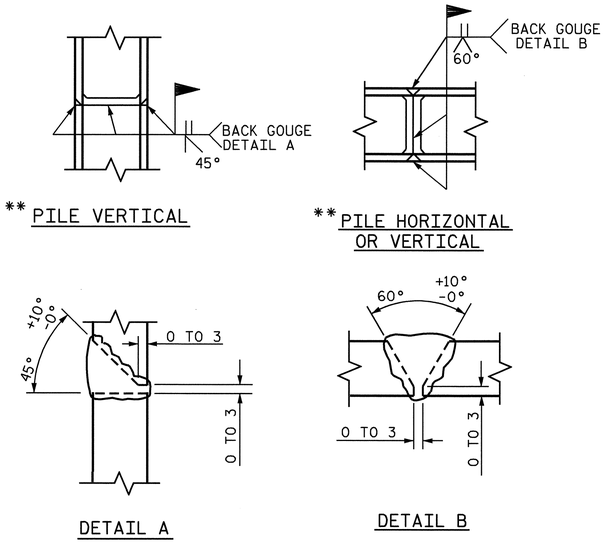

PILE SPLICE DETAILS

** POSITION OF PILE DURING WELDING.

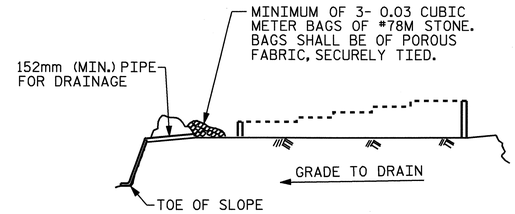

BAGGED STONE AND PIPE SHALL BE PLACED IMMEDIATELY AFTER COMPLETION OF END BENT EXCAVATION. PIPE MAY BE EITHER CONCRETE, CORRUGATED STEEL, CORRUGATED ALUMINUM ALLOY, OR CORRUGATED PLASTIC. PERFORATED PIPE WILL NOT BE ALLOWED.

BAGGED STONE SHALL REMAIN IN PLACE UNTIL THE ENGINEER DIRECTS THAT IT BE REMOVED. THE CONTRACTOR SHALL REMOVE AND DISPOSE OF SILT ACCUMULATIONS AT BAGGED STONE WHEN SO DIRECTED BY THE ENGINEER. BAGS SHALL BE REMOVED AND REPLACED WHENEVER THE ENGINEER DETERMINES THAT THEY HAVE DETERIORATED AND LOST THEIR EFFECTIVENESS.

NO SEPARATE PAYMENT WILL BE MADE FOR THIS WORK AND THE ENTIRE COST OF THIS WORK SHALL BE INCLUDED IN THE UNIT CONTRACT PRICE BID FOR THE SEVERAL PAY ITEMS.

TEMPORARY DRAINAGE AT END BENT

BAR TYPES

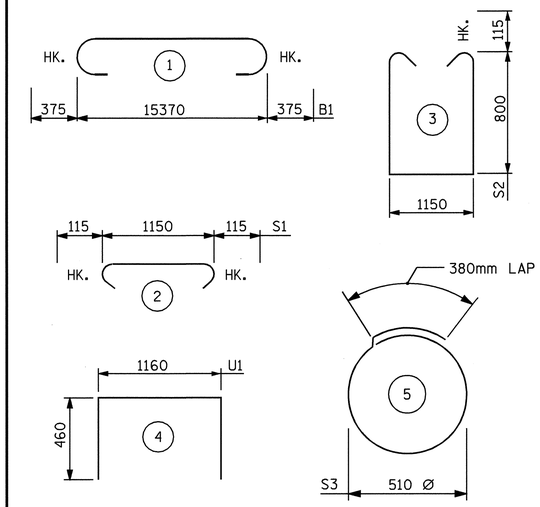

ALL BAR DIMENSIONS ARE OUT TO OUT.

BILL OF MATERIAL

END BENT #2

BAR	NO.	SIZE	TYPE	LENGTH	WEIGHT
B1	12	#29	1	16120	979
B2	20	#13	STR	8080	161
B3	6	#13	STR	960	6
B4	15	#13	STR	1160	17
B5	1	#13	STR	8340	8
B6	1	#13	STR	8280	8
B7	1	#13	STR	8240	8
B8	1	#13	STR	8140	8
B9	1	#13	STR	8080	8
B10	1	#13	STR	8040	8
B11	1	#13	STR	2840	3
B12	1	#13	STR	2800	3
B13	1	#13	STR	2740	3
B14	1	#13	STR	2660	3
B15	1	#13	STR	2600	3
B16	1	#13	STR	2560	3
H1	11	#16	STR	4820	82
H2	11	#16	STR	4760	81
H3	12	#16	STR	5060	94
H4	12	#16	STR	5120	95
S1	56	#13	2	1380	77
S2	56	#13	3	2980	166
S3	30	#13	5	1980	59
U1	21	#13	4	2080	43
V1	60	#13	STR	1820	109
V2	24	#16	STR	3080	115
V3	26	#16	STR	3420	138

REINFORCING STEEL = 2288 KG

CLASS A CONCRETE

* POUR #1
(CAP & LOWER PART OF WINGS)
CU. METERS 23.3
TOTAL CU. METERS 23.3

HP 310 X 79 STEEL PILES
NO. 10 METERS 230.000

PILE REDRIVES
EACH 5

* CONCRETE QUANTITY FOR UPPER PART OF WINGS IN POUR #4 ON SUPERSTRUCTURE.

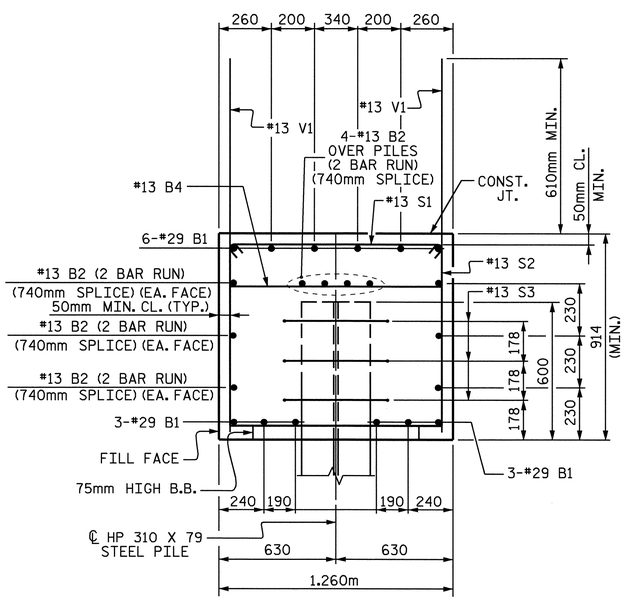

SECTION A-A

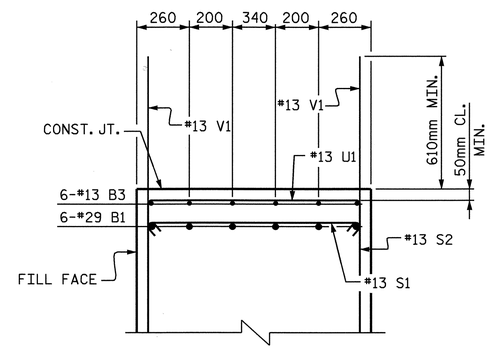

SECTION B-B

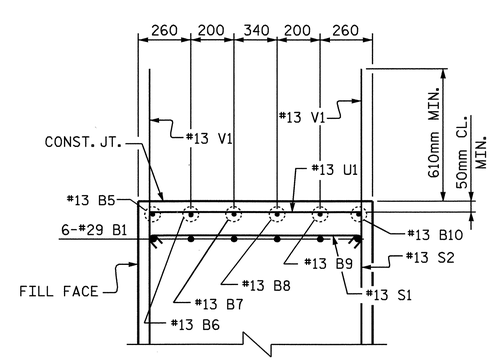

SECTION C-C

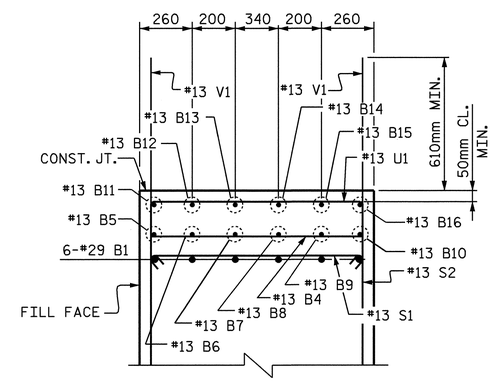

SECTION D-D

PROJECT NO. R-2301A
JONES-CRAVEN COUNTY
STATION: 18+22.000 -L-

SHEET 3 OF 3

STATE OF NORTH CAROLINA
DEPARTMENT OF TRANSPORTATION
RALEIGH

SUBSTRUCTURE INTEGRAL END BENT #2 (LEFT LANE)

NORTH CAROLINA PROFESSIONAL SEAL 10730 ENGINEER D. ANDREW DAVENPORT, JR.
9-8-08

REVISIONS						SHEET NO.
NO.	BY:	DATE:	NO.	BY:	DATE:	S-29
1			3			TOTAL SHEETS
2			4			176

STR. #1

DRAWN BY : M. G. SHAIKH DATE : 07-09-08
CHECKED BY : H. T. BARBOUR DATE : 07-29-08

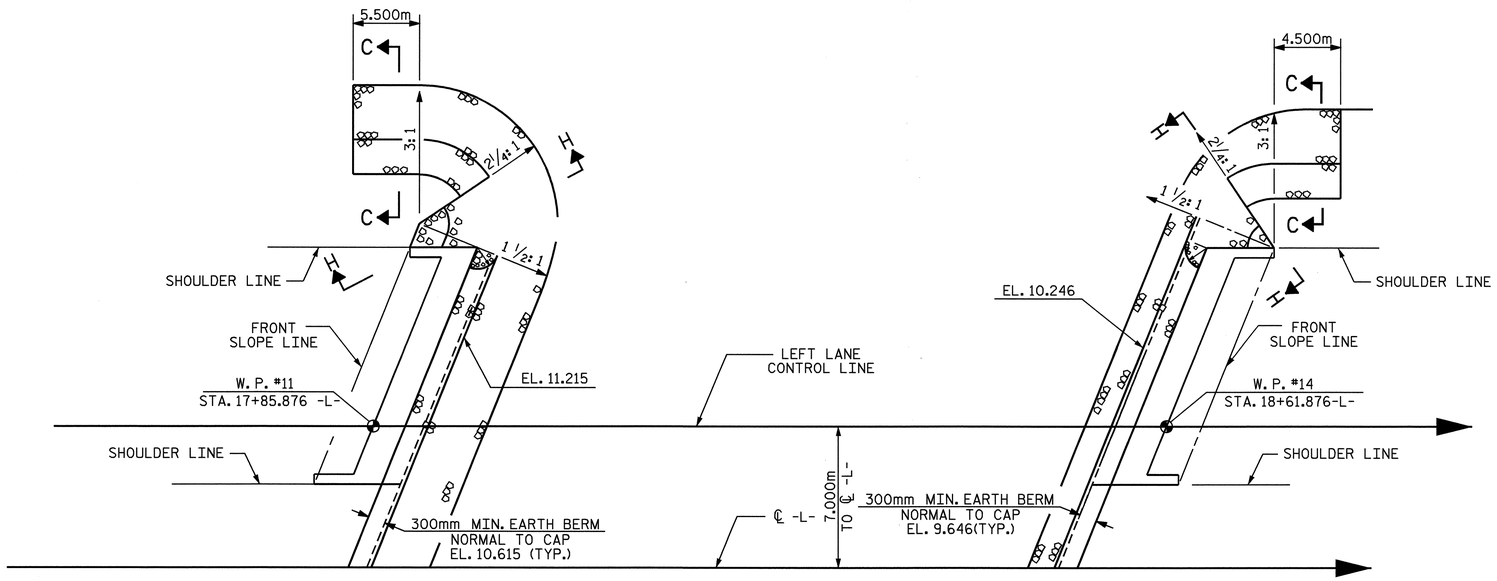

END BENT #1

END BENT #2

PLAN

ESTIMATED QUANTITIES		
BRIDGE @ STA. 18+22.000 -L- (LEFT LANE)	RIP RAP CLASS II (600mm THICK)	FILTER FABRIC FOR DRAINAGE
	METRIC TON	SQUARE METERS
END BENT 1	150	153
END BENT 2	74	75
TOTAL	224	228

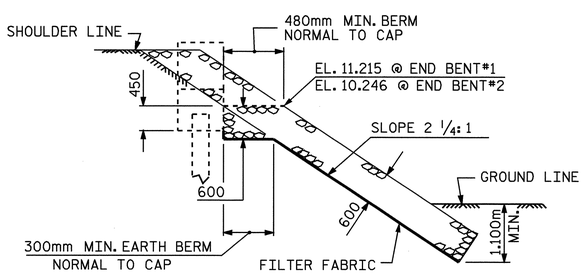

SECTION H-H

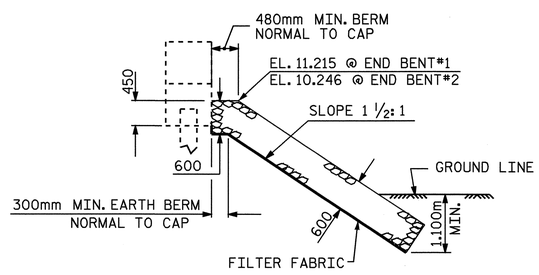

℄ SECTION

BERM RIP RAPPED

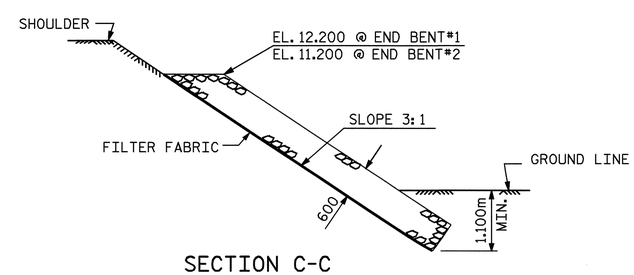

SECTION C-C

PROJECT NO. R-2301A
JONES-CRAVEN COUNTY
STATION: 18+22.000 -L-

STATE OF NORTH CAROLINA
DEPARTMENT OF TRANSPORTATION
RALEIGH

=RIP RAP DETAILS=
LEFT LANE

NORTH CAROLINA PROFESSIONAL SEAL 10730 ENGINEER D. ANDREW DAVENPORT, JR.

REVISIONS							SHEET NO.
NO.	BY:	DATE:	NO.	BY:	DATE:		S-30
1			3				TOTAL SHEETS
2			4				176

ASSEMBLED BY : M. G. SHIAKH DATE :06-24-08
CHECKED BY : W.B. HILL DATE :07-08

DRAWN BY : REK 1/84 REV. 8/16/99 RWW/LES
CHECKED BY : RDU 1/84 REV. 10/17/00 RWW/LES
REV. 5/1/06 TLA/GM

13-AUG-2008 09:53
f:\structures\mshalkh\Microstation\LEFT LANE STR #1\R-2301A_sd_RR.dgn
addavenport

STR #1 SKEW > 90° STD. NO. RR3SM

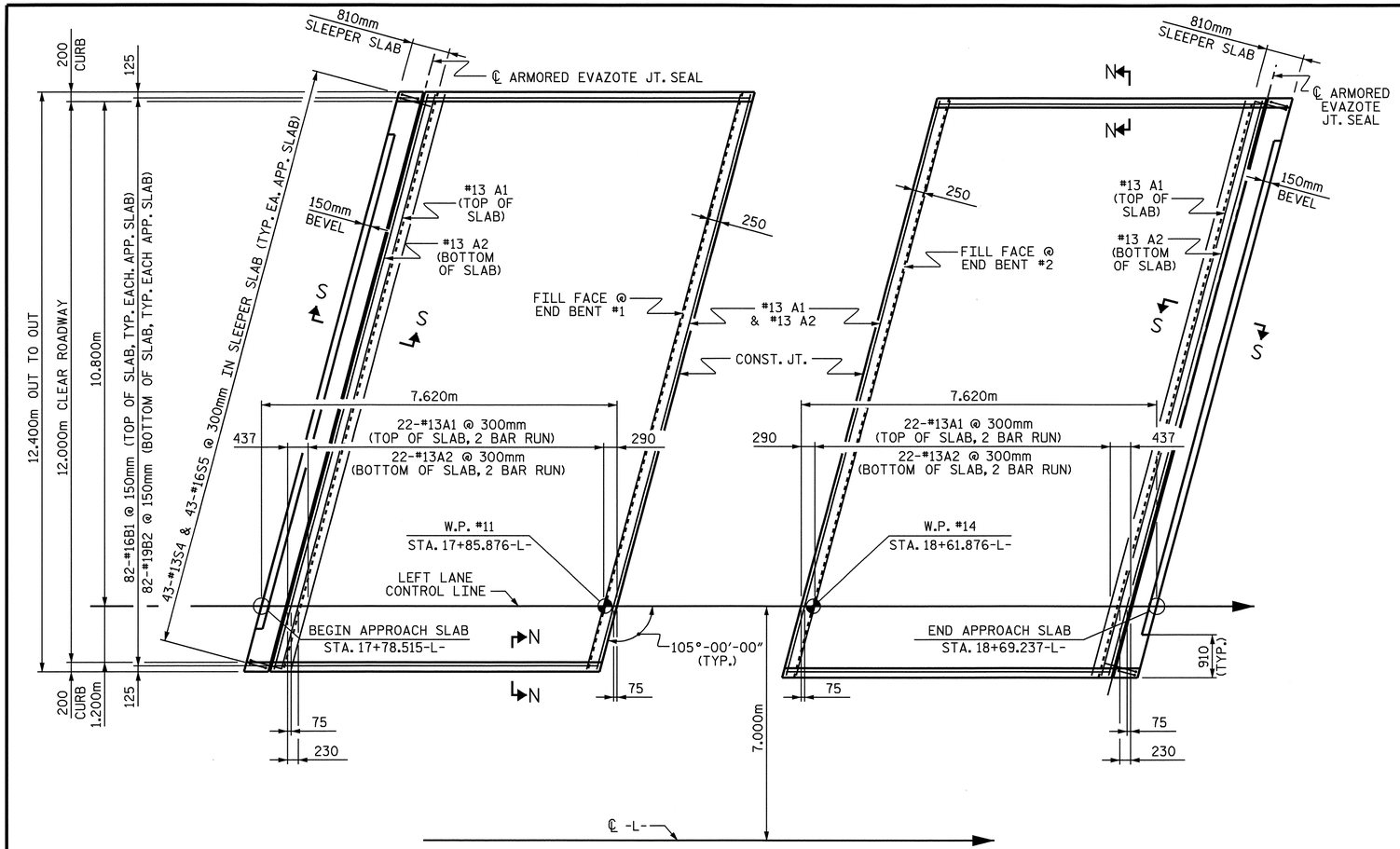

PLAN @ END BENT #1

PLAN @ END BENT #2

DIMENSIONS SHOWN ARE TYPICAL FOR BOTH APPROACH SLABS. #13 A1 BARS IN SLEEPER SLAB NOT SHOWN FOR CLARITY.

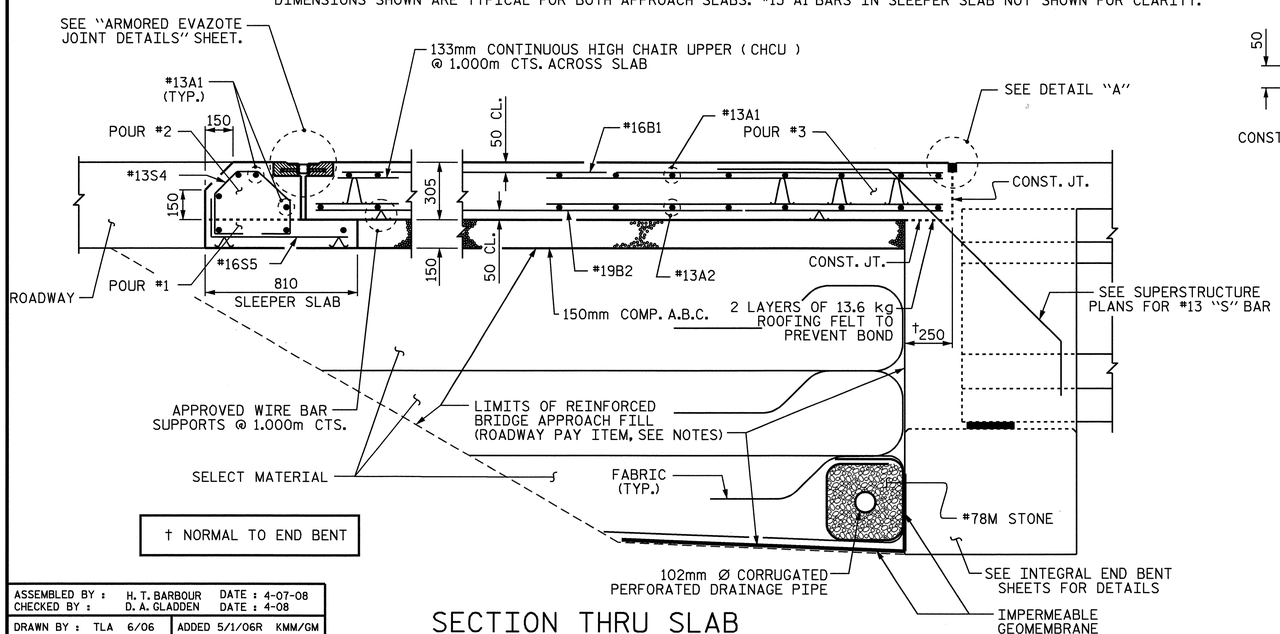

† NORMAL TO END BENT

SECTION THRU SLAB

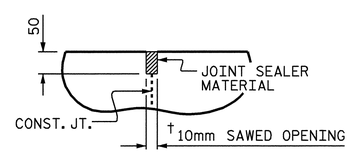

DETAIL "A"

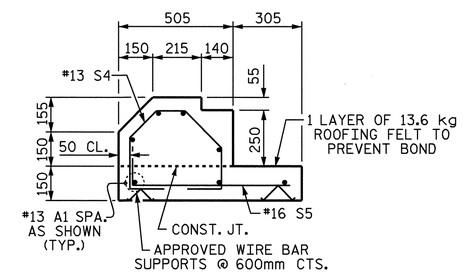

SECTION S-S

SHOWING SLEEPER SLAB

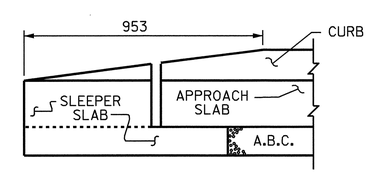

END OF CURB WITHOUT SHOULDER BERM GUTTER

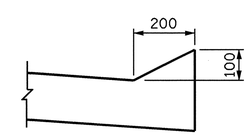

SECTION N-N

NOTES

APPROACH SLAB SHALL NOT BE CONSTRUCTED PRIOR TO COMPLETION OF THE BRIDGE DECK.

FOR REINFORCED BRIDGE APPROACH FILL INCLUDING FABRIC, IMPERMEABLE GEOMEMBRANE, 102mm Ø DRAINAGE PIPE, #78M STONE, AND SELECT MATERIAL, SEE ROADWAY PLANS.

AREA BETWEEN THE WINGWALL AND APPROACH SLAB SHALL BE GRADED TO DRAIN THE WATER AWAY FROM THE FILL FACE OF THE BRIDGE AND SHALL BE PAVED. SEE ROADWAY PLANS.

THE 150mm COMP. A.B.C. SHALL BE FLUSH WITH THE SLEEPER SLAB AND SHALL EXTEND 300mm OUTSIDE OF EACH EDGE OF THE APPROACH SLAB.

THE CONTRACTOR MAY USE 100mm TYPE B-25.0B ASPHALT CONCRETE BASE COURSE IN LIEU OF 150mm COMP. A.B.C. IF THIS OPTION IS USED, THE BASE COURSE SHALL BE FLUSH WITH THE SLEEPER SLAB, AND THE WIDTH SHALL BE THE SAME AS THAT OF THE APPROACH SLAB.

THE CONTRACTOR MAY USE 125mm CLASS "A" CONCRETE BASE IN LIEU OF 150mm COMP. A.B.C. IF THIS OPTION IS USED, THE CONCRETE BASE SHALL BE FLUSH WITH THE SLEEPER SLAB, AND THE WIDTH SHALL BE THE SAME AS THAT OF THE APPROACH SLAB. THE CONCRETE SHALL BE FINISHED TO A SMOOTH SURFACE AND A LAYER OF 13.6 kg ROOFING FELT SHALL BE PLACED BETWEEN THE CONCRETE BASE AND THE APPROACH SLAB TO PREVENT BOND. THE APPROACH SLAB SHALL NOT BE CAST UNTIL THE CONCRETE BASE HAS REACHED AN AGE OF THREE CURING DAYS.

THE VERTICAL JOINT ON THE RIGHT AND LEFT SIDE OF THE APPROACH SLAB AT THE ENDS OF THE EVAZOTE JOINT SHALL BE FILLED WITH SILICONE OR OTHER APPROVED MATERIAL IN ORDER TO PREVENT BACKFILL FROM ENTERING THE JOINT OPENING.

THE JOINT OPENING AT THE APPROACH SLAB/DECK INTERFACE SHALL BE SAWED NO MORE THAN 12 HOURS AFTER THE APPROACH SLAB IS CAST. THE JOINT SHALL BE CLEANED OF ALL DEBRIS BEFORE THE SEALANT IS APPLIED. THE JOINT SEALER MATERIAL SHALL CONFORM TO THE REQUIREMENTS OF TYPE SL LOW MODULUS SILICONE SEALANT.

FOR EVAZOTE JOINT SEALS, SEE SPECIAL PROVISIONS.

THE NOMINAL UNCOMPRESSED SEAL WIDTH OF THE EVAZOTE JOINT SEAL SHALL BE 71mm.

FOR ELASTOMERIC CONCRETE, SEE SPECIAL PROVISIONS.

BILL OF MATERIAL

FOR ONE APPROACH SLAB (2 REQ'D)

BAR	NO.	SIZE	TYPE	LENGTH	WEIGHT
* A1	62	#13	STR	6680	412
A2	48	#13	STR	6640	317
* B1	82	#16	STR	6800	865
B2	82	#19	STR	6960	1276
* S4	43	#13		1200	
S5	43	#16		880	

REINFORCING STEEL	1652 kg.
* EPOXY COATED REINFORCING STEEL	1328 kg.
CLASS AA CONCRETE	
POUR #1 - BOTTOM SLEEPER SLAB	1.6 C.M.
POUR #2 - TOP OF SLEEPER SLAB	1.8 C.M.
POUR #3 - SLAB & CURB	26.8 C.M.
TOTAL	30.2 C.M.

BAR TYPES

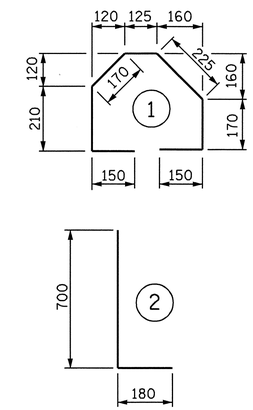

ALL BAR DIMENSIONS ARE OUT TO OUT

PROJECT NO. R-2301A

JONES-CRAVEN COUNTY

STATION: 18+22.000 -L-

SHEET 1 OF 3

STATE OF NORTH CAROLINA
DEPARTMENT OF TRANSPORTATION
RALEIGH

BRIDGE APPROACH SLAB FOR INTEGRAL ABUTMENT (LEFT LANE)

NORTH CAROLINA PROFESSIONAL SEAL 10730 ENGINEER D. ANDREW DAVENPORT, JR.

9-8-08

REVISIONS						
NO.	BY:	DATE:	NO.	BY:	DATE:	
1			3			
2			4			

SHEET NO. S-31

TOTAL SHEETS 176

ASSEMBLED BY :	H. T. BARBOUR	DATE : 4-07-08	
CHECKED BY :	D. A. GLADDEN	DATE : 4-08	
DRAWN BY : TLA 6/06		ADDED 5/1/06R KMM/GM	
CHECKED BY : GM 6/06			

12-AUG-2008 09:03
f:\structures\tbarbour\Microstation\STR.I\r-2301a_sd_as.dgn
addavenport

STR. #1

STD. NO. BAS11SM

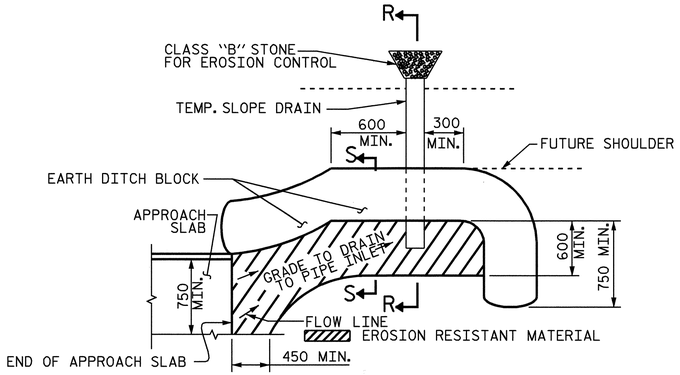

NOTE: IMMEDIATELY AFTER THE CONSTRUCTION OF THE APPROACH SLAB, THE CONTRACTOR SHALL PROVIDE TEMPORARY BERM AND SLOPE DRAIN. CONTRACTOR SHALL GRADE TO PIPE INLET AND PROVIDE EROSION RESISTANT MATERIAL AS SHOWN. THE EROSION RESISTANT MATERIAL SHALL BE EITHER 1) ASPHALT PLANT MIX, TYPE 1 OR TYPE 2, MIN. 50mm DEPTH, 2) EROSION CONTROL MAT, OR 3) CONCRETE, AS DIRECTED BY THE ENGINEER. THE SLOPE DRAIN SHALL CONSIST OF A NON-PERFORATED TEMPORARY DRAINAGE PIPE, 305mm IN DIAMETER.

PLAN VIEW

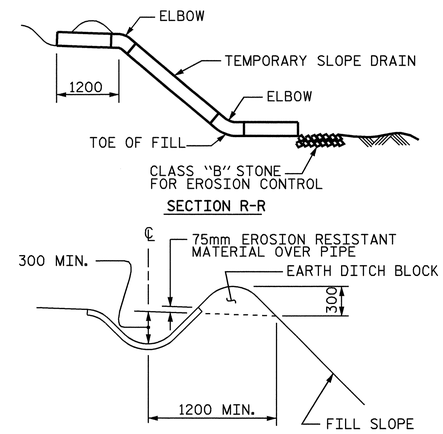

SECTION S-S

TEMPORARY BERM AND SLOPE DRAIN DETAILS

(TO BE USED WHEN SHOULDER BERM GUTTER IS REQUIRED)

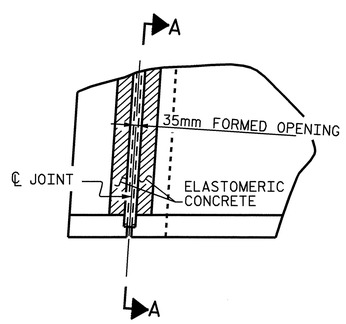

PLAN

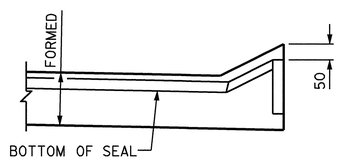

SECTION A-A

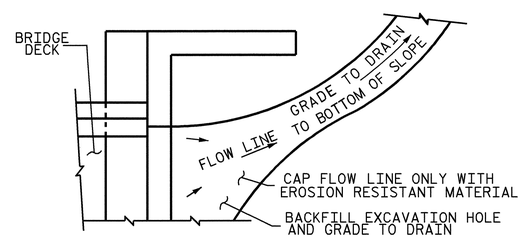

NOTE: IF THE APPROACH SLAB IS NOT CONSTRUCTED IMMEDIATELY AFTER THE BACKFILLING OF THE END BENT EXCAVATION, GRADE TO DRAIN TO THE BOTTOM OF THE SLOPE AND PROVIDE EROSION RESISTANT MATERIAL, SUCH AS FIBERGLASS ROVING OR AS DIRECTED BY THE ENGINEER TO PREVENT SOIL EROSION AND TO PROTECT THE AREA ADJACENT TO THE STRUCTURE. THE CONTRACTOR WILL BE REQUIRED TO REMOVE THESE MATERIALS PRIOR TO CONSTRUCTION OF THE APPROACH SLAB.

TEMPORARY DRAINAGE DETAIL

PROJECT NO. R-2301A
JONES-CRAVEN COUNTY
STATION: 18+22.000 -L-

SHEET 2 OF 3

STATE OF NORTH CAROLINA
DEPARTMENT OF TRANSPORTATION
RALEIGH

BRIDGE APPROACH SLAB DETAILS (LEFT LANE)

NORTH CAROLINA PROFESSIONAL SEAL 10730 ENGINEER D. ANDREW DAVENPORT, JR.

REVISIONS						SHEET NO.
NO.	BY:	DATE:	NO.	BY:	DATE:	S-32
1			3			TOTAL SHEETS
2			4			176

ASSEMBLED BY :	H. T. BARBOUR	DATE :	4-07-08
CHECKED BY :	D. A. GLADDEN	DATE :	4-08
DRAWN BY : FCJ 11/88	REV. 10/17/00 RWW/LES		
CHECKED BY : ARB 11/88	REV. 5/7/03 RWW/JTE		
	REV. 5/1/06R MAA/KMM		

04-SEP-2008 12:21
r:\structures\tbarbour\Microstation\STR.I\r-2301a_sd_as.dgn
tbarbour

STR. #1

STD. NO. BAS10SM

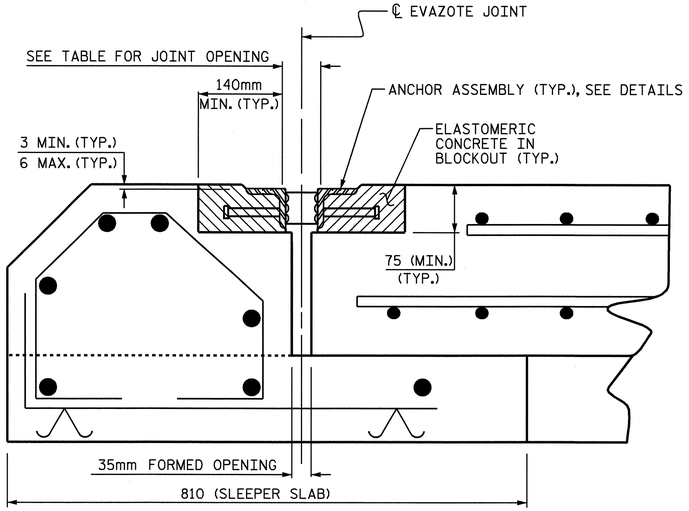

ARMORED JOINT DETAILS

SECTION NORMAL TO JOINT AT END BENT

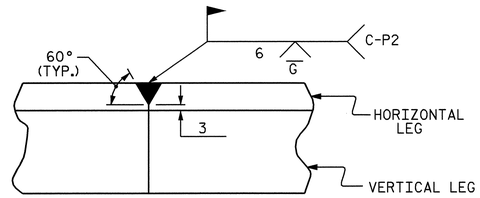

DETAIL- FIELD WELD SPLICE OF ANGLE

NOTES

ANGLES SHALL CONFORM TO AASHTO M270 GRADE 250 STEEL OR APPROVED EQUAL. ALL STUD ANCHORS SHALL CONFORM TO AASHTO M169 GRADES 1010 THRU 1020 OR APPROVED EQUAL.

STUD ANCHORS SHALL BE SHOP WELDED AND ALL HOLES SHALL BE SHOP DRILLED AS SHOWN ON THE PLANS. STUD ANCHORS SHALL BE ELECTRIC ARC END WELDED WITH COMPLETE FUSION.

UPON COMPLETION OF SHOP FABRICATION, THE ENTIRE ANCHOR ASSEMBLY SHALL BE METALLIZED. THE 12.70mm Ø STUD ANCHORS AND ANCHOR TABS NEED NOT BE METALLIZED. SEE SPECIAL PROVISION FOR THERMAL SPRAYED COATINGS (METALLIZATION).

ANCHOR ASSEMBLY SHALL BE MADE CONTINUOUS THE LENGTH OF THE JOINT FROM GUTTER TO GUTTER. FOR FIELD SPLICES AT ALL CROWN BREAK POINTS, THE ENDS OF THE STEEL ANGLES SHALL BE CUT PARALLEL TO THE BRIDGE CENTERLINE. FINISHED FIELD WELDS SHALL BE GROUND SMOOTH AND COATED WITH A MINIMUM THICKNESS OF 0.100mm OF ZINC-RICH PAINT IN ACCORDANCE WITH THE STANDARD SPECIFICATIONS.

ANCHOR ASSEMBLY SEGMENTS SHALL NOT BE LESS 3.6m NOR MORE THAN 6.1m IN LENGTH. SHORTER SEGMENTS MAY BE USED AT THE EDGE OF ROADWAY OR AT POINTS OF STAGED CONSTRUCTION.

THE ANCHOR ASSEMBLY SHALL BE SECURED AND LEVELED AS SHOWN IN THE "ARMORED JOINT ANCHOR ASSEMBLY DETAILS". NO SUBMITTALS ARE REQUIRED FOR 9.53mm Ø EXPANSION ANCHORS, NUTS OR WASHERS. THE CONTRACTOR MAY SUBMIT FOR APPROVAL AN ALTERNATE METHOD OF ALIGNING AND LEVELING THE ANGLES. THE ALTERNATE METHOD SHALL NOT INCLUDE ANY WELDING TO THE OUTSIDE FACE OF THE ANGLES.

AFTER THE ELASTOMERIC CONCRETE HAS BEEN CAST ON BOTH SIDES OF THE JOINT, REMOVE ANY EXCESS CONCRETE THAT COMES THROUGH THE WEEP HOLES AND THOROUGHLY CLEAN THE ANGLES. ANY DAMAGED STEEL SHALL BE COATED WITH A MINIMUM OF 0.100mm OF ZINC-RICH PAINT IN ACCORDANCE WITH THE STANDARD SPECIFICATIONS.

SEE SPECIAL PROVISIONS FOR EVAZOTE JOINT SEALS.

SEE SPECIAL PROVISIONS FOR ELASTOMERIC CONCRETE.

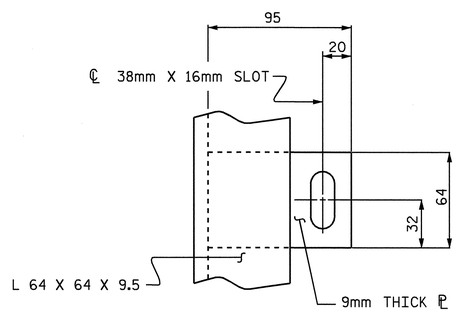

PLAN VIEW OF TAB

MOVEMENT AND SETTING OF EVAZOTE JOINT						
END BENT NO.	SKEW ANGLE	NOMINAL UNCOMPRESSED SEAL WIDTH	TOTAL MOVEMENT (ALONG ℄ RDWY)	PERPENDICULAR JOINT OPENING AT 7° C	PERPENDICULAR JOINT OPENING AT 16° C	PERPENDICULAR JOINT OPENING AT 32° C
1	105°-00'-00"	71mm	31mm	63mm	57mm	47mm
2	105°-00'-00"	71mm	31mm	63mm	57mm	47mm

TOTAL MOVEMENT IS CALCULATED ALONG THE CENTERLINE OF ROADWAY.
JOINT OPENINGS ARE MEASURED PERPENDICULAR TO THE JOINT.

BILL OF MATERIAL		
END BENT NO.	ELASTOMERIC CONCRETE ✱ (CU. m)	TOTAL LENGTH OF ANGLE (m)
1	0.3	24.847
2	0.3	24.847

✱ BASED ON THE MINIMUM BLOCKOUT SHOWN.

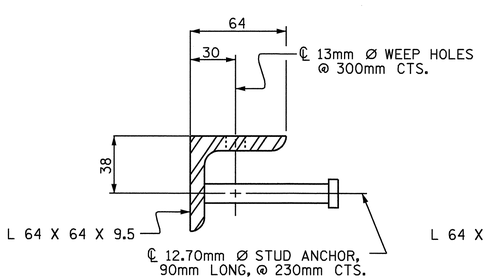

SECTION VIEW OF STUD

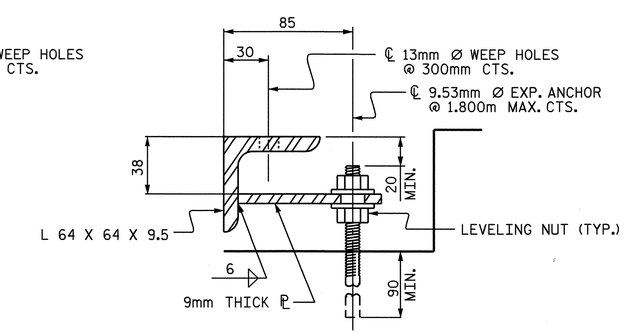

SECTION VIEW OF TAB

ARMORED JOINT ANCHOR ASSEMBLY DETAILS

PROJECT NO. R-2301A
JONES-CRAVEN COUNTY
STATION: 18+22.000 -L-

SHEET 3 OF 3

STATE OF NORTH CAROLINA
DEPARTMENT OF TRANSPORTATION
RALEIGH

ARMORED EVAZOTE JOINT DETAILS (LEFT LANE)

NORTH CAROLINA PROFESSIONAL SEAL 10730 ENGINEER ANDREW DAVENPORT, JR.
9-8-08

REVISIONS						
NO.	BY:	DATE:	NO.	BY:	DATE:	
1			3			
2			4			

SHEET NO. S-33
TOTAL SHEETS 76

ASSEMBLED BY :	H. T. BARBOUR	DATE :	4-07-08
CHECKED BY :	D. A. GLADDEN	DATE :	4-08
DRAWN BY : EEM 1/96	REV. 7/10/01	LES/RDR	
CHECKED BY : RGW 1/96	REV. 5/7/03RR	RWW/JTE	
	REV. 5/1/06	TLA/GM	

08-AUG-2008 09:14
r:\structures\tbarbour\microstation\str.l\r-2301a_sd_as.dgn
tbarbour

STR. #1

STD. NO. AEJ1SM

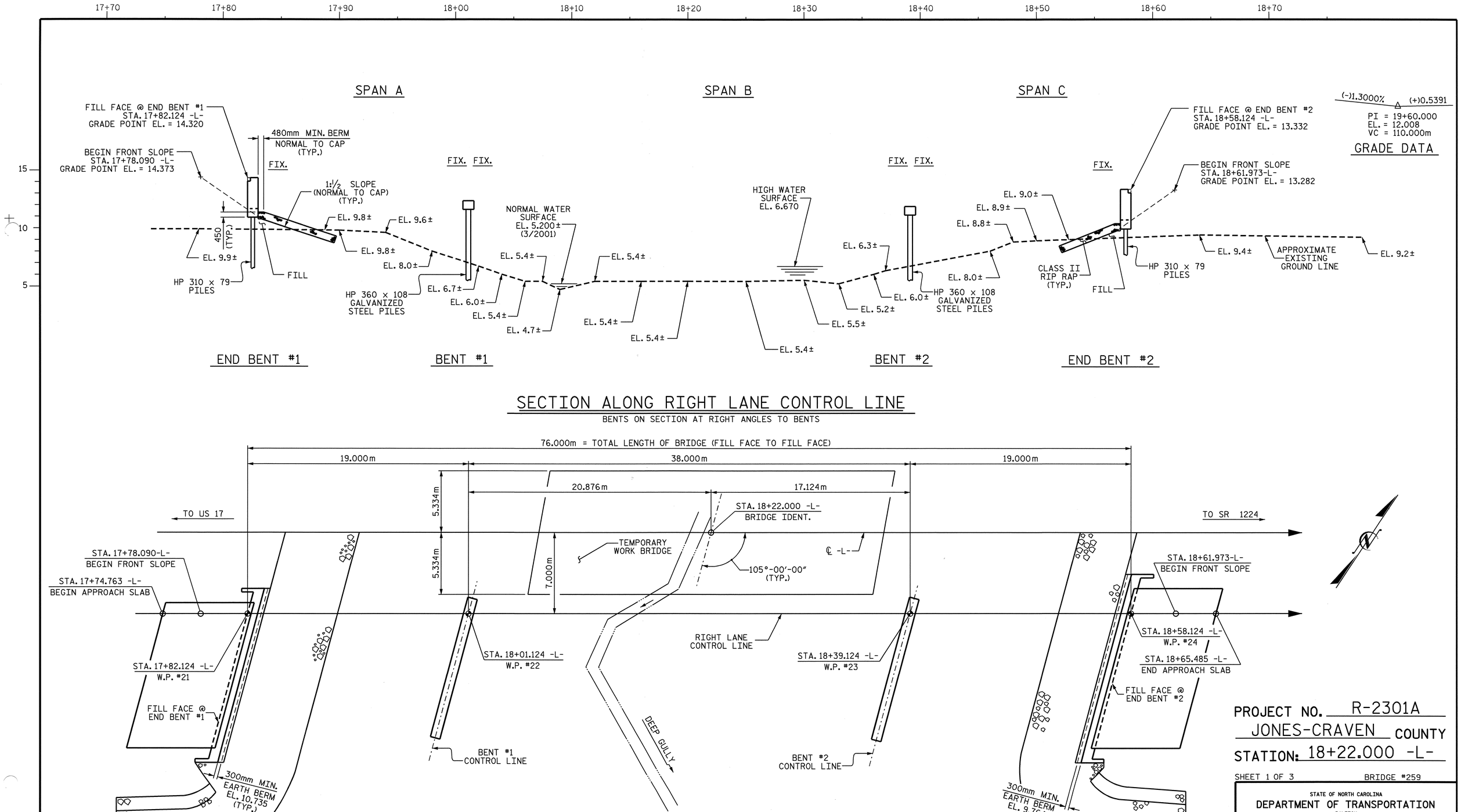

SECTION ALONG RIGHT LANE CONTROL LINE

BENTS ON SECTION AT RIGHT ANGLES TO BENTS

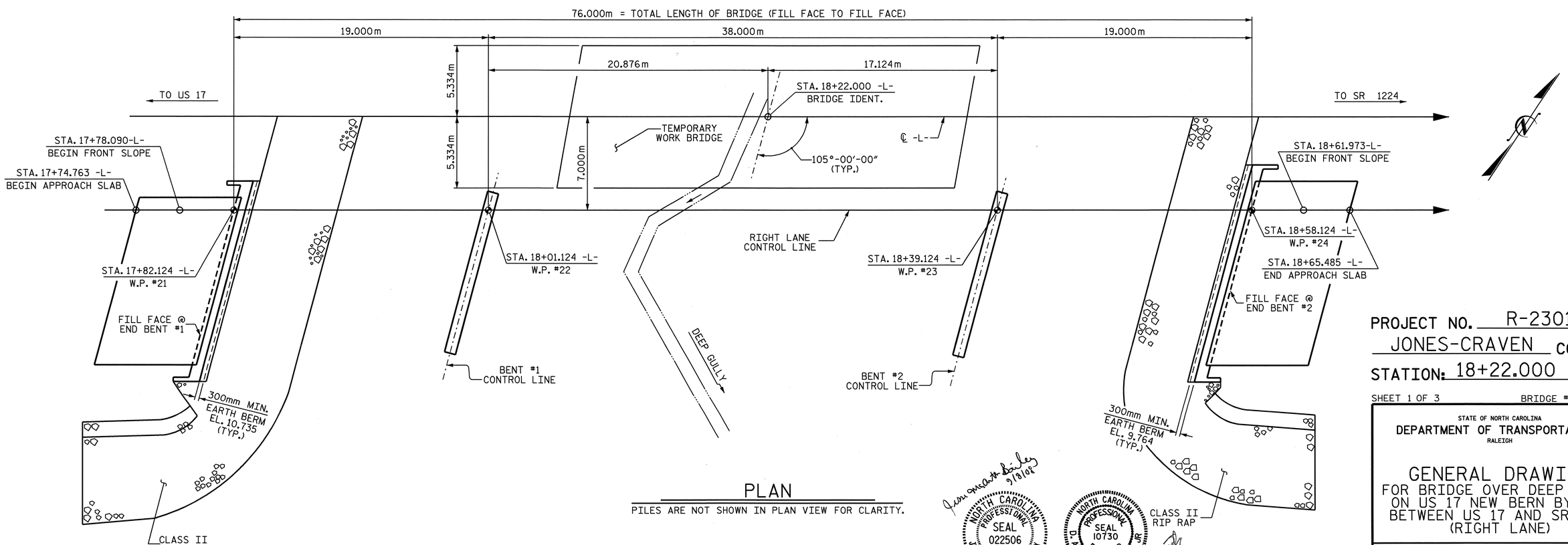

PLAN

PILES ARE NOT SHOWN IN PLAN VIEW FOR CLARITY.

NORTH CAROLINA PROFESSIONAL SEAL 022506 ENGINEER JESSE McARTHUR BAILEY

NORTH CAROLINA PROFESSIONAL SEAL 10730 ENGINEER D. ANDRE' DAVENPORT, JR.

PROJECT NO. R-2301A

JONES-CRAVEN COUNTY

STATION: 18+22.000 -L-

SHEET 1 OF 3 BRIDGE #259

STATE OF NORTH CAROLINA
DEPARTMENT OF TRANSPORTATION
RALEIGH

GENERAL DRAWING

FOR BRIDGE OVER DEEP GULLY
ON US 17 NEW BERN BYPASS
BETWEEN US 17 AND SR 1224
(RIGHT LANE)

REVISIONS						SHEET NO.
NO.	BY:	DATE:	NO.	BY:	DATE:	S-34
1			3			TOTAL SHEETS
2			4			176

DRAWN BY : D.A. DAVENPORT DATE : 06-08
CHECKED BY : H.T. BARBOUR DATE : 07-08

12-AUG-2008 07:15
f:\structures\asorsenglnh\r-2301a_sd_gd-*2.dgn
addavenport

STR.#2

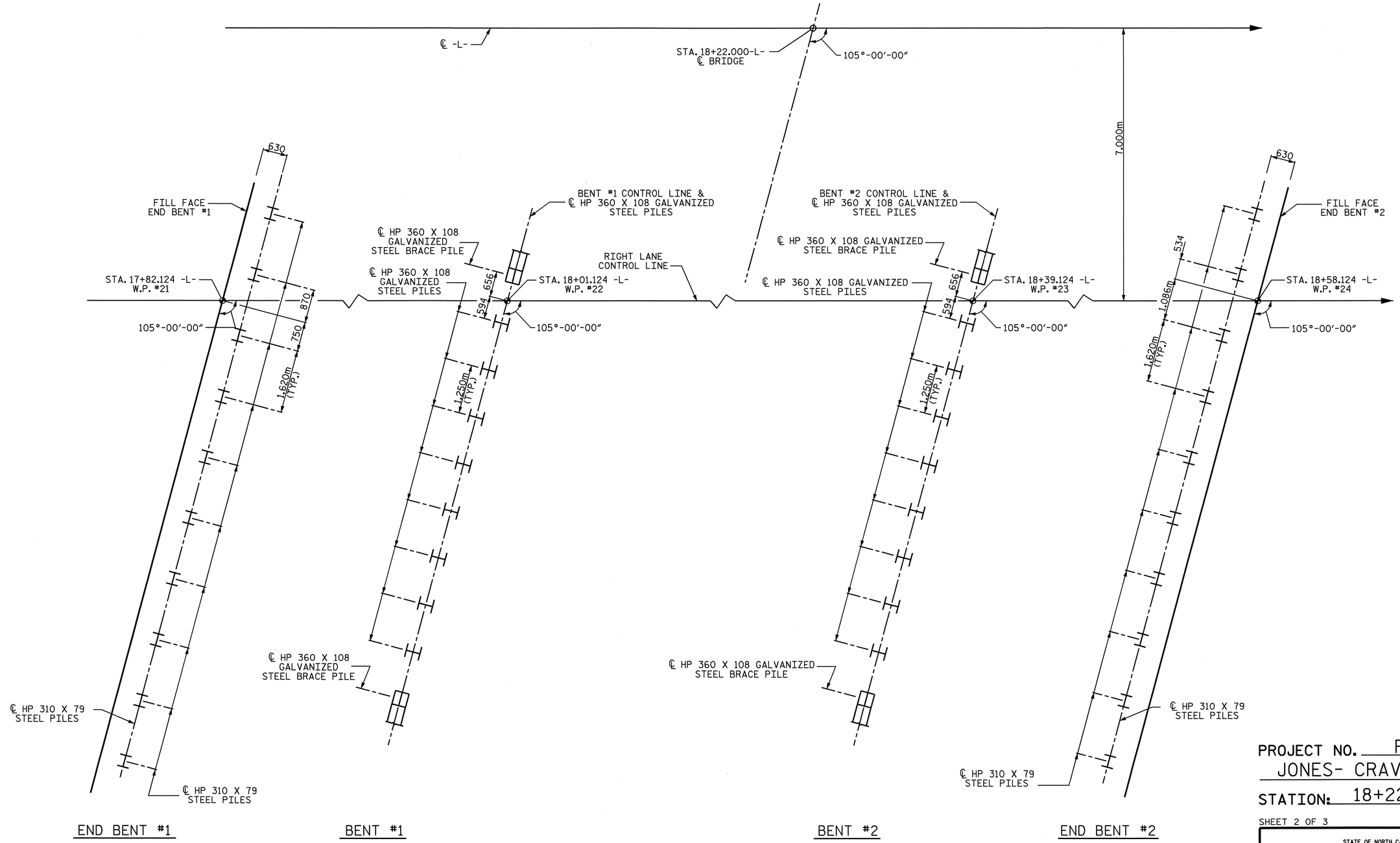

PROJECT NO. R-2301A

JONES- CRAVEN COUNTY

STATION: 18+22.000-L-

SHEET 2 OF 3

FOUNDATION LAYOUT

DIMENSIONS LOCATING PILES ARE TO THE PILE CENTERLINES
BRACE PILES AT BENTS ARE BATTERED AT 125:1000

STATE OF NORTH CAROLINA
DEPARTMENT OF TRANSPORTATION
RALEIGH

GENERAL DRAWING
FOR BRIDGE OVER DEEP GULLY
ON US 17 NEW BERN BYPASS
BETWEEN US 17 AND SR 1224
(RIGHT LANE)

NORTH CAROLINA PROFESSIONAL SEAL 10730 ENGINEER D. ANDREW DAVENPORT, JR.

REVISIONS							SHEET NO.
NO.	BY:	DATE:	NO.	BY:	DATE:		S-35
1			3				TOTAL SHEETS
2			4				170

DRAWN BY : D.A. DAVENPORT DATE : 07-08
CHECKED BY : H.T. BARBOUR DATE : 07-08

STR.#2

BENCH MARK #2: RAIL ROAD SPIKE IN 0.43m Ø OAK AT STA. 17+89.097 -L-, 45.225 LEFT, EL. 11.019

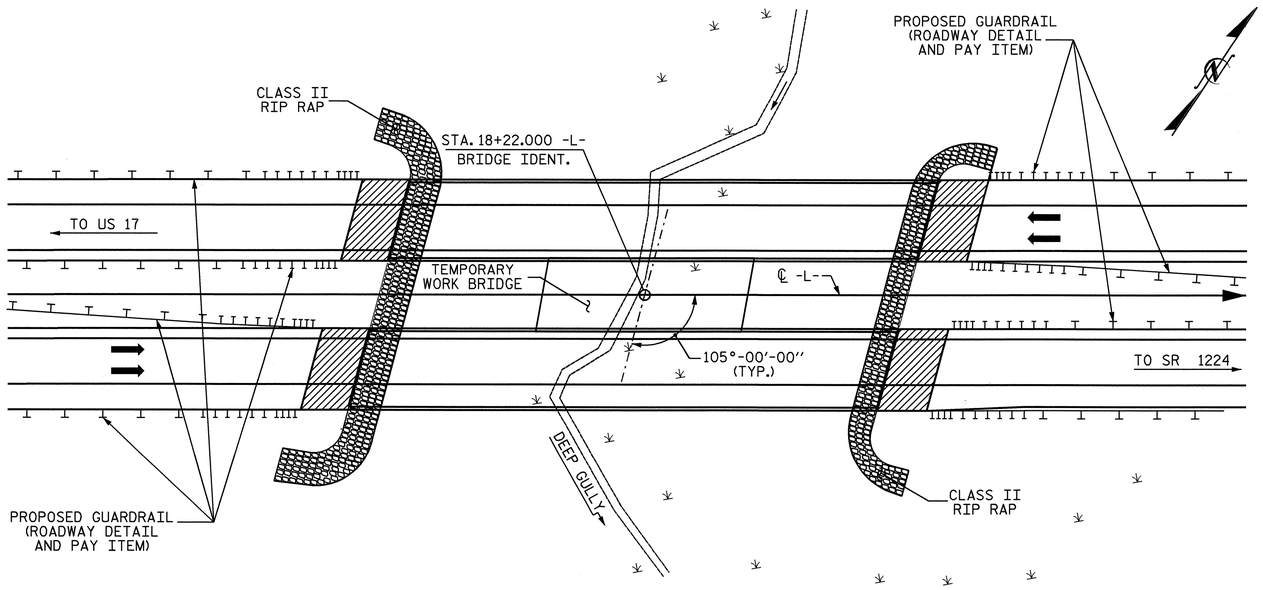

LOCATION SKETCH

NOTE: FOR UTILITY INFORMATION, SEE UTILITY PLANS AND SPECIAL PROVISIONS.

HYDRAULIC DATA

DESIGN DISCHARGE	= 12.6 CMS.
FREQUENCY OF DESIGN FLOOD	= 50 YRS.
DESIGN HIGH WATER ELEVATION	= 6.530
DRAINAGE AREA	= 1.58 SQ. MI.
BASIC DISCHARGE (Q100)	= 16.0 CMS.
BASIC HIGH WATER ELEVATION	= 6.670

OVERTOPPING FLOOD DATA

OVERTOPPING DISCHARGE	= 80.0 CMS.
FREQUENCY OF OVERTOPPING FLOOD	= 500+ YRS.
OVERTOPPING FLOOD ELEVATION	= 12.220

NOTES

ALL DIMENSIONS ARE IN MILLIMETERS UNLESS OTHERWISE NOTED.

ALL ELEVATIONS ARE IN METERS.

FOR OTHER DESIGN DATA AND GENERAL NOTES, SEE SHEET SNSM.

REMOVABLE FORMS MAY BE USED IN LIEU OF METAL STAY-IN-PLACE FORMS IN ACCORDANCE WITH ARTICLE 420-3 OF THE STANDARD SPECIFICATIONS.

NEEDLE BEAMS WILL NOT BE ALLOWED UNLESS OTHERWISE CALLED FOR ON THE PLANS OR APPROVED BY THE ENGINEER.

FOR SUBMITTAL OF WORKING DRAWINGS, SEE SPECIAL PROVISIONS.

FOR PRESTRESSED CONCRETE MEMBERS, SEE SPECIAL PROVISIONS.

FOR FALSEWORK AND FORMWORK, SEE SPECIAL PROVISIONS.

ASSUMED LIVE LOAD = MS18 OR ALTERNATE LOADING, EXCEPT THAT THE GIRDERS HAVE BEEN DESIGNED FOR MS22.5.

THIS BRIDGE HAS BEEN DESIGNED BY THE STRENGTH DESIGN METHOD AS SPECIFIED IN AASHTO STANDARD SPECIFICATIONS.

THIS BRIDGE HAS BEEN DESIGNED IN ACCORDANCE WITH THE REQUIREMENTS OF THE AASHTO STANDARD SPECIFICATIONS FOR SEISMIC DESIGN OF HIGHWAY BRIDGES FOR SEISMIC PERFORMANCE CATEGORY A.

FOR GROUT FOR STRUCTURES, SEE SPECIAL PROVISIONS.

FOR EROSION CONTROL MEASURES SEE EROSION CONTROL PLANS.

THE SCOUR CRITICAL ELEVATION FOR BENT NO. 1 IS ELEVATION 4.0 METERS. SCOUR CRITICAL ELEVATIONS ARE USED TO MONITOR POSSIBLE SCOUR PROBLEMS DURING THE LIFE OF THE STRUCTURE.

THE CONTRACTORS ATTENTION IS CALLED TO THE FACT THAT THE PAY ITEM AND QUANTITY FOR CONSTRUCTION, MAINTENANCE AND REMOVAL OF TEMPORARY ACCESS FOR THE TEMPORARY WORK BRIDGE AT STATION 18+22.000-L- IS INCLUDED IN THE TOTAL BILL OF MATERIAL FOR THE LEFT LANE BRIDGE AT STATION 18+22.000-L-.

THE CONTRACTOR SHALL PROVIDE INDEPENDENT ASSURANCE SAMPLES OF REINFORCING STEEL AS FOLLOWS: FOR PROJECTS REQUIRING UP TO 360,000 kg OF REINFORCING STEEL, ONE 760mm SAMPLE OF EACH SIZE BAR USED, AND FOR PROJECTS REQUIRING OVER 360,000 kg OF REINFORCING STEEL, TWO 760mm SAMPLES OF EACH SIZE BAR USED. THE BARS FROM WHICH THE SAMPLES ARE TAKEN MUST THEN BE SPLICED WITH REPLACEMENT BARS OF THE SIZE AND LENGTH OF THE SAMPLE PLUS A MINIMUM LAP SPLICE OF THIRTY BAR DIAMETERS.

THIS STRUCTURE HAS BEEN DESIGNED IN ACCORDANCE WITH HEC 18, 'EVALUATING SCOUR AT BRIDGES', MAY, 2001.

THE ALLOWABLE BEARING CAPACITY FOR PILES AT END BENT NO. 1 AND END BENT NO. 2 IS 630 KILONEWTONS PER PILE.

DRIVE PILES AT END BENT NO. 1 AND END BENT NO. 2 TO A REQUIRED BEARING CAPACITY OF 1260 KILONEWTONS PER PILE. THE REQUIRED BEARING CAPACITY IS EQUAL TO THE ALLOWABLE BEARING CAPACITY WITH A MINIMUM FACTOR OF SAFETY OF TWO.

FOR CRANE SAFETY, SEE SPECIAL PROVISIONS.

THE ALLOWABLE BEARING CAPACITY FOR PILES AT BENT NO. 1 AND BENT NO. 2 IS 720 KILONEWTONS PER PILE.

INSTALL PILES AT BENT NO. 1 TO A TIP ELEVATION NO HIGHER THAN -1.5 METERS.

INSTALL PILES AT BENT NO. 2 TO A TIP ELEVATION NO HIGHER THAN 0.5 METERS.

DRIVE PILES AT BENT NO. 1 TO A REQUIRED BEARING CAPACITY OF 1720 KILONEWTONS PER PILE. THE REQUIRED BEARING CAPACITY IS EQUAL TO THE ALLOWABLE BEARING CAPACITY WITH A MINIMUM FACTOR OF SAFETY OF TWO PLUS ANY ADDITIONAL CAPACITY TO ACCOUNT FOR DOWNDRAG OR NEGATIVE SKIN FRICTION AND SCOUR.

DRIVE PILES AT BENT NO. 2 TO A REQUIRED BEARING CAPACITY OF 1440 KILONEWTONS PER PILE. THE REQUIRED BEARING CAPACITY IS EQUAL TO THE ALLOWABLE BEARING CAPACITY WITH A MINIMUM FACTOR OF SAFETY OF TWO.

OBSERVE A ONE MONTH WAITING PERIOD AFTER CONSTRUCTING THE EMBANKMENT, TO THE BOTTOM OF THE CAP ELEVATION, BEFORE BEGINNING END BENT CONSTRUCTION AT END BENT NO. 1 AND END BENT NO. 2.

NORTH CAROLINA PROFESSIONAL SEAL 10730 ENGINEER D. ANDREW DAVENPORT, JR.
9-8-08

TOTAL BILL OF MATERIAL

	REINFORCED CONCRETE DECK SLAB	GROOVING BRIDGE FLOORS	CLASS A CONCRETE	BRIDGE APPROACH SLABS	REINFORCING STEEL	MODIFIED 1829mm PRESTRESSED CONCRETE GIRDERS		HP 310 X 79 STEEL PILES		HP 360 X 108 GALVANIZED STEEL PILES		PILE REDRIVES	CONCRETE BARRIER RAIL	RIP RAP CLASS II (600mm THICK)	FILTER FABRIC FOR DRAINAGE	ELASTOMERIC BEARINGS	EVAZOTE JOINT SEALS
	SQ. METERS	SQ. METERS	CU. METERS	LUMP SUM	kg	NO.	METERS	NO.	METERS	NO.	METERS	EACH	METERS	METRIC TONS	SQ. METERS	LUMP SUM	LUMP SUM
SUPERSTRUCTURE	987.200	987.500		LUMP SUM		15	373.080						150.964			LUMP SUM	LUMP SUM
END BENT NO. 1			22.5		2218			10	200			4		226	231		
BENT NO. 1			14.6		1466					10	275	5					
BENT NO. 2			14.6		1466					10	240	5					
END BENT NO. 2			22.5		2283			10	270			5		209	213		
TOTAL	987.200	987.500	74.2	LUMP SUM	7433	15	373.080	20	470	20	515	19	150.964	435	444	LUMP SUM	LUMP SUM

PROJECT NO. R-2301A
JONES-CRAVEN COUNTY
STATION: 18+22.000 -L-

SHEET 3 OF 3

STATE OF NORTH CAROLINA
DEPARTMENT OF TRANSPORTATION
RALEIGH

GENERAL DRAWING
FOR BRIDGE OVER DEEP GULLY
ON US 17 NEW BERN BYPASS
BETWEEN US 17 AND SR 1224
(RIGHT LANE)

REVISIONS						SHEET NO.
NO.	BY:	DATE:	NO.	BY:	DATE:	S-36
1			3			TOTAL SHEETS
2			4			176

DRAWN BY : D. A. DAVENPORT DATE : 07-08
CHECKED BY : H.T. BARBOUR DATE : 07-08

08-SEP-2008 09:34
f:\structures\asorsenglnh\R-2301A_sd_GD-#2.dgn
ddavenport

STR.#2

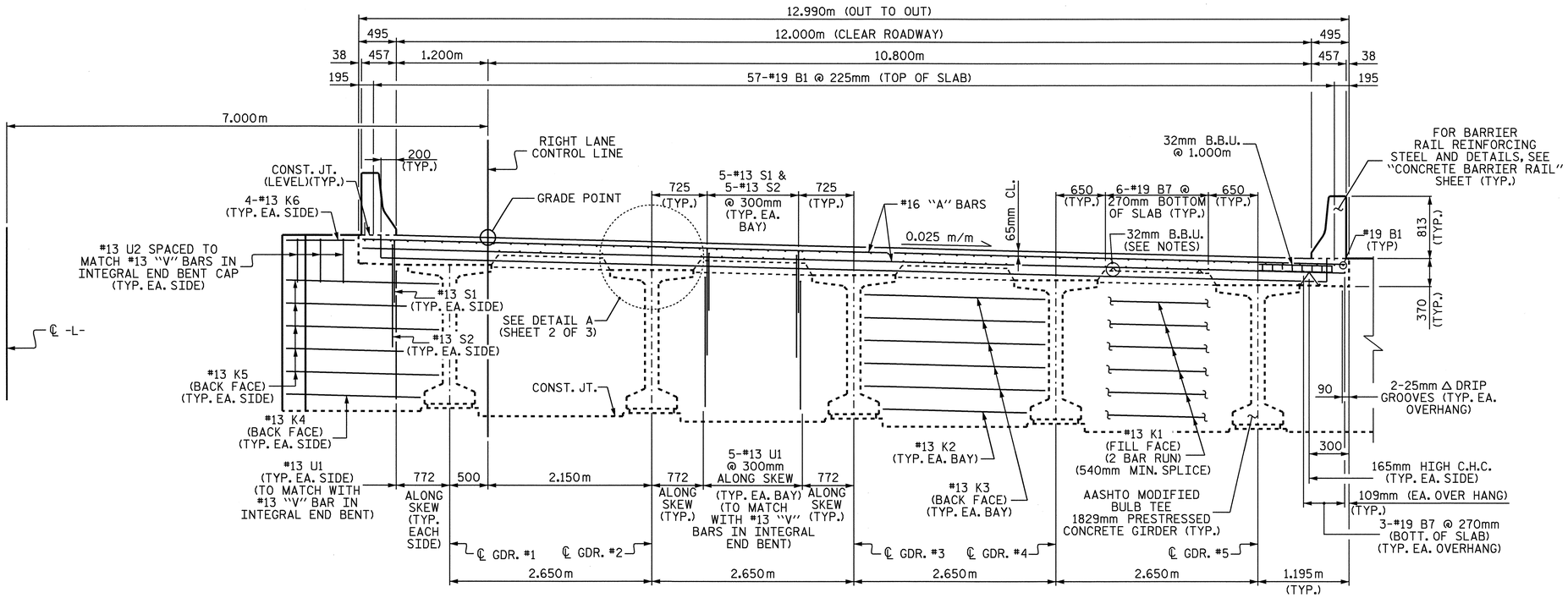

TYPICAL SECTION @ INTEGRAL END BENT

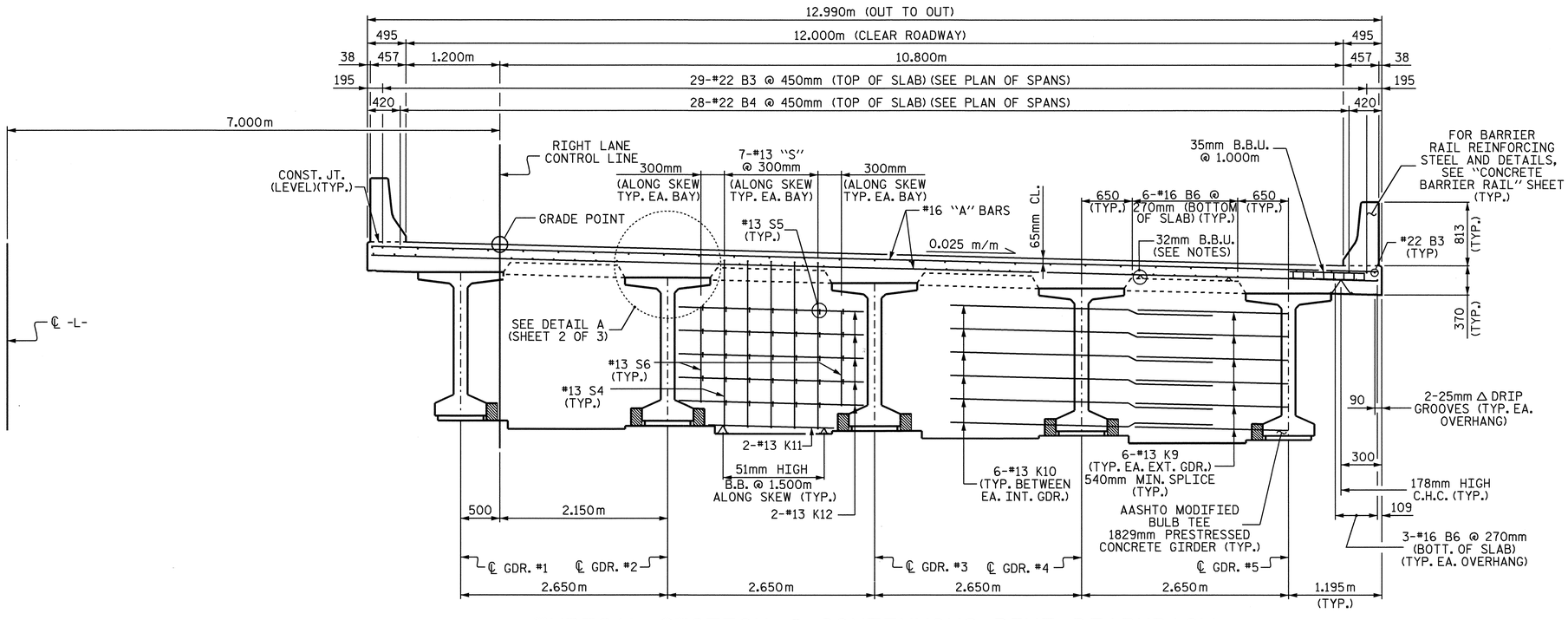

TYPICAL SECTION @ CONTINUOUS BENT DIAPHRAGM

NOTES

PROVIDE 32mm HIGH BEAM BOLSTERS UPPER AT 1.200m CTS. ATOP THE METAL STAY-IN-PLACE FORMS TO SUPPORT THE BOTTOM MAT OF 'A' BARS. WHEN USING REMOVABLE FORMS, PROVIDE CONTINUOUS HIGH CHAIRS FOR METAL DECK (CHCM) AT 1.200m CTS. WITH A HEIGHT TO SUPPORT THE BOTTOM MAT OF 'A' BARS A CLEAR DISTANCE OF 65mm ABOVE THE TOP OF THE REMOVABLE FORM.

LONGITUDINAL STEEL MAY BE SHIFTED SLIGHTLY, AS NECESSARY, TO AVOID INTERFERENCE WITH STIRRUPS IN PRESTRESSED CONCRETE GIRDERS.

BARRIER RAIL IN A CONTINUOUS UNIT SHALL NOT BE CAST UNTIL ALL SLAB CONCRETE IN THAT UNIT HAS BEEN CAST AND HAS REACHED A MINIMUM COMPRESSIVE STRENGTH OF 20.7 MPa.

CONCRETE IN INTERMEDIATE DIAPHRAGMS MAY BE CLASS A IN LIEU OF CLASS AA. PAYMENT SHALL BE MADE UNDER THE UNIT CONTRACT PRICE FOR REINFORCED CONCRETE DECK SLAB.

ALL REINFORCING STEEL IN BARRIER RAILS SHALL BE EPOXY COATED.

TEMPORARY STRUTS SHALL BE PLACED BETWEEN PRESTRESSED GIRDERS ADJACENT TO THE DIAPHRAGMS AND THE NUTS ON THE 31.75mm DIA. TIE RODS SHALL BE FULLY TIGHTENED BEFORE THE DIAPHRAGMS ARE CAST. STRUTS SHALL REMAIN IN PLACE 3 DAYS AFTER CONCRETE IS PLACED. THE TIE RODS SHALL BE RE-TIGHTENED AFTER THE STRUTS HAVE BEEN REMOVED.

PREVIOUSLY CAST CONCRETE IN A CONTINUOUS UNIT SHALL HAVE OBTAINED A MINIMUM COMPRESSIVE STRENGTH OF 20.7MPa BEFORE ADDITIONAL CONCRETE IS CAST IN THE UNIT.

PROJECT NO. R-2301A
JONES-CRAVEN COUNTY
STATION: 18+22.000 -L-

SHEET 1 OF 3

STATE OF NORTH CAROLINA
DEPARTMENT OF TRANSPORTATION
RALEIGH

SUPERSTRUCTURE TYPICAL SECTIONS RIGHT LANE

NORTH CAROLINA PROFESSIONAL SEAL 10730 ENGINEER D. ANDREW DAVENPORT, JR.
9-8-08

REVISIONS						SHEET NO.
NO.	BY:	DATE:	NO.	BY:	DATE:	S-37
1			3			TOTAL SHEETS
2			4			176

DRAWN BY : A. SORSENGINH DATE : 2/28/08
CHECKED BY : H. T. BARBOUR DATE : 4/7/08

STR. #2

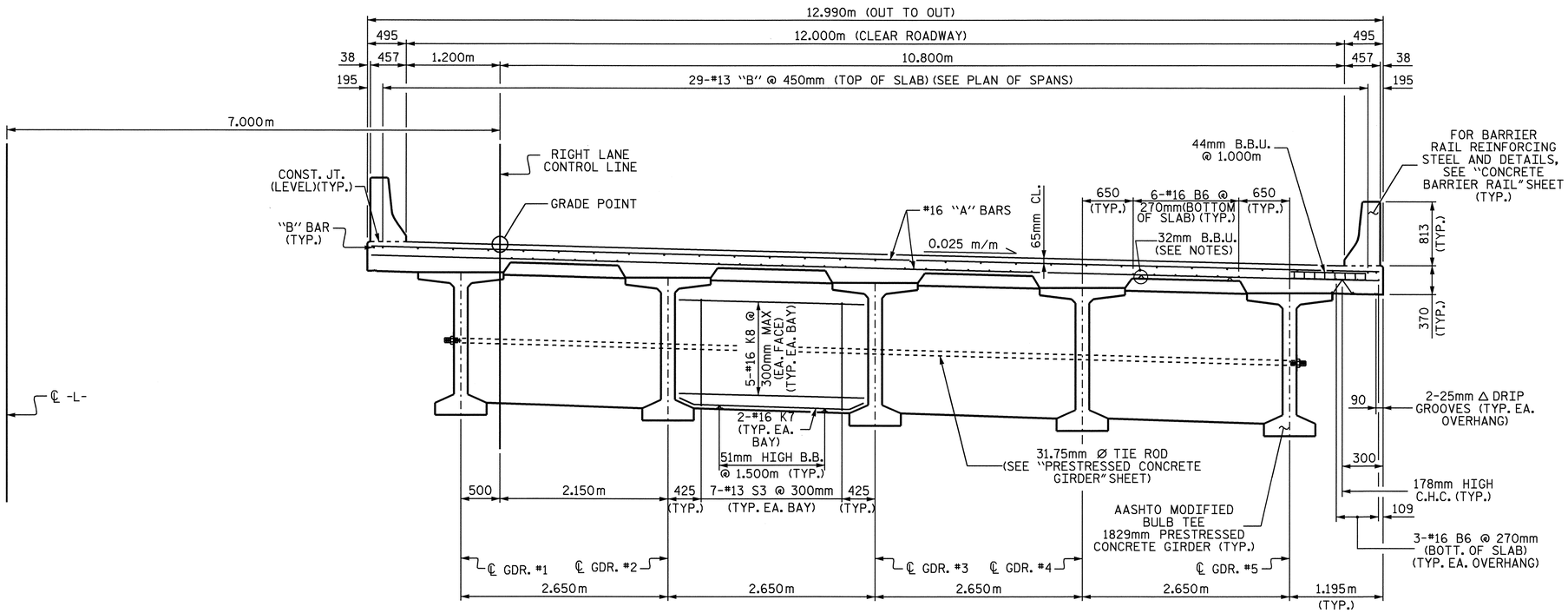

TYPICAL SECTION @ INTERMEDIATE DIAPHRAGM

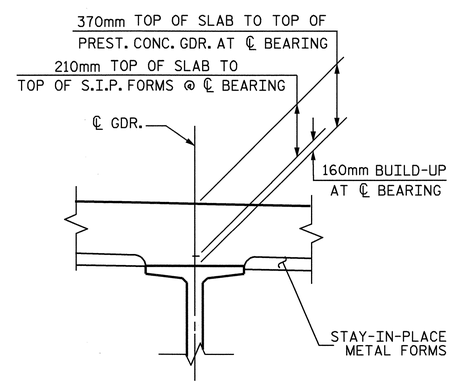

DETAIL A

PROJECT NO. R-2301A
JONES-CRAVEN COUNTY
STATION: 18+22.000 -L-

SHEET 2 OF 3

STATE OF NORTH CAROLINA
DEPARTMENT OF TRANSPORTATION
RALEIGH

SUPERSTRUCTURE TYPICAL SECTIONS RIGHT LANE

NORTH CAROLINA PROFESSIONAL SEAL 10730 ENGINEER D. ANDREW DAVENPORT, JR.
7-8-08

REVISIONS						SHEET NO.
NO.	BY:	DATE:	NO.	BY:	DATE:	S-38
1			3			TOTAL SHEETS
2			4			176

DRAWN BY : A. SORSENGINH DATE : 2/11/08
CHECKED BY : H. T. BARBOUR DATE : 4/7/08

STR. #2

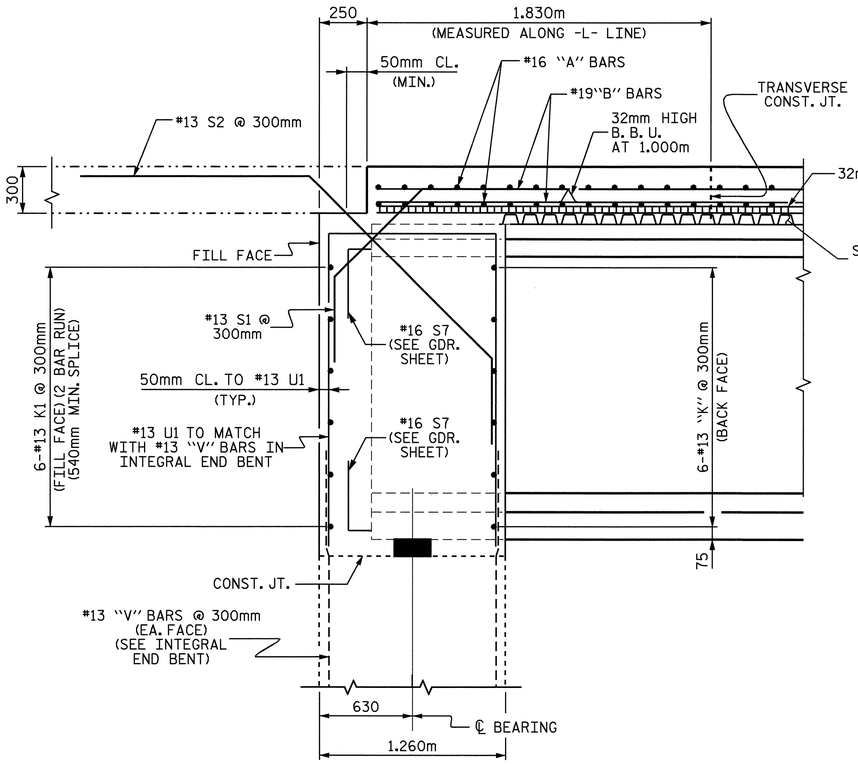

SECTION THROUGH INTEGRAL END BENT

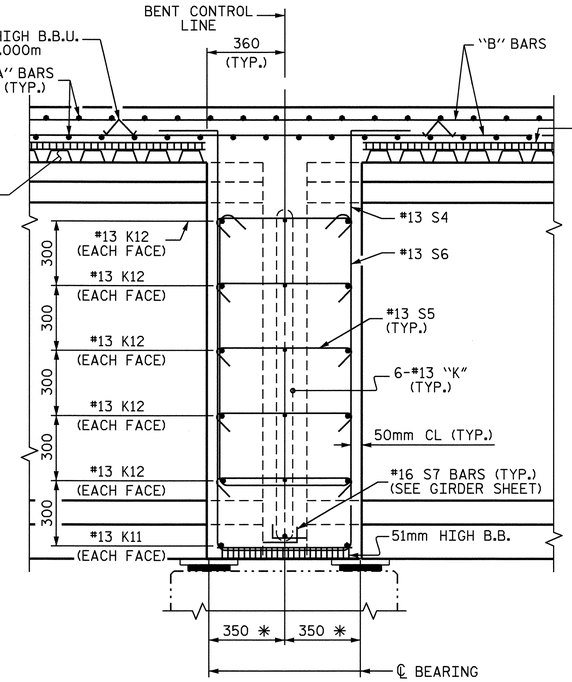

SECTION THROUGH
CONTINUOUS BENT DIAPHRAGM

* MEASURED ALONG ℄ GIRDER

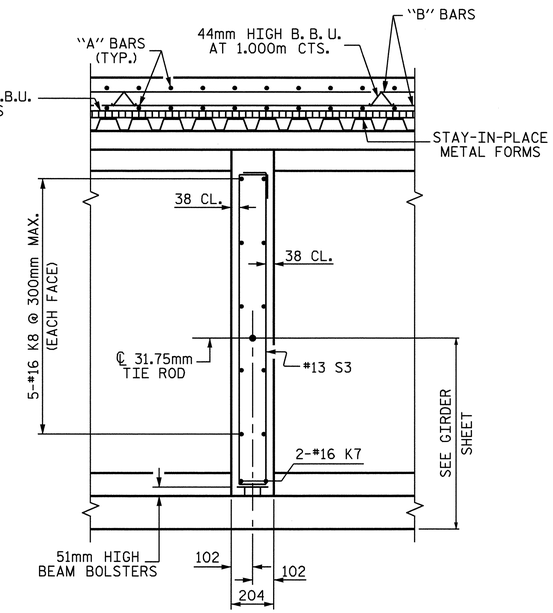

SECTION THROUGH
INTERMEDIATE DIAPHRAGM

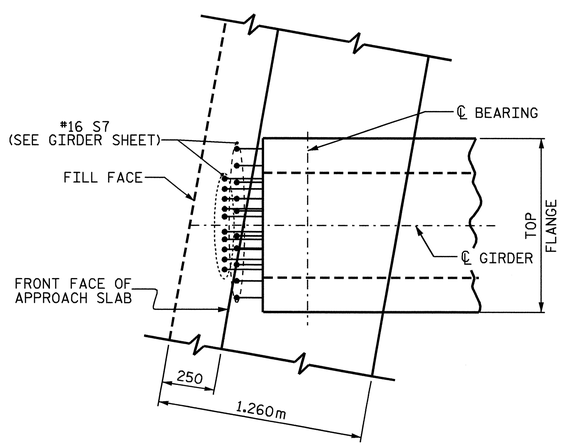

PLAN OF GIRDER @ INTEGRAL END BENT

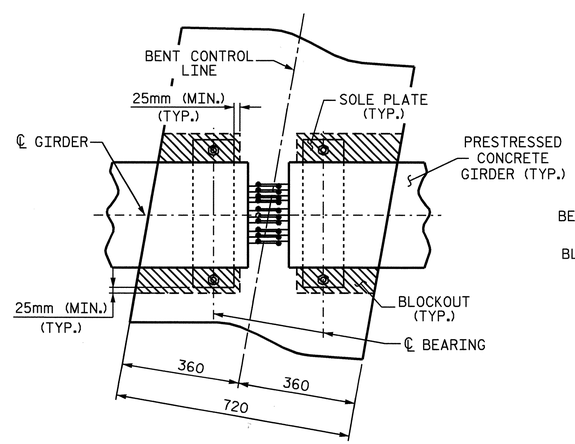

PLAN

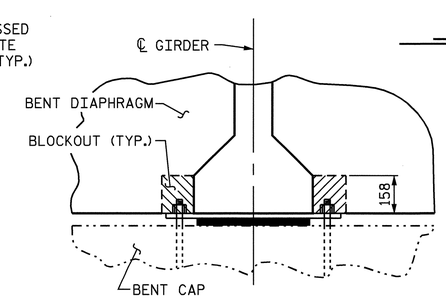

SECTION

BENT DIAPHRAGM BLOCK-OUT DETAIL

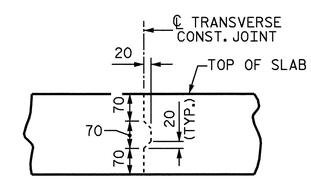

TRANSVERSE CONSTRUCTION
JOINT DETAIL

NOTE: REINFORCING STEEL IN SLAB NOT SHOWN.
LONGITUDINAL REINFORCING STEEL SHALL
BE CONTINUOUS THROUGH JOINT.

PROJECT NO. R-2301A
JONES-CRAVEN COUNTY
STATION: 18+22.000 -L-

SHEET 3 OF 3

STATE OF NORTH CAROLINA
DEPARTMENT OF TRANSPORTATION
RALEIGH

SUPERSTRUCTURE
TYPICAL SECTIONS
RIGHT LANE

NORTH CAROLINA PROFESSIONAL SEAL 10730 ENGINEER D. ANDRE' DAVENPORT, JR.
9-8-08

REVISIONS						SHEET NO.
NO.	BY:	DATE:	NO.	BY:	DATE:	S-39
1			3			TOTAL SHEETS
2			4			176

DRAWN BY : A. SORSENGINH DATE : 2/28/08
CHECKED BY : H. T. BARBOUR DATE : 4/7/08

STR. #2

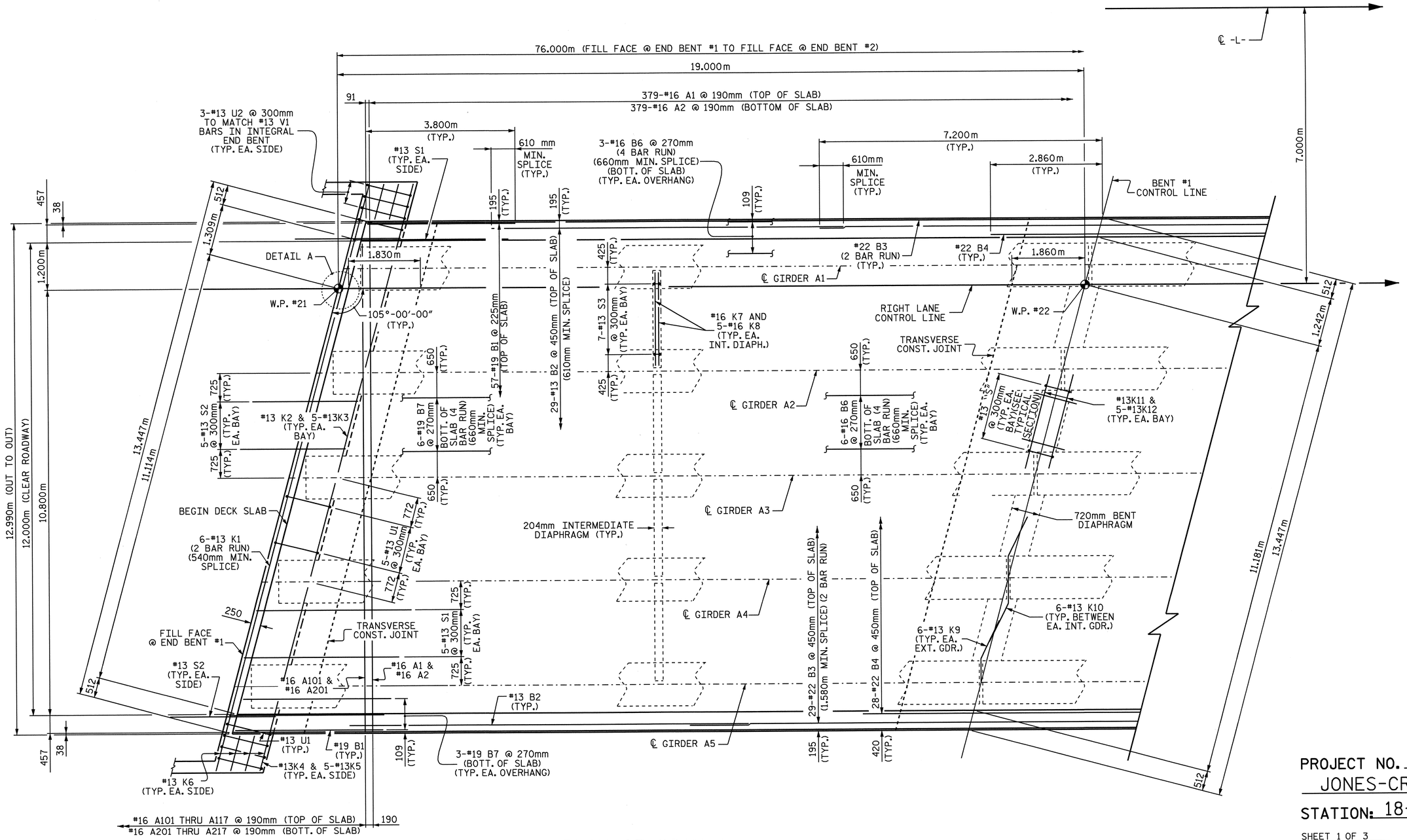

PLAN OF SPAN A

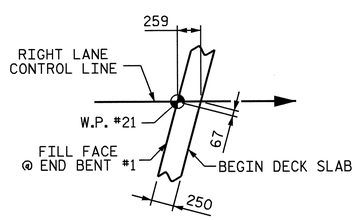

DETAIL A

PROJECT NO. R-2301A
JONES-CRAVEN COUNTY
STATION: 18+22.000 -L-

SHEET 1 OF 3

STATE OF NORTH CAROLINA
DEPARTMENT OF TRANSPORTATION
RALEIGH

SUPERSTRUCTURE PLAN OF SPAN A RIGHT LANE

NORTH CAROLINA PROFESSIONAL SEAL 10730 ENGINEER D. ANDREW DAVENPORT, JR.

REVISIONS							SHEET NO.
NO.	BY:	DATE:	NO.	BY:	DATE:		S-40
1			3				TOTAL SHEETS
2			4				176

DRAWN BY : A. SORSENGINH DATE : 2/28/08
CHECKED BY : H. T. BARBOUR DATE : 4/7/08

STR. #2

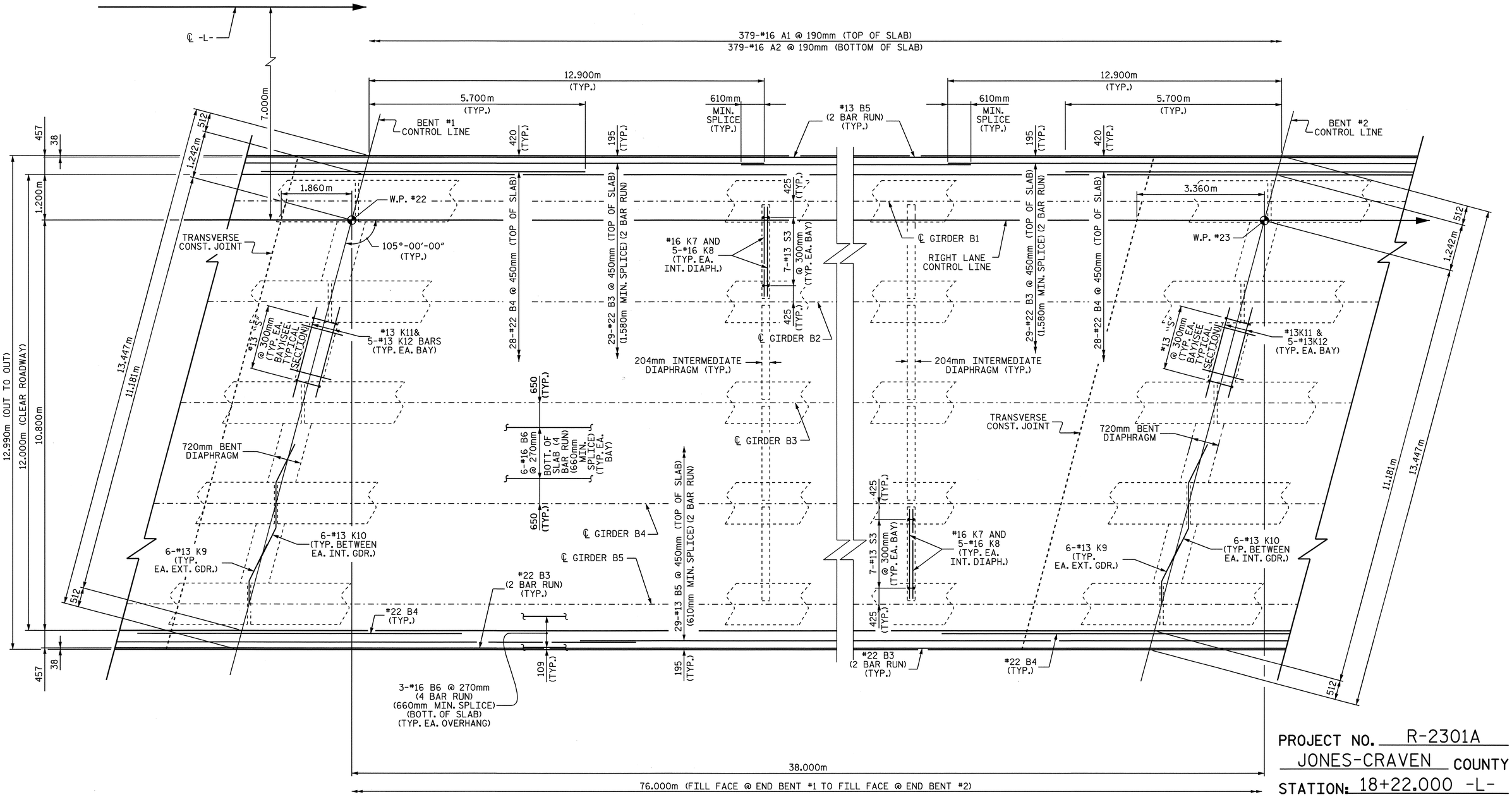

PLAN OF SPAN B

PROJECT NO. R-2301A
JONES-CRAVEN COUNTY
STATION: 18+22.000 -L-

SHEET 2 OF 3

STATE OF NORTH CAROLINA
DEPARTMENT OF TRANSPORTATION
RALEIGH

SUPERSTRUCTURE PLAN OF SPAN B RIGHT LANE

NORTH CAROLINA PROFESSIONAL SEAL 10730 ENGINEER D. ANDREW DAVENPORT, JR.
9-8-08

REVISIONS						SHEET NO.
NO.	BY:	DATE:	NO.	BY:	DATE:	S-41
1			3			TOTAL SHEETS
2			4			176

DRAWN BY : A. SORSENGINH DATE : 2/28/08
CHECKED BY : H. T. BARBOUR DATE : 4/7/08

STR. #2

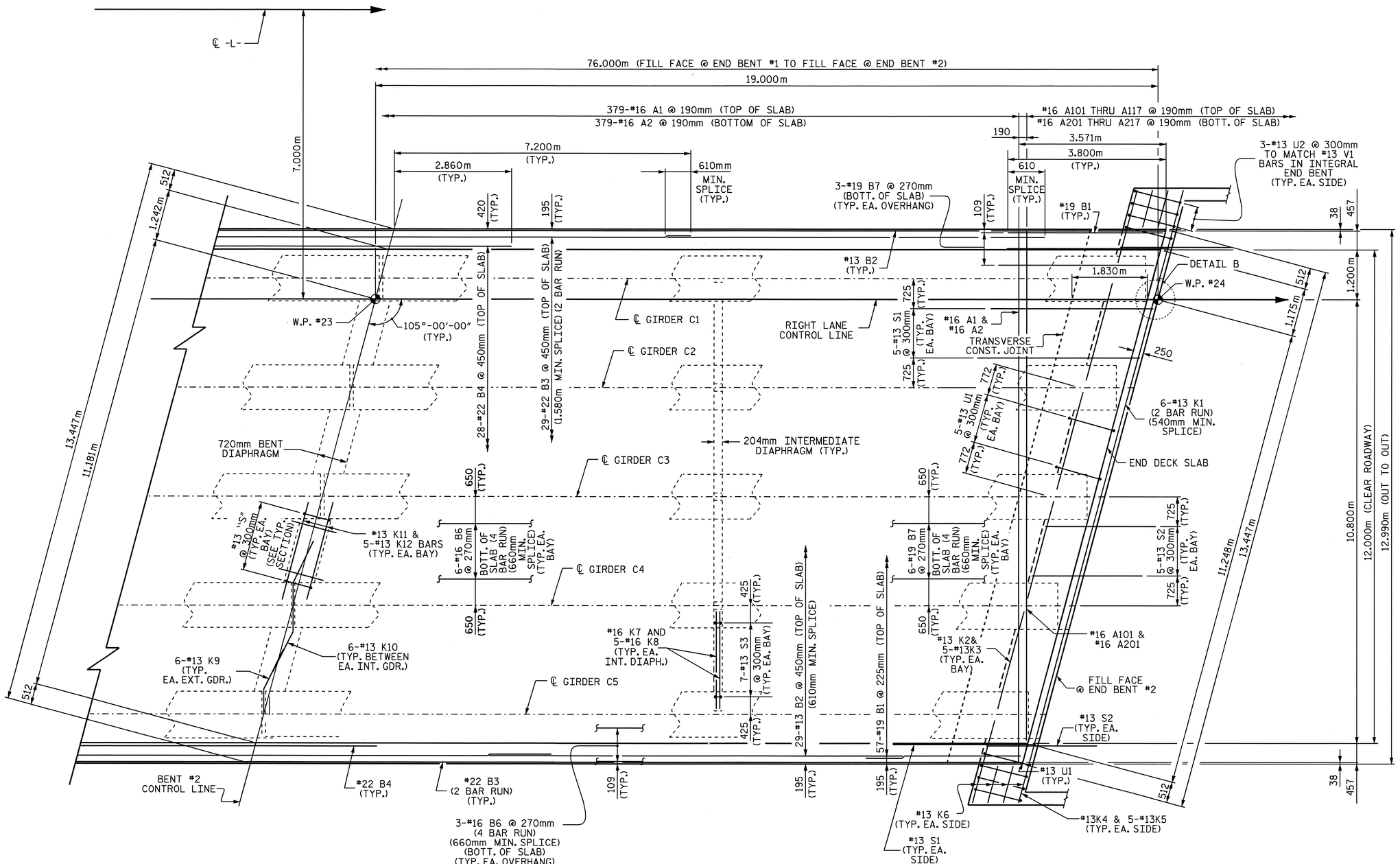

PLAN OF SPAN C

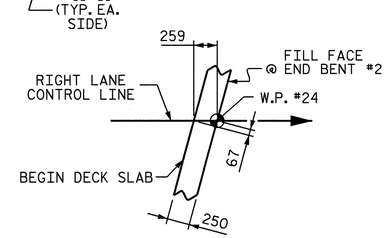

DETAIL B

PROJECT NO. R-2301A
JONES-CRAVEN COUNTY
STATION: 18+22.000 -L-

SHEET 3 OF 3

STATE OF NORTH CAROLINA
DEPARTMENT OF TRANSPORTATION
RALEIGH

SUPERSTRUCTURE PLAN OF SPAN C RIGHT LANE

NORTH CAROLINA PROFESSIONAL SEAL 10730 ENGINEER D. ANDREW DAVENPORT JR.

REVISIONS						SHEET NO.
NO.	BY:	DATE:	NO.	BY:	DATE:	S-42
1			3			TOTAL SHEETS
2			4			176

DRAWN BY : A. SORSENGINH DATE : 2/27/08
CHECKED BY : H. T. BARBOUR DATE : 4/7/08

STR. #2

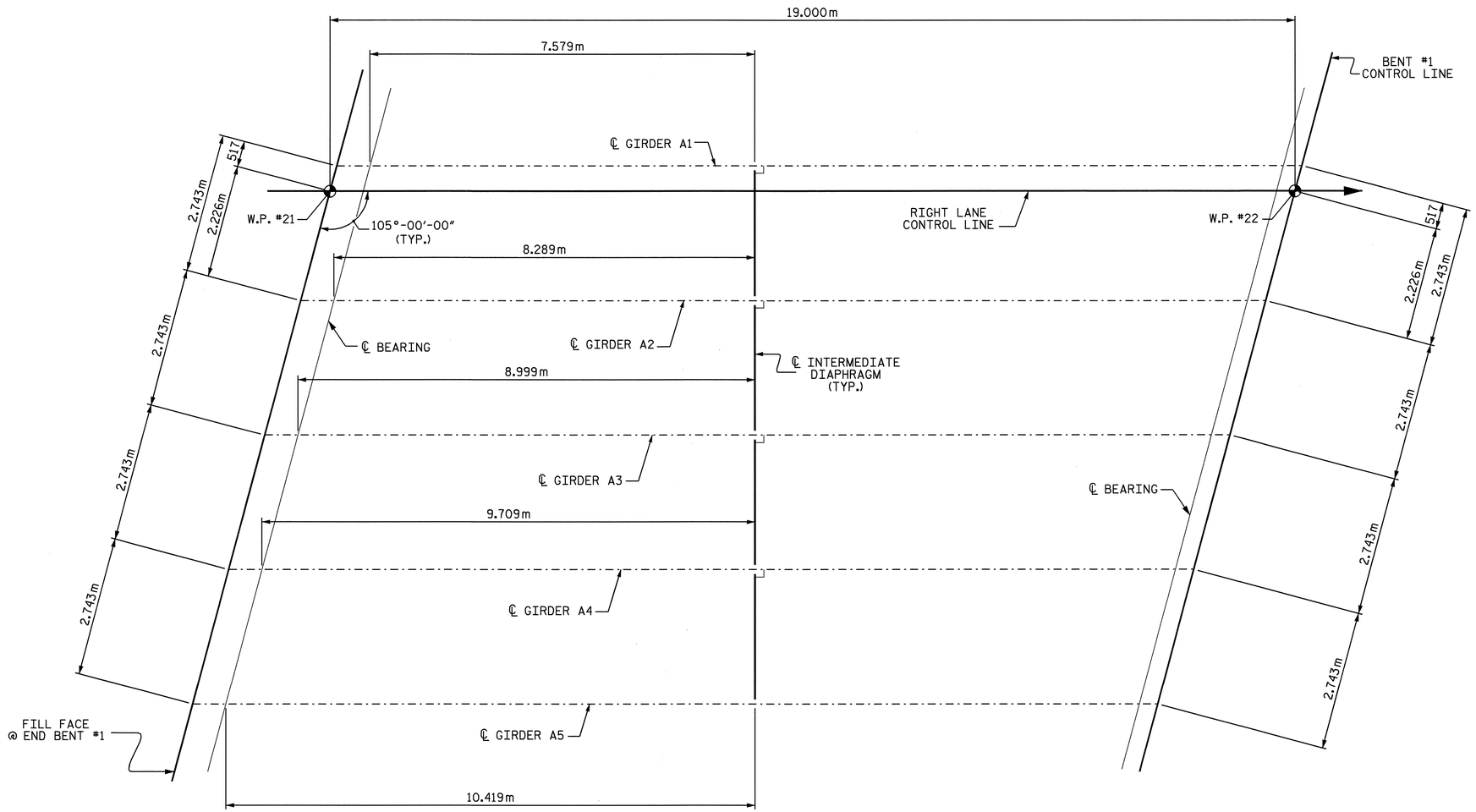

FIXED
E1

FRAMING PLAN SPAN A

FIXED
(E1, P1)

FIXED
(E2, P2)

PROJECT NO. R-2301A

JONES-CRAVEN COUNTY

STATION: 18+22.000 -L-

SHEET 1 OF 3

STATE OF NORTH CAROLINA
DEPARTMENT OF TRANSPORTATION
RALEIGH

SUPERSTRUCTURE FRAMING PLAN SPAN A RIGHT LANE

NORTH CAROLINA PROFESSIONAL SEAL 10730 ENGINEER D. ANDREW DAVENPORT, JR.
9-8-08

REVISIONS						SHEET NO.
NO.	BY:	DATE:	NO.	BY:	DATE:	S-43
1			3			TOTAL SHEETS
2			4			176

DRAWN BY : A. SORSENGINH DATE : 2/27/08
CHECKED BY : H. T. BARBOUR DATE : 4/7/08

STR. #2

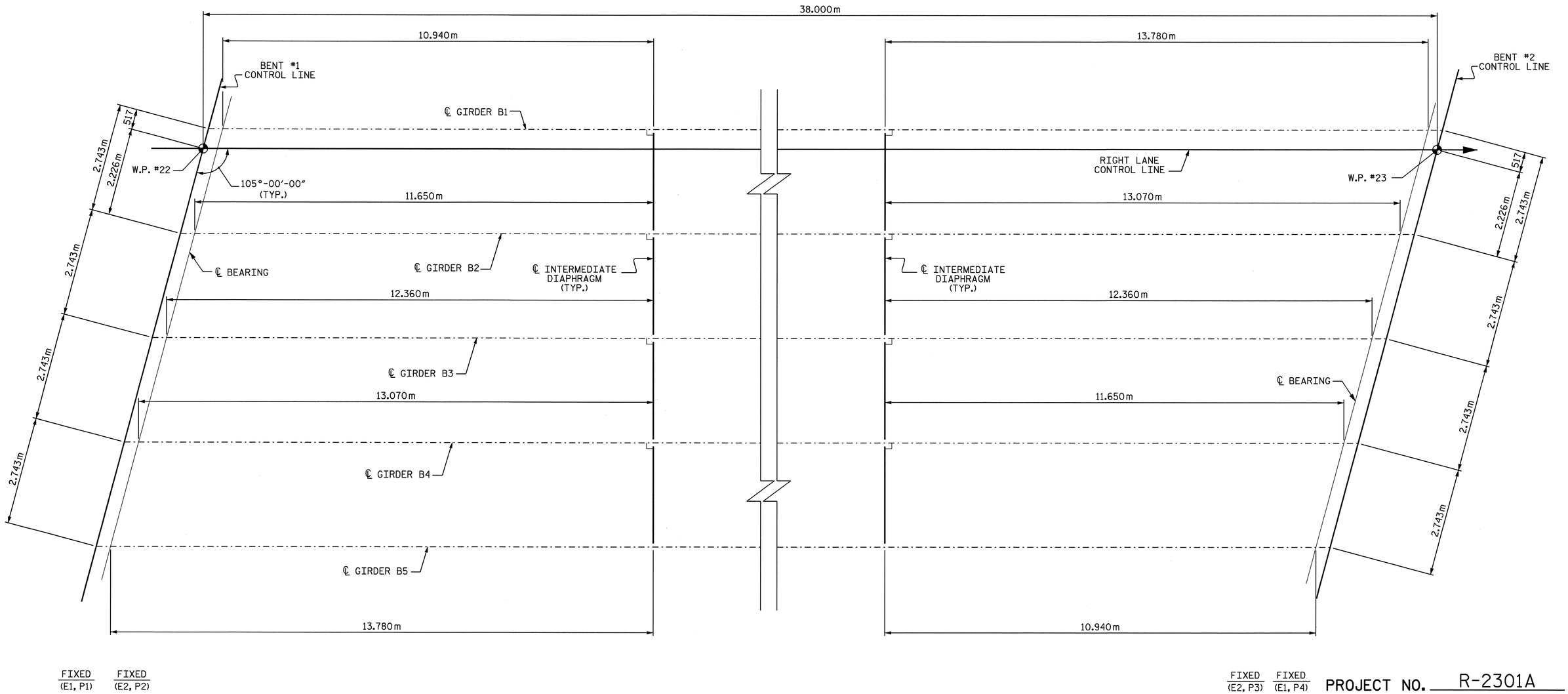

FRAMING PLAN SPAN B

PROJECT NO. R-2301A
JONES-CRAVEN COUNTY
STATION: 18+22.000 -L-

SHEET 2 OF 3

STATE OF NORTH CAROLINA
DEPARTMENT OF TRANSPORTATION
RALEIGH

SUPERSTRUCTURE FRAMING PLAN SPAN B RIGHT LANE

NORTH CAROLINA PROFESSIONAL SEAL 10730 ENGINEER D. ANDRE' DAVENPORT, JR.
9-8-08

REVISIONS							
NO.	BY:	DATE:	NO.	BY:	DATE:	SHEET NO. S-44	
1			3			TOTAL SHEETS 176	
2			4				

DRAWN BY : A. SORSENGINH DATE : 2/21/08
CHECKED BY : H. T. BARBOUR DATE : 4/7/08

STR. #2

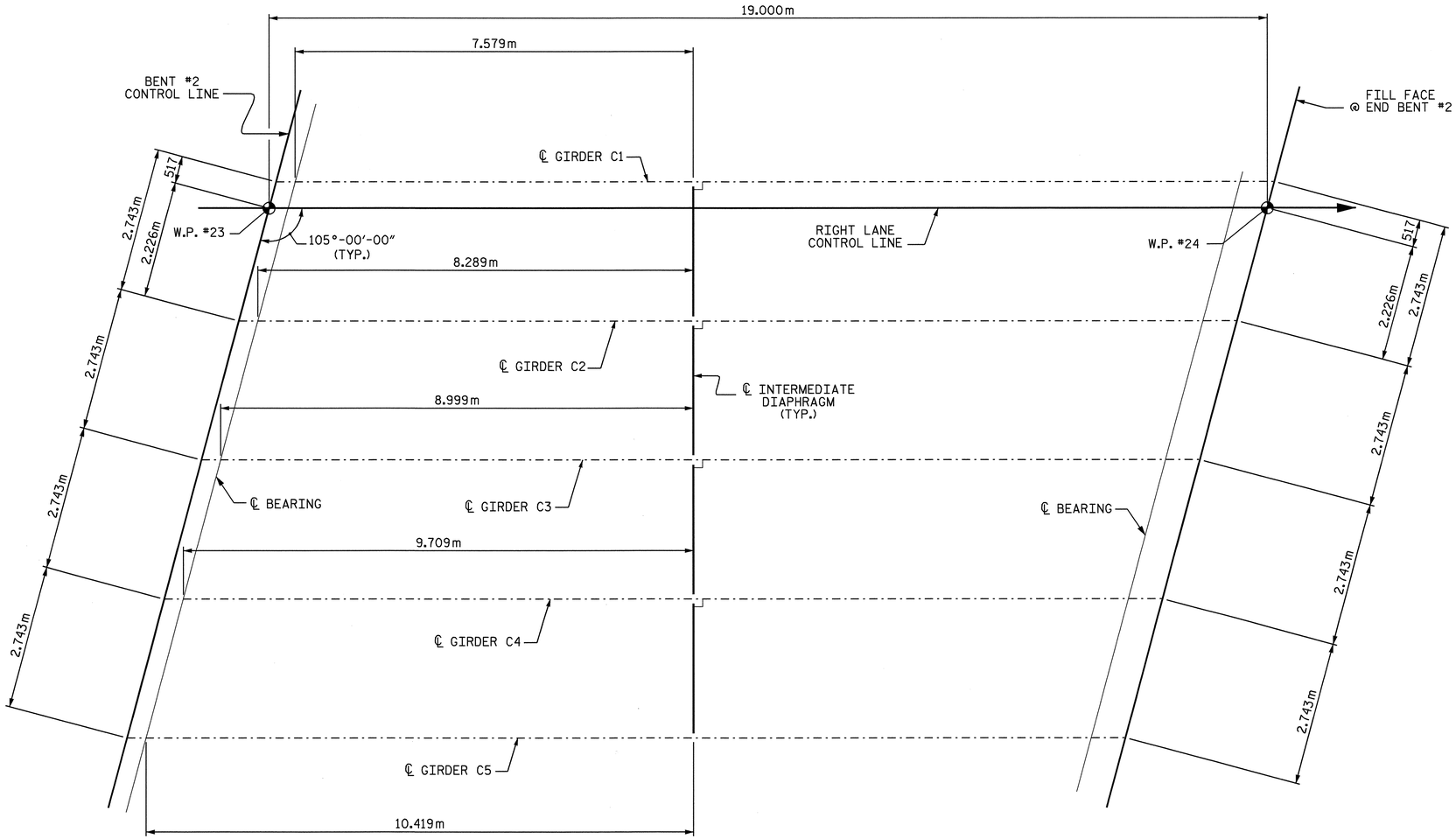

FIXED (E2, P3) FIXED (E1, P4)

FRAMING PLAN SPAN C

FIXED E1

PROJECT NO. R-2301A
JONES-CRAVEN COUNTY
STATION: 18+22.000 -L-

SHEET 3 OF 3

STATE OF NORTH CAROLINA
DEPARTMENT OF TRANSPORTATION
RALEIGH

SUPERSTRUCTURE
FRAMING PLAN
SPAN C
RIGHT LANE

NORTH CAROLINA PROFESSIONAL SEAL 10730 ENGINEER D. ANDRE' DAVENPORT, JR.
9-8-08

REVISIONS						SHEET NO.
NO.	BY:	DATE:	NO.	BY:	DATE:	S-45
1			3			TOTAL SHEETS
2			4			176

DRAWN BY : A. SORSENGINH DATE : 2/28/08
CHECKED BY : H. T. BARBOUR DATE : 4/7/08

STR. #2

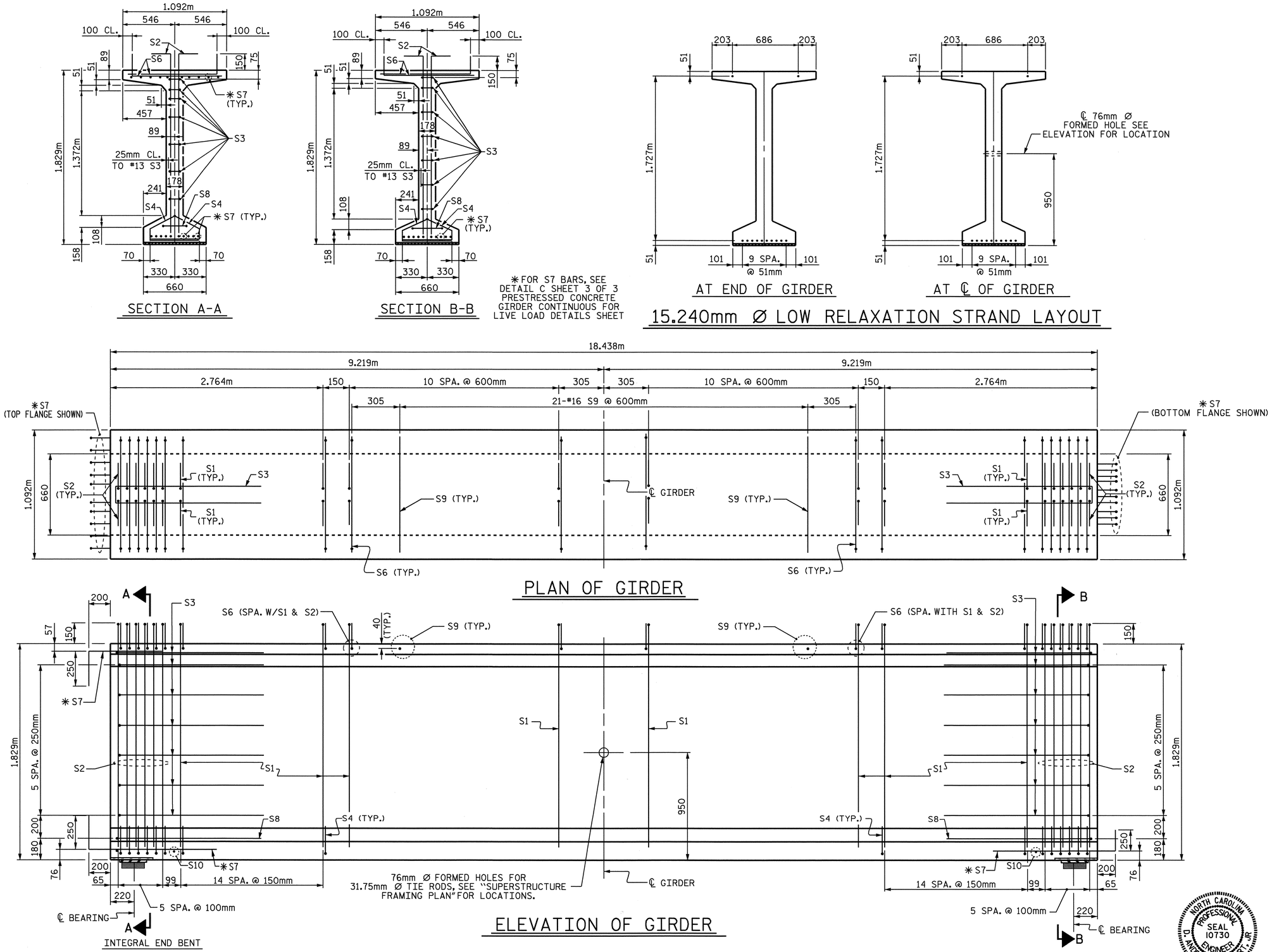

15.24mm Ø L.R GRADE 270 STRANDS

AREA (mm^2)	ULTIMATE STRENGTH (kN PER STRAND)	APPLIED PRESTRESS (kN PER STRAND)
140.0	260.7	195.5

REINFORCING STEEL FOR ONE GIRDER

BAR	NUMBER	SIZE	TYPE	LENGTH	WEIGHT
S1	104	#13	1	2100	217
S2	24	#16	1	2100	78
S3	14	#13	2	2560	36
S4	84	#13	3	920	77
S6	128	#16	1	1120	222
✱S7	30	#16	STR	1120	52
S8	2	#16	2	2740	9
S9	21	#16	STR	980	32
S10	2	#10	STR	560	1

✱ NOTE: S7 BARS SHALL BE BENT BEFORE SHIPMENT. HEAT BENDING SHALL NOT BE ALLOWED.

BAR TYPES

ALL BAR DIMENSIONS ARE OUT-TO-OUT

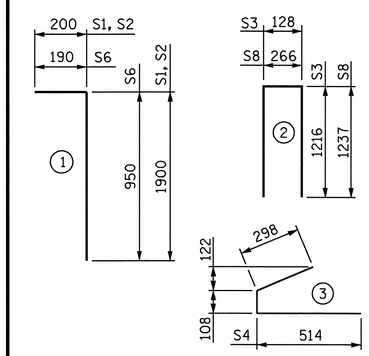

QUANTITIES FOR ONE GIRDER

	REINFORCING STEEL	34.5 MPa CONCRETE	15.24 Ø L.R STRAND
	kg	m^3	No.
	724	9.9	12

GIRDERS REQUIRED

NUMBER	LENGTH	TOTAL LENGTH
10	18.438	184.380

PROJECT NO. R-2301A
JONES-CRAVEN COUNTY
STATION: 18+22.000 -L-

SHEET 1 OF 3

STATE OF NORTH CAROLINA
DEPARTMENT OF TRANSPORTATION
RALEIGH

1829mm PRESTRESSED CONCRETE MODIFIED BULB TEE GIRDER SPANS A & C RIGHT LANE

NORTH CAROLINA PROFESSIONAL SEAL 10730 ENGINEER D. ANDREW DAVENPORT, JR.

REVISIONS							SHEET NO.
NO.	BY:	DATE:	NO.	BY:	DATE:		S-46
1			3				TOTAL SHEETS
2			4				176

ASSEMBLED BY :	A. SORSENGINH	DATE :	2/21/08
CHECKED BY :	H. T. BARBOUR	DATE :	4/7/08
DRAWN BY :	EEM 2/97	REV. 8/16/99	RWW/LES
CHECKED BY :	VAP 2/97		

STR. #2

STD. NO. PCG10M

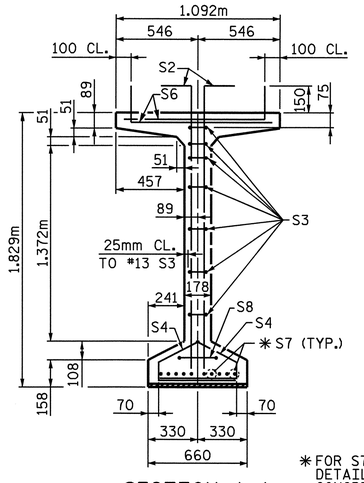

✱FOR S7 BARS, SEE DETAIL "C" OF PRESTRESSED CONCRETE GIRDER CONTINUOUS FOR LIVE LOAD DETAILS SHEET

SECTION A-A

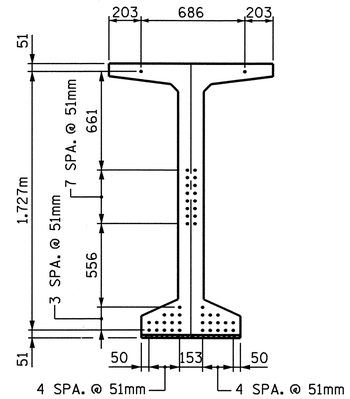

AT END OF GIRDER

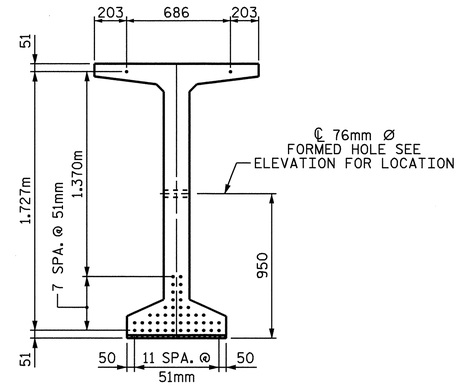

AT ℄ OF GIRDER

15.240mm Ø LOW RELAXATION STRAND LAYOUT

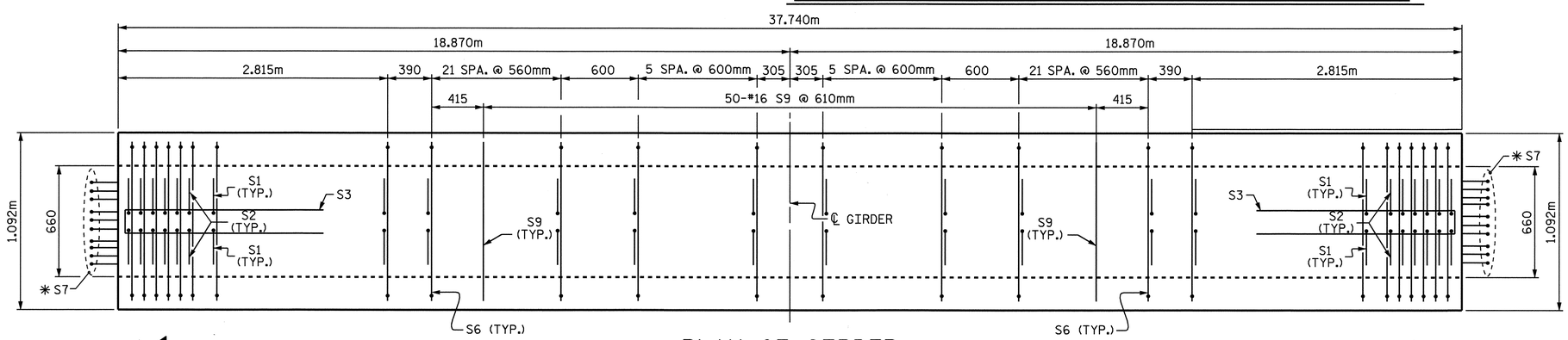

PLAN OF GIRDER

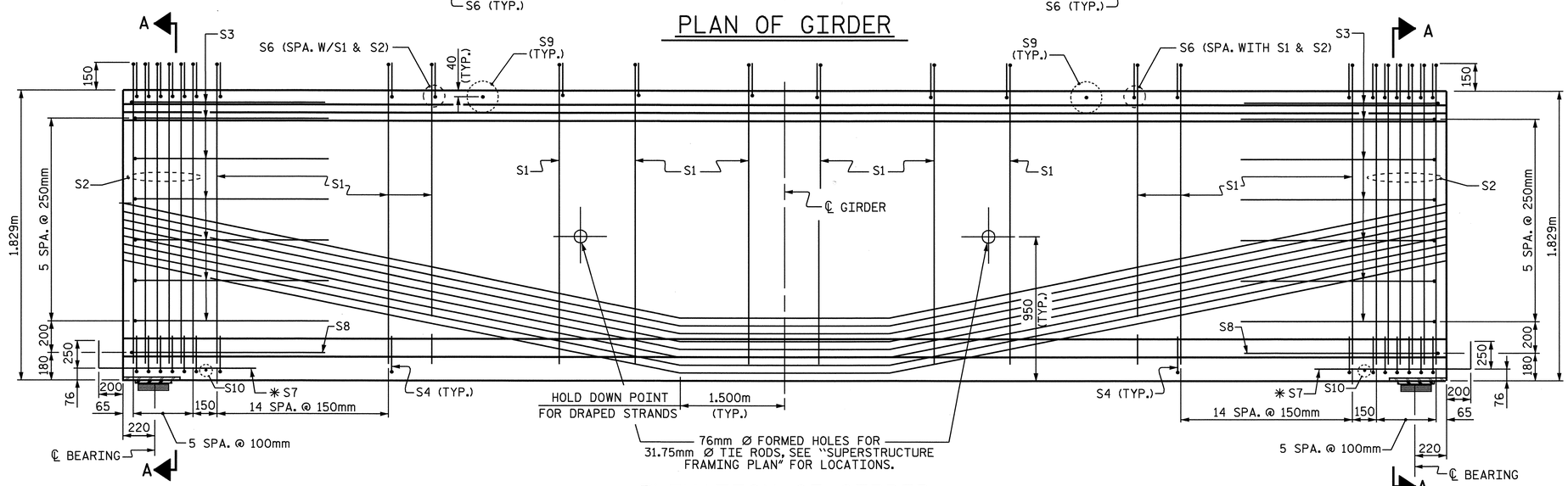

CONTINUOUS BENT

ELEVATION OF GIRDER

CONTINUOUS BENT

15.24mm Ø L.R GRADE 270 STRANDS

AREA (mm^2)	ULTIMATE STRENGTH (kN PER STRAND)	APPLIED PRESTRESS (kN PER STRAND)
140.0	260.7	195.5

REINFORCING STEEL FOR ONE GIRDER

BAR	NUMBER	SIZE	TYPE	LENGTH	WEIGHT
S1	172	#13	1	2100	359
S2	24	#16	1	2100	78
S3	14	#13	2	2560	36
S4	84	#13	3	920	77
S6	196	#16	1	1120	341
✱S7	20	#16	STR	1120	35
S8	2	#16	2	2740	9
S9	50	#16	STR	980	76
S10	2	#10	STR	560	1

✱NOTE: S7 BARS SHALL BE BENT BEFORE SHIPMENT. HEAT BENDING SHALL NOT BE ALLOWED.

BAR TYPES

ALL BAR DIMENSIONS ARE OUT-TO-OUT

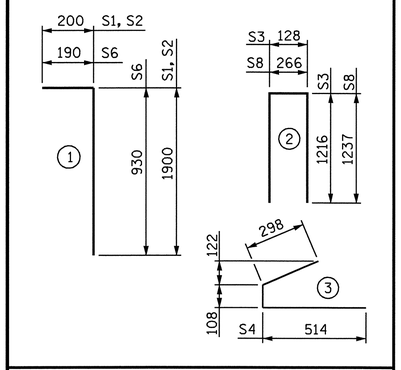

QUANTITIES FOR ONE GIRDER

	REINFORCING STEEL	65.5 MPa CONCRETE	15.24 Ø L.R. STRANDS
	kg	m^3	No.
	1012	20.3	46

GIRDERS REQUIRED

NUMBER	LENGTH	TOTAL LENGTH
5	37.740	188.700

PROJECT NO. R-2301A
JONES-CRAVEN COUNTY
STATION: 18+22.000 -L-

SHEET 2 OF 3

STATE OF NORTH CAROLINA
DEPARTMENT OF TRANSPORTATION
RALEIGH

1829mm PRESTRESSED CONCRETE MODIFIED BULB TEE GIRDER SPAN B RIGHT LANE

NORTH CAROLINA PROFESSIONAL SEAL 10730 ENGINEER D. ANDREW DAVENPORT, JR.
9-8-08

ASSEMBLED BY :	A. SORSENGINH	DATE :	2/22/08
CHECKED BY :	H. T. BARBOUR	DATE :	4/7/08
DRAWN BY :	EEM 2/97	REV. 8/16/99	RWW/LES
CHECKED BY :	VAP 2/97		

REVISIONS

NO.	BY:	DATE:	NO.	BY:	DATE:
1			3		
2			4		

SHEET NO. S-47
TOTAL SHEETS 176

STR. #2 STD. NO. PCG10M

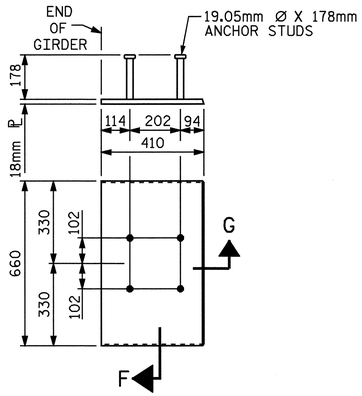

EMBEDDED PLATE "B-1" DETAILS FOR AASHTO TYPE IV GIRDER 1829mm MODIFIED BULB TEES

(2 REQ'D PER GIRDER)

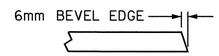

SECTION "G"

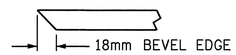

SECTION "F"

(SEE NOTES)

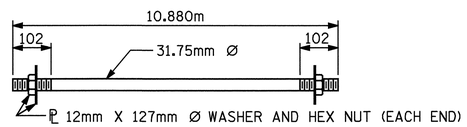

31.75mm Ø TIE ROD ASSEMBLY

(4 COMPLETE ASSEMBLIES REQUIRED)

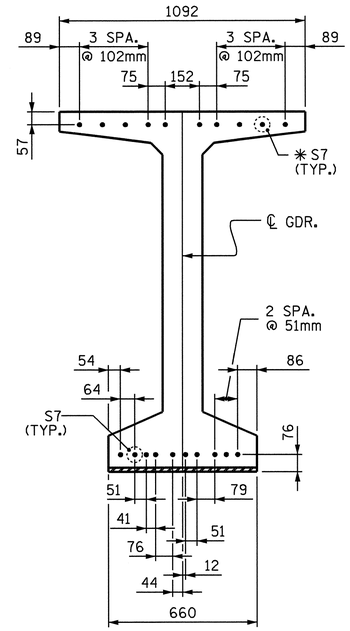

DETAIL C

NOTES

ALL PRESTRESSING STRANDS SHALL BE 7-WIRE LOW-RELAXATION GRADE 270 STRANDS AND SHALL CONFORM TO AASHTO M203M EXCEPT FOR SAMPLING REQUIREMENTS WHICH SHALL BE IN ACCORDANCE WITH THE STANDARD SPECIFICATIONS.

TIE ROD ASSEMBLY SHALL BE AASHTO M270 GRADE 250 STRUCTURAL STEEL.

ALL REINFORCING STEEL SHALL BE GRADE 420.

EMBEDDED PLATE "B-1" SHALL BE GALVANIZED IN ACCORDANCE WITH THE SPECIFICATIONS. BEVEL EDGES OF PLATE "B-1" TO GIVE CLOSE FIT BUT NOT TIGHT FIT TO STEEL CASTING FORM.

ANCHOR STUDS SHALL CONFORM TO AASHTO M169 GRADES 1010 THROUGH 1020 OR APPROVED EQUAL, AND SHALL MEET THE TYPE "B" REQUIREMENTS OF SUBSECTION 7.3 OF THE ANSI/AASHTO/AWS D1.5 BRIDGE WELDING CODE.

AT ENDS OF GIRDERS TO BE EMBEDDED IN CONCRETE DIAPHRAGMS OR END WALLS, PRESTRESSING STRANDS MAY EXTEND A MAXIMUM OF 50mm BEYOND THE GIRDER ENDS. OTHERWISE, PRESTRESSING STRANDS SHALL BE CUT FLUSH WITH THE GIRDER ENDS.

THE TRANSFER OF LOAD FROM THE ANCHORAGES TO THE GIRDER SHALL BE DONE WHEN CONCRETE HAS REACHED A COMPRESSIVE STRENGTH OF NOT LESS THAN 27.57 MPa FOR SPANS A & C AND 49.64 MPa FOR SPAN B.

DEPENDING ON THE TYPE OF SYSTEM USED TO SUPPORT THE DECK SLAB FORMS, PRESET ANCHORS MAY BE NECESSARY IN THE PRESTRESSED CONCRETE GIRDER.

THE TOP SURFACE OF THE GIRDER, EXCLUDING THE OUTSIDE 100mm, SHALL BE RAKED TO A DEPTH OF 6mm.

WHEN DRAPED STRANDS ARE DETAILED, THE LONGITUDINAL LOCATION OF THE HOLD DOWN DEVICES SHALL BE WITHIN 150mm OF THE LOCATION SHOWN AND THE CENTER OF GRAVITY OF THE GROUP OF DRAPED STRANDS SHALL BE LOCATED WITHIN 13mm OF THE THEORETICAL LOCATION SHOWN.

A 51mm x 51mm CHAMFER IS ALLOWED AT THE INTERSECTION OF THE WEB AND THE BOTTOM FLANGE OF THE 1600mm AND 1829mm MODIFIED BULB TEES ONLY.

THE CONTRACTOR HAS THE OPTION TO PROVIDE, AT NO ADDITIONAL COST TO THE DEPARTMENT, 2 ADDITIONAL STRANDS AT THE TOP OF THE GIRDER TO FACILITATE TYING OF THE REINFORCING STEEL. THESE STRANDS SHALL BE PULLED TO A LOAD OF 20 Kn.

FOR CRACK REPAIR OF PRESTRESSED CONCRETE GIRDERS, SEE SPECIAL PROVISIONS.

THE UPLIFT FORCE DUE TO DRAPED STRANDS IS 127.9 KN.

DEAD LOAD DEFLECTION TABLE

15.24mm Ø LOW RELAXATION	SPANS A&C										
	GIRDERS 1 - 5										
TENTH POINTS	℄ BRG.	.1	.2	.3	.4	.5	.6	.7	.8	.9	℄ BRG.
CAMBER (GIRDER ALONE IN PLACE) ↑	0.000	0.004	0.008	0.012	0.014	0.014	0.014	0.012	0.08	0.004	0.000
✱DEFLECTION DUE TO SUPERIMPOSED D.L. ↓	0.000	0.001	0.002	0.003	0.004	0.004	0.004	0.003	0.002	0.001	0.000
FINAL CAMBER ↑	0	3	6	9	10	10	10	9	6	3	0

DEAD LOAD DEFLECTION TABLE

15.24mm Ø LOW RELAXATION	SPAN B																																		
	GIRDER 1											GIRDERS 2, 3 & 4											GIRDER 5												
TENTH POINTS	℄ BRG.	.1	.2	.3	.4	.5	.6	.7	.8	.9	℄ BRG.	℄ BRG.	.1	.2	.3	.4	.5	.6	.7	.8	.9	℄ BRG.	℄ BRG.	.1	.2	.3	.4	.5	.6	.7	.8	.9	℄ BRG.
CAMBER (GIRDER ALONE IN PLACE) ↑	0.000	0.053	0.099	0.136	0.159	0.167	0.159	0.136	0.099	0.053	0.000	0.000	0.053	0.099	0.136	0.159	0.167	0.159	0.136	0.099	0.053	0.000	0.000	0.053	0.099	0.136	0.159	0.167	0.159	0.136	0.099	0.053	0.000
✱DEFLECTION DUE TO SUPERIMPOSED D.L. ↓	0.000	0.019	0.037	0.051	0.060	0.063	0.060	0.051	0.037	0.019	0.000	0.000	0.019	0.036	0.049	0.058	0.061	0.058	0.049	0.036	0.019	0.000	0.000	0.020	0.038	0.052	0.061	0.065	0.061	0.052	0.038	0.020	0.000
FINAL CAMBER ↑	0	34	62	85	99	104	99	85	62	34	0	0	34	63	87	101	106	101	87	63	34	0	0	33	61	84	98	102	98	84	61	33	0

✱INCLUDES FUTURE WEARING SURFACE
ALL VALUES ARE SHOWN IN METERS, EXCEPT "FINAL CAMBER" WHICH IS SHOWN IN MILLIMETERS.

PROJECT NO. R-2301A
JONES-CRAVEN COUNTY
STATION: 18+22.000 -L-

SHEET 3 OF 3

STATE OF NORTH CAROLINA
DEPARTMENT OF TRANSPORTATION
RALEIGH

PRESTRESSED CONCRETE GIRDER CONTINUOUS FOR LIVE LOAD DETAILS RIGHT LANE

NORTH CAROLINA PROFESSIONAL SEAL 10730 ENGINEER D. ANDREW DAVENPORT, JR.
9-8-08

REVISIONS						SHEET NO.
NO.	BY:	DATE:	NO.	BY:	DATE:	S-48
1			3			TOTAL SHEETS
2			4			176

ASSEMBLED BY : A. SORSENGINH	DATE : 2/25/08
CHECKED BY : H. T. BARBOUR	DATE : 4/7/08
DRAWN BY : ELR 11/91	REV. 10/17/00 RWW/LES
CHECKED BY : GRP 11/91	REV. 7/10/01RR LES/RDR
	REV. 5/1/06 TLA/GM

08-AUG-2008 12:51
r:\structures\asorsenginh\R-2301A_sd_S*2.dgn
tbarbour

STR. #2

STD. NO. PCG11SM

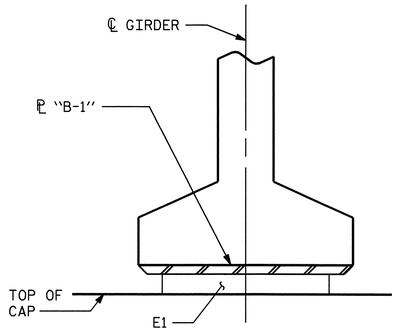

SECTION D-D
AT END BENT

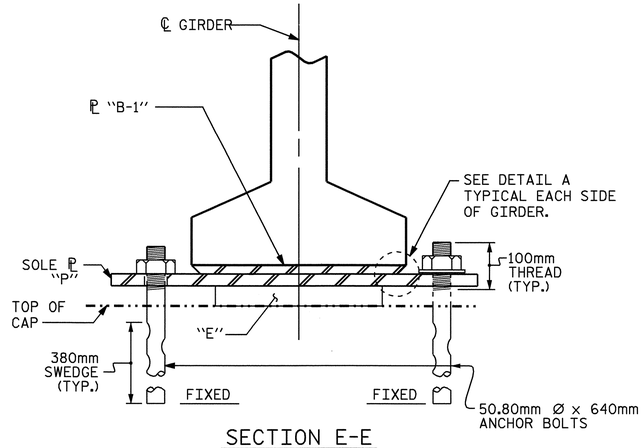

SECTION E-E
AT BENT

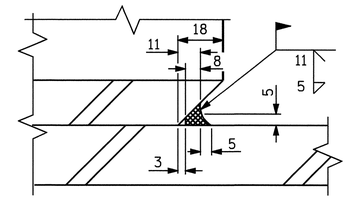

DETAIL A

NOTES

AT ALL FIXED POINTS OF SUPPORT, NUTS FOR ANCHOR BOLTS ARE TO BE TIGHTENED FINGER TIGHT AND THEN BACKED OFF 1/2 TURN. THE THREAD OF THE NUT AND BOLT SHALL THEN BE BURRED WITH A SHARP POINTED TOOL.

STEEL SOLE PLATES, ANCHOR BOLTS, NUTS, AND WASHERS SHALL BE GALVANIZED IN ACCORDANCE WITH THE STANDARD SPECIFICATIONS.

PRIOR TO WELDING, GRIND THE GALVANIZED SURFACE OF THE PORTION OF THE EMBEDDED PLATE AND SOLE PLATE THAT ARE TO BE WELDED. AFTER WELDING, DAMAGED GALVANIZED SURFACES SHALL BE REPAIRED IN ACCORDANCE WITH THE STANDARD SPECIFICATIONS.

WHEN WELDING THE SOLE PLATE TO THE EMBEDDED PLATE IN THE GIRDER, USE TEMPERATURE INDICATING WAX PENS, OR OTHER SUITABLE MEANS, TO ENSURE THAT THE TEMPERATURE OF THE SOLE PLATE DOES NOT EXCEED 149°C. TEMPERATURES ABOVE THIS MAY DAMAGE THE ELASTOMER.

SOLE PLATE "P", BOLTS, NUTS, WASHERS, AND PIPE SLEEVE SHALL BE INCLUDED IN THE PAY ITEM FOR PRESTRESSED CONCRETE GIRDERS.

ANCHOR BOLTS SHALL MEET THE REQUIREMENTS OF ASTM A449. NUTS SHALL MEET THE REQUIREMENTS OF AASHTO M291M-12 OR AASHTO M292M-2H. WASHERS SHALL MEET THE REQUIREMENTS OF AASHTO M293M. SHOP DRAWINGS ARE NOT REQUIRED FOR ANCHOR BOLTS, NUTS AND WASHERS. SHOP INSPECTION IS REQUIRED.

ALL SURFACES OF BEARING PLATES SHALL BE SMOOTH AND STRAIGHT.

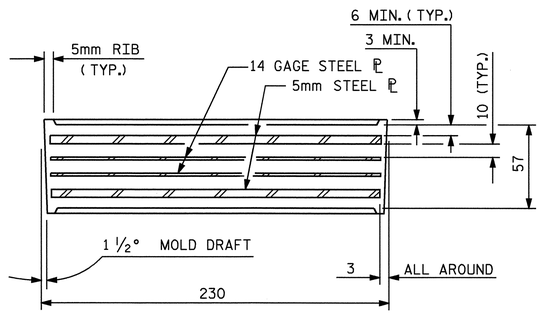

TYPICAL SECTION OF ELASTOMERIC BEARINGS

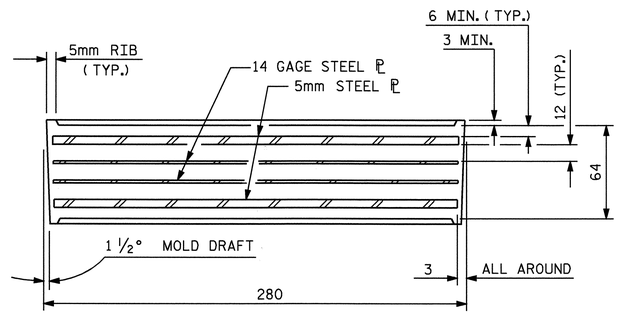

TYPICAL SECTION OF ELASTOMERIC BEARINGS

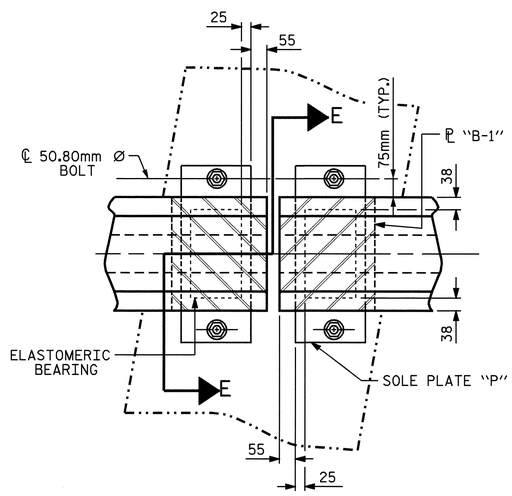

TYPICAL BENT PLAN

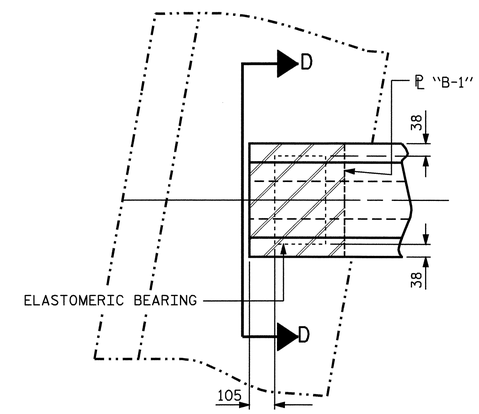

TYPICAL END BENT PLAN

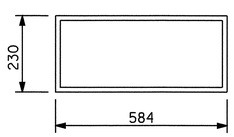

E1 (20 REQ'D)

PLAN VIEW OF ELASTOMERIC BEARING

TYPE V

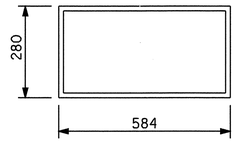

E2 (10 REQ'D)

PLAN VIEW OF ELASTOMERIC BEARING

TYPE VI

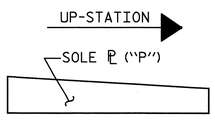

SOLE ℗ PLACEMENT DETAIL

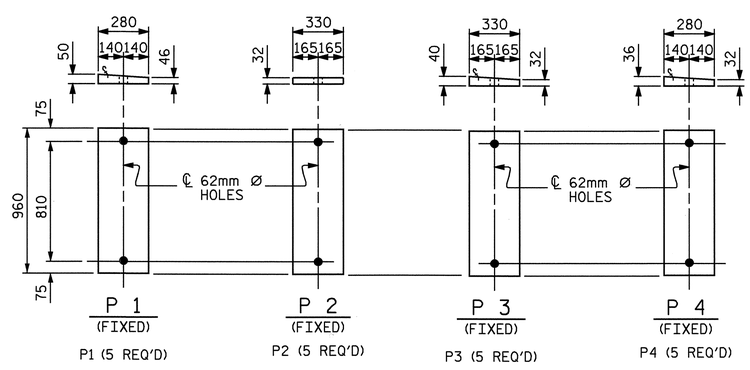

SOLE PLATE DETAILS ("P")

— LOAD RATINGS —	
	MAX.D.L.+L.L.
TYPE V	801 kN
TYPE VI	936 kN

PROJECT NO. R-2301A
JONES-CRAVEN COUNTY
STATION: 18+22.000 -L-

STATE OF NORTH CAROLINA
DEPARTMENT OF TRANSPORTATION
RALEIGH

ELASTOMERIC BEARING DETAILS
PRESTRESSED CONCRETE GIRDER SUPERSTRUCTURE
RIGHT LANE

NORTH CAROLINA PROFESSIONAL SEAL 10730 ENGINEER D. ANDREW DAVENPORT, JR.
9-8-08

REVISIONS							SHEET NO.
NO.	BY:	DATE:	NO.	BY:	DATE:		S-49
1			3				TOTAL SHEETS
2			4				176

STR. #2

STD. NO. EB4SM

ASSEMBLED BY : A. SORSENGINH	DATE : 2/25/08
CHECKED BY : H. T. BARBOUR	DATE : 3/31/08
DRAWN BY : WJH 8/89	REV. 8/16/99 RWW/LES
CHECKED BY : CRK 8/89	REV. 10/17/00 RWW/LES
	REV. 5/1/06 TLA/GM

05-SEP-2008 10:11
r:\structures\asorsenginh\R-2301A_sd_S*2.dgn
tbarbour

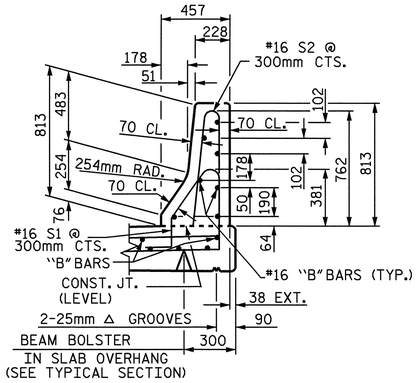

SECTION THRU RAIL

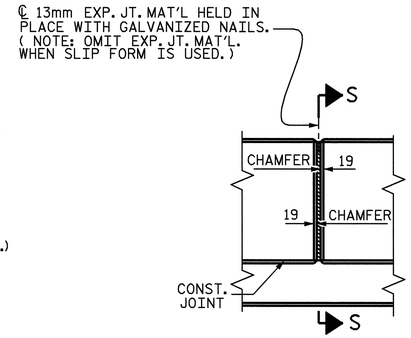

ELEVATION AT EXPANSION JOINTS

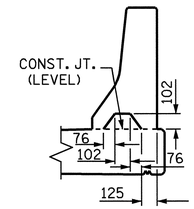

SECTION S-S

AT DAM IN OPEN JOINT
(THIS IS TO BE USED ONLY
WHEN SLIP FORM IS USED)

BARRIER RAIL DETAILS

NOTES

BARRIER RAIL IN A CONTINUOUS UNIT SHALL NOT BE CAST UNTIL ALL SLAB CONCRETE IN THE UNIT HAS BEEN CAST AND HAS REACHED A MINIMUM COMPRESSIVE STRENGTH OF 20.7 MPa.

ALL REINFORCING STEEL IN BARRIER RAILS SHALL BE EPOXY COATED.

VERTICAL GROOVED CONTRACTION JOINTS, 12mm IN DEPTH, SHALL BE TOOLED IN ALL EXPOSED FACES OF THE BARRIER RAIL AND IN ACCORDANCE WITH ARTICLE 825-10(B) OF THE STANDARD SPECIFICATIONS. THE CONTRACTION JOINT SHALL BE LOCATED AT EACH THIRD POINT BETWEEN BARRIER RAIL EXPANSION JOINTS. ONLY ONE CONTRACTION JOINT IS REQUIRED AT MIDPOINT OF BARRIER RAIL SEGMENTS LESS THAN 6.1m IN LENGTH AND NO CONTRACTION JOINTS ARE REQUIRED FOR THOSE SEGMENTS LESS THAN 3.5m IN LENGTH.

BAR TYPES

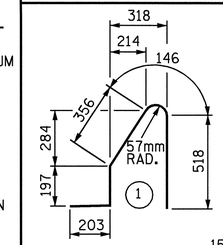

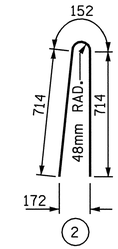

ALL BAR DIMENSIONS ARE OUT TO OUT

BILL OF MATERIAL

FOR CONCRETE BARRIER RAIL ONLY

BAR	NO.	SIZE	TYPE	LENGTH	WEIGHT
* B1	98	#16	STR	7480	1138
* B2	28	#16	STR	5460	237
* B3	56	#16	STR	3320	289
* S1	502	#16	1	1420	1106
* S2	502	#16	2	1580	1231

* EPOXY COATED
REINFORCING STEEL 4001 kg

CLASS AA CONCRETE 37.9 CU. METER

CONCRETE BARRIER RAIL 150.964 METERS

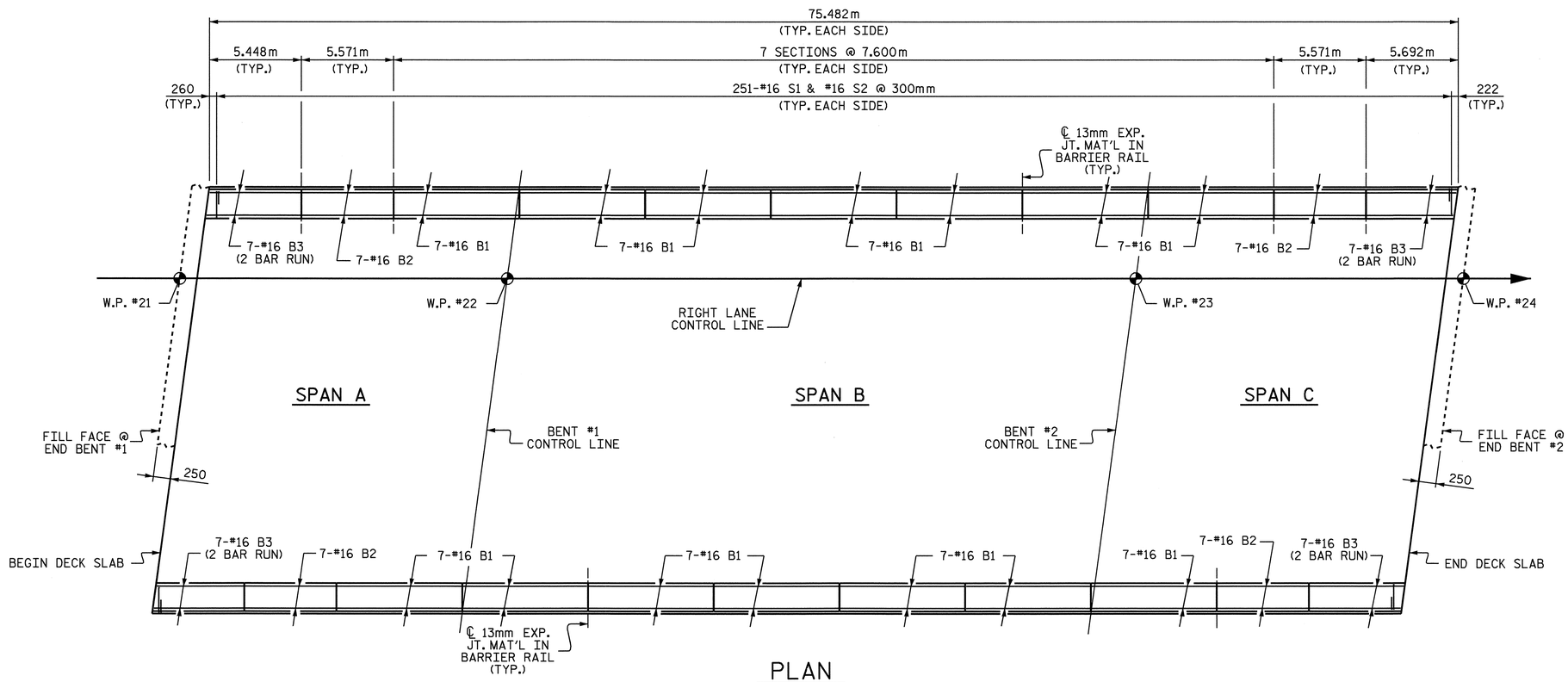

PLAN

PROJECT NO. R-2301A
JONES-CRAVEN COUNTY
STATION: 18+22.000 -L-

STATE OF NORTH CAROLINA
DEPARTMENT OF TRANSPORTATION
RALEIGH

CONCRETE
BARRIER RAIL
RIGHT LANE

NORTH CAROLINA PROFESSIONAL SEAL 10730 ENGINEER D. ANDREW DAVENPORT, JR.

REVISIONS								SHEET NO.
NO.	BY:	DATE:	NO.	BY:	DATE:			S-50
1			3					TOTAL SHEETS
2			4					176

ASSEMBLED BY : A. SORSENGINH		DATE : 2/29/08	
CHECKED BY : H. T. BARBOUR		DATE : 4/7/08	
DRAWN BY : ARB 5/87	REV. 10/17/00	RWW/LES	
CHECKED BY : SJD 9/87	REV. 5/7/03R	RWW/JTE	
	REV. 5/1/06	TLA/GM	

05-SEP-2008 10:12
r:\structures\asorsenginh\R-2301A_sd_S*2.dgn
tbarbour

STR. #2

STD. No. CBR1SM

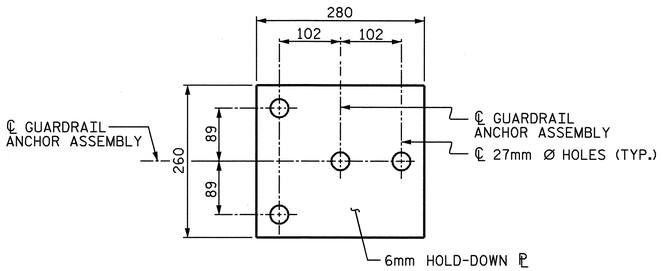

PLAN

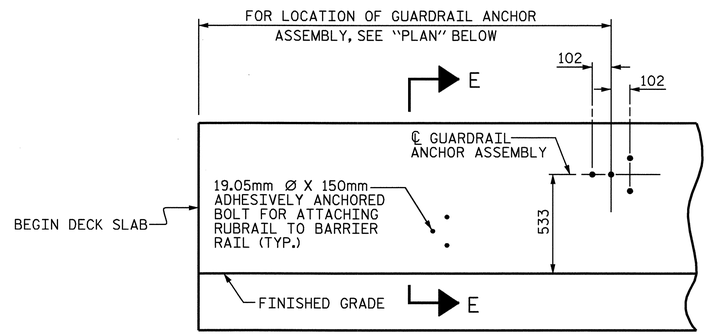

ELEVATION

FOR LOCATION OF RUBRAIL, SEE ROADWAY STD. 862.03

NOTES

THE GUARDRAIL ANCHOR ASSEMBLY SHALL CONSIST OF A 6mm HOLD DOWN PLATE AND 4 - 22.23mm Ø BOLTS WITH NUTS AND WASHERS, RUBRAIL, AND ADHESIVELY ANCHORED BOLTS.

THE HOLD-DOWN PLATE SHALL CONFORM TO AASHTO M270 GRADE 36. AFTER FABRICATION, THE HOLD-DOWN PLATE SHALL BE HOT-DIP GALVANIZED IN ACCORDANCE WITH AASHTO M111.

BOLTS SHALL CONFORM TO THE REQUIREMENTS OF ASTM A307 AND NUTS SHALL CONFORM TO THE REQUIREMENTS OF AASHTO M291. BOLTS, NUTS AND WASHERS SHALL BE GALVANIZED. (AT THE CONTRACTOR'S OPTION, STAINLESS STEEL BOLTS, NUTS AND WASHERS MAY BE USED AS AN ALTERNATE FOR THE 22.23mm Ø GALVANIZED BOLTS, NUTS AND WASHERS. THEY SHALL CONFORM TO OR EXCEED THE MECHANICAL REQUIREMENTS OF ASTM A307. THE USE OF THIS ALTERNATE SHALL BE APPROVED BY THE ENGINEER.)

THE GUARDRAIL ANCHOR ASSEMBLY IS REQUIRED AT ALL POINTS WHERE APPROACH GUARDRAIL IS TO BE ATTACHED TO THE END OF BARRIER RAIL. FOR POINTS OF ATTACHMENT, SEE SKETCH.

AFTER INSTALLATION, THE EXPOSED THREAD OF THE BOLT SHALL BE BURRED WITH A SHARP POINTED TOOL.

THE COST OF THE GUARDRAIL ANCHOR ASSEMBLY SHALL BE INCLUDED IN THE UNIT CONTRACT PRICE BID FOR CONCRETE BARRIER RAIL.

THE 32mm Ø HOLES SHALL BE FORMED OR DRILLED WITH A CORE BIT. IMPACT TOOLS WILL NOT BE PERMITTED. ANY CONCRETE DAMAGED BY THIS WORK SHALL BE REPAIRED TO THE SATISFACTION OF THE ENGINEER.

THE C150 X 12 RUBRAIL IS TO BE ADHESIVELY ANCHORED TO THE RAIL USING THREE 19.05mm Ø X 150mm BOLTS WITH WASHERS. LEVEL ONE FIELD TESTING IF REQUIRED, AND THE YIELD LOAD OF THE 19.05mm Ø BOLTS IS 53.4KN. FOR ADHESIVELY ANCHORED ANCHOR BOLTS OR DOWELS, SEE SPECIAL PROVISIONS. SEE ROADWAY STANDARD 862.03 FOR DETAILS AND LOCATION OF THE RUBRAIL.

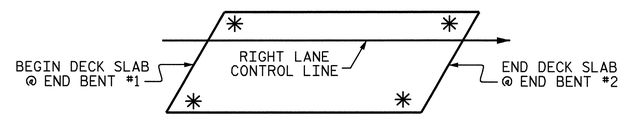

SKETCH SHOWING POINTS OF ATTACHMENTS

✳ DENOTES GUARDRAIL ANCHOR ASSEMBLY

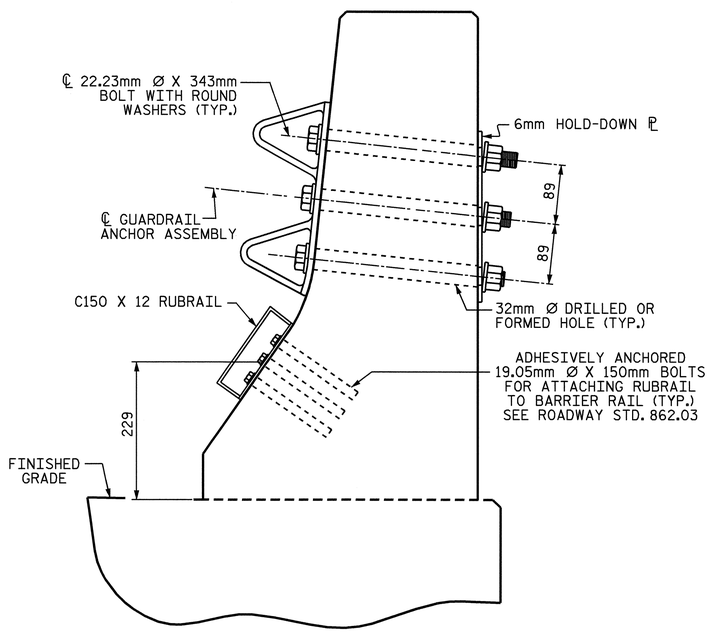

SECTION E-E

GUARDRAIL ANCHOR ASSEMBLY DETAILS

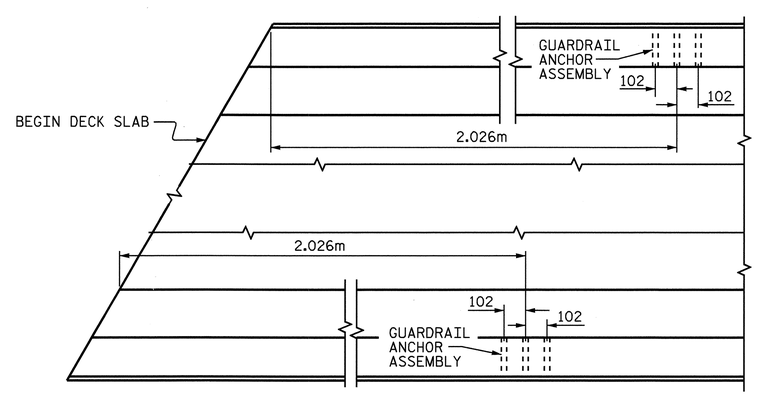

PLAN

LOCATION OF ANCHORS FOR GUARDRAIL

END BENT #1 SHOWN, END BENT #2 SIMILAR.

PROJECT NO. R-2301A
JONES-CRAVEN COUNTY
STATION: 18+22.000 -L-

STATE OF NORTH CAROLINA
DEPARTMENT OF TRANSPORTATION
RALEIGH

GUARDRAIL ANCHORAGE FOR BARRIER RAIL RIGHT LANE

NORTH CAROLINA PROFESSIONAL SEAL 10730 ENGINEER D. ANDREW DAVENPORT, JR.

REVISIONS						SHEET NO.
NO.	BY:	DATE:	NO.	BY:	DATE:	S-51
1			3			TOTAL SHEETS
2			4			76

ASSEMBLED BY :	A. SORSENGINH	DATE :	2/29/08
CHECKED BY :	H. T. BARBOUR	DATE :	3/31/08
DRAWN BY : TLA 5/06	ADDED 5/1/06		
CHECKED BY : GM 5/06			

08-AUG-2008 12:51
r:\structures\asorsenginh\R-2301A_sd_S*2.dgn
tbarbour

STR. #2 STD. NO. GRA2SM

SUPERSTRUCTURE BILL OF MATERIAL

	CLASS AA CONCRETE	REINFORCING STEEL	**EPOXY COATED REINFORCING STEEL
	(CU. M)	(Kg)	(Kg)
POUR #1	63.3		
POUR #2	166.4		
POUR #3	98.3		
POUR #4	60.4		
TOTALS	388.4	14,054	16,001

** QUANTITIES FOR BARRIER RAIL ARE NOT INCLUDED

GROOVING BRIDGE FLOORS

BRIDGE DECK	835.2	SQ.METER
APPROACH SLAB	152.3	SQ.METER
TOTAL	987.5	SQ.METER

REINFORCING BAR SCHEDULE

SPANS A-C

BAR	NO.	SIZE	TYPE	LENGTH	WEIGHT
* A1	379	#16	STR	12880	7576
A2	379	#16	STR	12880	7576
* A101	2	#16	STR	12360	38
* A102	2	#16	STR	11660	36
* A103	2	#16	STR	10940	34
* A104	2	#16	STR	10240	32
* A105	2	#16	STR	9540	30
* A106	2	#16	STR	8820	27
* A107	2	#16	STR	8120	25
* A108	2	#16	STR	7400	23
* A109	2	#16	STR	6700	21
* A110	2	#16	STR	5980	19
* A111	2	#16	STR	5280	16
* A112	2	#16	STR	4560	14
* A113	2	#16	STR	3860	12
* A114	2	#16	STR	3140	10
* A115	2	#16	STR	2440	8
* A116	2	#16	STR	1740	5
* A117	2	#16	STR	1020	3

BAR	NO.	SIZE	TYPE	LENGTH	WEIGHT
A201	2	#16	STR	12360	38
A202	2	#16	STR	11660	36
A203	2	#16	STR	10940	34
A204	2	#16	STR	10240	32
A205	2	#16	STR	9540	30
A206	2	#16	STR	8820	27
A207	2	#16	STR	8120	25
A208	2	#16	STR	7400	23
A209	2	#16	STR	6700	21
A210	2	#16	STR	5980	19
A211	2	#16	STR	5280	16
A212	2	#16	STR	4560	14
A213	2	#16	STR	3860	12
A214	2	#16	STR	3140	10
A215	2	#16	STR	2440	8
A216	2	#16	STR	1740	5
A217	2	#16	STR	1020	3
* B1	118	#19	STR	3760	992
* B2	62	#13	STR	8480	553
* B3	124	#22	STR	10840	4089
* B4	56	#22	STR	8560	1458
* B5	62	#13	STR	7020	433
B6	120	#16	STR	17800	3315
B7	60	#19	STR	3760	504
K1	24	#13	STR	7980	190
K2	8	#13	STR	1940	15
K3	40	#13	STR	2440	97
K4	4	#13	STR	1820	7
K5	20	#13	STR	2060	41
K6	16	#13	STR	920	15
K7	32	#16	7	2260	112
K8	160	#16	STR	2360	586
K9	24	#13	2	1680	40
K10	36	#13	3	3360	120
K11	16	#13	STR	1580	25
K12	80	#13	STR	2440	194
* S1	44	#13	1	3560	156
* S2	44	#13	1	3620	158
S3	112	#13	8	3460	385
S4	40	#13	5	5060	201
S5	264	#13	4	860	226
S6	16	#13	9	3250	52
* U1	44	#13	6	4540	199
* U2	12	#13	6	2840	34
REINFORCING STEEL					14,054
* EPOXY COATED REINFORCING STEEL					16,001

BAR TYPES

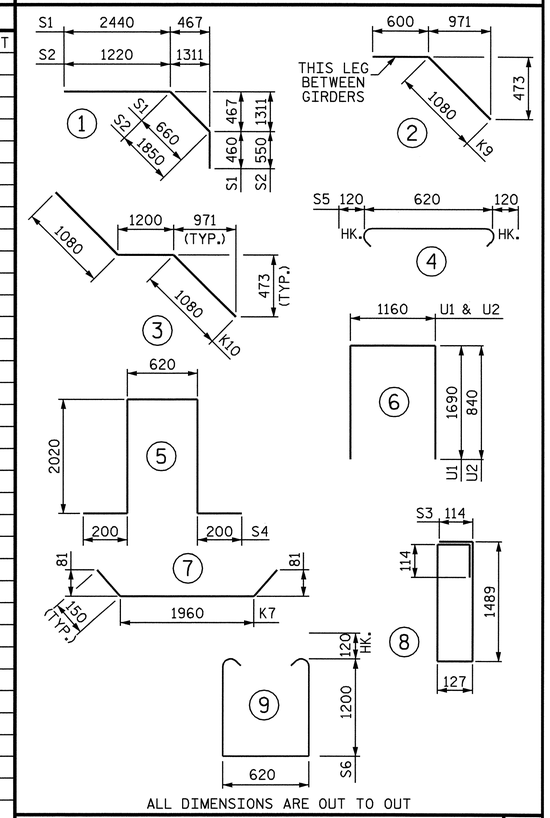

ALL DIMENSIONS ARE OUT TO OUT

SUPERSTRUCTURE REINFORCING STEEL LENGTHS ARE BASED ON THE FOLLOWING MINIMUM SPLICE LENGTHS

BAR SIZE	SUPERSTRUCTURE EXCEPT APPROACH SLABS, PARAPET, AND BARRIER RAIL		APPROACH SLABS		PARAPET AND BARRIER RAIL
	EPOXY COATED	UNCOATED	EPOXY COATED	UNCOATED	
#13	610	540	610	540	840
#16	770	660	770	660	1050
#19	920	790	1190	790	1330
#22	1580	1060			
#25	2080	1390			

ALL DIMENSIONS ARE IN MILLIMETERS

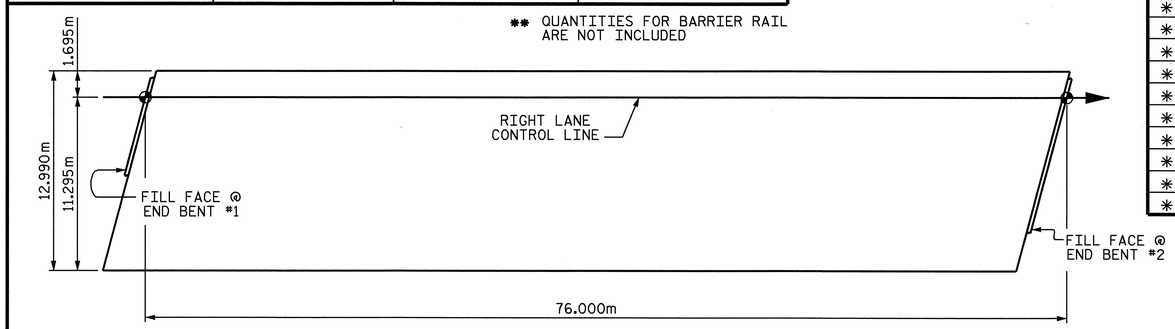

LAYOUT FOR COMPUTING AREA OF REINFORCED CONCRETE DECK SLAB (SQ. METER = 987.2)

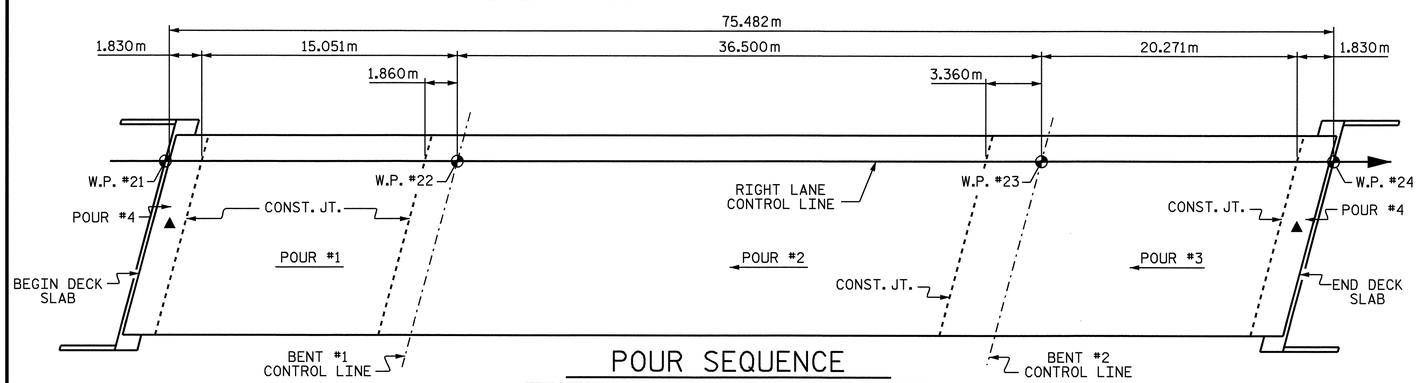

POUR SEQUENCE

▲POUR#4 IN THIS AREA INCLUDES THE UPPER PART OF THE END BENT WINGS, UPPER PART OF THE INTEGRAL END BENT, AND 1.830m SECTION OF THE BRIDGE DECK.

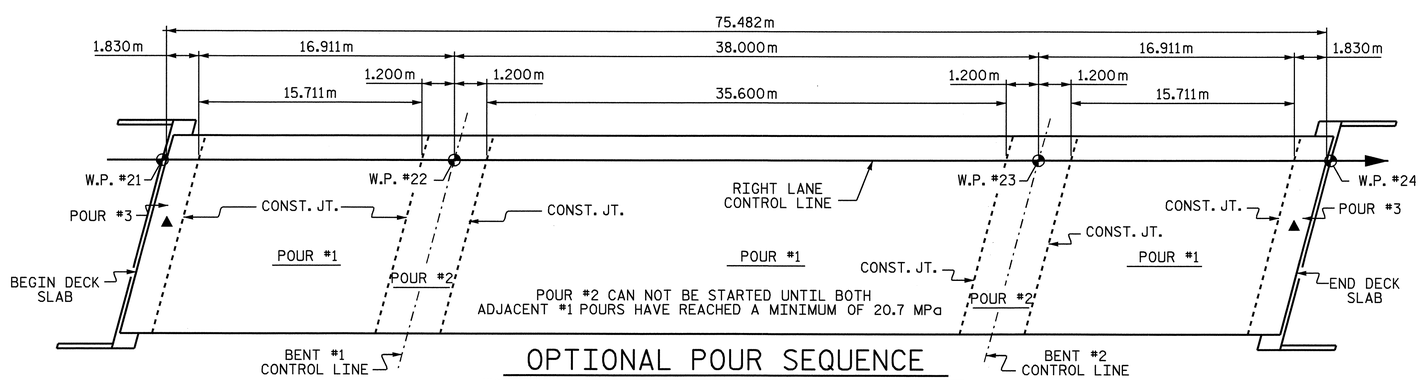

OPTIONAL POUR SEQUENCE

▲POUR#3 IN THIS AREA INCLUDES THE UPPER PART OF THE END BENT WINGS, UPPER PART OF THE INTEGRAL END BENT, AND 1.830m SECTION OF THE BRIDGE DECK.

DRAWN BY : A. SORSENGINH DATE : 2/29/08
CHECKED BY : H. T. BARBOUR DATE : 4/7/08

PROJECT NO. R-2301A
JONES-CRAVEN COUNTY
STATION: 18+22.000 -L-

STATE OF NORTH CAROLINA
DEPARTMENT OF TRANSPORTATION
RALEIGH

NORTH CAROLINA PROFESSIONAL SEAL 10730 ENGINEER D. ANDREW DAVENPORT, JR.
9-8-08

SUPERSTRUCTURE BILL OF MATERIAL RIGHT LANE

REVISIONS							SHEET NO.
NO.	BY:	DATE:	NO.	BY:	DATE:		S-52
1			3				TOTAL SHEETS
2			4				176

STR. #2

NOTES

SEE SUPERSTRUCTURE SHEETS FOR UPPER PART OF INTEGRAL END BENT DETAILS.

THE CONTRACTORE SHALL PROVIDE FOR INSTALLATION OF THE 102mm DIAMETER DRAIN PIPE THROUGH THE WING WALL AS REQUIRED FOR REINFORCED BRIDGE APPROACH FILLS, SEE THE ROADWAY PLANS. REINFORCING STEEL IN THE WING WALL MAY BE SHIFTED AS NECESSARY TO CLEAR THE DRAIN PIPE.

THE CONTRACTOR'S ATTENTION IS CALLED TO THE FACT THAT THE UPPER PART OF THE END BENT WINGS ARE TO BE POURED WITH POUR #4 OF THE SUPERSTRUCTURE.

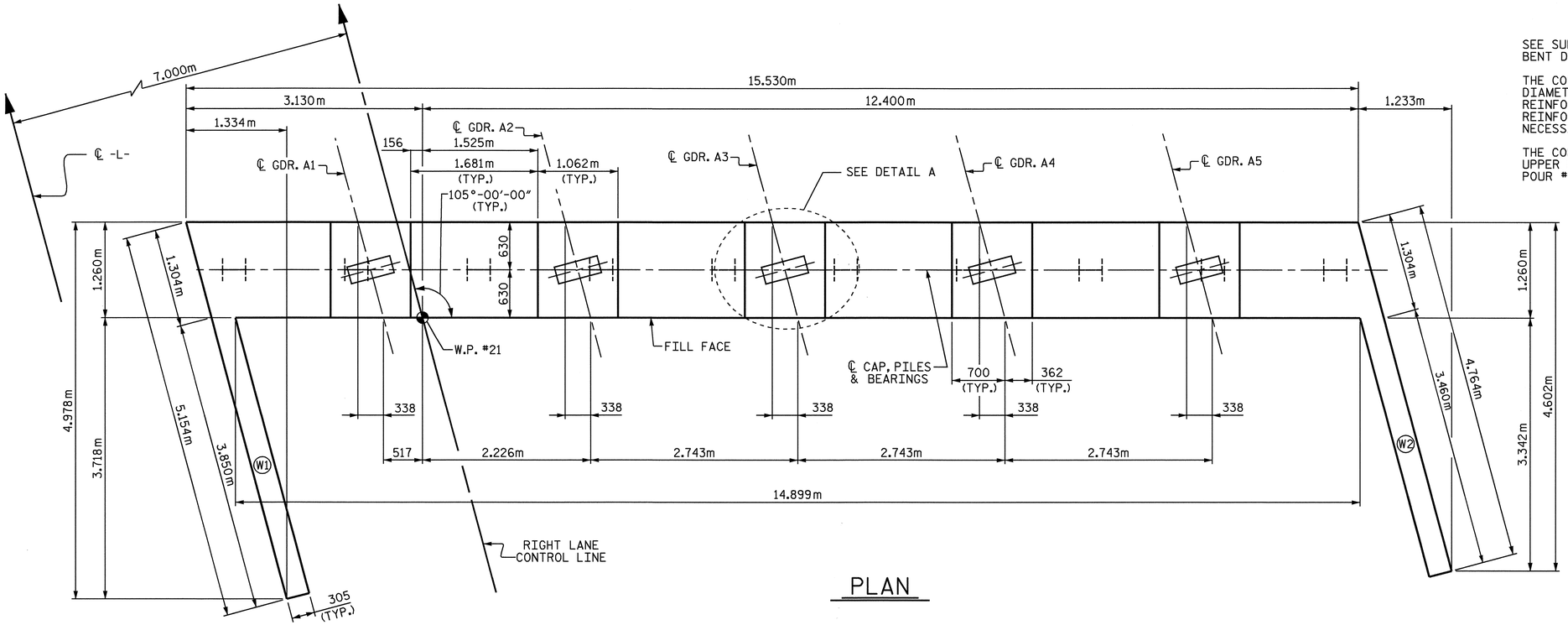

PLAN

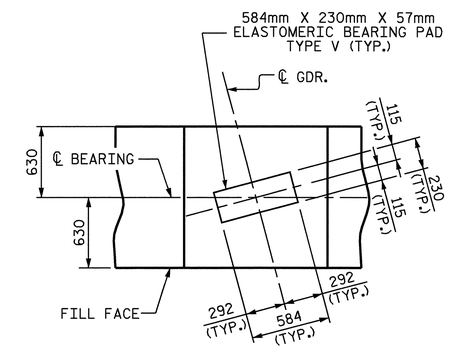

DETAIL A

PILES NOT SHOWN FOR CLARITY

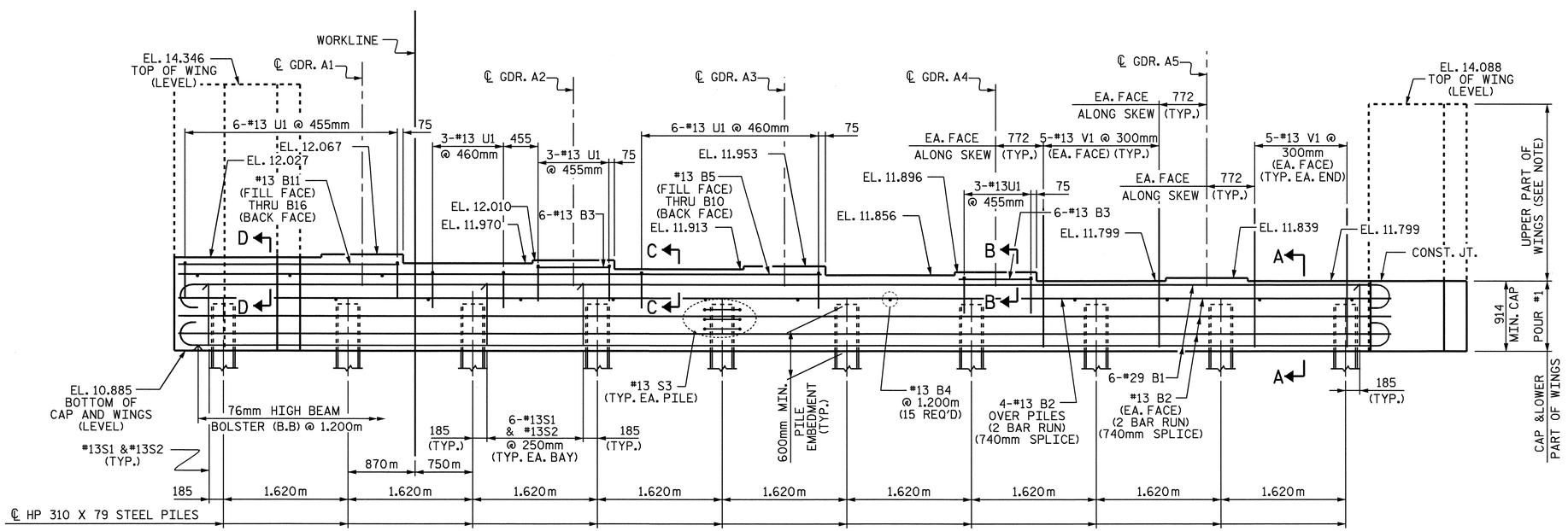

ELEVATION

PROJECT NO. R-2301A

JONES-CRAVEN COUNTY

STATION: 18+22.000 -L-

SHEET 1 OF 3

STATE OF NORTH CAROLINA
DEPARTMENT OF TRANSPORTATION
RALEIGH

SUBSTRUCTURE INTEGRAL END BENT #1 (RIGHT LANE)

NORTH CAROLINA PROFESSIONAL SEAL 10730 ENGINEER D. ANDREW DAVENPORT, JR.

REVISIONS						SHEET NO.
NO.	BY:	DATE:	NO.	BY:	DATE:	S-53
1			3			TOTAL SHEETS
2			4			176

STR. #2

DRAWN BY : M. G. SHAIKH DATE : 07-31-08
CHECKED BY : H.T. BARBOUR DATE : 08-08

04-SEP-2008 12:37
r:\structures\mshaikh\R-2301a\Microstation\RIGHT LANE STR #2\R-2301A_sd_E*.dgn
tbarbour

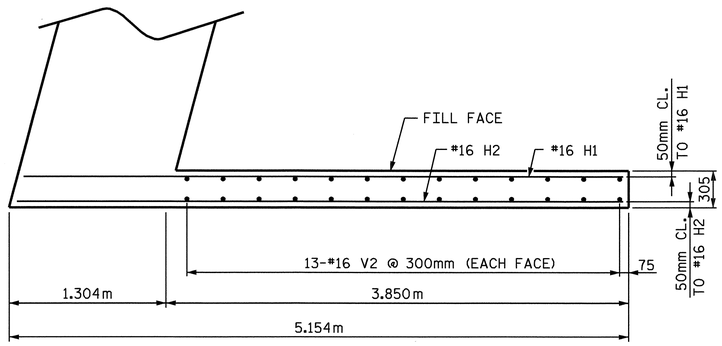

PLAN OF LEFT WING (W1)

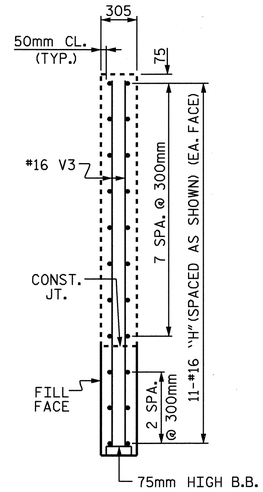

SECTION Y-Y

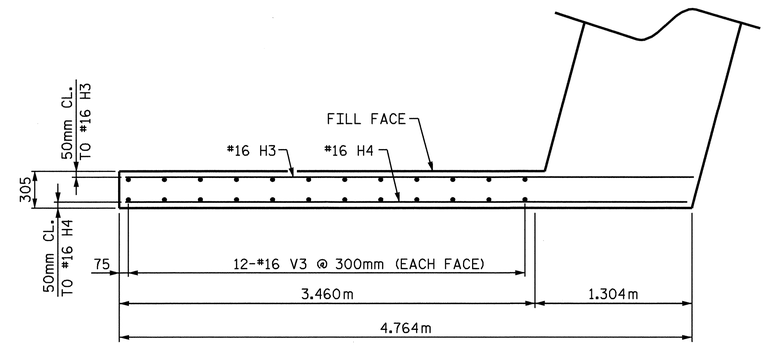

PLAN OF RIGHT RIGHT (W2)

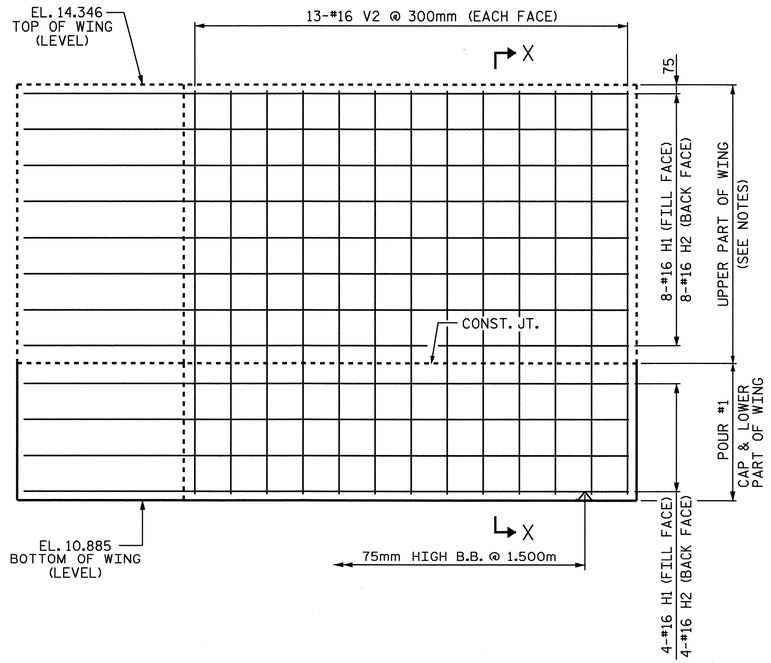

ELEVATION OF LEFT WING (W1)

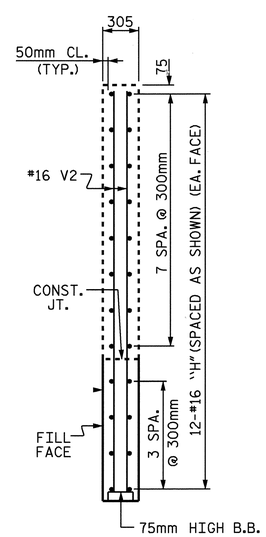

SECTION X-X

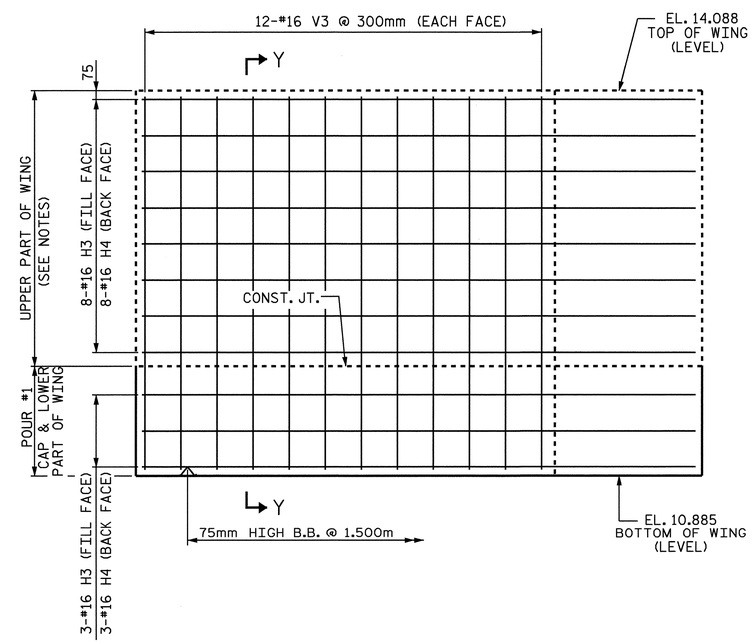

ELEVATION OF RIGHT WING (W2)

PROJECT NO. R-2301A
JONES-CRAVEN COUNTY
STATION: 18+22.000 -L-

SHEET 2 OF 3

STATE OF NORTH CAROLINA
DEPARTMENT OF TRANSPORTATION
RALEIGH

SUBSTRUCTURE INTEGRAL END BENT #1 (RIGHT LANE)

NORTH CAROLINA PROFESSIONAL SEAL 10730 ENGINEER D. ANDRE DAVENPORT, JR.

REVISIONS						SHEET NO.
NO.	BY:	DATE:	NO.	BY:	DATE:	S-54
1			3			TOTAL SHEETS
2			4			176

DRAWN BY : M. G. SHAIKH DATE : 08-04-08
CHECKED BY : H.T. BARBOUR DATE : 08-08

11-AUG-2008 15:32
f:\structures\mshaikh\Microstation\RIGHT LANE STR #2\R-2301A_sd_E*.dgn
addavenport

STR #2

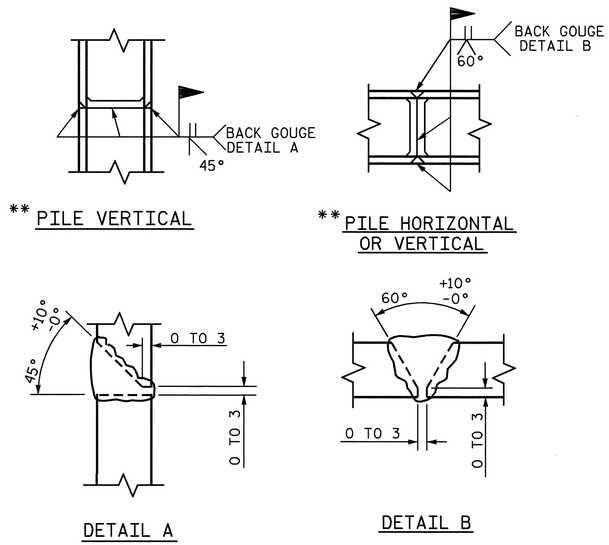

PILE SPLICE DETAILS

** POSITION OF PILE DURING WELDING.

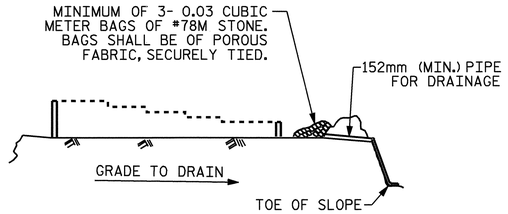

BAGGED STONE AND PIPE SHALL BE PLACED IMMEDIATELY AFTER COMPLETION OF END BENT EXCAVATION. PIPE MAY BE EITHER CONCRETE, CORRUGATED STEEL, CORRUGATED ALUMINUM ALLOY, OR CORRUGATED PLASTIC. PERFORATED PIPE WILL NOT BE ALLOWED.

BAGGED STONE SHALL REMAIN IN PLACE UNTIL THE ENGINEER DIRECTS THAT IT BE REMOVED. THE CONTRACTOR SHALL REMOVE AND DISPOSE OF SILT ACCUMULATIONS AT BAGGED STONE WHEN SO DIRECTED BY THE ENGINEER. BAGS SHALL BE REMOVED AND REPLACED WHENEVER THE ENGINEER DETERMINES THAT THEY HAVE DETERIORATED AND LOST THEIR EFFECTIVENESS.

NO SEPARATE PAYMENT WILL BE MADE FOR THIS WORK AND THE ENTIRE COST OF THIS WORK SHALL BE INCLUDED IN THE UNIT CONTRACT PRICE BID FOR THE SEVERAL PAY ITEMS.

TEMPORARY DRAINAGE AT END BENT

BAR TYPES

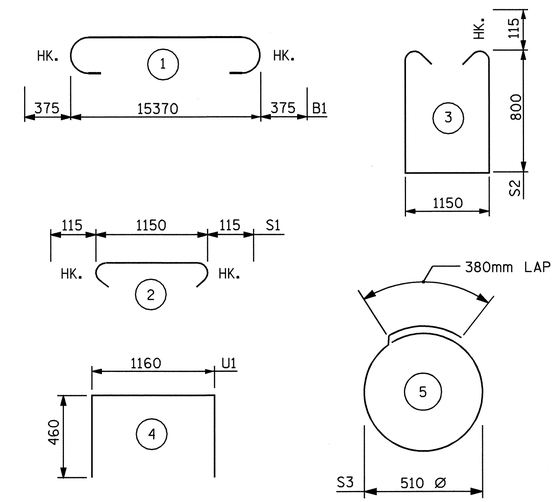

ALL BAR DIMENSIONS ARE OUT TO OUT.

BILL OF MATERIAL

END BENT #1

BAR	NO.	SIZE	TYPE	LENGTH	WEIGHT
B1	12	#29	1	16120	979
B2	20	#13	STR	8080	161
B3	6	#13	STR	960	6
B4	15	#13	STR	1160	17
B5	1	#13	STR	8340	8
B6	1	#13	STR	8280	8
B7	1	#13	STR	8240	8
B8	1	#13	STR	8140	8
B9	1	#13	STR	8080	8
B10	1	#13	STR	8040	8
B11	1	#13	STR	2840	3
B12	1	#13	STR	2800	3
B13	1	#13	STR	2740	3
B14	1	#13	STR	2660	3
B15	1	#13	STR	2600	3
B16	1	#13	STR	2560	3
H1	12	#16	STR	4980	93
H2	12	#16	STR	5020	93
H3	11	#16	STR	4720	81
H4	11	#16	STR	4660	80
S1	56	#13	2	1380	77
S2	56	#13	3	2980	166
S3	30	#13	5	1980	59
U1	21	#13	4	2080	43
V1	60	#13	STR	1820	109
V2	26	#16	STR	3360	136
V3	24	#16	STR	3100	115

REINFORCING STEEL = 2218 KG

CLASS A CONCRETE

* POUR #1
(CAP & LOWER PART OF WINGS)

	CU. METERS	22.5
TOTAL	CU. METERS	22.5

HP 310 X 79 STEEL PILES

NO. 10	METERS	200.000

PILE REDRIVES

EACH 4

* CONCRETE QUANTITY FOR UPPER PART OF WINGS IN POUR #4 ON SUPERSTRUCTURE.

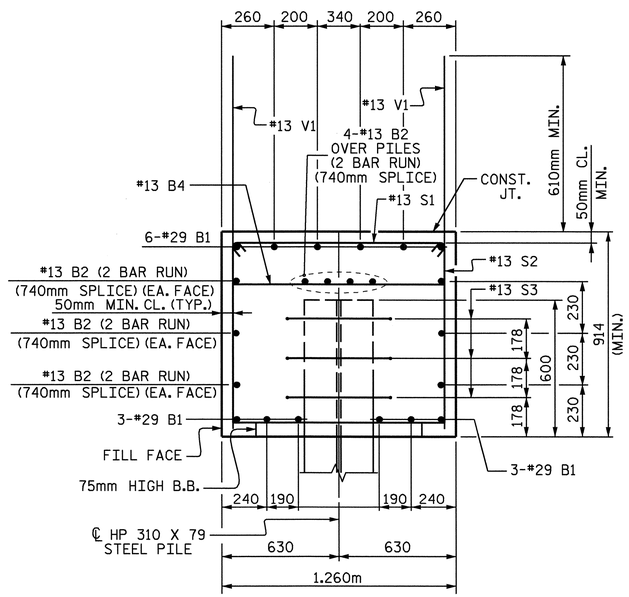

SECTION A-A

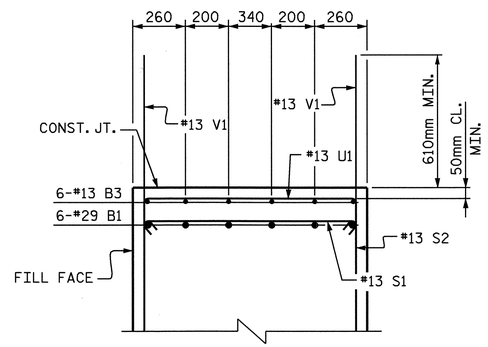

SECTION B-B

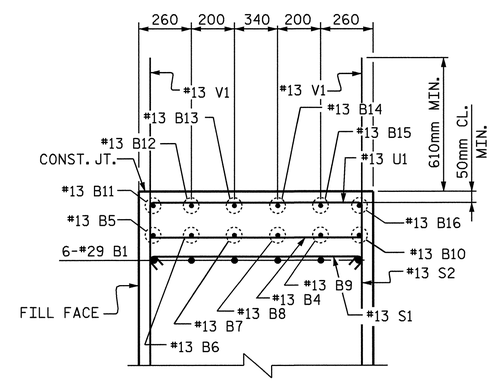

SECTION D-D

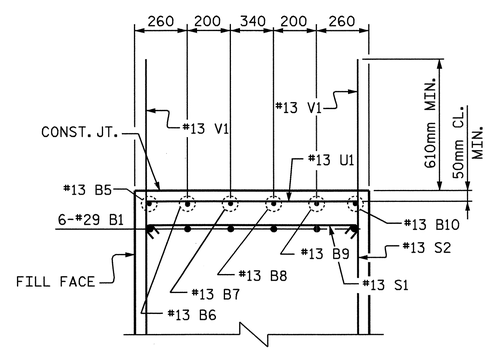

SECTION C-C

PROJECT NO. R-2301A
JONES-CRAVEN COUNTY
STATION: 18+22.000 -L-

SHEET 3 OF 3

STATE OF NORTH CAROLINA
DEPARTMENT OF TRANSPORTATION
RALEIGH

SUBSTRUCTURE INTEGRAL END BENT #1 (RIGHT LANE)

NORTH CAROLINA PROFESSIONAL SEAL 10730 ENGINEER D. ANDRE DAVENPORT, JR.

REVISIONS						SHEET NO.
NO.	BY:	DATE:	NO.	BY:	DATE:	S-55
1			3			TOTAL SHEETS
2			4			176

DRAWN BY : M. G. SHAIKH DATE : 07-02-08
CHECKED BY : H. T. BARBOUR DATE : 08-04-08

STR. #2

NOTES

STIRRUPS AND "U" BARS IN CAP MAY BE SHIFTED AS NECESSARY TO CLEAR ANCHOR BOLTS.

GALVANIZE THE TOP 10 METERS MINIMUM OF EACH PILE IN ACCORDANCE WITH SECTION 1076 OF THE STANDARD SPECIFICATIONS.

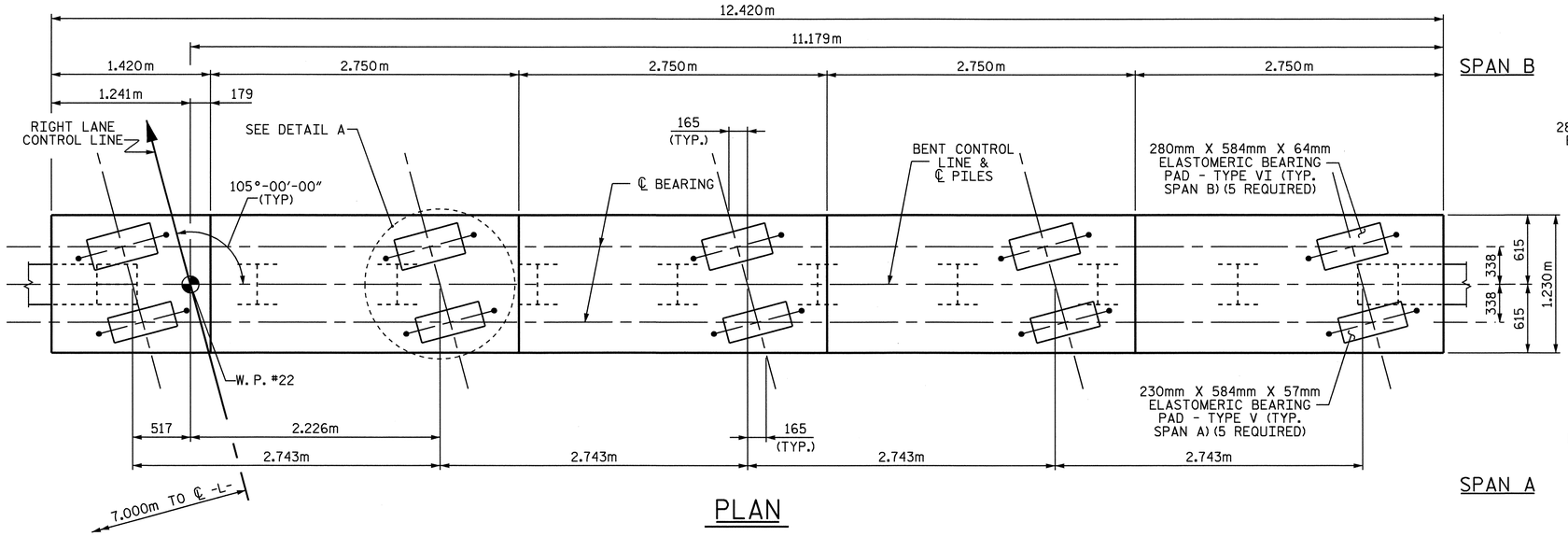

PLAN

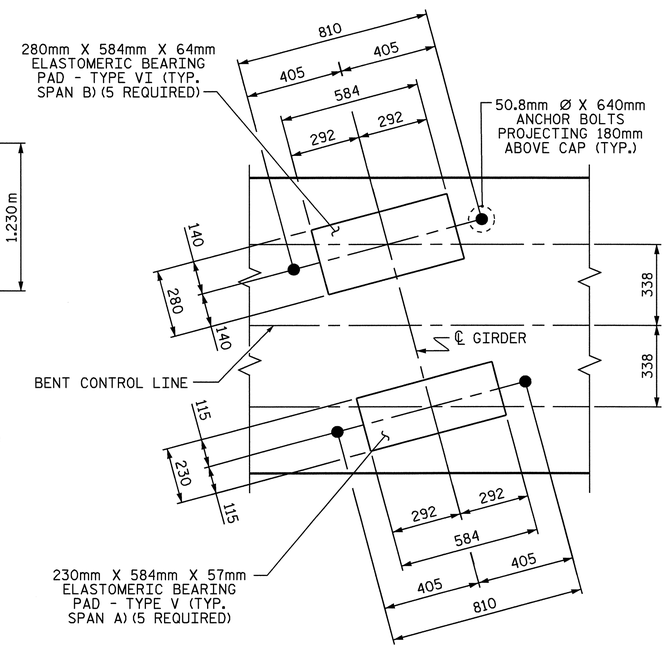

DETAIL A

PILE NOT SHOWN FOR CLARITY

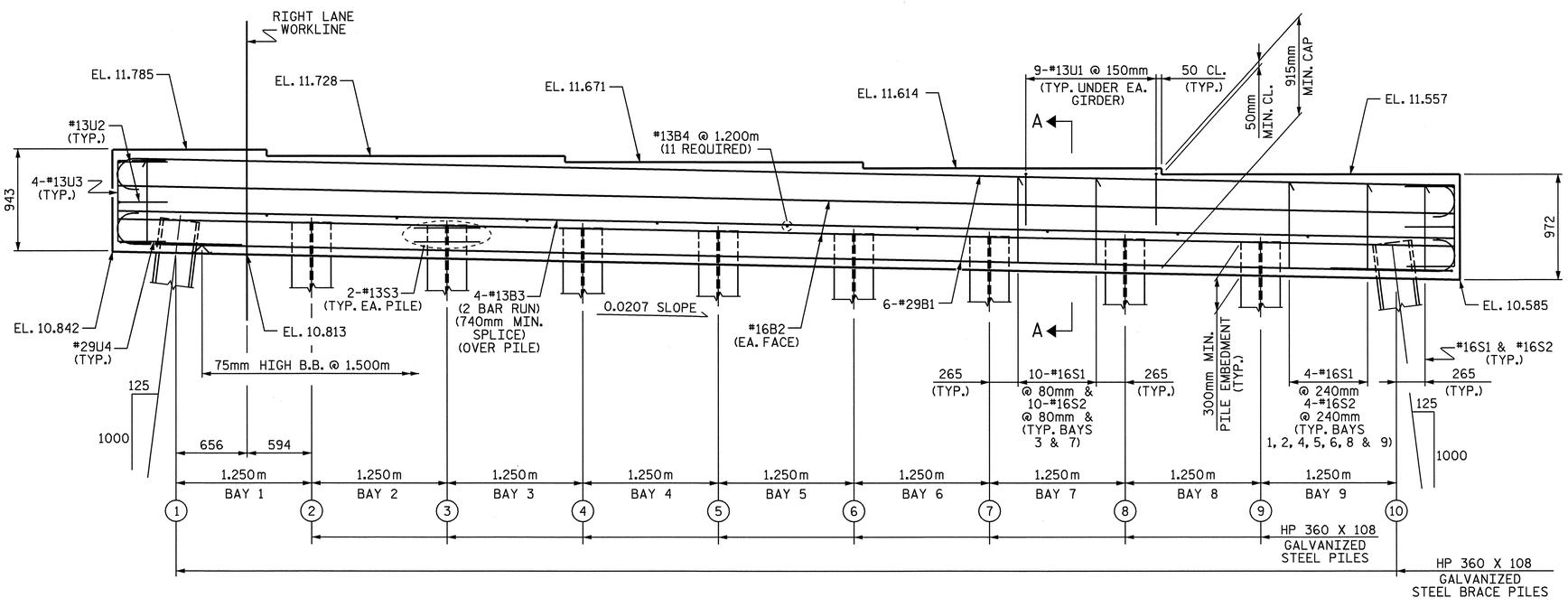

ELEVATION

PILE #	TOP OF PILE ELEVATION
1	EL. 11.127
2	EL. 11.101
3	EL. 11.075
4	EL. 11.049
5	EL. 11.023
6	EL. 10.997
7	EL. 10.971
8	EL. 10.946
9	EL. 10.920
10	EL. 10.894

PROJECT NO. R-2301A
JONES-CRAVEN COUNTY
STATION: 18+22.000-L-

SHEET 1 OF 2

STATE OF NORTH CAROLINA
DEPARTMENT OF TRANSPORTATION
RALEIGH

SUBSTRUCTURE BENT #1 (RIGHT LANE)

NORTH CAROLINA PROFESSIONAL SEAL 10730 ENGINEER D. ANDREW DAVENPORT, JR.

REVISIONS							SHEET NO. S-56
NO.	BY:	DATE:	NO.	BY:	DATE:		TOTAL SHEETS 176
1			3				
2			4				

DRAWN BY : H. T. BARBOUR DATE : 7-18-08
CHECKED BY : D. A. DAVENPORT DATE : 7-08

05-SEP-2008 09:44
r:\structures\tbarbour\Microstation\STR. 2\R-2301A_sd_B*.dgn
tbarbour

STR. #2

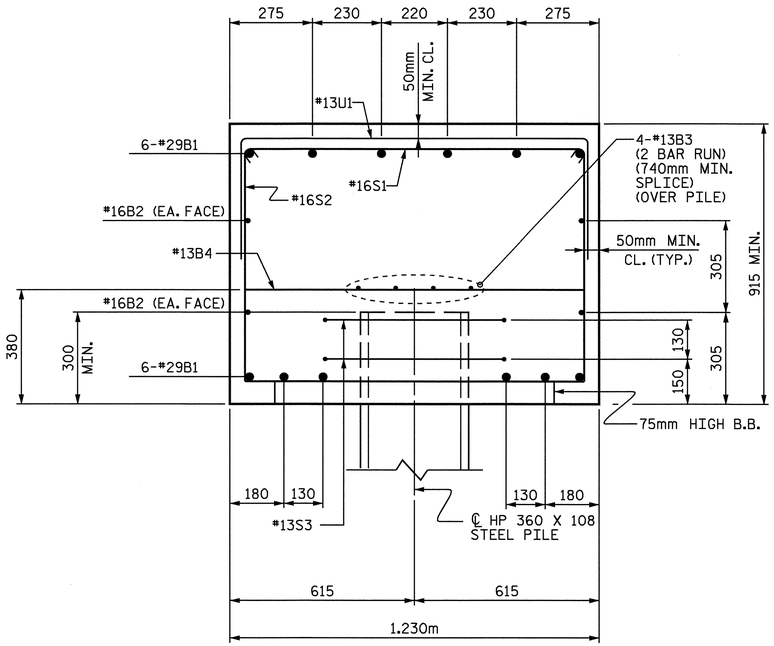

SECTION A-A

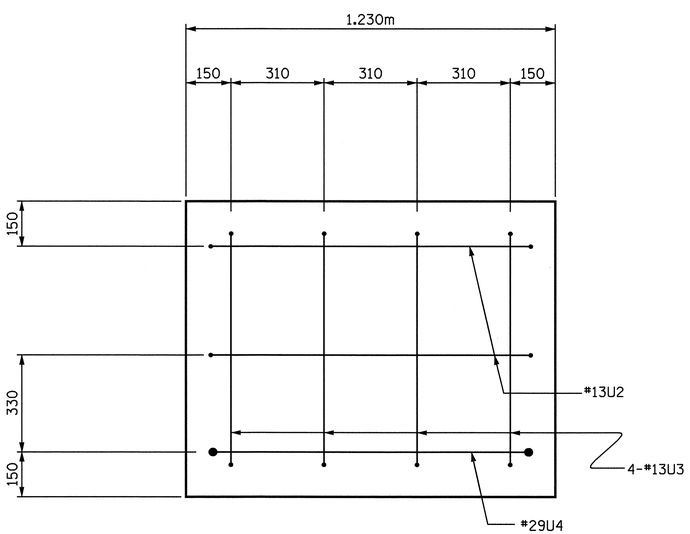

END VIEW

BAR TYPES

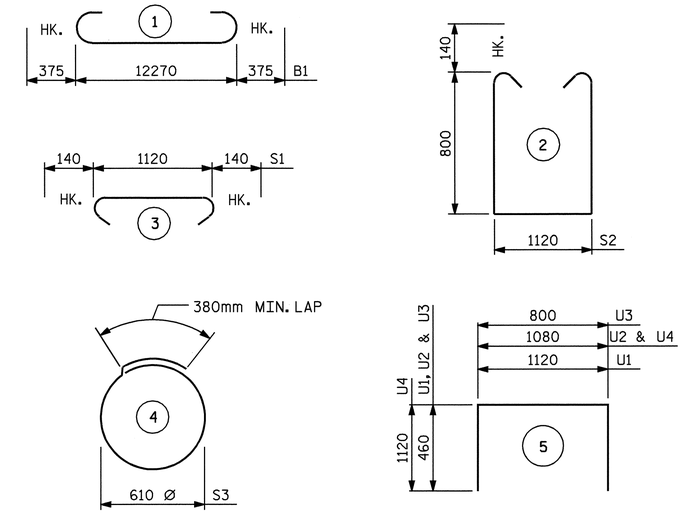

ALL BAR DIMENSIONS ARE OUT TO OUT.

BILL OF MATERIAL
BENT #1

BAR	NO.	SIZE	TYPE	LENGTH	WEIGHT
B1	12	29	1	13020	791
B2	4	16	STR	12320	76
B3	8	13	STR	6540	52
B4	11	13	STR	1120	12
S1	50	16	3	1400	109
S2	50	16	2	3000	233
S3	20	13	4	2300	46
U1	45	13	5	2040	91
U2	4	13	5	2000	8
U3	8	13	5	1720	14
U4	2	29	5	3320	34

REINFORCING STEEL 1466 kg.

CLASS A CONCRETE BREAKDOWN

POUR 1 (CAP) 14.6 C.M.

TOTAL CLASS A CONCRETE 14.6 C.M.

℄ HP 360 X 108 GALVANIZED STEEL PILES

NO. = 10 275.000m

PILE REDRIVES

EACH 5

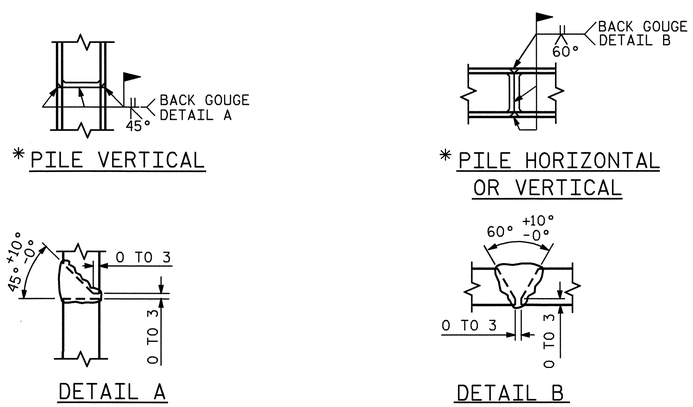

*PILE VERTICAL

*PILE HORIZONTAL OR VERTICAL

DETAIL A

DETAIL B

PILE SPLICE DETAILS

*POSITION OF PILE DURING WELDING.

PROJECT NO. R-2301A

JONES-CRAVEN COUNTY

STATION: 18+22.000-L-

SHEET 2 OF 2

STATE OF NORTH CAROLINA
DEPARTMENT OF TRANSPORTATION
RALEIGH

SUBSTRUCTURE
BENT #1
(RIGHT LANE)

NORTH CAROLINA PROFESSIONAL SEAL 10730 ENGINEER D. ANDREW DAVENPORT, JR.
9-16-08

REVISIONS						SHEET NO.
NO.	BY:	DATE:	NO.	BY:	DATE:	S-57
1			3			TOTAL SHEETS
2			4			176

STR. #2

DRAWN BY : H. T. BARBOUR DATE : 7-18-08
CHECKED BY : D. A. DAVENPORT DATE : 7-08

05-SEP-2008 09:24
r:\structures\tbarbour\microstation\STR. 2\R-2301A_sd_B*.dgn
tbarbour

NOTES

STIRRUPS AND "U" BARS IN CAP MAY BE SHIFTED AS NECESSARY TO CLEAR ANCHOR BOLTS.

GALVANIZE THE TOP 10 METERS MINIMUM OF EACH PILE IN ACCORDANCE WITH SECTION 1076 OF THE STANDARD SPECIFICATIONS.

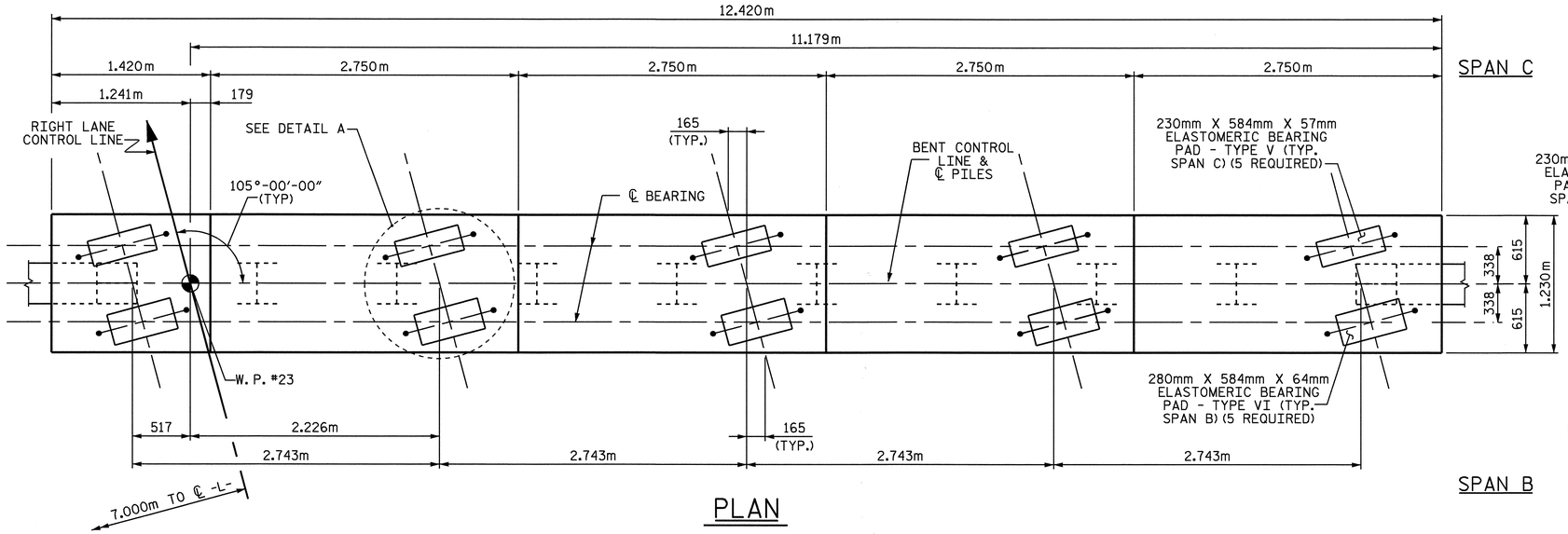

PLAN

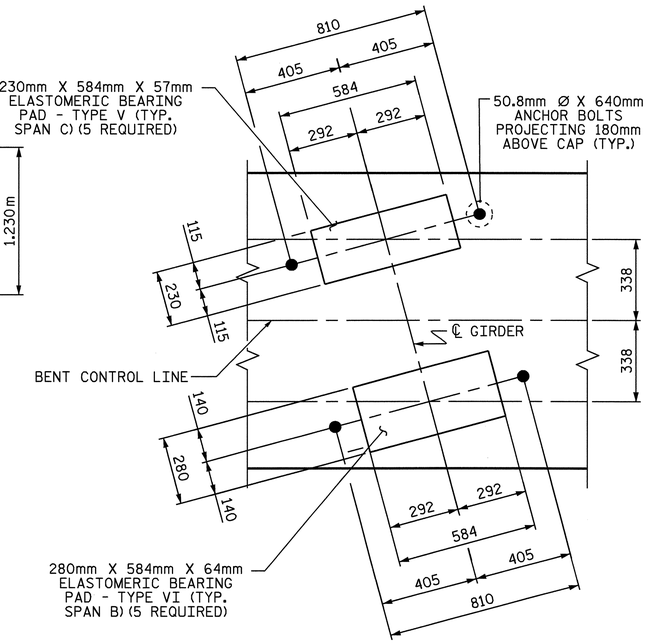

DETAIL A

PILE NOT SHOWN FOR CLARITY

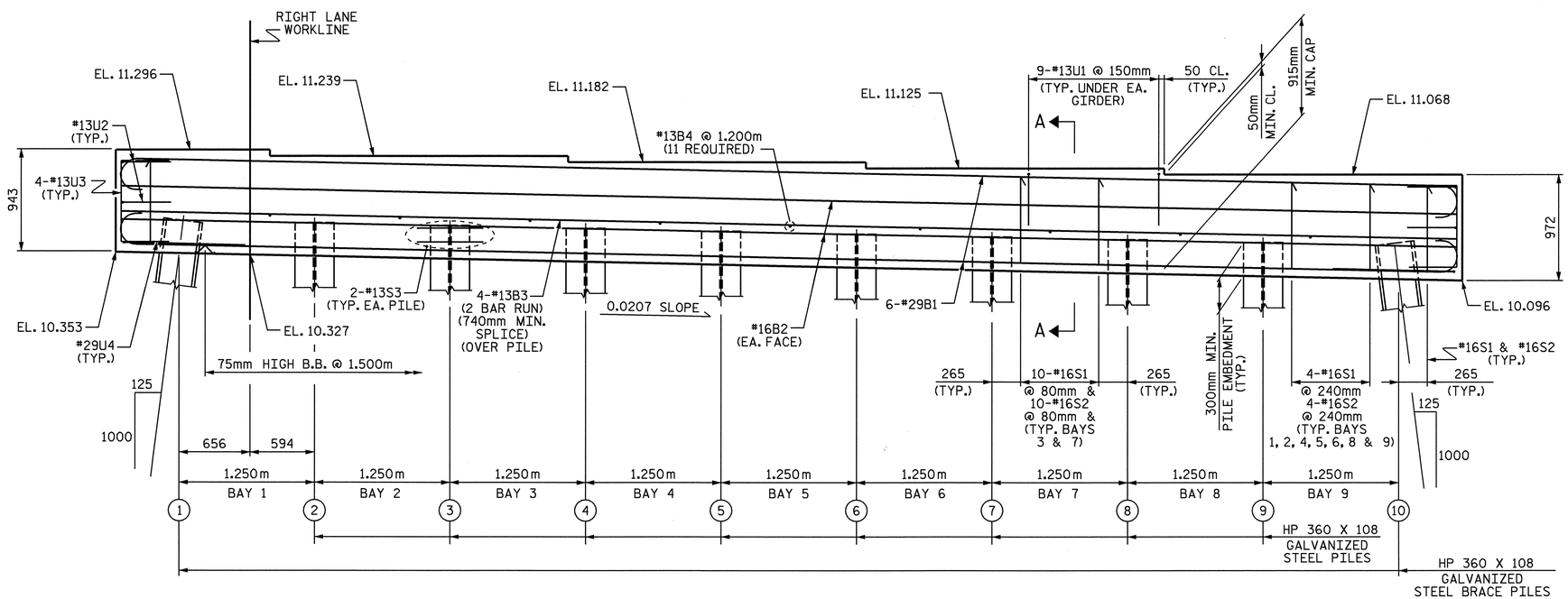

ELEVATION

PILE #	TOP OF PILE ELEVATION
1	EL. 10.638
2	EL. 10.612
3	EL. 10.586
4	EL. 10.560
5	EL. 10.534
6	EL. 10.508
7	EL. 10.482
8	EL. 10.457
9	EL. 10.431
10	EL. 10.405

PROJECT NO. R-2301A

JONES-CRAVEN COUNTY

STATION: 18+22.000-L-

SHEET 1 OF 2

STATE OF NORTH CAROLINA
DEPARTMENT OF TRANSPORTATION
RALEIGH

SUBSTRUCTURE
BENT #2
(RIGHT LANE)

NORTH CAROLINA PROFESSIONAL SEAL 10730 ENGINEER D. ANDREW DAVENPORT

REVISIONS						SHEET NO.
NO.	BY:	DATE:	NO.	BY:	DATE:	S-58
1			3			TOTAL SHEETS
2			4			176

DRAWN BY : H. T. BARBOUR DATE : 7-18-08
CHECKED BY : D. A. DAVENPORT DATE : 7-08

05-SEP-2008 09:44
r:\structures\tbarbour\Microstation\STR. 2\R-2301A_sd_B*.dgn
tbarbour

STR. #2

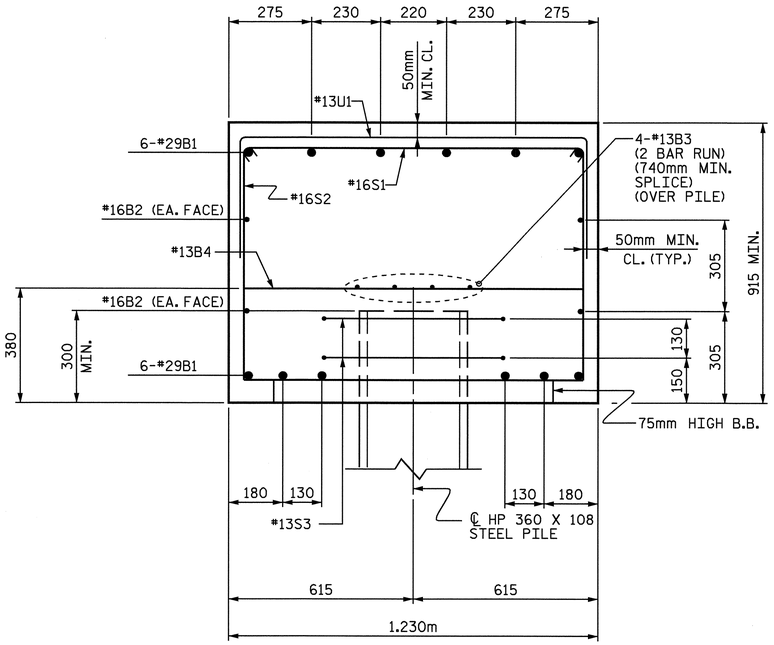

SECTION A-A

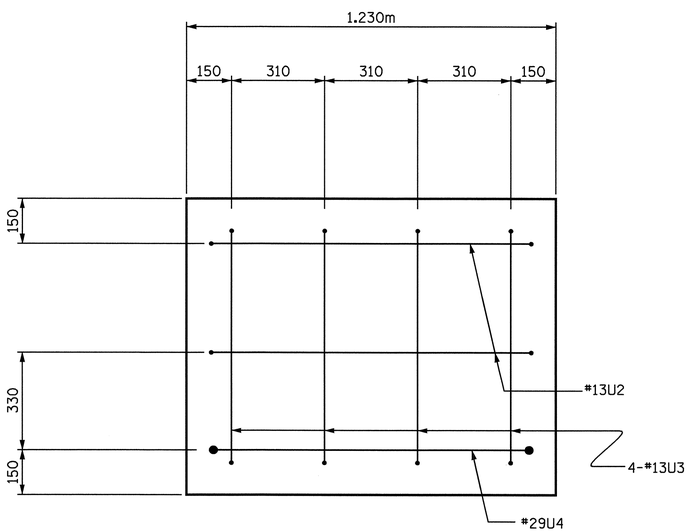

END VIEW

BAR TYPES

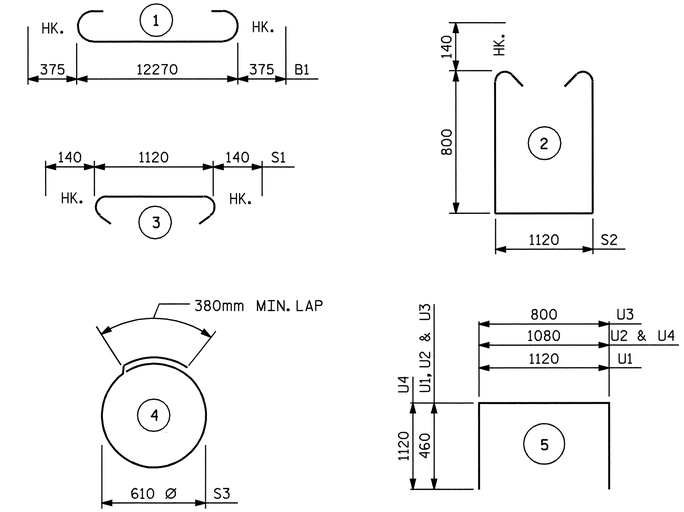

ALL BAR DIMENSIONS ARE OUT TO OUT.

BILL OF MATERIAL
BENT #2

BAR	NO.	SIZE	TYPE	LENGTH	WEIGHT
B1	12	29	1	13020	791
B2	4	16	STR	12320	76
B3	8	13	STR	6540	52
B4	11	13	STR	1120	12
S1	50	16	3	1400	109
S2	50	16	2	3000	233
S3	20	13	4	2300	46
U1	45	13	5	2040	91
U2	4	13	5	2000	8
U3	8	13	5	1720	14
U4	2	29	5	3320	34

REINFORCING STEEL 1466 kg.

CLASS A CONCRETE BREAKDOWN

POUR 1 (CAP) 14.6 C.M.

TOTAL CLASS A CONCRETE 14.6 C.M.

℄ HP 360 X 108 GALVANIZED STEEL PILES

NO. = 10 240.000m

PILE REDRIVES

EACH 5

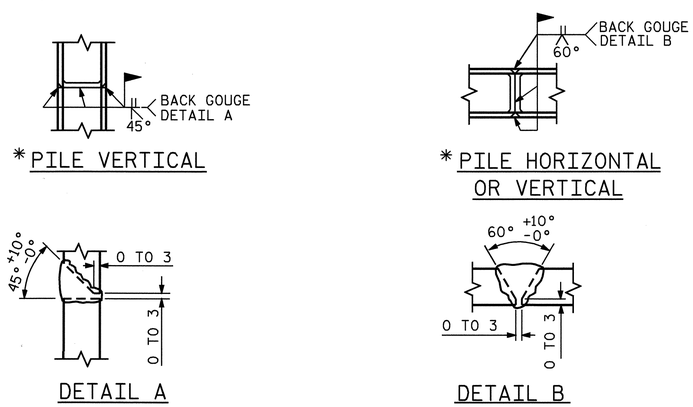

PILE SPLICE DETAILS

*POSITION OF PILE DURING WELDING.

PROJECT NO. R-2301A

JONES-CRAVEN COUNTY

STATION: 18+22.000-L-

SHEET 2 OF 2

STATE OF NORTH CAROLINA
DEPARTMENT OF TRANSPORTATION
RALEIGH

SUBSTRUCTURE
BENT #2
(RIGHT LANE)

NORTH CAROLINA PROFESSIONAL SEAL 10730 ENGINEER D. ANDREW DAVENPORT, JR.

REVISIONS						SHEET NO. S-59
NO.	BY:	DATE:	NO.	BY:	DATE:	TOTAL SHEETS 176
1			3			
2			4			

DRAWN BY : H. T. BARBOUR DATE : 7-18-08
CHECKED BY : D. A. DAVENPORT DATE : 7-08

05-SEP-2008 09:25
r:\structures\tbarbour\microstation\STR. 2\R-2301A_sd_B*.dgn
tbarbour

NOTES

SEE SUPERSTRUCTURE SHEETS FOR UPPER PART OF INTEGRAL END BENT DETAILS.

THE CONTRACTORE SHALL PROVIDE FOR INSTALLATION OF THE 102mm DIAMETER DRAIN PIPE THROUGH THE WING WALL AS REQUIRED FOR REINFORCED BRIDGE APPROACH FILLS, SEE THE ROADWAY PLANS. REINFORCING STEEL IN THE WING WALL MAY BE SHIFTED AS NECESSARY TO CLEAR THE DRAIN PIPE.

THE CONTRACTOR'S ATTENTION IS CALLED TO THE FACT THAT THE UPPER PART OF THE END BENT WINGS ARE TO BE POURED WITH POUR #4 OF THE SUPERSTRUCTURE.

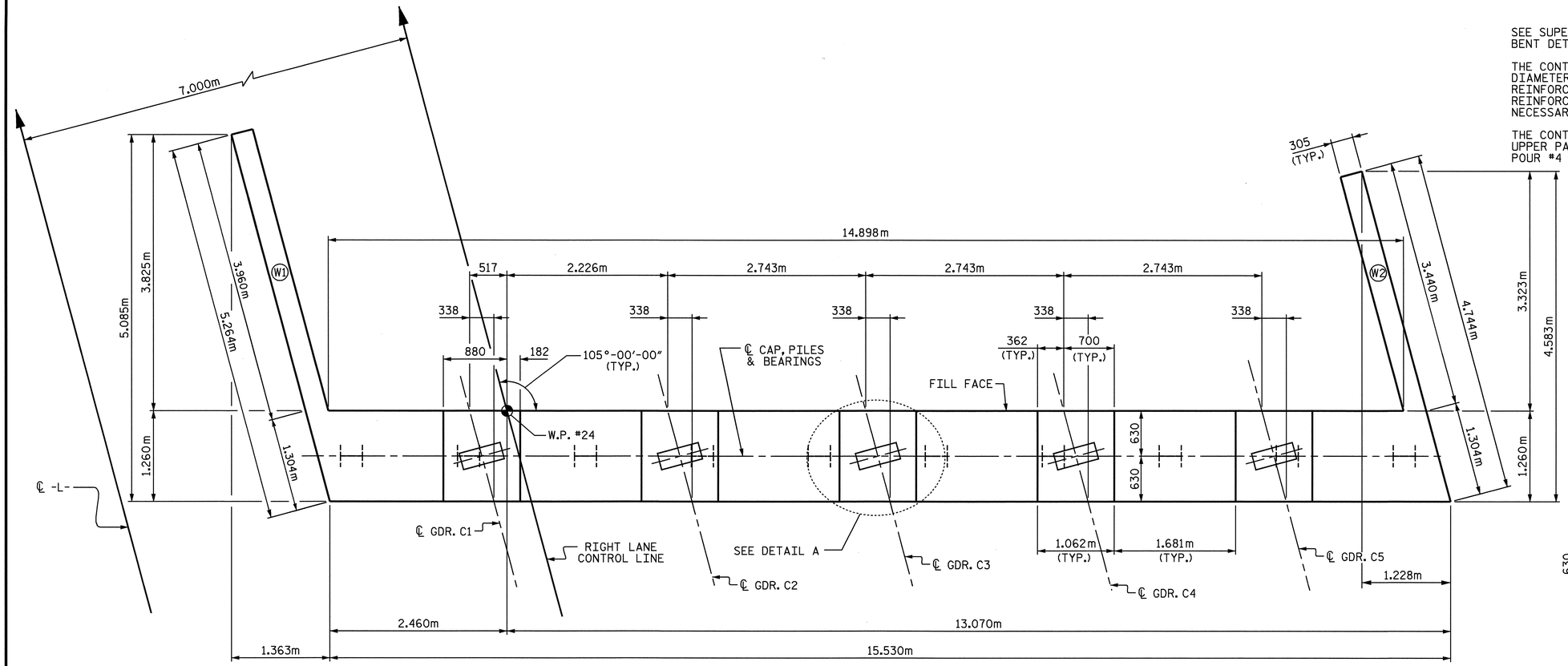

PLAN

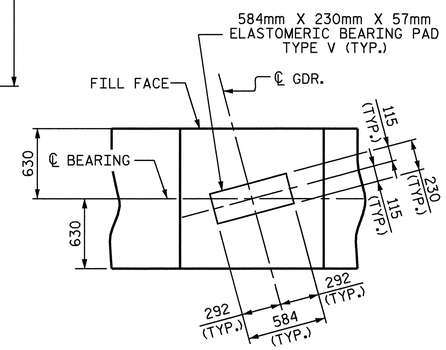

DETAIL A

PILES NOT SHOWN FOR CLARITY

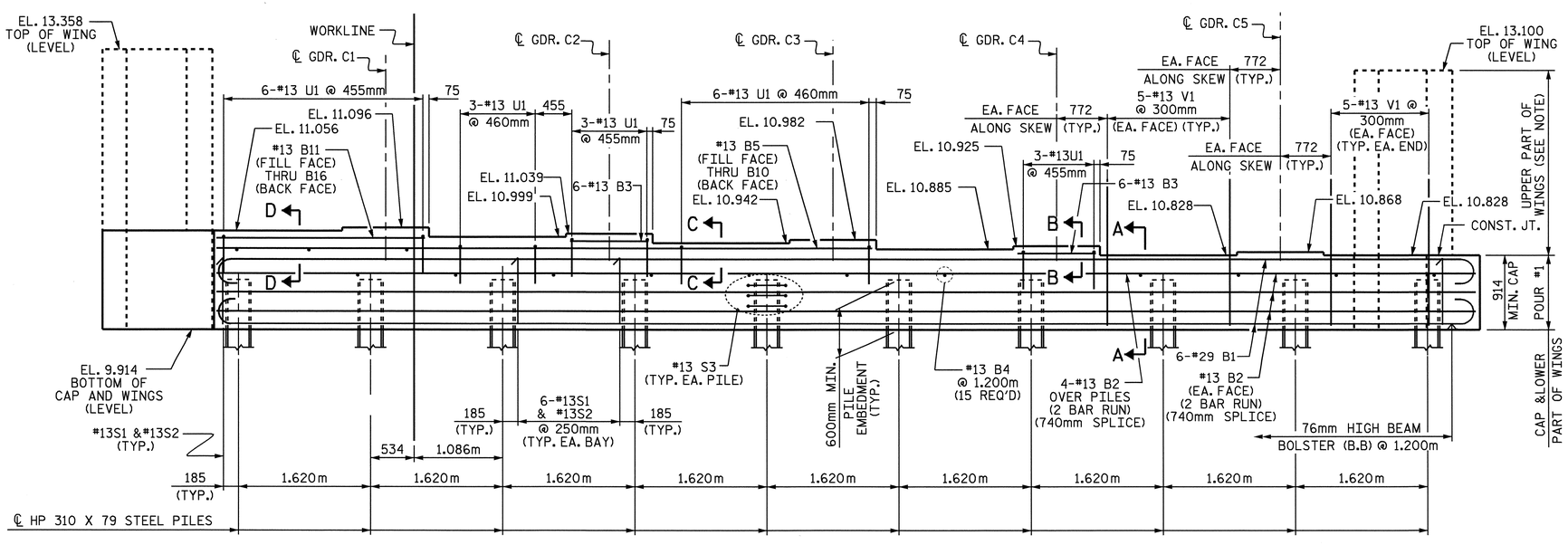

ELEVATION

PROJECT NO. R-2301A

JONES-CRAVEN COUNTY

STATION: 18+22.000 -L-

SHEET 1 OF 3

STATE OF NORTH CAROLINA
DEPARTMENT OF TRANSPORTATION
RALEIGH

SUBSTRUCTURE INTEGRAL END BENT #2 (RIGHT LANE)

NORTH CAROLINA PROFESSIONAL SEAL 10730 ENGINEER D. ANDREW DAVENPORT, JR.

REVISIONS								SHEET NO.
NO.	BY:	DATE:	NO.	BY:	DATE:			S-60
1			3					TOTAL SHEETS
2			4					176

STR. #2

DRAWN BY : M. G. SHAIKH DATE : 08-05-08
CHECKED BY : H.T. BARBOUR DATE : 08-08

05-SEP-2008 10:41
r:\structures\mshaikh\R-2301a\Microstation\RIGHT LANE STR #2\R-2301A_sd_E*.dgn
tbarbour

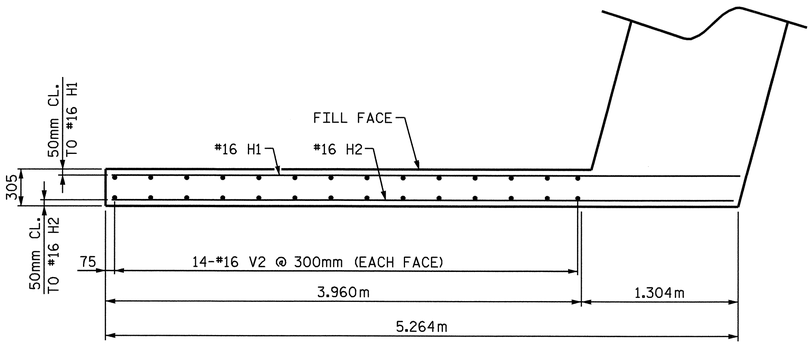

PLAN OF LEFT WING (W1)

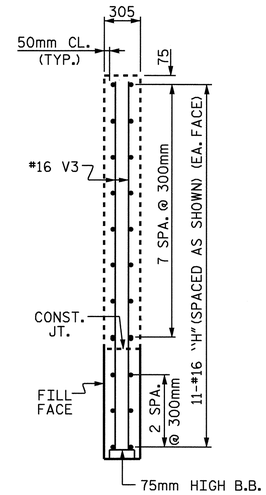

SECTION Y-Y

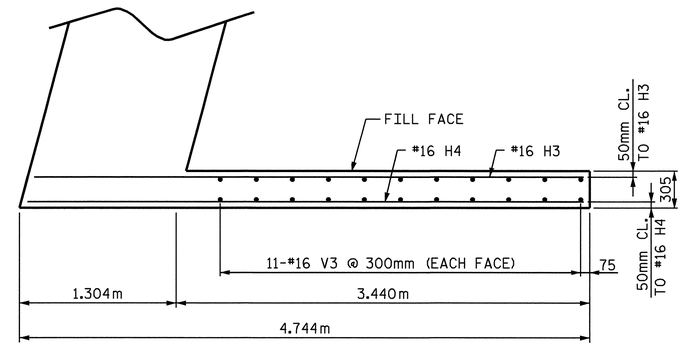

PLAN OF RIGHT RIGHT (W2)

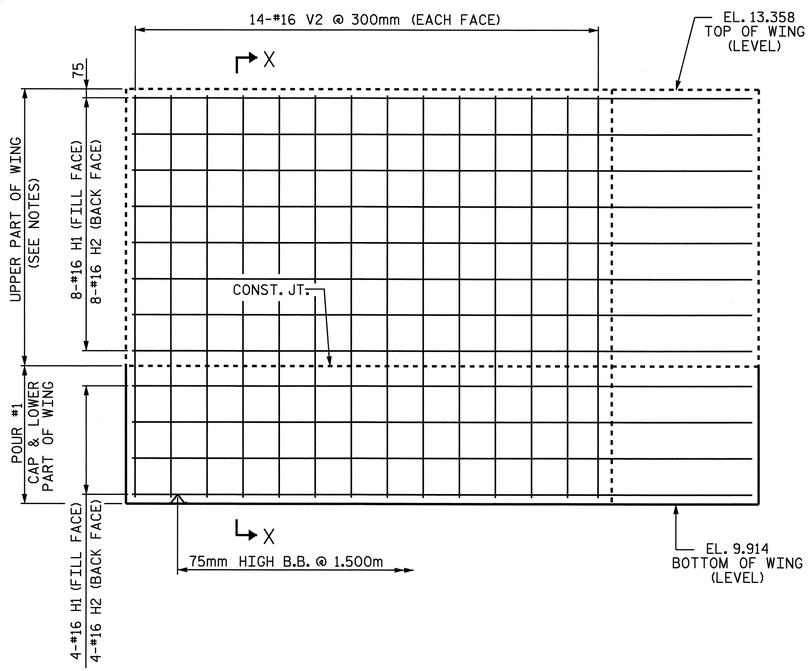

ELEVATION OF LEFT WING (W1)

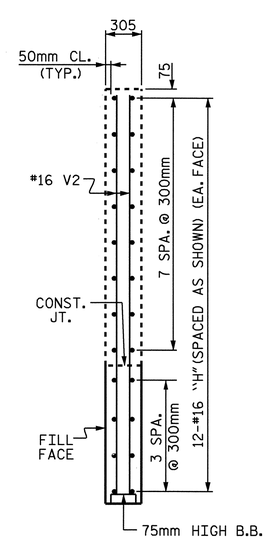

SECTION X-X

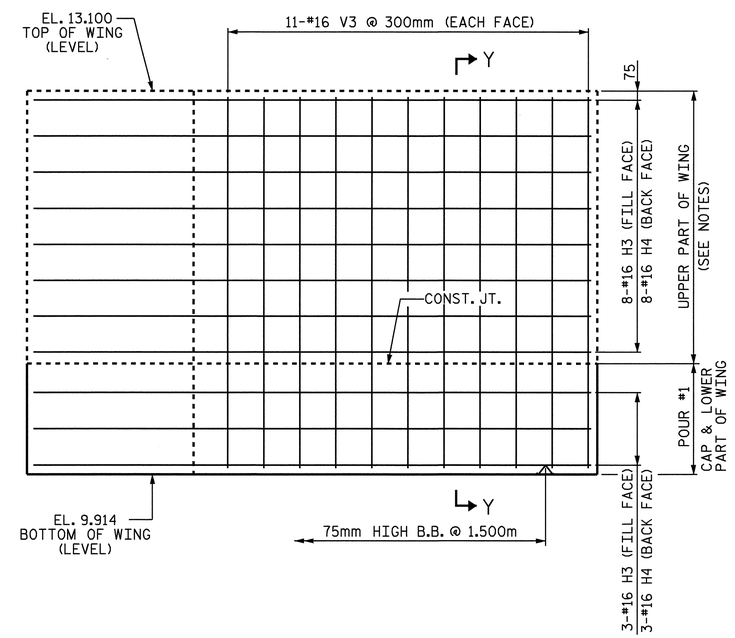

ELEVATION OF RIGHT WING (W2)

PROJECT NO. R-2301A
JONES-CRAVEN COUNTY
STATION: 18+22.000 -L-

SHEET 2 OF 3

STATE OF NORTH CAROLINA
DEPARTMENT OF TRANSPORTATION
RALEIGH

SUBSTRUCTURE
INTEGRAL
END BENT #2
(RIGHT LANE)

NORTH CAROLINA PROFESSIONAL SEAL 10730 ENGINEER D. ANDREW DAVENPORT, JR.

REVISIONS						SHEET NO.
NO.	BY:	DATE:	NO.	BY:	DATE:	S-61
1			3			TOTAL SHEETS
2			4			176

DRAWN BY : M. G. SHAIKH DATE : 08-06-08
CHECKED BY : H.T. BARBOUR DATE : 08-08

11-AUG-2008 15:32
f:\structures\mshaikh\Microstation\RIGHT LANE STR #2\R-2301A_sd_E*.dgn
addavenport

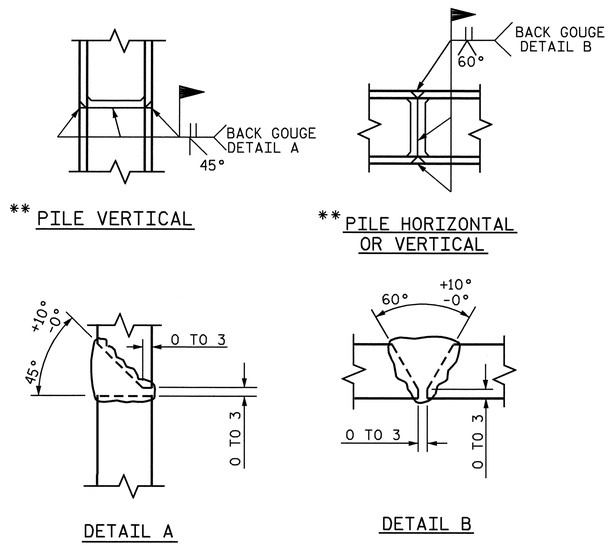

PILE SPLICE DETAILS

** POSITION OF PILE DURING WELDING.

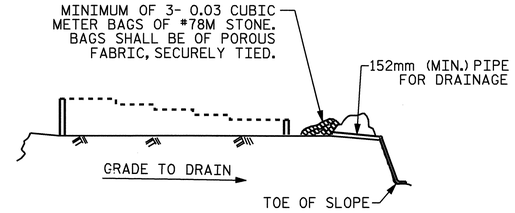

BAGGED STONE AND PIPE SHALL BE PLACED IMMEDIATELY AFTER COMPLETION OF END BENT EXCAVATION. PIPE MAY BE EITHER CONCRETE, CORRUGATED STEEL, CORRUGATED ALUMINUM ALLOY, OR CORRUGATED PLASTIC. PERFORATED PIPE WILL NOT BE ALLOWED.

BAGGED STONE SHALL REMAIN IN PLACE UNTIL THE ENGINEER DIRECTS THAT IT BE REMOVED. THE CONTRACTOR SHALL REMOVE AND DISPOSE OF SILT ACCUMULATIONS AT BAGGED STONE WHEN SO DIRECTED BY THE ENGINEER. BAGS SHALL BE REMOVED AND REPLACED WHENEVER THE ENGINEER DETERMINES THAT THEY HAVE DETERIORATED AND LOST THEIR EFFECTIVENESS.

NO SEPARATE PAYMENT WILL BE MADE FOR THIS WORK AND THE ENTIRE COST OF THIS WORK SHALL BE INCLUDED IN THE UNIT CONTRACT PRICE BID FOR THE SEVERAL PAY ITEMS.

TEMPORARY DRAINAGE AT END BENT

BAR TYPES

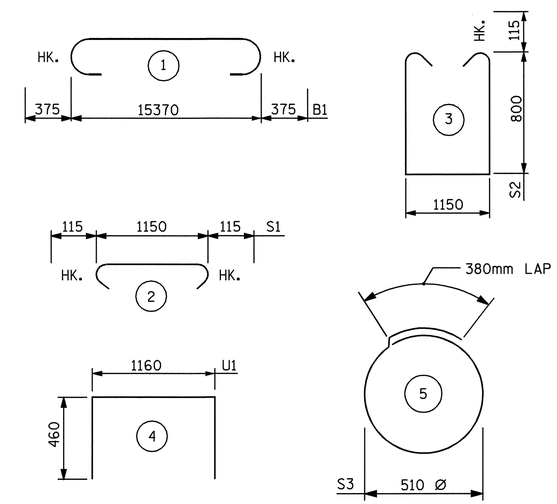

ALL BAR DIMENSIONS ARE OUT TO OUT.

BILL OF MATERIAL

END BENT #2

BAR	NO.	SIZE	TYPE	LENGTH	WEIGHT
B1	12	#29	1	16120	979
B2	20	#13	STR	8080	161
B3	6	#13	STR	960	6
B4	15	#13	STR	1160	17
B5	1	#13	STR	8340	8
B6	1	#13	STR	8280	8
B7	1	#13	STR	8240	8
B8	1	#13	STR	8140	8
B9	1	#13	STR	8080	8
B10	1	#13	STR	8040	8
B11	1	#13	STR	2840	3
B12	1	#13	STR	2800	3
B13	1	#13	STR	2740	3
B14	1	#13	STR	2660	3
B15	1	#13	STR	2600	3
B16	1	#13	STR	2560	3
H1	12	#16	STR	5220	97
H2	12	#16	STR	5160	96
H3	11	#16	STR	4560	78
H4	11	#16	STR	4620	79
S1	56	#13	2	1380	77
S2	56	#13	3	2980	166
S3	30	#13	5	1980	59
U1	21	#13	4	2080	43
V1	60	#13	STR	1820	109
V2	28	#16	STR	3340	145
V3	22	#16	STR	3080	105

REINFORCING STEEL = 2283 KG

CLASS A CONCRETE

* POUR #1
(CAP & LOWER PART OF WINGS)

	CU. METERS	22.5
TOTAL	CU. METERS	22.5

HP 310 X 79 STEEL PILES

NO. 10	METERS	270.000

PILE REDRIVES

EACH 5

* CONCRETE QUANTITY FOR UPPER PART OF WINGS IN POUR #4 ON SUPERSTRUCTURE.

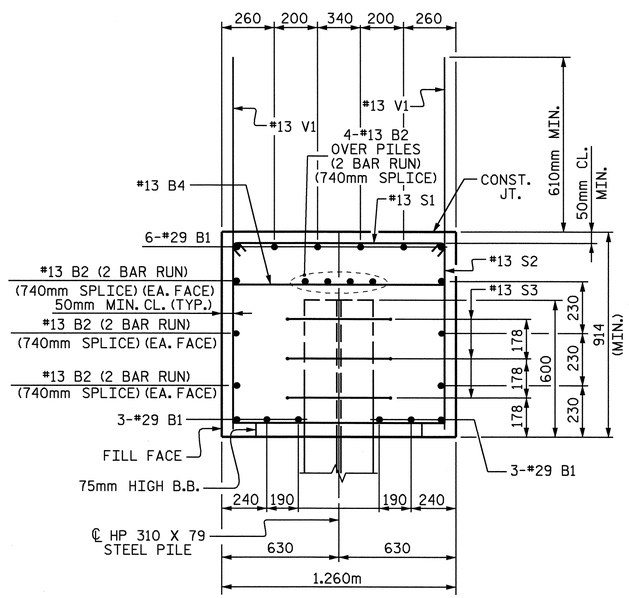

SECTION A-A

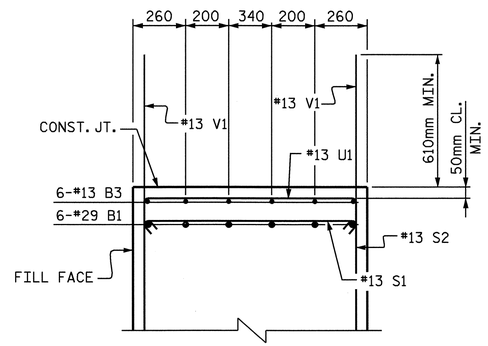

SECTION B-B

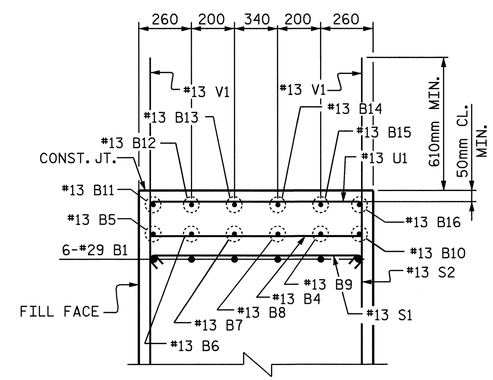

SECTION D-D

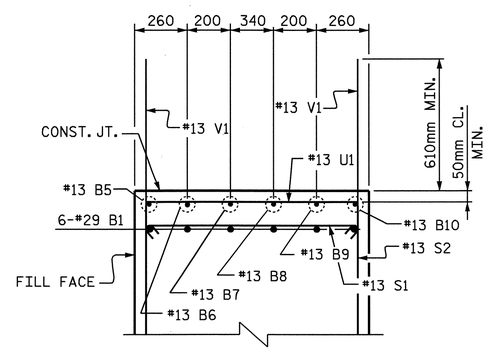

SECTION C-C

PROJECT NO. R-2301A
JONES-CRAVEN COUNTY
STATION: 18+22.000 -L-

SHEET 3 OF 3

STATE OF NORTH CAROLINA
DEPARTMENT OF TRANSPORTATION
RALEIGH

SUBSTRUCTURE INTEGRAL END BENT #2 (RIGHT LANE)

NORTH CAROLINA PROFESSIONAL SEAL 10730 ENGINEER D. ANDRE DAVENPORT, JR.

REVISIONS						
NO.	BY:	DATE:	NO.	BY:	DATE:	
1			3			
2			4			

SHEET NO. S-62
TOTAL SHEETS 176

DRAWN BY : M. G. SHAIKH DATE : 07-02-08
CHECKED BY : H. T. BARBOUR DATE : 08-06-08

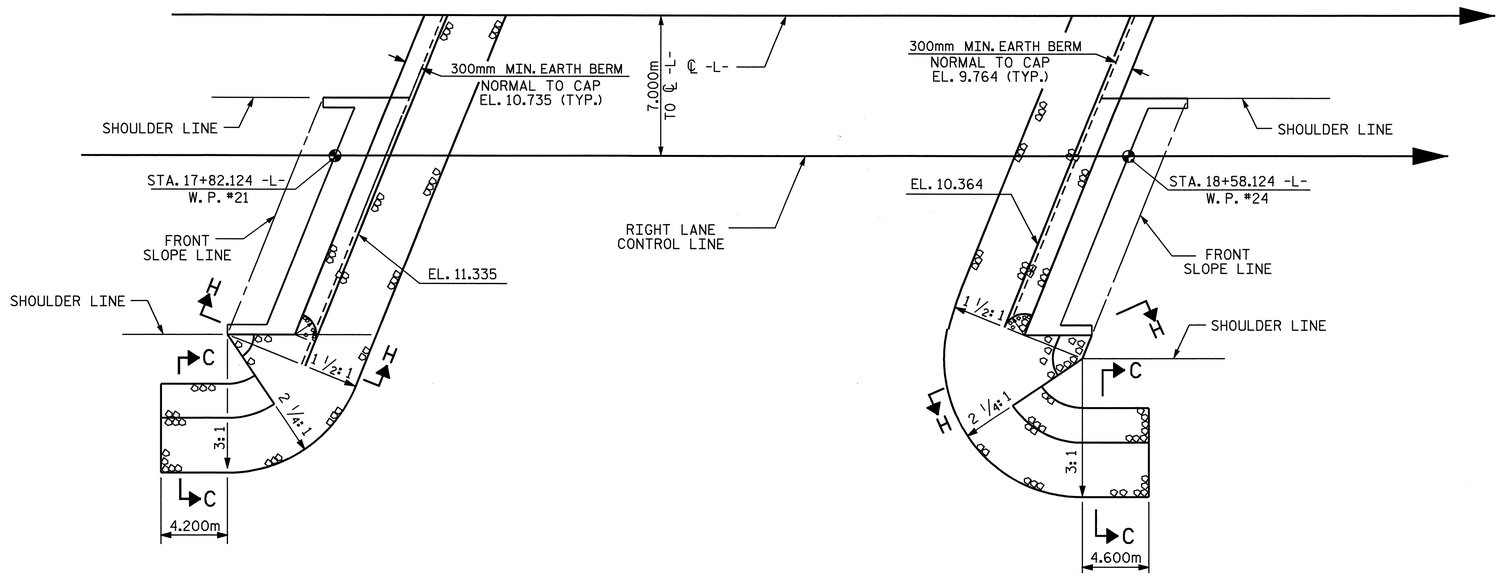

END BENT #1

END BENT #2

PLAN

ESTIMATED QUANTITIES		
BRIDGE @ STA. 18+22.000 -L- (RIGHT LANE)	RIP RAP CLASS II (600mm THICK)	FILTER FABRIC FOR DRAINAGE
	METRIC TON	SQUARE METERS
END BENT 1	226	231
END BENT 2	209	213
TOTAL	435	444

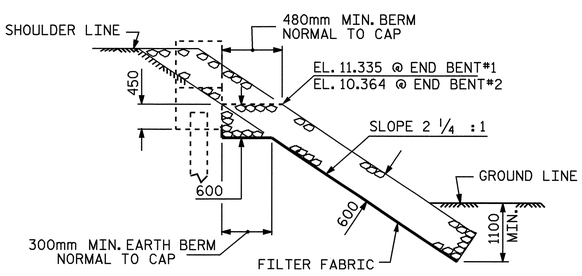

SECTION H-H

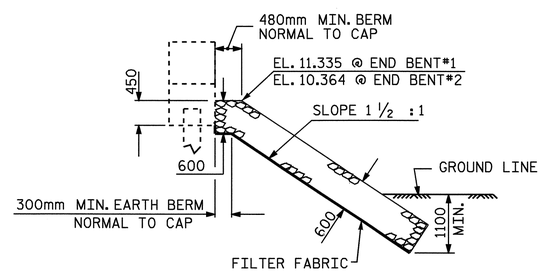

℄ SECTION

BERM RIP RAPPED

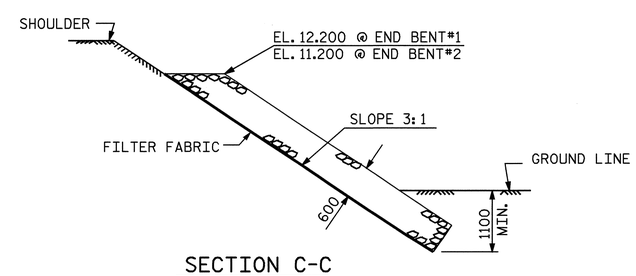

SECTION C-C

PROJECT NO. R-2301A

JONES-CRAVEN COUNTY

STATION: 18+22.000 -L-

STATE OF NORTH CAROLINA
DEPARTMENT OF TRANSPORTATION
RALEIGH

=RIP RAP DETAILS=
RIGHT LANE

NORTH CAROLINA PROFESSIONAL SEAL 10730 ENGINEER D. AUBREY DAVENPORT, JR.

ASSEMBLED BY : M. G. SHIAKH	DATE : 06-26-08
CHECKED BY : W.B. HILL	DATE : 07-08
DRAWN BY : REK 1/84	REV. 8/16/99 RWW/LES
CHECKED BY : RDU 1/84	REV. 10/17/00 RWW/LES
	REV. 5/1/06 TLA/GM

REVISIONS							SHEET NO.
NO.	BY:	DATE:	NO.	BY:	DATE:		S-63
1			3				TOTAL SHEETS
2			4				176

11-AUG-2008 15:35
f:\structures\mshaikh\Microstation\RIGHT LANE STR #2\R-2301A_sd_RR.dgn
adavenport

STR #2

SKEW > 90°

STD. NO. RR3SM

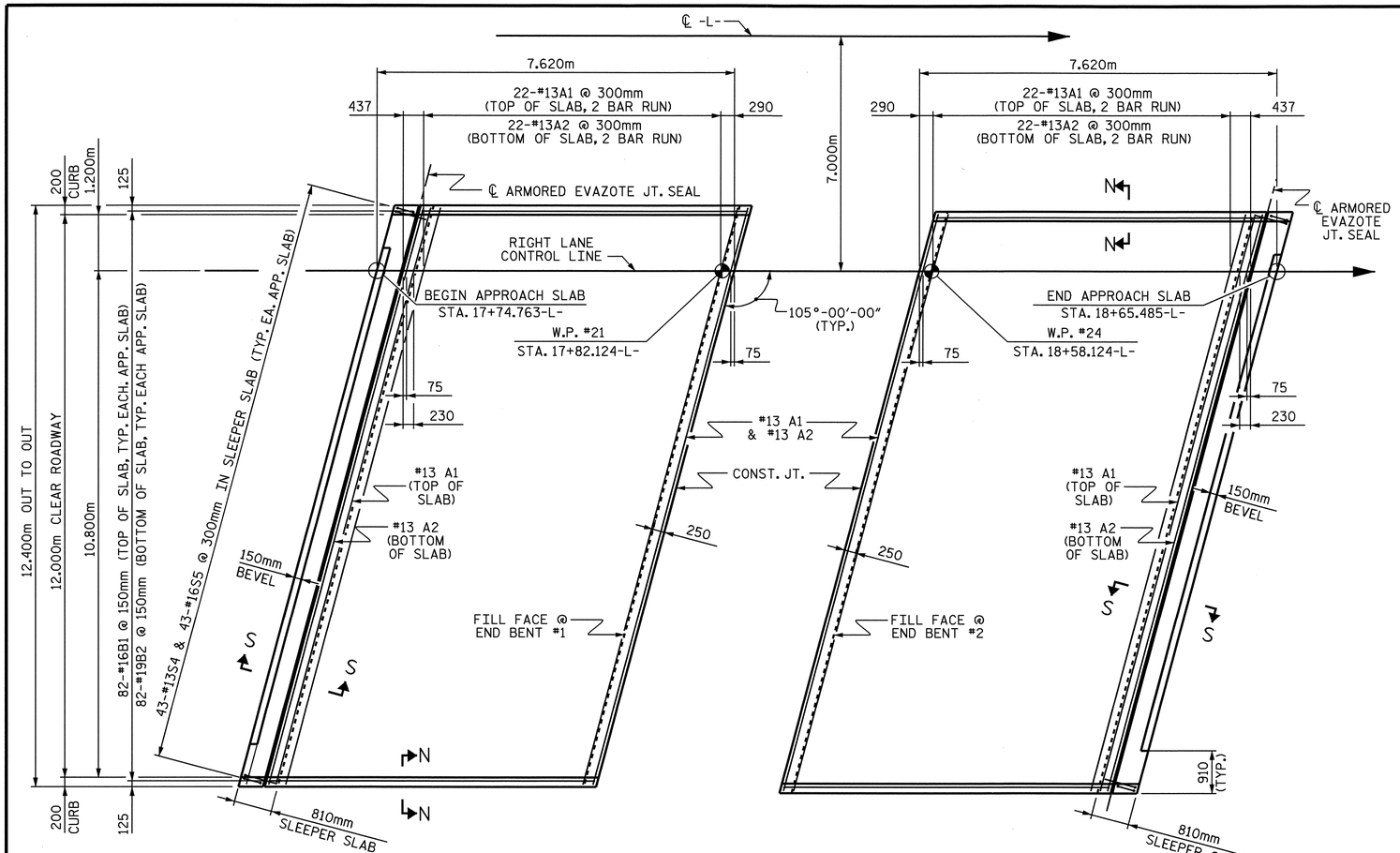

PLAN @ END BENT #1

PLAN @ END BENT #2

DIMENSIONS SHOWN ARE TYPICAL FOR BOTH APPROACH SLABS. #13 A1 BARS IN SLEEPER SLAB NOT SHOWN FOR CLARITY.

NOTES

APPROACH SLAB SHALL NOT BE CONSTRUCTED PRIOR TO COMPLETION OF THE BRIDGE DECK.

FOR REINFORCED BRIDGE APPROACH FILL INCLUDING FABRIC, IMPERMEABLE GEOMEMBRANE, 102mm Ø DRAINAGE PIPE, #78M STONE, AND SELECT MATERIAL, SEE ROADWAY PLANS.

AREA BETWEEN THE WINGWALL AND APPROACH SLAB SHALL BE GRADED TO DRAIN THE WATER AWAY FROM THE FILL FACE OF THE BRIDGE AND SHALL BE PAVED. SEE ROADWAY PLANS.

THE 150mm COMP. A.B.C. SHALL BE FLUSH WITH THE SLEEPER SLAB AND SHALL EXTEND 300mm OUTSIDE OF EACH EDGE OF THE APPROACH SLAB.

THE CONTRACTOR MAY USE 100mm TYPE B-25.0B ASPHALT CONCRETE BASE COURSE IN LIEU OF 150mm COMP. A.B.C. IF THIS OPTION IS USED, THE BASE COURSE SHALL BE FLUSH WITH THE SLEEPER SLAB, AND THE WIDTH SHALL BE THE SAME AS THAT OF THE APPROACH SLAB.

THE CONTRACTOR MAY USE 125mm CLASS "A" CONCRETE BASE IN LIEU OF 150mm COMP. A.B.C. IF THIS OPTION IS USED, THE CONCRETE BASE SHALL BE FLUSH WITH THE SLEEPER SLAB, AND THE WIDTH SHALL BE THE SAME AS THAT OF THE APPROACH SLAB. THE CONCRETE SHALL BE FINISHED TO A SMOOTH SURFACE AND A LAYER OF 13.6 kg ROOFING FELT SHALL BE PLACED BETWEEN THE CONCRETE BASE AND THE APPROACH SLAB TO PREVENT BOND. THE APPROACH SLAB SHALL NOT BE CAST UNTIL THE CONCRETE BASE HAS REACHED AN AGE OF THREE CURING DAYS.

THE VERTICAL JOINT ON THE RIGHT AND LEFT SIDE OF THE APPROACH SLAB AT THE ENDS OF THE EVAZOTE JOINT SHALL BE FILLED WITH SILICONE OR OTHER APPROVED MATERIAL IN ORDER TO PREVENT BACKFILL FROM ENTERING THE JOINT OPENING.

THE JOINT OPENING AT THE APPROACH SLAB/DECK INTERFACE SHALL BE SAWED NO MORE THAN 12 HOURS AFTER THE APPROACH SLAB IS CAST. THE JOINT SHALL BE CLEANED OF ALL DEBRIS BEFORE THE SEALANT IS APPLIED. THE JOINT SEALER MATERIAL SHALL CONFORM TO THE REQUIREMENTS OF TYPE SL LOW MODULUS SILICONE SEALANT.

FOR EVAZOTE JOINT SEALS, SEE SPECIAL PROVISIONS.

THE NOMINAL UNCOMPRESSED SEAL WIDTH OF THE EVAZOTE JOINT SEAL SHALL BE 71mm.

FOR ELASTOMERIC CONCRETE, SEE SPECIAL PROVISIONS.

BILL OF MATERIAL

FOR ONE APPROACH SLAB (2 REQ'D)

BAR	NO.	SIZE	TYPE	LENGTH	WEIGHT
* A1	62	#13	STR	6680	412
A2	48	#13	STR	6640	317
* B1	82	#16	STR	6800	865
B2	82	#19	STR	6960	1276
* S4	43	#13		1200	51
S5	43	#16		880	59

REINFORCING STEEL	1652 kg.
* EPOXY COATED REINFORCING STEEL	1328 kg.
CLASS AA CONCRETE	
POUR #1 - BOTTOM SLEEPER SLAB	1.6 C.M.
POUR #2 - TOP OF SLEEPER SLAB	1.8 C.M.
POUR #3 - SLAB & CURB	26.8 C.M.
TOTAL	30.2 C.M.

BAR TYPES

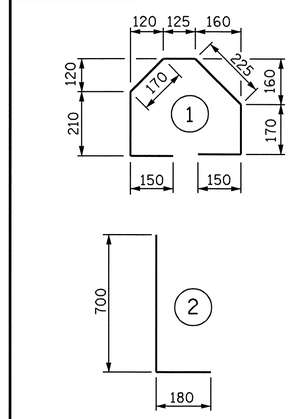

ALL BAR DIMENSIONS ARE OUT TO OUT

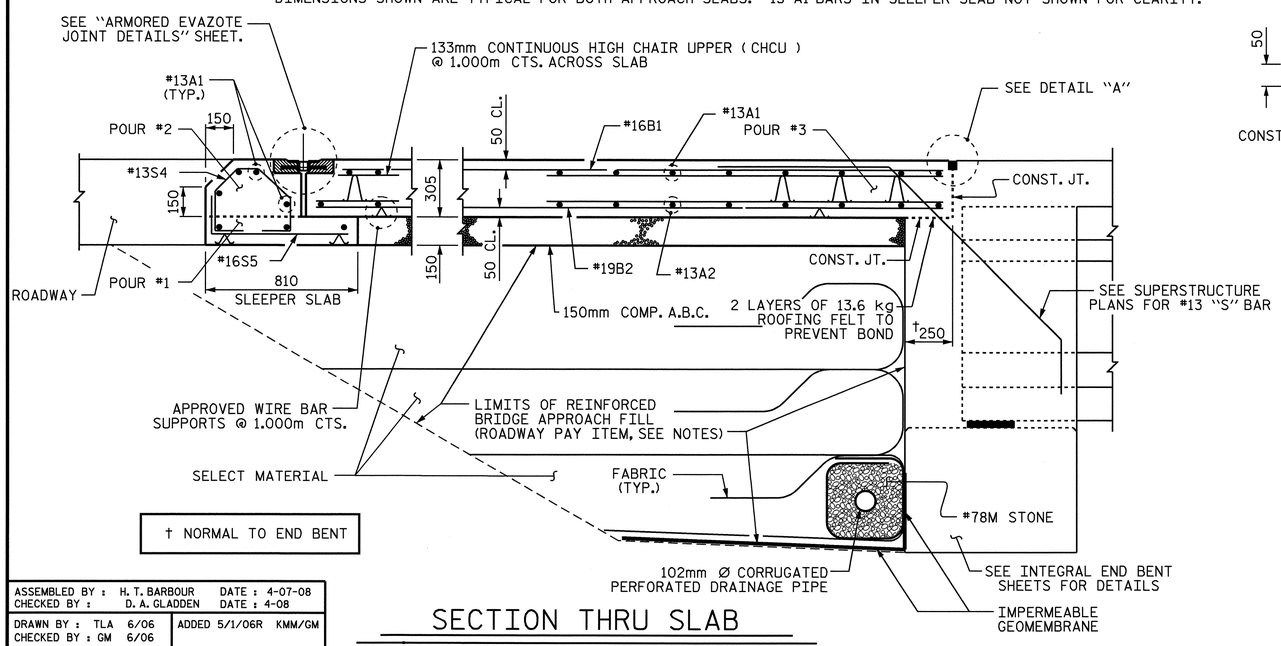

† NORMAL TO END BENT

SECTION THRU SLAB

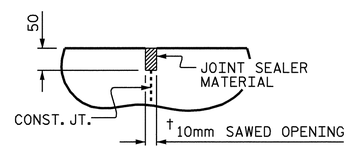

DETAIL "A"

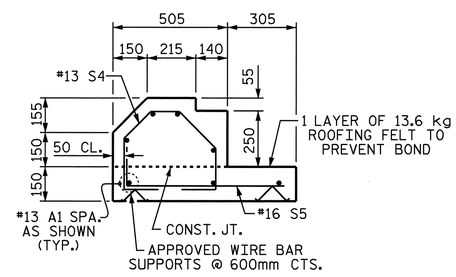

SECTION S-S

SHOWING SLEEPER SLAB

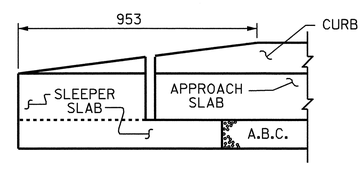

END OF CURB WITHOUT SHOULDER BERM GUTTER

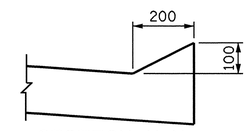

SECTION N-N

PROJECT NO. R-2301A

JONES-CRAVEN COUNTY

STATION: 18+22.000 -L-

SHEET 1 OF 3

STATE OF NORTH CAROLINA
DEPARTMENT OF TRANSPORTATION
RALEIGH

BRIDGE APPROACH SLAB FOR INTEGRAL ABUTMENT (RIGHT LANE)

NORTH CAROLINA PROFESSIONAL SEAL 10730 ENGINEER D. ANDREW DAVENPORT, JR.

REVISIONS						SHEET NO.
NO.	BY:	DATE:	NO.	BY:	DATE:	S-64
1			3			TOTAL SHEETS
2			4			176

ASSEMBLED BY : H. T. BARBOUR	DATE : 4-07-08
CHECKED BY : D. A. GLADDEN	DATE : 4-08
DRAWN BY : TLA 6/06	ADDED 5/1/06R KMM/GM
CHECKED BY : GM 6/06	

12-AUG-2008 07:26
f:\structures\tbarbour\Microstation\STR. 2\R-2301A_sd_AS.dgn
addavenport

STR. #2 STD. NO. BAS11SM

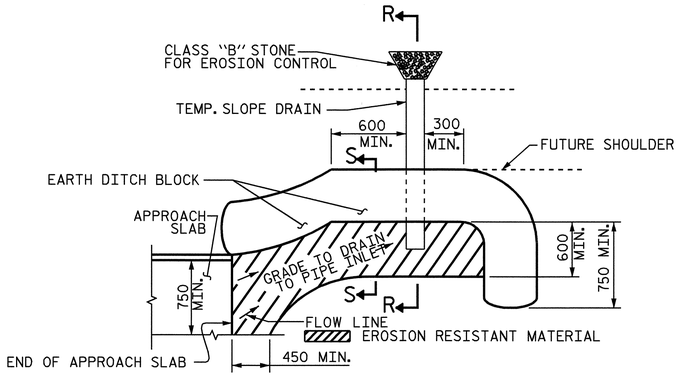

NOTE: IMMEDIATELY AFTER THE CONSTRUCTION OF THE APPROACH SLAB, THE CONTRACTOR SHALL PROVIDE TEMPORARY BERM AND SLOPE DRAIN. CONTRACTOR SHALL GRADE TO PIPE INLET AND PROVIDE EROSION RESISTANT MATERIAL AS SHOWN. THE EROSION RESISTANT MATERIAL SHALL BE EITHER 1) ASPHALT PLANT MIX, TYPE 1 OR TYPE 2, MIN. 50mm DEPTH, 2) EROSION CONTROL MAT, OR 3) CONCRETE, AS DIRECTED BY THE ENGINEER. THE SLOPE DRAIN SHALL CONSIST OF A NON-PERFORATED TEMPORARY DRAINAGE PIPE, 305mm IN DIAMETER.

PLAN VIEW

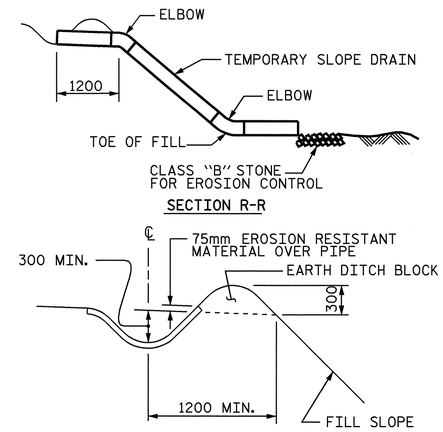

SECTION S-S

TEMPORARY BERM AND SLOPE DRAIN DETAILS

(TO BE USED WHEN SHOULDER BERM GUTTER IS REQUIRED)

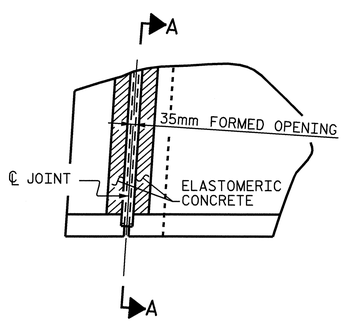

PLAN

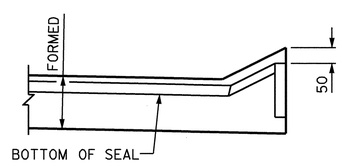

SECTION A-A

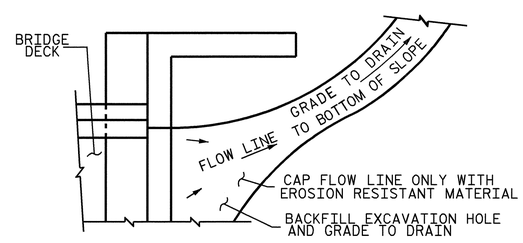

NOTE: IF THE APPROACH SLAB IS NOT CONSTRUCTED IMMEDIATELY AFTER THE BACKFILLING OF THE END BENT EXCAVATION, GRADE TO DRAIN TO THE BOTTOM OF THE SLOPE AND PROVIDE EROSION RESISTANT MATERIAL, SUCH AS FIBERGLASS ROVING OR AS DIRECTED BY THE ENGINEER TO PREVENT SOIL EROSION AND TO PROTECT THE AREA ADJACENT TO THE STRUCTURE. THE CONTRACTOR WILL BE REQUIRED TO REMOVE THESE MATERIALS PRIOR TO CONSTRUCTION OF THE APPROACH SLAB.

TEMPORARY DRAINAGE DETAIL

PROJECT NO. R-2301A
JONES-CRAVEN COUNTY
STATION: 18+22.000 -L-

SHEET 2 OF 3

STATE OF NORTH CAROLINA
DEPARTMENT OF TRANSPORTATION
RALEIGH

BRIDGE APPROACH SLAB DETAILS (RIGHT LANE)

NORTH CAROLINA PROFESSIONAL SEAL 10730 ENGINEER D. ANDREW DAVENPORT, JR.
4-8-08

REVISIONS						SHEET NO.
NO.	BY:	DATE:	NO.	BY:	DATE:	S-65
1			3			TOTAL SHEETS
2			4			176

ASSEMBLED BY :	H. T. BARBOUR	DATE :	4-07-08
CHECKED BY :	D. A. GLADDEN	DATE :	4-08
DRAWN BY : FCJ 11/88	REV. 10/17/00 RWW/LES		
CHECKED BY : ARB 11/88	REV. 5/7/03 RWW/JTE		
	REV. 5/1/06R MAA/KMM		

04-SEP-2008 12:34
r:\structures\tbarbour\Microstation\STR. 2\R-2301A_sd_AS.dgn
tbarbour

STR. #2

STD. NO. BAS10SM

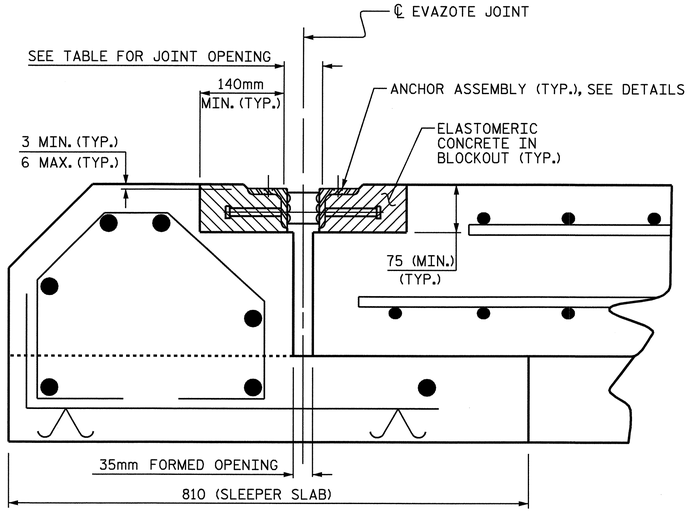

ARMORED JOINT DETAILS

SECTION NORMAL TO JOINT AT END BENT

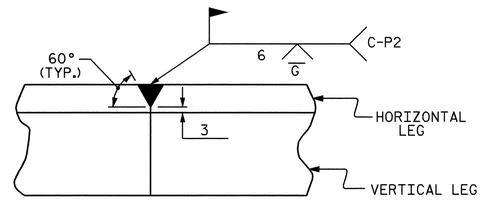

DETAIL- FIELD WELD SPLICE OF ANGLE

NOTES

ANGLES SHALL CONFORM TO AASHTO M270 GRADE 250 STEEL OR APPROVED EQUAL. ALL STUD ANCHORS SHALL CONFORM TO AASHTO M169 GRADES 1010 THRU 1020 OR APPROVED EQUAL.

STUD ANCHORS SHALL BE SHOP WELDED AND ALL HOLES SHALL BE SHOP DRILLED AS SHOWN ON THE PLANS. STUD ANCHORS SHALL BE ELECTRIC ARC END WELDED WITH COMPLETE FUSION.

UPON COMPLETION OF SHOP FABRICATION, THE ENTIRE ANCHOR ASSEMBLY SHALL BE METALLIZED. THE 12.70mm Ø STUD ANCHORS AND ANCHOR TABS NEED NOT BE METALLIZED. SEE SPECIAL PROVISION FOR THERMAL SPRAYED COATINGS (METALLIZATION).

ANCHOR ASSEMBLY SHALL BE MADE CONTINUOUS THE LENGTH OF THE JOINT FROM GUTTER TO GUTTER. FOR FIELD SPLICES AT ALL CROWN BREAK POINTS, THE ENDS OF THE STEEL ANGLES SHALL BE CUT PARALLEL TO THE BRIDGE CENTERLINE. FINISHED FIELD WELDS SHALL BE GROUND SMOOTH AND COATED WITH A MINIMUM THICKNESS OF 0.100mm OF ZINC-RICH PAINT IN ACCORDANCE WITH THE STANDARD SPECIFICATIONS.

ANCHOR ASSEMBLY SEGMENTS SHALL NOT BE LESS 3.6m NOR MORE THAN 6.1m IN LENGTH. SHORTER SEGMENTS MAY BE USED AT THE EDGE OF ROADWAY OR AT POINTS OF STAGED CONSTRUCTION.

THE ANCHOR ASSEMBLY SHALL BE SECURED AND LEVELED AS SHOWN IN THE "ARMORED JOINT ANCHOR ASSEMBLY DETAILS". NO SUBMITTALS ARE REQUIRED FOR 9.53mm Ø EXPANSION ANCHORS, NUTS OR WASHERS. THE CONTRACTOR MAY SUBMIT FOR APPROVAL AN ALTERNATE METHOD OF ALIGNING AND LEVELING THE ANGLES. THE ALTERNATE METHOD SHALL NOT INCLUDE ANY WELDING TO THE OUTSIDE FACE OF THE ANGLES.

AFTER THE ELASTOMERIC CONCRETE HAS BEEN CAST ON BOTH SIDES OF THE JOINT, REMOVE ANY EXCESS CONCRETE THAT COMES THROUGH THE WEEP HOLES AND THOROUGHLY CLEAN THE ANGLES. ANY DAMAGED STEEL SHALL BE COATED WITH A MINIMUM OF 0.100mm OF ZINC-RICH PAINT IN ACCORDANCE WITH THE STANDARD SPECIFICATIONS.

SEE SPECIAL PROVISIONS FOR EVAZOTE JOINT SEALS.

SEE SPECIAL PROVISIONS FOR ELASTOMERIC CONCRETE.

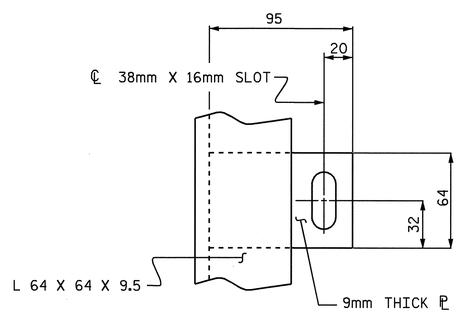

PLAN VIEW OF TAB

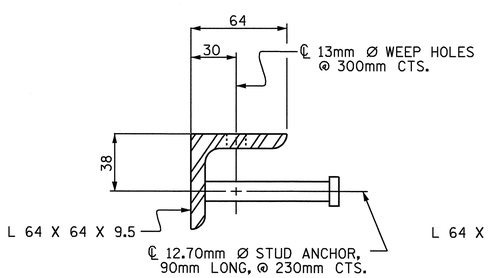

SECTION VIEW OF STUD

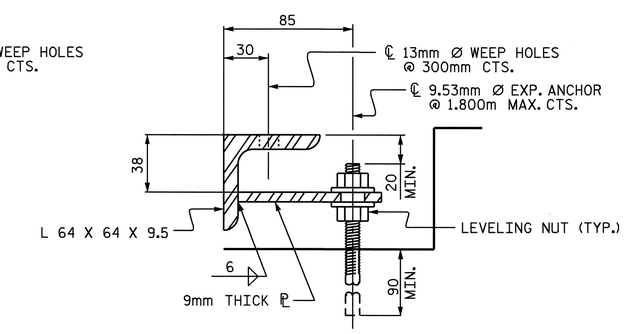

SECTION VIEW OF TAB

ARMORED JOINT ANCHOR ASSEMBLY DETAILS

MOVEMENT AND SETTING OF EVAZOTE JOINT

END BENT NO.	SKEW ANGLE	NOMINAL UNCOMPRESSED SEAL WIDTH	TOTAL MOVEMENT (ALONG ℄ RDWY)	PERPENDICULAR JOINT OPENING AT 7° C	PERPENDICULAR JOINT OPENING AT 16° C	PERPENDICULAR JOINT OPENING AT 32° C
1	105°-00'-00"	71mm	31mm	63mm	57mm	47mm
2	105°-00'-00"	71mm	31mm	63mm	57mm	47mm

TOTAL MOVEMENT IS CALCULATED ALONG THE CENTERLINE OF ROADWAY.
JOINT OPENINGS ARE MEASURED PERPENDICULAR TO THE JOINT.

BILL OF MATERIAL

END BENT NO.	ELASTOMERIC CONCRETE ✳ (CU. m)	TOTAL LENGTH OF ANGLE (m)
1	0.3	24.847
2	0.3	24.847

✳ BASED ON THE MINIMUM BLOCKOUT SHOWN.

PROJECT NO. R-2301A
JONES-CRAVEN COUNTY
STATION: 18+22.000 -L-

SHEET 3 OF 3

STATE OF NORTH CAROLINA
DEPARTMENT OF TRANSPORTATION
RALEIGH

ARMORED EVAZOTE JOINT DETAILS (RIGHT LANE)

NORTH CAROLINA PROFESSIONAL SEAL 10730 ENGINEER D. ANDREW DAVENPORT, JR.

REVISIONS						SHEET NO.
NO.	BY:	DATE:	NO.	BY:	DATE:	S-66
1			3			TOTAL SHEETS
2			4			176

ASSEMBLED BY :	H. T. BARBOUR	DATE :	4-07-08
CHECKED BY :	D. A. GLADDEN	DATE :	4-08
DRAWN BY : EEM	1/96	REV. 7/10/01	LES/RDR
CHECKED BY : RGW	1/96	REV. 5/7/03RR	RWW/JTE
		REV. 5/1/06	TLA/GM

11-AUG-2008 15:35
f:\structures\tbarbour\Microstation\STR. 2\R-2301A_sd_AS.dgn
addavenport

STR. #2

STD. NO. AEJ1SM

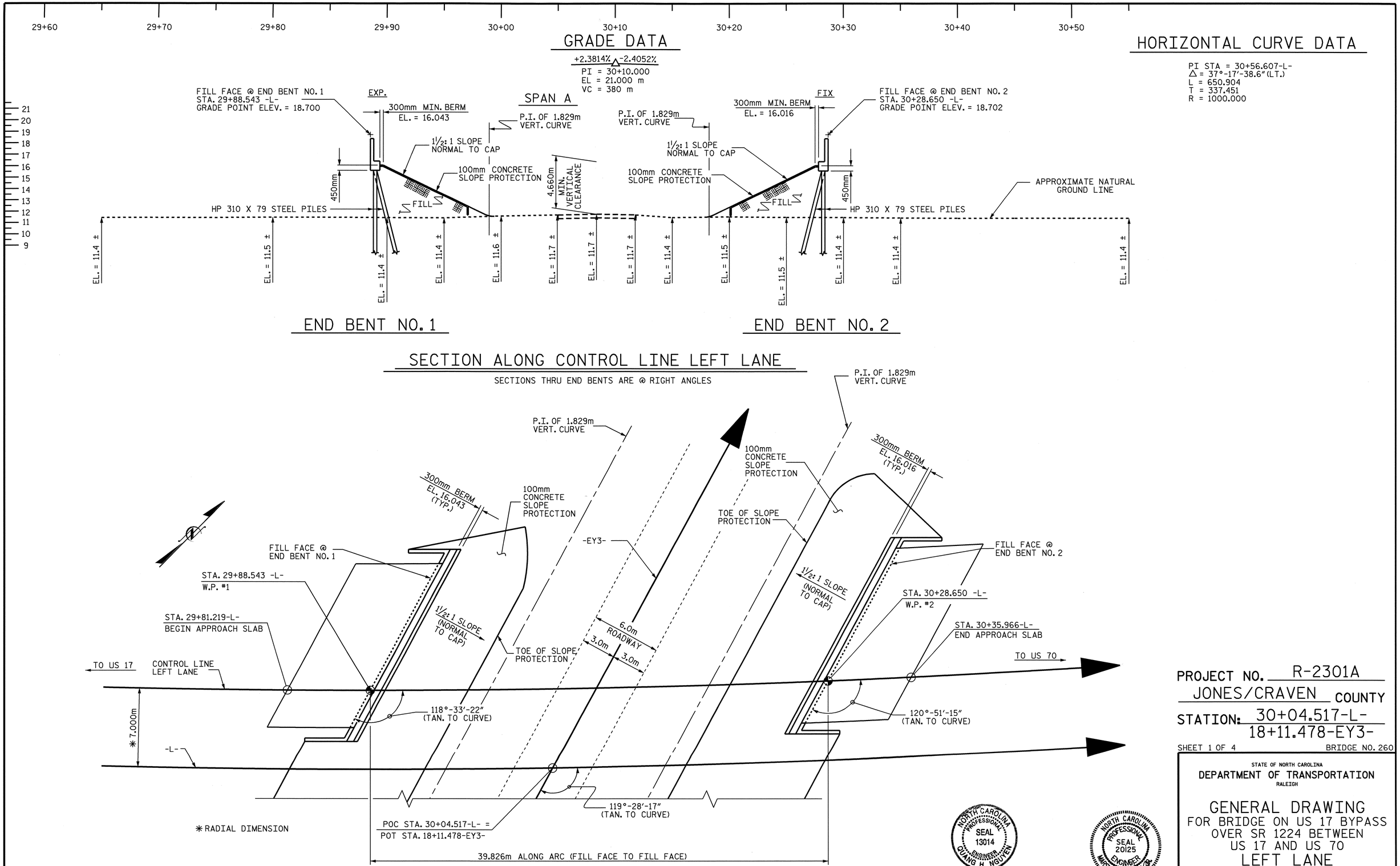
29+60
29+70
29+80
29+90
30+00
30+10
30+20
30+30
30+40
30+50
GRADE DATA
+2.3814% -2.4052%
PI = 30+10.000
EL = 21.000 m
VC = 380 m
HORIZONTAL CURVE DATA
PI STA = 30+56.607-L-
Δ = 37°-17'-38.6" (LT.)
L = 650.904
T = 337.451
R = 1000.000
SPAN A
FILL FACE @ END BENT NO. 1
STA. 29+88.543 -L-
GRADE POINT ELEV. = 18.700
EXP.
300mm MIN. BERM
EL. = 16.043
P.I. OF 1.829m VERT. CURVE
1½:1 SLOPE NORMAL TO CAP
100mm CONCRETE SLOPE PROTECTION
450mm
4.660m MIN. VERTICAL CLEARANCE
FILL
HP 310 X 79 STEEL PILES
FIX
300mm MIN. BERM
EL. = 16.016
FILL FACE @ END BENT NO. 2
STA. 30+28.650 -L-
GRADE POINT ELEV. = 18.702
APPROXIMATE NATURAL GROUND LINE
EL. = 11.4 ±
EL. = 11.5 ±
EL. = 11.6 ±
EL. = 11.7 ±
END BENT NO. 1
END BENT NO. 2
SECTION ALONG CONTROL LINE LEFT LANE
SECTIONS THRU END BENTS ARE @ RIGHT ANGLES
P.I. OF 1.829m VERT. CURVE
300mm BERM EL. 16.043 (TYP.)
300mm BERM EL. 16.016 (TYP.)
100mm CONCRETE SLOPE PROTECTION
TOE OF SLOPE PROTECTION
-EY3-
FILL FACE @ END BENT NO. 1
FILL FACE @ END BENT NO. 2
STA. 29+88.543 -L-
W.P. #1
STA. 30+28.650 -L-
W.P. #2
STA. 29+81.219-L-
BEGIN APPROACH SLAB
STA. 30+35.966-L-
END APPROACH SLAB
1½:1 SLOPE (NORMAL TO CAP)
6.0m ROADWAY
3.0m
3.0m
TO US 17
CONTROL LINE LEFT LANE
TO US 70
118°-33'-22" (TAN. TO CURVE)
120°-51'-15" (TAN. TO CURVE)
119°-28'-17" (TAN. TO CURVE)
*7.000m
-L-
*RADIAL DIMENSION
POC STA. 30+04.517-L- =
POT STA. 18+11.478-EY3-
39.826m ALONG ARC (FILL FACE TO FILL FACE)
PLAN
(PILES NOT SHOWN IN PLAN VIEW)
NORTH CAROLINA PROFESSIONAL SEAL 13014 ENGINEER QUANG H. NGUYEN
NORTH CAROLINA PROFESSIONAL SEAL 20125 ENGINEER MURPHY & CHEEK, P.A.
PROJECT NO. R-2301A
JONES/CRAVEN COUNTY
STATION: 30+04.517-L-
18+11.478-EY3-
SHEET 1 OF 4
BRIDGE NO. 260
STATE OF NORTH CAROLINA
DEPARTMENT OF TRANSPORTATION
RALEIGH
GENERAL DRAWING
FOR BRIDGE ON US 17 BYPASS
OVER SR 1224 BETWEEN
US 17 AND US 70
LEFT LANE
REVISIONS
NO. BY: DATE: NO. BY: DATE:
1 2 3 4
SHEET NO. S-67
TOTAL SHEETS 176
DRAWN BY : L.L. MURPHY DATE : 10-07
CHECKED BY : M.G. CHEEK DATE : 11-07
04-SEP-2008 08:19
r:\structures\finalplans\str #3\r2301a_sd_gd_str#3.dgn
lmurphy
STR #3

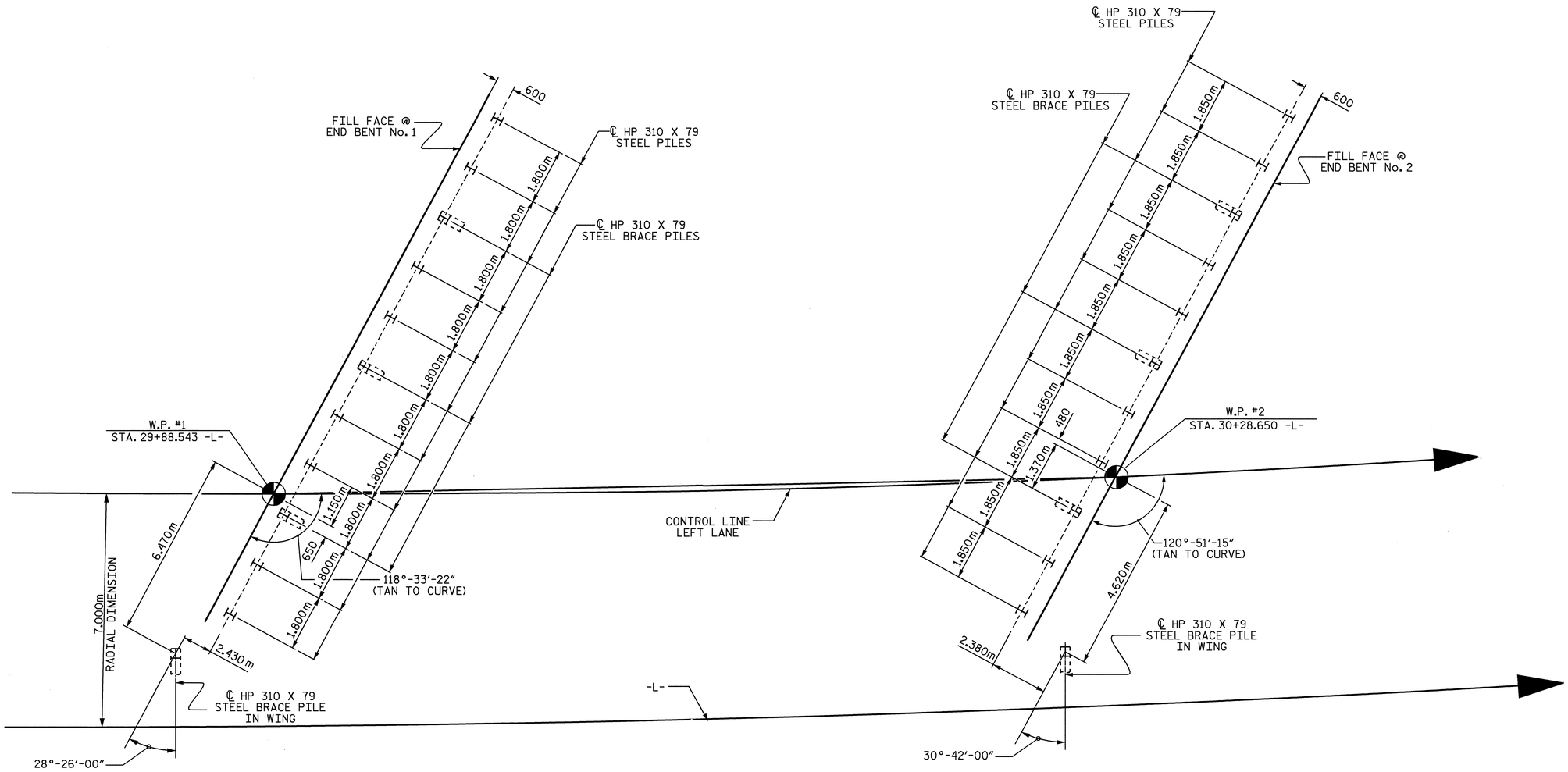

END BENT No. 1

END BENT No. 2

FOUNDATION LAYOUT

DIMENSIONS LOCATING PILES ARE SHOWN TO THE PILE CENTERLINE

END BENT BRACE PILES ARE BATTERED 250:1000

NOTES

DRIVE PILES AT END BENT No. 1 AND END BENT No. 2 TO A REQUIRED BEARING CAPACITY OF 1260 KILONEWTONS PER PILE. THE REQUIRED BEARING CAPACITY IS EQUAL TO THE ALLOWABLE BEARING CAPACITY WITH A MINIMUM FACTOR OF SAFETY OF TWO.

THE ALLOWABLE BEARING CAPACITY FOR PILES AT END BENT No. 1 AND END BENT No. 2 IS 630 KILONEWTONS PER PILE.

PROJECT NO. R-2301A
JONES/CRAVEN COUNTY
STATION: 30+04.517-L-

SHEET 2 OF 4

NORTH CAROLINA PROFESSIONAL SEAL 20125 ENGINEER MARSHALL G. CHEEK, JR.
9-5-08

STATE OF NORTH CAROLINA
DEPARTMENT OF TRANSPORTATION
RALEIGH

GENERAL DRAWING
FOR BRIDGE ON US 17 BYPASS OVER SR 1224 BETWEEN US 17 AND US 70
LEFT LANE

REVISIONS						SHEET NO.
NO.	BY:	DATE:	NO.	BY:	DATE:	S-68
1			3			TOTAL SHEETS
2			4			176

DRAWN BY : R. G. EMERSON DATE : 06/08
CHECKED BY : M. G. CHEEK DATE : 07/08

05-SEP-2008 11:26
r:\structures\finalplans\str #3\r2301a_sd_fl_str3.dgn
lmurphy

STR. #3

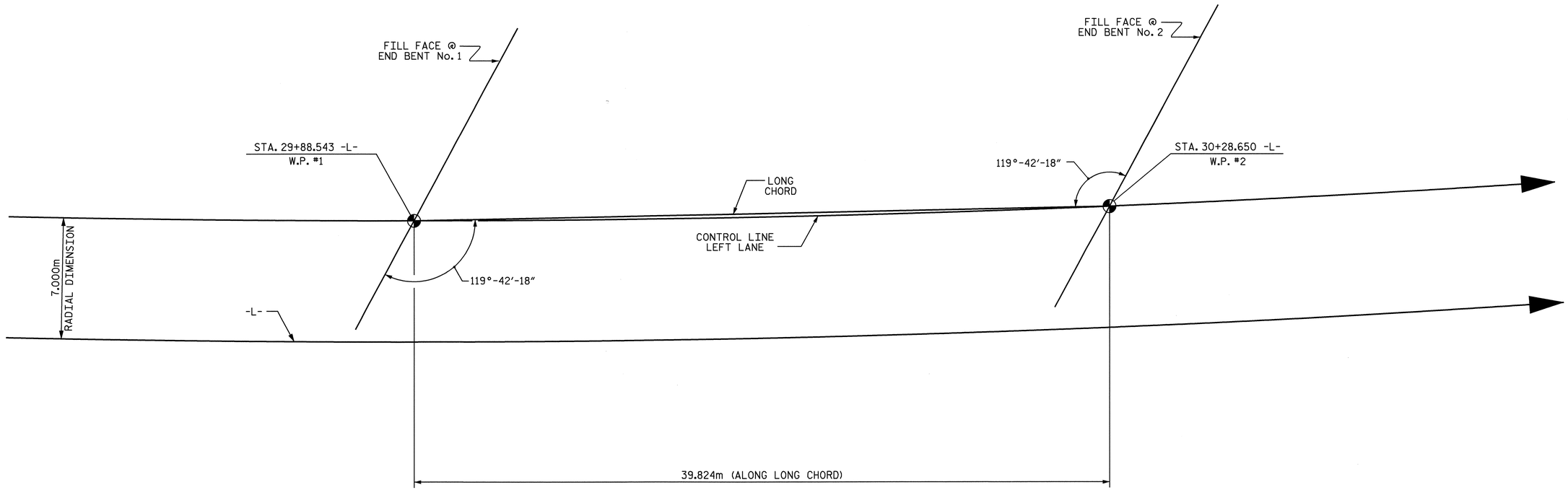

LONG CHORD LAYOUT

PROJECT NO. R-2301A

JONES/CRAVEN COUNTY

STATION: 30+04.517-L-

SHEET 3 OF 4

STATE OF NORTH CAROLINA
DEPARTMENT OF TRANSPORTATION
RALEIGH

GENERAL DRAWING
FOR BRIDGE ON US 17
BYPASS OVER SR 1224
BETWEEN US 17 AND US 70

LEFT LANE

NORTH CAROLINA PROFESSIONAL SEAL 20125 ENGINEER MARSHALL G. CHEEK, JR.
9-3-08

REVISIONS						SHEET NO.
NO.	BY:	DATE:	NO.	BY:	DATE:	S-69
1			3			TOTAL SHEETS
2			4			176

DRAWN BY : R. G. EMERSON DATE : 06/08
CHECKED BY : M. G. CHEEK DATE : 06/08

22-JUL-2008 08:15
r:\structures\remerson\str_3\r2301a_sd_lc_str_3.dgn
remerson

STR. #3

BENCH MARK 23 : RR SPIKE IN POWER POLE NUMBER RSC24, 39.157' LEFT OF STA. 30+39.586-L-, ELEV. 12.083

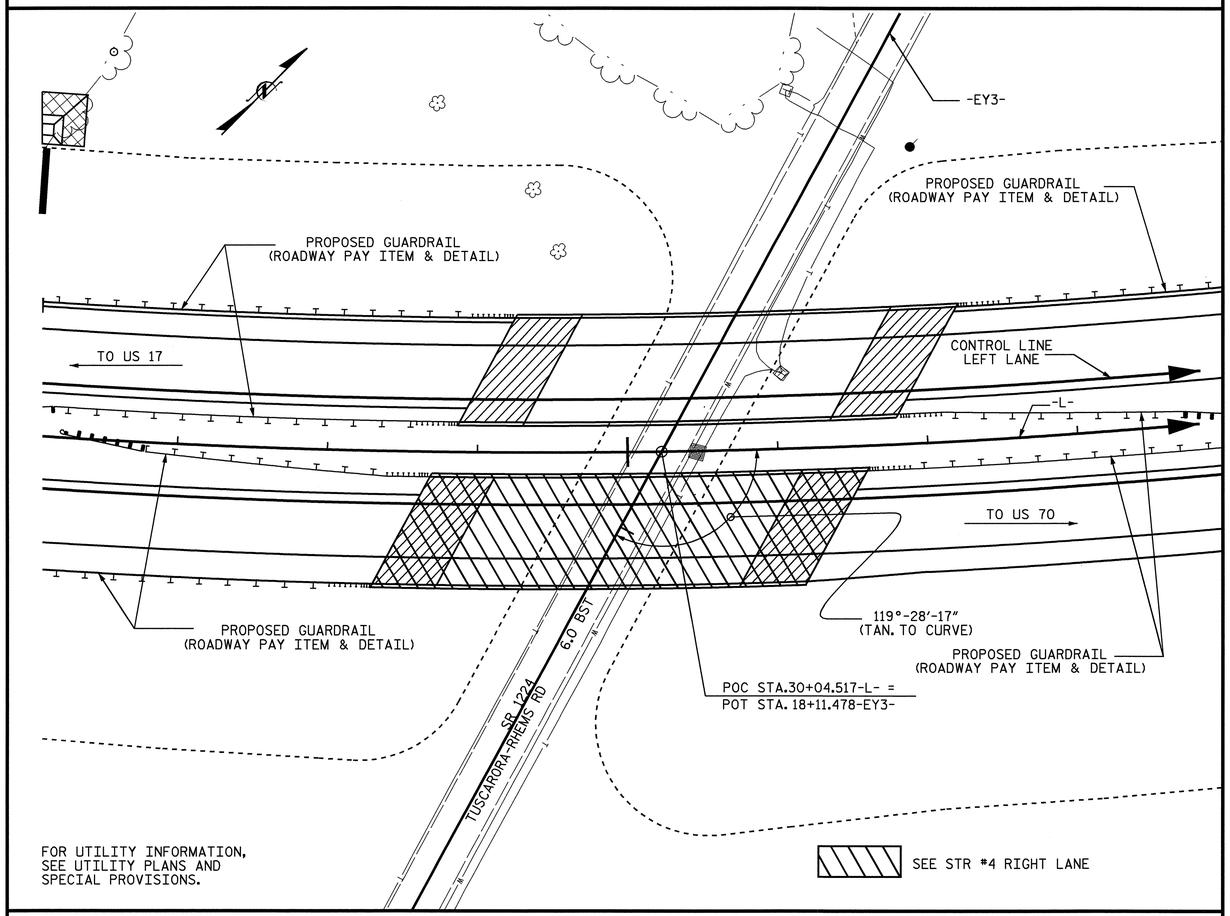

FOR UTILITY INFORMATION,
SEE UTILITY PLANS AND
SPECIAL PROVISIONS.

LOCATION SKETCH

THE CONTRACTOR SHALL PROVIDE INDEPENDENT ASSURANCE SAMPLES OF REINFORCING STEEL AS FOLLOWS: FOR PROJECTS REQUIRING UP TO 360,000 kg OF REINFORCING STEEL, ONE 760mm SAMPLE OF EACH SIZE BAR USED, AND FOR PROJECTS REQUIRING OVER 360,000 kg OF REINFORCING STEEL, TWO 760mm SAMPLES OF EACH SIZE BAR USED. THE BARS FROM WHICH THE SAMPLES ARE TAKEN MUST THEN BE SPLICED WITH REPLACEMENT BARS OF THE SIZE AND LENGTH OF THE SAMPLE PLUS A MINIMUM LAP SPLICE OF THIRTY BAR DIAMETERS.

NOTES

ALL DIMENSIONS ARE IN MILLIMETERS UNLESS OTHERWISE NOTED.

ALL ELEVATIONS ARE IN METERS.

FOR OTHER DESIGN DATA AND GENERAL NOTES, SEE SHEET SNSM.

ALL STRUCTURAL STEEL SHALL BE AASHTO M270 GRADE 345W AND PAINTED IN ACCORDANCE WITH SYSTEM 4 OF ARTICLE 442-7 OF THE STANDARD SPECIFICATIONS UNLESS OTHERWISE NOTED ON THE PLANS.

REMOVABLE FORMS MAY BE USED IN LIEU OF METAL STAY-IN-PLACE FORMS IN ACCORDANCE WITH ARTICLE 420-3 OF THE STANDARD SPECIFICATIONS.

FOR MAINTENANCE AND PROTECTION OF TRAFFIC BENEATH PROPOSED STRUCTURE, SEE SPECIAL PROVISIONS.

NEEDLE BEAMS WILL NOT BE ALLOWED UNLESS OTHERWISE CALLED FOR ON THE PLANS OR APPROVED BY THE ENGINEER.

FOR SUBMITTAL OF WORKING DRAWINGS, SEE SPECIAL PROVISIONS.

FOR METRIC STRUCTURAL STEEL, SEE SPECIAL PROVISIONS.

FOR FALSEWORK AND FORMWORK, SEE SPECIAL PROVISIONS.

ASSUMED LIVE LOAD = MS18 OR ALTERNATE LOADING, EXCEPT THAT THE GIRDERS HAVE BEEN DESIGNED FOR MS22.5.

THIS BRIDGE HAS BEEN DESIGNED BY THE STRENGTH DESIGN METHOD AS SPECIFIED IN AASHTO STANDARD SPECIFICATIONS.

THIS BRIDGE HAS BEEN DESIGNED IN ACCORDANCE WITH THE REQUIREMENTS OF THE AASHTO STANDARD SPECIFICATIONS FOR SEISMIC DESIGN OF HIGHWAY BRIDGES FOR SEISMIC PERFORMANCE CATEGORY A.

FOR GROUT FOR STRUCTURES, SEE SPECIAL PROVISIONS.

FOR CRANE SAFETY, SEE SPECIAL PROVISIONS.

FOR ADHESIVELY ANCHORED BOLTS OR DOWELS, SEE SPECIAL PROVISIONS.

TOTAL BILL OF MATERIAL

	REINFORCED CONCRETE DECK SLAB	GROOVING BRIDGE FLOORS	CLASS A CONCRETE	BRIDGE APPROACH SLABS	REINFORCING STEEL	STRUCTURAL STEEL	HP 310 X 79 STEEL PILES		PILE REDRIVES	CONCRETE BARRIER RAIL	100mm CONCRETE SLOPE PROTECTION	ELASTOMERIC BEARINGS	EVAZOTE JOINT SEALS
	SQ. METERS	SQ. METERS	CU. METERS	LUMP SUM	kg	APPROX. kg	NO.	METERS	EACH	METERS	SQ. METERS	LUMP SUM	LUMP SUM
SUPERSTRUCTURE	578.5	683.7		LUMP SUM		102650				78.294		LUMP SUM	LUMP SUM
END BENT NO. 1			37.1		3002		12	228.0	4		280		
END BENT NO. 2			38.5		3062		12	228.0	4		231		
TOTAL	578.5	683.7	75.6	LUMP SUM	6064	102650	24	456.0	8	78.294	511	LUMP SUM	LUMP SUM

PROJECT NO. R-2301A
JONES/CRAVEN COUNTY
STATION: 30+04.517-L-

SHEET 4 OF 4

STATE OF NORTH CAROLINA
DEPARTMENT OF TRANSPORTATION
RALEIGH

GENERAL DRAWING
FOR BRIDGE ON US17 BYPASS
OVER SR 1224 BETWEEN
US17 AND US70

LEFT LANE

NORTH CAROLINA PROFESSIONAL SEAL 20125 ENGINEER MARSHALL G. CHEEK, JR.
9-3-08

REVISIONS						SHEET NO.
NO.	BY:	DATE:	NO.	BY:	DATE:	S-70
1			3			TOTAL SHEETS
2			4			176

DRAWN BY : L.L. MURPHY DATE : 10-07
CHECKED BY : M.G. CHEEK DATE : 11-07

02-SEP-2008 12:18
r:\structures\finalplans\str #3\r2301a_sd_gd_str#3.dgn
lmurphy

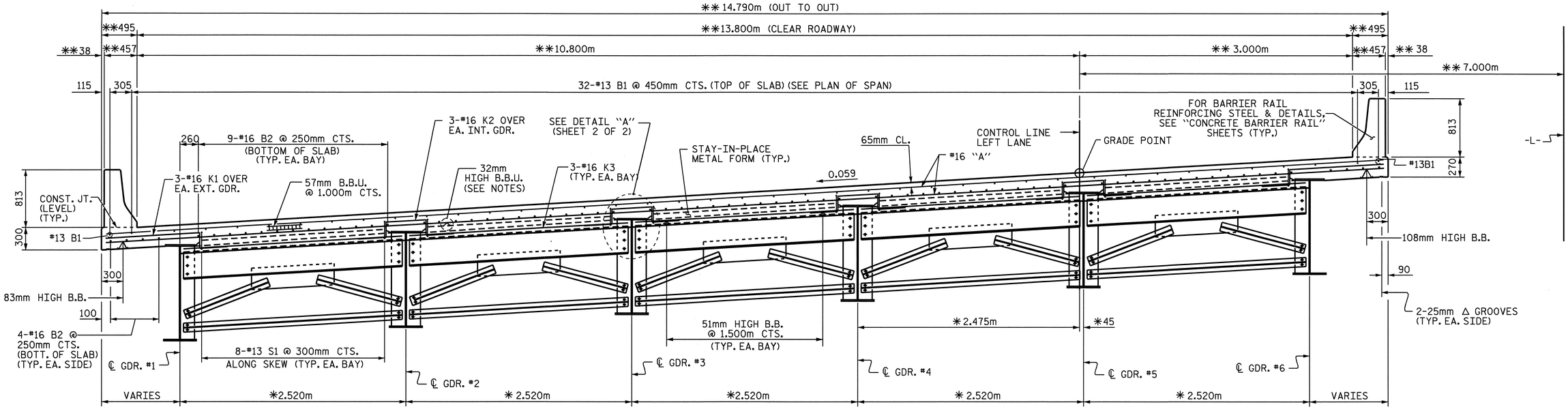

TYPICAL SECTION

(SHOWING END BENT DIAPHRAGM)

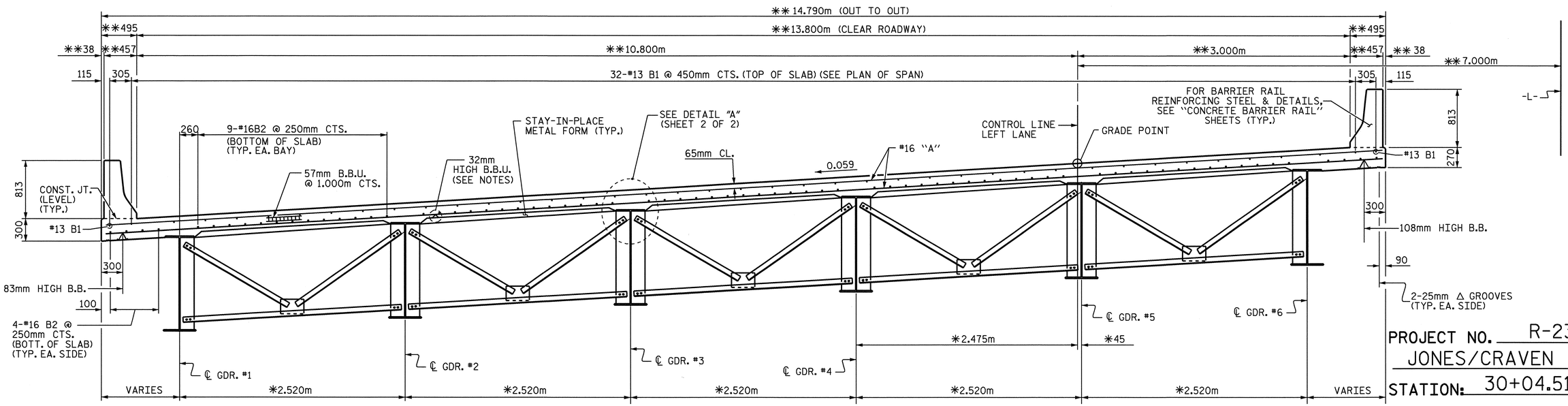

TYPICAL SECTION

(SHOWING INTERMEDIATE DIAPHRAGMS)

* DIMENSIONS RADIAL THROUGH WORKPOINTS.
** RADIAL DIMENSIONS

PROJECT NO. R-2301A
JONES/CRAVEN COUNTY
STATION: 30+04.517 -L-

SHEET 1 OF 2

STATE OF NORTH CAROLINA
DEPARTMENT OF TRANSPORTATION
RALEIGH

SUPERSTRUCTURE
TYPICAL SECTIONS
LEFT LANE

NORTH CAROLINA PROFESSIONAL SEAL 20125 ENGINEER MARSHALL B. GREEN, JR.
9-3-08

REVISIONS						SHEET NO.
NO.	BY:	DATE:	NO.	BY:	DATE:	S-71
1			3			TOTAL SHEETS
2			4			176

STR. #3

DRAWN BY : V.X. NGUYEN DATE : 07-22-08
CHECKED BY : D. HODGE DATE : 7-08

03-SEP-2008 12:05
r:\structures\final plans\str #3\R2301A_sd_TS.dgn
vnguyen

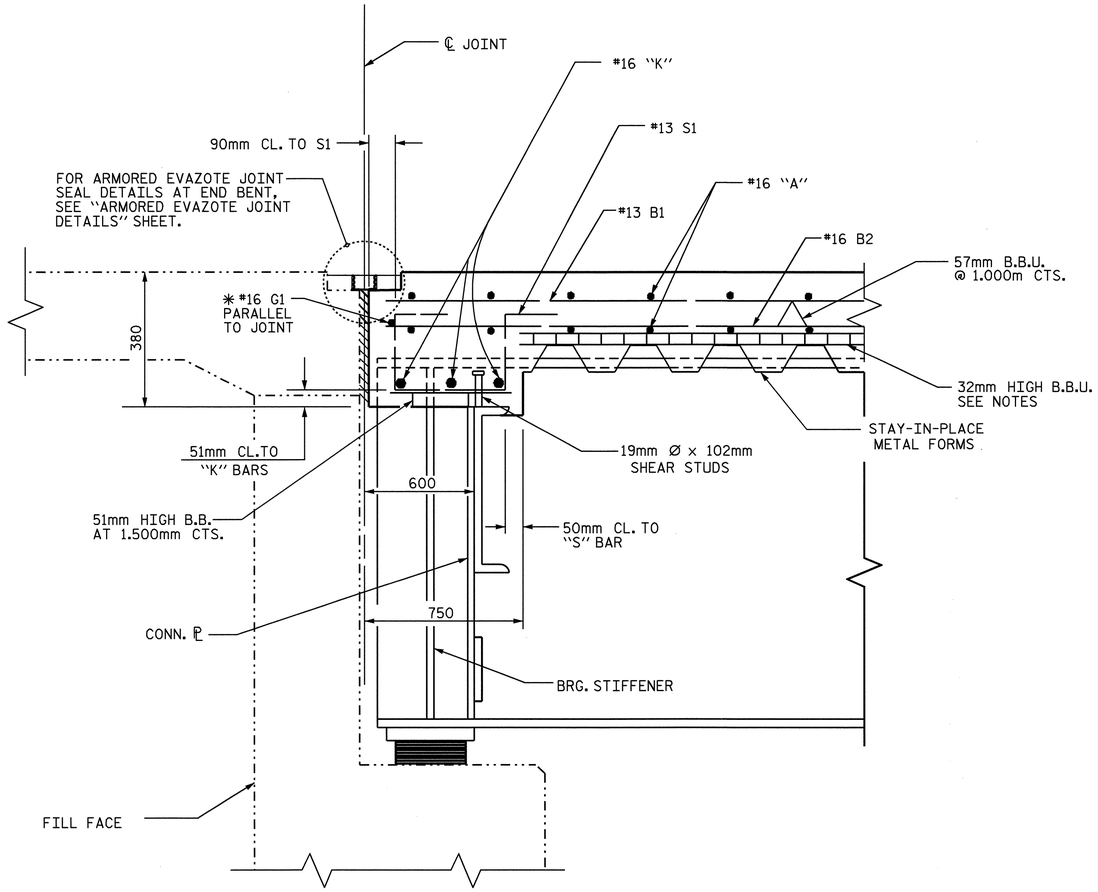

SECTION @ END BENT

✳ #16 "G" BAR MAY BE SHIFTED SLIGHTLY, AS NECESSARY, TO CLEAR DIAPHRAGM AND REINFORCING STEEL.

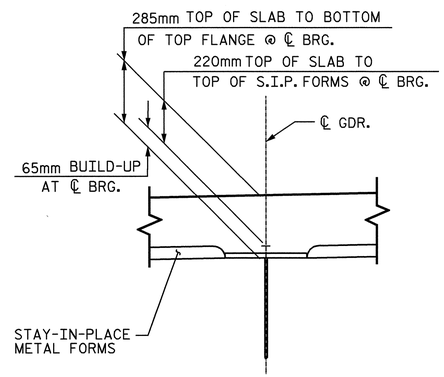

DETAIL "A"

NOTES

PROVIDE 32mm HIGH BEAM BOLSTERS UPPER AT 1.2m CTS. ATOP THE METAL STAY-IN-PLACE FORMS TO SUPPORT THE BOTTOM MAT OF 'A' BARS. WHEN USING REMOVABLE FORMS, PROVIDE CONTINUOUS HIGH CHAIRS FOR METAL DECK (C.H.C.M.) @ 1.2m CTS. WITH A HEIGHT TO SUPPORT THE BOTTOM MAT OF 'A' BARS A CLEAR DISTANCE OF 65mm ABOVE THE TOP OF THE REMOVABLE FORM.

THE CONTRACTOR MAY, WHEN NECESSARY, PROPOSE A SCHEME FOR AVOIDING INTERFERENCE BETWEEN METAL STAY-IN-PLACE FORM SUPPORTS OR FORMS AND GIRDER STIFFENERS OR CONNECTOR PLATES. THE PROPOSAL SHALL BE INDICATED, AS APPROPRIATE, ON EITHER THE STEEL WORKING DRAWINGS OR THE METAL STAY-IN- PLACE FORM WORKING DRAWINGS.

BARRIER RAIL SHALL NOT BE CAST UNTIL ALL SLAB CONCRETE IN THE UNIT HAS BEEN CAST AND HAS REACHED A MINIMUM COMPRESSIVE STRENGTH OF 20.7 MPa.

THE CONTRACTOR'S ATTENTION IS CALLED TO THE FOLLOWING PROCEDURES TO ACCOMMODATE GIRDER TRANSLATION AND END ROTATION:

1. ONCE THE DECK HAS CURED, THE GIRDERS SHALL BE JACKED AND THE ANCHOR BOLTS, SOLE PLATE AND ELASTOMERIC BEARING SLOTS SHALL BE CENTERED AS NEARLY AS PRACTICAL ABOUT THE BEARING STIFFENER. THIS OPERATION SHALL BE PERFORMED AT APPROXIMATELY 16° C.
2. AFTER CENTERING THE SLOTS ABOUT THE ANCHOR BOLTS, THE SOLE PLATES SHALL BE FIELD WELDED TO THE GIRDER FLANGES AND ANCHOR BOLTS GROUTED.

THE CONTRACTOR MAY PROPOSE ALTERNATE METHODS PROVIDED DETAILS ARE SUBMITTED TO THE ENGINEER FOR REVIEW AND APPROVAL.

DIRECTION OF CASTING DECK CONCRETE SHALL BE FROM THE FIXED BEARING END TOWARD THE EXPANSION BEARING END OF THE SPAN.

PROJECT NO. R-2301A
JONES/CRAVEN COUNTY
STATION: 30+04.517 -L-

SHEET 2 OF 2

STATE OF NORTH CAROLINA
DEPARTMENT OF TRANSPORTATION
RALEIGH

SUPERSTRUCTURE
TYPICAL SECTIONS
LEFT LANE

NORTH CAROLINA PROFESSIONAL SEAL 20125 ENGINEER MARSHALL G. SHEEL, JR. 9-3-08

REVISIONS								SHEET NO.
NO.	BY:	DATE:	NO.	BY:	DATE:			S-72
1			3					TOTAL SHEETS
2			4					176

DRAWN BY : V.X. NGUYEN DATE : 07-22-08
CHECKED BY : D. HODGE DATE : 7-08

04-AUG-2008 10:49
r:\structures\vnguyen\microstation\r2301a\R2301A_sd_TS.dgn
vnguyen

STR. #3

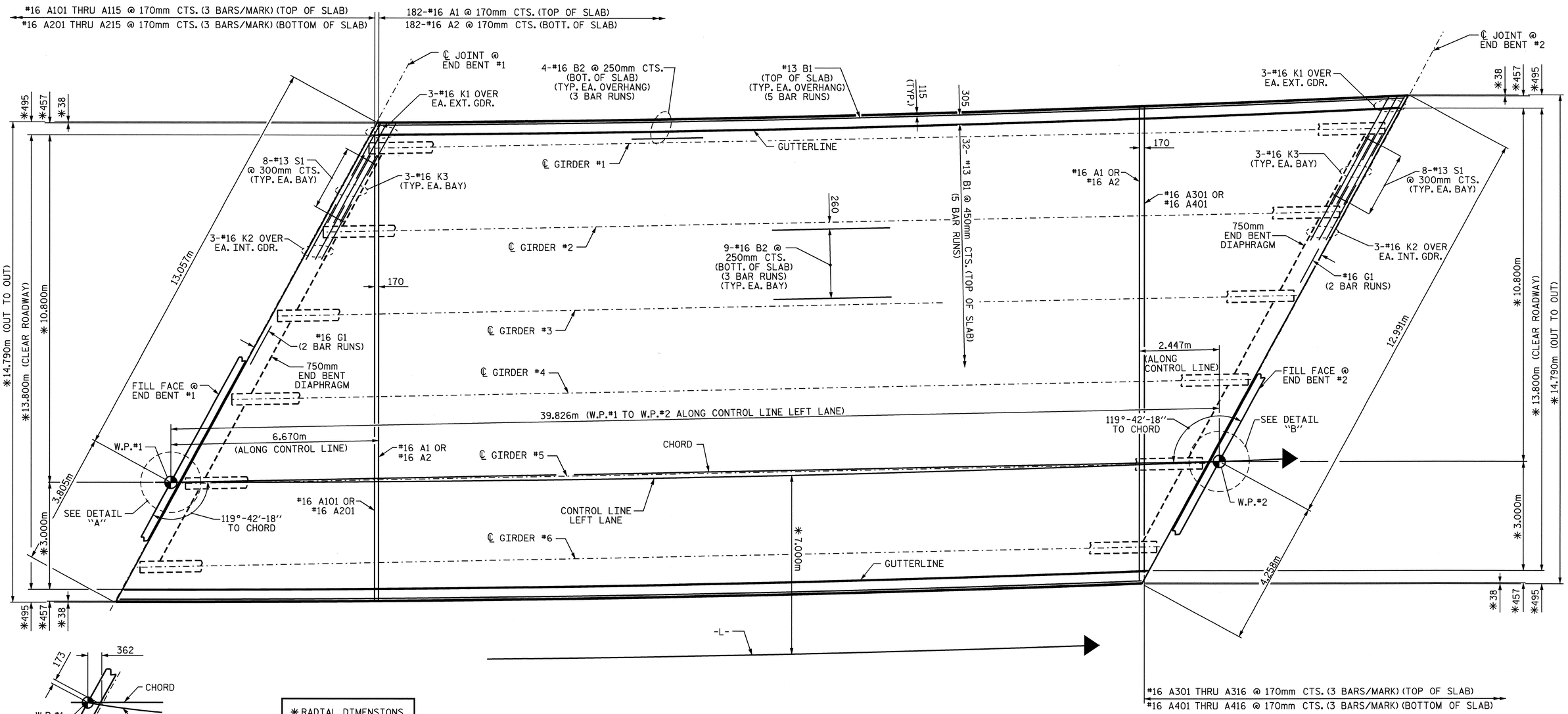

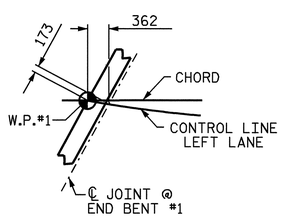

DETAIL "A"

✱ RADIAL DIMENSIONS

PLAN OF SPAN A

FOR REINFORCING STEEL IN BARRIER RAIL, SEE "CONCRETE BARRIER RAIL" SHEET.

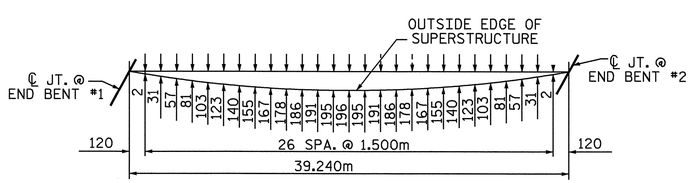

ARC OFFSETS

LEFT SIDE

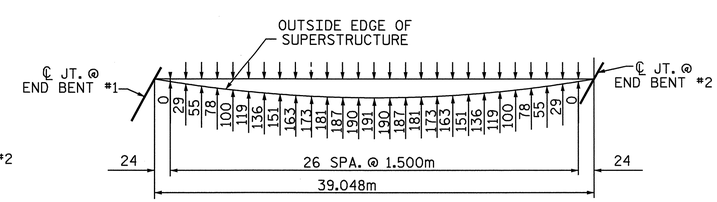

ARC OFFSETS

RIGHT SIDE

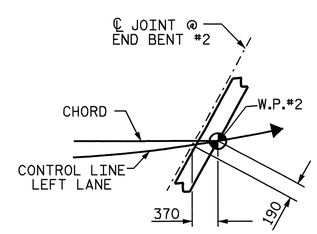

DETAIL "B"

PROJECT NO. R-2301A

JONES/CRAVEN COUNTY

STATION: 30+04.517 -L-

STATE OF NORTH CAROLINA
DEPARTMENT OF TRANSPORTATION
RALEIGH

SUPERSTRUCTURE
PLAN OF SPAN A
LEFT LANE

NORTH CAROLINA PROFESSIONAL SEAL 20125 ENGINEER MARSHALL L. WEBB, JR. 9-3-08

REVISIONS						SHEET NO.
NO.	BY:	DATE:	NO.	BY:	DATE:	S-73
1			3			TOTAL SHEETS
2			4			176

DRAWN BY : V.X. NGUYEN DATE : 12-17-07
CHECKED BY : D. HODGE DATE : 7-08

03-SEP-2008 12:04
r:\structures\final plans\str #3\R2301A_sd_S*.dgn
vnguyen

STR. #3

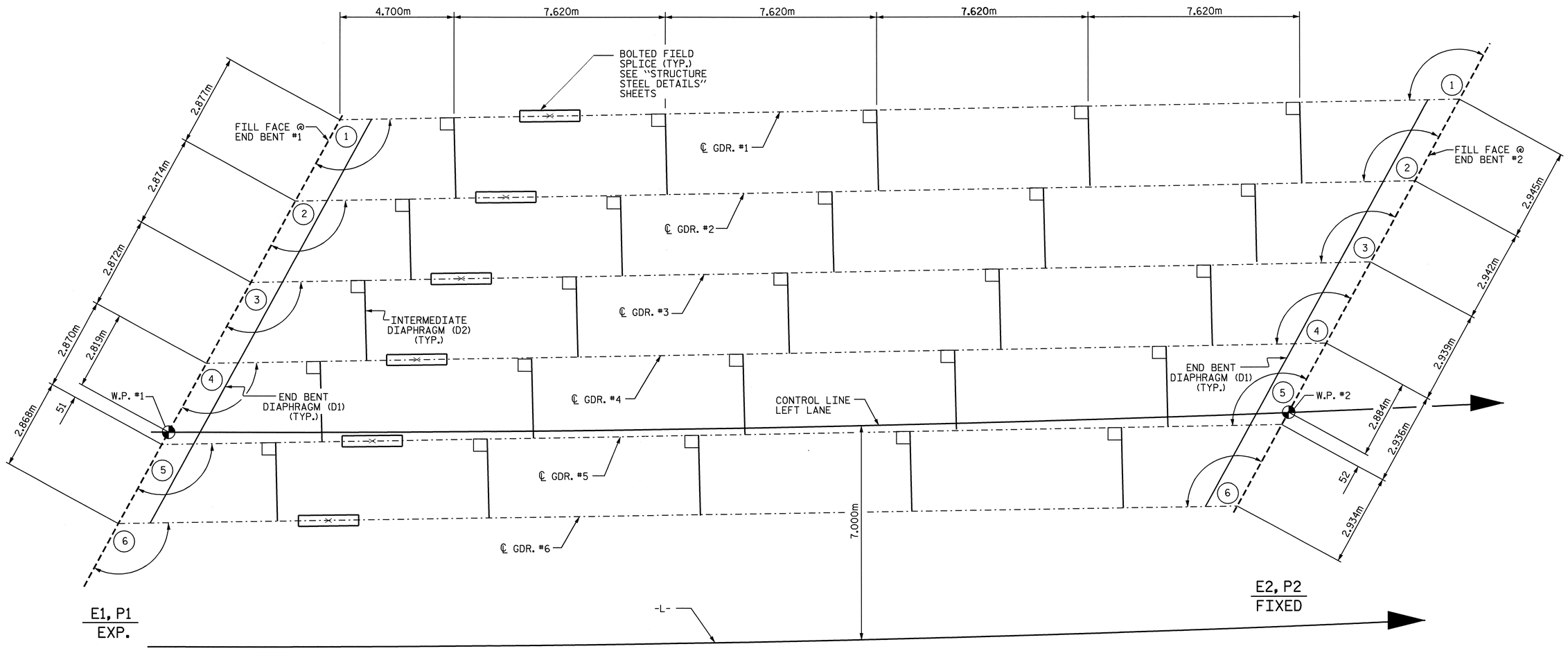

FRAMING PLAN

CHORD ANGLES	
@ FILL FACE END BENT 1	@ FILL FACE END BENT 2
1 120°-02'-22"	1 120°-02'-22"
2 119°-57'-17"	2 119°-57'-17"
3 119°-52'-14"	3 119°-52'-14"
4 119°-47'-13"	4 119°-47'-13"
5 119°-42'-13"	5 119°-42'-13"
6 119°-37'-15"	6 119°-37'-15"

NOTES

ALL STRUCTURAL STEEL SHALL BE AASHTO M270 GRADE 345W AND PAINTED IN ACCORDANCE WITH SYSTEM 4 OF ARTICLE 442-7 OF THE STANDARD SPECIFICATIONS UNLESS OTHERWISE NOTED ON THE PLANS.

ALL DIMENSIONS SHOWN ARE HORIZONTAL OR VERTICAL, UNLESS OTHERWISE NOTED.

ALL FIELD CONNECTIONS TO BE 22.23mm DIA. HIGH STRENGTH BOLTS UNLESS OTHERWISE NOTED.

SHOP SPLICES ARE PERMITTED TO LIMIT THE MAXIMUM REQUIRED FLANGE PIECE LENGTHS TO 18 METERS AND WEB PIECE LENGTHS TO 14 METERS. PERMITTED FLANGE AND WEB SHOP SPLICES SHALL NOT BE LOCATED WITHIN 4.5 METERS OF MAXIMUM DEAD LOAD DEFLECTION (NOR WITHIN 4.5 METERS OF INTERMEDIATE BEARINGS OF CONTINUOUS UNITS). KEEP 600mm MINIMUM BETWEEN WEB AND FLANGE SHOP SPLICES. KEEP 150mm MINIMUM BETWEEN CONNECTOR PLATE OR TRANSVERSE STIFFENER WELDS AND WEB OR FLANGE SHOP SPLICES.

STUDS ON GIRDERS MAY BE SHIFTED UP TO 25mm IF NECESSARY TO CLEAR FLANGE SPLICE WELD.

END OF GIRDERS SHALL BE PLUMB.

TENSION ON THE AASHTO M164 BOLTS SHALL BE CALIBRATED USING DIRECT TENSION INDICATOR WASHERS IN ACCORDANCE WITH ARTICLE 440-10 OF THE STANDARD SPECIFICATIONS.

A CHARPY V-NOTCH TEST IS REQUIRED FOR WEB PLATES, BOTTOM FLANGE PLATES, BOTTOM FLANGE SPLICE PLATES AND WEB SPLICE PLATES FOR ALL GIRDERS. IN ACCORDANCE WITH ARTICLE 1072-9 OF THE STANDARD SPECIFICATIONS.

BEARING STIFFENER MAY REQUIRE COPING IF WIDER THAN BOTTOM FLANGE TO AVOID INTERFERENCE WITH THE ANCHOR BOLT.

FOR HIGH STRENGTH BOLTS, SEE SPECIAL PROVISIONS.

PROJECT NO. R-2301A
JONES/CRAVEN COUNTY
STATION: 30+04.517 -L-

STATE OF NORTH CAROLINA
DEPARTMENT OF TRANSPORTATION
RALEIGH

FRAMING PLAN
LEFT LANE

NORTH CAROLINA PROFESSIONAL SEAL 20125 ENGINEER MARSHALL G. CHEEK, JR.
9-3-08

REVISIONS						SHEET NO.
NO.	BY:	DATE:	NO.	BY:	DATE:	S-74
1			3			TOTAL SHEETS
2			4			176

DRAWN BY : V.X. NGUYEN DATE : 7-3-08
CHECKED BY : M.G. CHEEK DATE : 7-08

STR. #3

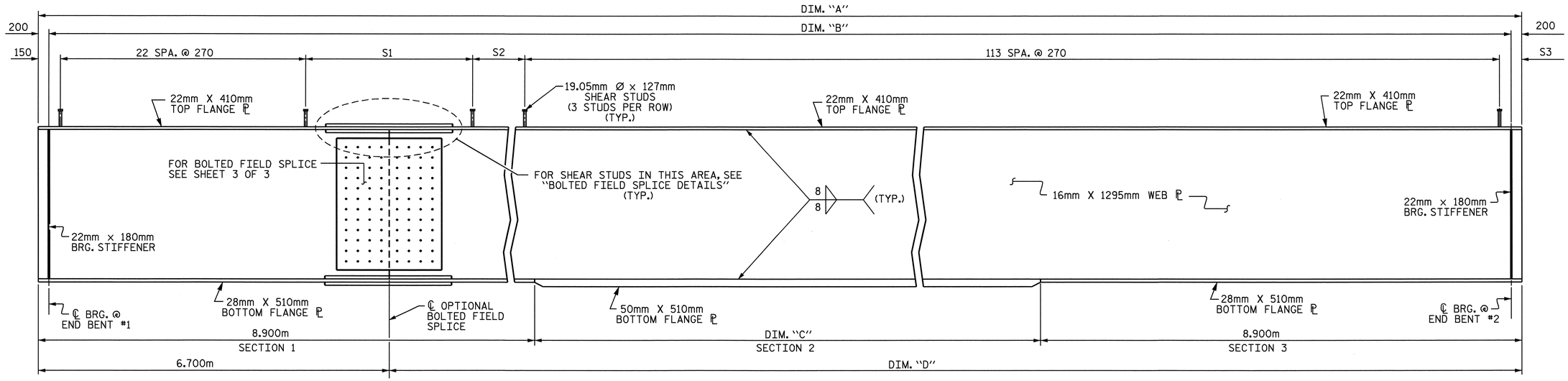

GIRDER ELEVATION

CONNECTOR PLATES NOT SHOWN FOR CLARITY

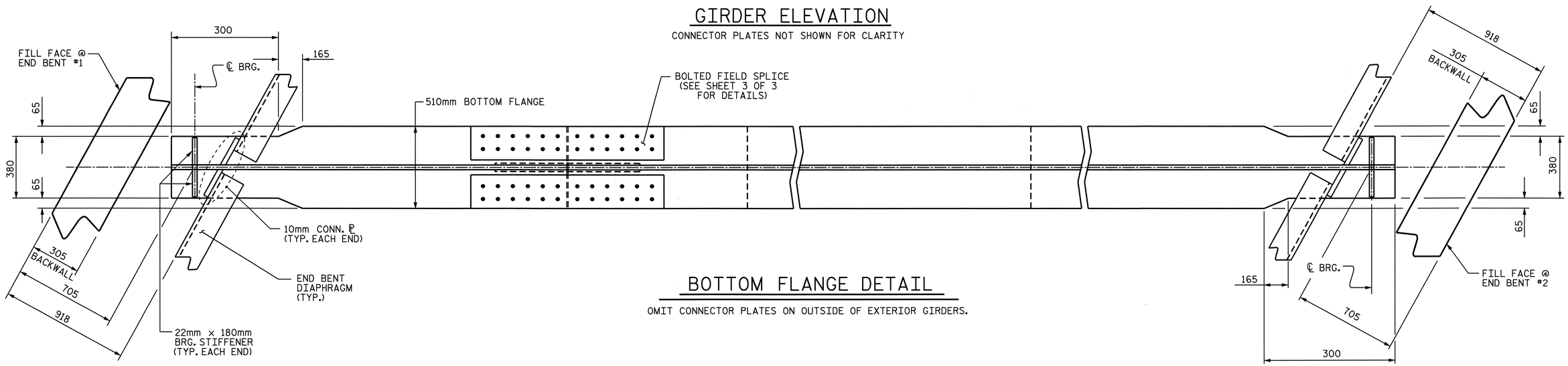

BOTTOM FLANGE DETAIL

OMIT CONNECTOR PLATES ON OUTSIDE OF EXTERIOR GIRDERS.

PROJECT NO. R-2301A

JONES/CRAVEN COUNTY

STATION: 30+04.517 -L-

SHEET 1 OF 3

GIRDER DIMENSIONS

GIRDER	DIM. "A"	DIM. "B"	DIM. "C"	DIM. "D"
1	38.729	38.329	20.929	32.029
2	38.696	38.296	20.896	31.996
3	38.664	38.264	20.864	31.964
4	38.632	38.232	20.832	31.932
5	38.600	38.200	20.800	31.900
6	38.568	38.168	20.768	31.868

NOTE : ALL GIRDER DIMENSIONS IN THE ABOVE TABLE ARE SHOWN IN METERS.

SHEAR STUD SPACING LEFT LANE

GIRDER	S1	S2	S3
GIRDER 1	1.210m	3 SPA. @ 250	169
GIRDER 2	1.200m	3 SPA. @ 250	146
GIRDER 3	1.180m	3 SPA. @ 250	134
GIRDER 4	1.160m	3 SPA. @ 250	122
GIRDER 5	1.160m	3 SPA. @ 230	150
GIRDER 6	1.160m	3 SPA. @ 230	118

NOTE : ALL DIMENSIONS IN THE ABOVE TABLE ARE SHOWN IN MILLIMETERS EXCEPT AS NOTED.

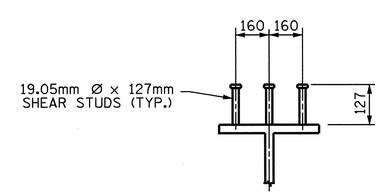

SHEAR STUD DETAILS

TYPICAL ALL GIRDERS EXCEPT AT FIELD SPLICE LOCATION.

NORTH CAROLINA PROFESSIONAL SEAL 20125 ENGINEER MARSHALL G. CHEEK, JR.
9-3-08

STATE OF NORTH CAROLINA
DEPARTMENT OF TRANSPORTATION
RALEIGH

SUPERSTRUCTURE

STRUCTURAL STEEL DETAILS
LEFT LANE

REVISIONS						SHEET NO.
NO.	BY:	DATE:	NO.	BY:	DATE:	S-75
1			3			TOTAL SHEETS
2			4			176

STR. #3

DRAWN BY : V.X. NGUYEN DATE : 5-15-08
CHECKED BY : M.G. CHEEK DATE : 6-30-08

03-SEP-2008 11:56
r:\structures\finalplans\str #3\r2301a_SD_STR#3&4_SS.dgn
vnguyen

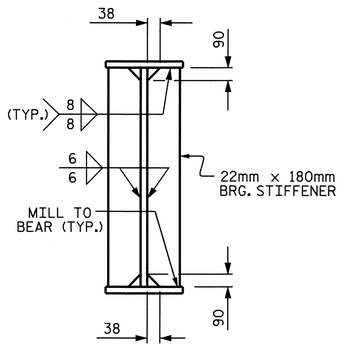

BEARING STIFFENER

BEARING STIFFENER MAY REQUIRE COPING IF WIDER THAN BOTTOM FLANGE TO AVOID INTERFERENCE WITH THE ANCHOR BOLT.

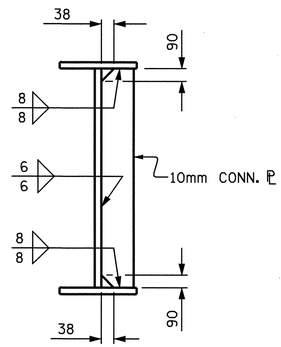

CONNECTOR PLATE

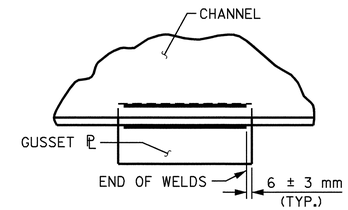

TYPICAL GUSSET PLATE CONNECTION

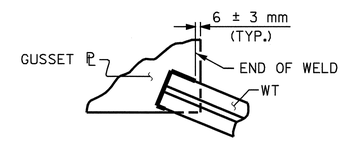

TYPICAL "TEE" TO GUSSET PLATE CONNECTION

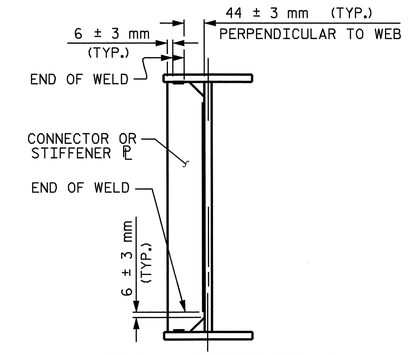

TYPICAL STIFFENER OR CONNECTOR PLATE CONNECTIONS

WELD TERMINATION DETAILS

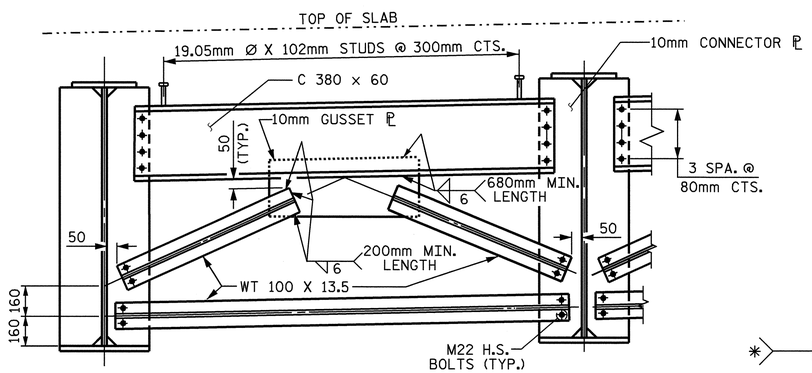

TYPICAL END BENT DIAPHRAGM

(D1)

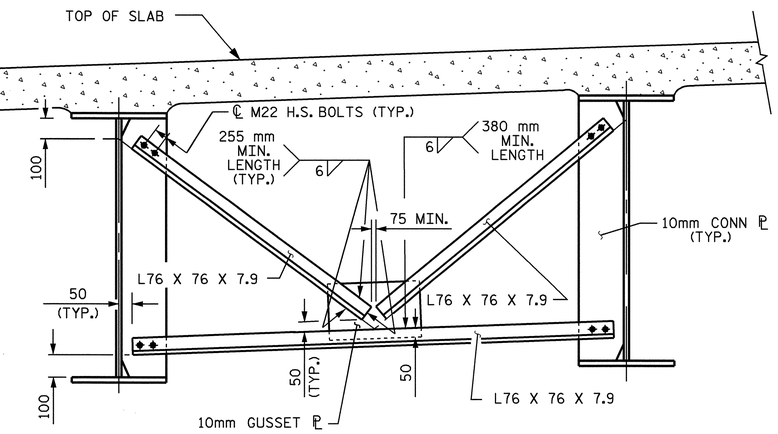

TYPICAL INTERMEDIATE DIAPHRAGM

(D2)

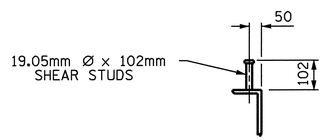

SHEAR STUD DETAILS

(@ CHANNELS)

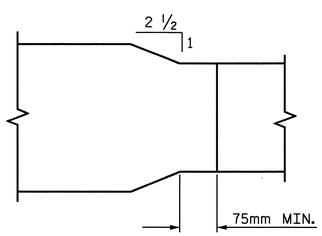

PLAN - FLANGE SPLICE

✱ GRIND SMOOTH AND FLUSH ON OUTER FACE OF EXTERIOR GIRDERS

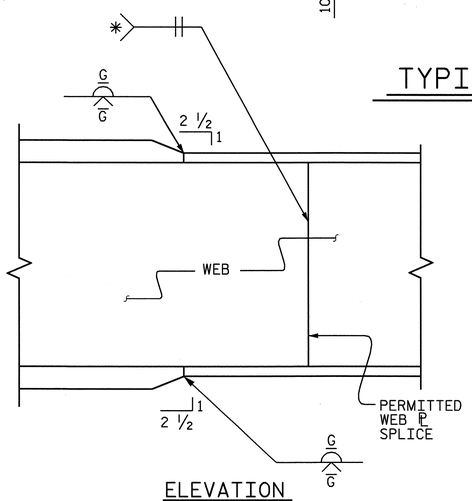

ELEVATION

TYPICAL FLANGE AND WEB BUTT JOINT

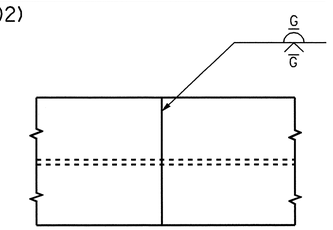

PLAN OF FLANGE

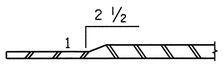

SECTION THRU FLANGE

PROJECT NO. R-2301A

JONES/CRAVEN COUNTY

STATION: 30+04.517 -L-

SHEET 2 OF 3

STATE OF NORTH CAROLINA
DEPARTMENT OF TRANSPORTATION
RALEIGH

SUPERSTRUCTURE

STRUCTURAL STEEL DETAILS

LEFT LANE

NORTH CAROLINA PROFESSIONAL SEAL 20125 ENGINEER MARSHALL G. CHEEK, JR.
9-3-08

REVISIONS						SHEET NO.
NO.	BY:	DATE:	NO.	BY:	DATE:	S-76
1			3			TOTAL SHEETS
2			4			176

STR. #3

DRAWN BY : V.X. NGUYEN DATE : 5-15-08
CHECKED BY : M.G. CHEEK DATE : 6-30-08

03-SEP-2008 11:58
r:\structures\finalplans\str #3\r2301a_SD_STR#3&4_SS.dgn
vnguyen

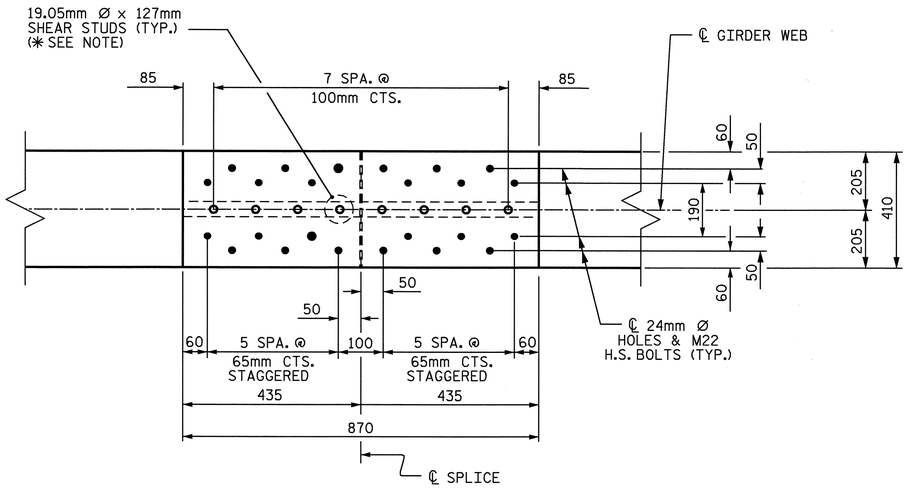

PLAN (TOP OF TOP FLANGE)

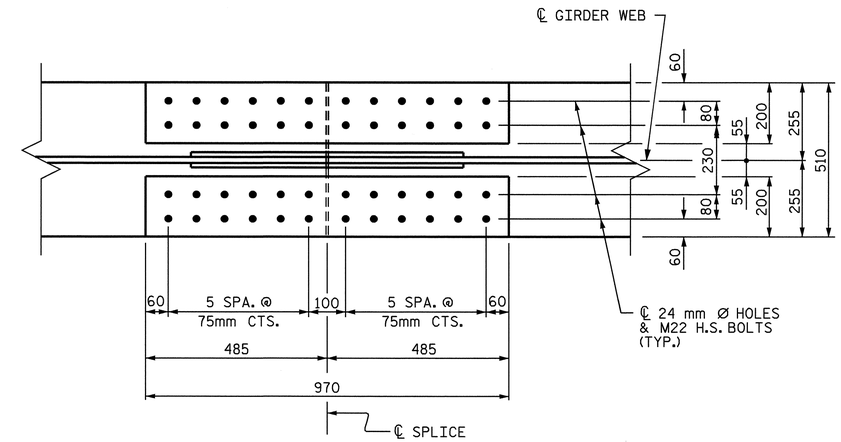

PLAN (TOP OF BOTTOM FLANGE)

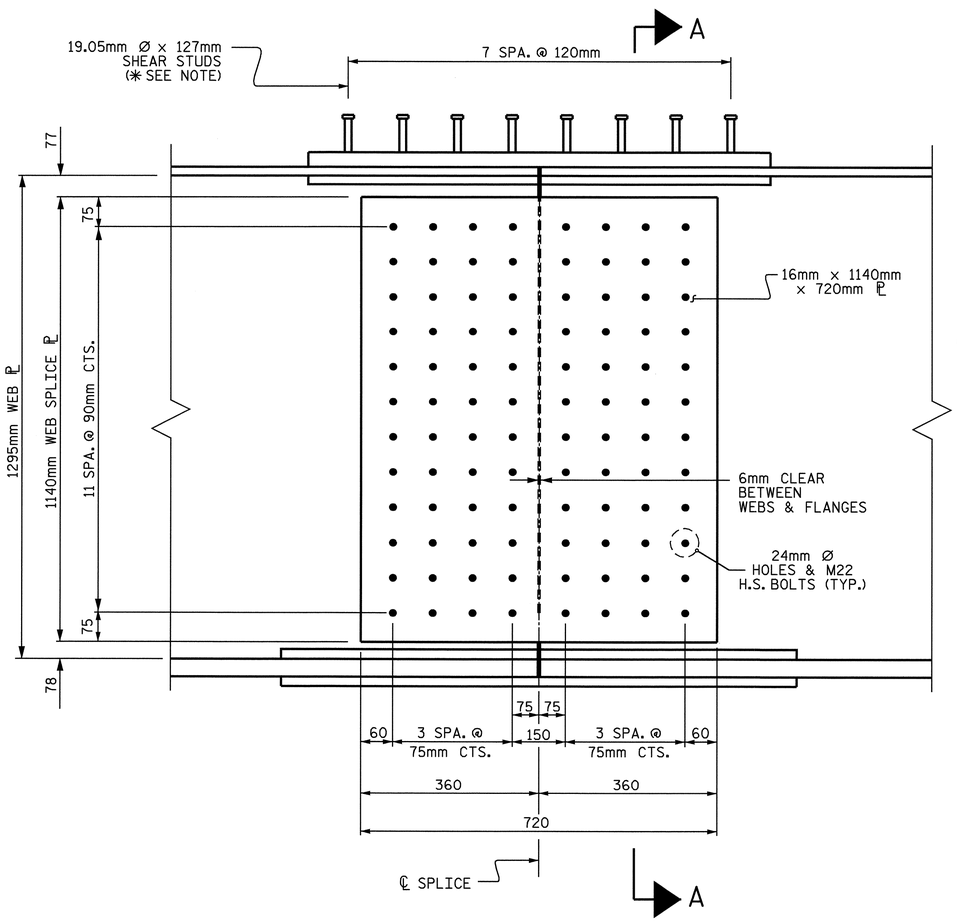

ELEVATION

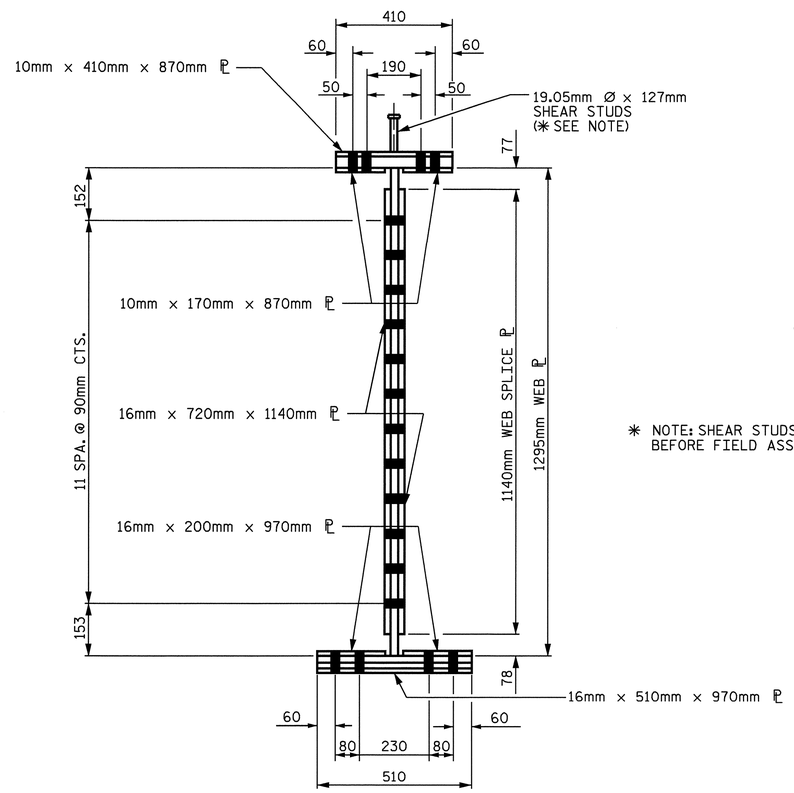

SECTION A-A

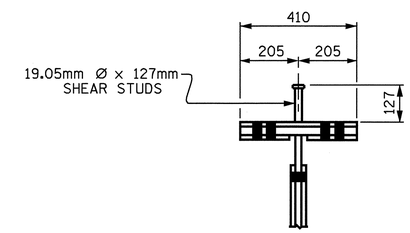

SHEAR STUD DETAIL
FOR TOP FLANGE SPLICE PLATE

✳ NOTE: SHEAR STUDS ARE TO BE SHOP WELDED ON TOP OF PLATE BEFORE FIELD ASSEMBLY

BOLTED FIELD SPLICE DETAILS

TYPICAL EACH GIRDER

PROJECT NO. R-2301A
JONES/CRAVEN COUNTY
STATION: 30+04.517 -L-

SHEET 3 OF 3

STATE OF NORTH CAROLINA
DEPARTMENT OF TRANSPORTATION
RALEIGH

SUPERSTRUCTURE

STRUCTURAL STEEL DETAILS
LEFT LANE

NORTH CAROLINA PROFESSIONAL SEAL 20125 ENGINEER MARSHALL G. CHEEK, JR.
9-3-08

REVISIONS						SHEET NO.
NO.	BY:	DATE:	NO.	BY:	DATE:	S-77
1			3			TOTAL SHEETS
2			4			176

STR. #3

DRAWN BY : V.X. NGUYEN DATE : 5-15-08
CHECKED BY : M.G. CHEEK DATE : 6-30-08

22-JUL-2008 10:38
r:\structures\vnguyen\microstation\r2301a\r2301a_SD_STR#3&4_SS.dgn
vnguyen

DEAD LOAD DEFLECTION TABLE FOR GIRDERS

GIRDER 1

@ TWENTIETH POINTS BETWEEN ℄ BEARINGS	℄ BRG.	.05	.10	.15	.20	.25	.30	.35	.40	.45	.50	.55	.60	.65	.70	.75	.80	.85	.90	.95	℄ BRG.
DEFLECTION DUE TO WEIGHT OF GIRDER	0.000	0.006	0.013	0.018	0.023	0.028	0.031	0.034	0.037	0.038	0.038	0.038	0.037	0.034	0.031	0.028	0.023	0.018	0.013	0.006	0.000
DEFLECTION DUE TO WEIGHT OF SLAB ✳	0.000	0.022	0.043	0.063	0.081	0.097	0.110	0.120	0.128	0.132	0.134	0.132	0.128	0.120	0.110	0.097	0.081	0.063	0.043	0.022	0.000
DEFLECTION DUE TO WEIGHT OF BARRIER RAIL	0.000	0.004	0.008	0.012	0.015	0.018	0.020	0.022	0.023	0.024	0.025	0.024	0.023	0.022	0.020	0.018	0.015	0.012	0.008	0.004	0.000
TOTAL DEAD LOAD DEFLECTION	0.000	0.032	0.064	0.093	0.119	0.143	0.161	0.176	0.188	0.194	0.197	0.194	0.188	0.176	0.161	0.143	0.119	0.093	0.064	0.032	0.000
VERTICAL CURVE ORDINATE	0.000	0.005	0.009	0.012	0.015	0.018	0.020	0.022	0.023	0.024	0.024	0.024	0.023	0.022	0.020	0.018	0.015	0.012	0.009	0.005	0.000
ORDINATE DUE TO SUPERELEVATION	0.000	-0.002	-0.004	-0.006	-0.007	-0.008	-0.009	-0.010	-0.011	-0.011	-0.011	-0.011	-0.011	-0.010	-0.009	-0.008	-0.007	-0.006	-0.004	-0.002	0.000
REQUIRED CAMBER	0	35	69	99	127	153	172	188	200	207	210	207	200	188	172	153	127	99	69	35	0

GIRDERS 2, 3, 4 & 5

@ TWENTIETH POINTS BETWEEN ℄ BEARINGS	℄ BRG.	.05	.10	.15	.20	.25	.30	.35	.40	.45	.50	.55	.60	.65	.70	.75	.80	.85	.90	.95	℄ BRG.
DEFLECTION DUE TO WEIGHT OF GIRDER	0.000	0.006	0.012	0.018	0.023	0.028	0.031	0.034	0.037	0.038	0.038	0.038	0.037	0.034	0.031	0.028	0.023	0.018	0.012	0.006	0.000
DEFLECTION DUE TO WEIGHT OF SLAB ✳	0.000	0.022	0.044	0.064	0.082	0.097	0.110	0.121	0.129	0.133	0.135	0.133	0.129	0.121	0.110	0.097	0.082	0.064	0.044	0.022	0.000
DEFLECTION DUE TO WEIGHT OF BARRIER RAIL	0.000	0.003	0.006	0.009	0.012	0.014	0.016	0.017	0.018	0.019	0.019	0.019	0.018	0.017	0.016	0.014	0.012	0.009	0.006	0.003	0.000
TOTAL DEAD LOAD DEFLECTION	0.000	0.031	0.062	0.091	0.117	0.139	0.157	0.172	0.184	0.190	0.192	0.190	0.184	0.172	0.157	0.139	0.117	0.091	0.062	0.031	0.000
VERTICAL CURVE ORDINATE	0.000	0.005	0.009	0.012	0.015	0.018	0.020	0.022	0.023	0.023	0.024	0.023	0.023	0.022	0.020	0.018	0.015	0.012	0.009	0.005	0.000
ORDINATE DUE TO SUPERELEVATION	0.000	-0.002	-0.004	-0.006	-0.007	-0.008	-0.009	-0.010	-0.011	-0.011	-0.011	-0.011	-0.011	-0.010	-0.009	-0.008	-0.007	-0.006	-0.004	-0.002	0.000
REQUIRED CAMBER	0	34	67	97	125	149	168	184	196	202	205	202	196	184	168	149	125	97	67	34	0

GIRDER 6

@ TWENTIETH POINTS BETWEEN ℄ BEARINGS	℄ BRG.	.05	.10	.15	.20	.25	.30	.35	.40	.45	.50	.55	.60	.65	.70	.75	.80	.85	.90	.95	℄ BRG.
DEFLECTION DUE TO WEIGHT OF GIRDER	0.000	0.006	0.012	0.018	0.023	0.027	0.031	0.034	0.036	0.037	0.038	0.037	0.036	0.034	0.031	0.027	0.023	0.018	0.012	0.006	0.000
DEFLECTION DUE TO WEIGHT OF SLAB ✳	0.000	0.022	0.044	0.064	0.083	0.098	0.112	0.122	0.130	0.135	0.136	0.135	0.130	0.122	0.112	0.098	0.083	0.064	0.044	0.022	0.000
DEFLECTION DUE TO WEIGHT OF BARRIER RAIL	0.000	0.004	0.008	0.011	0.014	0.017	0.019	0.021	0.023	0.023	0.024	0.023	0.023	0.021	0.019	0.017	0.014	0.011	0.008	0.004	0.000
TOTAL DEAD LOAD DEFLECTION	0.000	0.032	0.064	0.093	0.120	0.142	0.162	0.177	0.189	0.195	0.198	0.195	0.189	0.177	0.162	0.142	0.120	0.093	0.064	0.032	0.000
VERTICAL CURVE ORDINATE	0.000	0.004	0.008	0.012	0.015	0.017	0.019	0.021	0.022	0.023	0.023	0.023	0.022	0.021	0.019	0.017	0.015	0.012	0.008	0.004	0.000
ORDINATE DUE TO SUPERELEVATION	0.000	-0.002	-0.004	-0.006	-0.007	-0.008	-0.009	-0.010	-0.010	-0.011	-0.011	-0.011	-0.010	-0.010	-0.009	-0.008	-0.007	-0.006	-0.004	-0.002	0.000
REQUIRED CAMBER	0	34	68	99	128	151	172	188	201	207	210	207	201	188	172	151	128	99	68	34	0

✳ INCLUDES SLAB, BUILDUPS & STAY-IN-PLACE FORMS.
ALL VALUES ARE SHOWN IN METERS EXCEPT "REQUIRED CAMBER", WHICH IS GIVEN IN MILLIMETERS.

PROJECT NO. R-2301A
JONES/CRAVEN COUNTY
STATION: 30+04.517 -L-

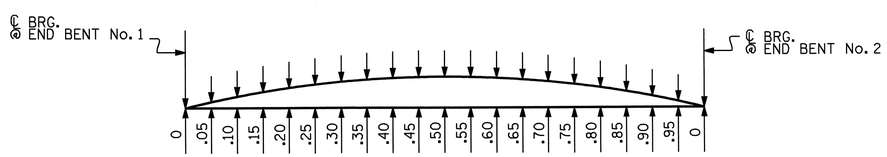

SPAN A

SCHEMATIC CAMBER ORDINATES

NOTE: FOR CAMBER @ 20TH POINTS, SEE TABLES.
SLOPE FOR THE ZERO CAMBER BASE LINE VARIES.

NORTH CAROLINA PROFESSIONAL SEAL 20125 ENGINEER MARSHALL G. CHEEK, JR.
9-8-08

STATE OF NORTH CAROLINA
DEPARTMENT OF TRANSPORTATION
RALEIGH

SUPERSTRUCTURE
DEAD LOAD
DEFLECTIONS
LEFT LANE

REVISIONS						SHEET NO.
NO.	BY:	DATE:	NO.	BY:	DATE:	S-78
1			3			TOTAL SHEETS
2			4			176

DRAWN BY : M. POOLE DATE : 06-08
CHECKED BY : M. G. CHEEK DATE : 06-08

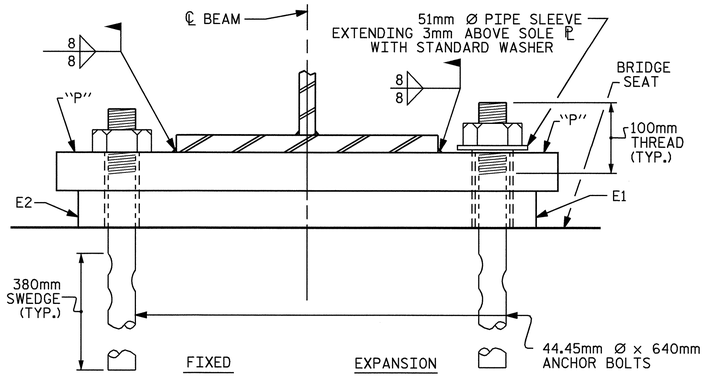

END VIEW

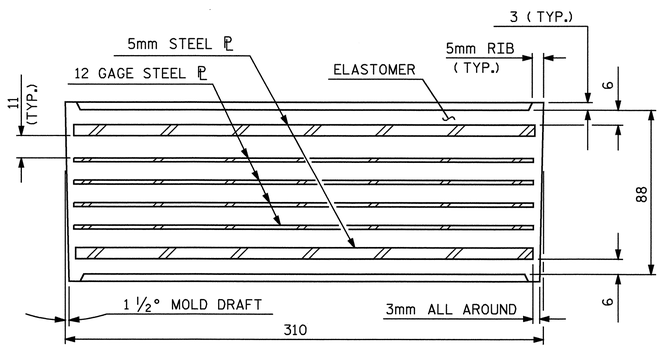

TYPICAL SECTION OF ELASTOMERIC BEARING

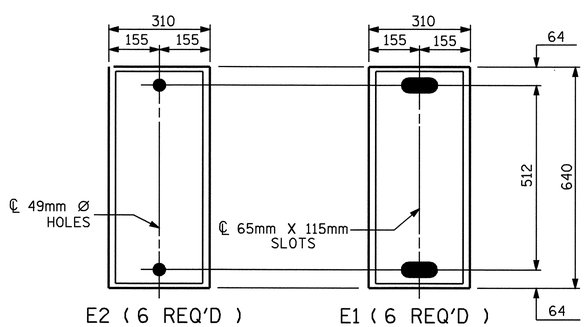

PLAN VIEW OF ELASTOMERIC BEARING

TYPE V

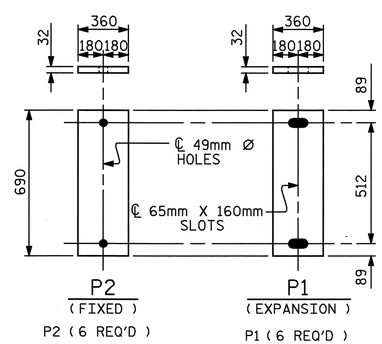

SOLE PLATE DETAILS ("P")

NOTES

AT ALL FIXED POINTS OF SUPPORT, NUTS FOR ANCHOR BOLTS ARE TO BE TIGHTENED FINGER TIGHT AND THEN BACKED OFF ½ TURN. THE THREAD OF THE NUT AND BOLT SHALL THEN BE BURRED WITH A SHARP POINTED TOOL.

THE 51mm Ø PIPE SLEEVE SHALL BE CUT FROM SCHEDULE 40 PVC PLASTIC PIPE. THE PVC PLASTIC PIPE SHALL MEET THE REQUIREMENTS OF ASTM D1785.

THE PAYMENT FOR THE PIPE SLEEVES SHALL BE INCLUDED IN THE SEVERAL PAY ITEMS.

FOR AASHTO M270 GRADE 345W STRUCTURAL STEEL, SOLE PLATE SHALL BE AASHTO M270 GRADE 345W AND SHALL NOT BE GALVANIZED, ANCHOR BOLTS AND NUTS SHALL BE GALVANIZED IN ACCORDANCE WITH THE STANDARD SPECIFICATIONS.

ANCHOR BOLTS SHALL MEET THE REQUIREMENTS OF ASTM A449. NUTS SHALL MEET THE REQUIREMENTS OF AASHTO M291M-12 OR AASHTO M292M-2H. WASHERS SHALL MEET THE REQUIREMENTS OF AASHTO M293M. SHOP DRAWINGS ARE NOT REQUIRED FOR ANCHOR BOLTS, NUTS AND WASHERS. SHOP INSPECTION IS REQUIRED.

WHEN FIELD WELDING THE SOLE PLATE TO THE GIRDER FLANGE, USE TEMPERATURE INDICATING WAX PENS, OR OTHER SUITABLE MEANS, TO ENSURE THAT THE TEMPERATURE OF THE SOLE PLATE DOES NOT EXCEED 149°C. TEMPERATURES ABOVE THIS MAY DAMAGE THE ELASTOMER.

ALL SURFACES OF BEARING PLATES SHALL BE SMOOTH AND STRAIGHT.

THE CONTRACTOR'S ATTENTION IS CALLED TO THE FOLLOWING PROCEDURES TO ACCOMMODATE GIRDER TRANSLATION AND END ROTATION:

1. ONCE THE DECK HAS CURED, THE GIRDERS SHALL BE JACKED AND THE ANCHOR BOLTS, SOLE PLATE, AND ELASTOMERIC BEARING SLOTS SHALL BE CENTERED AS NEARLY AS PRACTICAL ABOUT THE BEARING STIFFENER. THIS OPERATION SHALL BE PERFORMED AT APPROXIMATELY 16° C.

2. AFTER CENTERING THE SLOTS AND ANCHOR BOLTS, THE SOLE PLATES SHALL BE FIELD WELDED TO THE GIRDER FLANGES AND ANCHOR BOLTS GROUTED.

THE CONTRACTOR MAY PROPOSE ALTERNATE METHODS, PROVIDED DETAILS ARE SUBMITTED TO THE ENGINEER FOR REVIEW AND APPROVAL.

—LOAD RATINGS—	
	MAX.D.L.+ L.L.
TYPE V	943 kN

PROJECT NO. R-2301A
JONES/CRAVEN COUNTY
STATION: 30+04.517 -L-

STATE OF NORTH CAROLINA
DEPARTMENT OF TRANSPORTATION
RALEIGH

STANDARD ELASTOMERIC BEARING DETAILS

LEFT LANE

NORTH CAROLINA PROFESSIONAL SEAL 20125 ENGINEER MARSHALL G. CHEEK, JR. 9-3-08

REVISIONS								SHEET NO.
NO.	BY:	DATE:	NO.	BY:	DATE:			S-79
1			3					TOTAL SHEETS
2			4					176

ASSEMBLED BY : V.X. NGUYEN		DATE : 6-5-08	
CHECKED BY : M.G. CHEEK		DATE : 7-08	
DRAWN BY : EEM 10/95	REV. 8/16/99	MAB/LES	
CHECKED BY : PEK 10/95	REV. 10/17/00	RWW/LES	
	REV. 5/1/06	TLA/GM	

05-AUG-2008 14:17
r:\structures\vnguyen\microstation\r2301a\r2301a_sd_bg.dgn
vnguyen

STR. #3

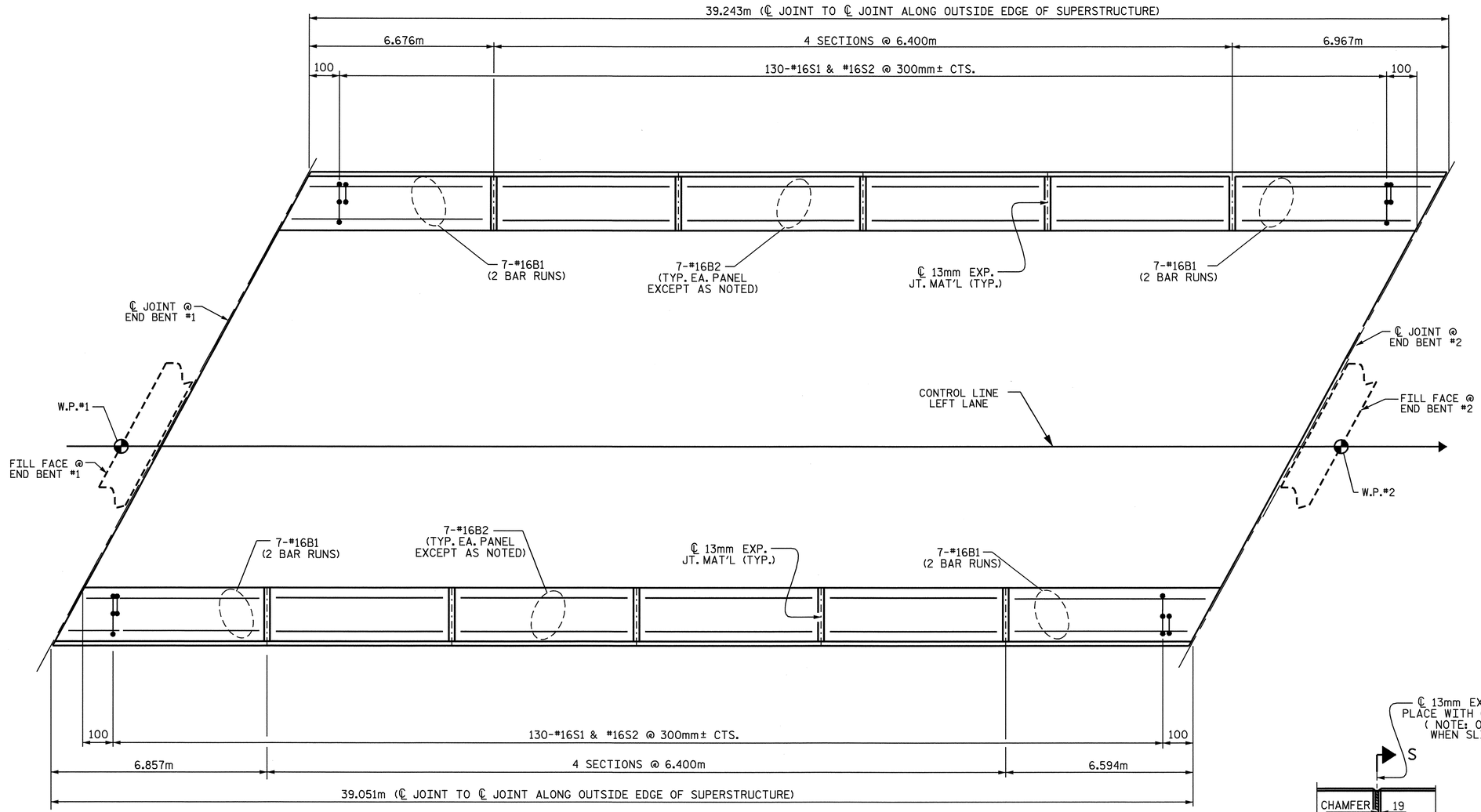

PLAN

BAR TYPES

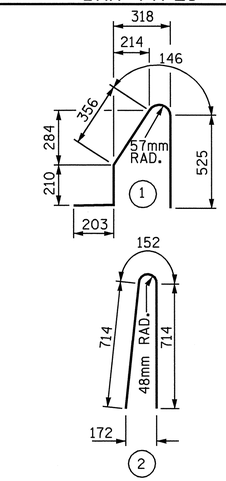

ALL BAR DIMENSIONS ARE OUT TO OUT

BILL OF MATERIAL

FOR CONCRETE BARRIER RAIL ONLY

BAR	NO.	SIZE	TYPE	LENGTH	WEIGHT
✳ B1	56	#16	STR	3960	344
✳ B2	56	#16	STR	6260	544
✳ S1	260	#16	1	1440	581
✳ S2	260	#16	2	1580	638

✳ EPOXY COATED REINFORCING STEEL 2107 kg

CLASS AA CONCRETE 19.6 CU. METERS

CONCRETE BARRIER RAIL 78.294 METERS

✳ THESE BARS ARE EPOXY COATED

NOTES

THE BARRIER RAIL SHALL NOT BE CAST UNTIL ALL SLAB CONCRETE IN THE SPAN HAS BEEN CAST AND HAS REACHED A MINIMUM COMPRESSIVE STRENGTH OF 20.7 MPa.

ALL REINFORCING STEEL IN BARRIER RAILS SHALL BE EPOXY COATED.

VERTICAL GROOVED CONTRACTION JOINTS, 12mm IN DEPTH, SHALL BE TOOLED IN ALL EXPOSED FACES OF THE BARRIER RAIL AND IN ACCORDANCE WITH ARTICLE 825-10(B) OF THE STANDARD SPECIFICATIONS. THE CONTRACTION JOINT SHALL BE LOCATED AT EACH THIRD POINT BETWEEN BARRIER RAIL EXPANSION JOINTS. ONLY ONE CONTRACTION JOINT IS REQUIRED AT MIDPOINT OF BARRIER RAIL SEGMENTS LESS THAN 6.1m IN LENGTH AND NO CONTRACTION JOINTS ARE REQUIRED FOR THOSE SEGMENTS LESS THAN 3.5m IN LENGTH.

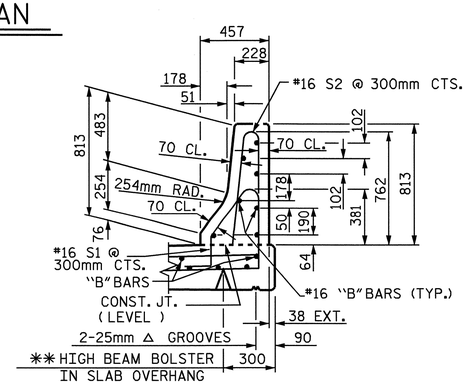

SECTION THRU RAIL

✳✳ SEE TYPICAL SECTION FOR HEIGHT OF THE BEAM BOLSTERS

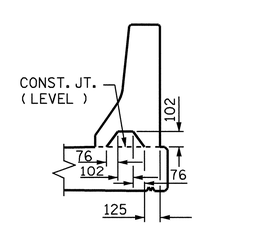

SECTION S-S

AT DAM IN OPEN JOINT (THIS IS TO BE USED ONLY WHEN SLIP FORM IS USED)

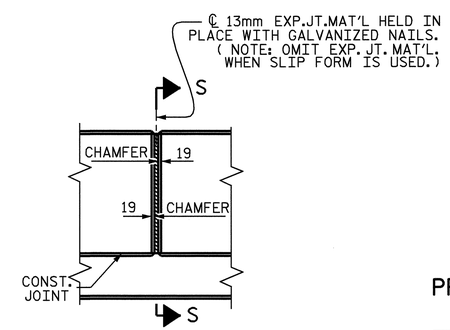

ELEVATION AT EXPANSION JOINTS

BARRIER RAIL DETAILS

PROJECT NO. R-2301A

JONES/CRAVEN COUNTY

STATION: 30+04.517 -L-

STATE OF NORTH CAROLINA
DEPARTMENT OF TRANSPORTATION
RALEIGH

STANDARD

CONCRETE BARRIER RAIL

LEFT LANE

ASSEMBLED BY : V.X. NGUYEN	DATE : 6-12-08		
CHECKED BY : M. G. CHEEK	DATE : 7-08		
DRAWN BY : ARB 5/87	REV. 10/17/00	RWW/LES	
CHECKED BY : SJD 9/87	REV. 5/7/03R	RWW/JTE	
	REV. 5/1/06	TLA/GM	

REVISIONS

NO.	BY:	DATE:	NO.	BY:	DATE:
1			3		
2			4		

SHEET NO. S-80

TOTAL SHEETS 176

NORTH CAROLINA PROFESSIONAL SEAL 20125 ENGINEER MARSHALL G. CHEEK, JR.

4-3-08

STR. #3

03-SEP-2008 12:01
r:\structures\final plans\str #3\R2301A_sd_BR.dgn
vnguyen

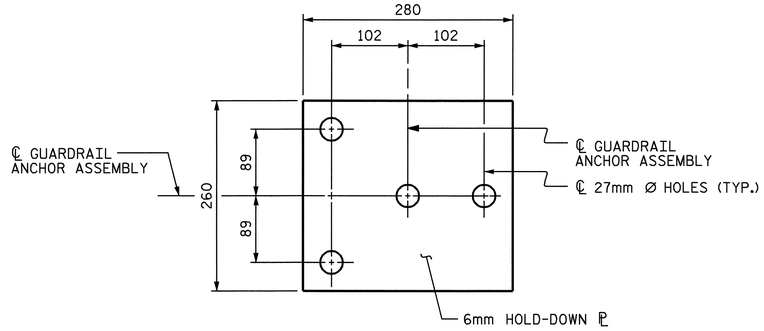

PLAN

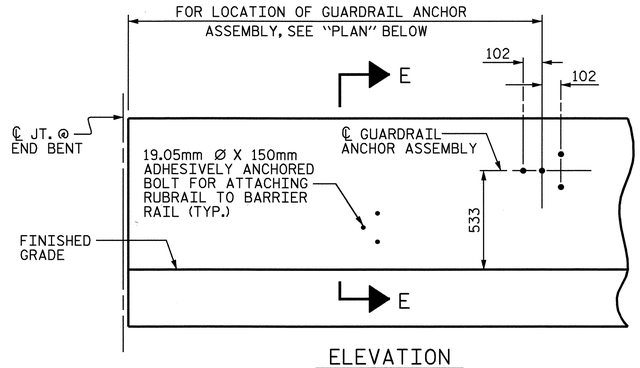

ELEVATION

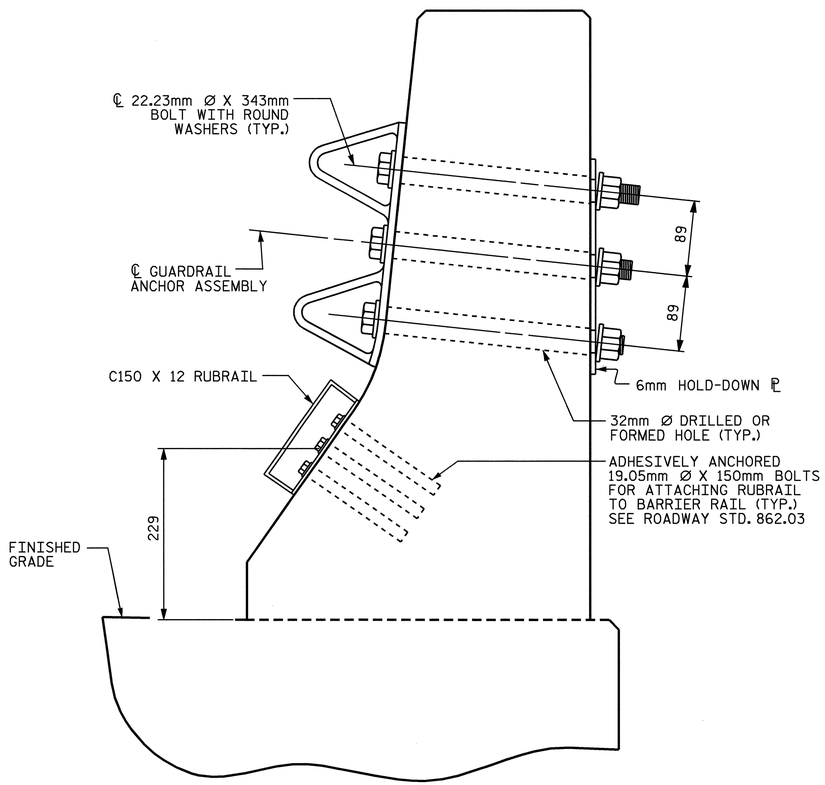

SECTION E-E

GUARDRAIL ANCHOR ASSEMBLY DETAILS

NOTES

THE GUARDRAIL ANCHOR ASSEMBLY SHALL CONSIST OF A 6mm HOLD DOWN PLATE AND 4 - 22.23mm Ø BOLTS WITH NUTS AND WASHERS, RUBRAIL, AND ADHESIVELY ANCHORED BOLTS.

THE HOLD-DOWN PLATE SHALL CONFORM TO AASHTO M270 GRADE 36. AFTER FABRICATION, THE HOLD-DOWN PLATE SHALL BE HOT-DIP GALVANIZED IN ACCORDANCE WITH AASHTO M111.

BOLTS SHALL CONFORM TO THE REQUIREMENTS OF ASTM A307 AND NUTS SHALL CONFORM TO THE REQUIREMENTS OF AASHTO M291. BOLTS, NUTS AND WASHERS SHALL BE GALVANIZED. (AT THE CONTRACTOR'S OPTION, STAINLESS STEEL BOLTS, NUTS AND WASHERS MAY BE USED AS AN ALTERNATE FOR THE 22.23mm Ø GALVANIZED BOLTS, NUTS AND WASHERS. THEY SHALL CONFORM TO OR EXCEED THE MECHANICAL REQUIREMENTS OF ASTM A307. THE USE OF THIS ALTERNATE SHALL BE APPROVED BY THE ENGINEER.)

THE GUARDRAIL ANCHOR ASSEMBLY IS REQUIRED AT ALL POINTS WHERE APPROACH GUARDRAIL IS TO BE ATTACHED TO THE END OF BARRIER RAIL. FOR POINTS OF ATTACHMENT, SEE SKETCH.

AFTER INSTALLATION, THE EXPOSED THREAD OF THE BOLT SHALL BE BURRED WITH A SHARP POINTED TOOL.

THE COST OF THE GUARDRAIL ANCHOR ASSEMBLY SHALL BE INCLUDED IN THE UNIT CONTRACT PRICE BID FOR CONCRETE BARRIER RAIL.

THE 32mm Ø HOLES SHALL BE FORMED OR DRILLED WITH A CORE BIT. IMPACT TOOLS WILL NOT BE PERMITTED. ANY CONCRETE DAMAGED BY THIS WORK SHALL BE REPAIRED TO THE SATISFACTION OF THE ENGINEER.

THE C150 X 12 RUBRAIL IS TO BE ADHESIVELY ANCHORED TO THE RAIL USING THREE 19.05mm Ø X 150mm BOLTS WITH WASHERS. LEVEL ONE FIELD TESTING IF REQUIRED, AND THE YIELD LOAD OF THE 19.05mm Ø BOLTS IS 53.4kN. FOR ADHESIVELY ANCHORED ANCHOR BOLTS OR DOWELS, SEE SPECIAL PROVISIONS. SEE ROADWAY STANDARD 862.03 FOR DETAILS AND LOCATION OF THE RUBRAIL.

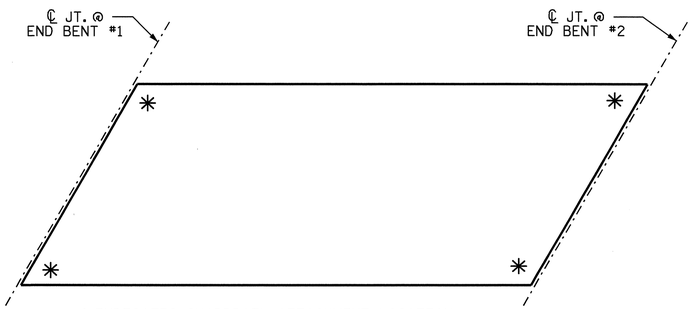

✳ INDICATES GUARDRAIL ATTACHMENT LOCATION

SKETCH SHOWING POINTS OF ATTACHMENTS

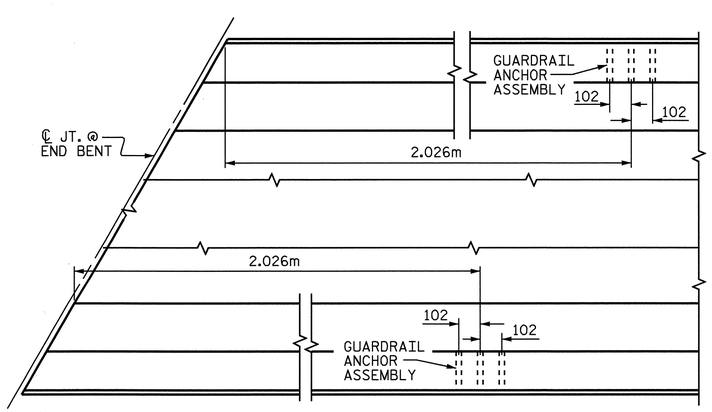

PLAN

LOCATION OF ANCHORS FOR GUARDRAIL

PROJECT NO. R-2301A
JONES/CRAVEN COUNTY
STATION: 30+04.517 -L-

STATE OF NORTH CAROLINA
DEPARTMENT OF TRANSPORTATION
RALEIGH

STANDARD
GUARDRAIL ANCHORAGE FOR BARRIER RAIL
LEFT LANE

NORTH CAROLINA PROFESSIONAL SEAL 20125 ENGINEER MARSHALL G. CHEEK, JR.
4-3-08

REVISIONS						SHEET NO.
NO.	BY:	DATE:	NO.	BY:	DATE:	S-81
1			3			TOTAL SHEETS
2			4			176

STR. #3

ASSEMBLED BY : V.X. NGUYEN	DATE : 7-10-08
CHECKED BY : M.G. CHEEK	DATE : 7-08
DRAWN BY : TLA 5/06	ADDED 5/1/06R KMM/GM
CHECKED BY : GM 5/06	

22-JUL-2008 10:56
r:\structures\vnguyen\microstation\r2301a\R2301A_sd_GR.dgn
vnguyen

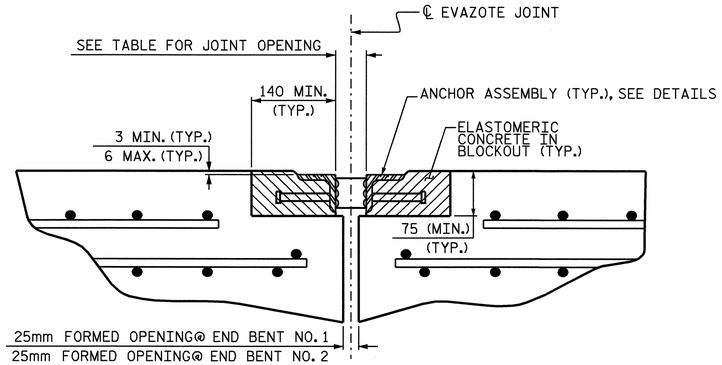

ARMORED JOINT DETAILS

SECTION NORMAL TO JOINT AT BENT

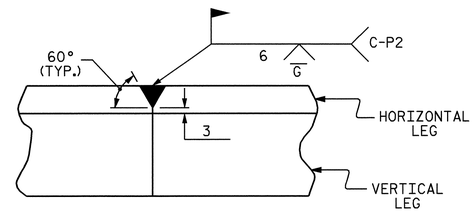

DETAIL- FIELD WELD SPLICE OF ANGLE

NOTES

ANGLES SHALL CONFORM TO AASHTO M270 GRADE 250 STEEL OR APPROVED EQUAL. ALL STUD ANCHORS SHALL CONFORM TO AASHTO M169 GRADES 1010 THRU 1020 OR APPROVED EQUAL.

STUD ANCHORS SHALL BE SHOP WELDED AND ALL HOLES SHALL BE SHOP DRILLED AS SHOWN ON THE PLANS. STUD ANCHORS SHALL BE ELECTRIC ARC END WELDED WITH COMPLETE FUSION.

UPON COMPLETION OF SHOP FABRICATION, THE ENTIRE ANCHOR ASSEMBLY SHALL BE METALLIZED. THE 12.70mm Ø STUD ANCHORS AND ANCHOR TABS NEED NOT BE METALLIZED. SEE SPECIAL PROVISION FOR THERMAL SPRAYED COATINGS (METALLIZATION).

ANCHOR ASSEMBLY SHALL BE MADE CONTINUOUS THE LENGTH OF THE JOINT FROM GUTTER TO GUTTER. FOR FIELD SPLICES AT ALL CROWN BREAK POINTS, THE ENDS OF THE STEEL ANGLES SHALL BE CUT PARALLEL TO THE BRIDGE CENTERLINE. FINISHED FIELD WELDS SHALL BE GROUND SMOOTH AND COATED WITH A MINIMUM THICKNESS OF 0.100mm OF ZINC-RICH PAINT IN ACCORDANCE WITH THE STANDARD SPECIFICATIONS.

ANCHOR ASSEMBLY SEGMENTS SHALL NOT BE LESS 3.6m NOR MORE THAN 6.1m IN LENGTH. SHORTER SEGMENTS MAY BE USED AT THE EDGE OF ROADWAY OR AT POINTS OF STAGED CONSTRUCTION.

THE ANCHOR ASSEMBLY SHALL BE SECURED AND LEVELED AS SHOWN IN THE "ARMORED JOINT ANCHOR ASSEMBLY DETAILS". NO SUBMITTALS ARE REQUIRED FOR 9.53mm Ø EXPANSION ANCHORS, NUTS OR WASHERS. THE CONTRACTOR MAY SUBMIT FOR APPROVAL AN ALTERNATE METHOD OF ALIGNING AND LEVELING THE ANGLES. THE ALTERNATE METHOD SHALL NOT INCLUDE ANY WELDING TO THE OUTSIDE FACE OF THE ANGLES.

AFTER THE ELASTOMERIC CONCRETE HAS BEEN CAST ON BOTH SIDES OF THE JOINT, REMOVE ANY EXCESS CONCRETE THAT COMES THROUGH THE WEEP HOLES AND THOROUGHLY CLEAN THE ANGLES. ANY DAMAGED STEEL SHALL BE COATED WITH A MINIMUM OF 0.100mm OF ZINC-RICH PAINT IN ACCORDANCE WITH THE STANDARD SPECIFICATIONS.

SEE SPECIAL PROVISIONS FOR EVAZOTE JOINT SEALS.

SEE SPECIAL PROVISIONS FOR ELASTOMERIC CONCRETE.

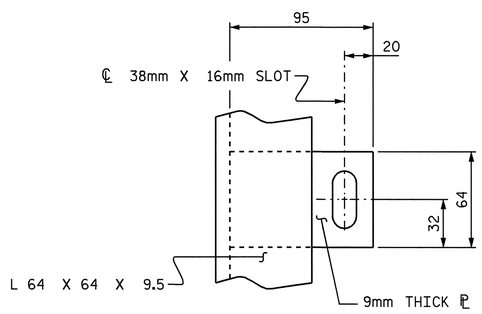

PLAN VIEW OF TAB

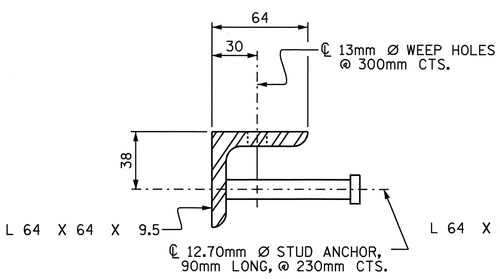

SECTION VIEW OF STUD

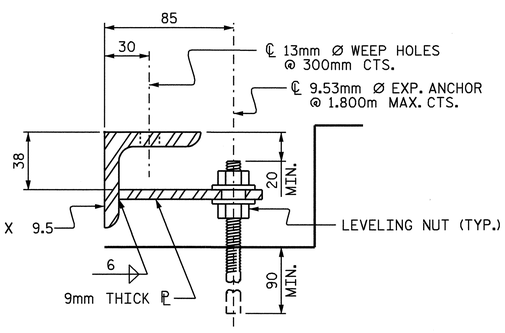

SECTION VIEW OF TAB

ARMORED JOINT ANCHOR ASSEMBLY DETAILS

MOVEMENT AND SETTING AT EVAZOTE JOINT

END BENT NO.	SKEW ANGLE TAN. TO CONTROL LINE AT ℄ JOINT	NOMINAL UNCOMPRESSED SEAL WIDTH	TOTAL MOVEMENT (ALONG ℄ RDWY)	PERPENDICULAR JOINT OPENING AT 7° C	PERPENDICULAR JOINT OPENING AT 16° C	PERPENDICULAR JOINT OPENING AT 32° C
1	118°-34'-37"	64mm	28mm	53mm	48mm	40mm
2	120°-49'-58"	64mm	0mm	48mm	48mm	48mm

TOTAL MOVEMENT IS CALCULATED ALONG THE CENTERLINE OF ROADWAY.
JOINT OPENINGS ARE MEASURED PERPENDICULAR TO THE JOINT.

BILL OF MATERIAL

END BENT NO.	ELASTOMERIC CONCRETE * (CU. m)	TOTAL LENGTH OF ANGLE (m)
1	0.3	31.428m
2	0.3	32.143m

* BASED ON THE MINIMUM BLOCKOUT SHOWN.

PROJECT NO. R-2301A
JONES/CRAVEN COUNTY
STATION: 30+04.517-L-

STATE OF NORTH CAROLINA
DEPARTMENT OF TRANSPORTATION
RALEIGH

STANDARD ARMORED EVAZOTE JOINT DETAILS

LEFT LANE

NORTH CAROLINA PROFESSIONAL SEAL 20125 ENGINEER MARSHALL G. CHEEK, JR.
9-3-08

REVISIONS						SHEET NO.
NO.	BY:	DATE:	NO.	BY:	DATE:	S-82
1			3			TOTAL SHEETS
2			4			176

ASSEMBLED BY : A.L. FIGUEROA DATE :06-25-08
CHECKED BY : M.G. CHEEK DATE :06-25-08
DRAWN BY : EEM 1/96
CHECKED BY : RGW 1/96
REV. 7/10/01 LES/RDR
REV. 5/7/03RR RWW/JTE
REV. 5/1/06 TLA/GM

22-JUL-2008 09:03
R:\Structures\AL Figueroa\Microstation\R-2301A_sd_STR*3-II_JS_ARM-S82.dgn
afigueroa

STR #3

STD. NO. AEJ1SM

BILL OF MATERIAL

BAR	NO.	SIZE	TYPE	LENGTH	WEIGHT
✳ A1	182	16	STR.	14680	4147
A2	182	16	STR.	14680	4147
✳ A101	3	16	STR.	13760	64
✳ A102	3	16	STR.	12840	60
✳ A103	3	16	STR.	11920	55
✳ A104	3	16	STR.	11000	51
✳ A105	3	16	STR.	10060	47
✳ A106	3	16	STR.	9140	43
✳ A107	3	16	STR.	8220	38
✳ A108	3	16	STR.	7300	34
✳ A109	3	16	STR.	6380	30
✳ A110	3	16	STR.	5440	25
✳ A111	3	16	STR.	4520	21
✳ A112	3	16	STR.	3600	17
✳ A113	3	16	STR.	2680	12
✳ A114	3	16	STR.	1740	8
✳ A115	3	16	STR.	820	4
A201	3	16	STR.	13760	64
A202	3	16	STR.	12840	60
A203	3	16	STR.	11920	55
A204	3	16	STR.	11000	51
A205	3	16	STR.	10060	47
A206	3	16	STR.	9140	43
A207	3	16	STR.	8220	38
A208	3	16	STR.	7300	34
A209	3	16	STR.	6380	30
A210	3	16	STR.	5440	25
A211	3	16	STR.	4520	21
A212	3	16	STR.	3600	17
A213	3	16	STR.	2680	12
A214	3	16	STR.	1740	8
A215	3	16	STR.	820	4
✳ A301	3	16	STR.	13820	64
✳ A302	3	16	STR.	12960	60
✳ A303	3	16	STR.	12120	56
✳ A304	3	16	STR.	11260	52
✳ A305	3	16	STR.	10400	48
✳ A306	3	16	STR.	9540	44
✳ A307	3	16	STR.	8680	40
✳ A308	3	16	STR.	7820	36
✳ A309	3	16	STR.	6960	32
✳ A310	3	16	STR.	6120	28
✳ A311	3	16	STR.	5260	24
✳ A312	3	16	STR.	4400	20
✳ A313	3	16	STR.	3540	16
✳ A314	3	16	STR.	2700	13
✳ A315	3	16	STR.	1840	9
✳ A316	3	16	STR.	980	5

BAR	NO.	SIZE	TYPE	LENGTH	WEIGHT
A401	3	16	STR.	13820	64
A402	3	16	STR.	12960	60
A403	3	16	STR.	12120	56
A404	3	16	STR.	11260	52
A405	3	16	STR.	10400	48
A406	3	16	STR.	9540	44
A407	3	16	STR.	8680	40
A408	3	16	STR.	7820	36
A409	3	16	STR.	6960	32
A410	3	16	STR.	6120	28
A411	3	16	STR.	5260	24
A412	3	16	STR.	4400	20
A413	3	16	STR.	3540	16
A414	3	16	STR.	2700	13
A415	3	16	STR.	1840	9
A416	3	16	STR.	980	5
✳ B1	170	13	STR.	8320	1406
B2	159	16	STR.	13500	3331
✳ G1	4	16	STR.	8960	56
✳ K1	12	16	1	2300	43
✳ K2	24	16	2	2580	96
K3	30	16	STR.	2460	115
✳ S1	80	13	3	1340	107

REINFORCING STEEL	8649 kg
✳ EPOXY COATED REINFORCING STEEL	6911 kg

✳ THESE BARS ARE EPOXY COATED

BAR TYPES

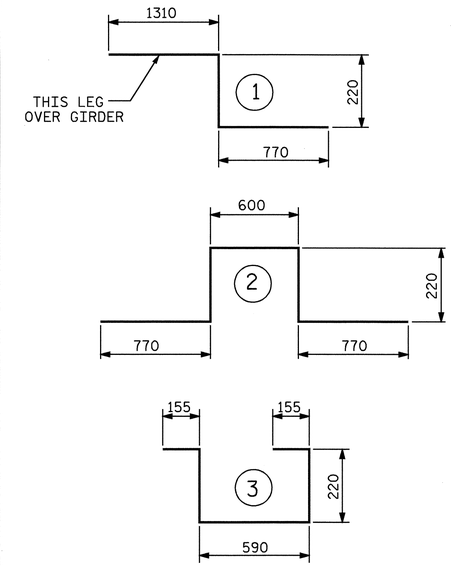

ALL BAR DIMENSIONS ARE OUT TO OUT

SUPERSTRUCTURE BILL OF MATERIAL

	CLASS AA CONCRETE	REINFORCING STEEL	EPOXY COATED REINFORCING STEEL
	(CU.METERS)	(kg)	(kg)
SPAN "A"	155.7	8649	6911
TOTALS✳✳	155.7	8649	6911

✳✳ QUANTITIES FOR BARRIER RAIL ARE NOT INCLUDED

SUPERSTRUCTURE REINFORCING STEEL LENGTHS ARE BASED ON THE FOLLOWING MINIMUM SPLICE LENGTHS

BAR SIZE	SUPERSTRUCTURE EXCEPT APPROACH SLABS, PARAPET, AND BARRIER RAIL		APPROACH SLABS		PARAPET AND BARRIER RAIL
	EPOXY COATED	UNCOATED	EPOXY COATED	UNCOATED	
#13	610	540	610	540	840
#16	770	660	770	660	1050
#19	920	790	1190	790	1330
#22	1580	1060			
#25	2080	1390			

ALL DIMENSIONS ARE IN MILLIMETERS

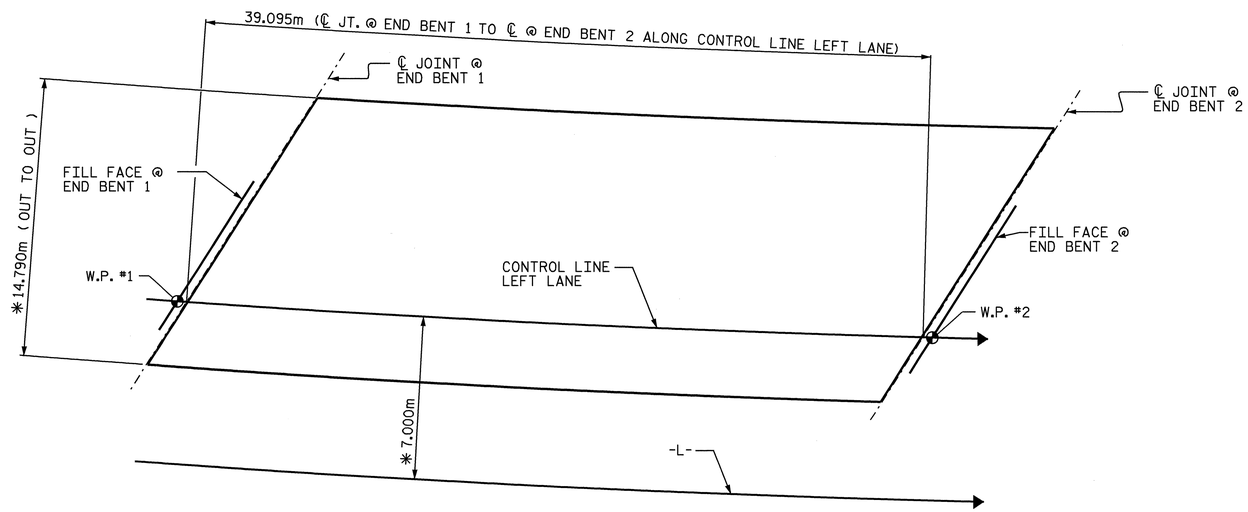

✳ RADIAL DIMENSIONS

GROOVING BRIDGE FLOORS

APPROACH SLABS	185.2 SQ.METERS
BRIDGE DECK	498.5 SQ.METERS
TOTAL	683.7 SQ.METERS

PROJECT NO. R-2301A
JONES/CRAVEN COUNTY
STATION: 30+04.517 -L-

LAYOUT FOR COMPUTING AREA OF REINFORCED CONCRETE DECK SLAB (SQ. METERS = 578.5)

STATE OF NORTH CAROLINA
DEPARTMENT OF TRANSPORTATION
RALEIGH

STANDARD
SUPERSTRUCTURE BILL OF MATERIAL
LEFT LANE

NORTH CAROLINA PROFESSIONAL SEAL 20125 ENGINEER MARSHALL L. GREER, JR.
9-3-08

REVISIONS						SHEET NO.
NO.	BY:	DATE:	NO.	BY:	DATE:	S-83
1			3			TOTAL SHEETS
2			4			176

STR. #3

ASSEMBLED BY : V.X. NGUYEN		DATE : 7-18-08	
CHECKED BY : D. HODGE		DATE : 7-08	
DRAWN BY : JMB 5/87	REV. 5/16/97	EEM/RGW	
CHECKED BY : SJD 9/87	REV. 5/1/06	TLA/GM	

03-SEP-2008 12:02
r:\structures\final plans\str #3\R2301A_sd_BM.dgn
vnguyen

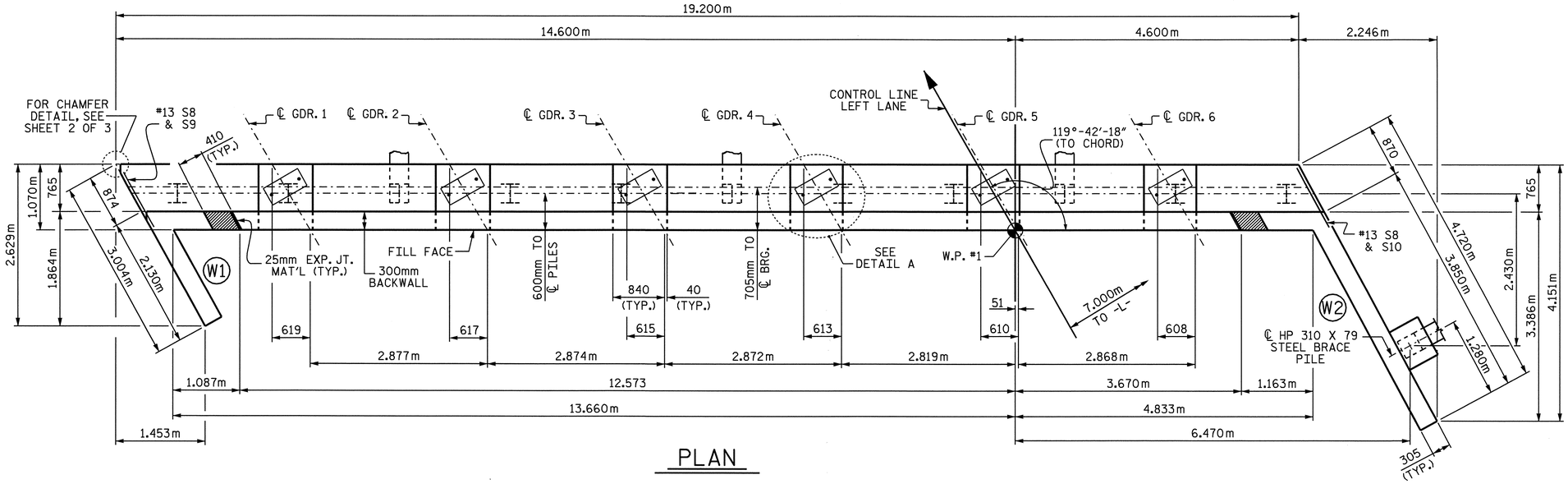

PLAN

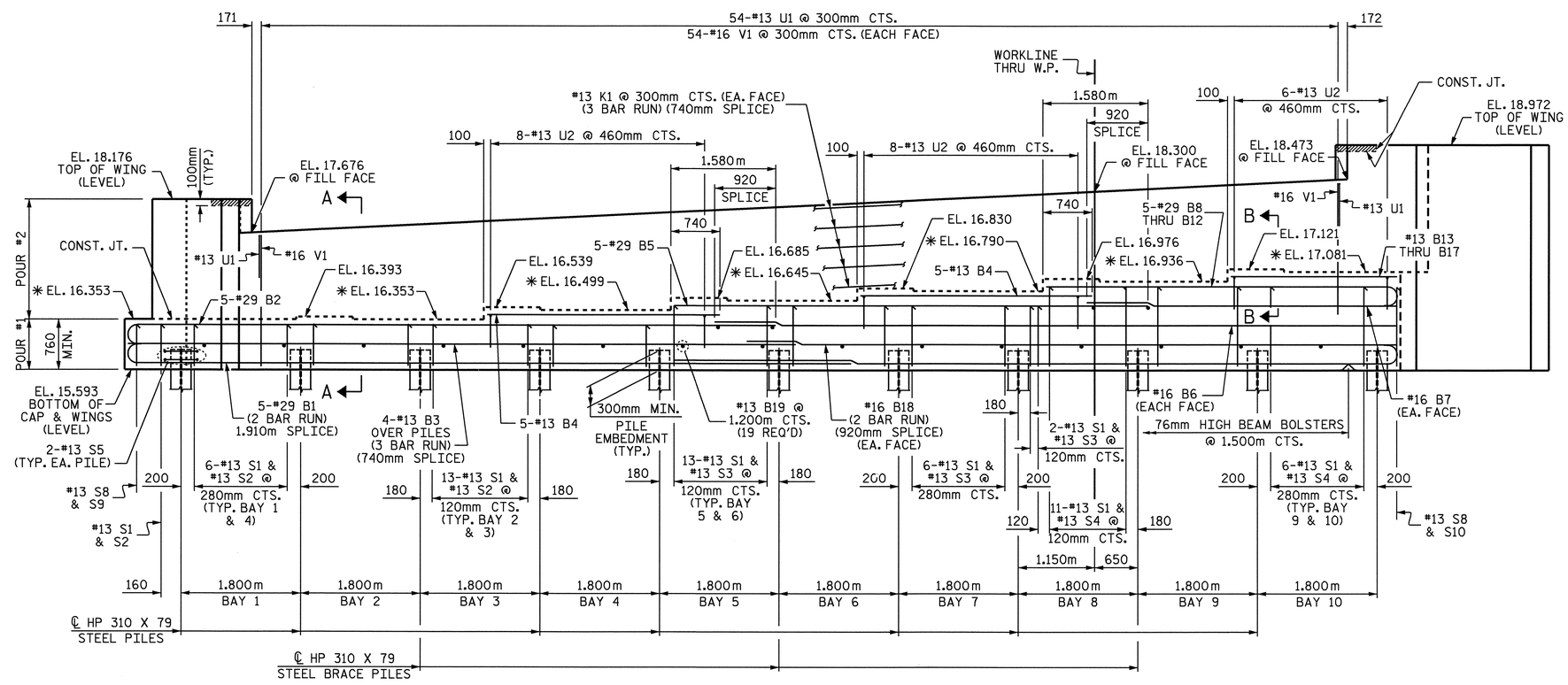

ELEVATION

✳ FOR LOCATION OF ELEVATIONS BETWEEN BRIDGE SEAT BUILDUPS, SEE SECTION VIEWS, SHEET 3 OF 3.

PILE IN WING NOT SHOWN FOR CLARITY

NOTES

STIRRUPS IN CAP MAY BE SHIFTED AS NECESSARY TO CLEAR ANCHOR BOLTS.

THE CONTRACTOR SHALL PROVIDE FOR INSTALLATION OF THE 102mm DIAMETER DRAIN PIPE THROUGH THE WING WALL AS REQUIRED FOR REINFORCED BRIDGE APPROACH FILLS, SEE THE ROADWAY PLANS. REINFORCING STEEL IN THE WING WALL MAY BE SHIFTED AS NECESSARY TO CLEAR THE DRAIN PIPE.

THE TOP SURFACE AREAS OF THE END BENT CAPS SHALL BE CURED IN ACCORDANCE WITH THE STANDARD SPECIFICATIONS EXCEPT THE MEMBRANE CURING COMPOUND METHOD SHALL NOT BE USED.

THE TOP SURFACE OF THE CAP EXCEPT THE BRIDGE SEAT BUILDUPS SHALL BE SLOPED TRANSVERSELY FROM THE FILL FACE TO THE BACK FACE AT THE RATE OF 2%.

FOR PILE SPLICE DETAILS, SEE SHEET 3 OF 3.

THE CONCRETE IN THE SHADED AREA OF THE WING SHALL BE POURED AFTER THE BARRIER RAIL IS CAST IF SLIP FORMING IS USED.

BACKWALL SHALL BE PLACED BEFORE APPLYING THE EPOXY PROTECTIVE COATING.

EPOXY COAT THE END BENT CAP AFTER ADJUSTMENTS ARE MADE TO BEARINGS AND ANCHOR BOLTS ARE GROUTED.

THE #16 V1 BARS IN THE BACKWALL SHALL BE PLACED 50mm CLEAR FROM THE TOP OF THE BACKWALL.

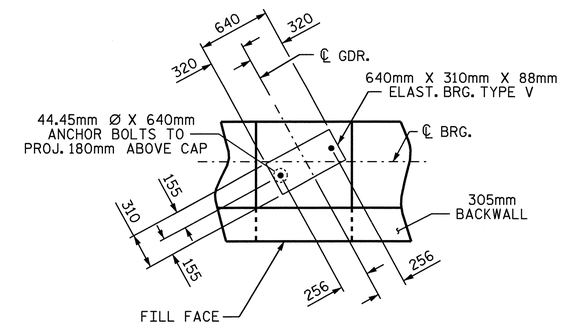

DETAIL A

(DIMENSIONS TYP. EA. BRG.)

PROJECT NO. R-2301A

JONES/CRAVEN COUNTY

STATION: 30+04.517 -L-

SHEET 1 OF 3

STATE OF NORTH CAROLINA
DEPARTMENT OF TRANSPORTATION
RALEIGH

SUBSTRUCTURE
END BENT 1

LEFT LANE

NORTH CAROLINA PROFESSIONAL SEAL 20125 ENGINEER MARSHALL G. CHEEK, JR.
9-3-08

REVISIONS						SHEET NO.
NO.	BY:	DATE:	NO.	BY:	DATE:	S-84
1			3			TOTAL SHEETS
2			4			176

STR. #3

DRAWN BY : A. SORSENGINH DATE : 6/30/08
CHECKED BY : M. G. CHEEK DATE : 7/29/08

02-SEP-2008 12:21
r:\structures\finalplans\str #3\R-2301A_sd_E*.dgn
lmurphy

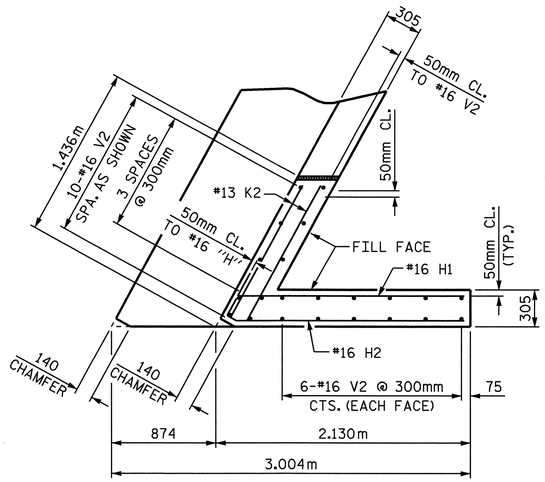

PLAN OF LEFT WING W1

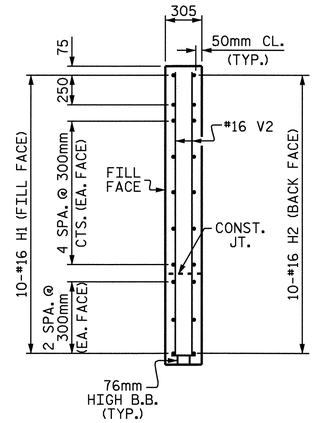

SECTION X-X

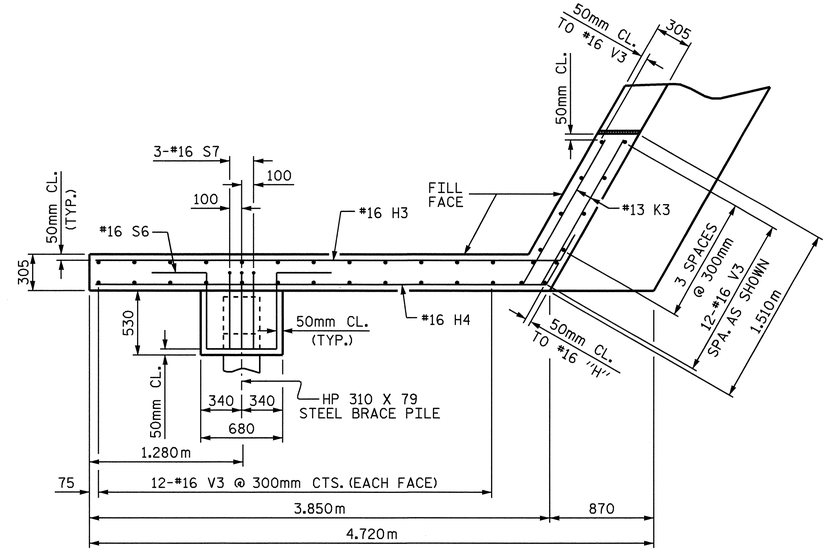

PLAN OF RIGHT WING W2

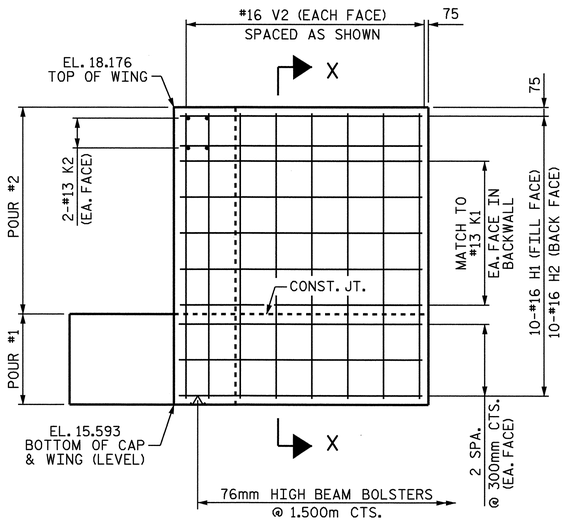

ELEVATION OF LEFT WING W1

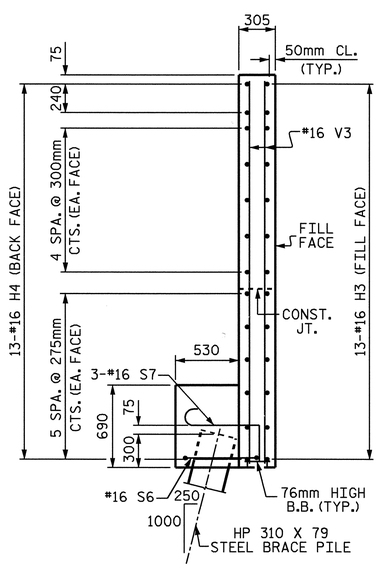

SECTION Y-Y

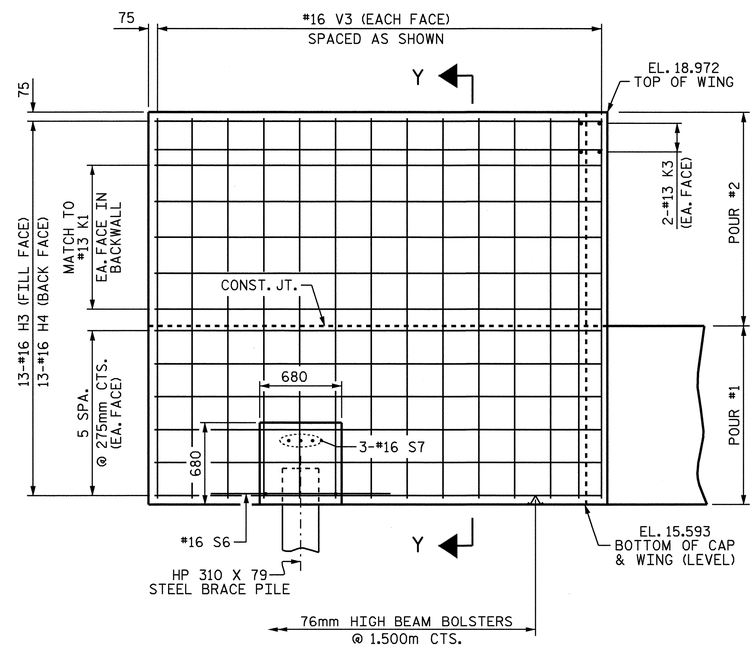

ELEVATION OF RIGHT WING W2

PROJECT NO. R-2301A

JONES/CRAVEN COUNTY

STATION: 30+04.517 -L-

SHEET 2 OF 3

STATE OF NORTH CAROLINA
DEPARTMENT OF TRANSPORTATION
RALEIGH

SUBSTRUCTURE
END BENT 1

LEFT LANE

NORTH CAROLINA PROFESSIONAL SEAL 20125 ENGINEER MARSHALL G. CHEEK, JR. 9-3-08

REVISIONS						SHEET NO.
NO.	BY:	DATE:	NO.	BY:	DATE:	S-85
1			3			TOTAL SHEETS
2			4			176

DRAWN BY : A. SORSENGINH DATE : 7/8/08
CHECKED BY : M. G. CHEEK DATE : 7/29/08

08-AUG-2008 08:54
r:\structures\asorsenginh\str #3\r-2301a_sd_e*.dgn
asorsenginh

STR. #3

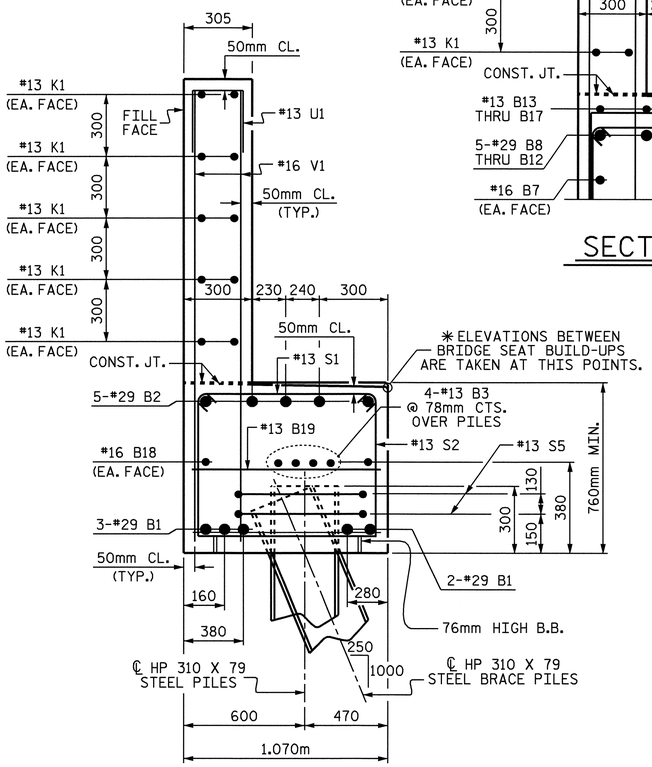

SECTION A-A

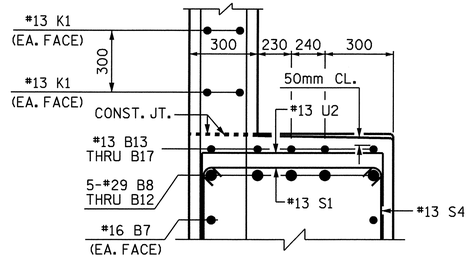

SECTION B-B

BAR TYPES

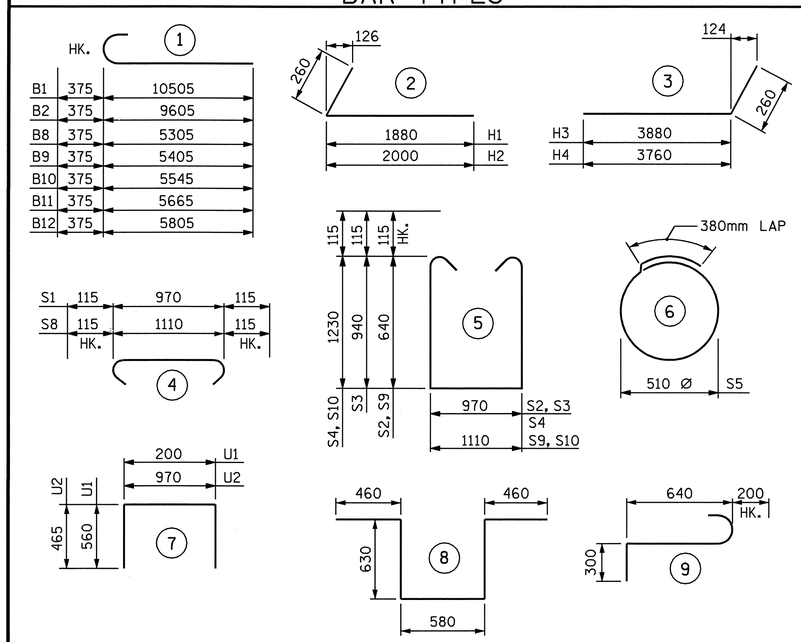

ALL BAR DIMENSIONS ARE OUT TO OUT.

BILL OF MATERIAL
END BENT #1

BAR	NO.	SIZE	TYPE	LENGTH	WEIGHT
B1	10	#29	1	10880	551
B2	5	#29	1	9980	252
B3	12	#13	STR	6860	82
B4	10	#13	STR	3620	36
B5	5	#29	STR	7280	184
B6	2	#16	STR	9520	30
B7	2	#16	STR	5260	16
B8	1	#29	1	5680	29
B9	1	#29	1	5780	29
B10	1	#29	1	5920	30
B11	1	#29	1	6040	31
B12	1	#29	1	6180	31
B13	1	#13	STR	2440	2
B14	1	#13	STR	2580	3
B15	1	#13	STR	2700	3
B16	1	#13	STR	2820	3
B17	1	#13	STR	2960	3
B18	4	#16	STR	10020	62
B19	19	#13	STR	960	18
H1	10	#16	2	2140	33
H2	10	#16	2	2260	35
H3	13	#16	3	4140	84
H4	13	#16	3	4020	81
K1	30	#13	STR	6860	205
K2	4	#13	STR	1300	5
K3	4	#13	STR	1400	6
S1	96	#13	4	1200	115
S2	39	#13	5	2480	96
S3	34	#13	5	3080	104

BAR	NO.	SIZE	TYPE	LENGTH	WEIGHT
S4	23	#13	5	3660	84
S5	22	#13	6	1980	43
S6	1	#16	8	2760	4
S7	3	#16	9	1140	5
S8	2	#13	4	1340	3
S9	1	#13	5	2620	3
S10	1	#13	5	3800	4
U1	54	#13	7	1320	71
U2	22	#13	7	1900	42
V1	108	#16	STR	1960	329
V2	22	#16	STR	2460	84
V3	34	#16	STR	3240	171

REINFORCING STEEL = 3002 kg

CLASS A CONCRETE
POUR #1
CAP & LOWER WINGS 25.1 CU. METERS
POUR #2
BACKWALL & UPPER WINGS 12.0 CU. METERS
TOTAL
CLASS A CONCRETE 37.1 CU. METERS

HP 310 X 79 STEEL PILES
NO. 12 228.0 METERS

PILE REDRIVES
NO. 4 EA.

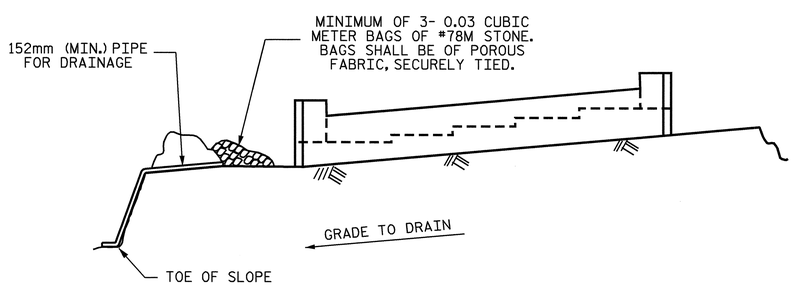

BAGGED STONE AND PIPE SHALL BE PLACED IMMEDIATELY AFTER COMPLETION OF END BENT EXCAVATION. PIPE MAY BE EITHER CONCRETE, CORRUGATED STEEL, CORRUGATED ALUMINUM ALLOY, OR CORRUGATED PLASTIC. PERFORATED PIPE WILL NOT BE ALLOWED.

BAGGED STONE SHALL REMAIN IN PLACE UNTIL THE ENGINEER DIRECTS THAT IT BE REMOVED. THE CONTRACTOR SHALL REMOVE AND DISPOSE OF SILT ACCUMULATIONS AT BAGGED STONE WHEN SO DIRECTED BY THE ENGINEER. BAGS SHALL BE REMOVED AND REPLACED WHENEVER THE ENGINEER DETERMINES THAT THEY HAVE DETERIORATED AND LOST THEIR EFFECTIVENESS.

NO SEPARATE PAYMENT WILL BE MADE FOR THIS WORK AND THE ENTIRE COST OF THIS WORK SHALL BE INCLUDED IN THE UNIT CONTRACT PRICE BID FOR THE SEVERAL PAY ITEMS.

TEMPORARY DRAINAGE AT END BENT

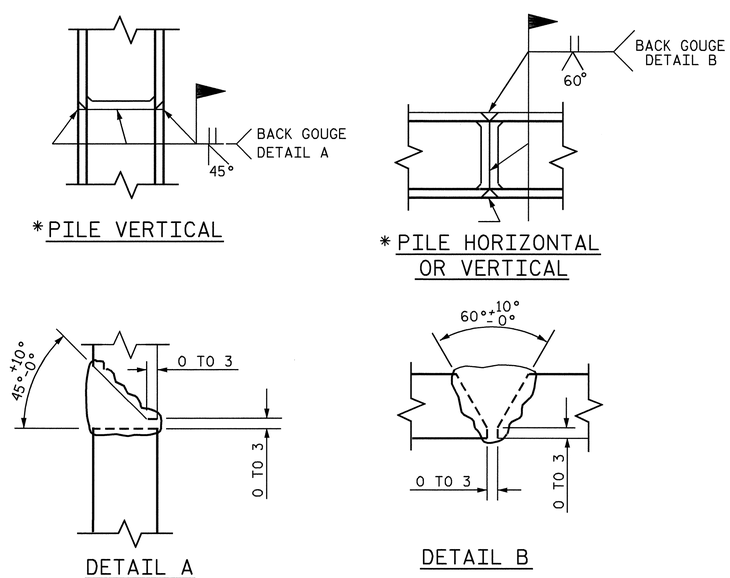

PILE SPLICE DETAILS
✳POSITION OF PILE DURING WELDING.

PROJECT NO. R-2301A
JONES/CRAVEN COUNTY
STATION: 30+04.517 -L-

SHEET 3 OF 3

STATE OF NORTH CAROLINA
DEPARTMENT OF TRANSPORTATION
RALEIGH

SUBSTRUCTURE
END BENT 1

LEFT LANE

NORTH CAROLINA PROFESSIONAL SEAL 20125 ENGINEER MARSHALL G. CHEEK, JR.
9-3-08

REVISIONS						SHEET NO.
NO.	BY:	DATE:	NO.	BY:	DATE:	S-86
1			3			TOTAL SHEETS
2			4			176

DRAWN BY : A. SORSENGINH DATE : 7/9/08
CHECKED BY : M. G. CHEEK DATE : 7/29/08

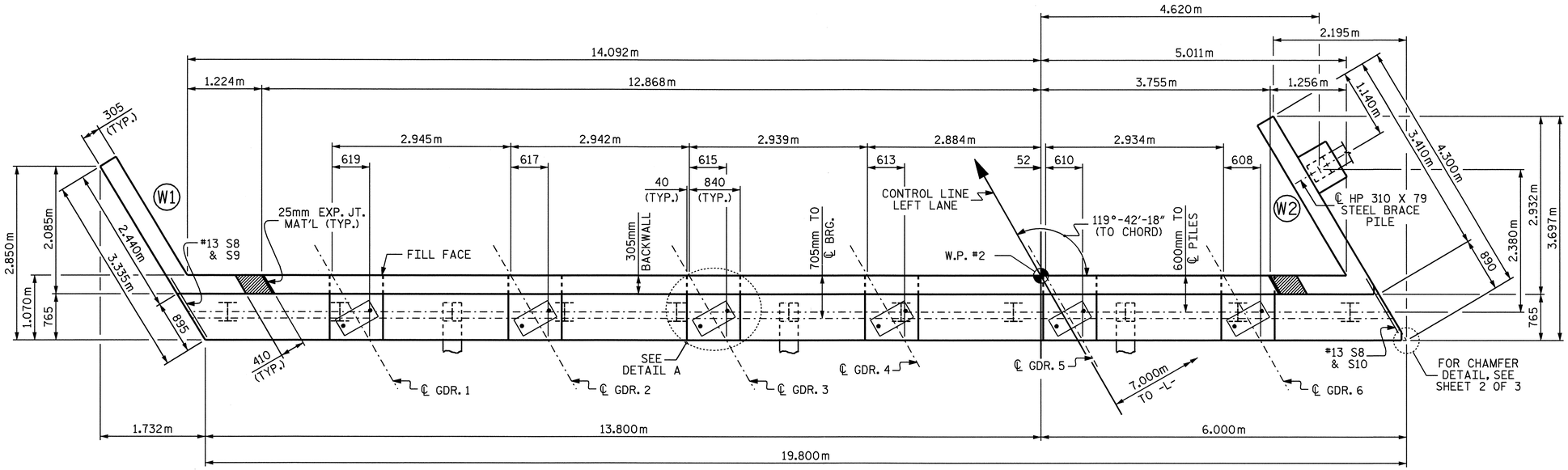

PLAN

NOTES

STIRRUPS IN CAP MAY BE SHIFTED AS NECESSARY TO CLEAR ANCHOR BOLTS.

THE CONTRACTOR SHALL PROVIDE FOR INSTALLATION OF THE 102mm DIAMETER DRAIN PIPE THROUGH THE WING WALL AS REQUIRED FOR REINFORCED BRIDGE APPROACH FILLS, SEE THE ROADWAY PLANS. REINFORCING STEEL IN THE WING WALL MAY BE SHIFTED AS NECESSARY TO CLEAR THE DRAIN PIPE.

THE TOP SURFACE AREAS OF THE END BENT CAPS SHALL BE CURED IN ACCORDANCE WITH THE STANDARD SPECIFICATIONS EXCEPT THE MEMBRANE CURING COMPOUND METHOD SHALL NOT BE USED.

THE TOP SURFACE OF THE CAP EXCEPT THE BRIDGE SEAT BUILDUPS SHALL BE SLOPED TRANSVERSELY FROM THE FILL FACE TO THE BACK FACE AT THE RATE OF 2%.

FOR PILE SPLICE DETAILS, SEE SHEET 3 OF 3.

THE CONCRETE IN THE SHADED AREA OF THE WING SHALL BE POURED AFTER THE BARRIER RAIL IS CAST IF SLIP FORMING IS USED.

BACKWALL SHALL BE PLACED BEFORE APPLYING THE EPOXY PROTECTIVE COATING.

THE #16 V1 BARS IN THE BACKWALL SHALL BE PLACED 50mm CLEAR FROM THE TOP OF THE BACKWALL.

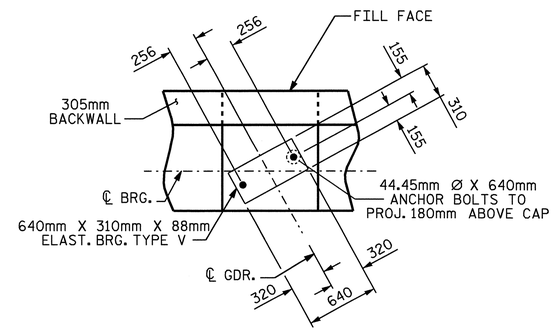

DETAIL A

(DIMENSIONS TYP. EA. BRG.)

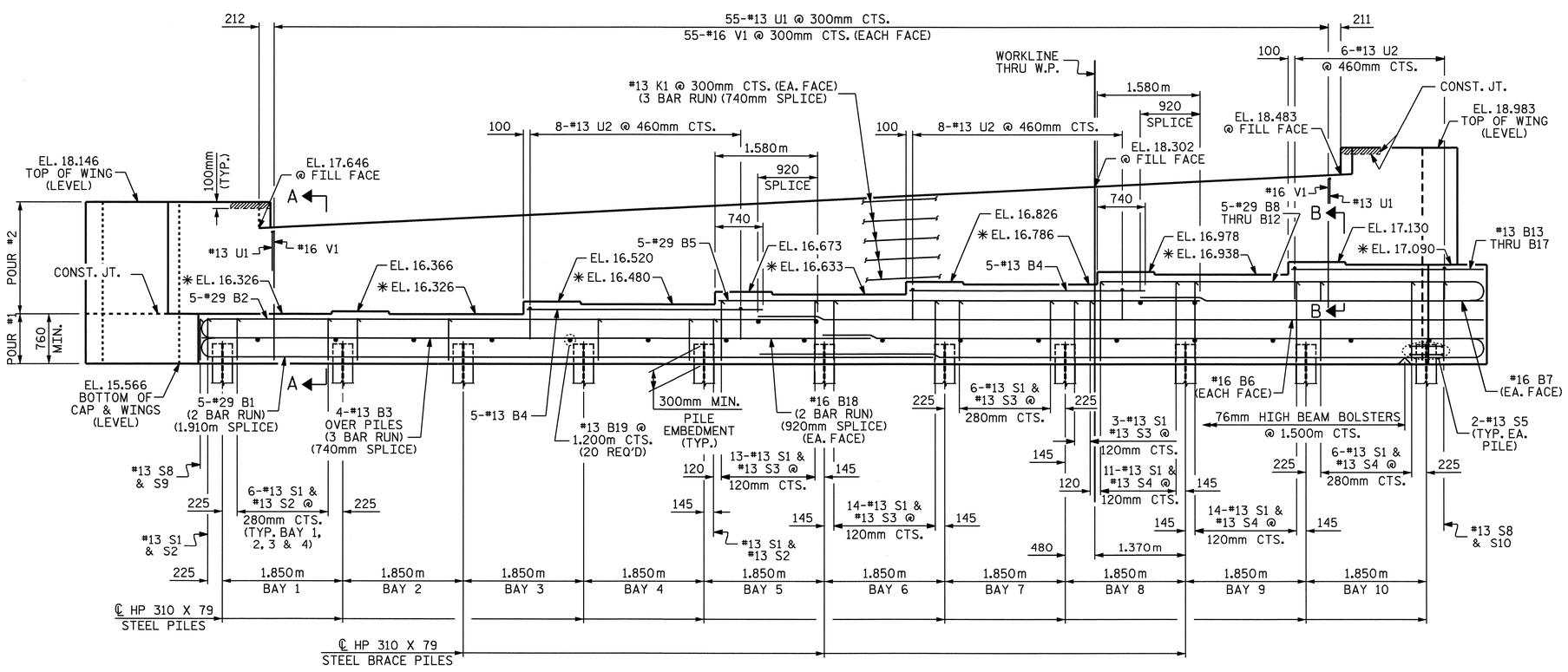

ELEVATION

✳ FOR LOCATION OF ELEVATIONS BETWEEN BRIDGE SEAT BUILDUPS, SEE SECTION VIEWS, SHEET 3 OF 3.

PILE IN WING NOT SHOWN FOR CLARITY

PROJECT NO. R-2301A

JONES/CRAVEN COUNTY

STATION: 30+04.517 -L-

SHEET 1 OF 3

STATE OF NORTH CAROLINA
DEPARTMENT OF TRANSPORTATION
RALEIGH

SUBSTRUCTURE
END BENT 2

LEFT LANE

NORTH CAROLINA PROFESSIONAL SEAL 20125 ENGINEER MARSHALL G. CHEEK, JR.
9-5-08

REVISIONS						SHEET NO.
NO.	BY:	DATE:	NO.	BY:	DATE:	S-87
1			3			TOTAL SHEETS
2			4			176

STR. #3

DRAWN BY : A. SORSENGINH DATE : 7/10/08
CHECKED BY : M. G. CHEEK DATE : 7/29/08

05-SEP-2008 07:06
r:\structures\finalplans\str #3\r-2301a_sd_e*.dgn
dahodge

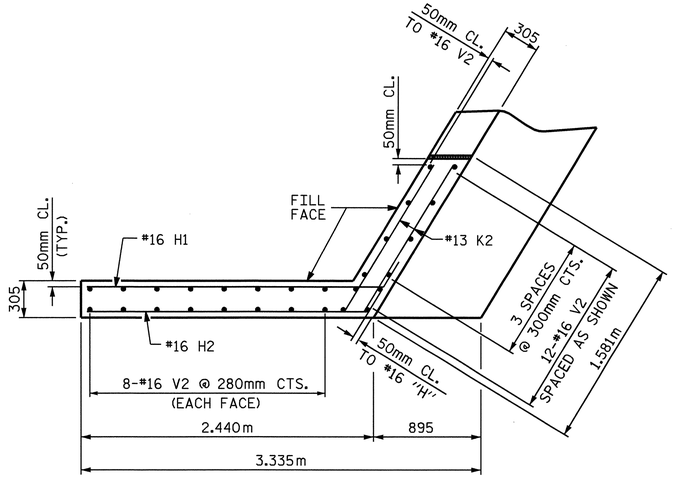

PLAN OF LEFT WING W1

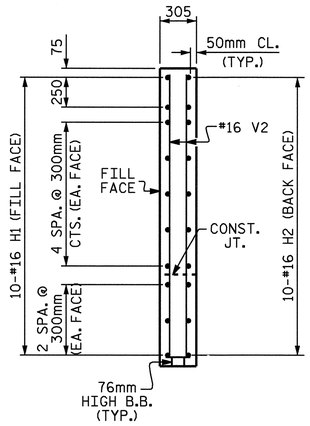

SECTION X-X

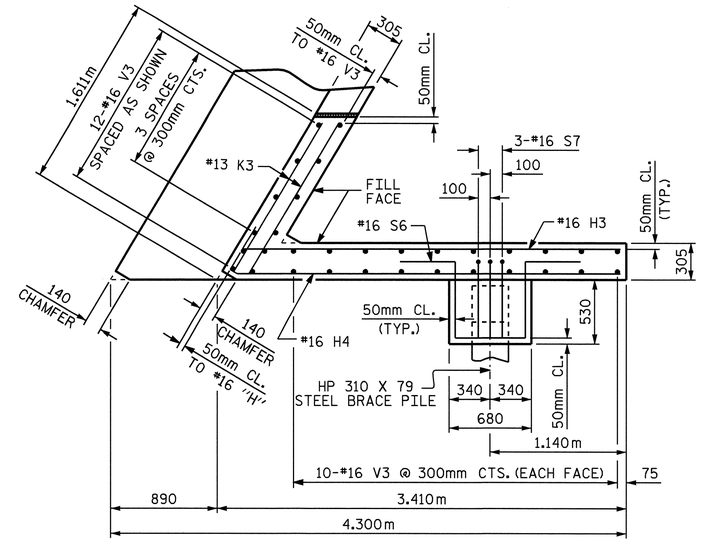

PLAN OF RIGHT WING W2

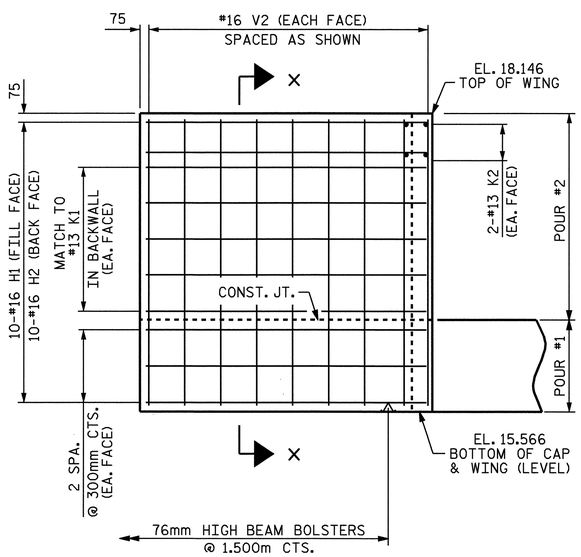

ELEVATION OF LEFT WING W1

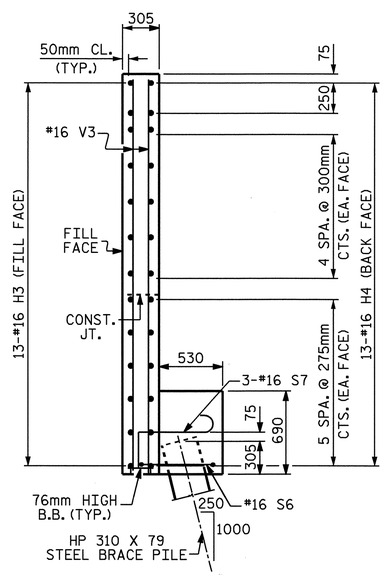

SECTION Y-Y

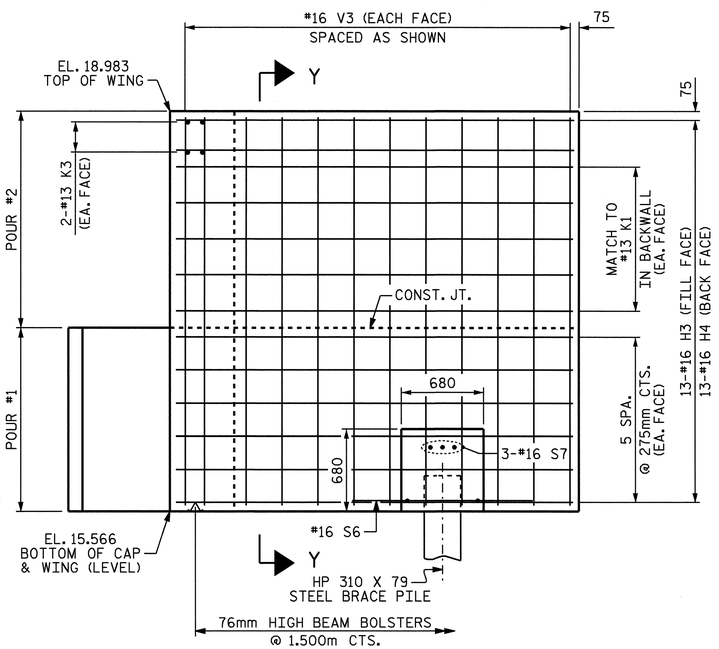

ELEVATION OF RIGHT WING W2

PROJECT NO. R-2301A

JONES/CRAVEN COUNTY

STATION: 30+04.517 -L-

SHEET 2 OF 3

STATE OF NORTH CAROLINA
DEPARTMENT OF TRANSPORTATION
RALEIGH

SUBSTRUCTURE
END BENT 2

LEFT LANE

NORTH CAROLINA PROFESSIONAL SEAL 20125 ENGINEER MARSHALL G. CHEEK, JR.
9-5-08

REVISIONS						SHEET NO.
NO.	BY:	DATE:	NO.	BY:	DATE:	S-88
1			3			TOTAL SHEETS
2			4			176

DRAWN BY : A. SORSENGINH DATE : 7/11/08
CHECKED BY : M. G. CHEEK DATE : 7/29/08

05-SEP-2008 07:06
r:\structures\final plans\str #3\r-2301a_sd_e*.dgn
dahodge

STR. #3

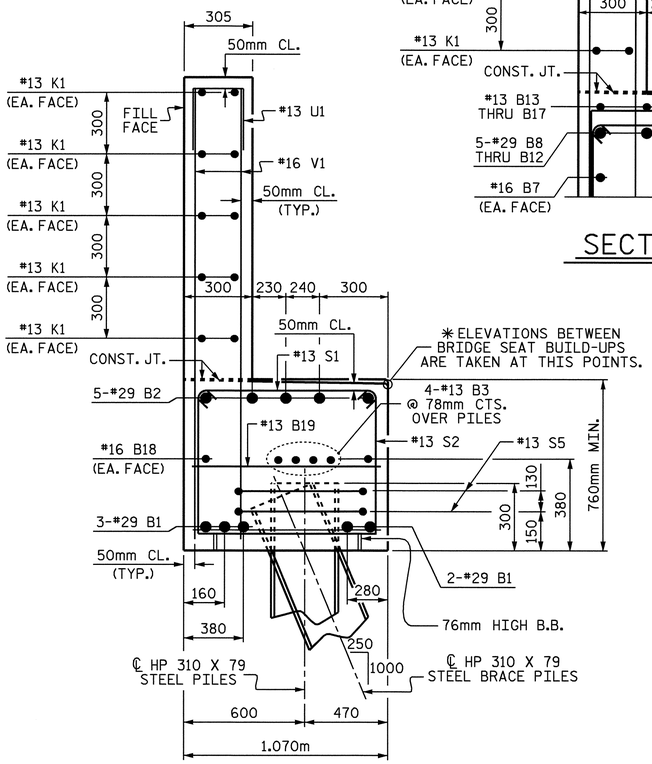

SECTION A-A

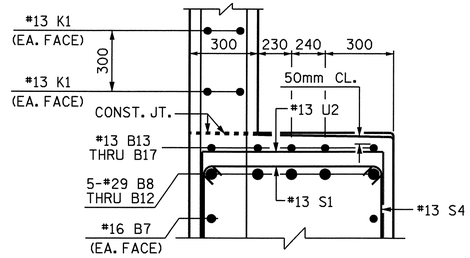

SECTION B-B

BAR TYPES

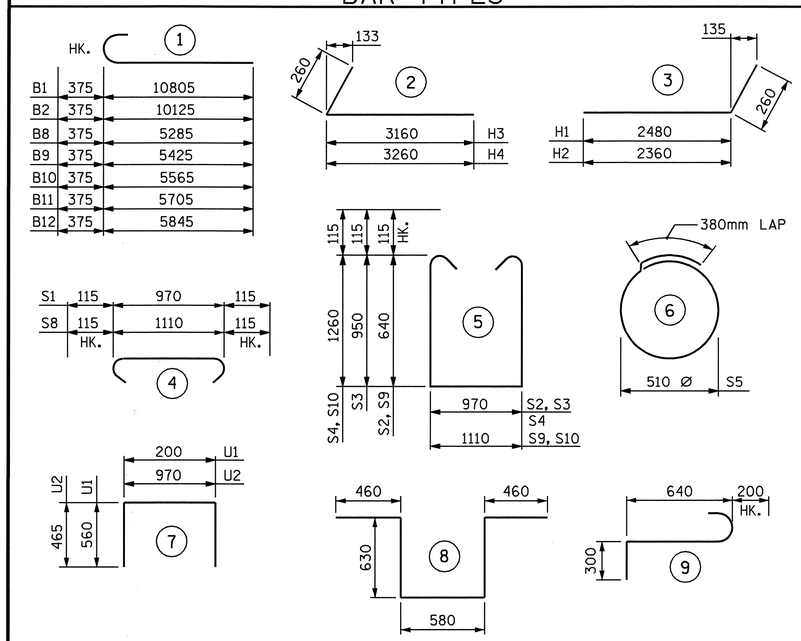

ALL BAR DIMENSIONS ARE OUT TO OUT.

BILL OF MATERIAL
END BENT #2

BAR	NO.	SIZE	TYPE	LENGTH	WEIGHT
B1	10	#29	1	11180	566
B2	5	#29	1	10500	266
B3	12	#13	STR	7060	84
B4	10	#13	STR	3700	37
B5	5	#29	STR	7420	188
B6	2	#16	STR	9840	31
B7	2	#16	STR	5280	16
B8	1	#29	1	5660	29
B9	1	#29	1	5800	29
B10	1	#29	1	5940	30
B11	1	#29	1	6080	31
B12	1	#29	1	6220	31
B13	1	#13	STR	2340	2
B14	1	#13	STR	2480	2
B15	1	#13	STR	2620	3
B16	1	#13	STR	2760	3
B17	1	#13	STR	2900	3
B18	4	#16	STR	10320	64
B19	20	#13	STR	960	19
H1	10	#16	3	2740	43
H2	10	#16	3	2620	41
H3	13	#16	2	3420	69
H4	13	#16	2	3520	71
K1	30	#13	STR	7060	211
K2	4	#13	STR	1420	6
K3	4	#13	STR	1460	6
S1	93	#13	4	1200	111
S2	26	#13	5	2480	64
S3	36	#13	5	3100	111

BAR	NO.	SIZE	TYPE	LENGTH	WEIGHT
S4	31	#13	5	3720	115
S5	22	#13	6	1980	43
S6	1	#16	8	2760	4
S7	3	#16	9	1140	5
S8	2	#13	4	1340	3
S9	1	#13	5	2620	3
S10	1	#13	5	3860	4
U1	55	#13	7	1320	72
U2	22	#13	7	1900	42
V1	110	#16	STR	1960	335
V2	28	#16	STR	2440	106
V3	32	#16	STR	3280	163

REINFORCING STEEL = 3062 kg

CLASS A CONCRETE
POUR #1
CAP & LOWER WINGS 26.1 CU. METERS
POUR #2
BACKWALL & UPPER WINGS 12.4 CU. METERS
TOTAL
CLASS A CONCRETE 38.5 CU. METERS

HP 310 X 79 STEEL PILES
NO. 12 228.0 METERS

PILE REDRIVES
NO. 4 EA.

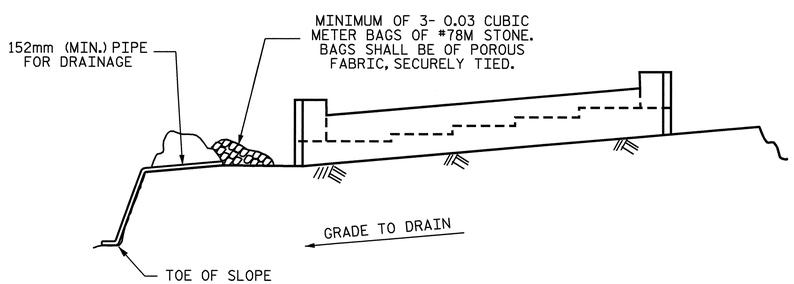

BAGGED STONE AND PIPE SHALL BE PLACED IMMEDIATELY AFTER COMPLETION OF END BENT EXCAVATION. PIPE MAY BE EITHER CONCRETE, CORRUGATED STEEL, CORRUGATED ALUMINUM ALLOY, OR CORRUGATED PLASTIC. PERFORATED PIPE WILL NOT BE ALLOWED.

BAGGED STONE SHALL REMAIN IN PLACE UNTIL THE ENGINEER DIRECTS THAT IT BE REMOVED. THE CONTRACTOR SHALL REMOVE AND DISPOSE OF SILT ACCUMULATIONS AT BAGGED STONE WHEN SO DIRECTED BY THE ENGINEER. BAGS SHALL BE REMOVED AND REPLACED WHENEVER THE ENGINEER DETERMINES THAT THEY HAVE DETERIORATED AND LOST THEIR EFFECTIVENESS.

NO SEPARATE PAYMENT WILL BE MADE FOR THIS WORK AND THE ENTIRE COST OF THIS WORK SHALL BE INCLUDED IN THE UNIT CONTRACT PRICE BID FOR THE SEVERAL PAY ITEMS.

TEMPORARY DRAINAGE AT END BENT

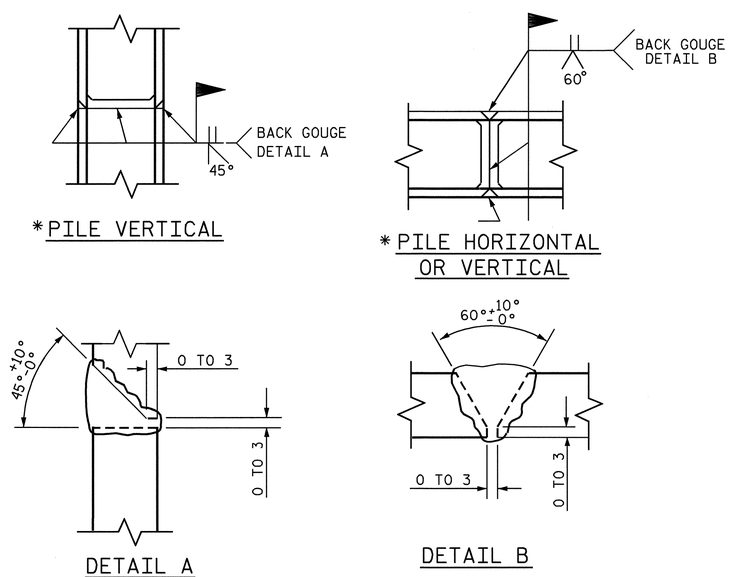

PILE SPLICE DETAILS

✱POSITION OF PILE DURING WELDING.

PROJECT NO. R-2301A
JONES/CRAVEN COUNTY
STATION: 30+04.517 -L-

SHEET 3 OF 3

STATE OF NORTH CAROLINA
DEPARTMENT OF TRANSPORTATION
RALEIGH

SUBSTRUCTURE
END BENT 2

LEFT LANE

NORTH CAROLINA PROFESSIONAL SEAL 20125 ENGINEER MARSHALL G. CHEEK, JR.
9-3-08

REVISIONS						SHEET NO.
NO.	BY:	DATE:	NO.	BY:	DATE:	S-89
1			3			TOTAL SHEETS
2			4			176

DRAWN BY : A. SORSENGINH DATE : 7/9/08
CHECKED BY : M. G. CHEEK DATE : 7/29/08

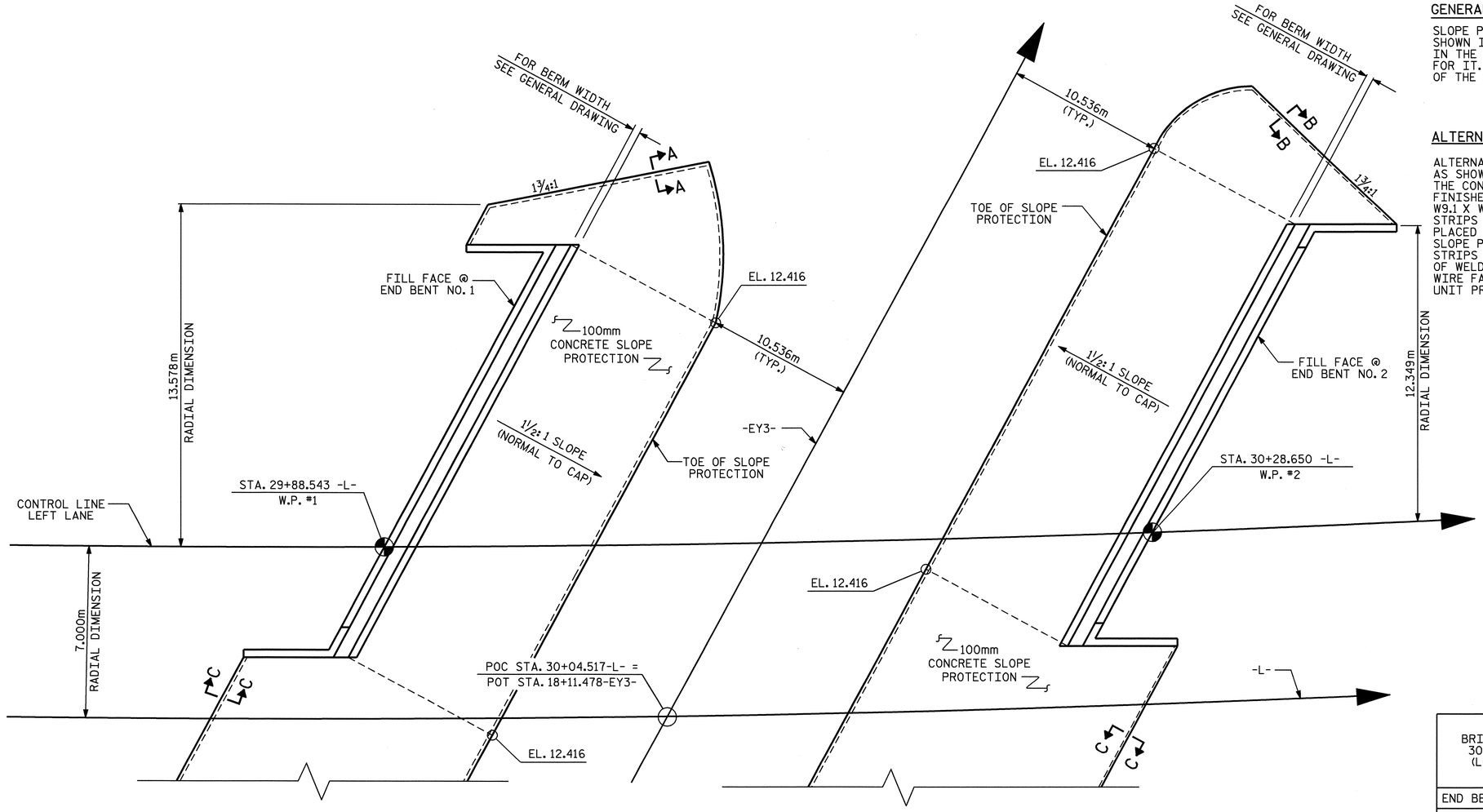

PLAN OF SLOPE PROTECTION

GENERAL NOTES

SLOPE PROTECTION SHALL BE PLACED UNDER THE ENDS OF THE BRIDGE AS SHOWN IN THE DETAILS. STRAIGHT EDGING WILL NOT BE REQUIRED UNLESS, IN THE OPINION OF THE ENGINEER, VISUAL INSPECTION INDICATES A NEED FOR IT. MEASUREMENT AND PAYMENT SHALL BE AS PRESCRIBED IN SECTION 462 OF THE STANDARD SPECIFICATIONS. FOR BERM WIDTH, SEE GENERAL DRAWING.

ALTERNATE "A"

ALTERNATE "A" SHALL CONSIST OF 100mm POURED-IN-PLACE CONCRETE PAVING AS SHOWN IN THE DETAILS ON THIS SHEET. CONCRETE SHALL BE CLASS "B". THE CONCRETE SURFACE SHALL BE FLOATED WITH A WOODEN FLOAT AND FINISHED. WELDED WIRE FABRIC REINFORCING SHALL BE 152 X 152 - W9.1 X W9.1, 1520mm WIDE. SLOPE PROTECTION SHALL BE POURED IN 1520mm STRIPS AS SHOWN IN THE "POURING DETAIL" WITH 600mm LONG #13 BARS PLACED ALONG THE SLOPE BETWEEN STRIPS AT 450mm MAXIMUM SPACING. SLOPE PROTECTION MAY BE POURED IN ALTERNATE 1220mm AND 1520mm STRIPS AS SHOWN IN THE "OPTIONAL POURING DETAIL" WITH ADJACENT RUNS OF WELDED WIRE FABRIC LAPPING AT LEAST 152mm. THE COST OF THE WELDED WIRE FABRIC AND #13 BARS, IF USED, SHALLBE INCLUDED IN THE CONTRACT UNIT PRICE BID PER SQUARE METER FOR SLOPE PROTECTION.

BRIDGE @ STA. 30+04.517-L- (LEFT LANE)	100 mm SLOPE PROTECTION	* WELDED WIRE FABRIC 1520mm WIDE
	SQUARE METERS	APPROX. METERS
END BENT No. 1	280	204
END BENT No. 2	231	169

* QUANTITY SHOWN IS BASED ON 1520mm POURS.

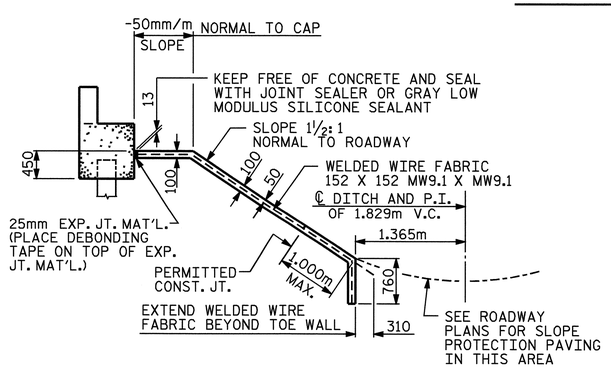

SECTION ALONG ℄ ROADWAY WHEN FILL CATCHES IN DITCH

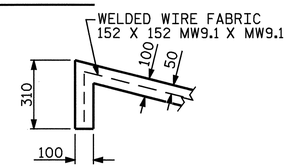

SECTION C-C

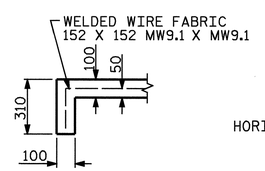

SECTION A-A

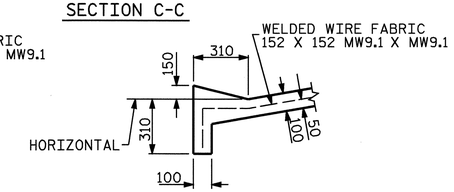

SECTION B-B

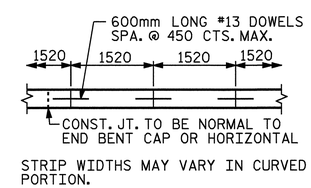

POURING DETAIL

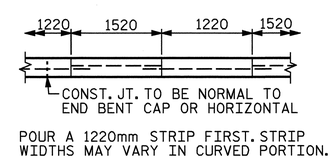

OPTIONAL POURING DETAIL

PROJECT NO. R-2301A
JONES/CRAVEN COUNTY
STATION: 30+04.517-L-

STATE OF NORTH CAROLINA
DEPARTMENT OF TRANSPORTATION
RALEIGH

SLOPE PROTECTION
LEFT LANE

NORTH CAROLINA PROFESSIONAL SEAL 20125 ENGINEER MARSHALL G. PHEES, JR. 9-5-08

REVISIONS						SHEET NO.
NO.	BY:	DATE:	NO.	BY:	DATE:	S-90
1			3			TOTAL SHEETS
2			4			176

DRAWN BY : R. G. EMERSON DATE : 06/08
CHECKED BY : D. HODGE DATE : 07/08

05-SEP-2008 13:08
r:\structures\finalplans\Str #3\R2301A_sd_SP_str_3.dgn
ddhodge

STR. #3

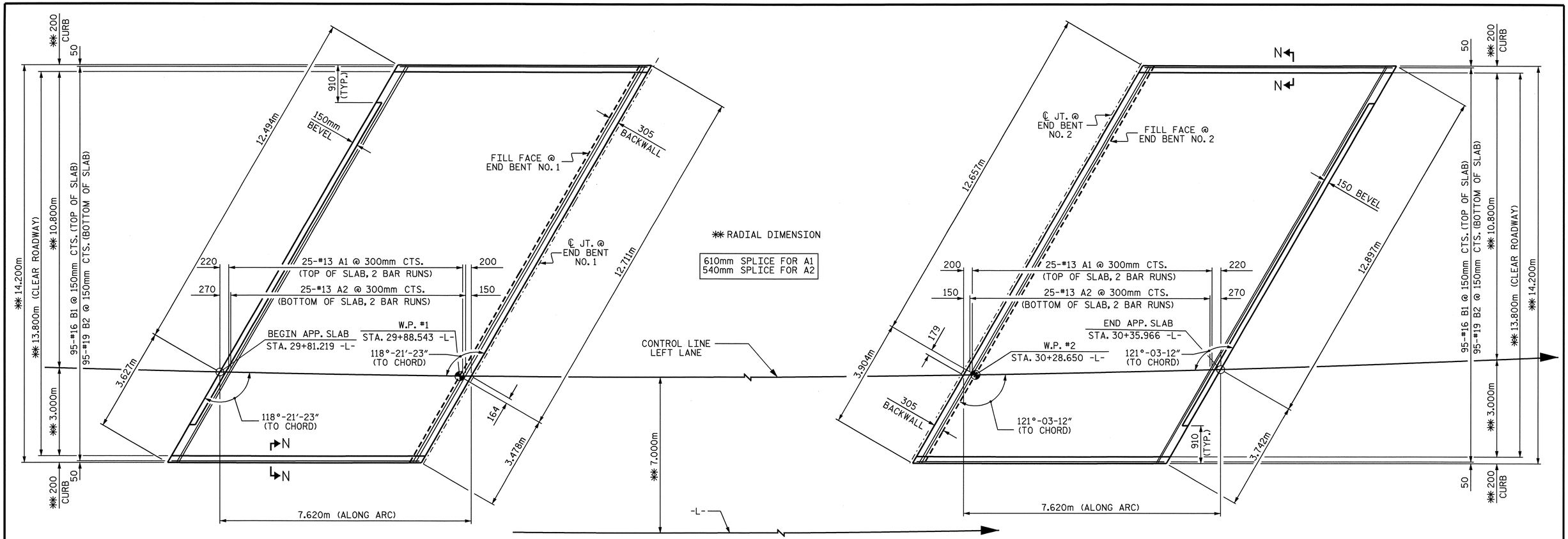

APPROACH SLAB @ END BENT NO. 1

PLAN

APPROACH SLAB @ END BENT NO. 2

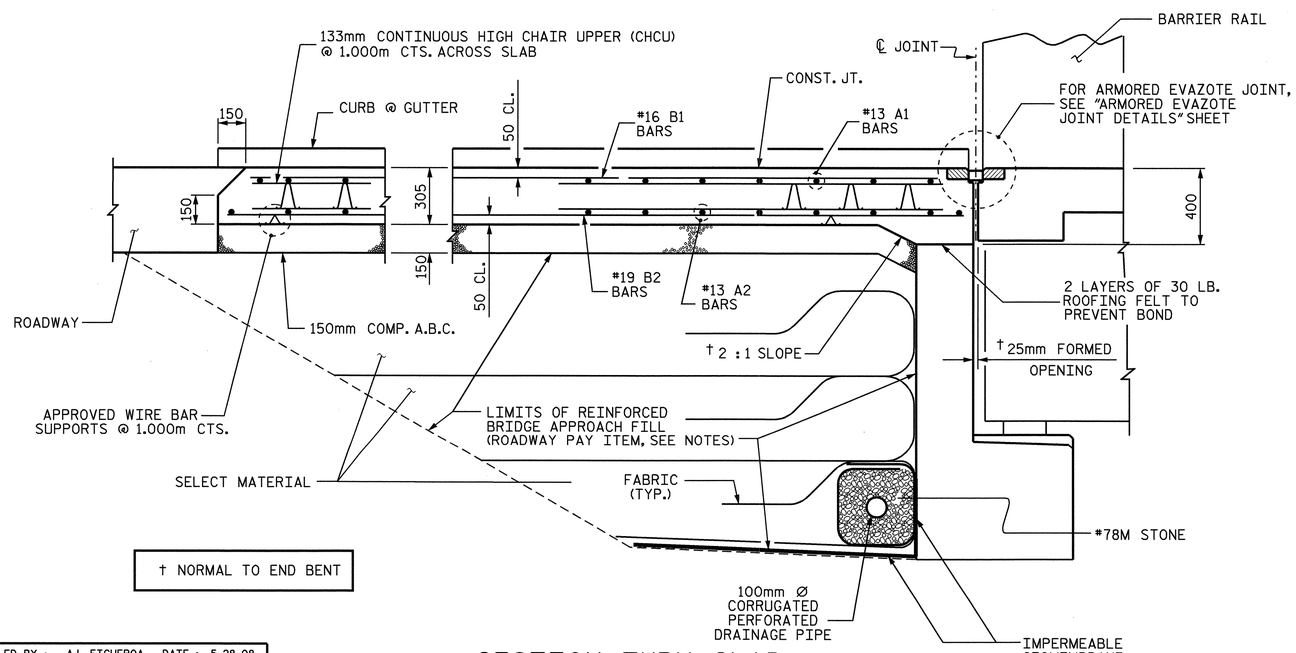

† NORMAL TO END BENT

SECTION THRU SLAB

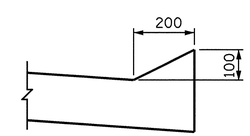

SECTION N-N

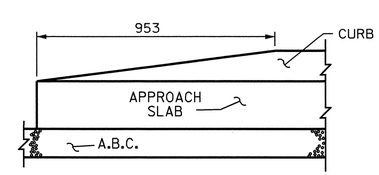

END OF CURB WITHOUT SHOULDER BERM GUTTER

PROJECT NO. R-2301A
JONES/CRAVEN COUNTY
STATION: 30+04.517 -L-

SHEET 1 OF 2

STATE OF NORTH CAROLINA
DEPARTMENT OF TRANSPORTATION
RALEIGH

BRIDGE APPROACH SLAB FOR FLEXIBLE PAVEMENT

LEFT LANE

NORTH CAROLINA PROFESSIONAL SEAL 20125 ENGINEER MARSHALL G. CHEEK, SR.
9-3-08

REVISIONS						SHEET NO.
NO.	BY:	DATE:	NO.	BY:	DATE:	S-91
1			3			TOTAL SHEETS
2			4			176

ASSEMBLED BY : A.L. FIGUEROA	DATE : 5-28-08		
CHECKED BY : M.G. CHEEK	DATE : 6-25-08		
DRAWN BY : FCJ 6/87	REV. 7/10/01	RWW/LES	
CHECKED BY : EGA 6/87	REV. 5/7/03R	RWW/JTE	
	REV. 5/1/06R	KMM/GM	

03-SEP-2008 07:47
R:\Structures\Final Plans\Str #3\R-2301A_sd_STR#3-16_AS.dgn
afigueroa

STR. #3 STD. NO. BAS4SM

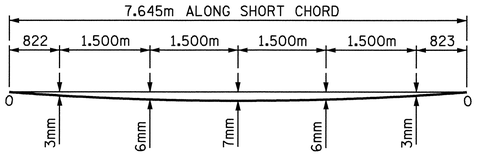

ARC OFFSETS - LEFT SIDE

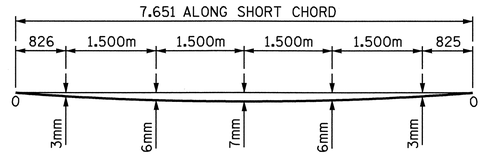

ARC OFFSETS - LEFT SIDE

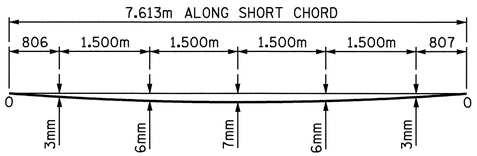

ARC OFFSETS - RIGHT SIDE

APPROACH SLAB @ END BENT NO.1

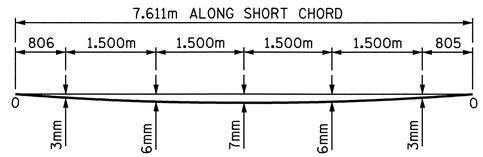

ARC OFFSETS - RIGHT SIDE

APPROACH SLAB @ END BENT NO.2

NOTES

APPROACH SLAB SHALL NOT BE CONSTRUCTED PRIOR TO COMPLETION OF THE BRIDGE DECK.

FOR REINFORCED BRIDGE APPROACH FILL INCLUDING FABRIC, IMPERMEABLE GEOMEMBRANE, 102mm Ø DRAINAGE PIPE, #78M STONE, AND SELECT MATERIAL, SEE ROADWAY PLANS.

AREA BETWEEN THE WINGWALL AND APPROACH SLAB SHALL BE GRADED TO DRAIN THE WATER AWAY FROM THE FILL FACE OF THE BRIDGE AND SHALL BE PAVED. SEE ROADWAY PLANS.

THE 150mm COMP. A.B.C. SHALL BE FLUSH WITH THE ROADWAY END OF THE APPROACH SLAB AND SHALL EXTEND 300mm OUTSIDE OF EACH EDGE OF THE APPROACH SLAB.

THE CONTRACTOR MAY USE 100mm TYPE B-25.0B ASPHALT CONCRETE COURSE IN LIEU OF 150mm COMP. A.B.C. IF THIS OPTION IS USED, THE BASE COURSE SHALL BE FLUSH WITH THE ROADWAY END OF THE APPROACH SLAB, AND THE WIDTH SHALL BE THE SAME AS THAT OF THE APPROACH SLAB.

THE CONTRACTOR MAY USE 125mm CLASS "A" CONCRETE BASE IN LIEU OF 150mm COMP. A.B.C. IF THIS OPTION IS USED, THE CONCRETE BASE SHALL BE FLUSH WITH THE ROADWAY END OF THE APPROACH SLAB, AND THE WIDTH SHALL BE THE SAME AS THAT OF THE APPROACH SLAB. THE CONCRETE SHALL BE FINISHED TO A SMOOTH SURFACE AND A LAYER OF 13.6 kg ROOFING FELT SHALL BE PLACED BETWEEN THE CONCRETE BASE AND THE APPROACH SLAB TO PREVENT BOND. THE APPROACH SLAB SHALL NOT BE CAST UNTIL THE CONCRETE BASE HAS REACHED AN AGE OF THREE CURING DAYS.

THE NOMINAL UNCOMPRESSED SEAL WIDTH OF THE EVAZOTE JOINT SEAL SHALL BE 64mm.

FOR EVAZOTE JOINT SEALS, SEE SPECIAL PROVISIONS.

FOR ELASTOMERIC CONCRETE, SEE SPECIAL PROVISIONS.

BILL OF MATERIAL

APPROACH SLAB @ END BENT NO.1

BAR	NO.	SIZE	TYPE	LENGTH	WEIGHT
✳ A1	50	#13	STR	8360	415
A2	50	#13	STR	8320	414
✳ B1	95	#16	STR	7240	1067
B2	95	#19	STR	7520	1597
REINFORCING STEEL				kg	2011
✳ EPOXY COATED REINFORCING STEEL				kg	1482
CLASS AA CONCRETE BREAKDOWN					
SLAB AND CURB				CU. METERS	33.6
CLASS AA CONCRETE				CU. METERS	33.6

APPROACH SLAB @ END BENT NO.2

BAR	NO.	SIZE	TYPE	LENGTH	WEIGHT
✳ A1	50	#13	STR	8580	426
A2	50	#13	STR	8540	424
✳ B1	95	#16	STR	7240	1067
B2	95	#19	STR	7520	1597
REINFORCING STEEL				kg	2021
✳ EPOXY COATED REINFORCING STEEL				kg	1493
CLASS AA CONCRETE BREAKDOWN					
SLAB AND CURB				CU. METERS	33.6
CLASS AA CONCRETE				CU. METERS	33.6

✳ THESE BARS ARE EPOXY COATED.

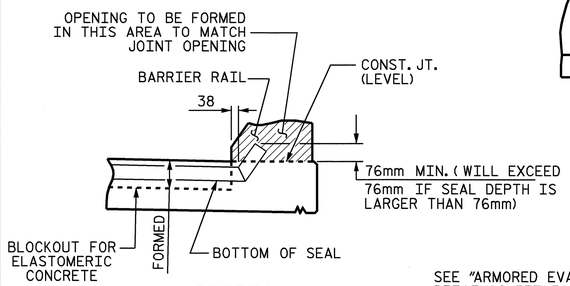

SECTION A-A

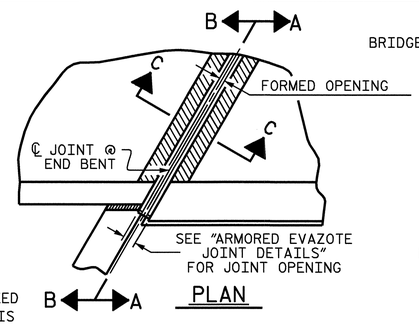

PLAN

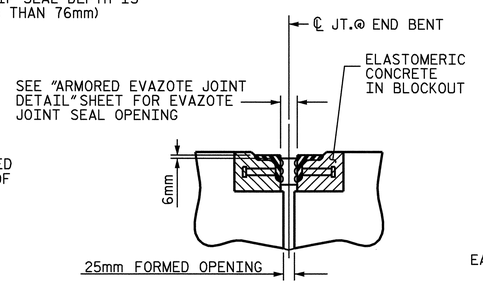

SECTION C-C
ARMORED EVAZOTE JOINT SEAL

EVAZOTE JOINT SEAL TO BE CUT, HEAT WELDED AND TURNED UP PARALLEL TO SLOPED FACE OF THE BARRIER RAIL.

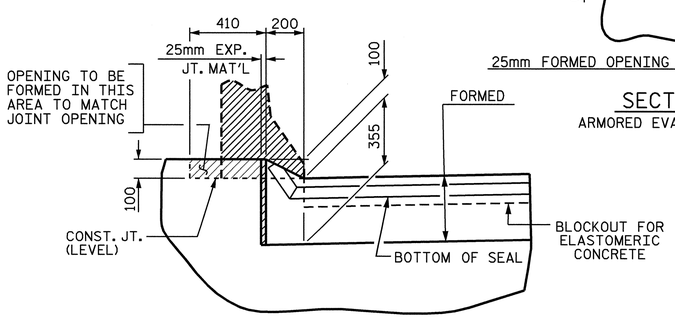

SECTION B-B

JOINT SEAL DETAILS @ END BENT

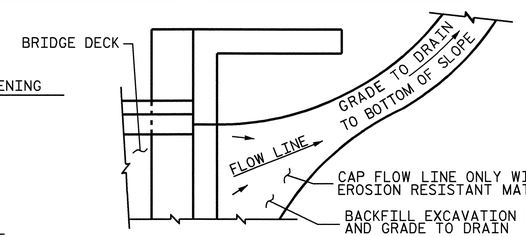

NOTE: IF THE APPROACH SLAB IS NOT CONSTRUCTED IMMEDIATELY AFTER THE BACKFILLING OF THE END BENT EXCAVATION, GRADE TO DRAIN TO THE BOTTOM OF THE SLOPE AND PROVIDE EROSION RESISTANT MATERIAL, SUCH AS FIBERGLASS ROVING OR AS DIRECTED BY THE ENGINEER TO PREVENT SOIL EROSION AND TO PROTECT THE AREA ADJACENT TO THE STRUCTURE. THE CONTRACTOR WILL BE REQUIRED TO REMOVE THESE MATERIALS PRIOR TO CONSTRUCTION OF THE APPROACH SLAB.

TEMPORARY DRAINAGE DETAIL

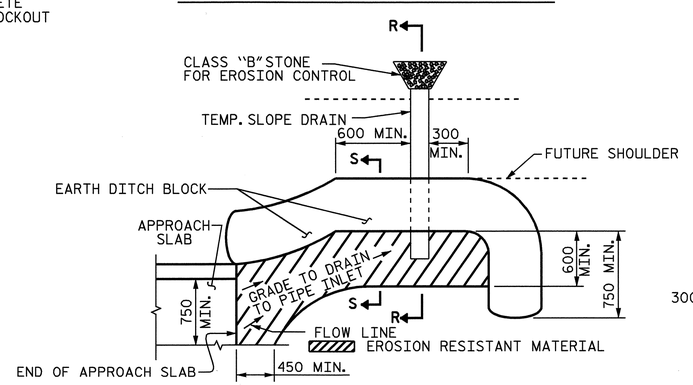

NOTE: IMMEDIATELY AFTER THE CONSTRUCTION OF THE APPROACH SLAB, THE CONTRACTOR SHALL PROVIDE TEMPORARY BERM AND SLOPE DRAIN. CONTRACTOR SHALL GRADE TO PIPE INLET AND PROVIDE EROSION RESISTANT MATERIAL AS SHOWN. THE EROSION RESISTANT MATERIAL SHALL BE EITHER 1) ASPHALT PLANT MIX, TYPE 1 OR TYPE 2, MIN. 50mm DEPTH, 2) EROSION CONTROL MAT, OR 3) CONCRETE, AS DIRECTED BY THE ENGINEER. THE SLOPE DRAIN SHALL CONSIST OF A NON-PERFORATED TEMPORARY DRAINAGE PIPE, 305mm IN DIAMETER.

PLAN VIEW

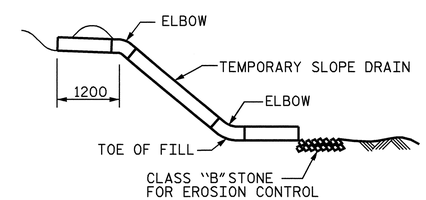

SECTION R-R

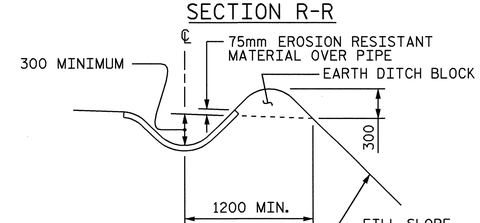

SECTION S-S

TEMPORARY BERM AND SLOPE DRAIN DETAILS

PROJECT NO. R-2301A
JONES/CRAVEN COUNTY
STATION: 30+04.517 -L-

SHEET 2 OF 2

STATE OF NORTH CAROLINA
DEPARTMENT OF TRANSPORTATION
RALEIGH

STANDARD
BRIDGE APPROACH SLAB DETAILS
LEFT LANE

ASSEMBLED BY : A.L. FIGUEROA	DATE : 5-27-08
CHECKED BY : M.G. CHEEK	DATE : 6-25-08

DRAWN BY : FCJ	11/88	REV. 10/17/00	RWW/LES
CHECKED BY : ARB	11/88	REV. 5/7/03	RWW/JTE
		REV. 5/1/06	TLA/GM

REVISIONS							SHEET NO.
NO.	BY:	DATE:	NO.	BY:	DATE:		S-92
1			3				TOTAL SHEETS
2			4				176

NORTH CAROLINA PROFESSIONAL SEAL 20125 ENGINEER MARSHALL G. DEEL, JR.

STR. #3 STD. NO. BAS10

02-SEP-2008 14:44
R:\Structures\Final Plans\Str #3\R-2301A_sd_STR#3-16_AS.dgn
aflgueroa

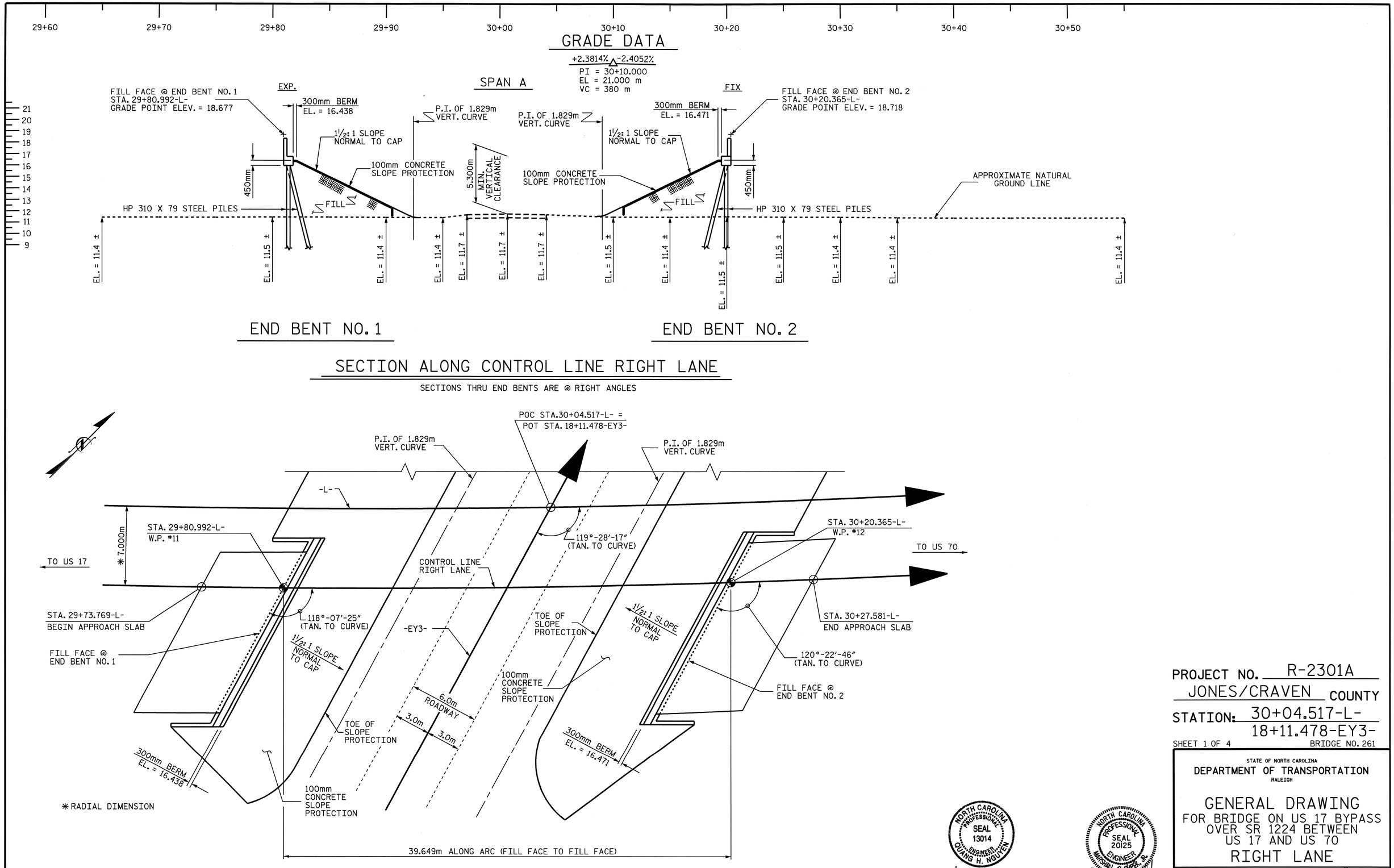

PROJECT NO. R-2301A
JONES/CRAVEN COUNTY
STATION: 30+04.517-L-
18+11.478-EY3-
SHEET 1 OF 4
BRIDGE NO. 261

STATE OF NORTH CAROLINA
DEPARTMENT OF TRANSPORTATION
RALEIGH

GENERAL DRAWING
FOR BRIDGE ON US 17 BYPASS
OVER SR 1224 BETWEEN
US 17 AND US 70
RIGHT LANE

NORTH CAROLINA PROFESSIONAL SEAL 13014 ENGINEER QUANG H. NGUYEN
9-4-08

NORTH CAROLINA PROFESSIONAL SEAL 20125 ENGINEER MARSHALL G. CHEEK, JR.
9-4-08

REVISIONS						SHEET NO.
NO.	BY:	DATE:	NO.	BY:	DATE:	S-93
1			3			TOTAL SHEETS
2			4			176

DRAWN BY : L.L. MURPHY DATE : 10-07
CHECKED BY : M.G. CHEEK DATE : 11-07

04-SEP-2008 08:25
r:\structures\finalplans\str #4\r2301a_sd_gd_str #4.dgn
lmurphy

STR #4

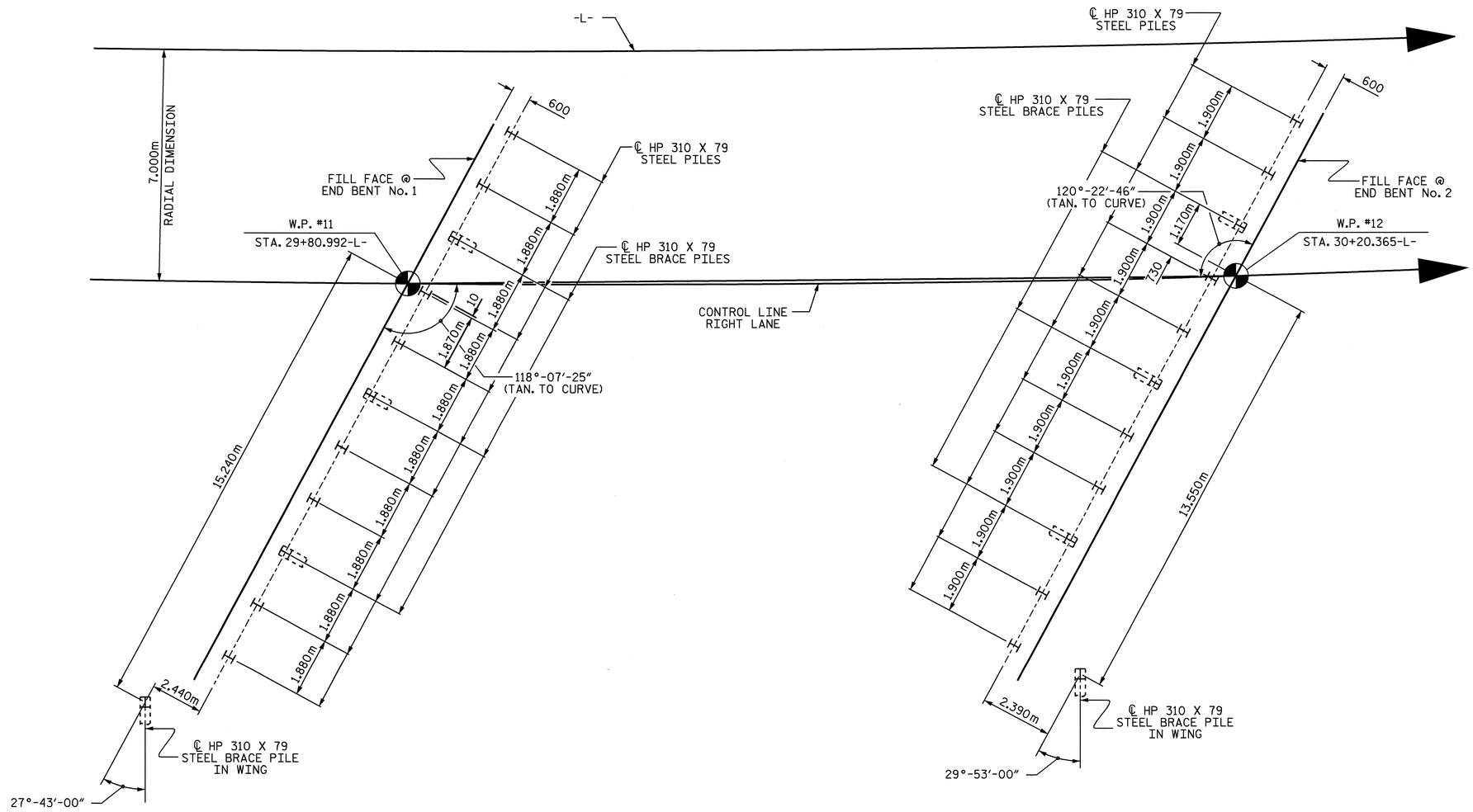

END BENT No. 1

END BENT No. 2

FOUNDATION LAYOUT

DIMENSIONS LOCATING PILES ARE SHOWN TO THE PILE CENTERLINE

END BENT BRACE PILES ARE BATTERED 250:1000

NOTES

DRIVE PILES AT END BENT No. 1 AND END BENT No. 2 TO A REQUIRED BEARING CAPACITY OF 1260 KILONEWTONS PER PILE. THE REQUIRED BEARING CAPACITY IS EQUAL TO THE ALLOWABLE BEARING CAPACITY WITH A MINIMUM FACTOR OF SAFETY OF TWO.

THE ALLOWABLE BEARING CAPACITY FOR PILES AT END BENT No. 1 AND END BENT No. 2 IS 630 KILONEWTONS PER PILE.

PROJECT NO. R-2301A
JONES/CRAVEN COUNTY
STATION: 30+04.517-L-

SHEET 2 OF 4

NORTH CAROLINA PROFESSIONAL SEAL 20125 ENGINEER MARSHALL B. CHEEK, JR.
9-5-08

STATE OF NORTH CAROLINA
DEPARTMENT OF TRANSPORTATION
RALEIGH

GENERAL DRAWING
FOR BRIDGE ON US 17 BYPASS
OVER SR 1224 BETWEEN
US 17 AND US 70
RIGHT LANE

REVISIONS						SHEET NO.
NO.	BY:	DATE:	NO.	BY:	DATE:	S-94
1			3			TOTAL SHEETS
2			4			176

STR. #4

DRAWN BY : R. G. EMERSON DATE : 06/08
CHECKED BY : M. G. CHEEK DATE : 07/08

05-SEP-2008 11:32
r:\structures\finalplans\Str #4\R2301A_sd_FL_str4.dgn
lmurphy

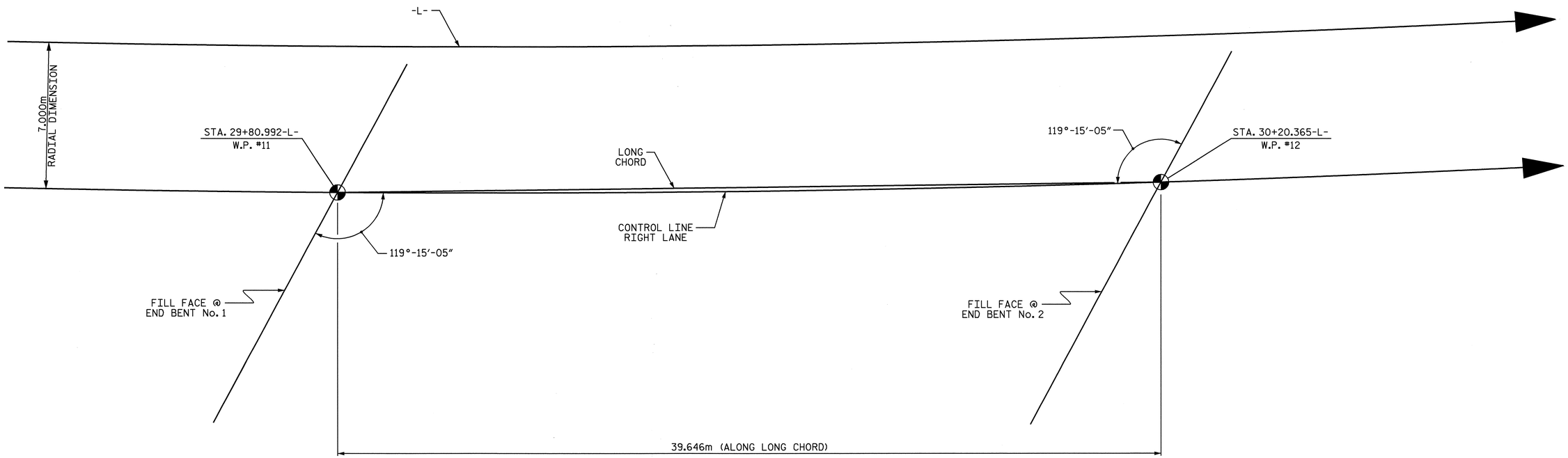

LONG CHORD LAYOUT

PROJECT NO. R-2301A
JONES/CRAVEN COUNTY
STATION: 30+04.517-L-

SHEET 3 OF 4

NORTH CAROLINA PROFESSIONAL SEAL 20125 ENGINEER MARSHALL G. CHEEK, JR.
9-3-08

STATE OF NORTH CAROLINA
DEPARTMENT OF TRANSPORTATION
RALEIGH

GENERAL DRAWING
FOR BRIDGE ON US 17 BYPASS
OVER SR 1224 BETWEEN
US 17 AND US 70

RIGHT LANE

REVISIONS						SHEET NO.
NO.	BY:	DATE:	NO.	BY:	DATE:	S-95
1			3			TOTAL SHEETS
2			4			176

DRAWN BY : R. G. EMERSON DATE : 06/08
CHECKED BY : M. G. CHEEK DATE : 06/08

06-AUG-2008 12:00
r:\structures\remerson\str_4\r2301a_sd_lc_str_4.dgn
lmurphy

STR. #4

BENCH MARK 23 : RR SPIKE IN POWER POLE NUMBER RSC24, 39.157' LEFT OF STA. 30+39.586-L-, ELEV. 12.083

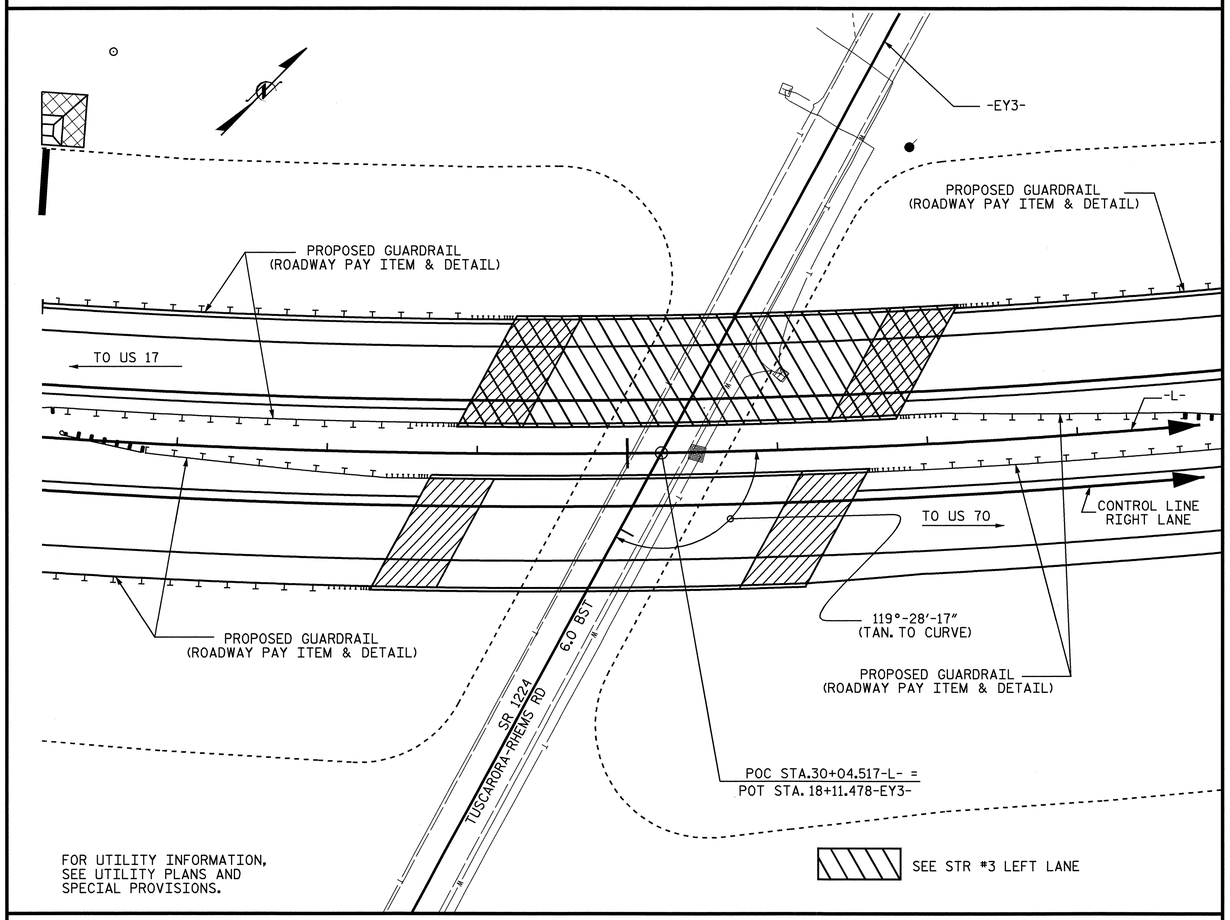

FOR UTILITY INFORMATION,
SEE UTILITY PLANS AND
SPECIAL PROVISIONS.

LOCATION SKETCH

THE CONTRACTOR SHALL PROVIDE INDEPENDENT ASSURANCE SAMPLES OF REINFORCING STEEL AS FOLLOWS: FOR PROJECTS REQUIRING UP TO 360,000 kg OF REINFORCING STEEL, ONE 760mm SAMPLE OF EACH SIZE BAR USED, AND FOR PROJECTS REQUIRING OVER 360,000 kg OF REINFORCING STEEL, TWO 760mm SAMPLES OF EACH SIZE BAR USED. THE BARS FROM WHICH THE SAMPLES ARE TAKEN MUST THEN BE SPLICED WITH REPLACEMENT BARS OF THE SIZE AND LENGTH OF THE SAMPLE PLUS A MINIMUM LAP SPLICE OF THIRTY BAR DIAMETERS.

NOTES

ALL DIMENSIONS ARE IN MILLIMETERS UNLESS OTHERWISE NOTED.

ALL ELEVATIONS ARE IN METERS.

FOR OTHER DESIGN DATA AND GENERAL NOTES, SEE SHEET SNSM.

ALL STRUCTURAL STEEL SHALL BE AASHTO M270 GRADE 345W AND PAINTED IN ACCORDANCE WITH SYSTEM 4 OF ARTICLE 442-7 OF THE STANDARD SPECIFICATIONS UNLESS OTHERWISE NOTED ON THE PLANS.

REMOVABLE FORMS MAY BE USED IN LIEU OF METAL STAY-IN-PLACE FORMS IN ACCORDANCE WITH ARTICLE 420-3 OF THE STANDARD SPECIFICATIONS.

FOR MAINTENANCE AND PROTECTION OF TRAFFIC BENEATH PROPOSED STRUCTURE, SEE SPECIAL PROVISIONS.

NEEDLE BEAMS WILL NOT BE ALLOWED UNLESS OTHERWISE CALLED FOR ON THE PLANS OR APPROVED BY THE ENGINEER.

FOR SUBMITTAL OF WORKING DRAWINGS, SEE SPECIAL PROVISIONS.

FOR METRIC STRUCTURAL STEEL, SEE SPECIAL PROVISIONS.

FOR FALSEWORK AND FORMWORK, SEE SPECIAL PROVISIONS.

ASSUMED LIVE LOAD = MS18 OR ALTERNATE LOADING, EXCEPT THAT THE GIRDERS HAVE BEEN DESIGNED FOR MS22.5.

THIS BRIDGE HAS BEEN DESIGNED BY THE STRENGTH DESIGN METHOD AS SPECIFIED IN AASHTO STANDARD SPECIFICATIONS.

THIS BRIDGE HAS BEEN DESIGNED IN ACCORDANCE WITH THE REQUIREMENTS OF THE AASHTO STANDARD SPECIFICATIONS FOR SEISMIC DESIGN OF HIGHWAY BRIDGES FOR SEISMIC PERFORMANCE CATEGORY A.

FOR GROUT FOR STRUCTURES, SEE SPECIAL PROVISIONS.

FOR CRANE SAFETY, SEE SPECIAL PROVISIONS.

FOR ADHESIVELY ANCHORED BOLTS OR DOWELS, SEE SPECIAL PROVISIONS.

TOTAL BILL OF MATERIAL

	REINFORCED CONCRETE DECK SLAB	GROOVING BRIDGE FLOORS	CLASS A CONCRETE	BRIDGE APPROACH SLABS	REINFORCING STEEL	STRUCTURAL STEEL	HP 310 X 79 STEEL PILES		PILE REDRIVES	CONCRETE BARRIER RAIL	100mm CONCRETE SLOPE PROTECTION	ELASTOMERIC BEARINGS	EVAZOTE JOINT SEALS
	SQ. METERS	SQ. METERS	CU. METERS	LUMP SUM	kg	APPROX. kg	NO.	METERS	EACH	METERS	SQ. METERS	LUMP SUM	LUMP SUM
SUPERSTRUCTURE	597.9	711.6		LUMP SUM		102150				77.757		LUMP SUM	LUMP SUM
END BENT NO. 1			39.0		3035		12	228.0	4		306		
END BENT NO. 2			39.4		3119		12	228.0	4		363		
TOTAL	597.9	711.6	78.4	LUMP SUM	6154	102150	24	456.0	8	77.757	669	LUMP SUM	LUMP SUM

PROJECT NO. R-2301A
JONES/CRAVEN COUNTY
STATION: 30+04.517-L-

SHEET 4 OF 4

STATE OF NORTH CAROLINA
DEPARTMENT OF TRANSPORTATION
RALEIGH

GENERAL DRAWING
FOR BRIDGE ON US17 BYPASS
OVER SR 1224 BETWEEN
US17 AND US70

RIGHT LANE

NORTH CAROLINA PROFESSIONAL SEAL 20125 ENGINEER MARSHALL G. CHEEK, JR.
9-5-08

REVISIONS						SHEET NO.
NO.	BY:	DATE:	NO.	BY:	DATE:	S-96
1			3			TOTAL SHEETS
2			4			176

DRAWN BY : L.L. MURPHY DATE : 10-07
CHECKED BY : M.G. CHEEK DATE : 11-07

02-SEP-2008 12:44
r:\structures\finalplans\Str #4\R2301A_sd_GD_STR #4.dgn
lmurphy

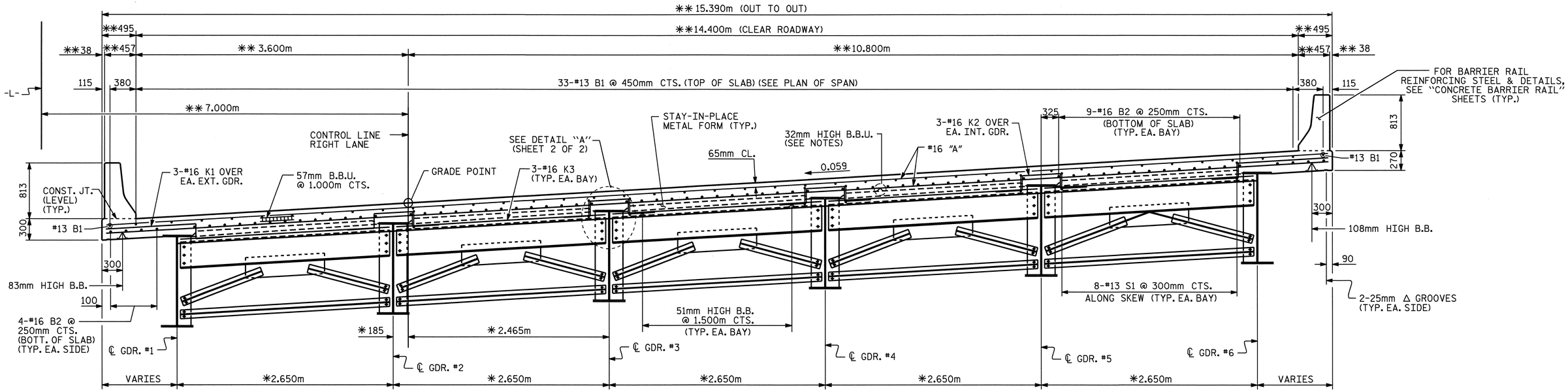

TYPICAL SECTION

(SHOWING END BENT DIAPHRAGM)

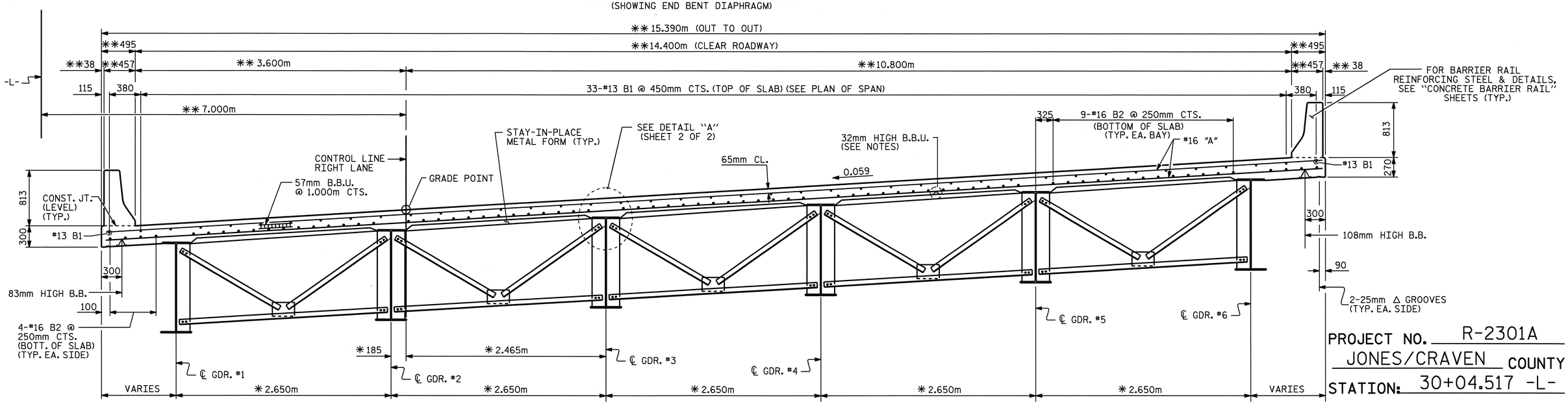

TYPICAL SECTION

(SHOWING INTERMEDIATE DIAPHRAGMS)

PROJECT NO. R-2301A

JONES/CRAVEN COUNTY

STATION: 30+04.517 -L-

SHEET 1 OF 2

* DIMENSIONS RADIAL THROUGH WORKPOINTS.
** RADIAL DIMENSIONS

NORTH CAROLINA PROFESSIONAL SEAL 20125 ENGINEER MARSHALL GUSHEE, JR.
9-5-08

STATE OF NORTH CAROLINA
DEPARTMENT OF TRANSPORTATION
RALEIGH

SUPERSTRUCTURE
TYPICAL SECTIONS
RIGHT LANE

REVISIONS						SHEET NO.
NO.	BY:	DATE:	NO.	BY:	DATE:	S-97
1			3			TOTAL SHEETS
2			4			176

STR. #4

DRAWN BY : V.X. NGUYEN DATE : 07-22-08
CHECKED BY : D. HODGE DATE : 7-08

05-SEP-2008 07:07
r:\structures\finalplans\str #3\R2301A_sd_TS.dgn
dahodge

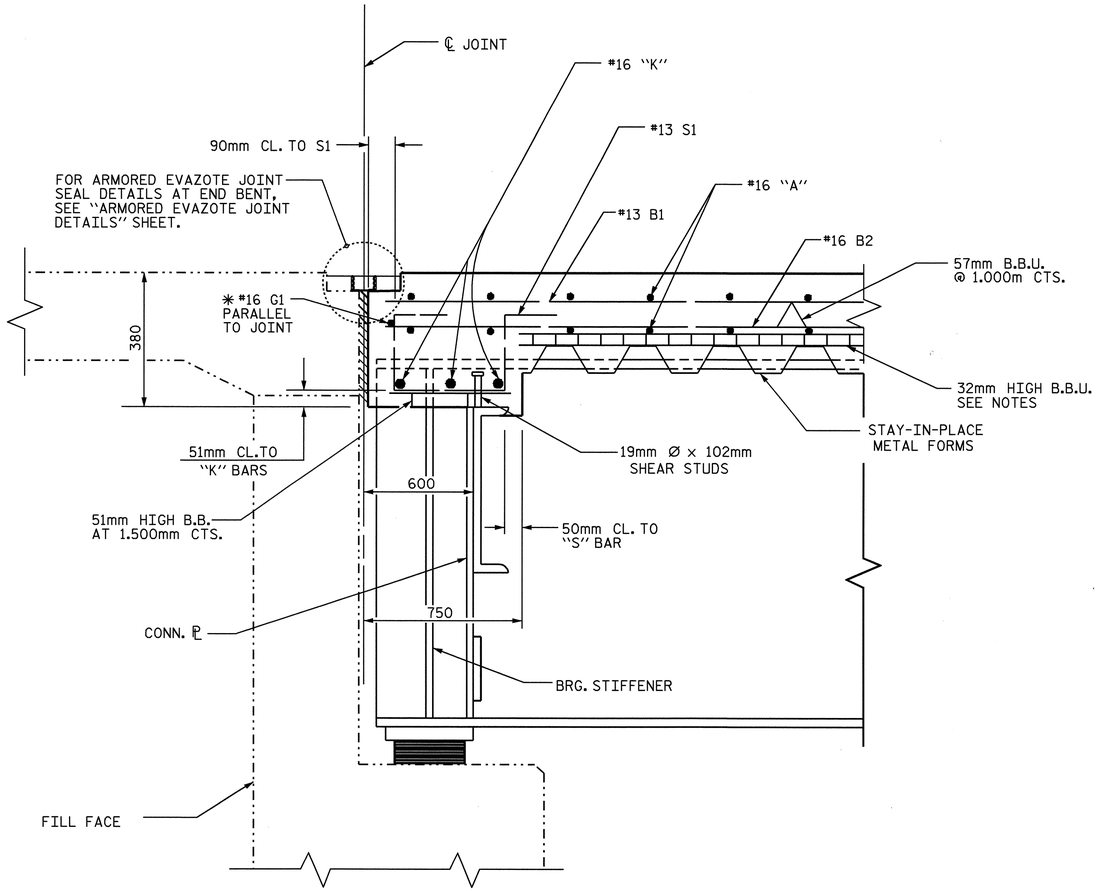

SECTION @ END BENT

✱#16 "G" BAR MAY BE SHIFTED SLIGHTLY, AS NECESSARY, TO CLEAR DIAPHRAGM AND REINFORCING STEEL.

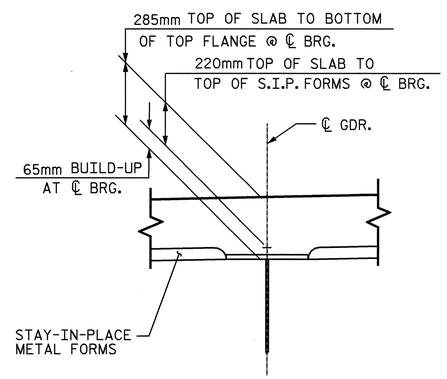

DETAIL "A"

NOTES

PROVIDE 32mm HIGH BEAM BOLSTERS UPPER AT 1.2m CTS. ATOP THE METAL STAY-IN-PLACE FORMS TO SUPPORT THE BOTTOM MAT OF 'A' BARS. WHEN USING REMOVABLE FORMS, PROVIDE CONTINUOUS HIGH CHAIRS FOR METAL DECK (C.H.C.M.) @ 1.2m CTS. WITH A HEIGHT TO SUPPORT THE BOTTOM MAT OF 'A' BARS A CLEAR DISTANCE OF 65mm ABOVE THE TOP OF THE REMOVABLE FORM.

THE CONTRACTOR MAY, WHEN NECESSARY, PROPOSE A SCHEME FOR AVOIDING INTERFERENCE BETWEEN METAL STAY-IN-PLACE FORM SUPPORTS OR FORMS AND GIRDER STIFFENERS OR CONNECTOR PLATES. THE PROPOSAL SHALL BE INDICATED, AS APPROPRIATE, ON EITHER THE STEEL WORKING DRAWINGS OR THE METAL STAY-IN- PLACE FORM WORKING DRAWINGS.

BARRIER RAIL SHALL NOT BE CAST UNTIL ALL SLAB CONCRETE IN THE UNIT HAS BEEN CAST AND HAS REACHED A MINIMUM COMPRESSIVE STRENGTH OF 20.7 MPa.

THE CONTRACTOR'S ATTENTION IS CALLED TO THE FOLLOWING PROCEDURES TO ACCOMMODATE GIRDER TRANSLATION AND END ROTATION:

1. ONCE THE DECK HAS CURED, THE GIRDERS SHALL BE JACKED AND THE ANCHOR BOLTS, SOLE PLATE AND ELASTOMERIC BEARING SLOTS SHALL BE CENTERED AS NEARLY AS PRACTICAL ABOUT THE BEARING STIFFENER. THIS OPERATION SHALL BE PERFORMED AT APPROXIMATELY 16° C.
2. AFTER CENTERING THE SLOTS ABOUT THE ANCHOR BOLTS, THE SOLE PLATES SHALL BE FIELD WELDED TO THE GIRDER FLANGES AND ANCHOR BOLTS GROUTED.

THE CONTRACTOR MAY PROPOSE ALTERNATE METHODS PROVIDED DETAILS ARE SUBMITTED TO THE ENGINEER FOR REVIEW AND APPROVAL.

DIRECTION OF CASTING DECK CONCRETE SHALL BE FROM THE FIXED BEARING END TOWARD THE EXPANSION BEARING END OF THE SPAN.

PROJECT NO. R-2301A
JONES/CRAVEN COUNTY
STATION: 30+04.517 -L-

SHEET 2 OF 2

STATE OF NORTH CAROLINA
DEPARTMENT OF TRANSPORTATION
RALEIGH

SUPERSTRUCTURE
TYPICAL SECTIONS
RIGHT LANE

NORTH CAROLINA PROFESSIONAL SEAL 20125 ENGINEER MARSHALL G. CHEEK, JR.
9-3-08

REVISIONS						SHEET NO.
NO.	BY:	DATE:	NO.	BY:	DATE:	S-98
1			3			TOTAL SHEETS
2			4			176

DRAWN BY : V.X. NGUYEN DATE : 07-22-08
CHECKED BY : D. HODGE DATE : 7-08

04-AUG-2008 09:22
r:\structures\vnguyen\microstation\r2301a\R2301A_sd_TS.dgn
vnguyen

STR. #4

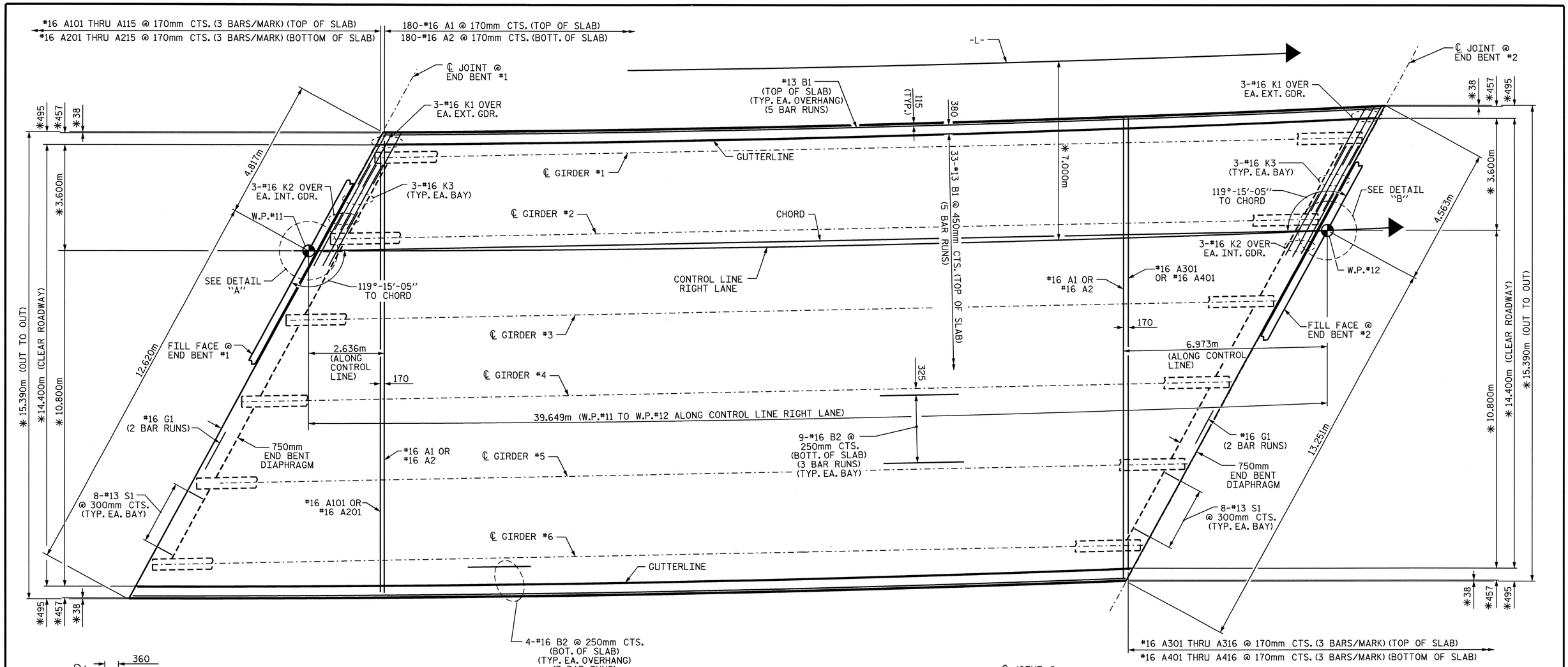

PLAN OF SPAN A

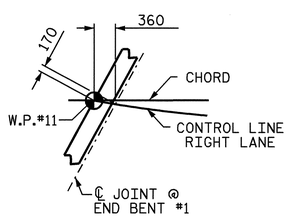

DETAIL "A"

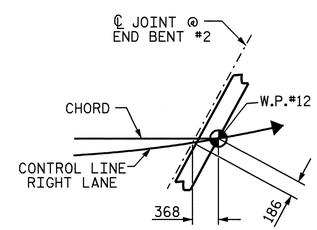

DETAIL "B"

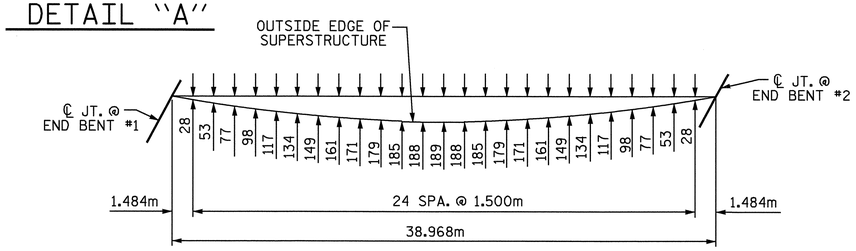

ARC OFFSETS

LEFT SIDE

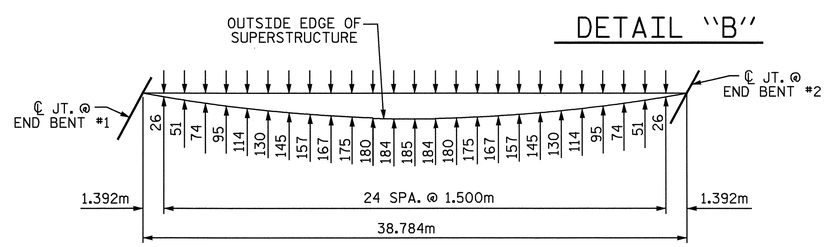

ARC OFFSETS

RIGHT SIDE

PROJECT NO. R-2301A
JONES/CRAVEN COUNTY
STATION: 30+04.517 -L-

STATE OF NORTH CAROLINA
DEPARTMENT OF TRANSPORTATION
RALEIGH

SUPERSTRUCTURE
PLAN OF SPAN A
RIGHT LANE

NORTH CAROLINA PROFESSIONAL SEAL 20125 ENGINEER MARSHALL G. CREEK, JR.
9-3-08

REVISIONS						SHEET NO.
NO.	BY:	DATE:	NO.	BY:	DATE:	S-99
1			3			TOTAL SHEETS
2			4			176

STR. #4

DRAWN BY : V.X. NGUYEN DATE : 12-17-07
CHECKED BY : D. HODGE DATE : 7-08

03-SEP-2008 12:04
r:\structures\finalplans\str #3\R2301A_sd_S*.dgn
vnguyen

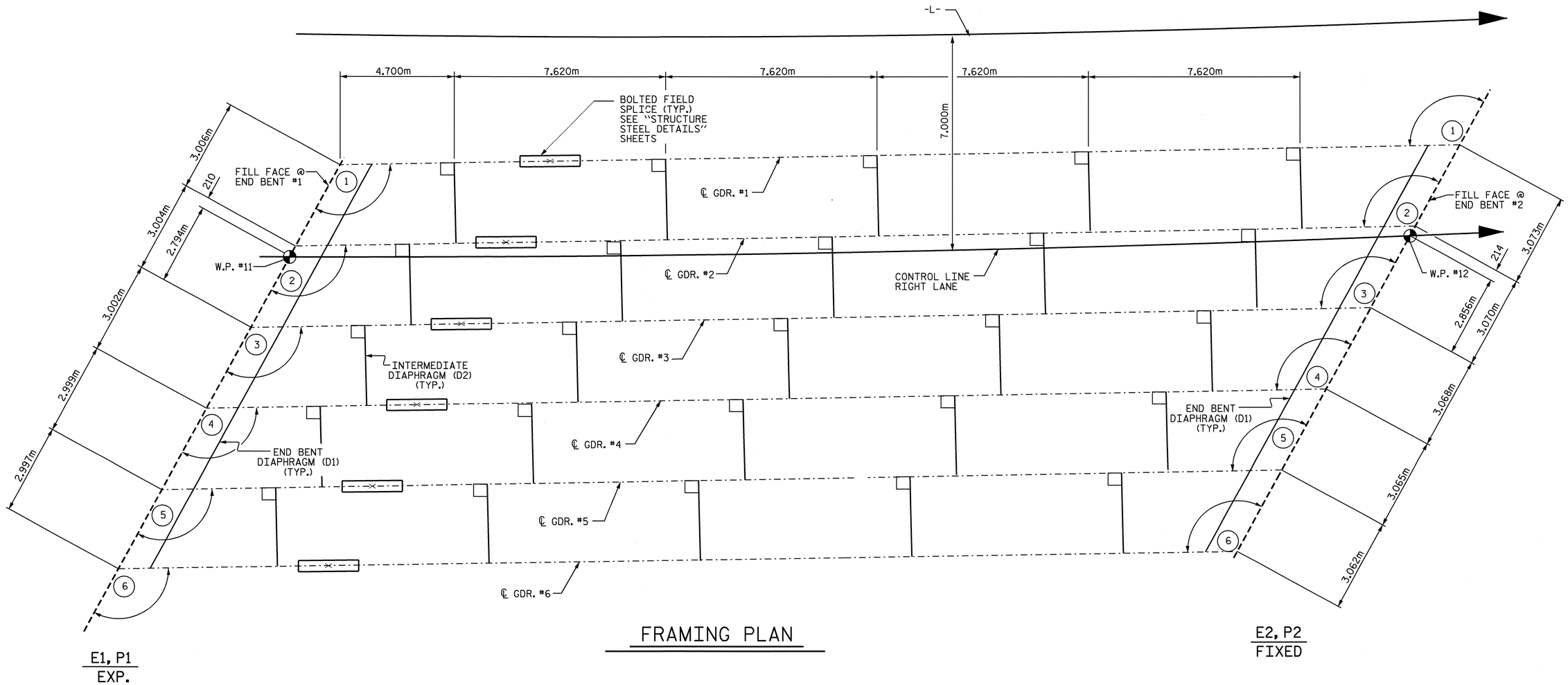

FRAMING PLAN

NOTES

ALL STRUCTURAL STEEL SHALL BE AASHTO M270 GRADE 345W AND PAINTED IN ACCORDANCE WITH SYSTEM 4 OF ARTICLE 442-7 OF THE STANDARD SPECIFICATIONS UNLESS OTHERWISE NOTED ON THE PLANS.

ALL DIMENSIONS SHOWN ARE HORIZONTAL OR VERTICAL, UNLESS OTHERWISE NOTED.

ALL FIELD CONNECTIONS TO BE 22.23mm DIA. HIGH STRENGTH BOLTS UNLESS OTHERWISE NOTED.

SHOP SPLICES ARE PERMITTED TO LIMIT THE MAXIMUM REQUIRED FLANGE PIECE LENGTHS TO 18 METERS AND WEB PIECE LENGTHS TO 14 METERS. PERMITTED FLANGE AND WEB SHOP SPLICES SHALL NOT BE LOCATED WITHIN 4.5 METERS OF MAXIMUM DEAD LOAD DEFLECTION (NOR WITHIN 4.5 METERS OF INTERMEDIATE BEARINGS OF CONTINUOUS UNITS). KEEP 600mm MINIMUM BETWEEN WEB AND FLANGE SHOP SPLICES. KEEP 150mm MINIMUM BETWEEN CONNECTOR PLATE OR TRANSVERSE STIFFENER WELDS AND WEB OR FLANGE SHOP SPLICES.

STUDS ON GIRDERS MAY BE SHIFTED UP TO 25mm IF NECESSARY TO CLEAR FLANGE SPLICE WELD.

END OF GIRDERS SHALL BE PLUMB.

TENSION ON THE AASHTO M164 BOLTS SHALL BE CALIBRATED USING DIRECT TENSION INDICATOR WASHERS IN ACCORDANCE WITH ARTICLE 440-10 OF THE STANDARD SPECIFICATIONS.

A CHARPY V-NOTCH TEST IS REQUIRED FOR WEB PLATES, BOTTOM FLANGE PLATES, BOTTOM FLANGE SPLICE PLATES AND WEB SPLICE PLATES FOR ALL GIRDERS. IN ACCORDANCE WITH ARTICLE 1072-9 OF THE STANDARD SPECIFICATIONS.

BEARING STIFFENER MAY REQUIRE COPING IF WIDER THAN BOTTOM FLANGE TO AVOID INTERFERENCE WITH THE ANCHOR BOLT.

FOR HIGH STRENGTH BOLTS, SEE SPECIAL PROVISIONS.

CHORD ANGLES	
@ FILL FACE END BENT 1	@ FILL FACE END BENT 2
1 119°-20'-32"	1 119°-20'-32"
2 119°-15'-26"	2 119°-15'-26"
3 119°-10'-23"	3 119°-10'-23"
4 119°-05'-22"	4 119°-05'-22"
5 119°-00'-22"	5 119°-00'-22"
6 118°-55'-24"	6 118°-55'-24"

DRAWN BY : V.X. NGUYEN DATE : 7-3-08
CHECKED BY : M.G. CHEEK DATE : 7-08

PROJECT NO. R-2301A
JONES/CRAVEN COUNTY
STATION: 30+04.517 -L-

STATE OF NORTH CAROLINA
DEPARTMENT OF TRANSPORTATION
RALEIGH

FRAMING PLAN
RIGHT LANE

NORTH CAROLINA PROFESSIONAL SEAL 20125 ENGINEER MARSHALL G. CHEEK, JR.
9-3-08

REVISIONS						SHEET NO.
NO.	BY:	DATE:	NO.	BY:	DATE:	S-100
1			3			TOTAL SHEETS
2			4			176

STR. #4

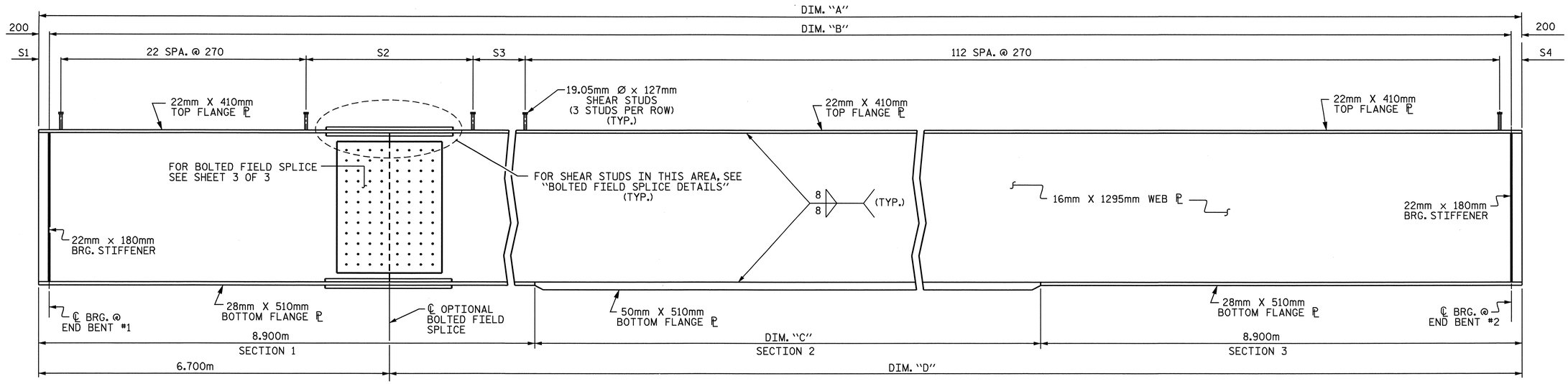

GIRDER ELEVATION

CONNECTOR PLATES NOT SHOWN FOR CLARITY

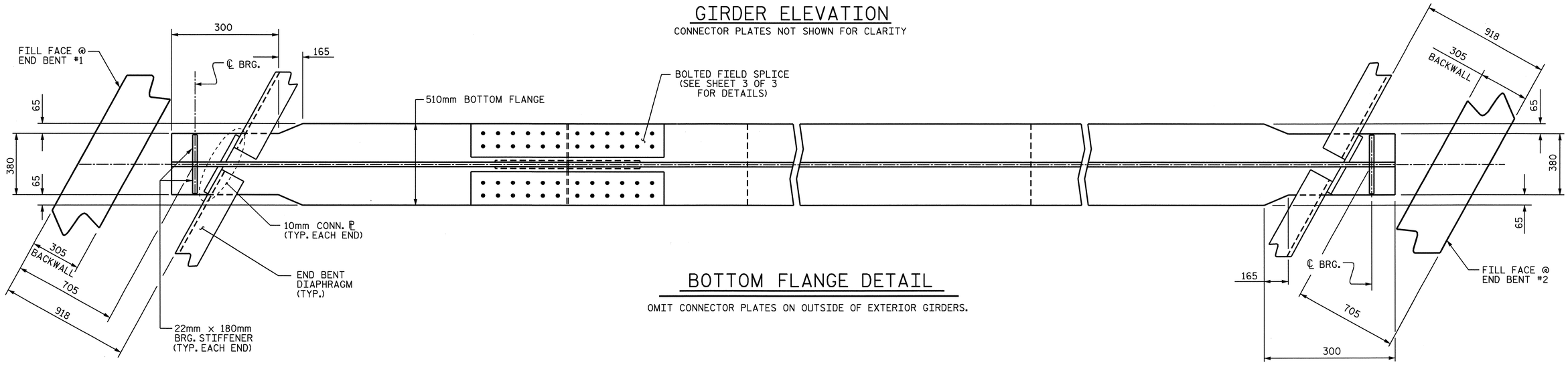

BOTTOM FLANGE DETAIL

OMIT CONNECTOR PLATES ON OUTSIDE OF EXTERIOR GIRDERS.

PROJECT NO. R-2301A

JONES/CRAVEN COUNTY

STATION: 30+04.517 -L-

SHEET 1 OF 3

GIRDER DIMENSIONS

GIRDER	DIM. "A"	DIM. "B"	DIM. "C"	DIM. "D"
1	38.464	38.064	20.664	31.764
2	38.432	38.032	20.632	31.732
3	38.401	38.001	20.601	31.701
4	38.370	37.970	20.570	31.670
5	38.339	37.939	20.539	31.639
6	38.309	37.909	20.509	31.609

NOTE : ALL GIRDER DIMENSIONS IN THE ABOVE TABLE ARE SHOWN IN METERS.

SHEAR STUD SPACING RIGHT LANE

GIRDER	S1	S2	S3	S4
GIRDER 1	160	1.210m	3 SPA. @ 250	164
GIRDER 2	160	1.180m	3 SPA. @ 250	162
GIRDER 3	150	1.200m	3 SPA. @ 240	151
GIRDER 4	150	1.170m	3 SPA. @ 240	150
GIRDER 5	140	1.190m	3 SPA. @ 230	139
GIRDER 6	140	1.190m	3 SPA. @ 220	139

NOTE : ALL DIMENSIONS IN THE ABOVE TABLE ARE SHOWN IN MILLIMETERS EXCEPT AS NOTED.

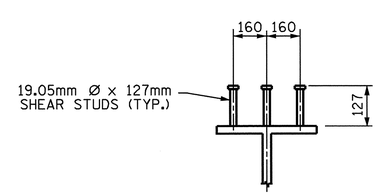

SHEAR STUD DETAILS

TYPICAL ALL GIRDERS EXCEPT AT FIELD SPLICE LOCATION.

NORTH CAROLINA PROFESSIONAL SEAL 20125 ENGINEER MARSHALL G. CHEEK, JR.
9-3-08

STATE OF NORTH CAROLINA
DEPARTMENT OF TRANSPORTATION
RALEIGH

SUPERSTRUCTURE

STRUCTURAL STEEL DETAILS
RIGHT LANE

REVISIONS						SHEET NO.
NO.	BY:	DATE:	NO.	BY:	DATE:	S-101
1			3			TOTAL SHEETS
2			4			176

STR. #4

DRAWN BY : V.X. NGUYEN DATE : 5-15-08
CHECKED BY : M.G. CHEEK DATE : 6-30-08

03-SEP-2008 11:56
r:\structures\finalplans\str #3\r2301a_SD_STR#3&4_SS.dgn
vnguyen

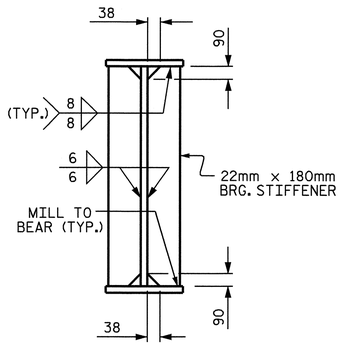

BEARING STIFFENER

BEARING STIFFENER MAY REQUIRE COPING IF WIDER THAN BOTTOM FLANGE TO AVOID INTERFERENCE WITH THE ANCHOR BOLT.

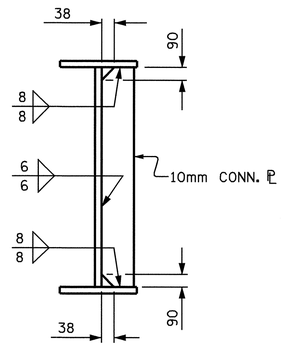

CONNECTOR PLATE

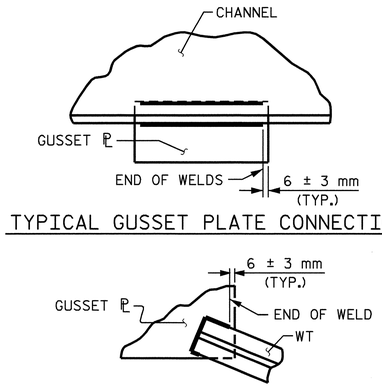

TYPICAL GUSSET PLATE CONNECTION

TYPICAL "TEE" TO GUSSET PLATE CONNECTION

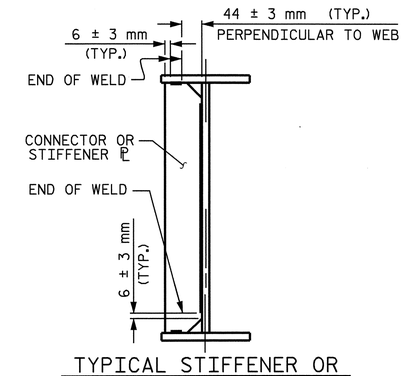

TYPICAL STIFFENER OR CONNECTOR PLATE CONNECTIONS

WELD TERMINATION DETAILS

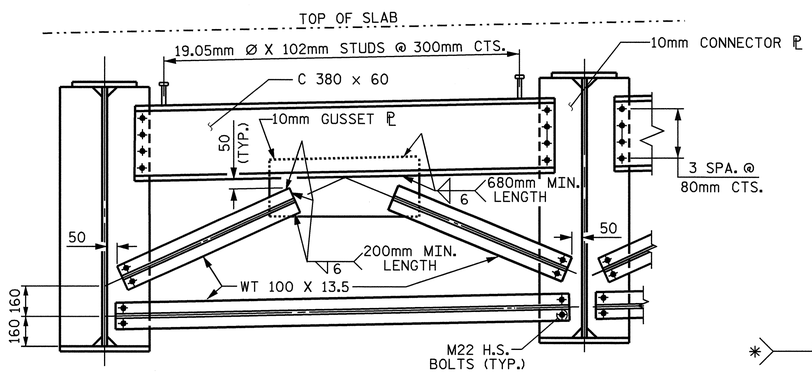

TYPICAL END BENT DIAPHRAGM

(D1)

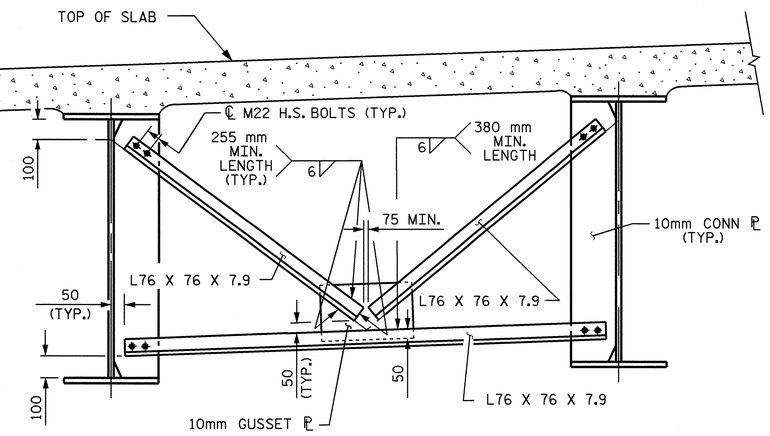

TYPICAL INTERMEDIATE DIAPHRAGM

(D2)

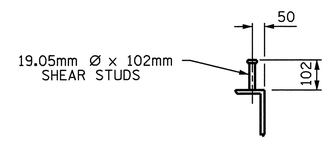

SHEAR STUD DETAILS

(@ CHANNELS)

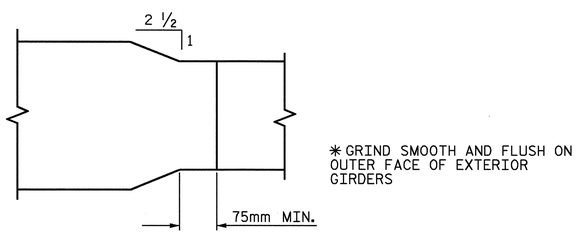

✱ GRIND SMOOTH AND FLUSH ON OUTER FACE OF EXTERIOR GIRDERS

PLAN - FLANGE SPLICE

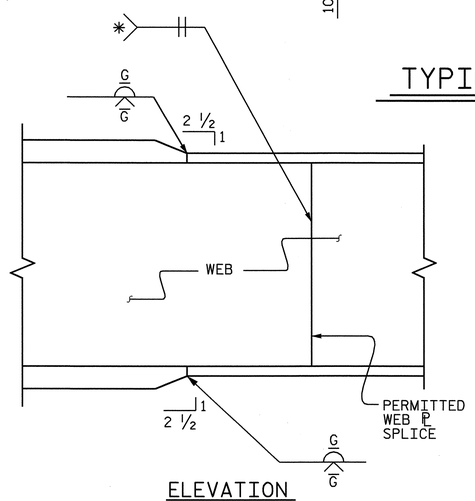

ELEVATION

TYPICAL FLANGE AND WEB BUTT JOINT

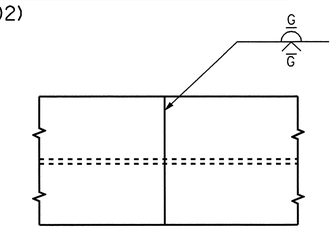

PLAN OF FLANGE

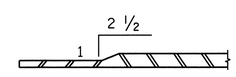

SECTION THRU FLANGE

PROJECT NO. R-2301A
JONES/CRAVEN COUNTY
STATION: 30+04.517 -L-

SHEET 2 OF 3

STATE OF NORTH CAROLINA
DEPARTMENT OF TRANSPORTATION
RALEIGH

SUPERSTRUCTURE

STRUCTURAL STEEL DETAILS
RIGHT LANE

NORTH CAROLINA PROFESSIONAL SEAL 20125 ENGINEER MARSHALL G. CHEEK, JR.
9-3-08

REVISIONS						SHEET NO.
NO.	BY:	DATE:	NO.	BY:	DATE:	S-102
1			3			TOTAL SHEETS
2			4			176

STR. #4

DRAWN BY : V.X. NGUYEN DATE : 5-15-08
CHECKED BY : M.G. CHEEK DATE : 6-30-08

03-SEP-2008 11:59
r:\structures\finalplans\str #3\r2301a_SD_STR#3&4_SS.dgn
vnguyen

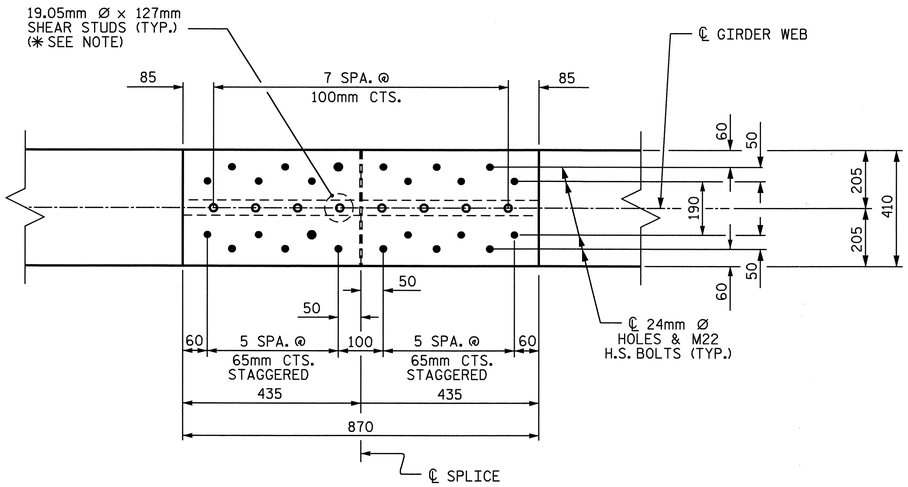

PLAN (TOP OF TOP FLANGE)

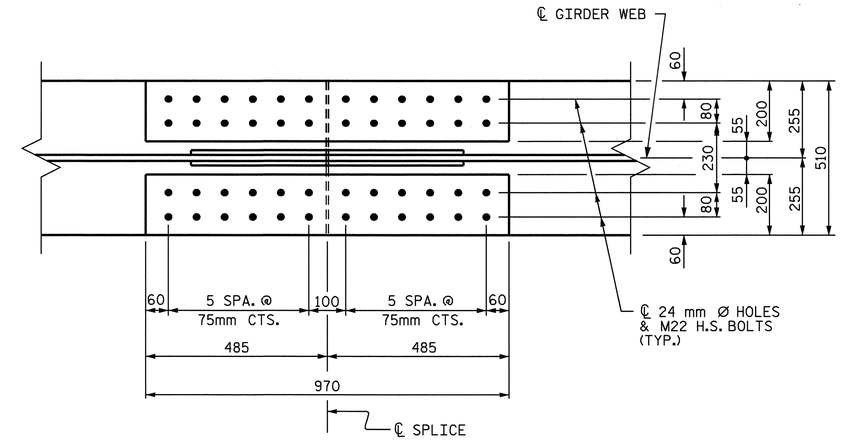

PLAN (TOP OF BOTTOM FLANGE)

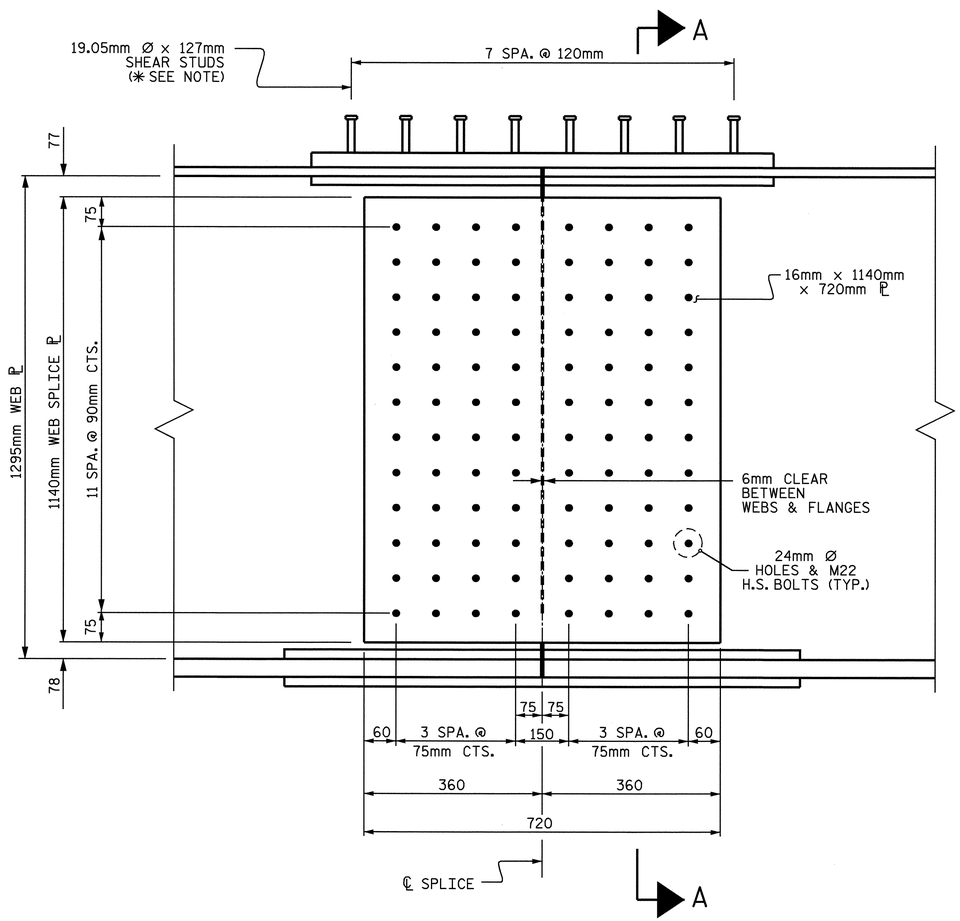

ELEVATION

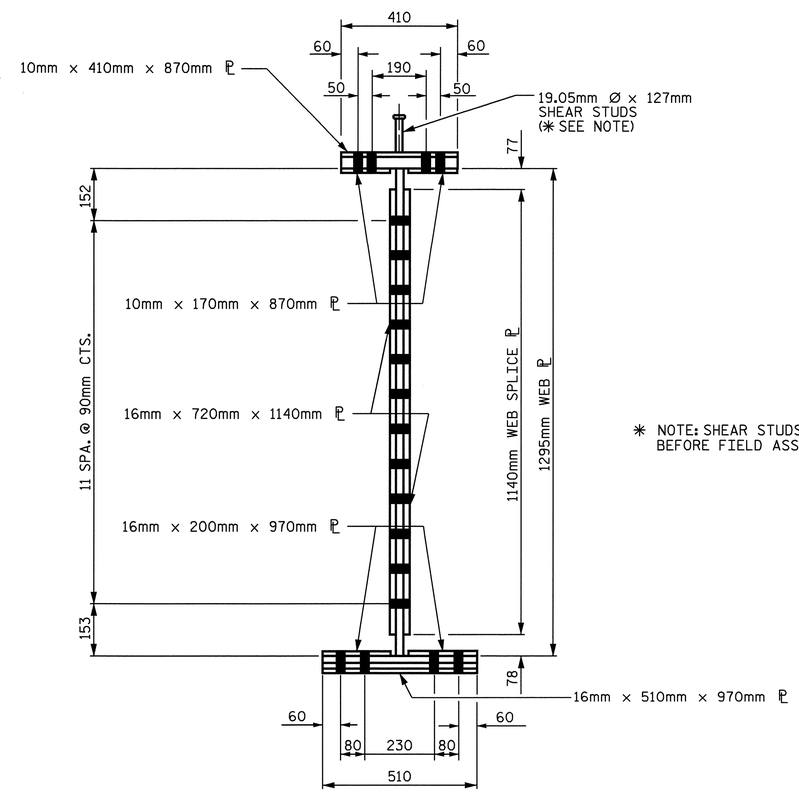

SECTION A-A

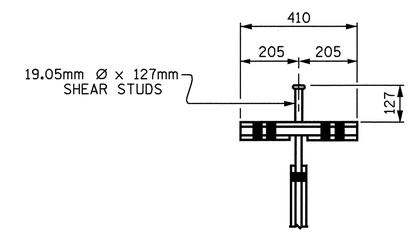

SHEAR STUD DETAIL FOR TOP FLANGE SPLICE PLATE

✳ NOTE: SHEAR STUDS ARE TO BE SHOP WELDED ON TOP OF PLATE BEFORE FIELD ASSEMBLY

BOLTED FIELD SPLICE DETAILS

TYPICAL EACH GIRDER

PROJECT NO. R-2301A
JONES/CRAVEN COUNTY
STATION: 30+04.517 -L-

SHEET 3 OF 3

STATE OF NORTH CAROLINA
DEPARTMENT OF TRANSPORTATION
RALEIGH

SUPERSTRUCTURE

STRUCTURAL STEEL DETAILS
RIGHT LANE

NORTH CAROLINA PROFESSIONAL SEAL 20125 ENGINEER MARSHALL G. CHEEK, JR.
8-3-08

REVISIONS						SHEET NO.
NO.	BY:	DATE:	NO.	BY:	DATE:	S-103
1			3			TOTAL SHEETS
2			4			176

STR. #4

DRAWN BY : V.X. NGUYEN DATE : 5-15-08
CHECKED BY : M.G. CHEEK DATE : 6-30-08

22-JUL-2008 10:39
r:\structures\vnguyen\mlcrostation\r2301a\r2301a_SD_STR*3&4_SS.dgn
vnguyen

DEAD LOAD DEFLECTION TABLE FOR GIRDERS

GIRDER 1

@ TWENTIETH POINTS BETWEEN ℄ BEARINGS	℄ BRG.	.05	.10	.15	.20	.25	.30	.35	.40	.45	.50	.55	.60	.65	.70	.75	.80	.85	.90	.95	℄ BRG.
DEFLECTION DUE TO WEIGHT OF GIRDER	0.000	0.006	0.012	0.018	0.023	0.027	0.031	0.034	0.036	0.037	0.037	0.037	0.036	0.034	0.031	0.027	0.023	0.018	0.012	0.006	0.000
DEFLECTION DUE TO WEIGHT OF SLAB ✳	0.000	0.022	0.042	0.062	0.079	0.094	0.107	0.117	0.125	0.129	0.131	0.129	0.125	0.117	0.107	0.094	0.079	0.062	0.042	0.022	0.000
DEFLECTION DUE TO WEIGHT OF BARRIER RAIL	0.000	0.004	0.008	0.012	0.015	0.018	0.020	0.022	0.024	0.025	0.025	0.025	0.024	0.022	0.020	0.018	0.015	0.012	0.008	0.004	0.000
TOTAL DEAD LOAD DEFLECTION	0.000	0.032	0.062	0.092	0.117	0.139	0.158	0.173	0.185	0.191	0.193	0.191	0.185	0.173	0.158	0.139	0.117	0.092	0.062	0.032	0.000
VERTICAL CURVE ORDINATE	0.000	0.004	0.008	0.012	0.015	0.017	0.019	0.021	0.022	0.022	0.023	0.022	0.022	0.021	0.019	0.017	0.015	0.012	0.008	0.004	0.000
ORDINATE DUE TO SUPERELEVATION	0.000	-0.002	-0.004	-0.005	-0.007	-0.008	-0.009	-0.010	-0.010	-0.011	-0.011	-0.011	-0.010	-0.010	-0.009	-0.008	-0.007	-0.005	-0.004	-0.002	0.000
REQUIRED CAMBER	0	34	66	99	125	148	168	184	197	202	205	202	197	184	168	148	125	99	66	34	0

GIRDERS 2, 3, 4 & 5

@ TWENTIETH POINTS BETWEEN ℄ BEARINGS	℄ BRG.	.05	.10	.15	.20	.25	.30	.35	.40	.45	.50	.55	.60	.65	.70	.75	.80	.85	.90	.95	℄ BRG.
DEFLECTION DUE TO WEIGHT OF GIRDER	0.000	0.006	0.012	0.018	0.023	0.027	0.031	0.033	0.036	0.037	0.037	0.037	0.036	0.033	0.031	0.027	0.023	0.018	0.012	0.006	0.000
DEFLECTION DUE TO WEIGHT OF SLAB ✳	0.000	0.022	0.043	0.062	0.080	0.095	0.108	0.118	0.126	0.130	0.132	0.130	0.126	0.118	0.108	0.095	0.080	0.062	0.043	0.022	0.000
DEFLECTION DUE TO WEIGHT OF BARRIER RAIL	0.000	0.003	0.006	0.009	0.012	0.014	0.016	0.017	0.018	0.019	0.019	0.019	0.018	0.017	0.016	0.014	0.012	0.009	0.006	0.003	0.000
TOTAL DEAD LOAD DEFLECTION	0.000	0.031	0.061	0.089	0.115	0.136	0.155	0.168	0.180	0.186	0.188	0.186	0.180	0.168	0.155	0.136	0.115	0.089	0.061	0.031	0.000
VERTICAL CURVE ORDINATE	0.000	0.004	0.008	0.012	0.014	0.017	0.019	0.021	0.022	0.022	0.023	0.022	0.022	0.021	0.019	0.017	0.014	0.012	0.008	0.004	0.000
ORDINATE DUE TO SUPERELEVATION	0.000	-0.002	-0.004	-0.005	-0.007	-0.008	-0.009	-0.010	-0.010	-0.011	-0.011	-0.011	-0.010	-0.010	-0.009	-0.008	-0.007	-0.005	-0.004	-0.002	0.000
REQUIRED CAMBER	0	33	65	96	122	145	165	179	192	197	200	197	192	179	165	145	122	96	65	33	0

GIRDER 6

@ TWENTIETH POINTS BETWEEN ℄ BEARINGS	℄ BRG.	.05	.10	.15	.20	.25	.30	.35	.40	.45	.50	.55	.60	.65	.70	.75	.80	.85	.90	.95	℄ BRG.
DEFLECTION DUE TO WEIGHT OF GIRDER	0.000	0.006	0.012	0.017	0.022	0.027	0.030	0.033	0.035	0.036	0.037	0.036	0.035	0.033	0.030	0.027	0.022	0.017	0.012	0.006	0.000
DEFLECTION DUE TO WEIGHT OF SLAB ✳	0.000	0.022	0.043	0.063	0.080	0.096	0.109	0.119	0.127	0.131	0.133	0.131	0.127	0.119	0.109	0.096	0.080	0.063	0.043	0.022	0.000
DEFLECTION DUE TO WEIGHT OF BARRIER RAIL	0.000	0.004	0.008	0.012	0.015	0.018	0.020	0.022	0.024	0.024	0.025	0.024	0.024	0.022	0.020	0.018	0.015	0.012	0.008	0.004	0.000
TOTAL DEAD LOAD DEFLECTION	0.000	0.032	0.063	0.092	0.117	0.141	0.159	0.174	0.186	0.191	0.195	0.191	0.186	0.174	0.159	0.141	0.117	0.092	0.063	0.032	0.000
VERTICAL CURVE ORDINATE	0.000	0.004	0.008	0.011	0.014	0.016	0.018	0.020	0.021	0.022	0.022	0.022	0.021	0.020	0.018	0.016	0.014	0.011	0.008	0.004	0.000
ORDINATE DUE TO SUPERELEVATION	0.000	-0.002	-0.004	-0.005	-0.007	-0.008	-0.009	-0.010	-0.010	-0.010	-0.010	-0.010	-0.010	-0.010	-0.009	-0.008	-0.007	-0.005	-0.004	-0.002	0.000
REQUIRED CAMBER	0	34	67	98	124	149	168	184	197	203	207	203	197	184	168	149	124	98	67	34	0

✳ INCLUDES SLAB, BUILDUPS & STAY-IN-PLACE FORMS.
ALL VALUES ARE SHOWN IN METERS EXCEPT "REQUIRED CAMBER", WHICH IS GIVEN IN MILLIMETERS.

PROJECT NO. R-2301A
JONES/CRAVEN COUNTY
STATION: 30+04.517 -L-

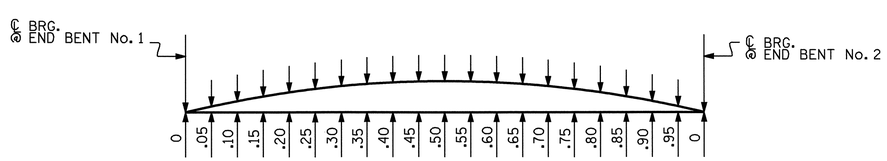

SPAN A

SCHEMATIC CAMBER ORDINATES

NOTE: FOR CAMBER @ 20TH POINTS, SEE TABLES.
SLOPE FOR THE ZERO CAMBER BASE LINE VARIES.

NORTH CAROLINA PROFESSIONAL SEAL 20125 ENGINEER MARSHALL G. CHEEK, JR.
9-8-08

STATE OF NORTH CAROLINA
DEPARTMENT OF TRANSPORTATION
RALEIGH

SUPERSTRUCTURE
DEAD LOAD DEFLECTIONS
RIGHT LANE

REVISIONS						SHEET NO.
NO.	BY:	DATE:	NO.	BY:	DATE:	S-104
1			3			TOTAL SHEETS
2			4			176

DRAWN BY : M. POOLE DATE : 06-08
CHECKED BY : M. G. CHEEK DATE : 06-08

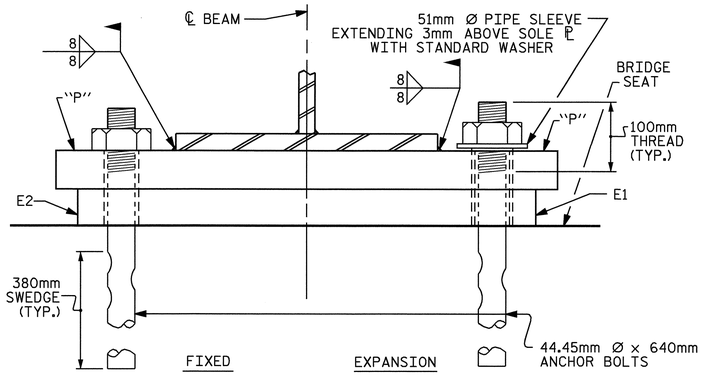

END VIEW

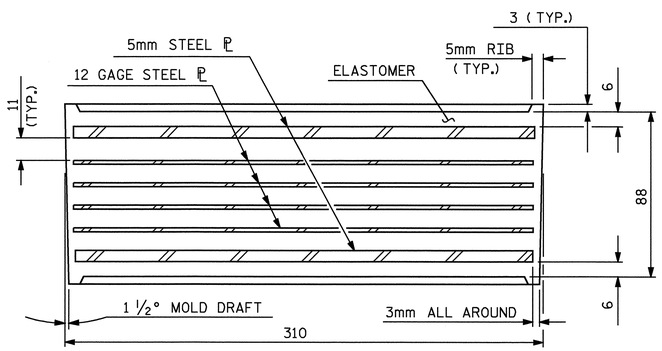

TYPICAL SECTION OF ELASTOMERIC BEARING

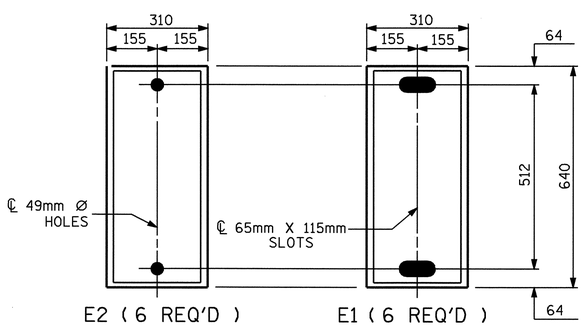

PLAN VIEW OF ELASTOMERIC BEARING

TYPE V

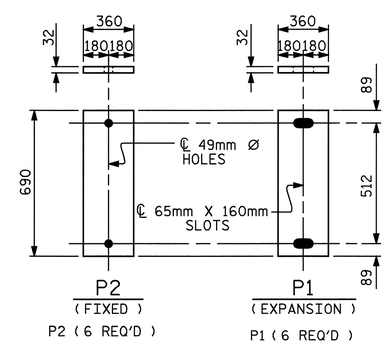

SOLE PLATE DETAILS ("P")

NOTES

AT ALL FIXED POINTS OF SUPPORT, NUTS FOR ANCHOR BOLTS ARE TO BE TIGHTENED FINGER TIGHT AND THEN BACKED OFF ½ TURN. THE THREAD OF THE NUT AND BOLT SHALL THEN BE BURRED WITH A SHARP POINTED TOOL.

THE 51mm Ø PIPE SLEEVE SHALL BE CUT FROM SCHEDULE 40 PVC PLASTIC PIPE. THE PVC PLASTIC PIPE SHALL MEET THE REQUIREMENTS OF ASTM D1785.

THE PAYMENT FOR THE PIPE SLEEVES SHALL BE INCLUDED IN THE SEVERAL PAY ITEMS.

FOR AASHTO M270 GRADE 345W STRUCTURAL STEEL, SOLE PLATE SHALL BE AASHTO M270 GRADE 345W AND SHALL NOT BE GALVANIZED, ANCHOR BOLTS AND NUTS SHALL BE GALVANIZED IN ACCORDANCE WITH THE STANDARD SPECIFICATIONS.

ANCHOR BOLTS SHALL MEET THE REQUIREMENTS OF ASTM A449. NUTS SHALL MEET THE REQUIREMENTS OF AASHTO M291M-12 OR AASHTO M292M-2H. WASHERS SHALL MEET THE REQUIREMENTS OF AASHTO M293M. SHOP DRAWINGS ARE NOT REQUIRED FOR ANCHOR BOLTS, NUTS AND WASHERS. SHOP INSPECTION IS REQUIRED.

WHEN FIELD WELDING THE SOLE PLATE TO THE GIRDER FLANGE, USE TEMPERATURE INDICATING WAX PENS, OR OTHER SUITABLE MEANS, TO ENSURE THAT THE TEMPERATURE OF THE SOLE PLATE DOES NOT EXCEED 149°C. TEMPERATURES ABOVE THIS MAY DAMAGE THE ELASTOMER.

ALL SURFACES OF BEARING PLATES SHALL BE SMOOTH AND STRAIGHT.

THE CONTRACTOR'S ATTENTION IS CALLED TO THE FOLLOWING PROCEDURES TO ACCOMMODATE GIRDER TRANSLATION AND END ROTATION:

1. ONCE THE DECK HAS CURED, THE GIRDERS SHALL BE JACKED AND THE ANCHOR BOLTS, SOLE PLATE, AND ELASTOMERIC BEARING SLOTS SHALL BE CENTERED AS NEARLY AS PRACTICAL ABOUT THE BEARING STIFFENER. THIS OPERATION SHALL BE PERFORMED AT APPROXIMATELY 16° C.

2. AFTER CENTERING THE SLOTS AND ANCHOR BOLTS, THE SOLE PLATES SHALL BE FIELD WELDED TO THE GIRDER FLANGES AND ANCHOR BOLTS GROUTED.

THE CONTRACTOR MAY PROPOSE ALTERNATE METHODS, PROVIDED DETAILS ARE SUBMITTED TO THE ENGINEER FOR REVIEW AND APPROVAL.

-LOAD RATINGS-	
	MAX.D.L.+ L.L.
TYPE V	943 kN

PROJECT NO. R-2301A
JONES/CRAVEN COUNTY
STATION: 30+04.517 -L-

STATE OF NORTH CAROLINA
DEPARTMENT OF TRANSPORTATION
RALEIGH

STANDARD ELASTOMERIC BEARING DETAILS

RIGHT LANE

NORTH CAROLINA PROFESSIONAL SEAL 20125 ENGINEER MARSHALL G. CHEEK, JR.
9-3-08

REVISIONS							SHEET NO.
NO.	BY:	DATE:	NO.	BY:	DATE:		S-105
1			3				TOTAL SHEETS
2			4				176

ASSEMBLED BY : V.X. NGUYEN		DATE : 6-5-08	
CHECKED BY : M.G. CHEEK		DATE : 7-08	
DRAWN BY : EEM 10/95	REV. 8/16/99	MAB/LES	
CHECKED BY : PEK 10/95	REV. 10/17/00	RWW/LES	
	REV. 5/1/06	TLA/GM	

05-AUG-2008 14:17
r:\structures\vnguyen\microstation\r2301a\r2301a_sd_bg.dgn
vnguyen

STR. #4

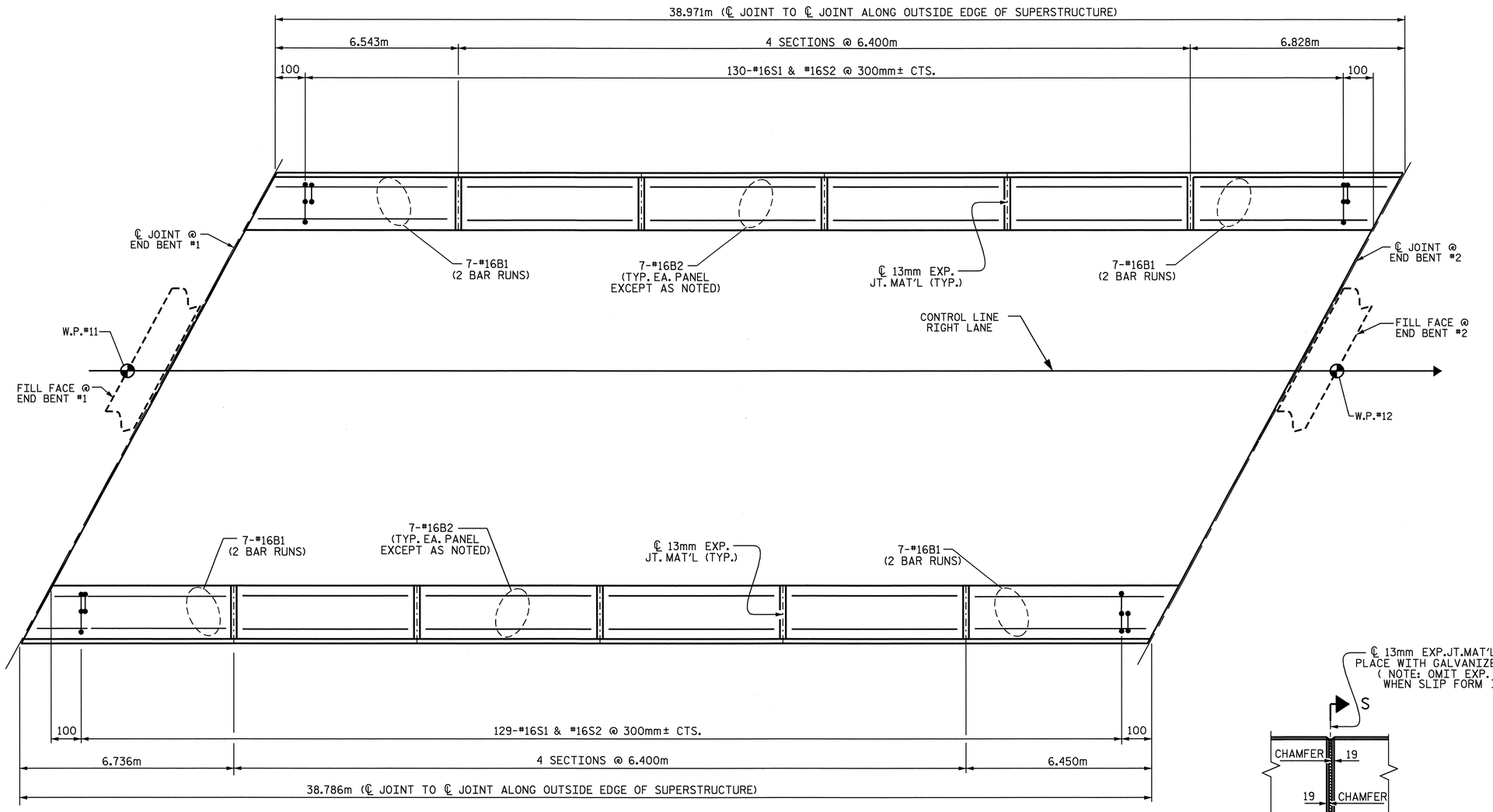

PLAN

BAR TYPES

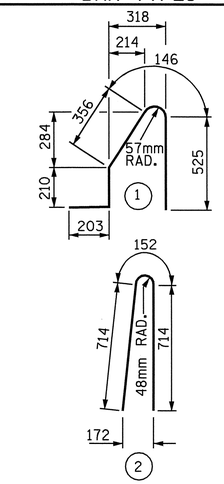

ALL BAR DIMENSIONS ARE OUT TO OUT

BILL OF MATERIAL

FOR CONCRETE BARRIER RAIL ONLY

BAR	NO.	SIZE	TYPE	LENGTH	WEIGHT
* B1	56	#16	STR	3960	344
* B2	56	#16	STR	6260	544
* S1	259	#16	1	1440	579
* S2	259	#16	2	1580	635

* EPOXY COATED REINFORCING STEEL 2102 kg

CLASS AA CONCRETE 19.5 CU. METERS

CONCRETE BARRIER RAIL 77.757 METERS

* THESE BARS ARE EPOXY COATED

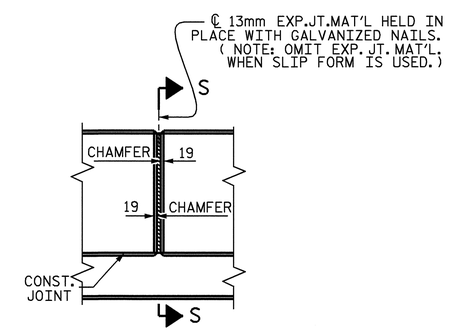

ELEVATION AT EXPANSION JOINTS

BARRIER RAIL DETAILS

NOTES

THE BARRIER RAIL SHALL NOT BE CAST UNTIL ALL SLAB CONCRETE IN THE SPAN HAS BEEN CAST AND HAS REACHED A MINIMUM COMPRESSIVE STRENGTH OF 20.7 MPa.

ALL REINFORCING STEEL IN BARRIER RAILS SHALL BE EPOXY COATED.

VERTICAL GROOVED CONTRACTION JOINTS, 12mm IN DEPTH, SHALL BE TOOLED IN ALL EXPOSED FACES OF THE BARRIER RAIL AND IN ACCORDANCE WITH ARTICLE 825-10(B) OF THE STANDARD SPECIFICATIONS. THE CONTRACTION JOINT SHALL BE LOCATED AT EACH THIRD POINT BETWEEN BARRIER RAIL EXPANSION JOINTS. ONLY ONE CONTRACTION JOINT IS REQUIRED AT MIDPOINT OF BARRIER RAIL SEGMENTS LESS THAN 6.1m IN LENGTH AND NO CONTRACTION JOINTS ARE REQUIRED FOR THOSE SEGMENTS LESS THAN 3.5m IN LENGTH.

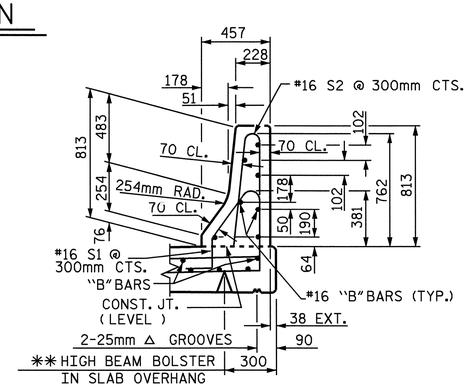

SECTION THRU RAIL

** SEE TYPICAL SECTION FOR HEIGHT OF THE BEAM BOLSTERS

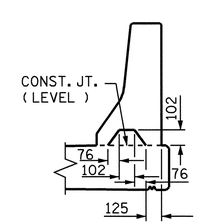

SECTION S-S

AT DAM IN OPEN JOINT
(THIS IS TO BE USED ONLY WHEN SLIP FORM IS USED)

PROJECT NO. R-2301A

JONES/CRAVEN COUNTY

STATION: 30+04.517 -L-

STATE OF NORTH CAROLINA
DEPARTMENT OF TRANSPORTATION
RALEIGH

STANDARD

CONCRETE BARRIER RAIL

RIGHT LANE

NORTH CAROLINA PROFESSIONAL SEAL 20125 ENGINEER MARSHALL G. CHEEK, JR.
9-3-08

REVISIONS						SHEET NO.
NO.	BY:	DATE:	NO.	BY:	DATE:	S-106
1			3			TOTAL SHEETS
2			4			176

STR. #4

STD. No. CBR1SM

ASSEMBLED BY : V.X. NGUYEN	DATE : 6-12-08		
CHECKED BY : M. G. CHEEK	DATE : 7-08		
DRAWN BY : ARB 5/87	REV. 10/17/00	RWW/LES	
CHECKED BY : SJD 9/87	REV. 5/7/03R	RWW/JTE	
	REV. 5/1/06	TLA/GM	

03-SEP-2008 12:01
r:\structures\final plans\str #3\R2301A_sd_BR.dgn
vnguyen

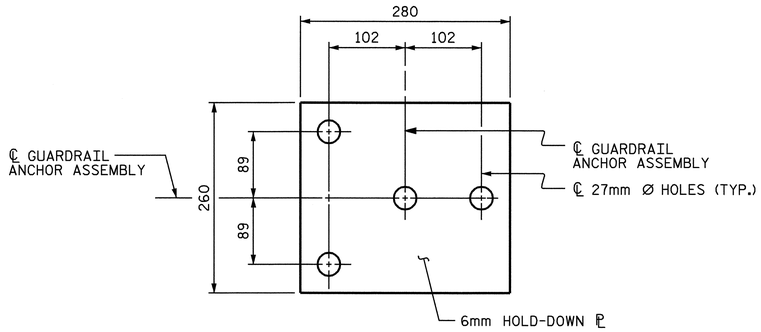

PLAN

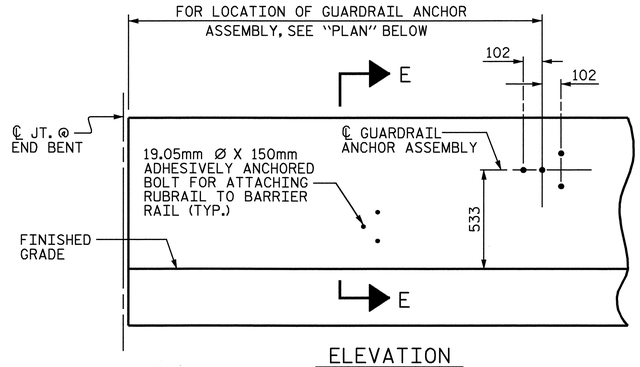

ELEVATION

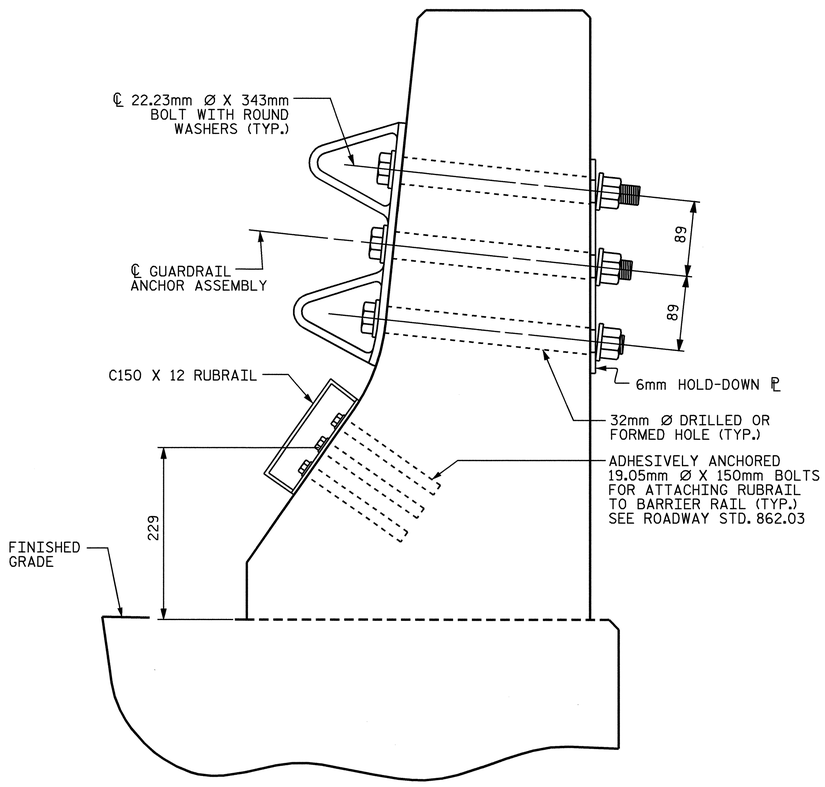

SECTION E-E

GUARDRAIL ANCHOR ASSEMBLY DETAILS

NOTES

THE GUARDRAIL ANCHOR ASSEMBLY SHALL CONSIST OF A 6mm HOLD DOWN PLATE AND 4 - 22.23mm Ø BOLTS WITH NUTS AND WASHERS, RUBRAIL, AND ADHESIVELY ANCHORED BOLTS.

THE HOLD-DOWN PLATE SHALL CONFORM TO AASHTO M270 GRADE 36. AFTER FABRICATION, THE HOLD-DOWN PLATE SHALL BE HOT-DIP GALVANIZED IN ACCORDANCE WITH AASHTO M111.

BOLTS SHALL CONFORM TO THE REQUIREMENTS OF ASTM A307 AND NUTS SHALL CONFORM TO THE REQUIREMENTS OF AASHTO M291. BOLTS, NUTS AND WASHERS SHALL BE GALVANIZED. (AT THE CONTRACTOR'S OPTION, STAINLESS STEEL BOLTS, NUTS AND WASHERS MAY BE USED AS AN ALTERNATE FOR THE 22.23mm Ø GALVANIZED BOLTS, NUTS AND WASHERS. THEY SHALL CONFORM TO OR EXCEED THE MECHANICAL REQUIREMENTS OF ASTM A307. THE USE OF THIS ALTERNATE SHALL BE APPROVED BY THE ENGINEER.)

THE GUARDRAIL ANCHOR ASSEMBLY IS REQUIRED AT ALL POINTS WHERE APPROACH GUARDRAIL IS TO BE ATTACHED TO THE END OF BARRIER RAIL. FOR POINTS OF ATTACHMENT, SEE SKETCH.

AFTER INSTALLATION, THE EXPOSED THREAD OF THE BOLT SHALL BE BURRED WITH A SHARP POINTED TOOL.

THE COST OF THE GUARDRAIL ANCHOR ASSEMBLY SHALL BE INCLUDED IN THE UNIT CONTRACT PRICE BID FOR CONCRETE BARRIER RAIL.

THE 32mm Ø HOLES SHALL BE FORMED OR DRILLED WITH A CORE BIT. IMPACT TOOLS WILL NOT BE PERMITTED. ANY CONCRETE DAMAGED BY THIS WORK SHALL BE REPAIRED TO THE SATISFACTION OF THE ENGINEER.

THE C150 X 12 RUBRAIL IS TO BE ADHESIVELY ANCHORED TO THE RAIL USING THREE 19.05mm Ø X 150mm BOLTS WITH WASHERS. LEVEL ONE FIELD TESTING IF REQUIRED, AND THE YIELD LOAD OF THE 19.05mm Ø BOLTS IS 53.4kN. FOR ADHESIVELY ANCHORED ANCHOR BOLTS OR DOWELS, SEE SPECIAL PROVISIONS. SEE ROADWAY STANDARD 862.03 FOR DETAILS AND LOCATION OF THE RUBRAIL.

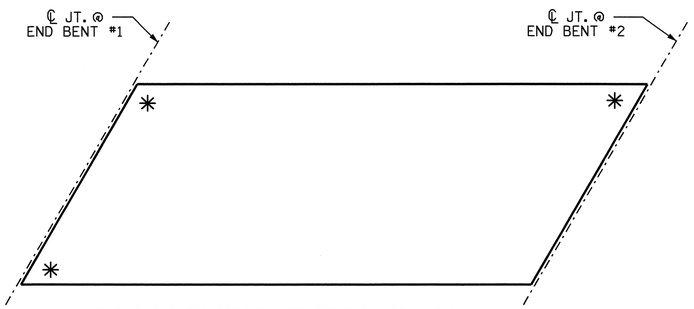

✳ INDICATES GUARDRAIL ATTACHMENT LOCATION

SKETCH SHOWING POINTS OF ATTACHMENTS

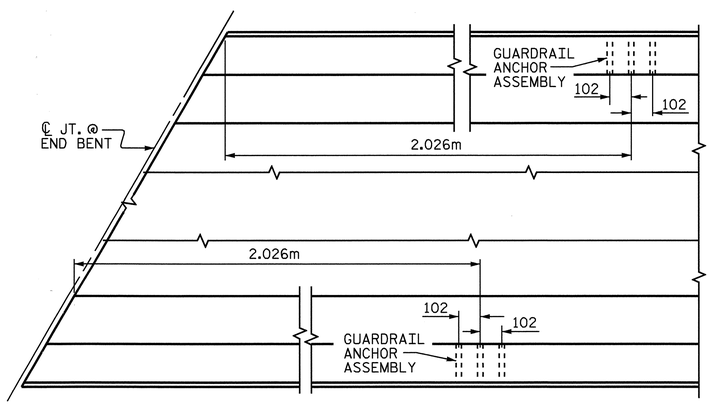

PLAN

LOCATION OF ANCHORS FOR GUARDRAIL

PROJECT NO. R-2301A
JONES/CRAVEN COUNTY
STATION: 30+04.517 -L-

STATE OF NORTH CAROLINA
DEPARTMENT OF TRANSPORTATION
RALEIGH

STANDARD
GUARDRAIL ANCHORAGE FOR BARRIER RAIL
RIGHT LANE

NORTH CAROLINA PROFESSIONAL SEAL 20125 ENGINEER MARSHALL G. CHEEK, JR.
9-3-08

REVISIONS						SHEET NO.
NO.	BY:	DATE:	NO.	BY:	DATE:	S-107
1			3			TOTAL SHEETS
2			4			176

STR. #4

ASSEMBLED BY : V.X. NGUYEN DATE : 7-10-08	
CHECKED BY : M.G. CHEEK DATE : 7-08	
DRAWN BY : TLA 5/06	ADDED 5/1/06R KMM/GM
CHECKED BY : GM 5/06	

22-JUL-2008 10:56
r:\structures\vnguyen\microstation\r2301a\R2301A_sd_GR.dgn
vnguyen

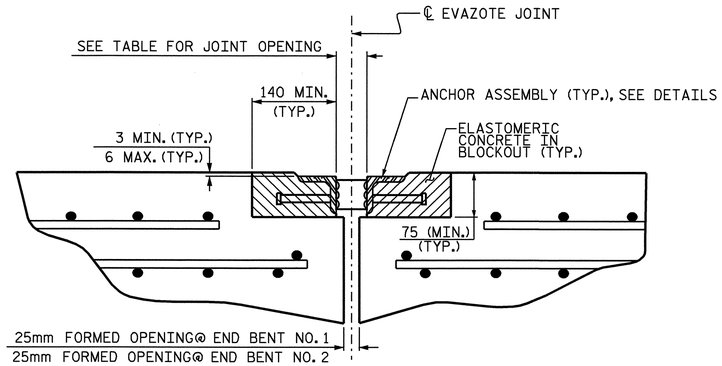

ARMORED JOINT DETAILS

SECTION NORMAL TO JOINT AT BENT

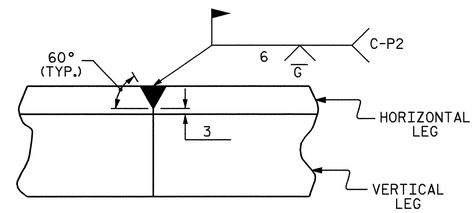

DETAIL- FIELD WELD SPLICE OF ANGLE

NOTES

ANGLES SHALL CONFORM TO AASHTO M270 GRADE 250 STEEL OR APPROVED EQUAL. ALL STUD ANCHORS SHALL CONFORM TO AASHTO M169 GRADES 1010 THRU 1020 OR APPROVED EQUAL.

STUD ANCHORS SHALL BE SHOP WELDED AND ALL HOLES SHALL BE SHOP DRILLED AS SHOWN ON THE PLANS. STUD ANCHORS SHALL BE ELECTRIC ARC END WELDED WITH COMPLETE FUSION.

UPON COMPLETION OF SHOP FABRICATION, THE ENTIRE ANCHOR ASSEMBLY SHALL BE METALLIZED. THE 12.70mm Ø STUD ANCHORS AND ANCHOR TABS NEED NOT BE METALLIZED. SEE SPECIAL PROVISION FOR THERMAL SPRAYED COATINGS (METALLIZATION).

ANCHOR ASSEMBLY SHALL BE MADE CONTINUOUS THE LENGTH OF THE JOINT FROM GUTTER TO GUTTER. FOR FIELD SPLICES AT ALL CROWN BREAK POINTS, THE ENDS OF THE STEEL ANGLES SHALL BE CUT PARALLEL TO THE BRIDGE CENTERLINE. FINISHED FIELD WELDS SHALL BE GROUND SMOOTH AND COATED WITH A MINIMUM THICKNESS OF 0.100mm OF ZINC-RICH PAINT IN ACCORDANCE WITH THE STANDARD SPECIFICATIONS.

ANCHOR ASSEMBLY SEGMENTS SHALL NOT BE LESS 3.6m NOR MORE THAN 6.1m IN LENGTH. SHORTER SEGMENTS MAY BE USED AT THE EDGE OF ROADWAY OR AT POINTS OF STAGED CONSTRUCTION.

THE ANCHOR ASSEMBLY SHALL BE SECURED AND LEVELED AS SHOWN IN THE "ARMORED JOINT ANCHOR ASSEMBLY DETAILS". NO SUBMITTALS ARE REQUIRED FOR 9.53mm Ø EXPANSION ANCHORS, NUTS OR WASHERS. THE CONTRACTOR MAY SUBMIT FOR APPROVAL AN ALTERNATE METHOD OF ALIGNING AND LEVELING THE ANGLES. THE ALTERNATE METHOD SHALL NOT INCLUDE ANY WELDING TO THE OUTSIDE FACE OF THE ANGLES.

AFTER THE ELASTOMERIC CONCRETE HAS BEEN CAST ON BOTH SIDES OF THE JOINT, REMOVE ANY EXCESS CONCRETE THAT COMES THROUGH THE WEEP HOLES AND THOROUGHLY CLEAN THE ANGLES. ANY DAMAGED STEEL SHALL BE COATED WITH A MINIMUM OF 0.100mm OF ZINC-RICH PAINT IN ACCORDANCE WITH THE STANDARD SPECIFICATIONS.

SEE SPECIAL PROVISIONS FOR EVAZOTE JOINT SEALS.

SEE SPECIAL PROVISIONS FOR ELASTOMERIC CONCRETE.

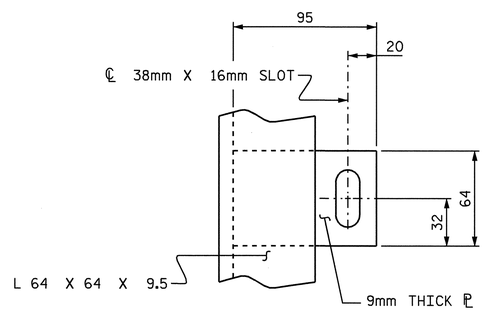

PLAN VIEW OF TAB

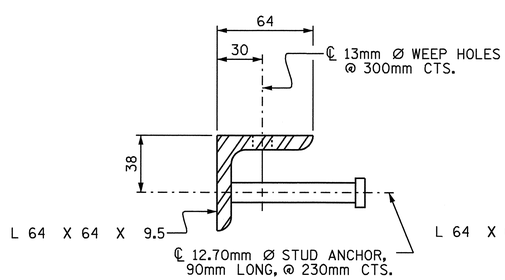

SECTION VIEW OF STUD

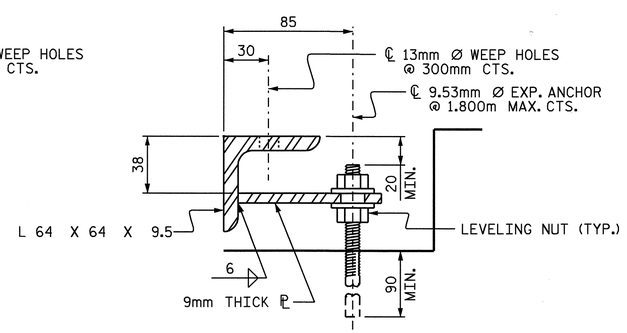

SECTION VIEW OF TAB

ARMORED JOINT ANCHOR ASSEMBLY DETAILS

MOVEMENT AND SETTING AT EVAZOTE JOINT

END BENT NO.	SKEW ANGLE TAN. TO CONTROL LINE AT ℄ JOINT	NOMINAL UNCOMPRESSED SEAL WIDTH	TOTAL MOVEMENT (ALONG ℄ RDWY)	PERPENDICULAR JOINT OPENING AT 7° C	PERPENDICULAR JOINT OPENING AT 16° C	PERPENDICULAR JOINT OPENING AT 32° C
1	118°-08'-38"	64mm	28mm	53mm	48mm	40mm
2	120°-21'-30"	64mm	0mm	48mm	48mm	48mm

TOTAL MOVEMENT IS CALCULATED ALONG THE CENTERLINE OF ROADWAY.
JOINT OPENINGS ARE MEASURED PERPENDICULAR TO THE JOINT.

BILL OF MATERIAL

END BENT NO.	ELASTOMERIC CONCRETE ✳ (CU. m)	TOTAL LENGTH OF ANGLE (m)
1	0.3	32.662m
2	0.3	33.377m

✳ BASED ON THE MINIMUM BLOCKOUT SHOWN.

PROJECT NO. R-2301A
JONES/CRAVEN COUNTY
STATION: 30+04.517-L-

STATE OF NORTH CAROLINA
DEPARTMENT OF TRANSPORTATION
RALEIGH

STANDARD ARMORED EVAZOTE JOINT DETAILS

RIGHT LANE

NORTH CAROLINA PROFESSIONAL SEAL 20125 ENGINEER MARSHALL G. CHEEK, JR.
9-3-08

REVISIONS						SHEET NO.
NO.	BY:	DATE:	NO.	BY:	DATE:	S-108
1			3			TOTAL SHEETS
2			4			176

ASSEMBLED BY : A.L. FIGUEROA DATE :06-25-08
CHECKED BY : M.G. CHEEK DATE :06-25-08
DRAWN BY : EEM 1/96
CHECKED BY : RGW 1/96
REV. 7/10/01 LES/RDR
REV. 5/7/03RR RWW/JTE
REV. 5/1/06 TLA/GM

22-JUL-2008 09:03
R:\Structures\AL Figueroa\Microstation\R-2301A_sd_STR#4-11_JS_ARM-S108.dgn
afigueroa

STR #4 STD. NO. AEJ1SM

BILL OF MATERIAL

BAR	NO.	SIZE	TYPE	LENGTH	WEIGHT
✳ A1	180	16	STR.	15280	4269
A2	180	16	STR.	15280	4269
✳ A101	3	16	STR.	14340	67
✳ A102	3	16	STR.	13400	62
✳ A103	3	16	STR.	12440	58
✳ A104	3	16	STR.	11500	54
✳ A105	3	16	STR.	10540	49
✳ A106	3	16	STR.	9600	45
✳ A107	3	16	STR.	8640	40
✳ A108	3	16	STR.	7700	36
✳ A109	3	16	STR.	6740	31
✳ A110	3	16	STR.	5800	27
✳ A111	3	16	STR.	4840	23
✳ A112	3	16	STR.	3900	18
✳ A113	3	16	STR.	2940	14
✳ A114	3	16	STR.	1980	9
✳ A115	3	16	STR.	1040	5
A201	3	16	STR.	14340	67
A202	3	16	STR.	13400	62
A203	3	16	STR.	12440	58
A204	3	16	STR.	11500	54
A205	3	16	STR.	10540	49
A206	3	16	STR.	9600	45
A207	3	16	STR.	8640	40
A208	3	16	STR.	7700	36
A209	3	16	STR.	6740	31
A210	3	16	STR.	5800	27
A211	3	16	STR.	4840	23
A212	3	16	STR.	3900	18
A213	3	16	STR.	2940	14
A214	3	16	STR.	1980	9
A215	3	16	STR.	1040	5
✳ A301	3	16	STR.	14400	67
✳ A302	3	16	STR.	13520	63
✳ A303	3	16	STR.	12640	59
✳ A304	3	16	STR.	11760	55
✳ A305	3	16	STR.	10880	51
✳ A306	3	16	STR.	10000	47
✳ A307	3	16	STR.	9100	42
✳ A308	3	16	STR.	8220	38
✳ A309	3	16	STR.	7340	34
✳ A310	3	16	STR.	6460	30
✳ A311	3	16	STR.	5580	26
✳ A312	3	16	STR.	4700	22
✳ A313	3	16	STR.	3820	18
✳ A314	3	16	STR.	2940	14
✳ A315	3	16	STR.	2060	10
✳ A316	3	16	STR.	1180	5
A401	3	16	STR.	14400	67
A402	3	16	STR.	13520	63
A403	3	16	STR.	12640	59
A404	3	16	STR.	11760	55
A405	3	16	STR.	10880	51
A406	3	16	STR.	10000	47
A407	3	16	STR.	9100	42
A408	3	16	STR.	8220	38
A409	3	16	STR.	7340	34
A410	3	16	STR.	6460	30
A411	3	16	STR.	5580	26
A412	3	16	STR.	4700	22
A413	3	16	STR.	3820	18
A414	3	16	STR.	2940	14
A415	3	16	STR.	2060	10
A416	3	16	STR.	1180	5
✳ B1	175	13	STR.	8260	1437
B2	159	16	STR.	13380	3302
✳ G1	4	16	STR.	9240	57
✳ K1	12	16	1	2240	42
✳ K2	24	16	2	2580	96
K3	30	16	STR.	2580	120
✳ S1	80	13	3	1340	107
REINFORCING STEEL					8810 kg
✳ EPOXY COATED REINFORCING STEEL					7127 kg

✳ THESE BARS ARE EPOXY COATED

BAR TYPES

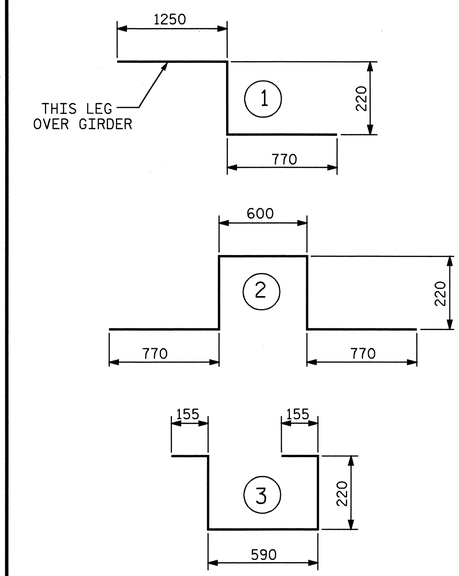

ALL BAR DIMENSIONS ARE OUT TO OUT

SUPERSTRUCTURE BILL OF MATERIAL

	CLASS AA CONCRETE	REINFORCING STEEL	EPOXY COATED REINFORCING STEEL
	(CU.METERS)	(kg)	(kg)
SPAN "A"	160.4	8810	7127
TOTALS✳✳	160.4	8810	7127

✳✳ QUANTITIES FOR BARRIER RAIL ARE NOT INCLUDED

SUPERSTRUCTURE REINFORCING STEEL LENGTHS ARE BASED ON THE FOLLOWING MINIMUM SPLICE LENGTHS

BAR SIZE	SUPERSTRUCTURE EXCEPT APPROACH SLABS, PARAPET, AND BARRIER RAIL		APPROACH SLABS		PARAPET AND BARRIER RAIL
	EPOXY COATED	UNCOATED	EPOXY COATED	UNCOATED	
#13	610	540	610	540	840
#16	770	660	770	660	1050
#19	920	790	1190	790	1330
#22	1580	1060			
#25	2080	1390			

ALL DIMENSIONS ARE IN MILLIMETERS

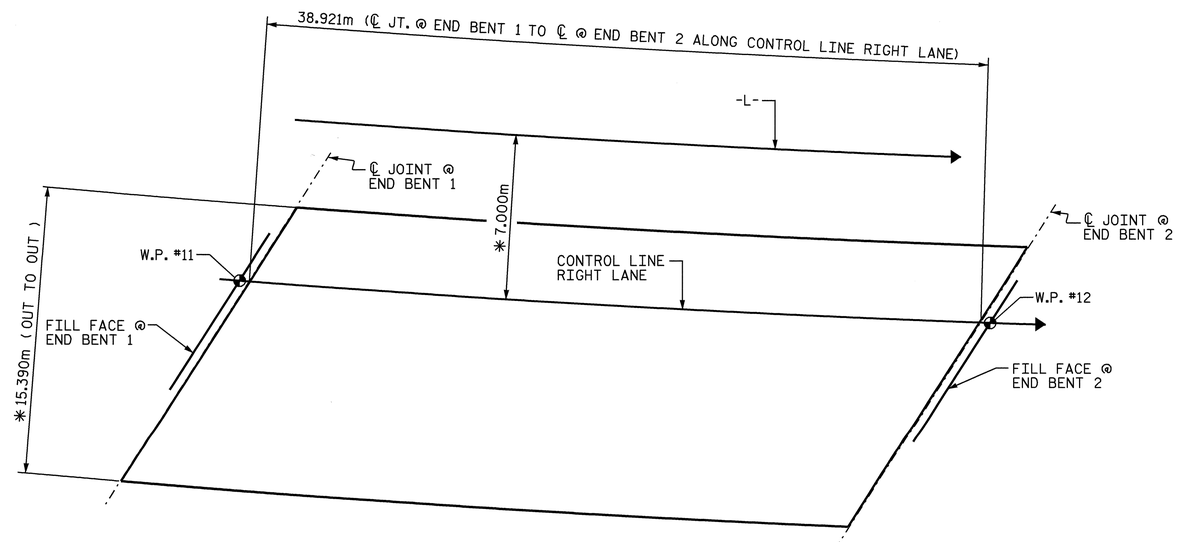

✳ RADIAL DIMENSIONS

LAYOUT FOR COMPUTING AREA OF REINFORCED CONCRETE DECK SLAB
(SQ. METERS = 597.9)

GROOVING BRIDGE FLOORS

APPROACH SLABS	193.5	SQ.METERS
BRIDGE DECK	518.1	SQ.METERS
TOTAL	711.6	SQ.METERS

PROJECT NO. R-2301A
JONES/CRAVEN COUNTY
STATION: 30+04.517 -L-

STATE OF NORTH CAROLINA
DEPARTMENT OF TRANSPORTATION
RALEIGH

STANDARD
SUPERSTRUCTURE
BILL OF MATERIAL
RIGHT LANE

NORTH CAROLINA PROFESSIONAL SEAL 20125 ENGINEER MARSHALL E. GREEN JR.
9.3.08

REVISIONS						SHEET NO.
NO.	BY:	DATE:	NO.	BY:	DATE:	S-109
1			3			TOTAL SHEETS
2			4			176

STR. #4

ASSEMBLED BY : V.X. NGUYEN DATE : 7-18-08
CHECKED BY : D. HODGE DATE : 7-08
DRAWN BY : JMB 5/87 REV. 5/16/97 EEM/RGW
CHECKED BY : SJD 9/87 REV. 5/1/06 TLA/GM

03-SEP-2008 12:03
r:\structures\final plans\str #3\R2301A_sd_BM.dgn
vnguyen

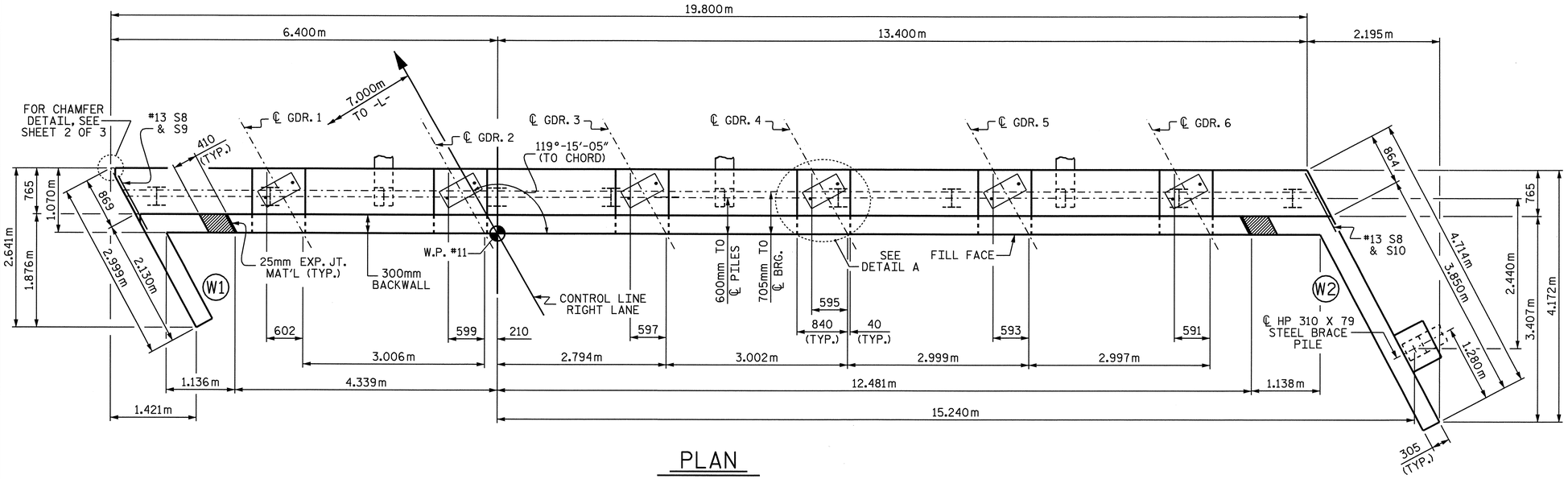

PLAN

NOTES

STIRRUPS IN CAP MAY BE SHIFTED AS NECESSARY TO CLEAR ANCHOR BOLTS.

THE CONTRACTOR SHALL PROVIDE FOR INSTALLATION OF THE 102mm DIAMETER DRAIN PIPE THROUGH THE WING WALL AS REQUIRED FOR REINFORCED BRIDGE APPROACH FILLS, SEE THE ROADWAY PLANS. REINFORCING STEEL IN THE WING WALL MAY BE SHIFTED AS NECESSARY TO CLEAR THE DRAIN PIPE.

THE TOP SURFACE AREAS OF THE END BENT CAPS SHALL BE CURED IN ACCORDANCE WITH THE STANDARD SPECIFICATIONS EXCEPT THE MEMBRANE CURING COMPOUND METHOD SHALL NOT BE USED.

THE TOP SURFACE OF THE CAP EXCEPT THE BRIDGE SEAT BUILDUPS SHALL BE SLOPED TRANSVERSELY FROM THE FILL FACE TO THE BACK FACE AT THE RATE OF 2%.

FOR PILE SPLICE DETAILS, SEE SHEET 3 OF 3.

THE CONCRETE IN THE SHADED AREA OF THE WING SHALL BE POURED AFTER THE BARRIER RAIL IS CAST IF SLIP FORMING IS USED.

BACKWALL SHALL BE PLACED BEFORE APPLYING THE EPOXY PROTECTIVE COATING.

EPOXY COAT THE END BENT CAP AFTER ADJUSTMENTS ARE MADE TO BEARINGS AND ANCHOR BOLTS ARE GROUTED.

THE #16 V1 BARS IN THE BACKWALL SHALL BE PLACED 50mm CLEAR FROM THE TOP OF THE BACKWALL.

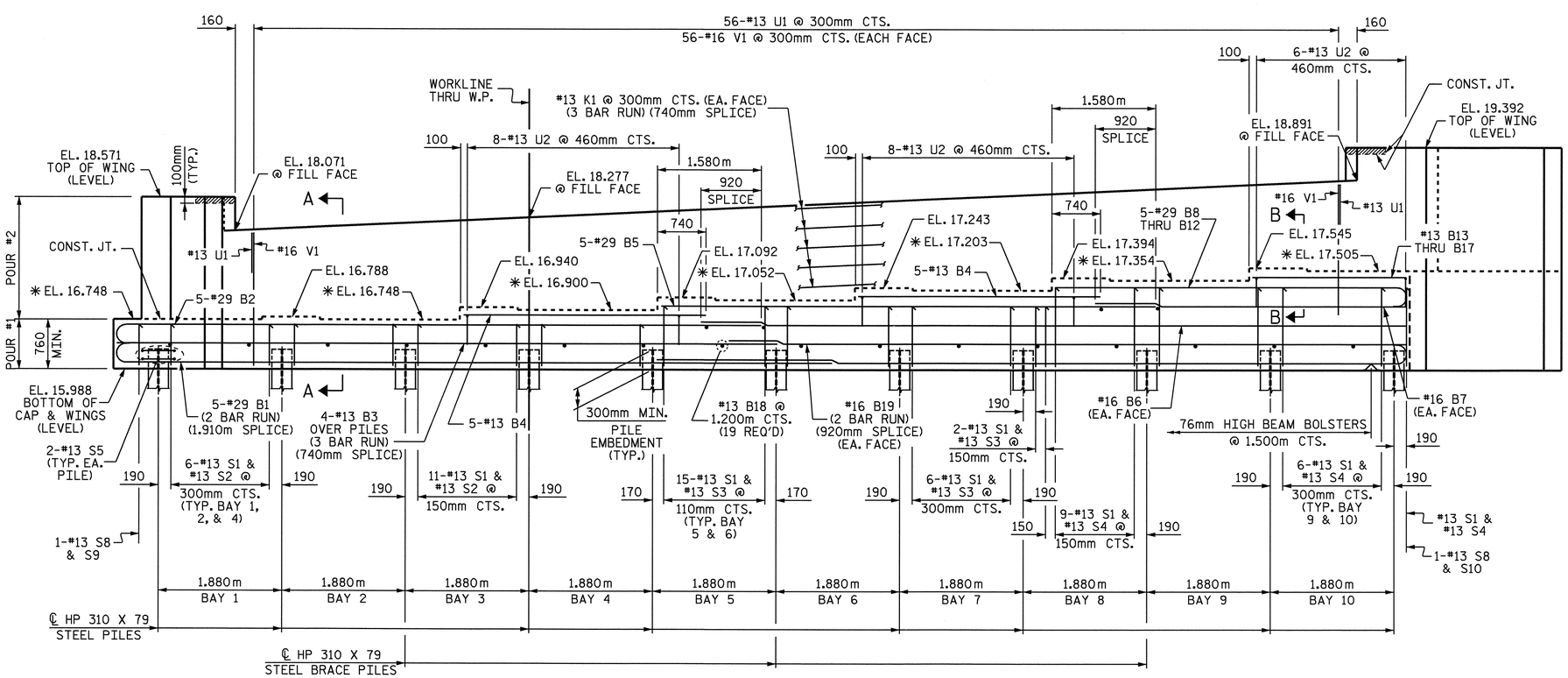

ELEVATION

✱ FOR LOCATION OF ELEVATIONS BETWEEN BRIDGE SEAT BUILDUPS, SEE SECTION VIEWS, SHEET 3 OF 3.

PILE IN WING NOT SHOWN FOR CLARITY

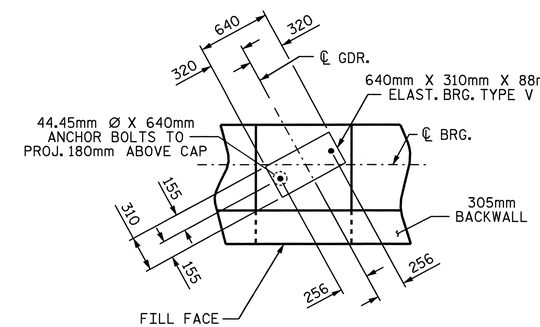

DETAIL A

(DIMENSIONS TYP. EA. BRG.)

PROJECT NO. R-2301A
JONES/CRAVEN COUNTY
STATION: 30+04.517 -L-

SHEET 1 OF 3

STATE OF NORTH CAROLINA
DEPARTMENT OF TRANSPORTATION
RALEIGH

SUBSTRUCTURE
END BENT 1

RIGHT LANE

NORTH CAROLINA PROFESSIONAL SEAL 20125 ENGINEER M. G. CHEEK, JR.
9-8-08

REVISIONS						SHEET NO.
NO.	BY:	DATE:	NO.	BY:	DATE:	S-110
1			3			TOTAL SHEETS
2			4			176

DRAWN BY : A. SORSENGINH DATE : 7/15/08
CHECKED BY : M. G. CHEEK DATE : 8/1/08

03-SEP-2008 10:48
r:\structures\finalplans\str #4\r-2301a_sd_e*.dgn
lmurphy

STR. #4

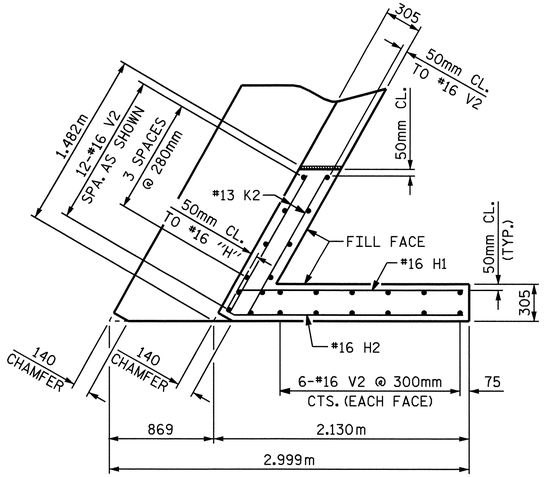

PLAN OF LEFT WING W1

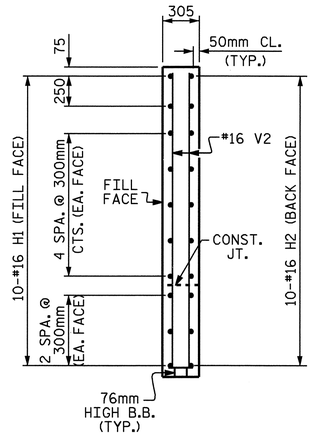

SECTION X-X

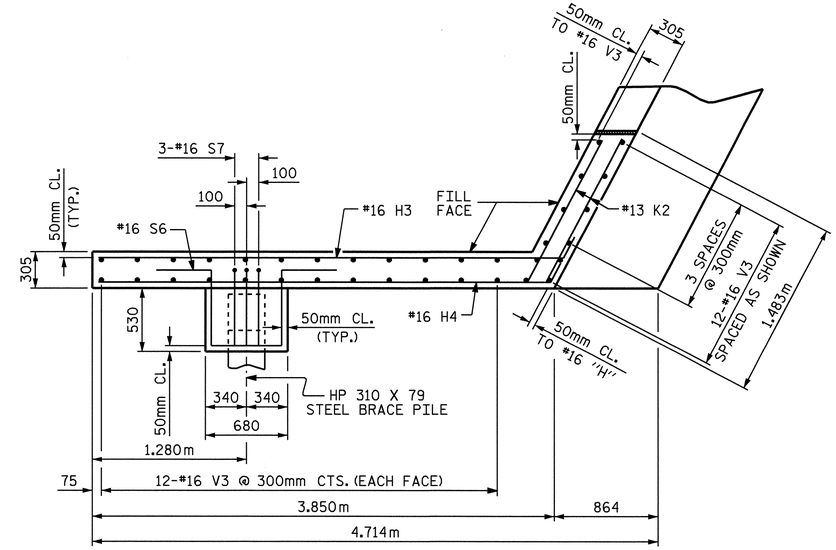

PLAN OF RIGHT WING W2

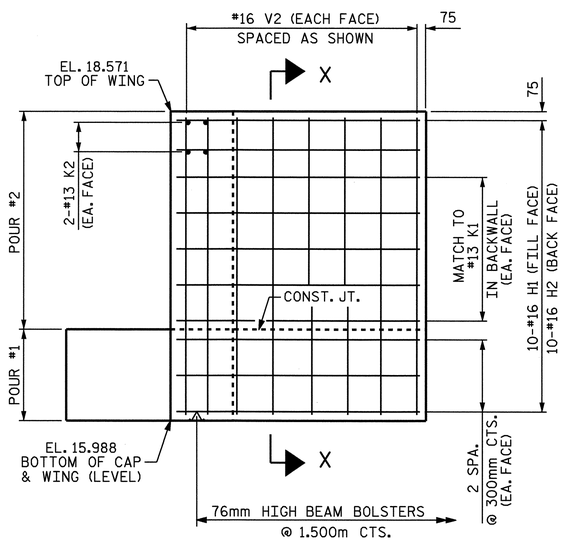

ELEVATION OF LEFT WING W1

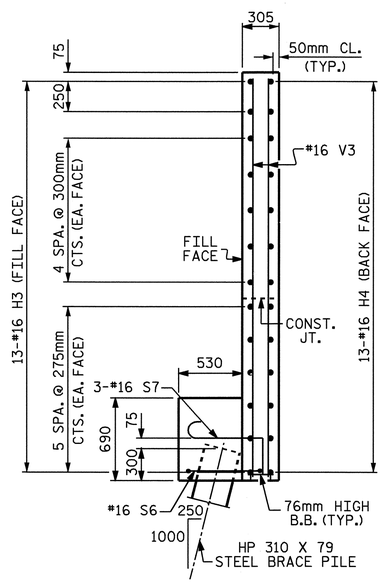

SECTION Y-Y

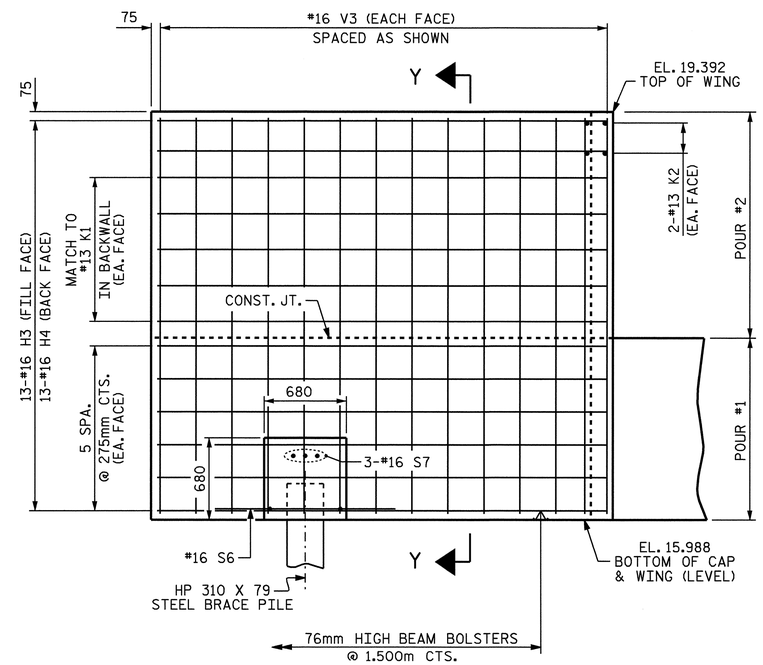

ELEVATION OF RIGHT WING W2

PROJECT NO. R-2301A
JONES/CRAVEN COUNTY
STATION: 30+04.517 -L-

SHEET 2 OF 3

STATE OF NORTH CAROLINA
DEPARTMENT OF TRANSPORTATION
RALEIGH

SUBSTRUCTURE
END BENT 1

RIGHT LANE

NORTH CAROLINA PROFESSIONAL SEAL 20125 ENGINEER MARSHALL G. CHEEK, JR.
9-5-08

REVISIONS						SHEET NO.
NO.	BY:	DATE:	NO.	BY:	DATE:	S-111
1			3			TOTAL SHEETS
2			4			176

DRAWN BY : A. SORSENGINH DATE : 7/16/08
CHECKED BY : M. G. CHEEK DATE : 8/1/08

05-SEP-2008 07:09
r:\structures\finalplans\Str #4\R-2301A_sd_E*.dgn
dahodge

STR. #4

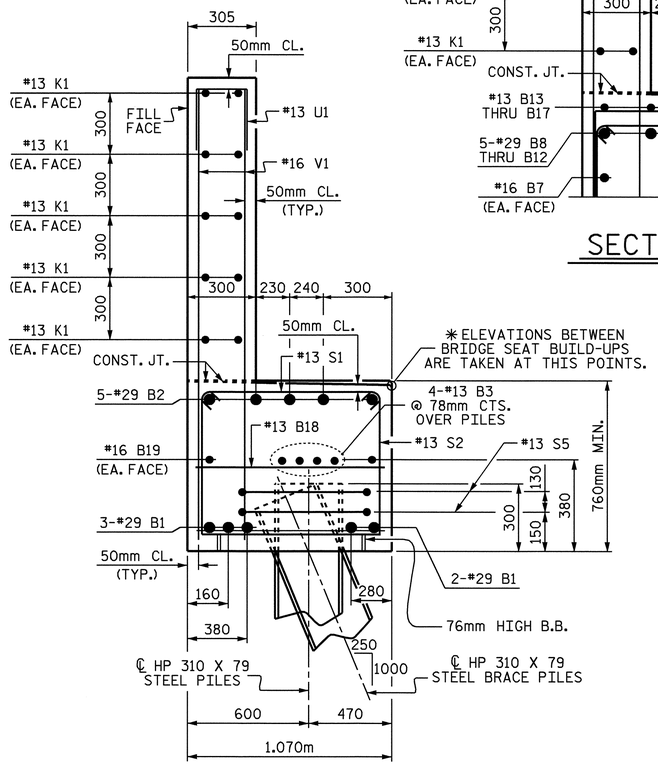

SECTION A-A

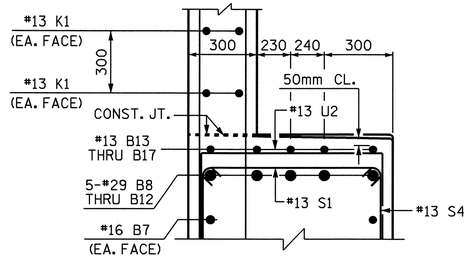

SECTION B-B

BAR TYPES

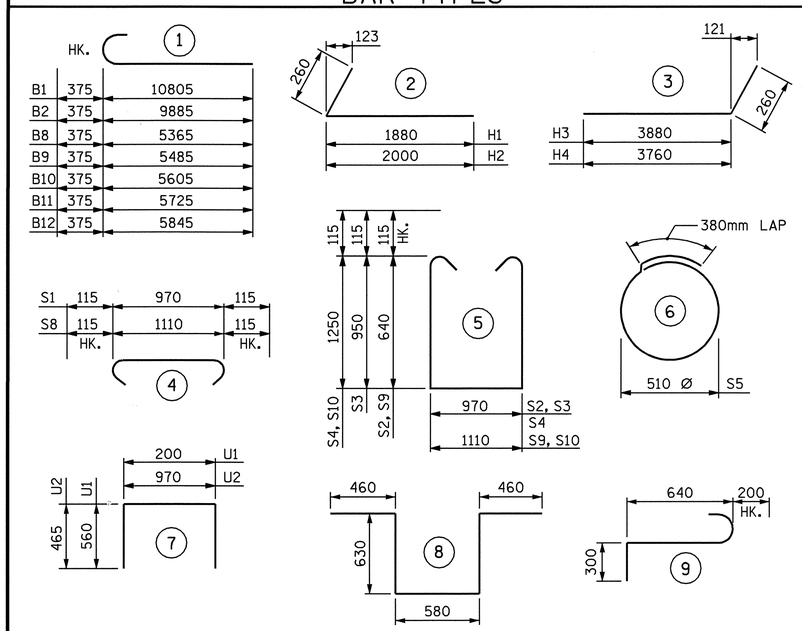

ALL BAR DIMENSIONS ARE OUT TO OUT.

BILL OF MATERIAL
END BENT #1

BAR	NO.	SIZE	TYPE	LENGTH	WEIGHT
B1	10	#29	1	11180	566
B2	5	#29	1	10260	260
B3	12	#13	STR	7060	84
B4	10	#13	STR	3740	37
B5	5	#29	STR	7560	171
B6	2	#16	STR	10740	33
B7	2	#16	STR	5240	16
B8	1	#29	1	5740	29
B9	1	#29	1	5860	30
B10	1	#29	1	5980	30
B11	1	#29	1	6100	31
B12	1	#29	1	6220	31
B13	1	#13	STR	2380	2
B14	1	#13	STR	2500	2
B15	1	#13	STR	2620	3
B16	1	#13	STR	2740	3
B17	1	#13	STR	2860	3
B18	19	#13	STR	960	18
B19	4	#16	STR	10320	64
H1	10	#16	2	2140	33
H2	10	#16	2	2260	35
H3	13	#16	3	4140	84
H4	13	#16	3	4020	81
K1	30	#13	STR	7060	211
K2	8	#13	STR	1340	11
S1	89	#13	4	1200	106
S2	29	#13	5	2480	71
S3	38	#13	5	3100	117

BAR	NO.	SIZE	TYPE	LENGTH	WEIGHT
S4	22	#13	5	3660	80
S5	22	#13	6	1980	43
S6	1	#16	8	2760	4
S7	3	#16	9	1140	5
S8	2	#13	4	1340	3
S9	1	#13	5	2620	3
S10	1	#13	5	3840	4
U1	56	#13	7	1320	73
U2	22	#13	7	1900	42
V1	112	#16	STR	1960	341
V2	24	#16	STR	2460	92
V3	36	#16	STR	3280	183

REINFORCING STEEL = 3035 kg

CLASS A CONCRETE
POUR #1
CAP & LOWER WINGS 26.3 CU. METERS
POUR #2
BACKWALL & UPPER WINGS 12.7 CU. METERS
TOTAL
CLASS A CONCRETE 39.0 CU. METERS

HP 310 X 79 STEEL PILES
NO. 12 228.0 METERS

PILE REDRIVES
NO. 4 EA.

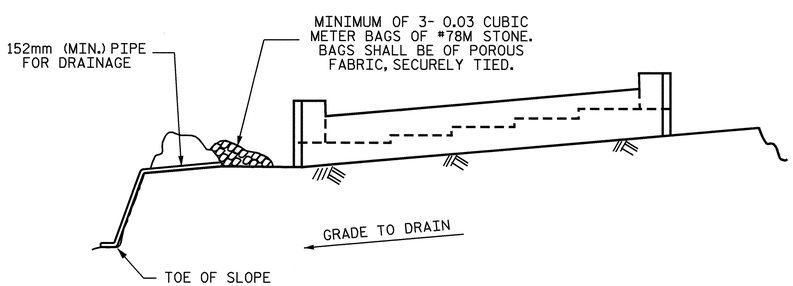

BAGGED STONE AND PIPE SHALL BE PLACED IMMEDIATELY AFTER COMPLETION OF END BENT EXCAVATION. PIPE MAY BE EITHER CONCRETE, CORRUGATED STEEL, CORRUGATED ALUMINUM ALLOY, OR CORRUGATED PLASTIC. PERFORATED PIPE WILL NOT BE ALLOWED.

BAGGED STONE SHALL REMAIN IN PLACE UNTIL THE ENGINEER DIRECTS THAT IT BE REMOVED. THE CONTRACTOR SHALL REMOVE AND DISPOSE OF SILT ACCUMULATIONS AT BAGGED STONE WHEN SO DIRECTED BY THE ENGINEER. BAGS SHALL BE REMOVED AND REPLACED WHENEVER THE ENGINEER DETERMINES THAT THEY HAVE DETERIORATED AND LOST THEIR EFFECTIVENESS.

NO SEPARATE PAYMENT WILL BE MADE FOR THIS WORK AND THE ENTIRE COST OF THIS WORK SHALL BE INCLUDED IN THE UNIT CONTRACT PRICE BID FOR THE SEVERAL PAY ITEMS.

TEMPORARY DRAINAGE AT END BENT

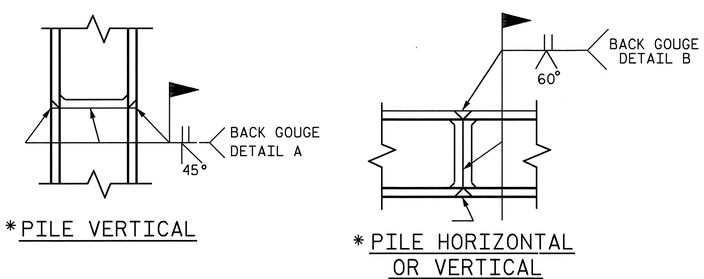

✱PILE VERTICAL

✱PILE HORIZONTAL OR VERTICAL

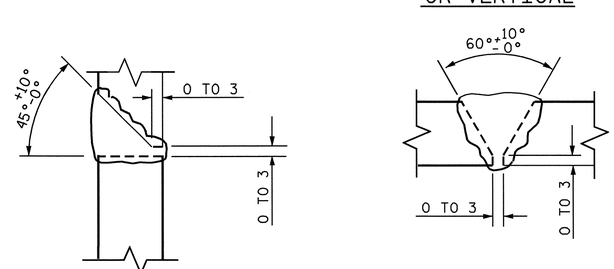

DETAIL A

DETAIL B

PILE SPLICE DETAILS

✱POSITION OF PILE DURING WELDING.

PROJECT NO. R-2301A
JONES/CRAVEN COUNTY
STATION: 30+04.517 -L-

SHEET 3 OF 3

STATE OF NORTH CAROLINA
DEPARTMENT OF TRANSPORTATION
RALEIGH

SUBSTRUCTURE
END BENT 1

RIGHT LANE

NORTH CAROLINA PROFESSIONAL SEAL 20125 ENGINEER MARSHALL G. CHEEK, JR. 9-3-08

REVISIONS						SHEET NO.
NO.	BY:	DATE:	NO.	BY:	DATE:	S-112
1			3			TOTAL SHEETS
2			4			176

STR. #4

DRAWN BY : A. SORSENGINH DATE : 7/9/08
CHECKED BY : M. G. CHEEK DATE : 8/1/08

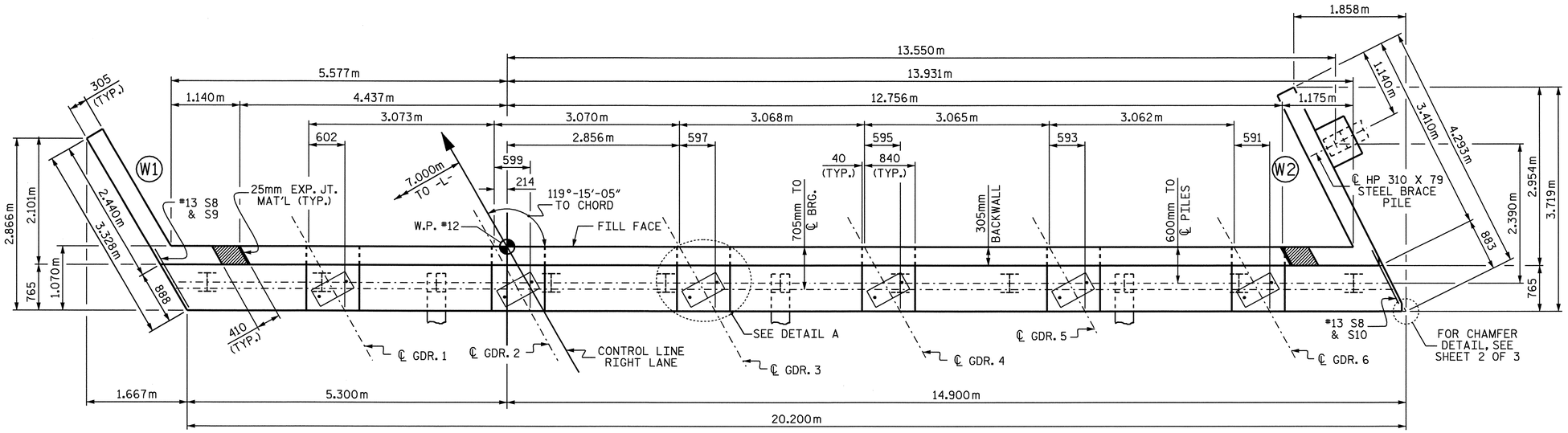

PLAN

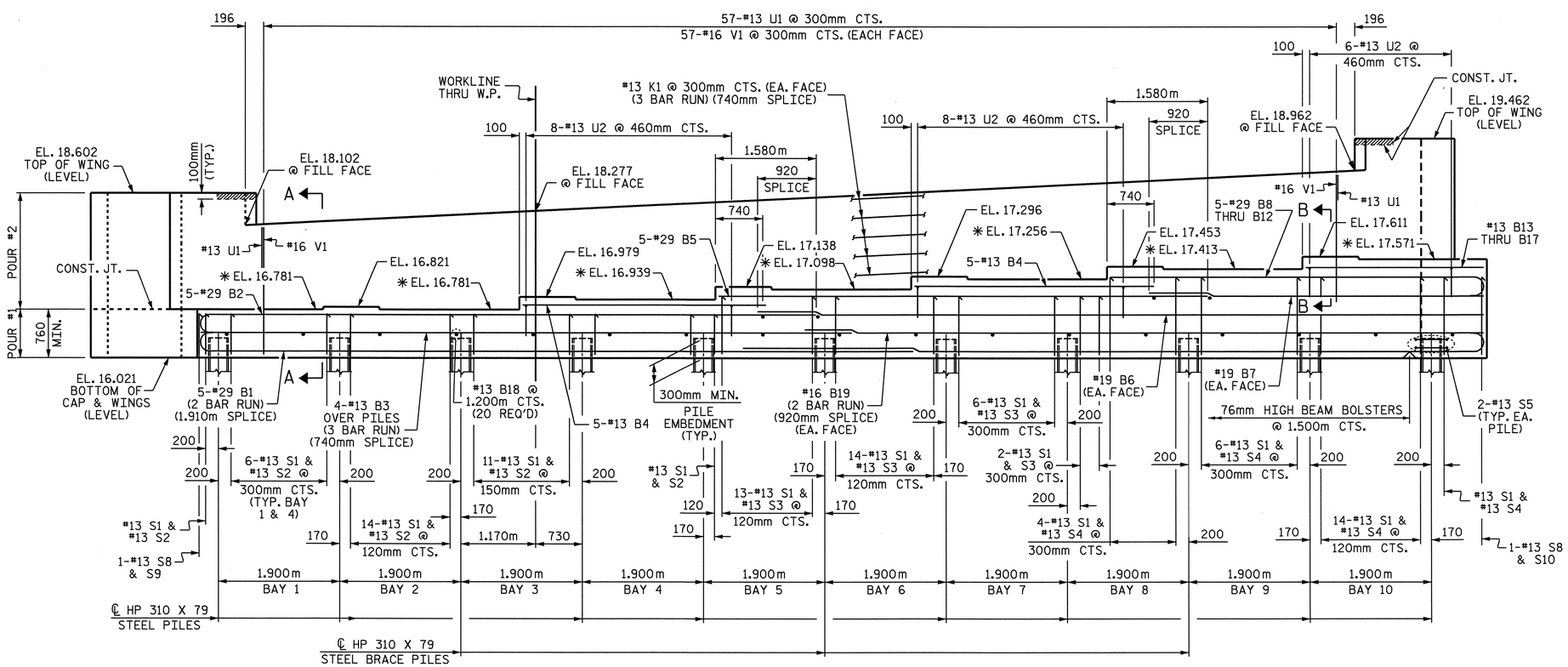

ELEVATION

✳ FOR LOCATION OF ELEVATIONS BETWEEN BRIDGE SEAT BUILDUPS, SEE SECTION VIEWS, SHEET 3 OF 3.

PILE IN WING NOT SHOWN FOR CLARITY

NOTES

STIRRUPS IN CAP MAY BE SHIFTED AS NECESSARY TO CLEAR ANCHOR BOLTS.

THE CONTRACTOR SHALL PROVIDE FOR INSTALLATION OF THE 102mm DIAMETER DRAIN PIPE THROUGH THE WING WALL AS REQUIRED FOR REINFORCED BRIDGE APPROACH FILLS, SEE THE ROADWAY PLANS. REINFORCING STEEL IN THE WING WALL MAY BE SHIFTED AS NECESSARY TO CLEAR THE DRAIN PIPE.

THE TOP SURFACE AREAS OF THE END BENT CAPS SHALL BE CURED IN ACCORDANCE WITH THE STANDARD SPECIFICATIONS EXCEPT THE MEMBRANE CURING COMPOUND METHOD SHALL NOT BE USED.

THE TOP SURFACE OF THE CAP EXCEPT THE BRIDGE SEAT BUILDUPS SHALL BE SLOPED TRANSVERSELY FROM THE FILL FACE TO THE BACK FACE AT THE RATE OF 2%.

FOR PILE SPLICE DETAILS, SEE SHEET 3 OF 3.

THE CONCRETE IN THE SHADED AREA OF THE WING SHALL BE POURED AFTER THE BARRIER RAIL IS CAST IF SLIP FORMING IS USED.

BACKWALL SHALL BE PLACED BEFORE APPLYING THE EPOXY PROTECTIVE COATING.

THE #16 V1 BARS IN THE BACKWALL SHALL BE PLACED 50mm CLEAR FROM THE TOP OF THE BACKWALL.

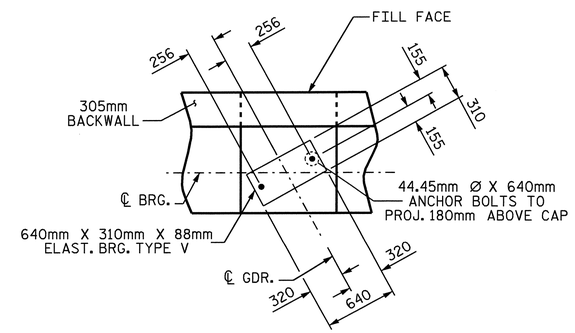

DETAIL A
(DIMENSIONS TYP. EA. BRG.)

PROJECT NO. R-2301A
JONES/CRAVEN COUNTY
STATION: 30+04.517 -L-

SHEET 1 OF 3

STATE OF NORTH CAROLINA
DEPARTMENT OF TRANSPORTATION
RALEIGH

SUBSTRUCTURE
END BENT 2

RIGHT LANE

NORTH CAROLINA PROFESSIONAL SEAL 20125 ENGINEER
MARSHAL G. CHEEK
9-9-08

REVISIONS						SHEET NO.
NO.	BY:	DATE:	NO.	BY:	DATE:	S-113
1			3			TOTAL SHEETS
2			4			176

DRAWN BY : A. SORSENGINH DATE : 7/17/08
CHECKED BY : M. G. CHEEK DATE : 8/1/08

03-SEP-2008 10:49
r:\structures\finalplans\str #4\r-2301a_sd_e*.dgn
lmurphy

STR. #4

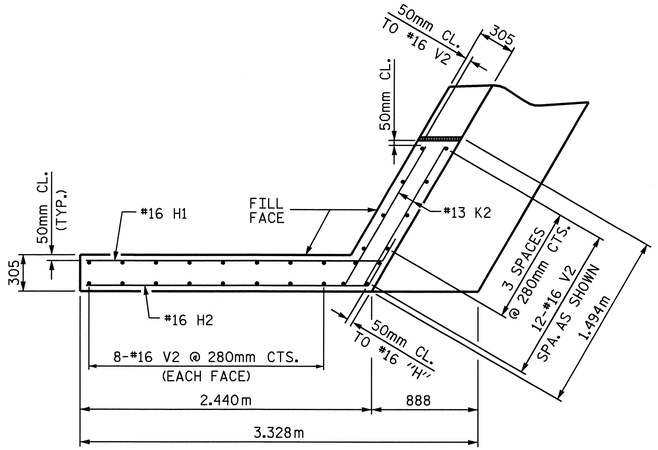

PLAN OF LEFT WING W1

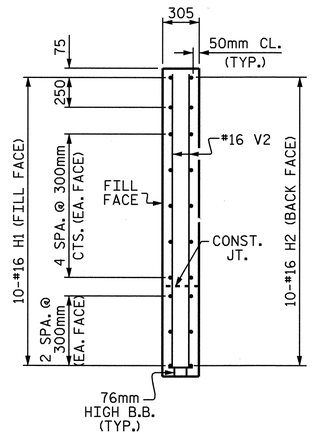

SECTION X-X

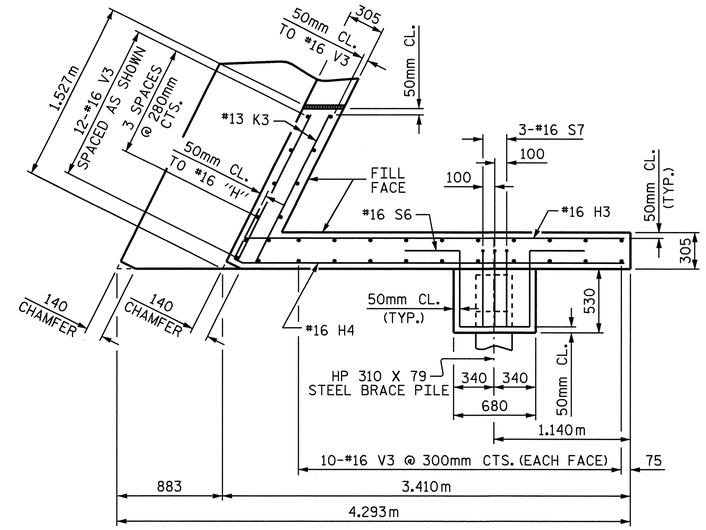

PLAN OF RIGHT WING W2

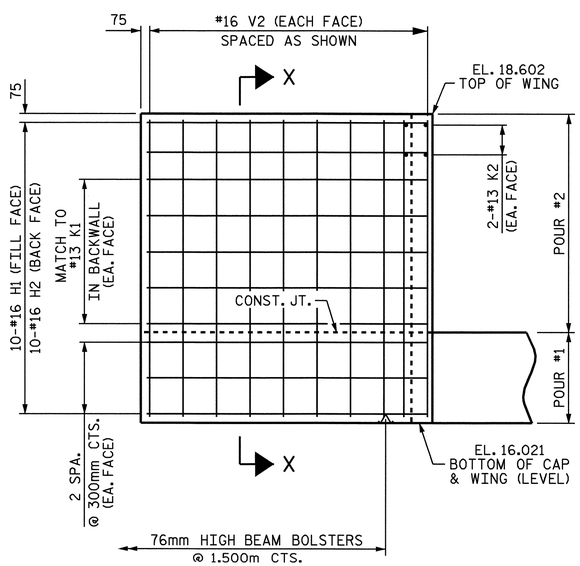

ELEVATION OF LEFT WING W1

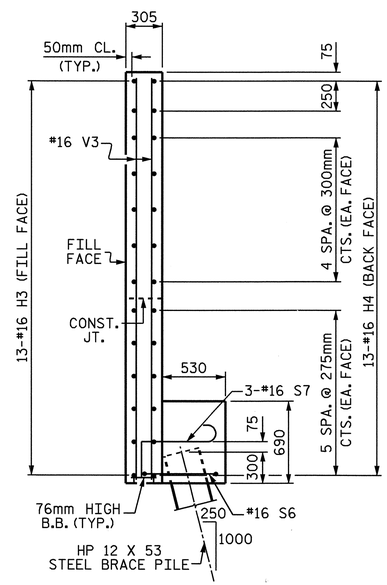

SECTION Y-Y

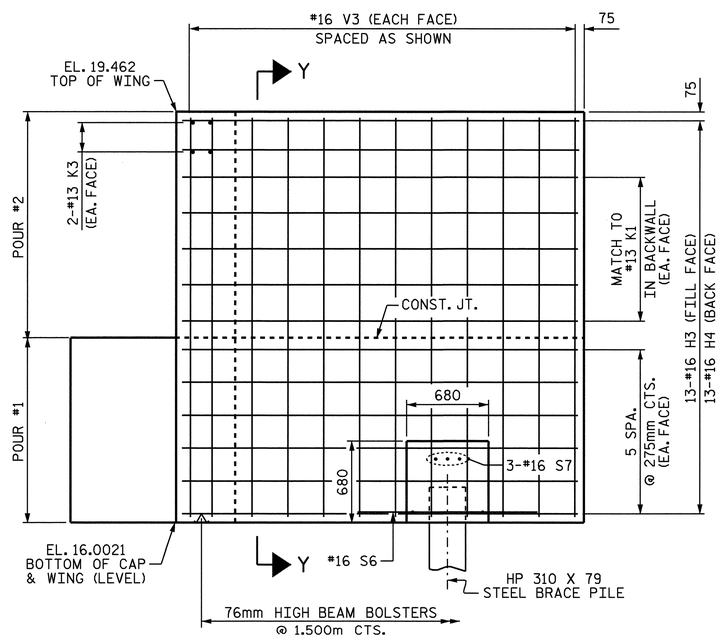

ELEVATION OF RIGHT WING W2

PROJECT NO. R-2301A
JONES/CRAVEN COUNTY
STATION: 30+04.517 -L-

SHEET 2 OF 3

STATE OF NORTH CAROLINA
DEPARTMENT OF TRANSPORTATION
RALEIGH

SUBSTRUCTURE
END BENT 2

RIGHT LANE

NORTH CAROLINA PROFESSIONAL SEAL 20125 ENGINEER MARSHALL G. CHEEK, JR.
9-3-08

REVISIONS						SHEET NO.
NO.	BY:	DATE:	NO.	BY:	DATE:	S-114
1			3			TOTAL SHEETS
2			4			176

STR. #4

DRAWN BY : A. SORSENGINH DATE : 7/17/08
CHECKED BY : M. G. CHEEK DATE : 8/1/08

08-AUG-2008 10:40
r:\structures\asorsenginh\str #4\r-2301a_sd_e*.dgn
asorsenginh

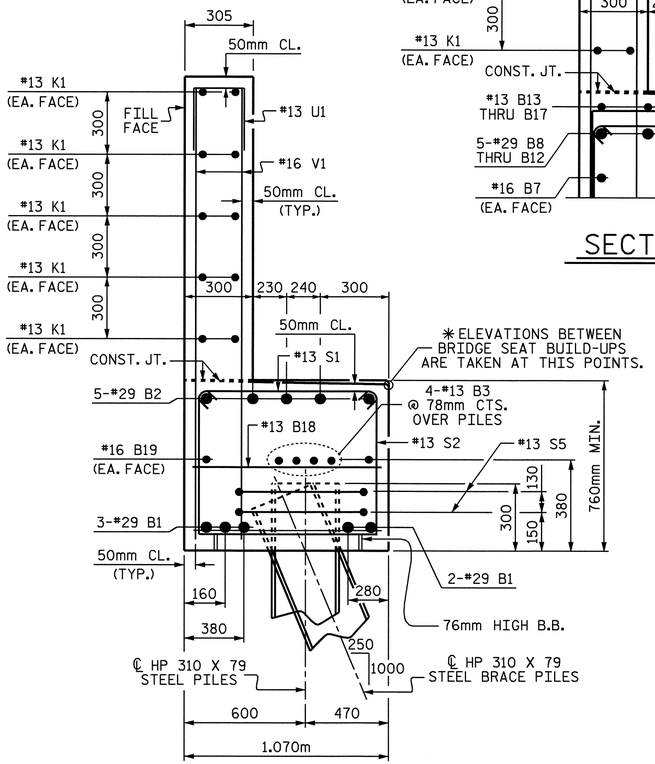

SECTION A-A

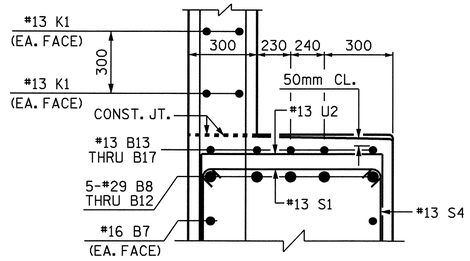

SECTION B-B

BAR TYPES

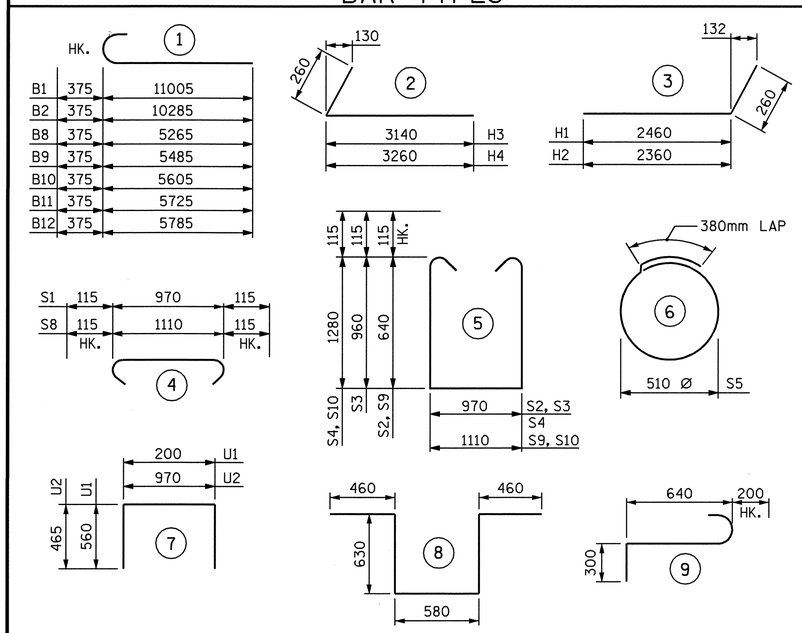

ALL BAR DIMENSIONS ARE OUT TO OUT.

BILL OF MATERIAL
END BENT #2

BAR	NO.	SIZE	TYPE	LENGTH	WEIGHT	BAR	NO.	SIZE	TYPE	LENGTH	WEIGHT
B1	10	#29	1	11380	576	S4	25	#13	5	3760	93
B2	5	#29	1	10660	270	S5	22	#13	6	1980	43
B3	12	#13	STR	7200	86	S6	1	#16	8	2760	4
B4	10	#13	STR	3760	37	S7	3	#16	9	1140	5
B5	5	#29	STR	7680	194	S8	2	#13	4	1340	3
B6	2	#16	STR	10740	33	S9	1	#13	5	2620	3
B7	2	#16	STR	5240	16	S10	1	#13	5	3900	4
B8	1	#29	1	5640	29						
B9	1	#29	1	5860	30	U1	57	#13	7	1320	75
B10	1	#29	1	5980	30	U2	22	#13	7	1900	42
B11	1	#29	1	6100	31						
B12	1	#29	1	6160	31	V1	114	#16	STR	1960	347
B13	1	#13	STR	2180	2	V2	28	#16	STR	2440	106
B14	1	#13	STR	2340	2	V3	32	#16	STR	3300	164
B15	1	#13	STR	2460	2						
B16	1	#13	STR	2600	3						
B17	1	#13	STR	2740	3						
B18	20	#13	STR	960	19						
B19	4	#16	STR	10520	65						
H1	10	#16	3	2720	42						
H2	10	#16	3	2620	41						
H3	13	#16	2	3400	69						
H4	13	#16	2	3520	71						
K1	30	#13	STR	7200	215						
K2	4	#13	STR	1340	5						
K3	4	#13	STR	1380	5						
S1	99	#13	4	1200	118						
S2	39	#13	5	2480	96						
S3	35	#13	5	3120	109						

REINFORCING STEEL = 3119 kg

CLASS A CONCRETE
POUR #1
CAP & LOWER WINGS 26.8 CU. METERS
POUR #2
BACKWALL & UPPER WINGS 12.6 CU. METERS
TOTAL
CLASS A CONCRETE 39.4 CU. METERS

HP 310 X 79 STEEL PILES
NO. 12 228.0 METERS

PILE REDRIVES
NO. 4 EA.

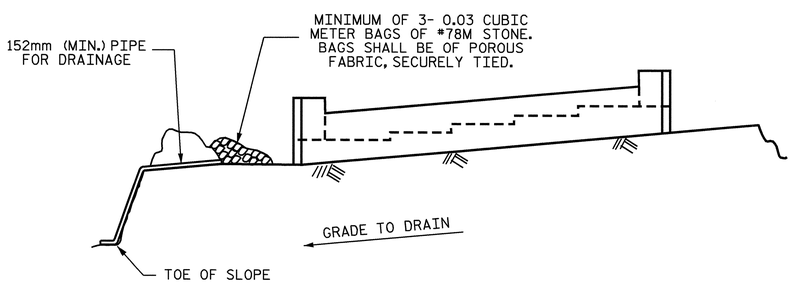

BAGGED STONE AND PIPE SHALL BE PLACED IMMEDIATELY AFTER COMPLETION OF END BENT EXCAVATION. PIPE MAY BE EITHER CONCRETE, CORRUGATED STEEL, CORRUGATED ALUMINUM ALLOY, OR CORRUGATED PLASTIC. PERFORATED PIPE WILL NOT BE ALLOWED.

BAGGED STONE SHALL REMAIN IN PLACE UNTIL THE ENGINEER DIRECTS THAT IT BE REMOVED. THE CONTRACTOR SHALL REMOVE AND DISPOSE OF SILT ACCUMULATIONS AT BAGGED STONE WHEN SO DIRECTED BY THE ENGINEER. BAGS SHALL BE REMOVED AND REPLACED WHENEVER THE ENGINEER DETERMINES THAT THEY HAVE DETERIORATED AND LOST THEIR EFFECTIVENESS.

NO SEPARATE PAYMENT WILL BE MADE FOR THIS WORK AND THE ENTIRE COST OF THIS WORK SHALL BE INCLUDED IN THE UNIT CONTRACT PRICE BID FOR THE SEVERAL PAY ITEMS.

TEMPORARY DRAINAGE AT END BENT

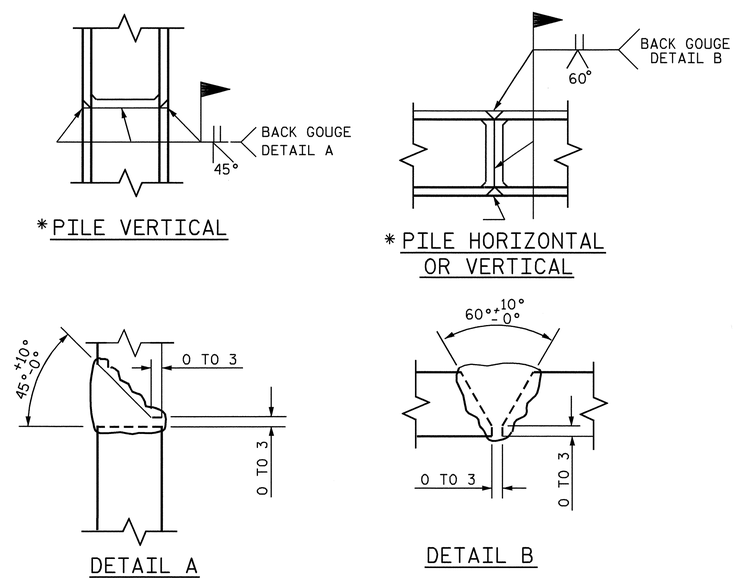

PILE SPLICE DETAILS

✳POSITION OF PILE DURING WELDING.

NORTH CAROLINA PROFESSIONAL SEAL 20125 ENGINEER MARSHALL G. CHEEK, JR.
9-3-08

PROJECT NO. R-2301A
JONES/CRAVEN COUNTY
STATION: 30+04.517 -L-

SHEET 3 OF 3

STATE OF NORTH CAROLINA
DEPARTMENT OF TRANSPORTATION
RALEIGH

SUBSTRUCTURE
END BENT 2

RIGHT LANE

REVISIONS						SHEET NO.
NO.	BY:	DATE:	NO.	BY:	DATE:	S-115
1			3			TOTAL SHEETS
2			4			176

DRAWN BY : A. SORSENGINH DATE : 7/9/08
CHECKED BY : M. G. CHEEK DATE : 8/1/08

STR. #4

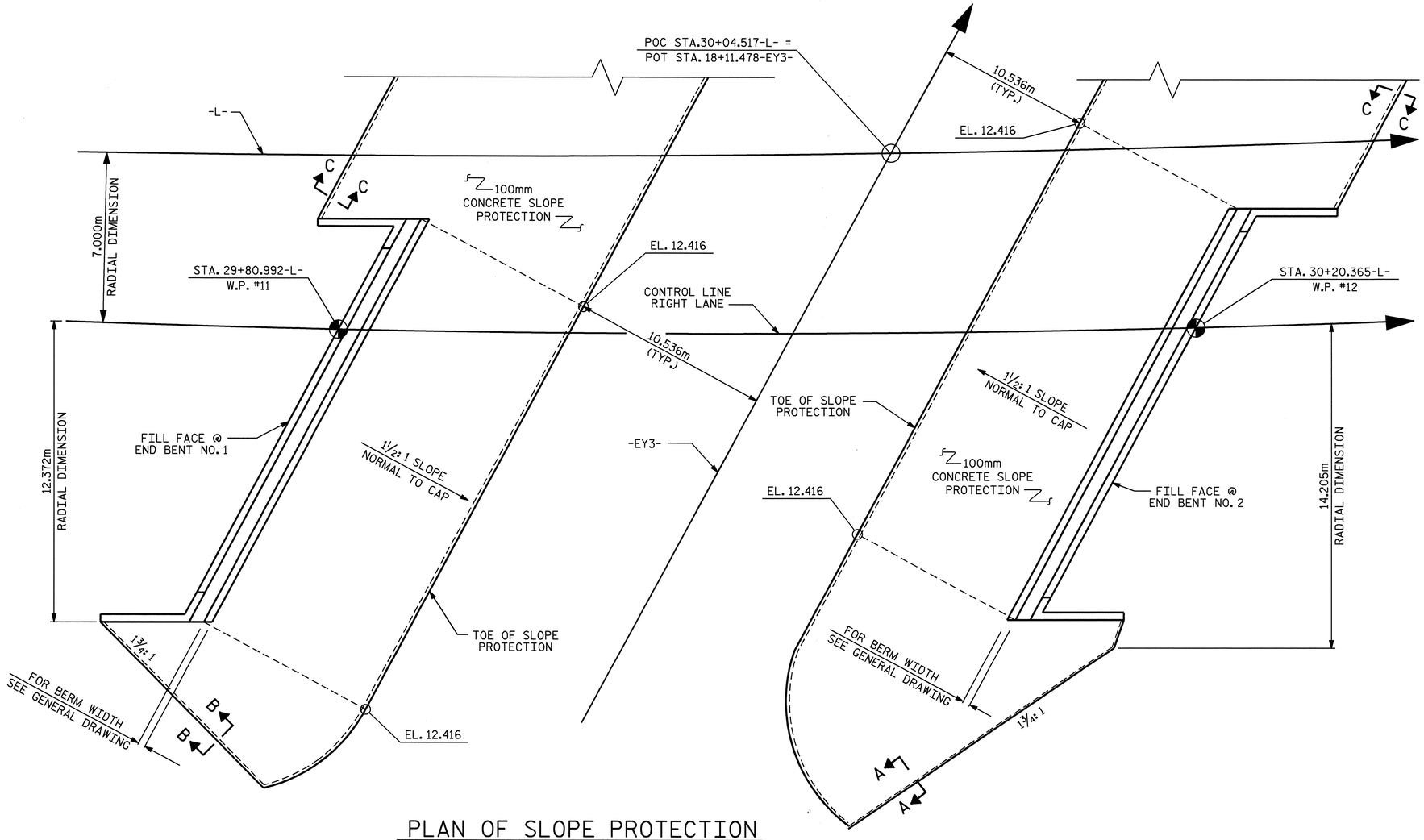

PLAN OF SLOPE PROTECTION

GENERAL NOTES

SLOPE PROTECTION SHALL BE PLACED UNDER THE ENDS OF THE BRIDGE AS SHOWN IN THE DETAILS. STRAIGHT EDGING WILL NOT BE REQUIRED UNLESS, IN THE OPINION OF THE ENGINEER, VISUAL INSPECTION INDICATES A NEED FOR IT. MEASUREMENT AND PAYMENT SHALL BE AS PRESCRIBED IN SECTION 462 OF THE STANDARD SPECIFICATIONS. FOR BERM WIDTH, SEE GENERAL DRAWING.

ALTERNATE "A"

ALTERNATE "A" SHALL CONSIST OF 100mm POURED-IN-PLACE CONCRETE PAVING AS SHOWN IN THE DETAILS ON THIS SHEET. CONCRETE SHALL BE CLASS "B". THE CONCRETE SURFACE SHALL BE FLOATED WITH A WOODEN FLOAT AND FINISHED. WELDED WIRE FABRIC REINFORCING SHALL BE 152 X 152 - W9.1 X W9.1, 1520mm WIDE. SLOPE PROTECTION SHALL BE POURED IN 1520mm STRIPS AS SHOWN IN THE "POURING DETAIL" WITH 600mm LONG #13 BARS PLACED ALONG THE SLOPE BETWEEN STRIPS AT 450mm MAXIMUM SPACING. SLOPE PROTECTION MAY BE POURED IN ALTERNATE 1220mm AND 1520mm STRIPS AS SHOWN IN THE "OPTIONAL POURING DETAIL" WITH ADJACENT RUNS OF WELDED WIRE FABRIC LAPPING AT LEAST 152mm. THE COST OF THE WELDED WIRE FABRIC AND #13 BARS, IF USED, SHALLBE INCLUDED IN THE CONTRACT UNIT PRICE BID PER SQUARE METER FOR SLOPE PROTECTION.

BRIDGE @ STA. 30+04.517-L- (RIGHT LANE)	100 mm SLOPE PROTECTION	* WELDED WIRE FABRIC 1520mm WIDE
	SQUARE METERS	APPROX. METERS
END BENT No. 1	306	223
END BENT No. 2	363	265

* QUANTITY SHOWN IS BASED ON 1520mm POURS.

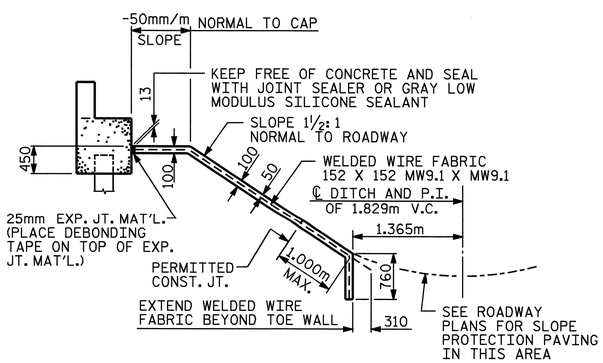

SECTION ALONG ℄ ROADWAY WHEN FILL CATCHES IN DITCH

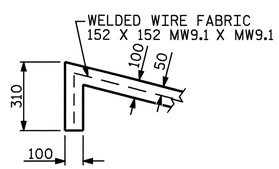

SECTION C-C

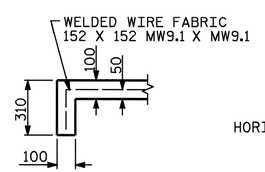

SECTION A-A

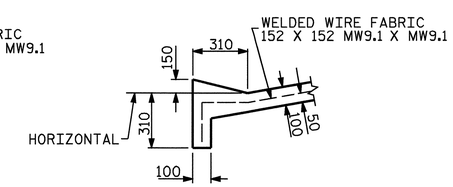

SECTION B-B

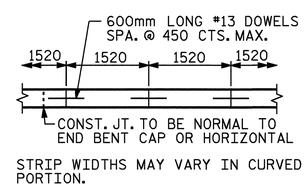

POURING DETAIL

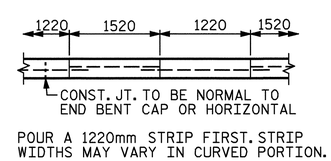

OPTIONAL POURING DETAIL

PROJECT NO. R-2301A
JONES/CRAVEN COUNTY
STATION: 30+04.517-L-

STATE OF NORTH CAROLINA
DEPARTMENT OF TRANSPORTATION
RALEIGH

SLOPE PROTECTION
RIGHT LANE

NORTH CAROLINA PROFESSIONAL SEAL 20125 ENGINEER MARSHALL G. PARKER, JR.
4-5-08

REVISIONS						SHEET NO.
NO.	BY:	DATE:	NO.	BY:	DATE:	S-116
1			3			TOTAL SHEETS
2			4			176

DRAWN BY : R. G. EMERSON DATE : 07/08
CHECKED BY : D. HODGE DATE : 07/08

05-SEP-2008 13:08
r:\structures\final plans\Str #4\R2301A_sd_SP_str_4.dgn
ddhodge

STR. #4

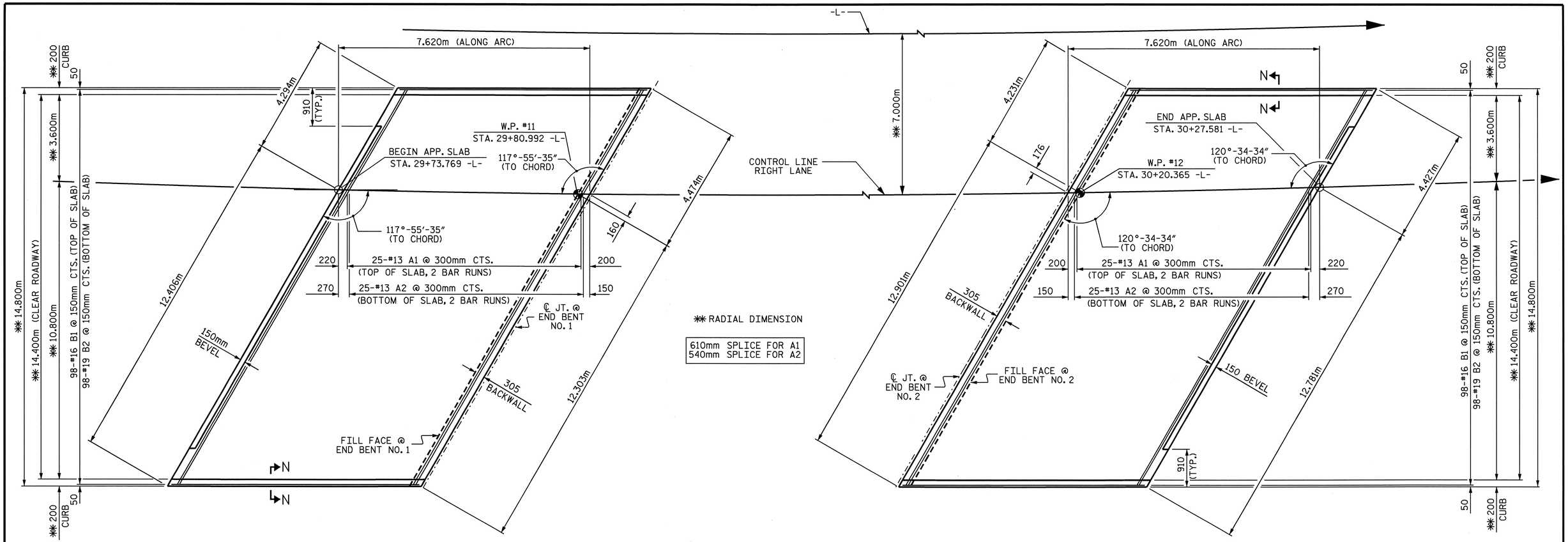

APPROACH SLAB @ END BENT NO. 1

PLAN

APPROACH SLAB @ END BENT NO. 2

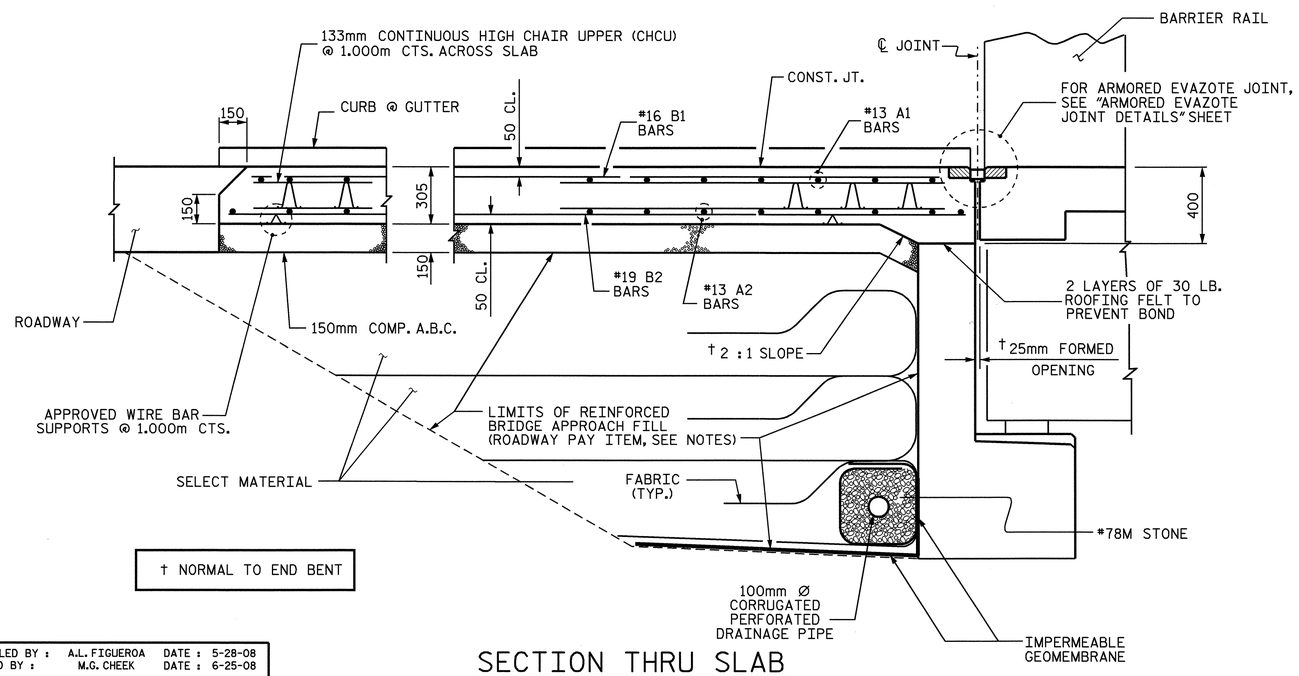

† NORMAL TO END BENT

SECTION THRU SLAB

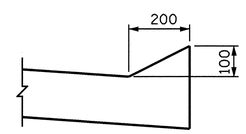

SECTION N-N

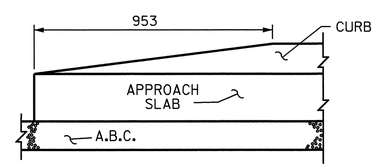

END OF CURB WITHOUT SHOULDER BERM GUTTER

PROJECT NO. R-2301A
JONES/CRAVEN COUNTY
STATION: 30+04.517 -L-

SHEET 1 OF 2

STATE OF NORTH CAROLINA
DEPARTMENT OF TRANSPORTATION
RALEIGH

BRIDGE APPROACH SLAB FOR FLEXIBLE PAVEMENT

RIGHT LANE

NORTH CAROLINA PROFESSIONAL SEAL 20125 ENGINEER MARSHALL G. CHEEK, JR.
9-3-08

REVISIONS						SHEET NO.
NO.	BY:	DATE:	NO.	BY:	DATE:	S-117
1			3			TOTAL SHEETS
2			4			176

ASSEMBLED BY : A.L. FIGUEROA	DATE : 5-28-08		
CHECKED BY : M.G. CHEEK	DATE : 6-25-08		
DRAWN BY : FCJ 6/87	REV. 7/10/01	RWW/LES	
CHECKED BY : EGA 6/87	REV. 5/7/03R	RWW/JTE	
	REV. 5/1/06R	KMM/GM	

02-SEP-2008 14:45
R:\Structures\Final Plans\Str #4\R-2301A_sd_STR#4-16_AS.dgn
afigueroa

STR. #4 STD. NO. BAS4SM

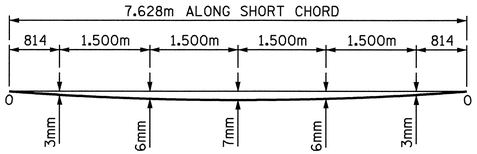

ARC OFFSETS - LEFT SIDE

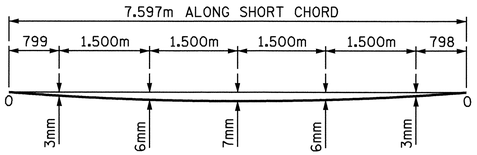

ARC OFFSETS - RIGHT SIDE

APPROACH SLAB @ END BENT NO.1

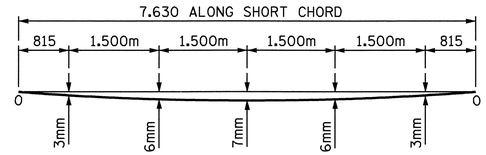

ARC OFFSETS - LEFT SIDE

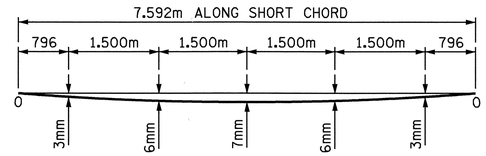

ARC OFFSETS - RIGHT SIDE

APPROACH SLAB @ END BENT NO.2

NOTES

APPROACH SLAB SHALL NOT BE CONSTRUCTED PRIOR TO COMPLETION OF THE BRIDGE DECK.

FOR REINFORCED BRIDGE APPROACH FILL INCLUDING FABRIC, IMPERMEABLE GEOMEMBRANE, 102mm Ø DRAINAGE PIPE, #78M STONE, AND SELECT MATERIAL, SEE ROADWAY PLANS.

AREA BETWEEN THE WINGWALL AND APPROACH SLAB SHALL BE GRADED TO DRAIN THE WATER AWAY FROM THE FILL FACE OF THE BRIDGE AND SHALL BE PAVED. SEE ROADWAY PLANS.

THE 150mm COMP. A.B.C. SHALL BE FLUSH WITH THE ROADWAY END OF THE APPROACH SLAB AND SHALL EXTEND 300mm OUTSIDE OF EACH EDGE OF THE APPROACH SLAB.

THE CONTRACTOR MAY USE 100mm TYPE B-25.0B ASPHALT CONCRETE COURSE IN LIEU OF 150mm COMP. A.B.C. IF THIS OPTION IS USED, THE BASE COURSE SHALL BE FLUSH WITH THE ROADWAY END OF THE APPROACH SLAB, AND THE WIDTH SHALL BE THE SAME AS THAT OF THE APPROACH SLAB.

THE CONTRACTOR MAY USE 125mm CLASS "A" CONCRETE BASE IN LIEU OF 150mm COMP. A.B.C. IF THIS OPTION IS USED, THE CONCRETE BASE SHALL BE FLUSH WITH THE ROADWAY END OF THE APPROACH SLAB, AND THE WIDTH SHALL BE THE SAME AS THAT OF THE APPROACH SLAB. THE CONCRETE SHALL BE FINISHED TO A SMOOTH SURFACE AND A LAYER OF 13.6 kg ROOFING FELT SHALL BE PLACED BETWEEN THE CONCRETE BASE AND THE APPROACH SLAB TO PREVENT BOND. THE APPROACH SLAB SHALL NOT BE CAST UNTIL THE CONCRETE BASE HAS REACHED AN AGE OF THREE CURING DAYS.

THE NOMINAL UNCOMPRESSED SEAL WIDTH OF THE EVAZOTE JOINT SEAL SHALL BE 64mm.

FOR EVAZOTE JOINT SEALS, SEE SPECIAL PROVISIONS.

FOR ELASTOMERIC CONCRETE, SEE SPECIAL PROVISIONS.

BILL OF MATERIAL

APPROACH SLAB @ END BENT NO.1

BAR	NO.	SIZE	TYPE	LENGTH	WEIGHT
* A1	50	#13	STR	8660	430
A2	50	#13	STR	8620	428
* B1	98	#16	STR	7240	1101
B2	98	#19	STR	7520	1647
REINFORCING STEEL				kg	2075
* EPOXY COATED REINFORCING STEEL				kg	1531
CLASS AA CONCRETE BREAKDOWN					
SLAB AND CURB				CU. METERS	33.6
CLASS AA CONCRETE				CU. METERS	33.6

APPROACH SLAB @ END BENT NO.2

BAR	NO.	SIZE	TYPE	LENGTH	WEIGHT
* A1	50	#13	STR	8640	429
A2	50	#13	STR	8620	428
* B1	98	#16	STR	7240	1101
B2	98	#19	STR	7520	1647
REINFORCING STEEL				kg	2075
* EPOXY COATED REINFORCING STEEL				kg	1531
CLASS AA CONCRETE BREAKDOWN					
SLAB AND CURB				CU. METERS	33.6
CLASS AA CONCRETE				CU. METERS	33.6

* THESE BARS ARE EPOXY COATED.

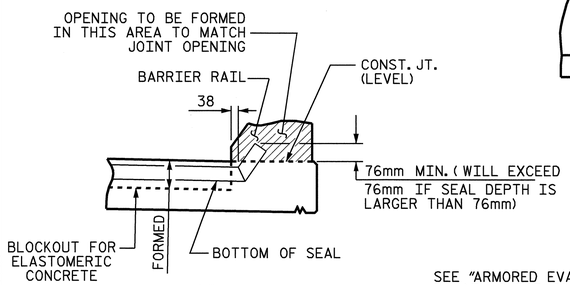

SECTION A-A

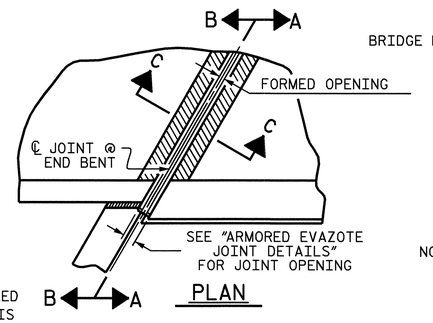

PLAN

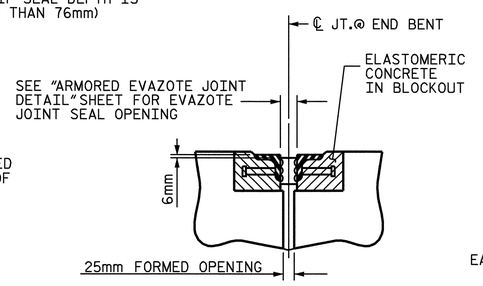

SECTION C-C
ARMORED EVAZOTE JOINT SEAL

EVAZOTE JOINT SEAL TO BE CUT, HEAT WELDED AND TURNED UP PARALLEL TO SLOPED FACE OF THE BARRIER RAIL.

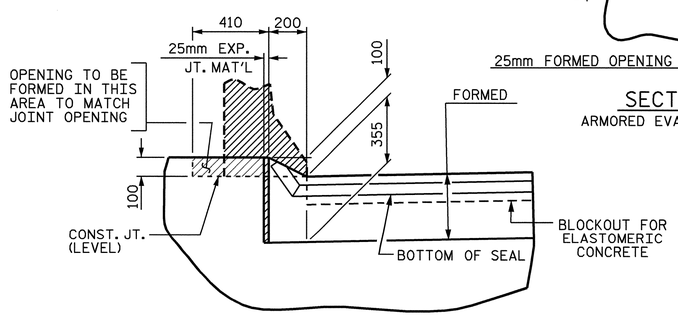

SECTION B-B

JOINT SEAL DETAILS @ END BENT

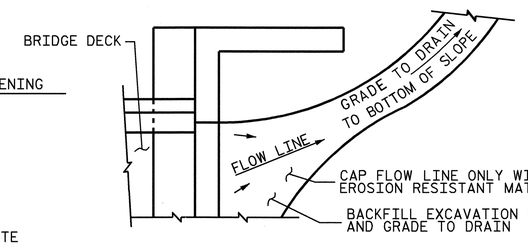

NOTE: IF THE APPROACH SLAB IS NOT CONSTRUCTED IMMEDIATELY AFTER THE BACKFILLING OF THE END BENT EXCAVATION, GRADE TO DRAIN TO THE BOTTOM OF THE SLOPE AND PROVIDE EROSION RESISTANT MATERIAL, SUCH AS FIBERGLASS ROVING OR AS DIRECTED BY THE ENGINEER TO PREVENT SOIL EROSION AND TO PROTECT THE AREA ADJACENT TO THE STRUCTURE. THE CONTRACTOR WILL BE REQUIRED TO REMOVE THESE MATERIALS PRIOR TO CONSTRUCTION OF THE APPROACH SLAB.

TEMPORARY DRAINAGE DETAIL

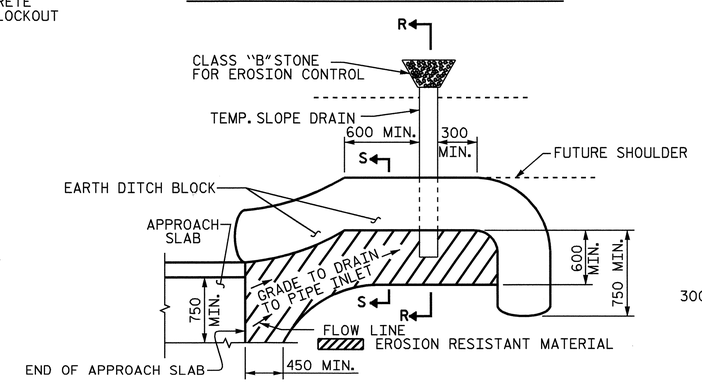

NOTE: IMMEDIATELY AFTER THE CONSTRUCTION OF THE APPROACH SLAB, THE CONTRACTOR SHALL PROVIDE TEMPORARY BERM AND SLOPE DRAIN. CONTRACTOR SHALL GRADE TO PIPE INLET AND PROVIDE EROSION RESISTANT MATERIAL AS SHOWN. THE EROSION RESISTANT MATERIAL SHALL BE EITHER 1) ASPHALT PLANT MIX, TYPE 1 OR TYPE 2, MIN. 50mm DEPTH, 2) EROSION CONTROL MAT, OR 3) CONCRETE, AS DIRECTED BY THE ENGINEER. THE SLOPE DRAIN SHALL CONSIST OF A NON-PERFORATED TEMPORARY DRAINAGE PIPE, 305mm IN DIAMETER.

PLAN VIEW

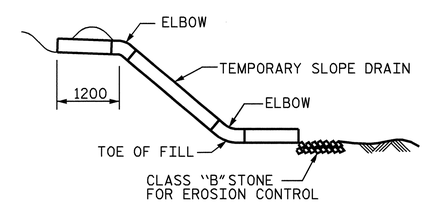

SECTION R-R

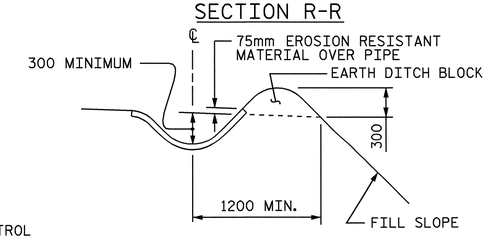

SECTION S-S

TEMPORARY BERM AND SLOPE DRAIN DETAILS

PROJECT NO. R-2301A
JONES/CRAVEN COUNTY
STATION: 30+04.517 -L-

SHEET 2 OF 2

STATE OF NORTH CAROLINA
DEPARTMENT OF TRANSPORTATION
RALEIGH

STANDARD
BRIDGE APPROACH SLAB DETAILS
RIGHT LANE

NORTH CAROLINA PROFESSIONAL SEAL 20125 ENGINEER MARSHALL G. CHEEK, JR.
9-2-08

REVISIONS						SHEET NO.
NO.	BY:	DATE:	NO.	BY:	DATE:	S-118
1			3			TOTAL SHEETS
2			4			176

STR. #4 STD. NO. BAS10

ASSEMBLED BY : A.L. FIGUEROA		DATE : 5-27-08	
CHECKED BY : M.G. CHEEK		DATE : 6-25-08	
DRAWN BY : FCJ 11/88	REV. 10/17/00	RWW/LES	
CHECKED BY : ARB 11/88	REV. 5/7/03	RWW/JTE	
	REV. 5/1/06	TLA/GM	

02-SEP-2008 14:45
R:\Structures\Final Plans\Str #4\R-2301A_sd_STR#4-16_AS.dgn
aflgueroa

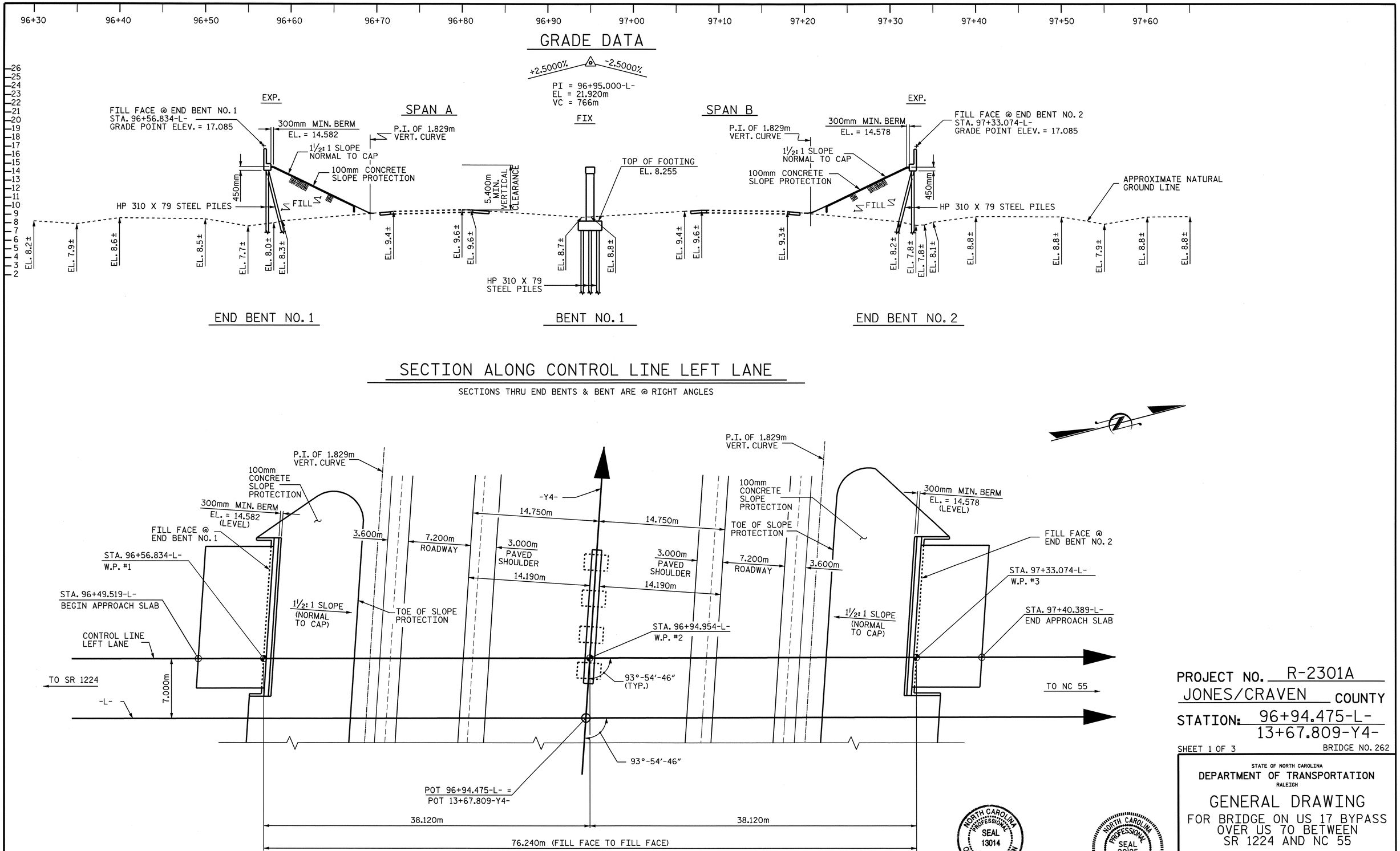

PROJECT NO. R-2301A
JONES/CRAVEN COUNTY
STATION: 96+94.475-L-
13+67.809-Y4-

SHEET 1 OF 3 BRIDGE NO. 262

STATE OF NORTH CAROLINA
DEPARTMENT OF TRANSPORTATION
RALEIGH

GENERAL DRAWING

FOR BRIDGE ON US 17 BYPASS
OVER US 70 BETWEEN
SR 1224 AND NC 55

LEFT LANE

REVISIONS							SHEET NO.
NO.	BY:	DATE:	NO.	BY:	DATE:		S-119
1			3				TOTAL SHEETS
2			4				176

DRAWN BY : L.L. MURPHY DATE : 12-07
CHECKED BY : M.G. CHEEK DATE : 01-08

04-SEP-2008 08:45
r:\structures\finalplans\str #5\r2301a_sd_gd_str#5.dgn
lmurphy

STR #5

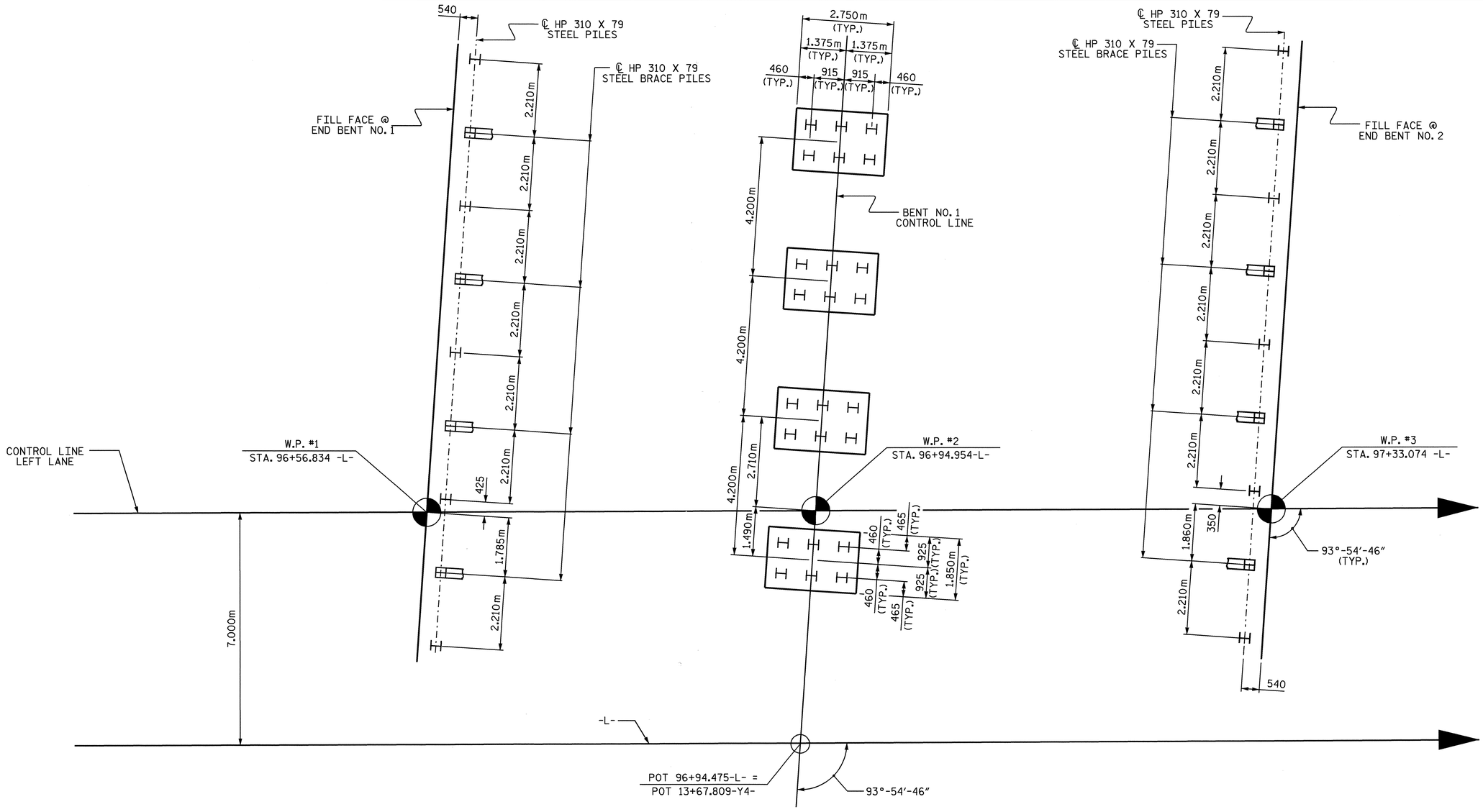

END BENT NO. 1 | BENT NO. 1 | END BENT NO. 2

FOUNDATION LAYOUT

DIMENSIONS LOCATING PILES ARE SHOWN TO THE PILE CENTERLINE
END BENT BRACE PILES ARE BATTERED 250:1000

NOTES

DRIVE PILES AT END BENT NO. 1 AND END BENT NO. 2 TO A REQUIRED BEARING CAPACITY OF 1260 KILONEWTONS PER PILE. THE REQUIRED BEARING CAPACITY IS EQUAL TO THE ALLOWABLE BEARING CAPACITY WITH A MINIMUM FACTOR OF SAFETY OF TWO.

THE ALLOWABLE BEARING CAPACITY FOR PILES AT END BENT NO. 1 AND END BENT NO. 2 IS 630 KILONEWTONS PER PILE.

DRIVE PILES AT BENT NO. 1 TO A REQUIRED BEARING CAPACITY OF 1260 KILONEWTONS PER PILE. THE REQUIRED BEARING CAPACITY IS EQUAL TO THE ALLOWABLE BEARING CAPACITY WITH A MINIMUM FACTOR OF SAFETY OF TWO.

THE ALLOWABLE BEARING CAPACITY FOR PILES AT BENT NO. 1 IS 630 KILONEWTONS PER PILE.

OBSERVE AN ONE MONTH WAITING PERIOD AFTER CONSTRUCTING THE EMBANKMENT TO THE BOTTOM OF CAP ELEVATION BEFORE BEGINNING END BENT CONSTRUCTION AT END BENT NO. 1 AND END BENT NO. 2.

NORTH CAROLINA PROFESSIONAL SEAL 20125 ENGINEER MARSHALL G. CHEEK, JR.
9-4-08

PROJECT NO. R-2301A
JONES/CRAVEN COUNTY
STATION: 96+94.475 -L-

SHEET 2 OF 3

STATE OF NORTH CAROLINA
DEPARTMENT OF TRANSPORTATION
RALEIGH

GENERAL DRAWING
FOR BRIDGE ON US 17 BYPASS OVER US 70 BETWEEN SR 1224 AND NC 55
LEFT LANE

REVISIONS						SHEET NO.
NO.	BY:	DATE:	NO.	BY:	DATE:	S-120
1			3			TOTAL SHEETS
2			4			176

DRAWN BY : R. G. EMERSON DATE : 07/08
CHECKED BY : M. G. CHEEK DATE : 07/08

04-SEP-2008 09:03
r:\structures\finalplans\str #5\r2301a_sd_fl_str5.dgn
lmurphy

STR. #5

BENCH MARK : 26 RR SPIKE IN 0.25 PINE, STA. 96+53.210 -L-, 44.844 (LT), ELEV. = 9.205

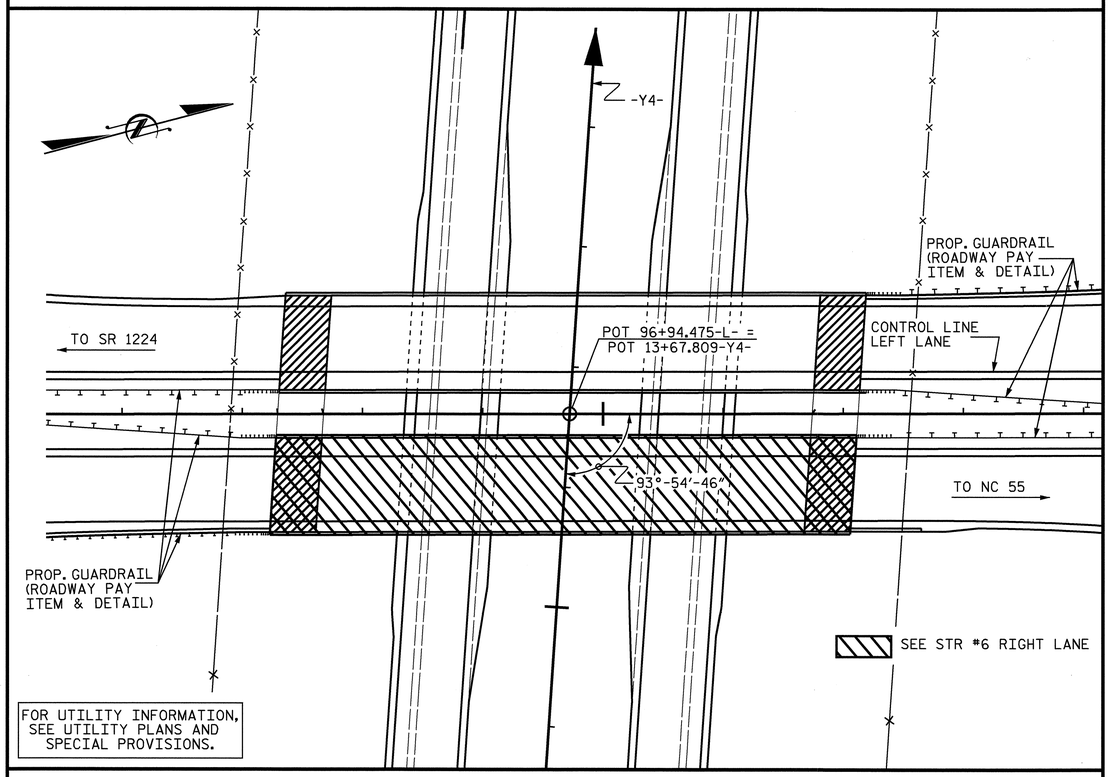

LOCATION SKETCH

THE CONTRACTOR SHALL PROVIDE INDEPENDENT ASSURANCE SAMPLES OF REINFORCING STEEL AS FOLLOWS: FOR PROJECTS REQUIRING UP TO 360,000 kg OF REINFORCING STEEL, ONE 760mm SAMPLE OF EACH SIZE BAR USED, AND FOR PROJECTS REQUIRING OVER 360,000 kg OF REINFORCING STEEL, TWO 760mm SAMPLES OF EACH SIZE BAR USED. THE BARS FROM WHICH THE SAMPLES ARE TAKEN MUST THEN BE SPLICED WITH REPLACEMENT BARS OF THE SIZE AND LENGTH OF THE SAMPLE PLUS A MINIMUM LAP SPLICE OF THIRTY BAR DIAMETERS.

NOTES

ALL DIMENSIONS ARE IN MILLIMETERS UNLESS OTHERWISE NOTED.

ALL ELEVATIONS ARE IN METERS.

FOR OTHER DESIGN DATA AND GENERAL NOTES, SEE SHEET SNSM.

ALL STRUCTURAL STEEL SHALL BE AASHTO M270 GRADE 345W AND PAINTED IN ACCORDANCE WITH SYSTEM 4 OF ARTICLE 442-7 OF THE STANDARD SPECIFICATIONS UNLESS OTHERWISE NOTED ON THE PLANS.

REMOVABLE FORMS MAY BE USED IN LIEU OF METAL STAY-IN-PLACE FORMS IN ACCORDANCE WITH ARTICLE 420-3 OF THE STANDARD SPECIFICATIONS.

FOR MAINTENANCE AND PROTECTION OF TRAFFIC BENEATH PROPOSED STRUCTURE, SEE SPECIAL PROVISIONS.

NEEDLE BEAMS WILL NOT BE ALLOWED UNLESS OTHERWISE CALLED FOR ON THE PLANS OR APPROVED BY THE ENGINEER.

FOR SUBMITTAL OF WORKING DRAWINGS, SEE SPECIAL PROVISIONS.

FOR METRIC STRUCTURAL STEEL, SEE SPECIAL PROVISIONS.

FOR FALSEWORK AND FORMWORK, SEE SPECIAL PROVISIONS.

ASSUMED LIVE LOAD = MS18 OR ALTERNATE LOADING, EXCEPT THAT THE GIRDERS HAVE BEEN DESIGNED FOR MS22.5.

THIS BRIDGE HAS BEEN DESIGNED BY THE STRENGTH DESIGN METHOD AS SPECIFIED IN AASHTO STANDARD SPECIFICATIONS.

THIS BRIDGE HAS BEEN DESIGNED IN ACCORDANCE WITH THE REQUIREMENTS OF THE AASHTO STANDARD SPECIFICATIONS FOR SEISMIC DESIGN OF HIGHWAY BRIDGES FOR SEISMIC PERFORMANCE CATEGORY A.

FOR GROUT FOR STRUCTURES, SEE SPECIAL PROVISIONS.

FOR CRANE SAFETY, SEE SPECIAL PROVISIONS.

FOR ADHESIVELY ANCHORED BOLTS OR DOWELS, SEE SPECIAL PROVISIONS.

TOTAL BILL OF MATERIAL

	FOUNDATION EXCAVATION FOR BENT	REINFORCED CONCRETE DECK SLAB	GROOVING BRIDGE FLOORS	CLASS A CONCRETE	BRIDGE APPROACH SLABS	REINFORCING STEEL	SPIRAL COLUMN REINFORCING STEEL	STRUCTURAL STEEL	HP 310 X 79 STEEL PILES		PILE REDRIVES	CONCRETE BARRIER RAIL	100mm SLOPE PROTECTION	POT BEARINGS	ELASTOMERIC BEARINGS	EVAZOTE JOINT SEALS
	LUMP SUM	SQ. METERS	SQ. METERS	CU. METERS	LUMP SUM	kg	kg	APPROX. kg	NO.	METERS	EACH	METERS	SQ. METERS	LUMP SUM	LUMP SUM	LUMP SUM
SUPERSTRUCTURE		1254.3	1316.0		LUMP SUM			209500				151.208		LUMP SUM	LUMP SUM	LUMP SUM
END BENT NO. 1				29.2		2527			9	207.0	4		274			
BENT NO.1	LUMP SUM			60.1		4922	733		24	552.0	4					
END BENT NO. 2				29.2		2528			9	207.0	4		266			
TOTAL	LUMP SUM	1254.3	1316.0	118.5	LUMP SUM	9977	733	209500	42	966.0	12	151.208	540	LUMP SUM	LUMP SUM	LUMP SUM

PROJECT NO. R-2301A
JONES/CRAVEN COUNTY
STATION: 96+94.475-L-

SHEET 3 OF 3

STATE OF NORTH CAROLINA
DEPARTMENT OF TRANSPORTATION
RALEIGH

GENERAL DRAWING
FOR BRIDGE ON US 17 BYPASS
OVER US 70 BETWEEN
SR 1224 AND NC 55

LEFT LANE

NORTH CAROLINA PROFESSIONAL SEAL 20125 ENGINEER MARSHALL G. CHEEK, JR.
9-3-08

REVISIONS						SHEET NO.
NO.	BY:	DATE:	NO.	BY:	DATE:	S-121
1			3			TOTAL SHEETS
2			4			176

DRAWN BY : L.L. MURPHY DATE : 6-08
CHECKED BY : M.G. CHEEK DATE : 8-08

02-SEP-2008 15:55
r:\structures\finalplans\Str #5\R2301A_sd_GD_str#5.dgn
lmurphy

STR #5

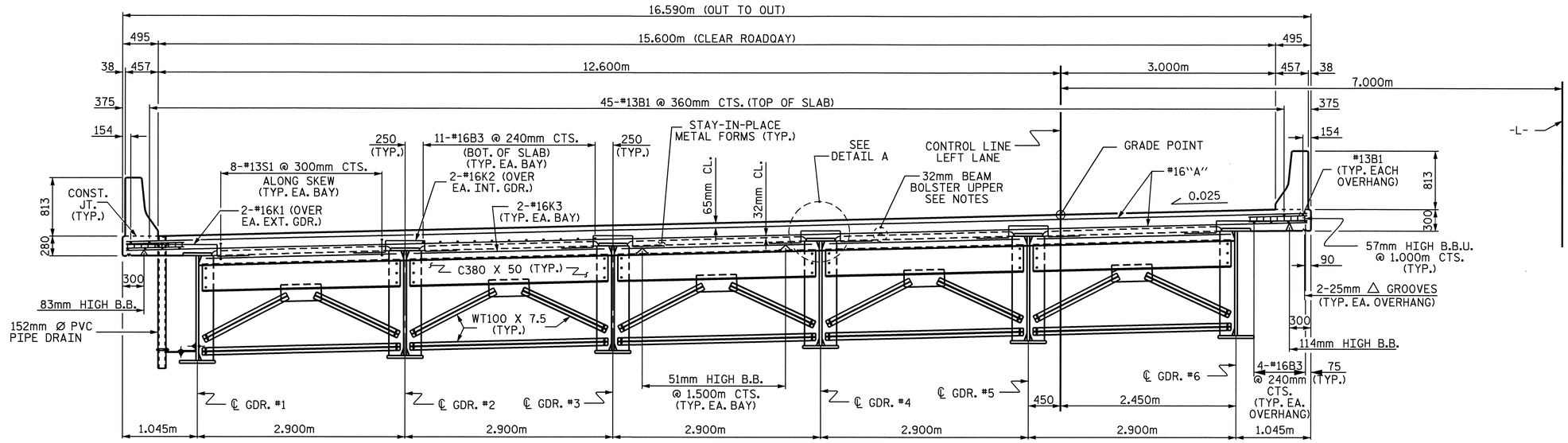

TYPICAL SECTION

(SHOWING END BENT DIAPHRAGM)

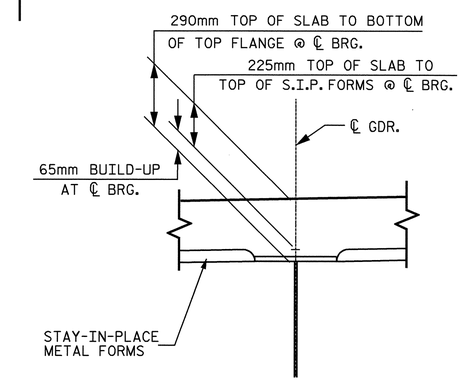

DETAIL A

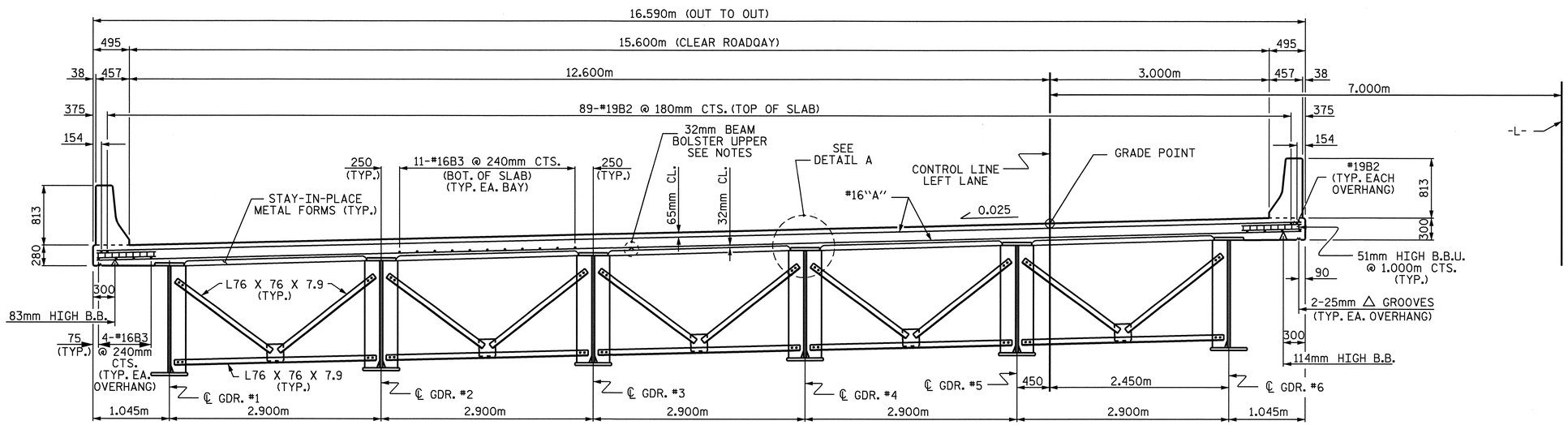

TYPICAL SECTION

(SHOWING BENT DIAPHRAGM)

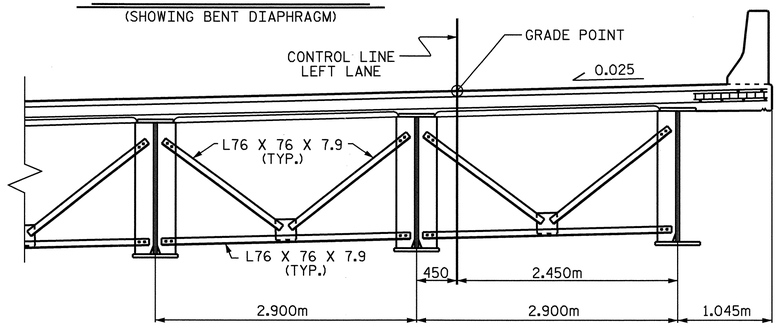

HALF SECTION

(SHOWING INTERMEDIATE DIAPHRAGM)

PROJECT NO. R-2301A
JONES/CRAVEN COUNTY
STATION: 96+94.475-L-

SHEET 1 OF 2

STATE OF NORTH CAROLINA
DEPARTMENT OF TRANSPORTATION
RALEIGH

SUPERSTRUCTURE
TYPICAL SECTION
LEFT LANE

NORTH CAROLINA PROFESSIONAL SEAL 20125 ENGINEER MARSHALL A. GREER, JR.
9-3-08

REVISIONS						SHEET NO.
NO.	BY:	DATE:	NO.	BY:	DATE:	S-122
1			3			TOTAL SHEETS
2			4			176

DRAWN BY : L.L. MURPHY DATE : 07-08
CHECKED BY : K. LAYNE DATE : 08-08

06-AUG-2008 10:20
r:\structures\lmurphy\STR*5\R2301A_sd_TS_STR*5.dgn
lmurphy

STR #5

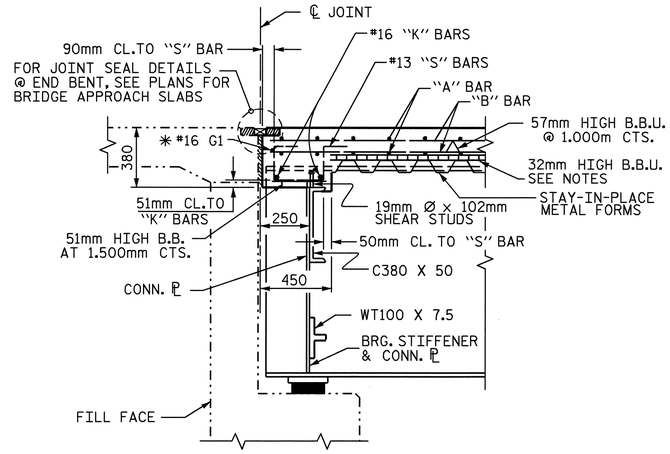

SECTION THRU END BENT DIAPHRAGM

✱ #16 "G" BAR MAY BE SHIFTED SLIGHTLY, AS NECESSARY, TO CLEAR DIAPHRAGM AND REINFORCING STEEL.

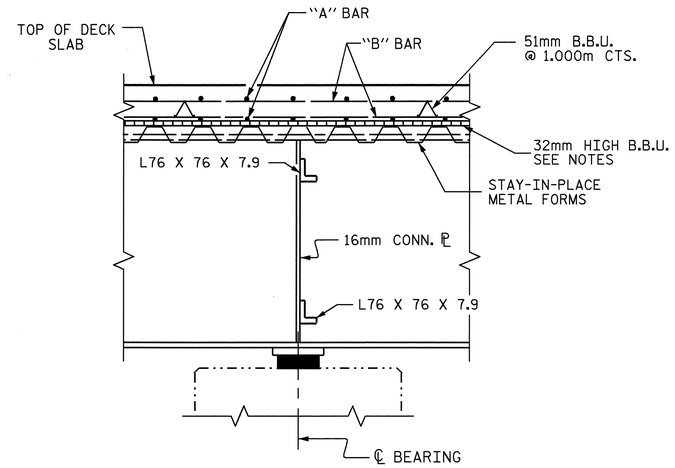

SECTION THRU BENT DIAPHRAGM

NOTES

PROVIDE 32mm HIGH BEAM BOLSTERS UPPER AT 1.2m CTS. ATOP THE METAL STAY-IN-PLACE FORMS TO SUPPORT THE BOTTOM MAT OF 'A' BARS. WHEN USING REMOVABLE FORMS, PROVIDE CONTINUOUS HIGH CHAIRS FOR METAL DECK (C.H.C.M.) @ 1.2m CTS. WITH A HEIGHT TO SUPPORT THE BOTTOM MAT OF 'A' BARS A CLEAR DISTANCE OF 65mm ABOVE THE TOP OF THE REMOVABLE FORM.

METAL STAY-IN-PLACE FORMS SHALL NOT BE WELDED TO BEAM OR GIRDER FLANGES IN THE ZONES REQUIRING CHARPY V-NOTCH TEST. SEE STRUCTURAL STEEL DETAIL SHEETS.

STRUCTURAL STEEL ERECTION IN A CONTINUOUS UNIT SHALL BE COMPLETE BEFORE FALSEWORK OR FORMS ARE PLACED ON THE UNIT.

#16 G1 BAR MAY BE SHIFTED SLIGHTLY, AS NECESSARY, TO CLEAR REINFORCING STEEL AND STIRRUPS.

THE CONTRACTOR MAY, WHEN NECESSARY, PROPOSE A SCHEME FOR AVOIDING INTERFERENCE BETWEEN METAL STAY-IN-PLACE FORM SUPPORTS OR FORMS AND GIRDER STIFFENERS OR CONNECTOR PLATES. THE PROPOSAL SHALL BE INDICATED, AS APPROPRIATE, ON EITHER THE STEEL WORKING DRAWINGS OR THE METAL STAY-IN-PLACE FORM WORKING DRAWINGS.

PLATES SHALL CONFORM TO AASHTO M270 GRADE 250 STEEL OR APPROVED EQUAL.

PREVIOUSLY CAST CONCRETE IN A CONTINUOUS UNIT SHALL HAVE ATTAINED A MINIMUM COMPRESSIVE STRENGTH OF 20.7 MPa BEFORE ADDITIONAL CONCRETE IS CAST IN THE UNIT.

THE CONTRACTOR SHALL ADJUST THE GIRDER BUILDUPS AS NECESSARY TO INCORPORATE A MAXIMUM PERMISSIBLE VARIATION IN POT BEARING DEPTH OF 13mm, SEE SPECIAL PROVISION FOR POT BEARINGS.

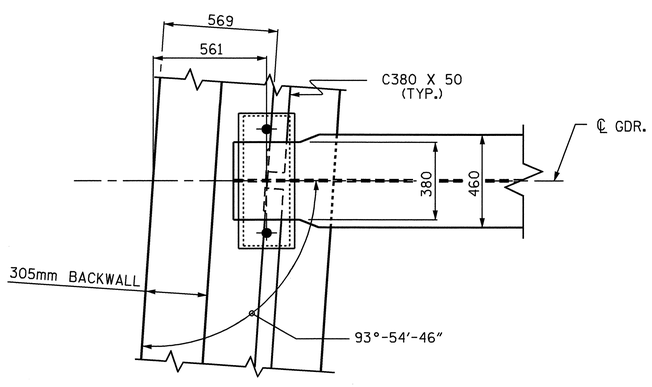

END BENT DIAPHRAGM

PLAN

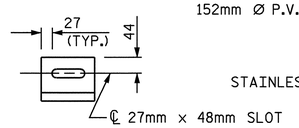

SECTION B-B

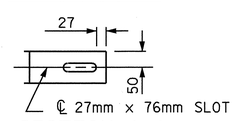

SECTION A-A

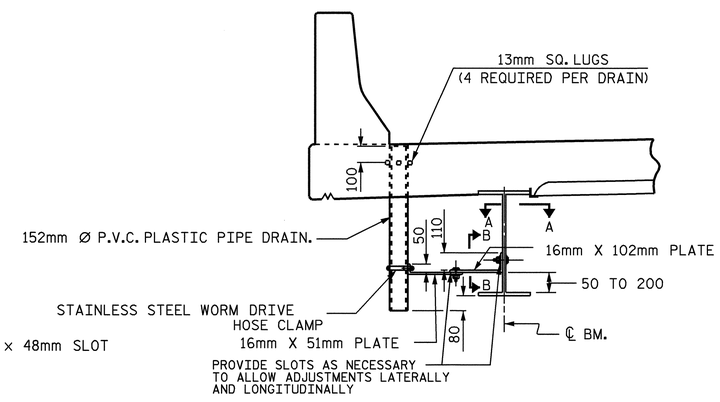

DRAIN CONNECTOR DETAIL

COUPLING IN DRAIN PIPE WILL BE PERMITTED AS APPROVED BY THE ENGINEER.

4- 13mm SQ. LUGS TO BE GLUED TO THE P.V.C. PLASTIC PIPE AT EQUAL SPACES AROUND THE PIPE DRAIN APPROXIMATELY 100mm FROM THE TOP OF THE PIPE.

BOLT SIZE TO BE SAME AS DIAPHRAGM AND CROSSFRAME CONNECTIONS. STAINLESS STEEL WORM HOSE CLAMP SHALL BE COMMERCIAL QUALITY.

TOP OF FLOOR DRAINS TO BE SET 10mm BELOW SURFACE OF SLAB.

PVC DECK DRAINS SHALL BE PAINTED WITH TWO COATS OF BROWN PRIMER MEETING THE REQUIREMENTS OF ARTICLE 1080-12 OF THE STANDARD SPECIFICATIONS. EACH COAT SHALL BE 0.050mm THICK. DECK DRAINS SHALL BE ROUGHENED PRIOR TO PAINTING. NO SEPARATE PAYMENT SHALL BE MADE FOR PAINTING PVC DECK DRAINS AS THIS IS CONSIDERED INCIDENTAL TO THE PAY ITEM FOR REINFORCED CONCRETE DECK SLAB (SAND LIGHTWEIGHT CONCRETE).

PROJECT NO. R-2301A
JONES/CRAVEN COUNTY
STATION: 96+94.475-L-

SHEET 2 OF 2

STATE OF NORTH CAROLINA
DEPARTMENT OF TRANSPORTATION
RALEIGH

SUPERSTRUCTURE
TYPICAL SECTION
LEFT LANE

NORTH CAROLINA PROFESSIONAL SEAL 20125 ENGINEER
MARSHALL W. CHESLAK
9-3-08

REVISIONS						SHEET NO.
NO.	BY:	DATE:	NO.	BY:	DATE:	S-123
1			3			TOTAL SHEETS
2			4			176

DRAWN BY : L.L. MURPHY DATE : 07-08
CHECKED BY : K. LAYNE DATE : 08-08

02-SEP-2008 17:04
r:\structures\finalplans\Str #5\R2301A_sd_TS_STR#5.dgn
lmurphy

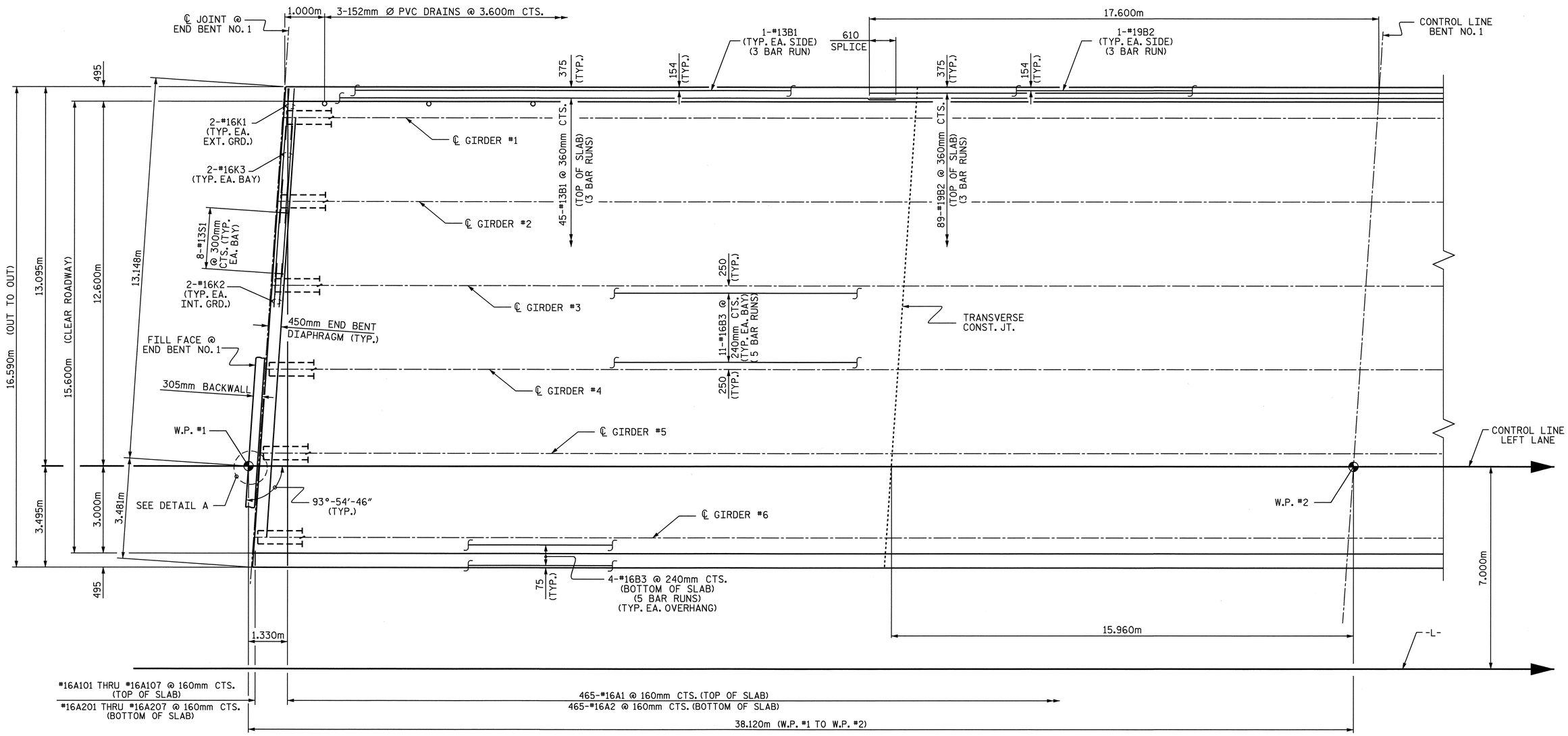

PLAN OF SPAN A

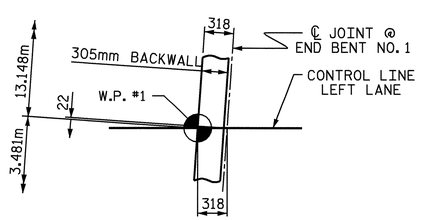

DETAIL A

PROJECT NO. R-2301A
JONES/CRAVEN COUNTY
STATION: 96+94.475-L-

SHEET 1 OF 2

STATE OF NORTH CAROLINA
DEPARTMENT OF TRANSPORTATION
RALEIGH

SUPERSTRUCTURE
PLAN OF SPAN A
LEFT LANE

NORTH CAROLINA PROFESSIONAL SEAL 20125 ENGINEER MARSHALL G. CREEK, JR.
9-3-08

REVISIONS						SHEET NO.
NO.	BY:	DATE:	NO.	BY:	DATE:	S-124
1			3			TOTAL SHEETS
2			4			176

DRAWN BY : L.L. MURPHY DATE : 07-08
CHECKED BY : K. LAYNE DATE : 08-08

02-SEP-2008 17:18
r:\structures\finalplans\Str #5\R2301A_sd_S#_STR#5.dgn
lmurphy

STR #5

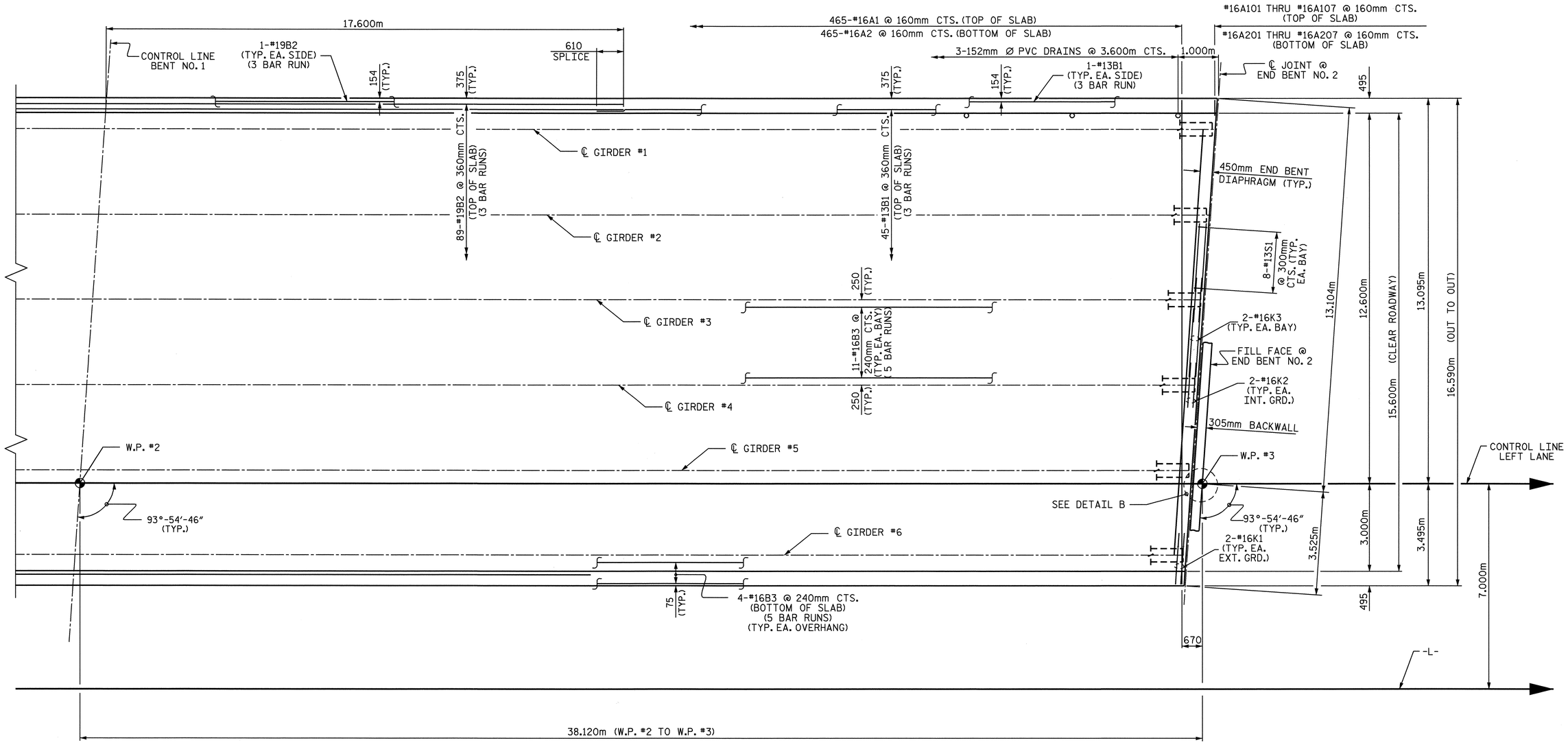

PLAN OF SPAN B

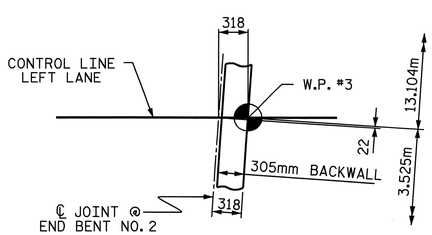

DETAIL B

PROJECT NO. R-2301A
JONES/CRAVEN COUNTY
STATION: 96+94.475-L-

SHEET 2 OF 2

STATE OF NORTH CAROLINA
DEPARTMENT OF TRANSPORTATION
RALEIGH

SUPERSTRUCTURE
PLAN OF SPAN B
LEFT LANE

NORTH CAROLINA PROFESSIONAL SEAL 20125 ENGINEER MARSHALL G. CHEEK, JR.
9-3-08

REVISIONS						SHEET NO. S-125
NO.	BY:	DATE:	NO.	BY:	DATE:	TOTAL SHEETS 176
1			3			
2			4			

DRAWN BY : L.L. MURPHY DATE : 07-08
CHECKED BY : K. LAYNE DATE : 08-08

02-SEP-2008 17:18
r:\structures\finalplans\Str #5\R2301A_sd_S#_STR#5.dgn
lmurphy

STR #5

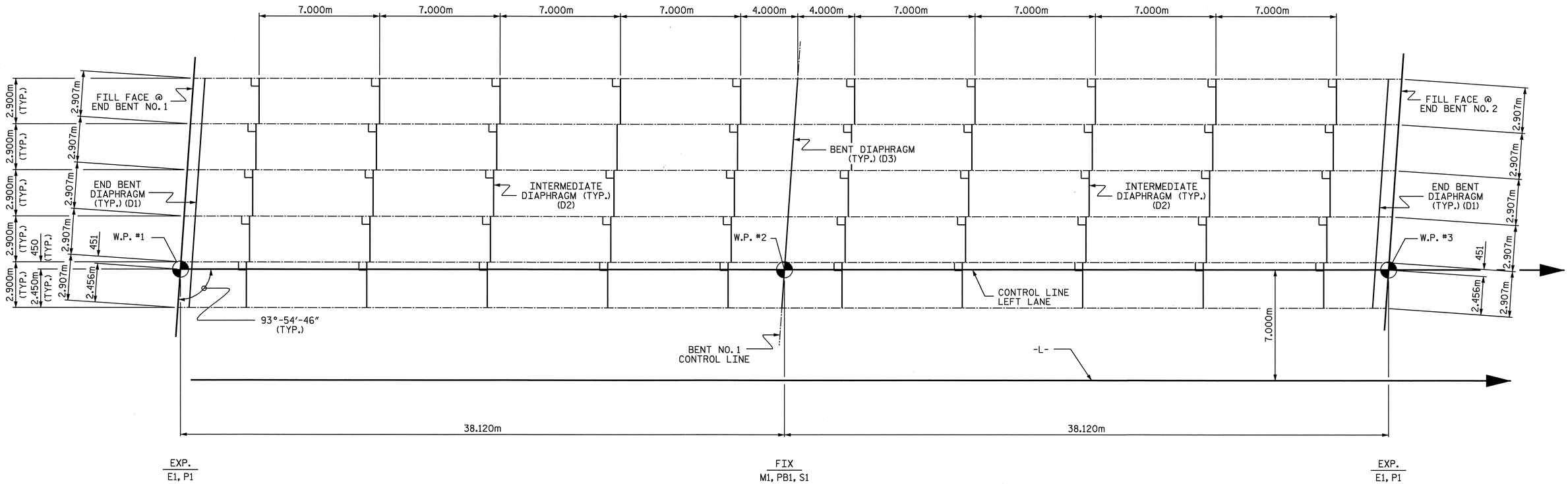

FRAMING PLAN

NOTES

ALL STRUCTURAL STEEL SHALL BE AASHTO M270 GRADE 345W AND PAINTED IN ACCORDANCE WITH SYSTEM 4 OF ARTICLE 442-7 OF THE STANDARD SPECIFICATIONS UNLESS OTHERWISE NOTED ON THE PLANS.

ALL DIMENSIONS SHOWN ARE HORIZONTAL OR VERTICAL, UNLESS OTHERWISE NOTED.

ALL FIELD CONNECTIONS TO BE 22.23mm DIA. HIGH STRENGTH BOLTS UNLESS OTHERWISE NOTED.

SHOP SPLICES ARE PERMITTED TO LIMIT THE MAXIMUM REQUIRED FLANGE PIECE LENGTHS TO 18 METERS AND WEB PIECE LENGTHS TO 14 METERS. PERMITTED FLANGE AND WEB SHOP SPLICES SHALL NOT BE LOCATED WITHIN 4.5 METERS OF MAXIMUM DEAD LOAD DEFLECTION (NOR WITHIN 4.5 METERS OF INTERMEDIATE BEARINGS OF CONTINUOUS UNITS). KEEP 600mm MINIMUM BETWEEN WEB AND FLANGE SHOP SPLICES. KEEP 150mm MINIMUM BETWEEN CONNECTOR PLATE OR TRANSVERSE STIFFENER WELDS AND WEB OR FLANGE SHOP SPLICES.

STUDS ON GIRDERS MAY BE SHIFTED UP TO 25mm IF NECESSARY TO CLEAR FLANGE SPLICE WELD.

END OF GIRDERS SHALL BE PLUMB.

TENSION ON THE AASHTO M164 BOLTS SHALL BE CALIBRATED USING DIRECT TENSION INDICATOR WASHERS IN ACCORDANCE WITH ARTICLE 440-10 OF THE STANDARD SPECIFICATIONS.

BEARING STIFFENER MAY REQUIRE COPING IF WIDER THAN BOTTOM FLANGE TO AVOID INTERFERENCE WITH THE ANCHOR BOLT.

FOR HIGH STRENGTH BOLTS, SEE SPECIAL PROVISIONS.

BEARING STIFFENERS ARE TO BE PLACED ALONG THE SKEW AND SHALL BE PLUMB.

PROJECT NO. R-2301A
JONES/CRAVEN COUNTY
STATION: 96+94.475-L-

NORTH CAROLINA PROFESSIONAL SEAL 20125 ENGINEER MARSHALL G. GREEN, JR.
4-5-08

STATE OF NORTH CAROLINA
DEPARTMENT OF TRANSPORTATION
RALEIGH

SUPERSTRUCTURE

FRAMING PLAN
LEFT LANE

REVISIONS						SHEET NO.
NO.	BY:	DATE:	NO.	BY:	DATE:	S-126
1			3			TOTAL SHEETS
2			4			176

DRAWN BY : L.L. MURPHY DATE : 07-08
CHECKED BY : M.G. CHEEK DATE : 08-08

05-AUG-2008 15:02
r:\structures\lmurphy\str#5\R2301A_sd_FP_STR#5.dgn
lmurphy

STR #5

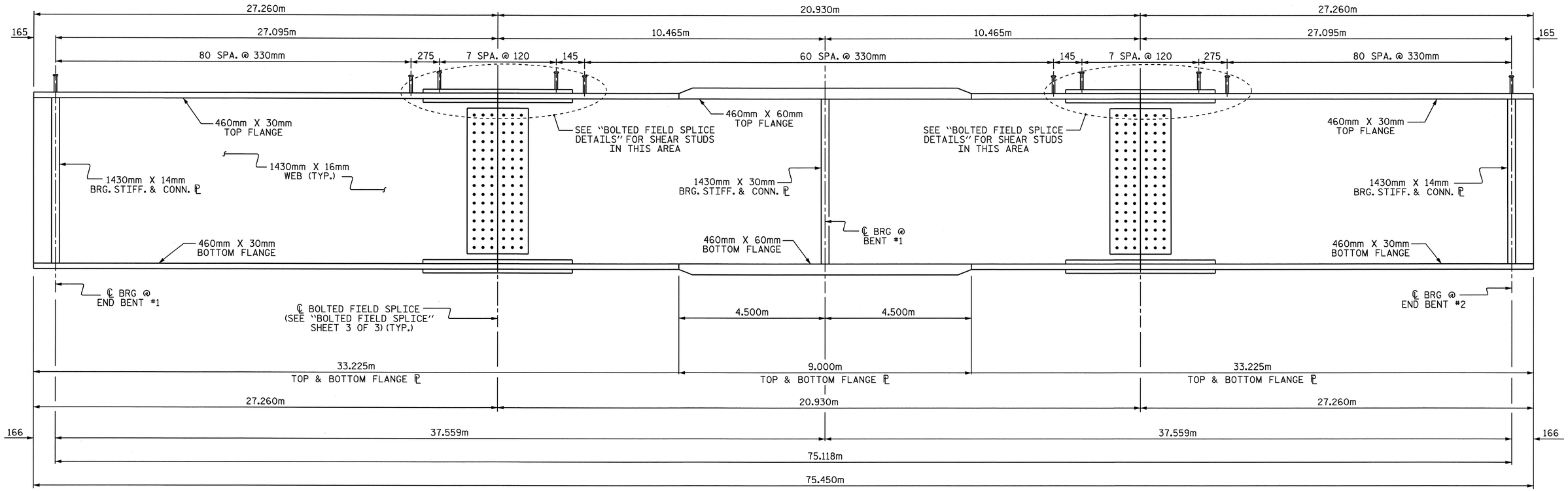

GIRDER ELEVATION

4 SHEAR STUDS PER ROW EXCEPT ON THE FIELD SPLICE ℙ
(INTERMEDIATE DIAPHRAGMS NOT SHOWN)

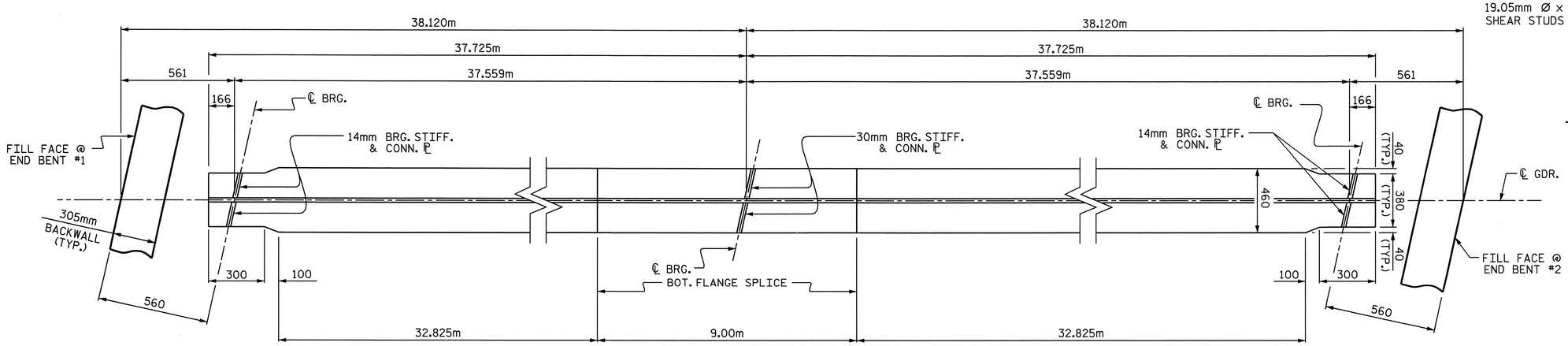

BOTTOM FLANGE DETAIL

(INTERMEDIATE DIAPHRAGMS NOT SHOWN)

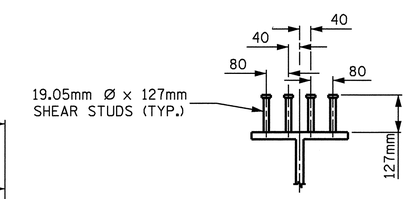

SHEAR STUD DETAILS

TYPICAL ALL GIRDERS EXCEPT AT FIELD SPLICE LOCATIONS.

PROJECT NO. R-2301A
JONES/CRAVEN COUNTY
STATION: 96+94.475 -L-

SHEET 1 OF 3

STATE OF NORTH CAROLINA
DEPARTMENT OF TRANSPORTATION
RALEIGH

SUPERSTRUCTURE

STRUCTURAL STEEL
LEFT LANE

NORTH CAROLINA PROFESSIONAL SEAL 20125 ENGINEER
MARSHALL G. CHEEK, JR.
8-3-08

REVISIONS						SHEET NO.
NO.	BY:	DATE:	NO.	BY:	DATE:	S-127
1			3			TOTAL SHEETS
2			4			176

DRAWN BY : R. G. EMERSON DATE : 07/08
CHECKED BY : M. G. CHEEK DATE : 08/08

02-SEP-2008 17:30
r:\structures\finalplans\str #5\R2301A_sd_SS_str5.dgn
lmurphy

STR #5

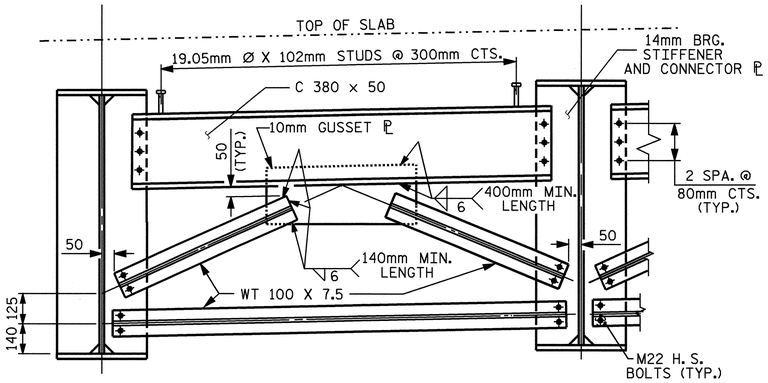

TYPICAL END BENT DIAPHRAGM

(D1)

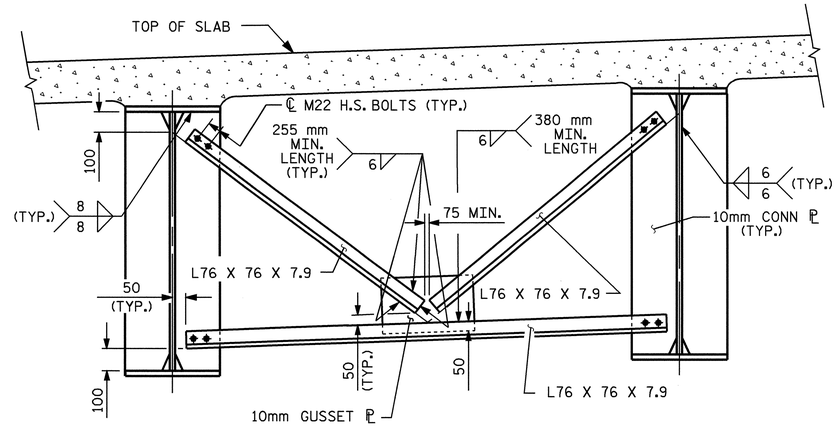

TYPICAL INTERMEDIATE DIAPHRAGM

(D2)

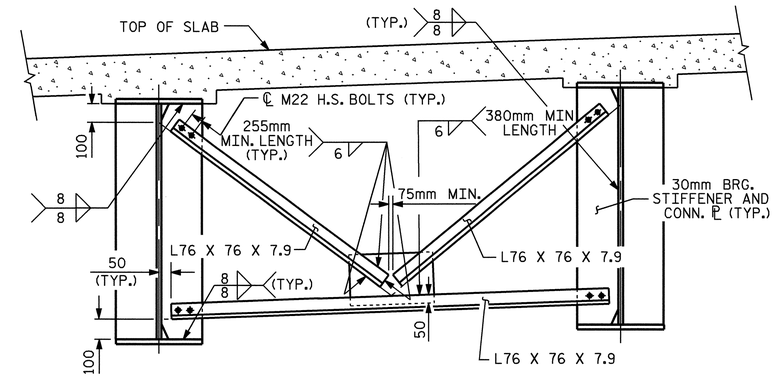

TYPICAL BENT DIAPHRAGM (D3)

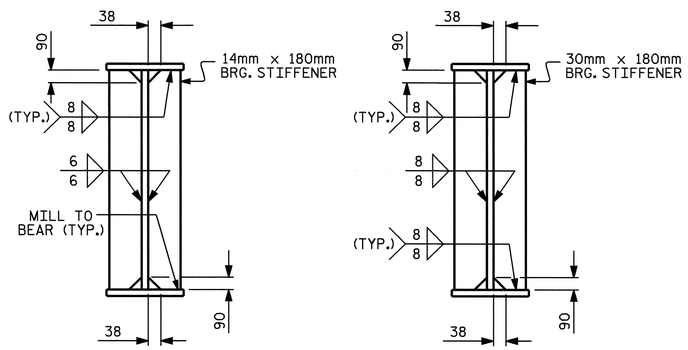

@ END BENT

@ BENT

BEARING STIFFENER AND CONNECTOR PLATE

BEARING STIFFENER MAY REQUIRE COPING IF WIDER THAN BOTTOM FLANGE TO AVOID INTERFERENCE WITH THE ANCHOR BOLT.

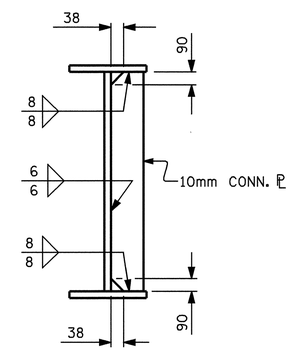

INTERMEDIATE DIAPHRAGM CONNECTOR PLATE

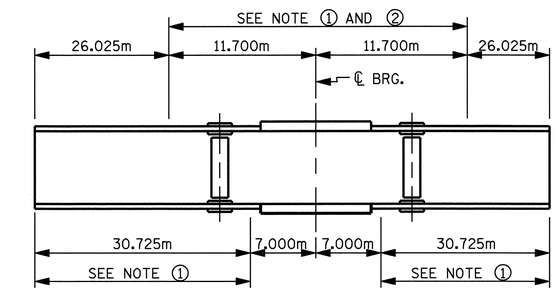

GIRDER MAKE UP

NOTE ①: CHARPY V-NOTCH TESTS ARE REQUIRED FOR ALL TOP OR BOTTOM FLANGE PLATES WHICH FALL WITHIN THESE LIMITS, ALL WEB PLATES, AND ALL SPLICE PLATES. IF A PERMITTED SHOP FLANGE SPLICE IS NOT USED, CHARPY V-NOTCH TESTS WILL BE REQUIRED FOR THE ENTIRE FLANGE PLATE. FOR CHARPY V-NOTCH TESTS, SEE ARTICLE 1072-9 OF THE STANDARD SPECIFICATIONS.

NOTE ②: NO WELDING OF FORMS OR FALSEWORK TO THE TOP FLANGE WILL BE PERMITTED IN THIS REGION.

CHARPY V-NOTCH TESTS FOR CONTINUOUS PLATE GIRDERS

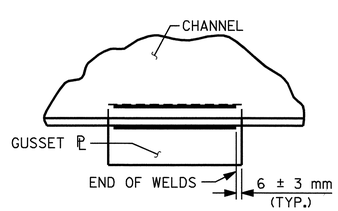

TYPICAL GUSSET PLATE CONNECTION

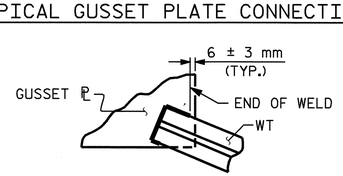

TYPICAL "TEE" TO GUSSET PLATE CONNECTION

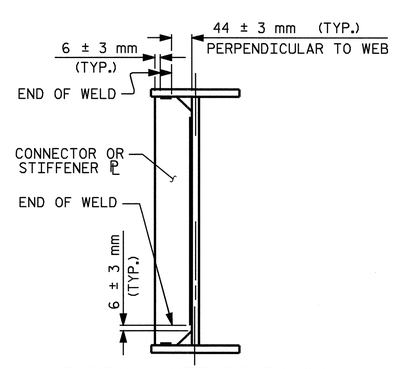

TYPICAL STIFFENER OR CONNECTOR PLATE CONNECTIONS

WELD TERMINATION DETAILS

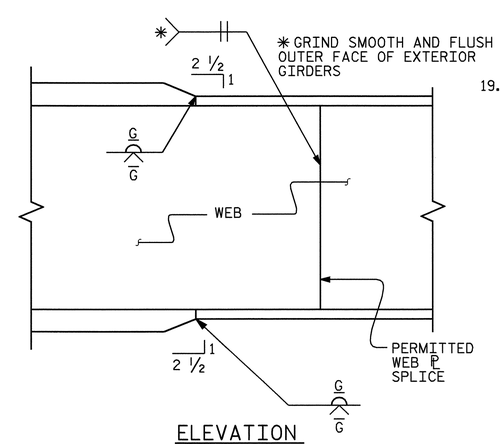

ELEVATION

TYPICAL FLANGE AND WEB BUTT JOINT

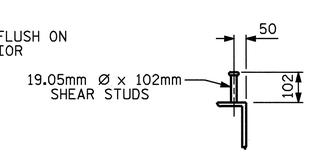

SHEAR STUD DETAILS

(@ CHANNELS)

PROJECT NO. R-2301A

JONES/CRAVEN COUNTY

STATION: 96+94.475 -L-

SHEET 2 OF 3

STATE OF NORTH CAROLINA
DEPARTMENT OF TRANSPORTATION
RALEIGH

SUPERSTRUCTURE

STRUCTURAL STEEL DETAILS

LEFT LANE

NORTH CAROLINA PROFESSIONAL SEAL 20125 ENGINEER
9-5-08

REVISIONS						SHEET NO.
NO.	BY:	DATE:	NO.	BY:	DATE:	S-128
1			3			TOTAL SHEETS
2			4			176

STR. #5

DRAWN BY : R. G. EMERSON DATE : 07/08
CHECKED BY : M. G. CHEEK DATE : 08/08

05-SEP-2008 07:43
r:\structures\finalplans\Str #5\R2301A_sd_SS_str5.dgn
dahodge

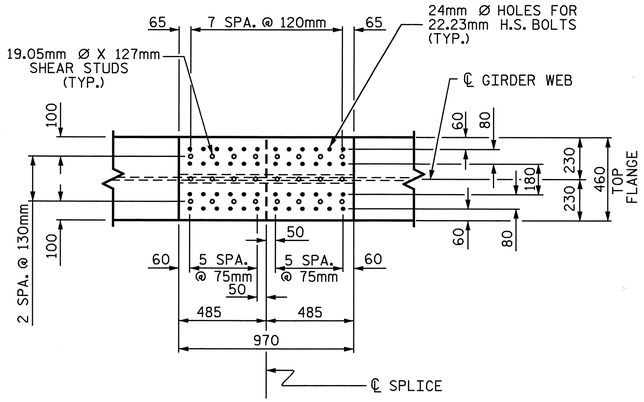

PLAN (TOP OF TOP FLANGE)

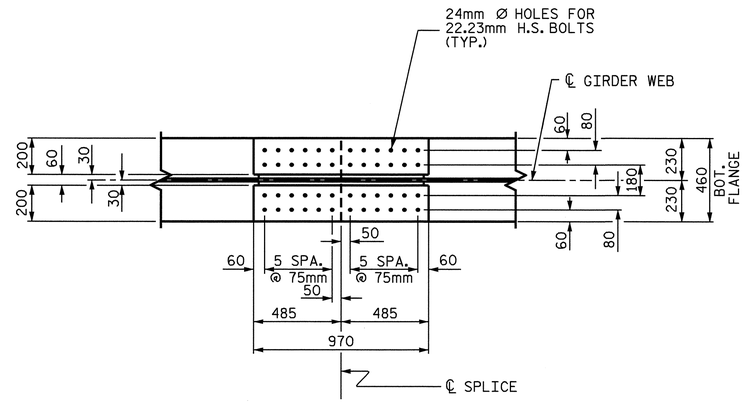

PLAN (TOP OF BOTTOM FLANGE)

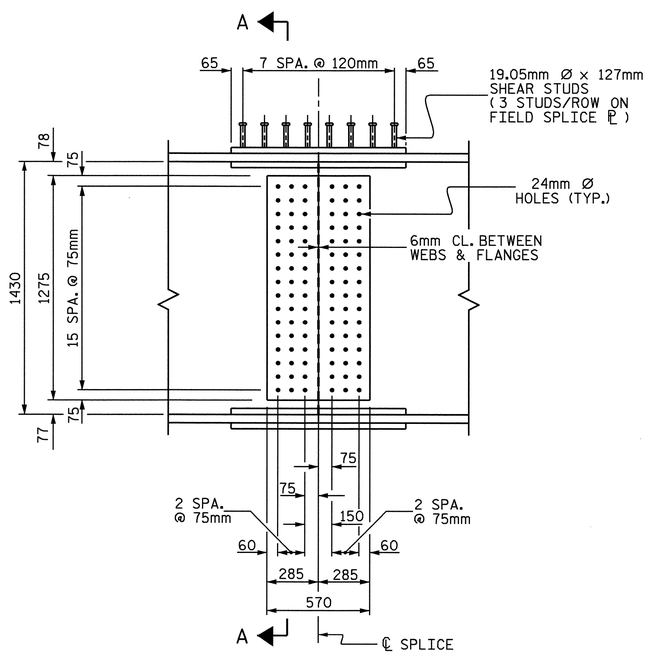

ELEVATION

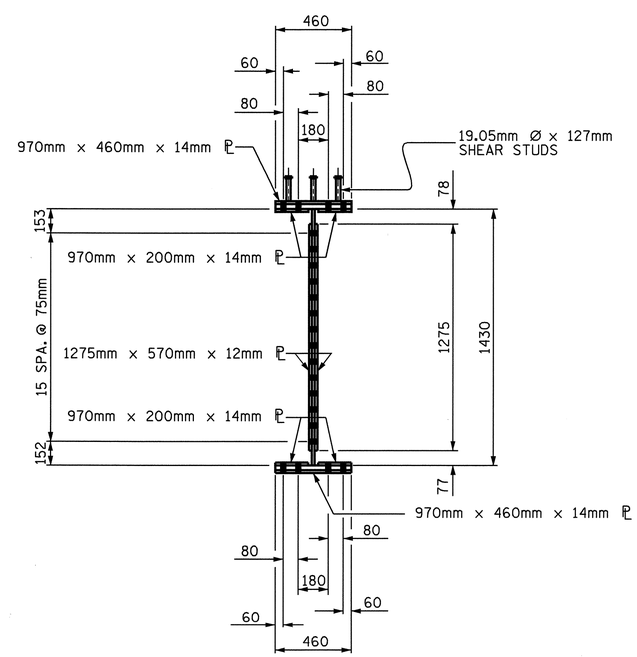

SECTION A-A

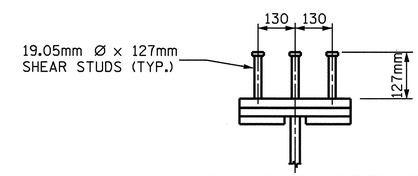

SHEAR STUD DETAILS

ON TOP FLANGE FIELD SPLICE PLATES

BOLTED FIELD SPLICE DETAILS

(TYPICAL EACH FIELD SPLICE)

PROJECT NO. R-2301A

JONES/CRAVEN COUNTY

STATION: 96+94.475-L-

SHEET 3 OF 3

STATE OF NORTH CAROLINA
DEPARTMENT OF TRANSPORTATION
RALEIGH

SUPERSTRUCTURE

BOLTED FIELD SPLICE
LEFT LANE

NORTH CAROLINA PROFESSIONAL SEAL 20125 ENGINEER MARSHALL G. CHEEK, JR.
9-3-08

REVISIONS							SHEET NO.
NO.	BY:	DATE:	NO.	BY:	DATE:		S-129
1			3				TOTAL SHEETS
2			4				176

DRAWN BY : L.L. MURPHY DATE : 07-08
CHECKED BY : M.G. CHEEK DATE : 07-08

11-AUG-2008 11:45
r:\structures\lmurphy\STR#5\R2301A_sd_SS_str5boltedfs.dgn
lmurphy

STR #5

DEAD LOAD DEFLECTION TABLE FOR GIRDERS

SPAN A - GIRDER 1

@ TWENTIETH POINTS BETWEEN ℄ BEARINGS	℄ BRG.	.05	.10	.15	.20	.25	.30	.35	.40	.45	.50	.55	.60	.65	.70	.75	.80	.85	.90	.95	℄ BRG.
DEFLECTION DUE TO WEIGHT OF GIRDER	0.000	0.002	0.004	0.006	0.008	0.009	0.010	0.011	0.011	0.011	0.011	0.010	0.009	0.007	0.006	0.004	0.003	0.002	0.001	0.000	0.000
DEFLECTION DUE TO WEIGHT OF SLAB *	0.000	0.008	0.015	0.022	0.027	0.032	0.036	0.038	0.039	0.038	0.036	0.033	0.030	0.025	0.020	0.015	0.010	0.006	0.003	0.001	0.000
DEFLECTION DUE TO WEIGHT OF BARRIER RAIL	0.000	0.002	0.004	0.005	0.007	0.008	0.008	0.009	0.009	0.009	0.009	0.008	0.007	0.006	0.005	0.004	0.003	0.002	0.001	0.000	0.000
TOTAL DEAD LOAD DEFLECTION	0.000	0.012	0.023	0.033	0.042	0.049	0.054	0.058	0.059	0.058	0.056	0.051	0.045	0.038	0.031	0.023	0.015	0.009	0.004	0.001	0.000
VERTICAL CURVE ORDINATE	0.000	0.002	0.004	0.006	0.007	0.009	0.010	0.011	0.011	0.011	0.012	0.011	0.011	0.011	0.010	0.009	0.007	0.006	0.004	0.002	0.000
REQUIRED CAMBER	0	14	27	39	49	58	64	69	70	69	68	62	56	49	41	32	22	15	8	3	0

SPAN B - GIRDER 1

@ TWENTIETH POINTS BETWEEN ℄ BEARINGS	℄ BRG.	.05	.10	.15	.20	.25	.30	.35	.40	.45	.50	.55	.60	.65	.70	.75	.80	.85	.90	.95	℄ BRG.
DEFLECTION DUE TO WEIGHT OF GIRDER	0.000	0.002	0.004	0.006	0.008	0.009	0.010	0.011	0.011	0.011	0.011	0.010	0.009	0.007	0.006	0.004	0.003	0.002	0.001	0.000	0.000
DEFLECTION DUE TO WEIGHT OF SLAB *	0.000	0.008	0.015	0.022	0.027	0.032	0.036	0.038	0.039	0.038	0.036	0.033	0.030	0.025	0.020	0.015	0.010	0.006	0.003	0.001	0.000
DEFLECTION DUE TO WEIGHT OF BARRIER RAIL	0.000	0.002	0.004	0.005	0.007	0.008	0.008	0.009	0.009	0.009	0.009	0.008	0.007	0.006	0.005	0.004	0.003	0.002	0.001	0.000	0.000
TOTAL DEAD LOAD DEFLECTION	0.000	0.012	0.023	0.033	0.042	0.049	0.054	0.058	0.059	0.058	0.056	0.051	0.045	0.038	0.031	0.023	0.015	0.009	0.004	0.001	0.000
VERTICAL CURVE ORDINATE	0.000	0.002	0.004	0.006	0.007	0.009	0.010	0.011	0.011	0.011	0.012	0.011	0.011	0.011	0.010	0.009	0.007	0.006	0.004	0.002	0.000
REQUIRED CAMBER	0	3	8	15	22	32	41	49	56	62	68	69	70	69	64	58	49	39	27	14	0

SPAN A - GIRDERS 2 THRU 5

@ TWENTIETH POINTS BETWEEN ℄ BEARINGS	℄ BRG.	.05	.10	.15	.20	.25	.30	.35	.40	.45	.50	.55	.60	.65	.70	.75	.80	.85	.90	.95	℄ BRG.
DEFLECTION DUE TO WEIGHT OF GIRDER	0.000	0.002	0.004	0.006	0.008	0.009	0.010	0.011	0.011	0.011	0.011	0.010	0.009	0.007	0.006	0.004	0.003	0.002	0.001	0.000	0.000
DEFLECTION DUE TO WEIGHT OF SLAB *	0.000	0.008	0.015	0.022	0.028	0.033	0.036	0.039	0.040	0.039	0.037	0.034	0.030	0.026	0.021	0.015	0.010	0.006	0.003	0.001	0.000
DEFLECTION DUE TO WEIGHT OF BARRIER RAIL	0.000	0.002	0.003	0.004	0.005	0.006	0.007	0.007	0.007	0.007	0.007	0.007	0.006	0.005	0.004	0.003	0.002	0.001	0.001	0.000	0.000
TOTAL DEAD LOAD DEFLECTION	0.000	0.012	0.022	0.032	0.041	0.048	0.053	0.057	0.058	0.057	0.055	0.051	0.045	0.038	0.031	0.022	0.015	0.009	0.005	0.001	0.000
VERTICAL CURVE ORDINATE	0.000	0.002	0.004	0.006	0.007	0.009	0.010	0.011	0.011	0.011	0.012	0.011	0.011	0.011	0.010	0.009	0.007	0.006	0.004	0.002	0.000
REQUIRED CAMBER	0	14	26	38	48	57	63	68	69	68	67	62	56	49	41	31	22	15	9	3	0

SPAN B - GIRDERS 2 THRU 5

@ TWENTIETH POINTS BETWEEN ℄ BEARINGS	℄ BRG.	.05	.10	.15	.20	.25	.30	.35	.40	.45	.50	.55	.60	.65	.70	.75	.80	.85	.90	.95	℄ BRG.
DEFLECTION DUE TO WEIGHT OF GIRDER	0.000	0.002	0.004	0.006	0.008	0.009	0.010	0.011	0.011	0.011	0.011	0.010	0.009	0.007	0.006	0.004	0.003	0.002	0.001	0.000	0.000
DEFLECTION DUE TO WEIGHT OF SLAB *	0.000	0.008	0.015	0.022	0.028	0.033	0.036	0.039	0.040	0.039	0.037	0.034	0.030	0.026	0.021	0.015	0.010	0.006	0.003	0.001	0.000
DEFLECTION DUE TO WEIGHT OF BARRIER RAIL	0.000	0.002	0.003	0.004	0.005	0.006	0.007	0.007	0.007	0.007	0.007	0.007	0.006	0.005	0.004	0.003	0.002	0.001	0.001	0.000	0.000
TOTAL DEAD LOAD DEFLECTION	0.000	0.012	0.022	0.032	0.041	0.048	0.053	0.057	0.058	0.057	0.055	0.051	0.045	0.038	0.031	0.022	0.015	0.009	0.005	0.001	0.000
VERTICAL CURVE ORDINATE	0.000	0.002	0.004	0.006	0.007	0.009	0.010	0.011	0.011	0.011	0.012	0.011	0.011	0.011	0.010	0.009	0.007	0.006	0.004	0.002	0.000
REQUIRED CAMBER	0	3	9	15	22	31	41	49	56	62	67	68	69	68	63	57	48	38	26	14	0

SPAN A - GIRDER 6

@ TWENTIETH POINTS BETWEEN ℄ BEARINGS	℄ BRG.	.05	.10	.15	.20	.25	.30	.35	.40	.45	.50	.55	.60	.65	.70	.75	.80	.85	.90	.95	℄ BRG.
DEFLECTION DUE TO WEIGHT OF GIRDER	0.000	0.002	0.004	0.006	0.008	0.009	0.010	0.011	0.011	0.011	0.011	0.010	0.009	0.007	0.006	0.004	0.003	0.002	0.001	0.000	0.000
DEFLECTION DUE TO WEIGHT OF SLAB *	0.000	0.008	0.015	0.022	0.028	0.033	0.036	0.039	0.040	0.039	0.037	0.034	0.030	0.026	0.021	0.015	0.010	0.006	0.003	0.001	0.000
DEFLECTION DUE TO WEIGHT OF BARRIER RAIL	0.000	0.002	0.004	0.005	0.007	0.008	0.008	0.009	0.009	0.009	0.009	0.008	0.007	0.006	0.005	0.004	0.003	0.002	0.001	0.000	0.000
TOTAL DEAD LOAD DEFLECTION	0.000	0.012	0.023	0.034	0.043	0.050	0.055	0.059	0.060	0.059	0.056	0.052	0.046	0.039	0.031	0.023	0.016	0.009	0.004	0.001	0.000
VERTICAL CURVE ORDINATE	0.000	0.002	0.004	0.006	0.007	0.009	0.010	0.011	0.011	0.011	0.012	0.011	0.011	0.011	0.010	0.009	0.007	0.006	0.004	0.002	0.000
REQUIRED CAMBER	0	14	27	40	50	59	65	70	71	70	68	63	57	50	41	32	23	15	8	3	0

SPAN B - GIRDER 6

@ TWENTIETH POINTS BETWEEN ℄ BEARINGS	℄ BRG.	.05	.10	.15	.20	.25	.30	.35	.40	.45	.50	.55	.60	.65	.70	.75	.80	.85	.90	.95	℄ BRG.
DEFLECTION DUE TO WEIGHT OF GIRDER	0.000	0.002	0.004	0.006	0.008	0.009	0.010	0.011	0.011	0.011	0.011	0.010	0.009	0.007	0.006	0.004	0.003	0.002	0.001	0.000	0.000
DEFLECTION DUE TO WEIGHT OF SLAB *	0.000	0.008	0.015	0.022	0.028	0.033	0.036	0.039	0.040	0.039	0.037	0.034	0.030	0.026	0.021	0.015	0.010	0.006	0.003	0.001	0.000
DEFLECTION DUE TO WEIGHT OF BARRIER RAIL	0.000	0.002	0.004	0.005	0.007	0.008	0.008	0.009	0.009	0.009	0.009	0.008	0.007	0.006	0.005	0.004	0.003	0.002	0.001	0.000	0.000
TOTAL DEAD LOAD DEFLECTION	0.000	0.012	0.023	0.034	0.043	0.050	0.055	0.059	0.060	0.059	0.056	0.052	0.046	0.039	0.031	0.023	0.016	0.009	0.004	0.001	0.000
VERTICAL CURVE ORDINATE	0.000	0.002	0.004	0.006	0.007	0.009	0.010	0.011	0.011	0.011	0.012	0.011	0.011	0.011	0.010	0.009	0.007	0.006	0.004	0.002	0.000
REQUIRED CAMBER	0	3	8	15	23	32	41	50	57	63	68	70	71	70	65	59	50	40	27	14	0

* INCLUDES SLAB, BUILDUPS & STAY-IN-PLACE FORMS.
ALL VALUES ARE SHOWN IN METERS EXCEPT "REQUIRED CAMBER", WHICH IS GIVEN IN MILLIMETERS.

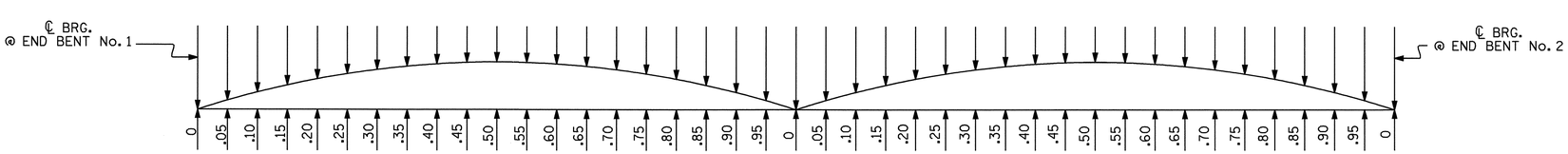

SCHEMATIC CAMBER ORDINATES

NOTE: FOR CAMBER @ 20TH POINTS, SEE TABLES.
SLOPE FOR THE ZERO CAMBER BASE LINE VARIES.

PROJECT NO. R-2301A
JONES/CRAVEN COUNTY
STATION: 96+94.475 -L-

STATE OF NORTH CAROLINA
DEPARTMENT OF TRANSPORTATION
RALEIGH

SUPERSTRUCTURE
DEAD LOAD DEFLECTIONS
LEFT LANE

NORTH CAROLINA PROFESSIONAL SEAL 20125 ENGINEER
MATERIAL & TESTS
9-8-08

REVISIONS						SHEET NO.
NO.	BY:	DATE:	NO.	BY:	DATE:	S-130
1			3			TOTAL SHEETS
2			4			176

DRAWN BY : M. POOLE DATE : 06-08
CHECKED BY : M. G. CHEEK DATE : 06-08

08-SEP-2008 12:09
r:\structures\finalplans\str #5\r2233aa_sd_dl_str#5.dgn
dahodge

STR. #5

NOTES

AT ALL FIXED POINTS OF SUPPORT, NUTS FOR ANCHOR BOLTS ARE TO BE TIGHTENED FINGER TIGHT AND THEN BACKED OFF 1/2 TURN. THE THREAD OF THE NUT AND BOLT SHALL THEN BE BURRED WITH A SHARP POINTED TOOL.

THE 51mm Ø PIPE SLEEVE SHALL BE CUT FROM SCHEDULE 40 PVC PLASTIC PIPE. THE PVC PLASTIC PIPE SHALL MEET THE REQUIREMENTS OF ASTM D1785.

THE PAYMENT FOR THE PIPE SLEEVES SHALL BE INCLUDED IN THE SEVERAL PAY ITEMS.

FOR AASHTO M270 GRADE 345W STRUCTURAL STEEL, SOLE PLATE SHALL BE AASHTO M270 GRADE 345W AND SHALL NOT BE GALVANIZED, ANCHOR BOLTS AND NUTS SHALL BE GALVANIZED IN ACCORDANCE WITH THE STANDARD SPECIFICATIONS.

ANCHOR BOLTS SHALL MEET THE REQUIREMENTS OF ASTM A449. NUTS SHALL MEET THE REQUIREMENTS OF AASHTO M291M-12 OR AASHTO M292M-2H. WASHERS SHALL MEET THE REQUIREMENTS OF AASHTO M293M. SHOP DRAWINGS ARE NOT REQUIRED FOR ANCHOR BOLTS, NUTS AND WASHERS. SHOP INSPECTION IS REQUIRED.

WHEN FIELD WELDING THE SOLE PLATE TO THE GIRDER FLANGE, USE TEMPERATURE INDICATING WAX PENS, OR OTHER SUITABLE MEANS, TO ENSURE THAT THE TEMPERATURE OF THE SOLE PLATE DOES NOT EXCEED 149°C. TEMPERATURES ABOVE THIS MAY DAMAGE THE ELASTOMER.

ALL SURFACES OF BEARING PLATES SHALL BE SMOOTH AND STRAIGHT.

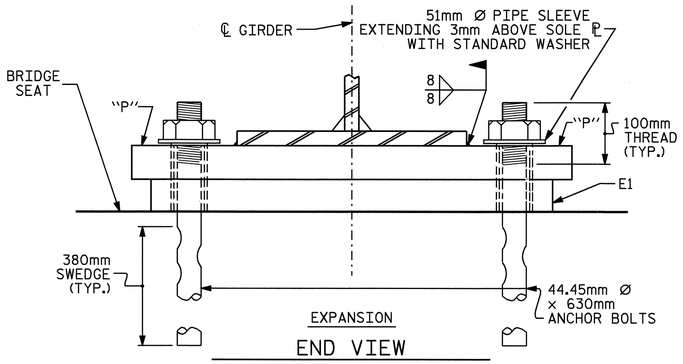

END VIEW

—LOAD RATINGS—	
	MAX.D.L.+ L.L.
TYPE III	674 kN

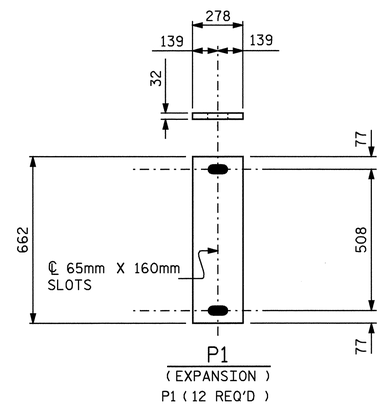

SOLE PLATE DETAILS ("P")

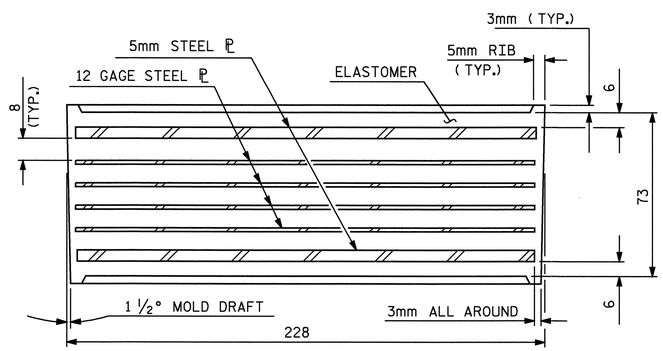

TYPICAL SECTION OF ELASTOMERIC BEARING

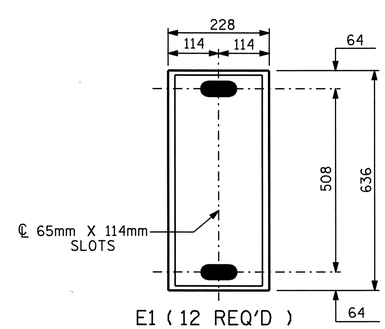

PLAN VIEW OF ELASTOMERIC BEARING

TYPE III

PROJECT NO. R-2301A
JONES/CRAVEN COUNTY
STATION: 96+94.475-L-

STATE OF NORTH CAROLINA
DEPARTMENT OF TRANSPORTATION
RALEIGH

ELASTOMERIC BEARING DETAILS

LEFT LANE

NORTH CAROLINA PROFESSIONAL SEAL 20125 ENGINEER MARSHALL B. CHEEK, JR.
9-5-08

REVISIONS						SHEET NO.
NO.	BY:	DATE:	NO.	BY:	DATE:	S-131
1			3			TOTAL SHEETS
2			4			176

STR #5 STD. NO. EB1SM

ASSEMBLED BY : A.L. FIGUEROA	DATE : 06-25-08	
CHECKED BY : M.G. CHEEK	DATE : 06-08	
DRAWN BY : JMB 11/87	REV. 8/16/99	MAB/LES
CHECKED BY : ARB 11/87	REV. 10/17/00	RWW/LES
	REV. 5/1/06	TLA/GM

05-SEP-2008 07:37
r:\structures\finalplans\Str #5\R-2301A_SD_STR#5-09_BG.dgn
dahodge

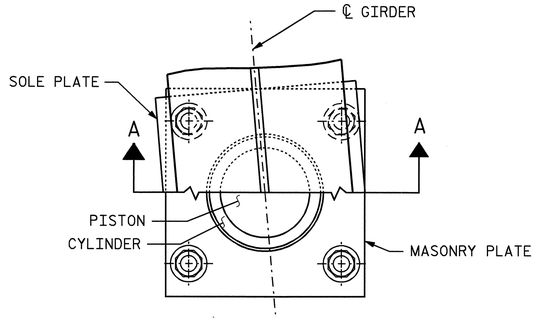

CUT-AWAY PLAN

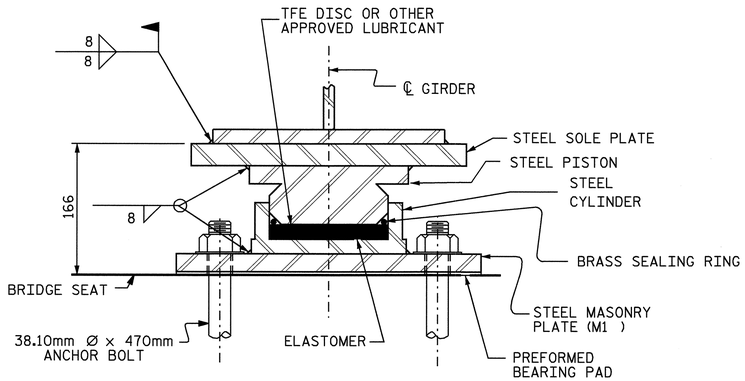

SECTION A-A

PB1, FIXED

(6 REQ'D.)

POT BEARING DETAILS

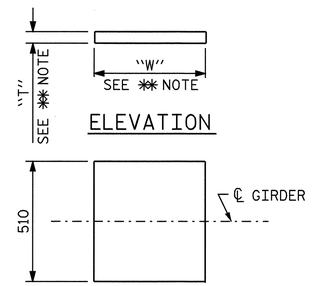

PLAN

✱✱ NOTE:
DIMENSIONS "W" AND "T" ARE TO BE DETERMINED BY THE MANUFACTURER.

SOLE PLATE DETAILS

S1 (6 REQ'D.)

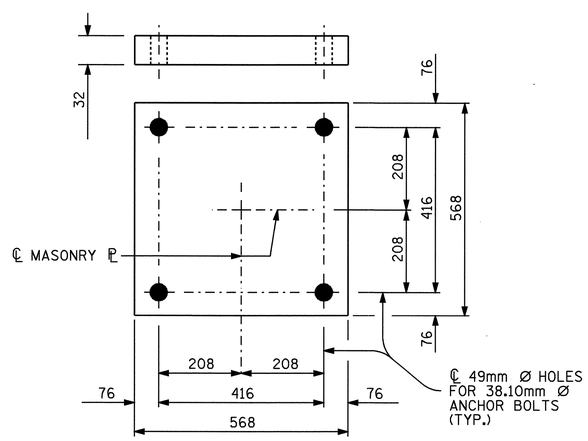

PLAN

M1 (6 REQ'D.)

MASONRY PLATE DETAILS

NOTES

FOR POT BEARINGS, SEE SPECIAL PROVISIONS.

AT ALL POINTS OF SUPPORT AT BENT NO. 1, NUTS FOR ANCHOR BOLTS SHALL BE TIGHTENED FINGER TIGHT AND GIVEN AN ADDITIONAL ¼ TURN. THE THREAD OF THE NUT AND BOLT SHALL THEN BE BURRED WITH A SHARP POINTED TOOL.

WHEN WELDING THE SOLE PLATE TO THE GIRDER, USE TEMPERATURE INDICATING WAX PENS, OR OTHER SUITABLE MEANS, TO ENSURE THAT THE TEMPERATURE OF THE BEARING DOES NOT EXCEED 121°C TEMPERATURES ABOVE THIS MAY DAMAGE THE TFE OR ELASTOMER.

SOLE PLATES SHOULD BE WELDED TO BEAM FLANGES AND ANCHOR BOLTS SHOULD BE GROUTED BEFORE FALSEWORK IS PLACED.

ALL SURFACES OF BEARING PLATES SHALL BE SMOOTH AND STRAIGHT.

FOR THERMAL SPRAYED COATINGS (METALLIZATION), SEE SPECIAL PROVISIONS.

THE CONTRACTOR MAY SUBSTITUTE DISC BEARINGS FOR THE POT BEARINGS SHOWN. FOR OPTIONAL DISC BEARINGS, SEE SPECIAL PROVISIONS.

TABLE FOR LOADS AND MOVEMENTS

BEARING	LOCATION	VERTICAL LOAD (kN)			LATERAL LOAD (kN)	TOTAL MOVEMENT (mm)
		DEAD	LIVE	TOTAL		
PB1 (FIXED)	BENT #1	1370	675	2045	275	✱✱✱

✱✱✱ NO MOVEMENT FOR FIXED POT BEARING

PROJECT NO. R-2301A
JONES/CRAVEN COUNTY
STATION: 96+94.475-L-

STATE OF NORTH CAROLINA
DEPARTMENT OF TRANSPORTATION
RALEIGH

POT BEARING DETAILS
LEFT LANE

NORTH CAROLINA PROFESSIONAL SEAL 20125 ENGINEER MARSHALL L. FIGUEROA, JR.
9-3-08

ASSEMBLED BY : A.L. FIGUEROA	DATE : 06-26-08
CHECKED BY : M.G. CHEEK	DATE : 06-08

DRAWN BY : RWW 8/99	REV. 7/10/01 LES/RWW
CHECKED BY : LES 8/99	REV. 5/7/03 RWW/JTE
	REV. 5/1/06 TLA/GM

REVISIONS						SHEET NO.
NO.	BY:	DATE:	NO.	BY:	DATE:	S-132
1			3			TOTAL SHEETS
2			4			176

STR #5 PB1SM.STD

06-AUG-2008 07:25
R:\Structures\AL Figueroa\Microstation\R-2301A_SD_STR#5-09_PBG-S132.dgn
afigueroa

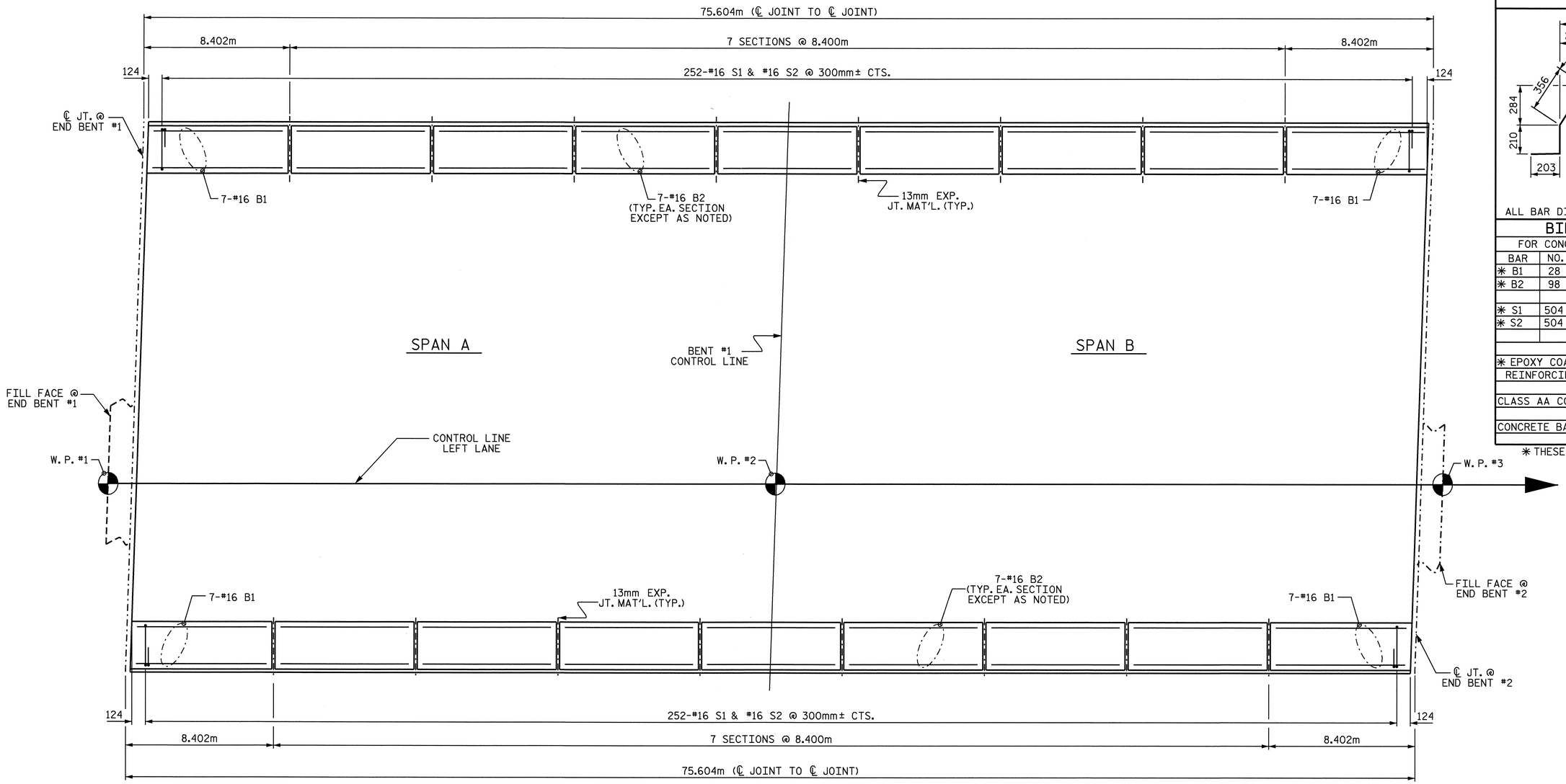

PLAN

BAR TYPES

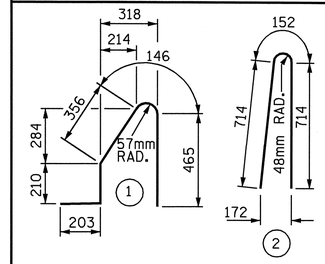

ALL BAR DIMENSIONS ARE OUT TO OUT

BILL OF MATERIAL

FOR CONCRETE BARRIER RAIL ONLY

BAR	NO.	SIZE	TYPE	LENGTH	WEIGHT
* B1	28	#16	STR	8260	359
* B2	98	#16	STR	8280	1259
* S1	504	#16	1	1380	1080
* S2	504	#16	2	1580	1236

* EPOXY COATED
REINFORCING STEEL 3934kg

CLASS AA CONCRETE 37.9 CU. METERS

CONCRETE BARRIER RAIL 151.208 METERS

* THESE BARS ARE EPOXY COATED

NOTES

THE BARRIER RAIL IN THE CONTINUOUS UNIT SHALL NOT BE CAST UNTIL ALL SLAB CONCRETE IN THE UNIT HAS BEEN CAST AND HAS REACHED A MINIMUM COMPRESSIVE STRENGTH OF 20.7 MPa.

ALL REINFORCING STEEL IN BARRIER RAILS SHALL BE EPOXY COATED.

VERTICAL GROOVED CONTRACTION JOINTS, 12mm IN DEPTH, SHALL BE TOOLED IN ALL EXPOSED FACES OF THE BARRIER RAIL AND IN ACCORDANCE WITH ARTICLE 825-10(B) OF THE STANDARD SPECIFICATIONS. THE CONTRACTION JOINT SHALL BE LOCATED AT EACH THIRD POINT BETWEEN BARRIER RAIL EXPANSION JOINTS. ONLY ONE CONTRACTION JOINT IS REQUIRED AT MIDPOINT OF BARRIER RAIL SEGMENTS LESS THAN 6.1m IN LENGTH AND NO CONTRACTION JOINTS ARE REQUIRED FOR THOSE SEGMENTS LESS THAN 3.5m IN LENGTH.

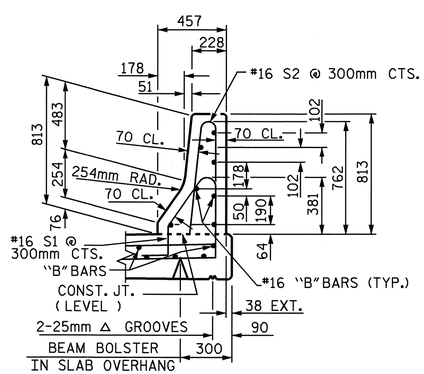

SECTION THRU RAIL

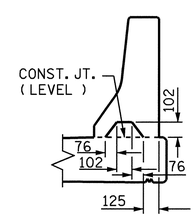

SECTION S-S

AT DAM IN OPEN JOINT
(THIS IS TO BE USED ONLY WHEN SLIP FORM IS USED)

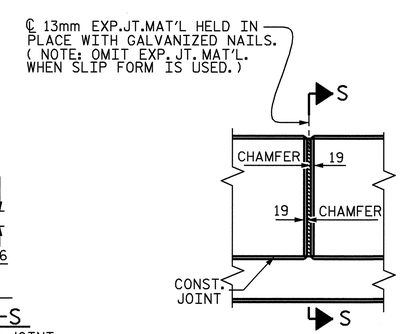

ELEVATION AT EXPANSION JOINTS

BARRIER RAIL DETAILS

PROJECT NO. R-2301A
JONES/CRAVEN COUNTY
STATION: 96+94.475-L-

STATE OF NORTH CAROLINA
DEPARTMENT OF TRANSPORTATION
RALEIGH

STANDARD

CONCRETE BARRIER RAIL
(LEFT LANE)

NORTH CAROLINA PROFESSIONAL SEAL 20125 ENGINEER MARSHALL G. CHEEK, JR.
4-3-08

REVISIONS							SHEET NO.
NO.	BY:	DATE:	NO.	BY:	DATE:		S-133
1			3				TOTAL SHEETS
2			4				176

ASSEMBLED BY : R. G. EMERSON		DATE : 07/08	
CHECKED BY : M. G. CHEEK		DATE : 07/08	
DRAWN BY : ARB 5/87	REV. 10/17/00	RWW/LES	
CHECKED BY : SJD 9/87	REV. 5/7/03R	RWW/JTE	
	REV. 5/1/06	TLA/GM	

23-JUL-2008 14:53
r:\structures\remerson\str_5\R2301A_sd_BR_str5.dgn
remerson

STR. #5

STD. No. CBR1SM

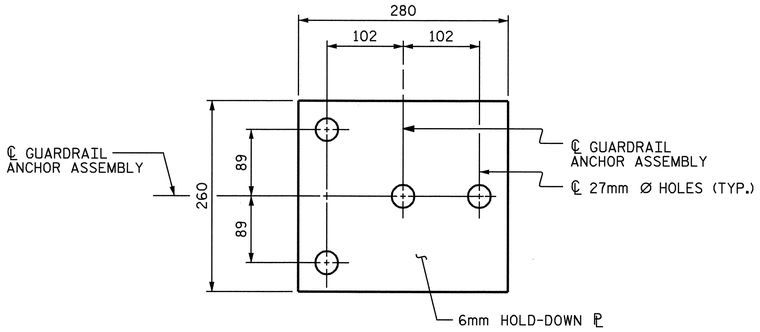

PLAN

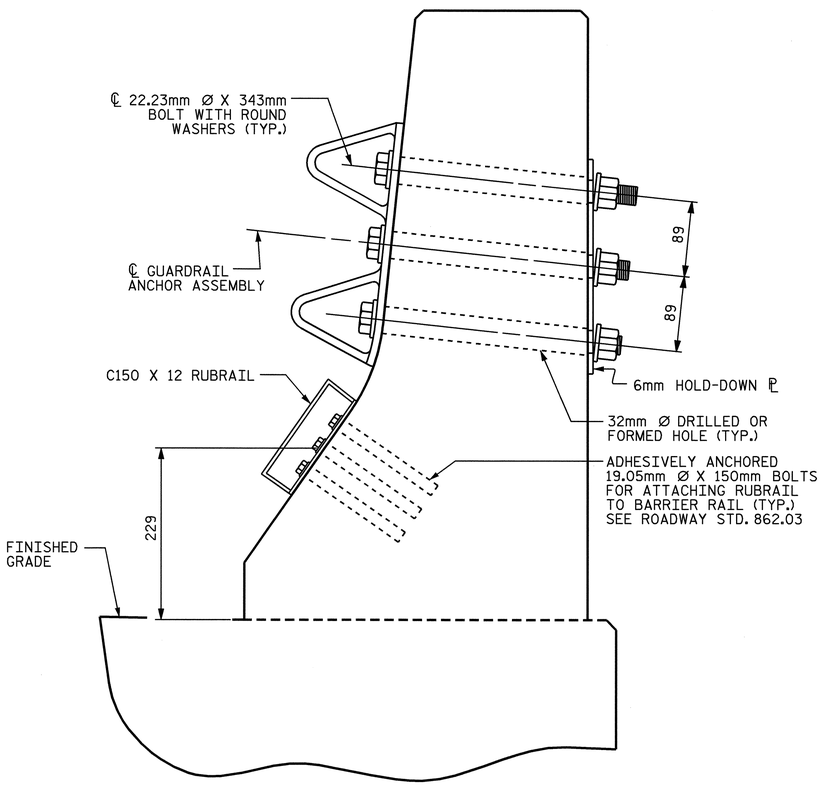

SECTION E-E

GUARDRAIL ANCHOR ASSEMBLY DETAILS

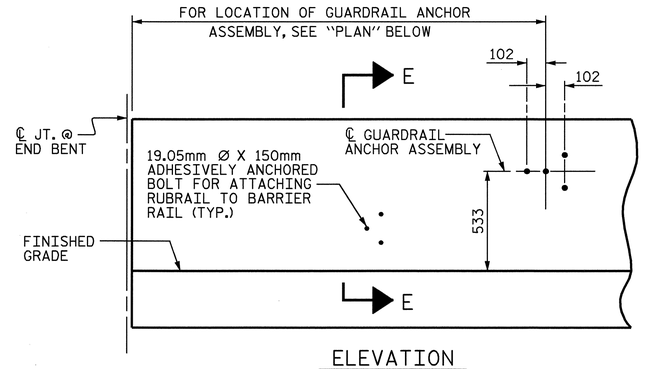

ELEVATION

FOR LOCATION OF RUBRAIL, SEE ROADWAY STD. 862.03

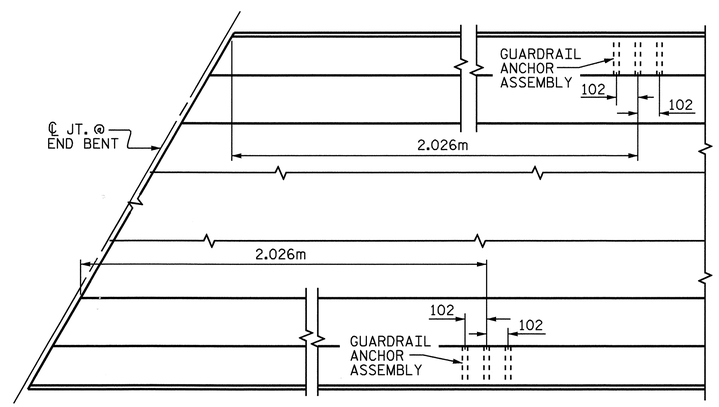

LOCATION OF ANCHORS FOR GUARDRAIL

END BENT #1 SHOWN, END BENT #2 SIMILAR.

NOTES

THE GUARDRAIL ANCHOR ASSEMBLY SHALL CONSIST OF A 6mm HOLD DOWN PLATE AND 4 - 22.23mm Ø BOLTS WITH NUTS AND WASHERS, RUBRAIL, AND ADHESIVELY ANCHORED BOLTS.

THE HOLD-DOWN PLATE SHALL CONFORM TO AASHTO M270 GRADE 36. AFTER FABRICATION, THE HOLD-DOWN PLATE SHALL BE HOT-DIP GALVANIZED IN ACCORDANCE WITH AASHTO M111.

BOLTS SHALL CONFORM TO THE REQUIREMENTS OF ASTM A307 AND NUTS SHALL CONFORM TO THE REQUIREMENTS OF AASHTO M291. BOLTS, NUTS AND WASHERS SHALL BE GALVANIZED. (AT THE CONTRACTOR'S OPTION, STAINLESS STEEL BOLTS, NUTS AND WASHERS MAY BE USED AS AN ALTERNATE FOR THE 22.23mm Ø GALVANIZED BOLTS, NUTS AND WASHERS. THEY SHALL CONFORM TO OR EXCEED THE MECHANICAL REQUIREMENTS OF ASTM A307. THE USE OF THIS ALTERNATE SHALL BE APPROVED BY THE ENGINEER.)

THE GUARDRAIL ANCHOR ASSEMBLY IS REQUIRED AT ALL POINTS WHERE APPROACH GUARDRAIL IS TO BE ATTACHED TO THE END OF BARRIER RAIL. FOR POINTS OF ATTACHMENT, SEE SKETCH.

AFTER INSTALLATION, THE EXPOSED THREAD OF THE BOLT SHALL BE BURRED WITH A SHARP POINTED TOOL.

THE COST OF THE GUARDRAIL ANCHOR ASSEMBLY SHALL BE INCLUDED IN THE UNIT CONTRACT PRICE BID FOR CONCRETE BARRIER RAIL.

THE 32mm Ø HOLES SHALL BE FORMED OR DRILLED WITH A CORE BIT. IMPACT TOOLS WILL NOT BE PERMITTED. ANY CONCRETE DAMAGED BY THIS WORK SHALL BE REPAIRED TO THE SATISFACTION OF THE ENGINEER.

THE C150 X 12 RUBRAIL IS TO BE ADHESIVELY ANCHORED TO THE RAIL USING THREE 19.05mm Ø X 150mm BOLTS WITH WASHERS. LEVEL ONE FIELD TESTING IF REQUIRED, AND THE YIELD LOAD OF THE 19.05mm Ø BOLTS IS 53.4kN. FOR ADHESIVELY ANCHORED ANCHOR BOLTS OR DOWELS, SEE SPECIAL PROVISIONS. SEE ROADWAY STANDARD 862.03 FOR DETAILS AND LOCATION OF THE RUBRAIL.

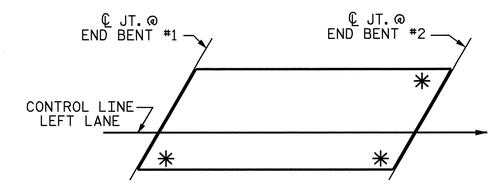

SKETCH SHOWING POINTS OF ATTACHMENTS

* DENOTES GUARDRAIL ANCHOR ASSEMBLY

PROJECT NO. R-2301A
JONES/CRAVEN COUNTY
STATION: 96+94.475 -L-

NORTH CAROLINA PROFESSIONAL SEAL 20125 ENGINEER MARSHALL G. CHEEK, JR.
4-3-08

STATE OF NORTH CAROLINA
DEPARTMENT OF TRANSPORTATION
RALEIGH

STANDARD
GUARDRAIL ANCHORAGE FOR BARRIER RAIL
(LEFT LANE)

REVISIONS						SHEET NO.
NO.	BY:	DATE:	NO.	BY:	DATE:	S-134
1			3			TOTAL SHEETS
2			4			176

ASSEMBLED BY : R. G. EMERSON DATE : 07/08
CHECKED BY : M. G. CHEEK DATE : 07/08
DRAWN BY : TLA 5/06
CHECKED BY : GM 5/06
ADDED 5/1/06R KMM/GM

22-JUL-2008 08:16
r:\structures\remerson\str_5\R2301A_sd_GR.dgn
remerson

STR. #5

STD. NO. GRA2

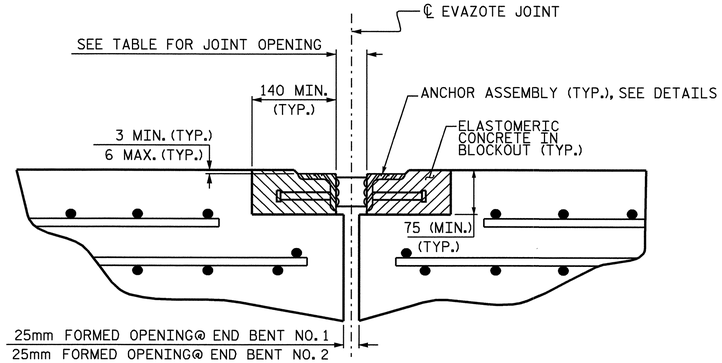

ARMORED JOINT DETAILS

SECTION NORMAL TO JOINT AT BENT

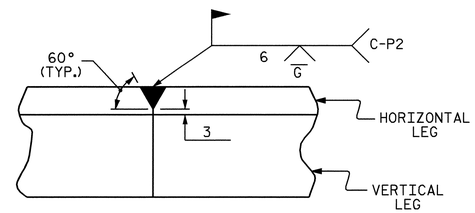

DETAIL- FIELD WELD SPLICE OF ANGLE

NOTES

ANGLES SHALL CONFORM TO AASHTO M270 GRADE 250 STEEL OR APPROVED EQUAL. ALL STUD ANCHORS SHALL CONFORM TO AASHTO M169 GRADES 1010 THRU 1020 OR APPROVED EQUAL.

STUD ANCHORS SHALL BE SHOP WELDED AND ALL HOLES SHALL BE SHOP DRILLED AS SHOWN ON THE PLANS. STUD ANCHORS SHALL BE ELECTRIC ARC END WELDED WITH COMPLETE FUSION.

UPON COMPLETION OF SHOP FABRICATION, THE ENTIRE ANCHOR ASSEMBLY SHALL BE METALLIZED. THE 12.70mm Ø STUD ANCHORS AND ANCHOR TABS NEED NOT BE METALLIZED. SEE SPECIAL PROVISION FOR THERMAL SPRAYED COATINGS (METALLIZATION).

ANCHOR ASSEMBLY SHALL BE MADE CONTINUOUS THE LENGTH OF THE JOINT FROM GUTTER TO GUTTER. FOR FIELD SPLICES AT ALL CROWN BREAK POINTS, THE ENDS OF THE STEEL ANGLES SHALL BE CUT PARALLEL TO THE BRIDGE CENTERLINE. FINISHED FIELD WELDS SHALL BE GROUND SMOOTH AND COATED WITH A MINIMUM THICKNESS OF 0.100mm OF ZINC-RICH PAINT IN ACCORDANCE WITH THE STANDARD SPECIFICATIONS.

ANCHOR ASSEMBLY SEGMENTS SHALL NOT BE LESS 3.6m NOR MORE THAN 6.1m IN LENGTH. SHORTER SEGMENTS MAY BE USED AT THE EDGE OF ROADWAY OR AT POINTS OF STAGED CONSTRUCTION.

THE ANCHOR ASSEMBLY SHALL BE SECURED AND LEVELED AS SHOWN IN THE "ARMORED JOINT ANCHOR ASSEMBLY DETAILS". NO SUBMITTALS ARE REQUIRED FOR 9.53mm Ø EXPANSION ANCHORS, NUTS OR WASHERS. THE CONTRACTOR MAY SUBMIT FOR APPROVAL AN ALTERNATE METHOD OF ALIGNING AND LEVELING THE ANGLES. THE ALTERNATE METHOD SHALL NOT INCLUDE ANY WELDING TO THE OUTSIDE FACE OF THE ANGLES.

AFTER THE ELASTOMERIC CONCRETE HAS BEEN CAST ON BOTH SIDES OF THE JOINT, REMOVE ANY EXCESS CONCRETE THAT COMES THROUGH THE WEEP HOLES AND THOROUGHLY CLEAN THE ANGLES. ANY DAMAGED STEEL SHALL BE COATED WITH A MINIMUM OF 0.100mm OF ZINC-RICH PAINT IN ACCORDANCE WITH THE STANDARD SPECIFICATIONS.

SEE SPECIAL PROVISIONS FOR EVAZOTE JOINT SEALS.

SEE SPECIAL PROVISIONS FOR ELASTOMERIC CONCRETE.

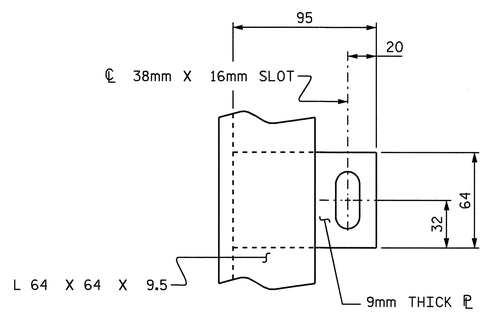

PLAN VIEW OF TAB

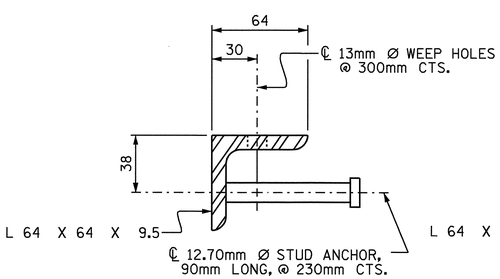

SECTION VIEW OF STUD

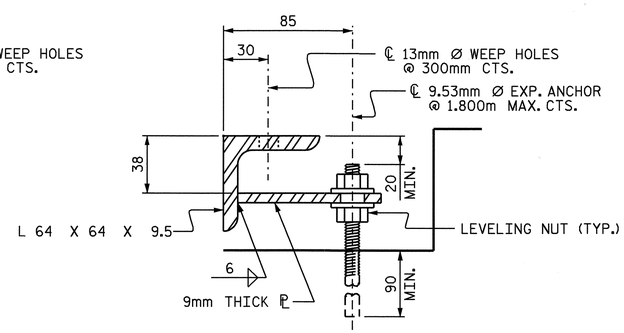

SECTION VIEW OF TAB

ARMORED JOINT ANCHOR ASSEMBLY DETAILS

MOVEMENT AND SETTING AT EVAZOTE JOINT						
END BENT NO.	SKEW ANGLE	NOMINAL UNCOMPRESSED SEAL WIDTH	TOTAL MOVEMENT (ALONG ℄ RDWY)	PERPENDICULAR JOINT OPENING AT 7° C	PERPENDICULAR JOINT OPENING AT 16° C	PERPENDICULAR JOINT OPENING AT 32° C
1	93°-54'-46"	64mm	32mm	54mm	48mm	38mm
2	93°-54'-46"	64mm	32mm	54mm	48mm	38mm

TOTAL MOVEMENT IS CALCULATED ALONG THE CENTERLINE OF ROADWAY.
JOINT OPENINGS ARE MEASURED PERPENDICULAR TO THE JOINT.

BILL OF MATERIAL		
END BENT NO.	ELASTOMERIC CONCRETE * (CU. m)	TOTAL LENGTH OF ANGLE (m)
1	0.3	31.272m
2	0.3	31.272m

* BASED ON THE MINIMUM BLOCKOUT SHOWN.

PROJECT NO. R-2301A
JONES/CRAVEN COUNTY
STATION: 96+94.475-L-

STATE OF NORTH CAROLINA
DEPARTMENT OF TRANSPORTATION
RALEIGH

STANDARD
ARMORED EVAZOTE
JOINT DETAILS
LEFT LANE

NORTH CAROLINA PROFESSIONAL SEAL 20125 ENGINEER MARSHALL G. CHEEK, JR.
9-2-08

REVISIONS						SHEET NO.
NO.	BY:	DATE:	NO.	BY:	DATE:	S-135
1			3			TOTAL SHEETS
2			4			176

ASSEMBLED BY : A.L. FIGUEROA	DATE : 06-25-08	
CHECKED BY : M.G. CHEEK	DATE : 06-25-08	
DRAWN BY : EEM 1/96	REV. 7/10/01 LES/RDR	
CHECKED BY : RGW 1/96	REV. 5/7/03RR RWW/JTE	
	REV. 5/1/06 TLA/GM	

22-JUL-2008 09:04
R:\Structures\AL Figueroa\Microstation\R-2301A_sd_STR*5-11_JS_ARM-S135.dgn
afigueroa

STR #5

STD. NO. AEJ1SM

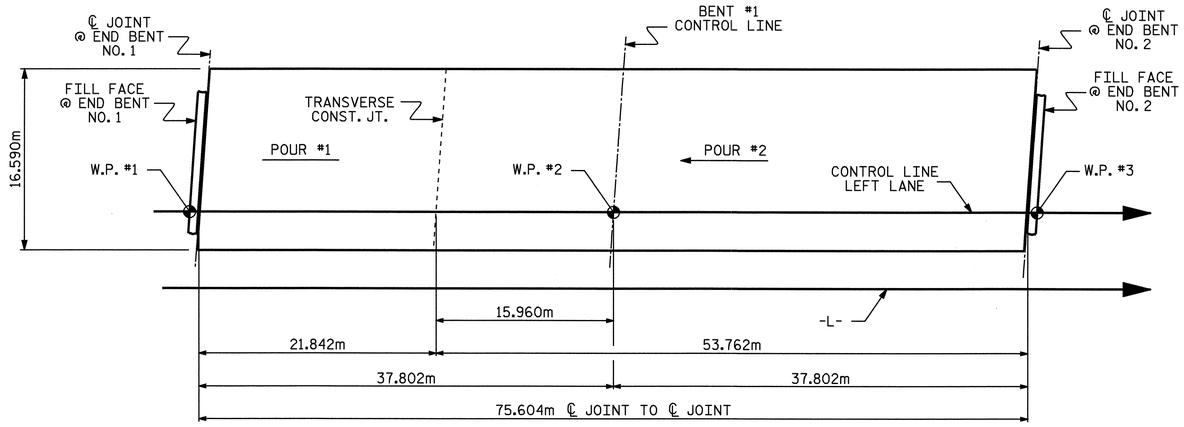

POUR SEQUENCE

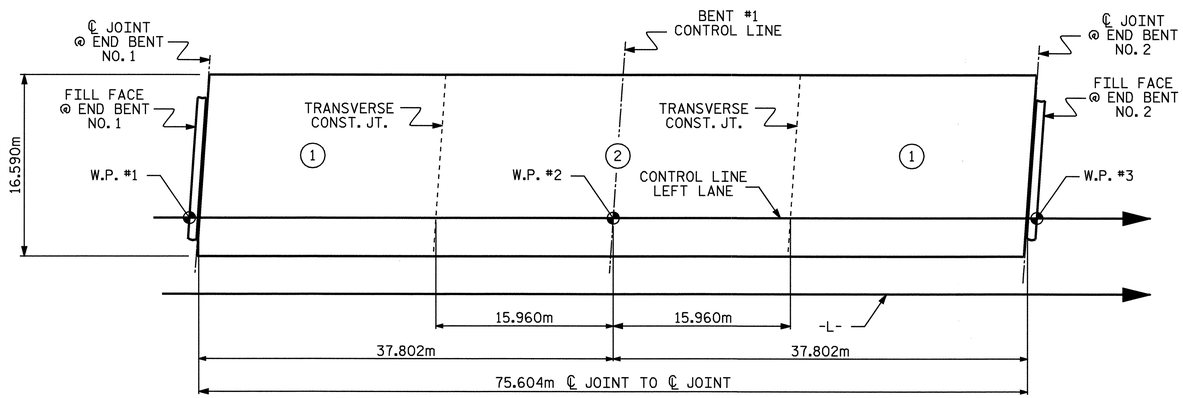

OPTIONAL POUR SEQUENCE

POUR (2) CANNOT BE STARTED UNTIL BOTH ADJACENT (1) POURS REACH A MINIMUM OF 20.7MPa

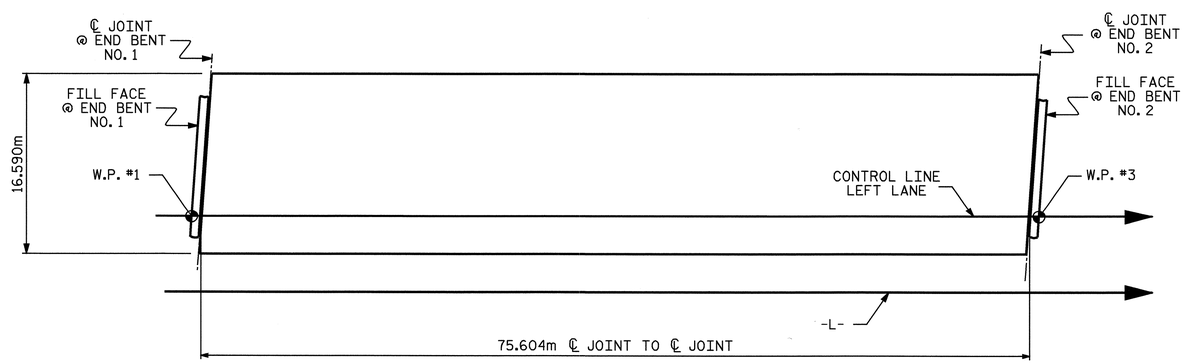

LAYOUT FOR COMPUTING AREA OF REINFORCED CONCRETE DECK SLAB

(SQ. METER = 1254.3)

BILL OF MATERIAL SPANS A & B

BAR	NO.	SIZE	TYPE	LENGTH	WEIGHT
✳ A1	465	#16	STR	16480	11893
✳ A101	2	#16	STR	14760	46
✳ A102	2	#16	STR	12420	39
✳ A103	2	#16	STR	10080	31
✳ A104	2	#16	STR	7740	24
✳ A105	2	#16	STR	5400	17
✳ A106	2	#16	STR	3060	9
✳ A107	2	#16	STR	720	2
A2	465	#16	STR	16480	11893
A201	2	#16	STR	14760	46
A202	2	#16	STR	12420	39
A203	2	#16	STR	10080	31
A204	2	#16	STR	7740	24
A205	2	#16	STR	5400	17
A206	2	#16	STR	3060	9
A207	2	#16	STR	720	2
✳ B1	282	#13	STR	7320	2052
✳ B2	273	#19	STR	12340	7529
B3	315	#16	STR	15620	7636
✳ G1	2	#16	STR	16520	51
✳ K1	8	#16	1	2240	28
✳ K2	16	#16	2	2520	63
✳ K3	20	#16	STR	2780	86
✳ S1	80	#13	3	1000	80
REINFORCING STEEL = 19697 kg					
✳ EPOXY COATED REINF. STEEL = 21950 kg					

✳ THESE BARS ARE EPOXY COATED.

BAR TYPES

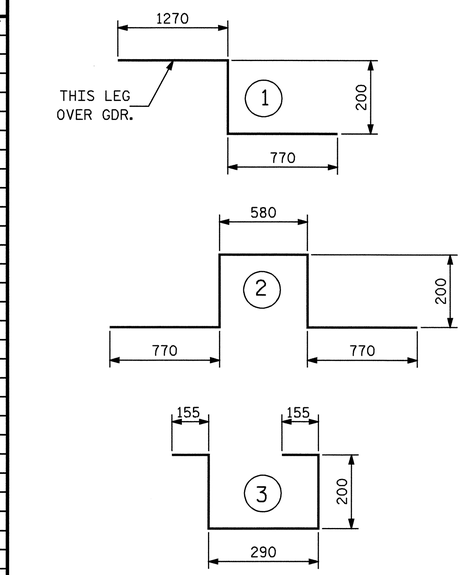

ALL BAR DIMENSIONS ARE OUT TO OUT

SUPERSTRUCTURE BILL OF MATERIAL

		CLASS AA CONCRETE	REINFORCING STEEL	EPOXY COATED REINFORCING STEEL
		(CU.METER)	(kg)	(kg)
SPAN "A" AND "B"	POUR #1	93.3	19697	21950
	POUR #2	228.4		
TOTALS ✳✳		321.7		

✳✳ QUANTITIES FOR BARRIER RAIL ARE NOT INCLUDED

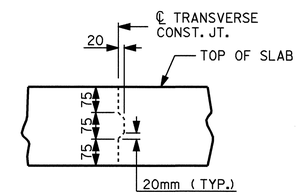

TRANSVERSE CONSTRUCTION JOINT DETAIL

NOTE: REINFORCING STEEL IN SLAB NOT SHOWN. LONGITUDINAL REINFORCING STEEL SHALL BE CONTINUOUS THRU JOINT.

GROOVING BRIDGE FLOORS		
APPROACH SLABS	212	SQ.METER
BRIDGE DECK	1104	SQ.METER
TOTAL	1316	SQ.METER

SUPERSTRUCTURE REINFORCING STEEL LENGTHS ARE BASED ON THE FOLLOWING MINIMUM SPLICE LENGTHS

BAR SIZE	SUPERSTRUCTURE EXCEPT APPROACH SLABS, PARAPET, AND BARRIER RAIL		APPROACH SLABS		PARAPET AND BARRIER RAIL
	EPOXY COATED	UNCOATED	EPOXY COATED	UNCOATED	
#13	610	540	610	540	840
#16	770	660	770	660	1050
#19	920	790	1190	790	1330
#22	1580	1060			
#25	2080	1390			

PROJECT NO. R-2301A
JONES/CRAVEN COUNTY
STATION: 96+94.475-L-

STATE OF NORTH CAROLINA
DEPARTMENT OF TRANSPORTATION
RALEIGH

STANDARD

SUPERSTRUCTURE

BILL OF MATERIAL
LEFT LANE

NORTH CAROLINA PROFESSIONAL SEAL 20125 ENGINEER MARSHALL B. CHEEK, JR.
9-5-08

ASSEMBLED BY : L.L. MURPHY	DATE : 07-08
CHECKED BY : K. LAYNE	DATE : 08-08
DRAWN BY : JMB 5/87	REV. 5/16/97 EEM/RGW
CHECKED BY : SJD 9/87	REV. 5/1/06 TLA/GM

REVISIONS						SHEET NO.
NO.	BY:	DATE:	NO.	BY:	DATE:	S-136
1			3			TOTAL SHEETS
2			4			176

05-SEP-2008 07:39
r:\structures\finalplans\Str #5\R2301A_sd_BM_STR#5.dgn
dahodge

STR #5

STD. NO. BOM1SM

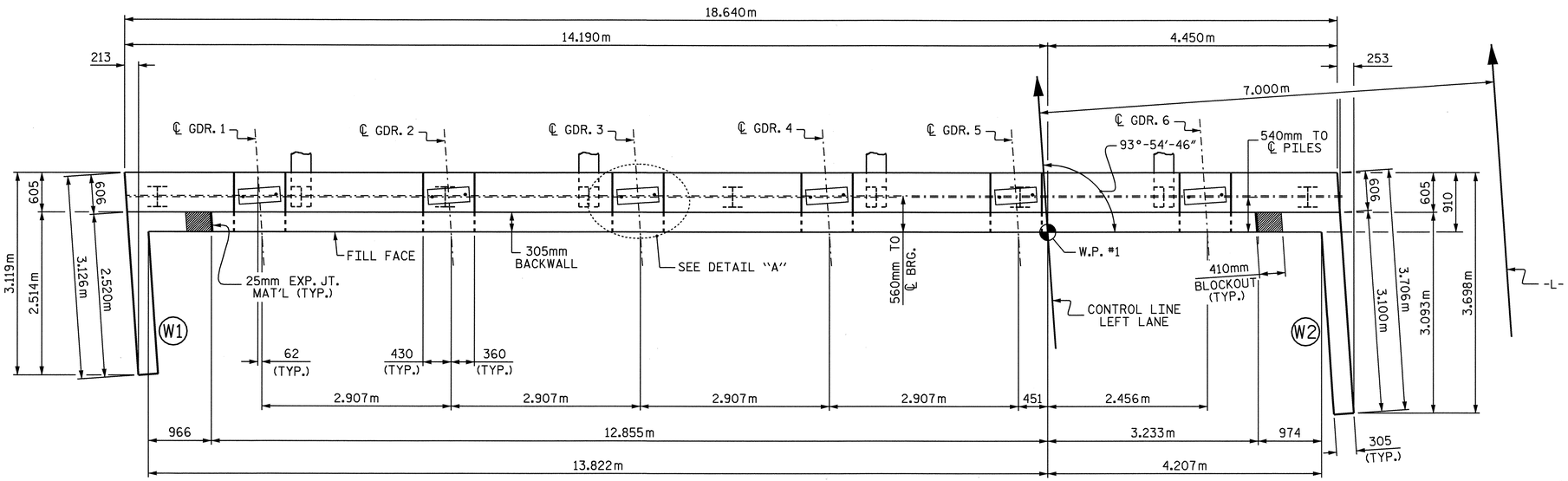

PLAN

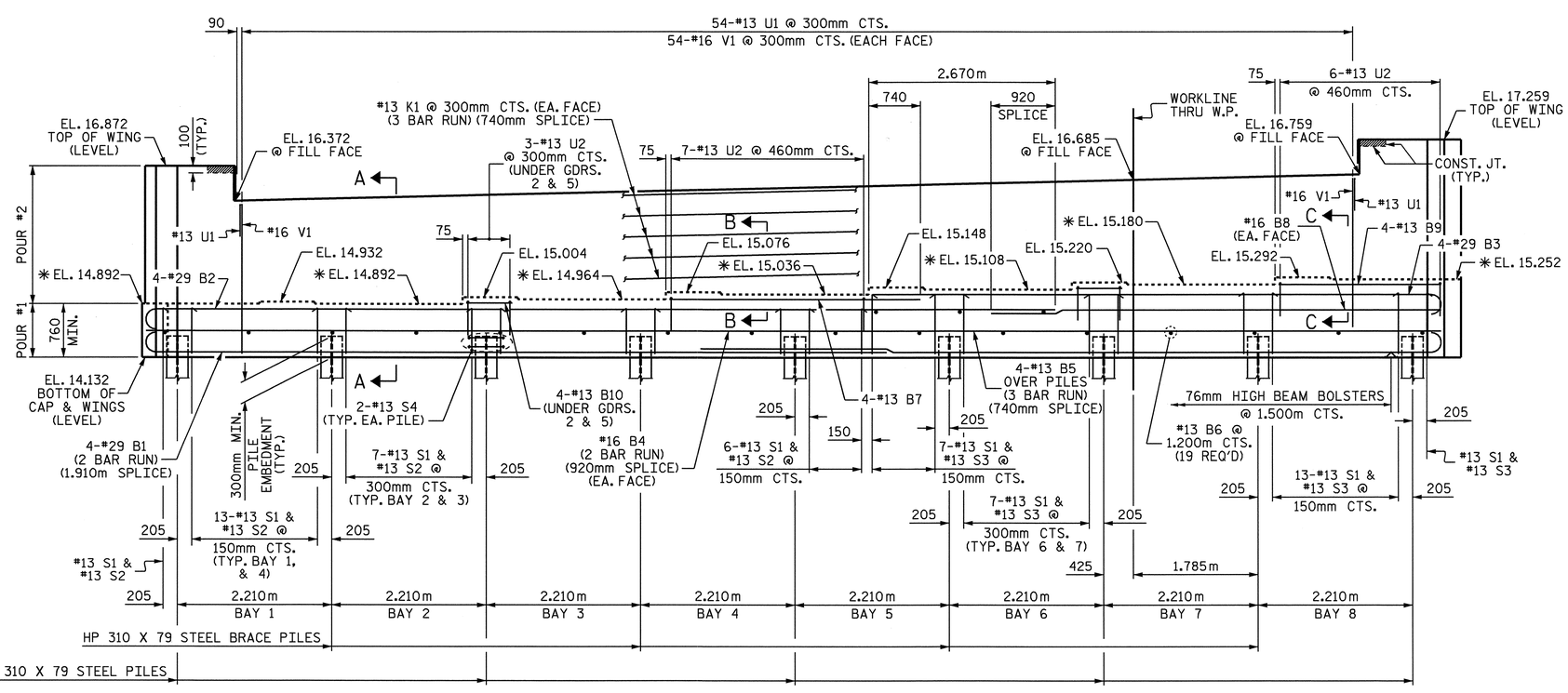

ELEVATION

✳ FOR LOCATION OF ELEVATIONS BETWEEN BRIDGE SEAT BUILD-UPS, SEE SECTION VIEWS, SHEET 3 OF 3.

NOTES

STIRRUPS IN CAP MAY BE SHIFTED AS NECESSARY TO CLEAR ANCHOR BOLTS.

THE CONTRACTOR SHALL PROVIDE FOR INSTALLATION OF THE 102mm DIAMETER DRAIN PIPE THROUGH THE WING WALL AS REQUIRED FOR REINFORCED BRIDGE APPROACH FILLS, SEE THE ROADWAY PLANS. REINFORCING STEEL IN THE WING WALL MAY BE SHIFTED AS NECESSARY TO CLEAR THE DRAIN PIPE.

THE TOP SURFACE AREAS OF THE END BENT CAPS SHALL BE CURED IN ACCORDANCE WITH THE STANDARD SPECIFICATIONS EXCEPT THE MEMBRANE CURING COMPOUND METHOD SHALL NOT BE USED.

THE TOP SURFACE OF THE CAP EXCEPT THE BRIDGE SEAT BUILDUPS SHALL BE SLOPED TRANSVERSELY FROM THE FILL FACE TO THE BACK FACE AT THE RATE OF 2%.

BACKWALL SHALL BE PLACED BEFORE APPLYING THE EPOXY PROTECTIVE COATING.

EPOXY COAT THE END BENT CAP AFTER ADJUSTMENTS ARE MADE TO BEARINGS AND ANCHOR BOLTS ARE GROUTED.

THE #16 V1 BARS IN THE BACKWALL SHALL BE PLACED 50mm CLEAR FROM THE TOP OF THE BACKWALL.

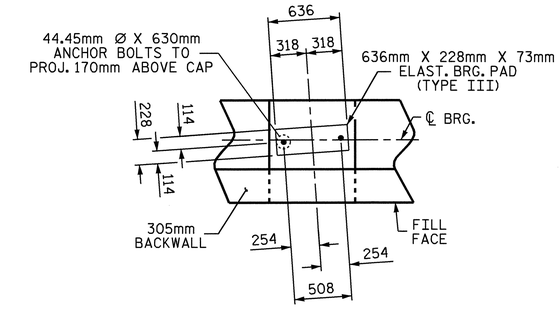

DETAIL "A"

(TYP. EA. GIRDER)

PROJECT NO. R-2301A
JONES/CRAVEN COUNTY
STATION: 96+94.475 -L-

SHEET 1 OF 3

STATE OF NORTH CAROLINA
DEPARTMENT OF TRANSPORTATION
RALEIGH

SUBSTRUCTURE
END BENT No. 1
LEFT LANE

NORTH CAROLINA PROFESSIONAL SEAL 20125 ENGINEER
9-4-08

REVISIONS								SHEET NO.
NO.	BY:	DATE:	NO.	BY:	DATE:			S-137
1			3					TOTAL SHEETS
2			4					176

DRAWN BY : A. SORSENGINH DATE : 6/13/08
CHECKED BY : T. BANKOVICH DATE : 7/08

03-SEP-2008 11:41
r:\structures\final plans\Str #5\R-2301A_sd_E_05.dgn
lmurphy

STR. #5

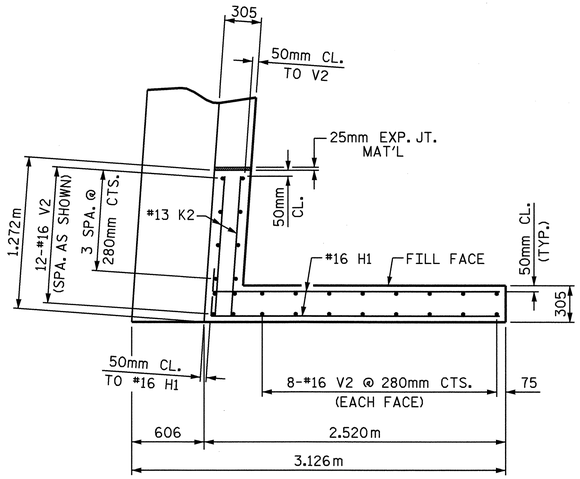

PLAN OF LEFT WING W1

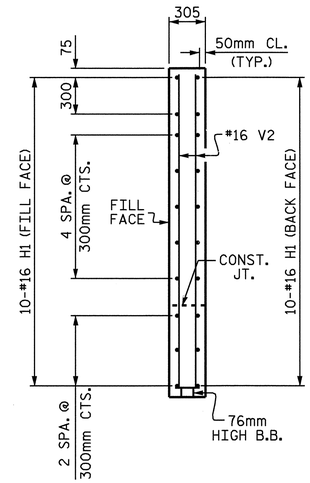

SECTION X-X

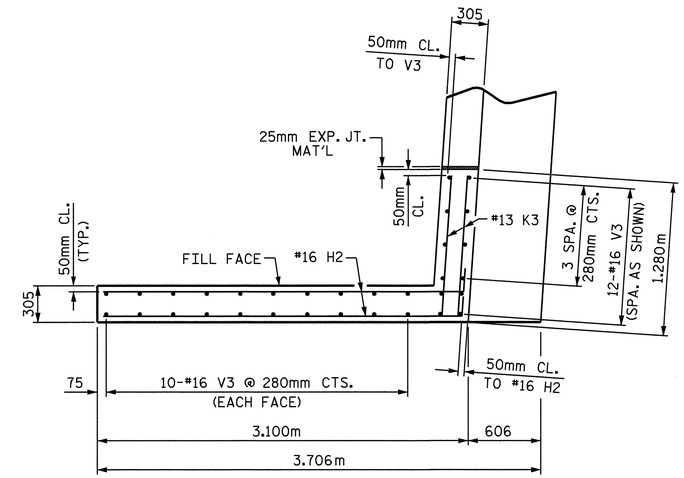

PLAN OF RIGHT WING W2

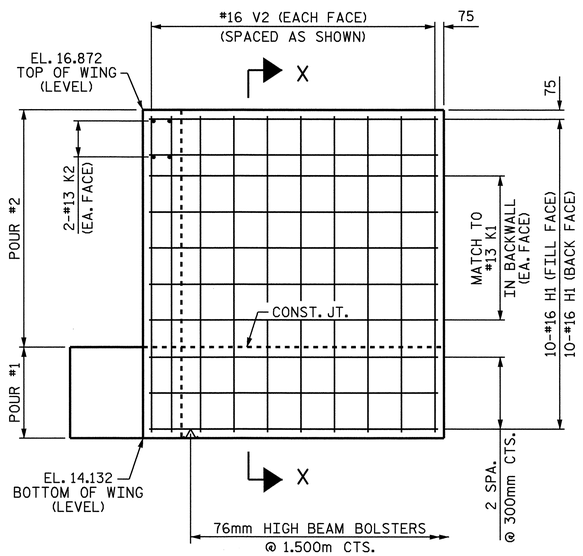

ELEVATION OF LEFT WING W1

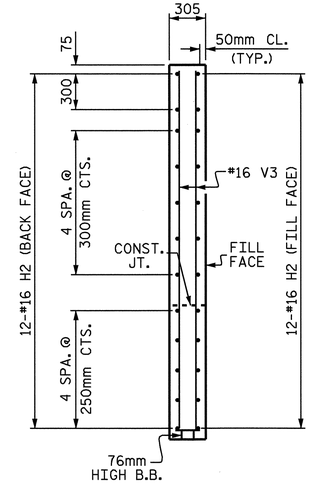

SECTION Y-Y

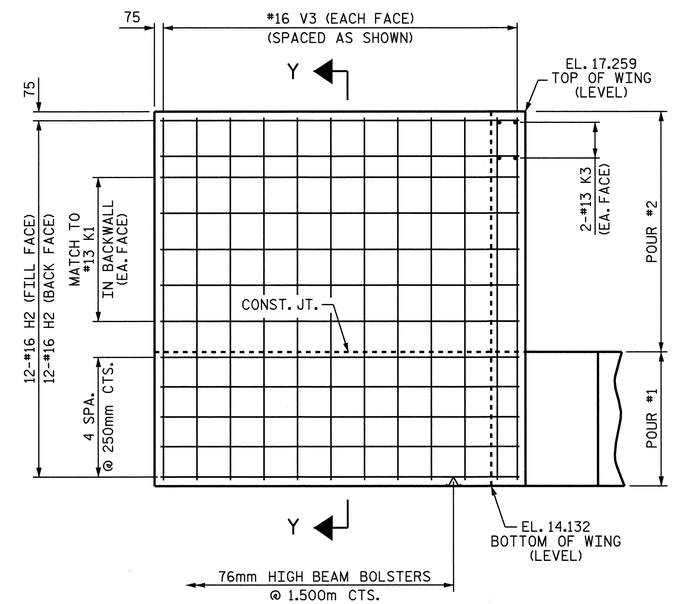

ELEVATION OF RIGHT WING W2

PROJECT NO. R-2301A
JONES/CRAVEN COUNTY
STATION: 96+94.475 -L-

SHEET 2 OF 3

STATE OF NORTH CAROLINA
DEPARTMENT OF TRANSPORTATION
RALEIGH

SUBSTRUCTURE
END BENT No. 1
LEFT LANE

NORTH CAROLINA PROFESSIONAL SEAL 20125 ENGINEER MARSHALL L. CREEK, JR.
9-5-08

REVISIONS						SHEET NO.
NO.	BY:	DATE:	NO.	BY:	DATE:	S-138
1			3			TOTAL SHEETS
2			4			176

STR. #5

DRAWN BY : A. SORSENGINH DATE : 6/16/08
CHECKED BY : T. BANKOVICH DATE : 7/08

08-AUG-2008 11:28
r:\structures\asorsenginh\str #5\r-2301a_sd_e_05.dgn
asorsenginh

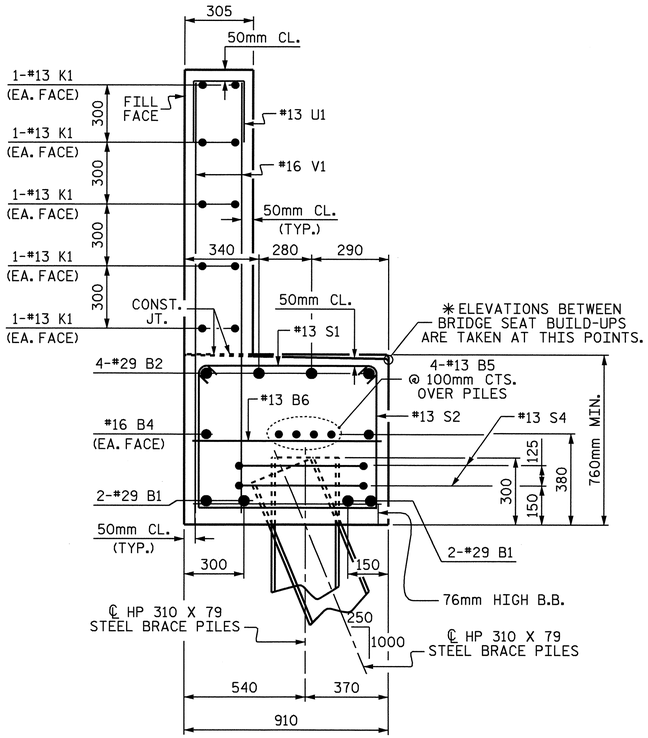

SECTION A-A

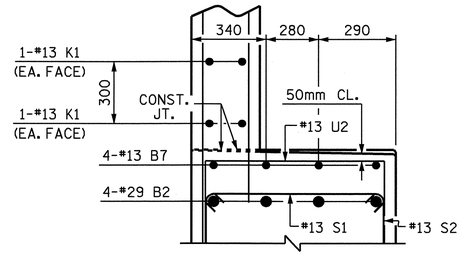

SECTION B-B

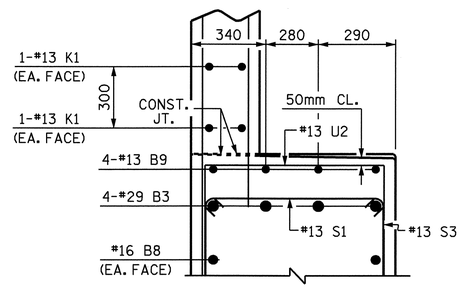

SECTION C-C

BAR TYPES

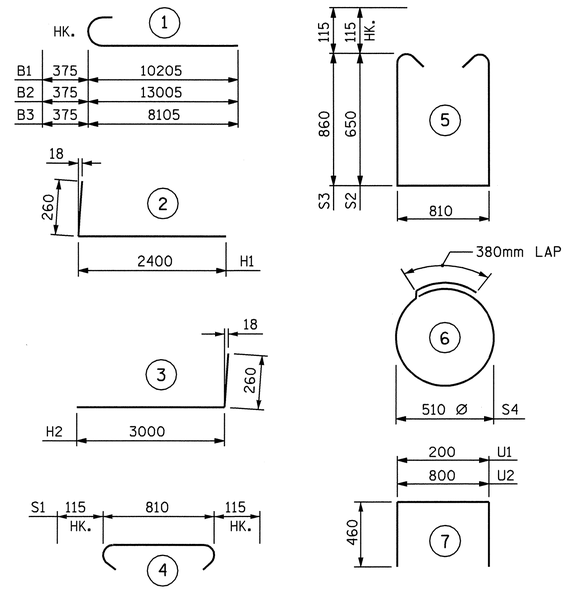

ALL BAR DIMENSIONS ARE OUT TO OUT.

BILL OF MATERIAL
END BENT No. 1

BAR	NO.	SIZE	TYPE	LENGTH	WEIGHT
B1	8	#29	1	10580	428
B2	4	#29	1	13380	271
B3	4	#29	1	8480	172
B4	4	#16	STR	9740	60
B5	12	#13	STR	6680	80
B6	19	#13	STR	800	15
B7	4	#13	STR	3600	14
B8	2	#16	STR	6440	20
B9	4	#13	STR	2320	9
B10	8	#13	STR	680	5
H1	20	#16	2	2660	83
H2	24	#16	3	3260	121
K1	30	#13	STR	6680	199
K2	4	#13	STR	1160	5
K3	4	#13	STR	1180	5
S1	82	#13	4	1040	85
S2	47	#13	5	2340	109
S3	35	#13	5	2760	96
S4	18	#13	6	1980	35
U1	54	#13	7	1120	60
U2	19	#13	7	1720	32
V1	108	#16	STR	2140	359
V2	28	#16	STR	2620	114
V3	32	#16	STR	3020	150

REINFORCING STEEL = 2527 kg

CLASS A CONCRETE
POUR #1
CAP & LOWER WINGS 17.2 CU. METERS
POUR #2
BACKWALL & UPPER WINGS 12.0 CU. METERS
TOTAL
CLASS A CONCRETE 29.2 CU. METERS

HP 310 X 79 STEEL PILES
NO. 9 207.0 METERS

PILE REDRIVES
NO. 4 EA.

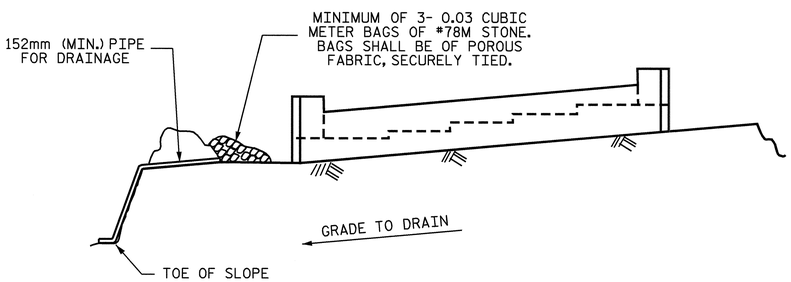

BAGGED STONE AND PIPE SHALL BE PLACED IMMEDIATELY AFTER COMPLETION OF END BENT EXCAVATION. PIPE MAY BE EITHER CONCRETE, CORRUGATED STEEL, CORRUGATED ALUMINUM ALLOY, OR CORRUGATED PLASTIC. PERFORATED PIPE WILL NOT BE ALLOWED.

BAGGED STONE SHALL REMAIN IN PLACE UNTIL THE ENGINEER DIRECTS THAT IT BE REMOVED. THE CONTRACTOR SHALL REMOVE AND DISPOSE OF SILT ACCUMULATIONS AT BAGGED STONE WHEN SO DIRECTED BY THE ENGINEER. BAGS SHALL BE REMOVED AND REPLACED WHENEVER THE ENGINEER DETERMINES THAT THEY HAVE DETERIORATED AND LOST THEIR EFFECTIVENESS.

NO SEPARATE PAYMENT WILL BE MADE FOR THIS WORK AND THE ENTIRE COST OF THIS WORK SHALL BE INCLUDED IN THE UNIT CONTRACT PRICE BID FOR THE SEVERAL PAY ITEMS.

TEMPORARY DRAINAGE AT END BENT

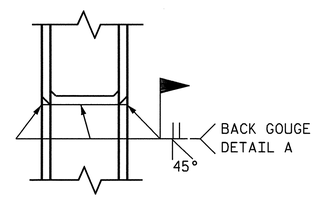

✱PILE VERTICAL

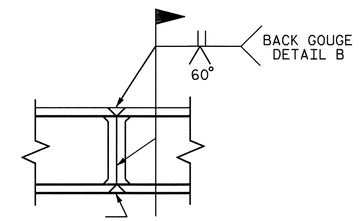

✱PILE HORIZONTAL OR VERTICAL

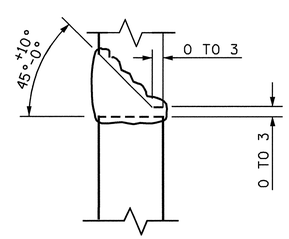

DETAIL A

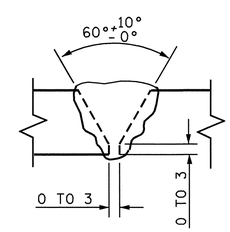

DETAIL B

PILE SPLICE DETAILS

✱POSITION OF PILE DURING WELDING.

NORTH CAROLINA PROFESSIONAL SEAL 20125 ENGINEER MARSHALL C. ROBERTS, JR.
9-4-08

PROJECT NO. R-2301A
JONES/CRAVEN COUNTY
STATION: 96+94.475 -L-

SHEET 3 OF 3

STATE OF NORTH CAROLINA
DEPARTMENT OF TRANSPORTATION
RALEIGH

SUBSTRUCTURE
END BENT No. 1
LEFT LANE

REVISIONS						SHEET NO.
NO.	BY:	DATE:	NO.	BY:	DATE:	S-139
1			3			TOTAL SHEETS
2			4			176

DRAWN BY : A. SORSENGINH DATE : 6/16/08
CHECKED BY : T. BANKOVICH DATE : 7/08

03-SEP-2008 11:41
r:\structures\final plans\Str #5\R-2301A_sd_E_05.dgn
lmurphy

STR. #5

NOTES

STIRRUPS IN CAP MAY BE SHIFTED AS NECESSARY TO CLEAR ANCHOR BOLTS.

HOOKS ON "V" BARS MAY BE TURNED AS NECESSARY FOR PLACING REINFORCING STEEL.

FOR PILE SPLICE DETAILS, SEE END BENT SHEETS.

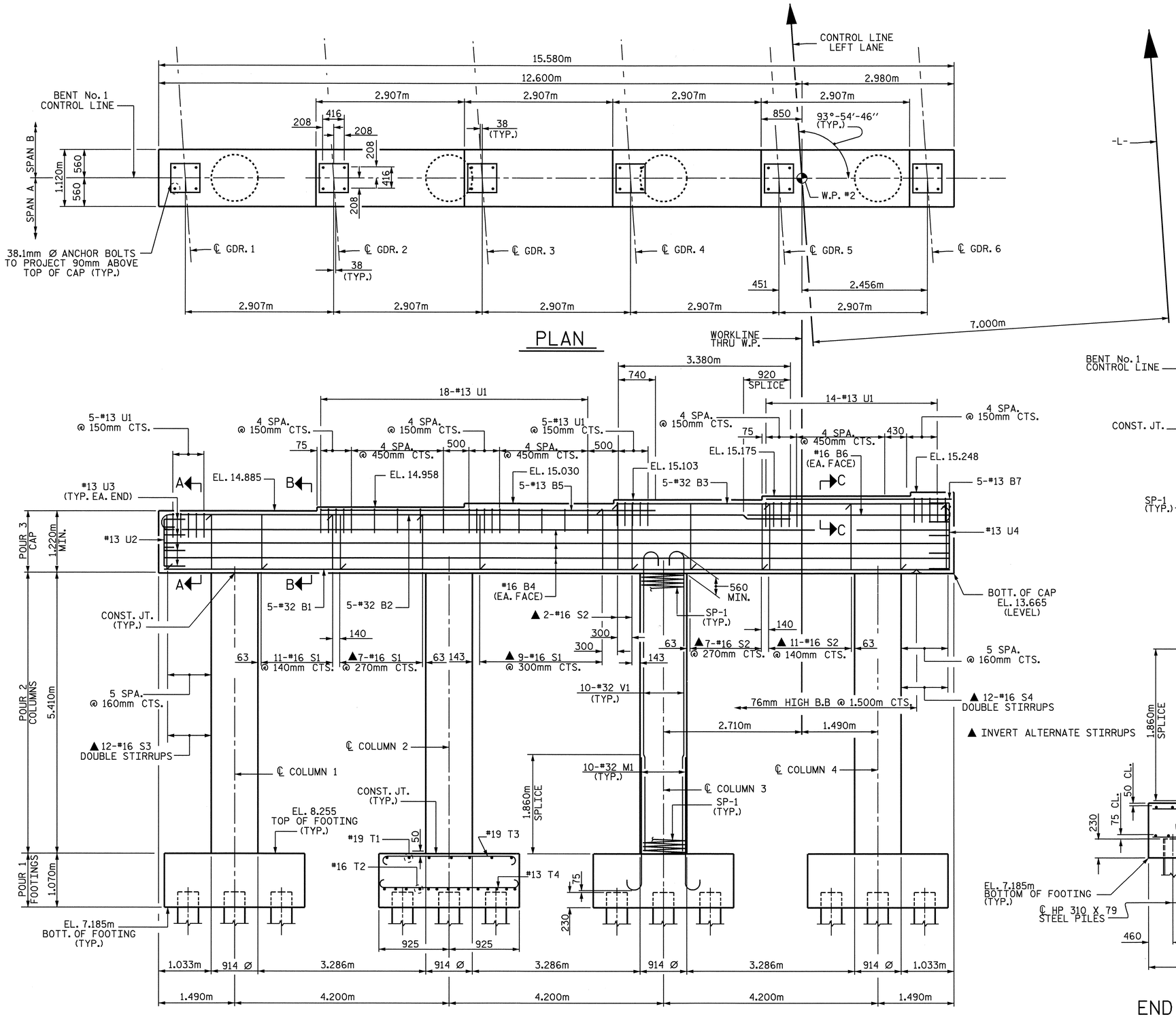

ELEVATION

DIMENSIONS AND REINFORCING STEEL ARE TYPICAL FOR EACH COLUMN AND FOOTING

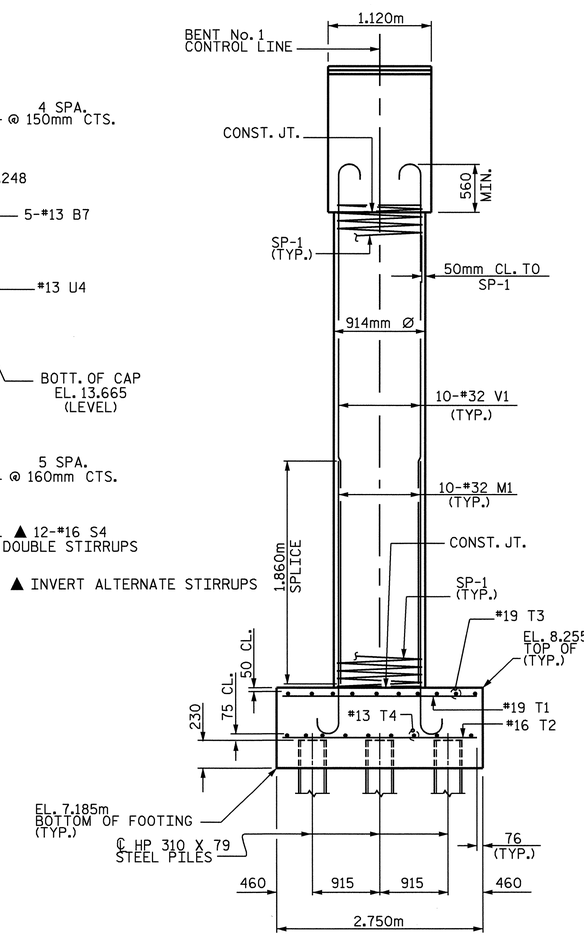

END ELEVATION

NORTH CAROLINA PROFESSIONAL SEAL 20125 ENGINEER MARSHALL G. CHEEK, JR. 9-5-08

PROJECT NO. R-2301A

JONES/CRAVEN COUNTY

STATION: 96+94.475 -L-

SHEET 1 OF 2

STATE OF NORTH CAROLINA
DEPARTMENT OF TRANSPORTATION
RALEIGH

SUBSTRUCTURE
BENT No. 1
LEFT LANE

REVISIONS						SHEET NO.
NO.	BY:	DATE:	NO.	BY:	DATE:	S-140
1			3			TOTAL SHEETS
2			4			176

DRAWN BY : M. POOLE DATE : 07-08
CHECKED BY : M. G. CHEEK DATE : 07-08

05-SEP-2008 10:36
r:\structures\final plans\str #5\r2301a_sd_bl_05.dgn
lmurphy

STR. #5

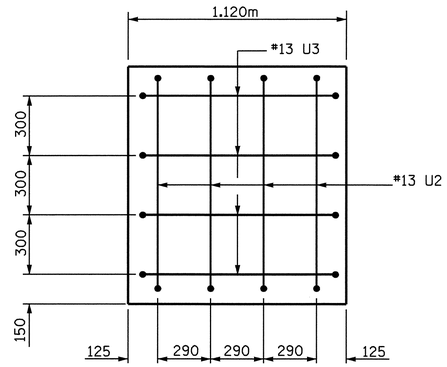

END OF CAP ELEVATION

LEFT SIDE

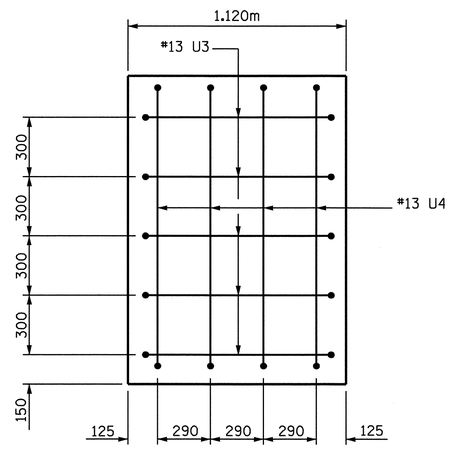

END OF CAP ELEVATION

RIGHT SIDE

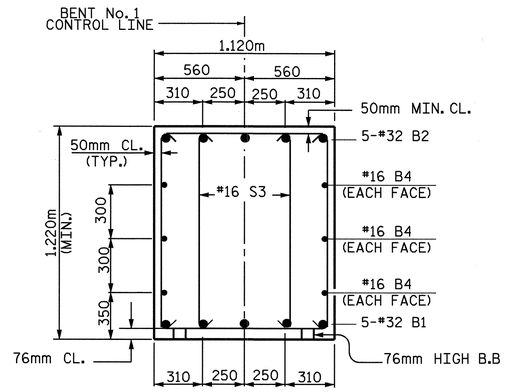

SECTION A-A

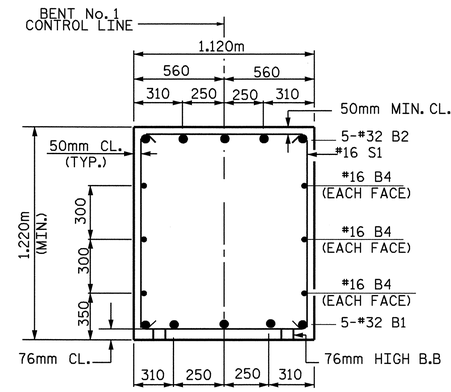

SECTION B-B

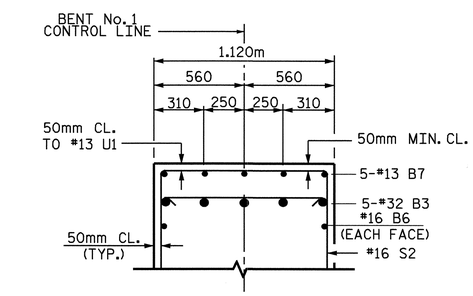

SECTION C-C

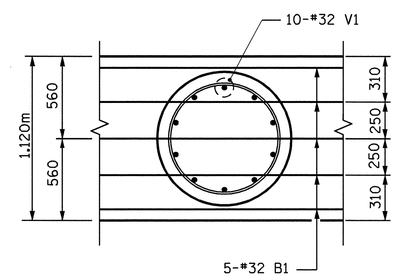

BOTTOM OF CAP

BAR TYPES

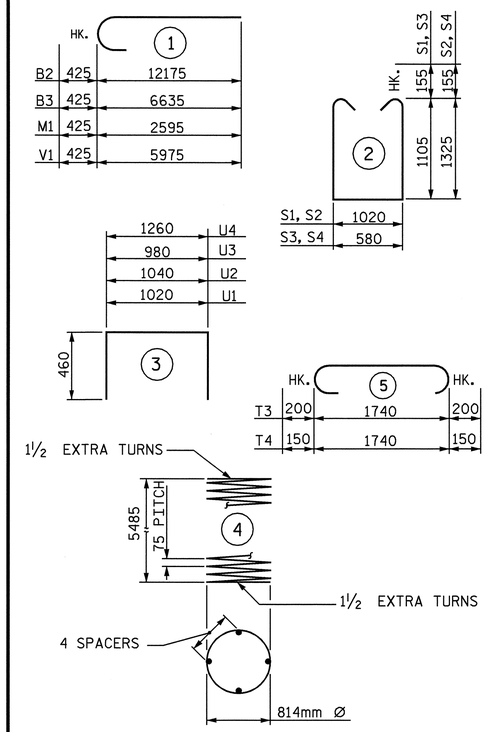

ALL BAR DIMENSIONS ARE OUT TO OUT.

✱✱✱ THE SP-1 SPIRAL REINFORCING STEEL SHALL BE W20 OR D-20 COLD DRAWN WIRE OR #13 PLAIN OR DEFORMED BAR.

BILL OF MATERIAL

BENT No. 1

BAR	NO.	SIZE	TYPE	LENGTH	WEIGHT
B1	5	32	STR	15480	496
B2	5	32	1	12600	403
B3	5	32	1	7060	226
B4	6	16	STR	15480	144
B5	5	13	STR	6520	32
B6	2	16	STR	4240	13
B7	5	13	STR	3720	18
M1	40	32	1	3020	774
S1	27	16	2	3540	148
S2	20	16	2	3980	124
S3	12	16	2	3280	61
S4	12	16	2	3720	69
T1	28	19	STR	2640	165
T2	56	16	STR	2640	229
T3	40	19	5	2140	193
T4	36	13	5	2040	73
U1	42	13	3	1940	81
U2	4	13	3	1960	8
U3	9	13	3	1900	17
U4	4	13	3	2180	9
V1	40	32	1	6400	1639

REINFORCING STEEL 4922 kg

BAR	NO.	SIZE	TYPE	LENGTH	WEIGHT
SP-1	4	✱✱✱	4	184410	733

TOTAL SPIRAL COLUMN REINFORCING STEEL 733 kg

CLASS A CONCRETE BREAKDOWN

POUR #1 (FOOTINGS)	21.8 CU. METERS
POUR #2 (COLUMNS)	14.2 CU. METERS
POUR #3 (CAP)	24.1 CU. METERS
TOTAL	60.1 CU. METERS

HP 310 X 79 STEEL PILES
No. 24 552.0 METERS

PILE REDRIVES
No. 4 EACH

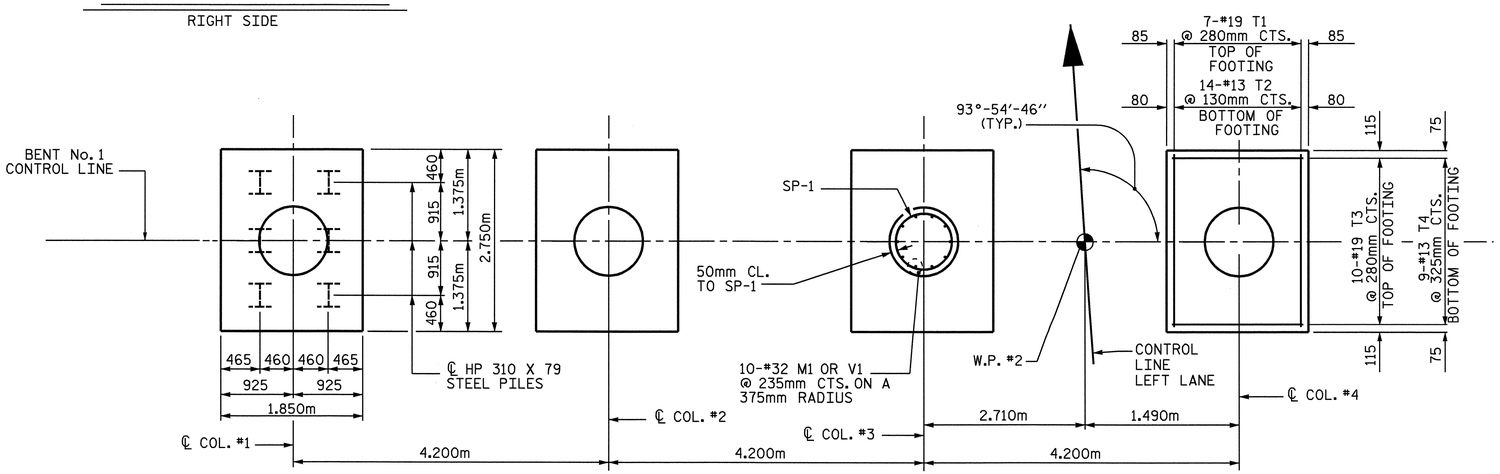

PLAN OF FOOTINGS

ALL FOOTINGS ARE TYPICAL

PROJECT NO. R-2301A
JONES/CRAVEN COUNTY
STATION: 96+94.475 -L-

SHEET 2 OF 2

STATE OF NORTH CAROLINA
DEPARTMENT OF TRANSPORTATION
RALEIGH

SUBSTRUCTURE
BENT No. 1
LEFT LANE

NORTH CAROLINA PROFESSIONAL SEAL 20125 ENGINEER MARSHALL G. CHEEK, JR.
9-5-08

REVISIONS						SHEET NO.
NO.	BY:	DATE:	NO.	BY:	DATE:	S-141
1			3			TOTAL SHEETS
2			4			176

DRAWN BY : M. POOLE DATE : 07-08
CHECKED BY : M. G. CHEEK DATE : 07-08

05-SEP-2008 11:41
r:\structures\final plans\str #5\r2301a_sd_bl_05.dgn
lmurphy

STR. #5

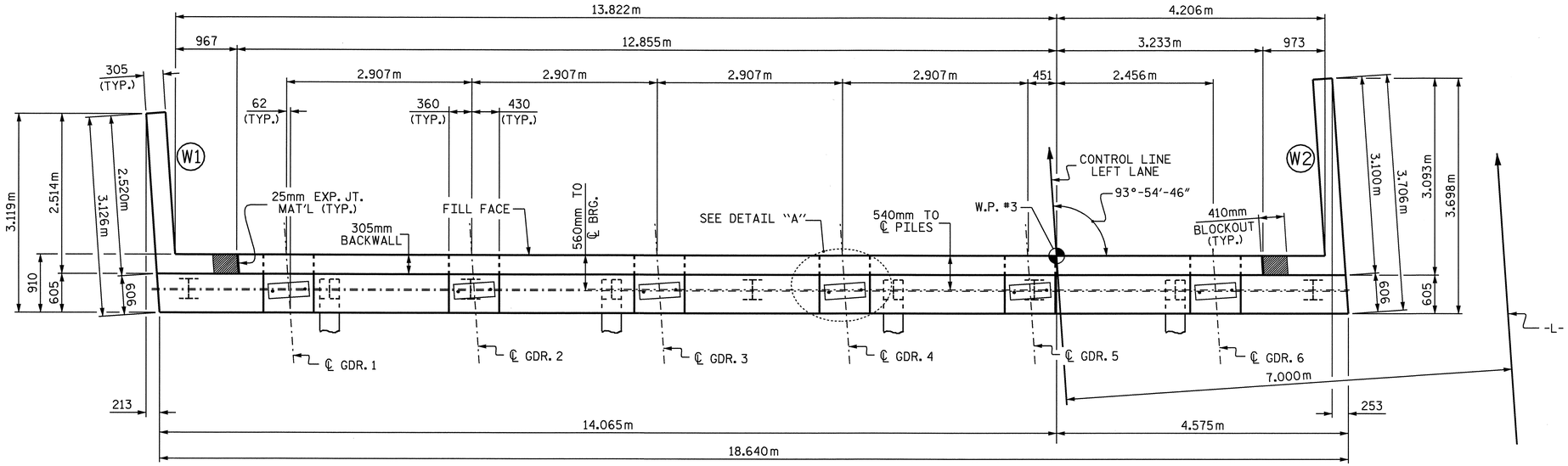

PLAN

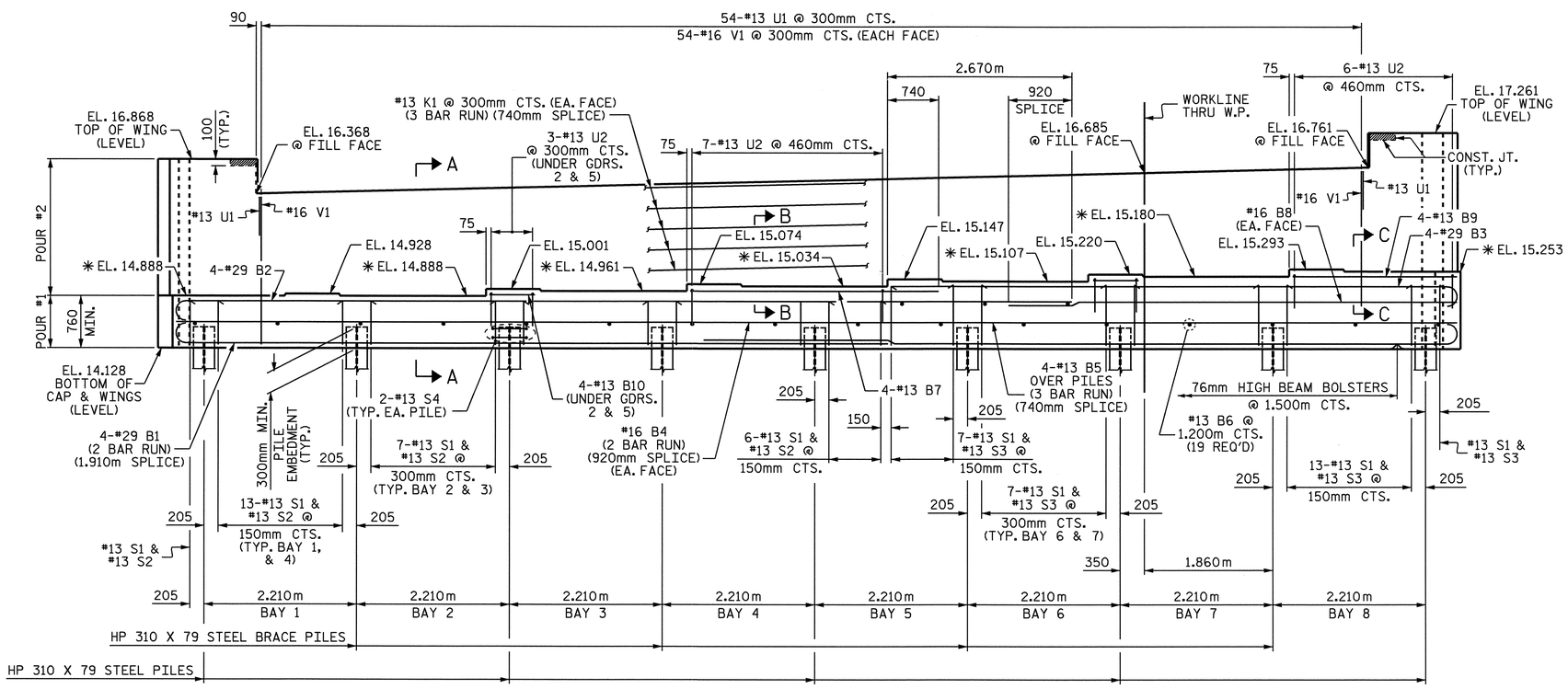

ELEVATION

✱ FOR LOCATION OF ELEVATIONS BETWEEN BRIDGE SEAT BUILD-UPS, SEE SECTION VIEWS, SHEET 3 OF 3.

NOTES

STIRRUPS IN CAP MAY BE SHIFTED AS NECESSARY TO CLEAR ANCHOR BOLTS.

THE CONTRACTOR SHALL PROVIDE FOR INSTALLATION OF THE 102mm DIAMETER DRAIN PIPE THROUGH THE WING WALL AS REQUIRED FOR REINFORCED BRIDGE APPROACH FILLS, SEE THE ROADWAY PLANS. REINFORCING STEEL IN THE WING WALL MAY BE SHIFTED AS NECESSARY TO CLEAR THE DRAIN PIPE.

THE TOP SURFACE AREAS OF THE END BENT CAPS SHALL BE CURED IN ACCORDANCE WITH THE STANDARD SPECIFICATIONS EXCEPT THE MEMBRANE CURING COMPOUND METHOD SHALL NOT BE USED.

THE TOP SURFACE OF THE CAP EXCEPT THE BRIDGE SEAT BUILDUPS SHALL BE SLOPED TRANSVERSELY FROM THE FILL FACE TO THE BACK FACE AT THE RATE OF 2%.

BACKWALL SHALL BE PLACED BEFORE APPLYING THE EPOXY PROTECTIVE COATING.

EPOXY COAT THE END BENT CAP AFTER ADJUSTMENTS ARE MADE TO BEARINGS AND ANCHOR BOLTS ARE GROUTED.

THE #16 V1 BARS IN THE BACKWALL SHALL BE PLACED 50mm CLEAR FROM THE TOP OF THE BACKWALL.

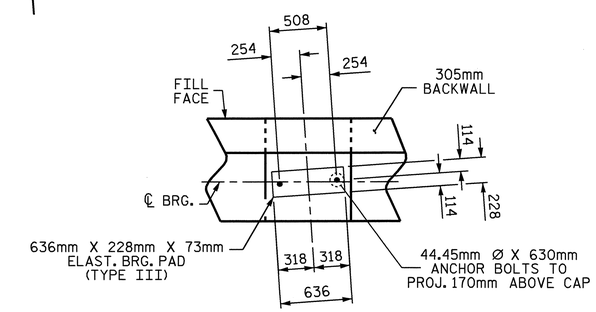

DETAIL "A"

(TYP. EA. GIRDER)

PROJECT NO. R-2301A
JONES/CRAVEN COUNTY
STATION: 96+94.475 -L-

SHEET 1 OF 3

STATE OF NORTH CAROLINA
DEPARTMENT OF TRANSPORTATION
RALEIGH

SUBSTRUCTURE
END BENT No. 2
LEFT LANE

NORTH CAROLINA PROFESSIONAL SEAL 20125 ENGINEER MARSHALL GUCKER, JR.
4-4-08

REVISIONS								SHEET NO.
NO.	BY:	DATE:	NO.	BY:	DATE:			S-142
1			3					TOTAL SHEETS
2			4					176

DRAWN BY : A. SORSENGINH DATE : 6/18/08
CHECKED BY : T. BANKOVICH DATE : 7/08

03-SEP-2008 11:42
r:\structures\finalplans\Str #5\R-2301A_sd_E_05.dgn
lmurphy

STR. #5

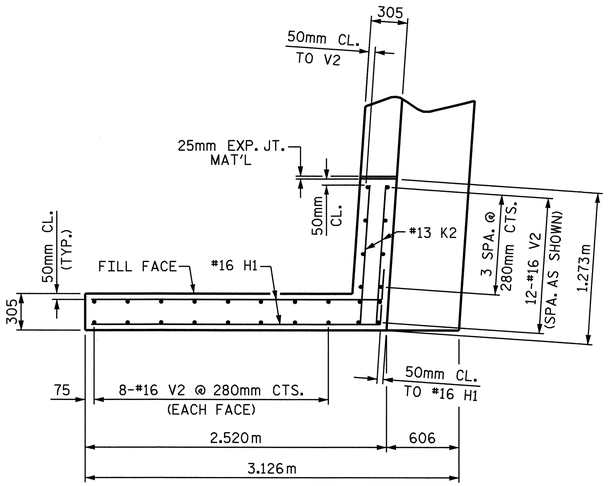

PLAN OF LEFT WING W1

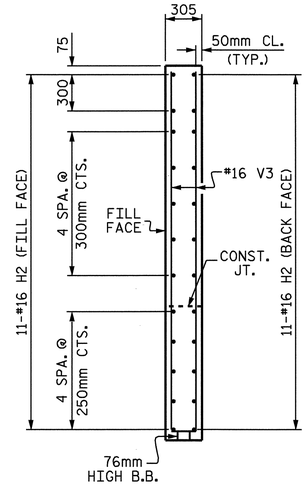

SECTION Y-Y

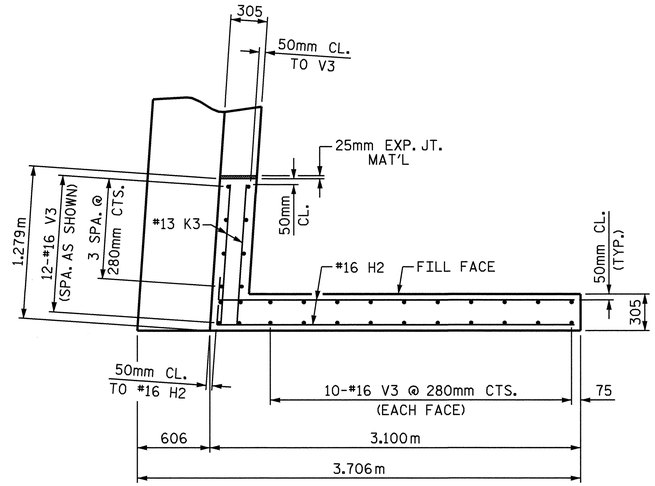

PLAN OF RIGHT WING W2

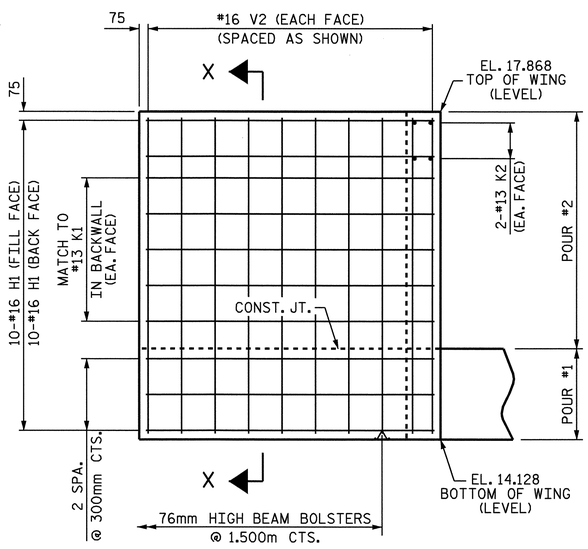

ELEVATION OF LEFT WING W1

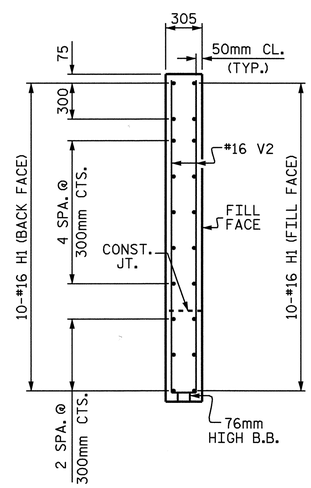

SECTION X-X

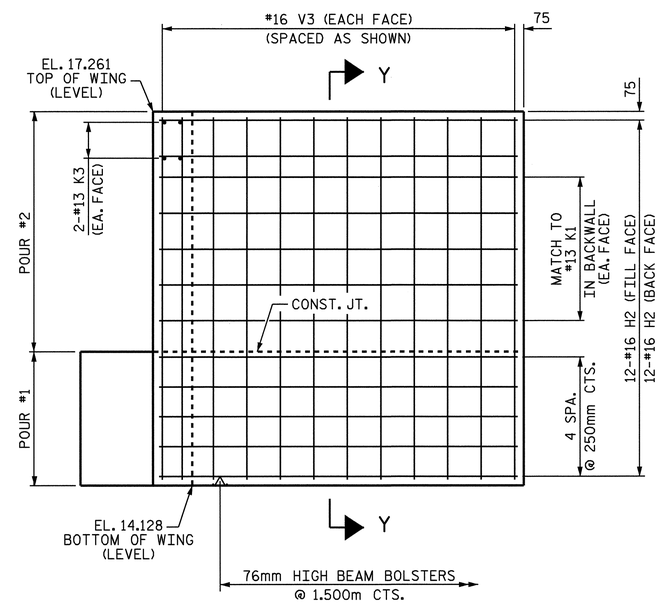

ELEVATION OF RIGHT WING W2

PROJECT NO. R-2301A
JONES/CRAVEN COUNTY
STATION: 96+94.475 -L-

SHEET 2 OF 3

STATE OF NORTH CAROLINA
DEPARTMENT OF TRANSPORTATION
RALEIGH

SUBSTRUCTURE
END BENT No. 2
LEFT LANE

NORTH CAROLINA PROFESSIONAL SEAL 20125 ENGINEER MARSHALL G. CHEEK, JR.
9-3-08

REVISIONS						SHEET NO.
NO.	BY:	DATE:	NO.	BY:	DATE:	S-143
1			3			TOTAL SHEETS
2			4			176

STR. #5

DRAWN BY : A. SORSENGINH DATE : 6/18/08
CHECKED BY : T. BANKOVICH DATE : 7/08

08-AUG-2008 11:29
r:\structures\asorsenginh\str #5\r-2301a_sd_e_05.dgn
asorsenginh

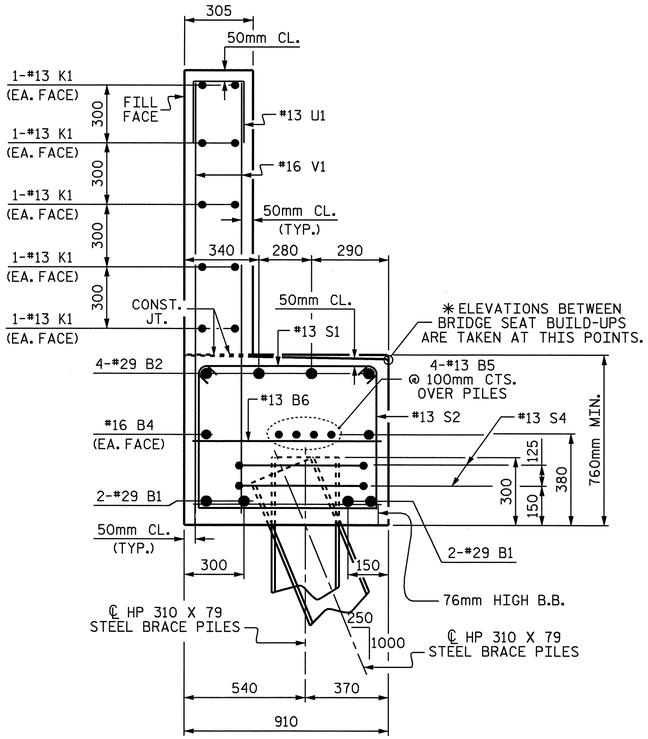

SECTION A-A

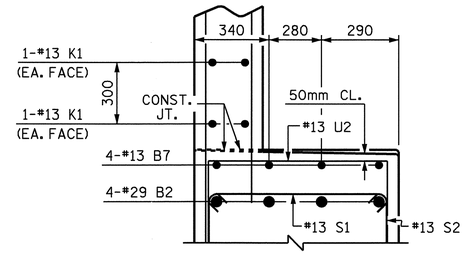

SECTION B-B

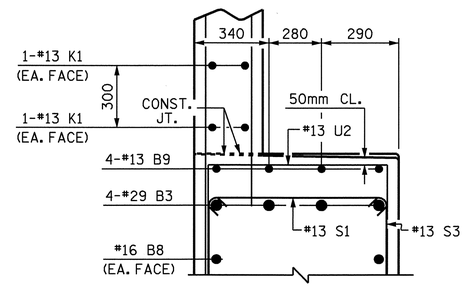

SECTION C-C

BAR TYPES

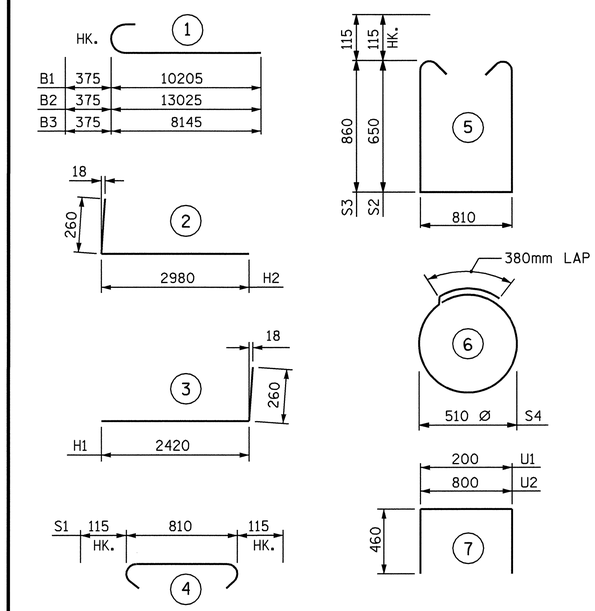

ALL BAR DIMENSIONS ARE OUT TO OUT.

BILL OF MATERIAL
END BENT No. 2

BAR	NO.	SIZE	TYPE	LENGTH	WEIGHT
B1	8	#29	1	10580	428
B2	4	#29	1	13400	271
B3	4	#29	1	8520	172
B4	4	#16	STR	9740	60
B5	12	#13	STR	6680	80
B6	19	#13	STR	800	15
B7	4	#13	STR	3600	14
B8	2	#16	STR	6480	20
B9	4	#13	STR	2360	9
B10	8	#13	STR	680	5
H1	20	#16	3	2680	83
H2	24	#16	2	3240	121
K1	30	#13	STR	6680	199
K2	4	#13	STR	1160	5
K3	4	#13	STR	1180	5
S1	82	#13	4	1040	85
S2	47	#13	5	2340	109
S3	35	#13	5	2760	96
S4	18	#13	6	1980	35
U1	54	#13	7	1120	60
U2	19	#13	7	1720	32
V1	108	#16	STR	2140	359
V2	28	#16	STR	2640	115
V3	32	#16	STR	3020	150

REINFORCING STEEL = 2528 kg

CLASS A CONCRETE
POUR #1
CAP & LOWER WINGS 17.2 CU. METERS
POUR #2
BACKWALL & UPPER WINGS 12.0 CU. METERS
TOTAL
CLASS A CONCRETE 29.2 CU. METERS

HP 310 X 79 STEEL PILES
NO. 9 207.0 METERS

PILE REDRIVES
NO. 4 EA.

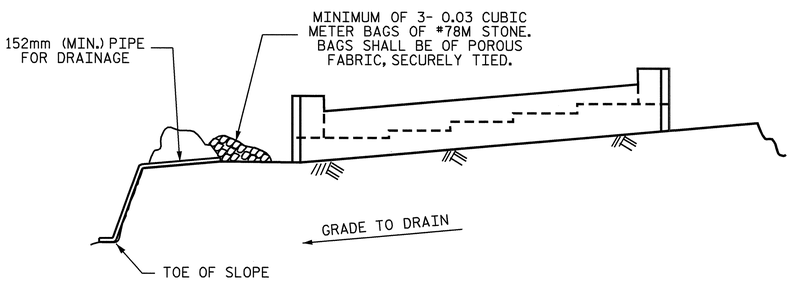

BAGGED STONE AND PIPE SHALL BE PLACED IMMEDIATELY AFTER COMPLETION OF END BENT EXCAVATION. PIPE MAY BE EITHER CONCRETE, CORRUGATED STEEL, CORRUGATED ALUMINUM ALLOY, OR CORRUGATED PLASTIC. PERFORATED PIPE WILL NOT BE ALLOWED.

BAGGED STONE SHALL REMAIN IN PLACE UNTIL THE ENGINEER DIRECTS THAT IT BE REMOVED. THE CONTRACTOR SHALL REMOVE AND DISPOSE OF SILT ACCUMULATIONS AT BAGGED STONE WHEN SO DIRECTED BY THE ENGINEER. BAGS SHALL BE REMOVED AND REPLACED WHENEVER THE ENGINEER DETERMINES THAT THEY HAVE DETERIORATED AND LOST THEIR EFFECTIVENESS.

NO SEPARATE PAYMENT WILL BE MADE FOR THIS WORK AND THE ENTIRE COST OF THIS WORK SHALL BE INCLUDED IN THE UNIT CONTRACT PRICE BID FOR THE SEVERAL PAY ITEMS.

TEMPORARY DRAINAGE AT END BENT

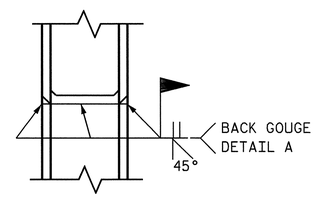

✱PILE VERTICAL

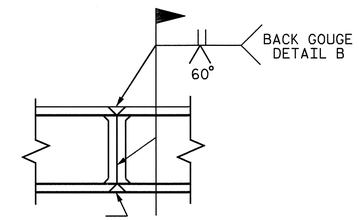

✱PILE HORIZONTAL OR VERTICAL

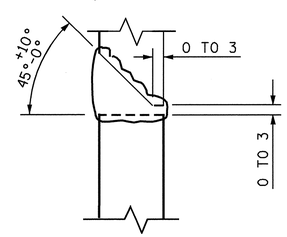

DETAIL A

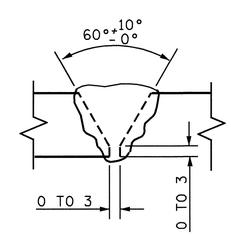

DETAIL B

PILE SPLICE DETAILS

✱POSITION OF PILE DURING WELDING.

NORTH CAROLINA PROFESSIONAL SEAL 20125 ENGINEER MARSHALL L. GREEL JR.
9-4-08

PROJECT NO. R-2301A
JONES/CRAVEN COUNTY
STATION: 96+94.475 -L-

SHEET 3 OF 3

STATE OF NORTH CAROLINA
DEPARTMENT OF TRANSPORTATION
RALEIGH

SUBSTRUCTURE
END BENT No. 2
LEFT LANE

REVISIONS						SHEET NO.
NO.	BY:	DATE:	NO.	BY:	DATE:	S-144
1			3			TOTAL SHEETS
2			4			176

DRAWN BY : A. SORSENGINH DATE : 6/19/08
CHECKED BY : T. BANKOVICH DATE : 7/08

03-SEP-2008 11:42
r:\structures\final plans\Str #5\R-2301A_sd_E_05.dgn
lmurphy

STR. #5

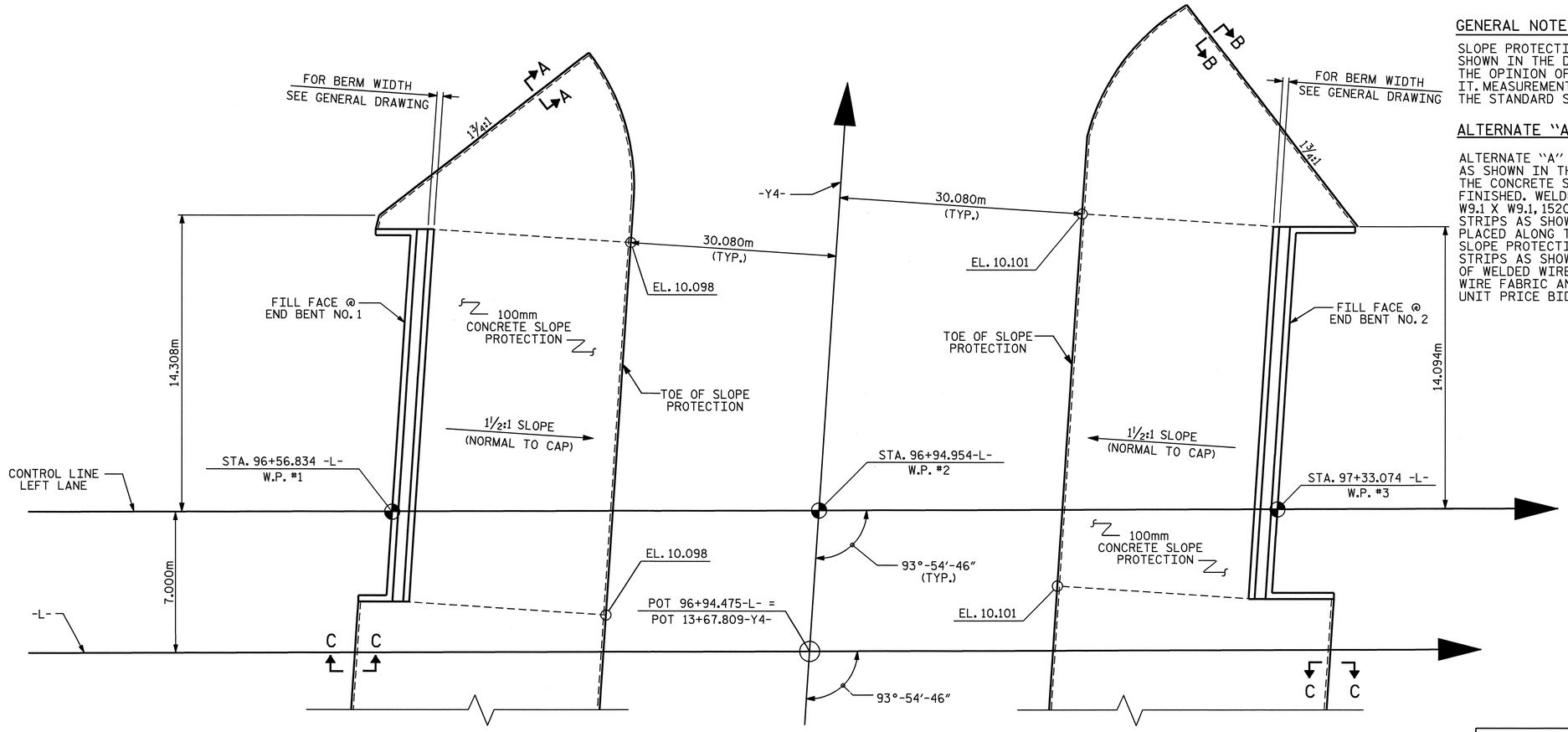

GENERAL NOTES

SLOPE PROTECTION SHALL BE PLACED UNDER THE ENDS OF THE BRIDGE AS SHOWN IN THE DETAILS. STRAIGHT EDGING WILL NOT BE REQUIRED UNLESS, IN THE OPINION OF THE ENGINEER, VISUAL INSPECTION INDICATES A NEED FOR IT. MEASUREMENT AND PAYMENT SHALL BE AS PRESCRIBED IN SECTION 462 OF THE STANDARD SPECIFICATIONS. FOR BERM WIDTH, SEE GENERAL DRAWING.

ALTERNATE "A"

ALTERNATE "A" SHALL CONSIST OF 100mm POURED-IN-PLACE CONCRETE PAVING AS SHOWN IN THE DETAILS ON THIS SHEET. CONCRETE SHALL BE CLASS "B". THE CONCRETE SURFACE SHALL BE FLOATED WITH A WOODEN FLOAT AND FINISHED. WELDED WIRE FABRIC REINFORCING SHALL BE 152 X 152 - W9.1 X W9.1, 1520mm WIDE. SLOPE PROTECTION SHALL BE POURED IN 1520mm STRIPS AS SHOWN IN THE "POURING DETAIL" WITH 600mm LONG #13 BARS PLACED ALONG THE SLOPE BETWEEN STRIPS AT 450mm MAXIMUM SPACING. SLOPE PROTECTION MAY BE POURED IN ALTERNATE 1220mm AND 1520mm STRIPS AS SHOWN IN THE "OPTIONAL POURING DETAIL" WITH ADJACENT RUNS OF WELDED WIRE FABRIC LAPPING AT LEAST 152mm. THE COST OF THE WELDED WIRE FABRIC AND #13 BARS, IF USED, SHALLBE INCLUDED IN THE CONTRACT UNIT PRICE BID PER SQUARE METER FOR SLOPE PROTECTION.

BRIDGE @ STA. 96+94.475 -L- (LEFT LANE)	100mm SLOPE PROTECTION	* WELDED WIRE FABRIC 1520mm WIDE
	SQUARE METERS	APPROX. METERS
END BENT No. 1	274	198
END BENT No. 2	266	194

* QUANTITY SHOWN IS BASED ON 1520mm POURS.

PLAN OF SLOPE PROTECTION

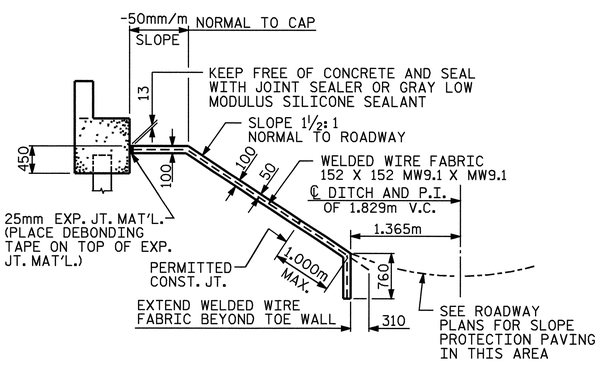

SECTION ALONG ℄ ROADWAY WHEN FILL CATCHES IN DITCH

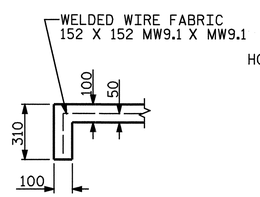

SECTION A-A

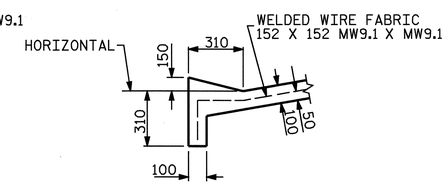

SECTION B-B

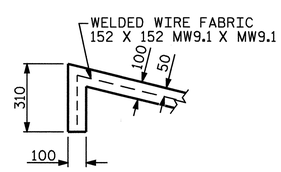

SECTION C-C

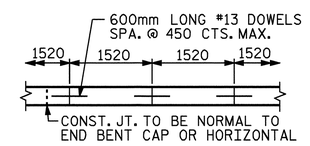

STRIP WIDTHS MAY VARY IN CURVED PORTION.

POURING DETAIL

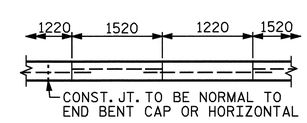

POUR A 1220mm STRIP FIRST. STRIP WIDTHS MAY VARY IN CURVED PORTION.

OPTIONAL POURING DETAIL

PROJECT NO. R-2301A
JONES/CRAVEN COUNTY
STATION: 96+94.475 -L-

STATE OF NORTH CAROLINA
DEPARTMENT OF TRANSPORTATION
RALEIGH

SLOPE PROTECTION

LEFT LANE

NORTH CAROLINA PROFESSIONAL SEAL 20125 ENGINEER MARSHALL GIDEON, JR.
9-5-08

REVISIONS							SHEET NO.
NO.	BY:	DATE:	NO.	BY:	DATE:		S-145
1			3				TOTAL SHEETS
2			4				176

DRAWN BY : R. G. EMERSON DATE : 07/08
CHECKED BY : D. HODGE DATE : 07/08

05-SEP-2008 13:07
r:\structures\final plans\Str #5\R2301A_sd_SP_str5.dgn
ddhodge

STR. #5

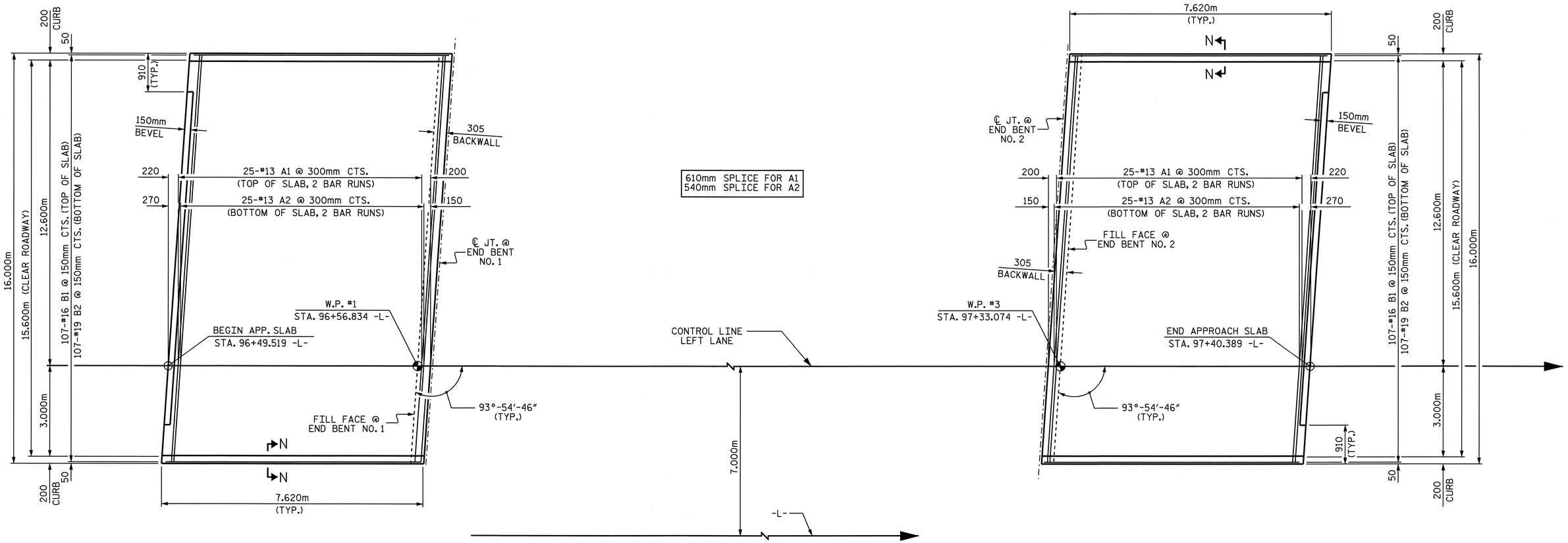

APPROACH SLAB @ END BENT NO. 1

PLAN

APPROACH SLAB @ END BENT NO. 2

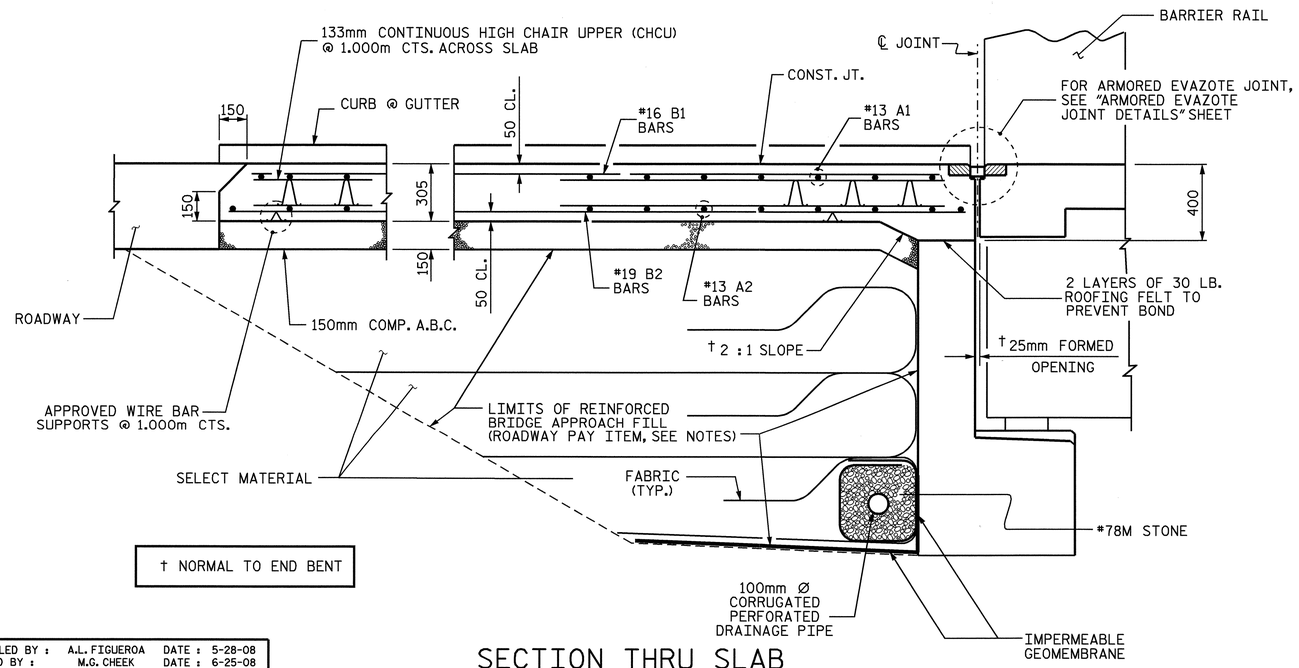

† NORMAL TO END BENT

SECTION THRU SLAB

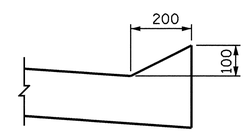

SECTION N-N

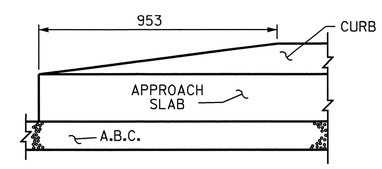

END OF CURB WITHOUT SHOULDER BERM GUTTER

PROJECT NO. R-2301A
JONES/CRAVEN COUNTY
STATION: 96+94.475 -L-

SHEET 1 OF 2

STATE OF NORTH CAROLINA
DEPARTMENT OF TRANSPORTATION
RALEIGH

BRIDGE APPROACH SLAB FOR FLEXIBLE PAVEMENT

LEFT LANE

NORTH CAROLINA PROFESSIONAL SEAL 20125 ENGINEER MARSHALL G. CHEEK, JR.
9-3-08

REVISIONS						SHEET NO.
NO.	BY:	DATE:	NO.	BY:	DATE:	S-146
1			3			TOTAL SHEETS
2			4			176

ASSEMBLED BY : A.L. FIGUEROA	DATE : 5-28-08		
CHECKED BY : M.G. CHEEK	DATE : 6-25-08		
DRAWN BY : FCJ 6/87	REV. 7/10/01	RWW/LES	
CHECKED BY : EGA 6/87	REV. 5/7/03R	RWW/JTE	
	REV. 5/1/06R	KMM/GM	

24-JUL-2008 16:07
R:\Structures\AL Figueroa\Microstation\R-2301A_sd_STR#5-16_AS-S146&147.dgn
afigueroa

STR. #5 STD. NO. BAS4SM

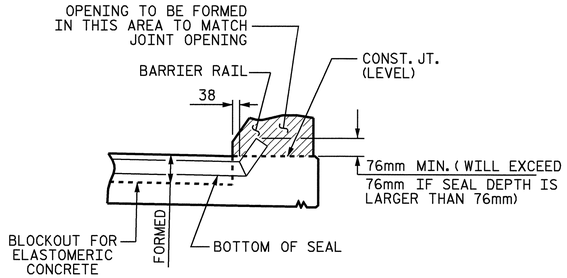

SECTION A-A

EVAZOTE JOINT SEAL TO BE CUT, HEAT WELDED AND TURNED UP PARALLEL TO SLOPED FACE OF THE BARRIER RAIL.

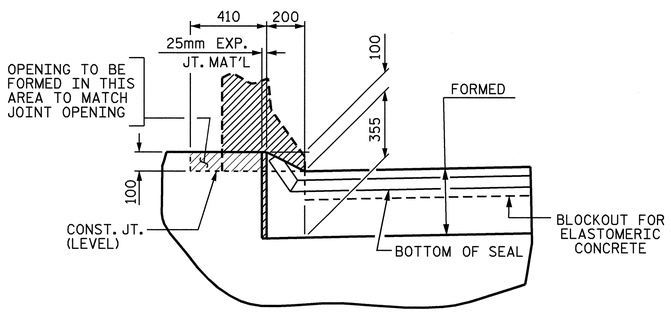

SECTION B-B

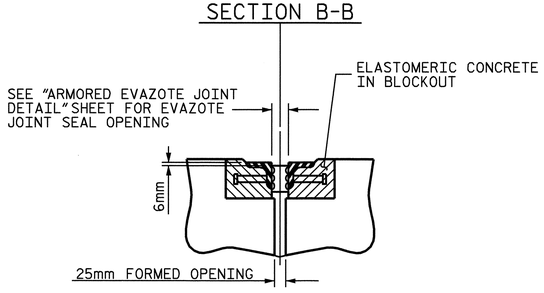

SECTION C-C

ARMORED EVAZOTE JOINT SEAL

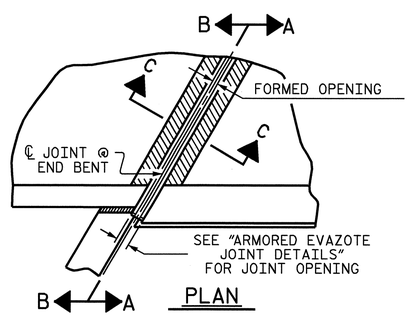

PLAN

JOINT SEAL DETAILS @ END BENT

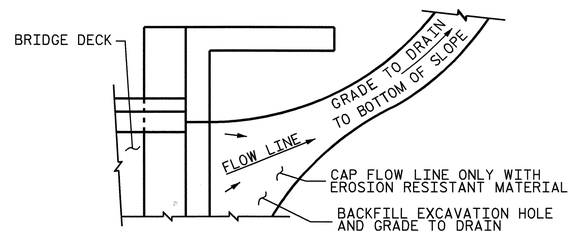

NOTE: IF THE APPROACH SLAB IS NOT CONSTRUCTED IMMEDIATELY AFTER THE BACKFILLING OF THE END BENT EXCAVATION, GRADE TO DRAIN TO THE BOTTOM OF THE SLOPE AND PROVIDE EROSION RESISTANT MATERIAL, SUCH AS FIBERGLASS ROVING OR AS DIRECTED BY THE ENGINEER TO PREVENT SOIL EROSION AND TO PROTECT THE AREA ADJACENT TO THE STRUCTURE. THE CONTRACTOR WILL BE REQUIRED TO REMOVE THESE MATERIALS PRIOR TO CONSTRUCTION OF THE APPROACH SLAB.

TEMPORARY DRAINAGE DETAIL

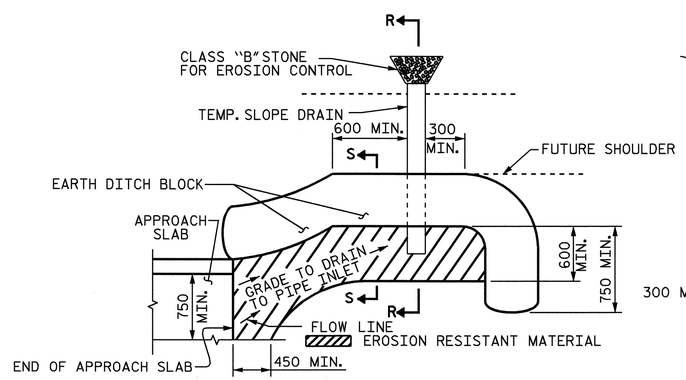

NOTE: IMMEDIATELY AFTER THE CONSTRUCTION OF THE APPROACH SLAB, THE CONTRACTOR SHALL PROVIDE TEMPORARY BERM AND SLOPE DRAIN. CONTRACTOR SHALL GRADE TO PIPE INLET AND PROVIDE EROSION RESISTANT MATERIAL AS SHOWN. THE EROSION RESISTANT MATERIAL SHALL BE EITHER 1) ASPHALT PLANT MIX, TYPE 1 OR TYPE 2, MIN. 50mm DEPTH, 2) EROSION CONTROL MAT, OR 3) CONCRETE, AS DIRECTED BY THE ENGINEER. THE SLOPE DRAIN SHALL CONSIST OF A NON-PERFORATED TEMPORARY DRAINAGE PIPE, 305mm IN DIAMETER.

PLAN VIEW

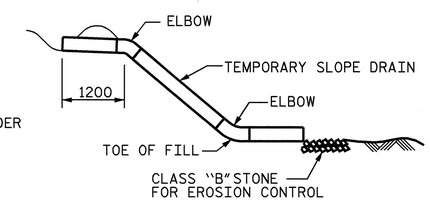

SECTION R-R

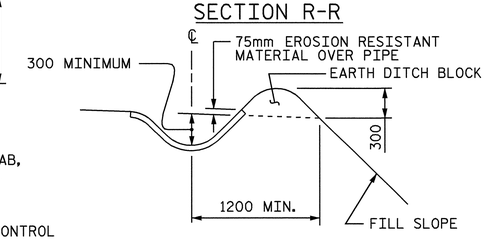

SECTION S-S

NOTES

APPROACH SLAB SHALL NOT BE CONSTRUCTED PRIOR TO COMPLETION OF THE BRIDGE DECK.

FOR REINFORCED BRIDGE APPROACH FILL INCLUDING FABRIC, IMPERMEABLE GEOMEMBRANE, 102mm Ø DRAINAGE PIPE, #78M STONE, AND SELECT MATERIAL, SEE ROADWAY PLANS.

AREA BETWEEN THE WINGWALL AND APPROACH SLAB SHALL BE GRADED TO DRAIN THE WATER AWAY FROM THE FILL FACE OF THE BRIDGE AND SHALL BE PAVED. SEE ROADWAY PLANS.

THE 150mm COMP. A.B.C. SHALL BE FLUSH WITH THE ROADWAY END OF THE APPROACH SLAB AND SHALL EXTEND 300mm OUTSIDE OF EACH EDGE OF THE APPROACH SLAB.

THE CONTRACTOR MAY USE 100mm TYPE B-25.0B ASPHALT CONCRETE COURSE IN LIEU OF 150mm COMP. A.B.C. IF THIS OPTION IS USED, THE BASE COURSE SHALL BE FLUSH WITH THE ROADWAY END OF THE APPROACH SLAB, AND THE WIDTH SHALL BE THE SAME AS THAT OF THE APPROACH SLAB.

THE CONTRACTOR MAY USE 125mm CLASS "A" CONCRETE BASE IN LIEU OF 150mm COMP. A.B.C. IF THIS OPTION IS USED, THE CONCRETE BASE SHALL BE FLUSH WITH THE ROADWAY END OF THE APPROACH SLAB, AND THE WIDTH SHALL BE THE SAME AS THAT OF THE APPROACH SLAB. THE CONCRETE SHALL BE FINISHED TO A SMOOTH SURFACE AND A LAYER OF 13.6 kg ROOFING FELT SHALL BE PLACED BETWEEN THE CONCRETE BASE AND THE APPROACH SLAB TO PREVENT BOND. THE APPROACH SLAB SHALL NOT BE CAST UNTIL THE CONCRETE BASE HAS REACHED AN AGE OF THREE CURING DAYS.

THE NOMINAL UNCOMPRESSED SEAL WIDTH OF THE EVAZOTE JOINT SEAL SHALL BE 64mm.

FOR EVAZOTE JOINT SEALS, SEE SPECIAL PROVISIONS.

FOR ELASTOMERIC CONCRETE, SEE SPECIAL PROVISIONS.

BILL OF MATERIAL

APPROACH SLAB @ END BENT NO.1

BAR	NO.	SIZE	TYPE	LENGTH	WEIGHT
✱ A1	50	#13	STR	8280	412
A2	50	#13	STR	8240	410
✱ B1	107	#16	STR	7240	1202
B2	107	#19	STR	7520	1798
REINFORCING STEEL				kg	2208
✱ EPOXY COATED REINFORCING STEEL				kg	1614
CLASS AA CONCRETE BREAKDOWN					
SLAB AND CURB CU. METERS					37.8
CLASS AA CONCRETE CU. METERS					37.8

APPROACH SLAB @ END BENT NO.2

BAR	NO.	SIZE	TYPE	LENGTH	WEIGHT
✱ A1	50	#13	STR	8280	412
A2	50	#13	STR	8240	410
✱ B1	107	#16	STR	7240	1202
B2	107	#19	STR	7520	1798
REINFORCING STEEL				kg	2208
✱ EPOXY COATED REINFORCING STEEL				kg	1614
CLASS AA CONCRETE BREAKDOWN					
SLAB AND CURB CU. METERS					37.8
CLASS AA CONCRETE CU. METERS					37.8

✱ THESE BARS ARE EPOXY COATED.

PROJECT NO. R-2301A
JONES/CRAVEN COUNTY
STATION: 96+94.475 -L-

SHEET 2 OF 2

STATE OF NORTH CAROLINA
DEPARTMENT OF TRANSPORTATION
RALEIGH

STANDARD
BRIDGE APPROACH SLAB DETAILS
LEFT LANE

TEMPORARY BERM AND SLOPE DRAIN DETAILS

ASSEMBLED BY :	A.L. FIGUEROA	DATE :	5-27-08
CHECKED BY :	M.G. CHEEK	DATE :	6-25-08
DRAWN BY : FCJ	11/88	REV. 10/17/00	RWW/LES
CHECKED BY : ARB	11/88	REV. 5/7/03	RWW/JTE
		REV. 5/1/06	TLA/GM

NORTH CAROLINA PROFESSIONAL SEAL 20125 ENGINEER MARSHALL G. CHEEK, JR.
4-30-08

REVISIONS						SHEET NO.
NO.	BY:	DATE:	NO.	BY:	DATE:	S-147
1			3			TOTAL SHEETS
2			4			176

STR. #5 STD. NO. BAS10

02-SEP-2008 14:45
R:\Structures\Final Plans\Str #5\R-2301A_sd_STR#5-16_AS.dgn
aflgueroa

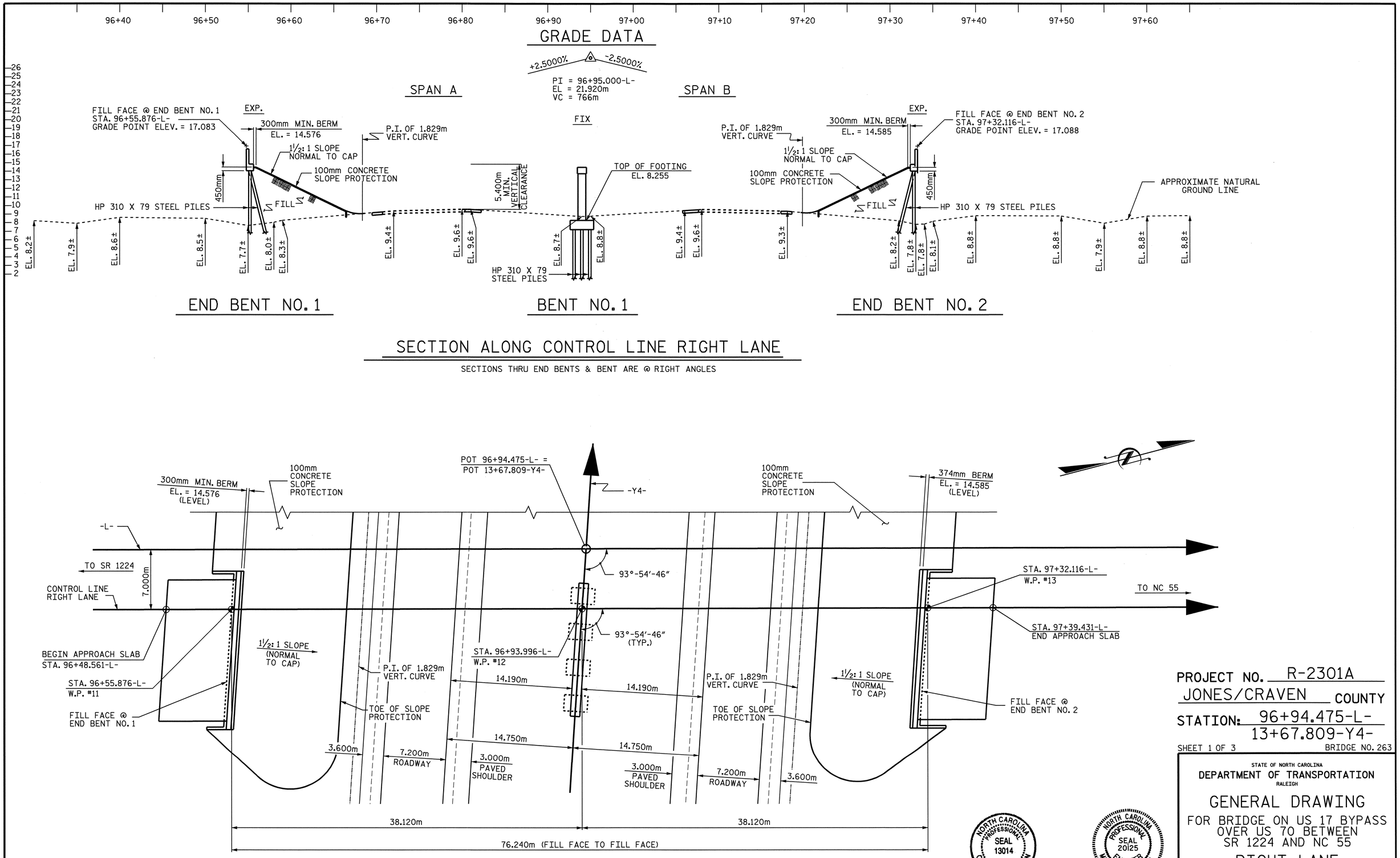

PROJECT NO. R-2301A
JONES/CRAVEN COUNTY
STATION: 96+94.475-L-
13+67.809-Y4-

SHEET 1 OF 3 BRIDGE NO. 263

STATE OF NORTH CAROLINA
DEPARTMENT OF TRANSPORTATION
RALEIGH

GENERAL DRAWING

FOR BRIDGE ON US 17 BYPASS
OVER US 70 BETWEEN
SR 1224 AND NC 55

RIGHT LANE

REVISIONS						SHEET NO.
NO.	BY:	DATE:	NO.	BY:	DATE:	S-148
1			3			TOTAL SHEETS
2			4			176

DRAWN BY : L.L. MURPHY DATE : 6-08
CHECKED BY : M.G. CHEEK DATE : 08-08

04-SEP-2008 08:47
r:\structures\finalplans\Str #6\R2301A_sd_GD_str#6.dgn
lmurphy

STR #6

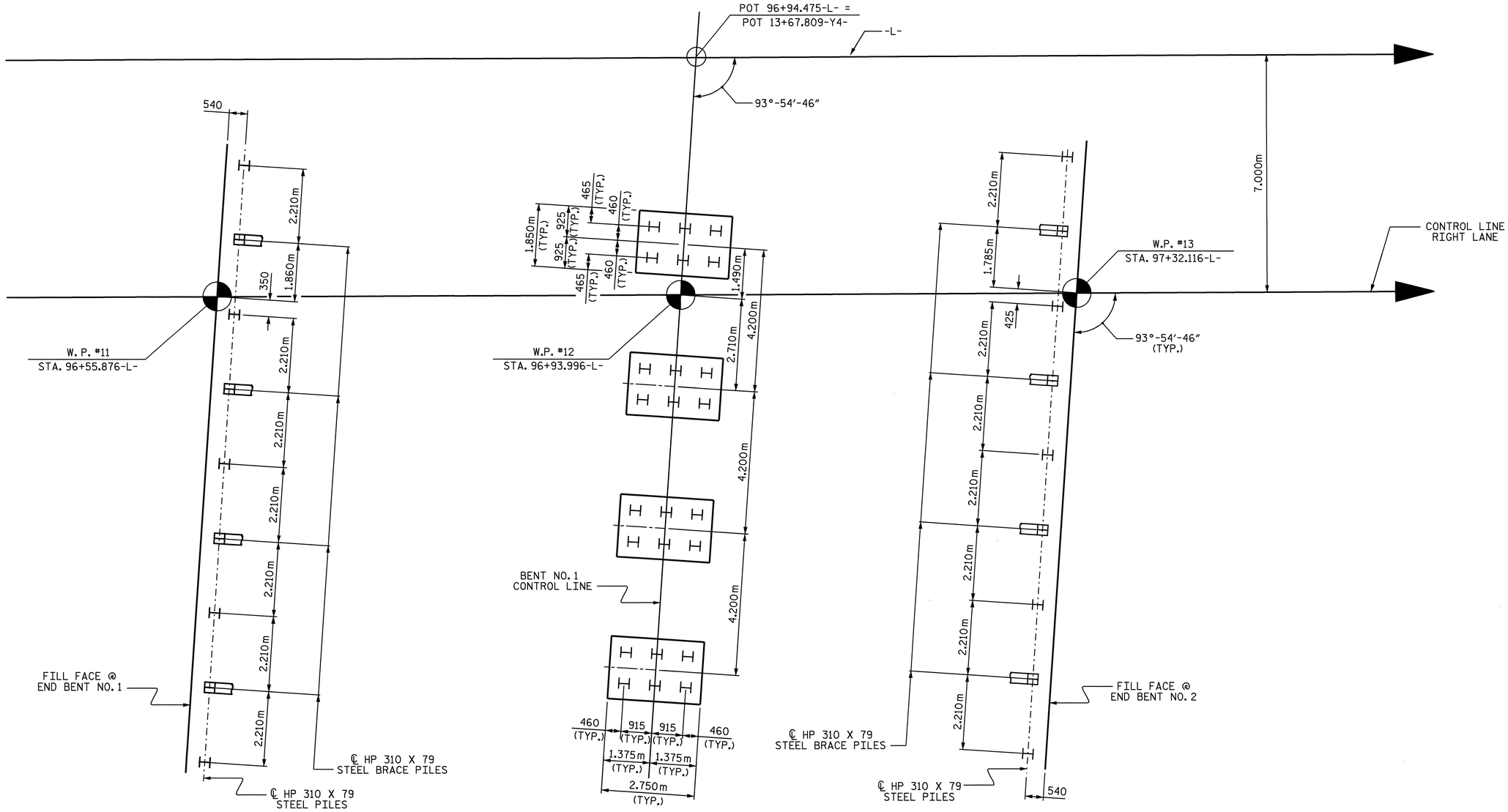

END BENT NO. 1 | BENT NO. 1 | END BENT NO. 2

FOUNDATION LAYOUT

DIMENSIONS LOCATING PILES ARE SHOWN TO THE PILE CENTERLINE
END BENT BRACE PILES ARE BATTERED 250:1000

NOTES

DRIVE PILES AT END BENT NO. 1 AND END BENT NO. 2 TO A REQUIRED BEARING CAPACITY OF 1260 KILONEWTONS PER PILE. THE REQUIRED BEARING CAPACITY IS EQUAL TO THE ALLOWABLE BEARING CAPACITY WITH A MINIMUM FACTOR OF SAFETY OF TWO.

THE ALLOWABLE BEARING CAPACITY FOR PILES AT END BENT NO. 1 AND END BENT NO. 2 IS 630 KILONEWTONS PER PILE.

DRIVE PILES AT BENT NO. 1 TO A REQUIRED BEARING CAPACITY OF 1260 KILONEWTONS PER PILE. THE REQUIRED BEARING CAPACITY IS EQUAL TO THE ALLOWABLE BEARING CAPACITY WITH A MINIMUM FACTOR OF SAFETY OF TWO.

THE ALLOWABLE BEARING CAPACITY FOR PILES AT BENT NO. 1 IS 630 KILONEWTONS PER PILE.

OBSERVE AN ONE MONTH WAITING PERIOD AFTER CONSTRUCTING THE EMBANKMENT TO THE BOTTOM OF CAP ELEVATION BEFORE BEGINNING END BENT CONSTRUCTION AT END BENT NO. 1 AND END BENT NO. 2.

PROJECT NO. R-2301A
JONES/CRAVEN COUNTY
STATION: 96+94.475 -L-

SHEET 2 OF 3

NORTH CAROLINA PROFESSIONAL SEAL 20125 ENGINEER MARSHALL G. CHEEK, JR.
9-4-08

STATE OF NORTH CAROLINA
DEPARTMENT OF TRANSPORTATION
RALEIGH

GENERAL DRAWING
FOR BRIDGE ON US 17 BYPASS
OVER US 70 BETWEEN
SR 1224 AND NC 55
RIGHT LANE

REVISIONS						SHEET NO.
NO.	BY:	DATE:	NO.	BY:	DATE:	S-149
1			3			TOTAL SHEETS
2			4			176

DRAWN BY : R. G. EMERSON DATE : 07/08
CHECKED BY : M. G. CHEEK DATE : 07/08

04-SEP-2008 09:07
r:\structures\finalplans\Str #6\R2301A_sd_FL_str6.dgn
lmurphy

STR. #6

BENCH MARK : 26 RR SPIKE IN A 0.25m Ø PINE, STA. 96+53.210 -L-, 44.844 (LT) ELEV. = 9.205

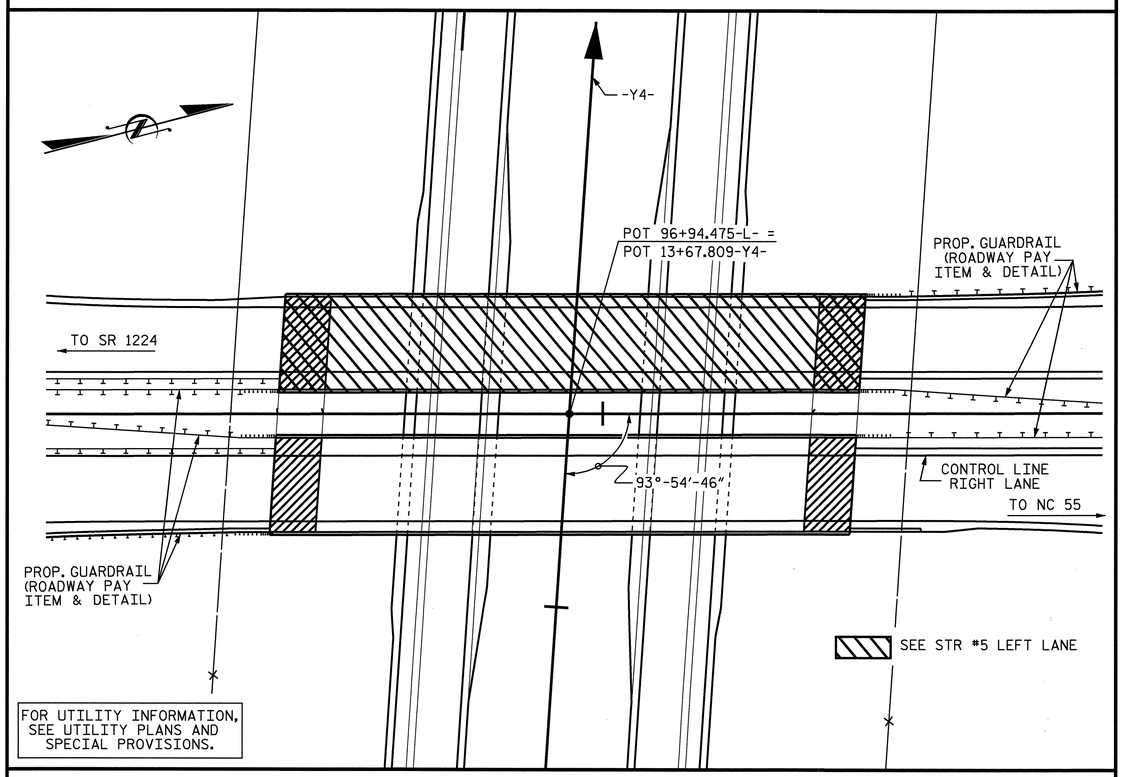

LOCATION SKETCH

THE CONTRACTOR SHALL PROVIDE INDEPENDENT ASSURANCE SAMPLES OF REINFORCING STEEL AS FOLLOWS: FOR PROJECTS REQUIRING UP TO 360,000 kg OF REINFORCING STEEL, ONE 760mm SAMPLE OF EACH SIZE BAR USED, AND FOR PROJECTS REQUIRING OVER 360,000 kg OF REINFORCING STEEL, TWO 760mm SAMPLES OF EACH SIZE BAR USED. THE BARS FROM WHICH THE SAMPLES ARE TAKEN MUST THEN BE SPLICED WITH REPLACEMENT BARS OF THE SIZE AND LENGTH OF THE SAMPLE PLUS A MINIMUM LAP SPLICE OF THIRTY BAR DIAMETERS.

NOTES

ALL DIMENSIONS ARE IN MILLIMETERS UNLESS OTHERWISE NOTED.

ALL ELEVATIONS ARE IN METERS.

FOR OTHER DESIGN DATA AND GENERAL NOTES, SEE SHEET SNSM.

ALL STRUCTURAL STEEL SHALL BE AASHTO M270 GRADE 345W AND PAINTED IN ACCORDANCE WITH SYSTEM 4 OF ARTICLE 442-7 OF THE STANDARD SPECIFICATIONS UNLESS OTHERWISE NOTED ON THE PLANS.

REMOVABLE FORMS MAY BE USED IN LIEU OF METAL STAY-IN-PLACE FORMS IN ACCORDANCE WITH ARTICLE 420-3 OF THE STANDARD SPECIFICATIONS.

FOR MAINTENANCE AND PROTECTION OF TRAFFIC BENEATH PROPOSED STRUCTURE, SEE SPECIAL PROVISIONS.

NEEDLE BEAMS WILL NOT BE ALLOWED UNLESS OTHERWISE CALLED FOR ON THE PLANS OR APPROVED BY THE ENGINEER.

FOR SUBMITTAL OF WORKING DRAWINGS, SEE SPECIAL PROVISIONS.

FOR METRIC STRUCTURAL STEEL, SEE SPECIAL PROVISIONS.

FOR FALSEWORK AND FORMWORK, SEE SPECIAL PROVISIONS.

ASSUMED LIVE LOAD = MS18 OR ALTERNATE LOADING, EXCEPT THAT THE GIRDERS HAVE BEEN DESIGNED FOR MS22.5.

THIS BRIDGE HAS BEEN DESIGNED BY THE STRENGTH DESIGN METHOD AS SPECIFIED IN AASHTO STANDARD SPECIFICATIONS.

THIS BRIDGE HAS BEEN DESIGNED IN ACCORDANCE WITH THE REQUIREMENTS OF THE AASHTO STANDARD SPECIFICATIONS FOR SEISMIC DESIGN OF HIGHWAY BRIDGES FOR SEISMIC PERFORMANCE CATEGORY A.

FOR GROUT FOR STRUCTURES, SEE SPECIAL PROVISIONS.

FOR CRANE SAFETY, SEE SPECIAL PROVISIONS.

FOR ADHESIVELY ANCHORED BOLTS OR DOWELS, SEE SPECIAL PROVISIONS.

TOTAL BILL OF MATERIAL

	FOUNDATION EXCAVATION FOR BENT	REINFORCED CONCRETE DECK SLAB	GROOVING BRIDGE FLOORS	CLASS A CONCRETE	BRIDGE APPROACH SLABS	REINFORCING STEEL	SPIRAL COLUMN REINFORCING STEEL	STRUCTURAL STEEL	HP 310 X 79 STEEL PILES		PILE REDRIVES	CONCRETE BARRIER RAIL	100mm SLOPE PROTECTION	POT BEARINGS	ELASTOMERIC BEARINGS	EVAZOTE JOINT SEALS
	LUMP SUM	SQ. METERS	SQ. METERS	CU. METERS	LUMP SUM	kg	kg	APPROX. kg	NO.	METERS	EACH	METERS	SQ. METERS	LUMP SUM	LUMP SUM	LUMP SUM
SUPERSTRUCTURE		1254.3	1316.0		LUMP SUM			209500				151.208		LUMP SUM	LUMP SUM	LUMP SUM
END BENT NO. 1				29.3		2527			9	189.0	4		281			
BENT NO.1	LUMP SUM			60.1		4922	733		24	456.0	4					
END BENT NO. 2				29.2		2528			9	225.0	4		281			
TOTAL	LUMP SUM	1254.3	1316.0	118.6	LUMP SUM	9977	733	209500	42	870.0	12	151.208	562	LUMP SUM	LUMP SUM	LUMP SUM

PROJECT NO. R-2301A
CRAVEN COUNTY
STATION: 96+94.475-L-

SHEET 3 OF 3

STATE OF NORTH CAROLINA
DEPARTMENT OF TRANSPORTATION
RALEIGH

GENERAL DRAWING
FOR BRIDGE ON US 17 BYPASS OVER US 70 BETWEEN SR 1224 AND NC 55
RIGHT LANE

NORTH CAROLINA PROFESSIONAL SEAL 20125 ENGINEER MARSHALL G. CHEEK, JR.
9-4-08

REVISIONS						SHEET NO.
NO.	BY:	DATE:	NO.	BY:	DATE:	S-150
1			3			TOTAL SHEETS
2			4			176

DRAWN BY : L.L. MURPHY DATE : 12-07
CHECKED BY : M.G. CHEEK DATE : 01-08

04-SEP-2008 08:51
r:\structures\finalplans\str #6\r2301a_sd_gd_str#6.dgn
lmurphy

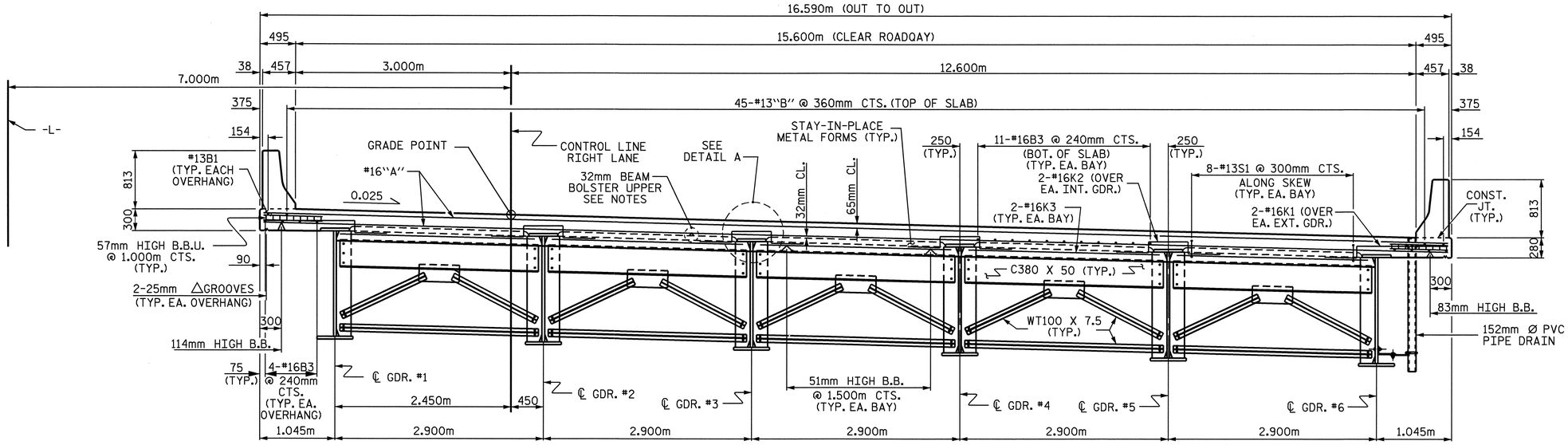

TYPICAL SECTION

(SHOWING END BENT DIAPHRAGM)

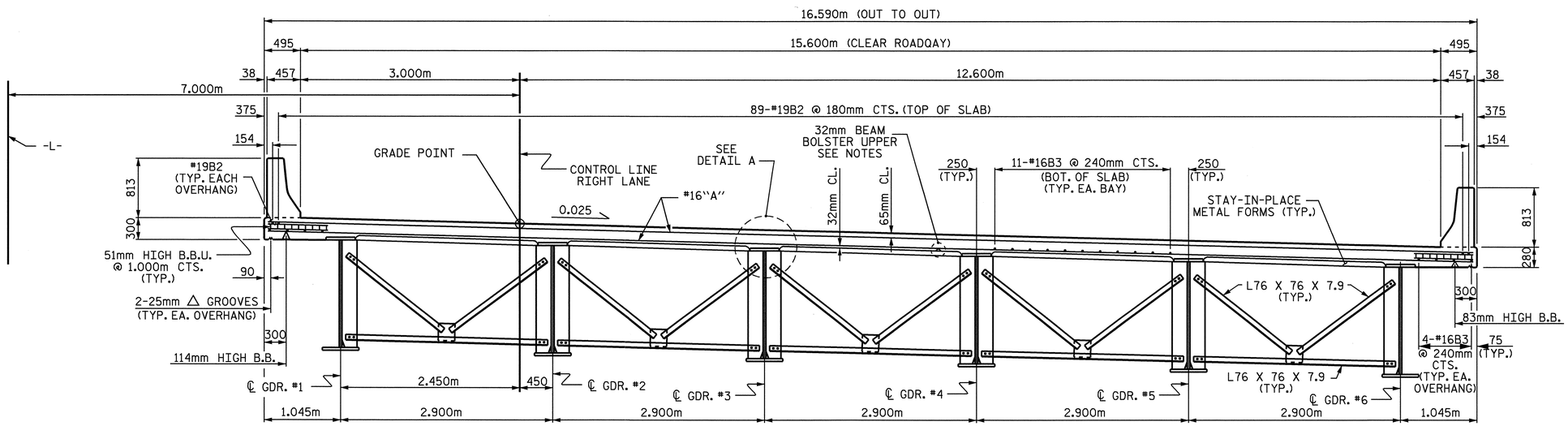

TYPICAL SECTION

(SHOWING BENT DIAPHRAGM)

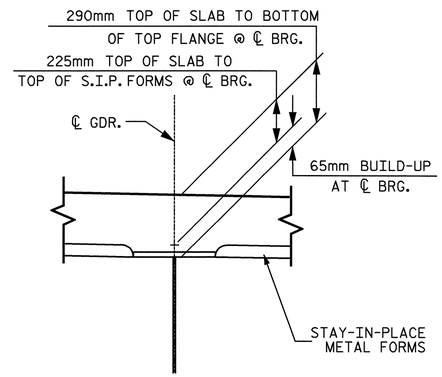

DETAIL A

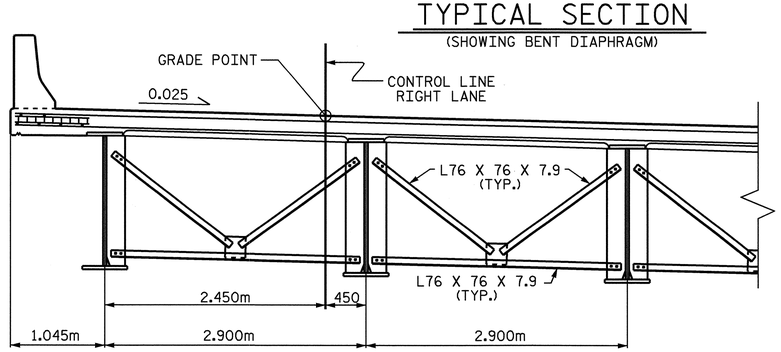

HALF SECTION

(SHOWING INTERMEDIATE DIAPHRAGM)

PROJECT NO. R-2301A

JONES/CRAVEN COUNTY

STATION: 96+94.475-L-

SHEET 1 OF 2

STATE OF NORTH CAROLINA
DEPARTMENT OF TRANSPORTATION
RALEIGH

SUPERSTRUCTURE
TYPICAL SECTION
RIGHT LANE

NORTH CAROLINA PROFESSIONAL SEAL 20125 ENGINEER MARSHALL B. CHEEK, JR.
9-3-08

REVISIONS						SHEET NO.
NO.	BY:	DATE:	NO.	BY:	DATE:	S-151
1			3			TOTAL SHEETS
2			4			176

DRAWN BY : L.L. MURPHY DATE : 07-08
CHECKED BY : K. LAYNE DATE : 08-08

06-AUG-2008 10:23
r:\structures\lmurphy\STR*6\R2301A_sd_TS_STR*6.dgn
lmurphy

STR #6

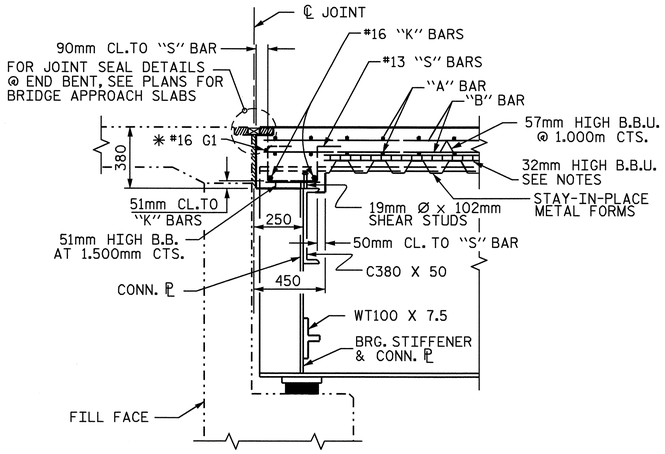

SECTION THRU END BENT DIAPHRAGM

✱ #16 "G" BAR MAY BE SHIFTED SLIGHTLY, AS NECESSARY, TO CLEAR DIAPHRAGM AND REINFORCING STEEL.

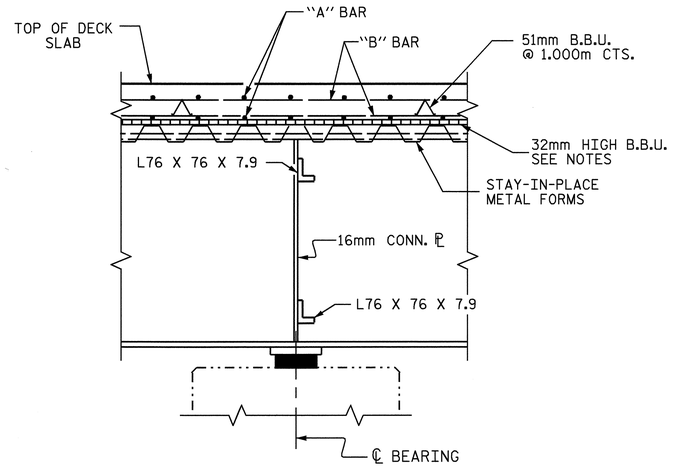

SECTION THRU BENT DIAPHRAGM

NOTES

PROVIDE 32mm HIGH BEAM BOLSTERS UPPER AT 1.2m CTS. ATOP THE METAL STAY-IN-PLACE FORMS TO SUPPORT THE BOTTOM MAT OF 'A' BARS. WHEN USING REMOVABLE FORMS, PROVIDE CONTINUOUS HIGH CHAIRS FOR METAL DECK (C.H.C.M.) @ 1.2m CTS. WITH A HEIGHT TO SUPPORT THE BOTTOM MAT OF 'A' BARS A CLEAR DISTANCE OF 65mm ABOVE THE TOP OF THE REMOVABLE FORM.

METAL STAY-IN-PLACE FORMS SHALL NOT BE WELDED TO BEAM OR GIRDER FLANGES IN THE ZONES REQUIRING CHARPY V-NOTCH TEST. SEE STRUCTURAL STEEL DETAIL SHEETS.

STRUCTURAL STEEL ERECTION IN A CONTINUOUS UNIT SHALL BE COMPLETE BEFORE FALSEWORK OR FORMS ARE PLACED ON THE UNIT.

#16 G1 BAR MAY BE SHIFTED SLIGHTLY, AS NECESSARY, TO CLEAR REINFORCING STEEL AND STIRRUPS.

THE CONTRACTOR MAY, WHEN NECESSARY, PROPOSE A SCHEME FOR AVOIDING INTERFERENCE BETWEEN METAL STAY-IN-PLACE FORM SUPPORTS OR FORMS AND GIRDER STIFFENERS OR CONNECTOR PLATES. THE PROPOSAL SHALL BE INDICATED, AS APPROPRIATE, ON EITHER THE STEEL WORKING DRAWINGS OR THE METAL STAY-IN-PLACE FORM WORKING DRAWINGS.

PLATES SHALL CONFORM TO AASHTO M270 GRADE 250 STEEL OR APPROVED EQUAL.

PREVIOUSLY CAST CONCRETE IN A CONTINUOUS UNIT SHALL HAVE ATTAINED A MINIMUM COMPRESSIVE STRENGTH OF 20.7 MPa BEFORE ADDITIONAL CONCRETE IS CAST IN THE UNIT.

THE CONTRACTOR SHALL ADJUST THE GIRDER BUILDUPS AS NECESSARY TO INCORPORATE A MAXIMUM PERMISSIBLE VARIATION IN POT BEARING DEPTH OF 13mm, SEE SPECIAL PROVISION FOR POT BEARINGS.

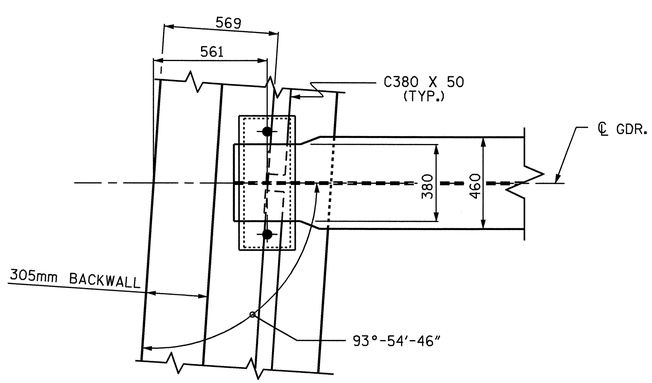

END BENT DIAPHRAGM

PLAN

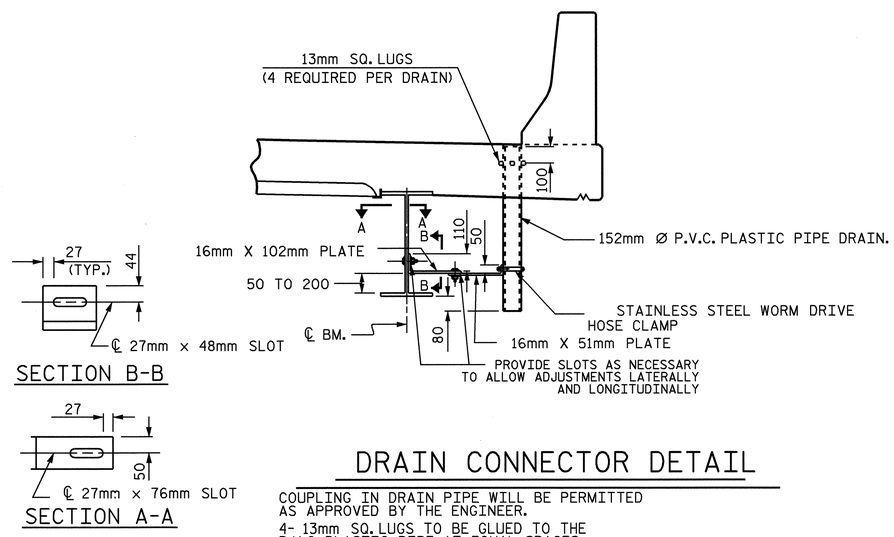

DRAIN CONNECTOR DETAIL

COUPLING IN DRAIN PIPE WILL BE PERMITTED AS APPROVED BY THE ENGINEER.

4- 13mm SQ. LUGS TO BE GLUED TO THE P.V.C. PLASTIC PIPE AT EQUAL SPACES AROUND THE PIPE DRAIN APPROXIMATELY 100mm FROM THE TOP OF THE PIPE.

BOLT SIZE TO BE SAME AS DIAPHRAGM AND CROSSFRAME CONNECTIONS. STAINLESS STEEL WORM HOSE CLAMP SHALL BE COMMERCIAL QUALITY.

TOP OF FLOOR DRAINS TO BE SET 10mm BELOW SURFACE OF SLAB.

PVC DECK DRAINS SHALL BE PAINTED WITH TWO COATS OF BROWN PRIMER MEETING THE REQUIREMENTS OF ARTICLE 1080-12 OF THE STANDARD SPECIFICATIONS. EACH COAT SHALL BE 0.050mm THICK. DECK DRAINS SHALL BE ROUGHENED PRIOR TO PAINTING. NO SEPARATE PAYMENT SHALL BE MADE FOR PAINTING PVC DECK DRAINS AS THIS IS CONSIDERED INCIDENTAL TO THE PAY ITEM FOR REINFORCED CONCRETE DECK SLAB (SAND LIGHTWEIGHT CONCRETE).

PROJECT NO. R-2301A
JONES/CRAVEN COUNTY
STATION: 96+94.475-L-

SHEET 2 OF 2

STATE OF NORTH CAROLINA
DEPARTMENT OF TRANSPORTATION
RALEIGH

SUPERSTRUCTURE
TYPICAL SECTION
RIGHT LANE

NORTH CAROLINA PROFESSIONAL SEAL 20125 ENGINEER
WILLIAM LEE GHEEN, JR.
9-4-08

REVISIONS								SHEET NO.
NO.	BY:	DATE:	NO.	BY:	DATE:			S-152
1			3					TOTAL SHEETS
2			4					176

DRAWN BY : L.L. MURPHY DATE : 07-08
CHECKED BY : K. LAYNE DATE : 08-08

03-SEP-2008 11:52
r:\structures\final plans\Str #6\R2301A_sd_TS_STR#6.dgn
lmurphy

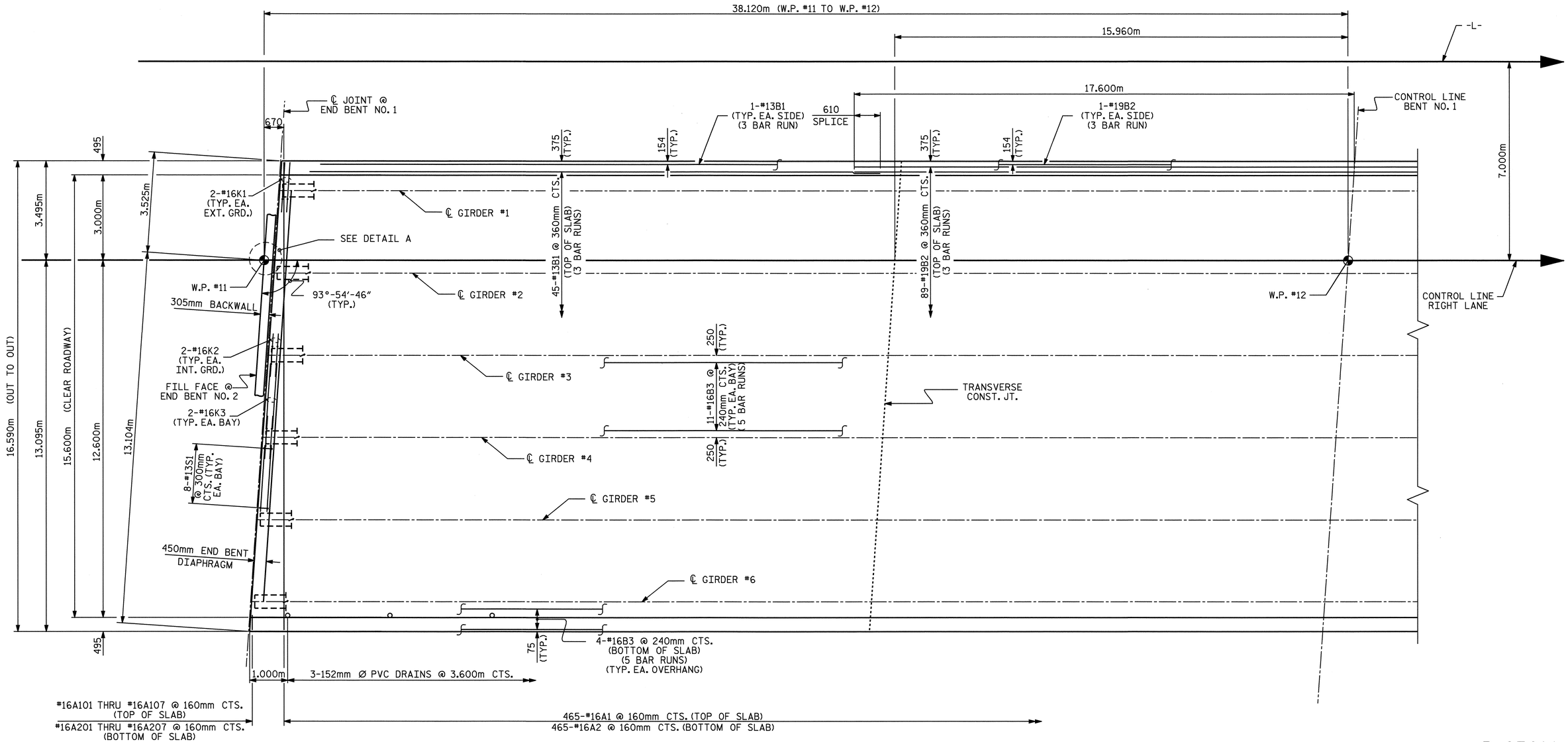

PLAN OF SPAN A

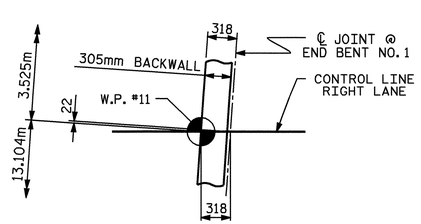

DETAIL A

PROJECT NO. R-2301A

JONES/CRAVEN COUNTY

STATION: 96+94.475-L-

SHEET 1 OF 2

STATE OF NORTH CAROLINA
DEPARTMENT OF TRANSPORTATION
RALEIGH

SUPERSTRUCTURE
PLAN OF SPAN A
RIGHT LANE

NORTH CAROLINA PROFESSIONAL SEAL 20125 ENGINEER MARSHALL L. GLOVER, JR.
9-5-08

REVISIONS						SHEET NO.
NO.	BY:	DATE:	NO.	BY:	DATE:	S-153
1			3			TOTAL SHEETS
2			4			176

DRAWN BY : L.L. MURPHY DATE : 07-08
CHECKED BY : K. LAYNE DATE : 08-08

05-SEP-2008 07:12
r:\structures\finalplans\Str #6\R2301A_sd_S*_STR*6.dgn
dahodge

STR #6

38.120m (W.P. #12 TO W.P. #13)

465-#16A1 @ 160mm CTS. (TOP OF SLAB)
465-#16A2 @ 160mm CTS. (BOTTOM OF SLAB)

#16A101 THRU #16A107 @ 160mm CTS. (TOP OF SLAB)
#16A201 THRU #16A207 @ 160mm CTS. (BOTTOM OF SLAB)

-L-

17.600m

1.330m

CONTROL LINE BENT NO. 1

1-#19B2 (TYP. EA. SIDE) (3 BAR RUN)

610 SPLICE

154 (TYP.)

375 (TYP.)

1-#13B1 (TYP. EA. SIDE) (3 BAR RUN)

495

7.000m

W.P. #12

W.P. #13

SEE DETAIL B

CONTROL LINE RIGHT LANE

89-#19B2 @ 360mm CTS. (TOP OF SLAB) (3 BAR RUNS)

45-#13B1 @ 360mm CTS. (TOP OF SLAB) (3 BAR RUNS)

℄ GIRDER #1

℄ GIRDER #2

℄ GIRDER #3

℄ GIRDER #4

℄ GIRDER #5

℄ GIRDER #6

93°-54′-46″ (TYP.)

305mm BACKWALL

FILL FACE @ END BENT NO. 2

450mm END BENT DIAPHRAGM (TYP.)

2-#16K2 (TYP. EA. INT. GRD.)

2-#16K3 (TYP. EA. BAY)

2-#16K1 (TYP. EA. EXT. GRD.)

250 (TYP.)

11-#16B3 @ 240mm CTS. (TYP. EA. BAY) (5 BAR RUNS)

8-#13S1 @ 300mm CTS. (TYP. EA. BAY)

3.481m

3.000m

3.495m

13.148m

12.600m

15.600m (CLEAR ROADWAY)

13.095m

16.590m (OUT TO OUT)

75 (TYP.)

4-#16B3 @ 240mm CTS. (BOTTOM OF SLAB) (5 BAR RUNS) (TYP. EA. OVERHANG)

3-152mm Ø PVC DRAINS @ 3.600m CTS.

1.000m

℄ JOINT @ END BENT NO. 2

PLAN OF SPAN B

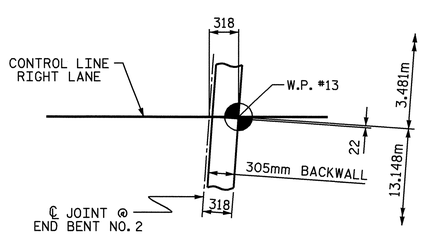

DETAIL B

PROJECT NO. R-2301A
JONES/CRAVEN COUNTY
STATION: 96+94.475-L-

SHEET 2 OF 2

STATE OF NORTH CAROLINA
DEPARTMENT OF TRANSPORTATION
RALEIGH

SUPERSTRUCTURE
PLAN OF SPAN B
RIGHT LANE

NORTH CAROLINA PROFESSIONAL SEAL 20125 ENGINEER MARVIN L. B. GREEK, JR.
9-4-08

REVISIONS						SHEET NO. S-154
NO.	BY:	DATE:	NO.	BY:	DATE:	TOTAL SHEETS 176
1			3			
2			4			

DRAWN BY : L.L. MURPHY DATE : 07-08
CHECKED BY : K. LAYNE DATE : 08-08

03-SEP-2008 12:29
r:\structures\final plans\str #6\r2301a_sd_s#_str#6.dgn
lmurphy

STR #6

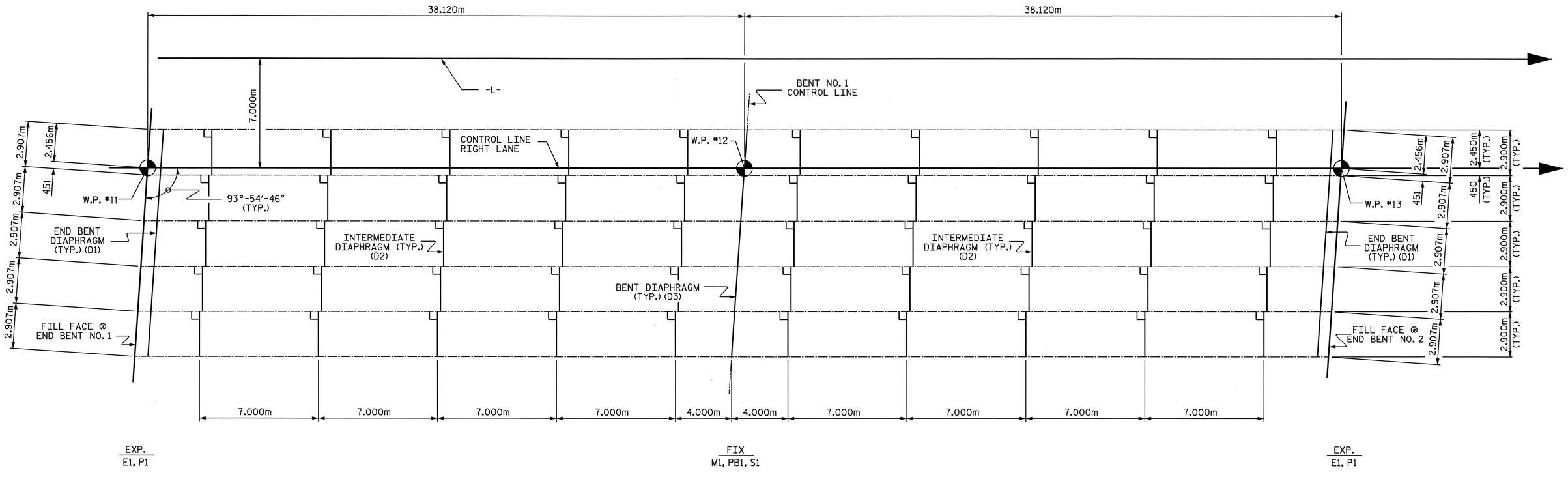

FRAMING PLAN

NOTES

ALL STRUCTURAL STEEL SHALL BE AASHTO M270 GRADE 345W AND PAINTED IN ACCORDANCE WITH SYSTEM 4 OF ARTICLE 442-7 OF THE STANDARD SPECIFICATIONS UNLESS OTHERWISE NOTED ON THE PLANS.

ALL DIMENSIONS SHOWN ARE HORIZONTAL OR VERTICAL, UNLESS OTHERWISE NOTED.

ALL FIELD CONNECTIONS TO BE 22.23mm DIA. HIGH STRENGTH BOLTS UNLESS OTHERWISE NOTED.

SHOP SPLICES ARE PERMITTED TO LIMIT THE MAXIMUM REQUIRED FLANGE PIECE LENGTHS TO 18 METERS AND WEB PIECE LENGTHS TO 14 METERS. PERMITTED FLANGE AND WEB SHOP SPLICES SHALL NOT BE LOCATED WITHIN 4.5 METERS OF MAXIMUM DEAD LOAD DEFLECTION (NOR WITHIN 4.5 METERS OF INTERMEDIATE BEARINGS OF CONTINUOUS UNITS). KEEP 600mm MINIMUM BETWEEN WEB AND FLANGE SHOP SPLICES. KEEP 150mm MINIMUM BETWEEN CONNECTOR PLATE OR TRANSVERSE STIFFENER WELDS AND WEB OR FLANGE SHOP SPLICES.

STUDS ON GIRDERS MAY BE SHIFTED UP TO 25mm IF NECESSARY TO CLEAR FLANGE SPLICE WELD.

END OF GIRDERS SHALL BE PLUMB.

TENSION ON THE AASHTO M164 BOLTS SHALL BE CALIBRATED USING DIRECT TENSION INDICATOR WASHERS IN ACCORDANCE WITH ARTICLE 440-10 OF THE STANDARD SPECIFICATIONS.

BEARING STIFFENER MAY REQUIRE COPING IF WIDER THAN BOTTOM FLANGE TO AVOID INTERFERENCE WITH THE ANCHOR BOLT.

FOR HIGH STRENGTH BOLTS, SEE SPECIAL PROVISIONS.

BEARING STIFFENERS ARE TO BE PLACED ALONG THE SKEW AND SHALL BE PLUMB.

PROJECT NO. R-2301A
JONES/CRAVEN COUNTY
STATION: 96+94.475-L-

NORTH CAROLINA PROFESSIONAL SEAL 20125 ENGINEER MARSHALL G. CHEEK, JR.
9-3-08

STATE OF NORTH CAROLINA
DEPARTMENT OF TRANSPORTATION
RALEIGH

SUPERSTRUCTURE
FRAMING PLAN
RIGHT LANE

REVISIONS						SHEET NO.
NO.	BY:	DATE:	NO.	BY:	DATE:	S-155
1			3			TOTAL SHEETS
2			4			176

DRAWN BY : L.L. MURPHY DATE : 07-08
CHECKED BY : M.G. CHEEK DATE : 07-08

05-AUG-2008 15:05
r:\structures\lmurphy\STR#6\R2301A_sd_FP_STR#6.dgn
lmurphy

STR #6

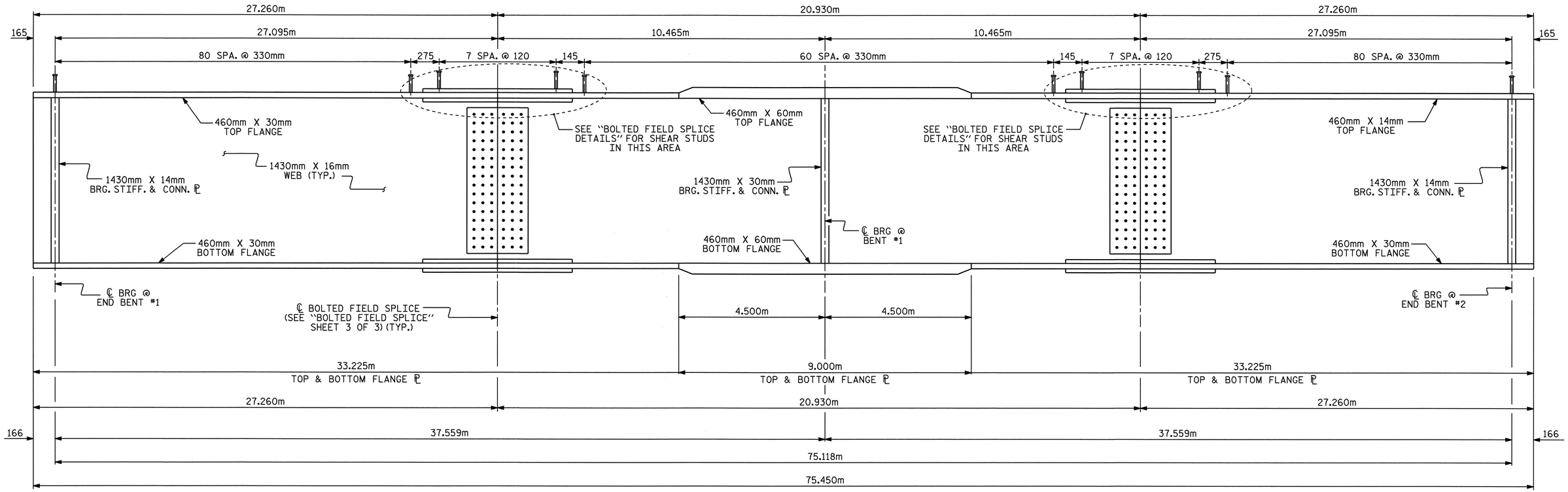

GIRDER ELEVATION

4 SHEAR STUDS PER ROW EXCEPT ON THE FIELD SPLICE ℙ
(INTERMEDIATE DIAPHRAGMS NOT SHOWN)

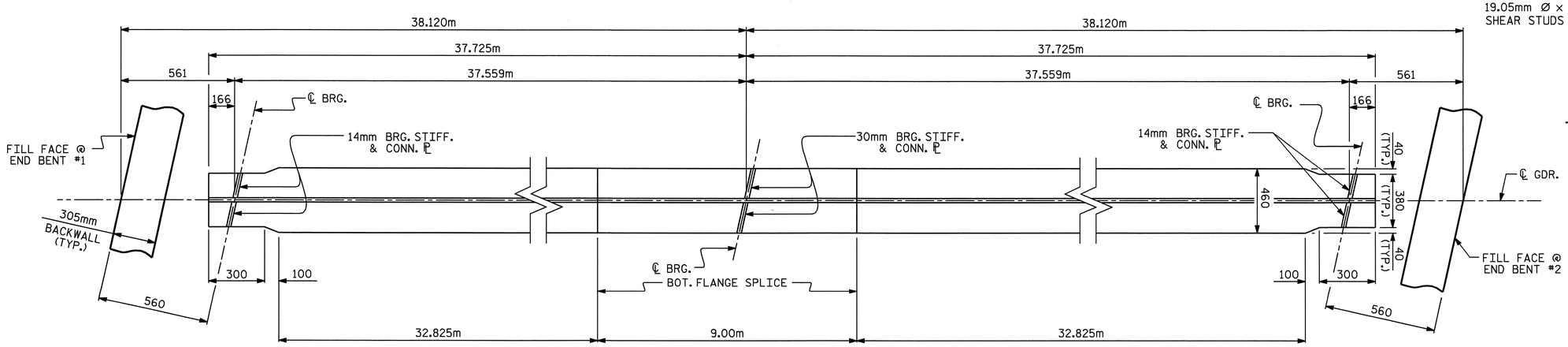

BOTTOM FLANGE DETAIL

(INTERMEDIATE DIAPHRAGMS NOT SHOWN)

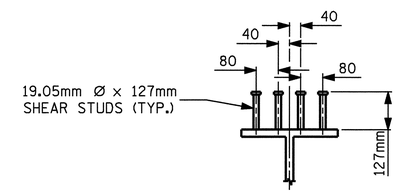

SHEAR STUD DETAILS

TYPICAL ALL GIRDERS EXCEPT AT FIELD SPLICE LOCATIONS.

PROJECT NO. R-2301A
JONES/CRAVEN COUNTY
STATION: 96+94.475 -L-

SHEET 1 OF 3

STATE OF NORTH CAROLINA
DEPARTMENT OF TRANSPORTATION
RALEIGH

SUPERSTRUCTURE

STRUCTURAL STEEL
RIGHT LANE

NORTH CAROLINA PROFESSIONAL SEAL 20125 ENGINEER MARSHALL G. CHEEK, JR.
9-5-08

REVISIONS						SHEET NO.
NO.	BY:	DATE:	NO.	BY:	DATE:	S-156
1			3			TOTAL SHEETS
2			4			176

DRAWN BY : R. G. EMERSON DATE : 07/08
CHECKED BY : M. G. CHEEK DATE : 08/08

05-SEP-2008 07:14
r:\structures\finalplans\Str #6\R2301A_sd_SS_str6.dgn
dahodge

STR #6

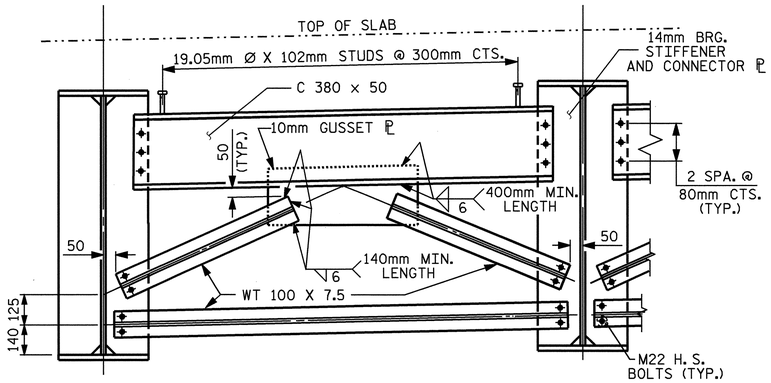

TYPICAL END BENT DIAPHRAGM

(D1)

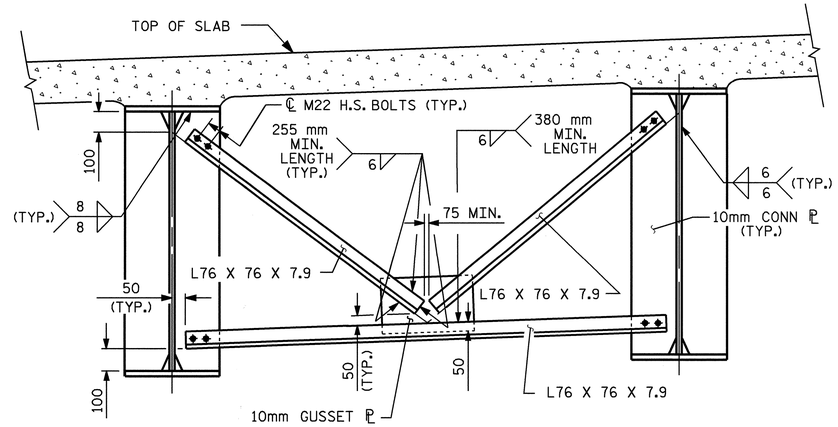

TYPICAL INTERMEDIATE DIAPHRAGM

(D2)

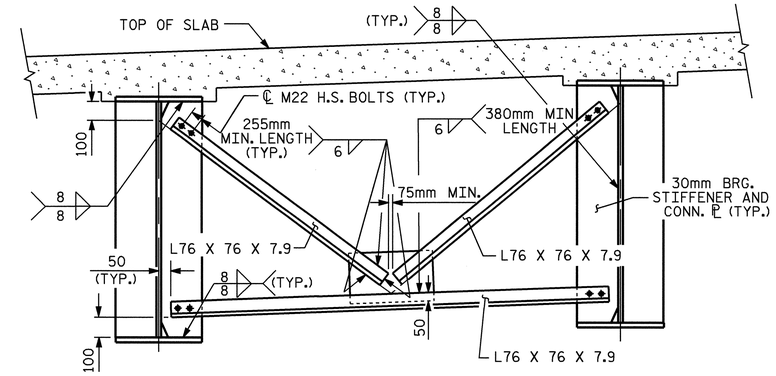

TYPICAL BENT DIAPHRAGM (D3)

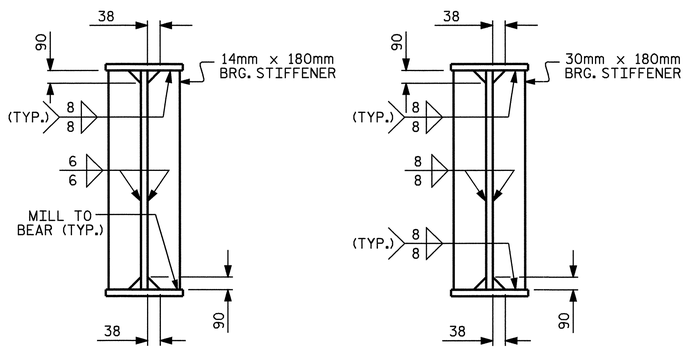

@ END BENT

@ BENT

BEARING STIFFENER AND CONNECTOR PLATE

BEARING STIFFENER MAY REQUIRE COPING IF WIDER THAN BOTTOM FLANGE TO AVOID INTERFERENCE WITH THE ANCHOR BOLT.

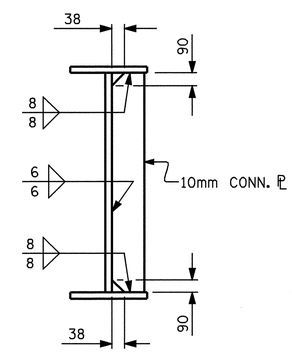

INTERMEDIATE DIAPHRAGM CONNECTOR PLATE

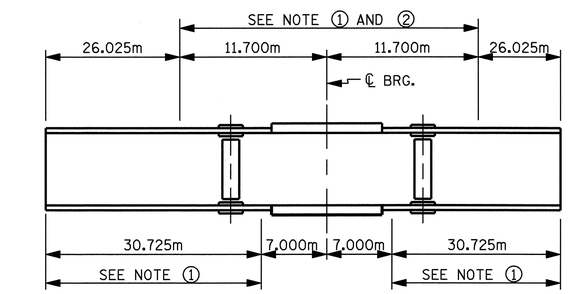

GIRDER MAKE UP

NOTE ①: CHARPY V-NOTCH TESTS ARE REQUIRED FOR ALL TOP OR BOTTOM FLANGE PLATES WHICH FALL WITHIN THESE LIMITS, ALL WEB PLATES, AND ALL SPLICE PLATES. IF A PERMITTED SHOP FLANGE SPLICE IS NOT USED, CHARPY V-NOTCH TESTS WILL BE REQUIRED FOR THE ENTIRE FLANGE PLATE. FOR CHARPY V-NOTCH TESTS, SEE ARTICLE 1072-9 OF THE STANDARD SPECIFICATIONS.

NOTE ②: NO WELDING OF FORMS OR FALSEWORK TO THE TOP FLANGE WILL BE PERMITTED IN THIS REGION.

CHARPY V-NOTCH TESTS FOR CONTINUOUS PLATE GIRDERS

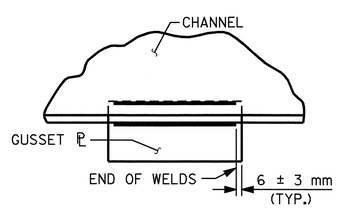

TYPICAL GUSSET PLATE CONNECTION

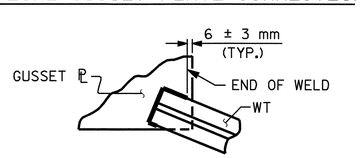

TYPICAL "TEE" TO GUSSET PLATE CONNECTION

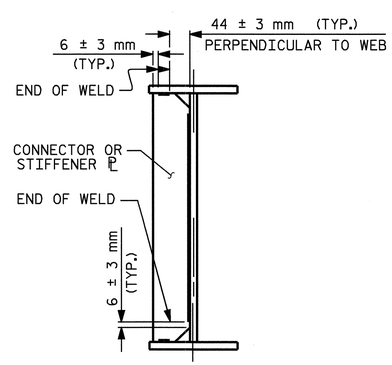

TYPICAL STIFFENER OR CONNECTOR PLATE CONNECTIONS

WELD TERMINATION DETAILS

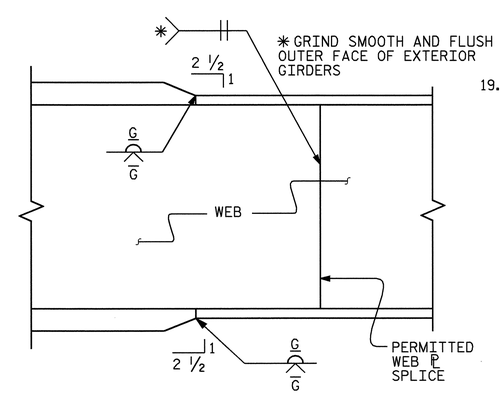

ELEVATION

TYPICAL FLANGE AND WEB BUTT JOINT

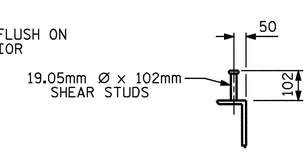

SHEAR STUD DETAILS

(@ CHANNELS)

PROJECT NO. R-2301A

JONES/CRAVEN COUNTY

STATION: 96+94.475 -L-

SHEET 2 OF 3

STATE OF NORTH CAROLINA
DEPARTMENT OF TRANSPORTATION
RALEIGH

SUPERSTRUCTURE

STRUCTURAL STEEL DETAILS
RIGHT LANE

NORTH CAROLINA PROFESSIONAL SEAL 20125 ENGINEER MARSHALL G. CHEEK, JR.
9-5-08

REVISIONS						SHEET NO.
NO.	BY:	DATE:	NO.	BY:	DATE:	S-157
1			3			TOTAL SHEETS
2			4			176

DRAWN BY : R. G. EMERSON DATE : 07/08
CHECKED BY : M. G. CHEEK DATE : 08/08

05-SEP-2008 07:42
r:\structures\finalplans\Str #6\R2301A_sd_SS_str6.dgn
dahodge

STR. #6

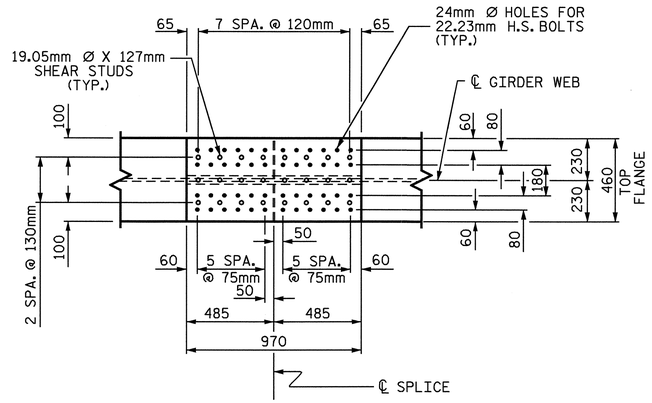

PLAN (TOP OF TOP FLANGE)

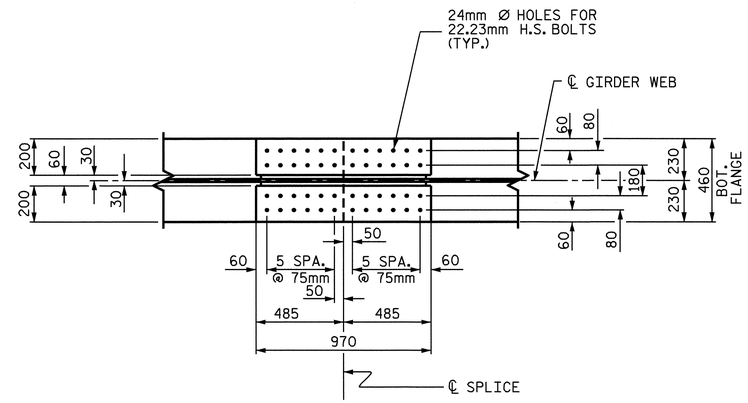

PLAN (TOP OF BOTTOM FLANGE)

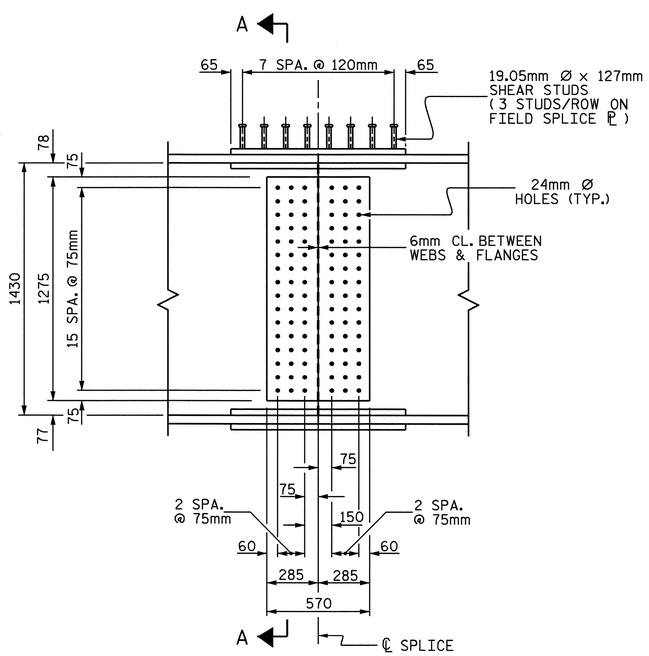

ELEVATION

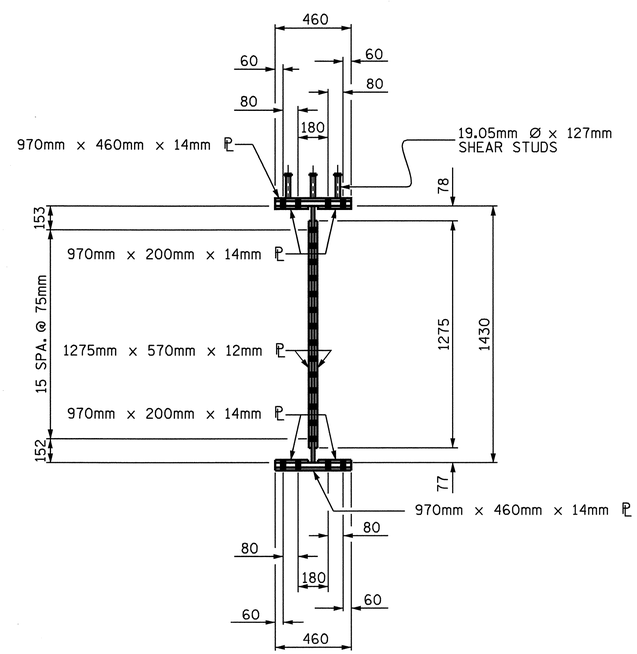

SECTION A-A

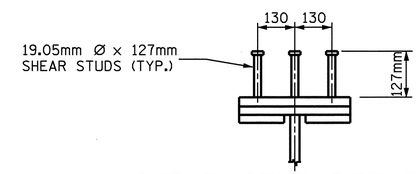

SHEAR STUD DETAILS

ON TOP FLANGE FIELD SPLICE PLATES

BOLTED FIELD SPLICE DETAILS

(TYPICAL EACH FIELD SPLICE)

PROJECT NO. R-2301A

JONES/CRAVEN COUNTY

STATION: 96+94.475-L-

SHEET 3 OF 3

STATE OF NORTH CAROLINA
DEPARTMENT OF TRANSPORTATION
RALEIGH

SUPERSTRUCTURE

BOLTED FIELD SPLICE
RIGHT LANE

NORTH CAROLINA PROFESSIONAL SEAL 20125 ENGINEER
MARSHALL G. CHEEK, JR.
9-3-08

REVISIONS							SHEET NO.
NO.	BY:	DATE:	NO.	BY:	DATE:		S-158
1			3				TOTAL SHEETS
2			4				176

DRAWN BY : L.L. MURPHY DATE : 07-08
CHECKED BY : M.G. CHEEK DATE : 07-08

11-AUG-2008 11:46
r:\structures\lmurphy\STR#6\R2301A_sd_SS_str6boltedfs.dgn
lmurphy

STR #6

DEAD LOAD DEFLECTION TABLE FOR GIRDERS

SPAN A - GIRDER 1

@ TWENTIETH POINTS BETWEEN ℄ BEARINGS	℄ BRG.	.05	.10	.15	.20	.25	.30	.35	.40	.45	.50	.55	.60	.65	.70	.75	.80	.85	.90	.95
DEFLECTION DUE TO WEIGHT OF GIRDER	0.000	0.002	0.004	0.006	0.008	0.009	0.010	0.011	0.011	0.011	0.011	0.010	0.009	0.007	0.006	0.004	0.003	0.002	0.001	0.000
DEFLECTION DUE TO WEIGHT OF SLAB *	0.000	0.008	0.015	0.022	0.028	0.033	0.036	0.039	0.040	0.039	0.037	0.034	0.030	0.026	0.021	0.015	0.010	0.006	0.003	0.001
DEFLECTION DUE TO WEIGHT OF BARRIER RAIL	0.000	0.002	0.004	0.005	0.007	0.008	0.008	0.009	0.009	0.009	0.009	0.008	0.007	0.006	0.005	0.004	0.003	0.002	0.001	0.000
TOTAL DEAD LOAD DEFLECTION	0.000	0.012	0.023	0.034	0.043	0.050	0.055	0.059	0.060	0.059	0.056	0.052	0.046	0.039	0.031	0.023	0.016	0.009	0.004	0.001
VERTICAL CURVE ORDINATE	0.000	0.002	0.004	0.006	0.007	0.009	0.010	0.011	0.011	0.011	0.012	0.011	0.011	0.011	0.010	0.009	0.007	0.006	0.004	0.002
REQUIRED CAMBER	0	14	27	40	50	59	65	70	71	70	68	63	57	50	41	32	23	15	8	3

SPAN B - GIRDER 1

@ TWENTIETH POINTS BETWEEN ℄ BEARINGS	℄ BRG.	.05	.10	.15	.20	.25	.30	.35	.40	.45	.50	.55	.60	.65	.70	.75	.80	.85	.90	.95	℄ BRG.
DEFLECTION DUE TO WEIGHT OF GIRDER	0.000	0.000	0.001	0.002	0.003	0.004	0.006	0.007	0.009	0.010	0.011	0.011	0.011	0.011	0.010	0.009	0.008	0.006	0.004	0.002	0.000
DEFLECTION DUE TO WEIGHT OF SLAB *	0.000	0.001	0.003	0.006	0.010	0.015	0.021	0.026	0.030	0.034	0.037	0.039	0.040	0.039	0.036	0.033	0.028	0.022	0.015	0.008	0.000
DEFLECTION DUE TO WEIGHT OF BARRIER RAIL	0.000	0.000	0.001	0.002	0.003	0.004	0.005	0.006	0.007	0.008	0.009	0.009	0.009	0.009	0.008	0.008	0.007	0.005	0.004	0.002	0.000
TOTAL DEAD LOAD DEFLECTION	0.000	0.001	0.004	0.009	0.016	0.023	0.031	0.039	0.046	0.052	0.056	0.059	0.060	0.059	0.055	0.050	0.043	0.034	0.023	0.012	0.000
VERTICAL CURVE ORDINATE	0.000	0.002	0.004	0.006	0.007	0.009	0.010	0.011	0.011	0.011	0.012	0.011	0.011	0.011	0.010	0.009	0.007	0.006	0.004	0.002	0.000
REQUIRED CAMBER	0	3	8	15	23	32	41	50	57	63	68	70	71	70	65	59	50	40	27	14	0

SPAN A - GIRDERS 2 THRU 5

@ TWENTIETH POINTS BETWEEN ℄ BEARINGS	℄ BRG.	.05	.10	.15	.20	.25	.30	.35	.40	.45	.50	.55	.60	.65	.70	.75	.80	.85	.90	.95
DEFLECTION DUE TO WEIGHT OF GIRDER	0.000	0.002	0.004	0.006	0.008	0.009	0.010	0.011	0.011	0.011	0.011	0.010	0.009	0.007	0.006	0.004	0.003	0.002	0.001	0.000
DEFLECTION DUE TO WEIGHT OF SLAB *	0.000	0.008	0.015	0.022	0.028	0.033	0.036	0.039	0.040	0.039	0.037	0.034	0.030	0.026	0.021	0.015	0.010	0.006	0.003	0.001
DEFLECTION DUE TO WEIGHT OF BARRIER RAIL	0.000	0.002	0.003	0.004	0.005	0.006	0.007	0.007	0.007	0.007	0.007	0.007	0.006	0.005	0.004	0.003	0.002	0.001	0.001	0.000
TOTAL DEAD LOAD DEFLECTION	0.000	0.012	0.022	0.032	0.041	0.048	0.053	0.057	0.058	0.057	0.055	0.051	0.045	0.038	0.031	0.022	0.015	0.009	0.005	0.001
VERTICAL CURVE ORDINATE	0.000	0.002	0.004	0.006	0.007	0.009	0.010	0.011	0.011	0.011	0.012	0.011	0.011	0.011	0.010	0.009	0.007	0.006	0.004	0.002
REQUIRED CAMBER	0	14	26	38	48	57	63	68	69	68	67	62	56	49	41	31	22	15	9	3

SPAN B - GIRDERS 2 THRU 5

@ TWENTIETH POINTS BETWEEN ℄ BEARINGS	℄ BRG.	.05	.10	.15	.20	.25	.30	.35	.40	.45	.50	.55	.60	.65	.70	.75	.80	.85	.90	.95	℄ BRG.
DEFLECTION DUE TO WEIGHT OF GIRDER	0.000	0.000	0.001	0.002	0.003	0.004	0.006	0.007	0.009	0.010	0.011	0.011	0.011	0.011	0.010	0.009	0.008	0.006	0.004	0.002	0.000
DEFLECTION DUE TO WEIGHT OF SLAB *	0.000	0.001	0.003	0.006	0.010	0.015	0.021	0.026	0.030	0.034	0.037	0.039	0.040	0.039	0.036	0.033	0.028	0.022	0.015	0.008	0.000
DEFLECTION DUE TO WEIGHT OF BARRIER RAIL	0.000	0.000	0.001	0.001	0.002	0.003	0.004	0.005	0.006	0.007	0.007	0.007	0.007	0.007	0.007	0.006	0.005	0.004	0.003	0.002	0.000
TOTAL DEAD LOAD DEFLECTION	0.000	0.001	0.005	0.009	0.015	0.022	0.031	0.038	0.045	0.051	0.055	0.057	0.058	0.057	0.053	0.048	0.041	0.032	0.022	0.012	0.000
VERTICAL CURVE ORDINATE	0.000	0.002	0.004	0.006	0.007	0.009	0.010	0.011	0.011	0.011	0.012	0.011	0.011	0.011	0.010	0.009	0.007	0.006	0.004	0.002	0.000
REQUIRED CAMBER	0	3	9	15	22	31	41	49	56	62	67	68	69	68	63	57	48	38	26	14	0

SPAN A - GIRDER 6

@ TWENTIETH POINTS BETWEEN ℄ BEARINGS	℄ BRG.	.05	.10	.15	.20	.25	.30	.35	.40	.45	.50	.55	.60	.65	.70	.75	.80	.85	.90	.95
DEFLECTION DUE TO WEIGHT OF GIRDER	0.000	0.002	0.004	0.006	0.008	0.009	0.010	0.011	0.011	0.011	0.011	0.010	0.009	0.007	0.006	0.004	0.003	0.002	0.001	0.000
DEFLECTION DUE TO WEIGHT OF SLAB *	0.000	0.008	0.015	0.022	0.027	0.032	0.036	0.038	0.039	0.038	0.036	0.033	0.030	0.025	0.020	0.015	0.010	0.006	0.003	0.001
DEFLECTION DUE TO WEIGHT OF BARRIER RAIL	0.000	0.002	0.004	0.005	0.007	0.008	0.008	0.009	0.009	0.009	0.009	0.008	0.007	0.006	0.005	0.004	0.003	0.002	0.001	0.000
TOTAL DEAD LOAD DEFLECTION	0.000	0.012	0.023	0.033	0.042	0.049	0.054	0.058	0.059	0.058	0.056	0.051	0.045	0.038	0.031	0.023	0.015	0.009	0.004	0.001
VERTICAL CURVE ORDINATE	0.000	0.002	0.004	0.006	0.007	0.009	0.010	0.011	0.011	0.011	0.012	0.011	0.011	0.011	0.010	0.009	0.007	0.006	0.004	0.002
REQUIRED CAMBER	0	14	27	39	49	58	64	69	70	69	68	62	56	49	41	32	22	15	8	3

SPAN B - GIRDER 6

@ TWENTIETH POINTS BETWEEN ℄ BEARINGS	℄ BRG.	.05	.10	.15	.20	.25	.30	.35	.40	.45	.50	.55	.60	.65	.70	.75	.80	.85	.90	.95	℄ BRG.
DEFLECTION DUE TO WEIGHT OF GIRDER	0.000	0.000	0.001	0.002	0.003	0.004	0.006	0.007	0.009	0.010	0.011	0.011	0.011	0.011	0.010	0.009	0.008	0.006	0.004	0.002	0.000
DEFLECTION DUE TO WEIGHT OF SLAB *	0.000	0.001	0.003	0.006	0.010	0.015	0.020	0.025	0.030	0.033	0.036	0.038	0.039	0.038	0.036	0.032	0.027	0.022	0.015	0.008	0.000
DEFLECTION DUE TO WEIGHT OF BARRIER RAIL	0.000	0.000	0.001	0.002	0.003	0.004	0.005	0.006	0.007	0.008	0.009	0.009	0.009	0.009	0.008	0.008	0.007	0.005	0.004	0.002	0.000
TOTAL DEAD LOAD DEFLECTION	0.000	0.001	0.004	0.009	0.015	0.023	0.031	0.038	0.045	0.051	0.056	0.058	0.059	0.058	0.054	0.049	0.042	0.033	0.023	0.012	0.000
VERTICAL CURVE ORDINATE	0.000	0.002	0.004	0.006	0.007	0.009	0.010	0.011	0.011	0.011	0.012	0.011	0.011	0.011	0.010	0.009	0.007	0.006	0.004	0.002	0.000
REQUIRED CAMBER	0	3	8	15	22	32	41	49	56	62	68	69	70	69	64	58	49	39	27	14	0

* INCLUDES SLAB, BUILDUPS & STAY-IN-PLACE FORMS.
ALL VALUES ARE SHOWN IN METERS EXCEPT "REQUIRED CAMBER", WHICH IS GIVEN IN MILLIMETERS.

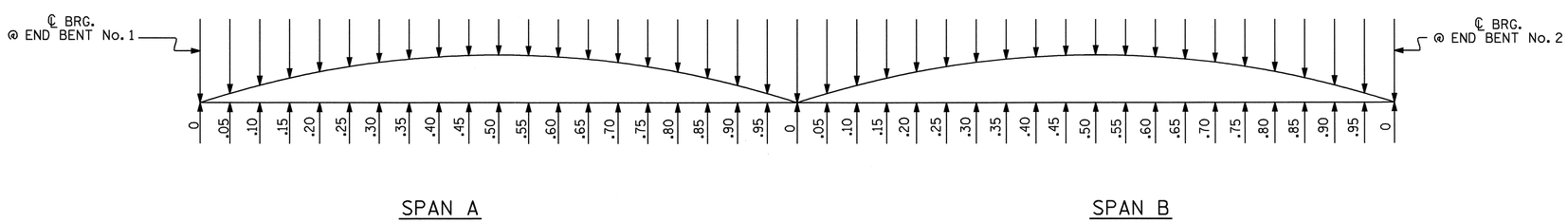

SCHEMATIC CAMBER ORDINATES

NOTE: FOR CAMBER @ 20TH POINTS, SEE TABLES.
SLOPE FOR THE ZERO CAMBER BASE LINE VARIES.

PROJECT NO. R-2301A
JONES/CRAVEN COUNTY
STATION: 96+94.475 -L-

STATE OF NORTH CAROLINA
DEPARTMENT OF TRANSPORTATION
RALEIGH

SUPERSTRUCTURE
DEAD LOAD DEFLECTIONS
RIGHT LANE

NORTH CAROLINA PROFESSIONAL SEAL 20125 ENGINEER MARSHALL G. CHEEK, JR.
9-8-08

REVISIONS								
NO.	BY:	DATE:	NO.	BY:	DATE:			
1			3					
2			4					

SHEET NO. S-159
TOTAL SHEETS 176

DRAWN BY : M. POOLE DATE : 06-08
CHECKED BY : M. G. CHEEK DATE : 06-08

08-SEP-2008 12:09
r:\structures\final plans\str #6\r2233aa_sd_dl_str#6.dgn
dahodge

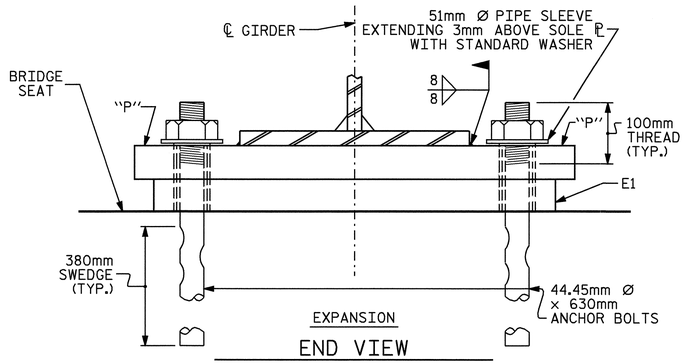

END VIEW

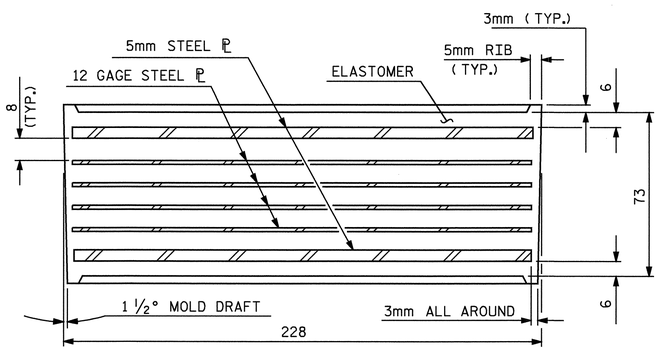

TYPICAL SECTION OF ELASTOMERIC BEARING

LOAD RATINGS	
	MAX.D.L.+ L.L.
TYPE III	674 kN

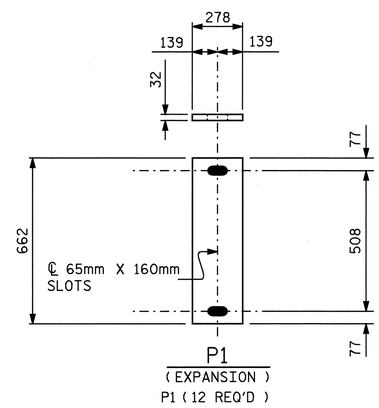

SOLE PLATE DETAILS ("P")

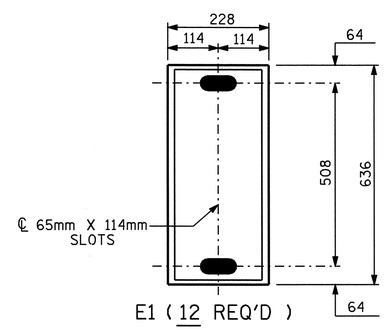

PLAN VIEW OF ELASTOMERIC BEARING

TYPE III

NOTES

AT ALL FIXED POINTS OF SUPPORT, NUTS FOR ANCHOR BOLTS ARE TO BE TIGHTENED FINGER TIGHT AND THEN BACKED OFF 1/2 TURN. THE THREAD OF THE NUT AND BOLT SHALL THEN BE BURRED WITH A SHARP POINTED TOOL.

THE 51mm Ø PIPE SLEEVE SHALL BE CUT FROM SCHEDULE 40 PVC PLASTIC PIPE. THE PVC PLASTIC PIPE SHALL MEET THE REQUIREMENTS OF ASTM D1785.

THE PAYMENT FOR THE PIPE SLEEVES SHALL BE INCLUDED IN THE SEVERAL PAY ITEMS.

FOR AASHTO M270 GRADE 345W STRUCTURAL STEEL, SOLE PLATE SHALL BE AASHTO M270 GRADE 345W AND SHALL NOT BE GALVANIZED, ANCHOR BOLTS AND NUTS SHALL BE GALVANIZED IN ACCORDANCE WITH THE STANDARD SPECIFICATIONS.

ANCHOR BOLTS SHALL MEET THE REQUIREMENTS OF ASTM A449. NUTS SHALL MEET THE REQUIREMENTS OF AASHTO M291M-12 OR AASHTO M292M-2H. WASHERS SHALL MEET THE REQUIREMENTS OF AASHTO M293M. SHOP DRAWINGS ARE NOT REQUIRED FOR ANCHOR BOLTS, NUTS AND WASHERS. SHOP INSPECTION IS REQUIRED.

WHEN FIELD WELDING THE SOLE PLATE TO THE GIRDER FLANGE, USE TEMPERATURE INDICATING WAX PENS, OR OTHER SUITABLE MEANS, TO ENSURE THAT THE TEMPERATURE OF THE SOLE PLATE DOES NOT EXCEED 149°C. TEMPERATURES ABOVE THIS MAY DAMAGE THE ELASTOMER.

ALL SURFACES OF BEARING PLATES SHALL BE SMOOTH AND STRAIGHT.

PROJECT NO. R-2301A
JONES/CRAVEN COUNTY
STATION: 96+94.475-L-

STATE OF NORTH CAROLINA
DEPARTMENT OF TRANSPORTATION
RALEIGH

ELASTOMERIC BEARING DETAILS

RIGHT LANE

NORTH CAROLINA PROFESSIONAL SEAL 20125 ENGINEER MARSHAL R. CHEEK JR.
9-5-08

REVISIONS						SHEET NO.
NO.	BY:	DATE:	NO.	BY:	DATE:	S-160
1			3			TOTAL SHEETS
2			4			176

STR #6 STD. NO. EB1SM

ASSEMBLED BY : A.L. FIGUEROA		DATE : 06-25-08	
CHECKED BY : M.G. CHEEK		DATE : 06-08	
DRAWN BY : JMB 11/87	REV. 8/16/99	MAB/LES	
CHECKED BY : ARB 11/87	REV. 10/17/00	RWW/LES	
	REV. 5/1/06	TLA/GM	

05-SEP-2008 07:36
r:\structures\finalplans\Str #6\R-2301A_SD_STR#6-09_BG.dgn
dahodge

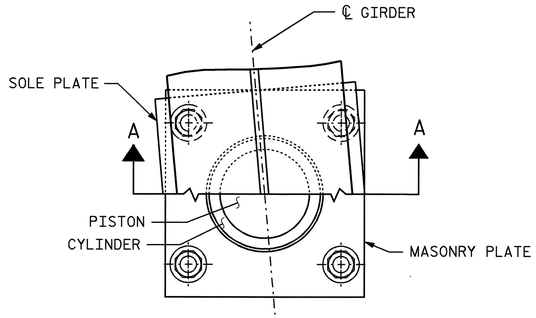

CUT-AWAY PLAN

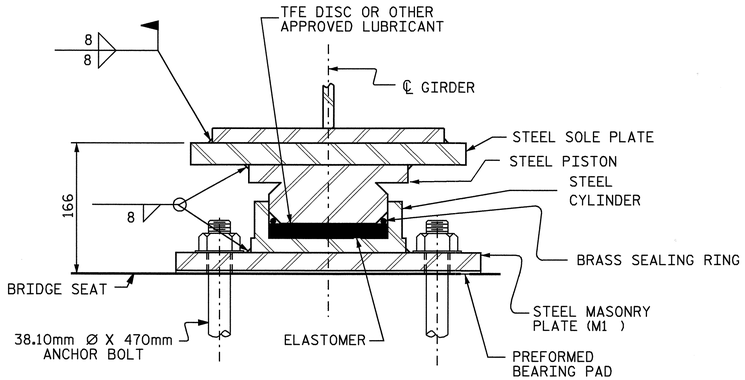

SECTION A-A

PB1, FIXED

(6 REQ'D.)

POT BEARING DETAILS

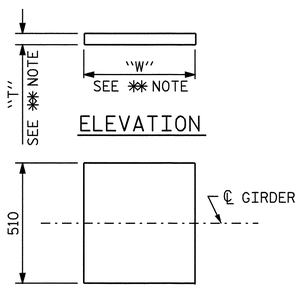

PLAN

✱✱ NOTE:
DIMENSIONS "W" AND "T" ARE TO BE DETERMINED BY THE MANUFACTURER.

SOLE PLATE DETAILS

S1 (6 REQ'D.)

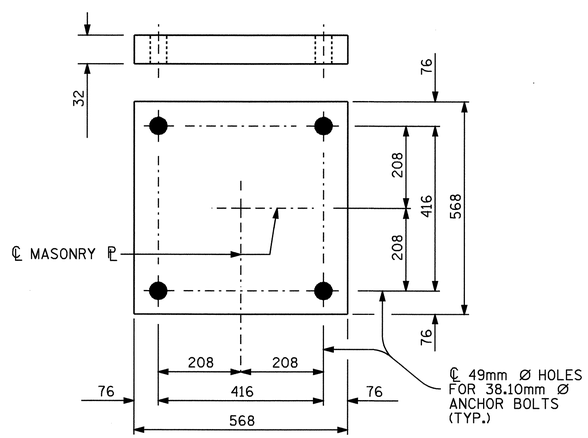

PLAN

M1 (6 REQ'D.)

MASONRY PLATE DETAILS

NOTES

FOR POT BEARINGS, SEE SPECIAL PROVISIONS.

AT ALL POINTS OF SUPPORT AT BENT NO. 1, NUTS FOR ANCHOR BOLTS SHALL BE TIGHTENED FINGER TIGHT AND GIVEN AN ADDITIONAL 1/4 TURN. THE THREAD OF THE NUT AND BOLT SHALL THEN BE BURRED WITH A SHARP POINTED TOOL.

WHEN WELDING THE SOLE PLATE TO THE GIRDER, USE TEMPERATURE INDICATING WAX PENS, OR OTHER SUITABLE MEANS, TO ENSURE THAT THE TEMPERATURE OF THE BEARING DOES NOT EXCEED 121°C TEMPERATURES ABOVE THIS MAY DAMAGE THE TFE OR ELASTOMER.

SOLE PLATES SHOULD BE WELDED TO BEAM FLANGES AND ANCHOR BOLTS SHOULD BE GROUTED BEFORE FALSEWORK IS PLACED.

ALL SURFACES OF BEARING PLATES SHALL BE SMOOTH AND STRAIGHT.

FOR THERMAL SPRAYED COATINGS (METALLIZATION), SEE SPECIAL PROVISIONS.

THE CONTRACTOR MAY SUBSTITUTE DISC BEARINGS FOR THE POT BEARINGS SHOWN. FOR OPTIONAL DISC BEARINGS, SEE SPECIAL PROVISIONS.

TABLE FOR LOADS AND MOVEMENTS

BEARING	LOCATION	VERTICAL LOAD (kN)			LATERAL LOAD (kN)	TOTAL MOVEMENT (mm)
		DEAD	LIVE	TOTAL		
PB1 (FIXED)	BENT #1	1370	675	2045	275	✱✱✱

✱✱✱ NO MOVEMENT FOR FIXED POT BEARING

PROJECT NO. R-2301A
JONES/CRAVEN COUNTY
STATION: 96+94.475-L-

STATE OF NORTH CAROLINA
DEPARTMENT OF TRANSPORTATION
RALEIGH

POT BEARING DETAILS
RIGHT LANE

NORTH CAROLINA PROFESSIONAL SEAL 20125 ENGINEER MARSHALL L. CHEEK, JR.
9-3-08

ASSEMBLED BY : A.L. FIGUEROA	DATE : 06-26-08
CHECKED BY : M.G. CHEEK	DATE : 06-08
DRAWN BY : RWW 8/99	REV. 7/10/01 LES/RWW
CHECKED BY : LES 8/99	REV. 5/7/03 RWW/JTE
	REV. 5/1/06 TLA/GM

REVISIONS								SHEET NO.
NO.	BY:	DATE:	NO.	BY:	DATE:			S-161
1			3					TOTAL SHEETS
2			4					176

STR #6 PB1SM.STD

06-AUG-2008 07:26
R:\Structures\AL Figueroa\Microstation\R-2301A_SD_STR*6-09_PBG-S161.dgn
aflgueroa

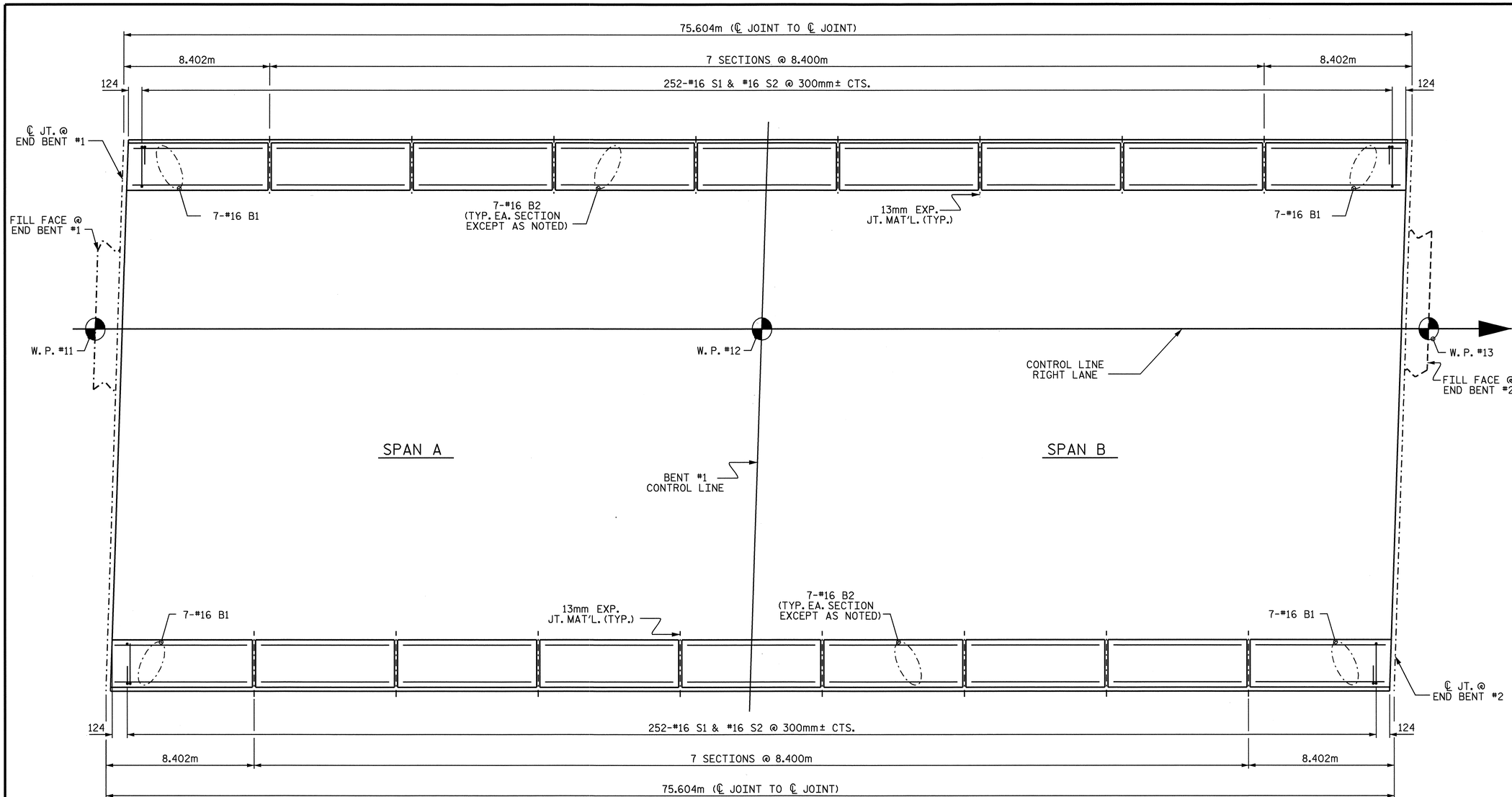

PLAN

BAR TYPES

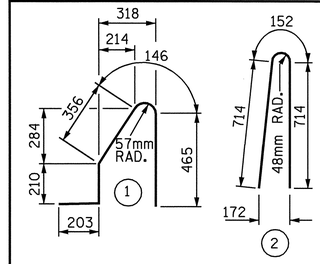

ALL BAR DIMENSIONS ARE OUT TO OUT

BILL OF MATERIAL

FOR CONCRETE BARRIER RAIL ONLY

BAR	NO.	SIZE	TYPE	LENGTH	WEIGHT
* B1	28	#16	STR	8260	359
* B2	98	#16	STR	8280	1259
* S1	504	#16	1	1380	1080
* S2	504	#16	2	1580	1236

* EPOXY COATED
REINFORCING STEEL 3934kg

CLASS AA CONCRETE 39.7 CU. METER

CONCRETE BARRIER RAIL 151.208 METERS

* THESE BARS ARE EPOXY COATED

NOTES

THE BARRIER RAIL IN THE CONTINUOUS UNIT SHALL NOT BE CAST UNTIL ALL SLAB CONCRETE IN THE UNIT HAS BEEN CAST AND HAS REACHED A MINIMUM COMPRESSIVE STRENGTH OF 20.7 MPa.

ALL REINFORCING STEEL IN BARRIER RAILS SHALL BE EPOXY COATED.

VERTICAL GROOVED CONTRACTION JOINTS, 12mm IN DEPTH, SHALL BE TOOLED IN ALL EXPOSED FACES OF THE BARRIER RAIL AND IN ACCORDANCE WITH ARTICLE 825-10(B) OF THE STANDARD SPECIFICATIONS. THE CONTRACTION JOINT SHALL BE LOCATED AT EACH THIRD POINT BETWEEN BARRIER RAIL EXPANSION JOINTS. ONLY ONE CONTRACTION JOINT IS REQUIRED AT MIDPOINT OF BARRIER RAIL SEGMENTS LESS THAN 6.1m IN LENGTH AND NO CONTRACTION JOINTS ARE REQUIRED FOR THOSE SEGMENTS LESS THAN 3.5m IN LENGTH.

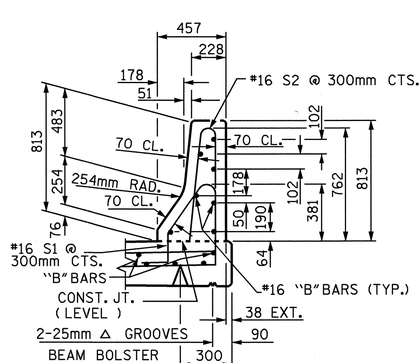

SECTION THRU RAIL

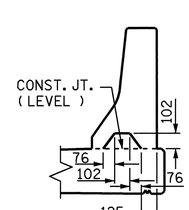

SECTION S-S

AT DAM IN OPEN JOINT
(THIS IS TO BE USED ONLY WHEN SLIP FORM IS USED)

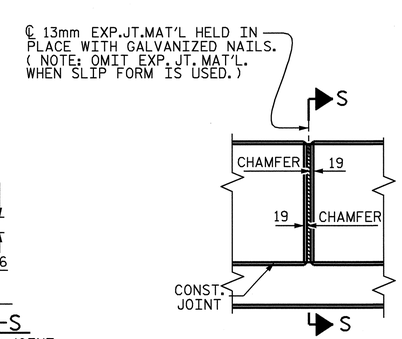

ELEVATION AT EXPANSION JOINTS

BARRIER RAIL DETAILS

PROJECT NO. R-2301A
JONES/CRAVEN COUNTY
STATION: 96+94.475-L-

STATE OF NORTH CAROLINA
DEPARTMENT OF TRANSPORTATION
RALEIGH

STANDARD

CONCRETE BARRIER RAIL
(RIGHT LANE)

NORTH CAROLINA PROFESSIONAL SEAL 20125 ENGINEER MARSHALL G. CHEEK, JR.
9-3-08

REVISIONS						SHEET NO.
NO.	BY:	DATE:	NO.	BY:	DATE:	S-162
1			3			TOTAL SHEETS
2			4			176

ASSEMBLED BY : R. G. EMERSON		DATE : 07/08	
CHECKED BY : M. G. CHEEK		DATE : 07/08	
DRAWN BY : ARB 5/87	REV. 10/17/00	RWW/LES	
CHECKED BY : SJD 9/87	REV. 5/7/03R	RWW/JTE	
	REV. 5/1/06	TLA/GM	

23-JUL-2008 14:53
r:\structures\remerson\str_6\R2301A_sd_BR_str6.dgn
remerson

STR. #6

STD. No. CBR1SM

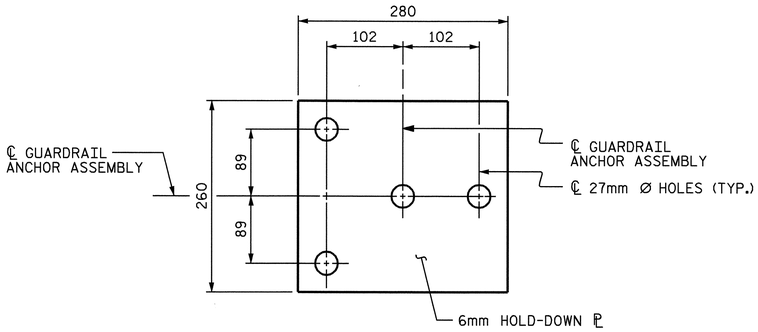

PLAN

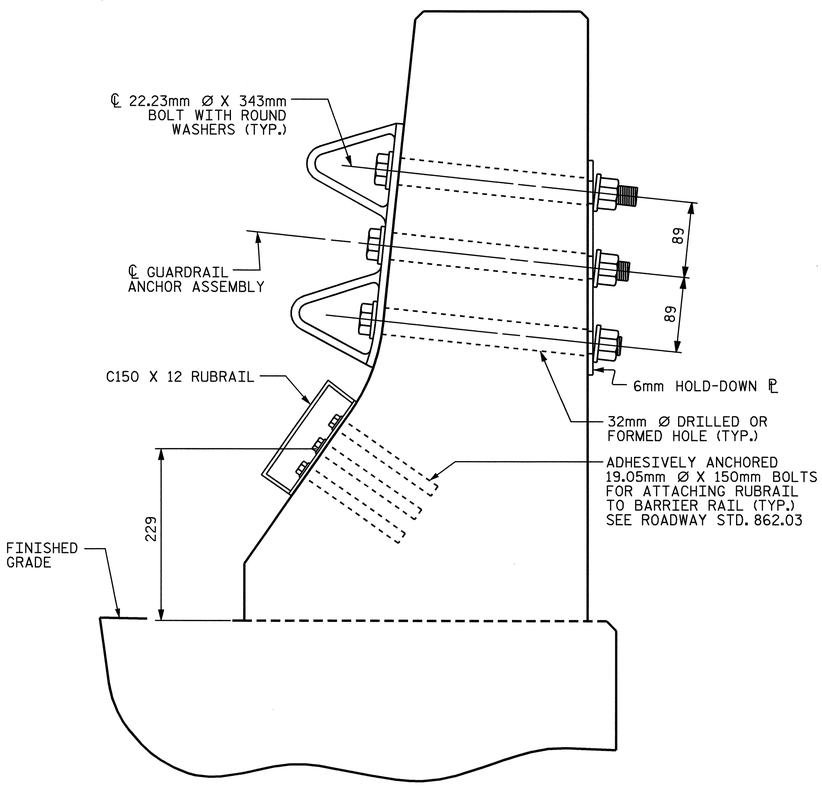

SECTION E-E

GUARDRAIL ANCHOR ASSEMBLY DETAILS

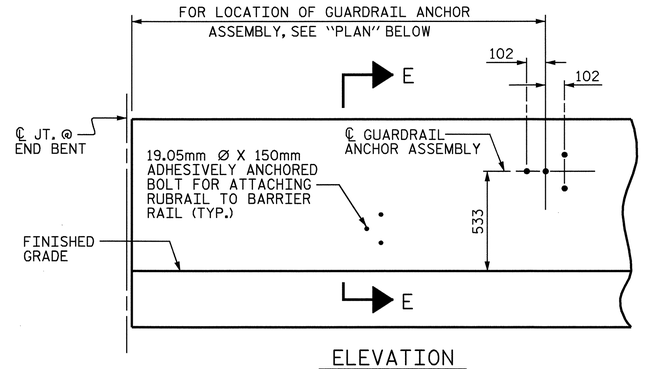

ELEVATION

FOR LOCATION OF RUBRAIL, SEE ROADWAY STD. 862.03

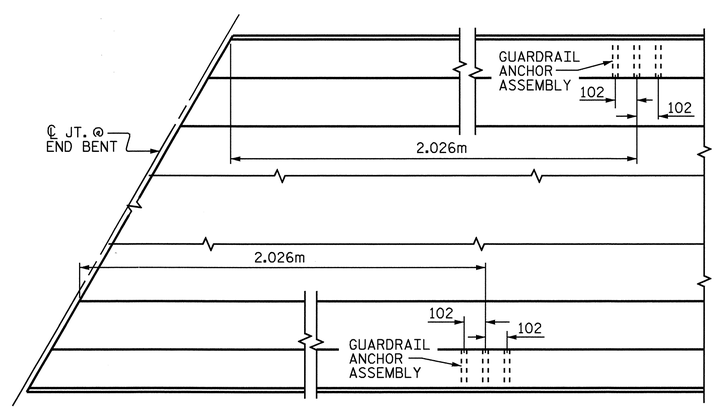

LOCATION OF ANCHORS FOR GUARDRAIL

END BENT #1 SHOWN, END BENT #2 SIMILAR.

NOTES

THE GUARDRAIL ANCHOR ASSEMBLY SHALL CONSIST OF A 6mm HOLD DOWN PLATE AND 4 - 22.23mm Ø BOLTS WITH NUTS AND WASHERS, RUBRAIL, AND ADHESIVELY ANCHORED BOLTS.

THE HOLD-DOWN PLATE SHALL CONFORM TO AASHTO M270 GRADE 36. AFTER FABRICATION, THE HOLD-DOWN PLATE SHALL BE HOT-DIP GALVANIZED IN ACCORDANCE WITH AASHTO M111.

BOLTS SHALL CONFORM TO THE REQUIREMENTS OF ASTM A307 AND NUTS SHALL CONFORM TO THE REQUIREMENTS OF AASHTO M291. BOLTS, NUTS AND WASHERS SHALL BE GALVANIZED. (AT THE CONTRACTOR'S OPTION, STAINLESS STEEL BOLTS, NUTS AND WASHERS MAY BE USED AS AN ALTERNATE FOR THE 22.23mm Ø GALVANIZED BOLTS, NUTS AND WASHERS. THEY SHALL CONFORM TO OR EXCEED THE MECHANICAL REQUIREMENTS OF ASTM A307. THE USE OF THIS ALTERNATE SHALL BE APPROVED BY THE ENGINEER.)

THE GUARDRAIL ANCHOR ASSEMBLY IS REQUIRED AT ALL POINTS WHERE APPROACH GUARDRAIL IS TO BE ATTACHED TO THE END OF BARRIER RAIL. FOR POINTS OF ATTACHMENT, SEE SKETCH.

AFTER INSTALLATION, THE EXPOSED THREAD OF THE BOLT SHALL BE BURRED WITH A SHARP POINTED TOOL.

THE COST OF THE GUARDRAIL ANCHOR ASSEMBLY SHALL BE INCLUDED IN THE UNIT CONTRACT PRICE BID FOR CONCRETE BARRIER RAIL.

THE 32mm Ø HOLES SHALL BE FORMED OR DRILLED WITH A CORE BIT. IMPACT TOOLS WILL NOT BE PERMITTED. ANY CONCRETE DAMAGED BY THIS WORK SHALL BE REPAIRED TO THE SATISFACTION OF THE ENGINEER.

THE C150 X 12 RUBRAIL IS TO BE ADHESIVELY ANCHORED TO THE RAIL USING THREE 19.05mm Ø X 150mm BOLTS WITH WASHERS. LEVEL ONE FIELD TESTING IF REQUIRED, AND THE YIELD LOAD OF THE 19.05mm Ø BOLTS IS 53.4kN. FOR ADHESIVELY ANCHORED ANCHOR BOLTS OR DOWELS, SEE SPECIAL PROVISIONS. SEE ROADWAY STANDARD 862.03 FOR DETAILS AND LOCATION OF THE RUBRAIL.

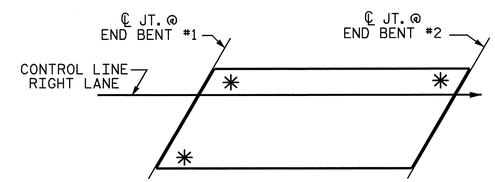

SKETCH SHOWING POINTS OF ATTACHMENTS

* DENOTES GUARDRAIL ANCHOR ASSEMBLY

PROJECT NO. R-2301A
JONES/CRAVEN COUNTY
STATION: 96+94.475 -L-

NORTH CAROLINA PROFESSIONAL SEAL 20125 ENGINEER MARSHALL G. CHEEK, JR.
9-3-08

STATE OF NORTH CAROLINA
DEPARTMENT OF TRANSPORTATION
RALEIGH

STANDARD
GUARDRAIL ANCHORAGE FOR BARRIER RAIL
(RIGHT LANE)

REVISIONS						SHEET NO.
NO.	BY:	DATE:	NO.	BY:	DATE:	S-163
1			3			TOTAL SHEETS
2			4			176

ASSEMBLED BY : R. G. EMERSON	DATE : 07/08
CHECKED BY : M. G. CHEEK	DATE : 07/08
DRAWN BY : TLA 5/06	ADDED 5/1/06R KMM/GM
CHECKED BY : GM 5/06	

22-JUL-2008 08:17
r:\structures\remerson\str_6\R2301A_sd_GR.dgn
remerson

STR. #6

STD. NO. GRA2

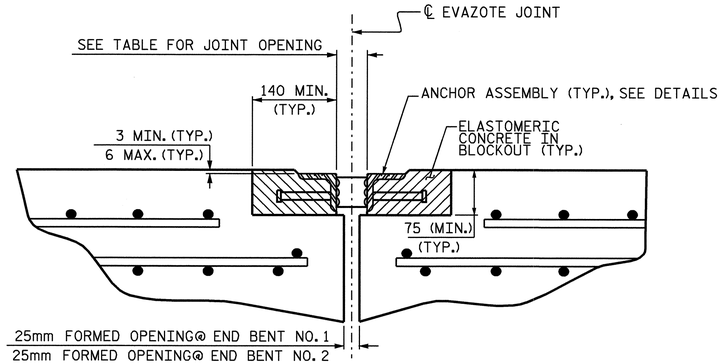

ARMORED JOINT DETAILS

SECTION NORMAL TO JOINT AT BENT

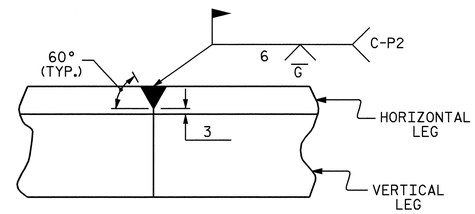

DETAIL- FIELD WELD SPLICE OF ANGLE

NOTES

ANGLES SHALL CONFORM TO AASHTO M270 GRADE 250 STEEL OR APPROVED EQUAL. ALL STUD ANCHORS SHALL CONFORM TO AASHTO M169 GRADES 1010 THRU 1020 OR APPROVED EQUAL.

STUD ANCHORS SHALL BE SHOP WELDED AND ALL HOLES SHALL BE SHOP DRILLED AS SHOWN ON THE PLANS. STUD ANCHORS SHALL BE ELECTRIC ARC END WELDED WITH COMPLETE FUSION.

UPON COMPLETION OF SHOP FABRICATION, THE ENTIRE ANCHOR ASSEMBLY SHALL BE METALLIZED. THE 12.70mm Ø STUD ANCHORS AND ANCHOR TABS NEED NOT BE METALLIZED. SEE SPECIAL PROVISION FOR THERMAL SPRAYED COATINGS (METALLIZATION).

ANCHOR ASSEMBLY SHALL BE MADE CONTINUOUS THE LENGTH OF THE JOINT FROM GUTTER TO GUTTER. FOR FIELD SPLICES AT ALL CROWN BREAK POINTS, THE ENDS OF THE STEEL ANGLES SHALL BE CUT PARALLEL TO THE BRIDGE CENTERLINE. FINISHED FIELD WELDS SHALL BE GROUND SMOOTH AND COATED WITH A MINIMUM THICKNESS OF 0.100mm OF ZINC-RICH PAINT IN ACCORDANCE WITH THE STANDARD SPECIFICATIONS.

ANCHOR ASSEMBLY SEGMENTS SHALL NOT BE LESS 3.6m NOR MORE THAN 6.1m IN LENGTH. SHORTER SEGMENTS MAY BE USED AT THE EDGE OF ROADWAY OR AT POINTS OF STAGED CONSTRUCTION.

THE ANCHOR ASSEMBLY SHALL BE SECURED AND LEVELED AS SHOWN IN THE "ARMORED JOINT ANCHOR ASSEMBLY DETAILS". NO SUBMITTALS ARE REQUIRED FOR 9.53mm Ø EXPANSION ANCHORS, NUTS OR WASHERS. THE CONTRACTOR MAY SUBMIT FOR APPROVAL AN ALTERNATE METHOD OF ALIGNING AND LEVELING THE ANGLES. THE ALTERNATE METHOD SHALL NOT INCLUDE ANY WELDING TO THE OUTSIDE FACE OF THE ANGLES.

AFTER THE ELASTOMERIC CONCRETE HAS BEEN CAST ON BOTH SIDES OF THE JOINT, REMOVE ANY EXCESS CONCRETE THAT COMES THROUGH THE WEEP HOLES AND THOROUGHLY CLEAN THE ANGLES. ANY DAMAGED STEEL SHALL BE COATED WITH A MINIMUM OF 0.100mm OF ZINC-RICH PAINT IN ACCORDANCE WITH THE STANDARD SPECIFICATIONS.

SEE SPECIAL PROVISIONS FOR EVAZOTE JOINT SEALS.

SEE SPECIAL PROVISIONS FOR ELASTOMERIC CONCRETE.

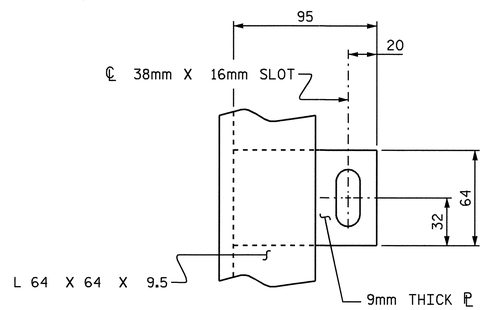

PLAN VIEW OF TAB

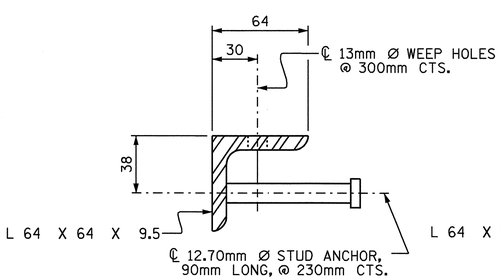

SECTION VIEW OF STUD

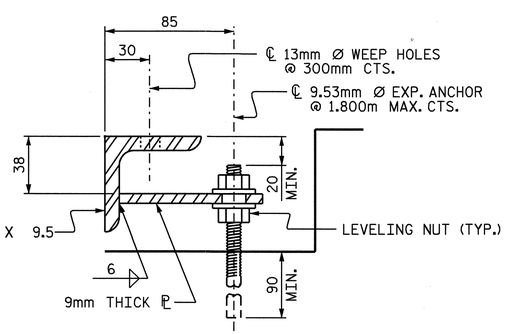

SECTION VIEW OF TAB

ARMORED JOINT ANCHOR ASSEMBLY DETAILS

MOVEMENT AND SETTING AT EVAZOTE JOINT						
END BENT NO.	SKEW ANGLE	NOMINAL UNCOMPRESSED SEAL WIDTH	TOTAL MOVEMENT (ALONG ℄ RDWY)	PERPENDICULAR JOINT OPENING AT 7° C	PERPENDICULAR JOINT OPENING AT 16° C	PERPENDICULAR JOINT OPENING AT 32° C
1	93°-54'-46"	64mm	32mm	54mm	48mm	38mm
2	93°-54'-46"	64mm	32mm	54mm	48mm	38mm

TOTAL MOVEMENT IS CALCULATED ALONG THE CENTERLINE OF ROADWAY.
JOINT OPENINGS ARE MEASURED PERPENDICULAR TO THE JOINT.

BILL OF MATERIAL		
END BENT NO.	ELASTOMERIC CONCRETE * (CU. m)	TOTAL LENGTH OF ANGLE (m)
1	0.3	31.272m
2	0.3	31.272m

* BASED ON THE MINIMUM BLOCKOUT SHOWN.

PROJECT NO. R-2301A
JONES/CRAVEN COUNTY
STATION: 96+94.475-L-

STATE OF NORTH CAROLINA
DEPARTMENT OF TRANSPORTATION
RALEIGH

STANDARD ARMORED EVAZOTE JOINT DETAILS

RIGHT LANE

NORTH CAROLINA PROFESSIONAL SEAL 20125 ENGINEER MARSHALL G. CHEEK, JR.
9-3-08

REVISIONS						SHEET NO.
NO.	BY:	DATE:	NO.	BY:	DATE:	S-164
1			3			TOTAL SHEETS
2			4			176

ASSEMBLED BY : A.L. FIGUEROA	DATE : 06-25-08	
CHECKED BY : M.G. CHEEK	DATE : 06-25-08	
DRAWN BY : EEM 1/96	REV. 7/10/01 LES/RDR	
CHECKED BY : RGW 1/96	REV. 5/7/03RR RWW/JTE	
	REV. 5/1/06 TLA/GM	

22-JUL-2008 09:04
R:\Structures\AL Figueroa\Microstation\R-2301A_sd_STR*6-II_JS_ARM-S164.dgn
afigueroa

STR #6

STD. NO. AEJ1SM

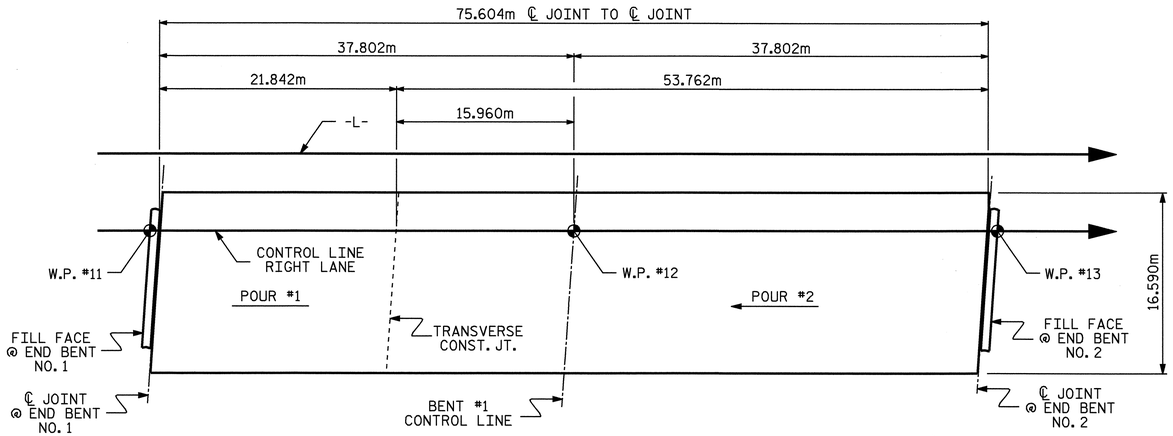

POUR SEQUENCE

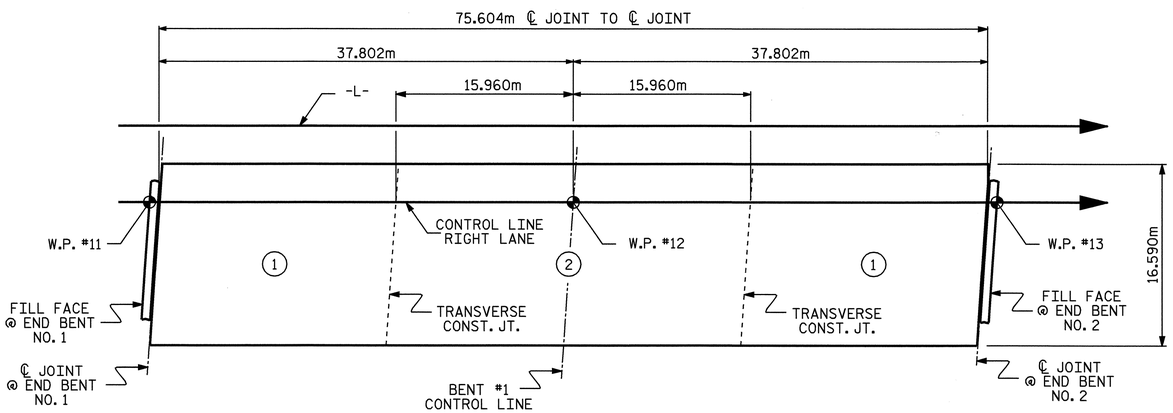

OPTIONAL POUR SEQUENCE

POUR (2) CANNOT BE STARTED UNTIL BOTH ADJACENT (1) POURS REACH A MINIMUM OF 20.7MPa

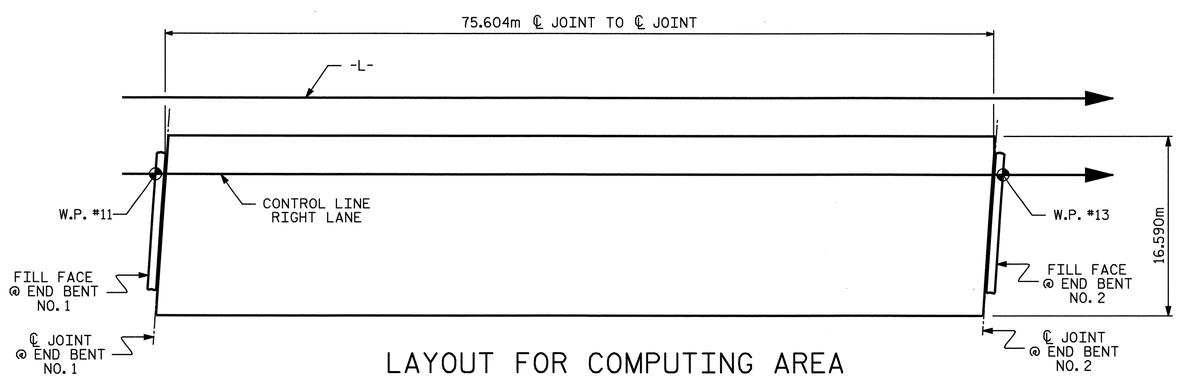

LAYOUT FOR COMPUTING AREA OF REINFORCED CONCRETE DECK SLAB

(SQ. METERS = 1254.3)

BILL OF MATERIAL SPANS A & B

BAR	NO.	SIZE	TYPE	LENGTH	WEIGHT
✳ A1	465	#16	STR	16480	11893
✳ A101	2	#16	STR	14760	46
✳ A102	2	#16	STR	12420	39
✳ A103	2	#16	STR	10080	31
✳ A104	2	#16	STR	7740	24
✳ A105	2	#16	STR	5400	17
✳ A106	2	#16	STR	3060	9
✳ A107	2	#16	STR	720	2
A2	465	#16	STR	16480	11893
A201	2	#16	STR	14760	46
A202	2	#16	STR	12420	39
A203	2	#16	STR	10080	31
A204	2	#16	STR	7740	24
A205	2	#16	STR	5400	17
A206	2	#16	STR	3060	9
A207	2	#16	STR	720	2
✳ B1	282	#13	STR	7320	2052
✳ B2	273	#19	STR	12340	7529
B3	315	#16	STR	15620	7636
✳ G1	2	#16	STR	16520	51
✳ K1	8	#16	1	2240	28
✳ K2	16	#16	2	2520	63
✳ K3	20	#16	STR	2780	86
✳ S1	80	#13	3	1000	80
REINFORCING STEEL = 19697 kg					
✳ EPOXY COATED REINF. STEEL = 21950 kg					

✳ THESE BARS ARE EPOXY COATED.

BAR TYPES

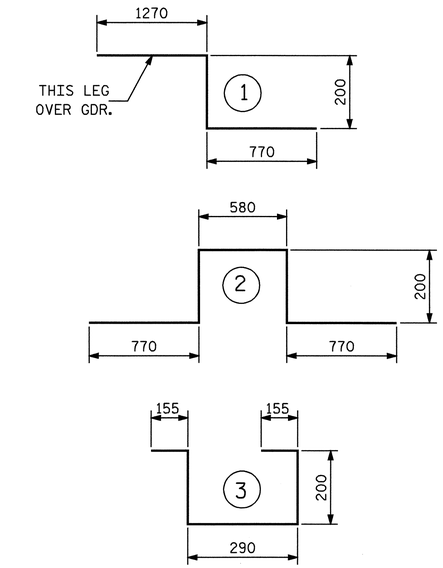

ALL BAR DIMENSIONS ARE OUT TO OUT

SUPERSTRUCTURE BILL OF MATERIAL

	CLASS AA CONCRETE		REINFORCING STEEL	EPOXY COATED REINFORCING STEEL
		(CU.METERS)	(kg)	(kg)
SPAN "A" AND "B"	POUR #1	93.3	19697	21950
	POUR #2	228.4		
TOTALS ✳✳		321.7		

✳✳ QUANTITIES FOR BARRIER RAIL ARE NOT INCLUDED

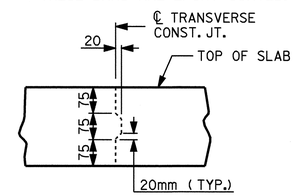

TRANSVERSE CONSTRUCTION JOINT DETAIL

NOTE: REINFORCING STEEL IN SLAB NOT SHOWN.
LONGITUDINAL REINFORCING STEEL SHALL
BE CONTINUOUS THRU JOINT.

GROOVING BRIDGE FLOORS		
APPROACH SLABS	212	SQ.METERS
BRIDGE DECK	1104	SQ.METERS
TOTAL	1316	SQ.METERS

SUPERSTRUCTURE REINFORCING STEEL LENGTHS ARE BASED ON THE FOLLOWING MINIMUM SPLICE LENGTHS

BAR SIZE	SUPERSTRUCTURE EXCEPT APPROACH SLABS, PARAPET, AND BARRIER RAIL		APPROACH SLABS		PARAPET AND BARRIER RAIL
	EPOXY COATED	UNCOATED	EPOXY COATED	UNCOATED	
#13	610	540	610	540	840
#16	770	660	770	660	1050
#19	920	790	1190	790	1330
#22	1580	1060			
#25	2080	1390			

PROJECT NO. R-2301A
JONES/CRAVEN COUNTY
STATION: 96+94.475-L-

STATE OF NORTH CAROLINA
DEPARTMENT OF TRANSPORTATION
RALEIGH

STANDARD

SUPERSTRUCTURE

BILL OF MATERIAL
RIGHT LANE

NORTH CAROLINA PROFESSIONAL SEAL 20125 ENGINEER MARSHALL GLOVER GRAY
9-5-08

ASSEMBLED BY : L.L. MURPHY	DATE : 07-08		
CHECKED BY : K. LAYNE	DATE : 08-08		
DRAWN BY : JMB 5/87	REV. 5/16/97	EEM/RGW	
CHECKED BY : SJD 9/87	REV. 5/1/06	TLA/GM	

REVISIONS						SHEET NO.
NO.	BY:	DATE:	NO.	BY:	DATE:	S-165
1			3			TOTAL SHEETS
2			4			176

05-SEP-2008 07:39
r:\structures\final plans\Str #6\R2301A_sd_BM_STR#6.dgn
dahodge

STR #6

STD. NO. BOM1SM

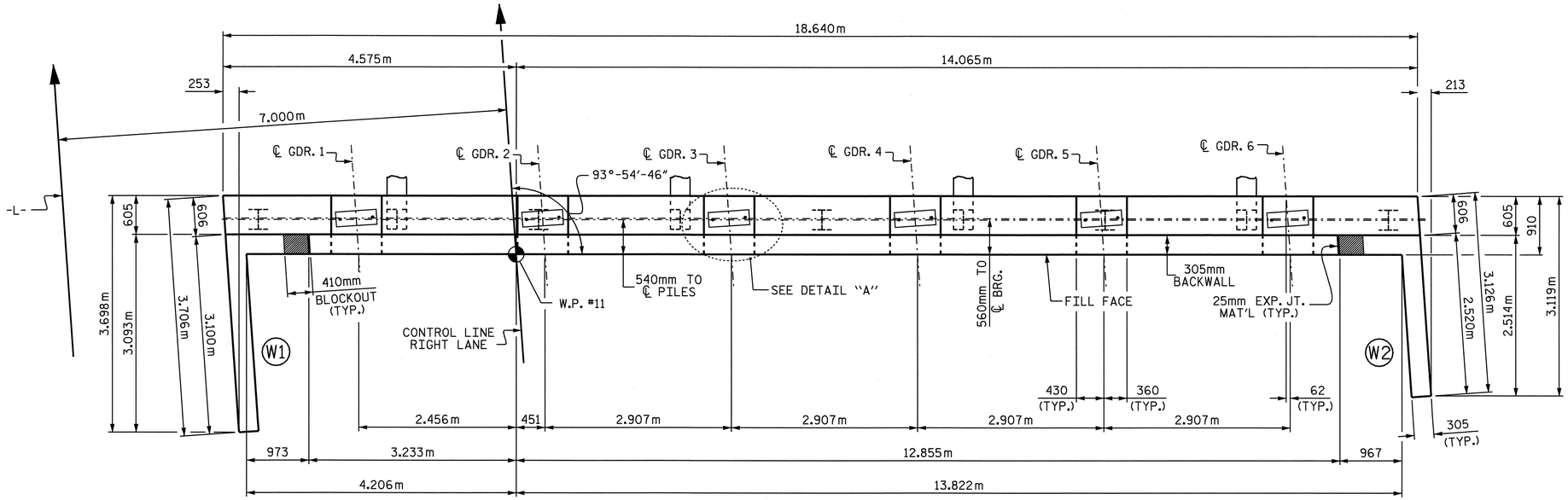

PLAN

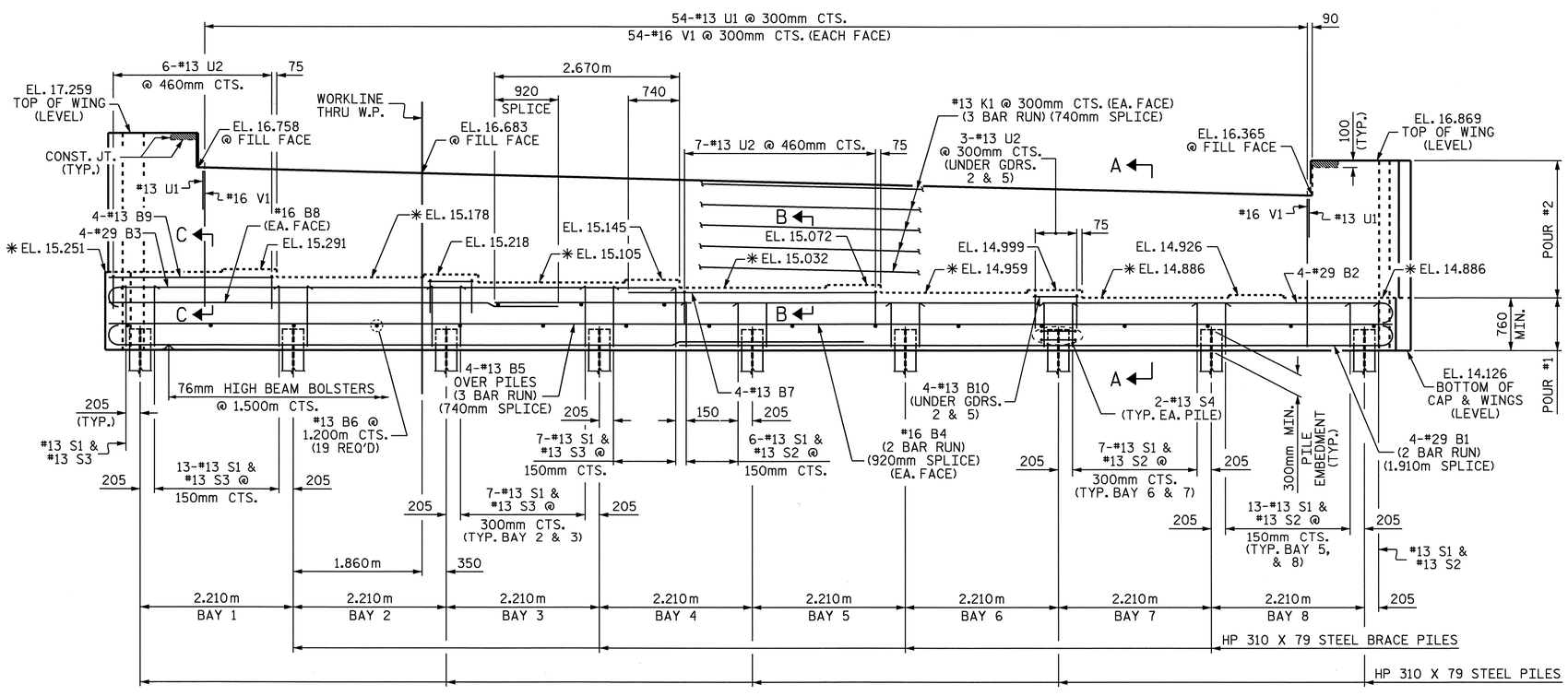

ELEVATION

✳FOR LOCATION OF ELEVATIONS BETWEEN BRIDGE SEAT BUILD-UPS, SEE SECTION VIEWS, SHEET 3 OF 3.

NOTES

STIRRUPS IN CAP MAY BE SHIFTED AS NECESSARY TO CLEAR ANCHOR BOLTS.

THE CONTRACTOR SHALL PROVIDE FOR INSTALLATION OF THE 102mm DIAMETER DRAIN PIPE THROUGH THE WING WALL AS REQUIRED FOR REINFORCED BRIDGE APPROACH FILLS, SEE THE ROADWAY PLANS. REINFORCING STEEL IN THE WING WALL MAY BE SHIFTED AS NECESSARY TO CLEAR THE DRAIN PIPE.

THE TOP SURFACE AREAS OF THE END BENT CAPS SHALL BE CURED IN ACCORDANCE WITH THE STANDARD SPECIFICATIONS EXCEPT THE MEMBRANE CURING COMPOUND METHOD SHALL NOT BE USED.

THE TOP SURFACE OF THE CAP EXCEPT THE BRIDGE SEAT BUILDUPS SHALL BE SLOPED TRANSVERSELY FROM THE FILL FACE TO THE BACK FACE AT THE RATE OF 2%.

BACKWALL SHALL BE PLACED BEFORE APPLYING THE EPOXY PROTECTIVE COATING.

EPOXY COAT THE END BENT CAP AFTER ADJUSTMENTS ARE MADE TO BEARINGS AND ANCHOR BOLTS ARE GROUTED.

THE #16 V1 BARS IN THE BACKWALL SHALL BE PLACED 50mm CLEAR FROM THE TOP OF THE BACKWALL.

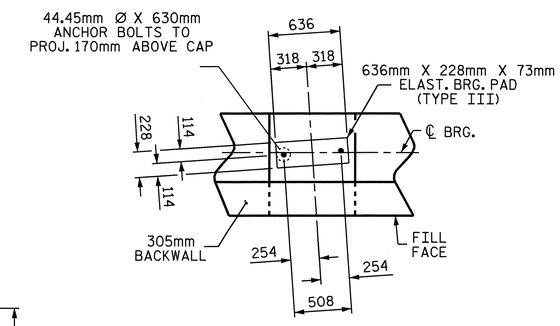

DETAIL "A"

(TYP. EA. GIRDER)

PROJECT NO. R-2301A

JONES/CRAVEN COUNTY

STATION: 96+94.475 -L-

SHEET 1 OF 3

STATE OF NORTH CAROLINA
DEPARTMENT OF TRANSPORTATION
RALEIGH

SUBSTRUCTURE
END BENT No. 1
RIGHT LANE

NORTH CAROLINA PROFESSIONAL SEAL 20125 ENGINEER MARSHALL B. GREEN, JR.
9-4-08

REVISIONS						SHEET NO.
NO.	BY:	DATE:	NO.	BY:	DATE:	S-166
1			3			TOTAL SHEETS
2			4			176

STR. #6

DRAWN BY : A. SORSENGINH DATE : 6/13/08
CHECKED BY : T. BANKOVICH DATE : 7/08

03-SEP-2008 16:33
r:\structures\finalplans\str #6\R-2301A_sd_E_06.dgn
lmurphy

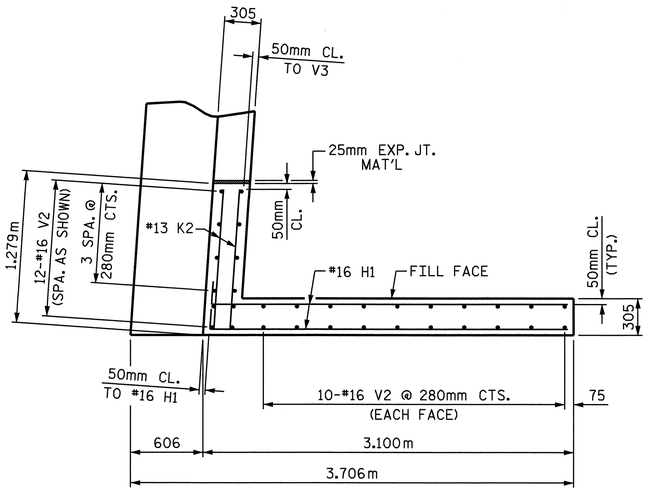

PLAN OF LEFT WING W1

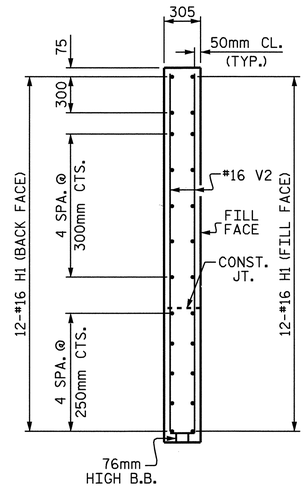

SECTION X-X

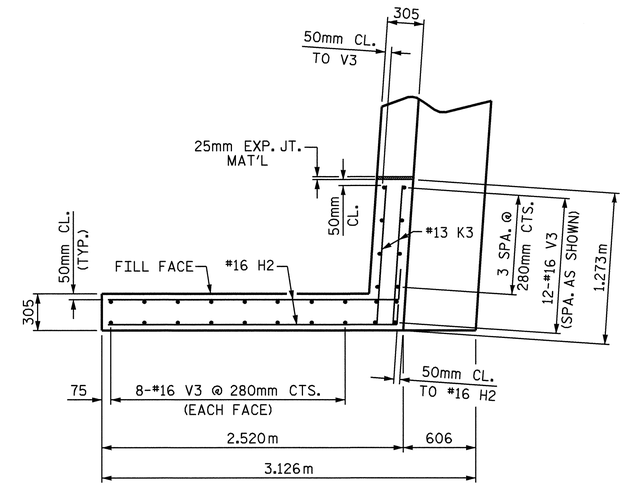

PLAN OF RIGHT WING W2

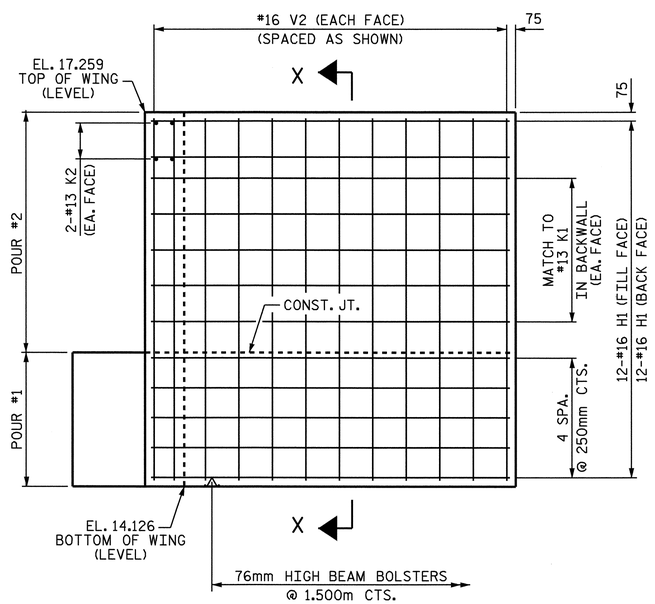

ELEVATION OF LEFT WING W1

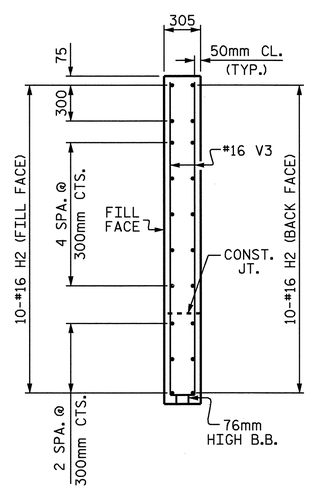

SECTION Y-Y

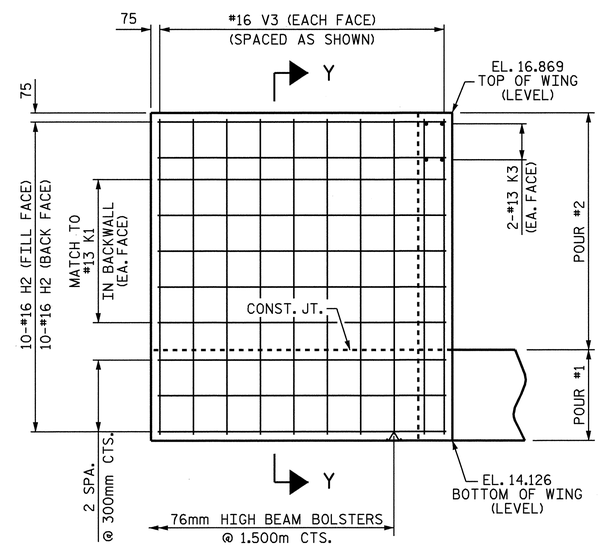

ELEVATION OF RIGHT WING W2

PROJECT NO. R-2301A

JONES/CRAVEN COUNTY

STATION: 96+94.475 -L-

SHEET 2 OF 3

STATE OF NORTH CAROLINA
DEPARTMENT OF TRANSPORTATION
RALEIGH

SUBSTRUCTURE
END BENT No. 1
RIGHT LANE

NORTH CAROLINA PROFESSIONAL SEAL 20125 ENGINEER MARSHALL B. CHEEK, JR.
9-5-08

REVISIONS						SHEET NO.
NO.	BY:	DATE:	NO.	BY:	DATE:	S-167
1			3			TOTAL SHEETS
2			4			176

DRAWN BY : A. SORSENGINH DATE : 6/16/08
CHECKED BY : T. BANKOVICH DATE : 7/08

08-AUG-2008 12:10
r:\structures\asorsenginh\str #6\r-2301a_sd_e_06.dgn
asorsenginh

STR. #6

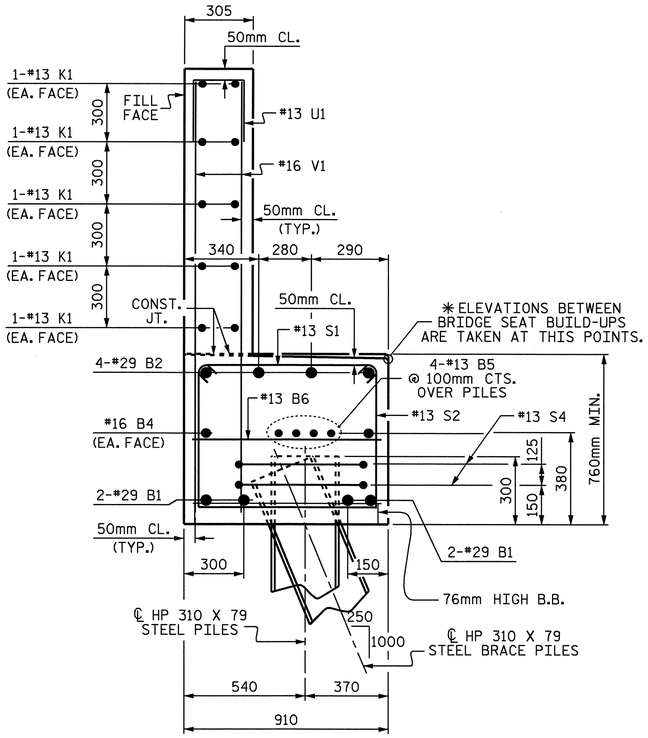

SECTION A-A

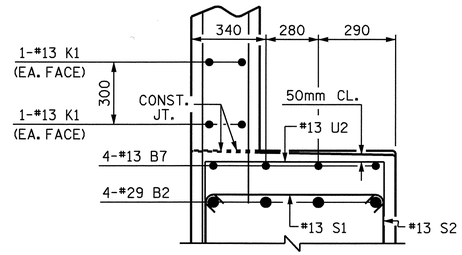

SECTION B-B

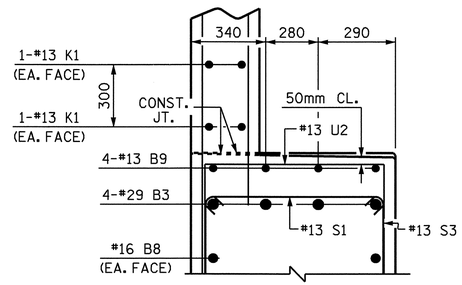

SECTION C-C

BAR TYPES

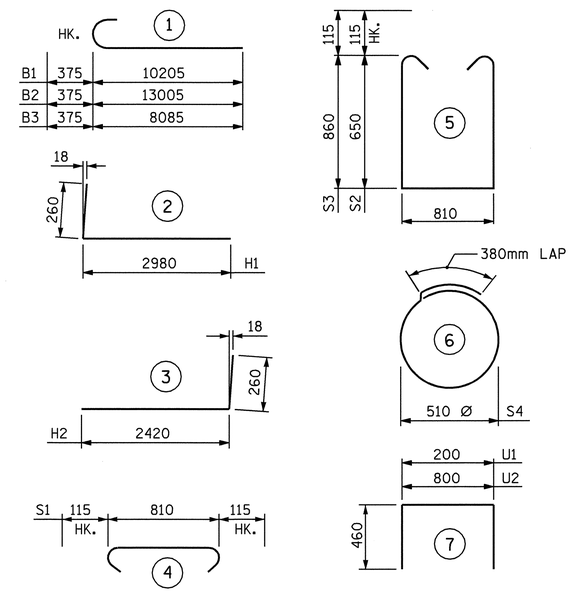

ALL BAR DIMENSIONS ARE OUT TO OUT.

BILL OF MATERIAL
END BENT No. 1

BAR	NO.	SIZE	TYPE	LENGTH	WEIGHT
B1	8	#29	1	10580	428
B2	4	#29	1	13380	271
B3	4	#29	1	8460	171
B4	4	#16	STR	9740	60
B5	12	#13	STR	6680	80
B6	19	#13	STR	800	15
B7	4	#13	STR	3600	14
B8	2	#16	STR	6480	20
B9	4	#13	STR	2300	9
B10	8	#13	STR	680	5
H1	24	#16	2	3240	121
H2	20	#16	3	2680	83
K1	30	#13	STR	6680	199
K2	4	#13	STR	1180	5
K3	4	#13	STR	1160	5
S1	82	#13	4	1040	85
S2	47	#13	5	2340	109
S3	35	#13	5	2760	96
S4	18	#13	6	1980	35
U1	54	#13	7	1120	60
U2	19	#13	7	1720	32
V1	108	#16	STR	2140	359
V2	32	#16	STR	3020	150
V3	28	#16	STR	2640	115

REINFORCING STEEL = 2527 kg

CLASS A CONCRETE
POUR #1
CAP & LOWER WINGS 17.3 CU. METERS
POUR #2
BACKWALL & UPPER WINGS 12.0 CU. METERS
TOTAL
CLASS A CONCRETE 29.3 CU. METERS

HP 310 X 79 STEEL PILES
NO. 9 189.0 METERS

PILE REDRIVES
NO. 4 EA.

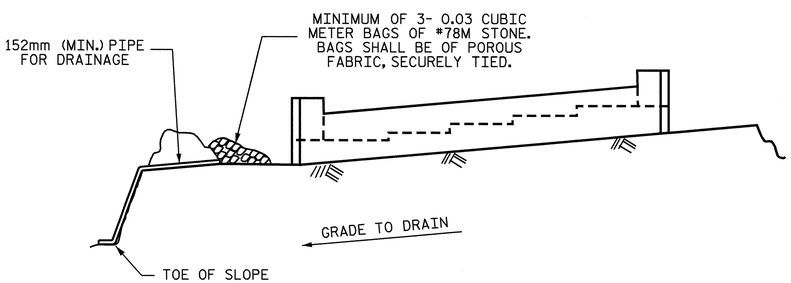

BAGGED STONE AND PIPE SHALL BE PLACED IMMEDIATELY AFTER COMPLETION OF END BENT EXCAVATION. PIPE MAY BE EITHER CONCRETE, CORRUGATED STEEL, CORRUGATED ALUMINUM ALLOY, OR CORRUGATED PLASTIC. PERFORATED PIPE WILL NOT BE ALLOWED.

BAGGED STONE SHALL REMAIN IN PLACE UNTIL THE ENGINEER DIRECTS THAT IT BE REMOVED. THE CONTRACTOR SHALL REMOVE AND DISPOSE OF SILT ACCUMULATIONS AT BAGGED STONE WHEN SO DIRECTED BY THE ENGINEER. BAGS SHALL BE REMOVED AND REPLACED WHENEVER THE ENGINEER DETERMINES THAT THEY HAVE DETERIORATED AND LOST THEIR EFFECTIVENESS.

NO SEPARATE PAYMENT WILL BE MADE FOR THIS WORK AND THE ENTIRE COST OF THIS WORK SHALL BE INCLUDED IN THE UNIT CONTRACT PRICE BID FOR THE SEVERAL PAY ITEMS.

TEMPORARY DRAINAGE AT END BENT

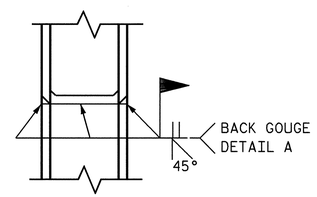

✱PILE VERTICAL

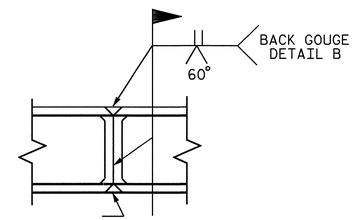

✱PILE HORIZONTAL OR VERTICAL

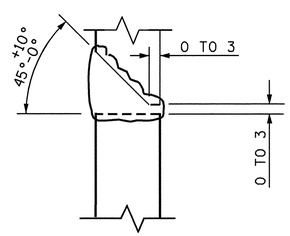

DETAIL A

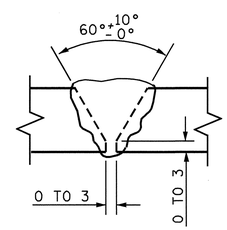

DETAIL B

PILE SPLICE DETAILS

✱POSITION OF PILE DURING WELDING.

NORTH CAROLINA PROFESSIONAL SEAL 20125 ENGINEER MARSHALL L. HODGES, JR.
9-4-08

PROJECT NO. R-2301A
JONES/CRAVEN COUNTY
STATION: 96+94.475 -L-

SHEET 3 OF 3

STATE OF NORTH CAROLINA
DEPARTMENT OF TRANSPORTATION
RALEIGH

SUBSTRUCTURE
END BENT No. 1
RIGHT LANE

REVISIONS						SHEET NO.
NO.	BY:	DATE:	NO.	BY:	DATE:	S-168
1			3			TOTAL SHEETS
2			4			176

DRAWN BY : A. SORSENGINH DATE : 6/16/08
CHECKED BY : T. BANKOVICH DATE : 7/08

03-SEP-2008 16:34
r:\structures\finalplans\str #6\R-2301A_sd_E_06.dgn
lmurphy

STR. #6

NOTES

STIRRUPS IN CAP MAY BE SHIFTED AS NECESSARY TO CLEAR ANCHOR BOLTS.

HOOKS ON "V" BARS MAY BE TURNED AS NECESSARY FOR PLACING REINFORCING STEEL.

FOR PILE SPLICE DETAILS, SEE END BENT SHEETS.

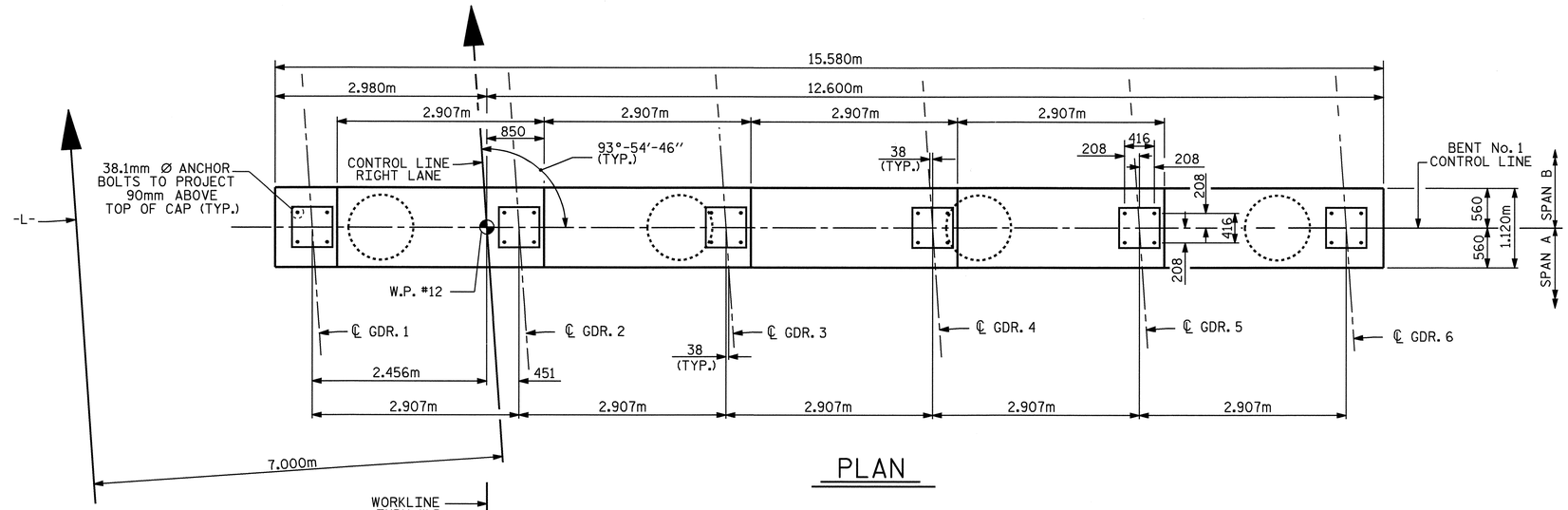

PLAN

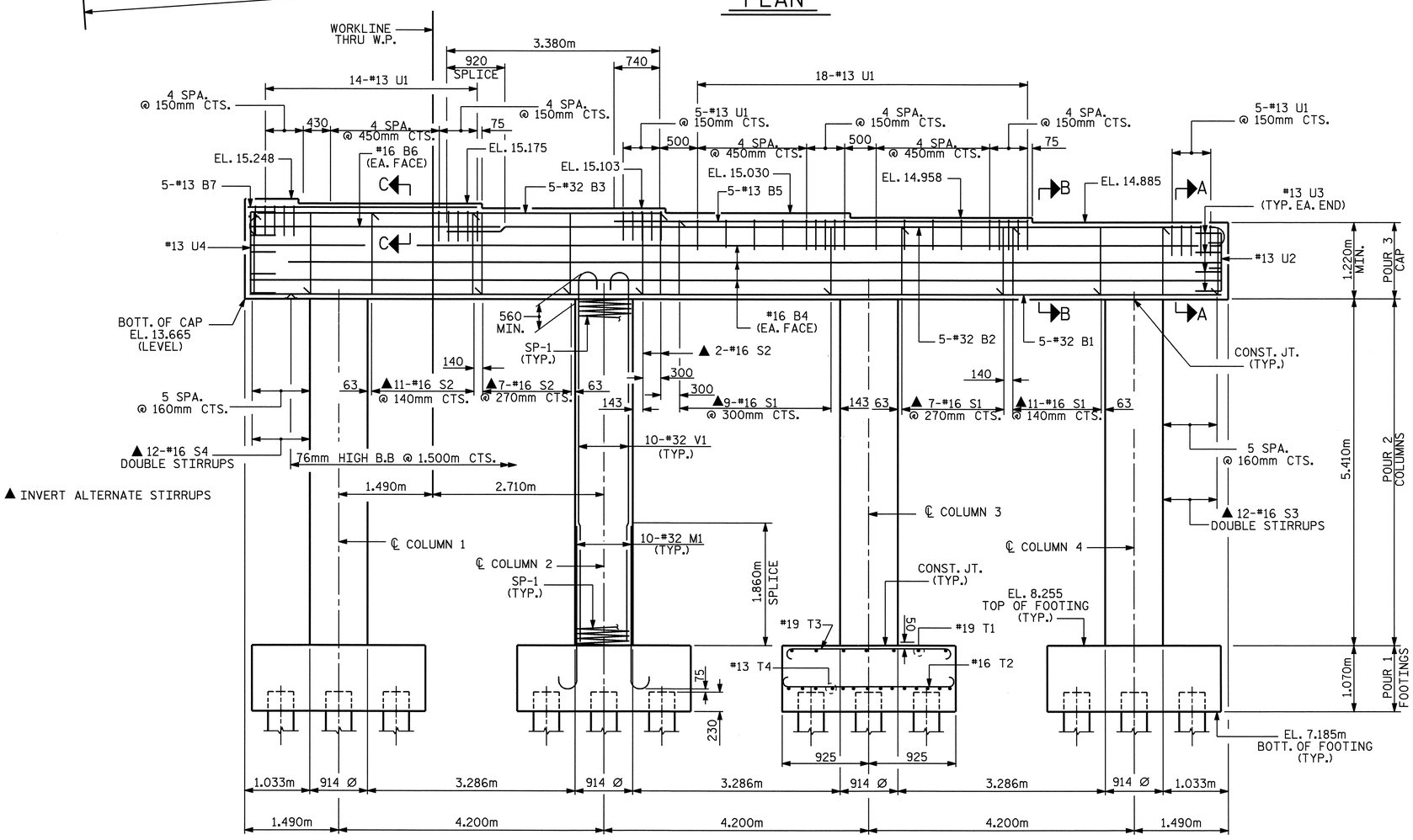

ELEVATION

DIMENSIONS AND REINFORCING STEEL ARE TYPICAL FOR EACH COLUMN AND FOOTING

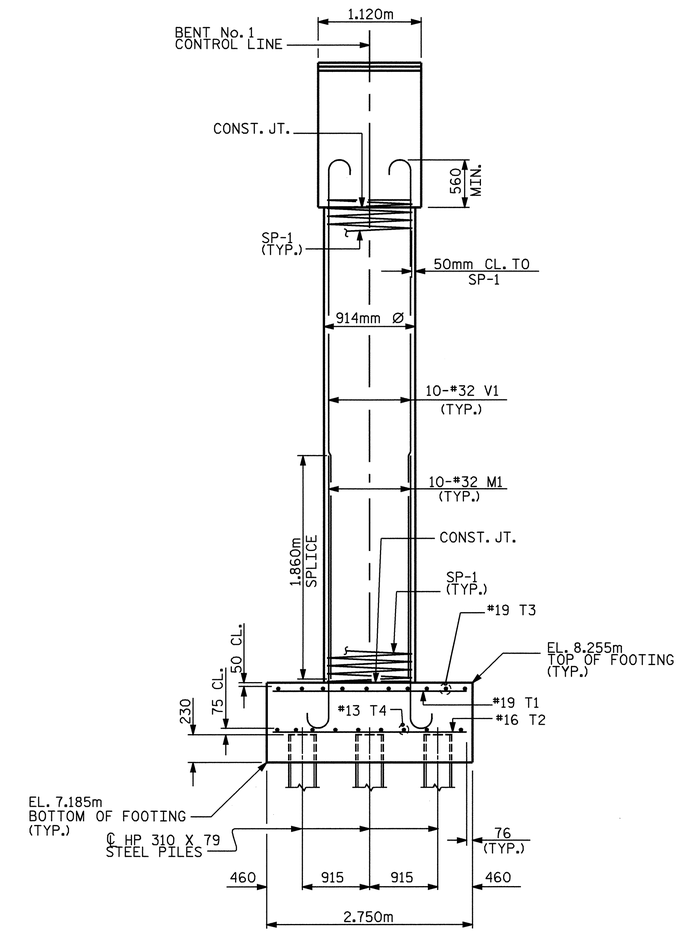

END ELEVATION

PROJECT NO. R-2301A

JONES/CRAVEN COUNTY

STATION: 96+94.475 -L-

SHEET 1 OF 2

STATE OF NORTH CAROLINA
DEPARTMENT OF TRANSPORTATION
RALEIGH

SUBSTRUCTURE
BENT No. 1
RIGHT LANE

NORTH CAROLINA PROFESSIONAL SEAL 20125 ENGINEER MARSHALL G. CHEEK, JR.
9-8-08

REVISIONS						SHEET NO.
NO.	BY:	DATE:	NO.	BY:	DATE:	S-169
1			3			TOTAL SHEETS
2			4			176

DRAWN BY : M. POOLE DATE : 07-08
CHECKED BY : M. G. CHEEK DATE : 07-08

08-SEP-2008 08:36
r:\structures\finalplans\str #6\r2301a_sd_bl_06.dgn
dahodge

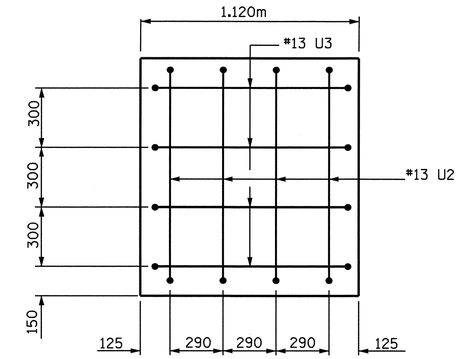

END OF CAP ELEVATION

LEFT SIDE

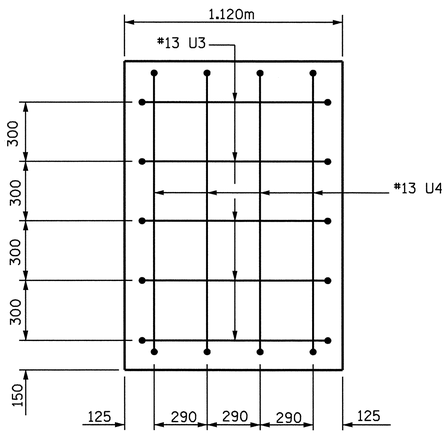

END OF CAP ELEVATION

RIGHT SIDE

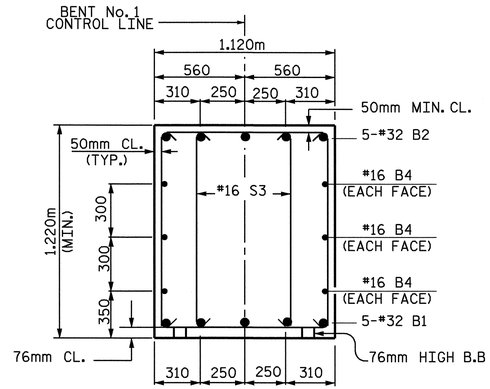

SECTION A-A

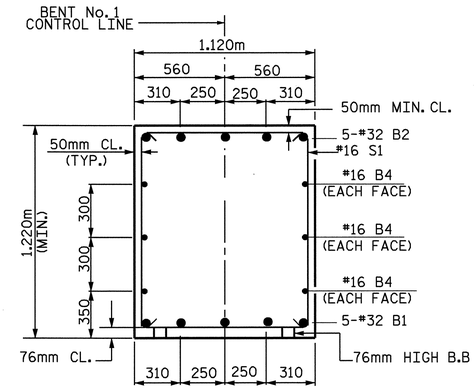

SECTION B-B

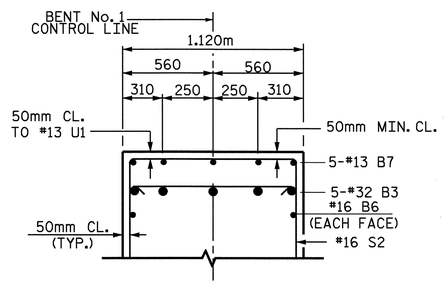

SECTION C-C

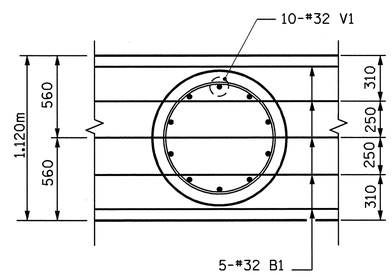

BOTTOM OF CAP

BAR TYPES

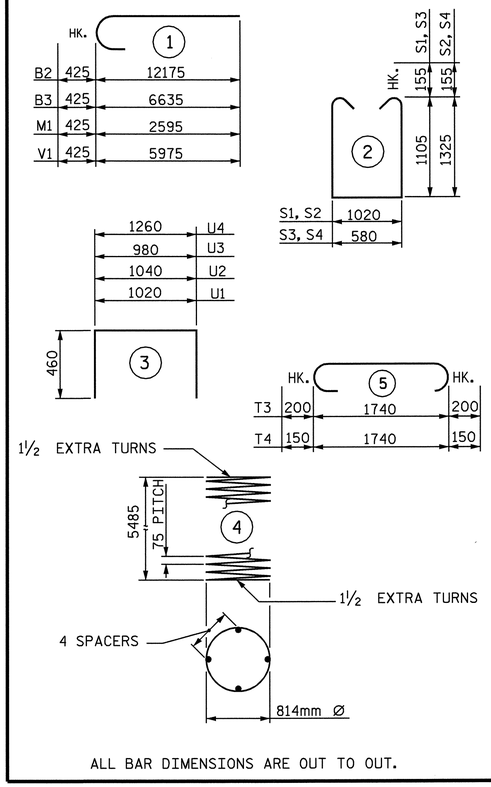

ALL BAR DIMENSIONS ARE OUT TO OUT.

✱✱✱ THE SP-1 SPIRAL REINFORCING STEEL SHALL BE W20 OR D-20 COLD DRAWN WIRE OR #13 PLAIN OR DEFORMED BAR.

BILL OF MATERIAL

BENT No. 1

BAR	NO.	SIZE	TYPE	LENGTH	WEIGHT
B1	5	32	STR	15480	496
B2	5	32	1	12600	403
B3	5	32	1	7060	226
B4	6	16	STR	15480	144
B5	5	13	STR	6520	32
B6	2	16	STR	4240	13
B7	5	13	STR	3720	18
M1	40	32	1	3020	774
S1	27	16	2	3540	148
S2	20	16	2	3980	124
S3	12	16	2	3280	61
S4	12	16	2	3720	69
T1	28	19	STR	2640	165
T2	56	16	STR	2640	229
T3	40	19	5	2140	193
T4	36	13	5	2040	73
U1	42	13	3	1940	81
U2	4	13	3	1960	8
U3	9	13	3	1900	17
U4	4	13	3	2180	9
V1	40	32	1	6400	1639
REINFORCING STEEL					4922 kg

BAR	NO.	SIZE	TYPE	LENGTH	WEIGHT
SP-1	4	✱✱✱	4	184410	733
TOTAL SPIRAL COLUMN REINFORCING STEEL					733 kg

CLASS A CONCRETE BREAKDOWN

POUR #1 (FOOTINGS)	21.8 CU. METERS
POUR #2 (COLUMNS)	14.2 CU. METERS
POUR #3 (CAP)	24.1 CU. METERS
TOTAL	60.1 CU. METERS

HP 310 X 79 STEEL PILES
No. 24 456.0 METERS

PILE REDRIVES
No. 4 EACH

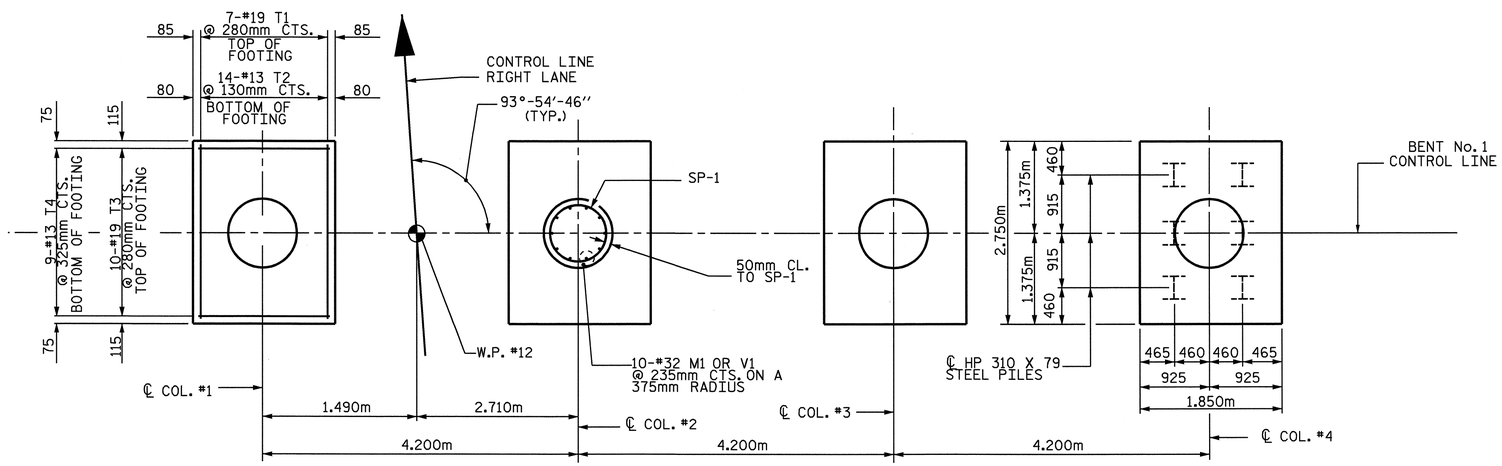

PLAN OF FOOTINGS

ALL FOOTINGS ARE TYPICAL

PROJECT NO. R-2301A
JONES/CRAVEN COUNTY
STATION: 96+94.475 -L-

SHEET 2 OF 2

STATE OF NORTH CAROLINA
DEPARTMENT OF TRANSPORTATION
RALEIGH

SUBSTRUCTURE
BENT No. 1
RIGHT LANE

NORTH CAROLINA PROFESSIONAL SEAL 20125 ENGINEER MARSHALL G. CHEEK, JR.
9-8-08

REVISIONS								SHEET NO.
NO.	BY:	DATE:	NO.	BY:	DATE:			S-170
1			3					TOTAL SHEETS
2			4					176

DRAWN BY : M. POOLE DATE : 07-08
CHECKED BY : M. G. CHEEK DATE : 07-08

05-SEP-2008 14:51
r:\structures\finalplans\Str #6\R2301A_sd_Bl_06.dgn
lmurphy

STR. #6

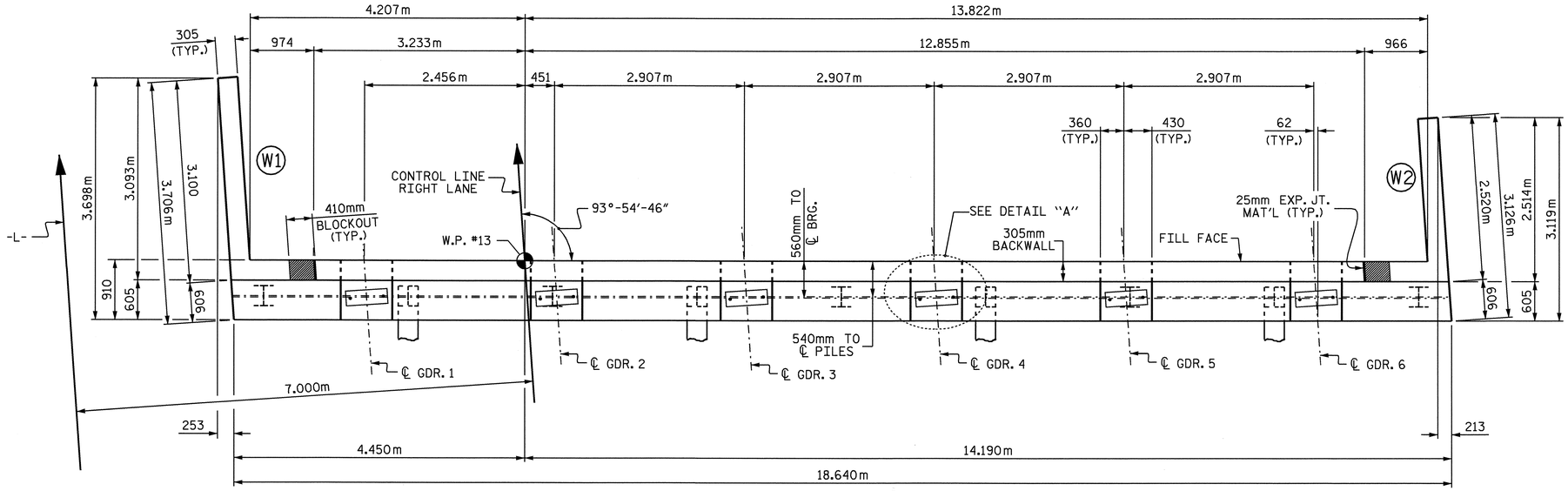

PLAN

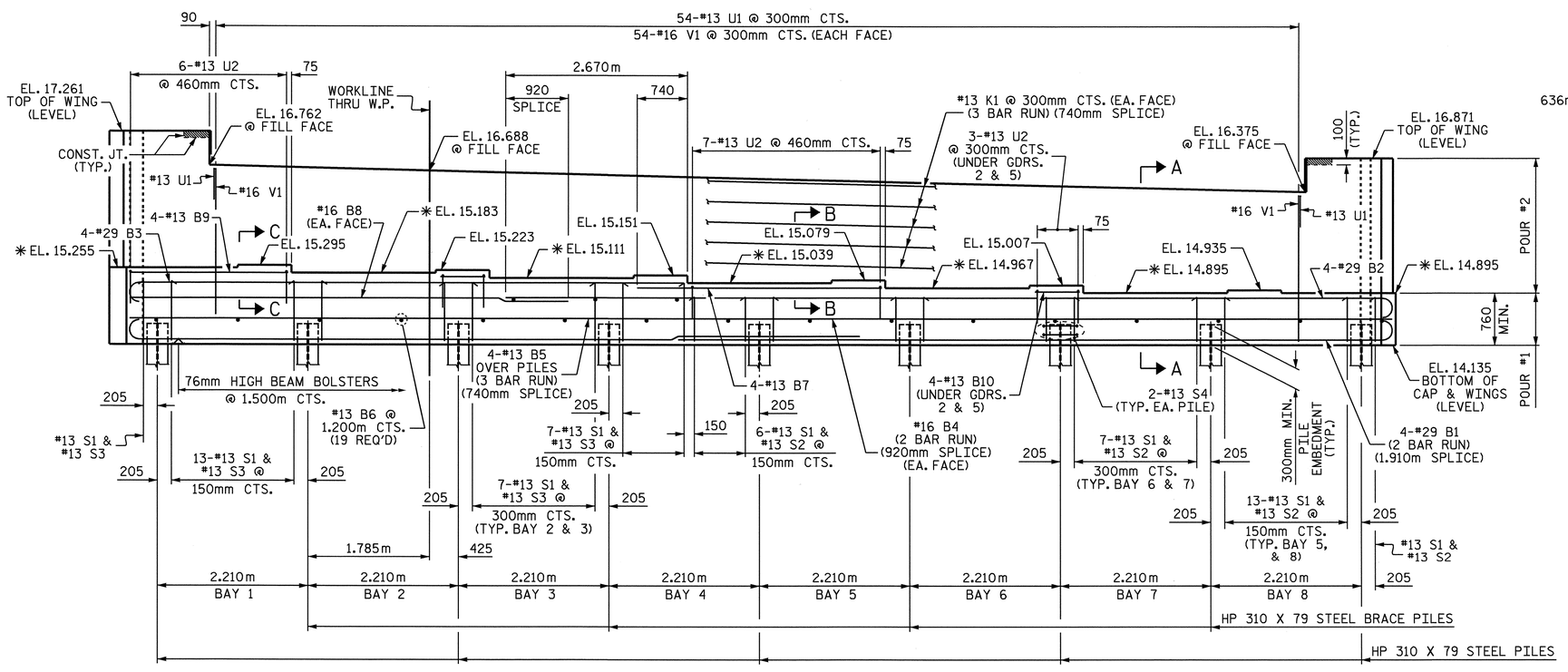

ELEVATION

✱ FOR LOCATION OF ELEVATIONS BETWEEN BRIDGE SEAT BUILD-UPS, SEE SECTION VIEWS, SHEET 3 OF 3.

NOTES

STIRRUPS IN CAP MAY BE SHIFTED AS NECESSARY TO CLEAR ANCHOR BOLTS.

THE CONTRACTOR SHALL PROVIDE FOR INSTALLATION OF THE 102mm DIAMETER DRAIN PIPE THROUGH THE WING WALL AS REQUIRED FOR REINFORCED BRIDGE APPROACH FILLS, SEE THE ROADWAY PLANS. REINFORCING STEEL IN THE WING WALL MAY BE SHIFTED AS NECESSARY TO CLEAR THE DRAIN PIPE.

THE TOP SURFACE AREAS OF THE END BENT CAPS SHALL BE CURED IN ACCORDANCE WITH THE STANDARD SPECIFICATIONS EXCEPT THE MEMBRANE CURING COMPOUND METHOD SHALL NOT BE USED.

THE TOP SURFACE OF THE CAP EXCEPT THE BRIDGE SEAT BUILDUPS SHALL BE SLOPED TRANSVERSELY FROM THE FILL FACE TO THE BACK FACE AT THE RATE OF 2%.

BACKWALL SHALL BE PLACED BEFORE APPLYING THE EPOXY PROTECTIVE COATING.

EPOXY COAT THE END BENT CAP AFTER ADJUSTMENTS ARE MADE TO BEARINGS AND ANCHOR BOLTS ARE GROUTED.

THE #16 V1 BARS IN THE BACKWALL SHALL BE PLACED 50mm CLEAR FROM THE TOP OF THE BACKWALL.

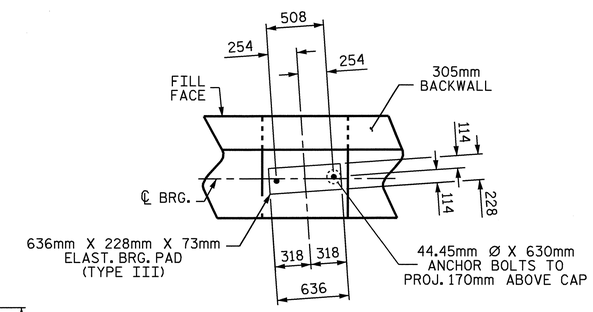

DETAIL "A"

(TYP. EA. GIRDER)

PROJECT NO. R-2301A

JONES/CRAVEN COUNTY

STATION: 96+94.475 -L-

SHEET 1 OF 3

STATE OF NORTH CAROLINA
DEPARTMENT OF TRANSPORTATION
RALEIGH

SUBSTRUCTURE
END BENT No. 2
RIGHT LANE

NORTH CAROLINA PROFESSIONAL SEAL 20125 ENGINEER MARSHALL D. OWEN, JR.
9-4-08

REVISIONS						SHEET NO.
NO.	BY:	DATE:	NO.	BY:	DATE:	S-171
1			3			TOTAL SHEETS
2			4			176

DRAWN BY : A. SORSENGINH DATE : 6/18/08
CHECKED BY : T. BANKOVICH DATE : 7/08

03-SEP-2008 16:35
r:\structures\finalplans\str #6\R-2301A_sd_E_06.dgn
lmurphy

STR. #6

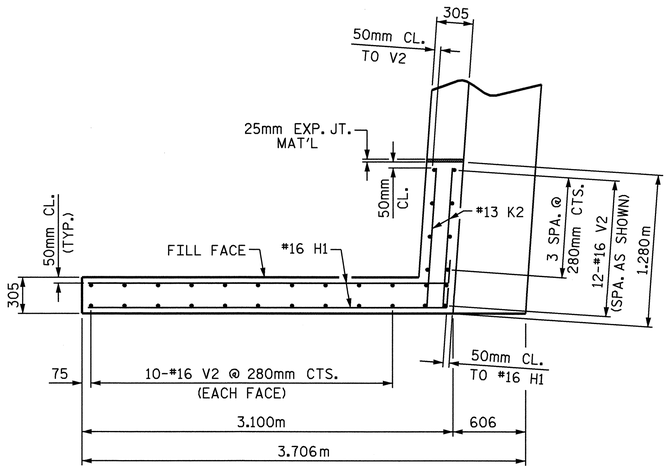

PLAN OF LEFT WING W1

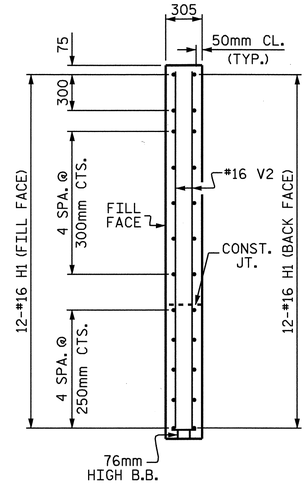

SECTION X-X

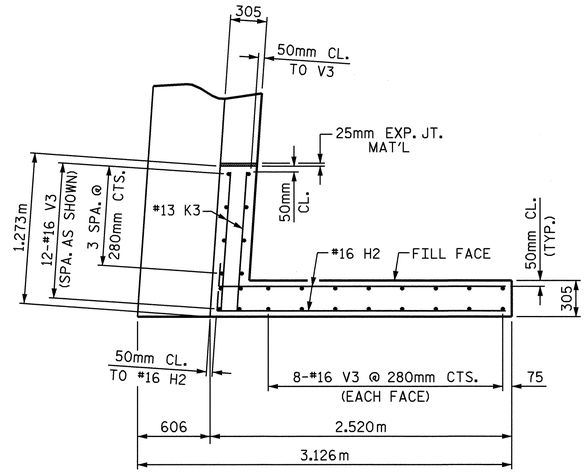

PLAN OF RIGHT WING W2

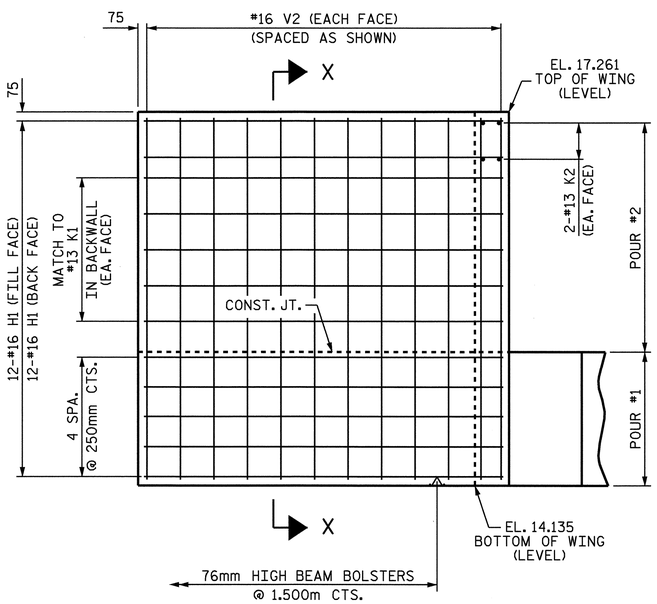

ELEVATION OF LEFT WING W1

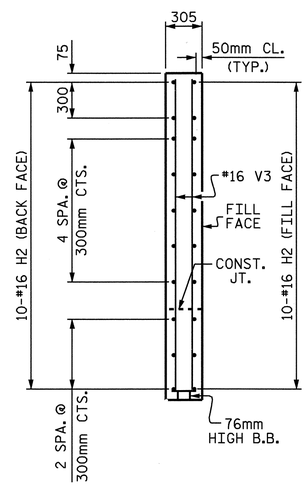

SECTION Y-Y

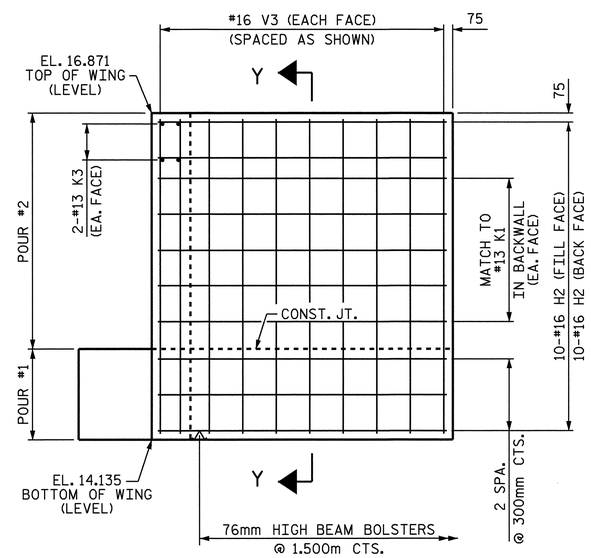

ELEVATION OF RIGHT WING W2

PROJECT NO. R-2301A
JONES/CRAVEN COUNTY
STATION: 96+94.475 -L-

SHEET 2 OF 3

STATE OF NORTH CAROLINA
DEPARTMENT OF TRANSPORTATION
RALEIGH

SUBSTRUCTURE
END BENT No. 2
RIGHT LANE

NORTH CAROLINA PROFESSIONAL SEAL 20125 ENGINEER MARSHALL G. HEEL, JR.
9-5-08

REVISIONS						SHEET NO.
NO.	BY:	DATE:	NO.	BY:	DATE:	S-172
1			3			TOTAL SHEETS
2			4			176

DRAWN BY : A. SORSENGINH DATE : 6/18/08
CHECKED BY : T. BANKOVICH DATE : 7/08

08-AUG-2008 12:09
r:\structures\asorsenginh\str #6\r-2301a_sd_e_06.dgn
asorsenginh

STR. #6

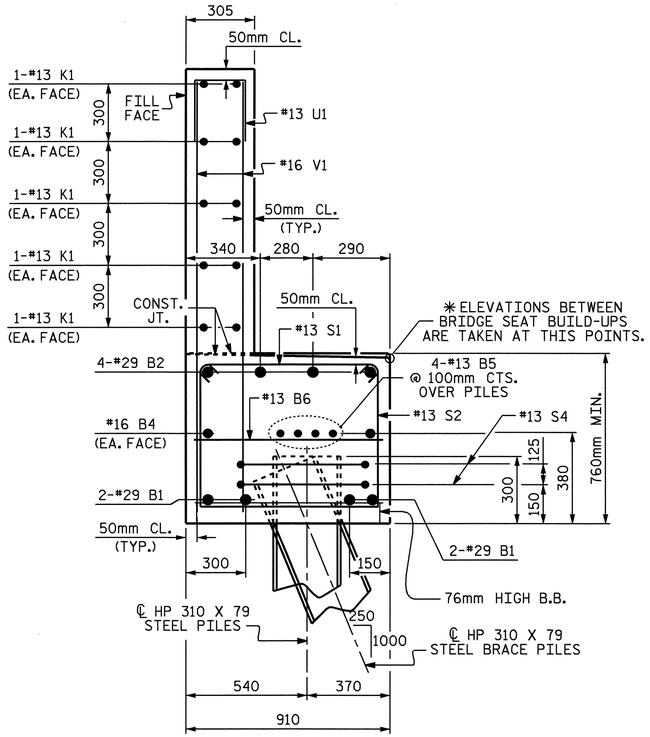

SECTION A-A

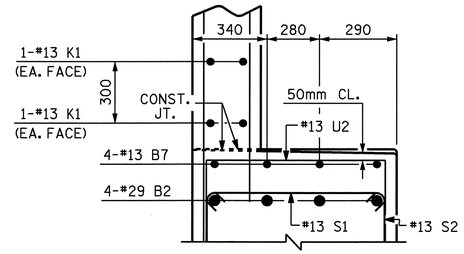

SECTION B-B

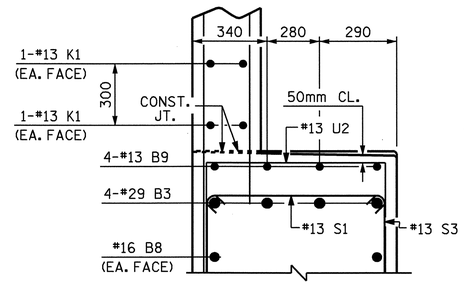

SECTION C-C

BAR TYPES

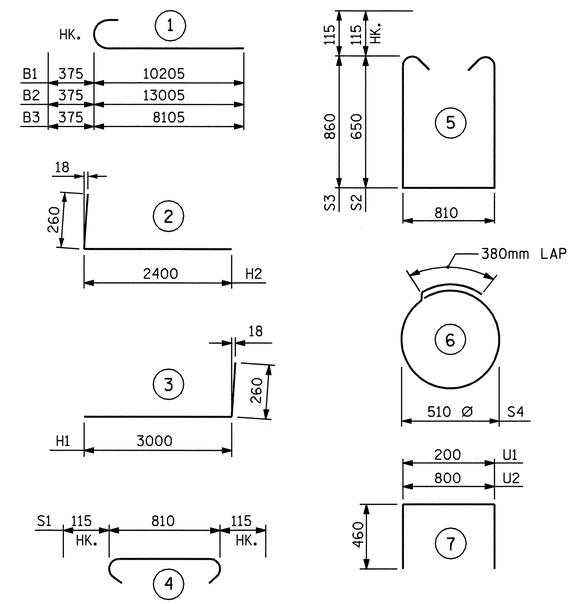

ALL BAR DIMENSIONS ARE OUT TO OUT.

BILL OF MATERIAL
END BENT No. 2

BAR	NO.	SIZE	TYPE	LENGTH	WEIGHT
B1	8	#29	1	10580	428
B2	4	#29	1	13380	271
B3	4	#29	1	8480	172
B4	4	#16	STR	9740	60
B5	12	#13	STR	6680	80
B6	19	#13	STR	800	15
B7	4	#13	STR	3600	14
B8	2	#16	STR	6480	20
B9	4	#13	STR	2300	9
B10	8	#13	STR	680	5
H1	24	#16	3	3260	121
H2	20	#16	2	2660	83
K1	30	#13	STR	6680	199
K2	4	#13	STR	1180	5
K3	4	#13	STR	1160	5
S1	82	#13	4	1040	85
S2	47	#13	5	2340	109
S3	35	#13	5	2760	96
S4	18	#13	6	1980	35
U1	54	#13	7	1120	60
U2	19	#13	7	1720	32
V1	108	#16	STR	2140	359
V2	32	#16	STR	3020	150
V3	28	#16	STR	2640	115

REINFORCING STEEL = 2528 kg

CLASS A CONCRETE
POUR #1
CAP & LOWER WINGS 17.2 CU. METERS
POUR #2
BACKWALL & UPPER WINGS 12.0 CU. METERS
TOTAL
CLASS A CONCRETE 29.2 CU. METERS

HP 310 X 79 STEEL PILES
NO. 9 225.0 METERS

PILE REDRIVES
NO. 4 EA.

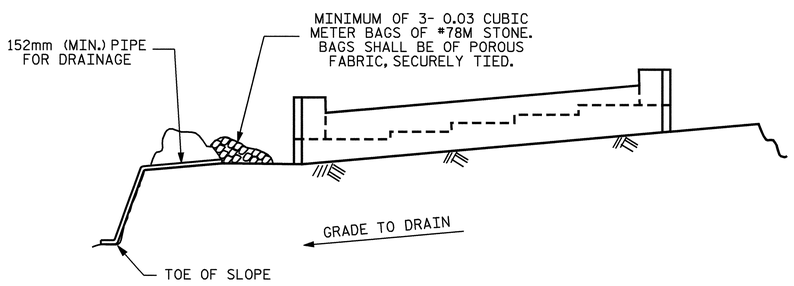

BAGGED STONE AND PIPE SHALL BE PLACED IMMEDIATELY AFTER COMPLETION OF END BENT EXCAVATION. PIPE MAY BE EITHER CONCRETE, CORRUGATED STEEL, CORRUGATED ALUMINUM ALLOY, OR CORRUGATED PLASTIC. PERFORATED PIPE WILL NOT BE ALLOWED.

BAGGED STONE SHALL REMAIN IN PLACE UNTIL THE ENGINEER DIRECTS THAT IT BE REMOVED. THE CONTRACTOR SHALL REMOVE AND DISPOSE OF SILT ACCUMULATIONS AT BAGGED STONE WHEN SO DIRECTED BY THE ENGINEER. BAGS SHALL BE REMOVED AND REPLACED WHENEVER THE ENGINEER DETERMINES THAT THEY HAVE DETERIORATED AND LOST THEIR EFFECTIVENESS.

NO SEPARATE PAYMENT WILL BE MADE FOR THIS WORK AND THE ENTIRE COST OF THIS WORK SHALL BE INCLUDED IN THE UNIT CONTRACT PRICE BID FOR THE SEVERAL PAY ITEMS.

TEMPORARY DRAINAGE AT END BENT

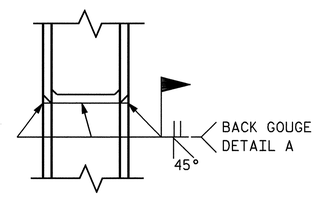

*PILE VERTICAL

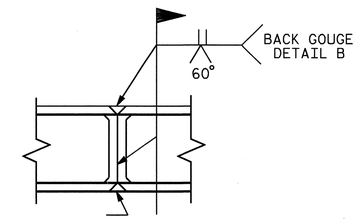

*PILE HORIZONTAL OR VERTICAL

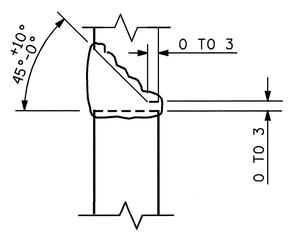

DETAIL A

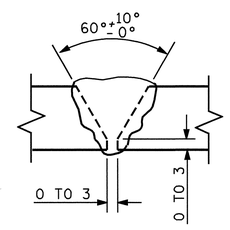

DETAIL B

PILE SPLICE DETAILS

*POSITION OF PILE DURING WELDING.

PROJECT NO. R-2301A
JONES/CRAVEN COUNTY
STATION: 96+94.475 -L-

SHEET 3 OF 3

STATE OF NORTH CAROLINA
DEPARTMENT OF TRANSPORTATION
RALEIGH

SUBSTRUCTURE
END BENT No. 2
RIGHT LANE

NORTH CAROLINA PROFESSIONAL SEAL 20125 ENGINEER
MARSHALL L. CREEK, JR.
9-5-08

REVISIONS						SHEET NO.
NO.	BY:	DATE:	NO.	BY:	DATE:	S-173
1			3			TOTAL SHEETS
2			4			176

DRAWN BY : A. SORSENGINH DATE : 6/19/08
CHECKED BY : T. BANKOVICH DATE : 7/08

05-SEP-2008 09:53
r:\structures\finalplans\str #6\r-2301a_sd_e_06.dgn
dahodge

STR. #6

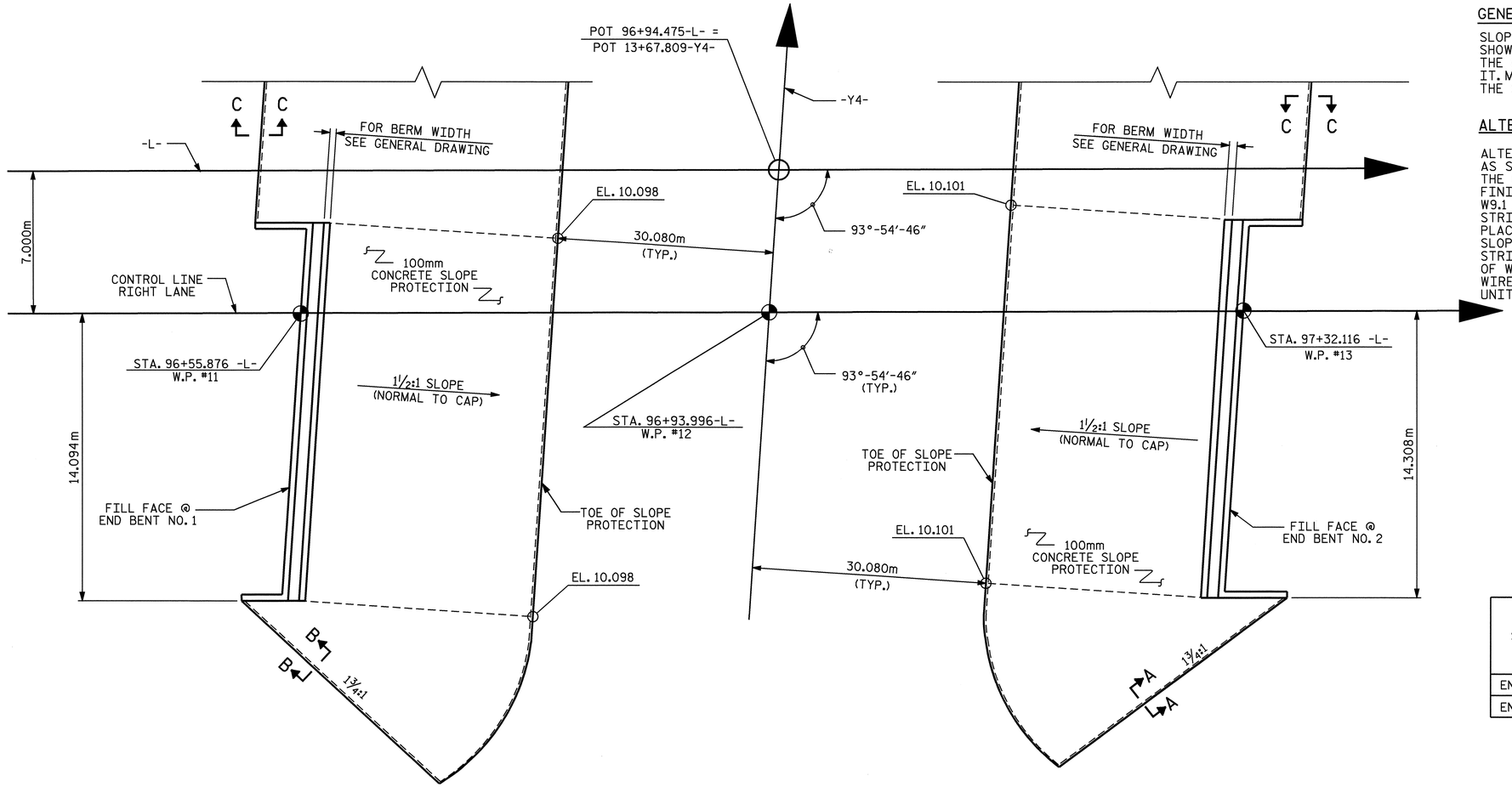

PLAN OF SLOPE PROTECTION

GENERAL NOTES

SLOPE PROTECTION SHALL BE PLACED UNDER THE ENDS OF THE BRIDGE AS SHOWN IN THE DETAILS. STRAIGHT EDGING WILL NOT BE REQUIRED UNLESS, IN THE OPINION OF THE ENGINEER, VISUAL INSPECTION INDICATES A NEED FOR IT. MEASUREMENT AND PAYMENT SHALL BE AS PRESCRIBED IN SECTION 462 OF THE STANDARD SPECIFICATIONS. FOR BERM WIDTH, SEE GENERAL DRAWING.

ALTERNATE "A"

ALTERNATE "A" SHALL CONSIST OF 100mm POURED-IN-PLACE CONCRETE PAVING AS SHOWN IN THE DETAILS ON THIS SHEET. CONCRETE SHALL BE CLASS "B". THE CONCRETE SURFACE SHALL BE FLOATED WITH A WOODEN FLOAT AND FINISHED. WELDED WIRE FABRIC REINFORCING SHALL BE 152 X 152 - W9.1 X W9.1, 1520mm WIDE. SLOPE PROTECTION SHALL BE POURED IN 1520mm STRIPS AS SHOWN IN THE "POURING DETAIL" WITH 600mm LONG #13 BARS PLACED ALONG THE SLOPE BETWEEN STRIPS AT 450mm MAXIMUM SPACING. SLOPE PROTECTION MAY BE POURED IN ALTERNATE 1220mm AND 1520mm STRIPS AS SHOWN IN THE "OPTIONAL POURING DETAIL" WITH ADJACENT RUNS OF WELDED WIRE FABRIC LAPPING AT LEAST 152mm. THE COST OF THE WELDED WIRE FABRIC AND #13 BARS, IF USED, SHALLBE INCLUDED IN THE CONTRACT UNIT PRICE BID PER SQUARE METER FOR SLOPE PROTECTION.

BRIDGE @ STA. 96+94.475 -L- (RIGHT LANE)	100mm SLOPE PROTECTION	* WELDED WIRE FABRIC 1520mm WIDE
	SQUARE METERS	APPROX. METERS
END BENT No. 1	281	205
END BENT No. 2	281	205

* QUANTITY SHOWN IS BASED ON 1520mm POURS.

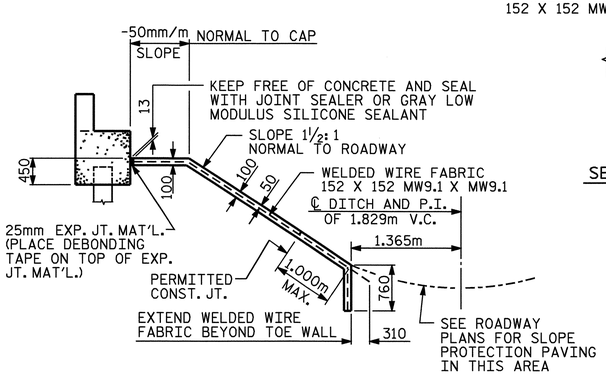

SECTION ALONG ℄ ROADWAY WHEN FILL CATCHES IN DITCH

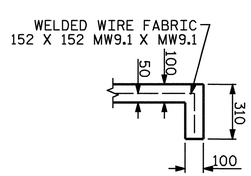

SECTION A-A

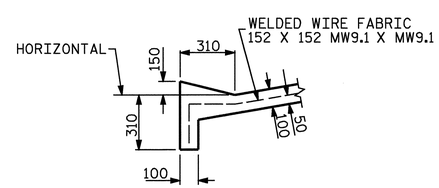

SECTION B-B

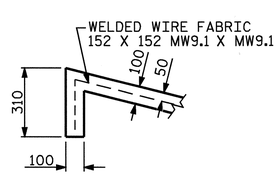

SECTION C-C

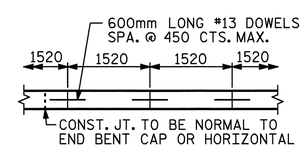

STRIP WIDTHS MAY VARY IN CURVED PORTION.

POURING DETAIL

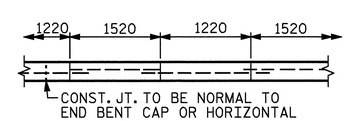

POUR A 1220mm STRIP FIRST. STRIP WIDTHS MAY VARY IN CURVED PORTION.

OPTIONAL POURING DETAIL

PROJECT NO. R-2301A
JONES/CRAVEN COUNTY
STATION: 96+94.475 -L-

STATE OF NORTH CAROLINA
DEPARTMENT OF TRANSPORTATION
RALEIGH

SLOPE PROTECTION

RIGHT LANE

NORTH CAROLINA PROFESSIONAL SEAL 20125 ENGINEER
MARSHALL LICKFIELD JR.
9-5-08

REVISIONS							SHEET NO.
NO.	BY:	DATE:	NO.	BY:	DATE:		S-174
1			3				TOTAL SHEETS
2			4				176

DRAWN BY : R. G. EMERSON DATE : 07/08
CHECKED BY : D. HODGE DATE : 07/08

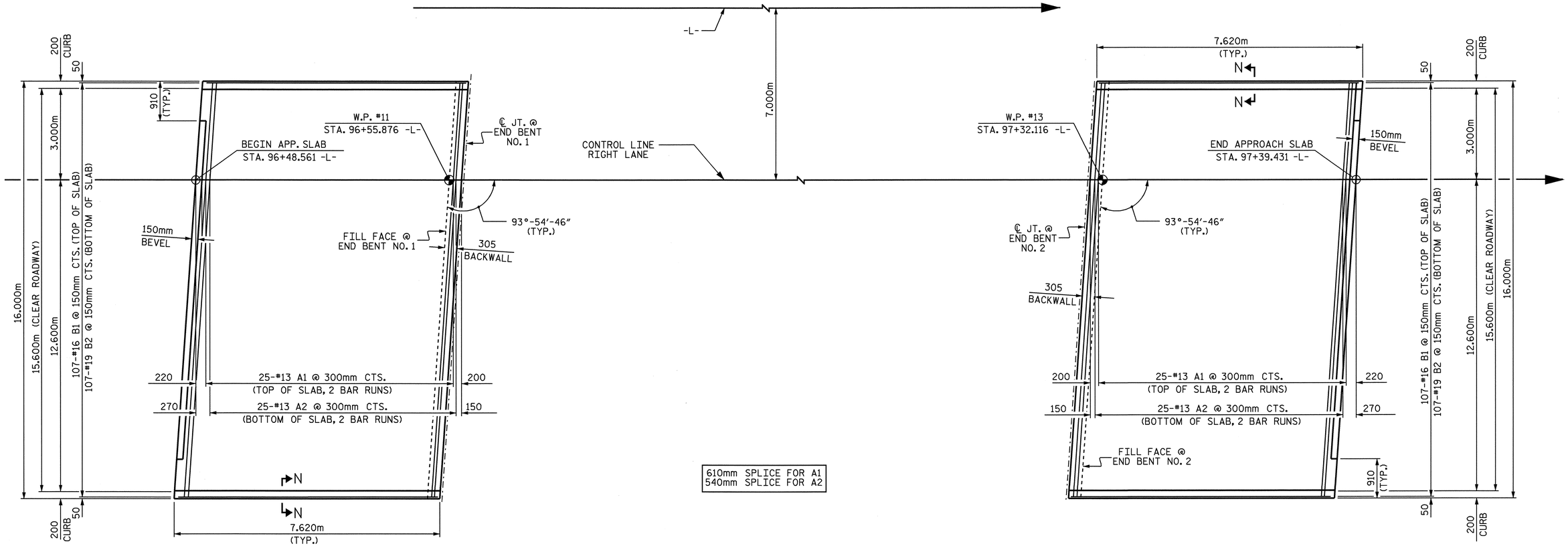

APPROACH SLAB @ END BENT NO. 1

PLAN

APPROACH SLAB @ END BENT NO. 2

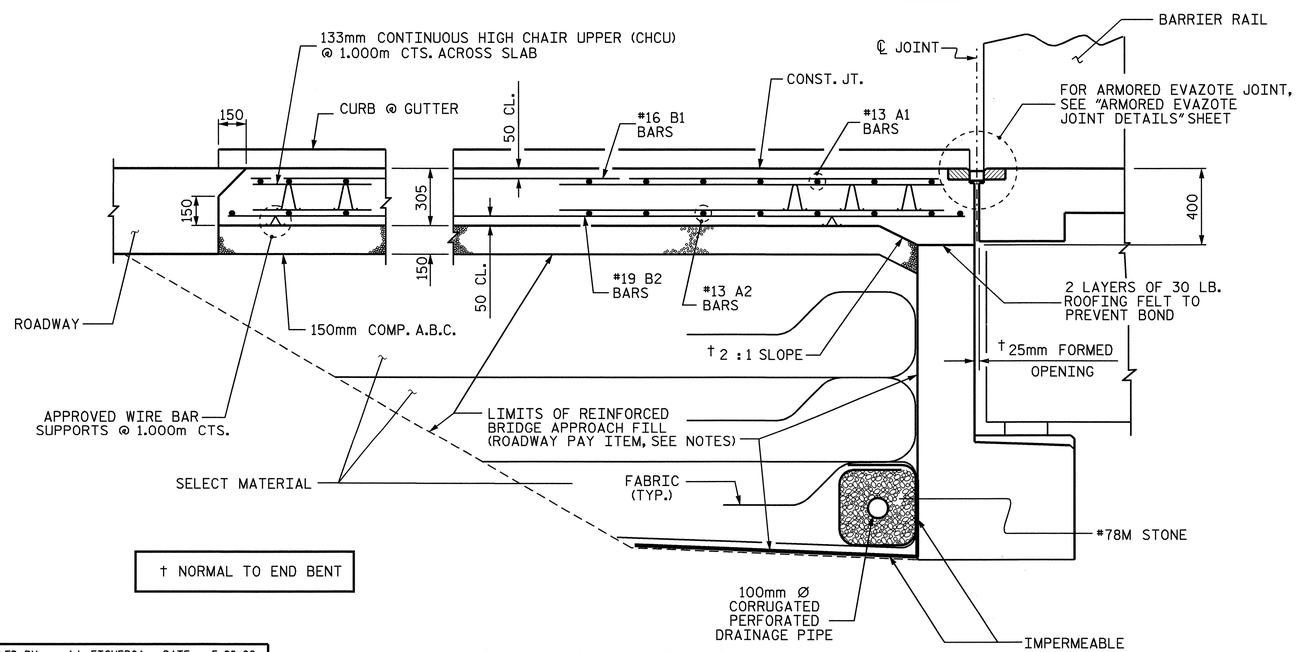

† NORMAL TO END BENT

SECTION THRU SLAB

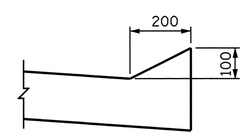

SECTION N-N

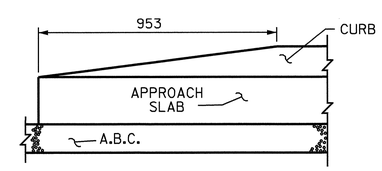

END OF CURB WITHOUT SHOULDER BERM GUTTER

PROJECT NO. R-2301A
JONES/CRAVEN COUNTY
STATION: 96+94.475 -L-

SHEET 1 OF 2

STATE OF NORTH CAROLINA
DEPARTMENT OF TRANSPORTATION
RALEIGH

BRIDGE APPROACH SLAB FOR FLEXIBLE PAVEMENT

RIGHT LANE

NORTH CAROLINA PROFESSIONAL SEAL 20125 ENGINEER MARSHALL G. CHEEK, JR. 9-3-08

ASSEMBLED BY : A.L. FIGUEROA	DATE : 5-28-08
CHECKED BY : M.G. CHEEK	DATE : 6-25-08

DRAWN BY : FCJ 6/87	REV. 7/10/01 RWW/LES
CHECKED BY : EGA 6/87	REV. 5/7/03R RWW/JTE
	REV. 5/1/06R KMM/GM

REVISIONS								SHEET NO.
NO.	BY:	DATE:	NO.	BY:	DATE:			S-175
1			3					TOTAL SHEETS
2			4					176

STR. #6 STD. NO. BAS4SM

24-JUL-2008 16:07
R:\Structures\AL Figueroa\Microstation\R-2301A_sd_STR*6-16_AS-S175&176.dgn
afigueroa

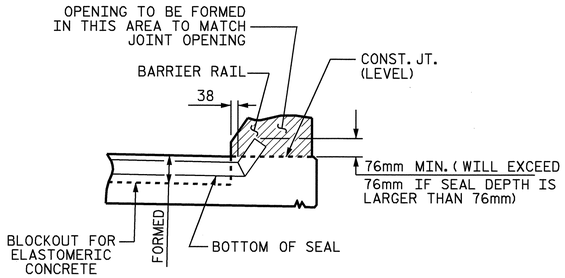

SECTION A-A

EVAZOTE JOINT SEAL TO BE CUT, HEAT WELDED AND TURNED UP PARALLEL TO SLOPED FACE OF THE BARRIER RAIL.

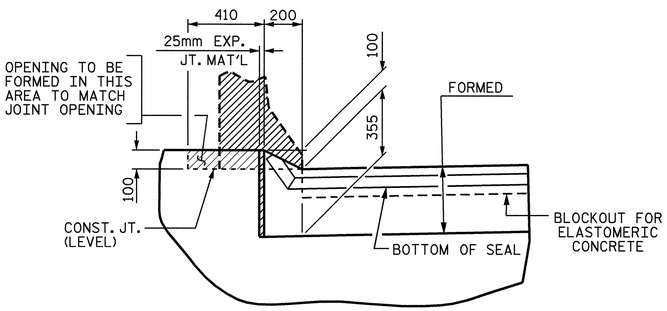

SECTION B-B

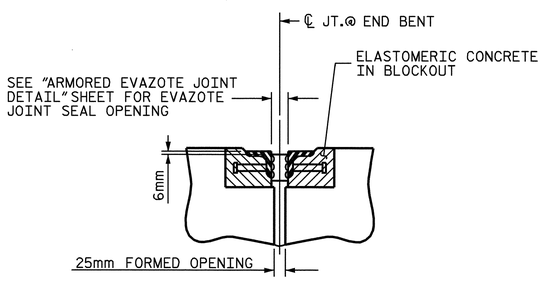

SECTION C-C

ARMORED EVAZOTE JOINT SEAL

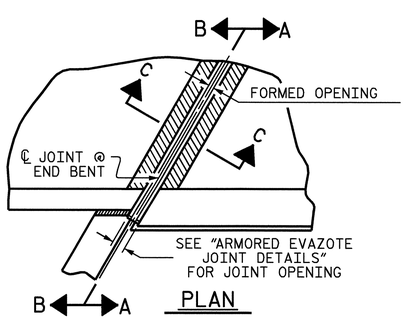

PLAN

JOINT SEAL DETAILS @ END BENT

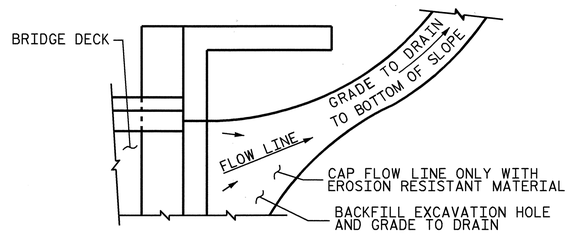

NOTE: IF THE APPROACH SLAB IS NOT CONSTRUCTED IMMEDIATELY AFTER THE BACKFILLING OF THE END BENT EXCAVATION, GRADE TO DRAIN TO THE BOTTOM OF THE SLOPE AND PROVIDE EROSION RESISTANT MATERIAL, SUCH AS FIBERGLASS ROVING OR AS DIRECTED BY THE ENGINEER TO PREVENT SOIL EROSION AND TO PROTECT THE AREA ADJACENT TO THE STRUCTURE. THE CONTRACTOR WILL BE REQUIRED TO REMOVE THESE MATERIALS PRIOR TO CONSTRUCTION OF THE APPROACH SLAB.

TEMPORARY DRAINAGE DETAIL

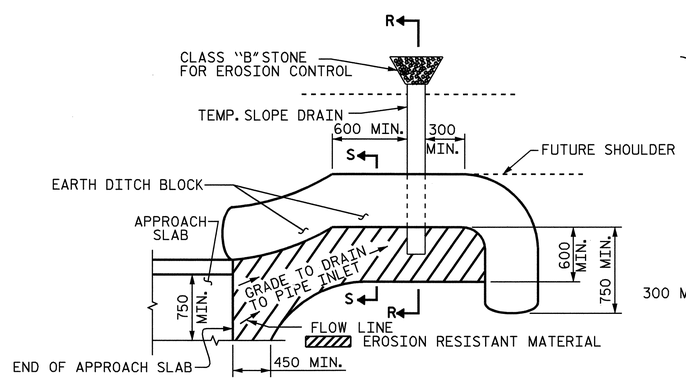

NOTE: IMMEDIATELY AFTER THE CONSTRUCTION OF THE APPROACH SLAB, THE CONTRACTOR SHALL PROVIDE TEMPORARY BERM AND SLOPE DRAIN. CONTRACTOR SHALL GRADE TO PIPE INLET AND PROVIDE EROSION RESISTANT MATERIAL AS SHOWN. THE EROSION RESISTANT MATERIAL SHALL BE EITHER 1) ASPHALT PLANT MIX, TYPE 1 OR TYPE 2, MIN. 50mm DEPTH, 2) EROSION CONTROL MAT, OR 3) CONCRETE, AS DIRECTED BY THE ENGINEER. THE SLOPE DRAIN SHALL CONSIST OF A NON-PERFORATED TEMPORARY DRAINAGE PIPE, 305mm IN DIAMETER.

PLAN VIEW

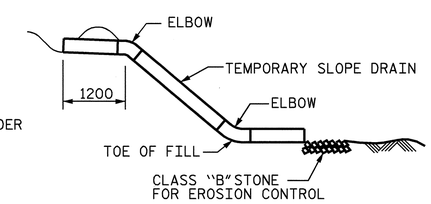

SECTION R-R

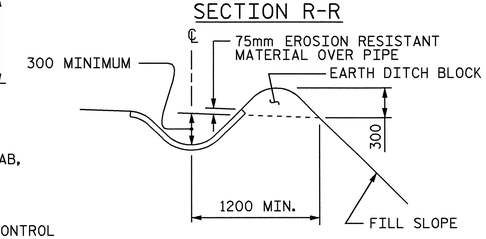

SECTION S-S

TEMPORARY BERM AND SLOPE DRAIN DETAILS

NOTES

APPROACH SLAB SHALL NOT BE CONSTRUCTED PRIOR TO COMPLETION OF THE BRIDGE DECK.

FOR REINFORCED BRIDGE APPROACH FILL INCLUDING FABRIC, IMPERMEABLE GEOMEMBRANE, 102mm Ø DRAINAGE PIPE, #78M STONE, AND SELECT MATERIAL, SEE ROADWAY PLANS.

AREA BETWEEN THE WINGWALL AND APPROACH SLAB SHALL BE GRADED TO DRAIN THE WATER AWAY FROM THE FILL FACE OF THE BRIDGE AND SHALL BE PAVED. SEE ROADWAY PLANS.

THE 150mm COMP. A.B.C. SHALL BE FLUSH WITH THE ROADWAY END OF THE APPROACH SLAB AND SHALL EXTEND 300mm OUTSIDE OF EACH EDGE OF THE APPROACH SLAB.

THE CONTRACTOR MAY USE 100mm TYPE B-25.0B ASPHALT CONCRETE COURSE IN LIEU OF 150mm COMP. A.B.C. IF THIS OPTION IS USED, THE BASE COURSE SHALL BE FLUSH WITH THE ROADWAY END OF THE APPROACH SLAB, AND THE WIDTH SHALL BE THE SAME AS THAT OF THE APPROACH SLAB.

THE CONTRACTOR MAY USE 125mm CLASS "A" CONCRETE BASE IN LIEU OF 150mm COMP. A.B.C. IF THIS OPTION IS USED, THE CONCRETE BASE SHALL BE FLUSH WITH THE ROADWAY END OF THE APPROACH SLAB, AND THE WIDTH SHALL BE THE SAME AS THAT OF THE APPROACH SLAB. THE CONCRETE SHALL BE FINISHED TO A SMOOTH SURFACE AND A LAYER OF 13.6 kg ROOFING FELT SHALL BE PLACED BETWEEN THE CONCRETE BASE AND THE APPROACH SLAB TO PREVENT BOND. THE APPROACH SLAB SHALL NOT BE CAST UNTIL THE CONCRETE BASE HAS REACHED AN AGE OF THREE CURING DAYS.

THE NOMINAL UNCOMPRESSED SEAL WIDTH OF THE EVAZOTE JOINT SEAL SHALL BE 64mm.

FOR EVAZOTE JOINT SEALS, SEE SPECIAL PROVISIONS.

FOR ELASTOMERIC CONCRETE, SEE SPECIAL PROVISIONS.

BILL OF MATERIAL

APPROACH SLAB @ END BENT NO.1

BAR	NO.	SIZE	TYPE	LENGTH	WEIGHT
✱ A1	50	#13	STR	8280	412
A2	50	#13	STR	8240	410
✱ B1	107	#16	STR	7240	1202
B2	107	#19	STR	7520	1798
REINFORCING STEEL				kg	2208
✱ EPOXY COATED REINFORCING STEEL				kg	1614
CLASS AA CONCRETE BREAKDOWN					
SLAB AND CURB CU. METERS					37.8
CLASS AA CONCRETE CU. METERS					37.8

APPROACH SLAB @ END BENT NO.2

BAR	NO.	SIZE	TYPE	LENGTH	WEIGHT
✱ A1	50	#13	STR	8280	412
A2	50	#13	STR	8240	410
✱ B1	107	#16	STR	7240	1202
B2	107	#19	STR	7520	1798
REINFORCING STEEL				kg	2208
✱ EPOXY COATED REINFORCING STEEL				kg	1614
CLASS AA CONCRETE BREAKDOWN					
SLAB AND CURB CU. METERS					37.8
CLASS AA CONCRETE CU. METERS					37.8

✱ THESE BARS ARE EPOXY COATED.

PROJECT NO. R-2301A
JONES/CRAVEN COUNTY
STATION: 96+94.475 -L-

SHEET 2 OF 2

STATE OF NORTH CAROLINA
DEPARTMENT OF TRANSPORTATION
RALEIGH

STANDARD
BRIDGE APPROACH SLAB DETAILS
RIGHT LANE

NORTH CAROLINA PROFESSIONAL SEAL 20125 ENGINEER MARSHALL G. CHEEK, JR.
9-3-08

REVISIONS								SHEET NO.
NO.	BY:	DATE:	NO.	BY:	DATE:			S-176
1			3					TOTAL SHEETS
2			4					176

ASSEMBLED BY : A.L. FIGUEROA		DATE : 5-27-08	
CHECKED BY : M.G. CHEEK		DATE : 6-25-08	
DRAWN BY : FCJ 11/88	REV. 10/17/00	RWW/LES	
CHECKED BY : ARB 11/88	REV. 5/7/03	RWW/JTE	
	REV. 5/1/06	TLA/GM	

02-SEP-2008 14:54
R:\Structures\Final Plans\Str #6\R-2301A_sd_STR#6-16_AS.dgn
aflgueroa

STR. #6 STD. NO. BAS10

STANDARD NOTES

DESIGN DATA:

SPECIFICATIONS	A.A.S.H.T.O. (CURRENT)
LIVE LOAD	SEE PLANS
IMPACT ALLOWANCE	SEE A.A.S.H.T.O.
STRESS IN EXTREME FIBER OF	
STRUCTURAL STEEL - AASHTO M270 GRADE 36	20,000 LBS. PER SQ. IN.
- AASHTO M270 GRADE 50W	27,000 LBS. PER SQ. IN.
- AASHTO M270 GRADE 50	27,000 LBS. PER SQ. IN.
REINFORCING STEEL IN TENSION	
GRADE 60	24,000 LBS. PER SQ. IN.
CONCRETE IN COMPRESSION	1,200 LBS. PER SQ. IN.
CONCRETE IN SHEAR	SEE A.A.S.H.T.O.
STRUCTURAL TIMBER - TREATED OR	
UNTREATED - EXTREME FIBER STRESS	1,800 LBS. PER SQ. IN.
COMPRESSION PERPENDICULAR TO GRAIN OF TIMBER	375 LBS. PER SQ. IN.
EQUIVALENT FLUID PRESSURE OF EARTH	30 LBS. PER CU. FT. (MINIMUM)

MATERIAL AND WORKMANSHIP:

EXCEPT AS MAY OTHERWISE BE SPECIFIED ON PLANS OR IN THE SPECIAL PROVISIONS, ALL MATERIAL AND WORKMANSHIP SHALL BE IN ACCORDANCE WITH THE 2006 "STANDARD SPECIFICATIONS FOR ROADS AND STRUCTURES" OF THE N. C. DEPARTMENT OF TRANSPORTATION.

STEEL SHEET PILING FOR PERMANENT OR TEMPORARY APPLICATIONS SHALL BE HOT ROLLED.

CONCRETE:

UNLESS OTHERWISE REQUIRED ON PLANS, CLASS A CONCRETE SHALL BE USED FOR ALL PORTIONS OF ALL STRUCTURES WITH THE EXCEPTION THAT: CLASS AA CONCRETE SHALL BE USED IN BRIDGE SUPERSTRUCTURES, ABUTMENT BACKWALLS, AND APPROACH SLABS; AND CLASS B CONCRETE SHALL BE USED FOR SLOPE PROTECTION AND RIP RAP.

CONCRETE CHAMFERS:

UNLESS OTHERWISE NOTED ON THE PLANS, ALL EXPOSED CORNERS ON STRUCTURES SHALL BE CHAMFERED 3/4" WITH THE FOLLOWING EXCEPTIONS: TOP CORNERS OF CURBS MAY BE ROUNDED TO 1-1/2" RADIUS WHICH IS BUILT INTO CURB FORMS; CORNERS OF TRANSVERSE FLOOR EXPANSION JOINTS SHALL BE ROUNDED WITH A 1/4" FINISHING TOOL UNLESS OTHERWISE REQUIRED ON PLANS; AND CORNERS OF EXPANSION JOINTS IN THE ROADWAY FACES AND TOPS OF CURBS AND SIDEWALKS SHALL BE ROUNDED TO A 1/4" RADIUS WITH A FINISHING STONE OR TOOL UNLESS OTHERWISE REQUIRED ON PLANS.

DOWELS:

DOWELS WHEN INDICATED ON PLANS AS FOR CULVERT EXTENSIONS, SHALL BE EMBEDDED AT LEAST 12" INTO THE OLD CONCRETE AND GROUTED INTO PLACE WITH 1:2 CEMENT MORTAR.

ALLOWANCE FOR DEAD LOAD DEFLECTION, SETTLEMENT, ETC. IN CASTING SUPERSTRUCTURES:

BRIDGES SHALL BE BUILT ON THE GRADE OR VERTICAL CURVE SHOWN ON PLANS. SLABS, CURBS AND PARAPETS SHALL CONFORM TO THE GRADE OR CURVE.

ALL DIMENSIONS WHICH ARE GIVEN IN SECTION AND ARE AFFECTED BY DEAD LOAD DEFLECTIONS ARE DIMENSIONS AT CENTER LINE OF BEARING UNLESS OTHERWISE NOTED ON PLANS. IN SETTING FORMS FOR STEEL BEAM BRIDGES AND PRESTRESSED CONCRETE GIRDER BRIDGES, ADJUSTMENTS SHALL BE MADE DUE TO THE DEAD LOAD DEFLECTIONS FOR THE ELEVATIONS SHOWN. WHERE BLOCKS ARE SHOWN OVER BEAMS FOR BUILDING UP TO THE SLAB, THE VERTICAL DIMENSIONS OF THE BLOCKS SHALL BE ADJUSTED BETWEEN BEARINGS TO COMPENSATE FOR DEAD LOAD DEFLECTIONS, VERTICAL CURVE ORDINATE, AND ACTUAL BEAM CAMBER. WHERE BOTTOM OF SLAB IS IN LINE WITH BOTTOM OF TOP FLANGES, DEPTH OF SLAB BETWEEN BEARINGS SHALL BE ADJUSTED TO COMPENSATE FOR DEAD LOAD DEFLECTION, VERTICAL CURVE ORDINATE, AND ACTUAL BEAM CAMBER.

IN SETTING FALSEWORK AND FORMS FOR REINFORCED CONCRETE SPANS, AN ALLOWANCE SHALL BE MADE FOR DEAD LOAD DEFLECTIONS, SETTLEMENT OF FALSEWORK, AND PERMANENT CAMBER WHICH SHALL BE PROVIDED FOR IN ADDITION TO THE ELEVATIONS SHOWN. AFTER REMOVAL OF THE FALSEWORK, THE FINISHED STRUCTURES SHALL CONFORM TO THE PROFILE AND ELEVATIONS SHOWN ON THE PLANS AND CONSTRUCTION ELEVATIONS FURNISHED BY THE ENGINEER.

DETAILED DRAWINGS FOR FALSEWORK OR FORMS FOR BRIDGE SUPERSTRUCTURE AND ANY STRUCTURE OR PARTS OF A STRUCTURE AS NOTED ON THE PLANS SHALL BE SUBMITTED TO THE ENGINEER FOR APPROVAL BEFORE CONSTRUCTION OF THE FALSEWORK OR FORMS IS STARTED.

REINFORCING STEEL:

ALL REINFORCING STEEL SHALL BE DEFORMED. DIMENSIONS RELATIVE TO PLACEMENT OF REINFORCING ARE TO CENTERS OF BARS UNLESS OTHERWISE INDICATED IN THE PLANS. DIMENSIONS ON BAR DETAILS ARE TO CENTERS OF BARS OR ARE OUT TO OUT AS INDICATED ON PLANS.

WIRE BAR SUPPORTS SHALL BE PROVIDED FOR REINFORCING STEEL WHERE INDICATED ON THE PLANS. WHEN BAR SUPPORT PIECES ARE PLACED IN CONTINUOUS LINES, THEY SHALL BE SO PLACED THAT THE ENDS OF THE SUPPORTING WIRES SHALL BE LAPPED TO LOCK LEGS ON ADJOINING PIECES.

STRUCTURAL STEEL:

AT THE CONTRACTOR'S OPTION, HE MAY SUBSTITUTE 7/8" Ø SHEAR STUDS FOR THE 3/4" Ø STUDS SPECIFIED ON THE PLANS. THIS SUBSTITUTION SHALL BE MADE AT THE RATE OF 3 - 7/8" Ø STUDS FOR 4 - 3/4" Ø STUDS, AND STUD SPACING CHANGES SHALL BE MADE AS NECESSARY TO PROVIDE THE SAME EQUIVALENT NUMBER OF 7/8" Ø STUDS ALONG THE BEAM AS SHOWN FOR 3/4" Ø STUDS BASED ON THE RATIO OF 3 - 7/8" Ø STUDS FOR 4 - 3/4" Ø STUDS. STUDS OF THE LENGTH SPECIFIED ON THE PLANS MUST BE PROVIDED. THE MAXIMUM SPACING SHALL BE 2'-0".

EXCEPT AT THE INTERIOR SUPPORTS OF CONTINUOUS BEAMS WHERE THE COVER PLATE IS IN CONTACT WITH BEARING PLATE, THE CONTRACTOR MAY, AT HIS OPTION, SUBSTITUTE FOR THE COVER PLATES DESIGNATED ON THE PLANS COVER PLATES OF THE EQUIVALENT AREA PROVIDED THESE PLATES ARE AT LEAST 5/16" IN THICKNESS AND DO NOT EXCEED A WIDTH EQUAL TO THE FLANGE WIDTH LESS 2" OR A THICKNESS EQUAL TO 2 TIMES THE FLANGE THICKNESS. THE SIZE OF FILLET WELDS SHALL CONFORM TO THE REQUIREMENTS OF THE CURRENT ANSI/AASHTO/AWS "BRIDGE WELDING CODE". ELECTROSLAG WELDING WILL NOT BE PERMITTED.

WITH THE SOLE EXCEPTION OF EDGES AT SURFACES WHICH BEAR ON OTHER SURFACES, ALL SHARP EDGES AND ENDS OF SHAPES AND PLATES SHALL BE SLIGHTLY ROUNDED BY SUITABLE MEANS TO A RADIUS OF APPROXIMATELY 1/16 INCH OR EQUIVALENT FLAT SURFACE AT A SUITABLE ANGLE PRIOR TO PAINTING, GALVANIZING, OR METALLIZING.

HANDRAILS AND POSTS:

METAL STANDARDS AND FACES OF THE CONCRETE END POSTS FOR THE METAL RAIL SHALL BE SET NORMAL TO THE GRADE OF THE CURB, UNLESS OTHERWISE SHOWN ON PLANS. THE METAL RAIL AND TOPS OF CONCRETE POSTS USED WITH THE ALUMINUM RAIL SHALL BE BUILT PARALLEL TO THE GRADE OF THE CURB.

METAL HANDRAILS SHALL BE IN ACCORDANCE WITH THE PLANS. RAILS SHALL BE AS MANUFACTURED FOR BRIDGE RAILING. CASTINGS SHALL BE OF A UNIFORM APPEARANCE. FINS AND OTHER DEFORMATIONS RESULTING FROM CASTING OR OTHERWISE SHALL BE REMOVED IN A MANNER SO THAT A UNIFORM COLORING OF THE COMPLETED CASTING SHALL BE OBTAINED. CASTINGS WITH DISCOLORATIONS OR OF NON-UNIFORM COLORING WILL NOT BE ACCEPTED. CERTIFIED MILL REPORTS ARE REQUIRED FOR METAL RAILS AND POSTS.

SPECIAL NOTES:

GENERALLY, IN CASE OF DISCREPANCY, THIS STANDARD SHEET OF NOTES SHALL GOVERN OVER THE SPECIFICATIONS, BUT THE REMAINDER OF THE PLANS SHALL GOVERN OVER NOTES HEREON, AND SPECIAL PROVISIONS SHALL GOVERN OVER ALL. SEE SPECIFICATIONS ARTICLE 105-4.

ENGLISH

JANUARY, 1990