CONTRACT: C201932

TIP PROJECT: R-2911B

STRUCTURES

STATE	STATE PROJECT REFERENCE NO.	SHEET NO.	TOTAL SHEETS
N.C.	R-2911B		

STATE PROJ. NO.	F.A. PROJ. NO.	DESCRIPTION
34517.1.1	STP-0070(39)	P.E.
34517.2.7	STP-0070(81)	R/W & UTIL.
34517.3.9	STP-0070(81)	CONST.

STATE OF NORTH CAROLINA
DIVISION OF HIGHWAYS

ROWAN COUNTY

LOCATION: US 70 FROM IREDELL COUNTY LINE TO EAST OF SR 1001 (AMITY HILL ROAD)

TYPE OF WORK: GRADING, DRAINAGE, PAVING, CULVERTS SIGNALS, AND STRUCTURES

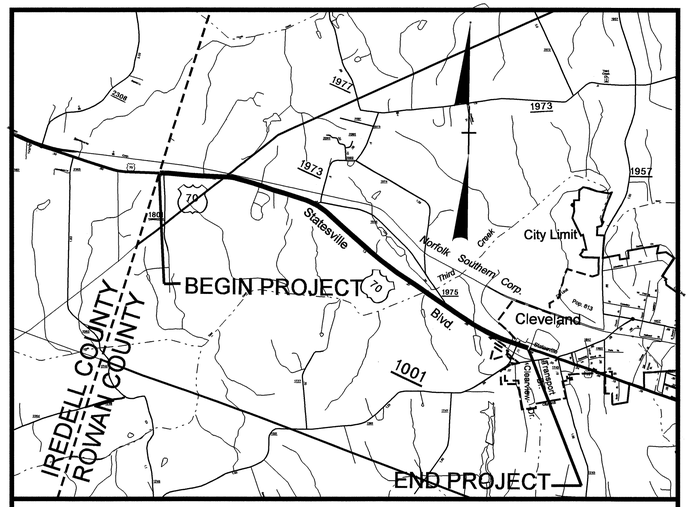

VICINITY MAP

NAD 83

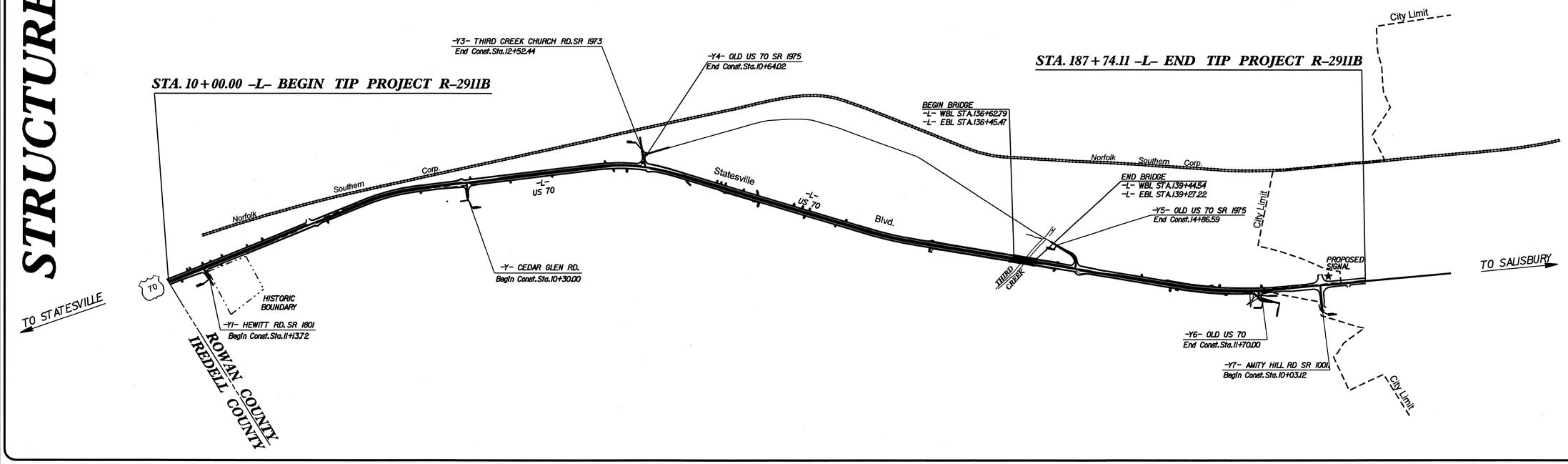

STATE OF NORTH CAROLINA DEPARTMENT OF TRANSPORTATION

DESIGN DATA

ADT 2008 = 13,300
ADT 2030 = 23,500
DHV = 9 %
D = 55 %
T = 9 % *

V = 60 MPH SHOULDER SECTION
V = 50 MPH CURB & GUTTER SECTION

* TTST 6% DUAL 3%

PROJECT LENGTH

LENGTH ROADWAY TIP PROJECT R-2911B = 3.313 Miles
LENGTH STRUCTURES TIP PROJECT R-2911B = 0.053 Miles
TOTAL LENGTH STATE TIP PROJECT R-2911B = 3.366 Miles

Prepared In the Office of:

DIVISION OF HIGHWAYS

2006 STANDARD SPECIFICATIONS

LETTING DATE:
September 16, 2008

Q.H. NGUYEN, P.E.
PROJECT ENGINEER

MARC G. CHEEK, P.E.
PROJECT DESIGN ENGINEER

STRUCTURE DESIGN UNIT
1000 BIRCH RIDGE DR.
RALEIGH, N.C. 27610

DIVISION OF HIGHWAYS
STATE OF NORTH CAROLINA

P.E.
STATE DESIGN ENGINEER
DEPARTMENT OF TRANSPORTATION
FEDERAL HIGHWAY ADMINISTRATION

APPROVED
DIVISION ADMINISTRATOR DATE

21-JUL-2008 10:48
$$
dahodge

F.A. PROJECT NO.: STP-0070(81)

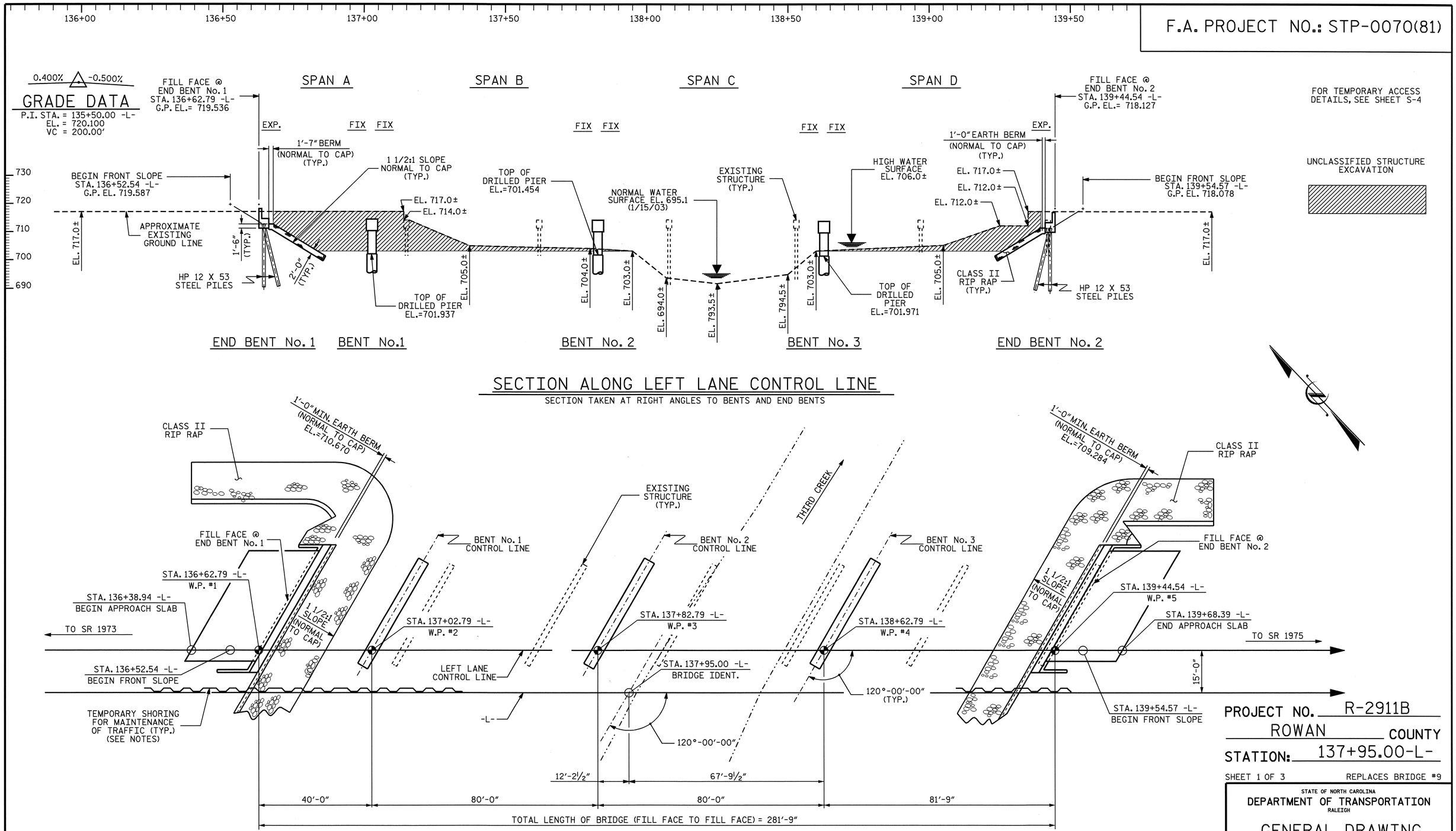

SECTION ALONG LEFT LANE CONTROL LINE

SECTION TAKEN AT RIGHT ANGLES TO BENTS AND END BENTS

PLAN

PILES AND COLUMNS NOT SHOWN IN PLAN VIEW

PROJECT NO. R-2911B

ROWAN COUNTY

STATION: 137+95.00-L-

SHEET 1 OF 3 REPLACES BRIDGE #9

STATE OF NORTH CAROLINA
DEPARTMENT OF TRANSPORTATION
RALEIGH

GENERAL DRAWING
FOR BRIDGE OVER
THIRD CREEK ON
US 70 BETWEEN
SR 1973 AND SR 1975
LEFT LANE

NORTH CAROLINA PROFESSIONAL SEAL 13014 ENGINEER QUANG H. NGUYEN
Quang H. Nguyen 7-21-08

NORTH CAROLINA PROFESSIONAL SEAL 20125 ENGINEER MARSHALL G. CHEEK, JR.
Marshall G. Cheek, Jr. 7-21-08

REVISIONS							SHEET NO.
NO.	BY:	DATE:	NO.	BY:	DATE:		S-1
1			3				TOTAL SHEETS
2			4				77

STR. #1

DRAWN BY : A.L. FIGUEROA DATE : 3-20-08
CHECKED BY : M.G. CHEEK DATE : 5-01-08

21-JUL-2008 09:16
r:\structures\finalplans\str #1\r-2911b_sd_str#1-02_gd.dgn
dahodge

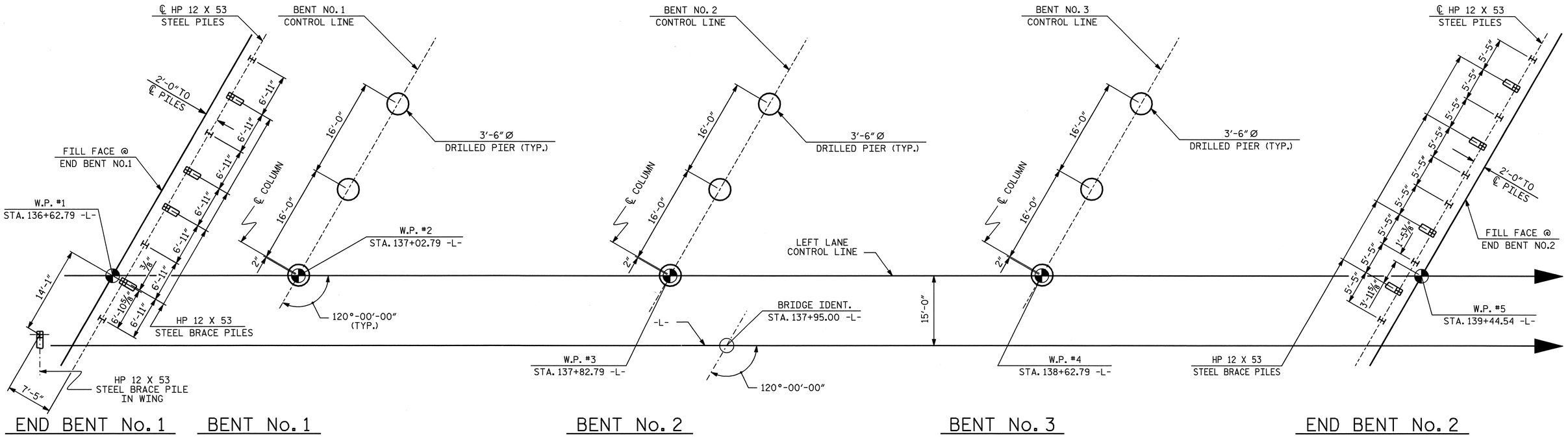

FOUNDATION LAYOUT

ALL END BENT PILES ARE HP 12 X 53
DIMENSIONS LOCATING PILES ARE SHOWN TO THE
PILE CENTERLINE AT THE BOTTOM OF THE CAP.
END BENT BRACE PILES ARE BATTERED 3:12

NOTES

DRIVE PILES AT END BENT NO.1 TO A REQUIRED BEARING CAPACITY OF 120 TONS PER PILE. THE REQUIRED BEARING CAPACITY IS EQUAL TO THE ALLOWABLE BEARING CAPACITY WITH A MINIMUM FACTOR OF SAFETY OF TWO.

THE ALLOWABLE BEARING CAPACITY FOR PILES AT END BENT NO.1 IS 60 TONS PER PILE.

DRILLED PIERS AT BENT NO. 1 ARE DESIGNED FOR BOTH SKIN FRICTION AND END BEARING. CHECK FIELD CONDITIONS FOR THE REQUIRED END BEARING CAPACITY OF 80 TONS PER SQ. FOOT.

DRILLED PIERS AT BENT NO.1 ARE DESIGNED FOR AN APPLIED LOAD OF 240 TONS EACH AT THE TOP OF THE COLUMN.

DRILLED PIERS AT BENT NO.1 SHALL EXTEND TO AN ELEVATION NO HIGHER THAN 668.0 (LT), 672.5 (CTR), AND 677.0 (RT) AND SATISFY THE REQUIRED END BEARING CAPACITY.

THE SCOUR CRITICAL ELEVATIONS FOR BENT NO.1 ARE ELEVATION 671.0 (LT), 675.8 (CTR), AND 680.5 (RT). SCOUR CRITICAL ELEVATIONS ARE USED TO MONITOR POSSIBLE SCOUR PROBLEMS DURING THE LIFE OF THE STRUCTURE.

THE DRILLED PIERS AT BENT NO.2 ARE DESIGNED FOR BOTH SKIN FRICTION AND END BEARING. CHECK FIELD CONDITIONS FOR THE REQUIRED END BEARING CAPACITY OF 95 TONS PER SQ. FOOT.

DRILLED PIERS AT BENT NO.2 ARE DESIGNED FOR AN APPLIED LOAD OF 275 TONS EACH AT THE TOP OF THE COLUMN.

PERMANENT STEEL CASING MAY BE REQUIRED FOR DRILLED PIERS AT BENT NO.2. IF REQUIRED, DO NOT EXTEND CASING BELOW ELEVATION 682.0 WITHOUT PRIOR APPROVAL FROM THE ENGINEER. THE ENGINEER WILL DETERMINE THE NEED FOR PERMANENT STEEL CASING.

DRILLED PIERS AT BENT NO.2 SHALL EXTEND TO AN ELEVATION NO HIGHER THAN 677.0 (LT), 676.0 (CTR), AND 675.0 (RT) AND SATISFY THE REQUIRED END BEARING CAPACITY.

THE SCOUR CRITICAL ELEVATIONS FOR BENT NO.2 IS ELEVATION 680.5 (LT), 679.5 (CTR), AND 678.5 (RT). SCOUR CRITICAL ELEVATIONS ARE USED TO MONITOR POSSIBLE SCOUR PROBLEMS DURING THE LIFE OF THE STRUCTURE.

THE DRILLED PIERS AT BENT NO.3 ARE DESIGNED FOR BOTH SKIN FRICTION AND END BEARING. CHECK FIELD CONDITIONS FOR THE REQUIRED END BEARING CAPACITY OF 95 TONS PER SQ. FOOT.

DRILLED PIERS AT BENT NO.3 ARE DESIGNED FOR AN APPLIED LOAD OF 284 TONS EACH AT THE TOP OF THE COLUMN.

PERMANENT STEEL CASING MAY BE REQUIRED FOR DRILLED PIERS AT BENT NO.3. IF REQUIRED, DO NOT EXTEND CASING BELOW ELEVATION 682.0 WITHOUT PRIOR APPROVAL FROM THE ENGINEER. THE ENGINEER WILL DETERMINE THE NEED FOR PERMANENT STEEL CASING.

DRILLED PIERS AT BENT NO.3 SHALL EXTEND TO AN ELEVATION NO HIGHER THAN 671.0 FT. (LT), 670.0 (CTR), AND 669.0 (RT) AND SATISFY THE REQUIRED END BEARING CAPACITY.

THE SCOUR CRITICAL ELEVATIONS FOR BENT NO.3 ARE ELEVATION 674.0 (LT), 673.0 (CTR), AND 672.0 (RT). SCOUR CRITICAL ELEVATIONS ARE USED TO MONITOR POSSIBLE SCOUR PROBLEMS DURING THE LIFE OF THE STRUCTURE.

SPT TESTING MAY BE REQUIRED FOR DRILLED PIERS. THE ENGINEER WILL DETERMINED THE NEED FOR SPT TESTING.

SID INSPECTIONS MAY BE REQUIRED FOR DRILLED PIERS. THE ENGINEER WILL DETERMINE THE NEED FOR SID INSPECTIONS.

CSL TUBES ARE REQUIRED AND CSL TESTING MAY BE REQUIRED FOR THE DRILLED PIERS. THE ENGINEER WILL DETERMINE THE NEED FOR CSL TESTING. SEE CROSSHOLE SONIC LOGGING SPECIAL PROVISION.

FOR DRILLED PIERS, SEE DRILLED PIERS SPECIAL PROVISIONS.

DRIVE PILES AT END BENT NO.2 TO A REQUIRED BEARING CAPACITY OF 120 TONS PER PILE. THE REQUIRED BEARING CAPACITY IS EQUAL TO THE ALLOWABLE BEARING CAPACITY WITH A MINIMUM FACTOR OF SAFETY OF TWO.

THE ALLOWABLE BEARING CAPACITY FOR PILES AT END BENT NO.2 IS 60 TONS PER PILE.

PROJECT NO. R-2911B
ROWAN COUNTY
STATION: 137+95.00 -L-

SHEET 2 OF 3

STATE OF NORTH CAROLINA
DEPARTMENT OF TRANSPORTATION
RALEIGH

GENERAL DRAWING
FOR BRIDGE ON US 70
OVER THIRD CREEK BETWEEN
SR 1973 AND SR 1975
LEFT LANE

NORTH CAROLINA PROFESSIONAL SEAL 20125 ENGINEER MARSHALL G. CHEEK, JR.
7-21-08

REVISIONS						SHEET NO.
NO.	BY:	DATE:	NO.	BY:	DATE:	S-2
1			3			TOTAL SHEETS
2			4			77

STR. #1

DRAWN BY : A.L. FIGUEROA DATE : 5-21-08
CHECKED BY : M.G. CHEEK DATE : 6-09-08

21-JUL-2008 09:17
r:\structures\finalplans\str #1\R-2911B_sd_str#1-03_FL.dgn
ddhodge

BENCHMARK No. 5: RAILROAD SPIKE IN THE NORTHERN ROOT OF A 54" SWEETGUM, STA. 114+32.00 -L-, RIGHT 263.78', EL. 778.176.

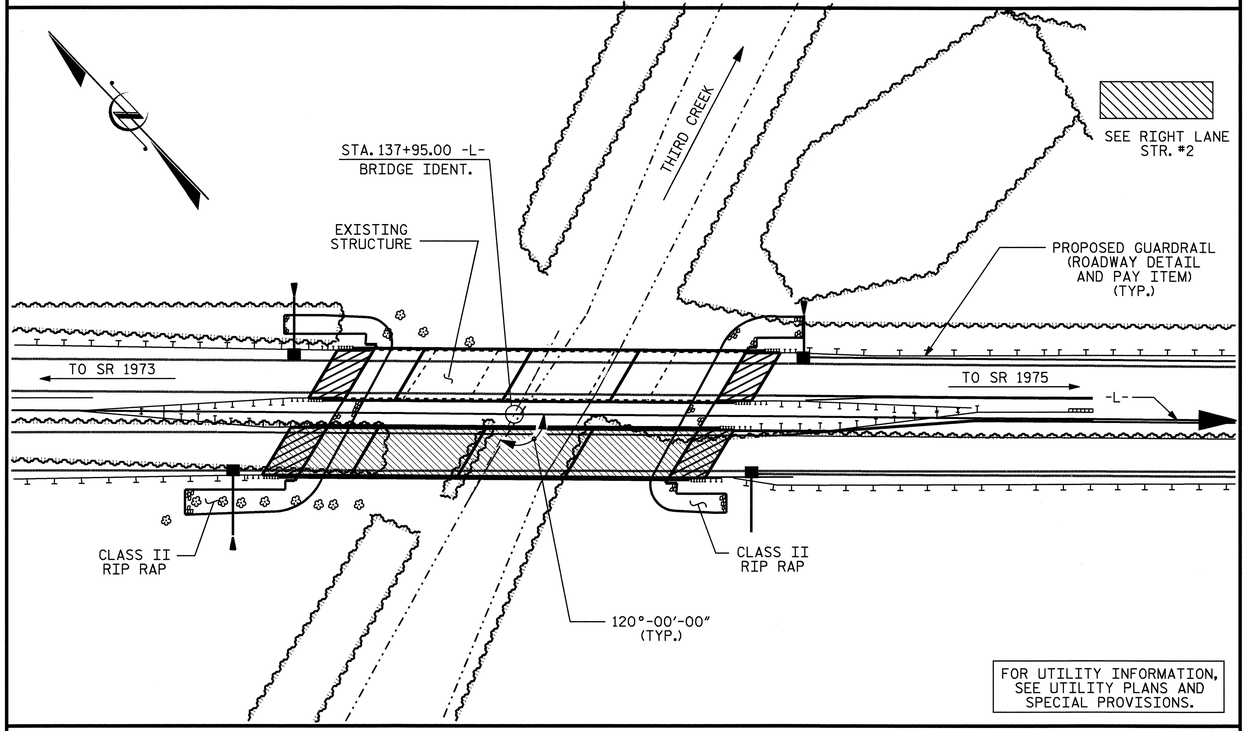

LOCATION SKETCH

NOTES

ASSUMED LIVE LOAD = HS 20 OR ALTERNATE LOADING, EXCEPT THAT THE GIRDERS HAVE BEEN DESIGNED FOR HS 25.

FOR OTHER DESIGN DATA AND GENERAL NOTES, SEE SHEET SN.

FOR EROSION CONTROL MEASURES, SEE EROSION CONTROL PLANS.

THIS BRIDGE HAS BEEN DESIGNED BY THE STRENGTH DESIGN METHOD AS SPECIFIED IN AASHTO STANDARD SPECIFICATIONS.

PRESTRESSED CONCRETE DECK PANELS MAY BE USED IN LIEU OF METAL STAY-IN-PLACE FORMS IN ACCORDANCE WITH ARTICLE 420-3 OF THE STANDARD SPECIFICATIONS.

REMOVABLE FORMS MAY BE USED IN LIEU OF METAL STAY-IN-PLACE FORMS IN ACCORDANCE WITH ARTICLE 420-3 OF THE STANDARD SPECIFICATIONS.

THE LOCATION OF THE CONSTRUCTION JOINT IN THE DRILLED PIERS IS BASED ON AN APPROXIMATE GROUND LINE ELEVATION. IF THE CONSTRUCTION JOINT IS ABOVE THE ACTUAL GROUND ELEVATION, THE CONTRACTOR SHALL PLACE THE CONSTRUCTION JOINT 1 FT. BELOW THE GROUND LINE.

AFTER SERVING AS TEMPORARY STRUCTURE THE EXISTING 5 SPAN STRUCTURE (1 @ 45'-6", 3 @ 45'-0", 1 @ 45'-6") CONSISTING OF A REINFORCED CONCRETE DECK WITH A 1½" ASPHALT WEARING SURFACE, ON 4 LINES OF STEEL I-BEAMS AND ON A SUBSTRUCTURE CONSISTING OF REINFORCED CONCRETE CAP AND STEEL PILES AT THE END BENTS AND BENTS #1 & 4, AND REINFORCED CONCRETE POST AND BEAM PILE FOOTING AT BENTS #2 & 3 AND LOCATED AT THE SITE OF THE PROPOSED STRUCTURE, SHALL BE REMOVED. THE EXISTING BRIDGE IS PRESENTLY POSTED BELOW THE LEGAL LOAD LIMIT. SHOULD THE STRUCTURAL INTEGRITY OF THE BRIDGE FURTHER DETERIORATE, THIS LOAD LIMITATION MAY BE REDUCED AS FOUND NECESSARY DURING THE LIFE OF THE PROJECT.

REMOVAL OF THE EXISTING BRIDGE SHALL BE PERFORMED SO AS NOT TO ALLOW DEBRIS TO FALL INTO THE WATER. THE CONTRACTOR SHALL REMOVE THE BRIDGE AND SUBMIT PLANS FOR DEMOLITION IN ACCORDANCE WITH ARTICLE 402-2 OF THE STANDARD SPECIFICATIONS.

THE MATERIAL SHOWN IN THE CROSS-HATCHED AREA (SEE SHEET 1 OF 3) SHALL BE EXCAVATED FOR A DISTANCE OF 50 FEET TO THE LEFT OF THE CENTERLINE SURVEY. THIS WORK WILL BE MEASURED AND PAID FOR AT THE CONTRACT UNIT PRICE PER CUBIC YARD FOR UNCLASSIFIED STRUCTURE EXCAVATION.

THE SUBSTRUCTURE OF THE EXISTING BRIDGE INDICATED ON THE PLANS IS FROM THE BEST INFORMATION AVAILABLE. SINCE THIS INFORMATION IS SHOWN FOR THE CONVENIENCE OF THE CONTRACTOR, THE CONTRACTOR SHALL HAVE NO CLAIM WHATSOEVER AGAINST THE DEPARTMENT OF TRANSPORTATION FOR ANY DELAYS OR ADDITIONAL COST INCURRED BASED ON DIFFERENCES BETWEEN THE EXISTING BRIDGE SUBSTRUCTURE SHOWN ON THE PLANS AND THE ACTUAL CONDITIONS AT THE PROJECT SITE.

THE CLASS AA CONCRETE IN THE BRIDGE DECK SHALL CONTAIN FLY ASH OR GROUND GRANULATED BLAST FURNACE SLAG AT THE SUBSTITUTION RATE SPECIFIED IN ARTICLE 1024-1 AND IN ACCORDANCE WITH ARTICLES 1024-5 AND 1024-6 OF THE STANDARD SPECIFICATIONS. NO PAYMENT WILL BE MADE FOR THIS SUBSTITUTION AS IT IS CONSIDERED INCIDENTAL TO THE COST OF THE REINFORCED CONCRETE DECK SLAB.

THIS STRUCTURE HAS BEEN DESIGNED IN ACCORDANCE WITH HEC 18, "EVALUATING SCOUR AT BRIDGES", MAY, 2001.

THIS BRIDGE HAS BEEN DESIGNED IN ACCORDANCE WITH THE REQUIREMENTS OF THE AASHTO STANDARD SPECIFICATIONS FOR SEISMIC DESIGN OF HIGHWAY BRIDGES FOR SEISMIC PERFORMANCE CATEGORY A.

TEMPORARY SHORING WILL BE REQUIRED IN THE AREA INDICATED IN THE PLAN VIEW, SHEET 1 OF 3.

FOR LIMITS OF TEMPORARY SHORING FOR MAINTENANCE OF TRAFFIC, SEE TRAFFIC CONTROL PLANS. FOR PAY ITEM FOR TEMPORARY SHORING FOR MAINTENANCE OF TRAFFIC, SEE ROADWAY PLANS.

STEEL SHEET PILING REQUIRED FOR SHORING SHALL BE HOT ROLLED.

THE CONTRACTOR SHALL PROVIDE INDEPENDENT ASSURANCE SAMPLES OF REINFORCING STEEL AS FOLLOWS FOR PROJECTS REQUIRING UP TO 400 TONS OF REINFORCING STEEL, ONE 30 INCH SAMPLE OF EACH SIZE BAR USED, AND FOR PROJECTS REQUIRING OVER 400 TONS OF REINFORCING STEEL, TWO 30 INCH SAMPLES OF EACH SIZE BAR USED. THE BARS FROM WHICH THE SAMPLES ARE TAKEN MUST THEN BE SPLICED WITH REPLACEMENT BARS OF THE SIZE AND LENGTH OF THE SAMPLE, PLUS A MINIMUM LAP SPLICE OF THIRTY BAR DIAMETERS.

INASMUCH AS THE PAINT SYSTEM ON THE EXISTING STRUCTURAL STEEL CONTAINS LEAD, THE CONTRACTOR'S ATTENTION IS DIRECTED TO ARTICLE 107-1 OF THE STANDARD SPECIFICATIONS. ANY COST RESULTING FROM COMPLIANCE WITH APPLICABLE STATE OR FEDERAL REGULATIONS PERTAINING TO HANDLING OF MATERIALS CONTAINING LEAD BASED PAINT SHALL BE INCLUDED IN THE BID PRICE FOR "REMOVAL OF EXISTING STRUCTURE".

AT THE CONTRACTOR'S OPTION, AND UPON REMOVAL OF THE TEMPORARY ACCESS, THE CLASS II RIP RAP USED IN THE TEMPORARY ACCESS MAY BE PLACED AS RIP RAP SLOPE PROTECTION. SEE SPECIAL PROVISIONS FOR CONSTRUCTION, MAINTENANCE AND REMOVAL OF TEMPORARY ACCESS.

FOR SUBMITTAL OF WORKING DRAWINGS, SEE SPECIAL PROVISIONS.

FOR FALSEWORK AND FORMWORK, SEE SPECIAL PROVISIONS.

FOR PRESTRESSED CONCRETE MEMBERS, SEE SPECIAL PROVISIONS.

NEEDLE BEAMS WILL NOT BE ALLOWED UNLESS OTHERWISE CALLED FOR ON THE PLANS OR APPROVED BY THE ENGINEER.

FOR GROUT FOR STRUCTURES, SEE SPECIAL PROVISIONS.

FOR CRANE SAFETY, SEE SPECIAL PROVISIONS.

TOTAL BILL OF MATERIAL

	CONSTRUCTION, MAINTENANCE & REMOVAL OF TEMPORARY ACCESS	REMOVAL OF EXISTING STRUCTURE	3'-6"Ø DRILLED PIERS IN SOIL	3'-6"Ø DRILLED PIERS NOT IN SOIL	PERMANENT STEEL CASING FOR 3'-6"Ø DRILLED PIERS	SID INSPECTION	SPT TESTING	CROSSHOLE SONIC LOGGING	UNCLASSIFIED STRUCTURE EXCAVATION	REINFORCED CONCRETE DECK SLAB
	LUMP SUM	LUMP SUM	LIN. FT.	LIN. FT.	LIN. FT.	EACH	EACH	EACH	CU. YDS.	SQ. FT.
SUPERSTRUCTURE		LUMP SUM								10963
END BENT NO. 1									1765	
BENT NO. 1			77.50	11.00				1		
BENT NO. 2			61.50	15.00	58.36			1		
BENT NO. 3			84.00	12.00	59.91			1		
END BENT NO. 2									565	
TOTAL	LUMP SUM	LUMP SUM	223.00	38.00	118.27	3	3	3	2330	10963

TOTAL BILL OF MATERIAL

	GROOVING BRIDGE FLOORS	CLASS A CONCRETE	BRIDGE APPROACH SLABS	REINFORCING STEEL	SPIRAL COLUMN REINFORCING STEEL	45" PRESTRESSED CONCRETE GIRDERS		HP 12 X 53 STEEL PILES		CONCRETE BARRIER RAIL	RIP RAP CLASS II (2'-0" THICK)	FILTER FABRIC FOR DRAINAGE	ELASTOMERIC BEARINGS	EVAZOTE JOINT SEALS
	SQ. FT.	CU. YDS.	LUMP SUM	LBS.	LBS.	NO.	LIN. FT.	NO.	LIN. FT.	LIN. FT.	TONS	SQ. YDS.	LUMP SUM	LUMP SUM
SUPERSTRUCTURE	10767		LUMP SUM			20	1374.58			558.66			LUMP SUM	LUMP SUM
END BENT NO. 1		32.6		4781				9	270		405	450		
BENT NO. 1		29.7		10636	2412									
BENT NO. 2		29.8		10030	2168									
BENT NO. 3		29.1		11037	2510									
END BENT NO. 2		33.1		4777				10	350		245	271		
TOTAL	10767	154.3	LUMP SUM	41261	7090	20	1374.58	19	620	558.66	650	721	LUMP SUM	LUMP SUM

HYDRAULIC DATA

DESIGN DISCHARGE	=	10,100 C.F.S.
FREQUENCY OF DESIGN FLOOD	=	50 YRS.
DESIGN HIGH WATER ELEVATION	=	713.2 FT.
DRAINAGE AREA	=	85.2 SQ. MI.
BASIC DISCHARGE (Q100)	=	12,000 C.F.S.
BASIC HIGH WATER ELEVATION	=	714.7 FT.

OVERTOPPING FLOOD DATA

OVERTOPPING DISCHARGE	=	15,100 C.F.S.
FREQUENCY OF OVERTOPPING FLOOD	=	100 YRS.+
OVERTOPPING FLOOD ELEVATION	=	717.8 FT.

PROJECT NO. R-2911B
ROWAN COUNTY
STATION: 137+95.00-L-

SHEET 3 OF 3

STATE OF NORTH CAROLINA
DEPARTMENT OF TRANSPORTATION
RALEIGH

GENERAL DRAWING
FOR BRIDGE OVER
THIRD CREEK ON
US 70 BETWEEN
SR 1973 AND SR 1975
LEFT LANE

NORTH CAROLINA PROFESSIONAL SEAL 20125 ENGINEER MARSHALL G. CHEEK, JR.
7-21-08

REVISIONS						SHEET NO.
NO.	BY:	DATE:	NO.	BY:	DATE:	S-3
1			3			TOTAL SHEETS
2			4			77

DRAWN BY : A.L. FIGUEROA DATE : 3-20-08
CHECKED BY : M.G. CHEEK DATE : 06-08

21-JUL-2008 09:17
r:\structures\finalplans\str #1\r-2911b_sd_str#1-02_gd.dgn
dahodge

STR. #1

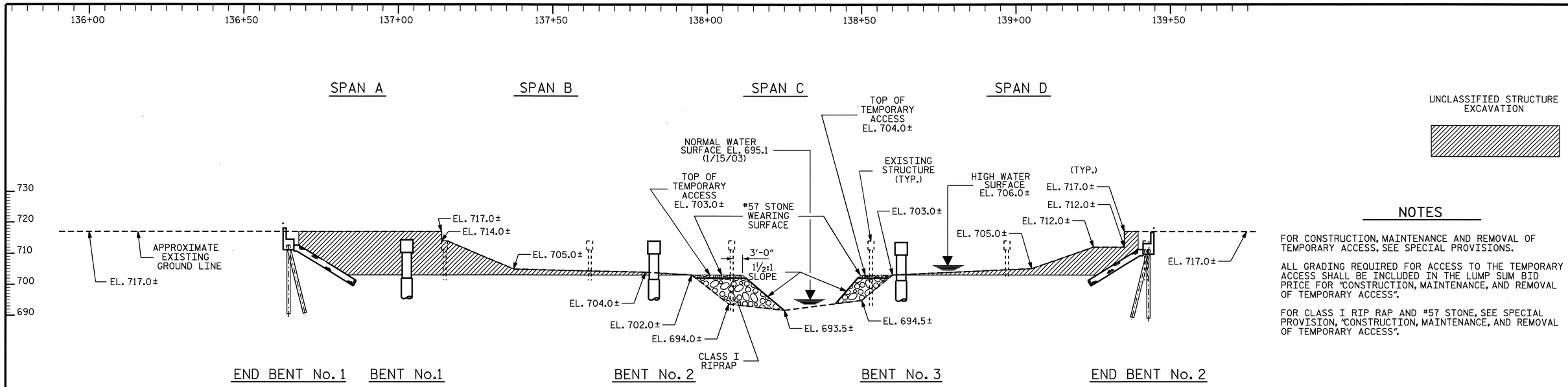

SECTION ALONG LEFT LANE CONTROL LINE

SECTION TAKEN AT RIGHT ANGLES TO BENTS AND END BENTS

UNCLASSIFIED STRUCTURE EXCAVATION

NOTES

FOR CONSTRUCTION, MAINTENANCE AND REMOVAL OF TEMPORARY ACCESS, SEE SPECIAL PROVISIONS.

ALL GRADING REQUIRED FOR ACCESS TO THE TEMPORARY ACCESS SHALL BE INCLUDED IN THE LUMP SUM BID PRICE FOR "CONSTRUCTION, MAINTENANCE, AND REMOVAL OF TEMPORARY ACCESS".

FOR CLASS I RIP RAP AND #57 STONE, SEE SPECIAL PROVISION, "CONSTRUCTION, MAINTENANCE, AND REMOVAL OF TEMPORARY ACCESS".

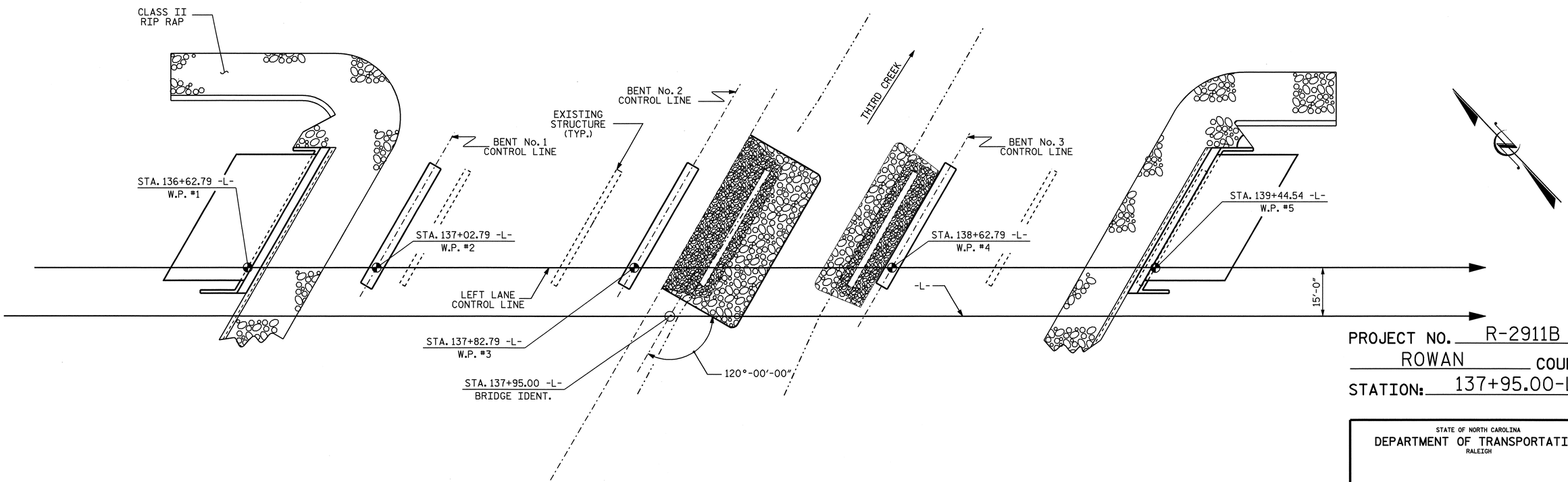

PLAN

PILES AND COLUMNS NOT SHOWN IN PLAN VIEW

PROJECT NO. R-2911B
ROWAN COUNTY
STATION: 137+95.00-L-

STATE OF NORTH CAROLINA
DEPARTMENT OF TRANSPORTATION
RALEIGH

TEMPORARY ACCESS
LEFT LANE

NORTH CAROLINA PROFESSIONAL SEAL 20125 ENGINEER MARSHALL G. CHEEK, JR.
7-21-08

REVISIONS						SHEET NO.
NO.	BY:	DATE:	NO.	BY:	DATE:	S-4
1			3			TOTAL SHEETS
2			4			77

STR. #1

DRAWN BY : A.L. FIGUEROA DATE : 3-20-08
CHECKED BY : M.G. CHEEK DATE : 6-18-08

21-JUL-2008 09:18
r:\structures\final plans\str #1\R-2911B_sd_str#1-04_TA.dgn
dahodge

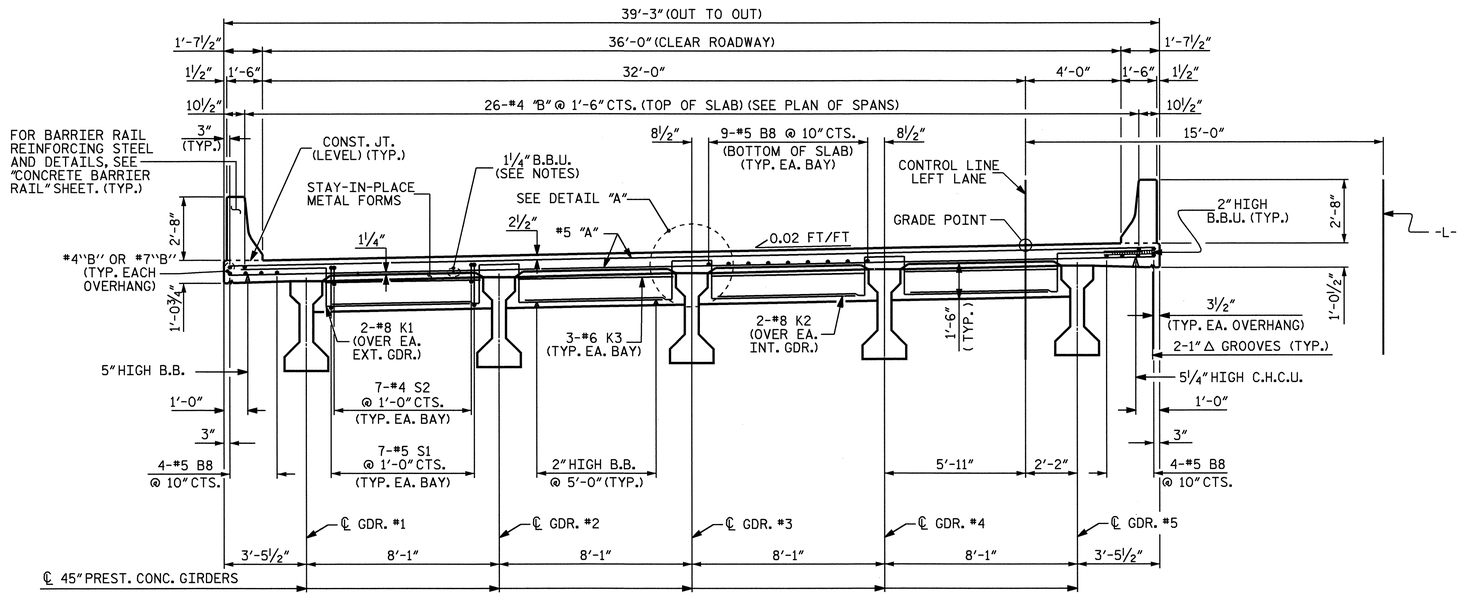

TYPICAL SECTION

(SHOWING END BENT DIAPHRAGMS)

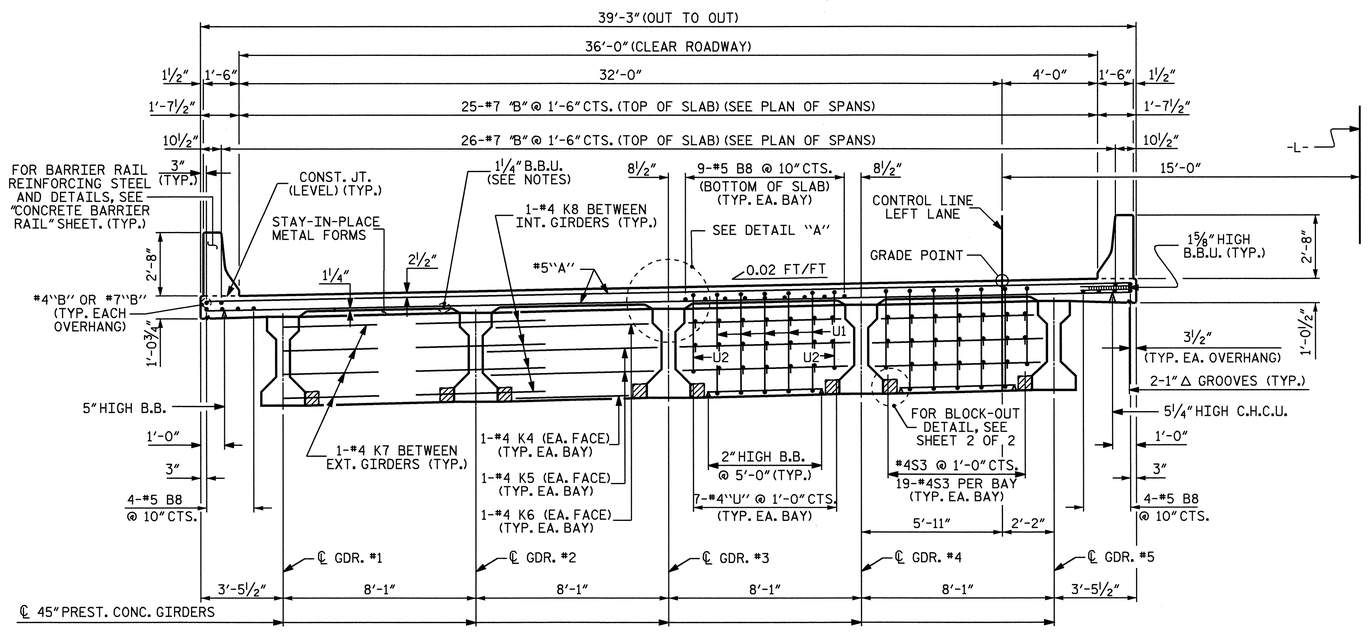

TYPICAL SECTION

(SHOWING BENT DIAPHRAGMS)

NOTES

PROVIDE 1¼" HIGH BEAM BOLSTERS UPPER AT 4'-0" CTS. ATOP THE METAL STAY-IN-PLACE FORMS TO SUPPORT THE BOTTOM MAT OF 'A' BARS. WHEN USING REMOVABLE FORMS, PROVIDE CONTINUOUS HIGH CHAIRS FOR METAL DECK (C.H.C.M.) @ 4'-0" CTS. WITH A HEIGHT TO SUPPORT THE BOTTOM MAT OF 'A' BARS A CLEAR DISTANCE OF 2½" ABOVE THE TOP OF THE REMOVABLE FORM.

LONGITUDINAL STEEL MAY BE SHIFTED SLIGHTLY, AS NECESSARY, TO AVOID INTERFERENCE WITH STIRRUPS IN PRESTRESSED CONCRETE GIRDERS.

PREVIOUSLY CAST CONCRETE IN A CONTINUOUS UNIT SHALL HAVE ATTAINED A MINIMUM COMPRESSIVE STRENGTH OF 3,000 PSI BEFORE ADDITIONAL CONCRETE IS CAST IN THE UNIT.

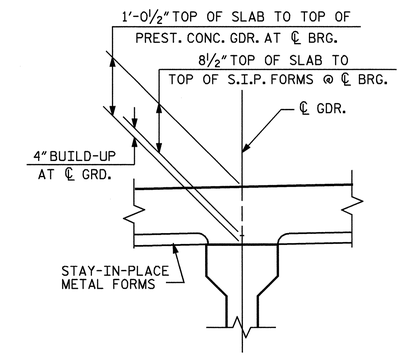

DETAIL "A"

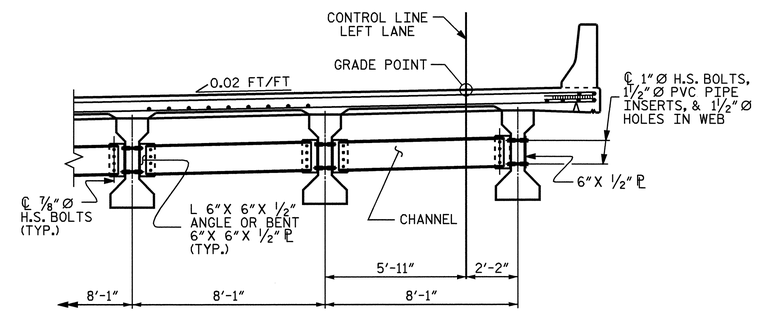

HALF SECTION

(SHOWING INTERMEDIATE DIAPHRAGM)

PROJECT NO. R-2911B

ROWAN COUNTY

STATION: 137+95.00 -L-

SHEET 1 OF 2

STATE OF NORTH CAROLINA
DEPARTMENT OF TRANSPORTATION
RALEIGH

SUPERSTRUCTURE
TYPICAL SECTIONS
LEFT LANE

NORTH CAROLINA PROFESSIONAL SEAL 20125 ENGINEER MARSHALL G. CHEEK, JR.
7-21-08

REVISIONS						SHEET NO.
NO.	BY:	DATE:	NO.	BY:	DATE:	S-5
1			3			TOTAL SHEETS
2			4			77

STR. #1

NCDDS

DRAWN BY : L.L. MURPHY DATE : 7-19-06
CHECKED BY : M.G. CHEEK DATE : 5-30-08

21-JUL-2008 09:19
r:\structures\finalplans\str #1\R-2911B_sd_str#1-05_TS.dgn
dahodge

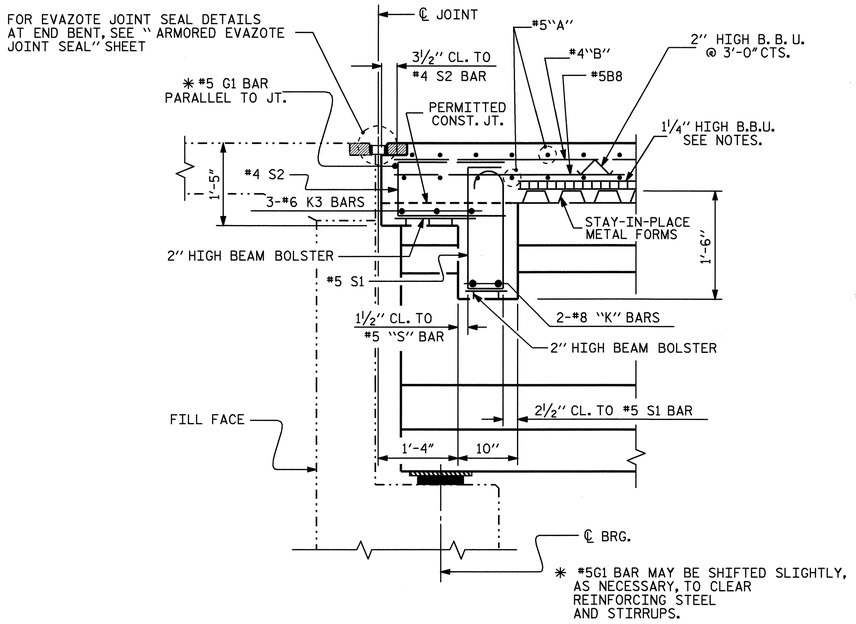

SECTION THRU END BENT DIAPHRAGM

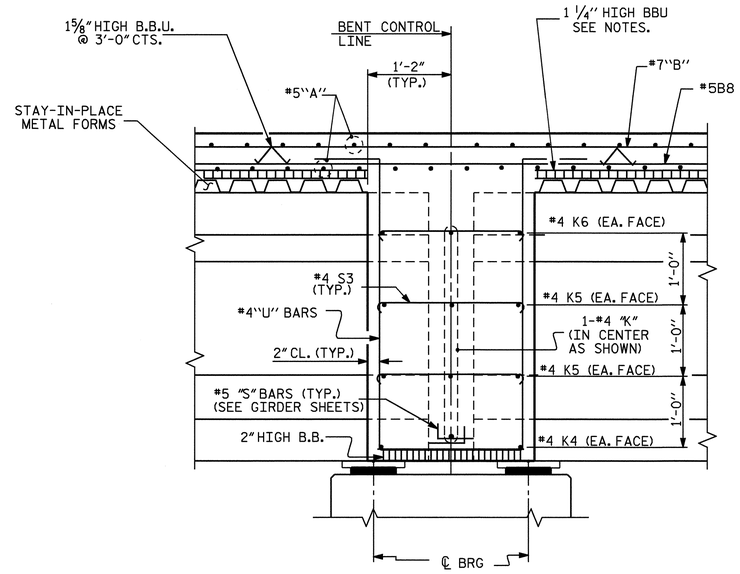

SECTION THRU CONTINUOUS BENT DIAPHRAGM

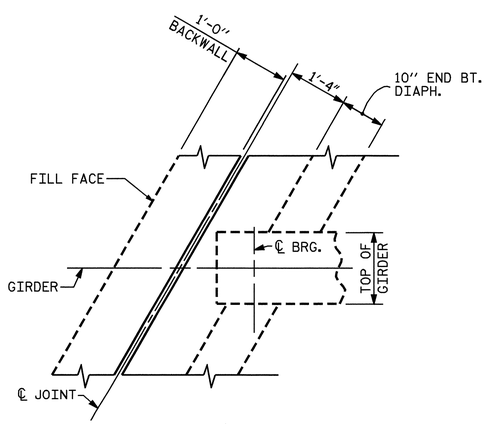

END BENT DIAPHRAGM

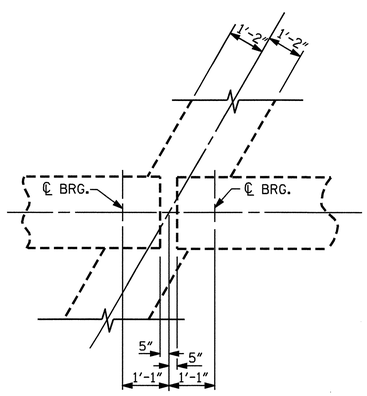

CONTINUOUS BENT DIAPHRAGM

PLAN

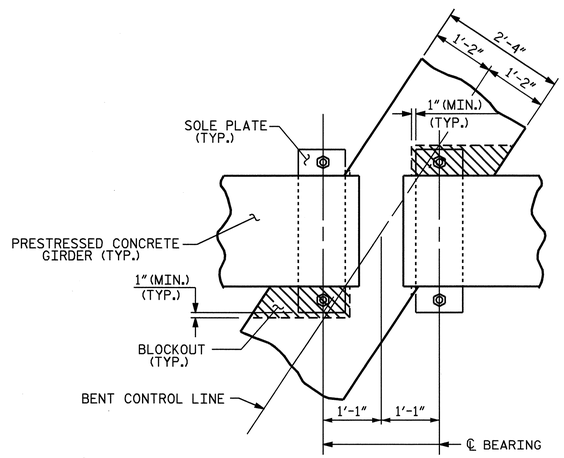

PLAN

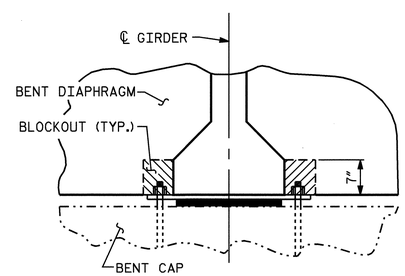

SECTION

BENT DIAPHRAGM BLOCK-OUT DETAIL

PROJECT NO. R-2911B

ROWAN COUNTY

STATION: 137+95.00 -L-

SHEET 2 OF 2

STATE OF NORTH CAROLINA
DEPARTMENT OF TRANSPORTATION
RALEIGH

SUPERSTRUCTURE

TYPICAL SECTIONS
DETAILS
LEFT LANE

NORTH CAROLINA PROFESSIONAL SEAL 20125 ENGINEER MARSHALL G. CHEEK, JR.
7-21-08

REVISIONS						SHEET NO.
NO.	BY:	DATE:	NO.	BY:	DATE:	S-6
1			3			TOTAL SHEETS
2			4			77

STR. #1 NCDDS

DRAWN BY : L.L. MURPHY DATE : 7-19-06
CHECKED BY : M.G. CHEEK DATE : 5-30-08

21-JUL-2008 09:19
r:\structures\finalplans\str #1\R-2911B_sd_str#1-05_TS.dgn
dahodge

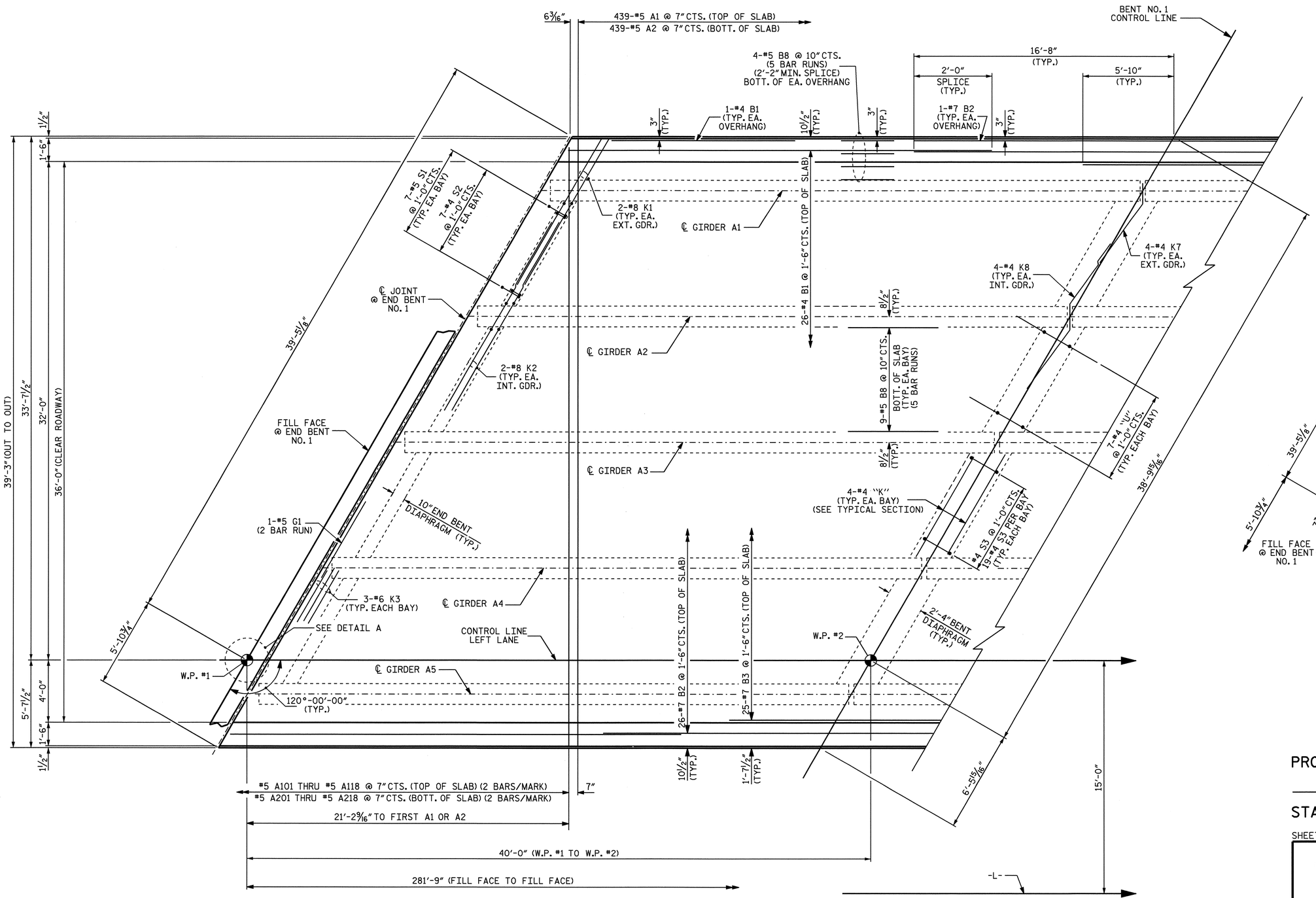

DETAIL A

PLAN OF SPAN A

FOR LOCATION OF TRANSVERSE CONSTRUCTION JOINT AND POURING SEQUENCE, SEE "SUPERSTRUCTURE BILL OF MATERIAL."

PROJECT NO. R-2911B
ROWAN COUNTY
STATION: 137+95.00 -L-

SHEET 1 OF 4

STATE OF NORTH CAROLINA
DEPARTMENT OF TRANSPORTATION
RALEIGH

SUPERSTRUCTURE
PLAN OF SPAN A
LEFT LANE

NORTH CAROLINA PROFESSIONAL SEAL 20125 ENGINEER MARSHALL G. CHEEK, JR.
7-21-08

REVISIONS						SHEET NO.
NO.	BY:	DATE:	NO.	BY:	DATE:	S-7
1			3			TOTAL SHEETS
2			4			77

DRAWN BY : L.L. MURPHY DATE : 7/21/06
CHECKED BY : M.G. CHEEK DATE : 5-08

21-JUL-2008 09:20
r:\structures\final plans\str #1\R-2911B_sd_str#1-06_S*.dgn
dahodge

STR. #1 NCDDS

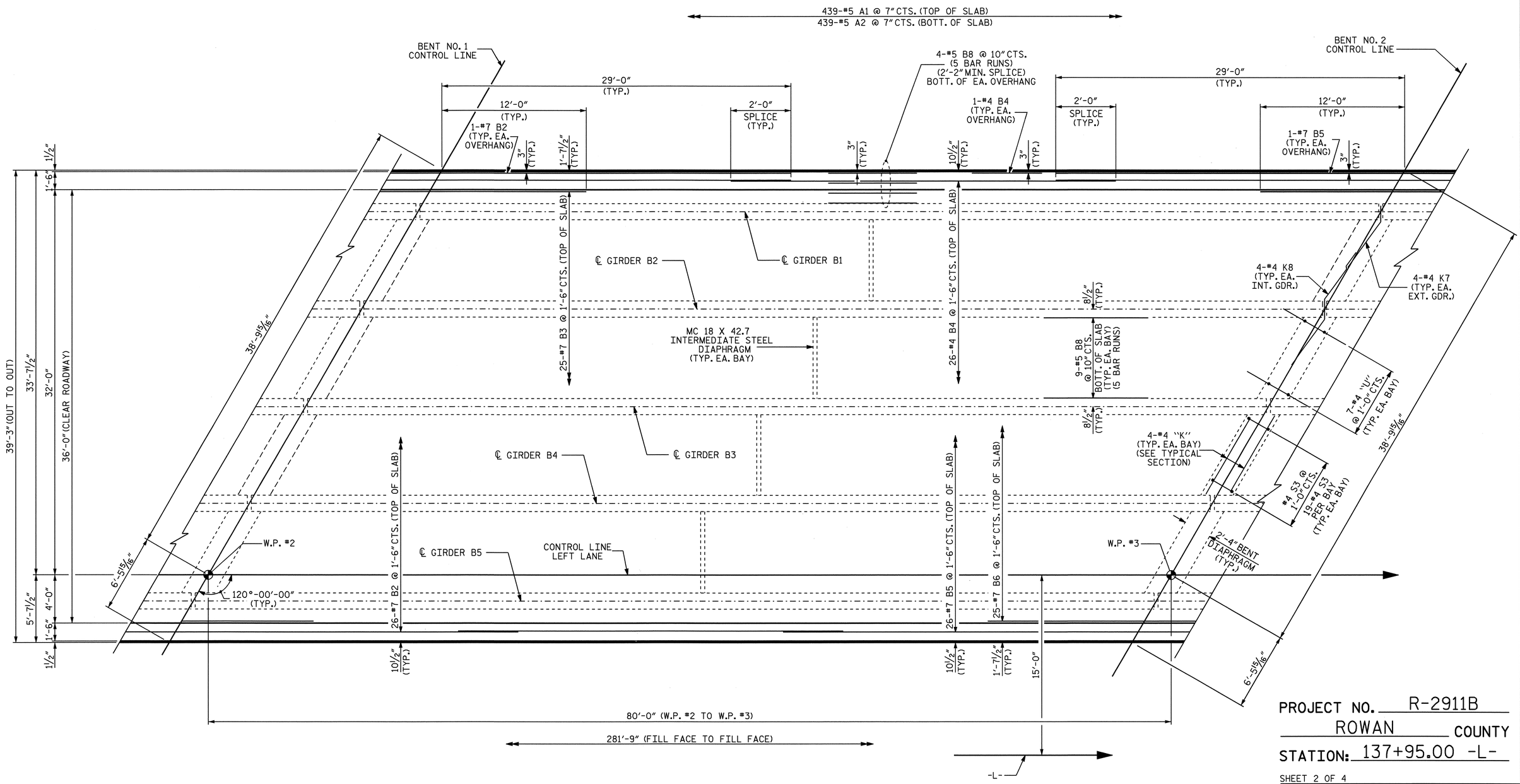

PLAN OF SPAN B

FOR LOCATION OF TRANSVERSE CONSTRUCTION JOINT AND POURING SEQUENCE, SEE "SUPERSTRUCTURE BILL OF MATERIAL."

PROJECT NO. R-2911B

ROWAN COUNTY

STATION: 137+95.00 -L-

SHEET 2 OF 4

STATE OF NORTH CAROLINA
DEPARTMENT OF TRANSPORTATION
RALEIGH

SUPERSTRUCTURE
PLAN OF SPAN B
LEFT LANE

NORTH CAROLINA PROFESSIONAL SEAL 20125 ENGINEER MARSHALL G. CHEEK, JR.
7-21-06

REVISIONS						SHEET NO.
NO.	BY:	DATE:	NO.	BY:	DATE:	S-8
1			3			TOTAL SHEETS
2			4			77

DRAWN BY : L.L. MURPHY DATE : 7/21/06
CHECKED BY : M.G. CHEEK DATE : 5-08

21-JUL-2008 09:33
r:\structures\final plans\str #1\R-2911B_sd_str#1-06_S*.dgn
dahodge

STR #1

NCDOT

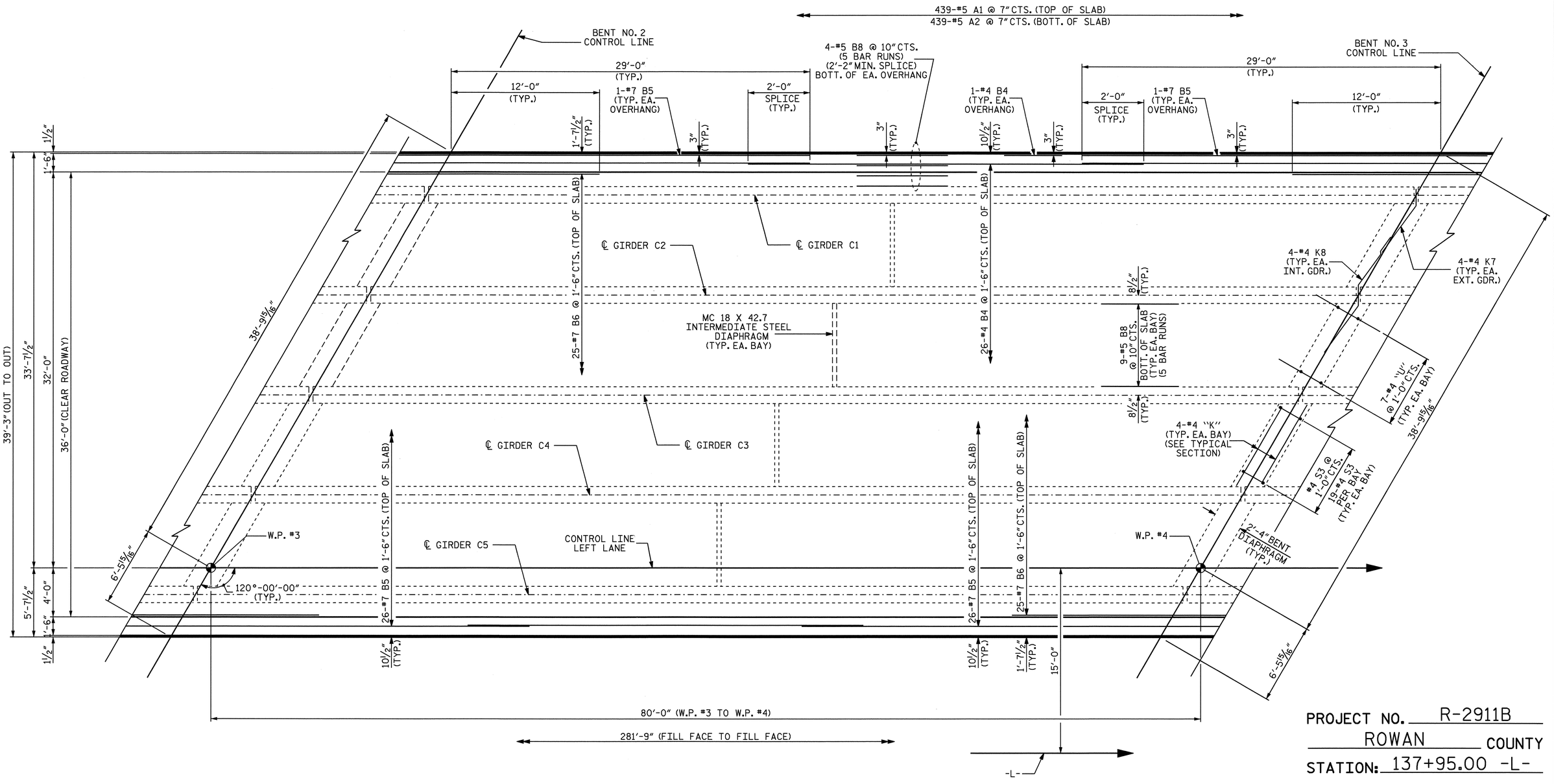

PLAN OF SPAN C

FOR LOCATION OF TRANSVERSE CONSTRUCTION JOINT AND POURING SEQUENCE, SEE "SUPERSTRUCTURE BILL OF MATERIAL."

PROJECT NO. R-2911B

ROWAN COUNTY

STATION: 137+95.00 -L-

SHEET 3 OF 4

STATE OF NORTH CAROLINA
DEPARTMENT OF TRANSPORTATION
RALEIGH

SUPERSTRUCTURE
PLAN OF SPAN C
LEFT LANE

NORTH CAROLINA PROFESSIONAL SEAL 20125 ENGINEER MARSHALL G. CHEEK, JR.
7-21-08

REVISIONS							SHEET NO.
NO.	BY:	DATE:	NO.	BY:	DATE:		S-9
1			3				TOTAL SHEETS
2			4				77

DRAWN BY : L.L. MURPHY DATE : 7/21/06
CHECKED BY : M.G. CHEEK DATE : 5-08

21-JUL-2008 09:20
r:\structures\finalplans\str #1\R-2911B_sd_str#1-06_S*.dgn
dahodge

STR #1

NCDDS

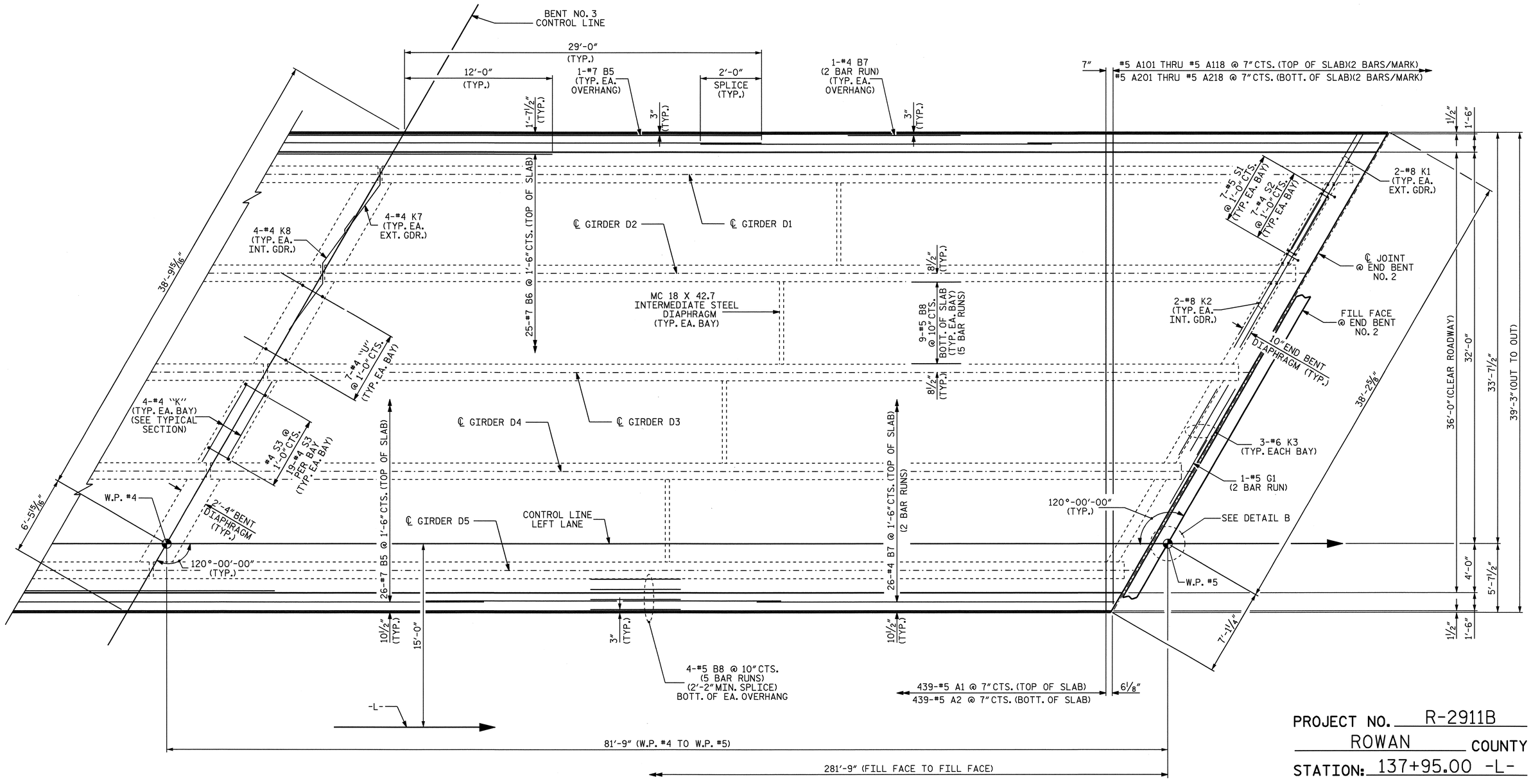

PROJECT NO. R-2911B

ROWAN COUNTY

STATION: 137+95.00 -L-

SHEET 4 OF 4

PLAN OF SPAN D

FOR LOCATION OF TRANSVERSE CONSTRUCTION JOINT AND POURING SEQUENCE, SEE "SUPERSTRUCTURE BILL OF MATERIAL."

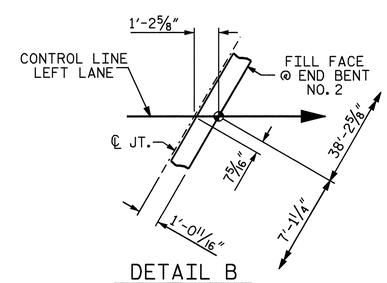

DETAIL B

STATE OF NORTH CAROLINA
DEPARTMENT OF TRANSPORTATION
RALEIGH

SUPERSTRUCTURE
PLAN OF SPAN D
LEFT LANE

NORTH CAROLINA PROFESSIONAL SEAL 20125 ENGINEER MARSHALL A. CHEEK, JR.
7-21-08

REVISIONS						SHEET NO.
NO.	BY:	DATE:	NO.	BY:	DATE:	S-10
1			3			TOTAL SHEETS
2			4			77

DRAWN BY : L.L. MURPHY DATE : 7/21/06
CHECKED BY : M.G. CHEEK DATE : 5-08

21-JUL-2008 09:34
r:\structures\final plans\str #1\R-2911B_sd_str#1-06_S*.dgn
dahodge

STR #1

NCDDS

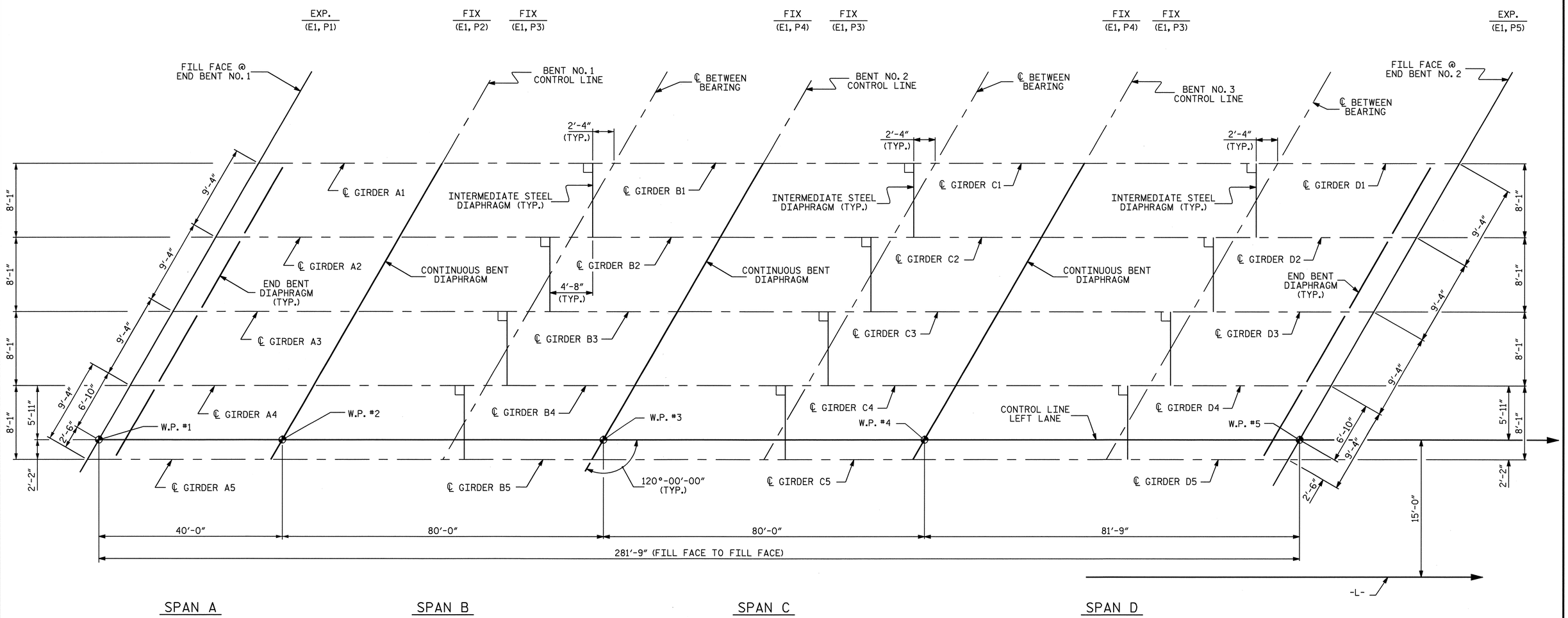

FRAMING PLAN

PROJECT NO. R-2911B
ROWAN COUNTY
STATION: 137+95.00 -L-

STATE OF NORTH CAROLINA
DEPARTMENT OF TRANSPORTATION
RALEIGH

SUPERSTRUCTURE

FRAMING PLAN
LEFT LANE

NORTH CAROLINA PROFESSIONAL SEAL 20125 ENGINEER MARSHALL G. CHEEK, JR.
7-21-08

REVISIONS								SHEET NO.
NO.	BY:	DATE:	NO.	BY:	DATE:			S-11
1			3					TOTAL SHEETS
2			4					77

DRAWN BY : L.L. MURPHY DATE : 03-08
CHECKED BY : M.G. CHEEK DATE : 05-08

21-JUL-2008 09:35
r:\structures\finalplans\str #1\R-2911B_sd_str#1-07_FP.dgn
dahodge

STR #1

NCDDS

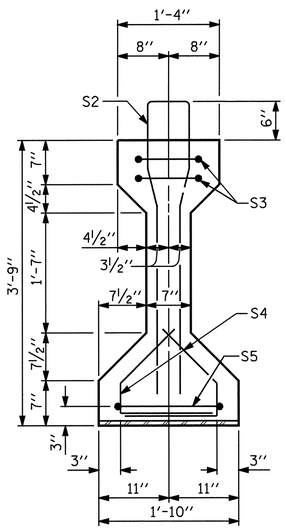

SECTION A-A

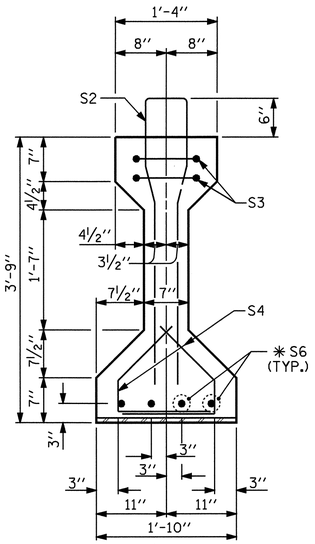

SECTION B-B

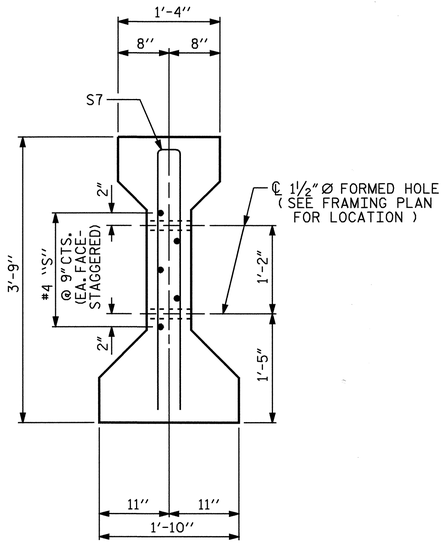

SECTION C-C

(S1 BARS NOT SHOWN)

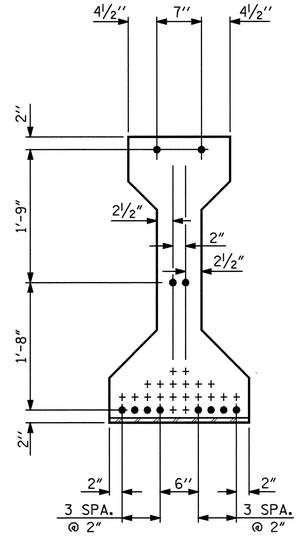

AT END OF GIRDER

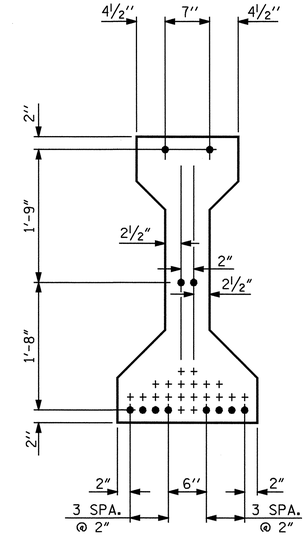

AT ℄ OF GIRDER

½" Ø LOW RELAXATION STRAND LAYOUT

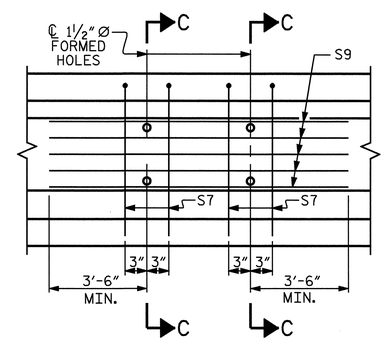

PARTIAL ELEVATION

SHOWING INTERMEDIATE DIAPHRAGM
REINFORCING STEEL FOR GIRDER Nos. 2-4

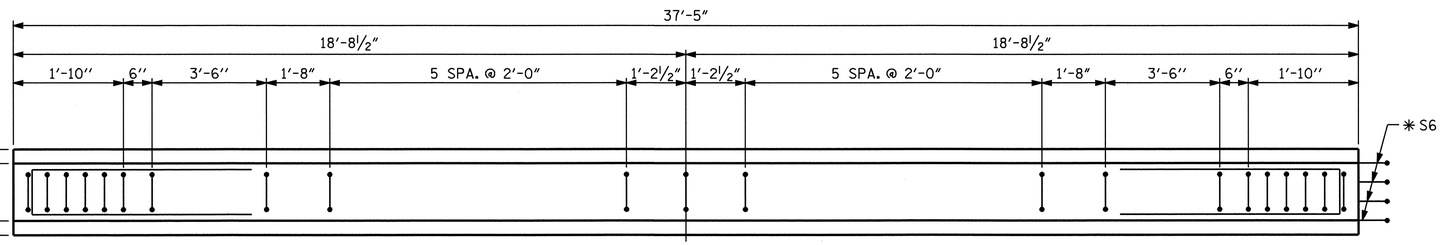

PLAN OF GIRDER

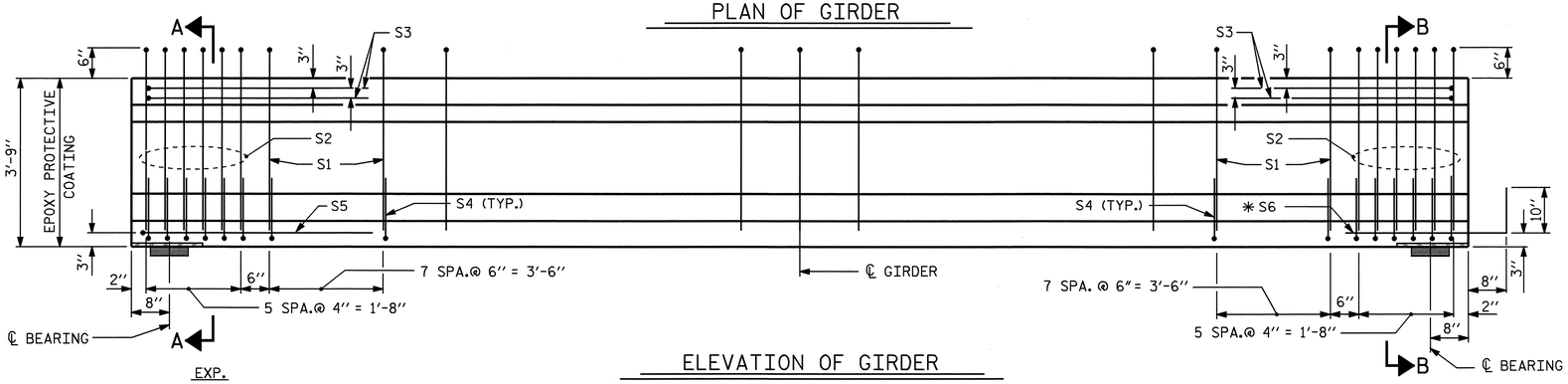

ELEVATION OF GIRDER

(SEE PARTIAL ELEVATION FOR ADDITIONAL "S" BARS)

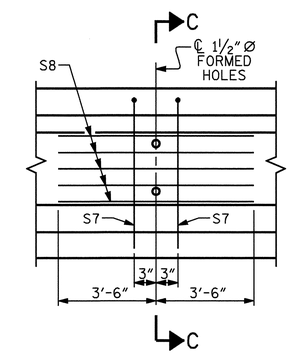

PARTIAL ELEVATION

SHOWING INTERMEDIATE DIAPHRAGM
REINFORCING STEEL FOR GIRDER Nos. 1 & 5

STATE OF NORTH CAROLINA PROFESSIONAL SEAL 20125 ENGINEER MARSHALL G. CHEEK, JR. 7-21-08

½" Ø L. R. GRADE 270 STRANDS

AREA (SQUARE INCHES)	ULTIMATE STRENGTH (LBS. PER STRAND)	APPLIED PRESTRESS (LBS. PER STRAND)
0.153	41,300	30,980

REINFORCING STEEL FOR ONE GIRDER

	BAR	NUMBER	SIZE	TYPE	LENGTH	WEIGHT
	S1	29	#4	1	8'-6"	165
	S2	12	#6	1	8'-6"	153
	S3	4	#4	3	8'-8"	23
	S4	56	#4	2	2'-9"	103
	S5	1	#4	3	9'-6"	6
	✳ S6	4	#5	STR	3'-8"	15
INTERIOR GDR.	S7	4	#5	3	7'-2"	30
INTERIOR GDR.	S9	5	#4	STR	11'-8"	39
EXTERIOR GDR.	S7	2	#5	3	7'-2"	15
EXTERIOR GDR.	S8	5	#4	STR	7'-0"	23

✳ NOTE: S6 BARS SHALL BE BENT BEFORE SHIPMENT. HEAT BENDING SHALL NOT BE ALLOWED.

BAR TYPES

ALL BAR DIMENSIONS ARE OUT-TO-OUT

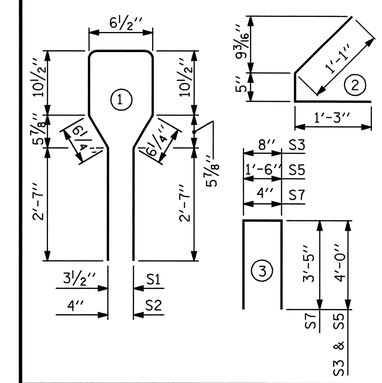

QUANTITIES FOR ONE GIRDER

	REINFORCING STEEL	5000 PSI CONCRETE	½" Ø L.R. STRANDS
	LB.	C.Y.	No.
INTERIOR GIRDER	528	5.4	12
EXTERIOR GIRDER	497	5.4	12

GIRDERS REQUIRED

NUMBER	LENGTH	TOTAL LENGTH
5	37'-5"	187'-1"

PROJECT NO. R-2911B

ROWAN COUNTY

STATION: 137+95.00-L-

SHEET 1 OF 5

STATE OF NORTH CAROLINA
DEPARTMENT OF TRANSPORTATION
RALEIGH

STANDARD

AASHTO TYPE III
PRESTRESSED CONCRETE GIRDER
CONTINUOUS FOR LIVE LOAD
SPAN A
LEFT LANE

REVISIONS							SHEET NO.
NO.	BY:	DATE:	NO.	BY:	DATE:		S-12
1			3				TOTAL SHEETS
2			4				77

ASSEMBLED BY : L.L. MURPHY	DATE : 4-08
CHECKED BY : M.G. CHEEK	DATE : 5-08
DRAWN BY : ELR 8/91	REV. 7/17/98 RWW/LES
CHECKED BY : GRP 8/91	REV. 10/17/00R RWW/LES
	REV. 5/1/06 TLA/GM

21-JUL-2008 09:36
r:\structures\final plans\str #1\R-2911B_sd_str#1-08_G*.dgn
ddhodge

STR #1

STD. NO. PCG5

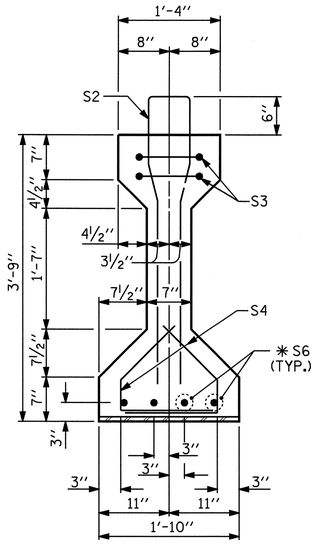

SECTION A-A

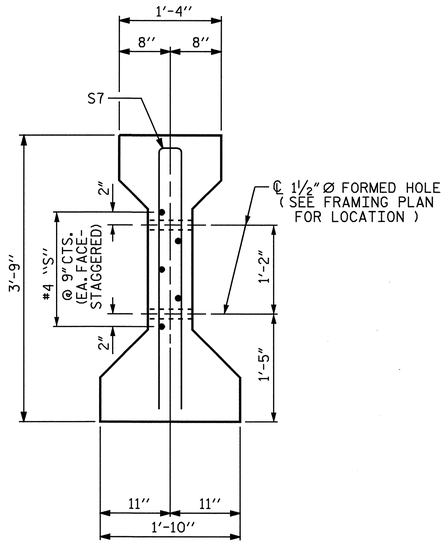

SECTION C-C

(S1 BARS NOT SHOWN)

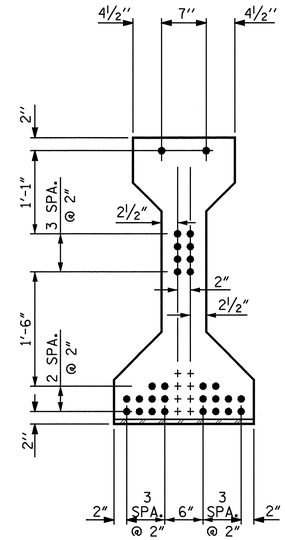

AT END OF GIRDER

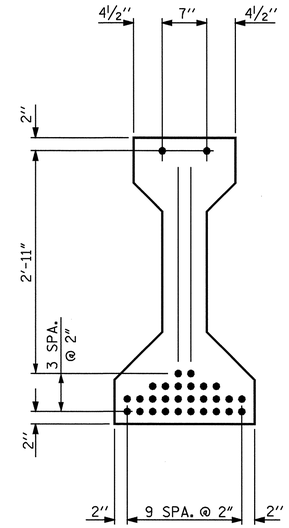

AT ℄ OF GIRDER

½" Ø LOW RELAXATION STRAND LAYOUT

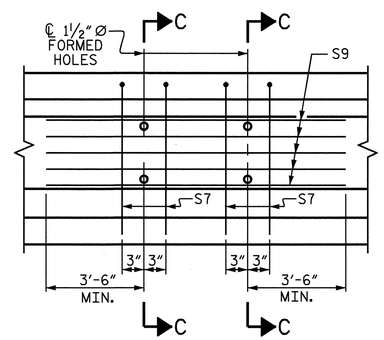

PARTIAL ELEVATION

SHOWING INTERMEDIATE DIAPHRAGM
REINFORCING STEEL FOR GIRDER Nos. 2-4

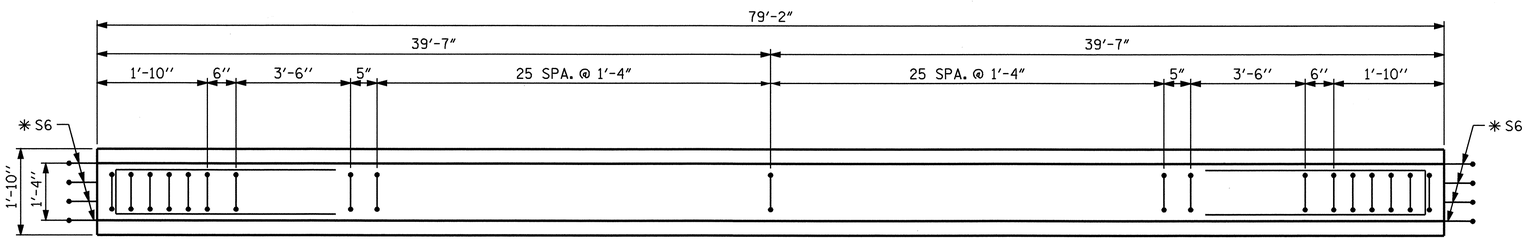

PLAN OF GIRDER

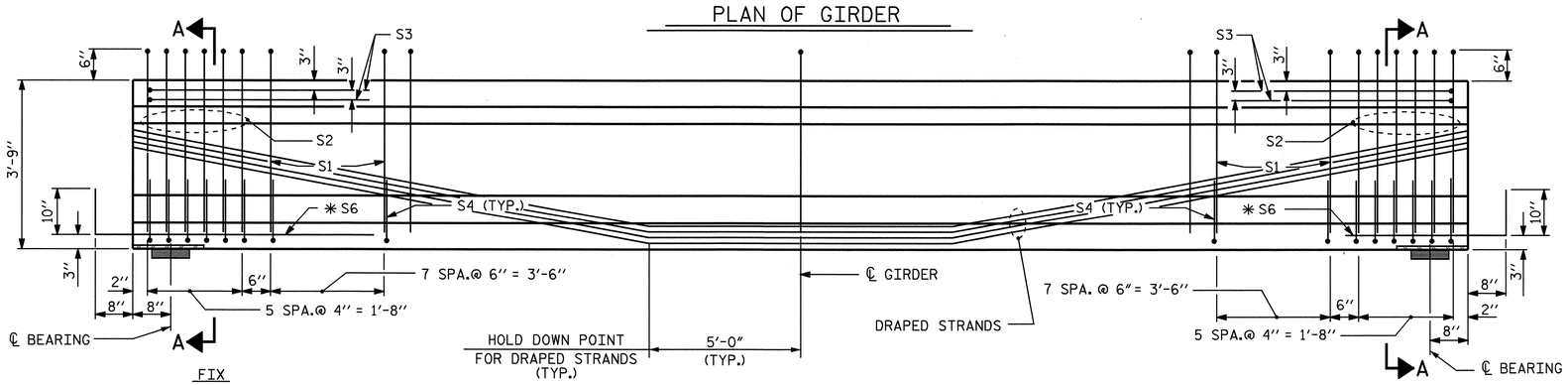

ELEVATION OF GIRDER

(SEE PARTIAL ELEVATION FOR ADDITIONAL "S" BARS)

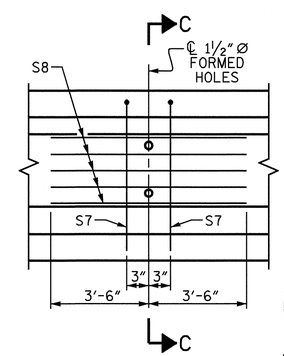

PARTIAL ELEVATION

SHOWING INTERMEDIATE DIAPHRAGM
REINFORCING STEEL FOR GIRDER Nos. 1 & 5

½" Ø L. R. GRADE 270 STRANDS

AREA (SQUARE INCHES)	ULTIMATE STRENGTH (LBS. PER STRAND)	APPLIED PRESTRESS (LBS. PER STRAND)
0.153	41,300	30,980

REINFORCING STEEL FOR ONE GIRDER

	BAR	NUMBER	SIZE	TYPE	LENGTH	WEIGHT
	S1	67	#4	1	8'-6"	380
	S2	12	#6	1	8'-6"	153
	S3	4	#4	3	8'-8"	23
	S4	56	#4	2	2'-9"	103
	✳ S6	8	#5	STR	3'-8"	31
INTERIOR GDR.	S7	4	#5	3	7'-2"	30
INTERIOR GDR.	S9	5	#4	STR	11'-8"	39
EXTERIOR GDR.	S7	2	#5	3	7'-2"	15
EXTERIOR GDR.	S8	5	#4	STR	7'-0"	23

✳ NOTE: S6 BARS SHALL BE BENT BEFORE SHIPMENT. HEAT BENDING SHALL NOT BE ALLOWED.

BAR TYPES

ALL BAR DIMENSIONS ARE OUT-TO-OUT

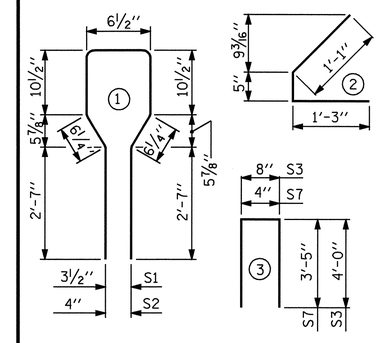

QUANTITIES FOR ONE GIRDER

	REINFORCING STEEL LB.	8200 PSI CONCRETE C.Y.	½" Ø L.R. STRANDS No.
INTERIOR GIRDER	759	11.4	30
EXTERIOR GIRDER	728	11.4	30

GIRDERS REQUIRED

NUMBER	LENGTH	TOTAL LENGTH
10	79'-2"	791'-8"

PROJECT NO. R-2911B

ROWAN COUNTY

STATION: 137+95.00-L-

SHEET 2 OF 5

STATE OF NORTH CAROLINA
DEPARTMENT OF TRANSPORTATION
RALEIGH

STANDARD

AASHTO TYPE III
PRESTRESSED CONCRETE GIRDER
CONTINUOUS FOR LIVE LOAD
SPANS B OR C
LEFT LANE

NORTH CAROLINA PROFESSIONAL SEAL 20125 ENGINEER MARSHALL G. CHEEK, JR.
7-21-08

REVISIONS								SHEET NO.
NO.	BY:	DATE:	NO.	BY:	DATE:			S-13
1			3					TOTAL SHEETS
2			4					77

ASSEMBLED BY : L.L. MURPHY	DATE : 04-08		
CHECKED BY : M.G. CHEEK	DATE : 05-08		
DRAWN BY : ELR 8/91	REV. 7/17/98 RWW/LES		
CHECKED BY : GRP 8/91	REV. 10/17/00R RWW/LES		
	REV. 5/1/06 TLA/GM		

17-JUN-2008 13:46
R:\Structures\r2911b\lmurphy\Microstation\Str#1\R2911B_sd_G#_str#1.dgn
afigueroa

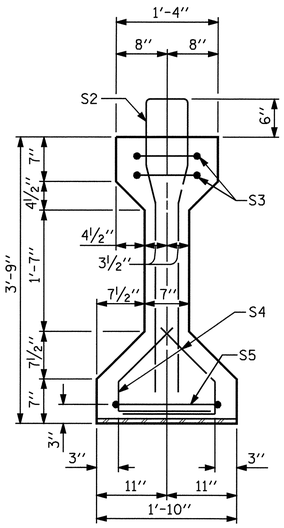

SECTION A-A

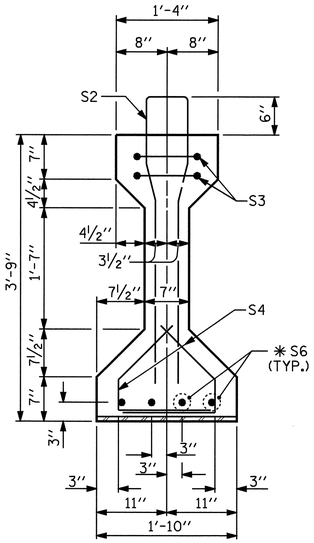

SECTION B-B

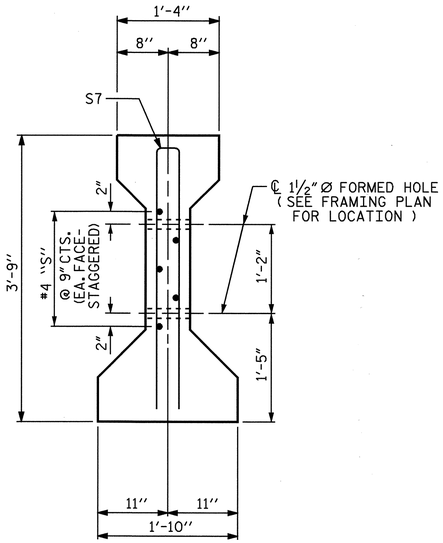

SECTION C-C

(S1 BARS NOT SHOWN)

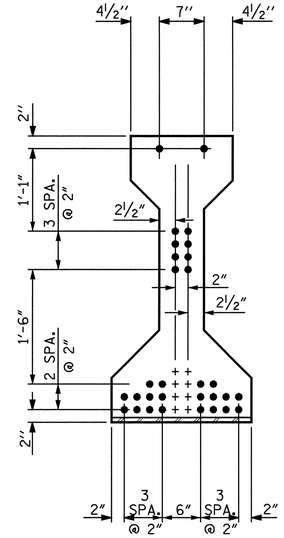

AT END OF GIRDER

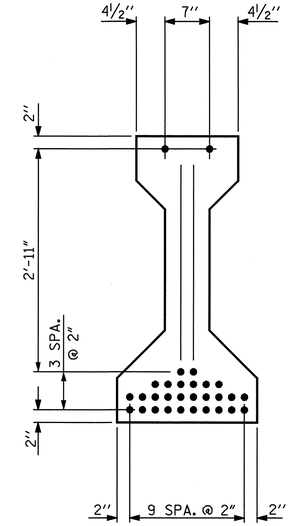

AT ℄ OF GIRDER

½" Ø LOW RELAXATION STRAND LAYOUT

½" Ø L. R. GRADE 270 STRANDS		
AREA (SQUARE INCHES)	ULTIMATE STRENGTH (LBS. PER STRAND)	APPLIED PRESTRESS (LBS. PER STRAND)
0.153	41,300	30,980

REINFORCING STEEL FOR ONE GIRDER

	BAR	NUMBER	SIZE	TYPE	LENGTH	WEIGHT
	S1	67	#4	1	8'-6"	380
	S2	12	#6	1	8'-6"	153
	S3	4	#4	3	8'-8"	23
	S4	56	#4	2	2'-9"	103
	S5	1	#4	3	9'-6"	6
	✱S6	4	#5	STR	3'-8"	15
INTERIOR GDR.	S7	4	#5	3	7'-2"	30
INTERIOR GDR.	S9	5	#4	STR	11'-8"	39
EXTERIOR GDR.	S7	2	#5	3	7'-2"	15
EXTERIOR GDR.	S8	5	#4	STR	7'-0"	23

✱NOTE: S6 BARS SHALL BE BENT BEFORE SHIPMENT. HEAT BENDING SHALL NOT BE ALLOWED.

BAR TYPES

ALL BAR DIMENSIONS ARE OUT-TO-OUT

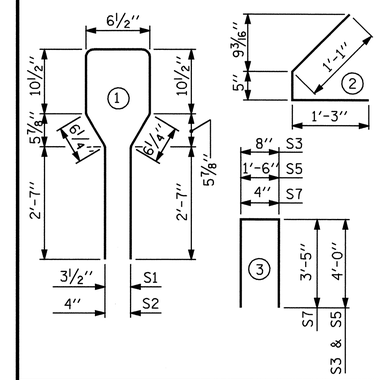

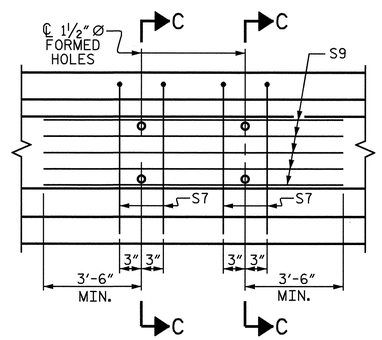

PARTIAL ELEVATION

SHOWING INTERMEDIATE DIAPHRAGM REINFORCING STEEL FOR GIRDER Nos. 2-4

QUANTITIES FOR ONE GIRDER

	REINFORCING STEEL	8200 PSI CONCRETE	½" Ø L.R. STRANDS
	LB.	C.Y.	No.
INTERIOR GIRDER	749	11.4	30
EXTERIOR GIRDER	718	11.4	30

GIRDERS REQUIRED

NUMBER	LENGTH	TOTAL LENGTH
5	79'-2"	395'-10"

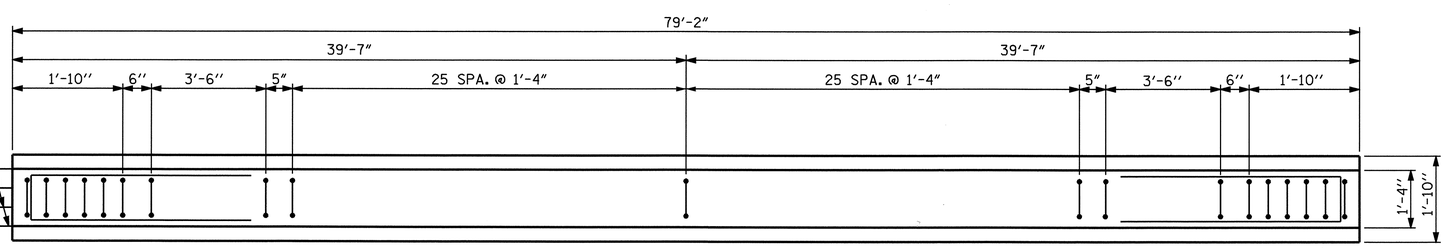

PLAN OF GIRDER

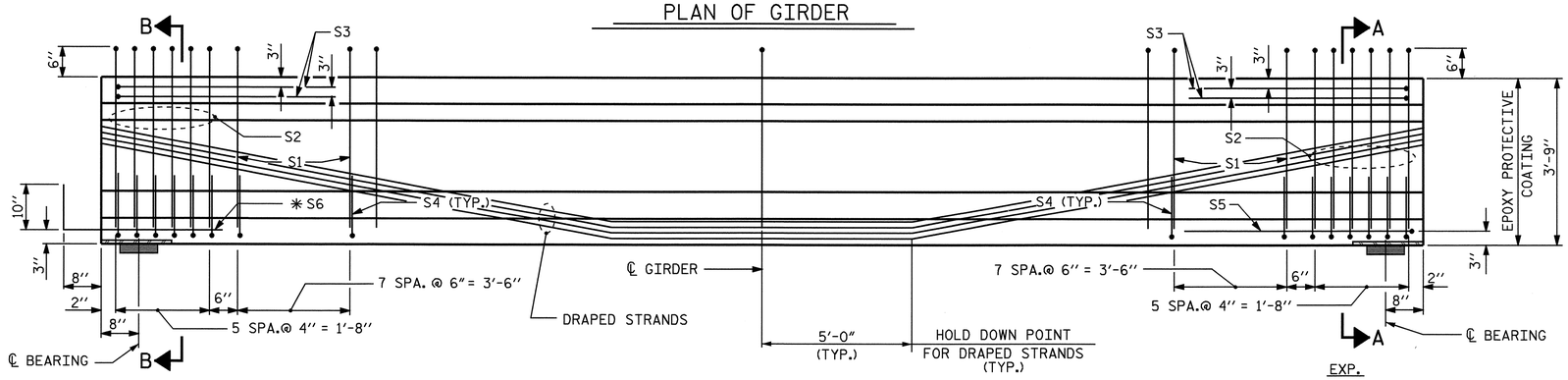

ELEVATION OF GIRDER

(SEE PARTIAL ELEVATION FOR ADDITIONAL "S" BARS)

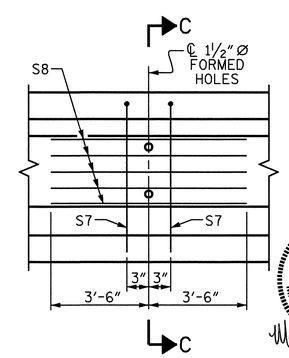

PARTIAL ELEVATION

SHOWING INTERMEDIATE DIAPHRAGM REINFORCING STEEL FOR GIRDER Nos. 1 & 5

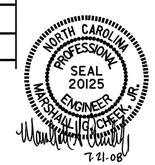

PROJECT NO. R-2911B

ROWAN COUNTY

STATION: 137+95.00-L-

SHEET 3 OF 5

STATE OF NORTH CAROLINA
DEPARTMENT OF TRANSPORTATION
RALEIGH

STANDARD

AASHTO TYPE III
PRESTRESSED CONCRETE GIRDER
CONTINUOUS FOR LIVE LOAD
SPAN D
LEFT LANE

ASSEMBLED BY : L.L. MURPHY	DATE : 04-08
CHECKED BY : M.G. CHEEK	DATE : 05-08
DRAWN BY : ELR 8/91	REV. 7/17/98 RWW/LES
CHECKED BY : GRP 8/91	REV. 10/17/00R RWW/LES
	REV. 5/1/06 TLA/GM

REVISIONS								SHEET NO.
NO.	BY:	DATE:	NO.	BY:	DATE:			S-14
1			3					TOTAL SHEETS
2			4					77

17-JUN-2008 13:46
R:\Structures\r2911b\lmurphy\Microstation\Str#1\R2911B_sd_G#_str#1.dgn
dfigueroa

STR #1

STD. NO. PCG5 (Sht. 1)

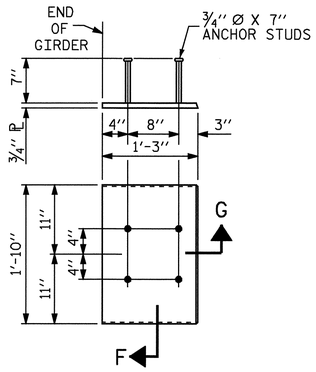

EMBEDDED PLATE "B-1" DETAILS FOR AASHTO TYPE III GIRDER

(2 REQ'D PER GIRDER)

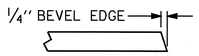

SECTION "G"

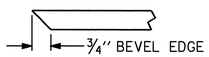

SECTION "F"

(SEE NOTES)

DEAD LOAD DEFLECTION TABLE FOR GIRDERS												
		SPAN "A"										
1/2" LOW RELAXATION		GIRDERS 1 THRU 5										
TENTH POINTS		0	0.1	0.2	0.3	0.4	0.5	0.6	0.7	0.8	0.9	0
CAMBER (GIRDER ALONE IN PLACE)	↑	0.0	0.006	0.011	0.016	0.018	0.019	0.018	0.016	0.011	0.006	0.0
✱ DEFLECTION DUE TO SUPERIMPOSED D.L.	↓	0.0	0.002	0.004	0.006	0.007	0.008	0.007	0.006	0.004	0.002	0.0
FINAL CAMBER	↑	0.0	1/16"	1/8"	1/8"	1/8"	1/8"	1/8"	1/8"	1/8"	1/16"	0.0

DEAD LOAD DEFLECTION TABLE FOR GIRDERS												
		SPAN "B", "C" & "D"										
1/2" LOW RELAXATION		GIRDERS 1 THRU 5										
TENTH POINTS		0	0.1	0.2	0.3	0.4	0.5	0.6	0.7	0.8	0.9	0
CAMBER (GIRDER ALONE IN PLACE)	↑	0.0	0.113	0.214	0.293	0.343	0.361	0.343	0.293	0.214	0.113	0.0
✱ DEFLECTION DUE TO SUPERIMPOSED D.L.	↓	0.0	0.041	0.078	0.107	0.125	0.131	0.125	0.107	0.078	0.041	0.0
FINAL CAMBER	↑	0.0	7/8"	1 5/8"	2 1/4"	2 5/8"	2 3/4"	2 5/8"	2 1/4"	1 5/8"	7/8"	0.0

✱ INCLUDES FUTURE WEARING SURFACE
ALL VALUES ARE SHOWN IN FEET (DECIMAL FORM), EXCEPT " FINAL CAMBER ", WHICH IS GIVEN IN INCHES (FRACTION FORM).

NOTES

ALL PRESTRESSING STRANDS SHALL BE 7-WIRE LOW-RELAXATION GRADE 270 STRANDS AND SHALL CONFORM TO AASHTO M203 EXCEPT FOR SAMPLING REQUIREMENTS WHICH SHALL BE IN ACCORDANCE WITH THE STANDARD SPECIFICATIONS.

ALL REINFORCING STEEL SHALL BE GRADE 60.

APPLY EPOXY PROTECTIVE COATING TO END OF GIRDER SURFACES INDICATED IN ELEVATION VIEW.

EMBEDDED PLATE "B-1" SHALL BE GALVANIZED IN ACCORDANCE WITH THE STANDARD SPECIFICATIONS. BEVEL EDGES OF PLATE "B-1" TO GIVE CLOSE FIT BUT NOT TIGHT FIT TO STEEL CASTING FORM.

ANCHOR STUDS SHALL CONFORM TO AASHTO M169 GRADES 1010 THROUGH 1020 OR APPROVED EQUAL, AND SHALL MEET THE TYPE "B" REQUIREMENTS OF SUBSECTION 7.3 OF THE ANSI/AASHTO/AWS D1.5 BRIDGE WELDING CODE.

AT ENDS OF GIRDERS TO BE EMBEDDED IN CONCRETE DIAPHRAGMS OR END WALLS, PRESTRESSING STRANDS MAY EXTEND A MAXIMUM OF 2" BEYOND THE GIRDER ENDS. OTHERWISE, PRESTRESSING STRANDS SHALL BE CUT FLUSH WITH THE GIRDER ENDS.

THE TRANSFER OF LOAD FROM THE ANCHORAGES TO THE GIRDER SHALL BE DONE WHEN CONCRETE HAS REACHED A COMPRESSIVE STRENGTH OF NOT LESS THAN 4000 PSI FOR SPAN A.

THE TRANSFER OF LOAD FROM THE ANCHORAGES TO THE GIRDER SHALL BE DONE WHEN CONCRETE HAS REACHED A COMPRESSIVE STRENGTH OF NOT LESS THAN 6500 PSI FOR SPANS B, C & D.

DEPENDING ON THE TYPE OF SYSTEM USED TO SUPPORT THE DECK SLAB FORMS, PRESET ANCHORS MAY BE NECESSARY IN THE PRESTRESSED CONCRETE GIRDER.

THE TOP SURFACE OF THE GIRDER, EXCLUDING THE OUTSIDE 4", SHALL BE RAKED TO A DEPTH OF 1/4".

WHEN DRAPED STRANDS ARE DETAILED, THE LONGITUDINAL LOCATION OF THE HOLD DOWN DEVICES SHALL BE WITHIN 6" OF THE LOCATION SHOWN AND THE CENTER OF GRAVITY OF THE GROUP OF DRAPED STRANDS SHALL BE LOCATED WITHIN 1/2" OF THE THEORETICAL LOCATION SHOWN.

FOR CRACK REPAIR OF PRESTRESSED CONCRETE GIRDERS, SEE SPECIAL PROVISIONS.

FOR PRESTRESSED CONCRETE MEMBERS, SEE SPECIAL PROVISIONS.

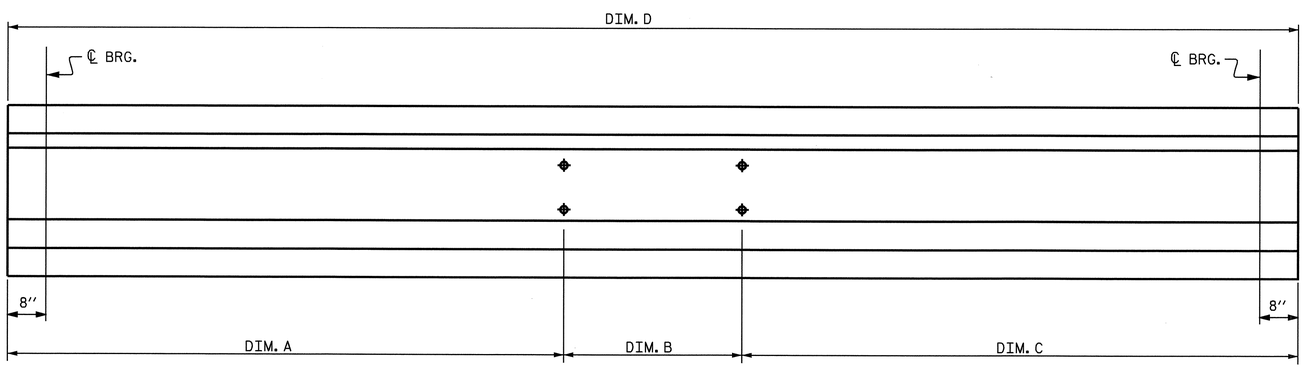

LOCATION OF BOLT HOLES IN GIRDERS

FOR DIMENSIONS SEE CHART A

CHART A				
GIRDER	DIM. A	DIM. B	DIM. C	DIM. D
GDR. B1	37'-3"	0	41'-11"	79'-2"
GDR. B2	37'-3"	4'-8"	37'-3"	79'-2"
GDR. B3	37'-3"	4'-8"	37'-3"	79'-2"
GDR. B4	37'-3"	4'-8"	37'-3"	79'-2"
GDR. B5	41'-11"	0	37'-3"	79'-2"
GDR. C1	37'-3"	0	41'-11"	79'-2"
GDR. C2	37'-3"	4'-8"	37'-3"	79'-2"
GDR. C3	37'-3"	4'-8"	37'-3"	79'-2"
GDR. C4	37'-3"	4'-8"	37'-3"	79'-2"
GDR. C5	41'-11"	0	37'-3"	79'-2"
GDR. D1	37'-3"	0	41'-11"	79'-2"
GDR. D2	37'-3"	4'-8"	37'-3"	79'-2"
GDR. D3	37'-3"	4'-8"	37'-3"	79'-2"
GDR. D4	37'-3"	4'-8"	37'-3"	79'-2"
GDR. D5	41'-11"	0	37'-3"	79'-2"

PROJECT NO. R-2911B
ROWAN COUNTY
STATION: 137+95.00 -L-

SHEET 4 OF 5

NORTH CAROLINA PROFESSIONAL SEAL 20125 ENGINEER MARSHALL G. CHEEK, JR.
7-21-08

STATE OF NORTH CAROLINA
DEPARTMENT OF TRANSPORTATION
RALEIGH

STANDARD
PRESTRESSED CONCRETE GIRDER CONTINUOUS FOR LIVE LOAD
DETAILS
LEFT LANE

REVISIONS						SHEET NO.
NO.	BY:	DATE:	NO.	BY:	DATE:	S-15
1			3			TOTAL SHEETS
2			4			77

ASSEMBLED BY : L.L. MURPHY	DATE : 04-08
CHECKED BY : M.G. CHEEK	DATE : 05-08
DRAWN BY : ELR 11/91	REV. 10/17/00 RWW/LES
CHECKED BY : GRP 11/91	REV. 7/10/01RR LES/RDR
	REV. 5/1/06 TLA/GM

17-JUN-2008 16:15
R:\Structures\r2911b\lmurphy\Microstation\Str#1\R2911B_sd_G*_str#1.dgn
afigueroa

STR. #1

STD. NO. PCG11

TABLE

GIRDER TYPE	CHANNEL SIZE	DIM "A"	DIM "B"	DIM "L"
III	MC 18 x 42.7	1'-5"	1'-2"	1'-6"

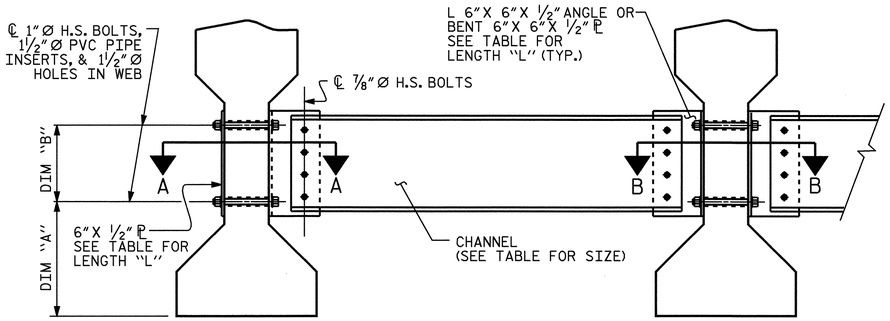

EXTERIOR GIRDER

INTERIOR GIRDER

PART SECTION AT INTERMEDIATE DIAPHRAGM

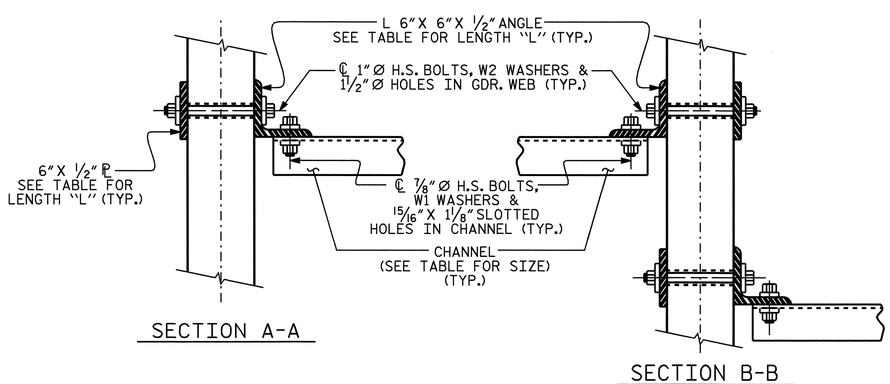

SECTION A-A

SECTION B-B

CONNECTION DETAILS

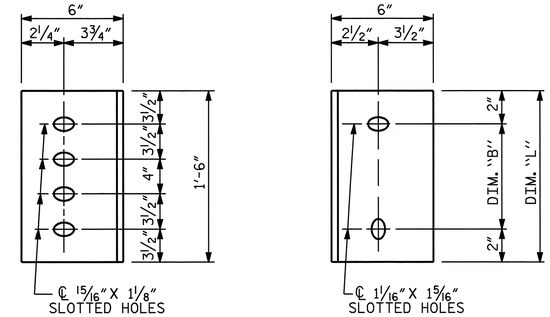

DIAPHRAGM FACE

WEB FACE

CONNECTOR PLATE DETAILS

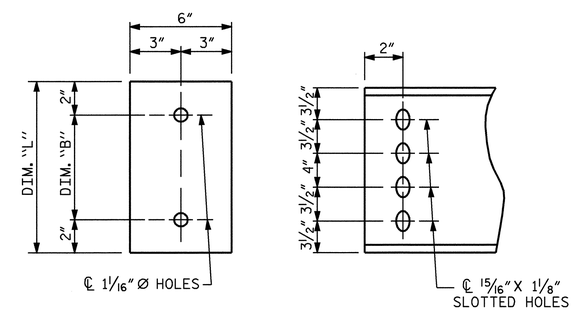

PLATE DETAILS

CHANNEL END

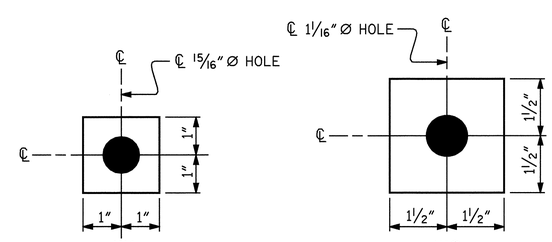

W1

ℙ 7/16" X 2" X 2"

USE WITH ⅞" Ø HVY. HEX NUTS & DIRECT TENSION INDICATOR WASHERS AT DIAPHRAGM CHANNEL TO CONNECTOR PLATE CONNECTIONS

W2

ℙ 7/16" X 3" X 3"

USE WITH 1" Ø HVY. HEX NUTS & DIRECT TENSION INDICATOR WASHERS AT CONNECTOR PLATE TO GIRDER CONNECTIONS

WASHER DETAILS

STRUCTURAL STEEL NOTES

ALL INTERMEDIATE DIAPHRAGM STEEL, CONNECTOR PLATES AND PLATE WASHERS SHALL BE AASHTO M270 GRADE 50 OR APPROVED EQUAL.

TENSION ON THE AASHTO M164 BOLTS THROUGH THE CHANNEL MEMBER SHALL BE CALIBRATED USING DIRECT TENSION INDICATOR WASHERS IN ACCORDANCE WITH ARTICLE 440-8 OF THE STANDARD SPECIFICATIONS.

TENSION ON THE AASHTO M164 BOLTS THROUGH THE GIRDER WEB SHALL BE SNUG TIGHTENED FOLLOWED BY AN ADDITIONAL ¼ TURN.

THE CHANNELS, ANGLES, WASHERS, PLATE WASHERS, AND DIRECT TENSION INDICATORS SHALL BE GALVANIZED OR METALLIZED IN ACCORDANCE WITH THE STANDARD SPECIFICATIONS. FOR THERMAL SPRAYED COATINGS (METALLIZATION), SEE SPECIAL PROVISIONS.

FOR METALLIZATION, APPLY AN 8 MIL THICK 99.99 PERCENT ZINC (W-Zn-1) THERMAL SPRAYED COATING WITH A 0.5 MIL THICK SEAL COAT TO ALL STEEL DIAPHRAGM SURFACES IN ACCORDANCE WITH THE THERMAL SPRAYED COATINGS SPECIAL PROVISIONS AND SECTION 442 OF THE STANDARD SPECIFICATIONS.

GALVANIZE THE HIGH STRENGTH BOLTS, NUTS, AND WASHERS IN ACCORDANCE WITH THE STANDARD SPECIFICATIONS. FOR HIGH STRENGTH BOLTS, SEE SPECIAL PROVISIONS.

USE A MINIMUM 7/16" THICK PLATE WASHER WITH STANDARD HOLES UNDER EACH BOLT HEAD AND NUT. THE PLATE WASHERS SHALL HAVE SUFFICIENT SIZE TO COVER THE HOLES AFTER INSTALLATION. DIRECT TENSION INDICATORS ARE TO BE USED IN CONJUNCTION WITH THE PLATE WASHERS.

PROVIDE SUFFICIENT LENGTH OF ALL BOLTS TO ACCOMMODATE WASHERS, DIRECT TENSION INDICATORS, THE THICKNESS OF CONNECTING MEMBER PLUS AT LEAST ¼" PROJECTION BEYOND THE NUT.

INTERMEDIATE DIAPHRAGM ASSEMBLY SHALL COMPLY WITH SECTION 1072 OF THE STANDARD SPECIFICATIONS.

CONTRACTOR SHALL SUBMIT TWO SETS OF WORKING DRAWINGS FOR THE INTERMEDIATE DIAPHRAGM ASSEMBLY FOR REVIEW, COMMENTS AND ACCEPTANCE. AFTER REVIEW, COMMENTS, AND ACCEPTANCE, SUBMIT SEVEN SETS FOR DISTRIBUTION.

IN THE EXTERIOR BAYS, TEMPORARY STRUTS SHALL BE PLACED BETWEEN PRESTRESSED GIRDERS ADJACENT TO THE STEEL DIAPHRAGMS. STRUTS SHALL REMAIN IN PLACE 3 DAYS AFTER CONCRETE IS PLACED. ALL AASHTO M164 H.S. BOLTS SHALL BE FULLY TIGHTENED AFTER THE STRUTS HAVE BEEN REMOVED.

THE COST OF THE STEEL DIAPHRAGMS AND ASSEMBLIES SHALL BE INCLUDED IN THE UNIT PRICE BID FOR PRESTRESSED CONCRETE GIRDERS.

PROJECT NO. R-2911B

ROWAN COUNTY

STATION: 137+95.00 -L-

SHEET 5 OF 5

STATE OF NORTH CAROLINA
DEPARTMENT OF TRANSPORTATION
RALEIGH

STANDARD
INTERMEDIATE
STEEL DIAPHRAGMS
FOR TYPE III
PRESTRESSED CONCRETE
GIRDERS
LEFT LANE

NORTH CAROLINA PROFESSIONAL SEAL 20125 ENGINEER MARSHALL G. CHEEK, JR.

7-21-08

REVISIONS						
NO.	BY:	DATE:	NO.	BY:	DATE:	
1			3			
2			4			

SHEET NO. S-16

TOTAL SHEETS 77

STR. #1

STD. NO. PCG12

ASSEMBLED BY : L.L. MURPHY		DATE : 7/19/06	
CHECKED BY : M.G. CHEEK		DATE : 05-08	
DRAWN BY : TLA 6/05	ADDED 10/21/05		
CHECKED BY : VC 6/05	REV. 5/1/06R	KMM/GM	

21-JUL-2008 09:37
r:\structures\final plans\str #1\R-2911B_sd_str#1-08_G*.dgn
dahodge

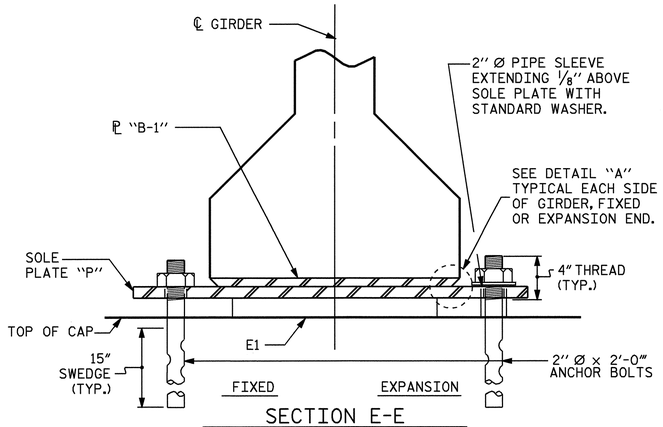

SECTION E-E

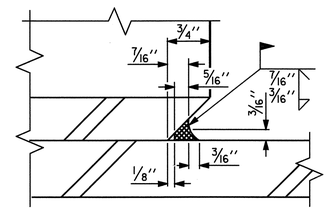

DETAIL "A"

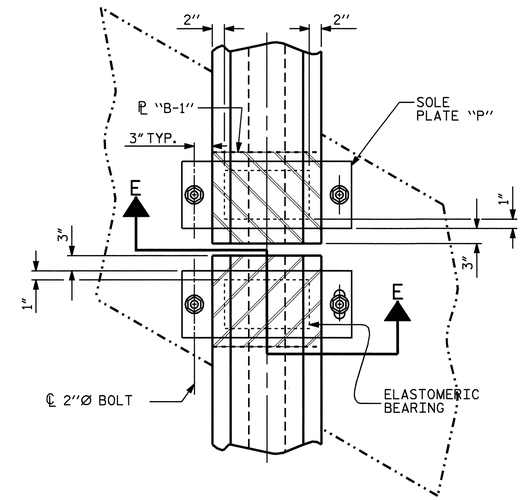

TYPICAL HALF-PLAN
(SHOWING CONTINUOUS BENT)

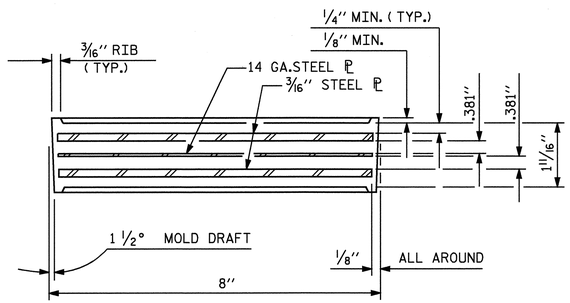

TYPICAL SECTION OF ELASTOMERIC BEARINGS

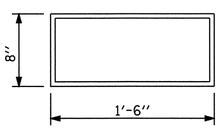

E1 (40 REQ'D)

PLAN VIEW OF ELASTOMERIC BEARING

TYPE III

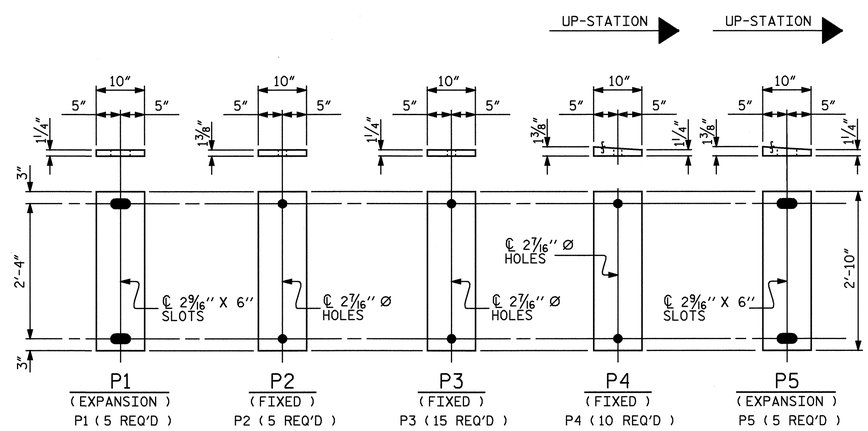

SOLE PLATE DETAILS ("P")

NOTES

AT ALL FIXED POINTS OF SUPPORT, NUTS FOR ANCHOR BOLTS ARE TO BE TIGHTENED FINGER TIGHT AND THEN BACKED OFF 1/2 TURN. THE THREAD OF THE NUT AND BOLT SHALL THEN BE BURRED WITH A SHARP POINTED TOOL.

THE 2" Ø PIPE SLEEVE SHALL BE CUT FROM SCHEDULE 40 PVC PLASTIC PIPE. THE PVC PLASTIC PIPE SHALL MEET THE REQUIREMENTS OF ASTM D1785.

STEEL SOLE PLATES, ANCHOR BOLTS, NUTS, AND WASHERS SHALL BE GALVANIZED IN ACCORDANCE WITH THE STANDARD SPECIFICATIONS.

PRIOR TO WELDING, GRIND THE GALVANIZED SURFACE OF THE PORTION OF THE EMBEDDED PLATE AND SOLE PLATE THAT ARE TO BE WELDED. AFTER WELDING, DAMAGED GALVANIZED SURFACES SHALL BE REPAIRED IN ACCORDANCE WITH THE STANDARD SPECIFICATIONS.

WHEN WELDING THE SOLE PLATE TO THE EMBEDDED PLATE IN THE GIRDER, USE TEMPERATURE INDICATING WAX PENS, OR OTHER SUITABLE MEANS, TO ENSURE THAT THE TEMPERATURE OF THE SOLE PLATE DOES NOT EXCEED 300°F. TEMPERATURES ABOVE THIS MAY DAMAGE THE ELASTOMER.

SOLE PLATE "P", BOLTS, NUTS, WASHERS, AND PIPE SLEEVE SHALL BE INCLUDED IN THE PAY ITEM FOR PRESTRESSED CONCRETE GIRDERS.

ANCHOR BOLTS SHALL MEET THE REQUIREMENTS OF ASTM A449. NUTS SHALL MEET THE REQUIREMENTS OF AASHTO M291-DH OR AASHTO M292-2H. WASHERS SHALL MEET THE REQUIREMENTS OF AASHTO M293. SHOP DRAWINGS ARE NOT REQUIRED FOR ANCHOR BOLT, NUTS AND WASHERS. SHOP INSPECTION IS REQUIRED.

ALL SURFACES OF BEARING PLATES SHALL BE SMOOTH AND STRAIGHT.

ELASTOMER IN ALL BEARINGS SHALL BE 60 DUROMETER.

— LOAD RATINGS —	
	MAX.D.L.+L.L.
45"PCG -TYPE III	115 K

ALL BEARINGS SHALL BE 60 DUROMETER

PROJECT NO. R-2911B
ROWAN COUNTY
STATION: 137+95.00-L-

STATE OF NORTH CAROLINA
DEPARTMENT OF TRANSPORTATION
RALEIGH
STANDARD
ELASTOMERIC BEARING DETAILS
PRESTRESSED CONCRETE GIRDER SUPERSTRUCTURE
LEFT LANE

REVISIONS								SHEET NO.
NO.	BY:	DATE:	NO.	BY:	DATE:			S-17
1			3					TOTAL SHEETS
2			4					77

NORTH CAROLINA PROFESSIONAL SEAL 20125 ENGINEER MARSHALL L. CHEEK, JR.
7-21-08

ASSEMBLED BY : L.L. MURPHY	DATE : 04-08		
CHECKED BY : M.G. CHEEK	DATE : 05-08		
DRAWN BY : WJH 8/89	REV. 10/17/00	RWW/LES	
CHECKED BY : CRK 8/89	REV. 7/10/01	RWW/LES	
	REV. 5/1/06	TLA/GM	

21-JUL-2008 09:39
r:\structures\finalplans\str #1\R-2911B_sd_str#1-09_BG.dgn
dahodge

STR #1

STD. NO. EB3

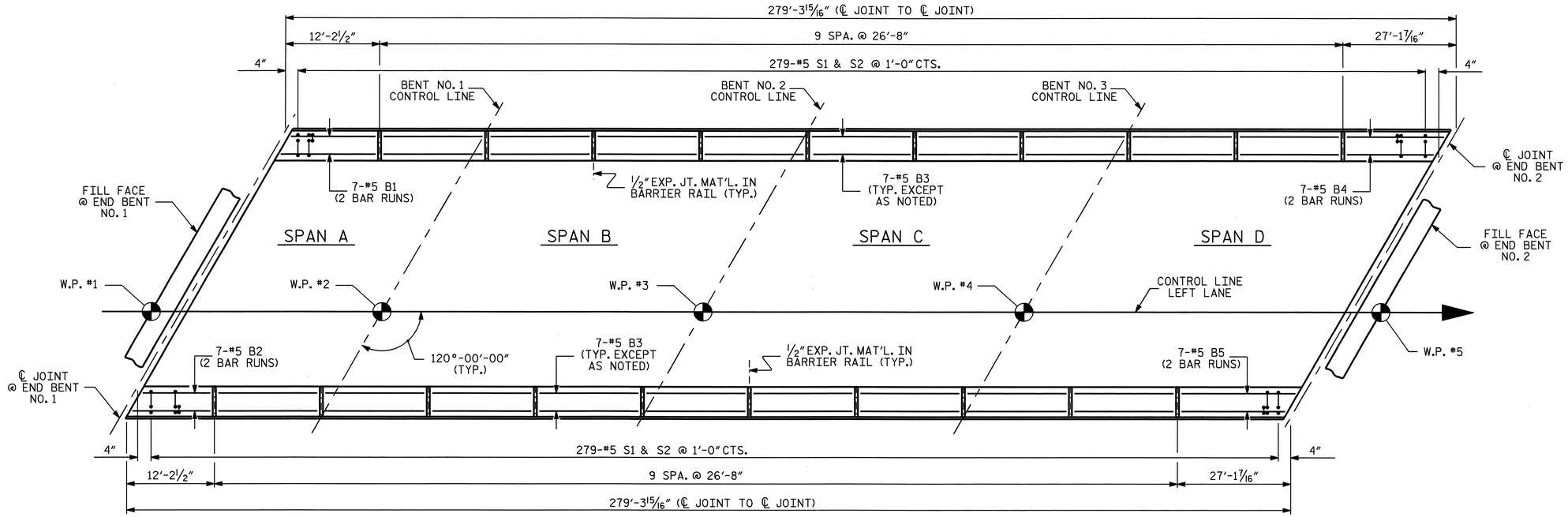

PLAN OF CONCRETE BARRIER RAIL

*FOR REINFORCING STEEL, SEE "END OF RAIL DETAILS"

BAR TYPES

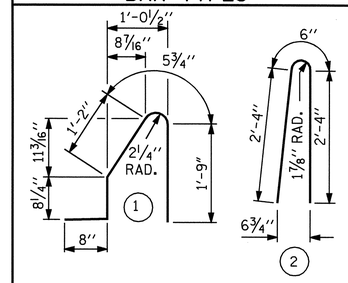

ALL BAR DIMENSIONS ARE OUT TO OUT

BILL OF MATERIAL

FOR CONCRETE BARRIER RAIL ONLY

BAR	NO.	SIZE	TYPE	LENGTH	WEIGHT
* S1	558	#5	1	4'-9"	2764
* S2	558	#5	2	5'-2"	3007
* B1	14	#5	STR	8'-1"	118
* B2	14	#5	STR	7'-8"	112
* B3	126	#5	STR	26'-3"	3450
* B4	14	#5	STR	15'-0"	219
* B5	14	#5	STR	15'-5"	225

* EPOXY COATED REINFORCING STEEL	9895 LBS.
CLASS AA CONCRETE	55.9 CU. YDS.
CONCRETE BARRIER RAIL	558.66 LIN. FT.

* THESE BARS ARE EPOXY COATED.

NOTES

THE BARRIER RAIL IN A CONTINUOUS UNIT SHALL NOT BE CAST UNTIL ALL SLAB CONCRETE IN THAT UNIT HAS BEEN CAST AND HAS REACHED A MINIMUM COMPRESSIVE STRENGTH OF 3,000 PSI.

ALL REINFORCING STEEL IN BARRIER RAILS SHALL BE EPOXY COATED.

VERTICAL GROOVED CONTRACTION JOINTS, 1/2" IN DEPTH, SHALL BE TOOLED IN ALL EXPOSED FACES OF THE BARRIER RAIL AND IN ACCORDANCE WITH ARTICLE 825-10(B) OF THE STANDARD SPECIFICATIONS. THE CONTRACTION JOINT SHALL BE LOCATED AT EACH THIRD POINT BETWEEN BARRIER RAIL EXPANSION JOINTS. ONLY ONE CONTRACTION JOINT IS REQUIRED AT MIDPOINT OF BARRIER RAIL SEGMENTS LESS THAN 20 FEET IN LENGTH AND NO CONTRACTION JOINTS ARE REQUIRED FOR THOSE SEGMENTS LESS THAN 10 FEET IN LENGTH.

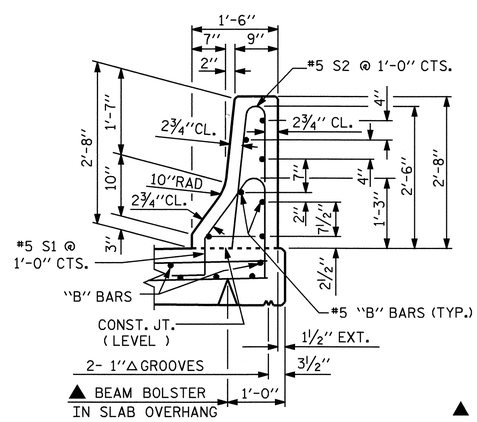

SECTION THRU RAIL

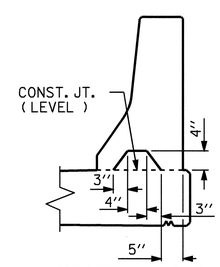

SECTION S-S

AT DAM IN OPEN JOINT (THIS IS TO BE USED ONLY WHEN SLIP FORM IS USED)

▲ FOR BEAM BOLSTER HEIGHT SEE, "SUPERSTRUCTURE TYPICAL SECTION".

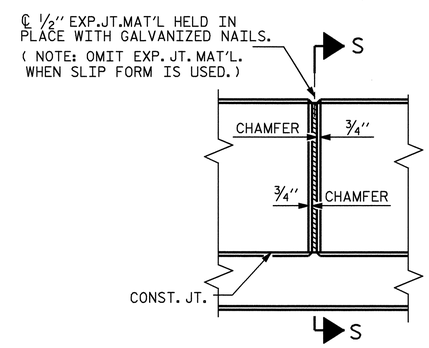

ELEVATION AT EXPANSION JOINTS

BARRIER RAIL DETAILS

PROJECT NO. R-2911B

ROWAN COUNTY

STATION: 137+95.00 -L-

SHEET 1 OF 2

STATE OF NORTH CAROLINA
DEPARTMENT OF TRANSPORTATION
RALEIGH

STANDARD

CONCRETE BARRIER RAIL LEFT LANE

NORTH CAROLINA PROFESSIONAL SEAL 20125 ENGINEER MARSHALL A. CHEEK, JR.
7-11-08

ASSEMBLED BY : L.L. MURPHY	DATE : 04-08		
CHECKED BY : M.G. CHEEK	DATE : 05-08		
DRAWN BY : ARB 5/87	REV. 10/17/00	RWW/LES	
CHECKED BY : SJD 9/87	REV. 5/7/03R	RWW/JTE	
	REV. 5/1/06	TLA/GM	

REVISIONS							SHEET NO.
NO.	BY:	DATE:	NO.	BY:	DATE:		S-18
1			3				TOTAL SHEETS
2			4				77

STR #1

STD. NO. CBR1

21-JUL-2008 10:01
r:\structures\final plans\str #1\R-2911B_sd_str#1-10_BR.dgn
dahodge

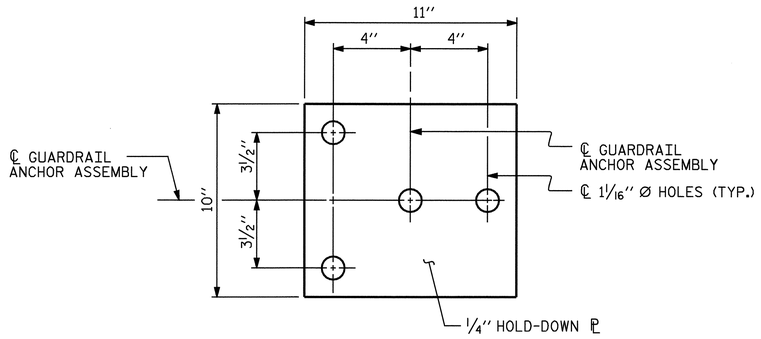

PLAN

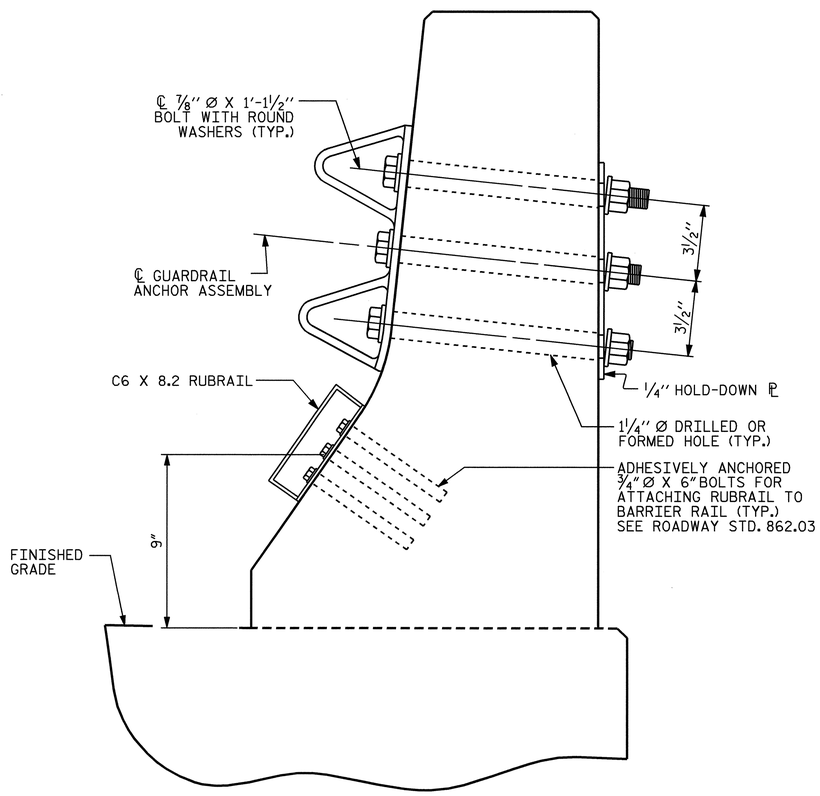

SECTION E-E

GUARDRAIL ANCHOR ASSEMBLY DETAILS

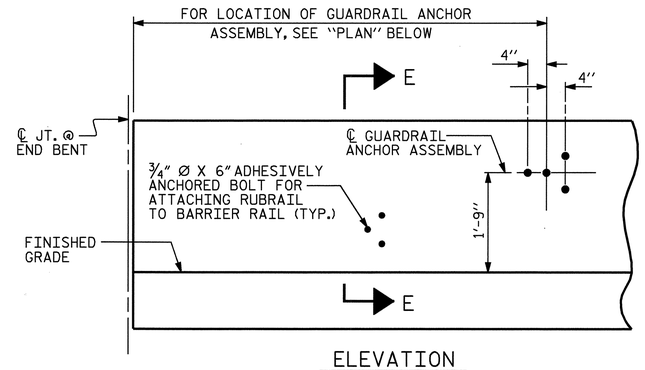

ELEVATION

FOR LOCATION OF RUBRAIL, SEE ROADWAY STD. 862.03

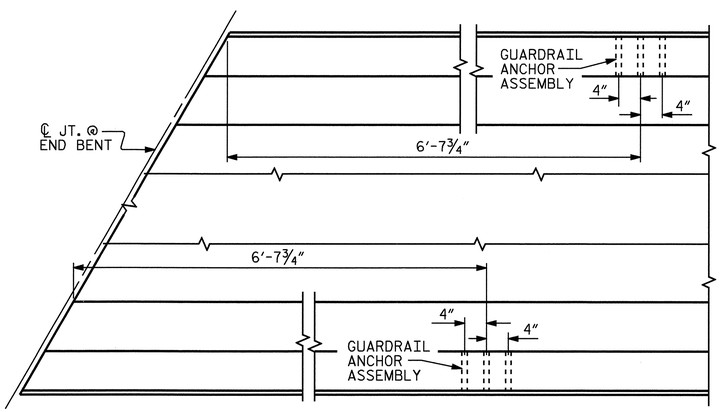

PLAN

LOCATION OF ANCHORS FOR GUARDRAIL

END BENT #1 SHOWN, END BENT #2 SIMILAR.

NOTES

THE GUARDRAIL ANCHOR ASSEMBLY SHALL CONSIST OF A 1/4'' HOLD DOWN PLATE AND 4 - 7/8'' Ø BOLTS WITH NUTS AND WASHERS, RUBRAIL, AND ADHESIVELY ANCHORED BOLTS.

THE HOLD-DOWN PLATE SHALL CONFORM TO AASHTO M270 GRADE 36. AFTER FABRICATION, THE HOLD-DOWN PLATE SHALL BE HOT-DIP GALVANIZED IN ACCORDANCE WITH AASHTO M111.

BOLTS SHALL CONFORM TO THE REQUIREMENTS OF ASTM A307 AND NUTS SHALL CONFORM TO THE REQUIREMENTS OF AASHTO M291. BOLTS, NUTS AND WASHERS SHALL BE GALVANIZED. (AT THE CONTRACTOR'S OPTION, STAINLESS STEEL BOLTS, NUTS AND WASHERS MAY BE USED AS AN ALTERNATE FOR THE 7/8'' Ø GALVANIZED BOLTS, NUTS AND WASHERS. THEY SHALL CONFORM TO OR EXCEED THE MECHANICAL REQUIREMENTS OF ASTM A307. THE USE OF THIS ALTERNATE SHALL BE APPROVED BY THE ENGINEER.)

THE GUARDRAIL ANCHOR ASSEMBLY IS REQUIRED AT ALL POINTS WHERE APPROACH GUARDRAIL IS TO BE ATTACHED TO THE END OF BARRIER RAIL. FOR POINTS OF ATTACHMENT, SEE SKETCH.

AFTER INSTALLATION, THE EXPOSED THREAD OF THE BOLT SHALL BE BURRED WITH A SHARP POINTED TOOL.

THE COST OF THE GUARDRAIL ANCHOR ASSEMBLY SHALL BE INCLUDED IN THE UNIT CONTRACT PRICE BID FOR CONCRETE BARRIER RAIL.

THE 1 1/4'' Ø HOLES SHALL BE FORMED OR DRILLED WITH A CORE BIT. IMPACT TOOLS WILL NOT BE PERMITTED. ANY CONCRETE DAMAGED BY THIS WORK SHALL BE REPAIRED TO THE SATISFACTION OF THE ENGINEER.

THE C6 X 8.2 RUBRAIL IS TO BE ADHESIVELY ANCHORED TO THE RAIL USING THREE 3/4'' Ø X 6'' BOLTS WITH WASHERS. LEVEL ONE FIELD TESTING IS REQUIRED, AND THE YIELD LOAD OF THE 3/4'' Ø BOLT IS 12 KIPS. FOR ADHESIVELY ANCHORED ANCHOR BOLTS OR DOWELS, SEE SPECIAL PROVISIONS. SEE ROADWAY STANDARD 862.03 FOR DETAILS AND LOCATION OF THE RUBRAIL.

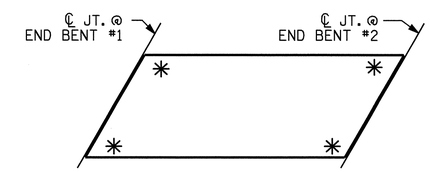

SKETCH SHOWING POINTS OF ATTACHMENTS

✳ DENOTES GUARDRAIL ANCHOR ASSEMBLY

PROJECT NO. R-2911B
ROWAN COUNTY
STATION: 137+95.00-L-

SHEET 2 OF 2

STATE OF NORTH CAROLINA
DEPARTMENT OF TRANSPORTATION
RALEIGH

STANDARD
GUARDRAIL ANCHORAGE FOR BARRIER RAIL LEFT LANE

NORTH CAROLINA PROFESSIONAL SEAL 20125 ENGINEER MARSHALL G. CHEEK, JR.
7-21-08

REVISIONS						SHEET NO.
NO.	BY:	DATE:	NO.	BY:	DATE:	S-19
1			3			TOTAL SHEETS
2			4			77

STR #1 STD. NO. GRA2

ASSEMBLED BY : L.L. MURPHY		DATE : 04-08	
CHECKED BY : M.G. CHEEK		DATE : 05-08	
DRAWN BY : TLA 5/06	ADDED 5/1/06R KMM/GM		
CHECKED BY : GM 5/06			

21-JUL-2008 11:07
r:\Structures\Final Plans\Str #1\R-2911B_sd_str#1-10_BR.dgn
dahodge

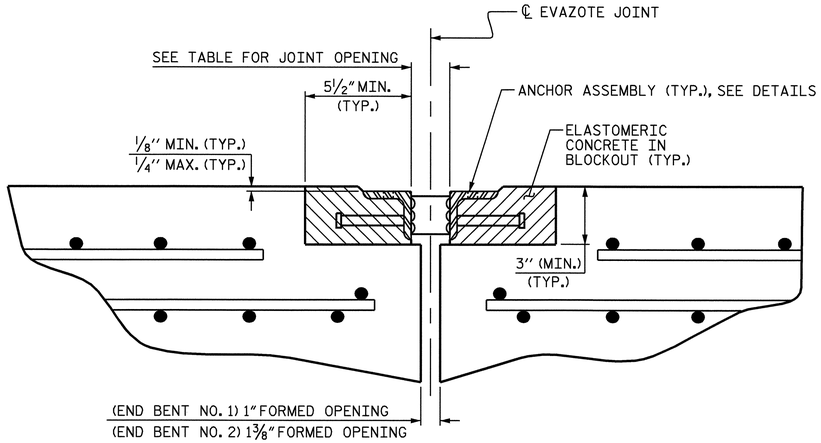

ARMORED JOINT DETAILS

SECTION NORMAL TO JOINT AT BENT

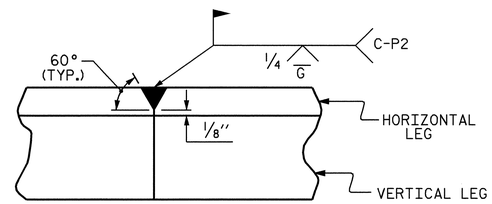

DETAIL- FIELD WELD SPLICE OF ANGLE

NOTES

ANGLES SHALL CONFORM TO AASHTO M270 GRADE 36 STEEL OR APPROVED EQUAL. ALL STUD ANCHORS SHALL CONFORM TO AASHTO M169 GRADES 1010 THRU 1020 OR APPROVED EQUAL.

STUD ANCHORS SHALL BE SHOP WELDED AND ALL HOLES SHALL BE SHOP DRILLED AS SHOWN ON THE PLANS. STUD ANCHORS SHALL BE ELECTRIC ARC END WELDED WITH COMPLETE FUSION.

UPON COMPLETION OF SHOP FABRICATION, THE ENTIRE ANCHOR ASSEMBLY SHALL BE METALLIZED. THE ½" Ø STUD ANCHORS AND ANCHOR TABS NEED NOT BE METALLIZED. SEE SPECIAL PROVISION FOR THERMAL SPRAYED COATINGS (METALLIZATION).

ANCHOR ASSEMBLY SHALL BE MADE CONTINUOUS THE LENGTH OF THE JOINT FROM GUTTER TO GUTTER. FOR FIELD SPLICES AT ALL CROWN BREAK POINTS, THE ENDS OF THE STEEL ANGLES SHALL BE CUT PARALLEL TO THE BRIDGE CENTERLINE. FINISHED FIELD WELDS SHALL BE GROUND SMOOTH AND COATED WITH A MINIMUM THICKNESS OF 4 DRY MILS OF ZINC-RICH PAINT IN ACCORDANCE WITH THE STANDARD SPECIFICATIONS.

ANCHOR ASSEMBLY SEGMENTS SHALL NOT BE LESS THAN 12 FEET NOR MORE THAN 20 FEET IN LENGTH. SHORTER SEGMENTS MAY BE USED AT THE EDGE OF ROADWAY OR AT POINTS OF STAGED CONSTRUCTION.

THE ANCHOR ASSEMBLY SHALL BE SECURED AND LEVELED AS SHOWN IN THE "ARMORED JOINT ANCHOR ASSEMBLY DETAILS". NO SUBMITTALS ARE REQUIRED FOR ⅜" Ø EXPANSION ANCHORS, NUTS OR WASHERS. THE CONTRACTOR MAY SUBMIT FOR APPROVAL AN ALTERNATE METHOD OF ALIGNING AND LEVELING THE ANGLES. THE ALTERNATE METHOD SHALL NOT INCLUDE ANY WELDING TO THE OUTSIDE FACE OF THE ANGLES.

AFTER THE ELASTOMERIC CONCRETE HAS BEEN CAST ON BOTH SIDES OF THE JOINT, REMOVE ANY EXCESS CONCRETE THAT COMES THROUGH THE WEEP HOLES AND THOROUGHLY CLEAN THE ANGLES. ANY DAMAGED STEEL SHALL BE COATED WITH A MINIMUM OF 4 MILS OF ZINC-RICH PAINT IN ACCORDANCE WITH THE STANDARD SPECIFICATIONS.

SEE SPECIAL PROVISIONS FOR EVAZOTE JOINT SEALS.

SEE SPECIAL PROVISIONS FOR ELASTOMERIC CONCRETE.

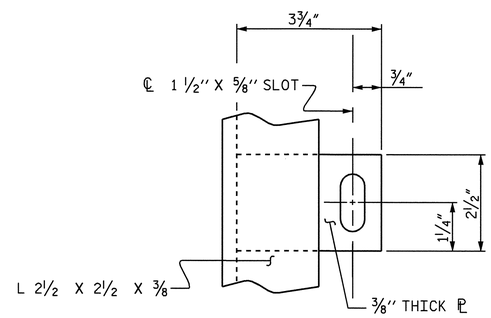

PLAN VIEW OF TAB

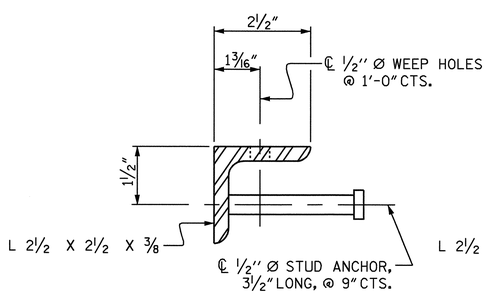

SECTION VIEW OF STUD

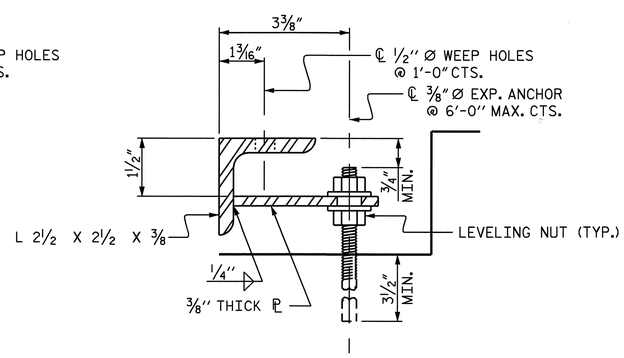

SECTION VIEW OF TAB

ARMORED JOINT ANCHOR ASSEMBLY DETAILS

MOVEMENT AND SETTING AT EVAZOTE JOINT

END BENT NO.	SKEW ANGLE	NOMINAL UNCOMPRESSED SEAL WIDTH	TOTAL MOVEMENT (ALONG ℄ RDWY)	PERPENDICULAR JOINT OPENING AT 45° F	PERPENDICULAR JOINT OPENING AT 60° F	PERPENDICULAR JOINT OPENING AT 90° F
1	120°	2½"	13⁄16"	2 3⁄16"	2"	1 11⁄16"
2	120°	2 13⁄16"	1⅛"	2 7⁄16"	2¼"	1⅞"

TOTAL MOVEMENT IS CALCULATED ALONG THE CENTERLINE OF ROADWAY.
JOINT OPENINGS ARE MEASURED PERPENDICULAR TO THE JOINT.

BILL OF MATERIAL

END BENT NO.	ELASTOMERIC CONCRETE ✳ (CU. FT.)	TOTAL LENGTH OF ANGLE (FT)
1	9.5	83'-1 11⁄16"
2	9.5	83'-1 11⁄16"

✳ BASED ON THE MINIMUM BLOCKOUT SHOWN.

PROJECT NO. R-2911B
ROWAN COUNTY
STATION: 137+95.00-L-

STATE OF NORTH CAROLINA
DEPARTMENT OF TRANSPORTATION
RALEIGH

STANDARD

ARMORED EVAZOTE JOINT DETAILS LEFT LANE

NORTH CAROLINA PROFESSIONAL SEAL 20125 ENGINEER MARSHALL G. CHEEK, JR.
7-21-08

REVISIONS						SHEET NO.
NO.	BY:	DATE:	NO.	BY:	DATE:	S-20
1			3			TOTAL SHEETS
2			4			77

STR #1 STD. NO. AEJ1

ASSEMBLED BY : L.L. MURPHY	DATE : 04-08		
CHECKED BY : M.G. CHEEK	DATE : 05-08		
DRAWN BY : EEM 1/96	REV. 7/10/01	LES/RDR	
CHECKED BY : RGW 1/96	REV. 5/7/03RR	RWW/JTE	
	REV. 5/1/06	TLA/GM	

17-JUN-2008 14:04
R:\Structures\r2911b\lmurphy\Microstation\Str*1\R2911B_sd_JS_str*1armored.dgn
afigueroa

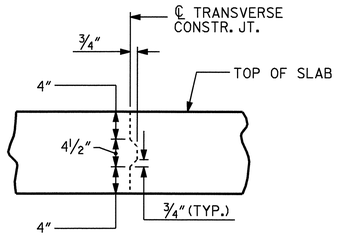

TRANSVERSE CONSTRUCTION JOINT DETAIL

NOTE: REINFORCING STEEL IN SLAB NOT SHOWN. LONGITUDINAL REINFORCING STEEL SHALL BE CONTINUOUS THRU JOINT

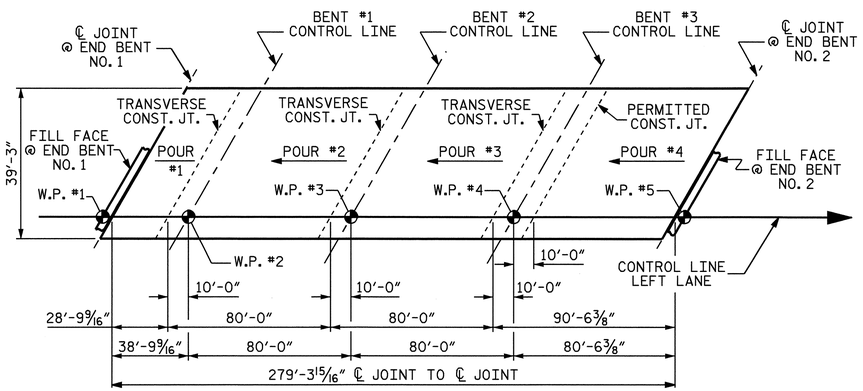

POUR SEQUENCE

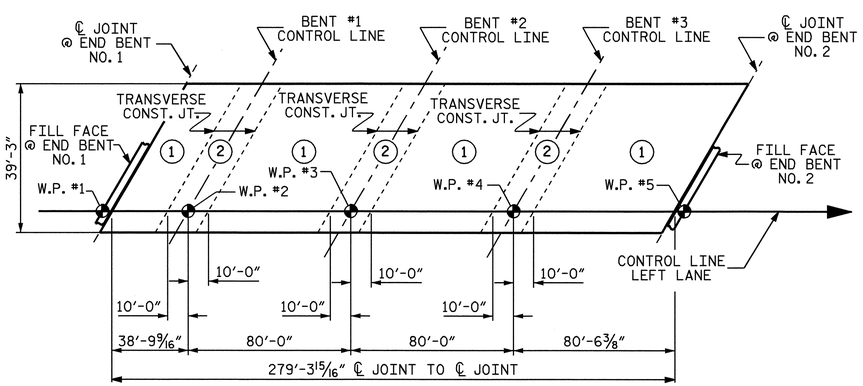

OPTIONAL POUR SEQUENCE

POUR (2) CANNOT BE STARTED UNTIL BOTH ADJACENT (1) POURS REACH A MINIMUM OF 3000 PSI

REINFORCING BAR SCHEDULE SPANS A THRU D

BAR	NO.	SIZE	TYPE	LENGTH	WEIGHT	BAR	NO.	SIZE	TYPE	LENGTH	WEIGHT
✳ A1	439	#5	STR	38'-11"	17819	A214	4	#5	STR	11'-1"	46
A2	439	#5	STR	38'-11"	17819	A215	4	#5	STR	9'-1"	38
						A216	4	#5	STR	7'-1"	30
✳ A101	4	#5	STR	37'-4"	156	A217	4	#5	STR	5'-0"	21
✳ A102	4	#5	STR	35'-4"	147	A218	4	#5	STR	3'-0"	13
✳ A103	4	#5	STR	33'-4"	139						
✳ A104	4	#5	STR	31'-3"	130	✳ B1	28	#4	STR	24'-0"	449
✳ A105	4	#5	STR	29'-3"	122	✳ B2	28	#7	STR	45'-8"	2614
✳ A106	4	#5	STR	27'-3"	114	✳ B3	25	#7	STR	17'-10"	911
✳ A107	4	#5	STR	25'-3"	105	✳ B4	56	#4	STR	26'-0"	973
✳ A108	4	#5	STR	23'-3"	97	✳ B5	56	#7	STR	58'-0"	6639
✳ A109	4	#5	STR	21'-2"	88	✳ B6	50	#7	STR	24'-0"	2453
✳ A110	4	#5	STR	19'-2"	80	✳ B7	56	#4	STR	27'-8"	1035
✳ A111	4	#5	STR	17'-2"	72	B8	220	#5	STR	57'-6"	13194
✳ A112	4	#5	STR	15'-2"	63						
✳ A113	4	#5	STR	13'-1"	55	✳ G1	4	#5	STR	23'-9"	99
✳ A114	4	#5	STR	11'-1"	46						
✳ A115	4	#5	STR	9'-1"	38	✳ K1	8	#8	1	12'-0"	256
✳ A116	4	#5	STR	7'-1"	30	✳ K2	12	#8	2	16'-8"	534
✳ A117	4	#5	STR	5'-0"	21	✳ K3	24	#6	STR	7'-5"	267
✳ A118	4	#5	STR	3'-0"	13	K4	24	#4	STR	5'-5"	87
						K5	48	#4	STR	8'-4"	267
A201	4	#5	STR	37'-4"	156	K6	24	#4	STR	7'-5"	119
A202	4	#5	STR	35'-4"	147	K7	24	#4	3	5'-10"	94
A203	4	#5	STR	33'-4"	139	K8	36	#4	4	11'-6"	277
A204	4	#5	STR	31'-3"	130						
A205	4	#5	STR	29'-3"	122	✳ S1	56	#5	5	4'-8"	273
A206	4	#5	STR	27'-3"	114	✳ S2	56	#4	6	4'-3"	159
A207	4	#5	STR	25'-3"	105	S3	228	#4	7	2'-9"	419
A208	4	#5	STR	23'-3"	97						
A209	4	#5	STR	21'-2"	88	✳ U1	60	#4	2	14'-6"	581
A210	4	#5	STR	19'-2"	80	✳ U2	24	#4	2	12'-6"	200
A211	4	#5	STR	17'-2"	72						
A212	4	#5	STR	15'-2"	63	REINFORCING STEEL = 33,792 LBS					
A213	4	#5	STR	13'-1"	55	✳ EPOXY COATED REINF. STEEL = 36,778 LBS					

✳ THESE BARS ARE EPOXY COATED

BAR TYPES

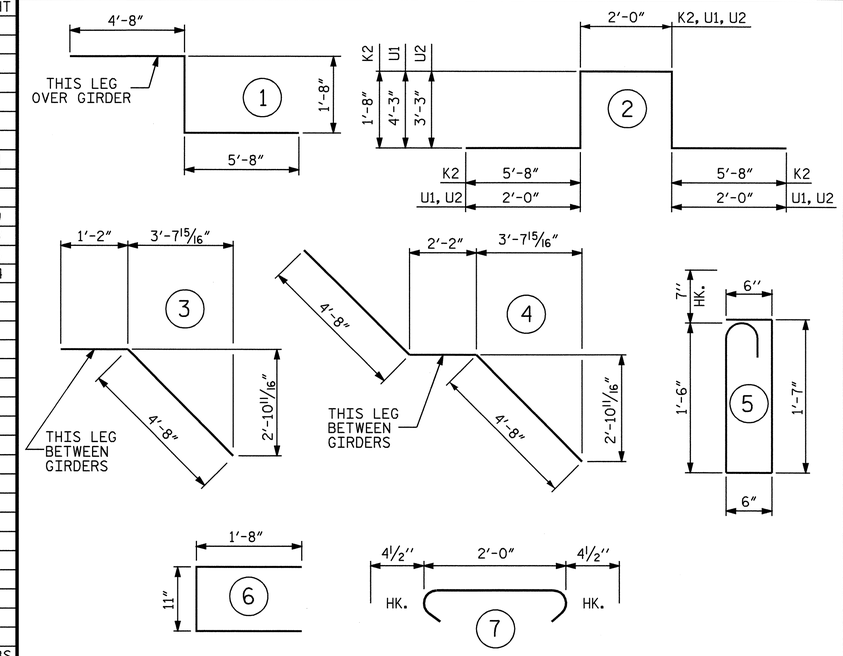

ALL BAR DIMENSIONS ARE OUT TO OUT

SUPERSTRUCTURE BILL OF MATERIAL

		CLASS AA CONCRETE (CU. YDS.)	REINFORCING STEEL (LBS.)	EPOXY COATED REINFORCING STEEL (LBS.)
SPAN A, B, C AND D	POUR #1	39.7	33,792	36,778
	POUR #2	108.8		
	POUR #3	108.8		
	POUR #4	125.7		
TOTALS ✳✳		383.0	33,792	36,778

✳✳ QUANTITIES FOR BARRIER RAIL ARE NOT INCLUDED

SUPERSTRUCTURE REINFORCING STEEL LENGTHS ARE BASED ON THE FOLLOWING MINIMUM SPLICE LENGTHS

BAR SIZE	SUPERSTRUCTURE EXCEPT APPROACH SLABS, PARAPET, AND BARRIER RAIL		APPROACH SLABS		PARAPET AND BARRIER RAIL
	EPOXY COATED	UNCOATED	EPOXY COATED	UNCOATED	
#4	2'-0"	1'-9"	2'-0"	1'-9"	2'-9"
#5	2'-6"	2'-2"	2'-6"	2'-2"	3'-5"
#6	3'-0"	2'-7"	3'-10"	2'-7"	4'-4"
#7	5'-3"	3'-6"			
#8	6'-10"	4'-7"			

GROOVING BRIDGE FLOORS

BRIDGE DECK	9,173	SQ.FT.
APPROACH SLAB	1,594	SQ.FT.
TOTAL	10,767	SQ.FT.

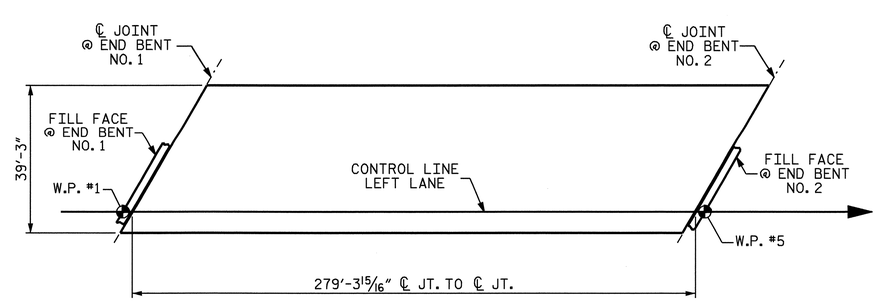

LAYOUT FOR COMPUTING AREA
REINFORCED CONCRETE DECK SLAB
(SQ. FT. = 10,963 SQ. FT.)

PROJECT NO. R-2911B
ROWAN COUNTY
STATION: 137+95.00 -L-

STATE OF NORTH CAROLINA
DEPARTMENT OF TRANSPORTATION
RALEIGH

SUPERSTRUCTURE
BILL OF MATERIAL
LEFT LANE

NORTH CAROLINA PROFESSIONAL SEAL 20125 ENGINEER MARSHALL B. CHEEK, JR.
7-21-08

REVISIONS						SHEET NO.
NO.	BY:	DATE:	NO.	BY:	DATE:	S-21
1			3			TOTAL SHEETS
2			4			77

ASSEMBLED BY : L.L. MURPHY	DATE : 04-08
CHECKED BY : M.G. CHEEK	DATE : 05-08
DRAWN BY : JMB 5/87	REV. 6/1/94 EEM/GRP
CHECKED BY : SJD 9/87	REV. 8/16/99 RWW/LES
	REV. 5/1/06 TLA/GM

21-JUL-2008 10:02
r:\structures\final plans\str #1\R-2911B_sd_str#1-12_BM.dgn
dahodge

STR #1 STD. NO. BOM2

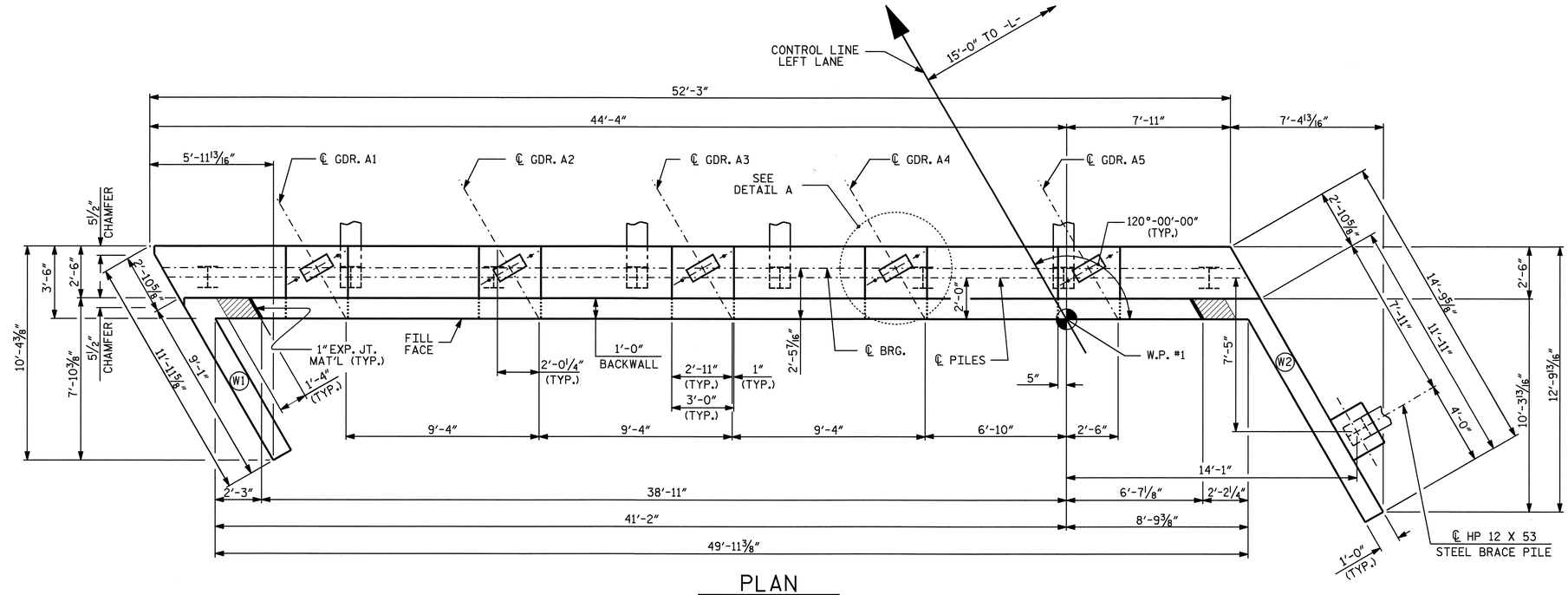

PLAN

NOTES

STIRRUPS IN CAP MAY BE SHIFTED AS NECESSARY TO CLEAR ANCHOR BOLTS.

FOR SECTION A-A, SEE SHEET 3 OF 3.

FOR PILE SPLICE DETAILS SEE SHEET 3 OF 3.

FOR TEMPORARY DRAINAGE AT END BENTS, SEE SHEET 3 OF 3.

BACKWALL SHALL BE PLACED BEFORE APPLYING THE EPOXY PROTECTIVE COATING.

THE TOP SURFACE AREA OF THE END BENT CAP SHALL BE CURED IN ACCORDANCE WITH THE STANDARD SPECIFICATIONS EXCEPT THAT THE MEMBRANE CURING COMPOUND METHOD SHALL NO BE USED.

THE TOP SURFACE OF THE END BENT CAP EXCEPT THE BRIDGE SEAT BUILDUPS SHALL BE SLOPED TRANSVERSELY FROM THE FILL FACE TO THE BACK FACE AT THE RATE OF 2%.

THE CONTRACTOR SHALL PROVIDE FOR INSTALLATION OF THE 4" DIAMETER DRAIN PIPE THROUGH THE WING WALL AS REQUIRED FOR REINFORCED BRIDGE APPROACH FILLS, SEE THE ROADWAY PLANS. REINFORCING STEEL IN THE WING WALL MAY BE SHIFTED AS NECESSARY TO CLEAR THE DRAIN PIPE.

THE CONCRETE IN THE SHADED AREA OF THE WING SHALL BE POURED AFTER THE BARRIER RAIL IS CAST IF SLIP FORMING IS USED.

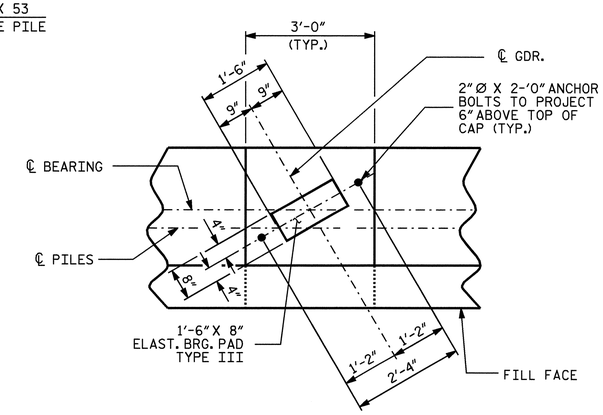

DETAIL A

✱ FOR LOCATION OF ELEVATIONS BETWEEN BRIDGE SEAT BUILD-UPS, SEE SECTION A-A, SHEET 3 OF 3

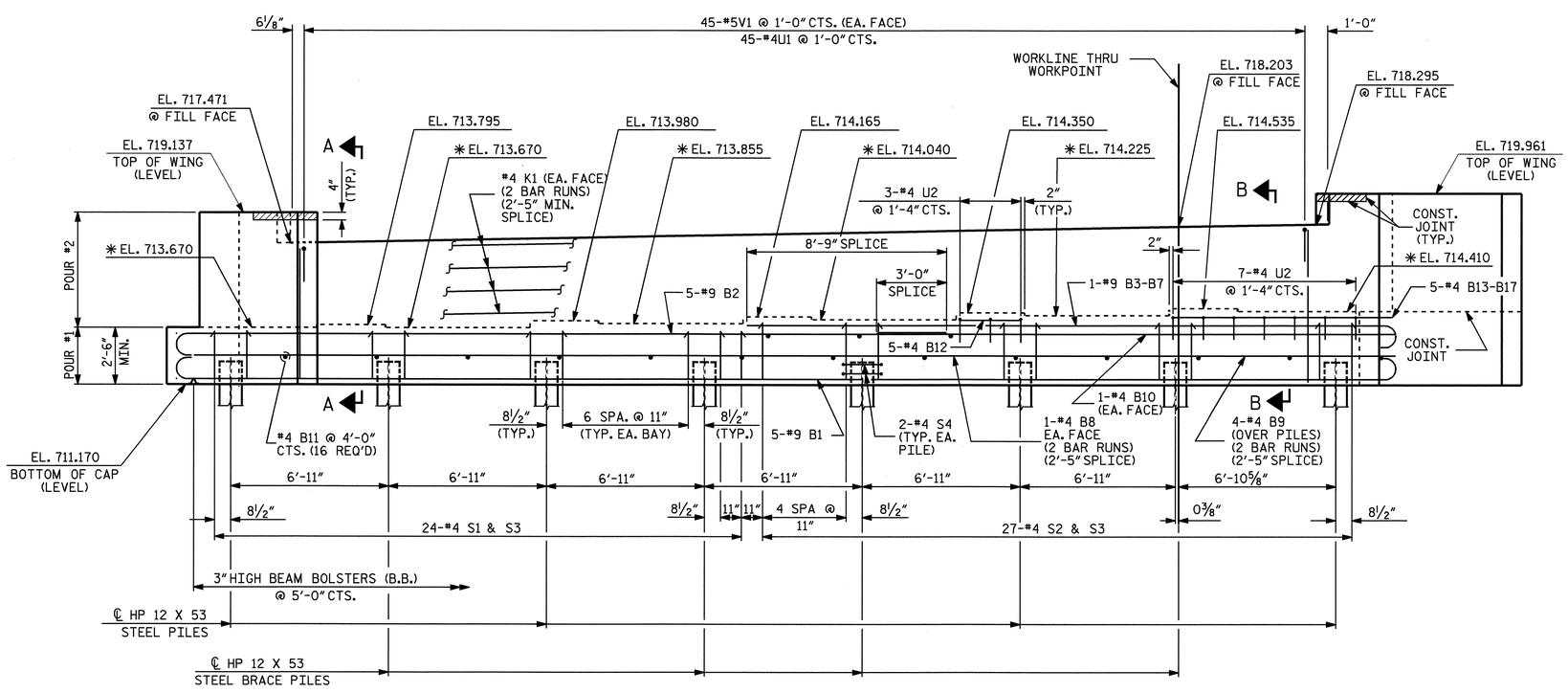

ELEVATION

(FOR CLARITY BRACE PILE IN WING NOT SHOWN)

PROJECT NO. R-2911B

ROWAN COUNTY

STATION: 137+95.00 -L-

SHEET 1 OF 3

STATE OF NORTH CAROLINA
DEPARTMENT OF TRANSPORTATION
RALEIGH

SUBSTRUCTURE
END BENT NO. 1
LEFT LANE

NORTH CAROLINA PROFESSIONAL SEAL 20125 ENGINEER MARSHALL C. CHECK, JR.
7-21-08

REVISIONS								SHEET NO.
NO.	BY:	DATE:	NO.	BY:	DATE:			S-22
1			3					TOTAL SHEETS
2			4					77

DRAWN BY : A.L. FIGUEROA DATE : 5-07-08
CHECKED BY : L.L. MURPHY DATE : 6-03-08

21-JUL-2008 11:13
r:\Structures\Final Plans\Str #1\R-2911B_sd_str#1-13_EB 1&2 .dgn
dahodge

STR #1

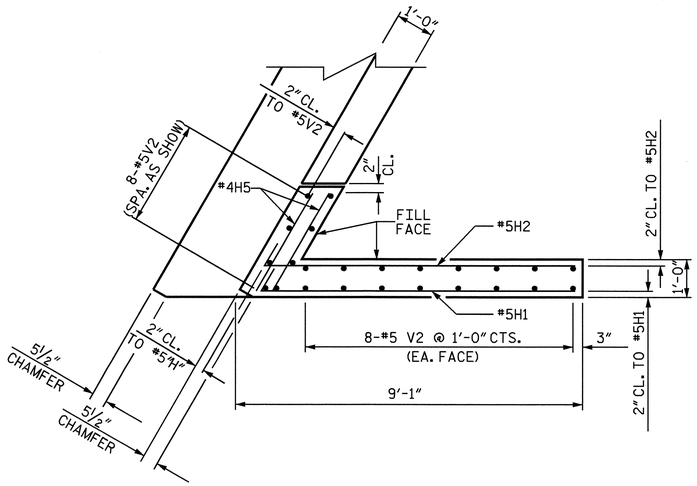

PLAN OF LEFT WING - W1

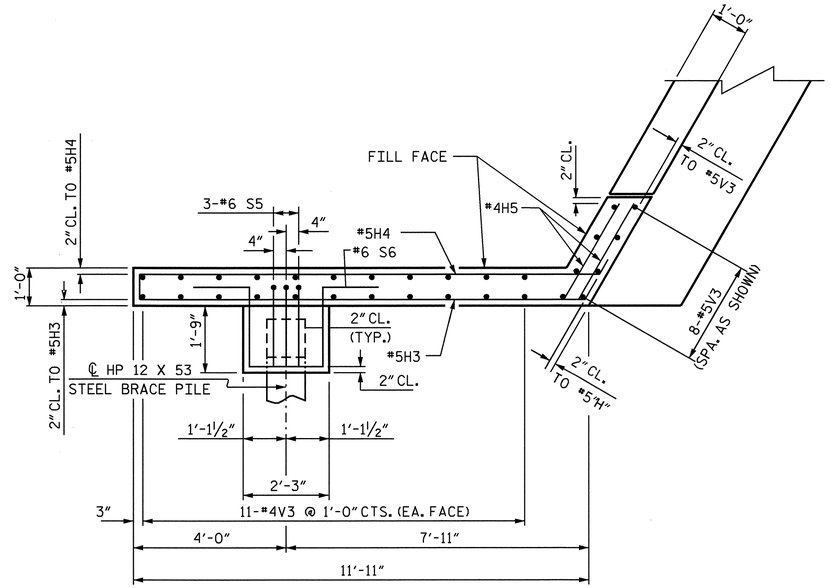

PLAN OF RIGHT WING - W2

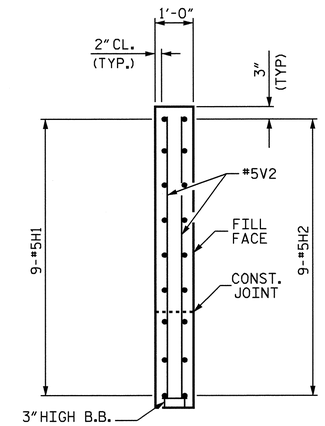

SECTION X-X

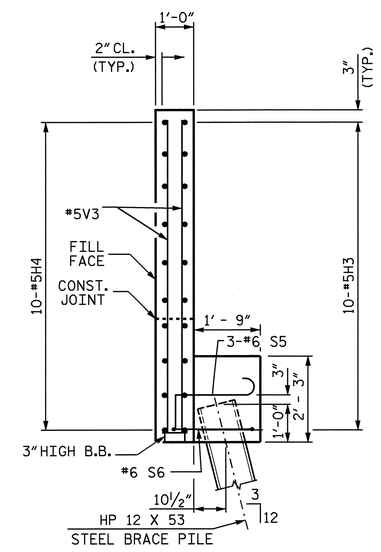

SECTION Y-Y

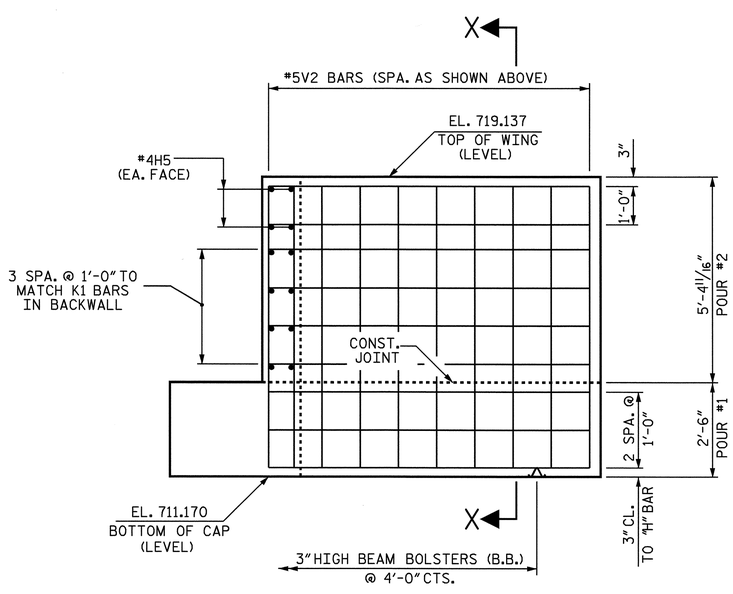

ELEVATION OF LEFT WING - W1

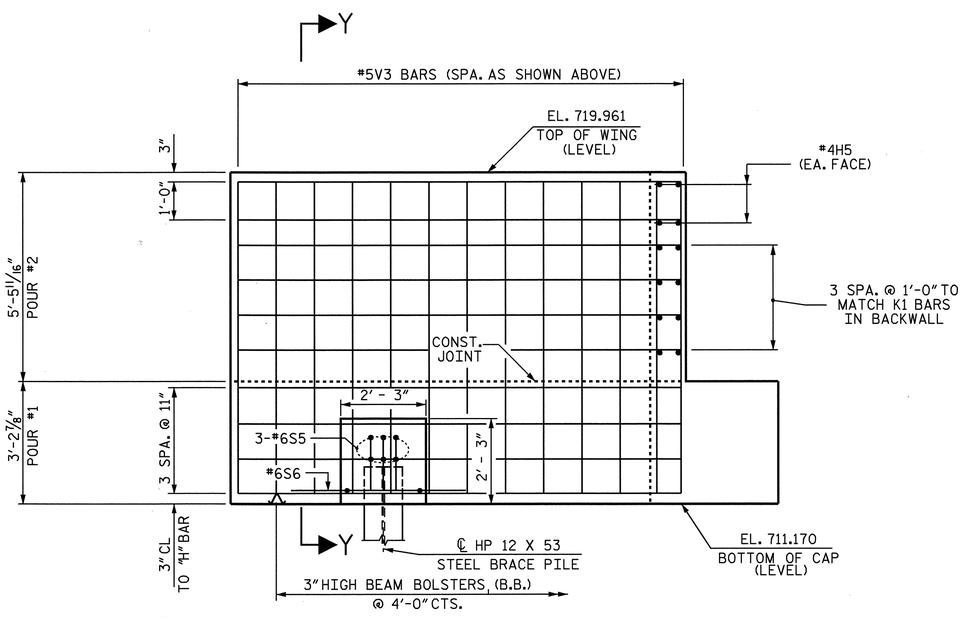

ELEVATION OF RIGHT WING - W2

PROJECT NO. R-2911B

ROWAN COUNTY

STATION: 137+95.00 -L-

SHEET 2 OF 3

STATE OF NORTH CAROLINA
DEPARTMENT OF TRANSPORTATION
RALEIGH

SUBSTRUCTURE
END BENT NO. 1
LEFT LANE

NORTH CAROLINA PROFESSIONAL SEAL 20125 ENGINEER MARSHALL G. CHEEK, JR. 7-21-08

REVISIONS						SHEET NO.
NO.	BY:	DATE:	NO.	BY:	DATE:	S-23
1			3			TOTAL SHEETS
2			4			77

STR#1

DRAWN BY : A.L. FIGUEROA DATE : 5-07-08
CHECKED BY : L.L. MURPHY DATE : 6-03-08

20-JUN-2008 10:42
r:\structures\r2911b\alfigueroa\microstation\R-2911B_sd_EB 1&2 -STR*1.dgn
lmurphy

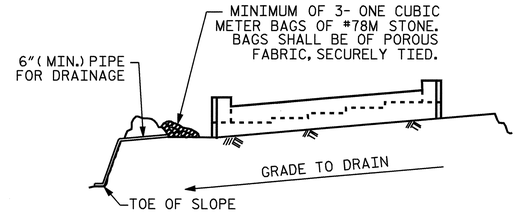

BAGGED STONE AND PIPE SHALL BE PLACED IMMEDIATELY AFTER COMPLETION OF END BENT EXCAVATION. PIPE MAY BE EITHER CONCRETE, CORRUGATED STEEL, CORRUGATED ALUMINUM ALLOY, OR CORRUGATED PLASTIC. PERFORATED PIPE WILL NOT BE ALLOWED.

BAGGED STONE SHALL REMAIN IN PLACE UNTIL THE ENGINEER DIRECTS THAT IT BE REMOVED. THE CONTRACTOR SHALL REMOVE AND DISPOSE OF SILT ACCUMULATIONS AT BAGGED STONE WHEN SO DIRECTED BY THE ENGINEER. BAGS SHALL BE REMOVED AND REPLACED WHENEVER THE ENGINEER DETERMINES THAT THEY HAVE DETERIORATED AND LOST THEIR EFFECTIVENESS.

NO SEPARATE PAYMENT WILL BE MADE FOR THIS WORK AND THE ENTIRE COST OF THIS WORK SHALL BE INCLUDED IN THE UNIT CONTRACT PRICE BID FOR THE SEVERAL PAY ITEMS.

TEMPORARY DRAINAGE AT END BENT

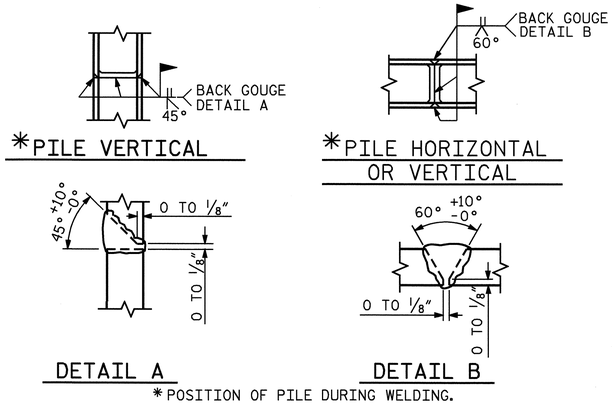

PILE SPLICE DETAILS

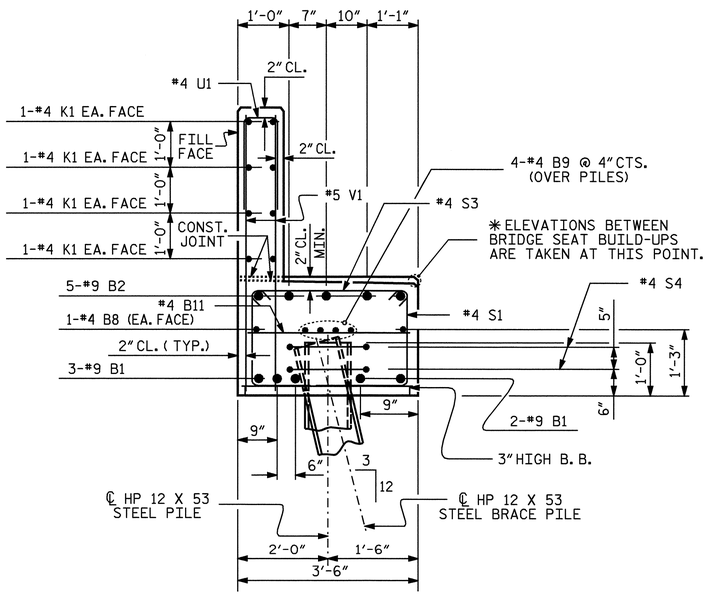

SECTION A-A

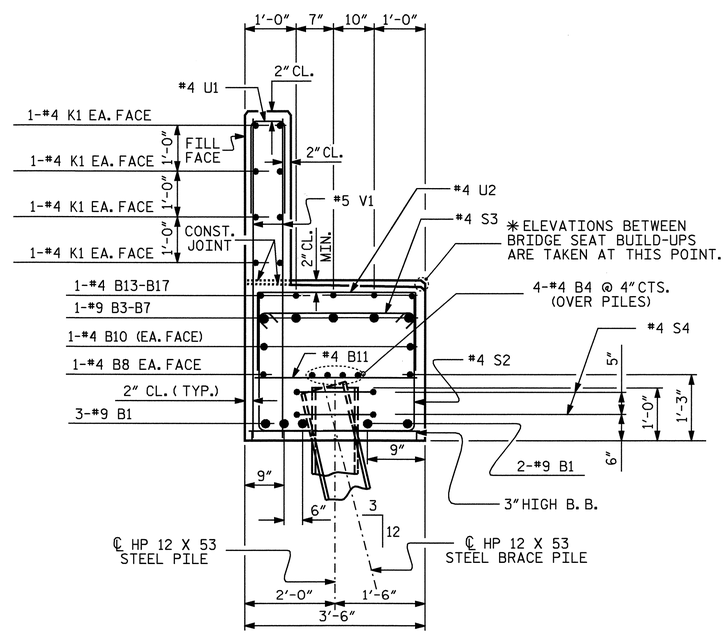

SECTION B-B

BAR TYPES

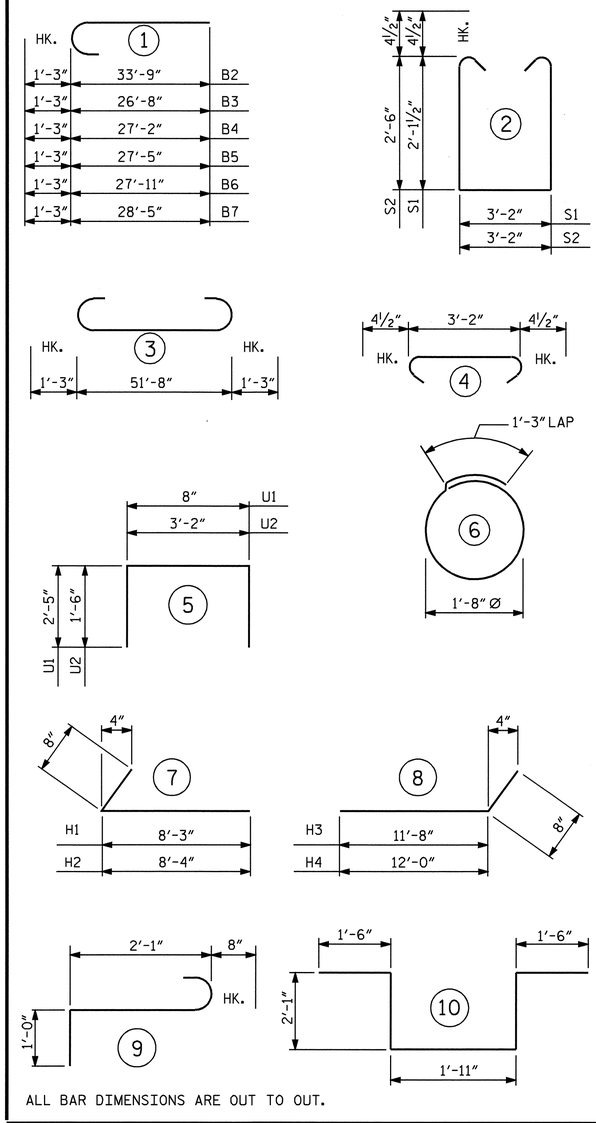

ALL BAR DIMENSIONS ARE OUT TO OUT.

BILL OF MATERIAL

END BENT NO. 1

BAR	NO.	SIZE	TYPE	LENGTH	WEIGHT
B1	5	#9	3	54'-2"	921
B2	5	#9	1	35'-0"	595
B3	1	#9	1	27'-11"	95
B4	1	#9	1	28'-5"	97
B5	1	#9	1	28'-10"	98
B6	1	#9	1	29'-2"	99
B7	1	#9	1	29'-8"	101
B8	4	#4	STR	27'-1"	72
B9	8	#4	STR	27'-1"	145
B10	2	#4	STR	20'-11"	28
B11	16	#4	STR	3'-2"	34
B12	5	#4	STR	2'-8"	9
B13	1	#4	STR	8'-0"	5
B14	1	#4	STR	8'-6"	6
B15	1	#4	STR	8'-11"	6
B16	1	#4	STR	9'-3"	6
B17	1	#4	STR	9'-9"	7
H1	9	#5	7	8'-11"	84
H2	9	#5	7	9'-0"	84
H3	10	#5	8	12'-4"	129
H4	10	#5	8	12'-8"	132
H5	8	#4	STR	2'-11"	16
K1	16	#4	STR	27'-1"	289
S1	24	#4	2	8'-2"	131
S2	27	#4	2	8'-11"	161
S3	51	#4	4	3'-11"	133
S4	16	#4	6	6'-6"	69
S5	3	#6	9	3'-9"	17
S6	1	#6	10	9'-1"	14
U1	45	#4	5	5'-6"	165
U2	10	#4	5	6'-2"	41
V1	90	#5	STR	5'-10"	548
V2	24	#5	STR	7'-5"	186
V3	30	#5	STR	8'-3"	258

REINFORCING STEEL = 4781 LBS

CLASS A CONCRETE BREAKDOWN

POUR #1 CAP, LOWER PART OF WINGS & BRACE PILE BLOCK	21.0 C.Y.
POUR #2 BACKWALL & UPPER PART OF WINGS	11.6 C.Y.
CLASS A CONCRETE TOTAL	32.6 C.Y.

HP 12 X 53 STEEL PILES

NO. 9 270 LIN. FT.

PROJECT NO. R-2911B
ROWAN COUNTY
STATION: 137+95.00 -L-

SHEET 3 OF 3

STATE OF NORTH CAROLINA
DEPARTMENT OF TRANSPORTATION
RALEIGH

SUBSTRUCTURE
END BENT NO. 1
LEFT LANE

NORTH CAROLINA PROFESSIONAL SEAL 20125 ENGINEER MARSHALL C. HOOKER, JR.
7-21-08

REVISIONS								SHEET NO.
NO.	BY:	DATE:	NO.	BY:	DATE:			S-24
1			3					TOTAL SHEETS
2			4					77

DRAWN BY : A.L. FIGUEROA DATE : 5-07-08
CHECKED BY : L.L. MURPHY DATE : 6-03-08

21-JUL-2008 10:05
r:\structures\finalplans\str #1\R-2911B_sd_str#1-13_EB 1&2 .dgn
dehodge

STR #1

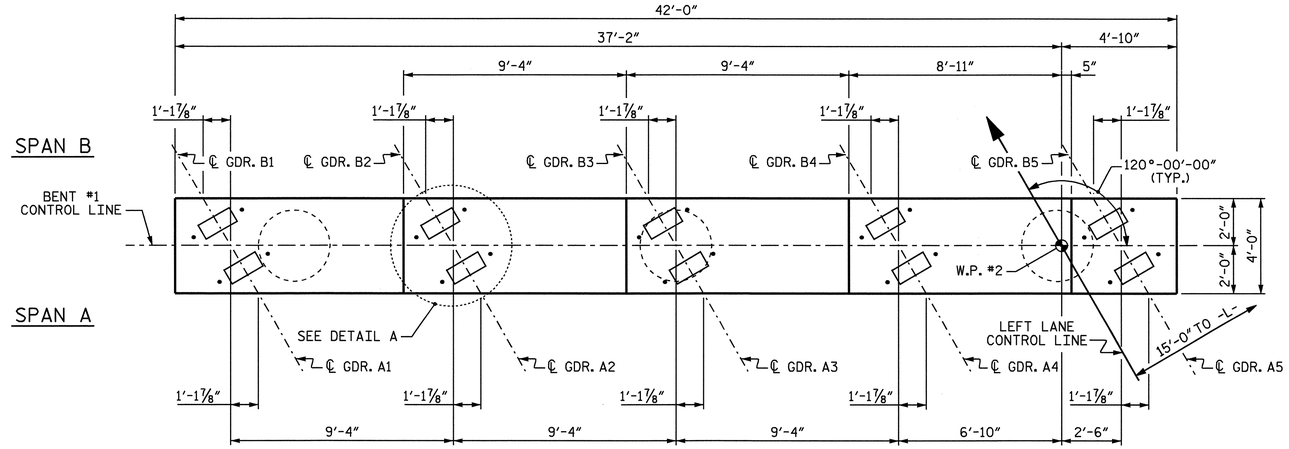

PLAN

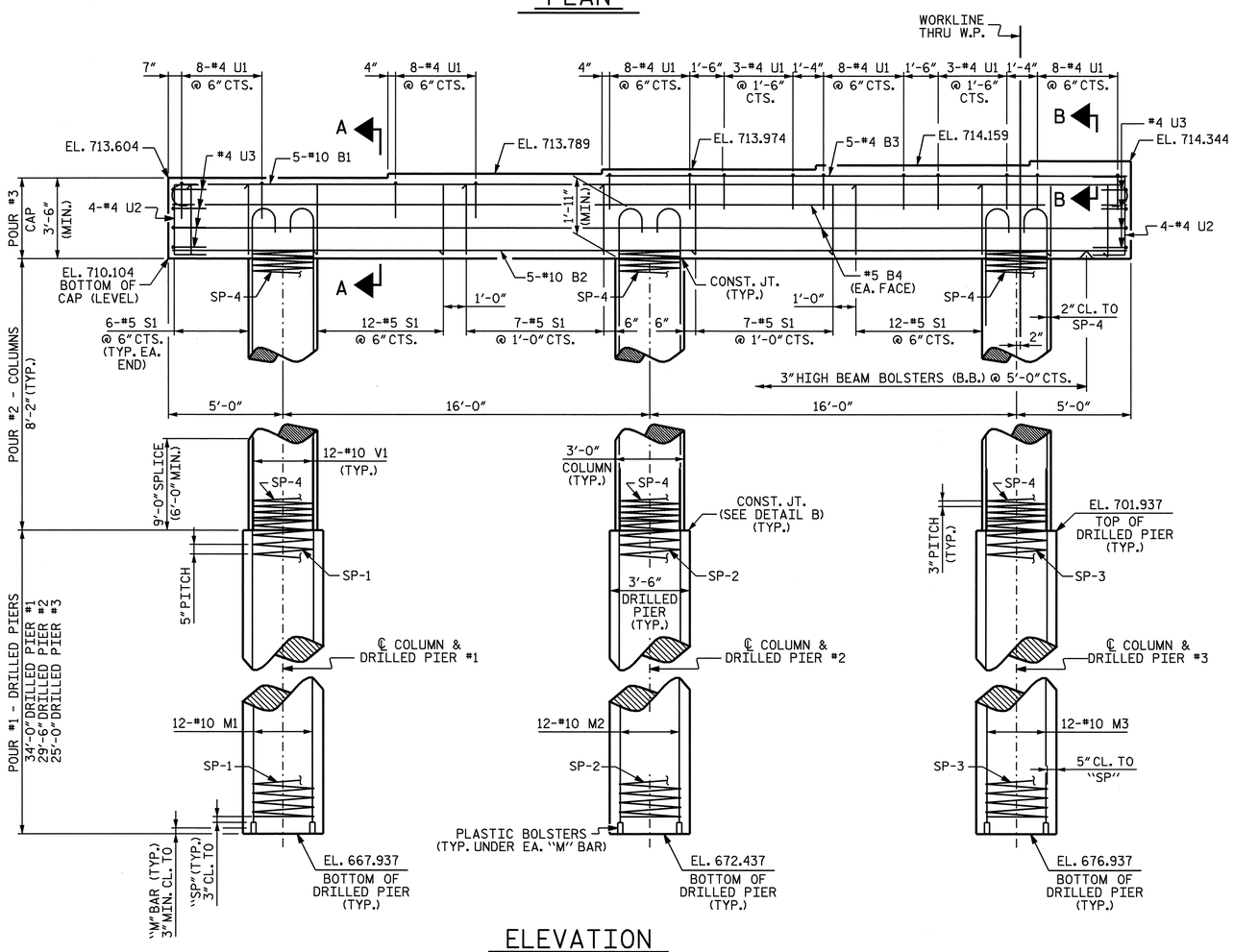

ELEVATION

DIMENSIONS AND REINFORCING STEEL ARE TYPICAL FOR EACH COLUMN AND DRILLED PIER

INVERT ALTERNATE STIRRUPS

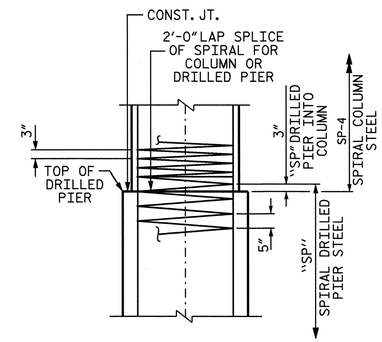

DETAIL B

(CONSTRUCTION JOINT DETAIL)

NOTES

STIRRUPS IN CAP MAY BE SHIFTED AS NECESSARY TO CLEAR DOWELS.

HOOKS ON "V" BARS MAY BE TURNED AS NECESSARY FOR PLACING REINFORCING STEEL.

ALL STEEL IN THE DRILLED PIERS IS INCLUDED IN THE PAY ITEMS FOR "REINFORCING STEEL" AND "SPIRAL COLUMN REINFORCING STEEL".

THE CONTRACTOR'S ATTENTION IS CALLED TO THE FACT THAT THE LONGITUDINAL REINFORCEMENT FOR THE DRILLED PIERS IS DETAILED WITH 3 FEET OF EXTRA LENGTH.

THE LOCATION OF THE CONSTRUCTION JOINT IN THE DRILLED PIERS IS BASED ON AN APPROXIMATE GROUND LINE ELEVATION. IF THE CONSTRUCTION JOINT IS ABOVE THE ACTUAL GROUND ELEVATION, THE CONTRACTOR SHALL PLACE THE CONSTRUCTION JOINT 1 FOOT BELOW THE GROUND LINE.

FOR DRILLED PIERS, SEE SPECIAL PROVISIONS.

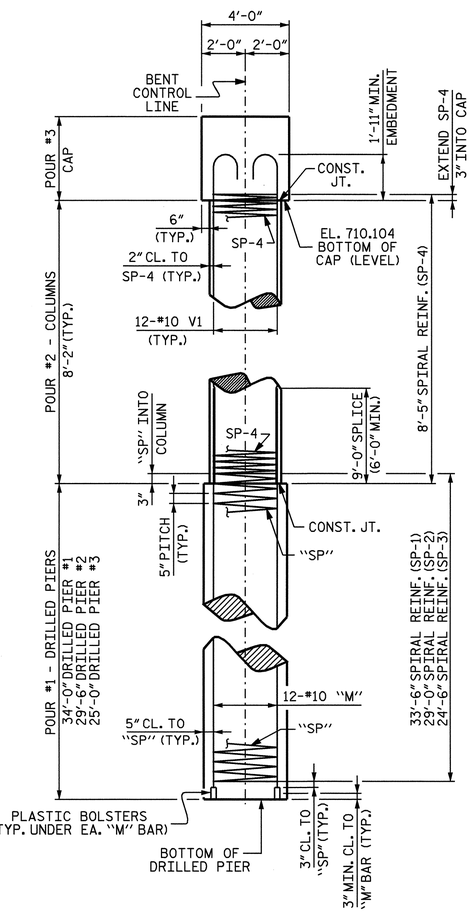

END ELEVATION

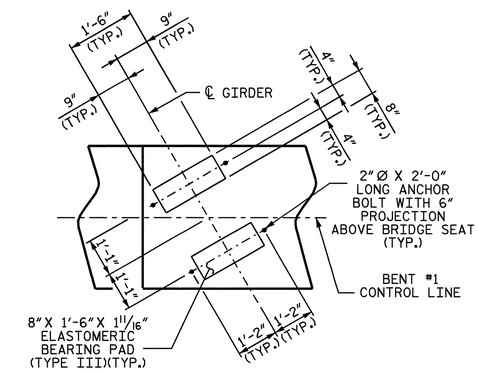

DETAIL A

(TYP. EA. GDR.)

PROJECT NO. R-2911B

ROWAN COUNTY

STATION: 137+95.00 -L-

SHEET 1 OF 2

STATE OF NORTH CAROLINA
DEPARTMENT OF TRANSPORTATION
RALEIGH

SUBSTRUCTURE
BENT #1
LEFT LANE

NORTH CAROLINA PROFESSIONAL SEAL 20125 ENGINEER MARSHALL G. CHEEK, JR.
7-21-08

REVISIONS								SHEET NO.
NO.	BY:	DATE:	NO.	BY:	DATE:			S-25
1			3					TOTAL SHEETS
2			4					77

DRAWN BY : A. SORSENGINH DATE : 5/27/08
CHECKED BY : MG CHEEK DATE : 6/12/08

21-JUL-2008 10:05
r:\structures\finalplans\str #1\R-2911B_sd_str#1-14_B*.dgn
dahodge

STR. #1

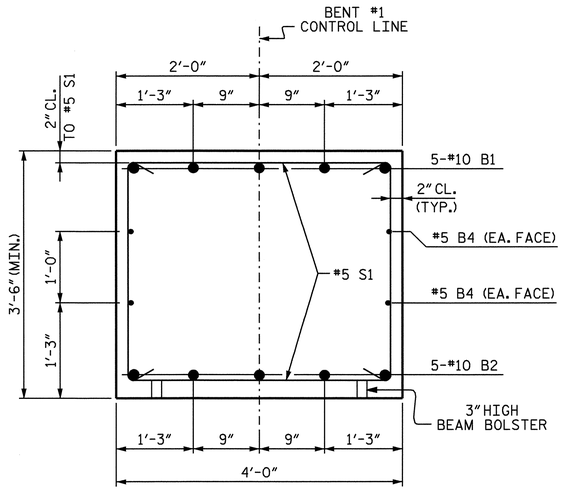

SECTION A-A

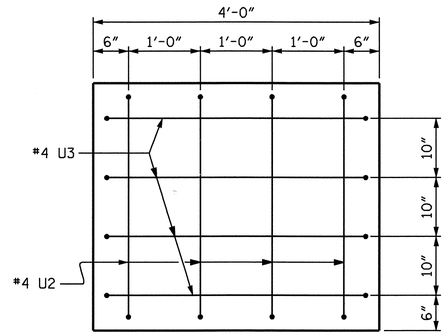

END VIEW

2" MIN. CONCRETE COVER FROM END OF CAP REQUIRED FOR ALL #4 "U" BARS.

#4 "U" BARS MAY BE SHIFTED UP TO 2" TO CLEAR "B" BARS.

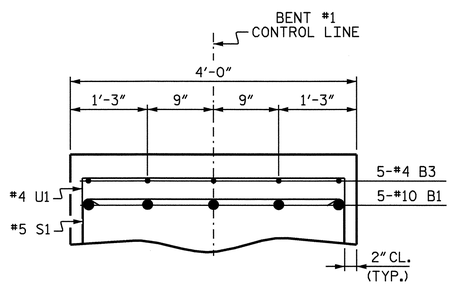

SECTION B-B

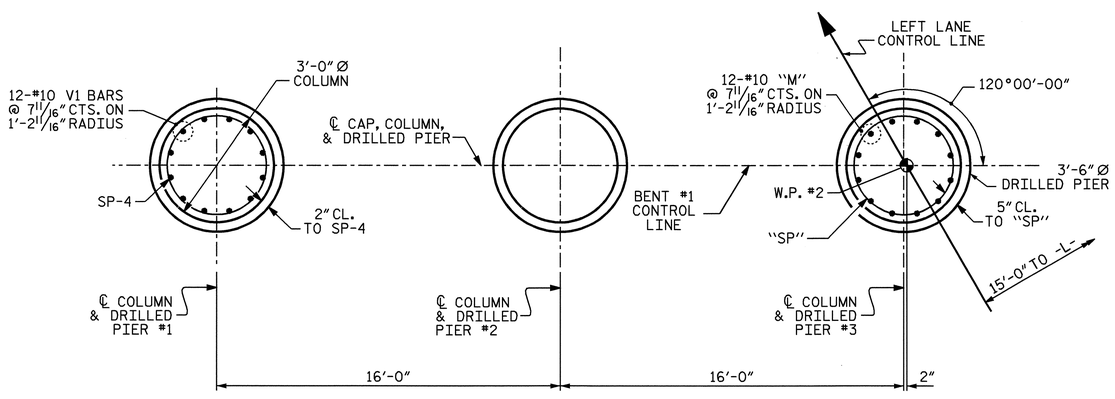

PARTIAL PLAN OF COLUMN

PARTIAL PLAN OF DRILLED PIER

PLAN OF DRILLED PIERS & COLUMNS

DIMENSIONS AND REINFORCING STEEL ARE TYPICAL FOR EACH COLUMN AND DRILLED PIER

BAR TYPES

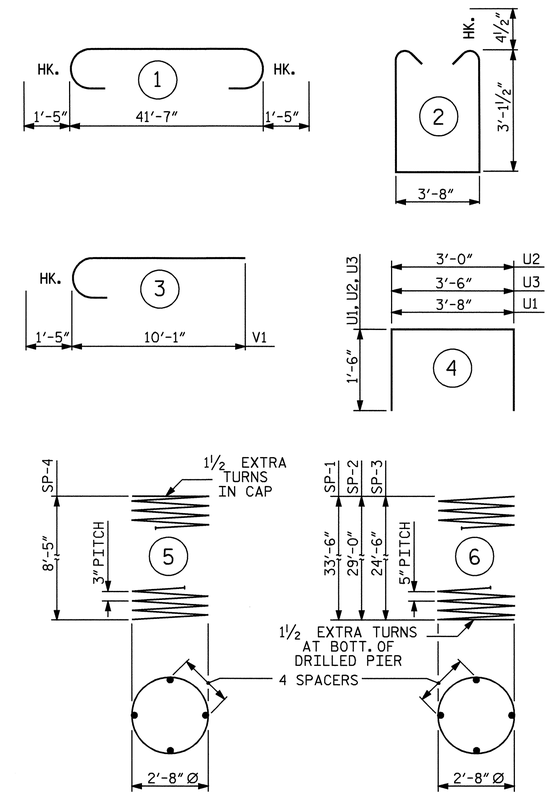

ALL BAR DIMENSIONS ARE OUT TO OUT.

✳ THE SP-1, SP-2 AND SP-3 SPIRAL REINFORCING STEEL SHALL BE W31 OR D-31 COLD DRAWN WIRE OR #5 PLAIN OR DEFORMED BAR.

✳✳ THE SP-4 SPIRAL REINFORCING STEEL SHALL BE W20 OR D-20 COLD DRAWN WIRE OR #4 PLAIN OR DEFORMED BAR.

BILL OF MATERIAL

BENT #1

BAR	NO	SIZE	TYPE	LENGTH	WEIGHT
B1	5	10	1	44'-5"	956
B2	5	10	STR	41'-8"	896
B3	5	4	STR	22'-9"	76
B4	4	5	STR	41'-8"	174
M1	12	10	STR	42'-9"	2207
M2	12	10	STR	38'-3"	1975
M3	12	10	STR	33'-9"	1743
S1	50	5	2	10'-8"	556
U1	46	4	4	6'-8"	205
U2	8	4	4	6'-0"	32
U3	8	4	4	6'-6"	35
V1	36	10	3	11'-6"	1781
REINFORCING STEEL LBS.					10,636
SP-1	1	✳	6	673'-1"	702
SP-2	1	✳	6	584'-10"	610
SP-3	1	✳	6	496'-8"	518
SP-4	3	✳✳	5	290'-4"	582
SPIRAL COLUMN REINFORCING STEEL LBS.					2,412

CLASS A CONCRETE BREAKDOWN

POUR #2 (COLUMNS)	6.4 C.Y.
POUR #3 (CAP)	23.3 C.Y.
TOTAL	29.7 C.Y.

DRILLED PIERS

DRILLED PIER CONCRETE

POUR #1 (DRILLED PIERS)	31.5 C.Y.
3'-6" Ø DRILLED PIERS NOT IN SOIL	11.00 LIN. FT.
3'-6" Ø DRILLED PIERS IN SOIL	77.50 LIN. FT.
▲ CSL TUBES	384.00 LIN. FT.

▲ NO SEPARATE PAYMENT WILL BE MADE FOR CSL TUBES. CSL TUBES WILL BE INCLUDED IN THE UNIT BID PRICE FOR DRILLED PIERS.

PROJECT NO. R-2911B
ROWAN COUNTY
STATION: 137+95.00 -L-

SHEET 2 OF 2

STATE OF NORTH CAROLINA
DEPARTMENT OF TRANSPORTATION
RALEIGH

SUBSTRUCTURE
BENT #1
LEFT LANE

NORTH CAROLINA PROFESSIONAL SEAL 20125 ENGINEER MARSHALL G. CHEEK, JR.
7-21-08

REVISIONS								SHEET NO.
NO.	BY:	DATE:	NO.	BY:	DATE:			S-26
1			3					TOTAL SHEETS
2			4					77

DRAWN BY : A. SORSENGINH DATE : 5/27/08
CHECKED BY : MG CHEEK DATE : 6/9/08

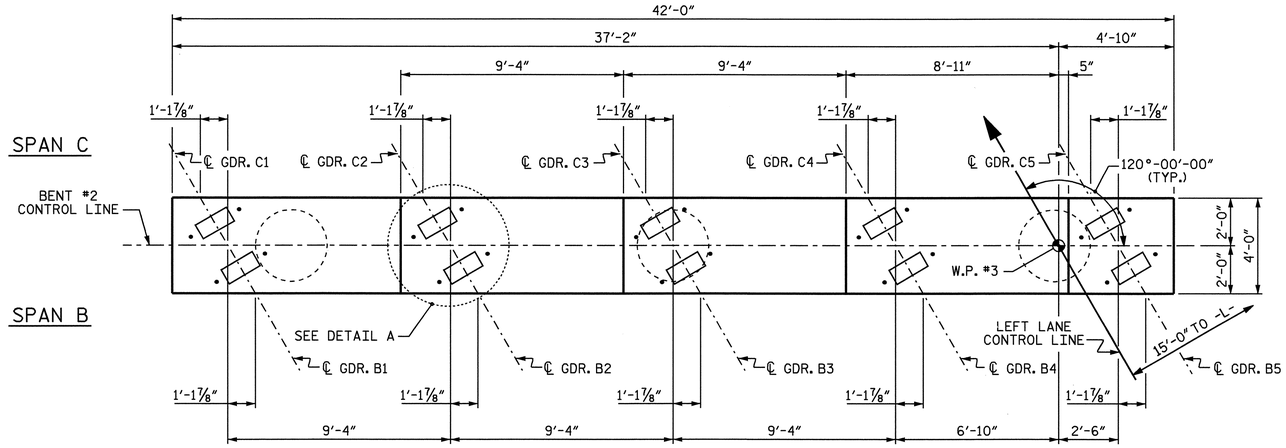

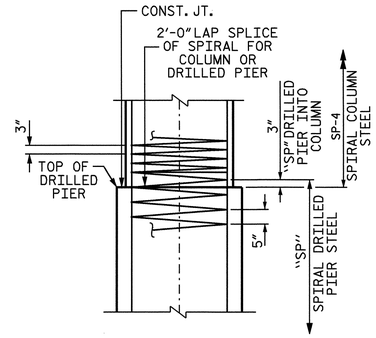

DETAIL B
(CONSTRUCTION JOINT DETAIL)

NOTES

STIRRUPS IN CAP MAY BE SHIFTED AS NECESSARY TO CLEAR DOWELS.

HOOKS ON "V" BARS MAY BE TURNED AS NECESSARY FOR PLACING REINFORCING STEEL.

ALL STEEL IN THE DRILLED PIERS IS INCLUDED IN THE PAY ITEMS FOR "REINFORCING STEEL" AND "SPIRAL COLUMN REINFORCING STEEL".

THE CONTRACTOR'S ATTENTION IS CALLED TO THE FACT THAT THE LONGITUDINAL REINFORCEMENT FOR THE DRILLED PIERS IS DETAILED WITH 3 FEET OF EXTRA LENGTH.

THE LOCATION OF THE CONSTRUCTION JOINT IN THE DRILLED PIERS IS BASED ON AN APPROXIMATE GROUND LINE ELEVATION. IF THE CONSTRUCTION JOINT IS ABOVE THE ACTUAL GROUND ELEVATION, THE CONTRACTOR SHALL PLACE THE CONSTRUCTION JOINT 1 FOOT BELOW THE GROUND LINE.

FOR DRILLED PIERS, SEE SPECIAL PROVISIONS.

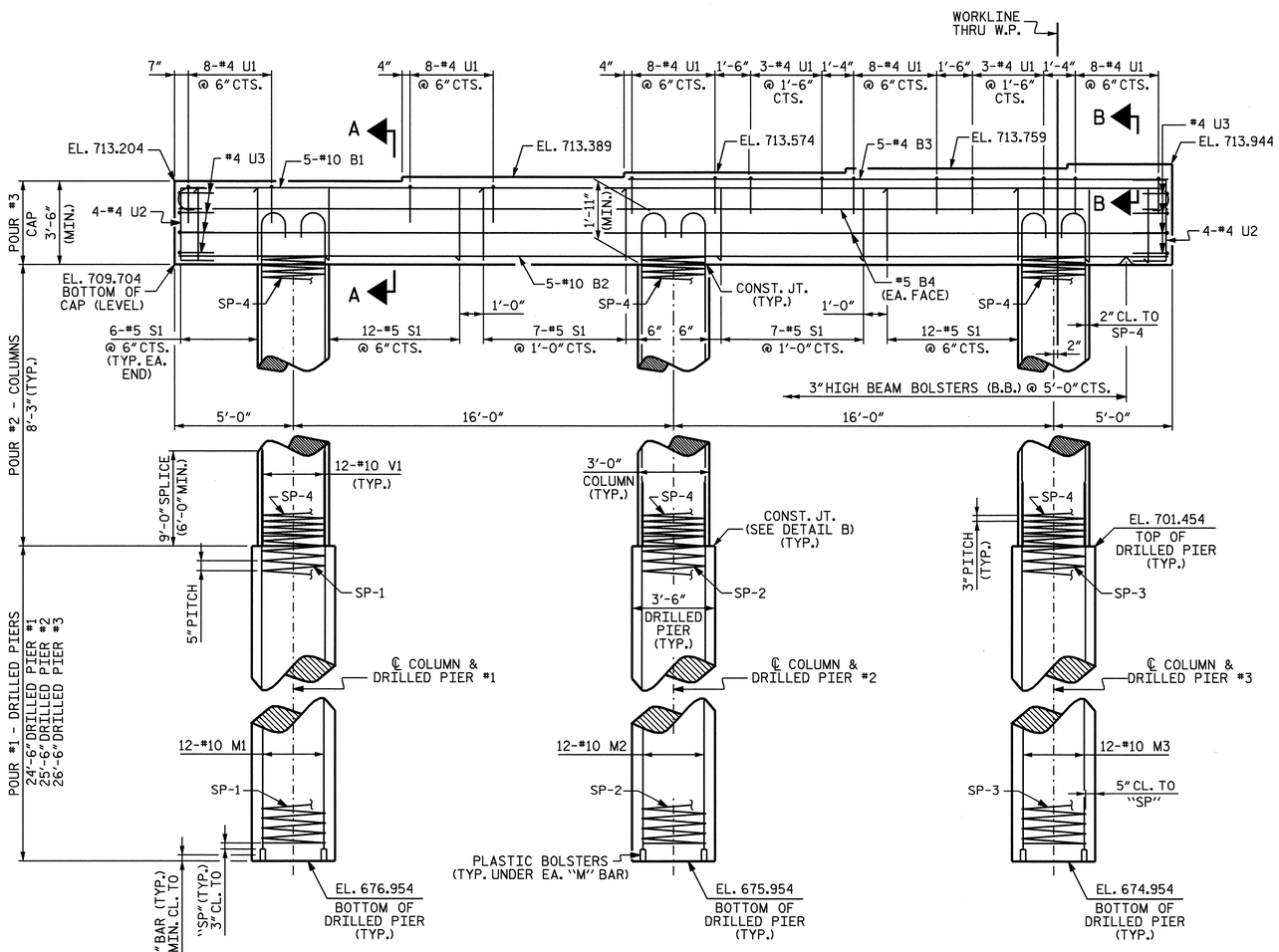

ELEVATION

DIMENSIONS AND REINFORCING STEEL ARE TYPICAL FOR EACH COLUMN AND DRILLED PIER

INVERT ALTERNATE STIRRUPS

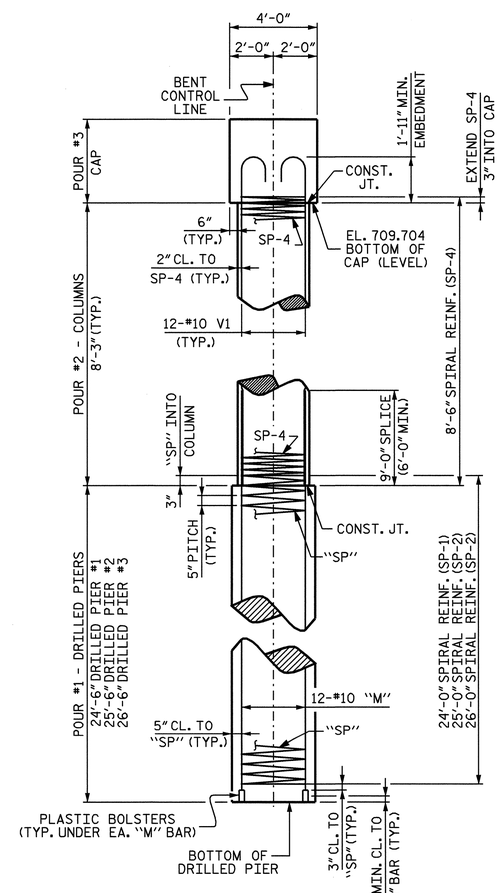

END ELEVATION

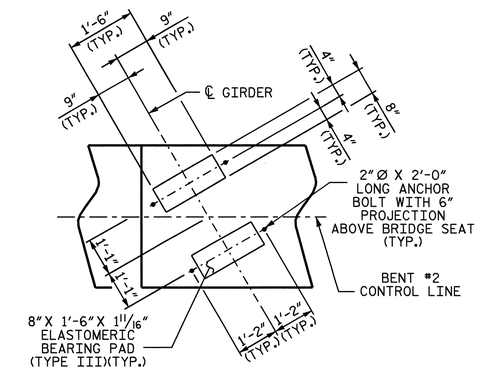

DETAIL A
(TYP. EA. GDR.)

PROJECT NO. R-2911B

ROWAN COUNTY

STATION: 137+95.00 -L-

SHEET 1 OF 2

STATE OF NORTH CAROLINA
DEPARTMENT OF TRANSPORTATION
RALEIGH

SUBSTRUCTURE
BENT #2
LEFT LANE

NORTH CAROLINA PROFESSIONAL SEAL 20125 ENGINEER MARSHALL G. CHEEK, JR.
7-2-08

REVISIONS							SHEET NO.
NO.	BY:	DATE:	NO.	BY:	DATE:		S-27
1			3				TOTAL SHEETS
2			4				77

DRAWN BY : A. SORSENGINH DATE : 5/27/08
CHECKED BY : MG CHEEK DATE : 6/12/08

21-JUL-2008 10:06
r:\structures\final plans\str #1\R-2911B_sd_str#1-14_B*.dgn
dahodge

STR. #1

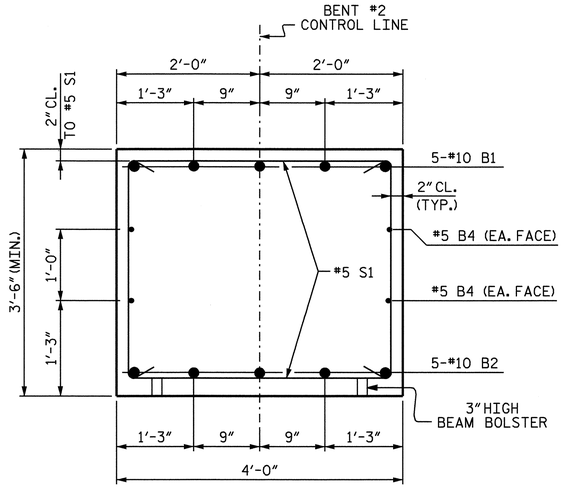

SECTION A-A

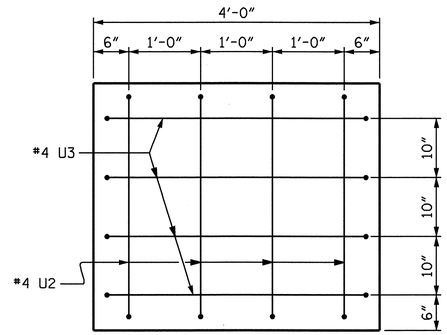

END VIEW

2" MIN. CONCRETE COVER FROM END OF CAP REQUIRED FOR ALL #4 "U" BARS.

#4 "U" BARS MAY BE SHIFTED UP TO 2" TO CLEAR "B" BARS.

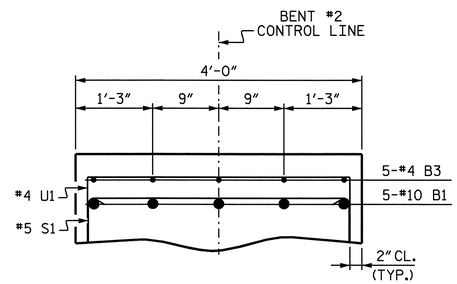

SECTION B-B

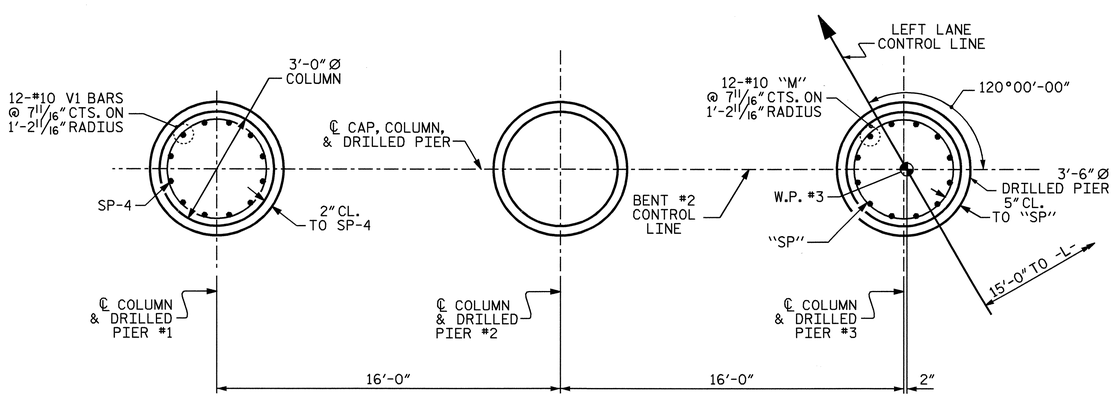

PARTIAL PLAN OF COLUMN

PARTIAL PLAN OF DRILLED PIER

PLAN OF DRILLED PIERS & COLUMNS

DIMENSIONS AND REINFORCING STEEL ARE TYPICAL FOR EACH COLUMN AND DRILLED PIER

BAR TYPES

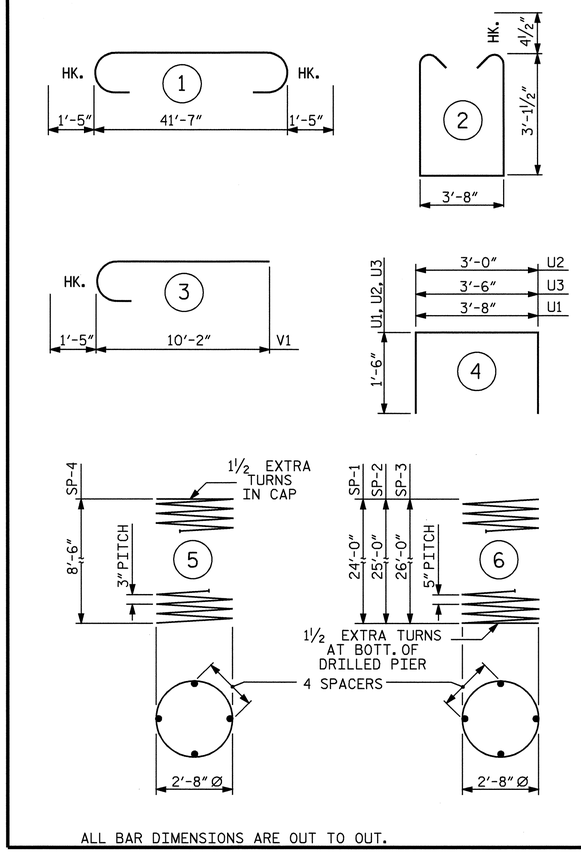

ALL BAR DIMENSIONS ARE OUT TO OUT.

✱ THE SP-1, SP-2 AND SP-3 SPIRAL REINFORCING STEEL SHALL BE W31 OR D-31 COLD DRAWN WIRE OR #5 PLAIN OR DEFORMED BAR.

✱✱ THE SP-4 SPIRAL REINFORCING STEEL SHALL BE W20 OR D-20 COLD DRAWN WIRE OR #4 PLAIN OR DEFORMED BAR.

BILL OF MATERIAL

BENT #2

BAR	NO	SIZE	TYPE	LENGTH	WEIGHT
B1	5	10	1	44'-5"	956
B2	5	10	STR	41'-8"	896
B3	5	4	STR	22'-9"	76
B4	4	5	STR	41'-8"	174
M1	12	10	STR	33'-3"	1717
M2	12	10	STR	34'-3"	1769
M3	12	10	STR	35'-3"	1820
S1	50	5	2	10'-8"	556
U1	46	4	4	6'-8"	205
U2	8	4	4	6'-0"	32
U3	8	4	4	6'-6"	35
V1	36	10	3	11'-7"	1794
REINFORCING STEEL LBS.					10,030
SP-1	1	✱	6	486'-5"	507
SP-2	1	✱	6	504'-10"	527
SP-3	1	✱	6	525'-4"	548
SP-4	3	✱✱	5	292'-4"	586
SPIRAL COLUMN REINFORCING STEEL LBS.					2,168

CLASS A CONCRETE BREAKDOWN

POUR #2 (COLUMNS)	6.5 C.Y.
POUR #3 (CAP)	23.3 C.Y.
TOTAL	29.8 C.Y.

DRILLED PIERS

DRILLED PIER CONCRETE

POUR #1 (DRILLED PIERS)	27.2 C.Y.
3'-6" Ø DRILLED PIERS NOT IN SOIL	15.00 LIN. FT.
3'-6" Ø DRILLED PIERS IN SOIL	61.50 LIN. FT.
PERMANENT STEEL CASING FOR 3'-6" Ø DRILLED PIERS	58.36 LIN. FT.
▲ CSL TUBES	336.00 LIN. FT.

▲ NO SEPARATE PAYMENT WILL BE MADE FOR CSL TUBES. CSL TUBES WILL BE INCLUDED IN THE UNIT BID PRICE FOR DRILLED PIERS.

PROJECT NO. R-2911B
ROWAN COUNTY
STATION: 137+95.00 -L-

SHEET 2 OF 2

STATE OF NORTH CAROLINA
DEPARTMENT OF TRANSPORTATION
RALEIGH

SUBSTRUCTURE
BENT #2
LEFT LANE

NORTH CAROLINA PROFESSIONAL SEAL 20125 ENGINEER MARSHALL G. CHEEK, JR.
7-21-08

REVISIONS							SHEET NO.
NO.	BY:	DATE:	NO.	BY:	DATE:		S-28
1			3				TOTAL SHEETS
2			4				77

DRAWN BY : A. SORSENGINH DATE : 5/27/08
CHECKED BY : MG CHEEK DATE : 6/12/08

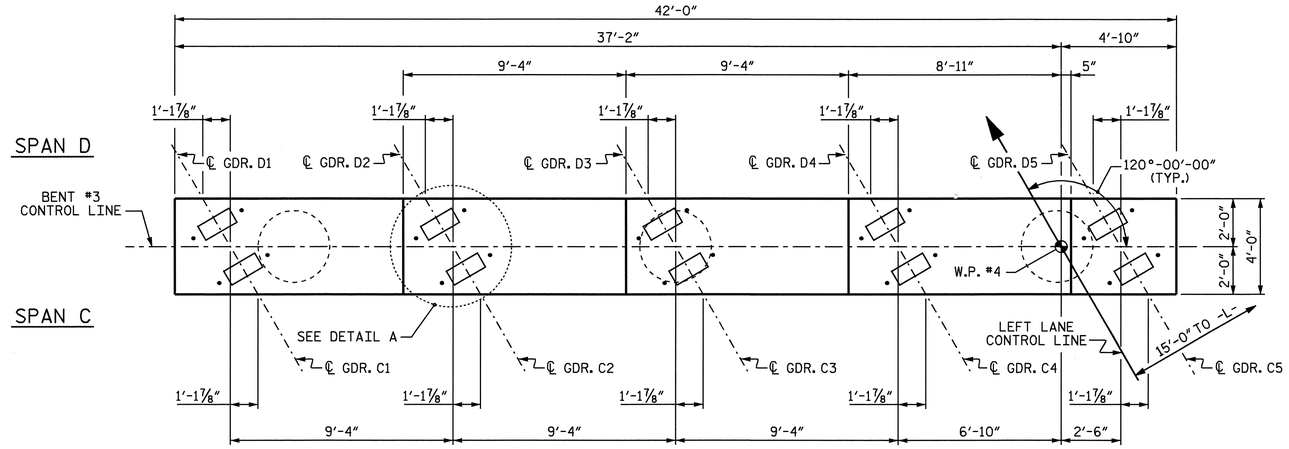

PLAN

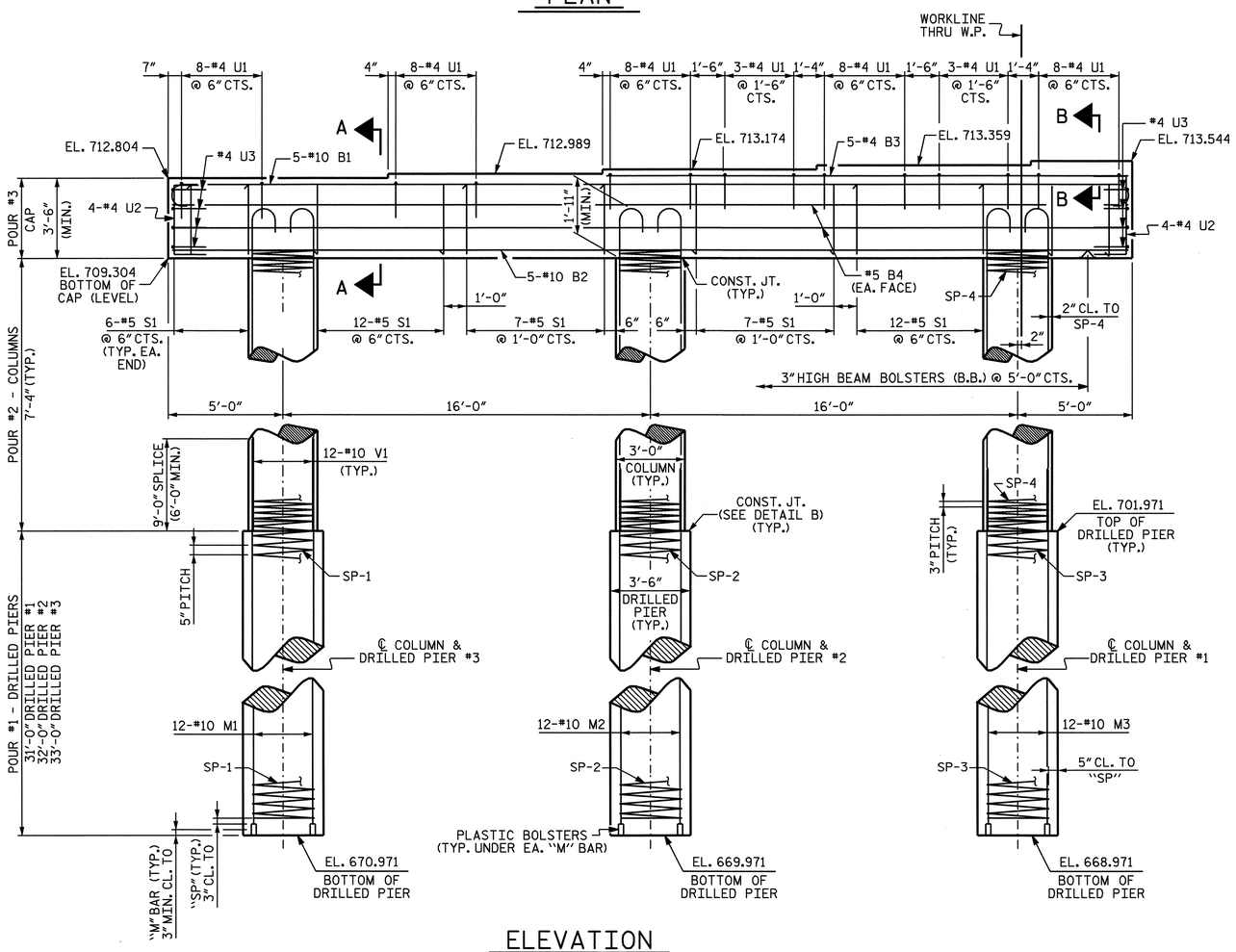

ELEVATION

DIMENSIONS AND REINFORCING STEEL ARE TYPICAL FOR EACH COLUMN AND DRILLED PIER

INVERT ALTERNATE STIRRUPS

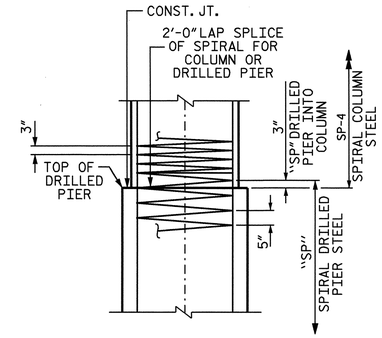

DETAIL B

(CONSTRUCTION JOINT DETAIL)

NOTES

STIRRUPS IN CAP MAY BE SHIFTED AS NECESSARY TO CLEAR DOWELS.

HOOKS ON "V" BARS MAY BE TURNED AS NECESSARY FOR PLACING REINFORCING STEEL.

ALL STEEL IN THE DRILLED PIERS IS INCLUDED IN THE PAY ITEMS FOR "REINFORCING STEEL" AND "SPIRAL COLUMN REINFORCING STEEL".

THE CONTRACTOR'S ATTENTION IS CALLED TO THE FACT THAT THE LONGITUDINAL REINFORCEMENT FOR THE DRILLED PIERS IS DETAILED WITH 3 FEET OF EXTRA LENGTH.

THE LOCATION OF THE CONSTRUCTION JOINT IN THE DRILLED PIERS IS BASED ON AN APPROXIMATE GROUND LINE ELEVATION. IF THE CONSTRUCTION JOINT IS ABOVE THE ACTUAL GROUND ELEVATION, THE CONTRACTOR SHALL PLACE THE CONSTRUCTION JOINT 1 FOOT BELOW THE GROUND LINE.

FOR DRILLED PIERS, SEE SPECIAL PROVISIONS.

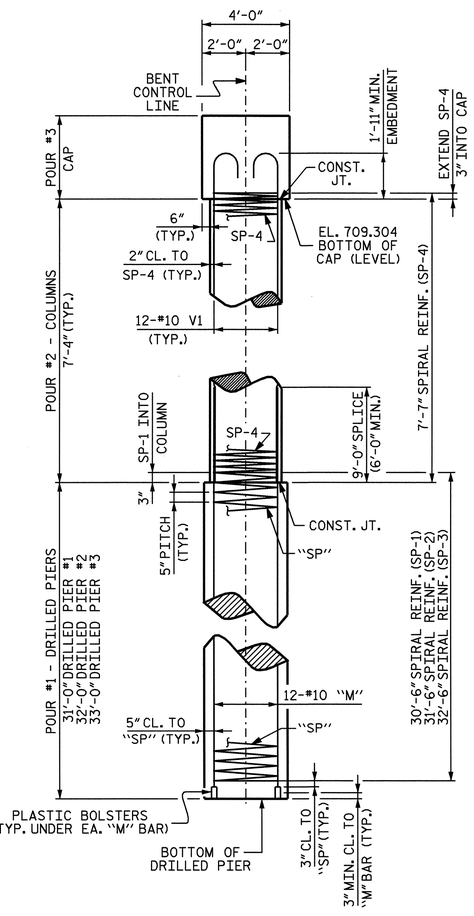

END ELEVATION

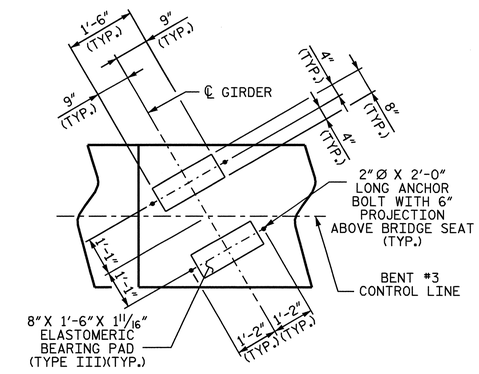

DETAIL A

(TYP. EA. GDR.)

PROJECT NO. R-2911B

ROWAN COUNTY

STATION: 137+95.00 -L-

SHEET 1 OF 2

STATE OF NORTH CAROLINA
DEPARTMENT OF TRANSPORTATION
RALEIGH

SUBSTRUCTURE
BENT #3
LEFT LANE

NORTH CAROLINA PROFESSIONAL SEAL 20125 ENGINEER MARSHALL G. CHEEK, JR.
7-21-08

REVISIONS							SHEET NO.
NO.	BY:	DATE:	NO.	BY:	DATE:		S-29
1			3				TOTAL SHEETS
2			4				77

STR. #1

DRAWN BY : A. SORSENGINH DATE : 5/27/08
CHECKED BY : MG CHEEK DATE : 6/9/08

21-JUL-2008 10:07
r:\structures\finalplans\str #1\R-2911B_sd_str#1-14_B*.dgn
dahodge

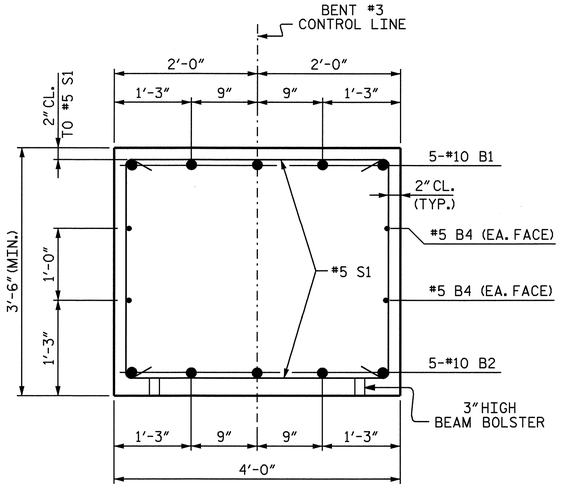

SECTION A-A

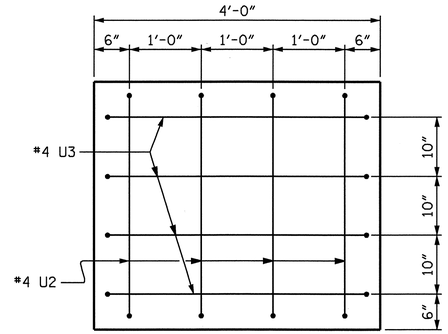

END VIEW

2" MIN. CONCRETE COVER FROM END OF CAP REQUIRED FOR ALL #4 "U" BARS.

#4 "U" BARS MAY BE SHIFTED UP TO 2" TO CLEAR "B" BARS.

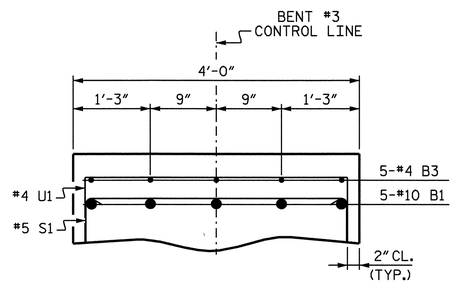

SECTION B-B

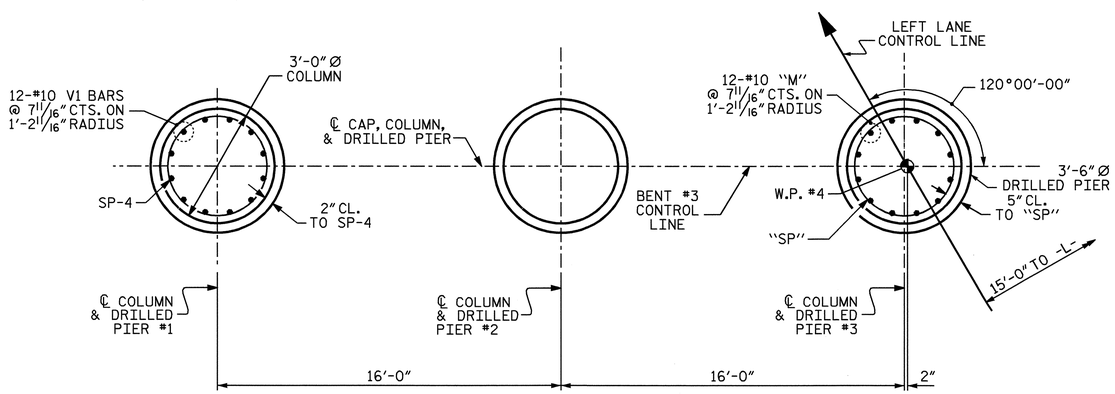

PARTIAL PLAN OF COLUMN

PARTIAL PLAN OF DRILLED PIER

PLAN OF DRILLED PIERS & COLUMNS

DIMENSIONS AND REINFORCING STEEL ARE TYPICAL FOR EACH COLUMN AND DRILLED PIER

BAR TYPES

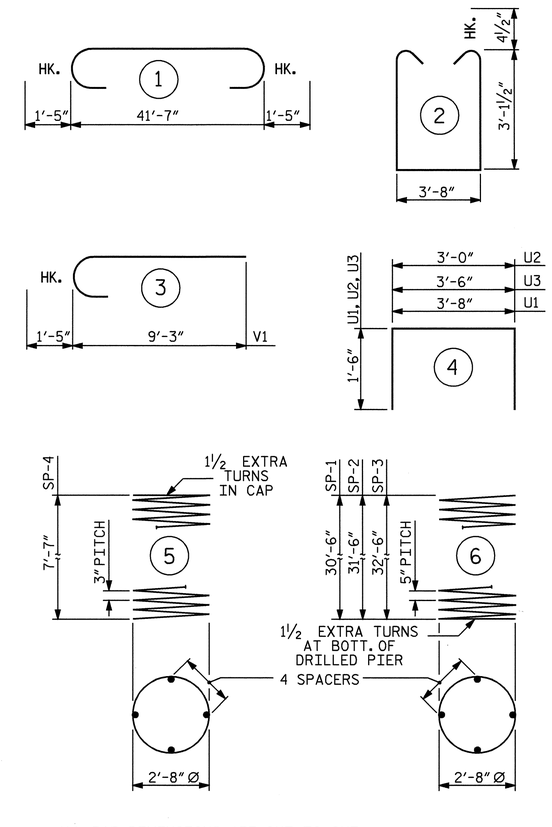

ALL BAR DIMENSIONS ARE OUT TO OUT.

✱ THE SP-1, SP-2 AND SP-3 SPIRAL REINFORCING STEEL SHALL BE W31 OR D-31 COLD DRAWN WIRE OR #5 PLAIN OR DEFORMED BAR.

✱✱ THE SP-4 SPIRAL REINFORCING STEEL SHALL BE W20 OR D-20 COLD DRAWN WIRE OR #4 PLAIN OR DEFORMED BAR.

BILL OF MATERIAL

BENT #3

BAR	NO	SIZE	TYPE	LENGTH	WEIGHT
B1	5	10	1	44'-5"	956
B2	5	10	STR	41'-8"	896
B3	5	4	STR	22'-9"	76
B4	4	5	STR	41'-8"	174
M1	12	10	STR	39'-9"	2053
M2	12	10	STR	40'-9"	2104
M3	12	10	STR	41'-9"	2156
S1	50	5	2	10'-8"	556
U1	46	4	4	6'-8"	205
U2	8	4	4	6'-0"	32
U3	8	4	4	6'-6"	35
V1	36	10	3	11'-7"	1794
REINFORCING STEEL LBS.					11,037
SP-1	1	✱	6	613'-7"	640
SP-2	1	✱	6	634'-1"	661
SP-3	1	✱	6	652'-7"	681
SP-4	3	✱✱	5	263'-6"	528
SPIRAL COLUMN REINFORCING STEEL LBS.					2,510

CLASS A CONCRETE BREAKDOWN

POUR #2 (COLUMNS)	5.8 C.Y.
POUR #3 (CAP)	23.3 C.Y.
TOTAL	29.1 C.Y.

DRILLED PIERS

DRILLED PIER CONCRETE

POUR #1 (DRILLED PIERS)	34.2 C.Y.
3'-6" Ø DRILLED PIERS NOT IN SOIL	12.00 LIN. FT.
3'-6" Ø DRILLED PIERS IN SOIL	84.00 LIN. FT.
PERMANENT STEEL CASING FOR 3'-6" Ø DRILLED PIERS	59.91 LIN. FT.
▲ CSL TUBES	414.00 LIN. FT.

▲ NO SEPARATE PAYMENT WILL BE MADE FOR CSL TUBES. CSL TUBES WILL BE INCLUDED IN THE UNIT BID PRICE FOR DRILLED PIERS.

PROJECT NO. R-2911B
ROWAN COUNTY
STATION: 137+95.00 -L-

SHEET 2 OF 2

STATE OF NORTH CAROLINA
DEPARTMENT OF TRANSPORTATION
RALEIGH

SUBSTRUCTURE
BENT #3
LEFT LANE

NORTH CAROLINA PROFESSIONAL SEAL 20125 ENGINEER MARSHALL G. CHEEK, JR.
7-21-08

REVISIONS							SHEET NO.
NO.	BY:	DATE:	NO.	BY:	DATE:		S-30
1			3				TOTAL SHEETS
2			4				77

DRAWN BY : A. SORSENGINH DATE : 5/27/08
CHECKED BY : MG CHEEK DATE : 6/12/08

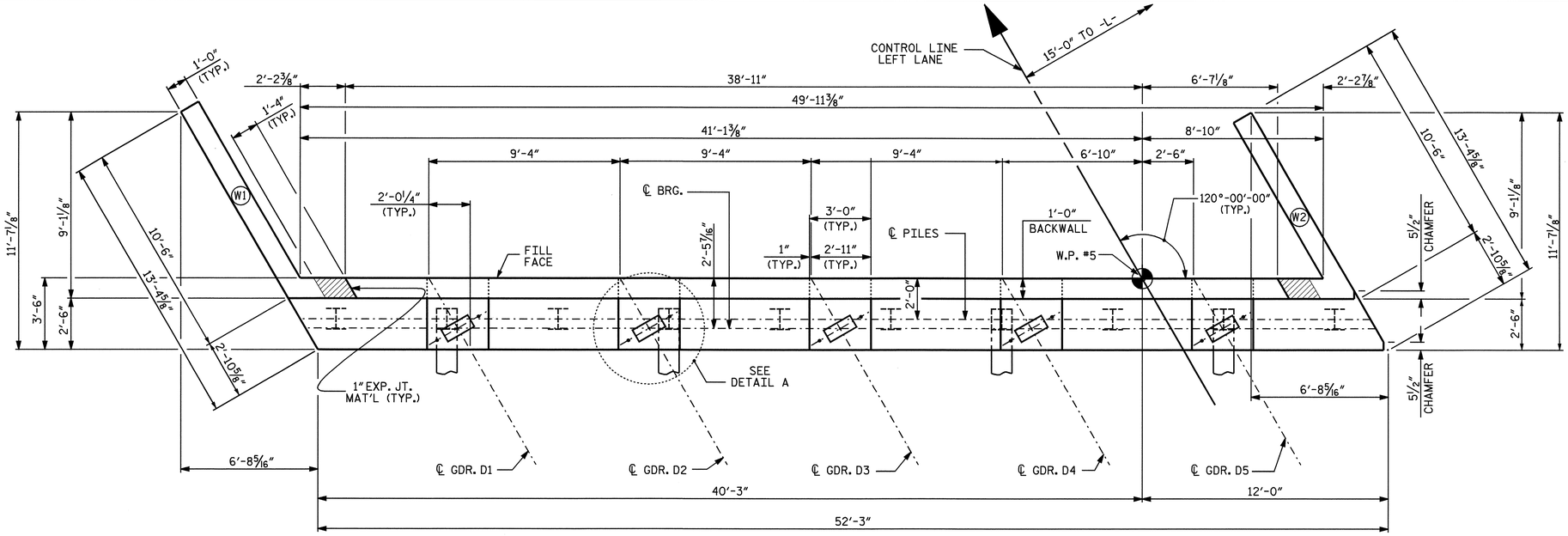

PLAN

NOTES

STIRRUPS IN CAP MAY BE SHIFTED AS NECESSARY TO CLEAR ANCHOR BOLTS.

FOR SECTION A-A, SEE SHEET 3 OF 3.

FOR PILE SPLICE DETAILS SEE SHEET 3 OF 3.

FOR TEMPORARY DRAINAGE AT END BENTS, SEE SHEET 3 OF 3.

BACKWALL SHALL BE PLACED BEFORE APPLYING THE EPOXY PROTECTIVE COATING.

THE TOP SURFACE AREA OF THE END BENT CAP SHALL BE CURED IN ACCORDANCE WITH THE STANDARD SPECIFICATIONS EXCEPT THAT THE MEMBRANE CURING COMPOUND METHOD SHALL NO BE USED.

THE TOP SURFACE OF THE END BENT CAP EXCEPT THE BRIDGE SEAT BUILDUPS SHALL BE SLOPED TRANSVERSELY FROM THE FILL FACE TO THE BACK FACE AT THE RATE OF 2%.

THE CONTRACTOR SHALL PROVIDE FOR INSTALLATION OF THE 4" DIAMETER DRAIN PIPE THROUGH THE WING WALL AS REQUIRED FOR REINFORCED BRIDGE APPROACH FILLS, SEE THE ROADWAY PLANS. REINFORCING STEEL IN THE WING WALL MAY BE SHIFTED AS NECESSARY TO CLEAR THE DRAIN PIPE.

THE CONCRETE IN THE SHADED AREA OF THE WING SHALL BE POURED AFTER THE BARRIER RAIL IS CAST IF SLIP FORMING IS USED.

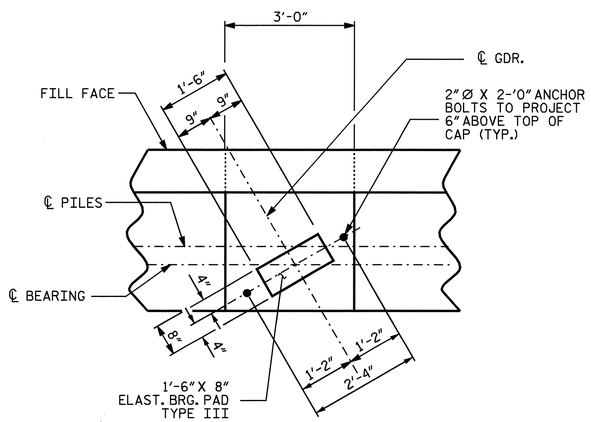

DETAIL A

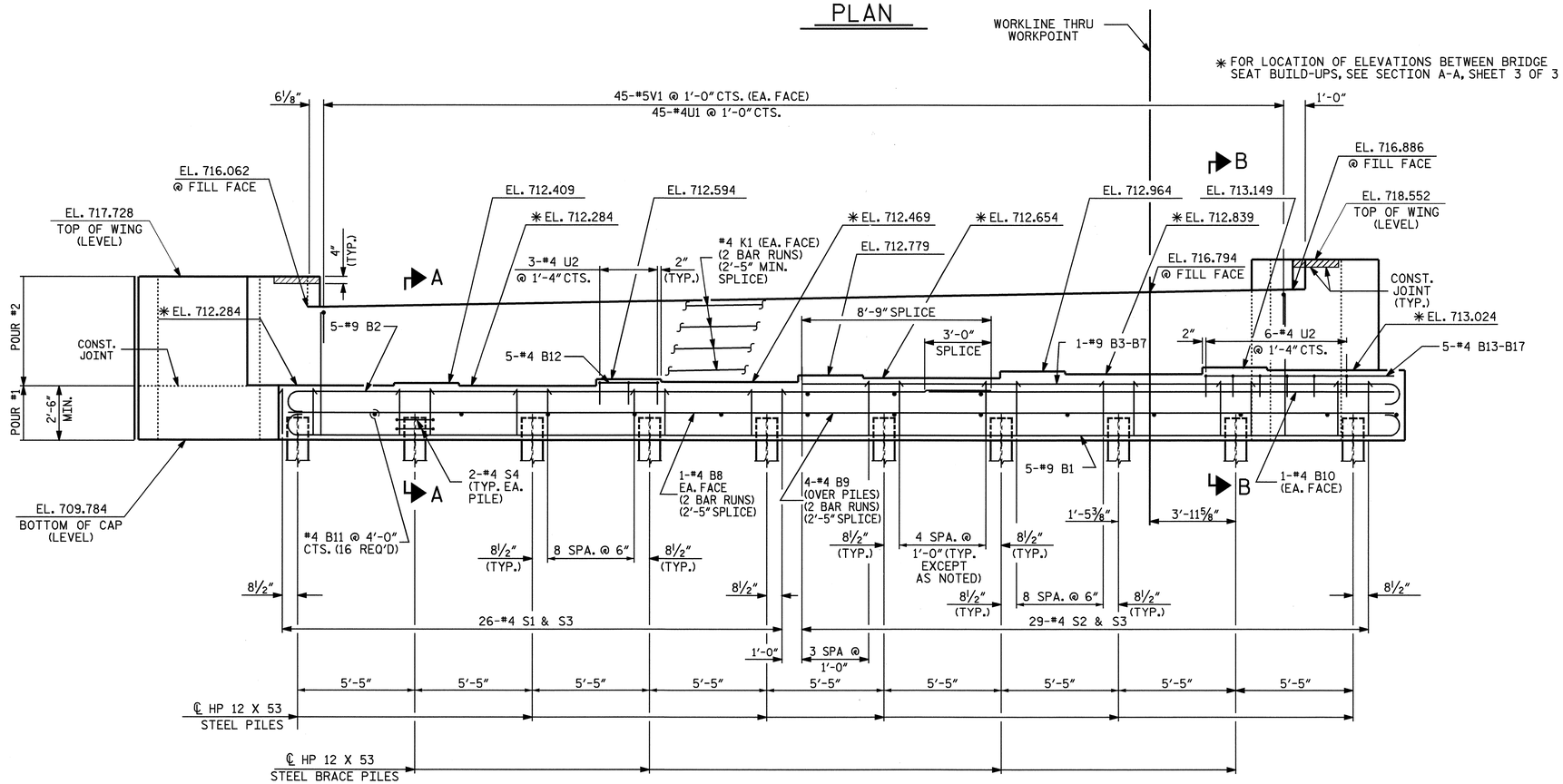

ELEVATION

(FOR CLARITY BRACE PILES IN WING NOT SHOWN)

PROJECT NO. R-2911B

ROWAN COUNTY

STATION: 137+95.00 -L-

SHEET 1 OF 3

STATE OF NORTH CAROLINA
DEPARTMENT OF TRANSPORTATION
RALEIGH

SUBSTRUCTURE
END BENT NO. 2
LEFT LANE

NORTH CAROLINA PROFESSIONAL SEAL 20125 ENGINEER MARSHALL GIDDEN, JR.
7-21-08

REVISIONS								SHEET NO.
NO.	BY:	DATE:	NO.	BY:	DATE:			S-31
1			3					TOTAL SHEETS
2			4					77

DRAWN BY : A.L. FIGUEROA DATE : 5-07-08
CHECKED BY : L.L. MURPHY DATE : 6-04-08

21-JUL-2008 10:08
r:\structures\finalplans\str #1\R-2911B_sd_str#1-13_EB 1&2 .dgn
dahodge

STR #1

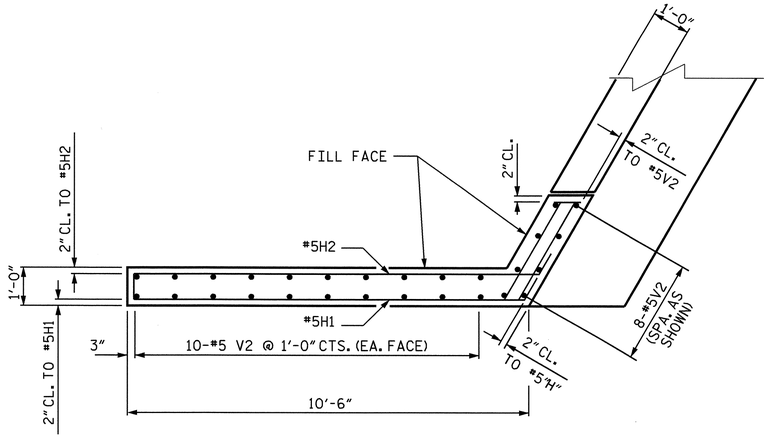

PLAN OF LEFT WING - W1

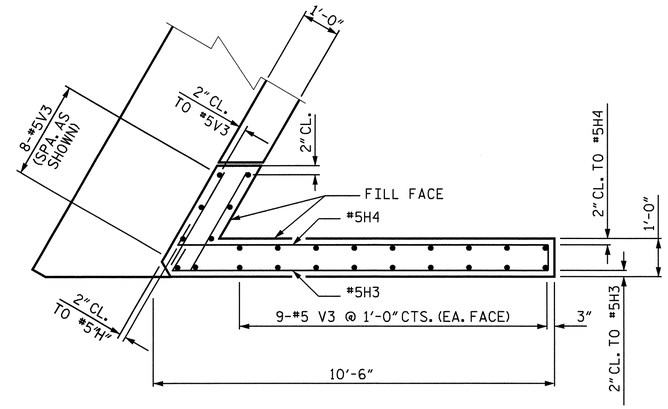

PLAN OF RIGHT WING - W2

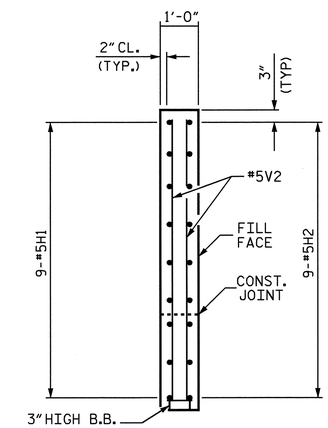

SECTION X-X

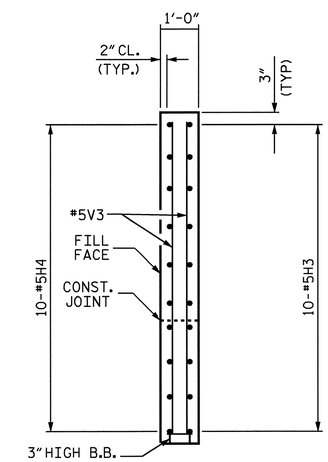

SECTION Y-Y

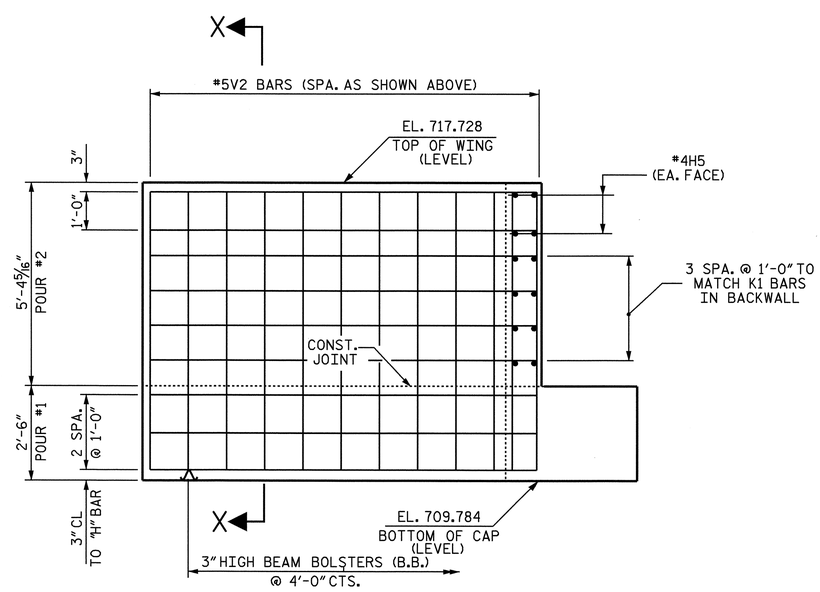

ELEVATION OF LEFT WING - W1

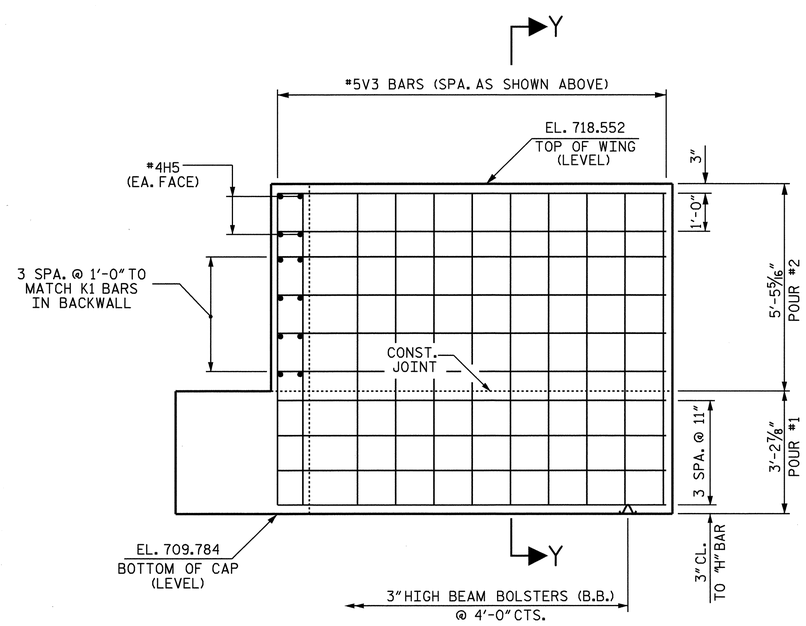

ELEVATION OF RIGHT WING - W2

PROJECT NO. R-2911B

ROWAN COUNTY

STATION: 137+95.00 -L-

SHEET 2 OF 3

STATE OF NORTH CAROLINA
DEPARTMENT OF TRANSPORTATION
RALEIGH

SUBSTRUCTURE
END BENT NO. 2
LEFT LANE

NORTH CAROLINA PROFESSIONAL SEAL 20125 ENGINEER MARSHALL L. CHEEK, JR.
7-21-08

REVISIONS								SHEET NO.
NO.	BY:	DATE:	NO.	BY:	DATE:			S-32
1			3					TOTAL SHEETS
2			4					77

STR#1

DRAWN BY : A.L. FIGUEROA DATE : 5-07-08
CHECKED BY : L.L. MURPHY DATE : 6-04-08

20-JUN-2008 10:42
r:\structures\r2911b\alfigueroa\microstation\R-2911B_sd_EB 1&2 -STR#1.dgn
lmurphy

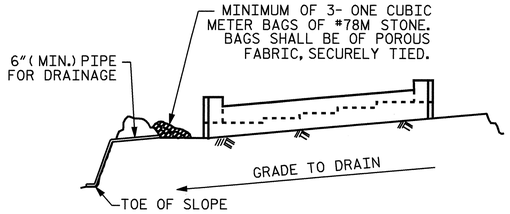

BAGGED STONE AND PIPE SHALL BE PLACED IMMEDIATELY AFTER COMPLETION OF END BENT EXCAVATION. PIPE MAY BE EITHER CONCRETE, CORRUGATED STEEL, CORRUGATED ALUMINUM ALLOY, OR CORRUGATED PLASTIC. PERFORATED PIPE WILL NOT BE ALLOWED.

BAGGED STONE SHALL REMAIN IN PLACE UNTIL THE ENGINEER DIRECTS THAT IT BE REMOVED. THE CONTRACTOR SHALL REMOVE AND DISPOSE OF SILT ACCUMULATIONS AT BAGGED STONE WHEN SO DIRECTED BY THE ENGINEER. BAGS SHALL BE REMOVED AND REPLACED WHENEVER THE ENGINEER DETERMINES THAT THEY HAVE DETERIORATED AND LOST THEIR EFFECTIVENESS.

NO SEPARATE PAYMENT WILL BE MADE FOR THIS WORK AND THE ENTIRE COST OF THIS WORK SHALL BE INCLUDED IN THE UNIT CONTRACT PRICE BID FOR THE SEVERAL PAY ITEMS.

TEMPORARY DRAINAGE AT END BENT

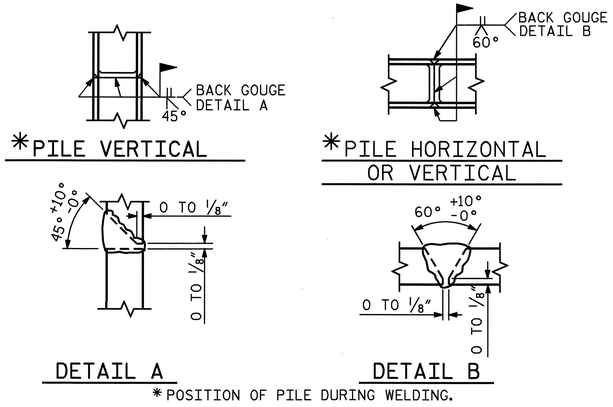

* POSITION OF PILE DURING WELDING.

PILE SPLICE DETAILS

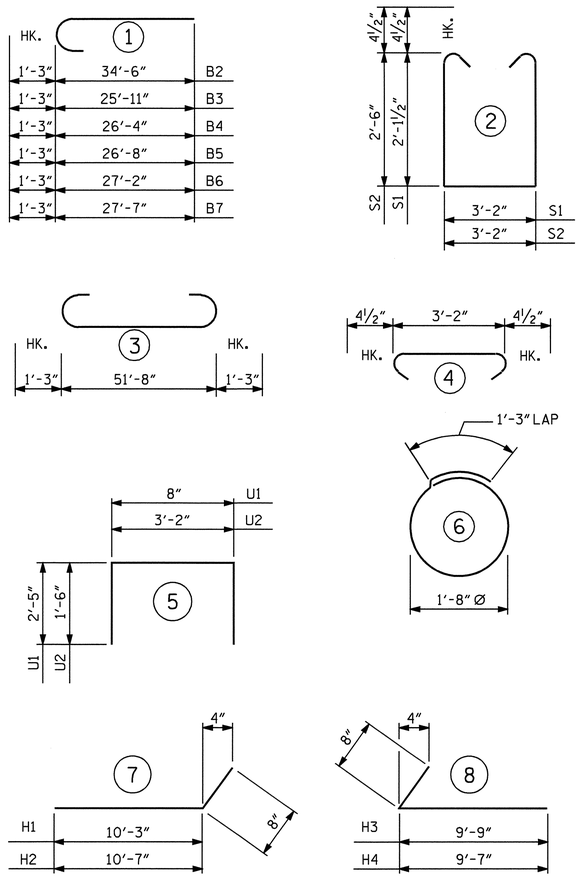

ALL BAR DIMENSIONS ARE OUT TO OUT.

BILL OF MATERIAL
END BENT NO. 2

BAR	NO.	SIZE	TYPE	LENGTH	WEIGHT
B1	5	#9	3	54'-2"	921
B2	5	#9	1	35'-9"	608
B3	1	#9	1	27'-2"	92
B4	1	#9	1	27'-7"	94
B5	1	#9	1	27'-11"	95
B6	1	#9	1	28'-5"	97
B7	1	#9	1	28'-10"	98
B8	4	#4	STR	27'-1"	72
B9	8	#4	STR	27'-1"	145
B10	2	#4	STR	20'-1"	27
B11	16	#4	STR	3'-2"	34
B12	5	#4	STR	2'-8"	9
B13	1	#4	STR	7'-3"	5
B14	1	#4	STR	7'-8"	5
B15	1	#4	STR	8'-0"	5
B16	1	#4	STR	8'-6"	6
B17	1	#4	STR	8'-11"	6
H1	9	#5	7	10'-11"	102
H2	9	#5	7	11'-3"	106
H3	10	#5	8	10'-5"	109
H4	10	#5	8	10'-3"	107
H5	8	#4	STR	2'-11"	16
K1	16	#4	STR	27'-1"	289
S1	26	#4	2	8'-2"	142
S2	29	#4	2	8'-11"	173
S3	55	#4	4	3'-11"	144
S4	20	#4	6	6'-6"	87
U1	45	#4	5	5'-6"	165
U2	9	#4	5	6'-2"	37
V1	90	#5	STR	5'-9"	540
V2	28	#5	STR	7'-5"	217
V3	26	#5	STR	8'-3"	224

REINFORCING STEEL = 4777 LBS

CLASS A CONCRETE BREAKDOWN

POUR #1 CAP, LOWER PART OF WINGS & BRACE PILE BLOCK	21.6 C.Y.
POUR #2 BACKWALL & UPPER PART OF WINGS	11.5 C.Y.
CLASS A CONCRETE TOTAL	33.1 C.Y.

HP 12 X 53 STEEL PILES

NO. 10 350 LIN. FT.

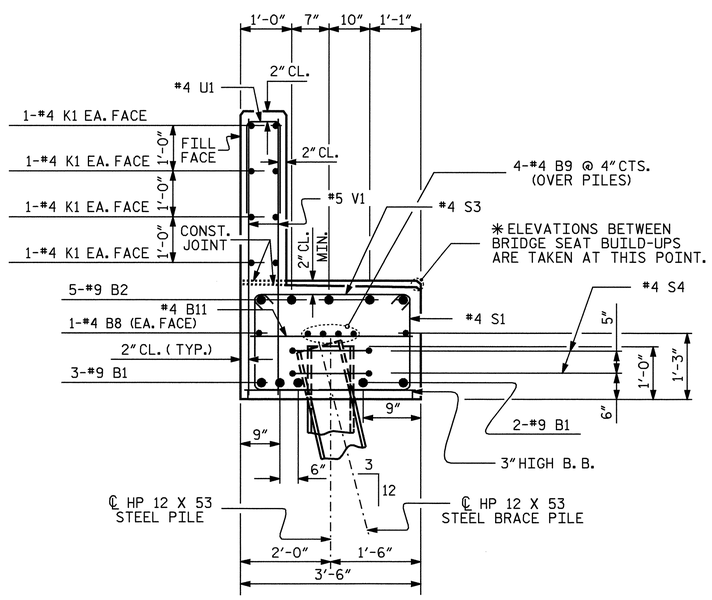

SECTION A-A

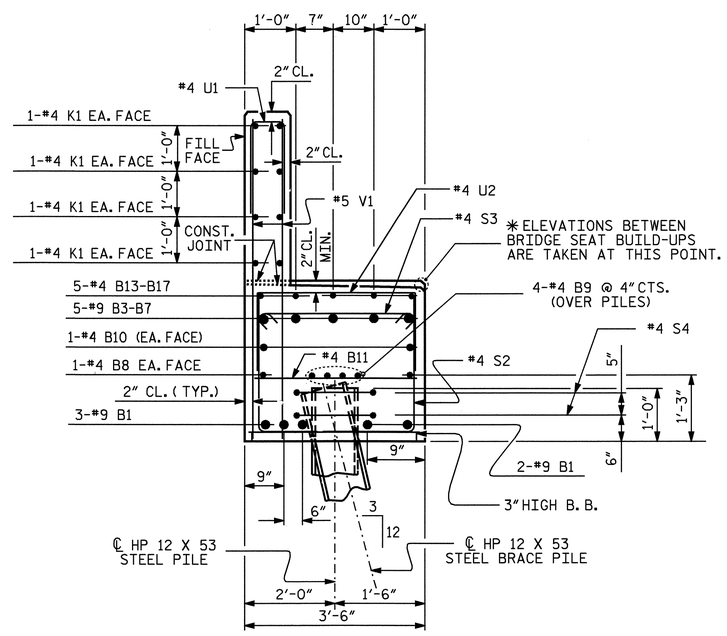

SECTION B-B

PROJECT NO. R-2911B

ROWAN COUNTY

STATION: 137+95.00 -L-

SHEET 3 OF 3

STATE OF NORTH CAROLINA
DEPARTMENT OF TRANSPORTATION
RALEIGH

SUBSTRUCTURE
END BENT NO. 2
LEFT LANE

NORTH CAROLINA PROFESSIONAL SEAL 20125 ENGINEER MARSHALL A. PEEK, JR.
7-21-08

REVISIONS							SHEET NO.
NO.	BY:	DATE:	NO.	BY:	DATE:		S-33
1			3				TOTAL SHEETS
2			4				77

DRAWN BY : A.L. FIGUEROA DATE : 5-07-08
CHECKED BY : L.L. MURPHY DATE : 6-04-08

21-JUL-2008 10:09
r:\structures\finalplans\str #1\R-2911B_sd_str#1-13_EB 1&2 .dgn

STR #1

NOTES :

FOR BERM WIDTH DIMENSIONS, SEE GENERAL DRAWING.

ESTIMATED QUANTITIES		
BRIDGE @ STA. 137+95.00 -L- (LEFT LANE)	RIP RAP CLASS II	FILTER FABRIC FOR DRAINAGE
	TONS	SQUARE YARDS
END BENT 1	405	450
END BENT 2	245	271

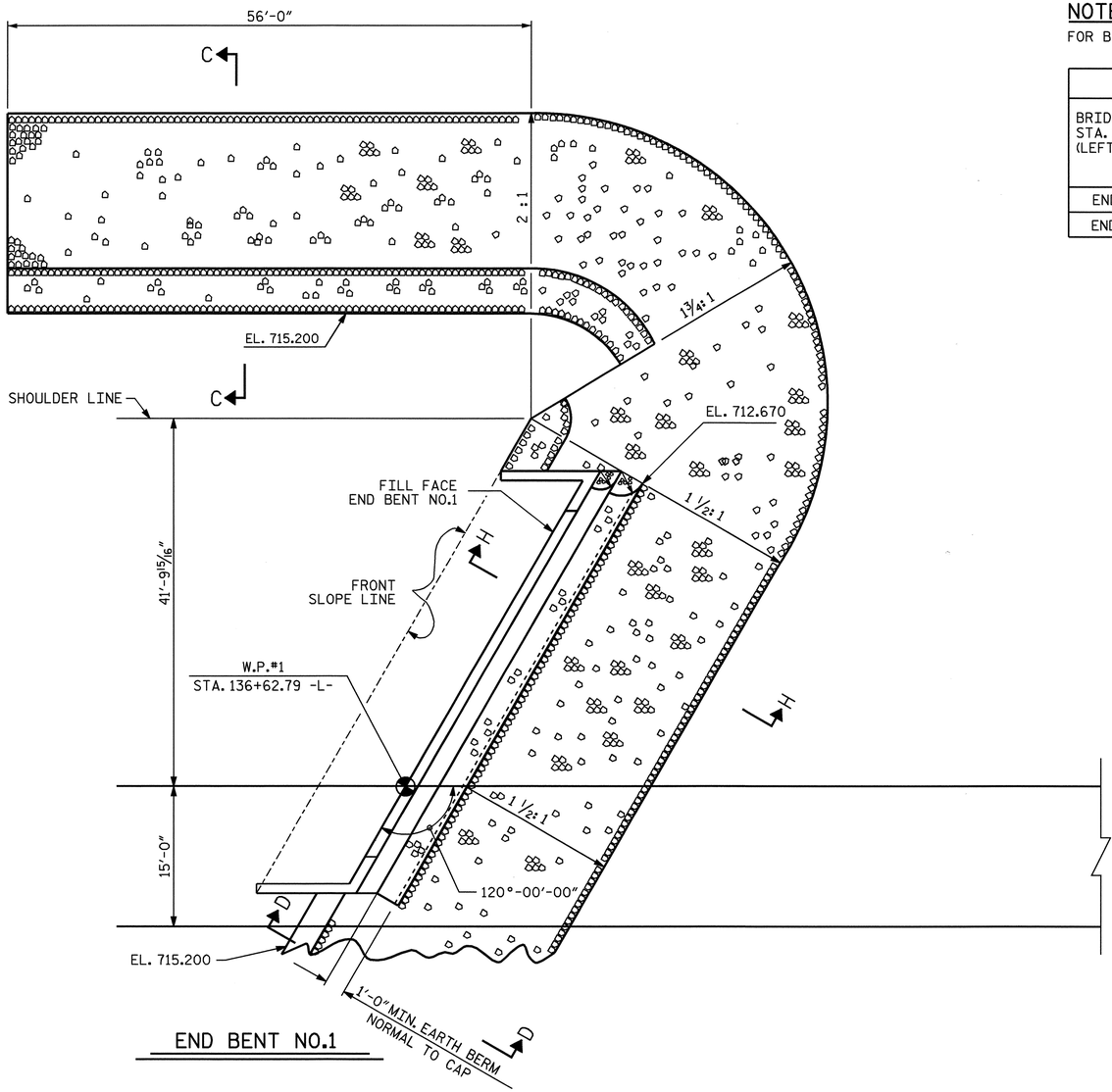

END BENT NO.1

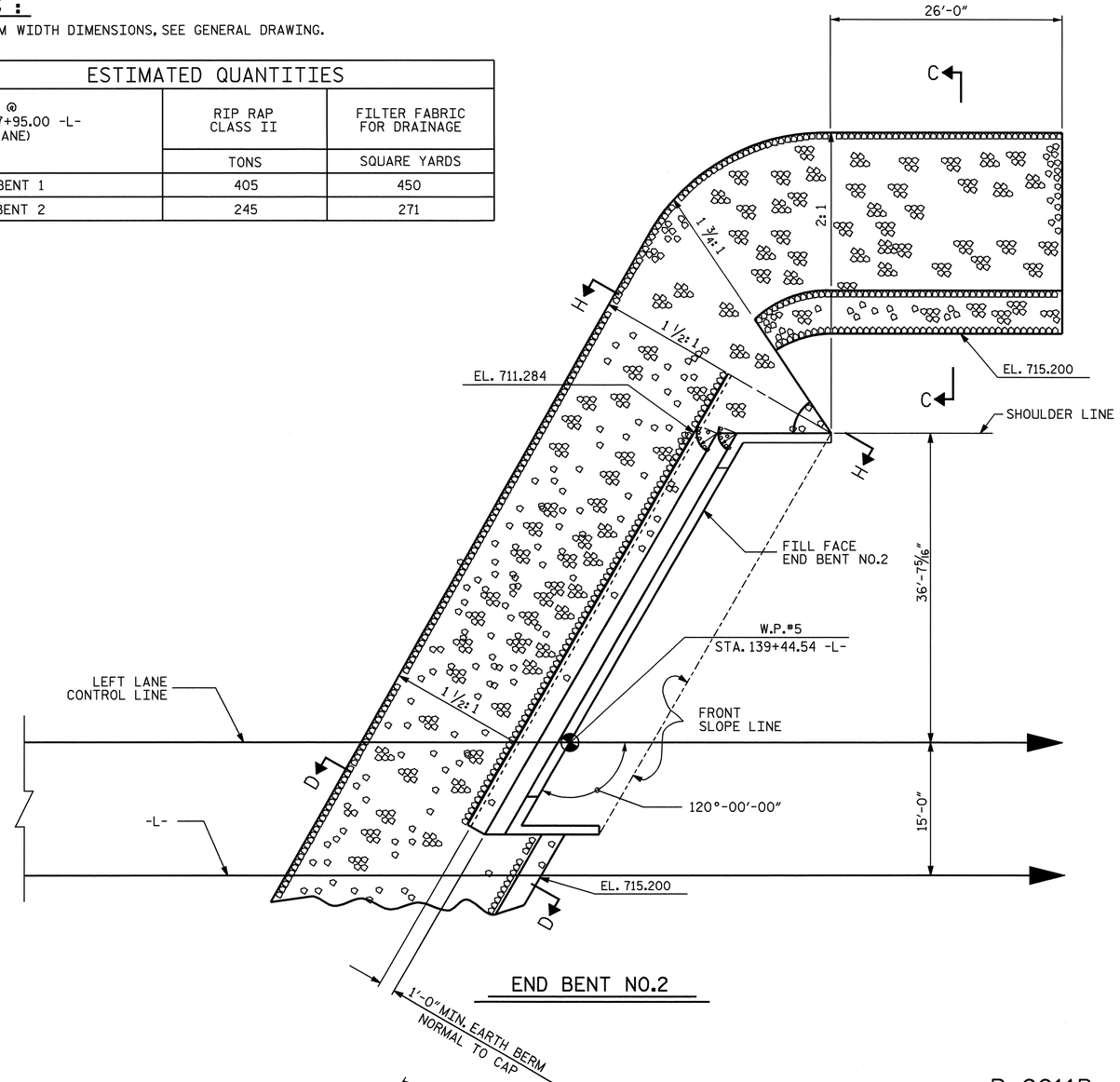

END BENT NO.2

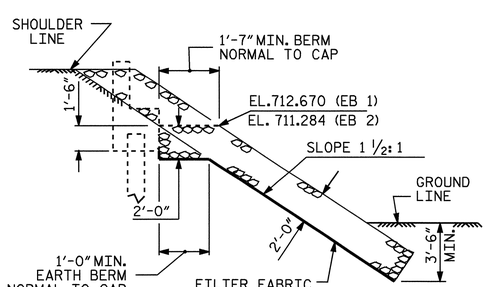

SECTION H-H

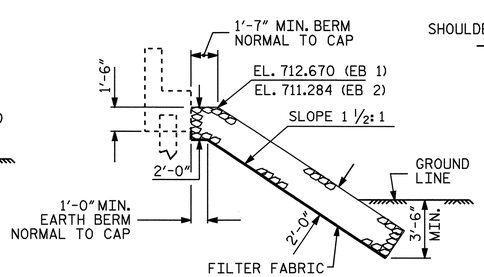

℄ SECTION

BERM RIP RAPPED

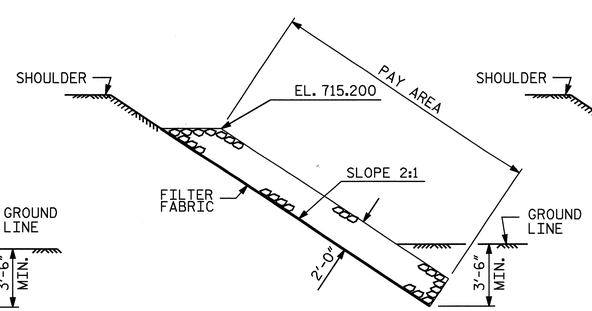

SECTION C-C

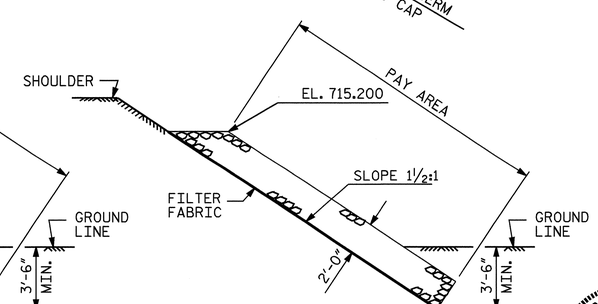

SECTION D-D

PROJECT NO. R-2911B

ROWAN COUNTY

STATION: 137+95.00 -L-

STATE OF NORTH CAROLINA
DEPARTMENT OF TRANSPORTATION
RALEIGH

RIP RAP DETAILS
(LEFT LANE)

NORTH CAROLINA PROFESSIONAL SEAL 20125 ENGINEER MARSHALL C. GOREK, JR.
7-21-08

ASSEMBLED BY : A.L. FIGUEROA	DATE : 10-31-07		
CHECKED BY : D. HODGE	DATE : 6-18-08		
DRAWN BY : REK 1/84	REV. 8/16/99	RWW/LES	
CHECKED BY : RDU 1/84	REV. 10/17/00	RWW/LES	
	REV. 5/1/06	TLA/GM	

REVISIONS							
NO.	BY:	DATE:	NO.	BY:	DATE:	SHEET NO.	
1			3			S-34	
2			4			TOTAL SHEETS	
						77	

STR #1 STD. NO. RR3

21-JUL-2008 10:10
r:\structures\finalplans\str #1\R-2911B_sd_str#1-15_SP.dgn
dahodge

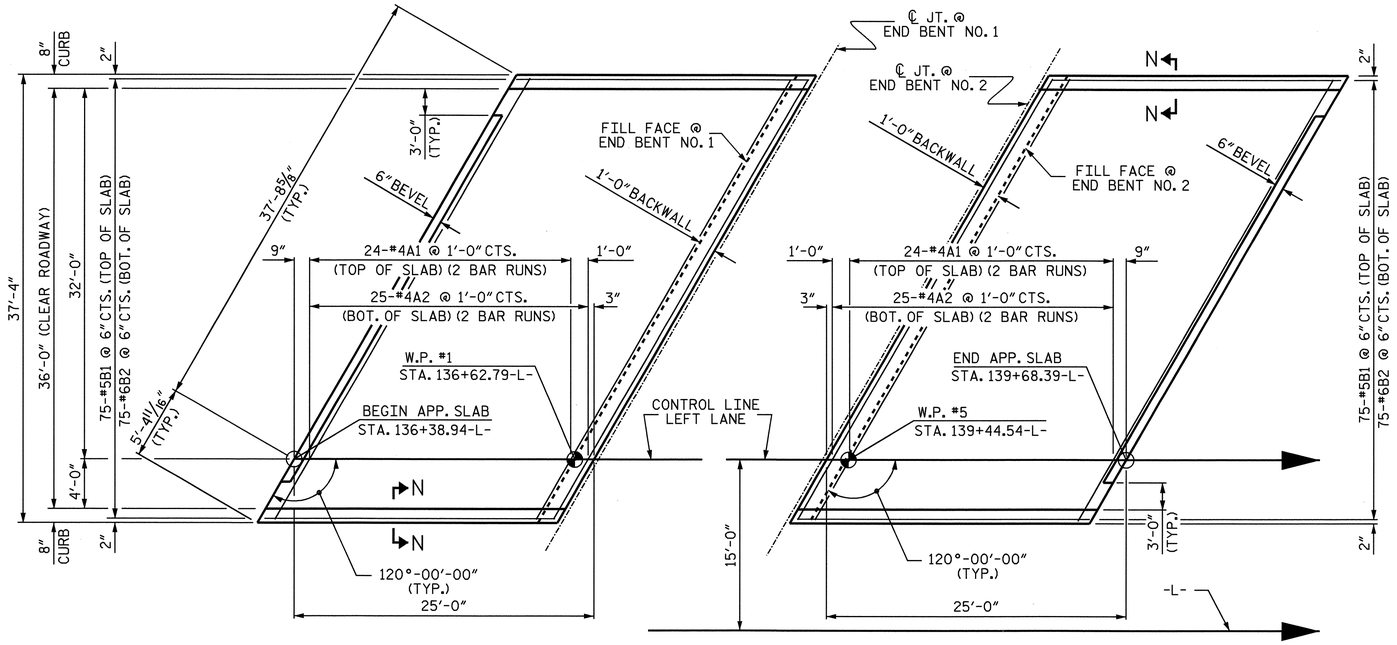

APPROACH SLAB @ END BENT NO. 1

APPROACH SLAB @ END BENT NO. 2

PLAN

NOTES

APPROACH SLAB SHALL NOT BE CONSTRUCTED PRIOR TO COMPLETION OF THE BRIDGE DECK.

FOR REINFORCED BRIDGE APPROACH FILL INCLUDING FABRIC, IMPERMEABLE GEOMEMBRANE, 4" Ø DRAINAGE PIPE, #78M STONE, AND SELECT MATERIAL, SEE ROADWAY PLANS.

AREA BETWEEN THE WINGWALL AND APPROACH SLAB SHALL BE GRADED TO DRAIN THE WATER AWAY FROM THE FILL FACE OF THE BRIDGE AND SHALL BE PAVED. SEE ROADWAY PLANS.

THE 6" COMP. A.B.C. SHALL BE FLUSH WITH THE ROADWAY END OF THE APPROACH SLAB AND SHALL EXTEND 1'-0" OUTSIDE EACH EDGE OF THE APPROACH SLAB.

THE CONTRACTOR MAY USE 4" TYPE B-25.0B ASPHALT CONCRETE BASE COURSE IN LIEU OF 6" COMP. A.B.C. IF THIS OPTION IS USED, THE BASE COURSE SHALL BE FLUSH WITH THE ROADWAY END OF THE APPROACH SLAB, AND THE WIDTH SHALL BE THE SAME AS THAT OF THE APPROACH SLAB.

THE CONTRACTOR MAY USE 5" CLASS "A" CONCRETE BASE IN LIEU OF 6" COMP. A.B.C. IF THIS OPTION IS USED, THE CONCRETE BASE SHALL BE FLUSH WITH THE ROADWAY END OF THE APPROACH SLAB, AND THE WIDTH SHALL BE THE SAME AS THAT OF THE APPROACH SLAB. THE CONCRETE SHALL BE FINISHED TO A SMOOTH SURFACE AND A LAYER OF 30 LB ROOFING FELT SHALL BE PLACED BETWEEN THE CONCRETE BASE AND THE APPROACH SLAB TO PREVENT BOND. THE APPROACH SLAB SHALL NOT BE CAST UNTIL THE CONCRETE BASE HAS REACHED AN AGE OF THREE CURING DAYS.

FOR EVAZOTE JOINT SEALS, SEE SPECIAL PROVISIONS.

BILL OF MATERIAL

APPROACH SLAB AT EB #1

BAR	NO.	SIZE	TYPE	LENGTH	WEIGHT
✳ A1	48	#4	STR	22'-5"	719
A2	50	#4	STR	22'-3"	743
✳ B1	75	#5	STR	23'-6"	1838
B2	75	#6	STR	24'-7"	2769
REINFORCING STEEL				LBS.	3512
✳ EPOXY COATED REINFORCING STEEL				LBS.	2557
CLASS AA CONCRETE				C.Y.	35.0

APPROACH SLAB AT EB #2

BAR	NO.	SIZE	TYPE	LENGTH	WEIGHT
✳ A1	48	#4	STR	22'-5"	719
A2	50	#4	STR	22'-3"	743
✳ B1	75	#5	STR	23'-6"	1838
B2	75	#6	STR	24'-7"	2769
REINFORCING STEEL				LBS.	3512
✳ EPOXY COATED REINFORCING STEEL				LBS.	2557
CLASS AA CONCRETE				C.Y.	35.0

✳ THESE BARS ARE EPOXY COATED.

SPLICE CHART

BAR SIZE	EPOXY COATED	UNCOATED
#4	2'-0"	1'-9"
#5	2'-6"	2'-2"
#6	3'-10"	2'-7"

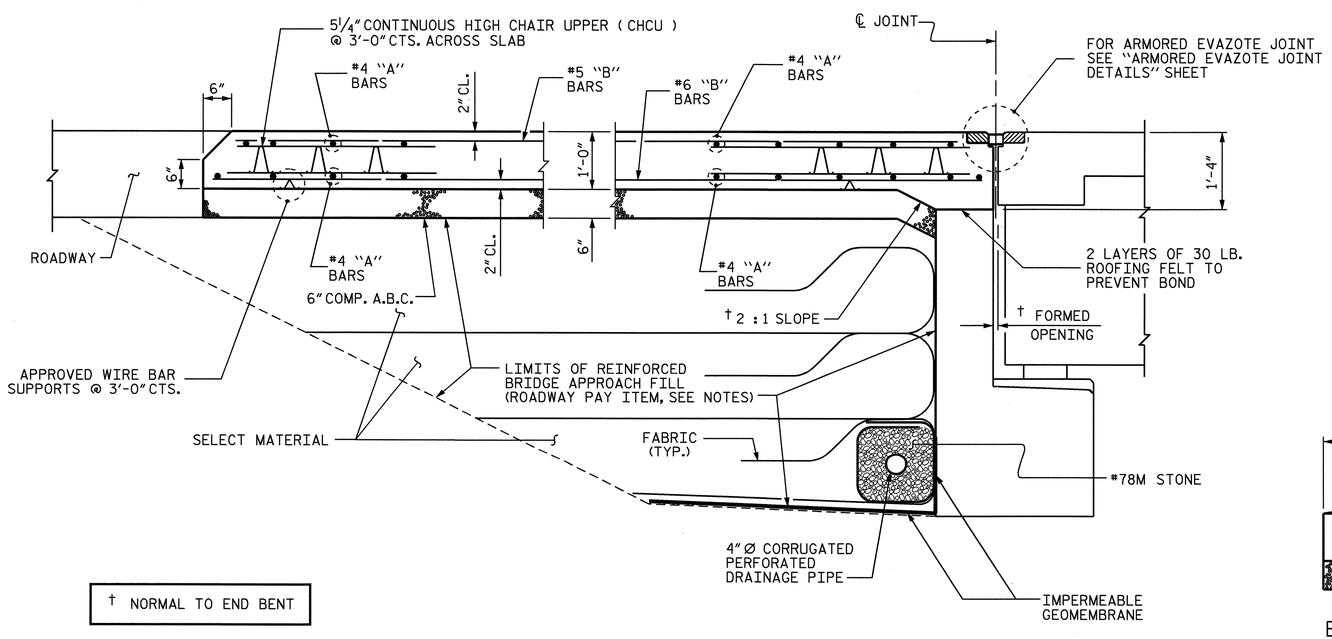

† NORMAL TO END BENT

SECTION THRU SLAB

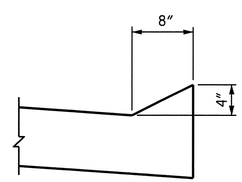

SECTION N-N

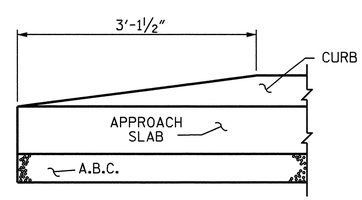

END OF CURB WITHOUT SHOULDER BERM GUTTER

CURB DETAILS

PROJECT NO. R-2911B

ROWAN COUNTY

STATION: 137+95.00-L-

SHEET 1 OF 2

STATE OF NORTH CAROLINA
DEPARTMENT OF TRANSPORTATION
RALEIGH

STANDARD

BRIDGE APPROACH SLAB FOR FLEXIBLE PAVEMENT LEFT LANE

NORTH CAROLINA PROFESSIONAL SEAL 20125 ENGINEER MARSHALL G. CHEEK, JR.
7-21-08

REVISIONS						SHEET NO.
NO.	BY:	DATE:	NO.	BY:	DATE:	S-35
1			3			TOTAL SHEETS
2			4			77

ASSEMBLED BY : L.L. MURPHY	DATE : 05-08		
CHECKED BY : M.G. CHEEK	DATE : 05-08		
DRAWN BY : EEM 3/95	REV. 7/10/01	LES/RDR	
CHECKED BY : VAP 3/95	REV. 5/7/03R	RWW/JTE	
	REV. 5/1/06R	KMM/GM	

17-JUN-2008 14:19
R:\Structures\r2911b\lmurphy\Microstation\Str#1\R2911B_sd_AS_str#1.dgn
afigueroa

STR #1

STD. NO. BAS4

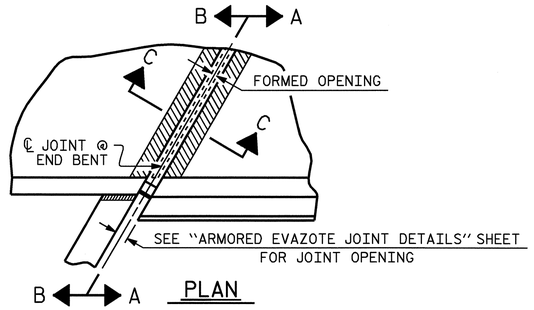

PLAN

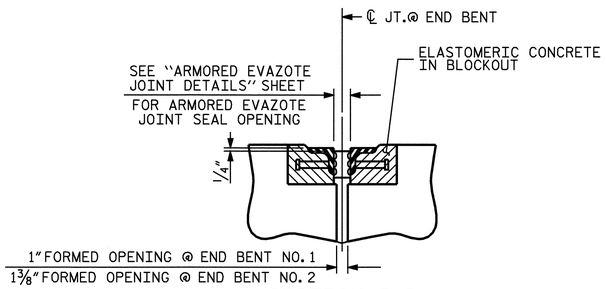

SECTION C-C

ARMORED EVAZOTE JOINT SEAL

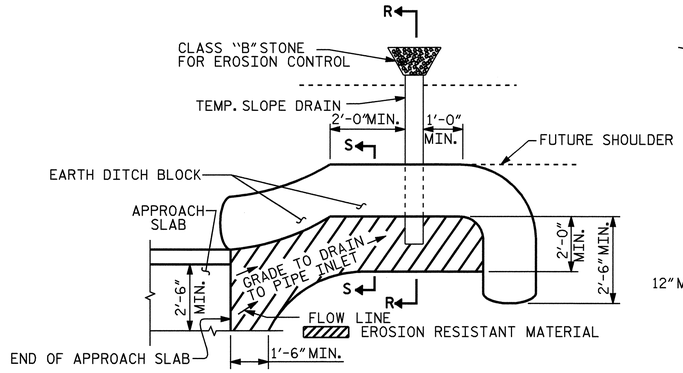

NOTE: IMMEDIATELY AFTER THE CONSTRUCTION OF THE APPROACH SLAB, THE CONTRACTOR SHALL PROVIDE TEMPORARY BERM AND SLOPE DRAIN. CONTRACTOR SHALL GRADE TO PIPE INLET AND PROVIDE EROSION RESISTANT MATERIAL AS SHOWN. THE EROSION RESISTANT MATERIAL SHALL BE EITHER 1) ASPHALT PLANT MIX, TYPE 1 OR TYPE 2, MIN. 2" DEPTH, 2) EROSION CONTROL MAT, OR 3) CONCRETE, AS DIRECTED BY THE ENGINEER. THE SLOPE DRAIN SHALL CONSIST OF A NON-PERFORATED TEMPORARY DRAINAGE PIPE, 12 INCHES IN DIAMETER.

PLAN VIEW

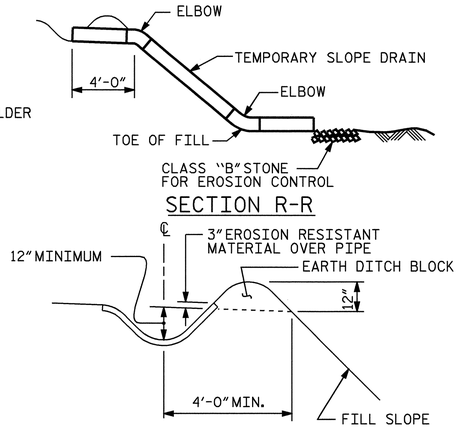

SECTION R-R

SECTION S-S

TEMPORARY BERM AND SLOPE DRAIN DETAILS

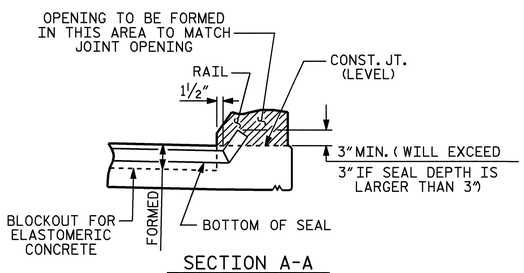

SECTION A-A

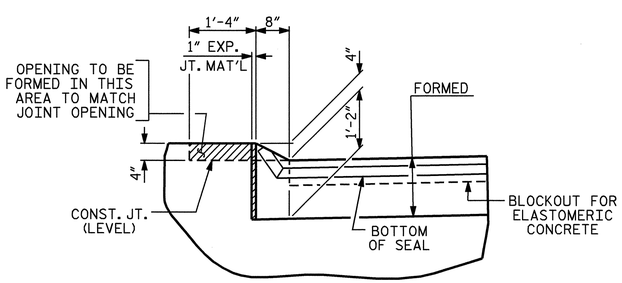

SECTION B-B

JOINT SEAL DETAILS @ END BENT

EVAZOTE JOINT SEAL TO BE CUT, HEAT WELDED AND TURNED UP PARALLEL TO SLOPED FACE OF THE BARRIER RAIL.

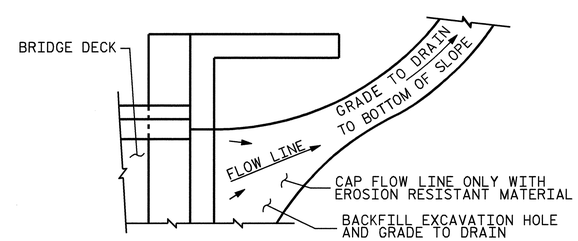

NOTE: IF THE APPROACH SLAB IS NOT CONSTRUCTED IMMEDIATELY AFTER THE BACKFILLING OF THE END BENT EXCAVATION, GRADE TO DRAIN TO THE BOTTOM OF THE SLOPE AND PROVIDE EROSION RESISTANT MATERIAL, SUCH AS FIBERGLASS ROVING OR AS DIRECTED BY THE ENGINEER TO PREVENT SOIL EROSION AND TO PROTECT THE AREA ADJACENT TO THE STRUCTURE. THE CONTRACTOR WILL BE REQUIRED TO REMOVE THESE MATERIALS PRIOR TO CONSTRUCTION OF THE APPROACH SLAB.

TEMPORARY DRAINAGE DETAIL

PROJECT NO. R-2911B

ROWAN COUNTY

STATION: 137+95.00-L-

SHEET 2 OF 2

STATE OF NORTH CAROLINA
DEPARTMENT OF TRANSPORTATION
RALEIGH

STANDARD

BRIDGE APPROACH SLAB DETAILS LEFT LANE

NORTH CAROLINA PROFESSIONAL SEAL 20125 ENGINEER MARSHALL L. GREEK, JR.
7-21-08

REVISIONS								SHEET NO.
NO.	BY:	DATE:	NO.	BY:	DATE:			S-36
1			3					TOTAL SHEETS
2			4					77

ASSEMBLED BY : L.L. MURPHY		DATE :	05-08
CHECKED BY : M.G. CHEEK		DATE :	05-08
DRAWN BY : FCJ	11/88	REV. 10/17/00	RWW/LES
CHECKED BY : ARB	11/88	REV. 5/7/03	RWW/JTE
		REV. 5/1/06R	MAA/KMM

21-JUL-2008 10:11
r:\structures\finalplans\str #1\R-2911B_sd_str#1-16_AS.dgn
dahodge

STR #1

STD. NO. BAS10

OVERHANG BRACKET CALCULATION INSTRUCTIONS

AASHTO SHAPES - TYPES III, IV, V, AND VI

1. RECORD KNOWN INFORMATION ON "BRIDGE OVERHANG BRACKET SUMMARY" ON SHEET 2
2. CALCULATE THE MAXIMUM SCREED LOAD PER BRACKET (SLPB) WITH AN ESTIMATED R = 1.5. SLPB = R X W. ROUND VALUE UP TO NEAREST SLPB VALUE INDICATED ON APPROPRIATE TABLE 1-1, 1-2, 1-3, OR 1-4.
3. WITH THE ESTIMATED SLPB, OVERHANG SLAB THICKNESS, "K" VALUE, AND 45° HANGER SAFE WORKING LOAD (SWL), ENTER THE APPROPRIATE TABLE 1-1, 1-2, 1-3, OR 1-4 (BASED ON OVERHANG DIMENSION) AND DETERMINE THE BRACKET SPACING, S.
4. CALCULATE S/D1 AND S/D2, ROUNDING UP TO NEAREST VALUE IN TABLE 2. ENTER TABLE 2 AND DETERMINE R VALUE.
5. CALCULATE REVISED SLPB. ROUND VALUE UP TO NEAREST SLPB VALUE INDICATED ON APPROPRIATE TABLE 1-1, 1-2, 1-3, OR 1-4.
6. WITH THE REVISED SLPB, OVERHANG SLAB THICKNESS, "K" VALUE AND 45 HANGER SAFE WORKING LOAD (SWL), ENTER THE APPROPRIATE TABLE 1-1, 1-2, 1-3 OR 1-4 (BASED ON OVERHANG DIMENSION) AND DETERMINE REVISED BRACKET SPACING, S.
7. CONTINUE ITERATIONS OF STEPS 4-6 UNTIL THE REVISED BRACKET SPACING, S, IS THE SAME AS THE PREVIOUS S VALUE.
8. CHECK LUMBER JOIST SPACING: WITH BRACKET SPACING VALUE, S, ROUND THIS VALUE UP TO THE NEAREST VALUE OF ALLOWABLE SPAN LENGTH OF JOIST OF TABLE 3. USING THIS VALUE, ALONG WITH THE AVERAGE OVERHANG SLAB THICKNESS AND THE LUMBER JOIST SIZE, DETERMINE JOIST SPACING FROM TABLE 3. IF NECESSARY, ADJUST LUMBER JOIST SIZE AND/OR JOIST SPACING TO MEET ALLOWABLE SPAN LENGTH OF JOIST.
9. CONVERSELY, IF THE DESIRED JOIST SPACING IS KNOWN, USE THIS ALONG WITH THE AVERAGE OVERHANG SLAB THICKNESS AND THE LUMBER JOIST SIZE TO DETERMINE IF ALLOWABLE SPAN LENGTH OF JOIST IS GREATER THAN THE BRACKET SPACING, S. IF NECESSARY, ADJUST LUMBER JOIST SIZE TO MEET REQUIREMENTS OF ALLOWABLE SPAN LENGTH OF JOIST AND JOIST SPACING.
10. RECORD REMAINING INFORMATION ON "BRIDGE OVERHANG BRACKET SUMMARY" FORM.
11. SUBMIT FORM AND CALCULATIONS FOR REVIEW AND APPROVAL.

TABLE 1-1

(FOR USE ON **UP TO 2'-0" OVERHANG (L)** & 54" HORIZONTAL LEG LENGTH OF THE OVERHANG BRACKET)

AVG. SLAB THICKNESS (T) (In)	BRACKET (K) DIMENSION (In)	SCREED LOAD PER BRACKET									45° HANGER SWL (lbs)
		2500 lbs.	2250 lbs.	2000 lbs.	1750 lbs.	1500 lbs.	1250 lbs.	1000 lbs.	750 lbs.	0 lbs.	
		BRACKET SPACING									
10	30				2'-1"	2'-7"	3'-2"	3'-8"	4'-2"	5'-9"	4000
		3'-6"	4'-0"	4'-5"	4'-9"	5'-1"	5'-3"	5'-5"	5'-7"	6'-7"	6000
	40				2'-1"	2'-7"	3'-2"	3'-8"	4'-2"	5'-9"	4000
		3'-6"	4'-0"	4'-5"	4'-9"	5'-1"	5'-3"	5'-5"	5'-7"	6'-7"	6000
	50				2'-1"	2'-7"	3'-2"	3'-8"	4'-2"	5'-9"	4000
		3'-6"	4'-0"	4'-5"	4'-9"	5'-1"	5'-3"	5'-5"	5'-7"	6'-7"	6000
12	30					2'-4"	2'-10"	3'-4"	3'-9"	5'-2"	4000
		3'-2"	3'-7"	4'-1"	4'-7"	5'-0"	5'-2"	5'-4"	5'-7"	6'-5"	6000
	40					2'-4"	2'-10"	3'-4"	3'-9"	5'-2"	4000
		3'-2"	3'-7"	4'-1"	4'-7"	5'-0"	5'-2"	5'-4"	5'-7"	6'-5"	6000
	50					2'-4"	2'-10"	3'-4"	3'-9"	5'-2"	4000
		3'-2"	3'-7"	4'-1"	4'-7"	5'-0"	5'-2"	5'-4"	5'-7"	6'-5"	6000
14	30					2'-2"	2'-7"	3'-0"	3'-5"	4'-9"	4000
		2'-10"	3'-4"	3'-9"	4'-2"	4'-7"	5'-0"	5'-4"	5'-7"	6'-4"	6000
	40					2'-2"	2'-7"	3'-0"	3'-5"	4'-9"	4000
		2'-10"	3'-4"	3'-9"	4'-2"	4'-7"	5'-0"	5'-4"	5'-7"	6'-4"	6000
	50					2'-2"	2'-7"	3'-0"	3'-5"	4'-9"	4000
		2'-10"	3'-4"	3'-9"	4'-2"	4'-7"	5'-0"	5'-4"	5'-7"	6'-4"	6000
16	30					2'-0"	2'-4"	2'-9"	3'-2"	4'-4"	4000
		2'-8"	3'-0"	3'-5"	3'-10"	4'-3"	4'-7"	5'-0"	5'-5"	6'-3"	6000
	40					2'-0"	2'-4"	2'-9"	3'-2"	4'-4"	4000
		2'-8"	3'-0"	3'-5"	3'-10"	4'-3"	4'-7"	5'-0"	5'-5"	6'-3"	6000
	50					2'-0"	2'-4"	2'-9"	3'-2"	4'-4"	4000
		2'-8"	3'-0"	3'-5"	3'-10"	4'-3"	4'-7"	5'-0"	5'-5"	6'-3"	6000

TABLE 1-2

(FOR USE ON **OVER 2'-0" TO 2'-6" OVERHANG (L)** & 54" HORIZONTAL LEG LENGTH OF THE OVERHANG BRACKET)

AVG. SLAB THICKNESS (T) (In)	BRACKET (K) DIMENSION (In)	SCREED LOAD PER BRACKET									45° HANGER SWL (lbs)
		2500 lbs.	2250 lbs.	2000 lbs.	1750 lbs.	1500 lbs.	1250 lbs.	1000 lbs.	750 lbs.	0 lbs.	
		BRACKET SPACING									
10	30					2'-4"	2'-9"	3'-3"	3'-8"	5'-1"	4000
		3'-1"	3'-6"	4'-0"	4'-5"	4'-11"	5'-3"	5'-5"	5'-7"	6'-7"	6000
	40					2'-4"	2'-9"	3'-3"	3'-8"	5'-1"	4000
		3'-1"	3'-6"	4'-0"	4'-5"	4'-11"	5'-3"	5'-5"	5'-7"	6'-7"	6000
	50					2'-4"	2'-9"	3'-3"	3'-8"	5'-1"	4000
		3'-1"	3'-6"	4'-0"	4'-5"	4'-11"	5'-3"	5'-5"	5'-7"	6'-7"	6000
12	30					2'-1"	2'-6"	2'-11"	3'-4"	4'-6"	4000
		2'-9"	3'-2"	3'-7"	4'-0"	4'-5"	4'-10"	5'-3"	5'-7"	6'-5"	6000
	40					2'-1"	2'-6"	2'-11"	3'-4"	4'-6"	4000
		2'-9"	3'-2"	3'-7"	4'-0"	4'-5"	4'-10"	5'-3"	5'-7"	6'-5"	6000
	50					2'-1"	2'-6"	2'-11"	3'-4"	4'-6"	4000
		2'-9"	3'-2"	3'-7"	4'-0"	4'-5"	4'-10"	5'-3"	5'-7"	6'-5"	6000
14	30					2'-3"	2'-7"	3'-0"	4'-1"	4000
		2'-6"	2'-10"	3'-3"	3'-7"	4'-0"	4'-4"	4'-9"	5'-1"	6'-3"	6000
	40					2'-3"	2'-7"	3'-0"	4'-1"	4000
		2'-6"	2'-10"	3'-3"	3'-7"	4'-0"	4'-4"	4'-9"	5'-1"	6'-3"	6000
	50					2'-3"	2'-7"	3'-0"	4'-1"	4000
		2'-6"	2'-10"	3'-3"	3'-7"	4'-0"	4'-4"	4'-9"	5'-1"	6'-3"	6000
16	30					2'-1"	2'-5"	2'-9"	3'-9"	4000
		2'-3"	2'-7"	2'-11"	3'-4"	3'-8"	4'-0"	4'-4"	4'-8"	5'-8"	6000
	40					2'-1"	2'-5"	2'-9"	3'-9"	4000
		2'-3"	2'-7"	2'-11"	3'-4"	3'-8"	4'-0"	4'-4"	4'-8"	5'-8"	6000
	50					2'-1"	2'-5"	2'-9"	3'-9"	4000
		2'-3"	2'-7"	2'-11"	3'-4"	3'-8"	4'-0"	4'-4"	4'-8"	5'-8"	6000

TABLE 1-3

(FOR USE ON **OVER 2'-6" TO 3'-0" OVERHANG (L)** & 54" HORIZONTAL LEG LENGTH OF THE OVERHANG BRACKET)

AVG. SLAB THICKNESS (T) (In)	BRACKET (K) DIMENSION (In)	SCREED LOAD PER BRACKET									45° HANGER SWL (lbs)
		2500 lbs.	2250 lbs.	2000 lbs.	1750 lbs.	1500 lbs.	1250 lbs.	1000 lbs.	750 lbs.	0 lbs.	
		BRACKET SPACING									
10	30					2'-1"	2'-6"	2'-11"	3'-4"	4'-6"	4000
						4'-5"	4'-10"	5'-3"	5'-7"	6'-7"	6000
	40					2'-1"	2'-6"	2'-11"	3'-4"	4'-6"	4000
		2'-9"	3'-2"	3'-7"	4'-0"	4'-5"	4'-10"	5'-3"	5'-7"	6'-7"	6000
	50					2'-1"	2'-6"	2'-11"	3'-4"	4'-6"	4000
		2'-9"	3'-2"	3'-7"	4'-0"	4'-5"	4'-10"	5'-3"	5'-7"	6'-7"	6000
12	30						2'-2"	2'-7"	2'-11"	4'-0"	4000
						3'-11"	4'-3"	4'-8"	5'-0"	6'-1"	6000
	40						2'-2"	2'-7"	2'-11"	4'-0"	4000
		2'-5"	2'-10"	3'-2"	3'-6"	3'-11"	4'-3"	4'-8"	5'-0"	6'-1"	6000
	50						2'-2"	2'-7"	2'-11"	4'-0"	4000
		2'-5"	2'-10"	3'-2"	3'-6"	3'-11"	4'-3"	4'-8"	5'-0"	6'-1"	6000
14	30						2'-0"	2'-4"	2'-8"	3'-8"	4000
					3'-2"	3'-6"	3'-10"	4'-2"	4'-6"	5'-6"	6000
	40						2'-0"	2'-4"	2'-8"	3'-8"	4000
		2'-2"	2'-6"	2'-10"	3'-2"	3'-6"	3'-10"	4'-2"	4'-6"	5'-6"	6000
	50						2'-0"	2'-4"	2'-8"	3'-8"	4000
		2'-2"	2'-6"	2'-10"	3'-2"	3'-6"	3'-10"	4'-2"	4'-6"	5'-6"	6000
16	30							2'-1"	2'-5"	3'-4"	4000
					2'-11"	3'-2"	3'-6"	3'-10"	4'-1"	5'-0"	6000
	40							2'-1"	2'-5"	3'-4"	4000
		2'-0"	2'-4"	2'-7"	2'-11"	3'-2"	3'-6"	3'-10"	4'-1"	5'-0"	6000
	50							2'-1"	2'-5"	3'-4"	4000
		2'-0"	2'-4"	2'-7"	2'-11"	3'-2"	3'-6"	3'-10"	4'-1"	5'-0"	6000

TABLE 1-4

(FOR USE ON **OVER 3'-0" TO 3'-6" OVERHANG (L)** & 54" HORIZONTAL LEG LENGTH OF THE OVERHANG BRACKET)

AVG. SLAB THICKNESS (T) (In)	BRACKET (K) DIMENSION (In)	SCREED LOAD PER BRACKET									45° HANGER SWL (lbs)
		2500 lbs.	2250 lbs.	2000 lbs.	1750 lbs.	1500 lbs.	1250 lbs.	1000 lbs.	750 lbs.	0 lbs.	
		BRACKET SPACING									
10	30						2'-1"	2'-5"	2'-9"	3'-10"	4000
						2'-3"	2'-11"	3'-7"	4'-3"	5'-9"	6000
	40						2'-1"	2'-5"	2'-9"	3'-10"	4000
				2'-4"	3'-0"	3'-7"	4'-1"	4'-5"	4'-9"	5'-9"	6000
	50						2'-1"	2'-5"	2'-9"	3'-10"	4000
		2'-4"	2'-8"	3'-0"	3'-4"	3'-8"	4'-1"	4'-5"	4'-9"	5'-9"	6000
12	30							2'-2"	2'-6"	3'-5"	4000
						2'-1"	2'-8"	3'-4"	3'-11"	5'-2"	6000
	40							2'-2"	2'-6"	3'-5"	4000
				2'-2"	2'-9"	3'-4"	3'-7"	3'-11"	4'-3"	5'-2"	6000
	50							2'-2"	2'-6"	3'-5"	4000
		2'-1"	2'-4"	2'-8"	3'-0"	3'-4"	3'-7"	3'-11"	4'-3"	5'-2"	6000
14	30								2'-3"	3'-1"	4000
						2'-0"	2'-6"	3'-1"	3'-8"	4'-8"	6000
	40								2'-3"	3'-1"	4000
				2'-0"	2'-7"	3'-0"	3'-3"	3'-6"	3'-10"	4'-8"	6000
	50								2'-3"	3'-1"	4000
			2'-2"	2'-5"	2'-8"	3'-0"	3'-3"	3'-6"	3'-10"	4'-8"	6000
16	30								2'-0"	2'-9"	4000
							2'-4"	2'-10"	3'-5"	4'-3"	6000
	40								2'-0"	2'-9"	4000
					2'-5"	2'-8"	2'-11"	3'-3"	3'-6"	4'-3"	6000
	50								2'-0"	2'-9"	4000
				2'-2"	2'-5"	2'-8"	2'-11"	3'-3"	3'-6"	4'-3"	6000

DEFINITIONS

SLPB = SCREED LOAD PER BRACKET (R x W)
R = SCREED LOAD FACTOR, OBTAINED FROM TABLE 2
W = WHEEL LOAD
S = BRACKET SPACING
T = AVERAGE SLAB THICKNESS
SWL = SAFE WORKING LOAD
K = DIMENSION DEFINED ON "BRIDGE OVERHANG BRACKET SUMMARY" ON SHEET 2
L = OVERHANG MEASURED FROM EDGE OF TOP FLANGE TO EDGE OF SUPERSTRUCTURE

PROJECT NO. R-2911B
ROWAN COUNTY
STATION: 137+95.00 -L-

SHEET 1 OF 3

STATE OF NORTH CAROLINA
DEPARTMENT OF TRANSPORTATION
RALEIGH

STANDARD OVERHANG FALSEWORK

AASHTO TYPES
III, IV, V, AND VI

LEFT LANE

NORTH CAROLINA PROFESSIONAL SEAL 18788 ENGINEER CHANG-CHUAN VICTOR CHAO

Chang-Chuan Victor Chao
4-22-2008

REVISIONS						SHEET NO.
NO.	BY:	DATE:	NO.	BY:	DATE:	S-37
1			3			TOTAL SHEETS
2			4			77

ASSEMBLED BY:	DATE:
CHECKED BY:	DATE:
DRAWN BY: R. WRIGHT 06/04	REV.
CHECKED BY: C. V. CHAO 06/04	

22-APR-2008 13:47
d:\wdlr\victor\overhangfalsework\tiebar&strut\r-2911b_type_III\r2911bleftoverhangsheets.dgn
vchao

STR. #1 OF1

BRIDGE OVERHANG BRACKET SUMMARY

TOTAL SCREED WEIGHT = _____ LBS.
NUMBER OF SCREED WHEELS = _____
SCREED WHEEL LOAD (W) = _____ LBS.
SCREED LOAD PER BRACKET = _____ LBS.

PROJECT No. : _____
COUNTY : _____
STATION : _____
DESCRIPTION : _____

DATE : _____
DESIGN BY : _____
CHECK BY : _____

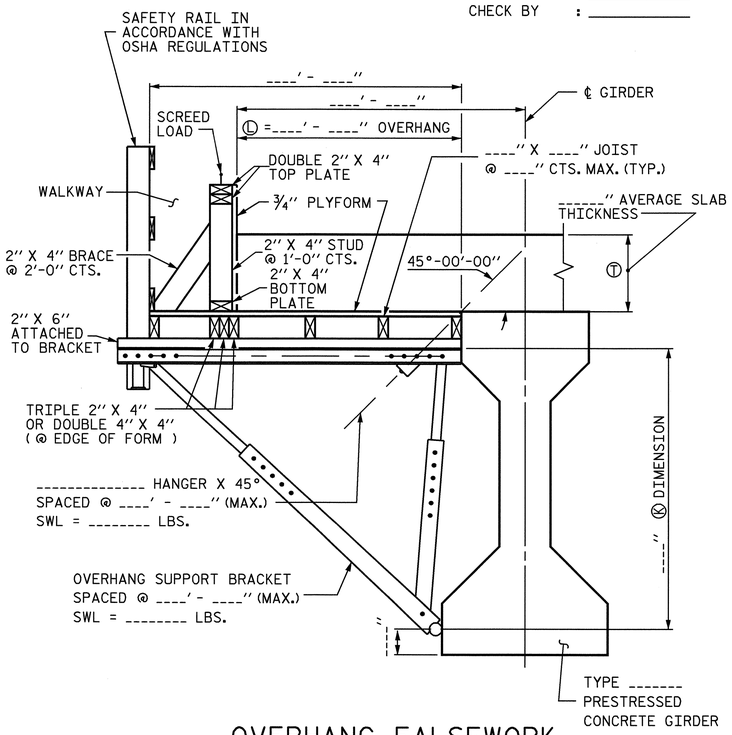

OVERHANG FALSEWORK

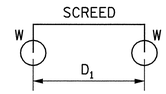

4-WHEEL MACHINE

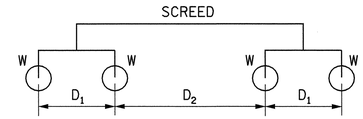

8-WHEEL MACHINE

4 WHEEL MACHINE	
S/D1	R
<= 1.0	1.00
1.1	1.09
1.2	1.17
1.3	1.23
1.4	1.29
1.5	1.33
1.6	1.38
1.7	1.41
1.8	1.44
1.9	1.47
2.0	1.50
2.2	1.55
2.4	1.58
2.6	1.62
2.8	1.64
3.0	1.67
3.5	1.71
4.0	1.75

TABLE 2: SCREED LOAD FACTOR "R"

		THE SCREED LOAD FACTOR R (FOR 8 WHEEL MACHINE)																	
		S/D_2																	
		<= 1.0	1.1	1.2	1.3	1.4	1.5	1.6	1.7	1.8	1.9	2.0	2.2	2.4	2.6	2.8	3.0	3.5	4.0
S/D_1	<= 1.0	1.00	1.09	1.17	1.23	1.29	1.33	1.38	1.41	1.44	1.47	1.50	1.55	1.58	1.62	1.64	1.67	1.71	1.75
	1.1	1.09	1.18	1.26	1.32	1.38	1.42	1.47	1.50	1.54	1.56	1.59	1.64	1.67	1.71	1.73	1.76	1.81	1.84
	1.2	1.17	1.26	1.33	1.40	1.45	1.50	1.54	1.58	1.61	1.64	1.67	1.71	1.75	1.78	1.81	1.83	1.88	1.92
	1.3	1.23	1.32	1.40	1.46	1.52	1.56	1.61	1.64	1.68	1.70	1.73	1.78	1.81	1.85	1.87	1.90	1.95	1.98
	1.4	1.29	1.38	1.45	1.52	1.57	1.62	1.66	1.70	1.73	1.76	1.79	1.83	1.87	1.90	1.93	1.95	2.00	2.07
	1.5	1.33	1.42	1.50	1.56	1.62	1.67	1.71	1.75	1.78	1.81	1.83	1.88	1.92	1.95	1.98	2.00	2.10	2.17
	1.6	1.38	1.47	1.54	1.61	1.66	1.71	1.75	1.79	1.82	1.85	1.88	1.92	1.96	1.99	2.04	2.08	2.18	2.25
	1.7	1.41	1.50	1.58	1.64	1.70	1.75	1.79	1.82	1.86	1.89	1.91	1.96	2.00	2.05	2.11	2.16	2.25	2.32
	1.8	1.44	1.54	1.61	1.68	1.73	1.78	1.82	1.86	1.89	1.92	1.94	1.99	2.06	2.12	2.17	2.22	2.32	2.39
	1.9	1.47	1.56	1.64	1.70	1.76	1.81	1.85	1.89	1.92	1.95	1.97	2.04	2.11	2.18	2.23	2.28	2.38	2.45
	2.0	1.50	1.59	1.67	1.73	1.79	1.83	1.88	1.91	1.94	1.97	2.00	2.09	2.17	2.23	2.29	2.33	2.43	2.50
	2.2	1.55	1.64	1.71	1.78	1.83	1.88	1.92	1.96	1.99	2.04	2.09	2.18	2.26	2.32	2.38	2.42	2.52	2.59
	2.4	1.58	1.67	1.75	1.81	1.87	1.92	1.96	2.00	2.06	2.11	2.17	2.26	2.33	2.40	2.45	2.50	2.60	2.67
	2.6	1.62	1.71	1.78	1.85	1.90	1.95	1.99	2.05	2.12	2.18	2.23	2.32	2.40	2.46	2.52	2.56	2.66	2.73
	2.8	1.64	1.73	1.81	1.87	1.93	1.98	2.04	2.11	2.17	2.23	2.29	2.38	2.45	2.52	2.57	2.62	2.71	2.79
	3.0	1.67	1.76	1.83	1.90	1.95	2.00	2.08	2.16	2.22	2.28	2.33	2.42	2.50	2.56	2.62	2.67	2.76	2.83
	3.5	1.71	1.81	1.88	1.95	2.00	2.10	2.18	2.25	2.32	2.38	2.43	2.52	2.60	2.66	2.71	2.76	2.86	2.93
	4.0	1.75	1.84	1.92	1.98	2.07	2.17	2.25	2.32	2.39	2.45	2.50	2.59	2.67	2.73	2.79	2.83	2.93	3.00

TABLE 3: ALLOWABLE SPAN LENGTH OF JOISTS AND JOIST SPACINGS

AVG. SLAB THICKNESS Ⓣ (IN)	LUMBER JOIST SIZE (IN X IN)	JOIST SPACINGS			
		15 IN	12 IN	10 IN	8 IN
		THE ALLOWABLE SPAN LENGTH OF JOISTS			
10	2 X 4	———	4' - 6"	4' - 9"	5' - 0"
	4 X 4	5' - 9"	6' - 3"	6' - 6"	6' - 7"
12	2 X 4	———	4' - 3"	4' - 9"	5' - 0"
	4 X 4	5' - 3"	6' - 0"	6' - 3"	6' - 5"
14	2 X 4	———	4' - 0"	4' - 6"	5' - 0"
	4 X 4	———	5' - 6"	6' - 0"	6' - 4"
16	2 X 4	———	4' - 0"	4' - 3"	4' - 9"
	4 X 4	———	5' - 3"	5' - 9"	6' - 3"

NOTES

DESIGN INCLUDES CONSTRUCTION LIVE LOAD 20 PSF ON THE AREA SUPPORTED AND 75 PLF AT THE OUTSIDE DECK OF OVERHANGS.

REQUIRED MINIMUM DIAGONAL LEG CAPACITY: 3600 LB WORKING LOAD

THE CONTRACTOR HAS THE OPTION OF SUBMITTING HIS OWN DESIGN FOR OVERHANG FALSEWORK IN ACCORDANCE WITH THE SPECIAL PROVISIONS.

SUBMITTALS UTILIZING THE INSTRUCTIONS AND PROCEDURES DESCRIBED ON SHEET 1 OF 3 SHALL BE IN ACCORDANCE WITH THE APPLICABLE SECTIONS OF THE SPECIFICATIONS AND SPECIAL PROVISIONS, EXCEPT THAT CALCULATIONS FOR OVERHANG FALSEWORK NEED NOT BE SEALED BY A REGISTERED ENGINEER.

FOR OVERHANG FALSEWORK BRACING DESIGN, SEE SHEET 3 OF 3.

PROJECT NO. R-2911B
ROWAN COUNTY
STATION: 137+95.00 -L-

SHEET 2 OF 3

STATE OF NORTH CAROLINA
DEPARTMENT OF TRANSPORTATION
RALEIGH

STANDARD OVERHANG FALSEWORK

AASHTO TYPES
III, IV, V, AND VI

LEFT LANE

NORTH CAROLINA PROFESSIONAL SEAL 18788 ENGINEER CHANG-CHUAN VICTOR CHAO

Chang-Chuan Victor Chao
4-22-2008

REVISIONS						SHEET NO.
NO.	BY:	DATE:	NO.	BY:	DATE:	S-38
1			3			TOTAL SHEETS
2			4			77

ASSEMBLED BY:	DATE:
CHECKED BY:	DATE:
DRAWN BY: R. WRIGHT 06/04	REV.
CHECKED BY: C. V. CHAO 06/04	

22-APR-2008 13:48
d:\wdir\victor\overhangfalsework\tiebar&strut\r-2911b_type_iii\r2911bleftoverhangsheets.dgn
vchao

STR. #1

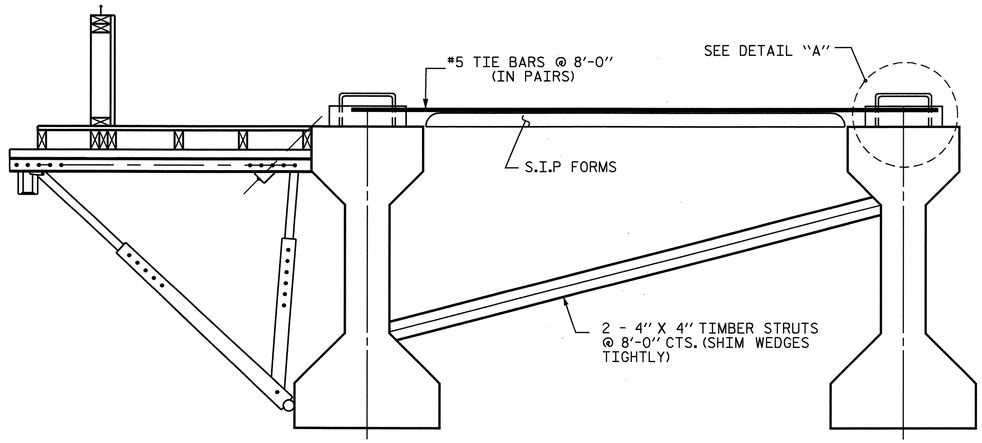

EXTERIOR GIRDER

INTERIOR GIRDER

DETAIL OF REQUIRED OVERHANG FALSEWORK BRACING SYSTEM

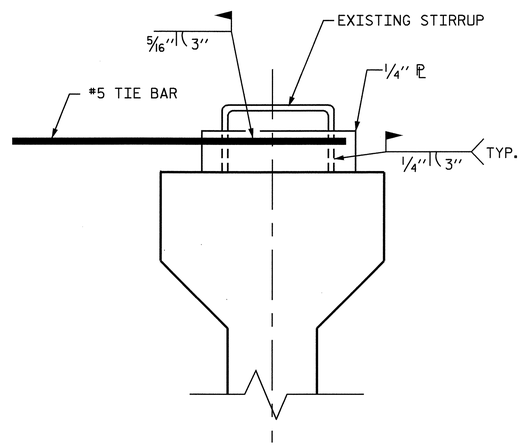

DETAIL "A"

NOTES:

EACH #5 TIE BAR SHALL BE WELDED TO ONE STIRRUP LOOP AS SHOWN IN DETAIL "A". #5 TIE BARS SHALL BE WELDED TO TWO ADJACENT STIRRUPS OF THE EXTERIOR GIRDER AND THE ADJACENT INTERIOR GIRDER BETWEEN PERMANENT DIAPHRAGMS. WELD STEEL PLATES IN BETWEEN THE TIE BARS AND THE STIRRUP LOOP. WELDING TWO TIE BARS TO THE SAME STIRRUP LOOP SHALL NOT BE PERMITTED.

MAXIMUM SPACING BETWEEN THE BRACING (TIE BARS-TIMBER STRUT) IS 8'-0" CTS. #5 TIE BARS SHALL BE LOCATED OVER A TIMBER STRUT.

INSTALL TIE BARS AND TIMBER STRUTS PRIOR TO PLACEMENT OF CONCRETE OR SCREED WEIGHT ONTO THE OVERHANG FALSEWORK.

PROJECT NO. R-2911B

ROWAN COUNTY

STATION: 137+95.00 -L-

SHEET 3 OF 3

STATE OF NORTH CAROLINA
DEPARTMENT OF TRANSPORTATION
RALEIGH

STANDARD OVERHANG FALSEWORK

AASHTO TYPES
III, IV, V, AND VI

LEFT LANE

NORTH CAROLINA PROFESSIONAL SEAL 18788 ENGINEER CHARNG-CHUAN VICTOR CHAO

Charng-Chuan Victor Chao
4-22-2008

REVISIONS						SHEET NO.
NO.	BY:	DATE:	NO.	BY:	DATE:	S-39
1			3			TOTAL SHEETS
2			4			77

DRAWN BY: R. WRIGHT 06/04 DATE :
CHECKED BY: C. V. CHAO 06/04 DATE :

22-APR-2008 13:48
d:\wdlr\victor\overhangfalsework\tiebar&strut\r-2911b_type_III\r2911bleftoverhangsheets.dgn
vchao

STR. #1

F.A. PROJECT NO.: STP-0070(81)

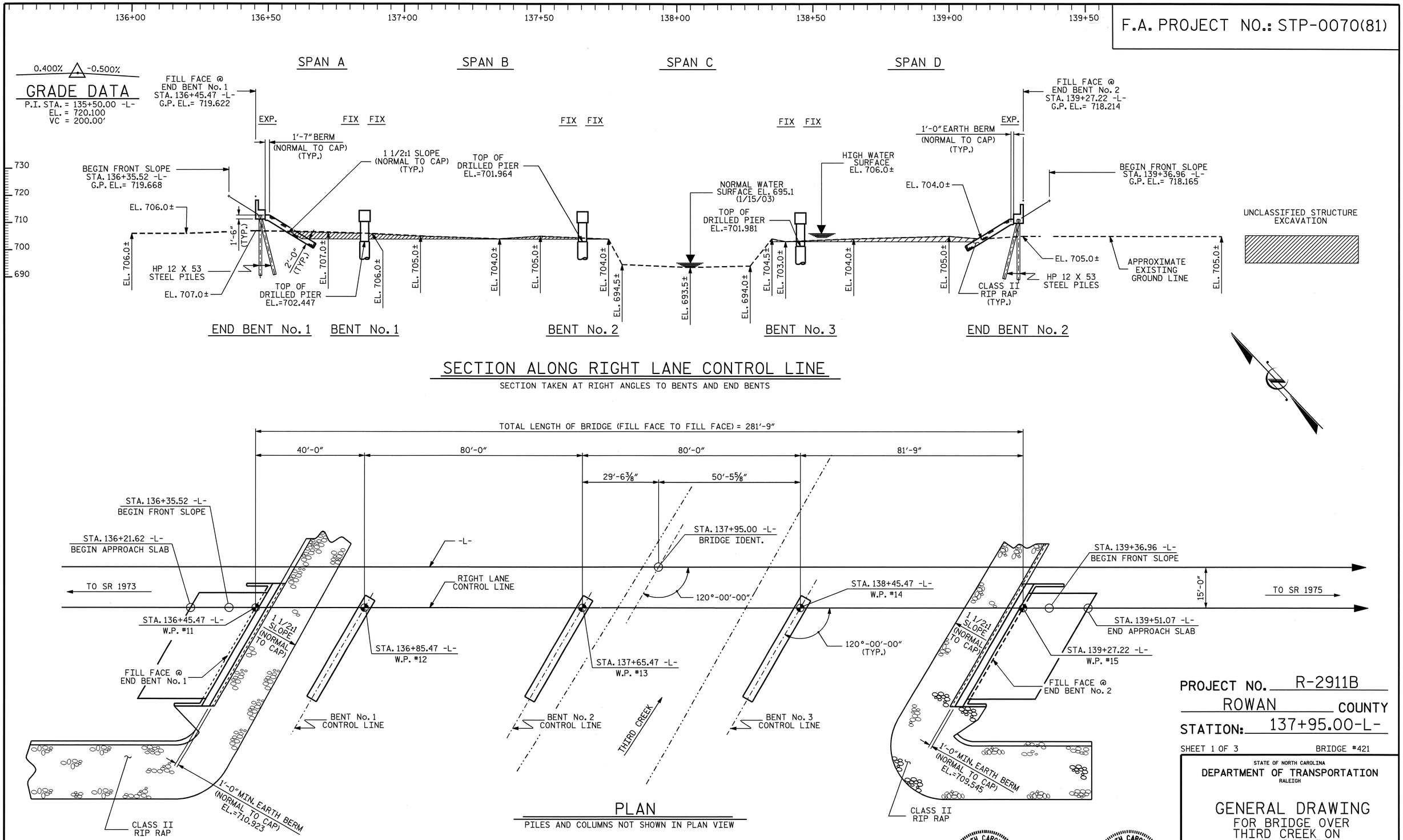

PROJECT NO. R-2911B

ROWAN COUNTY

STATION: 137+95.00-L-

SHEET 1 OF 3 BRIDGE #421

STATE OF NORTH CAROLINA
DEPARTMENT OF TRANSPORTATION
RALEIGH

GENERAL DRAWING
FOR BRIDGE OVER
THIRD CREEK ON
US 70 BETWEEN
SR 1973 AND SR 1975
RIGHT LANE

NORTH CAROLINA PROFESSIONAL SEAL 13014 ENGINEER QUANG H. NGUYEN
7-21-08

NORTH CAROLINA PROFESSIONAL SEAL 20125 ENGINEER MARSHALL G. CHEEK, JR.
7-21-08

REVISIONS							SHEET NO.
NO.	BY:	DATE:	NO.	BY:	DATE:		S-40
1			3				TOTAL SHEETS
2			4				77

STR. #2

DRAWN BY : A.L. FIGUEROA DATE : 3-20-08
CHECKED BY : M.G. CHEEK DATE : 5-01-08

21-JUL-2008 10:17
r:\structures\finalplans\Str #2\R-2911B_sd_str#2-01_GD.dgn
dahodge

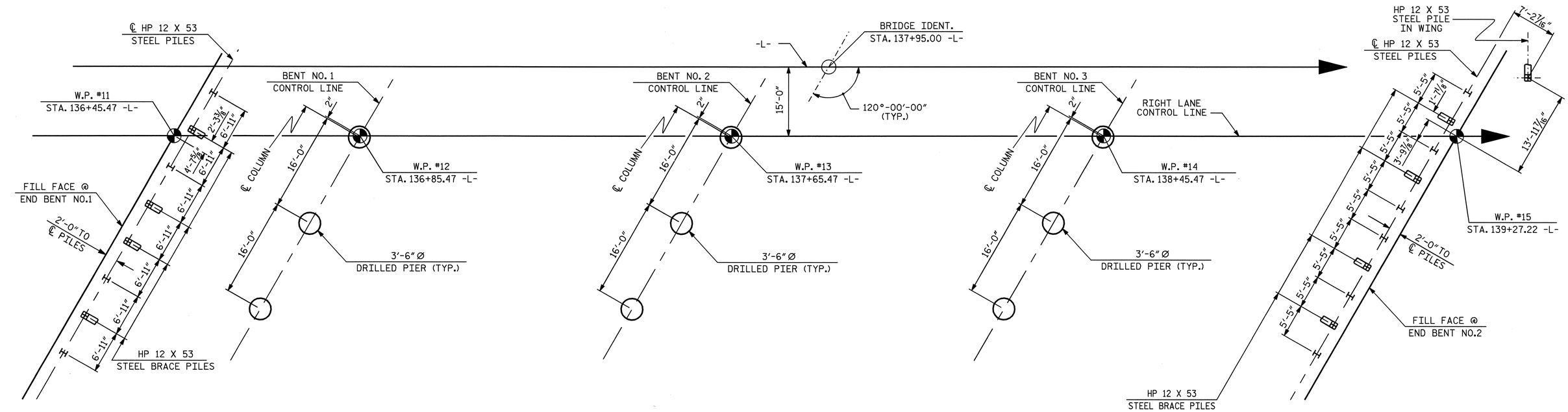

FOUNDATION LAYOUT

ALL END BENT PILES ARE HP 12 X 53
DIMENSIONS LOCATING PILES ARE SHOWN TO THE
PILE CENTERLINE AT THE BOTTOM OF THE CAP.
END BENT BRACE PILES ARE BATTERED 3:12.

NOTES

DRIVE PILES AT END BENT NO.1 TO A REQUIRED BEARING CAPACITY OF 120 TONS PER PILE. THE REQUIRED BEARING CAPACITY IS EQUAL TO THE ALLOWABLE BEARING CAPACITY WITH A MINIMUM FACTOR OF SAFETY OF TWO.

THE ALLOWABLE BEARING CAPACITY FOR PILES AT END BENT NO.1 IS 60 TONS PER PILE.

DRILLED PIERS AT BENT NO. 1 ARE DESIGNED FOR BOTH SKIN FRICTION AND END BEARING. CHECK FIELD CONDITIONS FOR THE REQUIRED END BEARING CAPACITY OF 80 TONS PER SQ. FOOT.

DRILLED PIERS AT BENT NO.1 ARE DESIGNED FOR AN APPLIED LOAD OF 241 TONS EACH AT THE TOP OF THE COLUMN.

DRILLED PIERS AT BENT NO.1 SHALL EXTEND TO AN ELEVATION NO HIGHER THAN 676.0 AND SATISFY THE REQUIRED END BEARING CAPACITY.

THE SCOUR CRITICAL ELEVATION FOR BENT NO.1 IS ELEVATION 679.0 SCOUR CRITICAL ELEVATIONS ARE USED TO MONITOR POSSIBLE SCOUR PROBLEMS DURING THE LIFE OF THE STRUCTURE.

THE DRILLED PIERS AT BENT NO.2 ARE DESIGNED FOR BOTH SKIN FRICTION AND END BEARING. CHECK FIELD CONDITIONS FOR THE REQUIRED END BEARING CAPACITY OF 95 TONS PER SQ. FT. (LT), 85 TONS PER SQ. FT. (CTR), AND 75 TONS PER SQ. FT. (RT).

DRILLED PIERS AT BENT NO.2 ARE DESIGNED FOR AN APPLIED LOAD OF 275 TONS EACH AT THE TOP OF THE COLUMN.

PERMANENT STEEL CASING MAY BE REQUIRED FOR DRILLED PIERS AT BENT NO.2. IF REQUIRED, DO NOT EXTEND CASING BELOW ELEVATION 682.0 WITHOUT PRIOR APPROVAL FROM THE ENGINEER. THE ENGINEER WILL DETERMINE THE NEED FOR PERMANENT STEEL CASING.

DRILLED PIERS AT BENT NO.2 SHALL EXTEND TO AN ELEVATION NO HIGHER THAN 676.0 (LT), 674.0 (CTR), AND 672.0 (RT) AND SATISFY THE REQUIRED END BEARING CAPACITY.

THE SCOUR CRITICAL ELEVATIONS FOR BENT NO.2 ARE ELEVATION 679.0 (LT), 677.3 (CTR), AND 675.5 (RT). SCOUR CRITICAL ELEVATIONS ARE USED TO MONITOR POSSIBLE SCOUR PROBLEMS DURING THE LIFE OF THE STRUCTURE.

THE DRILLED PIERS AT BENT NO.3 ARE DESIGNED FOR BOTH SKIN FRICTION AND END BEARING. CHECK FIELD CONDITIONS FOR THE REQUIRED END BEARING CAPACITY OF 95 TONS PER SQ. FT. (LT), 88 TONS PER SQ. FT. (CTR), AND 80 TONS PER SQ. FT. (RT).

DRILLED PIERS AT BENT NO.3 ARE DESIGNED FOR AN APPLIED LOAD OF 285 TONS EACH AT THE TOP OF THE COLUMN.

PERMANENT STEEL CASING MAY BE REQUIRED FOR DRILLED PIERS AT BENT NO.3. IF REQUIRED, DO NOT EXTEND CASING BELOW ELEVATION 682.0 WITHOUT PRIOR APPROVAL FROM THE ENGINEER. THE ENGINEER WILL DETERMINE THE NEED FOR PERMANENT STEEL CASING.

DRILLED PIERS AT BENT NO.3 SHALL EXTEND TO AN ELEVATION NO HIGHER THAN 675.0 AND SATISFY THE REQUIRED END BEARING CAPACITY.

THE SCOUR CRITICAL ELEVATION FOR BENT NO.3 ARE ELEVATION 677.5 (LT), 678.0 (CTR), AND 678.5 (RT). SCOUR CRITICAL ELEVATIONS ARE USED TO MONITOR POSSIBLE SCOUR PROBLEMS DURING THE LIFE OF THE STRUCTURE.

SPT TESTING MAY BE REQUIRED FOR DRILLED PIERS. THE ENGINEER WILL DETERMINED THE NEED FOR SPT TESTING.

SID INSPECTIONS MAY BE REQUIRED FOR DRILLED PIERS. THE ENGINEER WILL DETERMINE THE NEED FOR SID INSPECTIONS.

CSL TUBES ARE REQUIRED AND CSL TESTING MAY BE REQUIRED FOR THE DRILLED PIERS. THE ENGINEER WILL DETERMINE THE NEED FOR CSL TESTING. SEE CROSSHOLE SONIC LOGGING SPECIAL PROVISION.

FOR DRILLED PIERS, SEE DRILLED PIERS SPECIAL PROVISIONS.

DRIVE PILES AT END BENT NO.2 TO A REQUIRED BEARING CAPACITY OF 120 TONS PER PILE. THE REQUIRED BEARING CAPACITY IS EQUAL TO THE ALLOWABLE BEARING CAPACITY WITH A MINIMUM FACTOR OF SAFETY OF TWO.

THE ALLOWABLE BEARING CAPACITY FOR PILES AT END BENT NO.2 IS 60 TONS PER PILE.

PROJECT NO. R-2911B
ROWAN COUNTY
STATION: 137+95.00 -L-

SHEET 2 OF 3

STATE OF NORTH CAROLINA
DEPARTMENT OF TRANSPORTATION
RALEIGH

GENERAL DRAWING
FOR BRIDGE ON US 70
OVER THIRD CREEK BETWEEN
SR 1973 AND SR 1975
RIGHT LANE

NORTH CAROLINA PROFESSIONAL SEAL 20125 ENGINEER MARSHALL G. CHEEK, JR.
7-21-08

REVISIONS						SHEET NO.
NO.	BY:	DATE:	NO.	BY:	DATE:	S-41
1			3			TOTAL SHEETS
2			4			77

STR. #2

DRAWN BY : A.L. FIGUEROA DATE : 5-21-08
CHECKED BY : M.G. CHEEK DATE : 6-16-08

21-JUL-2008 10:18
r:\structures\finalplans\Str #2\R-2911B_sd_str#2-02_FL.dgn
dahodge

BENCHMARK No. 5: RAILROAD SPIKE IN THE NORTHERN ROOT OF A 54" SWEETGUM, STA. 114+32.00 -L-, RIGHT 263.78', EL. 778.176.

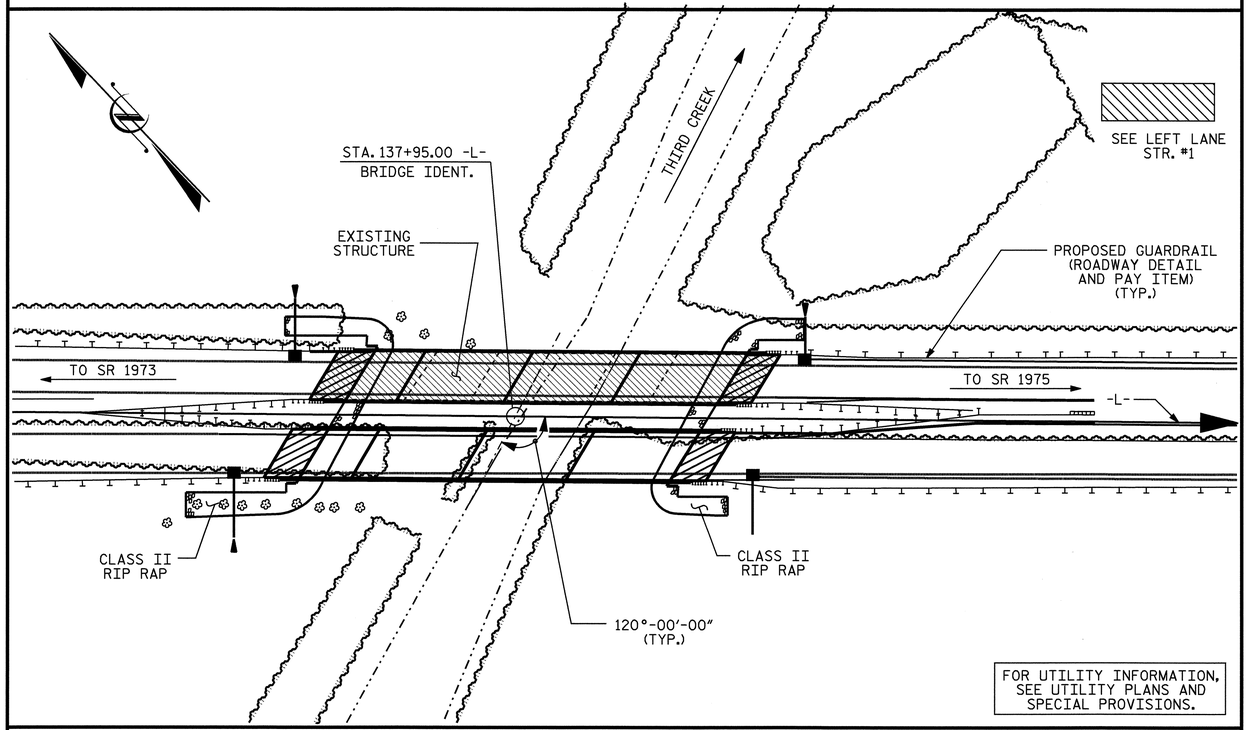

LOCATION SKETCH

NOTES

ASSUMED LIVE LOAD = HS 20 OR ALTERNATE LOADING, EXCEPT THAT THE GIRDERS HAVE BEEN DESIGNED FOR HS 25.

FOR OTHER DESIGN DATA AND GENERAL NOTES, SEE SHEET SN.

FOR EROSION CONTROL MEASURES, SEE EROSION CONTROL PLANS.

THIS BRIDGE HAS BEEN DESIGNED BY THE STRENGTH DESIGN METHOD AS SPECIFIED IN AASHTO STANDARD SPECIFICATIONS.

PRESTRESSED CONCRETE DECK PANELS MAY BE USED IN LIEU OF METAL STAY-IN-PLACE FORMS IN ACCORDANCE WITH ARTICLE 420-3 OF THE STANDARD SPECIFICATIONS.

REMOVABLE FORMS MAY BE USED IN LIEU OF METAL STAY-IN-PLACE FORMS IN ACCORDANCE WITH ARTICLE 420-3 OF THE STANDARD SPECIFICATIONS.

THE LOCATION OF THE CONSTRUCTION JOINT IN THE DRILLED PIERS IS BASED ON AN APPROXIMATE GROUND LINE ELEVATION. IF THE CONSTRUCTION JOINT IS ABOVE THE ACTUAL GROUND ELEVATION, THE CONTRACTOR SHALL PLACE THE CONSTRUCTION JOINT 1 FT. BELOW THE GROUND LINE.

THE MATERIAL SHOWN IN THE CROSS-HATCHED AREA (SEE SHEET 1 OF 3) SHALL BE EXCAVATED FOR A DISTANCE OF 50 FEET TO THE RIGHT OF THE CENTERLINE SURVEY. THIS WORK WILL BE MEASURED AND PAID FOR AT THE CONTRACT UNIT PRICE PER CUBIC YARD FOR UNCLASSIFIED STRUCTURE EXCAVATION.

THE CLASS AA CONCRETE IN THE BRIDGE DECK SHALL CONTAIN FLY ASH OR GROUND GRANULATED BLAST FURNACE SLAG AT THE SUBSTITUTION RATE SPECIFIED IN ARTICLE 1024-1 AND IN ACCORDANCE WITH ARTICLES 1024-5 AND 1024-6 OF THE STANDARD SPECIFICATIONS. NO PAYMENT WILL BE MADE FOR THIS SUBSTITUTION AT IT IS CONSIDERED INCIDENTAL TO THE COST OF THE REINFORCED CONCRETE DECK SLAB.

THIS STRUCTURE HAS BEEN DESIGNED IN ACCORDANCE WITH HEC 18, "EVALUATING SCOUR AT BRIDGES", MAY, 2001.

THIS BRIDGE HAS BEEN DESIGNED IN ACCORDANCE WITH THE REQUIREMENTS OF THE AASHTO STANDARD SPECIFICATIONS FOR SEISMIC DESIGN OF HIGHWAY BRIDGES FOR SEISMIC PERFORMANCE CATEGORY A.

TEMPORARY SHORING WILL BE REQUIRED IN THE AREA INDICATED IN THE PLAN VIEW, SHEET 1 OF 3.

FOR LIMITS OF TEMPORARY SHORING FOR MAINTENANCE OF TRAFFIC, SEE TRAFFIC CONTROL PLANS. FOR PAY ITEM FOR TEMPORARY SHORING FOR MAINTENANCE OF TRAFFIC, SEE ROADWAY PLANS.

STEEL SHEET PILING REQUIRED FOR SHORING SHALL BE HOT ROLLED.

THE CONTRACTOR SHALL PROVIDE INDEPENDENT ASSURANCE SAMPLES OF REINFORCING STEEL AS FOLLOWS FOR PROJECTS REQUIRING UP TO 400 TONS OF REINFORCING STEEL, ONE 30 INCH SAMPLE OF EACH SIZE BAR USED, AND FOR PROJECTS REQUIRING OVER 400 TONS OF REINFORCING STEEL, TWO 30 INCH SAMPLES OF EACH SIZE BAR USED. THE BARS FROM WHICH THE SAMPLES ARE TAKEN MUST THEN BE SPLICED WITH REPLACEMENT BARS OF THE SIZE AND LENGTH OF THE SAMPLE, PLUS A MINIMUM LAP SPLICE OF THIRTY BAR DIAMETERS.

FOR SUBMITTAL OF WORKING DRAWINGS, SEE SPECIAL PROVISIONS.

FOR FALSEWORK AND FORMWORK, SEE SPECIAL PROVISIONS.

FOR PRESTRESSED CONCRETE MEMBERS, SEE SPECIAL PROVISIONS.

NEEDLE BEAMS WILL NOT BE ALLOWED UNLESS OTHERWISE CALLED FOR ON THE PLANS OR APPROVED BY THE ENGINEER.

FOR GROUT FOR STRUCTURES, SEE SPECIAL PROVISIONS.

FOR CRANE SAFETY, SEE SPECIAL PROVISIONS.

HYDRAULIC DATA

DESIGN DISCHARGE	=	10,100 C.F.S.
FREQUENCY OF DESIGN FLOOD	=	50 YRS.
DESIGN HIGH WATER ELEVATION	=	713.2 FT.
DRAINAGE AREA	=	85.2 SQ. MI.
BASIC DISCHARGE (Q100)	=	12,000 C.F.S.
BASIC HIGH WATER ELEVATION	=	714.7 FT.

OVERTOPPING FLOOD DATA

OVERTOPPING DISCHARGE	=	15,100 C.F.S.
FREQUENCY OF OVERTOPPING FLOOD	=	100 YRS.
OVERTOPPING FLOOD ELEVATION	=	717.8 FT.

TOTAL BILL OF MATERIAL

	3'-6" Ø DRILLED PIERS IN SOIL	3'-6" Ø DRILLED PIERS NOT IN SOIL	PERMANENT STEEL CASING FOR 3'-6" Ø DRILLED PIERS	SID INSPECTION	SPT TESTING	CROSSHOLE SONIC LOGGING	UNCLASSIFIED STRUCTURE EXCAVATION	REINFORCED CONCRETE DECK SLAB	GROOVING BRIDGE FLOORS	CLASS A CONCRETE	BRIDGE APPROACH SLABS	REINFORCING STEEL	SPIRAL COLUMN REINFORCING STEEL	45" PRESTRESSED CONCRETE GIRDERS		HP 12 X 53 STEEL PILES		CONCRETE BARRIER RAIL	RIP RAP CLASS II (2'-0" THICK)	FILTER FABRIC FOR DRAINAGE	ELASTOMERIC BEARINGS	EVAZOTE JOINT SEALS
	LIN. FT.	LIN. FT.	LIN. FT.	EACH	EACH	EACH	LUMP SUM	SQ. FT.	SQ. FT.	CU. YDS.	LUMP SUM	LBS.	LBS.	NO.	LIN. FT.	NO.	LIN. FT.	LIN. FT.	TONS	SQ. YDS.	LUMP SUM	LUMP SUM
SUPERSTRUCTURE							LUMP SUM	10963	10767		LUMP SUM			20	1374.58			558.66			LUMP SUM	LUMP SUM
END BENT NO. 1										32.5		4686				8	240		540	598		
BENT NO. 1	69.50	10.00				1				29.5		10134	2209									
BENT NO. 2	72.00	12.00	59.89			1				29.6		10379	2305									
BENT NO. 3	67.00	14.00	59.94			1				29.3		10159	2221									
END BENT NO. 2										32.7		4716				11	330		280	313		
TOTAL	208.50	36.00	119.83	3	3	3	LUMP SUM	10963	10767	153.6	LUMP SUM	40074	6735	20	1374.58	19	570	558.66	820	911	LUMP SUM	LUMP SUM

PROJECT NO. R-2911B
ROWAN COUNTY
STATION: 137+95.00-L-

SHEET 3 OF 3

STATE OF NORTH CAROLINA
DEPARTMENT OF TRANSPORTATION
RALEIGH

GENERAL DRAWING
FOR BRIDGE OVER
THIRD CREEK ON
US 70 BETWEEN
SR 1973 AND SR 1975
RIGHT LANE

NORTH CAROLINA PROFESSIONAL SEAL 20125 ENGINEER MARSHALL G. CHEEK, JR.
7-21-08

REVISIONS						SHEET NO.
NO.	BY:	DATE:	NO.	BY:	DATE:	S-42
1			3			TOTAL SHEETS
2			4			77

STR. #2

DRAWN BY : A.L. FIGUEROA DATE : 3-20-08
CHECKED BY : M.G. CHEEK DATE : 06-08

21-JUL-2008 10:18
r:\structures\finalplans\Str #2\R-2911B_sd_str#2-01_GD.dgn
dahodge

NOTES

PROVIDE 1¼" HIGH BEAM BOLSTERS UPPER AT 4'-0" CTS. ATOP THE METAL STAY-IN-PLACE FORMS TO SUPPORT THE BOTTOM MAT OF 'A' BARS. WHEN USING REMOVABLE FORMS, PROVIDE CONTINUOUS HIGH CHAIRS FOR METAL DECK (C.H.C.M.) @ 4'-0" CTS. WITH A HEIGHT TO SUPPORT THE BOTTOM MAT OF 'A' BARS A CLEAR DISTANCE OF 2½" ABOVE THE TOP OF THE REMOVABLE FORM.

LONGITUDINAL STEEL MAY BE SHIFTED SLIGHTLY, AS NECESSARY, TO AVOID INTERFERENCE WITH STIRRUPS IN PRESTRESSED CONCRETE GIRDERS.

PREVIOUSLY CAST CONCRETE IN A CONTINUOUS UNIT SHALL HAVE ATTAINED A MINIMUM COMPRESSIVE STRENGTH OF 3,000 PSI BEFORE ADDITIONAL CONCRETE IS CAST IN THE UNIT.

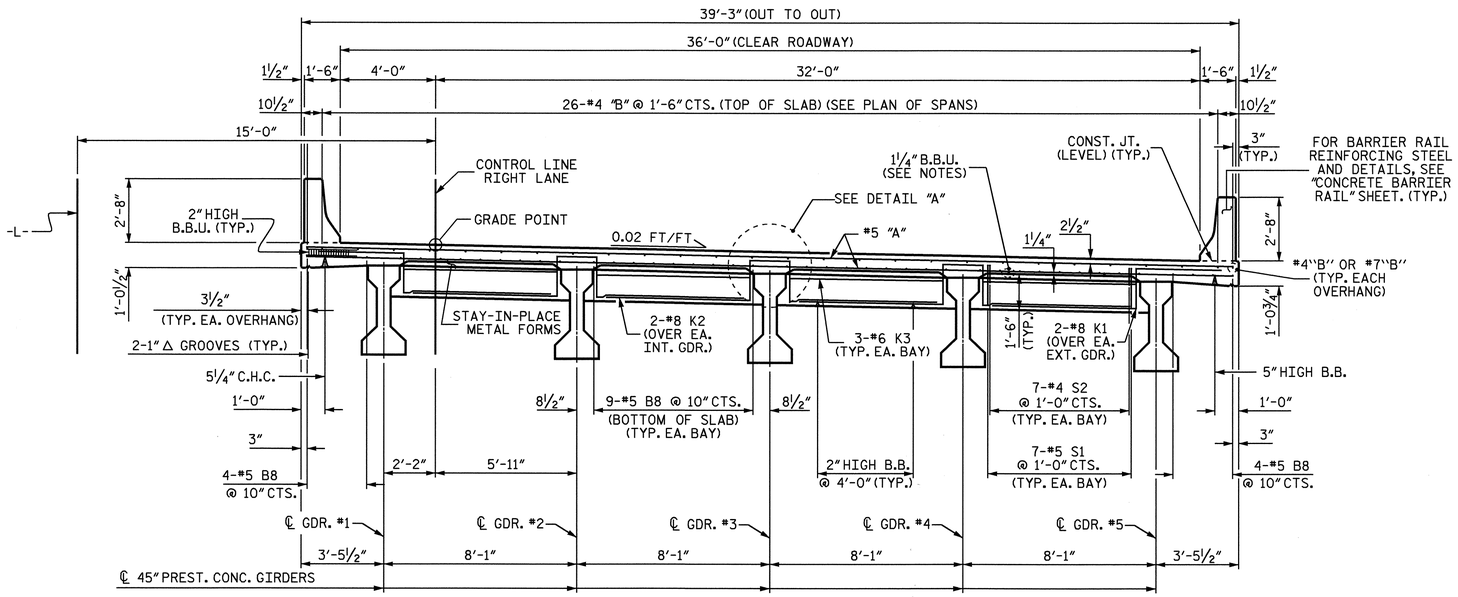

TYPICAL SECTION

(SHOWING END BENT DIAPHRAGMS)

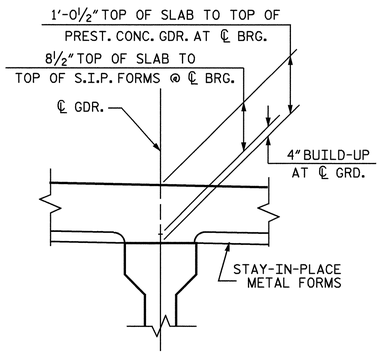

DETAIL "A"

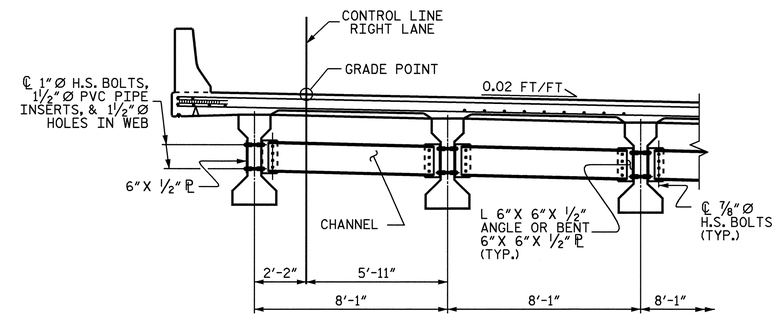

HALF SECTION

(SHOWING INTERMEDIATE DIAPHRAGM)

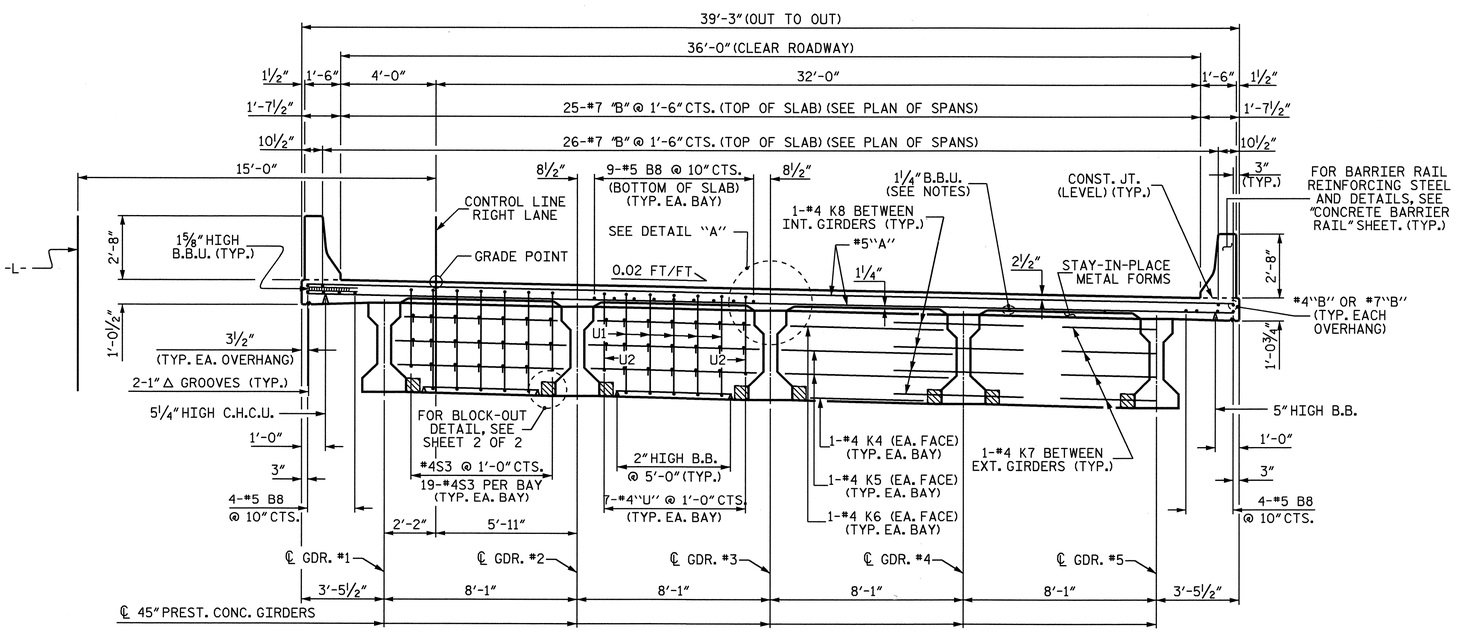

TYPICAL SECTION

(SHOWING BENT DIAPHRAGMS)

PROJECT NO. R-2911B

ROWAN COUNTY

STATION: 137+95.00 -L-

SHEET 1 OF 2

STATE OF NORTH CAROLINA
DEPARTMENT OF TRANSPORTATION
RALEIGH

SUPERSTRUCTURE

TYPICAL SECTIONS
RIGHT LANE

NORTH CAROLINA PROFESSIONAL SEAL 20125 ENGINEER MARSHALL A. CHEEK, JR.
7-21-08

REVISIONS						SHEET NO.
NO.	BY:	DATE:	NO.	BY:	DATE:	S-43
1			3			TOTAL SHEETS
2			4			77

STR. #2 NCDDS

DRAWN BY : L.L. MURPHY DATE : 04-08
CHECKED BY : M.G. CHEEK DATE : 05-08

18-JUN-2008 11:35
r:\structures\r2911b\lmurphy\microstation\Str*2\R2911B_sd_TS_str*2.dgn
lmurphy

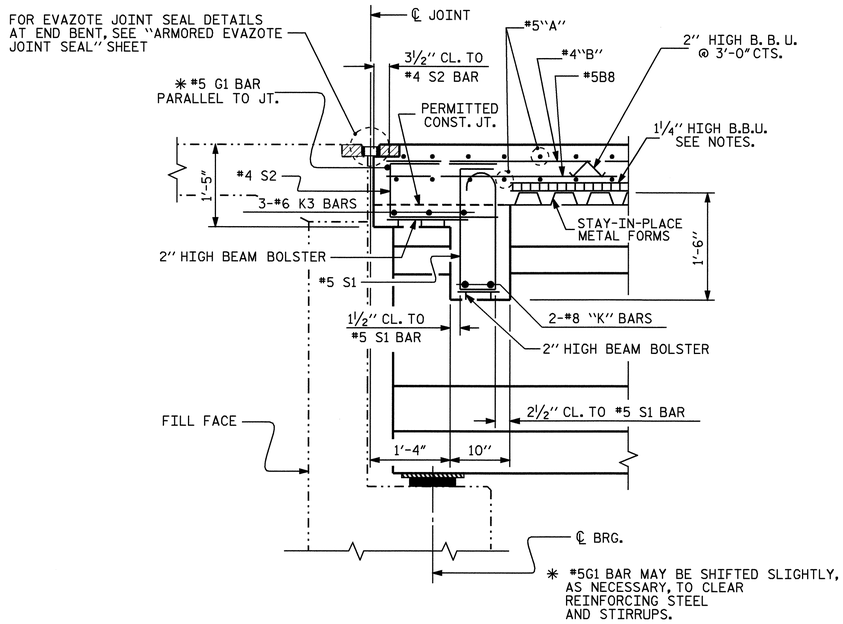

SECTION THRU END BENT DIAPHRAGM

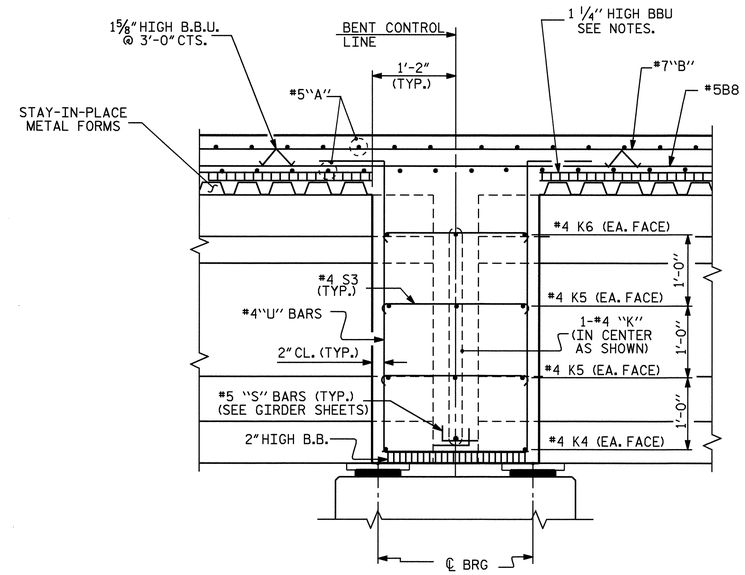

SECTION THRU CONTINUOUS BENT DIAPHRAGM

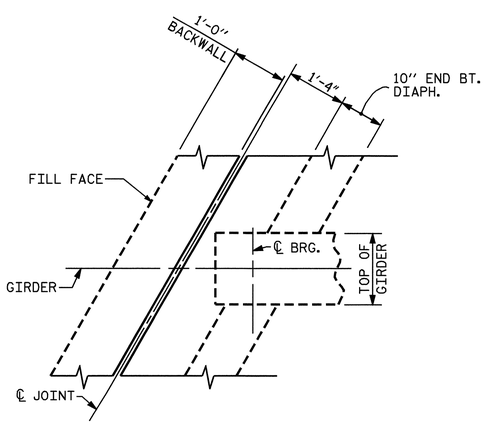

END BENT DIAPHRAGM

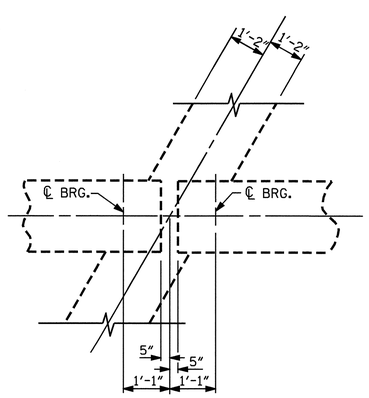

CONTINUOUS BENT DIAPHRAGM

PLAN

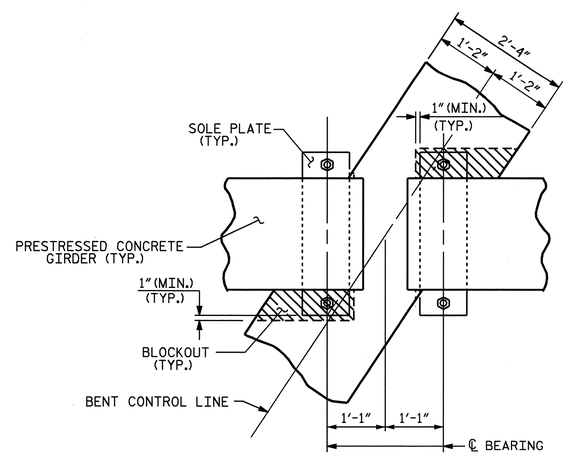

PLAN

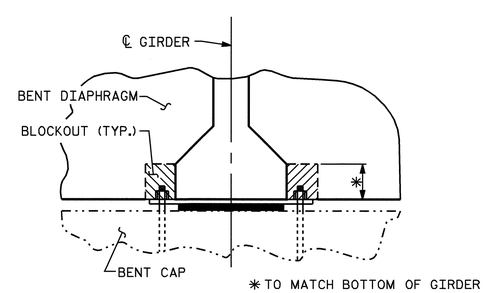

SECTION

BENT DIAPHRAGM BLOCK-OUT DETAIL

PROJECT NO. R-2911B
ROWAN COUNTY
STATION: 137+95.00 -L-

SHEET 2 OF 2

STATE OF NORTH CAROLINA
DEPARTMENT OF TRANSPORTATION
RALEIGH

SUPERSTRUCTURE

TYPICAL SECTIONS
DETAILS
RIGHT LANE

NORTH CAROLINA PROFESSIONAL SEAL 20125 ENGINEER MARSHALL G. CHEEK, JR.
7-21-08

REVISIONS						
NO.	BY:	DATE:	NO.	BY:	DATE:	
1			3			
2			4			

SHEET NO. S-44
TOTAL SHEETS 77

STR. #2

NCDDS

DRAWN BY : L.L. MURPHY DATE : 04-08
CHECKED BY : M.G. CHEEK DATE : 05-08

21-JUL-2008 10:19
r:\structures\finalplans\Str #2\R-2911B_sd_str#2-03_TS.dgn
dahodge

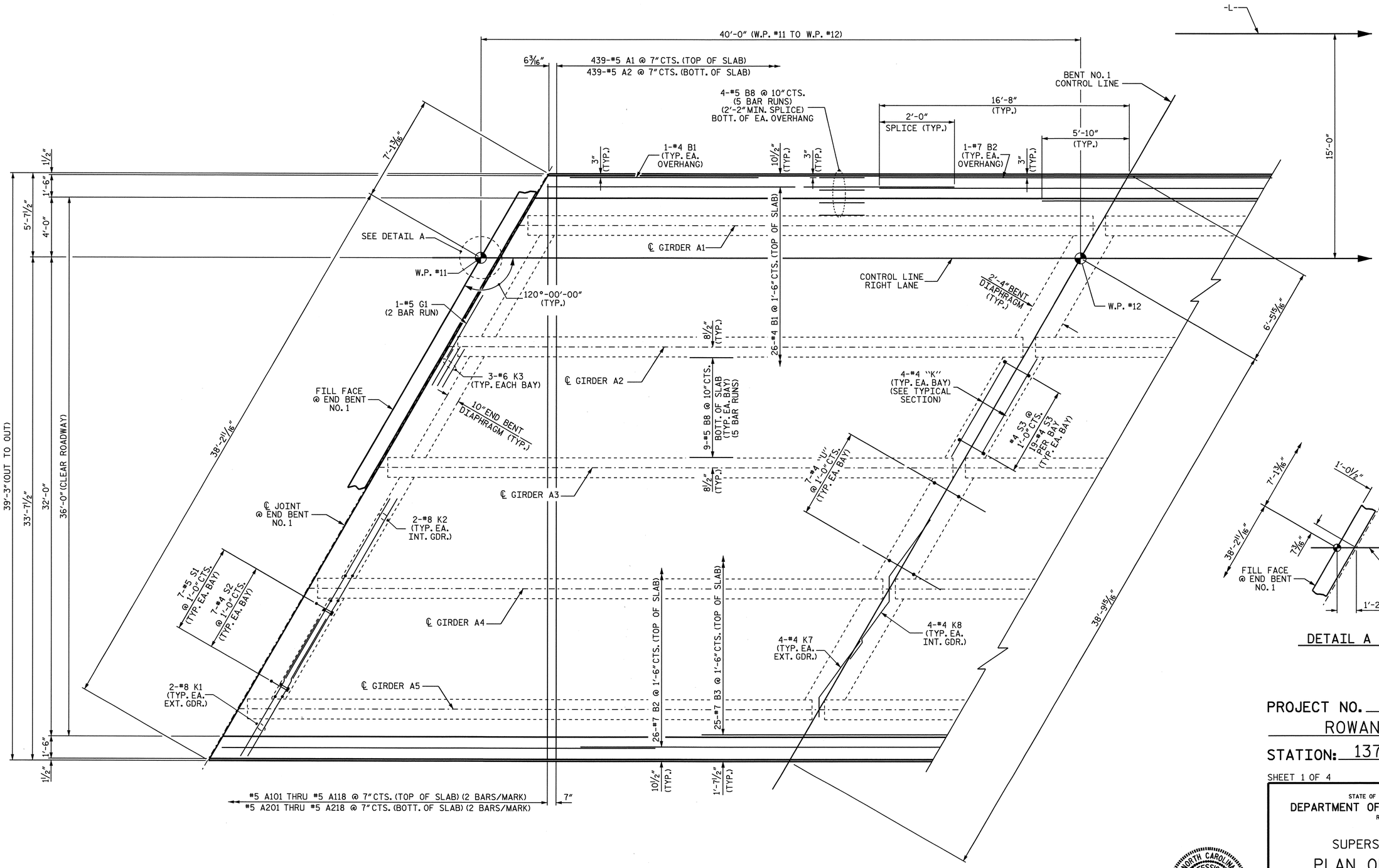

PLAN OF SPAN A

FOR LOCATION OF TRANSVERSE CONSTRUCTION JOINT AND POURING SEQUENCE, SEE "SUPERSTRUCTURE BILL OF MATERIAL."

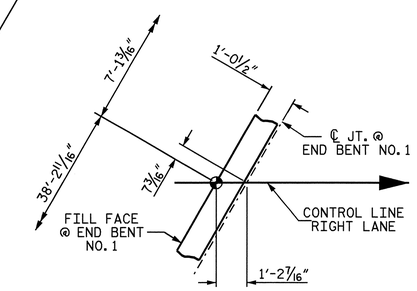

DETAIL A

PROJECT NO. R-2911B

ROWAN COUNTY

STATION: 137+95.00 -L-

SHEET 1 OF 4

STATE OF NORTH CAROLINA
DEPARTMENT OF TRANSPORTATION
RALEIGH

SUPERSTRUCTURE

PLAN OF SPAN A RIGHT LANE

NORTH CAROLINA PROFESSIONAL SEAL 20125 ENGINEER MARSHALL G. CHEEK, JR.
7-21-08

REVISIONS						SHEET NO.
NO.	BY:	DATE:	NO.	BY:	DATE:	S-45
1			3			TOTAL SHEETS
2			4			77

DRAWN BY : L.L. MURPHY DATE : 04-08
CHECKED BY : M.G. CHEEK DATE : 05-08

18-JUN-2008 11:36
r:\structures\r2911b\lmurphy\microstation\Str*2\R2911B_sd_S*_str*2.dgn
lmurphy

STR #2 NC00S

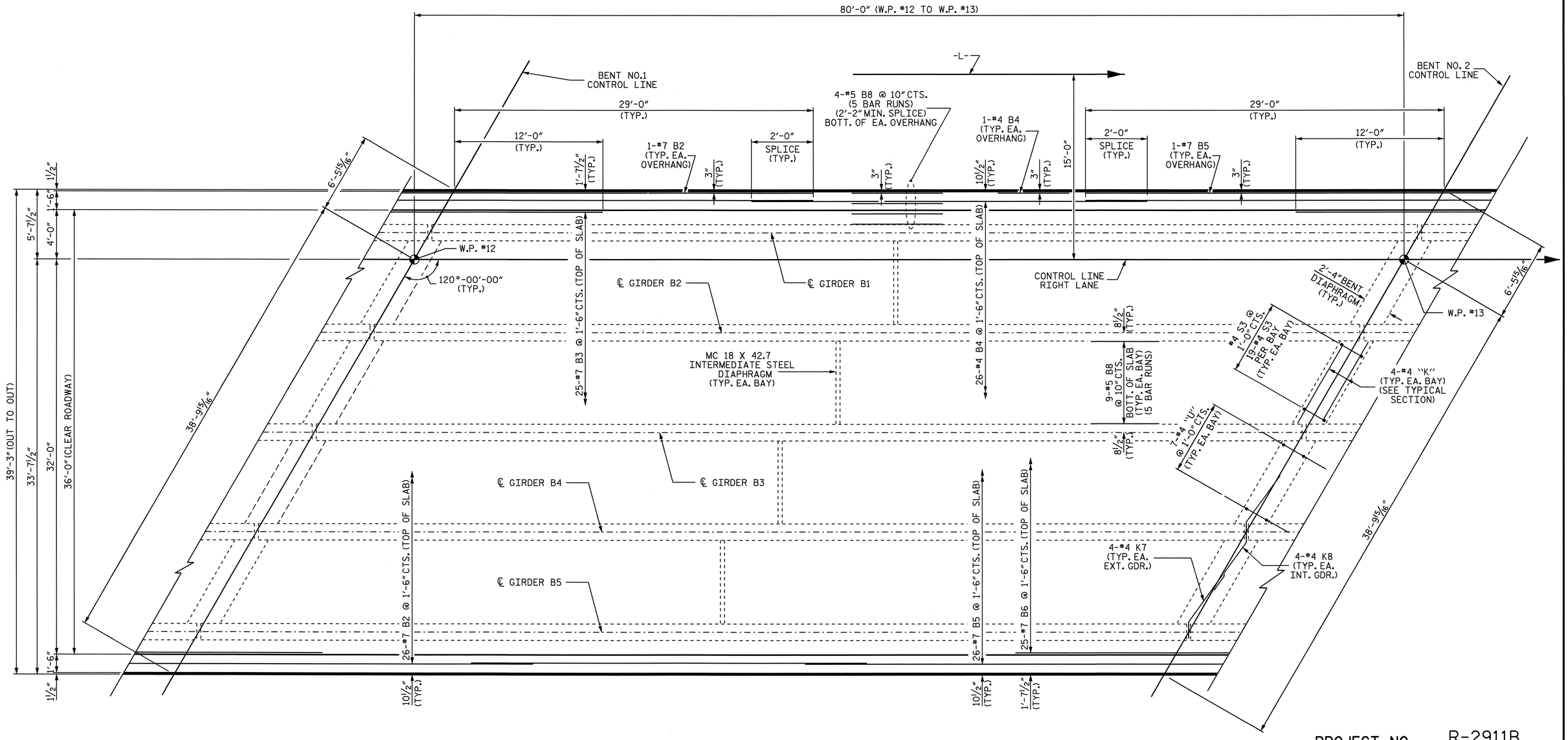

PROJECT NO. R-2911B

ROWAN COUNTY

STATION: 137+95.00 -L-

SHEET 2 OF 4

PLAN OF SPAN B

FOR LOCATION OF TRANSVERSE CONSTRUCTION JOINT AND POURING SEQUENCE, SEE "SUPERSTRUCTURE BILL OF MATERIAL."

NORTH CAROLINA PROFESSIONAL SEAL 20125 ENGINEER MARSHALL G. CHEEK, JR.

7-21-08

STATE OF NORTH CAROLINA
DEPARTMENT OF TRANSPORTATION
RALEIGH

SUPERSTRUCTURE

PLAN OF SPAN B
RIGHT LANE

REVISIONS						SHEET NO.
NO.	BY:	DATE:	NO.	BY:	DATE:	S-46
1			3			TOTAL SHEETS
2			4			77

DRAWN BY : L.L. MURPHY DATE : 04-08
CHECKED BY : M.G. CHEEK DATE : 05-08

18-JUN-2008 11:37
r:\structures\r2911b\lmurphy\microstation\Str*2\R2911B_sd_S*_str*2.dgn
lmurphy

STR #2 NCDDS

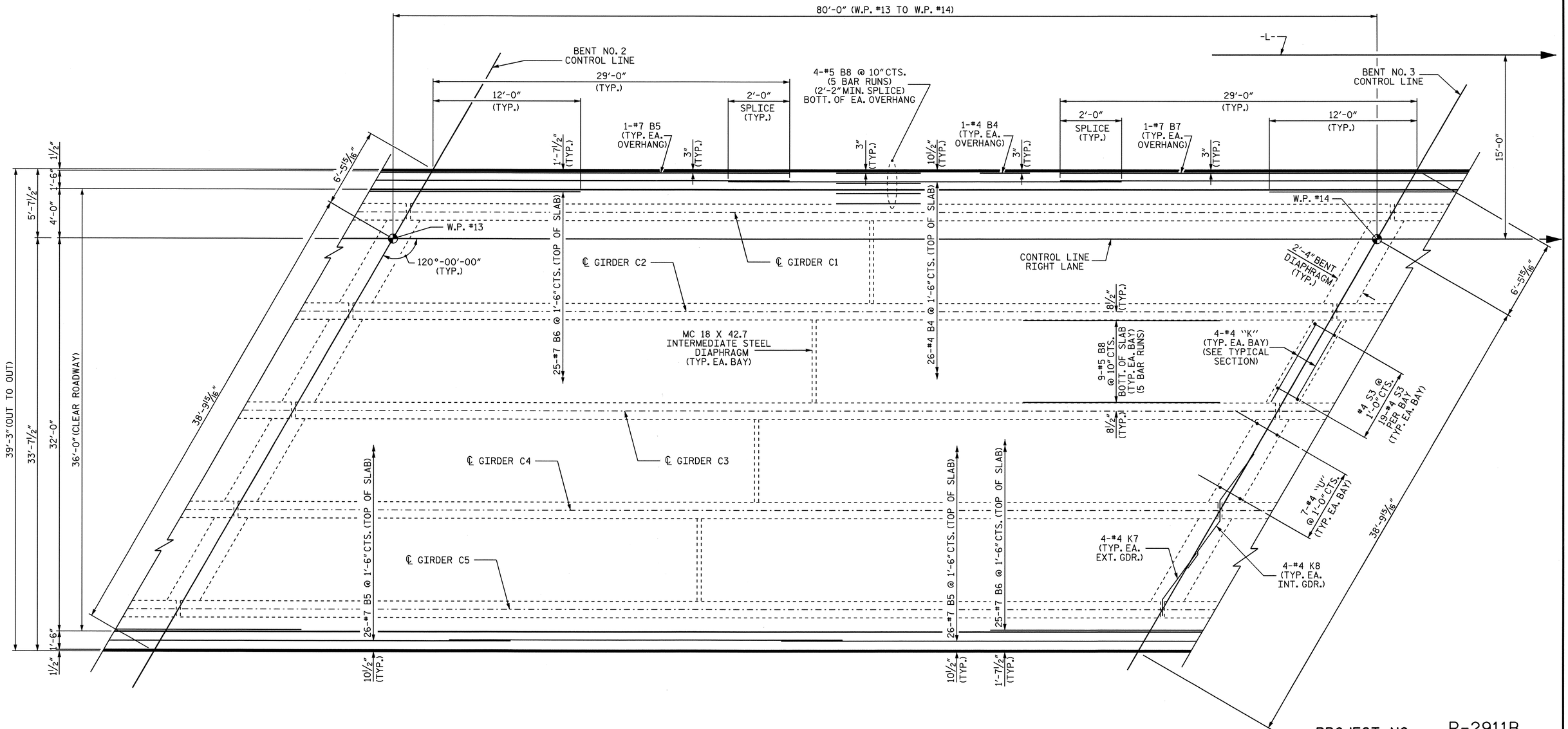

PROJECT NO. R-2911B

ROWAN COUNTY

STATION: 137+95.00 -L-

SHEET 3 OF 4

PLAN OF SPAN C

FOR LOCATION OF TRANSVERSE CONSTRUCTION JOINT AND POURING SEQUENCE, SEE "SUPERSTRUCTURE BILL OF MATERIAL."

NORTH CAROLINA PROFESSIONAL SEAL 20125 ENGINEER MARSHALL G. CHEEK, JR.

7-21-08

STATE OF NORTH CAROLINA
DEPARTMENT OF TRANSPORTATION
RALEIGH

SUPERSTRUCTURE

PLAN OF SPAN C
RIGHT LANE

REVISIONS						SHEET NO.
NO.	BY:	DATE:	NO.	BY:	DATE:	S-47
1			3			TOTAL SHEETS
2			4			77

DRAWN BY : L.L. MURPHY DATE : 04-08
CHECKED BY : M.G. CHEEK DATE : 05-08

18-JUN-2008 11:37
r:\structures\r2911b\lmurphy\microstation\Str*2\R2911B_sd_S*_str*2.dgn
lmurphy

STR #2 NC005

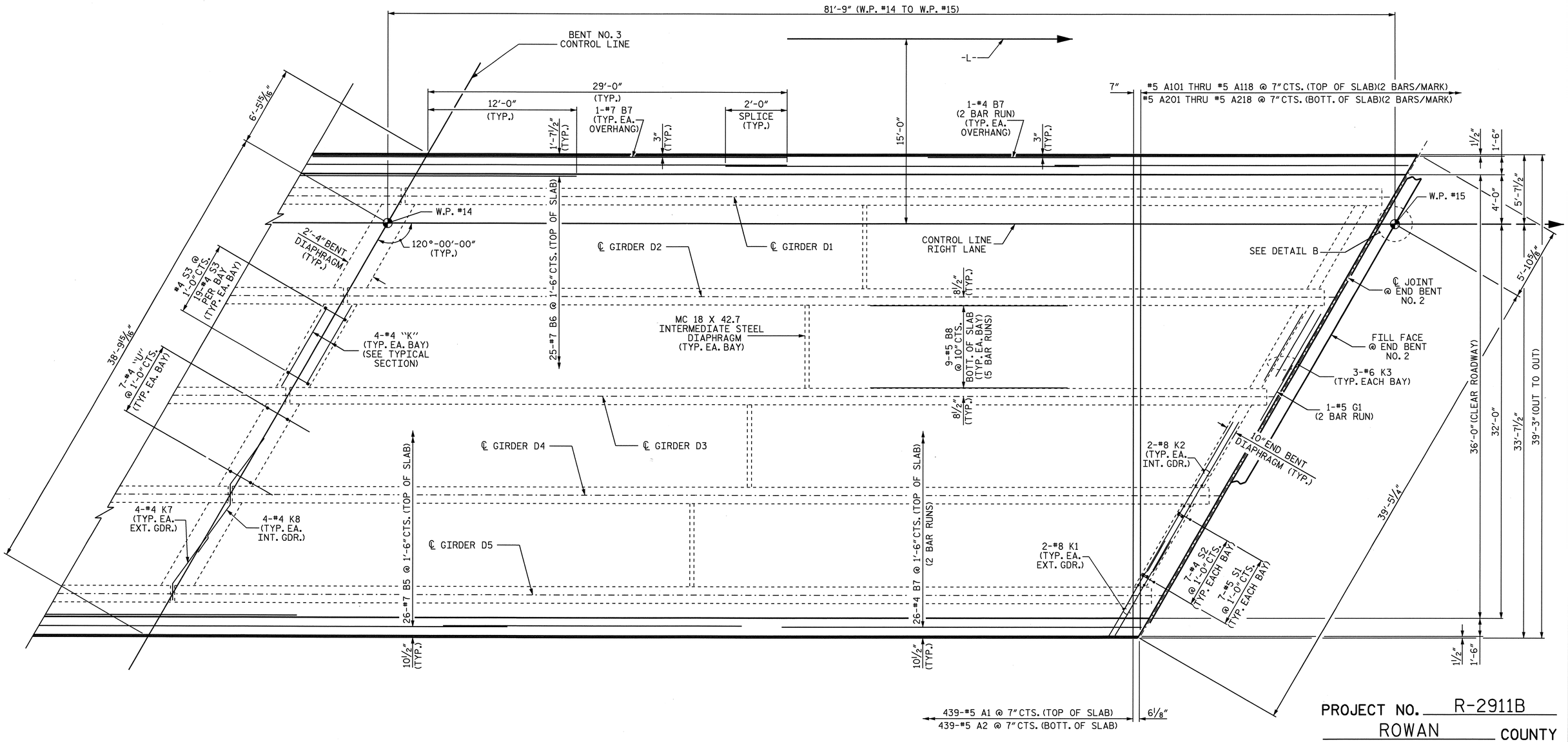

PLAN OF SPAN D

FOR LOCATION OF TRANSVERSE CONSTRUCTION JOINT AND POURING SEQUENCE, SEE "SUPERSTRUCTURE BILL OF MATERIAL."

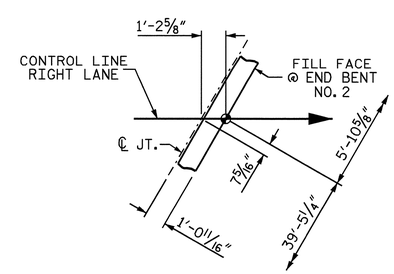

DETAIL B

PROJECT NO. R-2911B

ROWAN COUNTY

STATION: 137+95.00 -L-

SHEET 4 OF 4

STATE OF NORTH CAROLINA
DEPARTMENT OF TRANSPORTATION
RALEIGH

SUPERSTRUCTURE

PLAN OF SPAN D RIGHT LANE

NORTH CAROLINA PROFESSIONAL SEAL 20125 ENGINEER MARSHALL G. CHEEK, JR.
7-21-08

REVISIONS						SHEET NO.
NO.	BY:	DATE:	NO.	BY:	DATE:	S-48
1			3			TOTAL SHEETS
2			4			77

DRAWN BY : L.L. MURPHY DATE : 04-08
CHECKED BY : M.G. CHEEK DATE : 05-08

18-JUN-2008 11:37
r:\structures\r2911b\lmurphy\microstation\Str*2\R2911B_sd_S*_str*2.dgn
lmurphy

STR #2 NCDDS

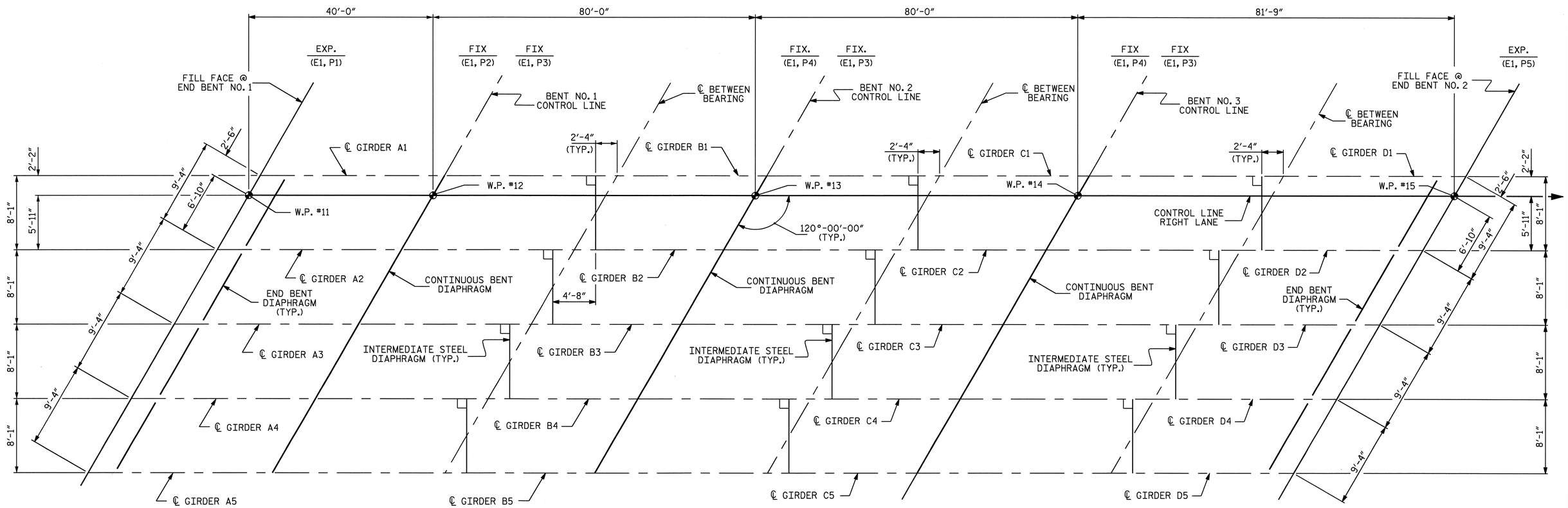

FRAMING PLAN

PROJECT NO. R-2911B

ROWAN COUNTY

STATION: 137+95.00 -L-

STATE OF NORTH CAROLINA
DEPARTMENT OF TRANSPORTATION
RALEIGH

SUPERSTRUCTURE

FRAMING PLAN
RIGHT LANE

NORTH CAROLINA PROFESSIONAL SEAL 20125 ENGINEER MARSHALL G. CHEEK, JR.
7-21-08

REVISIONS							
NO.	BY:	DATE:	NO.	BY:	DATE:		
1			3				
2			4				

SHEET NO. S-49

TOTAL SHEETS 77

DRAWN BY : L.L. MURPHY DATE : 03-08
CHECKED BY : M.G. CHEEK DATE : 05-08

21-JUL-2008 10:21
r:\structures\finalplans\Str #2\R-2911B_sd_str#2-05_FP.dgn
dahodge

STR #2 NCBDS

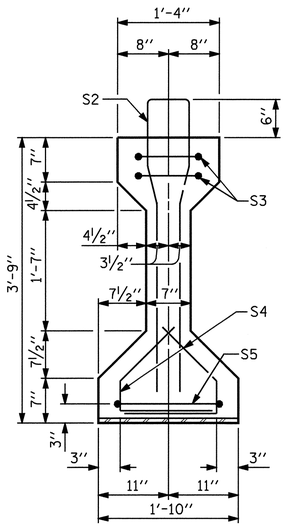

SECTION A-A

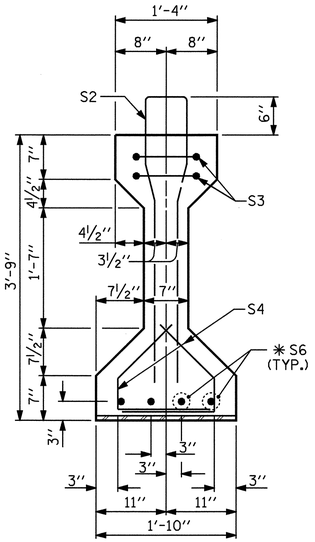

SECTION B-B

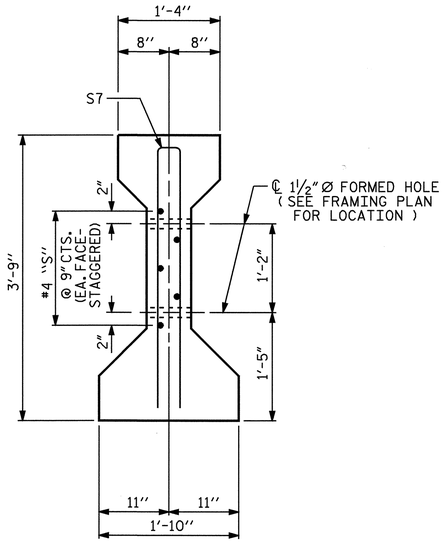

SECTION C-C

(S1 BARS NOT SHOWN)

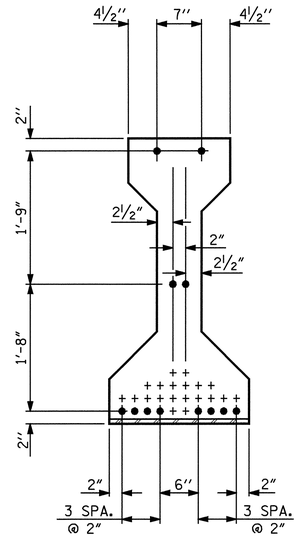

AT END OF GIRDER

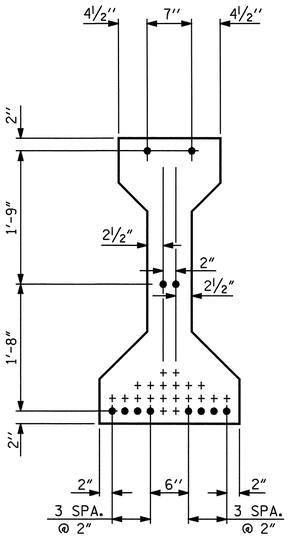

AT ℄ OF GIRDER

½" Ø LOW RELAXATION STRAND LAYOUT

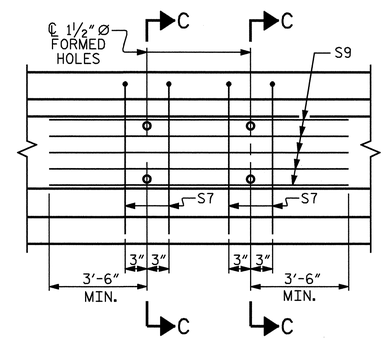

PARTIAL ELEVATION

SHOWING INTERMEDIATE DIAPHRAGM REINFORCING STEEL FOR GIRDER Nos. 2-4

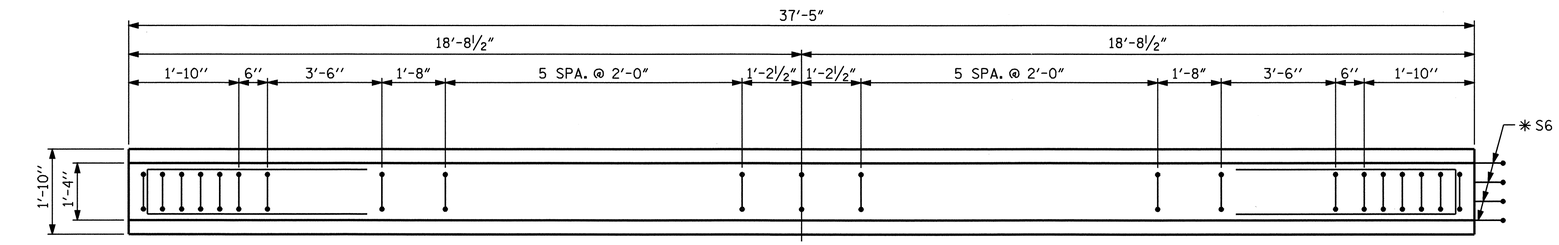

PLAN OF GIRDER

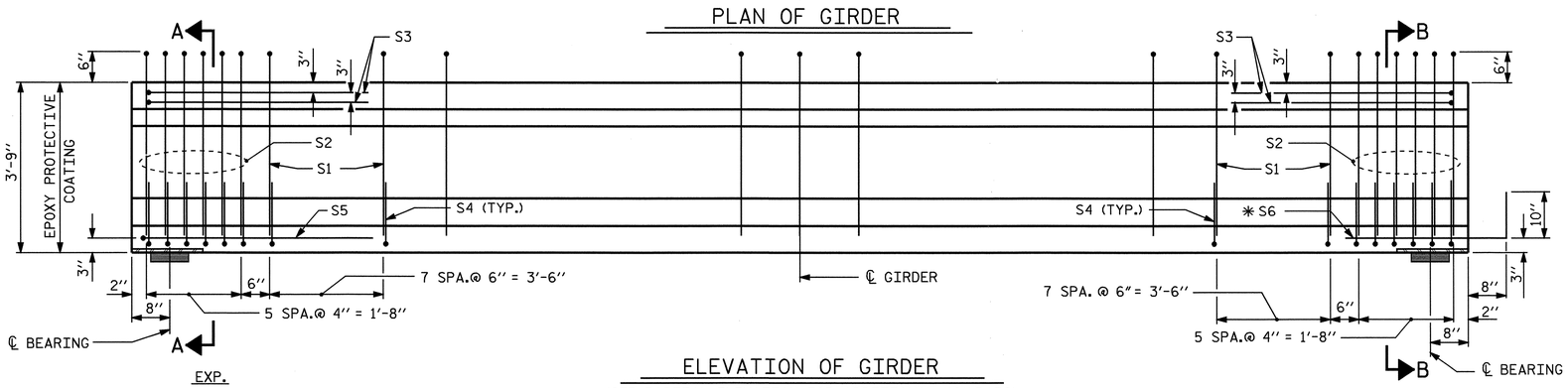

ELEVATION OF GIRDER

(SEE PARTIAL ELEVATION FOR ADDITIONAL "S" BARS)

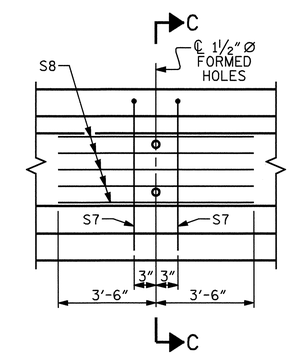

PARTIAL ELEVATION

SHOWING INTERMEDIATE DIAPHRAGM REINFORCING STEEL FOR GIRDER Nos. 1 & 5

½" Ø L. R. GRADE 270 STRANDS

AREA (SQUARE INCHES)	ULTIMATE STRENGTH (LBS. PER STRAND)	APPLIED PRESTRESS (LBS. PER STRAND)
0.153	41,300	30,980

REINFORCING STEEL FOR ONE GIRDER

	BAR	NUMBER	SIZE	TYPE	LENGTH	WEIGHT
	S1	29	#4	1	8'-6"	165
	S2	12	#6	1	8'-6"	153
	S3	4	#4	3	8'-8"	23
	S4	56	#4	2	2'-9"	103
	S5	1	#4	3	9'-6"	6
	✳ S6	4	#5	STR	3'-8"	15
INTERIOR GDR.	S7	4	#5	3	7'-2"	30
INTERIOR GDR.	S9	5	#4	STR	11'-8"	39
EXTERIOR GDR.	S7	2	#5	3	7'-2"	15
EXTERIOR GDR.	S8	5	#4	STR	7'-0"	23

✳ NOTE: S6 BARS SHALL BE BENT BEFORE SHIPMENT. HEAT BENDING SHALL NOT BE ALLOWED.

BAR TYPES

ALL BAR DIMENSIONS ARE OUT-TO-OUT

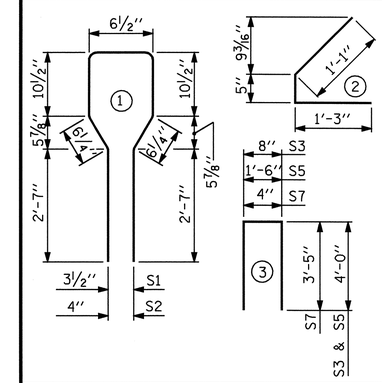

QUANTITIES FOR ONE GIRDER

	REINFORCING STEEL	5000 PSI CONCRETE	½" Ø L.R. STRANDS
	LB.	C.Y.	No.
INTERIOR GIRDER	528	5.4	12
EXTERIOR GIRDER	497	5.4	12

GIRDERS REQUIRED

NUMBER	LENGTH	TOTAL LENGTH
5	37'-5"	187'-1"

PROJECT NO. R-2911B

ROWAN COUNTY

STATION: 137+95.00-L-

SHEET 1 OF 5

STATE OF NORTH CAROLINA
DEPARTMENT OF TRANSPORTATION
RALEIGH

STANDARD

AASHTO TYPE III
PRESTRESSED CONCRETE GIRDER
CONTINUOUS FOR LIVE LOAD
SPAN A
RIGHT LANE

NORTH CAROLINA PROFESSIONAL SEAL 20125 ENGINEER MARSHALL W. CHEEK, JR.
7-21-08

REVISIONS							SHEET NO.
NO.	BY:	DATE:	NO.	BY:	DATE:		S-50
1			3				TOTAL SHEETS
2			4				77

ASSEMBLED BY : L.L. MURPHY	DATE : 4-08
CHECKED BY : M.G. CHEEK	DATE : 5-08
DRAWN BY : ELR 8/91	REV. 7/17/98 RWW/LES
CHECKED BY : GRP 8/91	REV. 10/17/00R RWW/LES
	REV. 5/1/06 TLA/GM

21-JUL-2008 10:21
r:\structures\final plans\Str #2\R-2911B_sd_str#2-06_G*.dgn
dahodge

STR #2

STD. NO. PCG5

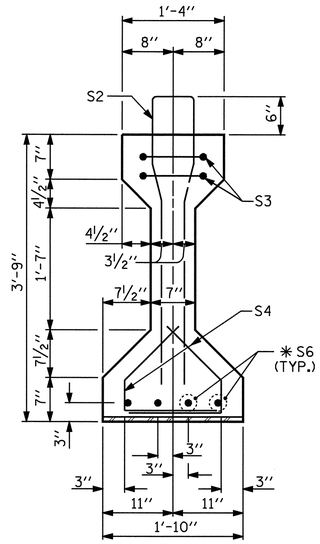

SECTION A-A

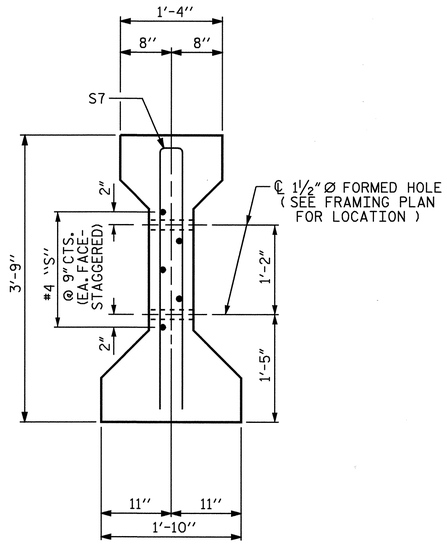

SECTION C-C

(S1 BARS NOT SHOWN)

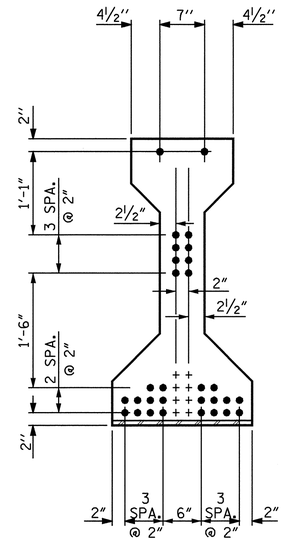

AT END OF GIRDER

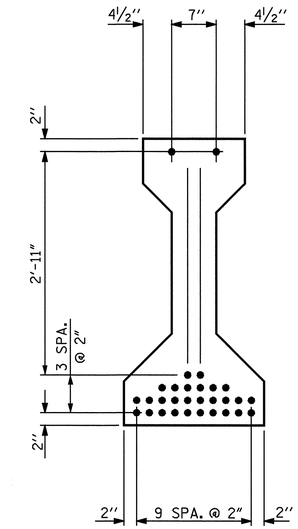

AT ℄ OF GIRDER

½" Ø LOW RELAXATION STRAND LAYOUT

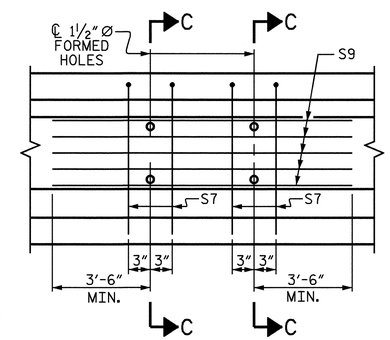

PARTIAL ELEVATION

SHOWING INTERMEDIATE DIAPHRAGM
REINFORCING STEEL FOR GIRDER Nos. 2-4

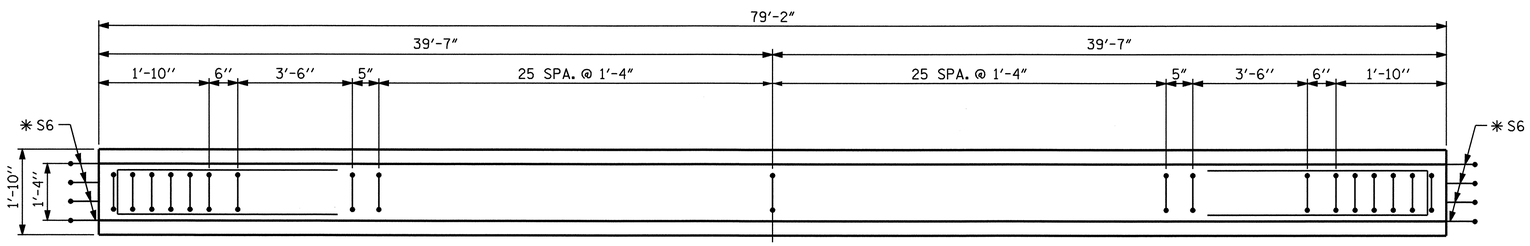

PLAN OF GIRDER

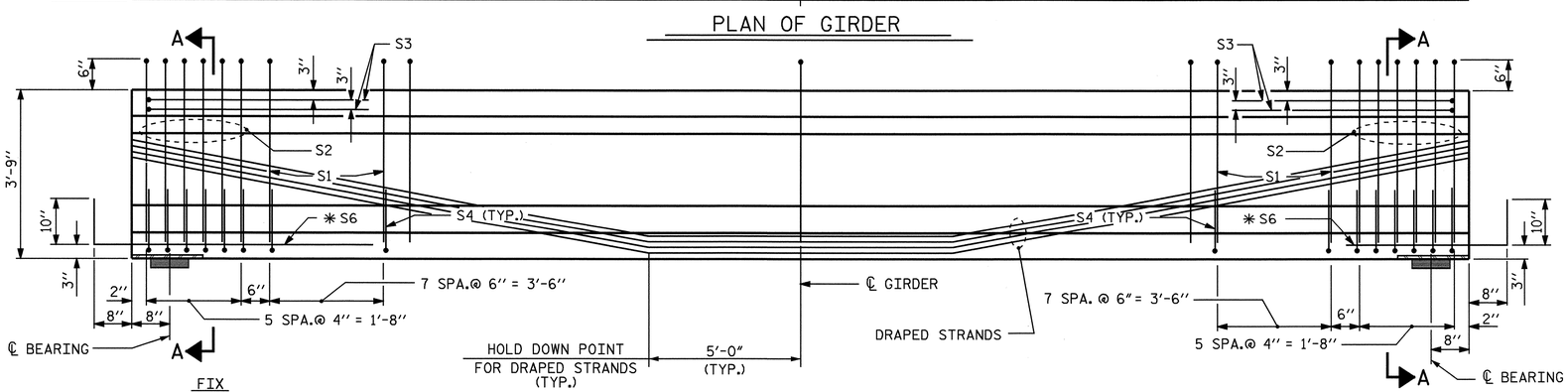

ELEVATION OF GIRDER

(SEE PARTIAL ELEVATION FOR ADDITIONAL "S" BARS)

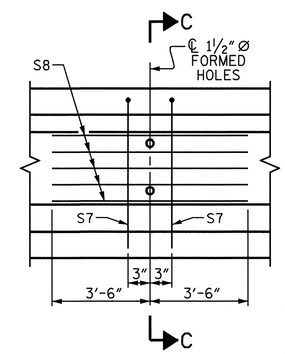

PARTIAL ELEVATION

SHOWING INTERMEDIATE DIAPHRAGM
REINFORCING STEEL FOR GIRDER Nos. 1 & 5

½" Ø L. R. GRADE 270 STRANDS

AREA (SQUARE INCHES)	ULTIMATE STRENGTH (LBS. PER STRAND)	APPLIED PRESTRESS (LBS. PER STRAND)
0.153	41,300	30,980

REINFORCING STEEL FOR ONE GIRDER

	BAR	NUMBER	SIZE	TYPE	LENGTH	WEIGHT
	S1	67	#4	1	8'-6"	380
	S2	12	#6	1	8'-6"	153
	S3	4	#4	3	8'-8"	23
	S4	56	#4	2	2'-9"	103
	✱ S6	8	#5	STR	3'-8"	31
INTERIOR GDR.	S7	4	#5	3	7'-2"	30
INTERIOR GDR.	S9	5	#4	STR	11'-8"	39
EXTERIOR GDR.	S7	2	#5	3	7'-2"	15
EXTERIOR GDR.	S8	5	#4	STR	7'-0"	23

✱ NOTE: S6 BARS SHALL BE BENT BEFORE SHIPMENT. HEAT BENDING SHALL NOT BE ALLOWED.

BAR TYPES

ALL BAR DIMENSIONS ARE OUT-TO-OUT

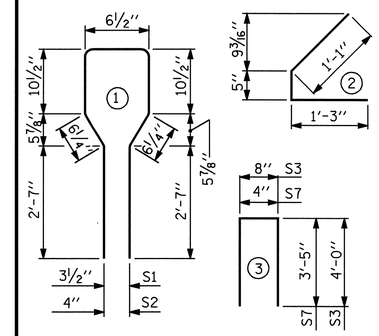

QUANTITIES FOR ONE GIRDER

	REINFORCING STEEL	8200 PSI CONCRETE	½" Ø L.R. STRANDS
	LB.	C.Y.	No.
EXTERIOR GIRDER	759	11.4	30
INTERIOR GIRDER	728	11.4	30

GIRDERS REQUIRED

NUMBER	LENGTH	TOTAL LENGTH
10	79'-2"	791'-8"

PROJECT NO. R-2911B

ROWAN COUNTY

STATION: 137+95.00-L-

SHEET 2 OF 5

STATE OF NORTH CAROLINA
DEPARTMENT OF TRANSPORTATION
RALEIGH

STANDARD

AASHTO TYPE III
PRESTRESSED CONCRETE GIRDER
CONTINUOUS FOR LIVE LOAD
SPANS B OR C
RIGHT LANE

NORTH CAROLINA PROFESSIONAL SEAL 20125 ENGINEER MARSHALL G. CHEEK, JR.
7-21-08

REVISIONS								SHEET NO.
NO.	BY:	DATE:		NO.	BY:	DATE:		S-51
1				3				TOTAL SHEETS
2				4				77

ASSEMBLED BY : L.L. MURPHY	DATE : 4-08
CHECKED BY : M.G. CHEEK	DATE : 5-08
DRAWN BY : ELR 8/91	REV. 7/17/98 RWW/LES
CHECKED BY : GRP 8/91	REV. 10/17/00R RWW/LES
	REV. 5/1/06 TLA/GM

18-JUN-2008 11:44
r:\structures\r2911b\lmurphy\microstation\Str#2\R2911B_sd_G#_str#2.dgn
lmurphy

STR #2

STD. NO. PCG5

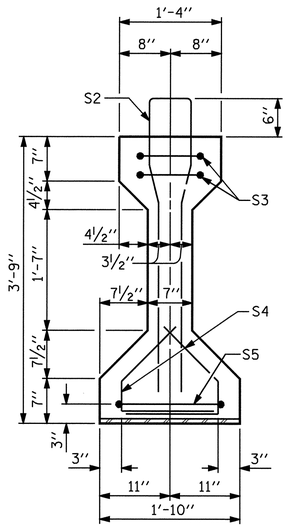

SECTION A-A

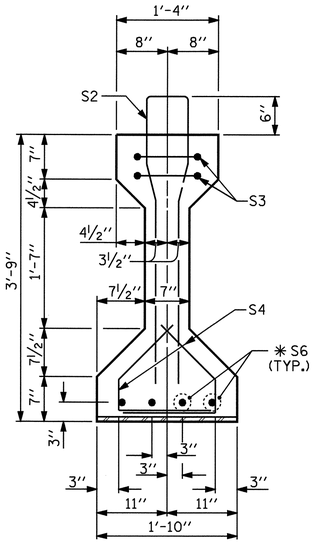

SECTION B-B

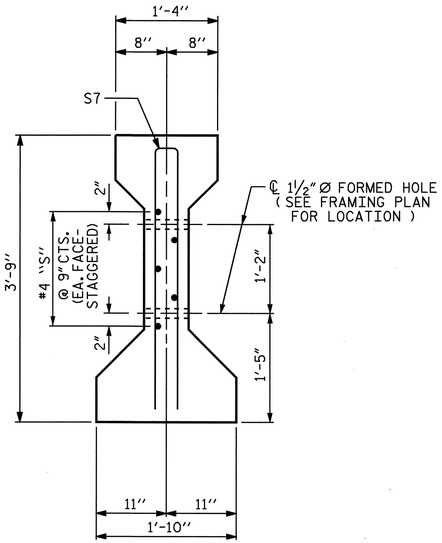

SECTION C-C

(S1 BARS NOT SHOWN)

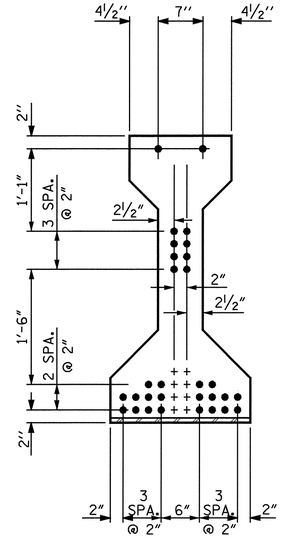

AT END OF GIRDER

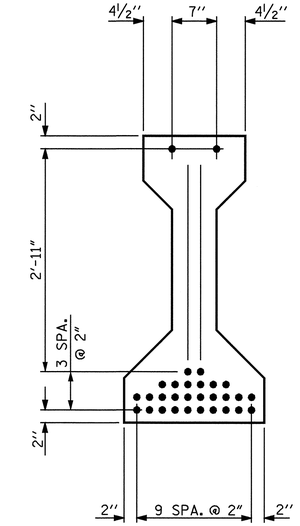

AT ℄ OF GIRDER

½" Ø LOW RELAXATION STRAND LAYOUT

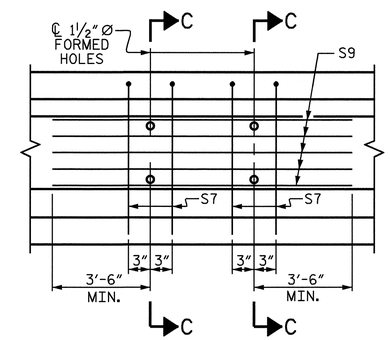

PARTIAL ELEVATION

SHOWING INTERMEDIATE DIAPHRAGM REINFORCING STEEL FOR GIRDER Nos. 2-4

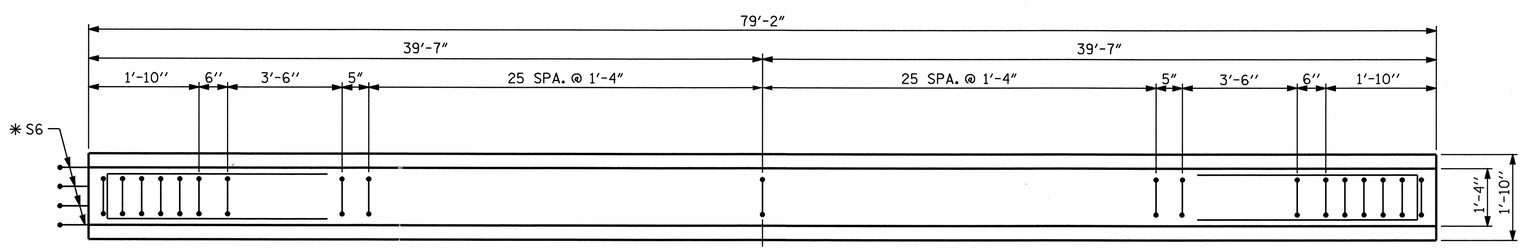

PLAN OF GIRDER

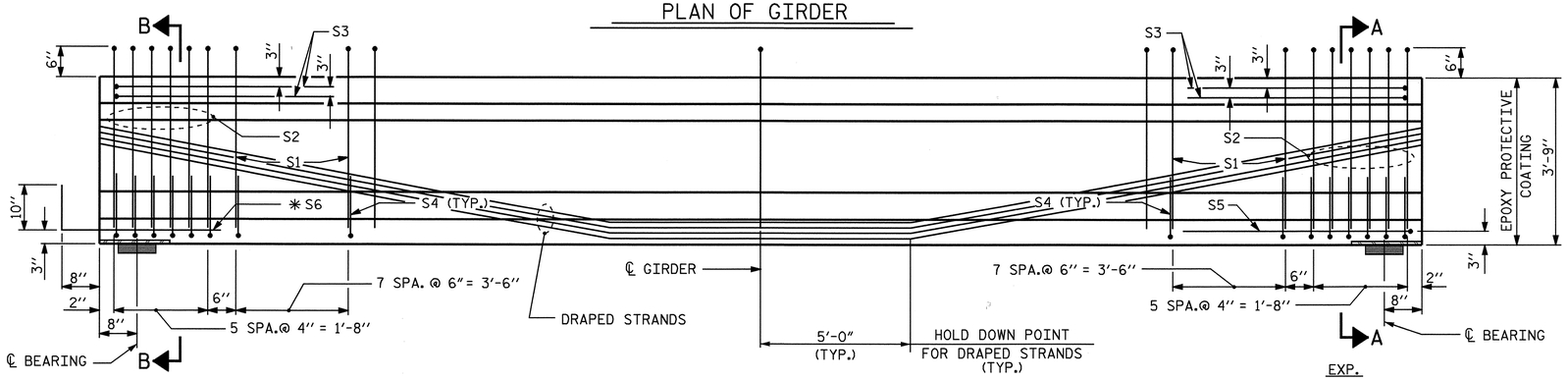

ELEVATION OF GIRDER

(SEE PARTIAL ELEVATION FOR ADDITIONAL "S" BARS)

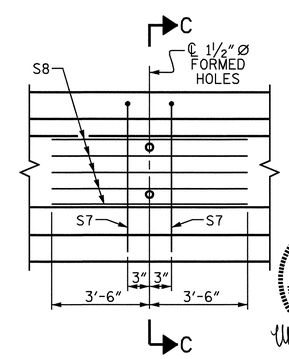

PARTIAL ELEVATION

SHOWING INTERMEDIATE DIAPHRAGM REINFORCING STEEL FOR GIRDER Nos. 1 & 5

½" Ø L. R. GRADE 270 STRANDS

AREA (SQUARE INCHES)	ULTIMATE STRENGTH (LBS. PER STRAND)	APPLIED PRESTRESS (LBS. PER STRAND)
0.153	41,300	30,980

REINFORCING STEEL FOR ONE GIRDER

	BAR	NUMBER	SIZE	TYPE	LENGTH	WEIGHT
	S1	67	#4	1	8'-6"	380
	S2	12	#6	1	8'-6"	153
	S3	4	#4	3	8'-8"	23
	S4	56	#4	2	2'-9"	103
	S5	1	#4	3	9'-6"	6
	✳ S6	4	#5	STR	3'-8"	15
INTERIOR GDR.	S7	4	#5	3	7'-2"	30
INTERIOR GDR.	S9	5	#4	STR	11'-8"	39
EXTERIOR GDR.	S7	2	#5	3	7'-2"	15
EXTERIOR GDR.	S8	5	#4	STR	7'-0"	23

✳ NOTE: S6 BARS SHALL BE BENT BEFORE SHIPMENT. HEAT BENDING SHALL NOT BE ALLOWED.

BAR TYPES

ALL BAR DIMENSIONS ARE OUT-TO-OUT

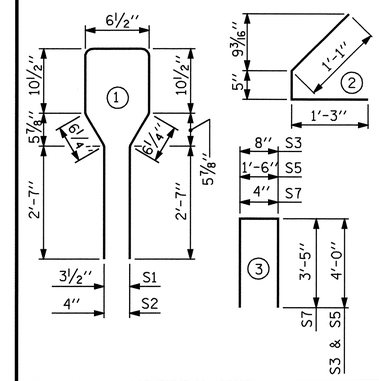

QUANTITIES FOR ONE GIRDER

	REINFORCING STEEL LB.	8200 PSI CONCRETE C.Y.	½" Ø L.R. STRANDS No.
EXTERIOR GIRDER	749	11.4	30
INTERIOR GIRDER	718	11.4	30

GIRDERS REQUIRED

NUMBER	LENGTH	TOTAL LENGTH
5	79'-2"	395'-10"

PROJECT NO. R-2911B

ROWAN COUNTY

STATION: 137+95.00-L-

SHEET 3 OF 5

STATE OF NORTH CAROLINA
DEPARTMENT OF TRANSPORTATION
RALEIGH

STANDARD

AASHTO TYPE III
PRESTRESSED CONCRETE GIRDER
CONTINUOUS FOR LIVE LOAD
SPAN D
RIGHT LANE

NORTH CAROLINA PROFESSIONAL SEAL 20125 ENGINEER MARSHALL G. CHEEK, JR.
7-21-08

REVISIONS								SHEET NO.
NO.	BY:	DATE:	NO.	BY:	DATE:			S-52
1			3					TOTAL SHEETS
2			4					77

ASSEMBLED BY : L.L. MURPHY	DATE : 4-08
CHECKED BY : M.G. CHEEK	DATE : 5-08
DRAWN BY : ELR 8/91	REV. 7/17/98 RWW/LES
CHECKED BY : GRP 8/91	REV. 10/17/00R RWW/LES
	REV. 5/1/06 TLA/GM

18-JUN-2008 11:45
r:\structures\r2911b\lmurphy\microstation\Str#2\R2911B_sd_G#_str#2.dgn
lmurphy

STR #2

STD. NO. PCG5

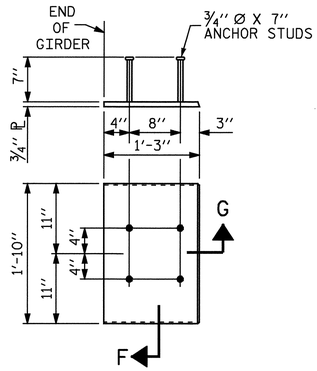

EMBEDDED PLATE "B-1" DETAILS FOR AASHTO TYPE III GIRDER

(2 REQ'D PER GIRDER)

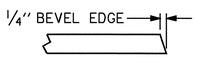

SECTION "G"

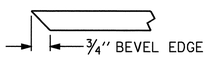

SECTION "F"

(SEE NOTES)

DEAD LOAD DEFLECTION TABLE FOR GIRDERS												
		SPAN "A"										
1/2" LOW RELAXATION		GIRDERS 1 THRU 5										
TENTH POINTS		0	0.1	0.2	0.3	0.4	0.5	0.6	0.7	0.8	0.9	0
CAMBER (GIRDER ALONE IN PLACE)	↑	0.0	0.006	0.011	0.016	0.018	0.019	0.018	0.016	0.011	0.006	0.0
✳ DEFLECTION DUE TO SUPERIMPOSED D.L.	↓	0.0	0.002	0.004	0.006	0.007	0.008	0.007	0.006	0.004	0.002	0.0
FINAL CAMBER	↑	0.0	1/16"	1/8"	1/8"	1/8"	1/8"	1/8"	1/8"	1/8"	1/16"	0.0

DEAD LOAD DEFLECTION TABLE FOR GIRDERS												
		SPAN "B", "C" & "D"										
1/2" LOW RELAXATION		GIRDERS 1 THRU 5										
TENTH POINTS		0	0.1	0.2	0.3	0.4	0.5	0.6	0.7	0.8	0.9	0
CAMBER (GIRDER ALONE IN PLACE)	↑	0.0	0.113	0.214	0.293	0.343	0.361	0.343	0.293	0.214	0.113	0.0
✳ DEFLECTION DUE TO SUPERIMPOSED D.L.	↓	0.0	0.041	0.078	0.107	0.125	0.131	0.125	0.107	0.078	0.041	0.0
FINAL CAMBER	↑	0.0	7/8"	1 5/8"	2 1/4"	2 5/8"	2 3/4"	2 5/8"	2 1/4"	1 5/8"	7/8"	0.0

✳ INCLUDES FUTURE WEARING SURFACE
ALL VALUES ARE SHOWN IN FEET (DECIMAL FORM), EXCEPT " FINAL CAMBER ", WHICH IS GIVEN IN INCHES (FRACTION FORM).

NOTES

ALL PRESTRESSING STRANDS SHALL BE 7-WIRE LOW-RELAXATION GRADE 270 STRANDS AND SHALL CONFORM TO AASHTO M203 EXCEPT FOR SAMPLING REQUIREMENTS WHICH SHALL BE IN ACCORDANCE WITH THE STANDARD SPECIFICATIONS.

ALL REINFORCING STEEL SHALL BE GRADE 60.

APPLY EPOXY PROTECTIVE COATING TO END OF GIRDER SURFACES INDICATED IN ELEVATION VIEW.

EMBEDDED PLATE "B-1" SHALL BE GALVANIZED IN ACCORDANCE WITH THE STANDARD SPECIFICATIONS. BEVEL EDGES OF PLATE "B-1" TO GIVE CLOSE FIT BUT NOT TIGHT FIT TO STEEL CASTING FORM.

ANCHOR STUDS SHALL CONFORM TO AASHTO M169 GRADES 1010 THROUGH 1020 OR APPROVED EQUAL, AND SHALL MEET THE TYPE "B" REQUIREMENTS OF SUBSECTION 7.3 OF THE ANSI/AASHTO/AWS D1.5 BRIDGE WELDING CODE.

AT ENDS OF GIRDERS TO BE EMBEDDED IN CONCRETE DIAPHRAGMS OR END WALLS, PRESTRESSING STRANDS MAY EXTEND A MAXIMUM OF 2" BEYOND THE GIRDER ENDS. OTHERWISE, PRESTRESSING STRANDS SHALL BE CUT FLUSH WITH THE GIRDER ENDS.

THE TRANSFER OF LOAD FROM THE ANCHORAGES TO THE GIRDER SHALL BE DONE WHEN CONCRETE HAS REACHED A COMPRESSIVE STRENGTH OF NOT LESS THAN 4000 PSI FOR SPAN A.

THE TRANSFER OF LOAD FROM THE ANCHORAGES TO THE GIRDER SHALL BE DONE WHEN CONCRETE HAS REACHED A COMPRESSIVE STRENGTH OF NOT LESS THAN 6500 PSI FOR SPANS B, C & D.

DEPENDING ON THE TYPE OF SYSTEM USED TO SUPPORT THE DECK SLAB FORMS, PRESET ANCHORS MAY BE NECESSARY IN THE PRESTRESSED CONCRETE GIRDER.

THE TOP SURFACE OF THE GIRDER, EXCLUDING THE OUTSIDE 4", SHALL BE RAKED TO A DEPTH OF 1/4".

WHEN DRAPED STRANDS ARE DETAILED, THE LONGITUDINAL LOCATION OF THE HOLD DOWN DEVICES SHALL BE WITHIN 6" OF THE LOCATION SHOWN AND THE CENTER OF GRAVITY OF THE GROUP OF DRAPED STRANDS SHALL BE LOCATED WITHIN 1/2" OF THE THEORETICAL LOCATION SHOWN.

FOR CRACK REPAIR OF PRESTRESSED CONCRETE GIRDERS, SEE SPECIAL PROVISIONS.

FOR PRESTRESSED CONCRETE MEMBERS, SEE SPECIAL PROVISIONS.

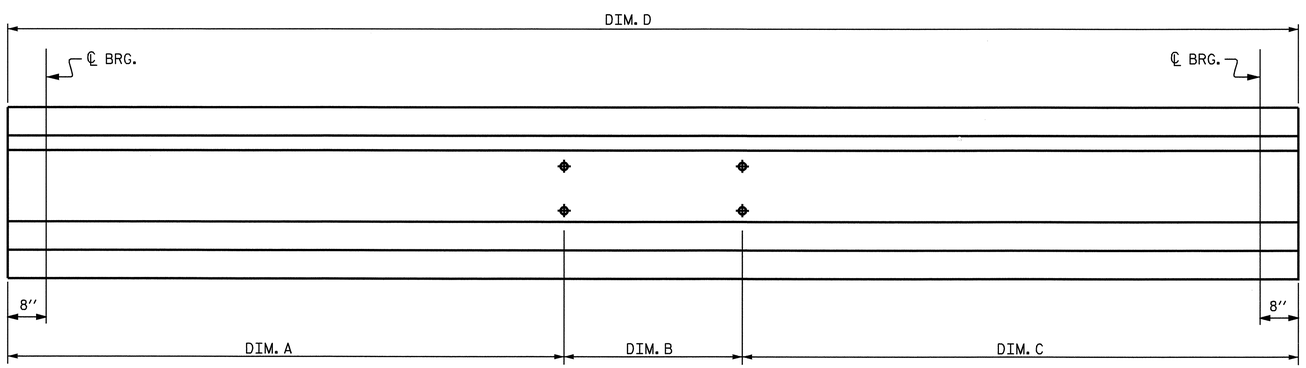

LOCATION OF BOLT HOLES IN GIRDERS

FOR DIMENSIONS SEE CHART A

CHART A				
GIRDER	DIM. A	DIM. B	DIM. C	DIM. D
GDR. B1	37'-3"	0	41'-11"	79'-2"
GDR. B2	37'-3"	4'-8"	37'-3"	79'-2"
GDR. B3	37'-3"	4'-8"	37'-3"	79'-2"
GDR. B4	37'-3"	4'-8"	37'-3"	79'-2"
GDR. B5	41'-11"	0	37'-3"	79'-2"
GDR. C1	37'-3"	0	41'-11"	79'-2"
GDR. C2	37'-3"	4'-8"	37'-3"	79'-2"
GDR. C3	37'-3"	4'-8"	37'-3"	79'-2"
GDR. C4	37'-3"	4'-8"	37'-3"	79'-2"
GDR. C5	41'-11"	0	37'-3"	79'-2"
GDR. D1	37'-3"	0	41'-11"	79'-2"
GDR. D2	37'-3"	4'-8"	37'-3"	79'-2"
GDR. D3	37'-3"	4'-8"	37'-3"	79'-2"
GDR. D4	37'-3"	4'-8"	37'-3"	79'-2"
GDR. D5	41'-11"	0	37'-3"	79'-2"

PROJECT NO. R-2911B
ROWAN COUNTY
STATION: 137+95.00 -L-

SHEET 4 OF 5

STATE OF NORTH CAROLINA
DEPARTMENT OF TRANSPORTATION
RALEIGH

STANDARD

PRESTRESSED CONCRETE GIRDER CONTINUOUS FOR LIVE LOAD DETAILS RIGHT LANE

NORTH CAROLINA PROFESSIONAL SEAL 20125 ENGINEER MARSHALL A. GICHEK, JR.
7-21-08

ASSEMBLED BY : L.L. MURPHY	DATE : 04-08
CHECKED BY : M.G. CHEEK	DATE : 05-08
DRAWN BY : ELR 11/91	REV. 10/17/00 RWW/LES
CHECKED BY : GRP 11/91	REV. 7/10/01RR LES/RDR
	REV. 5/1/06 TLA/GM

REVISIONS						SHEET NO.
NO.	BY:	DATE:	NO.	BY:	DATE:	S-53
1			3			TOTAL SHEETS
2			4			77

17-JUN-2008 16:24
R:\Structures\r2911b\lmurphy\Microstation\Str#2\R2911B_sd_G#_str#2.dgn
afigueroa

STR. #2

STD. NO. PCG11

TABLE

GIRDER TYPE	CHANNEL SIZE	DIM "A"	DIM "B"	DIM "L"
III	MC 18 x 42.7	1'-5"	1'-2"	1'-6"

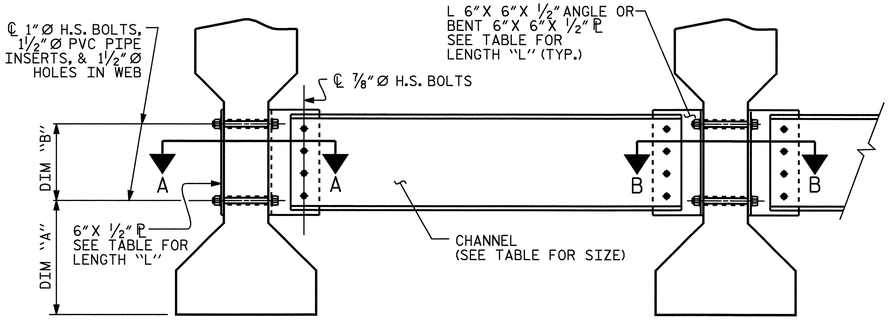

EXTERIOR GIRDER

INTERIOR GIRDER

PART SECTION AT INTERMEDIATE DIAPHRAGM

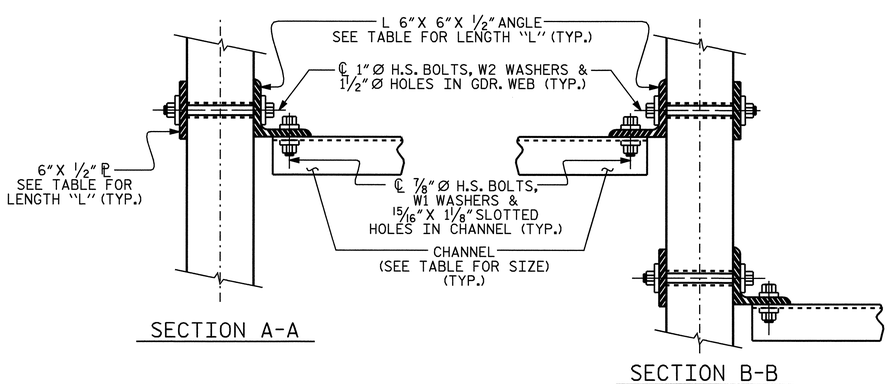

SECTION A-A

SECTION B-B

CONNECTION DETAILS

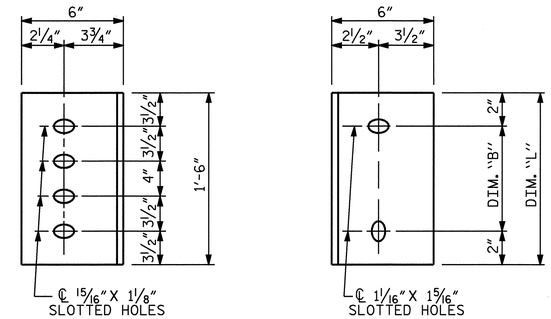

DIAPHRAGM FACE

WEB FACE

CONNECTOR PLATE DETAILS

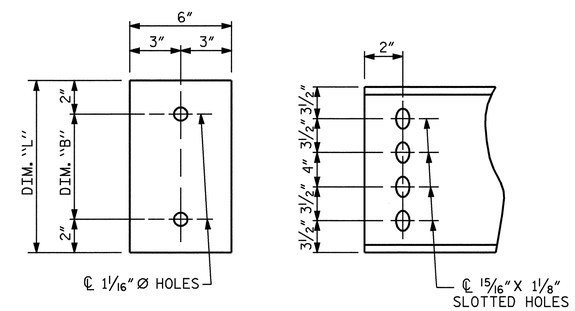

PLATE DETAILS

CHANNEL END

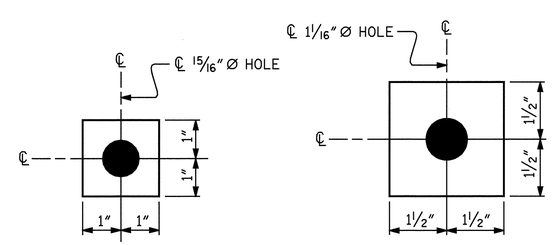

W1

ℙ 7/16"X 2"X 2"

USE WITH ⅞"Ø HVY. HEX NUTS & DIRECT TENSION INDICATOR WASHERS AT DIAPHRAGM CHANNEL TO CONNECTOR PLATE CONNECTIONS

W2

ℙ 7/16"X 3"X 3"

USE WITH 1"Ø HVY. HEX NUTS & DIRECT TENSION INDICATOR WASHERS AT CONNECTOR PLATE TO GIRDER CONNECTIONS

WASHER DETAILS

STRUCTURAL STEEL NOTES

ALL INTERMEDIATE DIAPHRAGM STEEL, CONNECTOR PLATES AND PLATE WASHERS SHALL BE AASHTO M270 GRADE 50 OR APPROVED EQUAL.

TENSION ON THE AASHTO M164 BOLTS THROUGH THE CHANNEL MEMBER SHALL BE CALIBRATED USING DIRECT TENSION INDICATOR WASHERS IN ACCORDANCE WITH ARTICLE 440-8 OF THE STANDARD SPECIFICATIONS.

TENSION ON THE AASHTO M164 BOLTS THROUGH THE GIRDER WEB SHALL BE SNUG TIGHTENED FOLLOWED BY AN ADDITIONAL ¼ TURN.

THE CHANNELS, ANGLES, WASHERS, PLATE WASHERS, AND DIRECT TENSION INDICATORS SHALL BE GALVANIZED OR METALLIZED IN ACCORDANCE WITH THE STANDARD SPECIFICATIONS. FOR THERMAL SPRAYED COATINGS (METALLIZATION), SEE SPECIAL PROVISIONS.

FOR METALLIZATION, APPLY AN 8 MIL THICK 99.99 PERCENT ZINC (W-Zn-1) THERMAL SPRAYED COATING WITH A 0.5 MIL THICK SEAL COAT TO ALL STEEL DIAPHRAGM SURFACES IN ACCORDANCE WITH THE THERMAL SPRAYED COATINGS SPECIAL PROVISIONS AND SECTION 442 OF THE STANDARD SPECIFICATIONS.

GALVANIZE THE HIGH STRENGTH BOLTS, NUTS, AND WASHERS IN ACCORDANCE WITH THE STANDARD SPECIFICATIONS. FOR HIGH STRENGTH BOLTS, SEE SPECIAL PROVISIONS.

USE A MINIMUM 7/16" THICK PLATE WASHER WITH STANDARD HOLES UNDER EACH BOLT HEAD AND NUT. THE PLATE WASHERS SHALL HAVE SUFFICIENT SIZE TO COVER THE HOLES AFTER INSTALLATION. DIRECT TENSION INDICATORS ARE TO BE USED IN CONJUNCTION WITH THE PLATE WASHERS.

PROVIDE SUFFICIENT LENGTH OF ALL BOLTS TO ACCOMMODATE WASHERS, DIRECT TENSION INDICATORS, THE THICKNESS OF CONNECTING MEMBER PLUS AT LEAST ¼" PROJECTION BEYOND THE NUT.

INTERMEDIATE DIAPHRAGM ASSEMBLY SHALL COMPLY WITH SECTION 1072 OF THE STANDARD SPECIFICATIONS.

CONTRACTOR SHALL SUBMIT TWO SETS OF WORKING DRAWINGS FOR THE INTERMEDIATE DIAPHRAGM ASSEMBLY FOR REVIEW, COMMENTS AND ACCEPTANCE. AFTER REVIEW, COMMENTS, AND ACCEPTANCE, SUBMIT SEVEN SETS FOR DISTRIBUTION.

IN THE EXTERIOR BAYS, TEMPORARY STRUTS SHALL BE PLACED BETWEEN PRESTRESSED GIRDERS ADJACENT TO THE STEEL DIAPHRAGMS. STRUTS SHALL REMAIN IN PLACE 3 DAYS AFTER CONCRETE IS PLACED. ALL AASHTO M164 H.S. BOLTS SHALL BE FULLY TIGHTENED AFTER THE STRUTS HAVE BEEN REMOVED.

THE COST OF THE STEEL DIAPHRAGMS AND ASSEMBLIES SHALL BE INCLUDED IN THE UNIT PRICE BID FOR PRESTRESSED CONCRETE GIRDERS.

PROJECT NO. R-2911B

ROWAN COUNTY

STATION: 137+95.00 -L-

SHEET 5 OF 5

STATE OF NORTH CAROLINA
DEPARTMENT OF TRANSPORTATION
RALEIGH

STANDARD
INTERMEDIATE
STEEL DIAPHRAGMS
FOR TYPE III
PRESTRESSED CONCRETE
GIRDERS
RIGHT LANE

NORTH CAROLINA PROFESSIONAL SEAL 20125 ENGINEER MARSHALL G. CHEEK, JR.
7-21-08

REVISIONS							SHEET NO.
NO.	BY:	DATE:	NO.	BY:	DATE:		S-54
1			3				TOTAL SHEETS
2			4				77

ASSEMBLED BY : L.L. MURPHY	DATE : 05-08		
CHECKED BY : M.G. CHEEK	DATE : 05-08		
DRAWN BY : TLA 6/05	ADDED 10/21/05		
CHECKED BY : VC 6/05	REV. 5/1/06R	KMM/GM	

21-JUL-2008 10:22
r:\structures\final plans\Str *2\R-2911B_sd_str*2-06_G*.dgn
dahodge

STR. #2

STD. NO. PCG12

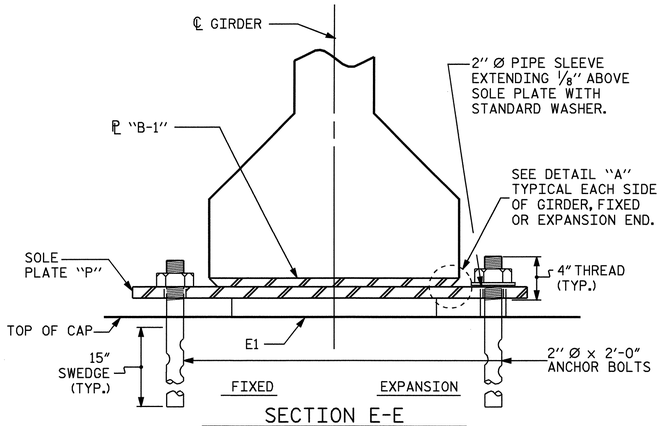

SECTION E-E

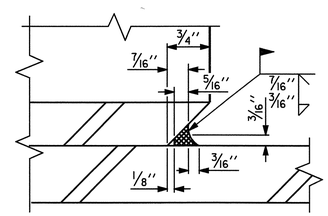

DETAIL "A"

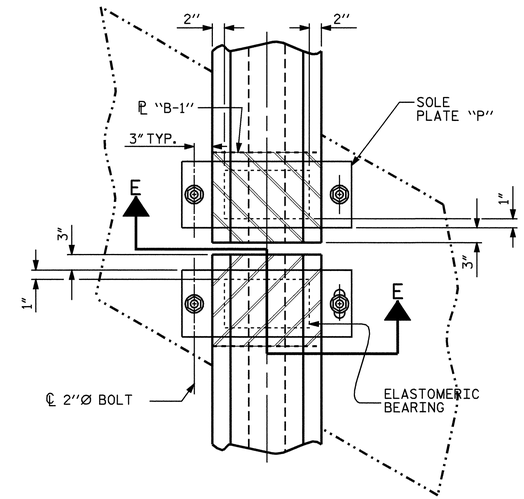

TYPICAL HALF-PLAN

(SHOWING CONTINUOUS BENT)

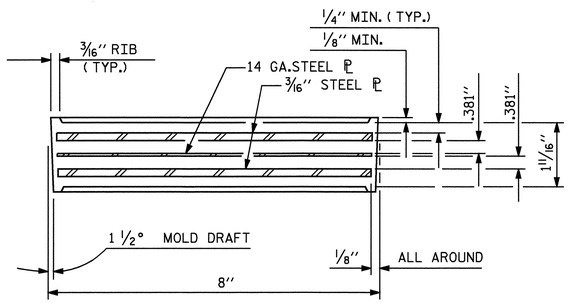

TYPICAL SECTION OF ELASTOMERIC BEARINGS

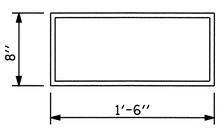

E1 (40 REQ'D)

PLAN VIEW OF ELASTOMERIC BEARING

TYPE III

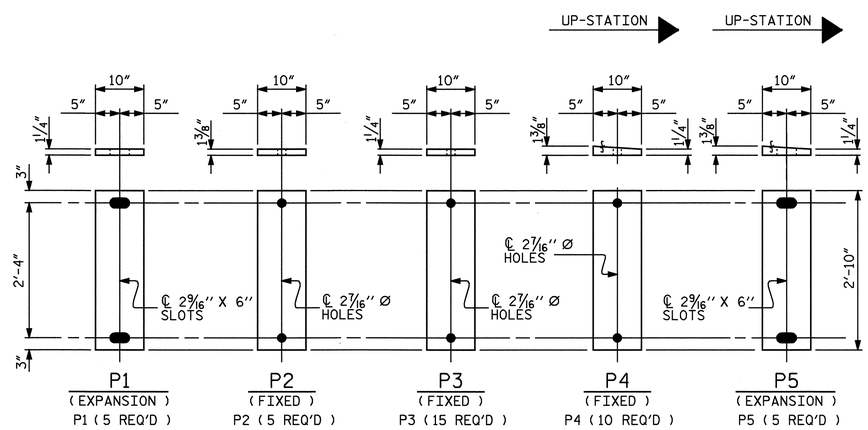

SOLE PLATE DETAILS ("P")

NOTES

AT ALL FIXED POINTS OF SUPPORT, NUTS FOR ANCHOR BOLTS ARE TO BE TIGHTENED FINGER TIGHT AND THEN BACKED OFF 1/2 TURN. THE THREAD OF THE NUT AND BOLT SHALL THEN BE BURRED WITH A SHARP POINTED TOOL.

THE 2" Ø PIPE SLEEVE SHALL BE CUT FROM SCHEDULE 40 PVC PLASTIC PIPE. THE PVC PLASTIC PIPE SHALL MEET THE REQUIREMENTS OF ASTM D1785.

STEEL SOLE PLATES, ANCHOR BOLTS, NUTS, AND WASHERS SHALL BE GALVANIZED IN ACCORDANCE WITH THE STANDARD SPECIFICATIONS.

PRIOR TO WELDING, GRIND THE GALVANIZED SURFACE OF THE PORTION OF THE EMBEDDED PLATE AND SOLE PLATE THAT ARE TO BE WELDED. AFTER WELDING, DAMAGED GALVANIZED SURFACES SHALL BE REPAIRED IN ACCORDANCE WITH THE STANDARD SPECIFICATIONS.

WHEN WELDING THE SOLE PLATE TO THE EMBEDDED PLATE IN THE GIRDER, USE TEMPERATURE INDICATING WAX PENS, OR OTHER SUITABLE MEANS, TO ENSURE THAT THE TEMPERATURE OF THE SOLE PLATE DOES NOT EXCEED 300°F. TEMPERATURES ABOVE THIS MAY DAMAGE THE ELASTOMER.

SOLE PLATE "P", BOLTS, NUTS, WASHERS, AND PIPE SLEEVE SHALL BE INCLUDED IN THE PAY ITEM FOR PRESTRESSED CONCRETE GIRDERS.

ANCHOR BOLTS SHALL MEET THE REQUIREMENTS OF ASTM A449. NUTS SHALL MEET THE REQUIREMENTS OF AASHTO M291-DH OR AASHTO M292-2H. WASHERS SHALL MEET THE REQUIREMENTS OF AASHTO M293. SHOP DRAWINGS ARE NOT REQUIRED FOR ANCHOR BOLT, NUTS AND WASHERS. SHOP INSPECTION IS REQUIRED.

ALL SURFACES OF BEARING PLATES SHALL BE SMOOTH AND STRAIGHT.

ELASTOMER IN ALL BEARINGS SHALL BE 60 DUROMETERS.

— LOAD RATINGS —	
	MAX.D.L.+L.L.
45" PCG -TYPE III	115 K

ALL BEARINGS SHALL BE 60 DUROMETER

PROJECT NO. R-2911B

ROWAN COUNTY

STATION: 137+95.00-L-

STATE OF NORTH CAROLINA
DEPARTMENT OF TRANSPORTATION
RALEIGH

STANDARD
ELASTOMERIC BEARING DETAILS
PRESTRESSED CONCRETE GIRDER
SUPERSTRUCTURE
RIGHT LANE

REVISIONS								SHEET NO.
NO.	BY:	DATE:	NO.	BY:	DATE:			S-55
1			3					TOTAL SHEETS
2			4					77

NORTH CAROLINA PROFESSIONAL SEAL 20125 ENGINEER MARSHALL L. GREEK, JR.
7-21-08

ASSEMBLED BY : L.L. MURPHY	DATE : 04-08		
CHECKED BY : M.G. CHEEK	DATE : 05-08		
DRAWN BY : WJH 8/89	REV. 10/17/00	RWW/LES	
CHECKED BY : CRK 8/89	REV. 7/10/01	RWW/LES	
	REV. 5/1/06	TLA/GM	

21-JUL-2008 11:20
r:\Structures\Final Plans\Str #2\R-2911B_sd_str#2-07_BG.dgn
dahodge

STR #2

STD. NO. EB3

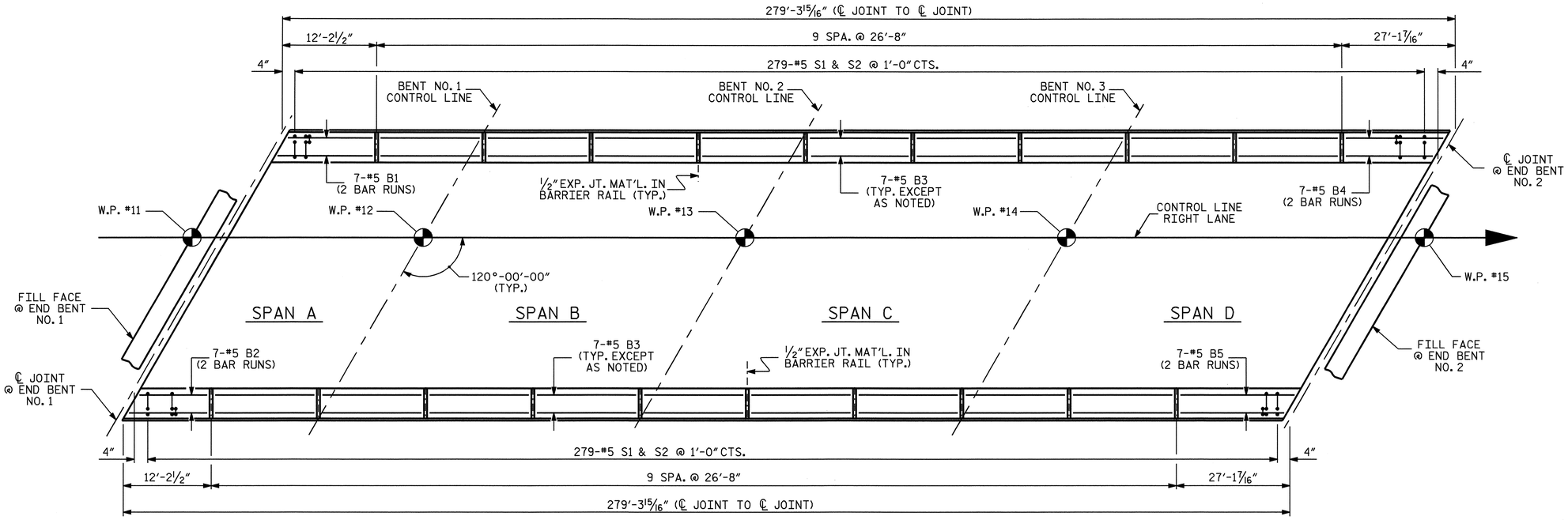

PLAN OF CONCRETE BARRIER RAIL

✳ FOR REINFORCING STEEL, SEE "END OF RAIL DETAILS"

BAR TYPES

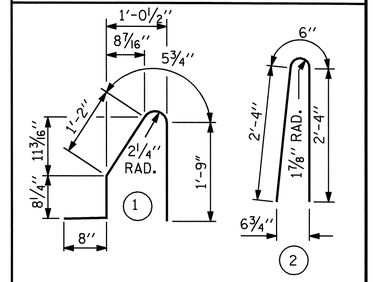

ALL BAR DIMENSIONS ARE OUT TO OUT

BILL OF MATERIAL

FOR CONCRETE BARRIER RAIL ONLY

BAR	NO.	SIZE	TYPE	LENGTH	WEIGHT
✳ S1	558	#5	1	4'-9"	2764
✳ S2	558	#5	2	5'-2"	3007
✳ B1	14	#5	STR	8'-1"	118
✳ B2	14	#5	STR	7'-8"	112
✳ B3	126	#5	STR	26'-3"	3450
✳ B4	14	#5	STR	15'-0"	219
✳ B5	14	#5	STR	15'-5"	225

✳ EPOXY COATED REINFORCING STEEL	9895 LBS.
CLASS AA CONCRETE	55.9 CU. YDS.
CONCRETE BARRIER RAIL	558.66 LIN. FT.

✳ THESE BARS ARE EPOXY COATED

NOTES

THE BARRIER RAIL IN A CONTINUOUS UNIT SHALL NOT BE CAST UNTIL ALL SLAB CONCRETE IN THAT UNIT HAS BEEN CAST AND HAS REACHED A MINIMUM COMPRESSIVE STRENGTH OF 3,000 PSI.

ALL REINFORCING STEEL IN BARRIER RAILS SHALL BE EPOXY COATED.

VERTICAL GROOVED CONTRACTION JOINTS, 1/2" IN DEPTH, SHALL BE TOOLED IN ALL EXPOSED FACES OF THE BARRIER RAIL AND IN ACCORDANCE WITH ARTICLE 825-10(B) OF THE STANDARD SPECIFICATIONS. THE CONTRACTION JOINT SHALL BE LOCATED AT EACH THIRD POINT BETWEEN BARRIER RAIL EXPANSION JOINTS. ONLY ONE CONTRACTION JOINT IS REQUIRED AT MIDPOINT OF BARRIER RAIL SEGMENTS LESS THAN 20 FEET IN LENGTH AND NO CONTRACTION JOINTS ARE REQUIRED FOR THOSE SEGMENTS LESS THAN 10 FEET IN LENGTH.

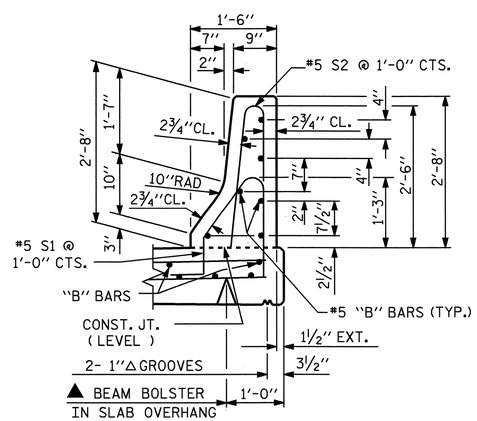

SECTION THRU RAIL

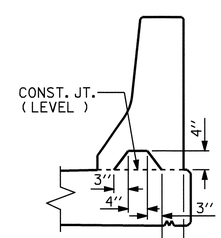

SECTION S-S

AT DAM IN OPEN JOINT
(THIS IS TO BE USED ONLY WHEN SLIP FORM IS USED)

▲ FOR BEAM BOLSTER HEIGHT SEE, "SUPERSTRUCTURE TYPICAL SECTION".

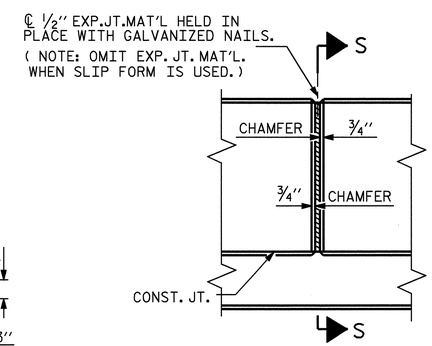

ELEVATION AT EXPANSION JOINTS

BARRIER RAIL DETAILS

PROJECT NO. R-2911B

ROWAN COUNTY

STATION: 137+95.00 -L-

SHEET 1 OF 2

STATE OF NORTH CAROLINA
DEPARTMENT OF TRANSPORTATION
RALEIGH

STANDARD

CONCRETE BARRIER RAIL RIGHT LANE

NORTH CAROLINA PROFESSIONAL SEAL 20125 ENGINEER MARSHALL LIGHDECK, JR.
7-21-08

REVISIONS							SHEET NO.
NO.	BY:	DATE:	NO.	BY:	DATE:		S-56
1			3				TOTAL SHEETS
2			4				77

ASSEMBLED BY : L.L. MURPHY	DATE : 04-08
CHECKED BY : M.G. CHEEK	DATE : 05-08
DRAWN BY : ARB 5/87	REV. 10/17/00 RWW/LES
CHECKED BY : SJD 9/87	REV. 5/7/03R RWW/JTE
	REV. 5/1/06 TLA/GM

21-JUL-2008 10:24
r:\structures\final plans\Str #2\R-2911B_sd_str#2-08_BR.dgn
dahodge

STR #2

STD. NO. CBR1

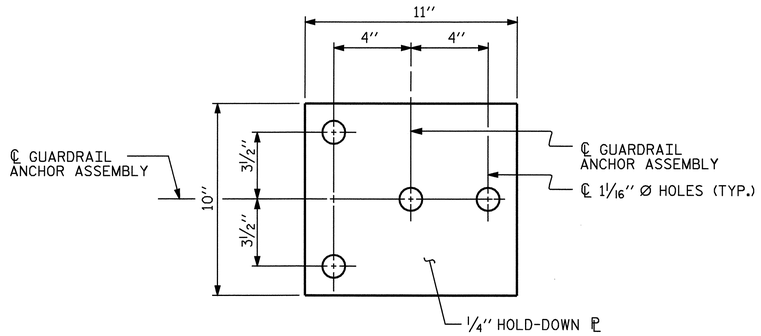

PLAN

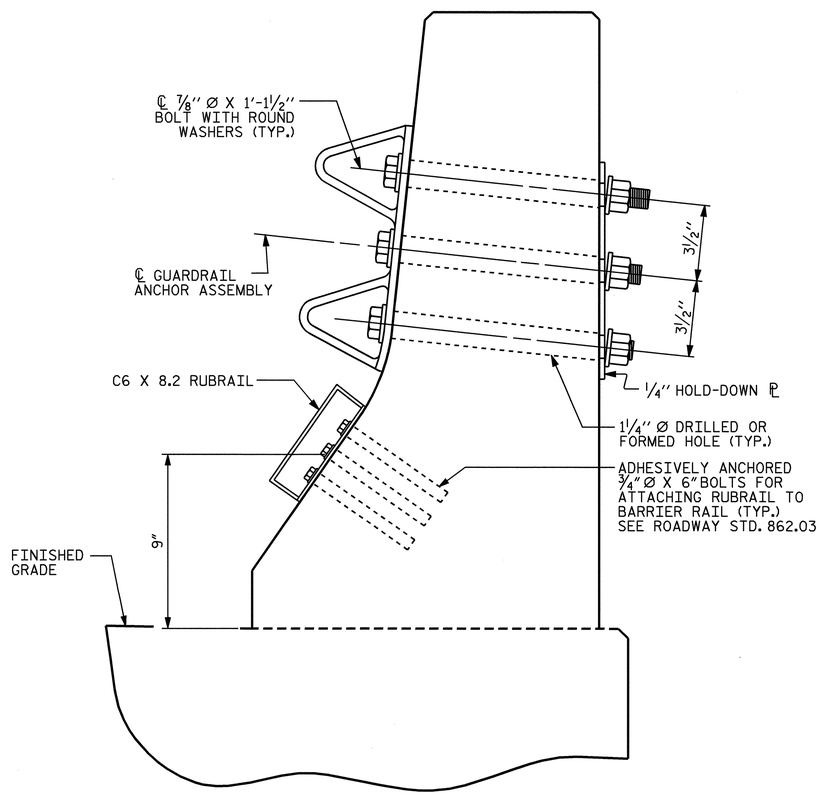

SECTION E-E

GUARDRAIL ANCHOR ASSEMBLY DETAILS

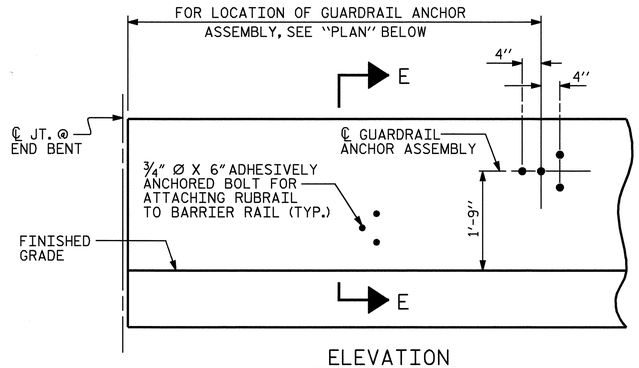

ELEVATION

FOR LOCATION OF RUBRAIL, SEE ROADWAY STD. 862.03

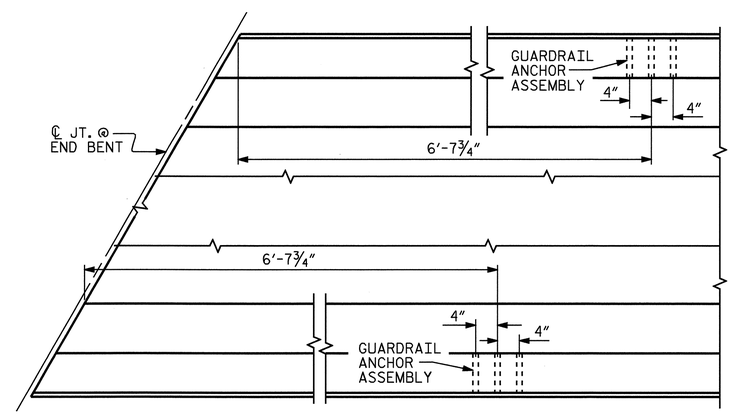

PLAN

LOCATION OF ANCHORS FOR GUARDRAIL

END BENT #1 SHOWN, END BENT #2 SIMILAR.

NOTES

THE GUARDRAIL ANCHOR ASSEMBLY SHALL CONSIST OF A 1/4" HOLD DOWN PLATE AND 4 - 7/8" Ø BOLTS WITH NUTS AND WASHERS, RUBRAIL, AND ADHESIVELY ANCHORED BOLTS.

THE HOLD-DOWN PLATE SHALL CONFORM TO AASHTO M270 GRADE 36. AFTER FABRICATION, THE HOLD-DOWN PLATE SHALL BE HOT-DIP GALVANIZED IN ACCORDANCE WITH AASHTO M111.

BOLTS SHALL CONFORM TO THE REQUIREMENTS OF ASTM A307 AND NUTS SHALL CONFORM TO THE REQUIREMENTS OF AASHTO M291. BOLTS, NUTS AND WASHERS SHALL BE GALVANIZED. (AT THE CONTRACTOR'S OPTION, STAINLESS STEEL BOLTS, NUTS AND WASHERS MAY BE USED AS AN ALTERNATE FOR THE 7/8" Ø GALVANIZED BOLTS, NUTS AND WASHERS. THEY SHALL CONFORM TO OR EXCEED THE MECHANICAL REQUIREMENTS OF ASTM A307. THE USE OF THIS ALTERNATE SHALL BE APPROVED BY THE ENGINEER.)

THE GUARDRAIL ANCHOR ASSEMBLY IS REQUIRED AT ALL POINTS WHERE APPROACH GUARDRAIL IS TO BE ATTACHED TO THE END OF BARRIER RAIL. FOR POINTS OF ATTACHMENT, SEE SKETCH.

AFTER INSTALLATION, THE EXPOSED THREAD OF THE BOLT SHALL BE BURRED WITH A SHARP POINTED TOOL.

THE COST OF THE GUARDRAIL ANCHOR ASSEMBLY SHALL BE INCLUDED IN THE UNIT CONTRACT PRICE BID FOR CONCRETE BARRIER RAIL.

THE 1 1/4" Ø HOLES SHALL BE FORMED OR DRILLED WITH A CORE BIT. IMPACT TOOLS WILL NOT BE PERMITTED. ANY CONCRETE DAMAGED BY THIS WORK SHALL BE REPAIRED TO THE SATISFACTION OF THE ENGINEER.

THE C6 X 8.2 RUBRAIL IS TO BE ADHESIVELY ANCHORED TO THE RAIL USING THREE 3/4"Ø X 6" BOLTS WITH WASHERS. LEVEL ONE FIELD TESTING IS REQUIRED, AND THE YIELD LOAD OF THE 3/4"Ø BOLT IS 12 KIPS. FOR ADHESIVELY ANCHORED ANCHOR BOLTS OR DOWELS, SEE SPECIAL PROVISIONS. SEE ROADWAY STANDARD 862.03 FOR DETAILS AND LOCATION OF THE RUBRAIL.

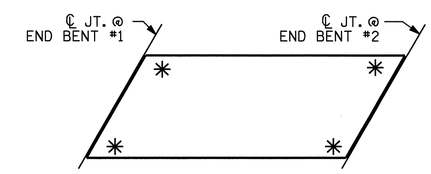

SKETCH SHOWING POINTS OF ATTACHMENTS

✳ DENOTES GUARDRAIL ANCHOR ASSEMBLY

PROJECT NO. R-2911B
ROWAN COUNTY
STATION: 137+95.00-L-

SHEET 2 OF 2

STATE OF NORTH CAROLINA
DEPARTMENT OF TRANSPORTATION
RALEIGH

STANDARD
GUARDRAIL ANCHORAGE FOR BARRIER RAIL RIGHT LANE

NORTH CAROLINA PROFESSIONAL SEAL 20125 ENGINEER MARSHALL G. CHEEK, JR.
7-21-08

REVISIONS						SHEET NO.
NO.	BY:	DATE:	NO.	BY:	DATE:	S-57
1			3			TOTAL SHEETS
2			4			77

ASSEMBLED BY : L.L. MURPHY	DATE : 04-08		
CHECKED BY : M.G. CHEEK	DATE : 05-08		
DRAWN BY : TLA 5/06	ADDED 5/1/06R KMM/GM		
CHECKED BY : GM 5/06			

21-JUL-2008 11:21
r:\Structures\Final Plans\Str #2\R-2911B_sd_str#2-08_BR.dgn
dahodge

STR #2 STD. NO. GRA2

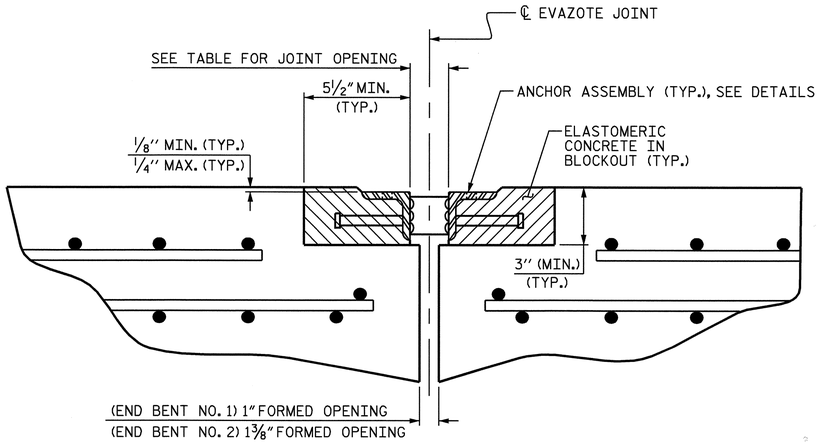

ARMORED JOINT DETAILS

SECTION NORMAL TO JOINT AT BENT

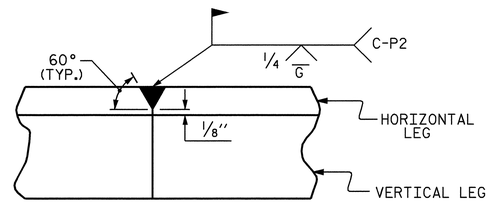

DETAIL- FIELD WELD SPLICE OF ANGLE

NOTES

ANGLES SHALL CONFORM TO AASHTO M270 GRADE 36 STEEL OR APPROVED EQUAL. ALL STUD ANCHORS SHALL CONFORM TO AASHTO M169 GRADES 1010 THRU 1020 OR APPROVED EQUAL.

STUD ANCHORS SHALL BE SHOP WELDED AND ALL HOLES SHALL BE SHOP DRILLED AS SHOWN ON THE PLANS. STUD ANCHORS SHALL BE ELECTRIC ARC END WELDED WITH COMPLETE FUSION.

UPON COMPLETION OF SHOP FABRICATION, THE ENTIRE ANCHOR ASSEMBLY SHALL BE METALLIZED. THE ½" Ø STUD ANCHORS AND ANCHOR TABS NEED NOT BE METALLIZED. SEE SPECIAL PROVISION FOR THERMAL SPRAYED COATINGS (METALLIZATION).

ANCHOR ASSEMBLY SHALL BE MADE CONTINUOUS THE LENGTH OF THE JOINT FROM GUTTER TO GUTTER. FOR FIELD SPLICES AT ALL CROWN BREAK POINTS, THE ENDS OF THE STEEL ANGLES SHALL BE CUT PARALLEL TO THE BRIDGE CENTERLINE. FINISHED FIELD WELDS SHALL BE GROUND SMOOTH AND COATED WITH A MINIMUM THICKNESS OF 4 DRY MILS OF ZINC-RICH PAINT IN ACCORDANCE WITH THE STANDARD SPECIFICATIONS.

ANCHOR ASSEMBLY SEGMENTS SHALL NOT BE LESS THAN 12 FEET NOR MORE THAN 20 FEET IN LENGTH. SHORTER SEGMENTS MAY BE USED AT THE EDGE OF ROADWAY OR AT POINTS OF STAGED CONSTRUCTION.

THE ANCHOR ASSEMBLY SHALL BE SECURED AND LEVELED AS SHOWN IN THE "ARMORED JOINT ANCHOR ASSEMBLY DETAILS". NO SUBMITTALS ARE REQUIRED FOR ⅜" Ø EXPANSION ANCHORS, NUTS OR WASHERS. THE CONTRACTOR MAY SUBMIT FOR APPROVAL AN ALTERNATE METHOD OF ALIGNING AND LEVELING THE ANGLES. THE ALTERNATE METHOD SHALL NOT INCLUDE ANY WELDING TO THE OUTSIDE FACE OF THE ANGLES.

AFTER THE ELASTOMERIC CONCRETE HAS BEEN CAST ON BOTH SIDES OF THE JOINT, REMOVE ANY EXCESS CONCRETE THAT COMES THROUGH THE WEEP HOLES AND THOROUGHLY CLEAN THE ANGLES. ANY DAMAGED STEEL SHALL BE COATED WITH A MINIMUM OF 4 MILS OF ZINC-RICH PAINT IN ACCORDANCE WITH THE STANDARD SPECIFICATIONS.

SEE SPECIAL PROVISIONS FOR EVAZOTE JOINT SEALS.

SEE SPECIAL PROVISIONS FOR ELASTOMERIC CONCRETE.

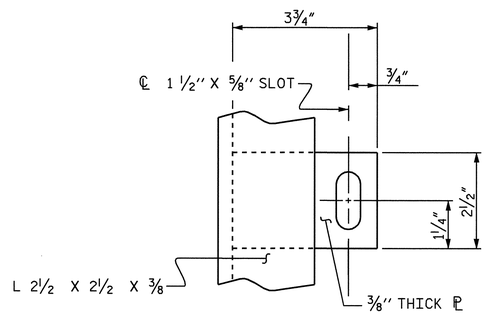

PLAN VIEW OF TAB

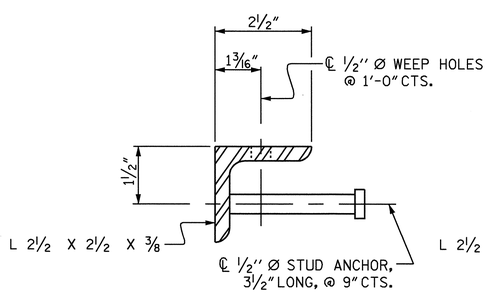

SECTION VIEW OF STUD

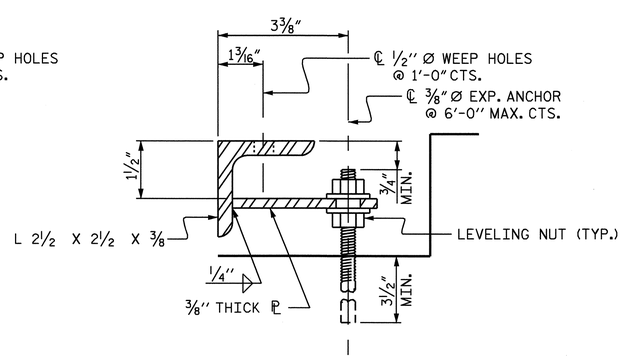

SECTION VIEW OF TAB

ARMORED JOINT ANCHOR ASSEMBLY DETAILS

MOVEMENT AND SETTING AT EVAZOTE JOINT

END BENT NO.	SKEW ANGLE	NOMINAL UNCOMPRESSED SEAL WIDTH	TOTAL MOVEMENT (ALONG ℄ RDWY)	PERPENDICULAR JOINT OPENING AT 45° F	PERPENDICULAR JOINT OPENING AT 60° F	PERPENDICULAR JOINT OPENING AT 90° F
1	120°	2½"	13⁄16"	2 3⁄16"	2"	1 11⁄16"
2	120°	2 13⁄16"	1⅛"	2 1⁄16"	2¼"	1⅞"

TOTAL MOVEMENT IS CALCULATED ALONG THE CENTERLINE OF ROADWAY.
JOINT OPENINGS ARE MEASURED PERPENDICULAR TO THE JOINT.

BILL OF MATERIAL

END BENT NO.	ELASTOMERIC CONCRETE ✳ (CU. FT.)	TOTAL LENGTH OF ANGLE (FT)
1	9.5	83'-1 11⁄16"
2	9.5	83'-1 11⁄16"

✳ BASED ON THE MINIMUM BLOCKOUT SHOWN.

PROJECT NO. R-2911B
ROWAN COUNTY
STATION: 137+95.00-L-

STATE OF NORTH CAROLINA
DEPARTMENT OF TRANSPORTATION
RALEIGH

STANDARD

ARMORED EVAZOTE JOINT DETAILS RIGHT LANE

NORTH CAROLINA PROFESSIONAL SEAL 20125 ENGINEER MARSHALL G. CHEEK, JR.
7-21-08

REVISIONS						SHEET NO.
NO.	BY:	DATE:	NO.	BY:	DATE:	S-58
1			3			TOTAL SHEETS
2			4			77

STR #2 STD. NO. AEJ1

ASSEMBLED BY : L.L. MURPHY	DATE : 04-08		
CHECKED BY : M.G. CHEEK	DATE : 05-08		
DRAWN BY : EEM 1/96	REV. 7/10/01 LES/RDR		
CHECKED BY : RGW 1/96	REV. 5/7/03RR RWW/JTE		
	REV. 5/1/06 TLA/GM		

17-JUN-2008 16:30
R:\Structures\r2911b\lmurphy\Microstation\Str#2\R2911B_sd_JS_str#2armored.dgn
afigueroa

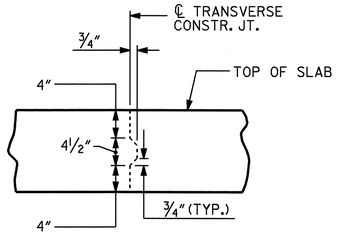

TRANSVERSE CONSTRUCTION JOINT DETAIL

NOTE: REINFORCING STEEL IN SLAB NOT SHOWN. LONGITUDINAL REINFORCING STEEL SHALL BE CONTINUOUS THRU JOINT

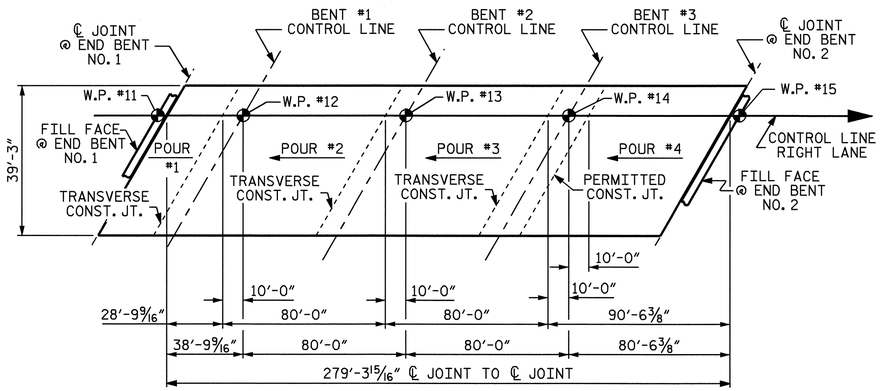

POUR SEQUENCE

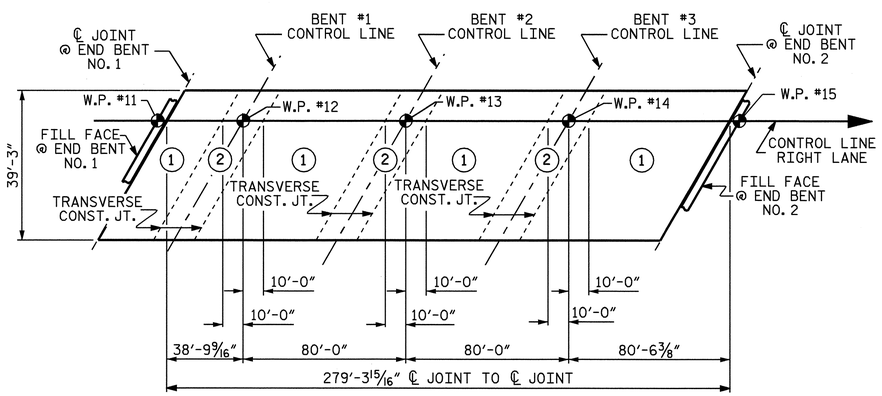

OPTIONAL POUR SEQUENCE

POUR (2) CANNOT BE STARTED UNTIL BOTH ADJACENT (1) POURS REACH A MINIMUM OF 3000 PSI

REINFORCING BAR SCHEDULE SPANS A THRU D

BAR	NO.	SIZE	TYPE	LENGTH	WEIGHT	BAR	NO.	SIZE	TYPE	LENGTH	WEIGHT
✳ A1	439	#5	STR	38'-11"	17819	A214	4	#5	STR	11'-1"	46
A2	439	#5	STR	38'-11"	17819	A215	4	#5	STR	9'-1"	38
						A216	4	#5	STR	7'-1"	30
✳ A101	4	#5	STR	37'-4"	156	A217	4	#5	STR	5'-0"	21
✳ A102	4	#5	STR	35'-4"	147	A218	4	#5	STR	3'-0"	13
✳ A103	4	#5	STR	33'-4"	139						
✳ A104	4	#5	STR	31'-3"	130	✳ B1	28	#4	STR	24'-0"	449
✳ A105	4	#5	STR	29'-3"	122	✳ B2	28	#7	STR	45'-8"	2614
✳ A106	4	#5	STR	27'-3"	114	✳ B3	25	#7	STR	17'-10"	911
✳ A107	4	#5	STR	25'-3"	105	✳ B4	56	#4	STR	26'-0"	973
✳ A108	4	#5	STR	23'-3"	97	✳ B5	56	#7	STR	58'-0"	6639
✳ A109	4	#5	STR	21'-2"	88	✳ B6	50	#7	STR	24'-0"	2453
✳ A110	4	#5	STR	19'-2"	80	✳ B7	56	#4	STR	27'-8"	1035
✳ A111	4	#5	STR	17'-2"	72	B8	220	#5	STR	57'-6"	13194
✳ A112	4	#5	STR	15'-2"	63						
✳ A113	4	#5	STR	13'-1"	55	✳ G1	4	#5	STR	23'-9"	99
✳ A114	4	#5	STR	11'-1"	46						
✳ A115	4	#5	STR	9'-1"	38	✳ K1	8	#8	1	12'-0"	256
✳ A116	4	#5	STR	7'-1"	30	✳ K2	12	#8	2	16'-8"	534
✳ A117	4	#5	STR	5'-0"	21	✳ K3	24	#6	STR	7'-5"	267
✳ A118	4	#5	STR	3'-0"	13	K4	24	#4	STR	5'-5"	87
						K5	48	#4	STR	8'-4"	267
A201	4	#5	STR	37'-4"	156	K6	24	#4	STR	7'-5"	119
A202	4	#5	STR	35'-4"	147	K7	24	#4	3	5'-10"	94
A203	4	#5	STR	33'-4"	139	K8	36	#4	4	11'-6"	277
A204	4	#5	STR	31'-3"	130						
A205	4	#5	STR	29'-3"	122	✳ S1	56	#5	5	4'-8"	273
A206	4	#5	STR	27'-3"	114	✳ S2	56	#4	6	4'-3"	159
A207	4	#5	STR	25'-3"	105	S3	228	#4	7	2'-9"	419
A208	4	#5	STR	23'-3"	97						
A209	4	#5	STR	21'-2"	88	✳ U1	60	#4	2	14'-6"	581
A210	4	#5	STR	19'-2"	80	✳ U2	24	#4	2	12'-6"	200
A211	4	#5	STR	17'-2"	72						
A212	4	#5	STR	15'-2"	63	REINFORCING STEEL = 33,792 LBS					
A213	4	#5	STR	13'-1"	55	✳ EPOXY COATED REINF. STEEL = 36,778 LBS					

THESE BARS ARE EPOXY COATED

BAR TYPES

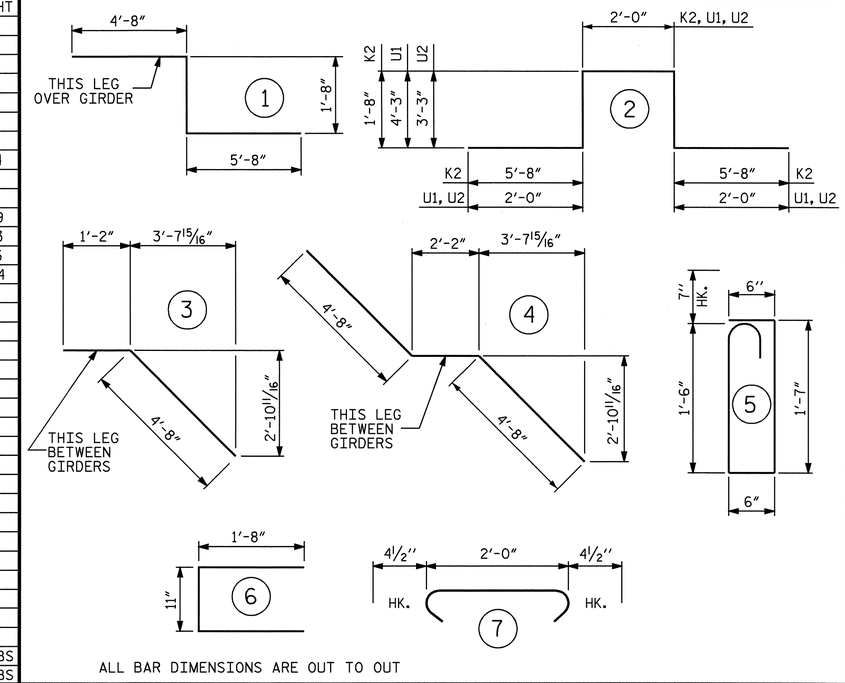

ALL BAR DIMENSIONS ARE OUT TO OUT

SUPERSTRUCTURE BILL OF MATERIAL

		CLASS AA CONCRETE	REINFORCING STEEL	EPOXY COATED REINFORCING STEEL
		(CU. YDS.)	(LBS.)	(LBS.)
SPAN A, B, C AND D	POUR #1	39.7	33,792	36,778
	POUR #2	108.8		
	POUR #3	108.8		
	POUR #4	125.7		
TOTALS ✳✳		383.0	33,792	36,778

✳✳ QUANTITIES FOR BARRIER RAIL ARE NOT INCLUDED

SUPERSTRUCTURE REINFORCING STEEL LENGTHS ARE BASED ON THE FOLLOWING MINIMUM SPLICE LENGTHS

BAR SIZE	SUPERSTRUCTURE EXCEPT APPROACH SLABS, PARAPET, AND BARRIER RAIL		APPROACH SLABS		PARAPET AND BARRIER RAIL
	EPOXY COATED	UNCOATED	EPOXY COATED	UNCOATED	
#4	2'-0"	1'-9"	2'-0"	1'-9"	2'-9"
#5	2'-6"	2'-2"	2'-6"	2'-2"	3'-5"
#6	3'-0"	2'-7"	3'-10"	2'-7"	4'-4"
#7	5'-3"	3'-6"			
#8	6'-10"	4'-7"			

GROOVING BRIDGE FLOORS

BRIDGE DECK	9,173	SQ.FT.
APPROACH SLAB	1,594	SQ.FT.
TOTAL	10,767	SQ.FT.

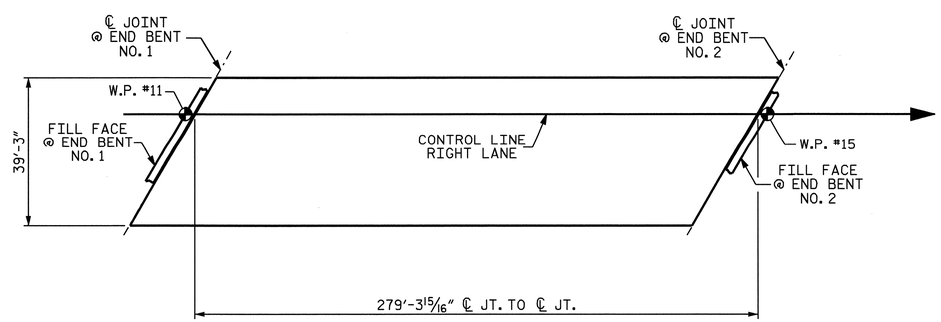

LAYOUT FOR COMPUTING AREA
REINFORCED CONCRETE DECK SLAB
(SQ. FT. = 10,963 SQ. FT.)

PROJECT NO. R-2911B
ROWAN COUNTY
STATION: 137+95.00 -L-

STATE OF NORTH CAROLINA
DEPARTMENT OF TRANSPORTATION
RALEIGH

SUPERSTRUCTURE
BILL OF MATERIAL
RIGHT LANE

NORTH CAROLINA PROFESSIONAL SEAL 20125 ENGINEER MARSHALL L. GOODSELL, JR.
7-21-08

REVISIONS								SHEET NO.
NO.	BY:	DATE:	NO.	BY:	DATE:			S-59
1			3					TOTAL SHEETS
2			4					77

ASSEMBLED BY : L.L. MURPHY	DATE : 04-08		
CHECKED BY : M.G. CHEEK	DATE : 05-08		
DRAWN BY : JMB 5/87	REV. 6/1/94	EEM/GRP	
CHECKED BY : SJD 9/87	REV. 8/16/99	RWW/LES	
	REV. 5/1/06	TLA/GM	

21-JUL-2008 10:29
r:\structures\final plans\Str #2\R-2911B_sd_str#2-10_BM.dgn
dahodge

STR #2 STD. NO. BOM2

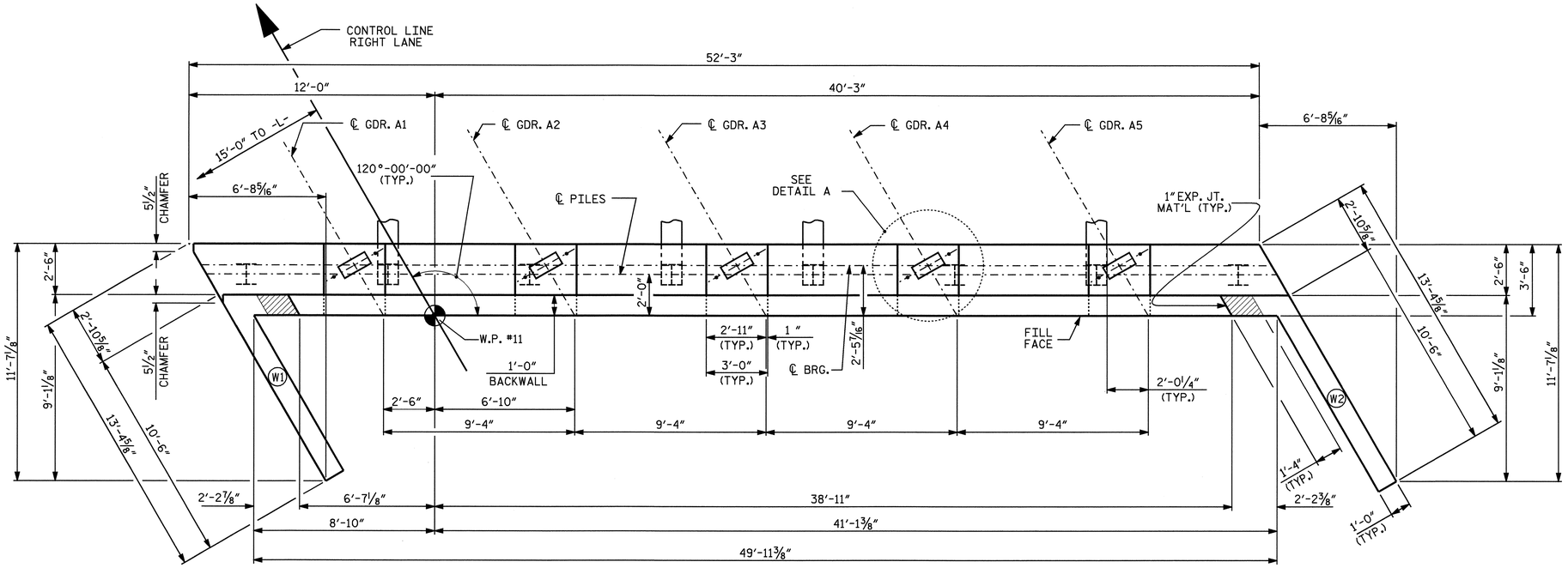

PLAN

✳FOR LOCATION OF ELEVATIONS BETWEEN BRIDGE SEAT BUILD-UPS, SEE SECTION A-A, SHEET 3 OF 3

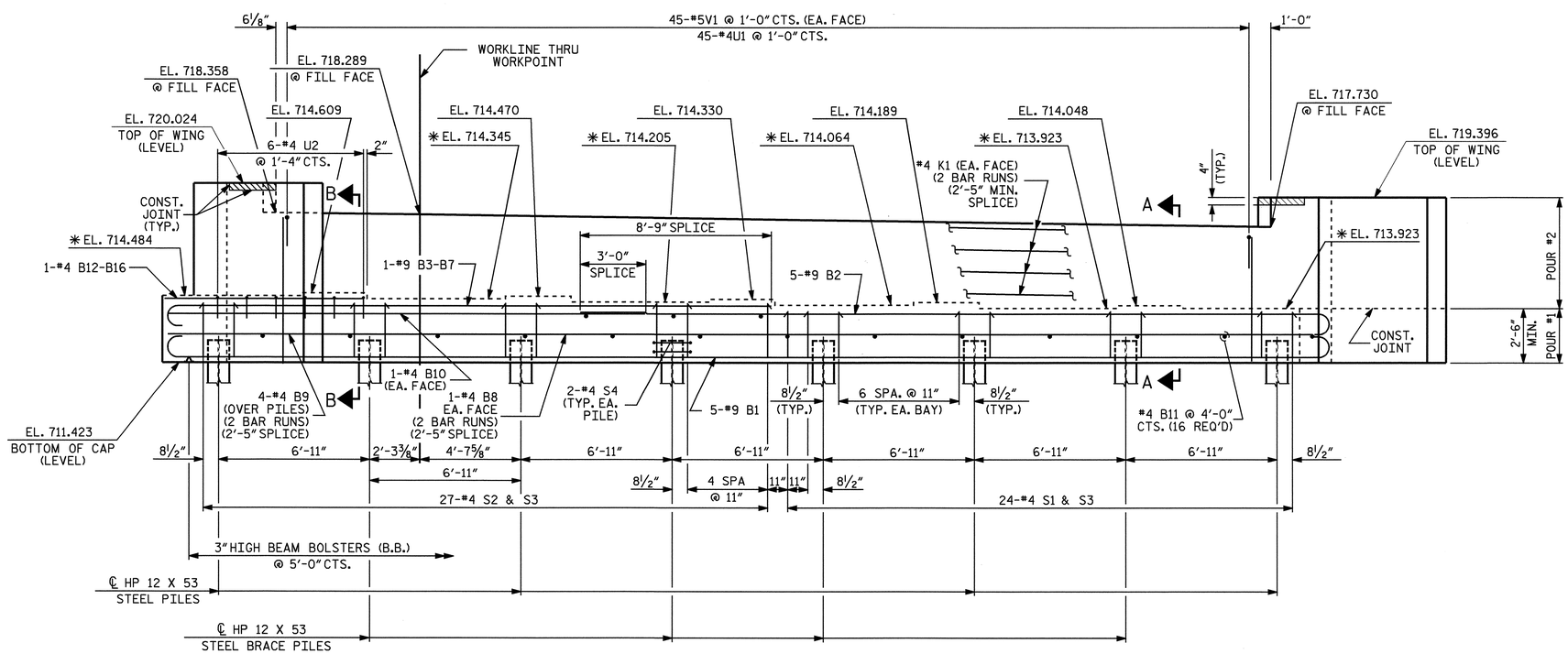

ELEVATION

NOTES

STIRRUPS IN CAP MAY BE SHIFTED AS NECESSARY TO CLEAR ANCHOR BOLTS.

FOR SECTION A-A, SEE SHEET 3 OF 3.

FOR PILE SPLICE DETAILS SEE SHEET 3 OF 3.

FOR TEMPORARY DRAINAGE AT END BENTS, SEE SHEET 3 OF 3.

BACKWALL SHALL BE PLACED BEFORE APPLYING THE EPOXY PROTECTIVE COATING.

THE TOP SURFACE AREA OF THE END BENT CAP SHALL BE CURED IN ACCORDANCE WITH THE STANDARD SPECIFICATIONS EXCEPT THAT THE MEMBRANE CURING COMPOUND METHOD SHALL NO BE USED.

THE TOP SURFACE OF THE END BENT CAP EXCEPT THE BRIDGE SEAT BUILDUPS SHALL BE SLOPED TRANSVERSELY FROM THE FILL FACE TO THE BACK FACE AT THE RATE OF 2%.

THE CONTRACTOR SHALL PROVIDE FOR INSTALLATION OF THE 4" DIAMETER DRAIN PIPE THROUGH THE WING WALL AS REQUIRED FOR REINFORCED BRIDGE APPROACH FILLS, SEE THE ROADWAY PLANS. REINFORCING STEEL IN THE WING WALL MAY BE SHIFTED AS NECESSARY TO CLEAR THE DRAIN PIPE.

THE CONCRETE IN THE SHADED AREA OF THE WING SHALL BE POURED AFTER THE BARRIER RAIL IS CAST IF SLIP FORMING IS USED.

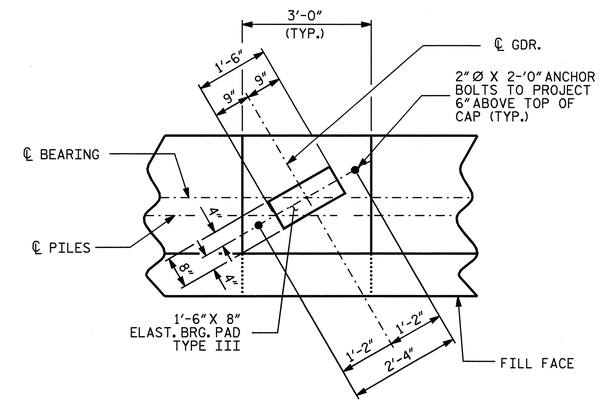

DETAIL A

PROJECT NO. R-2911B

ROWAN COUNTY

STATION: 137+95.00 -L-

SHEET 1 OF 3

STATE OF NORTH CAROLINA
DEPARTMENT OF TRANSPORTATION
RALEIGH

SUBSTRUCTURE
END BENT NO. 1
RIGHT LANE

NORTH CAROLINA PROFESSIONAL SEAL 20125 ENGINEER MARSHALL L. GREEN, JR.
7-21-08

REVISIONS						SHEET NO.
NO.	BY:	DATE:	NO.	BY:	DATE:	S-60
1			3			TOTAL SHEETS
2			4			77

STR #2

DRAWN BY : A.L. FIGUEROA DATE : 5-14-08
CHECKED BY : L.L MURPHY DATE : 6-9-08

21-JUL-2008 10:32
r:\structures\finalplans\Str #2\R-2911B_sd_str#2-11_EB 1&2 .dgn
dahodge

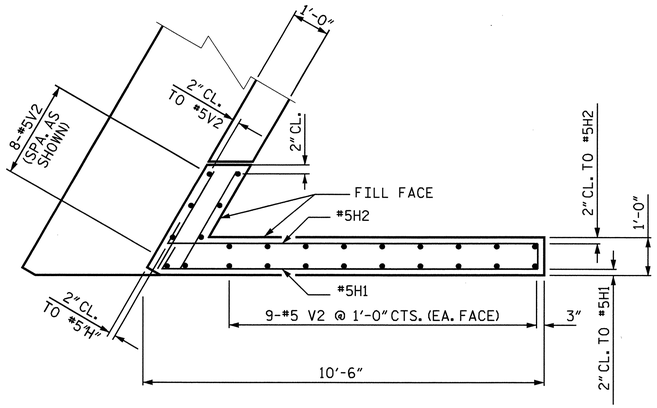

PLAN OF LEFT WING - W1

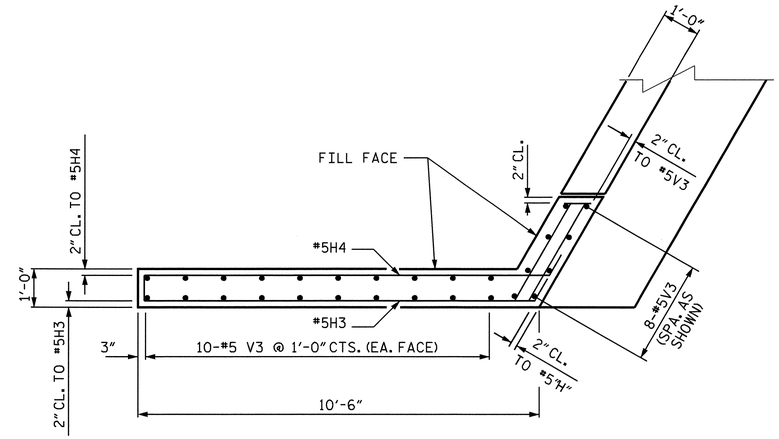

PLAN OF RIGHT WING - W2

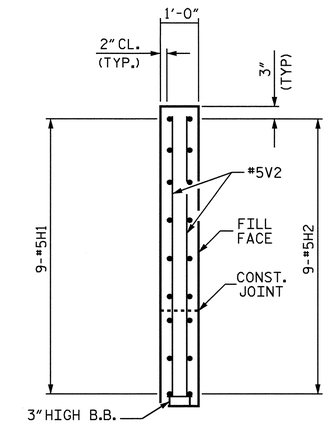

SECTION X-X

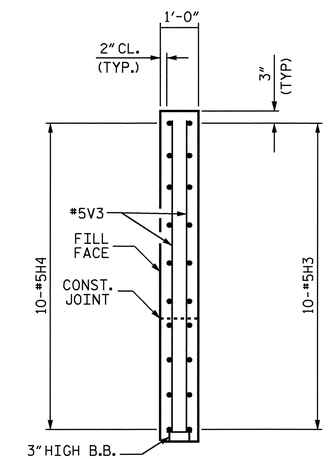

SECTION Y-Y

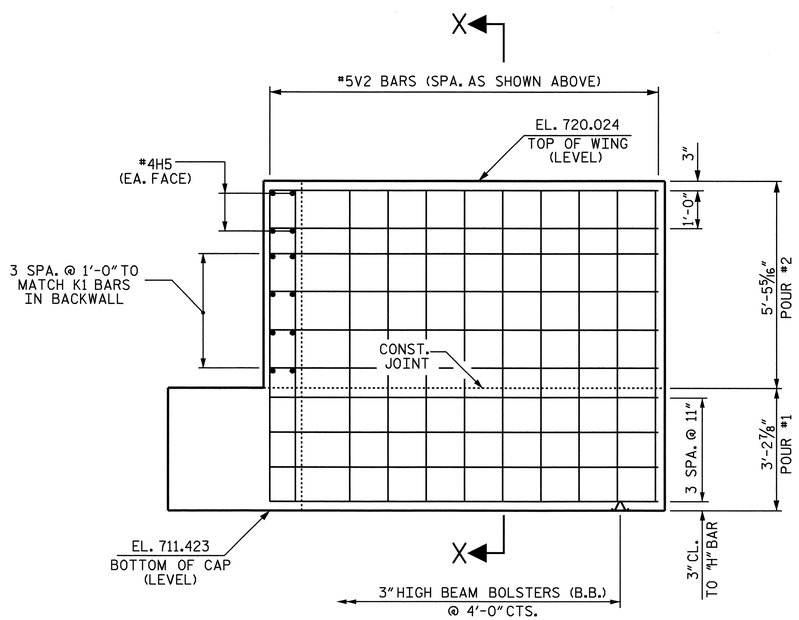

ELEVATION OF LEFT WING - W1

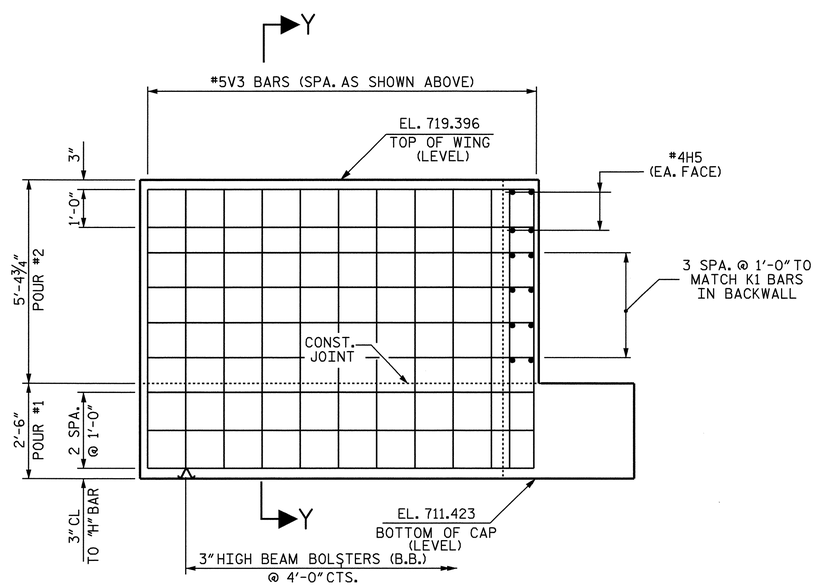

ELEVATION OF RIGHT WING - W2

PROJECT NO. R-2911B

ROWAN COUNTY

STATION: 137+95.00 -L-

SHEET 2 OF 3

STATE OF NORTH CAROLINA
DEPARTMENT OF TRANSPORTATION
RALEIGH

SUBSTRUCTURE
END BENT NO. 1
RIGHT LANE

NORTH CAROLINA PROFESSIONAL SEAL 20125 ENGINEER MARSHALL A. CHEEK, JR.
7-21-08

REVISIONS								SHEET NO.
NO.	BY:	DATE:	NO.	BY:	DATE:			S-61
1			3					TOTAL SHEETS
2			4					77

STR#2

DRAWN BY : A.L. FIGUEROA DATE : 5-07-08
CHECKED BY : L.L. MURPHY DATE : 6-09-08

20-JUN-2008 10:05
r:\structures\r2911b\alfigueroa\microstation\r-2911b_sd_eb 1&2 -str*2 .dgn
lmurphy

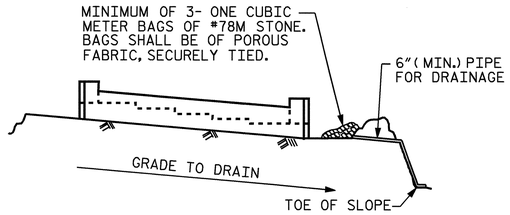

BAGGED STONE AND PIPE SHALL BE PLACED IMMEDIATELY AFTER COMPLETION OF END BENT EXCAVATION. PIPE MAY BE EITHER CONCRETE, CORRUGATED STEEL, CORRUGATED ALUMINUM ALLOY, OR CORRUGATED PLASTIC. PERFORATED PIPE WILL NOT BE ALLOWED.

BAGGED STONE SHALL REMAIN IN PLACE UNTIL THE ENGINEER DIRECTS THAT IT BE REMOVED. THE CONTRACTOR SHALL REMOVE AND DISPOSE OF SILT ACCUMULATIONS AT BAGGED STONE WHEN SO DIRECTED BY THE ENGINEER. BAGS SHALL BE REMOVED AND REPLACED WHENEVER THE ENGINEER DETERMINES THAT THEY HAVE DETERIORATED AND LOST THEIR EFFECTIVENESS.

NO SEPARATE PAYMENT WILL BE MADE FOR THIS WORK AND THE ENTIRE COST OF THIS WORK SHALL BE INCLUDED IN THE UNIT CONTRACT PRICE BID FOR THE SEVERAL PAY ITEMS.

TEMPORARY DRAINAGE AT END BENT

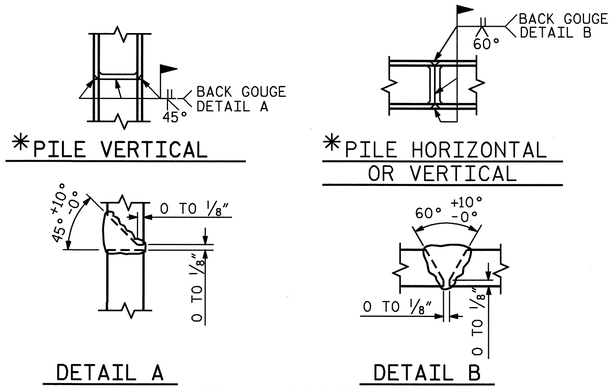

* POSITION OF PILE DURING WELDING.

PILE SPLICE DETAILS

BAR TYPES

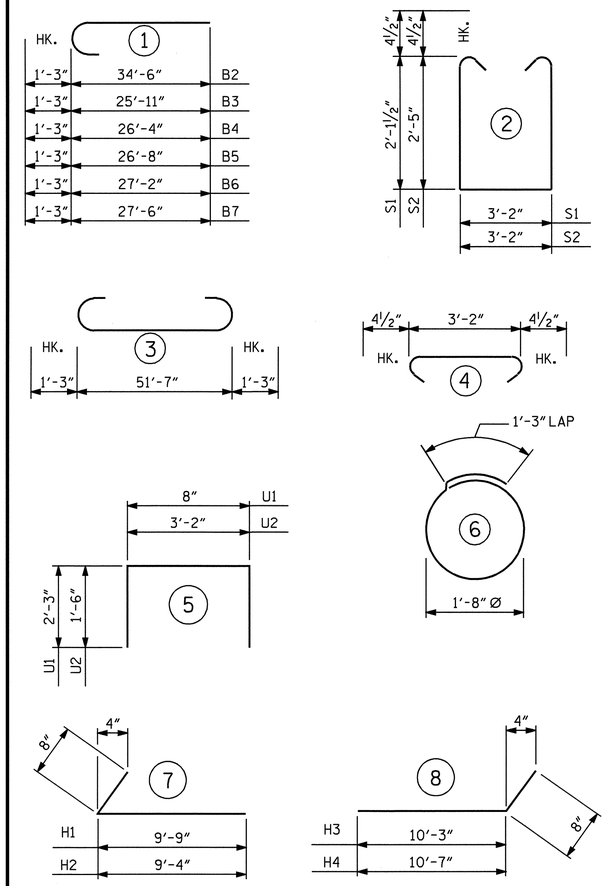

ALL BAR DIMENSIONS ARE OUT TO OUT.

BILL OF MATERIAL

END BENT NO. 1

BAR	NO.	SIZE	TYPE	LENGTH	WEIGHT
B1	5	#9	3	54'-1"	919
B2	5	#9	1	35'-9"	608
B3	1	#9	1	27'-2"	92
B4	1	#9	1	27'-7"	94
B5	1	#9	1	27'-11"	95
B6	1	#9	1	28'-5"	97
B7	1	#9	1	28'-9"	98
B8	4	#4	STR	27'-1"	72
B9	8	#4	STR	27'-1"	145
B10	2	#4	STR	20'-2"	27
B11	16	#4	STR	3'-2"	34
B12	1	#4	STR	7'-3"	5
B13	1	#4	STR	7'-8"	5
B14	1	#4	STR	8'-0"	5
B15	1	#4	STR	8'-6"	6
B16	1	#4	STR	8'-11"	6
H1	10	#5	7	10'-5"	109
H2	10	#5	7	10'-4"	108
H3	9	#5	8	10'-11"	102
H4	9	#5	8	11'-3"	106
H5	8	#4	STR	2'-11"	16
K1	16	#4	STR	27'-0"	289
S1	24	#4	2	8'-2"	131
S2	27	#4	2	8'-10"	159
S3	51	#4	4	3'-11"	133
S4	16	#4	6	6'-6"	69
U1	45	#4	5	5'-2"	155
U2	6	#4	5	6'-2"	25
V1	90	#5	STR	5'-9"	540
V2	26	#5	STR	8'-1"	219
V3	28	#5	STR	7'-5"	217

REINFORCING STEEL = 4686 LBS

CLASS A CONCRETE BREAKDOWN

POUR #1
CAP, LOWER PART OF WINGS & BRACE PILE BLOCK 21.0 C.Y.

POUR #2
BACKWALL & UPPER PART OF WINGS 11.5 C.Y.

CLASS A CONCRETE TOTAL 32.5 C.Y.

HP 12 X 53 STEEL PILES

NO. 8 240 LIN. FT.

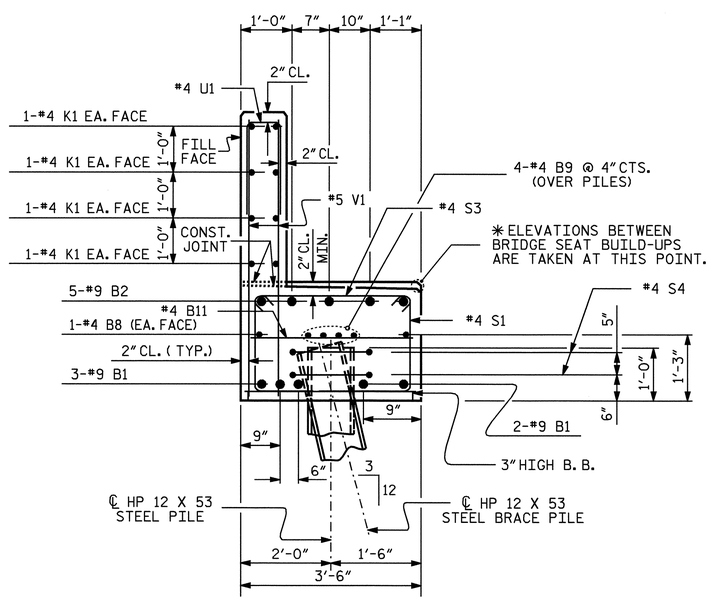

SECTION A-A

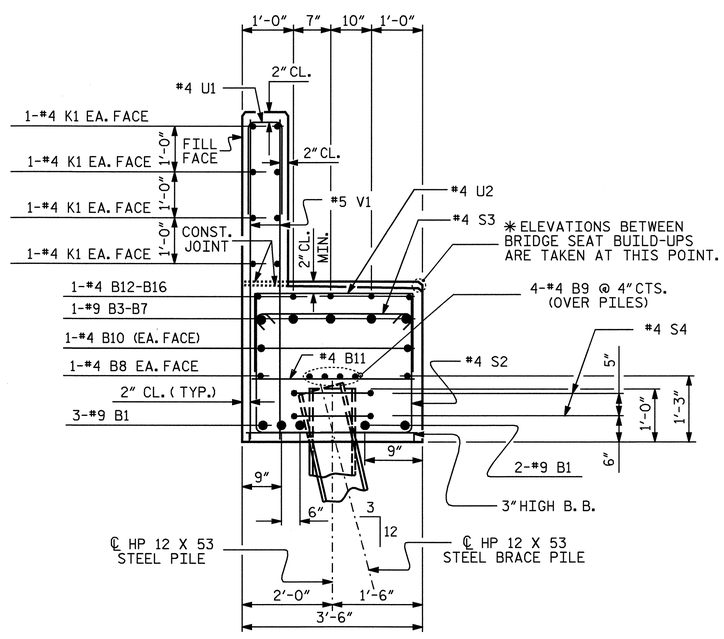

SECTION B-B

PROJECT NO. R-2911B
ROWAN COUNTY
STATION: 137+95.00 -L-

SHEET 3 OF 3

STATE OF NORTH CAROLINA
DEPARTMENT OF TRANSPORTATION
RALEIGH

SUBSTRUCTURE
END BENT NO. 1
RIGHT LANE

NORTH CAROLINA PROFESSIONAL SEAL 20125 ENGINEER MARSHALL L. GILBERT, JR.
7-21-08

REVISIONS							SHEET NO.
NO.	BY:	DATE:	NO.	BY:	DATE:		S-62
1			3				TOTAL SHEETS
2			4				77

STR #2

DRAWN BY : A.L. FIGUEROA DATE : 5-07-08
CHECKED BY : L.L. MURPHY DATE : 6-09-08

21-JUL-2008 10:32
r:\structures\finalplans\Str #2\R-2911B_sd_str#2-11_EB 1&2 .dgn

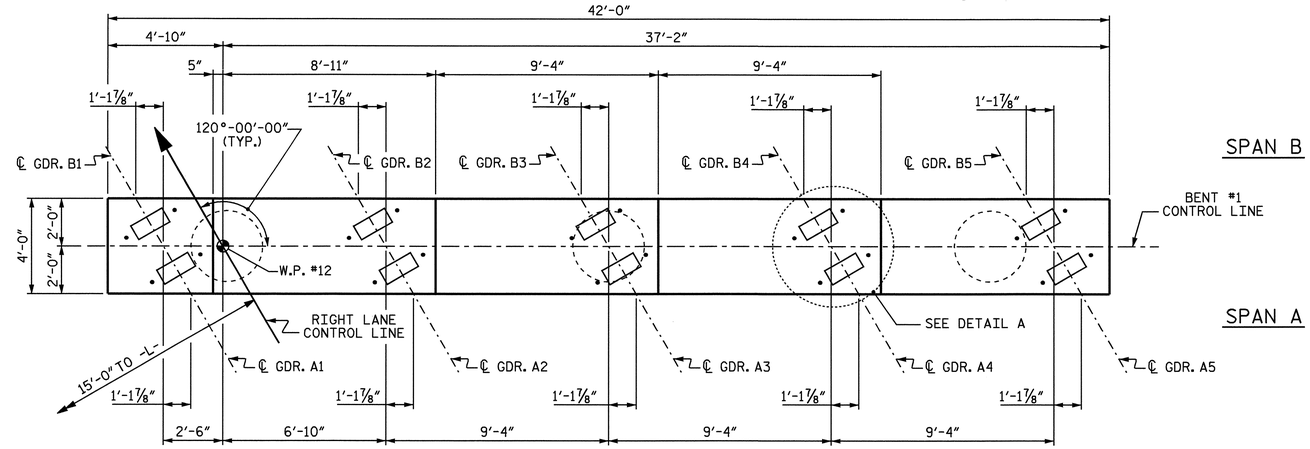

PLAN

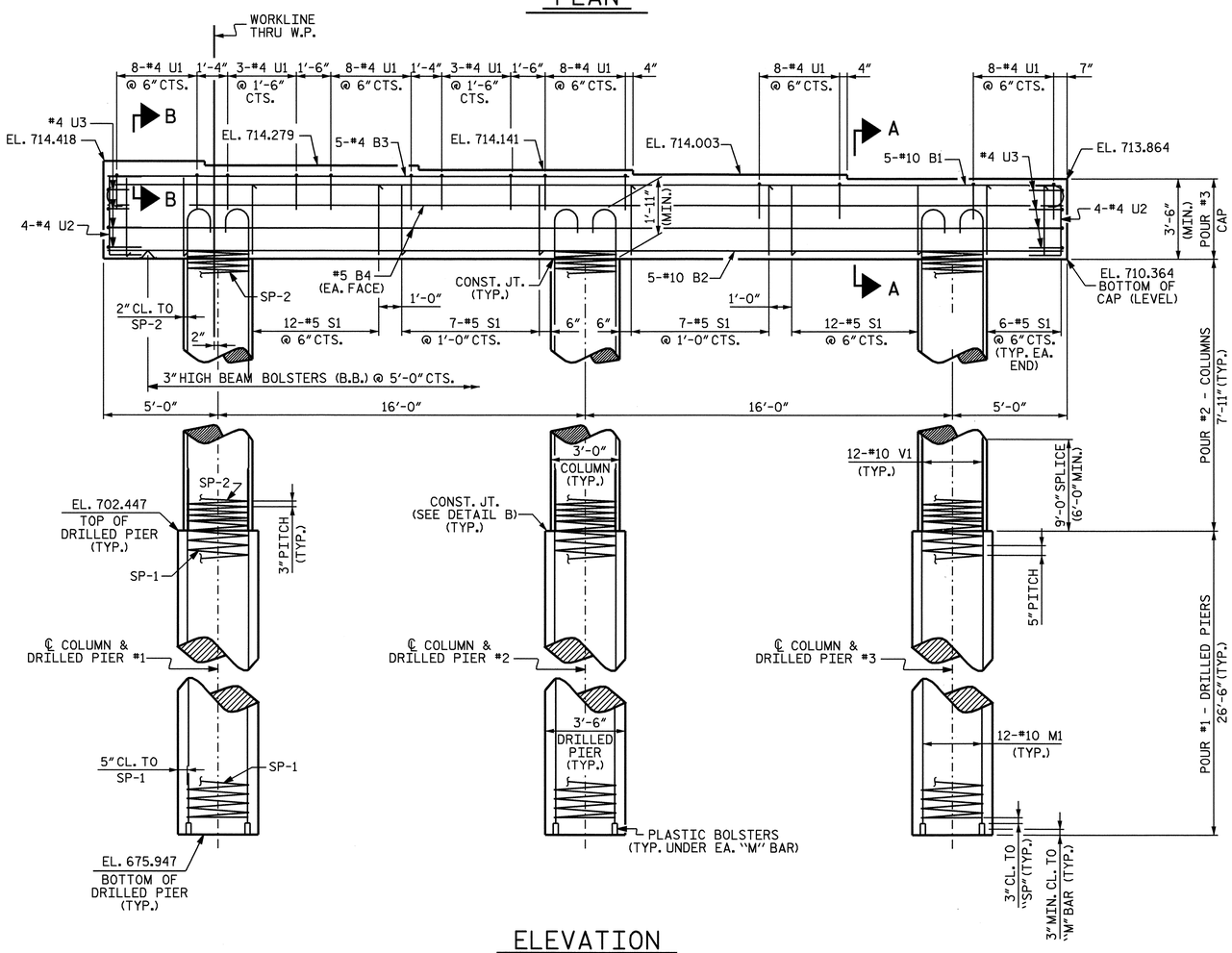

ELEVATION

DIMENSIONS AND REINFORCING STEEL ARE TYPICAL FOR EACH COLUMN AND DRILLED PIER

INVERT ALTERNATE STIRRUPS

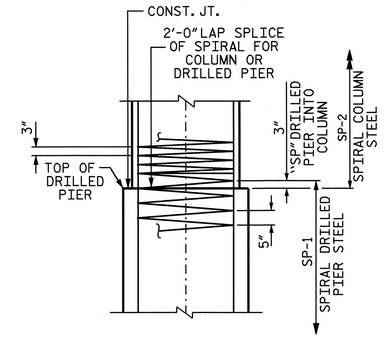

DETAIL B

(CONSTRUCTION JOINT DETAIL)

NOTES

STIRRUPS IN CAP MAY BE SHIFTED AS NECESSARY TO CLEAR DOWELS.

HOOKS ON "V" BARS MAY BE TURNED AS NECESSARY FOR PLACING REINFORCING STEEL.

ALL STEEL IN THE DRILLED PIERS IS INCLUDED IN THE PAY ITEMS FOR "REINFORCING STEEL" AND "SPIRAL COLUMN REINFORCING STEEL".

THE CONTRACTOR'S ATTENTION IS CALLED TO THE FACT THAT THE LONGITUDINAL REINFORCEMENT FOR THE DRILLED PIERS IS DETAILED WITH 3 FEET OF EXTRA LENGTH.

THE LOCATION OF THE CONSTRUCTION JOINT IN THE DRILLED PIERS IS BASED ON AN APPROXIMATE GROUND LINE ELEVATION. IF THE CONSTRUCTION JOINT IS ABOVE THE ACTUAL GROUND ELEVATION, THE CONTRACTOR SHALL PLACE THE CONSTRUCTION JOINT 1 FOOT BELOW THE GROUND LINE.

FOR DRILLED PIERS, SEE SPECIAL PROVISIONS.

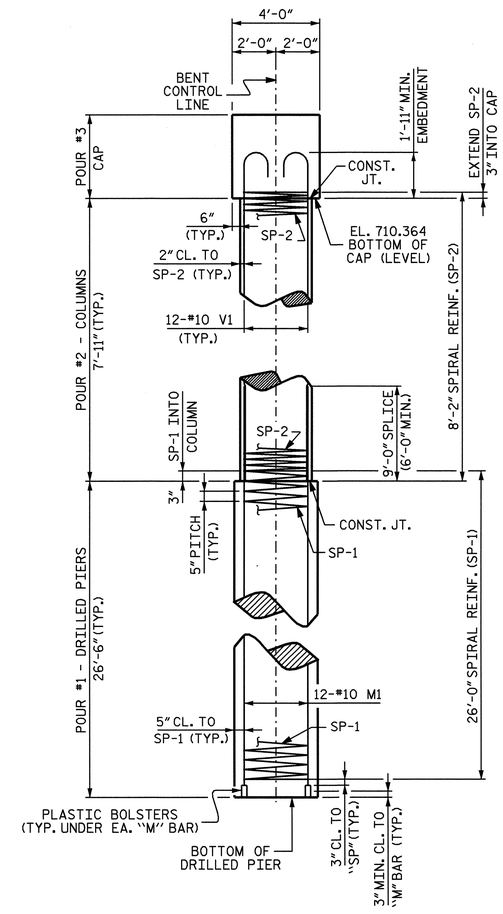

END ELEVATION

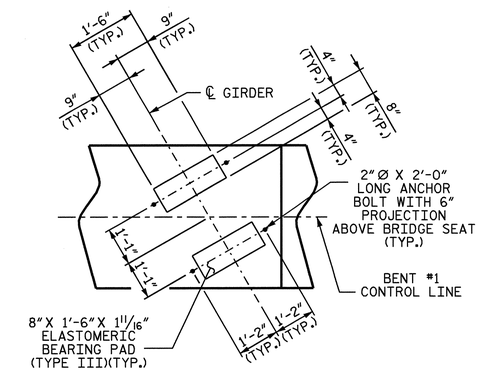

DETAIL A

(TYP. EA. GDR.)

PROJECT NO. R-2911B

ROWAN COUNTY

STATION: 137+95.00 -L-

SHEET 1 OF 2

STATE OF NORTH CAROLINA
DEPARTMENT OF TRANSPORTATION
RALEIGH

SUBSTRUCTURE
BENT #1
RIGHT LANE

NORTH CAROLINA PROFESSIONAL SEAL 20125 ENGINEER MARSHALL G. CHEEK, JR.
7-21-08

REVISIONS						SHEET NO.
NO.	BY:	DATE:	NO.	BY:	DATE:	S-63
1			3			TOTAL SHEETS
2			4			77

DRAWN BY : A. SORSENGINH DATE : 5/27/08
CHECKED BY : MG CHEEK DATE : 6/9/08

21-JUL-2008 10:34
r:\structures\finalplans\str *2\R-2911B_sd_str*2-12_B*.dgn
dahodge

STR. #2

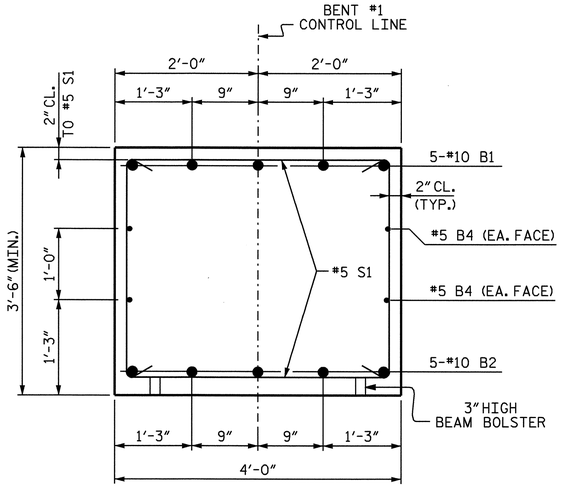

SECTION A-A

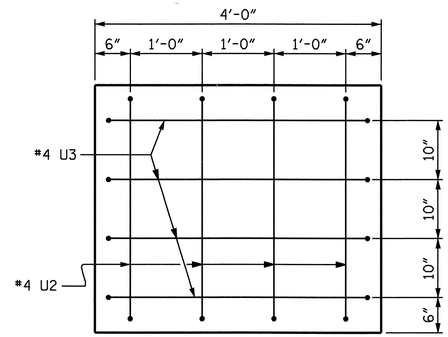

END VIEW

2" MIN. CONCRETE COVER FROM END OF CAP REQUIRED FOR ALL #4 "U" BARS.

#4 "U" BARS MAY BE SHIFTED UP TO 2" TO CLEAR "B" BARS.

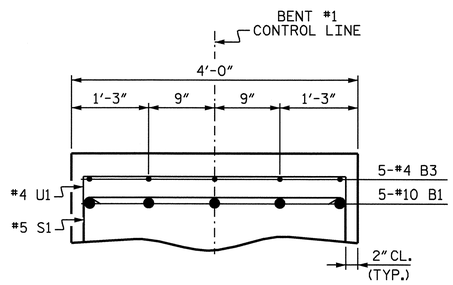

SECTION B-B

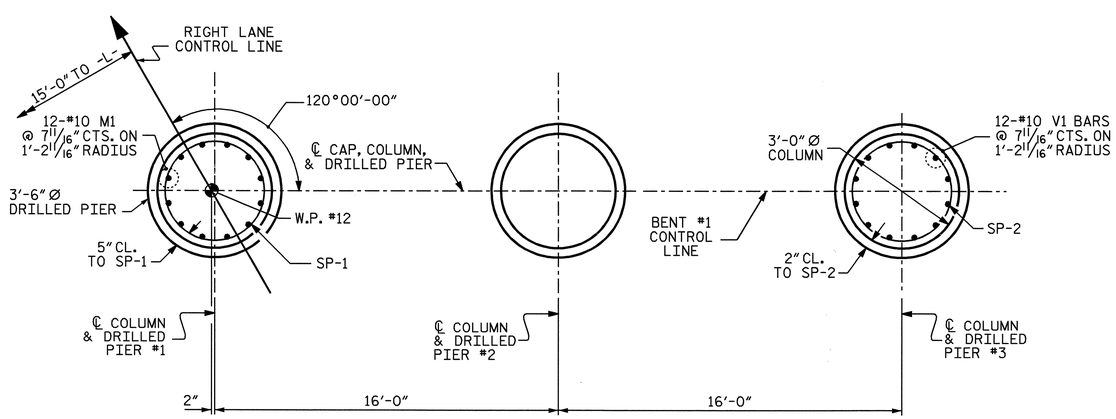

PARTIAL PLAN OF DRILLED PIER

PARTIAL PLAN OF COLUMN

PLAN OF DRILLED PIERS & COLUMNS

DIMENSIONS AND REINFORCING STEEL ARE TYPICAL FOR EACH COLUMN AND DRILLED PIER

BAR TYPES

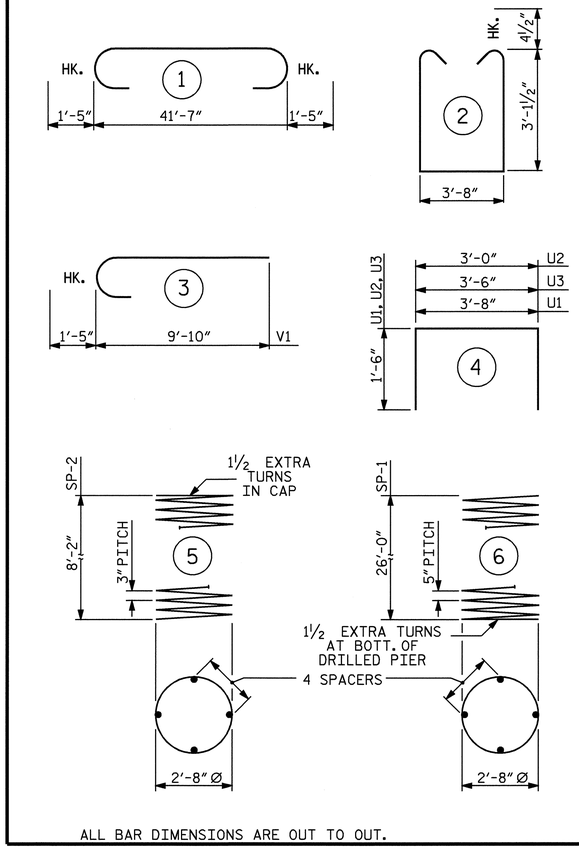

ALL BAR DIMENSIONS ARE OUT TO OUT.

✱ THE SP-1 SPIRAL REINFORCING STEEL SHALL BE W31 OR D-31 COLD DRAWN WIRE OR #5 PLAIN OR DEFORMED BAR.

✱✱ THE SP-2 SPIRAL REINFORCING STEEL SHALL BE W20 OR D-20 COLD DRAWN WIRE OR #4 PLAIN OR DEFORMED BAR.

BILL OF MATERIAL

BENT #1

BAR	NO	SIZE	TYPE	LENGTH	WEIGHT
B1	5	10	1	44'-5"	956
B2	5	10	STR	41'-8"	896
B3	5	4	STR	22'-9"	76
B4	4	5	STR	41'-8"	174
M1	36	10	STR	35'-3"	5461
S1	50	5	2	10'-8"	556
U1	46	4	4	6'-8"	205
U2	8	4	4	6'-0"	32
U3	8	4	4	6'-6"	35
V1	36	10	3	11'-3"	1743
REINFORCING STEEL LBS.					10,134
SP-1	3	✱	6	525'-4"	1644
SP-2	3	✱✱	5	282'-1"	565
SPIRAL COLUMN REINFORCING STEEL LBS.					2,209

CLASS A CONCRETE BREAKDOWN

POUR #2 (COLUMNS)	6.2 C.Y.
POUR #3 (CAP)	23.3 C.Y.
TOTAL	29.5 C.Y.

DRILLED PIERS

DRILLED PIER CONCRETE

POUR #1 (DRILLED PIERS) 28.3 C.Y.

3'-6" Ø DRILLED PIERS NOT IN SOIL 10.00 LIN. FT.

3'-6" Ø DRILLED PIERS IN SOIL 69.50 LIN. FT.

▲ CSL TUBES 348.00 LIN. FT.

▲ NO SEPARATE PAYMENT WILL BE MADE FOR CSL TUBES. CSL TUBES WILL BE INCLUDED IN THE UNIT BID PRICE FOR DRILLED PIERS.

PROJECT NO. R-2911B
ROWAN COUNTY
STATION: 137+95.00 -L-

SHEET 2 OF 2

STATE OF NORTH CAROLINA
DEPARTMENT OF TRANSPORTATION
RALEIGH

SUBSTRUCTURE
BENT #1
RIGHT LANE

NORTH CAROLINA PROFESSIONAL SEAL 20125 ENGINEER MARSHALL G. CHEEK, JR.
7-21-08

REVISIONS								SHEET NO.
NO.	BY:	DATE:	NO.	BY:	DATE:			S-64
1			3					TOTAL SHEETS
2			4					77

DRAWN BY : A. SORSENGINH DATE : 5/27/08
CHECKED BY : MG CHEEK DATE : 6/9/08

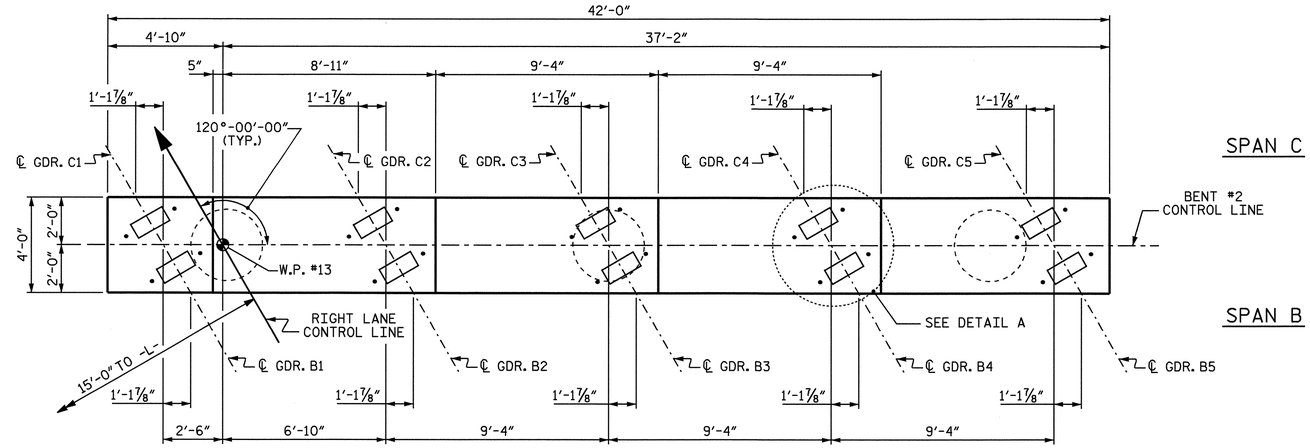

PLAN

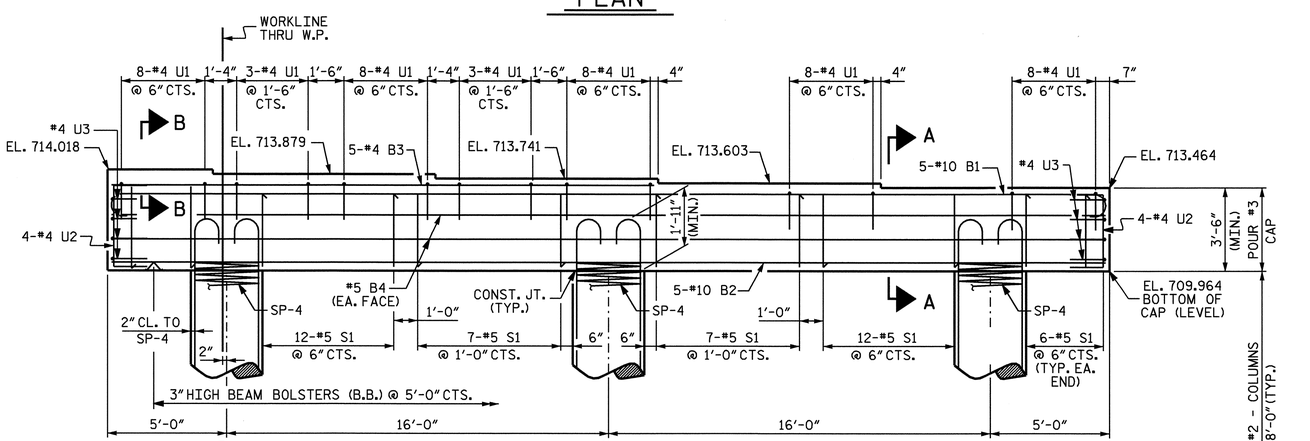

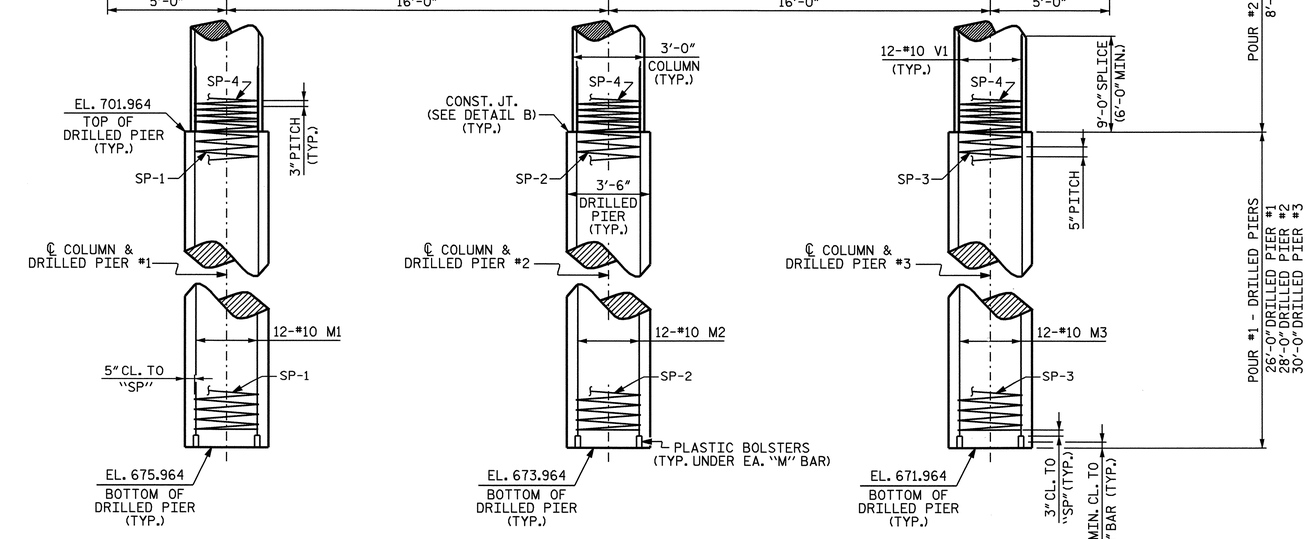

ELEVATION

DIMENSIONS AND REINFORCING STEEL ARE TYPICAL FOR EACH COLUMN AND DRILLED PIER

INVERT ALTERNATE STIRRUPS

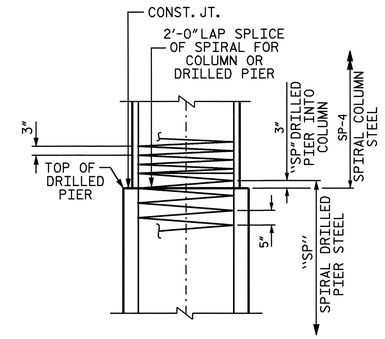

DETAIL B

(CONSTRUCTION JOINT DETAIL)

NOTES

STIRRUPS IN CAP MAY BE SHIFTED AS NECESSARY TO CLEAR DOWELS.

HOOKS ON "V" BARS MAY BE TURNED AS NECESSARY FOR PLACING REINFORCING STEEL.

ALL STEEL IN THE DRILLED PIERS IS INCLUDED IN THE PAY ITEMS FOR "REINFORCING STEEL" AND "SPIRAL COLUMN REINFORCING STEEL".

THE CONTRACTOR'S ATTENTION IS CALLED TO THE FACT THAT THE LONGITUDINAL REINFORCEMENT FOR THE DRILLED PIERS IS DETAILED WITH 3 FEET OF EXTRA LENGTH.

THE LOCATION OF THE CONSTRUCTION JOINT IN THE DRILLED PIERS IS BASED ON AN APPROXIMATE GROUND LINE ELEVATION. IF THE CONSTRUCTION JOINT IS ABOVE THE ACTUAL GROUND ELEVATION, THE CONTRACTOR SHALL PLACE THE CONSTRUCTION JOINT 1 FOOT BELOW THE GROUND LINE.

FOR DRILLED PIERS, SEE SPECIAL PROVISIONS.

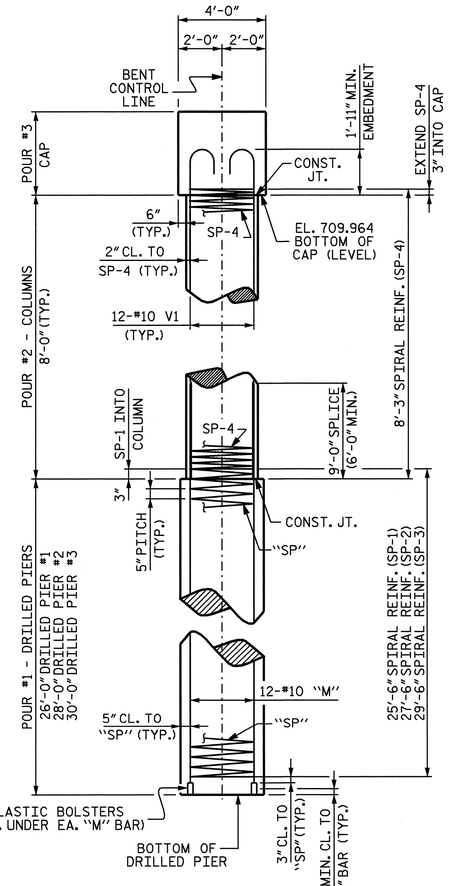

END ELEVATION

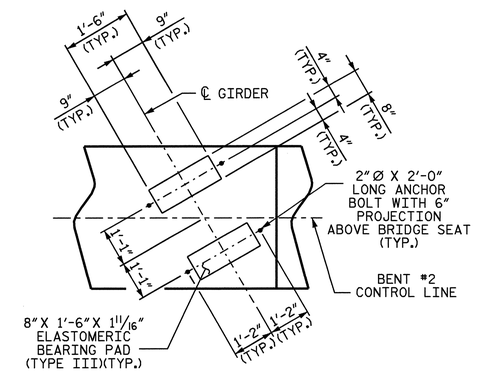

DETAIL A

(TYP. EA. GDR.)

PROJECT NO. R-2911B

ROWAN COUNTY

STATION: 137+95.00 -L-

SHEET 1 OF 2

STATE OF NORTH CAROLINA
DEPARTMENT OF TRANSPORTATION
RALEIGH

SUBSTRUCTURE
BENT #2
RIGHT LANE

NORTH CAROLINA PROFESSIONAL SEAL 20125 ENGINEER MARSHALL G. CHEEK, JR.
7-21-08

REVISIONS							SHEET NO.
NO.	BY:	DATE:	NO.	BY:	DATE:		S-65
1			3				TOTAL SHEETS
2			4				77

DRAWN BY : A. SORSENGINH DATE : 5/27/08
CHECKED BY : MG CHEEK DATE : 6/12/08

21-JUL-2008 10:35
r:\structures\finalplans\str #2\R-2911B_sd_str#2-12_8#.dgn
dahodge

STR. #2

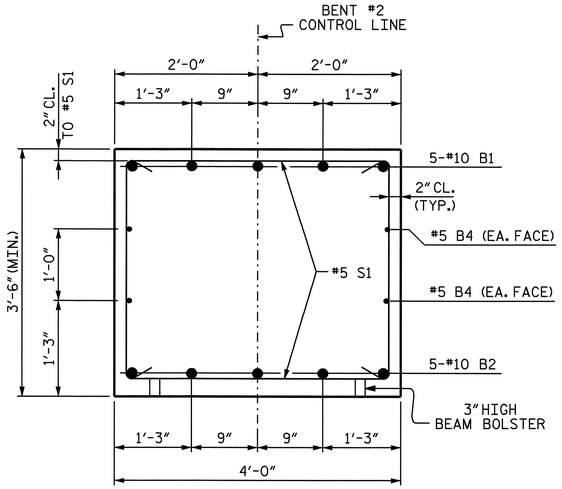

SECTION A-A

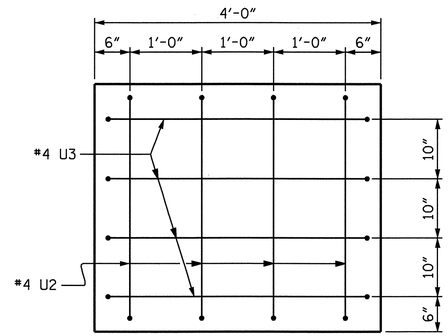

END VIEW

2" MIN. CONCRETE COVER FROM END OF CAP REQUIRED FOR ALL #4 "U" BARS.

#4 "U" BARS MAY BE SHIFTED UP TO 2" TO CLEAR "B" BARS.

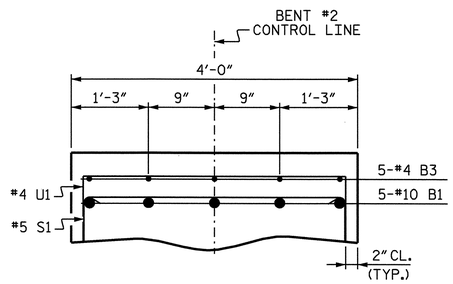

SECTION B-B

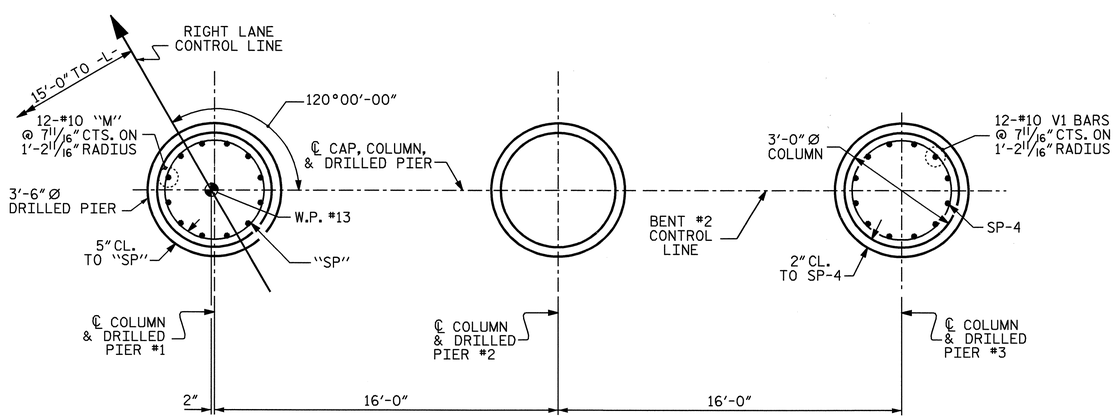

PARTIAL PLAN OF DRILLED PIER

PARTIAL PLAN OF COLUMN

PLAN OF DRILLED PIERS & COLUMNS

DIMENSIONS AND REINFORCING STEEL ARE TYPICAL FOR EACH COLUMN AND DRILLED PIER

BAR TYPES

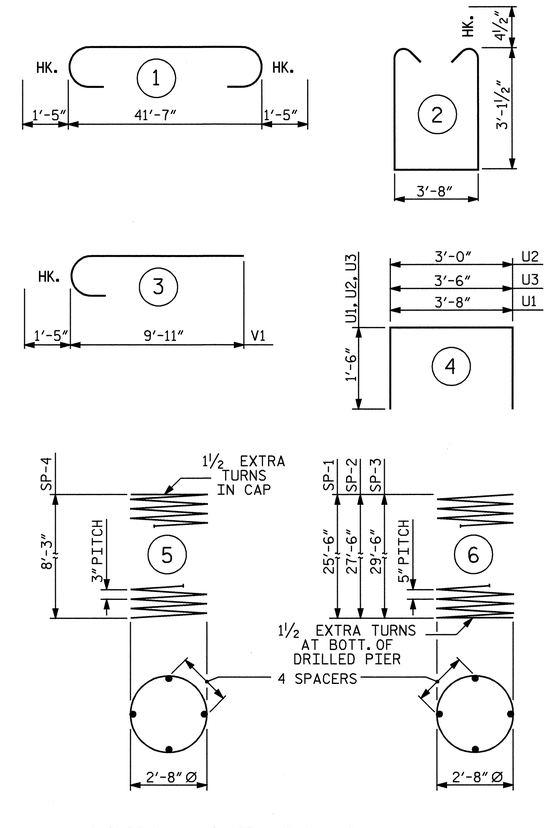

ALL BAR DIMENSIONS ARE OUT TO OUT.

✱ THE SP-1, SP-2 AND SP-3 SPIRAL REINFORCING STEEL SHALL BE W31 OR D-31 COLD DRAWN WIRE OR #5 PLAIN OR DEFORMED BAR.

✱✱ THE SP-4 SPIRAL REINFORCING STEEL SHALL BE W20 OR D-20 COLD DRAWN WIRE OR #4 PLAIN OR DEFORMED BAR.

BILL OF MATERIAL

BENT #2

BAR	NO	SIZE	TYPE	LENGTH	WEIGHT
B1	5	10	1	44'-5"	956
B2	5	10	STR	41'-8"	896
B3	5	4	STR	22'-9"	76
B4	4	5	STR	41'-8"	174
M1	12	10	STR	34'-9"	1794
M2	12	10	STR	36'-9"	1898
M3	12	10	STR	38'-9"	2001
S1	50	5	2	10'-8"	556
U1	46	4	4	6'-8"	205
U2	8	4	4	6'-0"	32
U3	8	4	4	6'-6"	35
V1	36	10	3	11'-4"	1756
REINFORCING STEEL LBS.					10,379
SP-1	1	✱	6	515'-1"	537
SP-2	1	✱	6	554'-1"	578
SP-3	1	✱	6	595'-2"	621
SP-4	3	✱✱	5	284'-1"	569
SPIRAL COLUMN REINFORCING STEEL LBS.					2,305

CLASS A CONCRETE BREAKDOWN

POUR #2 (COLUMNS)	6.3 C.Y.
POUR #3 (CAP)	23.3 C.Y.
TOTAL	29.6 C.Y.

DRILLED PIERS

DRILLED PIER CONCRETE

POUR #1 (DRILLED PIERS)	29.9 C.Y.
3'-6" Ø DRILLED PIERS NOT IN SOIL	12.00 LIN. FT.
3'-6" Ø DRILLED PIERS IN SOIL	72.00 LIN. FT.
PERMANENT STEEL CASING FOR 3'-6" Ø DRILLED PIERS	59.89 LIN. FT.
▲ CSL TUBES	366.00 LIN. FT.

▲ NO SEPARATE PAYMENT WILL BE MADE FOR CSL TUBES. CSL TUBES WILL BE INCLUDED IN THE UNIT BID PRICE FOR DRILLED PIERS.

PROJECT NO. R-2911B
ROWAN COUNTY
STATION: 137+95.00 -L-

SHEET 2 OF 2

STATE OF NORTH CAROLINA
DEPARTMENT OF TRANSPORTATION
RALEIGH

SUBSTRUCTURE
BENT #2
RIGHT LANE

NORTH CAROLINA PROFESSIONAL SEAL 20125 ENGINEER MARSHALL G. CHEEK, JR.
7-21-08

REVISIONS						SHEET NO.
NO.	BY:	DATE:	NO.	BY:	DATE:	S-66
1			3			TOTAL SHEETS
2			4			77

DRAWN BY : A. SORSENGINH DATE : 5/27/08
CHECKED BY : MG CHEEK DATE : 6/12/08

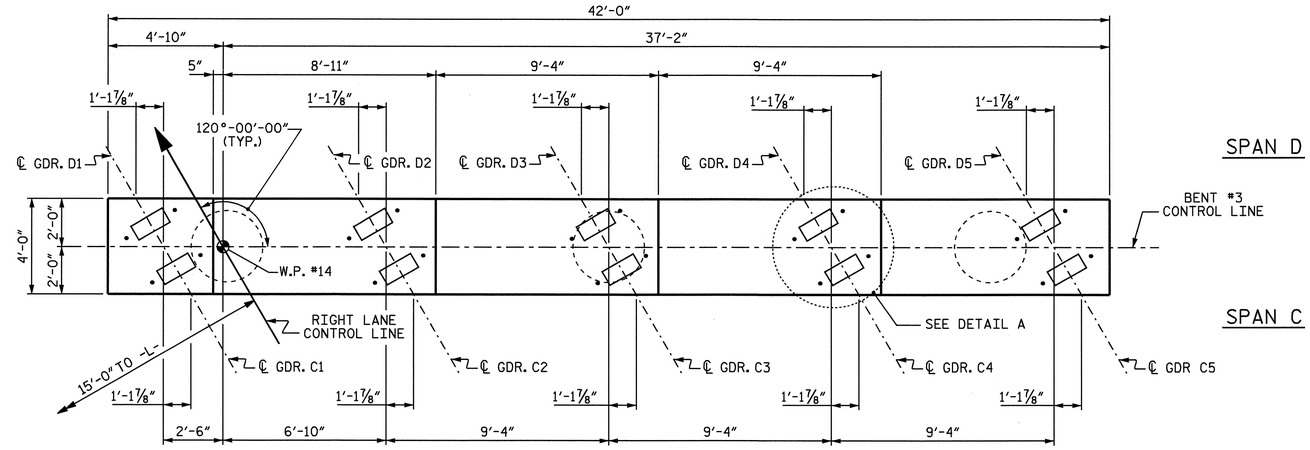

PLAN

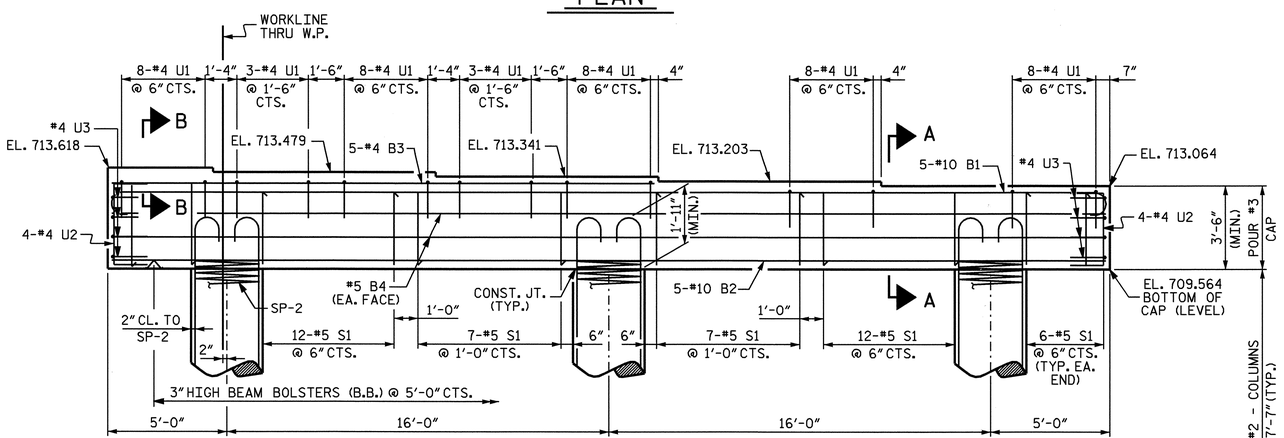

ELEVATION

DIMENSIONS AND REINFORCING STEEL ARE TYPICAL FOR EACH COLUMN AND DRILLED PIER

INVERT ALTERNATE STIRRUPS

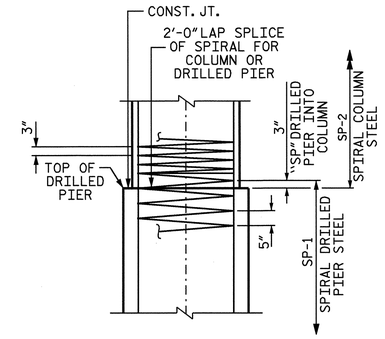

DETAIL B

(CONSTRUCTION JOINT DETAIL)

NOTES

STIRRUPS IN CAP MAY BE SHIFTED AS NECESSARY TO CLEAR DOWELS.

HOOKS ON "V" BARS MAY BE TURNED AS NECESSARY FOR PLACING REINFORCING STEEL.

ALL STEEL IN THE DRILLED PIERS IS INCLUDED IN THE PAY ITEMS FOR "REINFORCING STEEL" AND "SPIRAL COLUMN REINFORCING STEEL".

THE CONTRACTOR'S ATTENTION IS CALLED TO THE FACT THAT THE LONGITUDINAL REINFORCEMENT FOR THE DRILLED PIERS IS DETAILED WITH 3 FEET OF EXTRA LENGTH.

THE LOCATION OF THE CONSTRUCTION JOINT IN THE DRILLED PIERS IS BASED ON AN APPROXIMATE GROUND LINE ELEVATION. IF THE CONSTRUCTION JOINT IS ABOVE THE ACTUAL GROUND ELEVATION, THE CONTRACTOR SHALL PLACE THE CONSTRUCTION JOINT 1 FOOT BELOW THE GROUND LINE.

FOR DRILLED PIERS, SEE SPECIAL PROVISIONS.

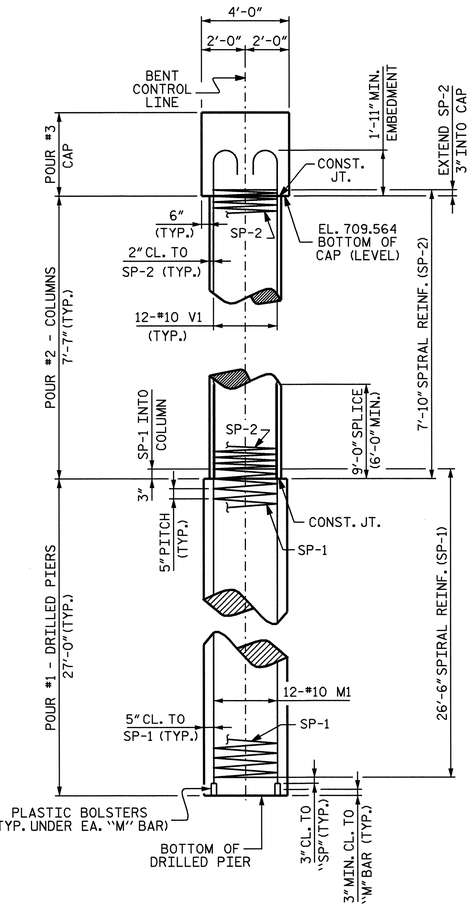

END ELEVATION

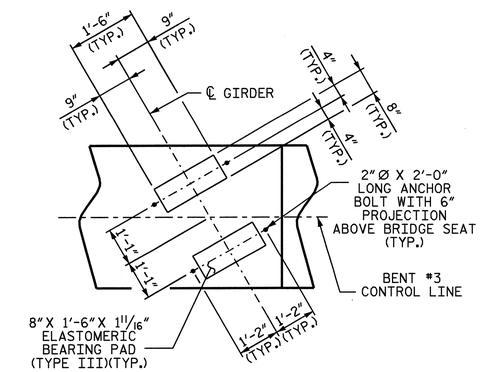

DETAIL A

(TYP. EA. GDR.)

PROJECT NO. R-2911B

ROWAN COUNTY

STATION: 137+95.00 -L-

SHEET 1 OF 2

STATE OF NORTH CAROLINA
DEPARTMENT OF TRANSPORTATION
RALEIGH

SUBSTRUCTURE
BENT #3
RIGHT LANE

NORTH CAROLINA PROFESSIONAL SEAL 20125 ENGINEER MARSHALL C. CHEEK, JR.
7-21-08

REVISIONS						SHEET NO.
NO.	BY:	DATE:	NO.	BY:	DATE:	S-67
1			3			TOTAL SHEETS
2			4			77

DRAWN BY : A. SORSENGINH DATE : 5/27/08
CHECKED BY : MG CHEEK DATE : 6/12/08

21-JUL-2008 10:35
r:\structures\finalplans\str #2\R-2911B_sd_str#2-12_B#.dgn
dahodge

STR. #2

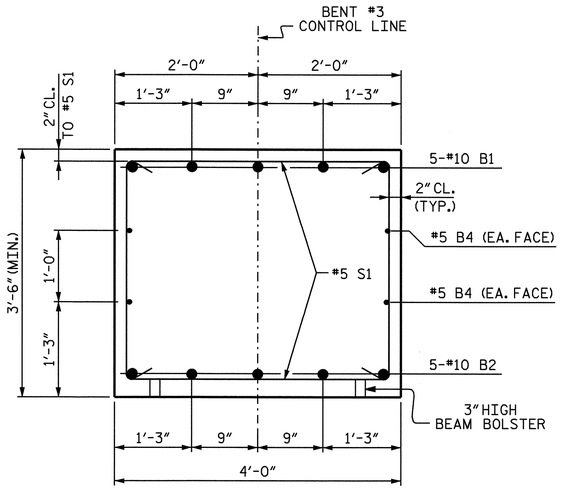

SECTION A-A

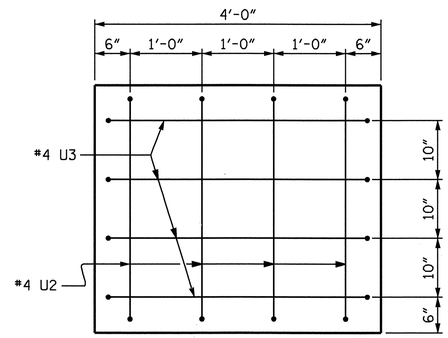

END VIEW

2" MIN. CONCRETE COVER FROM END OF CAP REQUIRED FOR ALL #4 "U" BARS.

#4 "U" BARS MAY BE SHIFTED UP TO 2" TO CLEAR "B" BARS.

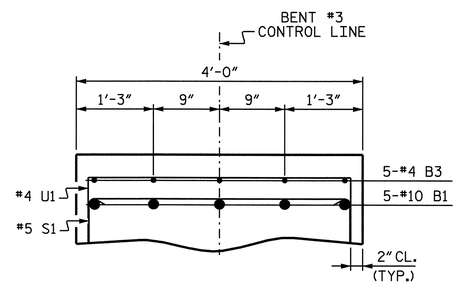

SECTION B-B

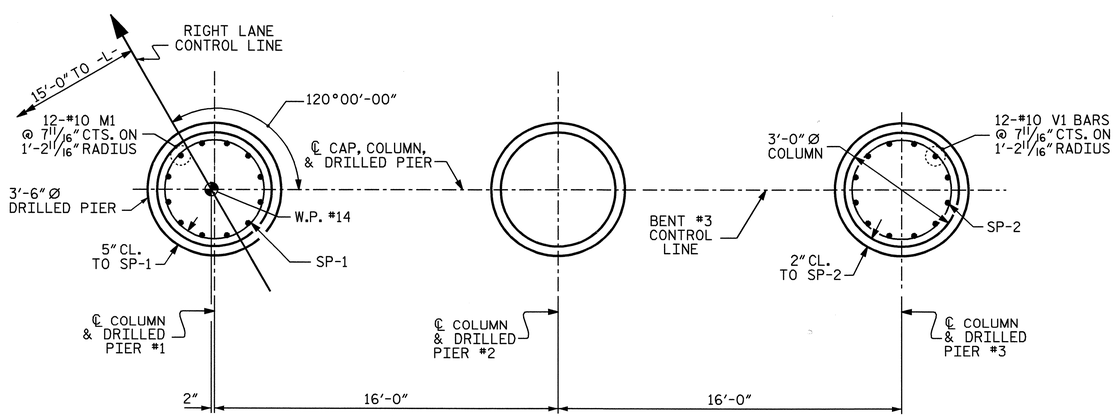

PARTIAL PLAN OF DRILLED PIER

PARTIAL PLAN OF COLUMN

PLAN OF DRILLED PIERS & COLUMNS

DIMENSIONS AND REINFORCING STEEL ARE TYPICAL FOR EACH COLUMN AND DRILLED PIER

BAR TYPES

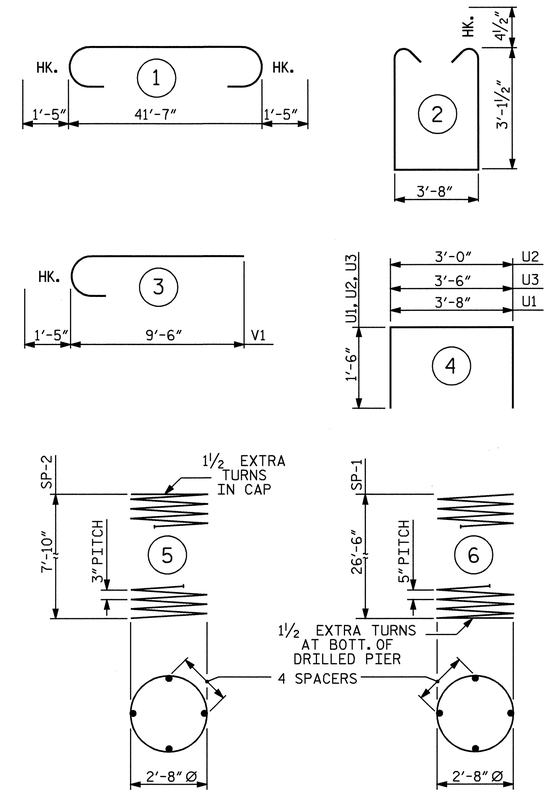

ALL BAR DIMENSIONS ARE OUT TO OUT.

* THE SP-1 SPIRAL REINFORCING STEEL SHALL BE W31 OR D-31 COLD DRAWN WIRE OR #5 PLAIN OR DEFORMED BAR.

** THE SP-2 SPIRAL REINFORCING STEEL SHALL BE W20 OR D-20 COLD DRAWN WIRE OR #4 PLAIN OR DEFORMED BAR.

BILL OF MATERIAL

BENT #3

BAR	NO	SIZE	TYPE	LENGTH	WEIGHT
B1	5	10	1	44'-5"	956
B2	5	10	STR	41'-8"	896
B3	5	4	STR	22'-9"	76
B4	4	5	STR	41'-8"	174
M1	36	10	STR	35'-9"	5538
S1	50	5	2	10'-8"	556
U1	46	4	4	6'-8"	205
U2	8	4	4	6'-0"	32
U3	8	4	4	6'-6"	35
V1	36	10	3	10'-11"	1691
REINFORCING STEEL LBS.					10,159
SP-1	3	*	6	535'-8"	1676
SP-2	3	**	5	271'-9"	545
SPIRAL COLUMN REINFORCING STEEL LBS.					2,221

CLASS A CONCRETE BREAKDOWN

POUR #2 (COLUMNS)	6.0 C.Y.
POUR #3 (CAP)	23.3 C.Y.
TOTAL	29.3 C.Y.

DRILLED PIERS

DRILLED PIER CONCRETE

POUR #1 (DRILLED PIERS) 28.9 C.Y.

3'-6" Ø DRILLED PIERS NOT IN SOIL 14.00 LIN. FT.

3'-6" Ø DRILLED PIERS IN SOIL 67.00 LIN. FT.

PERMANENT STEEL CASING FOR 3'-6" Ø DRILLED PIERS 59.94 LIN. FT.

▲ CSL TUBES 354.00 LIN. FT.

▲ NO SEPARATE PAYMENT WILL BE MADE FOR CSL TUBES. CSL TUBES WILL BE INCLUDED IN THE UNIT BID PRICE FOR DRILLED PIERS.

PROJECT NO. R-2911B
ROWAN COUNTY
STATION: 137+95.00 -L-

SHEET 2 OF 2

STATE OF NORTH CAROLINA
DEPARTMENT OF TRANSPORTATION
RALEIGH

SUBSTRUCTURE
BENT #3
RIGHT LANE

NORTH CAROLINA PROFESSIONAL SEAL 20125 ENGINEER MARSHALL G. CHEEK, JR.
7-21-08

REVISIONS							SHEET NO.
NO.	BY:	DATE:	NO.	BY:	DATE:		S-68
1			3				TOTAL SHEETS
2			4				77

DRAWN BY : A. SORSENGINH DATE : 5/27/08
CHECKED BY : MG CHEEK DATE : 6/12/08

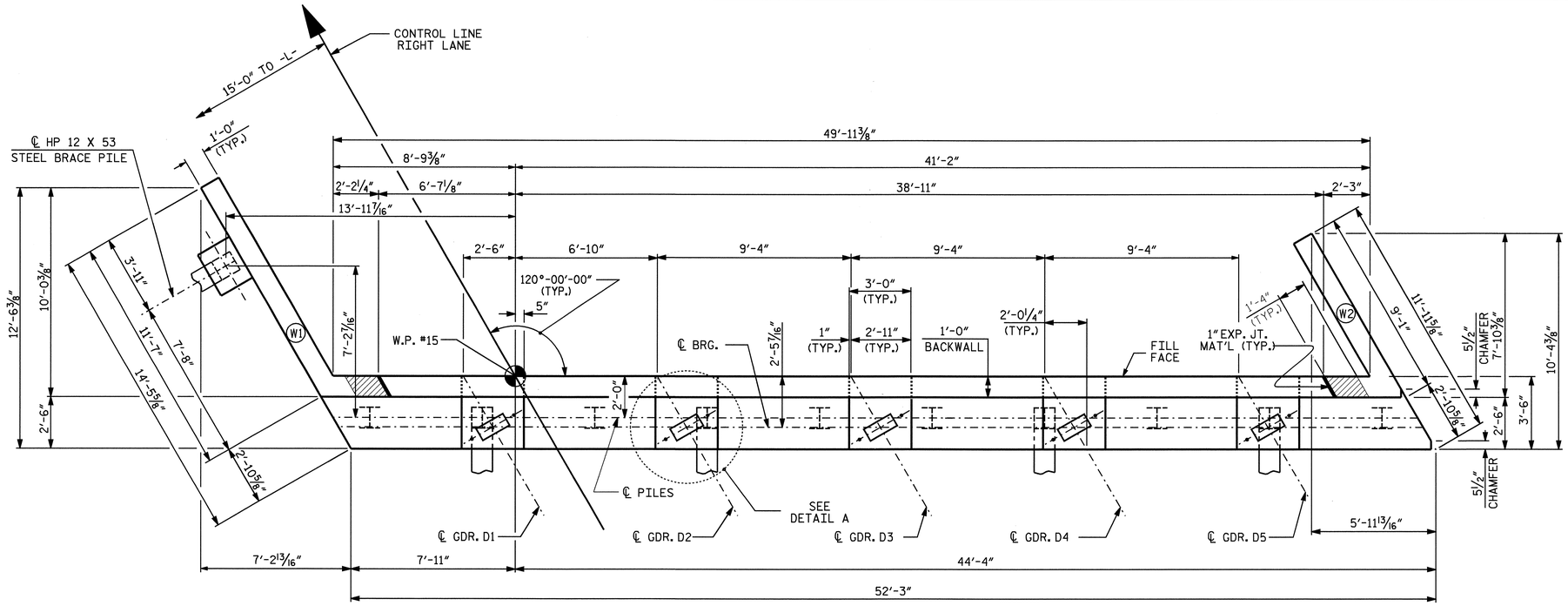

PLAN

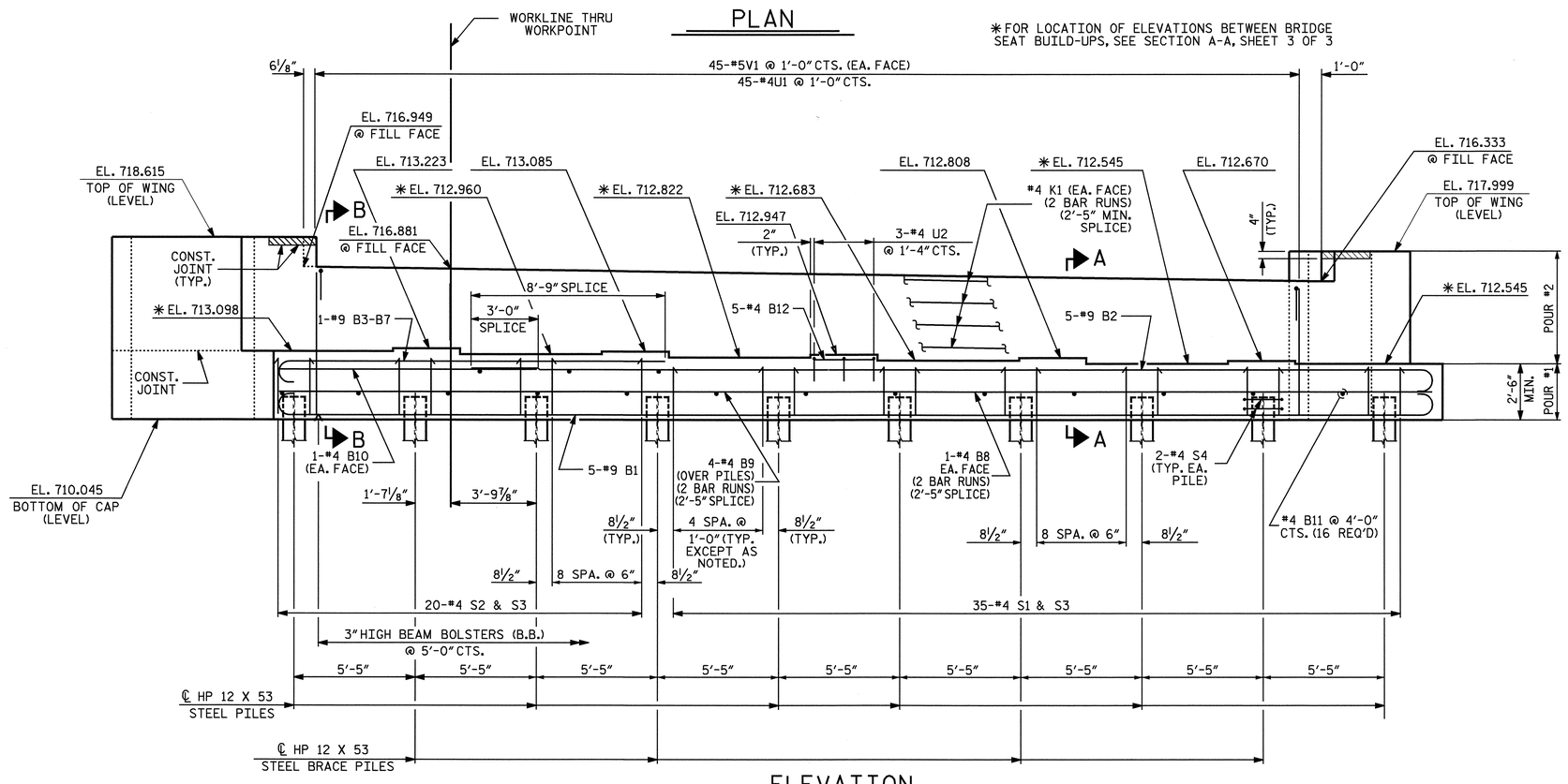

✱FOR LOCATION OF ELEVATIONS BETWEEN BRIDGE SEAT BUILD-UPS, SEE SECTION A-A, SHEET 3 OF 3

ELEVATION

(FOR CLARITY BRACE PILE IN WING NOT SHOWN)

NOTES

STIRRUPS IN CAP MAY BE SHIFTED AS NECESSARY TO CLEAR ANCHOR BOLTS.

FOR SECTION A-A, SEE SHEET 3 OF 3.

FOR PILE SPLICE DETAILS SEE SHEET 3 OF 3.

FOR TEMPORARY DRAINAGE AT END BENTS, SEE SHEET 3 OF 3.

BACKWALL SHALL BE PLACED BEFORE APPLYING THE EPOXY PROTECTIVE COATING.

THE TOP SURFACE AREA OF THE END BENT CAP SHALL BE CURED IN ACCORDANCE WITH THE STANDARD SPECIFICATIONS EXCEPT THAT THE MEMBRANE CURING COMPOUND METHOD SHALL NO BE USED.

THE TOP SURFACE OF THE END BENT CAP EXCEPT THE BRIDGE SEAT BUILDUPS SHALL BE SLOPED TRANSVERSELY FROM THE FILL FACE TO THE BACK FACE AT THE RATE OF 2%.

THE CONTRACTOR SHALL PROVIDE FOR INSTALLATION OF THE 4" DIAMETER DRAIN PIPE THROUGH THE WING WALL AS REQUIRED FOR REINFORCED BRIDGE APPROACH FILLS. SEE THE ROADWAY PLANS. REINFORCING STEEL IN THE WING WALL MAY BE SHIFTED AS NECESSARY TO CLEAR THE DRAIN PIPE.

THE CONCRETE IN THE SHADED AREA OF THE WING SHALL BE POURED AFTER THE BARRIER RAIL IS CAST IF SLIP FORMING IS USED.

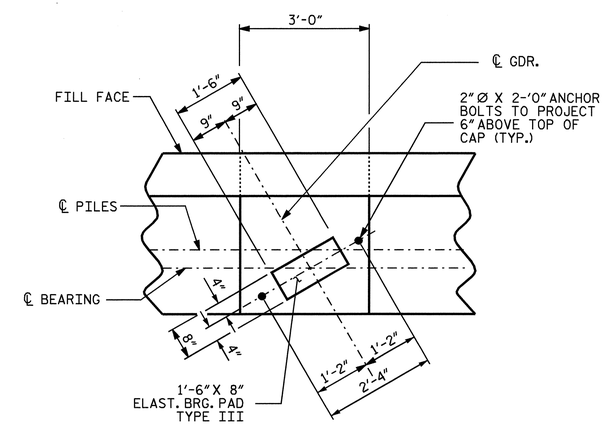

DETAIL A

PROJECT NO. R-2911B

ROWAN COUNTY

STATION: 137+95.00 -L-

SHEET 1 OF 3

STATE OF NORTH CAROLINA
DEPARTMENT OF TRANSPORTATION
RALEIGH

SUBSTRUCTURE
END BENT NO. 2
RIGHT LANE

NORTH CAROLINA PROFESSIONAL SEAL 20125 ENGINEER MARSHALL A. JOCHECK, JR.
7-21-08

REVISIONS								SHEET NO.
NO.	BY:	DATE:	NO.	BY:	DATE:			S-69
1			3					TOTAL SHEETS
2			4					77

STR #2

DRAWN BY : A.L. FIGUEROA DATE : 5-14-08
CHECKED BY : L.L. MURPHY DATE : 6-03-08

21-JUL-2008 10:36
r:\structures\finalplans\Str #2\R-2911B_sd_str#2-11_EB 1&2 .dgn
dahodge

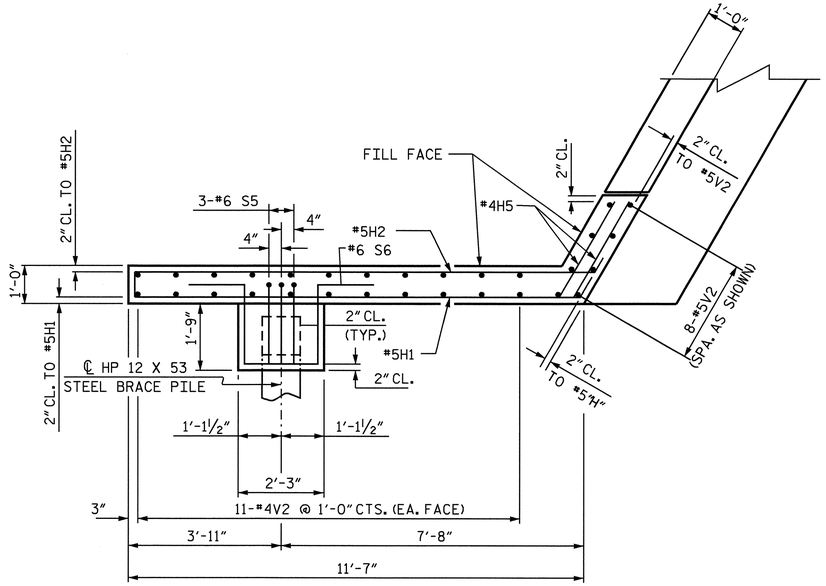

PLAN OF LEFT WING - W1

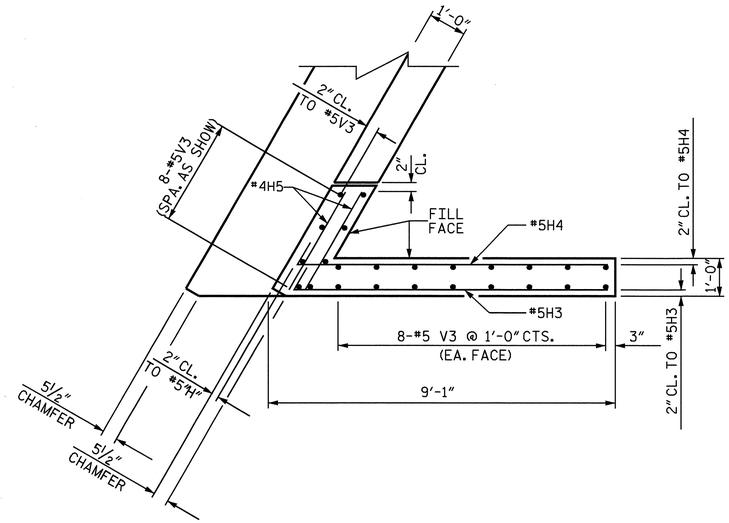

PLAN OF RIGHT WING - W2

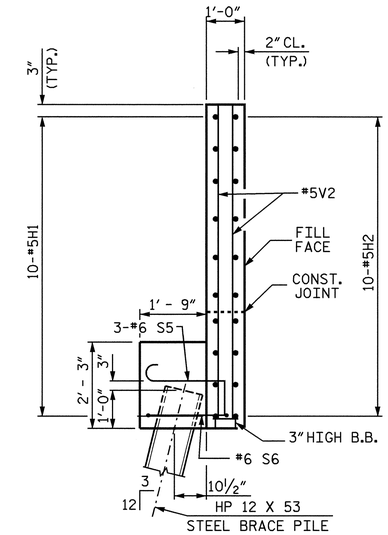

SECTION X-X

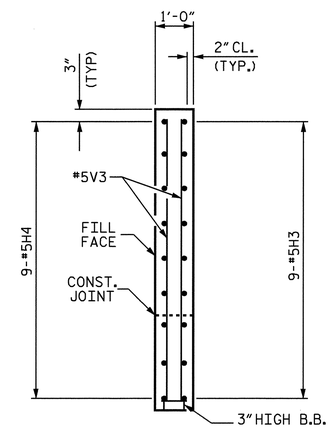

SECTION Y-Y

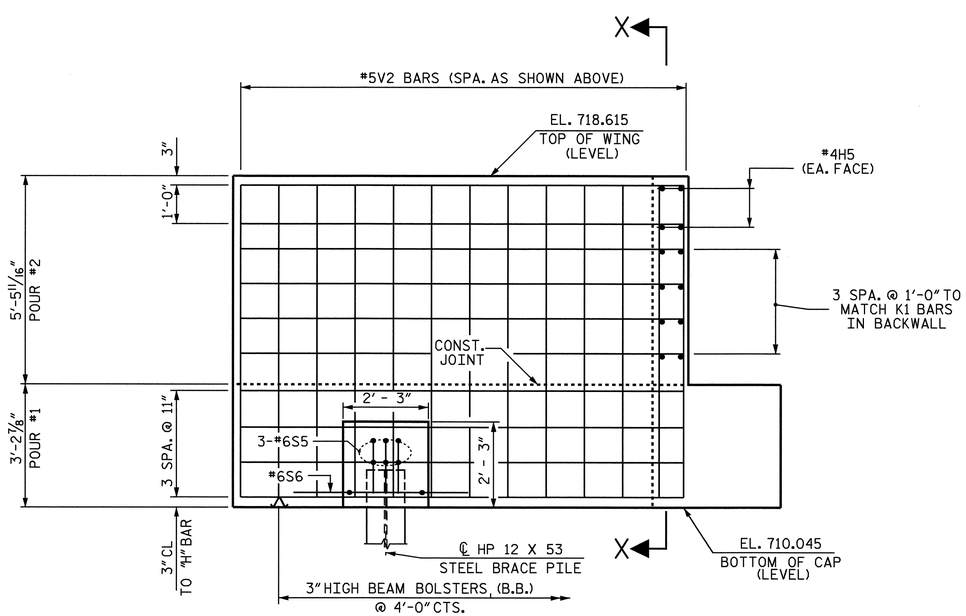

ELEVATION OF LEFT WING - W1

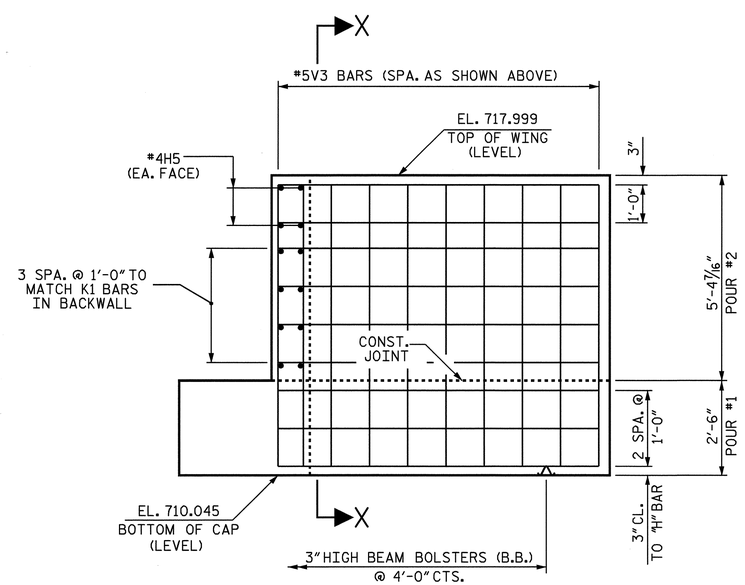

ELEVATION OF RIGHT WING - W2

PROJECT NO. R-2911B

ROWAN COUNTY

STATION: 137+95.00 -L-

SHEET 2 OF 3

STATE OF NORTH CAROLINA
DEPARTMENT OF TRANSPORTATION
RALEIGH

SUBSTRUCTURE
END BENT NO. 2
RIGHT LANE

NORTH CAROLINA PROFESSIONAL SEAL 20125 ENGINEER MARSHALL A. CHEEK, JR.
7-21-08

REVISIONS						SHEET NO.
NO.	BY:	DATE:	NO.	BY:	DATE:	S-70
1			3			TOTAL SHEETS
2			4			77

STR#2

DRAWN BY : A.L. FIGUEROA DATE : 5-07-08
CHECKED BY : L.L. MURPHY DATE : 6-03-08

20-JUN-2008 16:54
r:\structures\r2911b\alfigueroa\microstation\R-2911B_sd_EB 1&2 -STR#2 .dgn
lmurphy

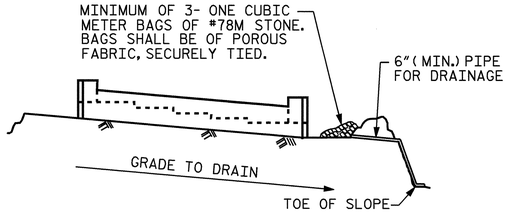

BAGGED STONE AND PIPE SHALL BE PLACED IMMEDIATELY AFTER COMPLETION OF END BENT EXCAVATION. PIPE MAY BE EITHER CONCRETE, CORRUGATED STEEL, CORRUGATED ALUMINUM ALLOY, OR CORRUGATED PLASTIC. PERFORATED PIPE WILL NOT BE ALLOWED.

BAGGED STONE SHALL REMAIN IN PLACE UNTIL THE ENGINEER DIRECTS THAT IT BE REMOVED. THE CONTRACTOR SHALL REMOVE AND DISPOSE OF SILT ACCUMULATIONS AT BAGGED STONE WHEN SO DIRECTED BY THE ENGINEER. BAGS SHALL BE REMOVED AND REPLACED WHENEVER THE ENGINEER DETERMINES THAT THEY HAVE DETERIORATED AND LOST THEIR EFFECTIVENESS.

NO SEPARATE PAYMENT WILL BE MADE FOR THIS WORK AND THE ENTIRE COST OF THIS WORK SHALL BE INCLUDED IN THE UNIT CONTRACT PRICE BID FOR THE SEVERAL PAY ITEMS.

TEMPORARY DRAINAGE AT END BENT

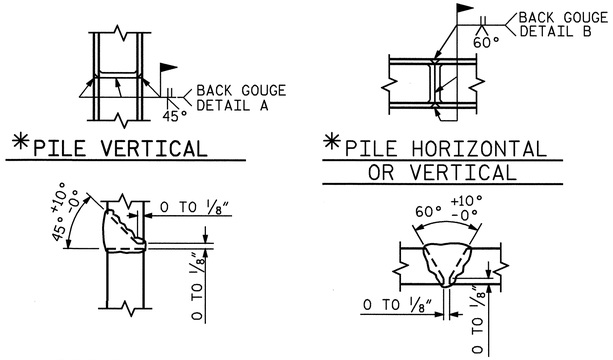

*POSITION OF PILE DURING WELDING.

PILE SPLICE DETAILS

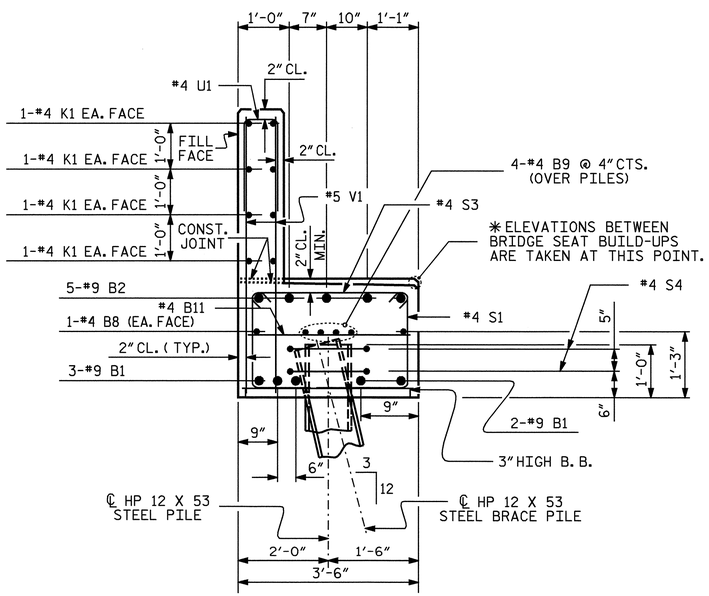

SECTION A-A

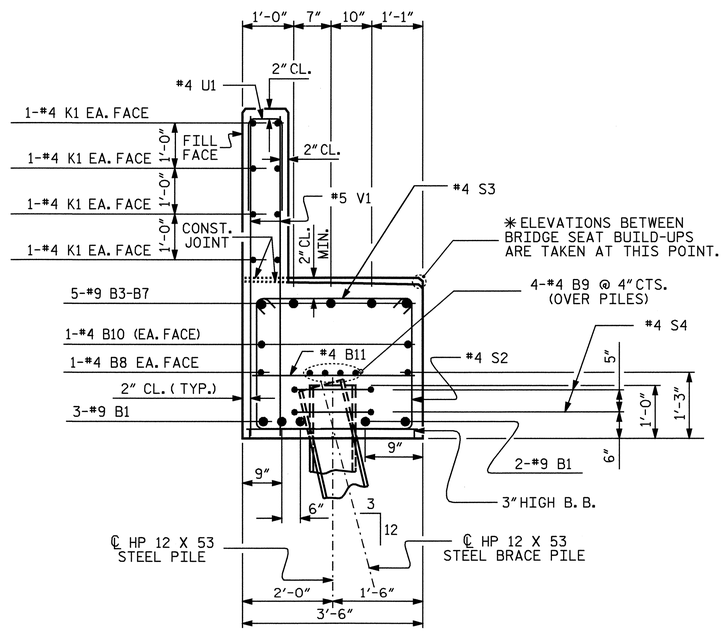

SECTION B-B

BAR TYPES

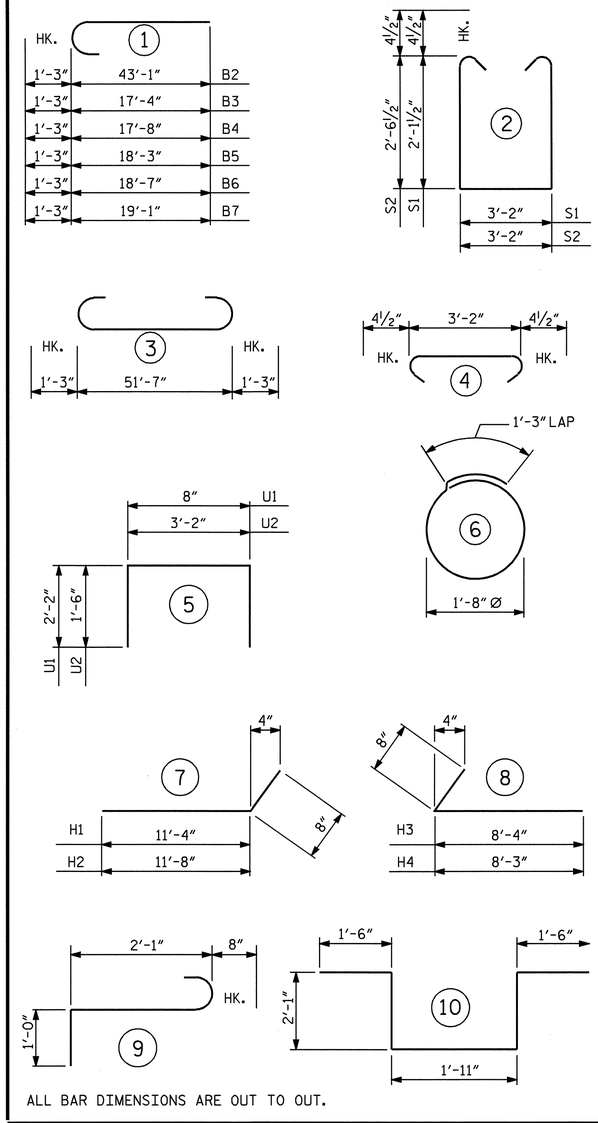

ALL BAR DIMENSIONS ARE OUT TO OUT.

BILL OF MATERIAL
END BENT NO. 2

BAR	NO.	SIZE	TYPE	LENGTH	WEIGHT
B1	5	#9	3	54'-1"	919
B2	5	#9	1	44'-4"	754
B3	1	#9	1	18'-7"	63
B4	1	#9	1	19'-1"	65
B5	1	#9	1	19'-6"	66
B6	1	#9	1	19'-10"	67
B7	1	#9	1	20'-4"	69
B8	4	#4	STR	27'-1"	72
B9	8	#4	STR	27'-1"	145
B10	2	#4	STR	11'-7"	15
B11	16	#4	STR	3'-2"	34
B12	5	#4	STR	2'-8"	9
H1	10	#5	7	12'-0"	125
H2	10	#5	7	12'-4"	129
H3	9	#5	8	9'-0"	84
H4	9	#5	8	8'-11"	84
H5	8	#4	STR	2'-11"	16
K1	16	#4	STR	27'-1"	289
S1	35	#4	2	8'-2"	191
S2	20	#4	2	9'-0"	120
S3	55	#4	4	3'-11"	144
S4	20	#4	6	6'-6"	87
S5	3	#6	9	3'-9"	17
S6	1	#6	10	9'-1"	14
U1	45	#4	5	5'-0"	150
U2	3	#4	5	6'-2"	12
V1	90	#5	STR	5'-9"	540
V2	30	#5	STR	8'-0"	250
V3	24	#5	STR	7'-5"	186

REINFORCING STEEL = 4716 LBS

CLASS A CONCRETE BREAKDOWN

POUR #1 CAP, LOWER PART OF WINGS & BRACE PILE BLOCK	21.3 C.Y.
POUR #2 BACKWALL & UPPER PART OF WINGS	11.4 C.Y.
CLASS A CONCRETE TOTAL	32.7 C.Y.

HP 12 X 53 STEEL PILES

NO. 11 330 LIN. FT.

PROJECT NO. R-2911B
ROWAN COUNTY
STATION: 137+95.00 -L-

SHEET 3 OF 3

STATE OF NORTH CAROLINA
DEPARTMENT OF TRANSPORTATION
RALEIGH

SUBSTRUCTURE
END BENT NO. 2
RIGHT LANE

NORTH CAROLINA PROFESSIONAL SEAL 20125 ENGINEER MARSHALL G. CLEEK, JR.
7-21-08

REVISIONS						SHEET NO.
NO.	BY:	DATE:	NO.	BY:	DATE:	S-71
1			3			TOTAL SHEETS
2			4			77

STR #2

DRAWN BY : A.L. FIGUEROA DATE : 5-07-08
CHECKED BY : L.L. MURPHY DATE : 6-03-08

21-JUL-2008 10:37
r:\structures\finalplans\Str #2\R-2911B_sd_str#2-11_EB 1&2 .dgn
dchodge

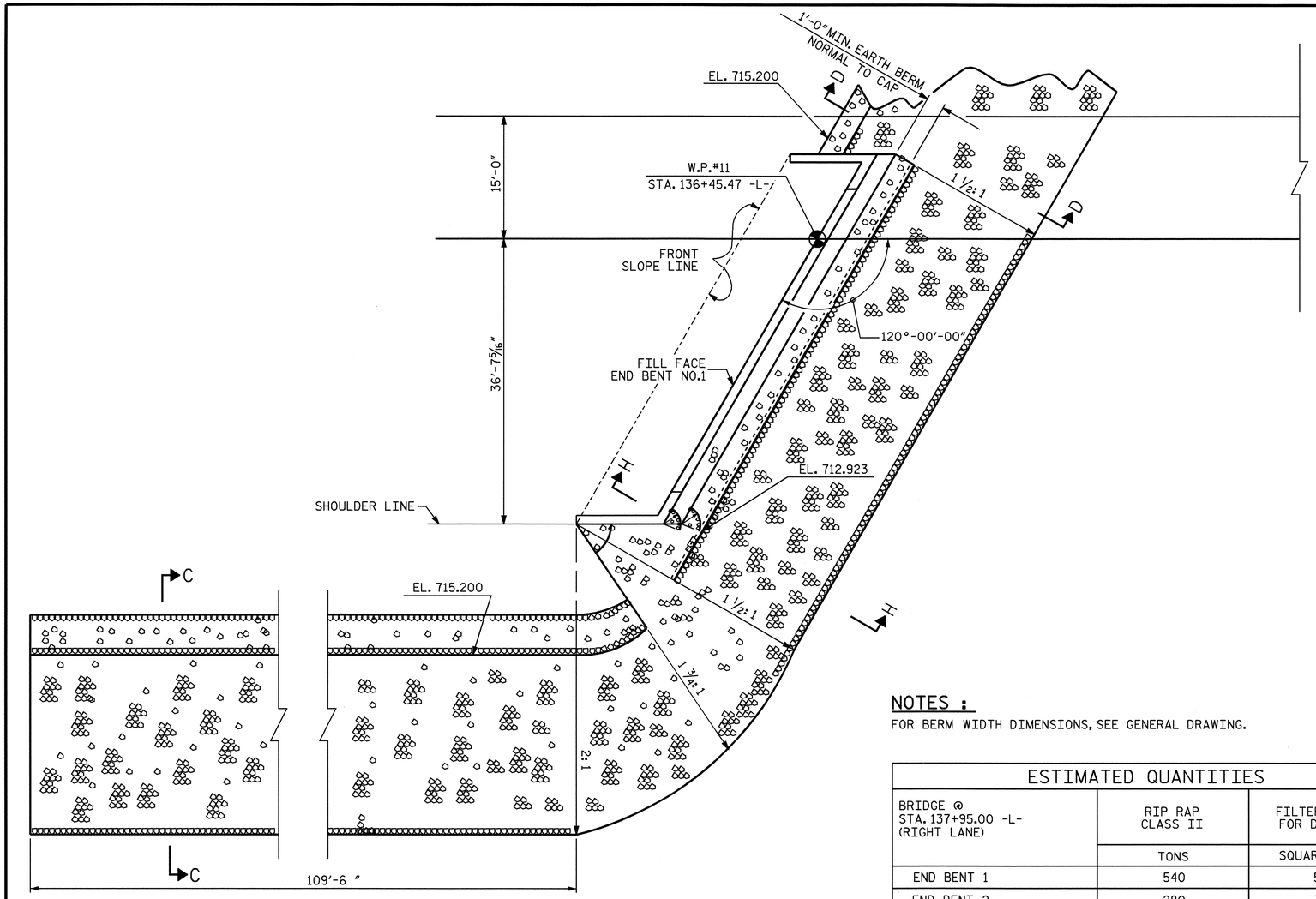

END BENT NO.1

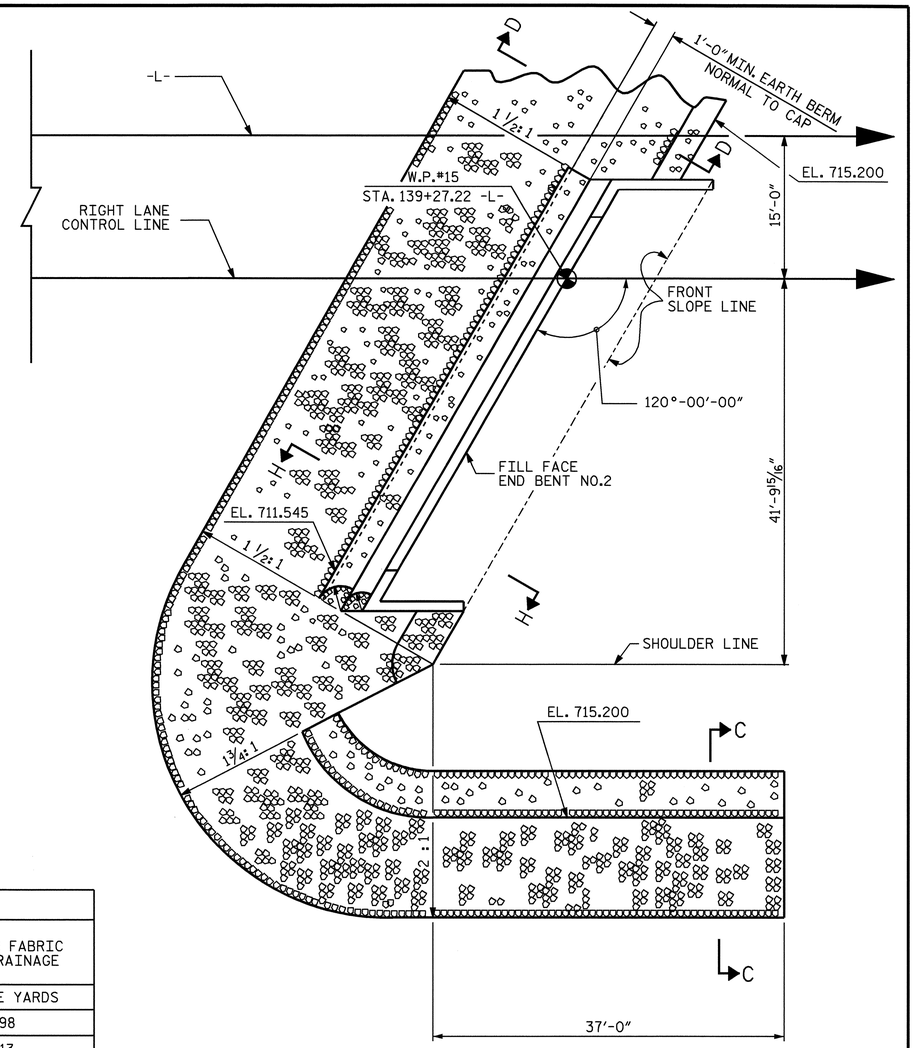

END BENT NO.2

NOTES :

FOR BERM WIDTH DIMENSIONS, SEE GENERAL DRAWING.

ESTIMATED QUANTITIES		
BRIDGE @ STA. 137+95.00 -L- (RIGHT LANE)	RIP RAP CLASS II	FILTER FABRIC FOR DRAINAGE
	TONS	SQUARE YARDS
END BENT 1	540	598
END BENT 2	280	313

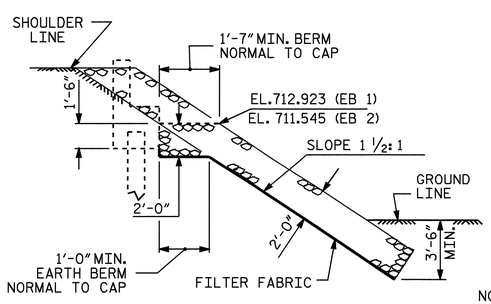

SECTION H-H

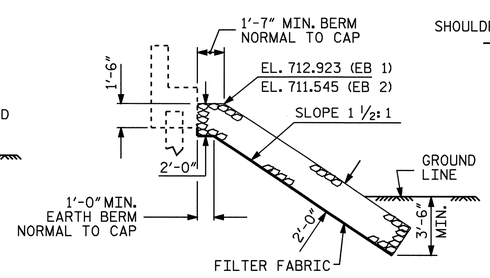

℄ SECTION

BERM RIP RAPPED

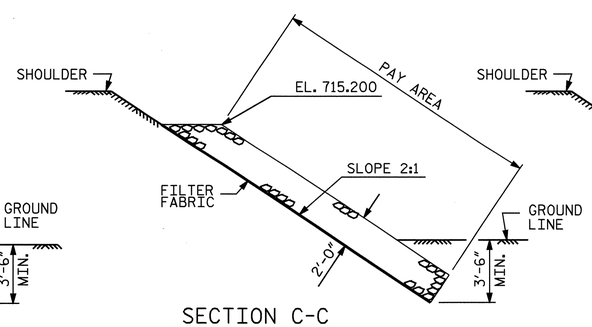

SECTION C-C

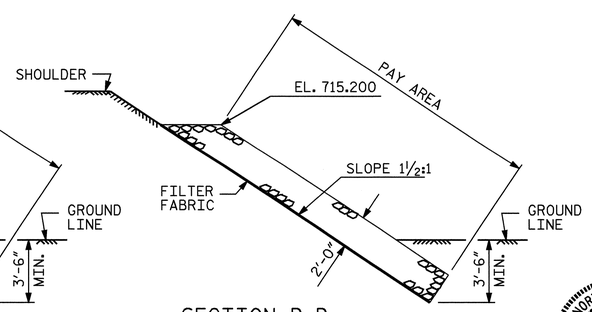

SECTION D-D

PROJECT NO. R-2911B

ROWAN COUNTY

STATION: 137+95.00 -L-

STATE OF NORTH CAROLINA
DEPARTMENT OF TRANSPORTATION
RALEIGH

RIP RAP DETAILS (RIGHT LANE)

NORTH CAROLINA PROFESSIONAL SEAL 20125 ENGINEER MARSHALL G. CHEEK, JR.

7-21-08

REVISIONS						SHEET NO.
NO.	BY:	DATE:	NO.	BY:	DATE:	S-72
1			3			TOTAL SHEETS
2			4			77

STR #2 STD. NO. RR3

ASSEMBLED BY : A.L. FIGUEROA		DATE :	10-31-07
CHECKED BY : D. HODGE		DATE :	6-18-08
DRAWN BY : REK 1/84	REV. 8/16/99	RWW/LES	
CHECKED BY : RDU 1/84	REV. 10/17/00	RWW/LES	
	REV. 5/1/06	TLA/GM	

21-JUL-2008 10:38
r:\structures\finalplans\Str #1\R-2911B_sd_str#1-15_SP.dgn
dahodge

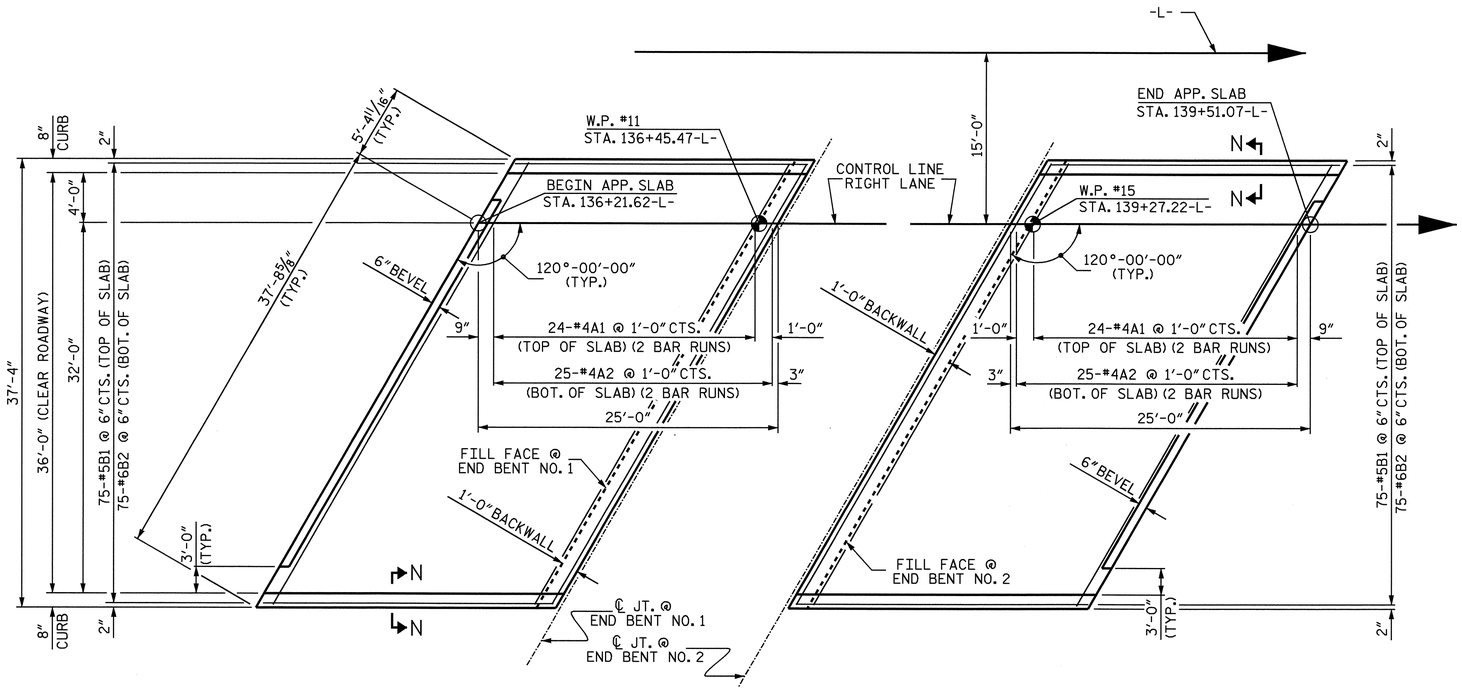

APPROACH SLAB @ END BENT NO. 1 APPROACH SLAB @ END BENT NO. 2

PLAN

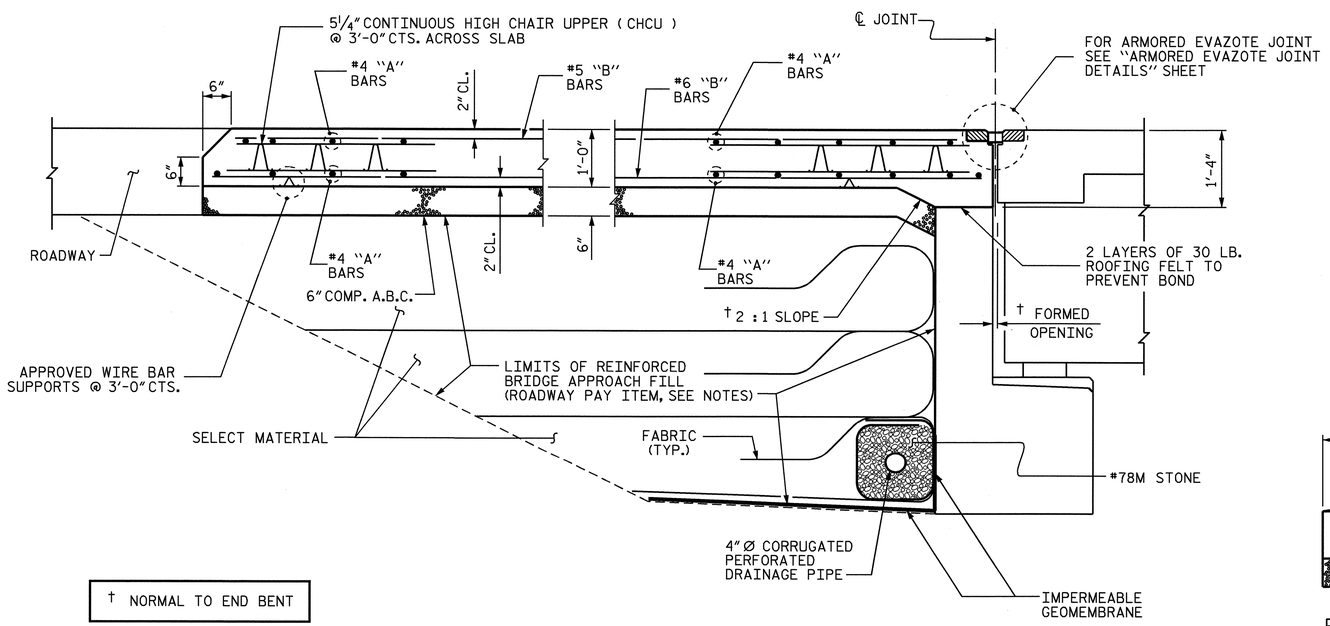

† NORMAL TO END BENT

SECTION THRU SLAB

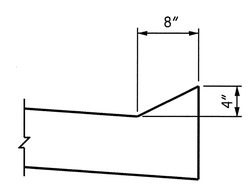

SECTION N-N

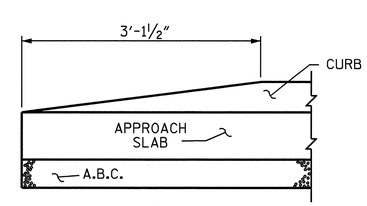

END OF CURB WITHOUT SHOULDER BERM GUTTER

CURB DETAILS

NOTES

APPROACH SLAB SHALL NOT BE CONSTRUCTED PRIOR TO COMPLETION OF THE BRIDGE DECK.

FOR REINFORCED BRIDGE APPROACH FILL INCLUDING FABRIC, IMPERMEABLE GEOMEMBRANE, 4" Ø DRAINAGE PIPE, #78M STONE, AND SELECT MATERIAL, SEE ROADWAY PLANS.

AREA BETWEEN THE WINGWALL AND APPROACH SLAB SHALL BE GRADED TO DRAIN THE WATER AWAY FROM THE FILL FACE OF THE BRIDGE AND SHALL BE PAVED. SEE ROADWAY PLANS.

THE 6" COMP. A.B.C. SHALL BE FLUSH WITH THE ROADWAY END OF THE APPROACH SLAB AND SHALL EXTEND 1'-0" OUTSIDE EACH EDGE OF THE APPROACH SLAB.

THE CONTRACTOR MAY USE 4" TYPE B-25.0B ASPHALT CONCRETE BASE COURSE IN LIEU OF 6" COMP. A.B.C. IF THIS OPTION IS USED, THE BASE COURSE SHALL BE FLUSH WITH THE ROADWAY END OF THE APPROACH SLAB, AND THE WIDTH SHALL BE THE SAME AS THAT OF THE APPROACH SLAB.

THE CONTRACTOR MAY USE 5" CLASS "A" CONCRETE BASE IN LIEU OF 6" COMP. A.B.C. IF THIS OPTION IS USED, THE CONCRETE BASE SHALL BE FLUSH WITH THE ROADWAY END OF THE APPROACH SLAB, AND THE WIDTH SHALL BE THE SAME AS THAT OF THE APPROACH SLAB. THE CONCRETE SHALL BE FINISHED TO A SMOOTH SURFACE AND A LAYER OF 30 LB ROOFING FELT SHALL BE PLACED BETWEEN THE CONCRETE BASE AND THE APPROACH SLAB TO PREVENT BOND. THE APPROACH SLAB SHALL NOT BE CAST UNTIL THE CONCRETE BASE HAS REACHED AN AGE OF THREE CURING DAYS.

FOR EVAZOTE JOINT SEALS, SEE SPECIAL PROVISIONS.

BILL OF MATERIAL

APPROACH SLAB AT EB #1

BAR	NO.	SIZE	TYPE	LENGTH	WEIGHT
✱A1	48	#4	STR	22'-5"	719
A2	50	#4	STR	22'-3"	743
✱B1	75	#5	STR	23'-6"	1838
B2	75	#6	STR	24'-7"	2769
REINFORCING STEEL				LBS.	3512
✱EPOXY COATED REINFORCING STEEL				LBS.	2557
CLASS AA CONCRETE				C. Y.	35.0

APPROACH SLAB AT EB #2

BAR	NO.	SIZE	TYPE	LENGTH	WEIGHT
✱A1	48	#4	STR	22'-5"	719
A2	50	#4	STR	22'-3"	743
✱B1	75	#5	STR	23'-6"	1838
B2	75	#6	STR	24'-7"	2769
REINFORCING STEEL				LBS.	3512
✱EPOXY COATED REINFORCING STEEL				LBS.	2557
CLASS AA CONCRETE				C. Y.	35.0

✱ THESE BARS ARE EPOXY COATED.

SPLICE CHART

BAR SIZE	EPOXY COATED	UNCOATED
#4	2'-0"	1'-9"
#5	2'-6"	2'-2"
#6	3'-10"	2'-7"

PROJECT NO. R-2911B
ROWAN COUNTY
STATION: 137+95.00-L-

SHEET 1 OF 2

STATE OF NORTH CAROLINA
DEPARTMENT OF TRANSPORTATION
RALEIGH

STANDARD

BRIDGE APPROACH SLAB FOR FLEXIBLE PAVEMENT RIGHT LANE

NORTH CAROLINA PROFESSIONAL SEAL 20125 ENGINEER MARSHALL G. CHEEK, JR.
7-21-08

REVISIONS						SHEET NO.
NO.	BY:	DATE:	NO.	BY:	DATE:	S-73
1			3			TOTAL SHEETS
2			4			77

ASSEMBLED BY : L.L. MURPHY	DATE : 05-08		
CHECKED BY : M.G. CHEEK	DATE : 05-08		
DRAWN BY : EEM 3/95	REV. 7/10/01	LES/RDR	
CHECKED BY : VAP 3/95	REV. 5/7/03R	RWW/JTE	
	REV. 5/1/06R	KMM/GM	

17-JUN-2008 14:34
R:\Structures\r2911b\lmurphy\Microstation\Str#2\R2911B_sd_AS_str#2.dgn
aflgueroa

STR #2 STD. NO. BAS4

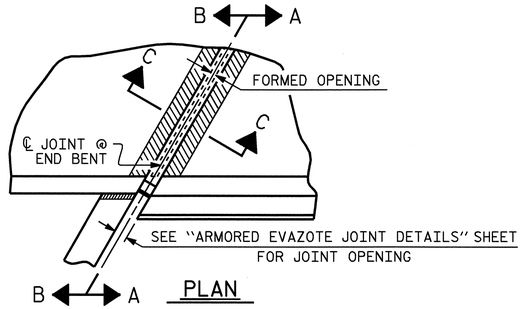

PLAN

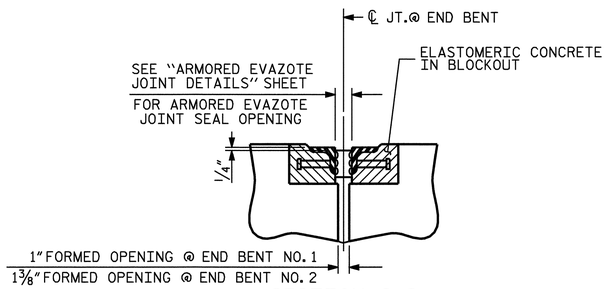

SECTION C-C
ARMORED EVAZOTE JOINT SEAL

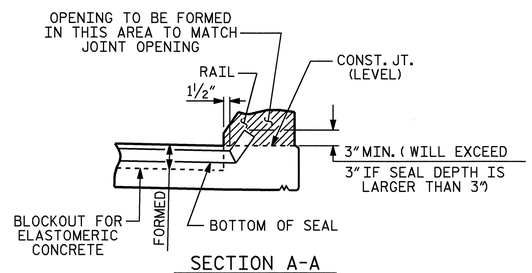

SECTION A-A

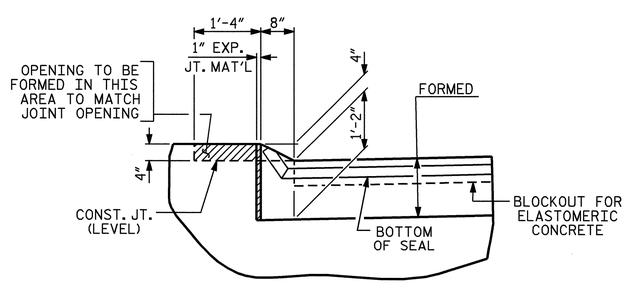

SECTION B-B

JOINT SEAL DETAILS @ END BENT

EVAZOTE JOINT SEAL TO BE CUT, HEAT WELDED AND TURNED UP PARALLEL TO SLOPED FACE OF THE BARRIER RAIL.

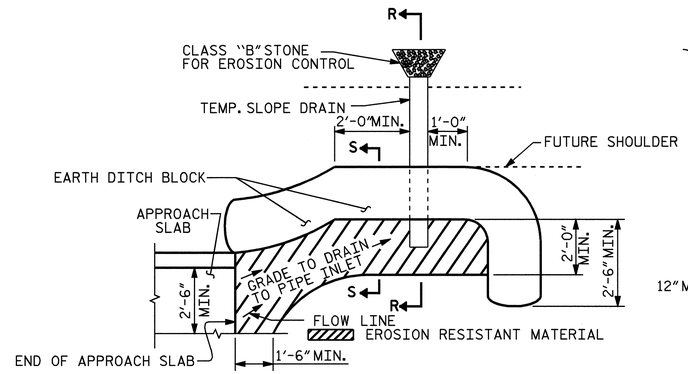

NOTE: IMMEDIATELY AFTER THE CONSTRUCTION OF THE APPROACH SLAB, THE CONTRACTOR SHALL PROVIDE TEMPORARY BERM AND SLOPE DRAIN. CONTRACTOR SHALL GRADE TO PIPE INLET AND PROVIDE EROSION RESISTANT MATERIAL AS SHOWN. THE EROSION RESISTANT MATERIAL SHALL BE EITHER 1) ASPHALT PLANT MIX, TYPE 1 OR TYPE 2, MIN. 2" DEPTH, 2) EROSION CONTROL MAT, OR 3) CONCRETE, AS DIRECTED BY THE ENGINEER. THE SLOPE DRAIN SHALL CONSIST OF A NON-PERFORATED TEMPORARY DRAINAGE PIPE, 12 INCHES IN DIAMETER.

PLAN VIEW

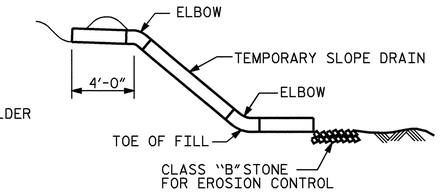

SECTION R-R

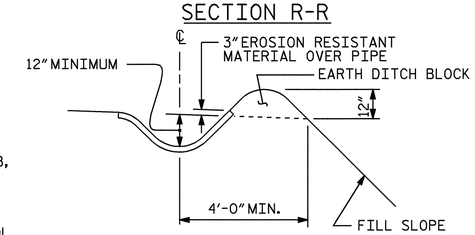

SECTION S-S

TEMPORARY BERM AND SLOPE DRAIN DETAILS

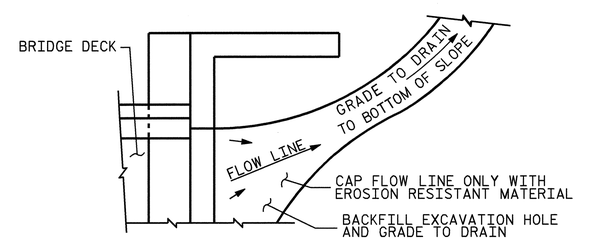

NOTE: IF THE APPROACH SLAB IS NOT CONSTRUCTED IMMEDIATELY AFTER THE BACKFILLING OF THE END BENT EXCAVATION, GRADE TO DRAIN TO THE BOTTOM OF THE SLOPE AND PROVIDE EROSION RESISTANT MATERIAL, SUCH AS FIBERGLASS ROVING OR AS DIRECTED BY THE ENGINEER TO PREVENT SOIL EROSION AND TO PROTECT THE AREA ADJACENT TO THE STRUCTURE. THE CONTRACTOR WILL BE REQUIRED TO REMOVE THESE MATERIALS PRIOR TO CONSTRUCTION OF THE APPROACH SLAB.

TEMPORARY DRAINAGE DETAIL

PROJECT NO. R-2911B
ROWAN COUNTY
STATION: 137+95.00-L-

SHEET 2 OF 2

STATE OF NORTH CAROLINA
DEPARTMENT OF TRANSPORTATION
RALEIGH

STANDARD

BRIDGE APPROACH SLAB DETAILS RIGHT LANE

NORTH CAROLINA PROFESSIONAL SEAL 20125 ENGINEER MARSHALL G. CHEEK, JR.
7-21-08

REVISIONS						SHEET NO.
NO.	BY:	DATE:	NO.	BY:	DATE:	S-74
1			3			TOTAL SHEETS
2			4			77

STR #2 STD. NO. BAS10

ASSEMBLED BY : L.L. MURPHY		DATE :	05-08
CHECKED BY : M.G. CHEEK		DATE :	05-08
DRAWN BY : FCJ 11/88	REV. 10/17/00		RWW/LES
CHECKED BY : ARB 11/88	REV. 5/7/03		RWW/JTE
	REV. 5/1/06R		MAA/KMM

21-JUL-2008 10:40
r:\structures\final plans\Str #2\R-2911B_sd_str#2-13_AS.dgn
dahodge

OVERHANG BRACKET CALCULATION INSTRUCTIONS

AASHTO SHAPES - TYPES III, IV, V, AND VI

1. RECORD KNOWN INFORMATION ON "BRIDGE OVERHANG BRACKET SUMMARY" ON SHEET 2
2. CALCULATE THE MAXIMUM SCREED LOAD PER BRACKET (SLPB) WITH AN ESTIMATED R = 1.5. SLPB = R X W. ROUND VALUE UP TO NEAREST SLPB VALUE INDICATED ON APPROPRIATE TABLE 1-1, 1-2, 1-3, OR 1-4.
3. WITH THE ESTIMATED SLPB, OVERHANG SLAB THICKNESS, "K" VALUE, AND 45° HANGER SAFE WORKING LOAD (SWL), ENTER THE APPROPRIATE TABLE 1-1, 1-2, 1-3, OR 1-4 (BASED ON OVERHANG DIMENSION) AND DETERMINE THE BRACKET SPACING, S.
4. CALCULATE S/D1 AND S/D2, ROUNDING UP TO NEAREST VALUE IN TABLE 2. ENTER TABLE 2 AND DETERMINE R VALUE.
5. CALCULATE REVISED SLPB. ROUND VALUE UP TO NEAREST SLPB VALUE INDICATED ON APPROPRIATE TABLE 1-1, 1-2, 1-3, OR 1-4.
6. WITH THE REVISED SLPB, OVERHANG SLAB THICKNESS, "K" VALUE AND 45 HANGER SAFE WORKING LOAD (SWL), ENTER THE APPROPRIATE TABLE 1-1, 1-2, 1-3 OR 1-4 (BASED ON OVERHANG DIMENSION) AND DETERMINE REVISED BRACKET SPACING, S.
7. CONTINUE ITERATIONS OF STEPS 4-6 UNTIL THE REVISED BRACKET SPACING, S, IS THE SAME AS THE PREVIOUS S VALUE.
8. CHECK LUMBER JOIST SPACING: WITH BRACKET SPACING VALUE, S, ROUND THIS VALUE UP TO THE NEAREST VALUE OF ALLOWABLE SPAN LENGTH OF JOIST OF TABLE 3. USING THIS VALUE, ALONG WITH THE AVERAGE OVERHANG SLAB THICKNESS AND THE LUMBER JOIST SIZE, DETERMINE JOIST SPACING FROM TABLE 3. IF NECESSARY, ADJUST LUMBER JOIST SIZE AND/OR JOIST SPACING TO MEET ALLOWABLE SPAN LENGTH OF JOIST.
9. CONVERSELY, IF THE DESIRED JOIST SPACING IS KNOWN, USE THIS ALONG WITH THE AVERAGE OVERHANG SLAB THICKNESS AND THE LUMBER JOIST SIZE TO DETERMINE IF ALLOWABLE SPAN LENGTH OF JOIST IS GREATER THAN THE BRACKET SPACING, S. IF NECESSARY, ADJUST LUMBER JOIST SIZE TO MEET REQUIREMENTS OF ALLOWABLE SPAN LENGTH OF JOIST AND JOIST SPACING.
10. RECORD REMAINING INFORMATION ON "BRIDGE OVERHANG BRACKET SUMMARY" FORM.
11. SUBMIT FORM AND CALCULATIONS FOR REVIEW AND APPROVAL.

TABLE 1-1

(FOR USE ON **UP TO 2'-0" OVERHANG Ⓛ** & 54" HORIZONTAL LEG LENGTH OF THE OVERHANG BRACKET)

AVG. SLAB THICKNESS Ⓣ (in)	BRACKET Ⓚ DIMENSION (in)	SCREED LOAD PER BRACKET									45° HANGER SWL (lbs)
		2500 lbs.	2250 lbs.	2000 lbs.	1750 lbs.	1500 lbs.	1250 lbs.	1000 lbs.	750 lbs.	0 lbs.	
		BRACKET SPACING									
10	30				2'-1"	2'-7"	3'-2"	3'-8"	4'-2"	5'-9"	4000
		3'-6"	4'-0"	4'-5"	4'-9"	5'-1"	5'-3"	5'-5"	5'-7"	6'-7"	6000
	40				2'-1"	2'-7"	3'-2"	3'-8"	4'-2"	5'-9"	4000
		3'-6"	4'-0"	4'-5"	4'-9"	5'-1"	5'-3"	5'-5"	5'-7"	6'-7"	6000
	50				2'-1"	2'-7"	3'-2"	3'-8"	4'-2"	5'-9"	4000
		3'-6"	4'-0"	4'-5"	4'-9"	5'-1"	5'-3"	5'-5"	5'-7"	6'-7"	6000
12	30					2'-4"	2'-10"	3'-4"	3'-9"	5'-2"	4000
		3'-2"	3'-7"	4'-1"	4'-7"	5'-0"	5'-2"	5'-4"	5'-7"	6'-5"	6000
	40					2'-4"	2'-10"	3'-4"	3'-9"	5'-2"	4000
		3'-2"	3'-7"	4'-1"	4'-7"	5'-0"	5'-2"	5'-4"	5'-7"	6'-5"	6000
	50					2'-4"	2'-10"	3'-4"	3'-9"	5'-2"	4000
		3'-2"	3'-7"	4'-1"	4'-7"	5'-0"	5'-2"	5'-4"	5'-7"	6'-5"	6000
14	30					2'-2"	2'-7"	3'-0"	3'-5"	4'-9"	4000
		2'-10"	3'-4"	3'-9"	4'-2"	4'-7"	5'-0"	5'-4"	5'-7"	6'-4"	6000
	40					2'-2"	2'-7"	3'-0"	3'-5"	4'-9"	4000
		2'-10"	3'-4"	3'-9"	4'-2"	4'-7"	5'-0"	5'-4"	5'-7"	6'-4"	6000
	50					2'-2"	2'-7"	3'-0"	3'-5"	4'-9"	4000
		2'-10"	3'-4"	3'-9"	4'-2"	4'-7"	5'-0"	5'-4"	5'-7"	6'-4"	6000
16	30					2'-0"	2'-4"	2'-9"	3'-2"	4'-4"	4000
		2'-8"	3'-0"	3'-5"	3'-10"	4'-3"	4'-7"	5'-0"	5'-5"	6'-3"	6000
	40					2'-0"	2'-4"	2'-9"	3'-2"	4'-4"	4000
		2'-8"	3'-0"	3'-5"	3'-10"	4'-3"	4'-7"	5'-0"	5'-5"	6'-3"	6000
	50					2'-0"	2'-4"	2'-9"	3'-2"	4'-4"	4000
		2'-8"	3'-0"	3'-5"	3'-10"	4'-3"	4'-7"	5'-0"	5'-5"	6'-3"	6000

TABLE 1-2

(FOR USE ON **OVER 2'-0" TO 2'-6" OVERHANG Ⓛ** & 54" HORIZONTAL LEG LENGTH OF THE OVERHANG BRACKET)

AVG. SLAB THICKNESS Ⓣ (in)	BRACKET Ⓚ DIMENSION (in)	SCREED LOAD PER BRACKET									45° HANGER SWL (lbs)
		2500 lbs.	2250 lbs.	2000 lbs.	1750 lbs.	1500 lbs.	1250 lbs.	1000 lbs.	750 lbs.	0 lbs.	
		BRACKET SPACING									
10	30					2'-4"	2'-9"	3'-3"	3'-8"	5'-1"	4000
		3'-1"	3'-6"	4'-0"	4'-5"	4'-11"	5'-3"	5'-5"	5'-7"	6'-7"	6000
	40					2'-4"	2'-9"	3'-3"	3'-8"	5'-1"	4000
		3'-1"	3'-6"	4'-0"	4'-5"	4'-11"	5'-3"	5'-5"	5'-7"	6'-7"	6000
	50					2'-4"	2'-9"	3'-3"	3'-8"	5'-1"	4000
		3'-1"	3'-6"	4'-0"	4'-5"	4'-11"	5'-3"	5'-5"	5'-7"	6'-7"	6000
12	30					2'-1"	2'-6"	2'-11"	3'-4"	4'-6"	4000
		2'-9"	3'-2"	3'-7"	4'-0"	4'-5"	4'-10"	5'-3"	5'-7"	6'-5"	6000
	40					2'-1"	2'-6"	2'-11"	3'-4"	4'-6"	4000
		2'-9"	3'-2"	3'-7"	4'-0"	4'-5"	4'-10"	5'-3"	5'-7"	6'-5"	6000
	50					2'-1"	2'-6"	2'-11"	3'-4"	4'-6"	4000
		2'-9"	3'-2"	3'-7"	4'-0"	4'-5"	4'-10"	5'-3"	5'-7"	6'-5"	6000
14	30						2'-3"	2'-7"	3'-0"	4'-1"	4000
		2'-6"	2'-10"	3'-3"	3'-7"	4'-0"	4'-4"	4'-9"	5'-1"	6'-3"	6000
	40						2'-3"	2'-7"	3'-0"	4'-1"	4000
		2'-6"	2'-10"	3'-3"	3'-7"	4'-0"	4'-4"	4'-9"	5'-1"	6'-3"	6000
	50						2'-3"	2'-7"	3'-0"	4'-1"	4000
		2'-6"	2'-10"	3'-3"	3'-7"	4'-0"	4'-4"	4'-9"	5'-1"	6'-3"	6000
16	30						2'-1"	2'-5"	2'-9"	3'-9"	4000
		2'-3"	2'-7"	2'-11"	3'-4"	3'-8"	4'-0"	4'-4"	4'-8"	5'-8"	6000
	40						2'-1"	2'-5"	2'-9"	3'-9"	4000
		2'-3"	2'-7"	2'-11"	3'-4"	3'-8"	4'-0"	4'-4"	4'-8"	5'-8"	6000
	50						2'-1"	2'-5"	2'-9"	3'-9"	4000
		2'-3"	2'-7"	2'-11"	3'-4"	3'-8"	4'-0"	4'-4"	4'-8"	5'-8"	6000

TABLE 1-3

(FOR USE ON **OVER 2'-6" TO 3'-0" OVERHANG Ⓛ** & 54" HORIZONTAL LEG LENGTH OF THE OVERHANG BRACKET)

AVG. SLAB THICKNESS Ⓣ (in)	BRACKET Ⓚ DIMENSION (in)	SCREED LOAD PER BRACKET									45° HANGER SWL (lbs)
		2500 lbs.	2250 lbs.	2000 lbs.	1750 lbs.	1500 lbs.	1250 lbs.	1000 lbs.	750 lbs.	0 lbs.	
		BRACKET SPACING									
10	30					2'-1"	2'-6"	2'-11"	3'-4"	4'-6"	4000
						4'-5"	4'-10"	5'-3"	5'-7"	6'-7"	6000
	40					2'-1"	2'-6"	2'-11"	3'-4"	4'-6"	4000
		2'-9"	3'-2"	3'-7"	4'-0"	4'-5"	4'-10"	5'-3"	5'-7"	6'-7"	6000
	50					2'-1"	2'-6"	2'-11"	3'-4"	4'-6"	4000
		2'-9"	3'-2"	3'-7"	4'-0"	4'-5"	4'-10"	5'-3"	5'-7"	6'-7"	6000
12	30						2'-2"	2'-7"	2'-11"	4'-0"	4000
						3'-11"	4'-3"	4'-8"	5'-0"	6'-1"	6000
	40						2'-2"	2'-7"	2'-11"	4'-0"	4000
		2'-5"	2'-10"	3'-2"	3'-6"	3'-11"	4'-3"	4'-8"	5'-0"	6'-1"	6000
	50						2'-2"	2'-7"	2'-11"	4'-0"	4000
		2'-5"	2'-10"	3'-2"	3'-6"	3'-11"	4'-3"	4'-8"	5'-0"	6'-1"	6000
14	30						2'-0"	2'-4"	2'-8"	3'-8"	4000
					3'-2"	3'-6"	3'-10"	4'-2"	4'-6"	5'-6"	6000
	40						2'-0"	2'-4"	2'-8"	3'-8"	4000
		2'-2"	2'-6"	2'-10"	3'-2"	3'-6"	3'-10"	4'-2"	4'-6"	5'-6"	6000
	50						2'-0"	2'-4"	2'-8"	3'-8"	4000
		2'-2"	2'-6"	2'-10"	3'-2"	3'-6"	3'-10"	4'-2"	4'-6"	5'-6"	6000
16	30						2'-1"	2'-5"	3'-4"	4000
					2'-11"	3'-2"	3'-6"	3'-10"	4'-1"	5'-0"	6000
	40						2'-1"	2'-5"	3'-4"	4000
		2'-0"	2'-4"	2'-7"	2'-11"	3'-2"	3'-6"	3'-10"	4'-1"	5'-0"	6000
	50						2'-1"	2'-5"	3'-4"	4000
		2'-0"	2'-4"	2'-7"	2'-11"	3'-2"	3'-6"	3'-10"	4'-1"	5'-0"	6000

TABLE 1-4

(FOR USE ON **OVER 3'-0" TO 3'-6" OVERHANG Ⓛ** & 54" HORIZONTAL LEG LENGTH OF THE OVERHANG BRACKET)

AVG. SLAB THICKNESS Ⓣ (in)	BRACKET Ⓚ DIMENSION (in)	SCREED LOAD PER BRACKET									45° HANGER SWL (lbs)
		2500 lbs.	2250 lbs.	2000 lbs.	1750 lbs.	1500 lbs.	1250 lbs.	1000 lbs.	750 lbs.	0 lbs.	
		BRACKET SPACING									
10	30						2'-1"	2'-5"	2'-9"	3'-10"	4000
						2'-3"	2'-11"	3'-7"	4'-3"	5'-9"	6000
	40						2'-1"	2'-5"	2'-9"	3'-10"	4000
				2'-4"	3'-0"	3'-7"	4'-1"	4'-5"	4'-9"	5'-9"	6000
	50						2'-1"	2'-5"	2'-9"	3'-10"	4000
		2'-4"	2'-8"	3'-0"	3'-4"	3'-8"	4'-1"	4'-5"	4'-9"	5'-9"	6000
12	30							2'-2"	2'-6"	3'-5"	4000
						2'-1"	2'-8"	3'-4"	3'-11"	5'-2"	6000
	40							2'-2"	2'-6"	3'-5"	4000
				2'-2"	2'-9"	3'-4"	3'-7"	3'-11"	4'-3"	5'-2"	6000
	50							2'-2"	2'-6"	3'-5"	4000
		2'-1"	2'-4"	2'-8"	3'-0"	3'-4"	3'-7"	3'-11"	4'-3"	5'-2"	6000
14	30								2'-3"	3'-1"	4000
						2'-0"	2'-6"	3'-1"	3'-8"	4'-8"	6000
	40								2'-3"	3'-1"	4000
				2'-0"	2'-7"	3'-0"	3'-3"	3'-6"	3'-10"	4'-8"	6000
	50								2'-3"	3'-1"	4000
			2'-2"	2'-5"	2'-8"	3'-0"	3'-3"	3'-6"	3'-10"	4'-8"	6000
16	30								2'-0"	2'-9"	4000
							2'-4"	2'-10"	3'-5"	4'-3"	6000
	40								2'-0"	2'-9"	4000
					2'-5"	2'-8"	2'-11"	3'-3"	3'-6"	4'-3"	6000
	50								2'-0"	2'-9"	4000
				2'-2"	2'-5"	2'-8"	2'-11"	3'-3"	3'-6"	4'-3"	6000

DEFINITIONS

SLPB = SCREED LOAD PER BRACKET (R x W)
R = SCREED LOAD FACTOR, OBTAINED FROM TABLE 2
W = WHEEL LOAD
S = BRACKET SPACING
T = AVERAGE SLAB THICKNESS
SWL = SAFE WORKING LOAD
K = DIMENSION DEFINED ON "BRIDGE OVERHANG BRACKET SUMMARY" ON SHEET 2
L = OVERHANG MEASURED FROM EDGE OF TOP FLANGE TO EDGE OF SUPERSTRUCTURE

PROJECT NO. R-2911B
ROWAN COUNTY
STATION: 137+95.00 -L-

SHEET 1 OF 3

STATE OF NORTH CAROLINA
DEPARTMENT OF TRANSPORTATION
RALEIGH

STANDARD OVERHANG FALSEWORK

AASHTO TYPES
III, IV, V, AND VI

(RIGHT LANE)

NORTH CAROLINA PROFESSIONAL SEAL 18788 ENGINEER CHANG-CHUAN VICTOR CHAO

Chang-Chuan Victor Chao
4-22-2008

REVISIONS						SHEET NO.
NO.	BY:	DATE:	NO.	BY:	DATE:	S-75
1			3			TOTAL SHEETS
2			4			77

ASSEMBLED BY:	DATE:
CHECKED BY:	DATE:
DRAWN BY: R. WRIGHT 06/04	REV.
CHECKED BY: C. V. CHAO 06/04	

22-APR-2008 13:50
d:\wdlr\victor\overhangfalsework\tiebar&strut\r-2911b_type_iii\r2911brightoverhangsheets.dgn
vchao

STR. #2 OF1

BRIDGE OVERHANG BRACKET SUMMARY

TOTAL SCREED WEIGHT = _____ LBS.
NUMBER OF SCREED WHEELS = _____
SCREED WHEEL LOAD (W) = _____ LBS.
SCREED LOAD PER BRACKET = _____ LBS.

PROJECT No. : _____
COUNTY : _____
STATION : _____
DESCRIPTION : _____

DATE : _____
DESIGN BY : _____
CHECK BY : _____

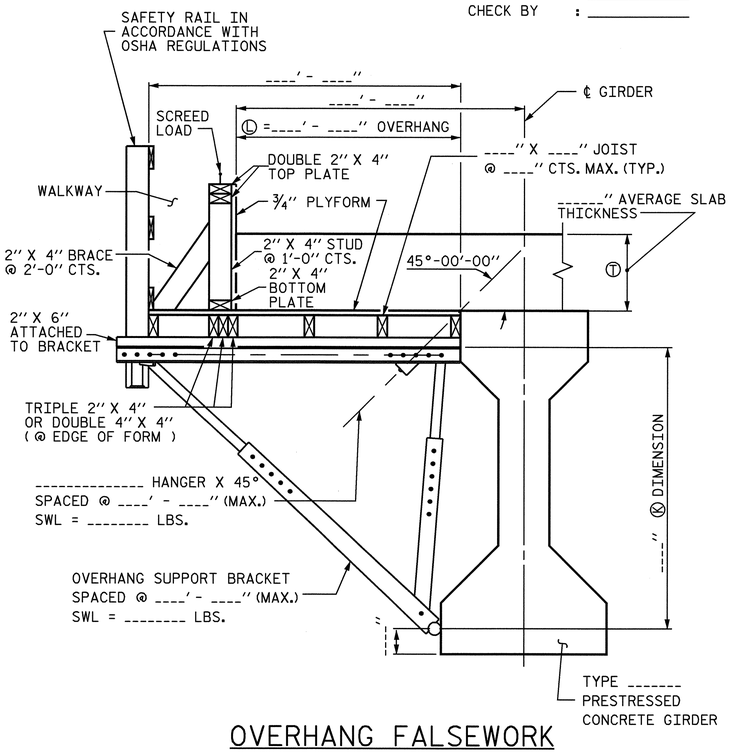

OVERHANG FALSEWORK

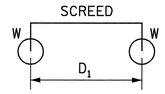

4-WHEEL MACHINE

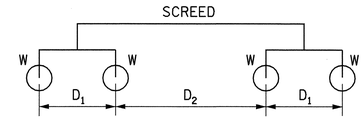

8-WHEEL MACHINE

4 WHEEL MACHINE	
S/D1	R
<= 1.0	1.00
1.1	1.09
1.2	1.17
1.3	1.23
1.4	1.29
1.5	1.33
1.6	1.38
1.7	1.41
1.8	1.44
1.9	1.47
2.0	1.50
2.2	1.55
2.4	1.58
2.6	1.62
2.8	1.64
3.0	1.67
3.5	1.71
4.0	1.75

TABLE 2: SCREED LOAD FACTOR "R"

		THE SCREED LOAD FACTOR R (FOR 8 WHEEL MACHINE)																	
		S/D_2																	
		<= 1.0	1.1	1.2	1.3	1.4	1.5	1.6	1.7	1.8	1.9	2.0	2.2	2.4	2.6	2.8	3.0	3.5	4.0
S/D_1	<= 1.0	1.00	1.09	1.17	1.23	1.29	1.33	1.38	1.41	1.44	1.47	1.50	1.55	1.58	1.62	1.64	1.67	1.71	1.75
	1.1	1.09	1.18	1.26	1.32	1.38	1.42	1.47	1.50	1.54	1.56	1.59	1.64	1.67	1.71	1.73	1.76	1.81	1.84
	1.2	1.17	1.26	1.33	1.40	1.45	1.50	1.54	1.58	1.61	1.64	1.67	1.71	1.75	1.78	1.81	1.83	1.88	1.92
	1.3	1.23	1.32	1.40	1.46	1.52	1.56	1.61	1.64	1.68	1.70	1.73	1.78	1.81	1.85	1.87	1.90	1.95	1.98
	1.4	1.29	1.38	1.45	1.52	1.57	1.62	1.66	1.70	1.73	1.76	1.79	1.83	1.87	1.90	1.93	1.95	2.00	2.07
	1.5	1.33	1.42	1.50	1.56	1.62	1.67	1.71	1.75	1.78	1.81	1.83	1.88	1.92	1.95	1.98	2.00	2.10	2.17
	1.6	1.38	1.47	1.54	1.61	1.66	1.71	1.75	1.79	1.82	1.85	1.88	1.92	1.96	1.99	2.04	2.08	2.18	2.25
	1.7	1.41	1.50	1.58	1.64	1.70	1.75	1.79	1.82	1.86	1.89	1.91	1.96	2.00	2.05	2.11	2.16	2.25	2.32
	1.8	1.44	1.54	1.61	1.68	1.73	1.78	1.82	1.86	1.89	1.92	1.94	1.99	2.06	2.12	2.17	2.22	2.32	2.39
	1.9	1.47	1.56	1.64	1.70	1.76	1.81	1.85	1.89	1.92	1.95	1.97	2.04	2.11	2.18	2.23	2.28	2.38	2.45
	2.0	1.50	1.59	1.67	1.73	1.79	1.83	1.88	1.91	1.94	1.97	2.00	2.09	2.17	2.23	2.29	2.33	2.43	2.50
	2.2	1.55	1.64	1.71	1.78	1.83	1.88	1.92	1.96	1.99	2.04	2.09	2.18	2.26	2.32	2.38	2.42	2.52	2.59
	2.4	1.58	1.67	1.75	1.81	1.87	1.92	1.96	2.00	2.06	2.11	2.17	2.26	2.33	2.40	2.45	2.50	2.60	2.67
	2.6	1.62	1.71	1.78	1.85	1.90	1.95	1.99	2.05	2.12	2.18	2.23	2.32	2.40	2.46	2.52	2.56	2.66	2.73
	2.8	1.64	1.73	1.81	1.87	1.93	1.98	2.04	2.11	2.17	2.23	2.29	2.38	2.45	2.52	2.57	2.62	2.71	2.79
	3.0	1.67	1.76	1.83	1.90	1.95	2.00	2.08	2.16	2.22	2.28	2.33	2.42	2.50	2.56	2.62	2.67	2.76	2.83
	3.5	1.71	1.81	1.88	1.95	2.00	2.10	2.18	2.25	2.32	2.38	2.43	2.52	2.60	2.66	2.71	2.76	2.86	2.93
	4.0	1.75	1.84	1.92	1.98	2.07	2.17	2.25	2.32	2.39	2.45	2.50	2.59	2.67	2.73	2.79	2.83	2.93	3.00

TABLE 3: ALLOWABLE SPAN LENGTH OF JOISTS AND JOIST SPACINGS

AVG. SLAB THICKNESS Ⓣ (IN)	LUMBER JOIST SIZE (IN X IN)	JOIST SPACINGS			
		15 IN	12 IN	10 IN	8 IN
		THE ALLOWABLE SPAN LENGTH OF JOISTS			
10	2 X 4	———	4' - 6"	4' - 9"	5' - 0"
	4 X 4	5' - 9"	6' - 3"	6' - 6"	6' - 7"
12	2 X 4	———	4' - 3"	4' - 9"	5' - 0"
	4 X 4	5' - 3"	6' - 0"	6' - 3"	6' - 5"
14	2 X 4	———	4' - 0"	4' - 6"	5' - 0"
	4 X 4	———	5' - 6"	6' - 0"	6' - 4"
16	2 X 4	———	4' - 0"	4' - 3"	4' - 9"
	4 X 4	———	5' - 3"	5' - 9"	6' - 3"

NOTES

DESIGN INCLUDES CONSTRUCTION LIVE LOAD 20 PSF ON THE AREA SUPPORTED AND 75 PLF AT THE OUTSIDE DECK OF OVERHANGS.

REQUIRED MINIMUM DIAGONAL LEG CAPACITY: 3600 LB WORKING LOAD

THE CONTRACTOR HAS THE OPTION OF SUBMITTING HIS OWN DESIGN FOR OVERHANG FALSEWORK IN ACCORDANCE WITH THE SPECIAL PROVISIONS.

SUBMITTALS UTILIZING THE INSTRUCTIONS AND PROCEDURES DESCRIBED ON SHEET 1 OF 3 SHALL BE IN ACCORDANCE WITH THE APPLICABLE SECTIONS OF THE SPECIFICATIONS AND SPECIAL PROVISIONS, EXCEPT THAT CALCULATIONS FOR OVERHANG FALSEWORK NEED NOT BE SEALED BY A REGISTERED ENGINEER.

FOR OVERHANG FALSEWORK BRACING DESIGN, SEE SHEET 3 OF 3.

PROJECT NO. R-2911B
ROWAN COUNTY
STATION: 137+95.00 -L-

SHEET 2 OF 3

STATE OF NORTH CAROLINA
DEPARTMENT OF TRANSPORTATION
RALEIGH

STANDARD OVERHANG FALSEWORK

AASHTO TYPES
III, IV, V, AND VI

(RIGHT LANE)

NORTH CAROLINA PROFESSIONAL SEAL 18788 ENGINEER CHANG-CHUAN VICTOR CHAO

Chang-Chuan Victor Chao
4-22-2008

REVISIONS						SHEET NO.
NO.	BY:	DATE:	NO.	BY:	DATE:	S-76
1			3			TOTAL SHEETS
2			4			77

ASSEMBLED BY:	DATE:
CHECKED BY:	DATE:
DRAWN BY: R. WRIGHT 06/04	REV.
CHECKED BY: C. V. CHAO 06/04	

22-APR-2008 13:51
d:\wdlr\victor\overhangfalsework\tiebar&strut\r-2911b_type_III\r2911brightoverhangsheets.dgn
vchao

STR. #2

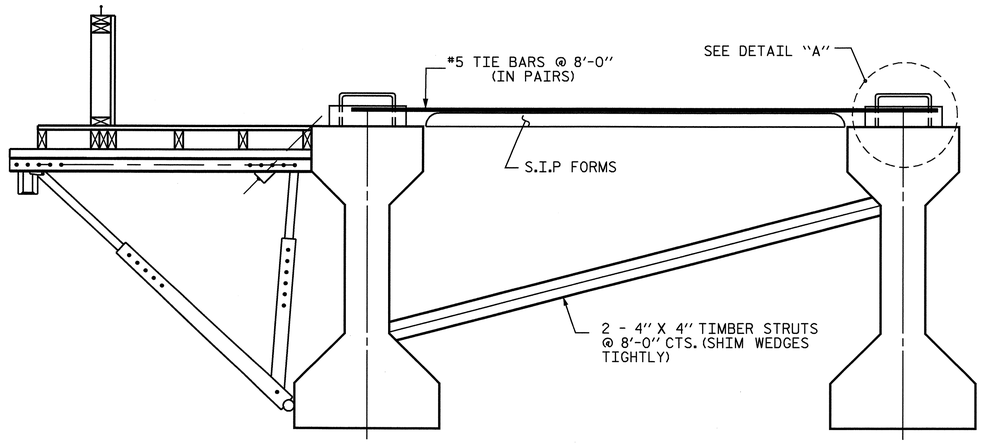

EXTERIOR GIRDER INTERIOR GIRDER

DETAIL OF REQUIRED OVERHANG FALSEWORK BRACING SYSTEM

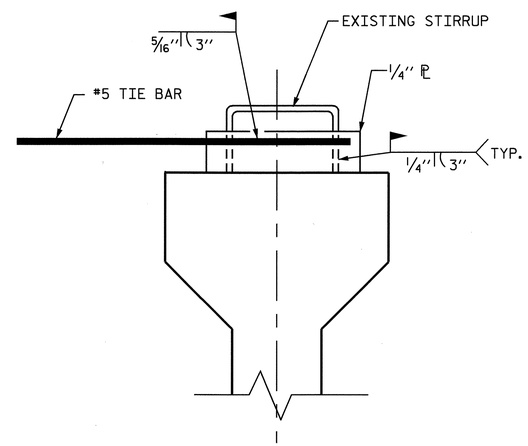

DETAIL "A"

NOTES:

EACH #5 TIE BAR SHALL BE WELDED TO ONE STIRRUP LOOP AS SHOWN IN DETAIL "A". #5 TIE BARS SHALL BE WELDED TO TWO ADJACENT STIRRUPS OF THE EXTERIOR GIRDER AND THE ADJACENT INTERIOR GIRDER BETWEEN PERMANENT DIAPHRAGMS. WELD STEEL PLATES IN BETWEEN THE TIE BARS AND THE STIRRUP LOOP. WELDING TWO TIE BARS TO THE SAME STIRRUP LOOP SHALL NOT BE PERMITTED.

MAXIMUM SPACING BETWEEN THE BRACING (TIE BARS-TIMBER STRUT) IS 8'-0" CTS. #5 TIE BARS SHALL BE LOCATED OVER A TIMBER STRUT.

INSTALL TIE BARS AND TIMBER STRUTS PRIOR TO PLACEMENT OF CONCRETE OR SCREED WEIGHT ONTO THE OVERHANG FALSEWORK.

PROJECT NO. R-2911B
ROWAN COUNTY
STATION: 137+95.00 -L-

SHEET 3 OF 3

STATE OF NORTH CAROLINA
DEPARTMENT OF TRANSPORTATION
RALEIGH

STANDARD OVERHANG FALSEWORK

AASHTO TYPES
III, IV, V, AND VI

(RIGHT LANE)

NORTH CAROLINA PROFESSIONAL SEAL 18788 ENGINEER CHANG-CHUAN VICTOR CHAO

Chang-Chuan Victor Chao
4-22-2008

REVISIONS						SHEET NO.
NO.	BY:	DATE:	NO.	BY:	DATE:	S-77
1			3			TOTAL SHEETS
2			4			77

DRAWN BY: R. WRIGHT 06/04 DATE :
CHECKED BY: C. V. CHAO 06/04 DATE :

22-APR-2008 13:51
d:\wdlr\victor\overhangfalsework\tiebar&strut\r-2911b_type_iii\r2911brightoverhangsheets.dgn
vchao

STR. #2 OF3

STANDARD NOTES

DESIGN DATA:

SPECIFICATIONS	A.A.S.H.T.O. (CURRENT)
LIVE LOAD	SEE PLANS
IMPACT ALLOWANCE	SEE A.A.S.H.T.O.
STRESS IN EXTREME FIBER OF	
STRUCTURAL STEEL - AASHTO M270 GRADE 36	20,000 LBS. PER SQ. IN.
- AASHTO M270 GRADE 50W	27,000 LBS. PER SQ. IN.
- AASHTO M270 GRADE 50	27,000 LBS. PER SQ. IN.
REINFORCING STEEL IN TENSION	
GRADE 60	24,000 LBS. PER SQ. IN.
CONCRETE IN COMPRESSION	1,200 LBS. PER SQ. IN.
CONCRETE IN SHEAR	SEE A.A.S.H.T.O.
STRUCTURAL TIMBER - TREATED OR	
UNTREATED - EXTREME FIBER STRESS	1,800 LBS. PER SQ. IN.
COMPRESSION PERPENDICULAR TO GRAIN OF TIMBER	375 LBS. PER SQ. IN.
EQUIVALENT FLUID PRESSURE OF EARTH	30 LBS. PER CU. FT. (MINIMUM)

MATERIAL AND WORKMANSHIP:

EXCEPT AS MAY OTHERWISE BE SPECIFIED ON PLANS OR IN THE SPECIAL PROVISIONS, ALL MATERIAL AND WORKMANSHIP SHALL BE IN ACCORDANCE WITH THE 2002 STANDARD SPECIFICATIONS "FOR ROADS AND STRUCTURES" OF THE N. C. DEPARTMENT OF TRANSPORTATION.

STEEL SHEET PILING FOR PERMANENT OR TEMPORARY APPLICATIONS SHALL BE HOT ROLLED.

CONCRETE:

UNLESS OTHERWISE REQUIRED ON PLANS, CLASS A CONCRETE SHALL BE USED FOR ALL PORTIONS OF ALL STRUCTURES WITH THE EXCEPTION THAT: CLASS AA CONCRETE SHALL BE USED IN BRIDGE SUPERSTRUCTURES, ABUTMENT BACKWALLS, AND APPROACH SLABS; CLASS B CONCRETE SHALL BE USED FOR SLOPE PROTECTION AND RIP RAP; AND CLASS S SHALL BE USED FOR UNDERWATER FOOTING SEALS.

CONCRETE CHAMFERS:

UNLESS OTHERWISE NOTED ON THE PLANS, ALL EXPOSED CORNERS ON STRUCTURES SHALL BE CHAMFERED 3/4" WITH THE FOLLOWING EXCEPTIONS: TOP CORNERS OF CURBS MAY BE ROUNDED TO 1-1/2" RADIUS WHICH IS BUILT INTO CURB FORMS; CORNERS OF TRANSVERSE FLOOR EXPANSION JOINTS SHALL BE ROUNDED WITH A 1/4" FINISHING TOOL UNLESS OTHERWISE REQUIRED ON PLANS; AND CORNERS OF EXPANSION JOINTS IN THE ROADWAY FACES AND TOPS OF CURBS AND SIDEWALKS SHALL BE ROUNDED TO A 1/4" RADIUS WITH A FINISHING STONE OR TOOL UNLESS OTHERWISE REQUIRED ON PLANS.

DOWELS:

DOWELS WHEN INDICATED ON PLANS AS FOR CULVERT EXTENSIONS, SHALL BE EMBEDDED AT LEAST 12" INTO THE OLD CONCRETE AND GROUTED INTO PLACE WITH 1:2 CEMENT MORTAR.

ALLOWANCE FOR DEAD LOAD DEFLECTION, SETTLEMENT, ETC. IN CASTING SUPERSTRUCTURES:

BRIDGES SHALL BE BUILT ON THE GRADE OR VERTICAL CURVE SHOWN ON PLANS. SLABS, CURBS AND PARAPETS SHALL CONFORM TO THE GRADE OR CURVE.

ALL DIMENSIONS WHICH ARE GIVEN IN SECTION AND ARE AFFECTED BY DEAD LOAD DEFLECTIONS ARE DIMENSIONS AT CENTER LINE OF BEARING UNLESS OTHERWISE NOTED ON PLANS. IN SETTING FORMS FOR STEEL BEAM BRIDGES AND PRESTRESSED CONCRETE GIRDER BRIDGES, ADJUSTMENTS SHALL BE MADE DUE TO THE DEAD LOAD DEFLECTIONS FOR THE ELEVATIONS SHOWN. WHERE BLOCKS ARE SHOWN OVER BEAMS FOR BUILDING UP TO THE SLAB, THE VERTICAL DIMENSIONS OF THE BLOCKS SHALL BE ADJUSTED BETWEEN BEARINGS TO COMPENSATE FOR DEAD LOAD DEFLECTIONS, VERTICAL CURVE ORDINATE, AND ACTUAL BEAM CAMBER. WHERE BOTTOM OF SLAB IS IN LINE WITH BOTTOM OF TOP FLANGES, DEPTH OF SLAB BETWEEN BEARINGS SHALL BE ADJUSTED TO COMPENSATE FOR DEAD LOAD DEFLECTION, VERTICAL CURVE ORDINATE, AND ACTUAL BEAM CAMBER.

IN SETTING FALSEWORK AND FORMS FOR REINFORCED CONCRETE SPANS, AN ALLOWANCE SHALL BE MADE FOR DEAD LOAD DEFLECTIONS, SETTLEMENT OF FALSEWORK, AND PERMANENT CAMBER WHICH SHALL BE PROVIDED FOR IN ADDITION TO THE ELEVATIONS SHOWN. AFTER REMOVAL OF THE FALSEWORK, THE FINISHED STRUCTURES SHALL CONFORM TO THE PROFILE AND ELEVATIONS SHOWN ON THE PLANS AND CONSTRUCTION ELEVATIONS FURNISHED BY THE ENGINEER.

DETAILED DRAWINGS FOR FALSEWORK OR FORMS FOR BRIDGE SUPERSTRUCTURE AND ANY STRUCTURE OR PARTS OF A STRUCTURE AS NOTED ON THE PLANS SHALL BE SUBMITTED TO THE ENGINEER FOR APPROVAL BEFORE CONSTRUCTION OF THE FALSEWORK OR FORMS IS STARTED.

REINFORCING STEEL:

ALL REINFORCING STEEL SHALL BE DEFORMED WITH THE EXCEPTION OF #2 BARS WHICH MAY BE FABRICATED FROM COLD DRAWN STEEL WIRE. DIMENSIONS RELATIVE TO PLACEMENT OF REINFORCING ARE TO CENTERS OF BARS UNLESS OTHERWISE INDICATED IN THE PLANS. DIMENSIONS ON BAR DETAILS ARE TO CENTERS OF BARS OR ARE OUT TO OUT AS INDICATED ON PLANS.

WIRE BAR SUPPORTS SHALL BE PROVIDED FOR REINFORCING STEEL WHERE INDICATED ON THE PLANS. WHEN BAR SUPPORT PIECES ARE PLACED IN CONTINUOUS LINES, THEY SHALL BE SO PLACED THAT THE ENDS OF THE SUPPORTING WIRES SHALL BE LAPPED TO LOCK LEGS ON ADJOINING PIECES.

STRUCTURAL STEEL:

AT THE CONTRACTOR'S OPTION, HE MAY SUBSTITUTE 7/8" Ø SHEAR STUDS FOR THE 3/4" Ø STUDS SPECIFIED ON THE PLANS. THIS SUBSTITUTION SHALL BE MADE AT THE RATE OF 3 - 7/8" Ø STUDS FOR 4 - 3/4" Ø STUDS, AND STUD SPACING CHANGES SHALL BE MADE AS NECESSARY TO PROVIDE THE SAME EQUIVALENT NUMBER OF 7/8" Ø STUDS ALONG THE BEAM AS SHOWN FOR 3/4" Ø STUDS BASED ON THE RATIO OF 3 - 7/8" Ø STUDS FOR 4 - 3/4" Ø STUDS. STUDS OF THE LENGTH SPECIFIED ON THE PLANS MUST BE PROVIDED. THE MAXIMUM SPACING SHALL BE 2'-0".

EXCEPT AT THE INTERIOR SUPPORTS OF CONTINUOUS BEAMS WHERE THE COVER PLATE IS IN CONTACT WITH BEARING PLATE, THE CONTRACTOR MAY, AT HIS OPTION, SUBSTITUTE FOR THE COVER PLATES DESIGNATED ON THE PLANS COVER PLATES OF THE EQUIVALENT AREA PROVIDED THESE PLATES ARE AT LEAST 5/16" IN THICKNESS AND DO NOT EXCEED A WIDTH EQUAL TO THE FLANGE WIDTH LESS 2" OR A THICKNESS EQUAL TO 2 TIMES THE FLANGE THICKNESS. THE SIZE OF FILLET WELDS SHALL CONFORM TO THE REQUIREMENTS OF THE CURRENT ANSI/AASHTO/AWS "BRIDGE WELDING CODE". ELECTROSLAG WELDING WILL NOT BE PERMITTED.

PLACEMENT OF BEAM OR GIRDER MEMBERS ON TRUCKS FOR HAULING SHALL BE DONE IN COMPLIANCE WITH LIMITS SHOWN ON SKETCHES PROVIDED TO THE MATERIALS AND TEST UNIT APPROVED BY THE STRUCTURE DESIGN UNIT DATED MAY 8, 1991. THESE SKETCHES PRIMARILY LIMIT THE UNSUPPORTED CANTILEVER LENGTH OF MEMBERS. WHEN THE CONTRACTOR WISHES TO PLACE MEMBERS ON TRUCKS NOT IN ACCORDANCE WITH THESE LIMITS, TO SHIP BY RAIL, TO ATTACH SHIPPING RESTRAINTS TO THE MEMBERS OR TO INVERT MEMBERS, HE SHALL SUBMIT A SKETCH FOR APPROVAL PRIOR TO SHIPPING. SEE ALSO ARTICLE 1072-11.

WITH THE SOLE EXCEPTION OF EDGES AT SURFACES WHICH BEAR ON OTHER SURFACES, ALL SHARP EDGES AND ENDS OF SHAPES AND PLATES SHALL BE SLIGHTLY ROUNDED BY SUITABLE MEANS TO A RADIUS OF APPROXIMATELY 1/16 INCH OR EQUIVALENT FLAT SURFACE AT A SUITABLE ANGLE PRIOR TO PAINTING, GALVANIZING, OR METALLIZING.

HANDRAILS AND POSTS:

METAL STANDARDS AND FACES OF THE CONCRETE END POSTS FOR THE METAL RAIL SHALL BE SET NORMAL TO THE GRADE OF THE CURB, UNLESS OTHERWISE SHOWN ON PLANS. THE METAL RAIL AND TOPS OF CONCRETE POSTS USED WITH THE ALUMINUM RAIL SHALL BE BUILT PARALLEL TO THE GRADE OF THE CURB.

METAL HANDRAILS SHALL BE IN ACCORDANCE WITH THE PLANS. RAILS SHALL BE AS MANUFACTURED FOR BRIDGE RAILING. CASTINGS SHALL BE OF A UNIFORM APPEARANCE. FINS AND OTHER DEFORMATIONS RESULTING FROM CASTING OR OTHERWISE SHALL BE REMOVED IN A MANNER SO THAT A UNIFORM COLORING OF THE COMPLETED CASTING SHALL BE OBTAINED. CASTINGS WITH DISCOLORATIONS OR OF NON-UNIFORM COLORING WILL NOT BE ACCEPTED. CERTIFIED MILL REPORTS ARE REQUIRED FOR METAL RAILS AND POSTS.

SPECIAL NOTES:

GENERALLY, IN CASE OF DISCREPANCY, THIS STANDARD SHEET OF NOTES SHALL GOVERN OVER THE SPECIFICATIONS, BUT THE REMAINDER OF THE PLANS SHALL GOVERN OVER NOTES HEREON, AND SPECIAL PROVISIONS SHALL GOVERN OVER ALL. SEE SPECIFICATIONS ARTICLE 105-4.

ENGLISH

JANUARY, 1990

STD. NO. SN