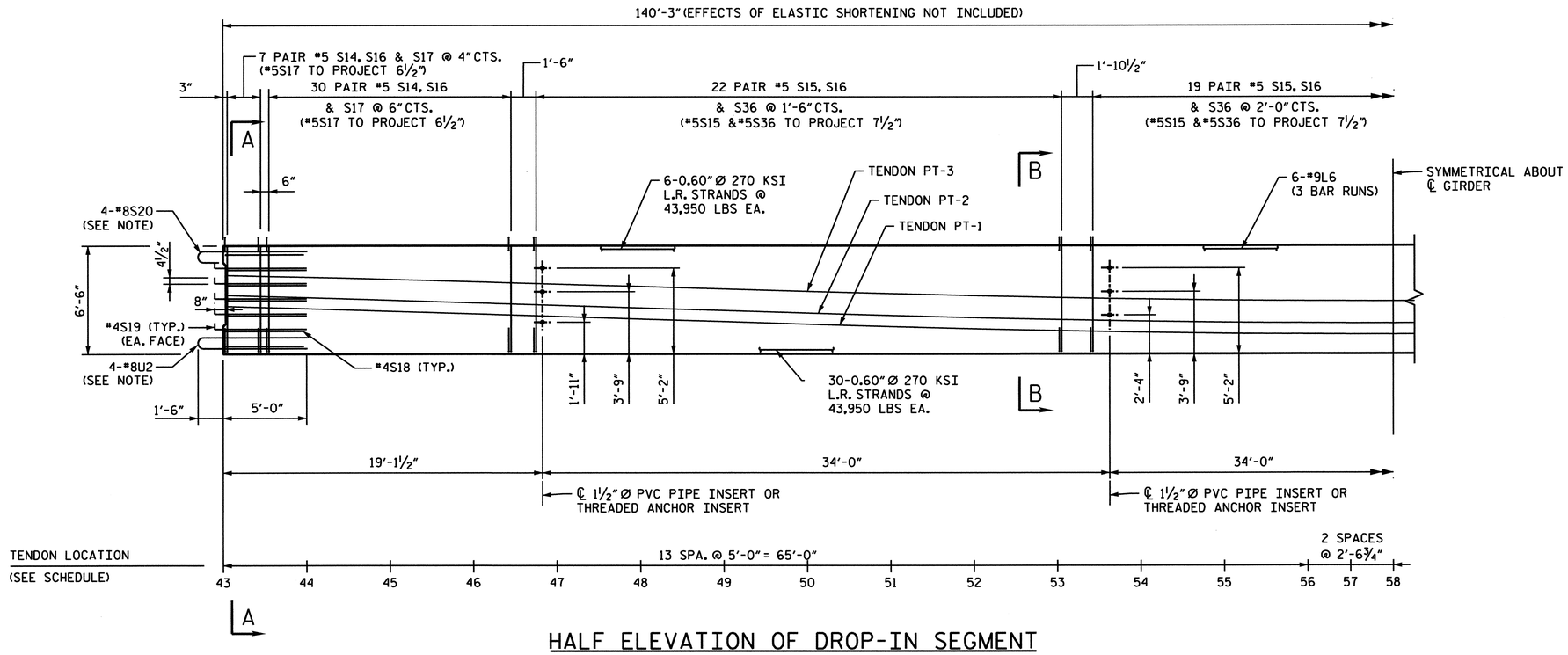

HALF ELEVATION OF DROP-IN SEGMENT

POST-TENSIONING TENDONS PT-1 THRU PT-3
ARE EACH COMPRISED OF 15-0.60"Ø 270 KSI L.R. STRANDS

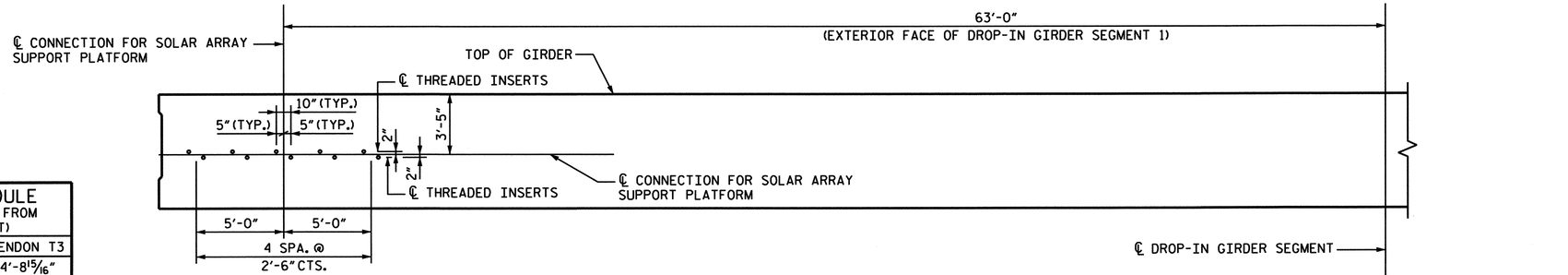

LOCATION OF THREADED INSERTS FOR SOLAR ARRAY PLATFORM

NOTE: THREADED INSERTS FOR SOLAR ARRAY PLATFORM ARE TO BE PLACED ON EXTERIOR SIDE OF DROP-IN GIRDER SEGMENT 1.
FABRICATOR SHALL VERIFY LOCATIONS BEFORE CASTING OF THE GIRDER.

TENDON LOCATION SCHEDULE
(DISTANCES SHOWN ARE MEASURED FROM BOTTOM OF GIRDER TO ℄ DUCT)

SECTION	TENDON T1	TENDON T2	TENDON T3
43	2'-10 5/8"	3'-6 5/8"	4'-8 15/16"
44	2'-8 7/8"	3'-4 7/8"	4'-7 9/16"
45	2'-7"	3'-3"	4'-5 15/16"
46	2'-5 1/16"	3'-1 1/16"	4'-4 1/4"
47	2'-3 3/16"	2'-11 3/16"	4'-2 1/2"
48	2'-1 1/4"	2'-9 1/4"	4'-0 3/4"
49	1'-11 3/8"	2'-7 3/8"	3'-10 5/16"
50	1'-9 1/2"	2'-5 1/2"	3'-9 3/16"
51	1'-7 11/16"	2'-3 11/16"	3'-7 9/16"
52	1'-6 1/8"	2'-2 1/8"	3'-6 1/16"
53	1'-4 3/4"	2'-0 3/4"	3'-4 11/16"
54	1'-3 5/8"	1'-11 5/8"	3'-3 5/8"
55	1'-2 3/4"	1'-10 3/4"	3'-2 3/4"
56	1'-2 3/16"	1'-10 3/16"	3'-2 3/16"
57	1'-2 1/16"	1'-10 1/16"	3'-2 1/16"
58	1'-2"	1'-10"	3'-2"

NOTE:
USE THREADED INSERTS ON EXTERIOR GIRDERS INSTEAD OF PVC PIPE INSERTS. SEE 78"P/T CONCRETE GIRDER AND POST-TENSIONING DETAILS.

FOR REINFORCING AROUND THE PVC PIPE INSERTS AND THREADED INSERTS, SEE 78"P/T CONCRETE GIRDER AND POST-TENSIONING DETAILS.

OMIT 2-#8S2O & 2-#8U2 BARS ON EXTERIOR SIDE OF EXTERIOR GIRDERS.

#4S19 BARS SHALL BE BENT AFTER GIRDER FABRICATION AND BEFORE SHIPMENT. HEAT BENDING SHALL NOT BE ALLOWED.

FOR SECTIONS A-A AND B-B, SEE SHEET 2 OF 2.

DRAWN BY : S. A. MORGAN DATE : NOV. 06
CHECKED BY : R.E. MONEY DATE : NOV. 06

DATE: $DATE$
FILE: $FILENAME$

PREPARED IN THE OFFICE OF TYLIN INTERNATIONAL
RALEIGH, NORTH CAROLINA
Copyright © 2006, TYLI
DWG NO.

NORTH CAROLINA PROFESSIONAL SEAL 024928 ENGINEER RODNEY E. MONEY 05/01/07

REVISIONS						SHEET NO.
NO.	BY:	DATE:	NO.	BY:	DATE:	5-105
1			3			TOTAL SHEETS
2			4			207

PROJECT NO. B-0682
BRUNSWICK COUNTY
STATION: 47+08.03 -L- POT

SHEET 1 OF 2

STATE OF NORTH CAROLINA
DEPARTMENT OF TRANSPORTATION
RALEIGH

78"P/T CONCRETE GIRDER DROP-IN SEGMENT

SPAN M

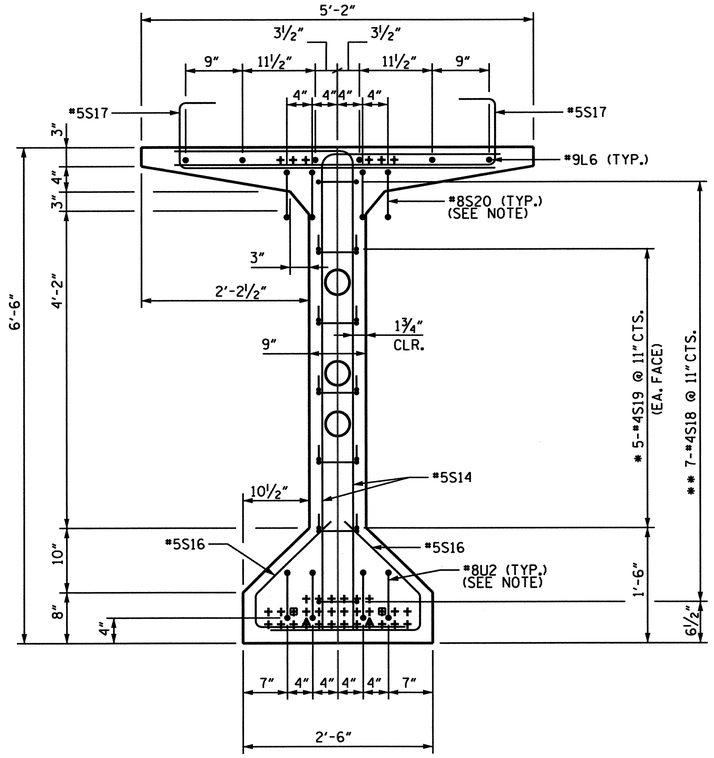

SECTION A-A

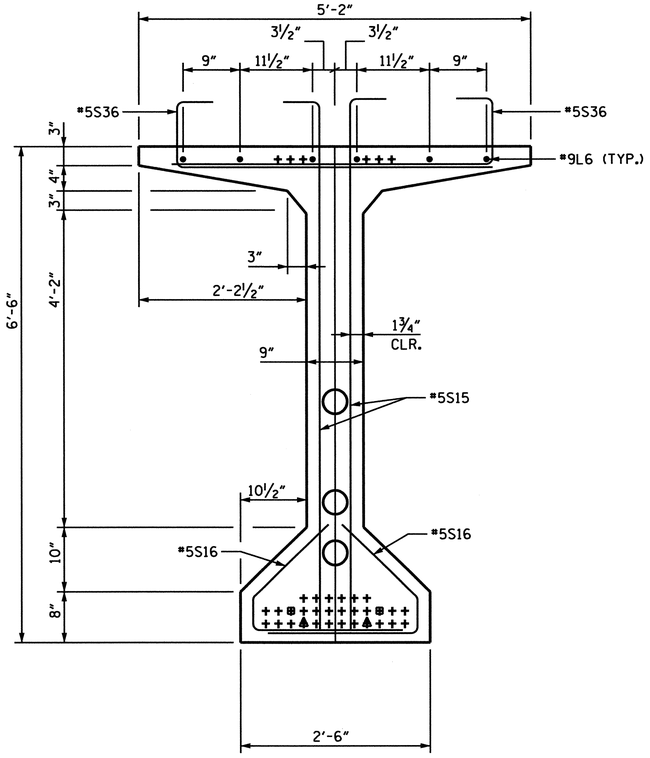

SECTION B-B

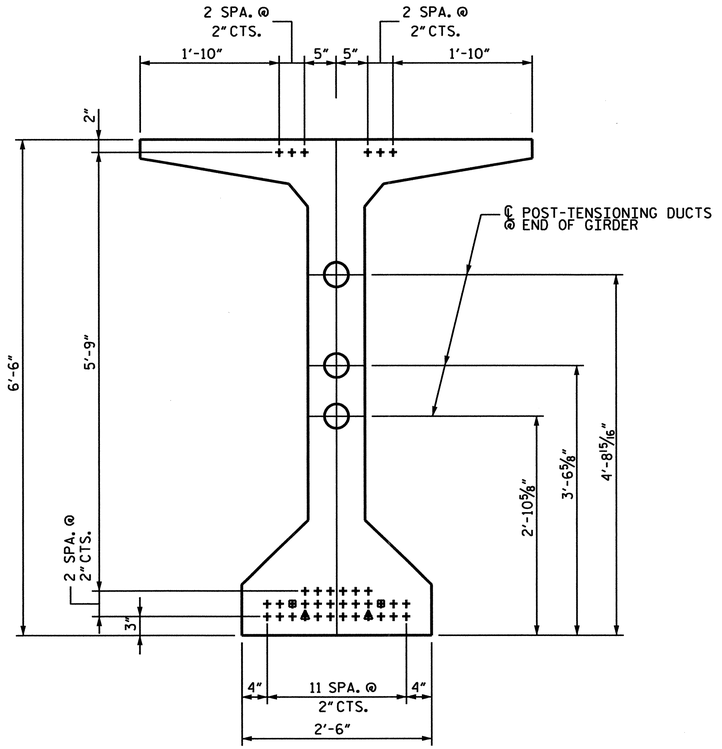

0.6"Ø LOW RELAXATION STRAND LAYOUT

36 STRAIGHT STRANDS

+ FULLY BONDED STRANDS

▲ DEBOND TO 30'-0" FROM GIRDER END

▣ DEBOND TO 40'-0" FROM GIRDER END

NOTES:

OMIT 2-#8S20 & 2-#8U2 BARS ON EXTERIOR SIDE OF EXTERIOR GIRDERS.

* #4S19 BARS SHALL BE BENT AFTER GIRDER FABRICATION AND BEFORE SHIPMENT. HEAT BENDING SHALL NOT BE ALLOWED.

** #4S18 BARS MAY BE SHIFTED SLIGHTLY TO AVOID THE POST-TENSIONING DUCTS.

PROJECT NO. B-0682

BRUNSWICK COUNTY

STATION: 47+08.03 -L- POT

SHEET 2 OF 2

NORTH CAROLINA PROFESSIONAL SEAL 024928 ENGINEER RODNEY E. MONEY 2/24/07

STATE OF NORTH CAROLINA
DEPARTMENT OF TRANSPORTATION
RALEIGH

78"P/T CONCRETE GIRDER
DROP-IN SEGMENT DETAILS

SPAN M

PREPARED IN THE OFFICE OF
TYLIN INTERNATIONAL
RALEIGH, NORTH CAROLINA
Copyright © 2006, TYLI

DWG NO.

REVISIONS						SHEET NO.
NO.	BY:	DATE:	NO.	BY:	DATE:	S-106
1			3			TOTAL SHEETS
2			4			207

DRAWN BY : S. A. MORGAN DATE : NOV. 06

CHECKED BY : R.E. MONEY DATE : NOV. 06

DATE: #DATE#
FILE: #FILENAME#

REINFORCING BAR SCHEDULE

END GIRDER SEGMENT QUANTITY FOR ONE GIRDER					
BAR	NO.	SIZE	TYPE	LENGTH	WEIGHT
S21	48	5	7	8'-7"	430
S22	86	5	7	7'-8"	688
S23	130	5	6	3'-9"	508
S24	126	5	5	5'-7"	734
S25	7	4	1	9'-11"	46
*S26	10	4	STR.	6'-0"	40
S27	4	8	3	8'-2"	87
S28	52	5	9	9'-7"	520
S29	11	5	10	7'-9"	89
S30	2	5	1	7'-2"	15
S31	2	5	1	8'-7"	18
S32	22	5	1	6'-9"	155
S33	2	5	1	4'-6"	9
S34	30	5	1	8'-5"	263
S35	52	5	12	3'-0"	163
L7	12	9	STR.	41'-0"	1,673
L8	4	9	STR.	54'-6"	741
L9	10	5	STR.	15'-7"	163
U3	4	8	4	13'-4"	142
U4	1	5	1	17'-2"	18
U5	1	5	1	26'-7"	28

*Note: S26 BARS SHALL BE BENT AFTER GIRDER FABRICATION AND BEFORE SHIPMENT. HEAT BENDING SHALL NOT BE ALLOWED.

HAUNCH GIRDER SEMENT QUANTITY FOR ONE GIRDER					
BAR	NO.	SIZE	TYPE	LENGTH	WEIGHT
S1	28	5	7	8'-5"	246
S2	80	5	7	8'-8"	723
S3	4	5	7	8'-8"	36
S4	108	5	7	8'-8"	976
S5	10	5	7	8'-8"	90
S6	200	5	2	4'-3"	887
S8	10	5	2	4'-11"	51
S9	230	5	5	5'-7"	1,339
S10	5	4	11	3'-2"	11
S11	14	4	1	9'-11"	93
*S12	20	4	STR.	6'-0"	80
S13	6	8	3	8'-2"	131
S37	4	5	7	4'-4"	18
S38	4	5	7	4'-6"	19
S39	4	5	7	4'-7"	19
S40	4	5	7	4'-8"	19
S41	4	5	7	4'-10"	20
L1	6	8	8	26'-0"	417
L2	4	8	8	25'-10"	276
L3	2	4	STR.	8'-2"	11
L4	12	9	STR.	46'-11"	1,914
L5	20	8	STR.	34'-0"	1,816
L10	4	9	STR.	37'-1"	504
L11	2	9	STR.	47'-8"	324
U1	6	8	4	13'-4"	214
U6	101	5	1	12'-9"	1,343

*Note: S12 BARS SHALL BE BENT AFTER GIRDER FABRICATION AND BEFORE SHIPMENT. HEAT BENDING SHALL NOT BE ALLOWED.

DROP-IN GIRDER SEGMENT QUANTITY FOR ONE GIRDER					
BAR	NO.	SIZE	TYPE	LENGTH	WEIGHT
S14	148	5	7	8'-7"	1,325
S15	126	5	7	7'-9"	1,018
S16	274	5	6	3'-9"	1,072
S17	148	5	5	5'-7"	862
S18	14	4	1	9'-11"	93
*S19	20	4	STR.	6'-0"	80
S20	8	8	3	8'-2"	174
S36	126	5	5	5'-8"	745
L6	18	9	STR.	52'-6"	3,213
U2	8	8	4	13'-4"	285

*Note: S19 BARS SHALL BE BENT AFTER GIRDER FABRICATION AND BEFORE SHIPMENT. HEAT BENDING SHALL NOT BE ALLOWED.

QUANTITIES FOR ONE GIRDER

	8,000 PSI CONCRETE (CU. YDS.)	REINFORCING STEEL (LBS.)	0.6" DIA. L.R. STRANDS (NUMBER)
END SEGMENT	38.2	6,530	18
HAUNCH SEGMENT	33.8	10,939	28
DROP-IN SEGMENT	45.6	8,867	36

GIRDERS REQUIRED

	NUMBER	LENGTH (FEET)	TOTAL LENGTH (FEET)
END SEGMENT	8	105'-5¾"	843'-10"
HAUNCH SEGMENT	8	85'-5"	683'-4"
DROP-IN SEGMENT	4	140'-3"	561'-0"
TOTAL	20		2,088'-2"

BAR TYPES

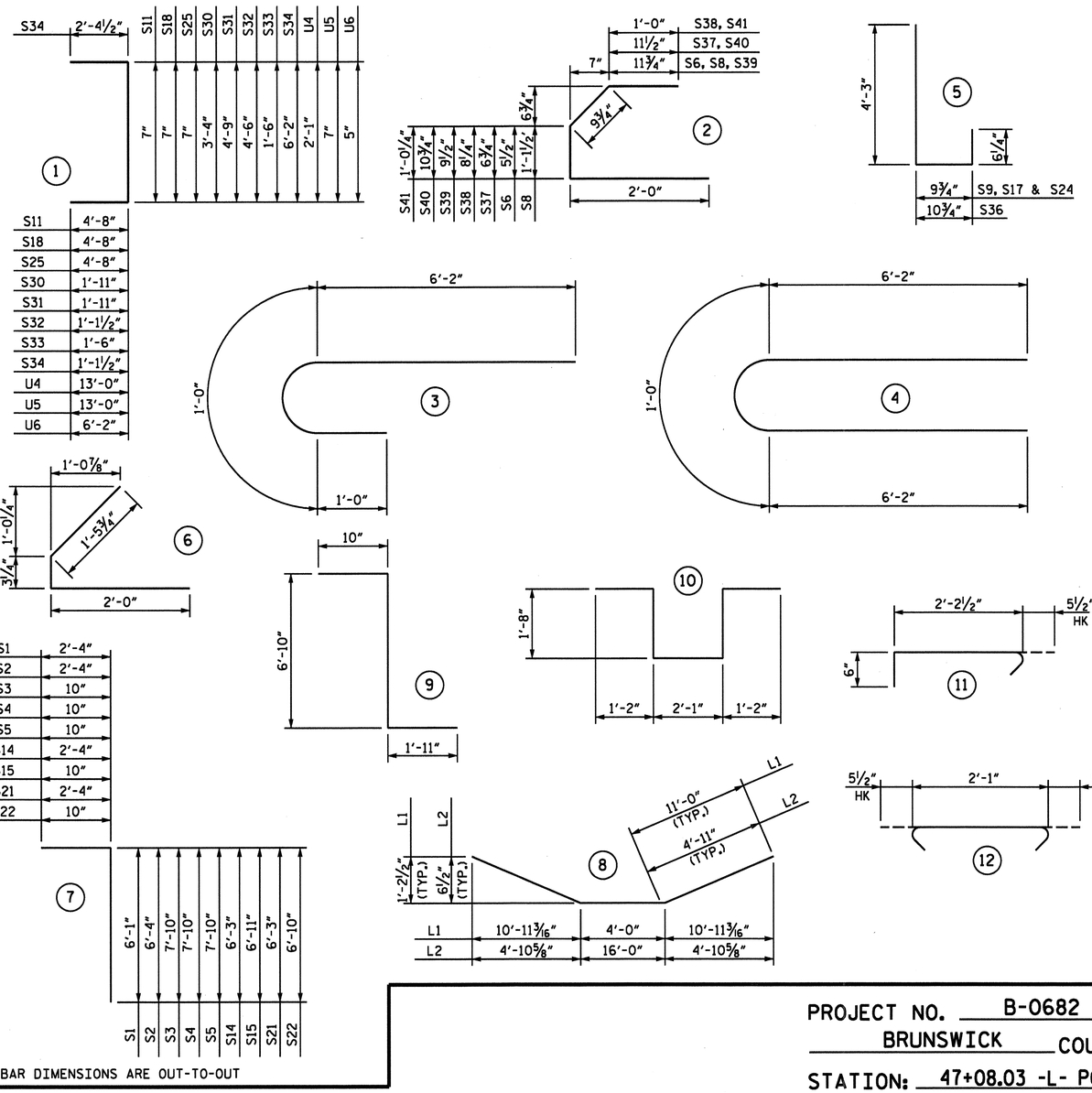

ALL BAR DIMENSIONS ARE OUT-TO-OUT

PROJECT NO. B-0682

BRUNSWICK COUNTY

STATION: 47+08.03 -L- POT

NORTH CAROLINA PROFESSIONAL SEAL 024928 ENGINEER RODNEY E. MONEY 2/26/07

STATE OF NORTH CAROLINA
DEPARTMENT OF TRANSPORTATION
RALEIGH

78" P/T CONCRETE GIRDER BILL OF MATERIAL

PREPARED IN THE OFFICE OF TYLIN INTERNATIONAL RALEIGH, NORTH CAROLINA
Copyright © 2006, TYLI
DWG NO.

REVISIONS						
NO.	BY:	DATE:	NO.	BY:	DATE:	SHEET NO. 5-107
1			3			TOTAL SHEETS 207
2			4			

DRAWN BY : S. A. MORGAN DATE : NOV. 06
CHECKED BY : R.E. MONEY DATE : NOV. 06

DATE: $DATE$
FILE: $FILENAME$

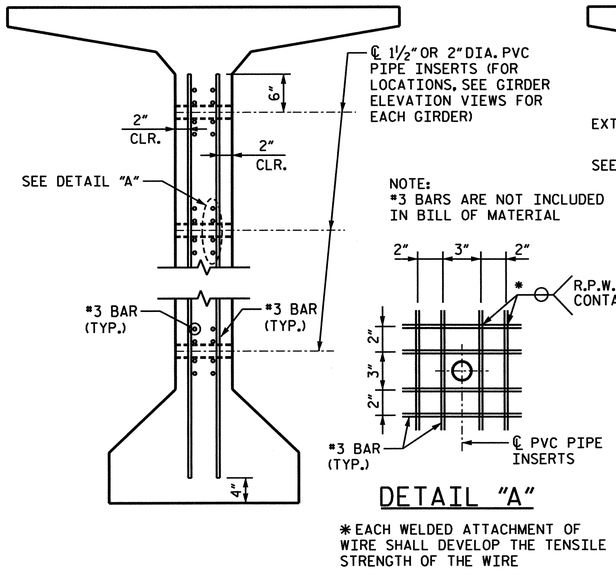

NOTE:
*3 BARS ARE NOT INCLUDED IN BILL OF MATERIAL

DETAIL "A"

*EACH WELDED ATTACHMENT OF WIRE SHALL DEVELOP THE TENSILE STRENGTH OF THE WIRE

INTERIOR GIRDER ONLY

PVC PIPE INSERT DETAILS

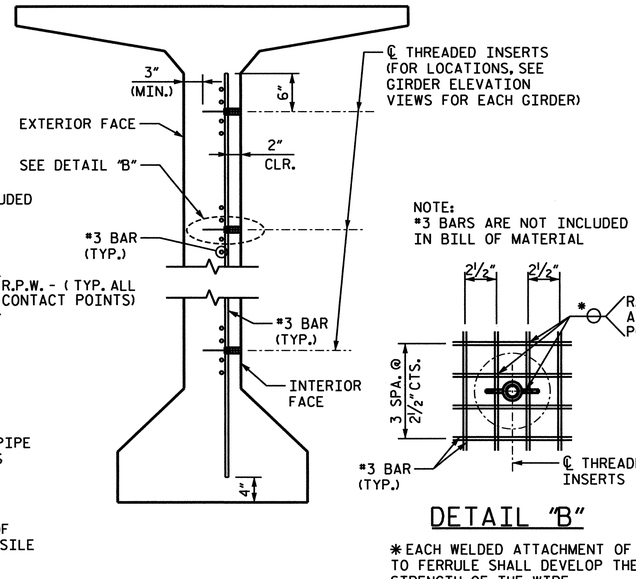

NOTE:
*3 BARS ARE NOT INCLUDED IN BILL OF MATERIAL

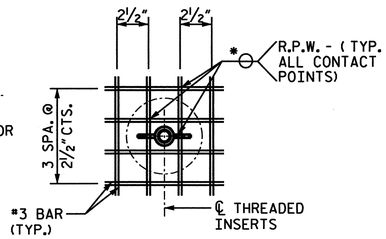

DETAIL "B"

*EACH WELDED ATTACHMENT OF WIRE TO FERRULE SHALL DEVELOP THE TENSILE STRENGTH OF THE WIRE

EXTERIOR GIRDER ONLY

THREADED INSERT DETAILS

NOTES

FOR STRUCTURAL CONCRETE INSERT FOR STEEL DIAPHRAGMS AND SOLAR ARRAY PLATFORM

THE STRUCTURAL CONCRETE INSERT ASSEMBLY FOR STEEL DIAPHRAGMS AND SOLAR ARRAY PLATFORM SHALL CONSIST OF THE FOLLOWING:

A. FERRULES SHALL BE MADE FROM STEEL MEETING THE REQUIREMENTS OF AASHTO M169, GRADE 12L14 AND SHALL HAVE A MINIMUM LENGTH OF THREADS OF 1½".

B. 1-⅞"Ø x 1⅝" OR 1- 1"Ø x 2¼" BOLT WITH WASHER. BOLT SHALL CONFORM TO THE REQUIREMENTS OF ASTM A325. BOLT AND WASHER SHALL BE GALVANIZED.

C. WIRE STRUT SHOWN IN THE CONCRETE INSERT ASSEMBLY DETAILS IS THE MINIMUM ALLOWABLE SIZE AND SHALL HAVE A MINIMUM TENSILE STRENGTH OF 100,000 PSI. AS AN OPTION, A 7/16" DIA. WIRE STRUT WITH A MINIMUM TENSILE STRENGTH OF 90,000 PSI IS ACCEPTABLE.

D. IT IS THE CONTRACTOR'S RESPONSIBILITY TO ENSURE HIGH STRENGTH BOLTS AND FERRULES HAVE MATCHING THREAD TYPES AND PROVIDE A PROPER FIT UP.

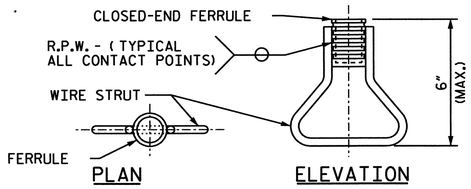

CONCRETE INSERT

NOTES

FOR STRUCTURAL CONCRETE INSERT FOR CONCRETE DIAPHRAGMS REBARS

THE STRUCTURAL CONCRETE INSERT ASSEMBLY FOR CONCRETE DIAPHRAGM REBARS SHALL CONSIST OF THE FOLLOWING:

A. FERRULES SHALL BE MADE FROM STEEL MEETING THE REQUIREMENTS OF AASHTO M169, GRADE 12L14 AND SHALL HAVE A MINIMUM LENGTH OF THREADS OF 1½".

B. WIRE STRUT SHOWN IN THE CONCRETE INSERT ASSEMBLY DETAIL IS THE MINIMUM ALLOWABLE SIZE AND SHALL HAVE A MINIMUM TENSILE STRENGTH OF 100,000 PSI. AS AN OPTION, A 7/16" DIA. WIRE STRUT WITH A MINIMUM TENSILE STRENGTH OF 90,000 PSI IS ACCEPTABLE.

C. ALL MECHANICAL SPLICERS SHALL BE POSITIVE LOCKING TAPER TYPE WITH A MINIMUM TENSILE STRENGTH OF 125 PERCENT OF SPECIFIED YIELD OF REINFORCEMENT STEEL CONFORMING TO ASTM A-615M GRADE 50.

D. REBAR ENDS SHALL BE MACHINED USING THE MANUFACTURES BAR THREADER TO ENSURE PROPER THREADING. THE BARS SHALL BE TIGHTENED TO THE MANUFACTURES RECOMMENDED WRENCH SETTING.

E. DETAILS SHOWING MECHANICAL SPLICERS AND THEIR LOCATIONS SHALL BE SHOWN ON THE SHOP DRAWINGS AND SHALL BE APPROVED BY THE ENGINEER PRIOR TO CASTING THE GIRDER.

THE COST OF THE THREADED INSERTS AND PVC PIPE INSERTS SHALL BE INCLUDED IN THE VARIOUS PAY ITEMS.

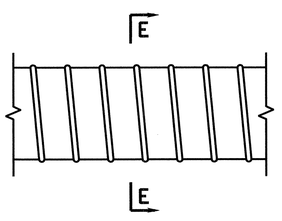

PLAN VIEW

SECTION E-E

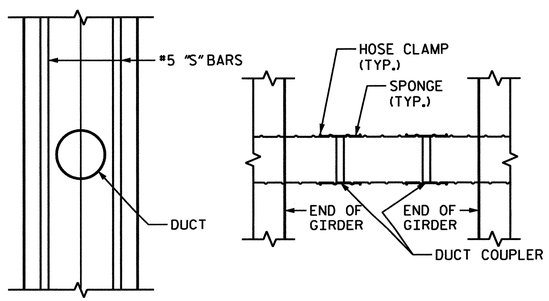

DUCT IN GIRDER WEB

POST TENSIONING DUCT DETAILS

NOTE: SEE POST TENSIONING NOTES FOR ADDITIONAL INFORMATION

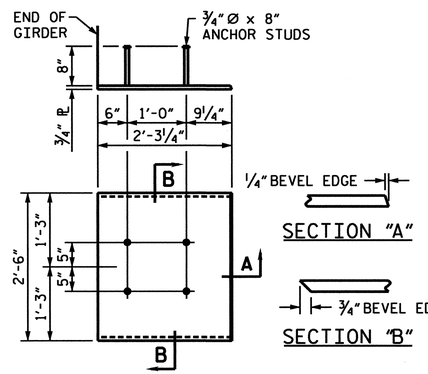

EMBEDDED PLATE "B-2" DETAILS

(1 REQUIRED PER END GIRDER SEGMENT)

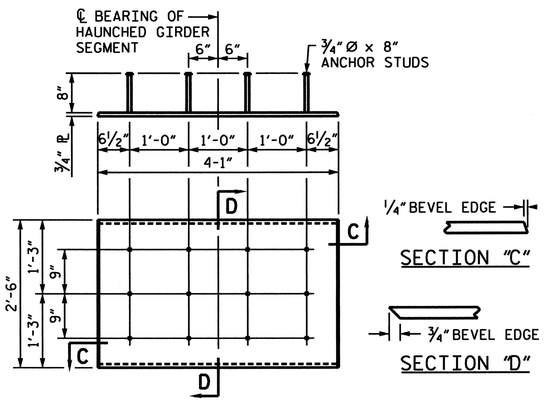

EMBEDDED PLATE "B-3" DETAILS

(1 REQUIRED PER HAUNCHED GIRDER SEGMENT)

EMBEDDED PLATE NOTES

EMBEDDED PLATE "B-2" AND "B-3" SHALL BE GALVANIZED IN ACCORDANCE WITH THE STANDARD SPECIFICATIONS. BEVEL EDGES OF PLATE "B-2" AND "B-3" TO GIVE CLOSE FIT BUT NOT TIGHT FIT TO STEEL CASTING FORM.

ANCHOR STUDS SHALL CONFORM TO AASHTO M169 GRADES 1010 THROUGH 1020 OR APPROVED EQUAL, AND SHALL MEET THE TYPE "B" REQUIREMENTS OF SUBSECTION 7.3 OF THE ANSI/AASHTO/AWS D1.5 BRIDGE WELDING CODE.

EMBEDDED PLATES TO BE INCLUDED IN THE UNIT PRICE BID FOR "78" POST-TENSIONED CONCRETE GIRDER".

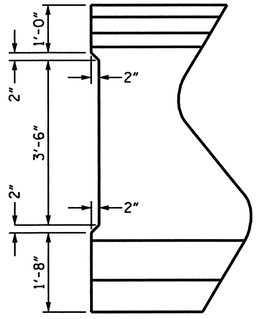

SHEAR KEY DETAIL

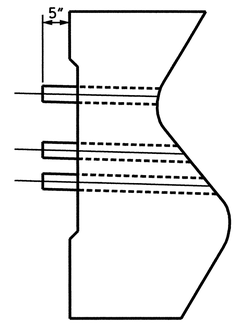

DUCT PROJECTION DETAIL

TYPICAL FOR ALL GIRDERS AT EACH SPLICE LOCATION

PROJECT NO. B-0682

BRUNSWICK COUNTY

STATION: 47+08.03 -L- POT

NORTH CAROLINA PROFESSIONAL SEAL 024928 ENGINEER RODNEY E. MONEY 2/26/07

STATE OF NORTH CAROLINA
DEPARTMENT OF TRANSPORTATION
RALEIGH

78" P/T CONCRETE GIRDER DETAILS

SPANS L-N

PREPARED IN THE OFFICE OF
TYLIN INTERNATIONAL
RALEIGH, NORTH CAROLINA
Copyright © 2006, TYLI

DWG NO.

REVISIONS						SHEET NO.
NO.	BY:	DATE:	NO.	BY:	DATE:	S-108
1			3			TOTAL SHEETS
2			4			207

DRAWN BY : S.A. MORGAN DATE : NOV. 06
CHECKED BY : R.E. MONEY DATE : NOV. 06

DATE: #DATE#
FILE: #FILENAME#

MATERIAL PROPERTIES

CONCRETE:

FOR CORROSION PROTECTION OF BRIDGE, SEE SPECIAL PROVISIONS.

THE TRANSFER OF LOAD FROM THE ANCHORAGES TO THE GIRDER SHALL BE DONE WHEN CONCRETE HAS REACHED A COMPRESSIVE STRENGTH OF NOT LESS THAN 5500 psi.

THE CONCRETE IN THE GIRDER CLOSURE SPLICE DIAPHRAGMS SHALL BE CLASS PRESTRESS +6000 WITH A MINIMUM CONCRETE COMPRESSIVE STRENGTH AT 28 DAYS OF 6500 psi.

THE CONCRETE IN THE DIAPHRAGMS OVER BENT 12 AND 13 SHALL BE CLASS AA CONCRETE.

DECK SLAB CONCRETE SHALL ATTAIN A MINIMUM CONCRETE COMPRESSIVE STRENGTH OF 3000 psi PRIOR TO STRESSING OF STAGE 2 POST-TENSIONING TENDONS.

CONCRETE IN PRESTRESSED CONCRETE GIRDERS SHALL BE AT LEAST 60 DAYS OLD PRIOR TO STRESSING OF POST-TENSIONING TENDONS.

ALL CONCRETE BEING STRESSED SHALL BE AT LEAST 10 DAYS OLD PRIOR TO STRESSING OF POST-TENSIONING TENDONS.

APPLY EPOXY PROTECTIVE COATING TO END OF GIRDER SURFACES INDICATED ON SHEET 3 OF 4 OF THE "78" P/T CONCRETE GIRDER END SEGMENT DETAILS" SHEET.

DEPENDING ON THE TYPE OF SYSTEM USED TO SUPPORT THE DECK SLAB FORMS, PRESET ANCHORS MAY BE NECESSARY IN THE PRESTRESSED CONCRETE GIRDERS.

THE TOP SURFACE OF THE GIRDER, EXCLUDING THE OUTSIDE 4", SHALL BE RAKED TO A DEPTH OF 1/4".

FOR CRACK REPAIR OF PRESTRESSED CONCRETE GIRDERS, SEE SPECIAL PROVISIONS.

PRESTRESSED CONCRETE GIRDERS ARE DESIGNED FOR 0 psi TENSION IN THE PRECOMPRESSED TENSILE ZONE UNDER ALL LOADING CONDITIONS.

PRESTRESSED CONCRETE GIRDERS SHALL CONTAIN NITRITE CORROSION INHIBITOR.

THE CONTRACTOR IS RESPONSIBLE FOR THE INTEGRITY AND STABILITY OF THE GIRDERS. IN HANDLING THE 78" POST-TENSIONED PRESTRESSED GIRDERS, THEY SHALL BE MAINTAINED IN AN UPRIGHT POSITION AT ALL TIMES AND THE PROPOSED METHOD FOR ERECTING, STORING AND TRANSPORTING THE GIRDERS SHALL BE SUBMITTED TO THE ENGINEER FOR APPROVAL. THE SUBMITTAL SHALL INCLUDE DESIGN CALCULATIONS FOR LOCATIONS OF PICK-UP POINTS AND SUPPORT POINTS AS NEEDED TO MAINTAIN THE GIRDER STABILITY DURING ERECTION, STORAGE AND TRANSPORTATION.

PRESTRESSING STEEL:

ALL PRESTRESSING STRANDS SHALL BE 7-WIRE LOW-RELAXATION GRADE 270 STRANDS AND SHALL CONFORM TO AASHTO M203 EXCEPT FOR SAMPLING REQUIREMENTS WHICH SHALL BE IN ACCORDANCE WITH THE STANDARD SPECIFICATIONS.

AT ENDS OF GIRDERS TO BE EMBEDDED IN CONCRETE DIAPHRAGMS OR END WALLS, PRESTRESSING STRANDS MAY EXTEND A MAXIMUM OF 2" BEYOND THE GIRDER ENDS. OTHERWISE, PRESTRESSING STRANDS SHALL BE CUT FLUSH WITH THE GIRDER ENDS.

REINFORCING STEEL:

ALL REINFORCING STEEL SHALL BE GRADE 60.

DESIGN ASSUMPTIONS

CONSTRUCTION SEQUENCE:

SEE "ERECTION SEQUENCE SPANS L-N" SHEET FOR NOTES AND DETAILS.

THE DESIGN SHOWN IN THESE PLANS IS BASED ON A CONSTRUCTION SEQUENCE FOR WHICH THE GIRDERS WERE ASSUMED TO BE FROM 60 TO 365 DAYS OLD WHEN ERECTED.

COEFFICIENTS FOR PRESTRESSING STEEL AND PRESTRESS LOSSES:

MODULUS OF ELASTICITY = 28,500 ksi
ANCHOR SET = 0.375 INCHES **
FRICTION COEFFICIENT (GALVANIZED DUCT) = 0.25
WOBBLE COEFFICIENT = 0.0002
CONSPLICE® BY LEAP SOFTWARE, INC. WAS USED FOR TIME-DEPENDENT PROPERTIES OF CONCRETE, UTILIZING THE CEP-FIP-90 CODE METHOD.

** ACTUAL ANCHOR SET LOSSES SHALL BE DETERMINED DURING CONSTRUCTION. THE CONTRACTOR MAY REQUIRE ADJUSTMENT OF JACKING FORCES TO COMPENSATE FOR DIFFERENT AMOUNTS OF SET.

POST-TENSIONING TENDONS:

THREE POST-TENSIONING TENDONS CONSISTING OF 15-0.6 INCH DIAMETER LOW-RELAXATION PRESTRESSING STRANDS ARE USED.

TENDONS ARE STRESSED IN TWO STAGES:
FIRST STAGE POST-TENSIONING TENDONS (TENDONS 1 AND 2) ARE STRESSED AFTER GIRDERS ARE SPLICED, BUT BEFORE COMPOSITE DECK SLAB IS PLACED.
SECOND STAGE POST-TENSIONING TENDON (TENDON 3) IS STRESSED AFTER THE COMPOSITE DECK SLAB IS PLACED.

ALL POST-TENSIONING TENDONS ARE STRESSED FROM BOTH ENDS.

DESIGN ASSUMPTIONS

POST-TENSIONING STRESS LIMITS AND DESIGN JACKING STRESSES:

MAXIMUM JACKING STRESS = 0.80 Fpu (216.0 ksi)
DESIGN JACKING STRESS = 0.75 Fpu (202.5 ksi) FOR TENDONS 1, 2 AND 3.

MAXIMUM STRESSES AFTER ANCHORING TENDONS:
AT END OF SEATING ZONE = 0.725 Fpu (195.8 ksi)
AT ANCHOR = 0.705 Fpu (190.4 ksi)

WORKING DRAWINGS

THE CONTRACTOR SHALL SUBMIT WORKING DRAWINGS SHOWING COMPLETE DETAILS OF THE POST-TENSIONING SYSTEM TO THE ENGINEER FOR APPROVAL.

THE CONTRACTOR SHALL SUBMIT WORKING DRAWING SHOWING COMPLETE DETAILS OF THE DUCT AND DUCT SPLICE FOR APPROVAL BY THE ENGINEER. THESE WORKING DRAWINGS SHALL SHOW COMPLETE DIMENSIONS OF THE DUCT AND DUCT SPLICE, A THOROUGH SEQUENCE OF INSTALLATION OF THE DUCT SPLICE, DETAILS FOR SUPPORT OF THE DUCT, DETAILS OF GROUT VENTS AND THEIR CONNECTION TO THE DUCT, LOCATION OF GROUT VENTS AND OTHER RELATED DETAILS. THE DUCT SHALL NOT BE SHIPPED TO THE PRECASTER UNTIL THIS SUBMITTAL IS APPROVED BY THE ENGINEER.

THE CONTRACTOR SHALL SUBMIT INTEGRATED WORKING DRAWINGS IN AREAS OF POST-TENSIONING ANCHORAGES DUE TO CONGESTION WITH REINFORCING STEEL. THESE WORKING DRAWINGS WILL SHOW COMPLETE DETAILS OF THE ANCHORAGE SYSTEM, INCLUDING ANCHORAGE PROTECTION DETAILS, AND RECESSES REQUIRED TO ACCOMMODATE STRESSING EQUIPMENT. LOCAL ANCHORAGE ZONE REINFORCEMENT SHALL BE DESIGNED BY THE POST-TENSIONING SUPPLIER AND SHOWN ON THE WORKING DRAWINGS. THE CONTRACTOR SHALL BE RESPONSIBLE FOR RESOLVING CONFLICTS OF LOCAL ANCHORAGE ZONE REINFORCEMENT AND ANCHORAGE WITH OTHER REINFORCEMENT. ANY SHIFTING OF REINFORCING STEEL TO ACCOMMODATE PLACEMENT OF LOCAL ANCHORAGE ZONE REINFORCEMENT SHALL BE APPROVED BY THE ENGINEER.

PRIOR TO CASTING THE GIRDERS, THE CONTRACTOR SHALL SUBMIT COMPLETE WORKING DRAWINGS WITH THE EXACT LOCATION AND A COMPLETE DESCRIPTION OF ALL INSERTS CAST IN THE GIRDERS TO THE DEPARTMENT FOR APPROVAL. SUCH INSERTS INCLUDE, BUT ARE NOT LIMITED TO, INSERTS FOR SUPPORTING FALSEWORK AND FORMWORK, INSERTS FOR ATTACHING DIAPHRAGMS, INSERTS FOR CONNECTING STRONGBACKS, INSERTS FOR CONNECTING TEMPORARY TOWERS, INSERTS FOR CONNECTING TEMPORARY BRACING, AND LIFTING INSERTS.

THE CONTRACTOR SHALL SUBMIT WORKING DRAWINGS AND CALCULATIONS SHOWING COMPLETE DETAILS OF TENDON STRESSING FOR APPROVAL BY THE ENGINEER. THESE DETAILS SHALL INDICATE JACKING FORCES, THE SEQUENCE OF STRESSING, CALCULATED TENDON ELONGATIONS, GAUGE PRESSURES, JACK CALIBRATIONS, FRICTION COEFFICIENT, WOBBLE COEFFICIENT AND ANCHOR SET LOSS.

THE CONTRACTOR SHALL SUBMIT COMPLETE DETAILS OF TENDON GROUTING MATERIALS AND PROCEDURES FOR APPROVAL BY THE ENGINEER.

DUCTS

DUCTS FOR POST-TENSION TENDONS SHALL BE GALVANIZED CORRUGATED METAL SHEATHING WITH AN INSIDE CLEAR DIAMETER OF 3.63" AND AN OUTSIDE DIAMETER OF 3.82". THE CONTRACTOR HAS THE OPTION OF USING AN ALTERNATE DUCT SIZE AS LONG AS THE ALTERNATE DUCT DOES NOT DECREASE THE 2" OF COVER REQUIRED FOR THE STIRRUPS.

DUCTS SHALL BE SECURELY TIED TO STIRRUPS AT A MAXIMUM INTERVAL OF 1'-6" CTS. TO PREVENT DISPLACEMENT OF DUCTS DURING CONCRETE PLACEMENT.

DURING STORAGE AND AFTER INSTALLATION, DUCTS AND GROUT VENTS SHALL BE SEALED AT ALL TIMES TO PREVENT ENTRANCE OF WATER AND DEBRIS. DUCTS SHALL BE PROTECTED AND HANDLED WITH CARE TO PREVENT DAMAGE OR UNINTENDED BENDING, CRIMPING OR FLATTENING DURING STORAGE, INSTALLATION AND PLACEMENT OF GIRDER CONCRETE.

THE GIRDER SIDE FORMS SHALL NOT BE SET IN PLACE UNTIL THE ENGINEER HAS VISUALLY INSPECTED AND APPROVED THE DUCT PROFILE, ANCHORAGE DETAILS, REINFORCING CAGE AND OTHER GIRDER FABRICATION DETAILS. THE DUCTS SHALL ALSO BE PRESSURE TESTED FOR POSSIBLE LEAKS BEFORE SIDE FORMS ARE PLACED.

THE CONTRACTOR SHALL BE RESPONSIBLE FOR THE DETAILED DESIGN OF THE DUCT AND THE DUCT SPLICE. A SUGGESTED CONCEPTUAL DESIGN OF THE DUCT SPLICE IS GIVEN ON THE "78" P/T CONCRETE GIRDER DETAILS" SHEET.

DUCTS SHALL HAVE GROUT VENTS AT EACH INTERIOR SUPPORT (HIGH POINT) AND AT EACH LOW POINT ALONG THE TENDON PROFILE AND AT OTHER LOCATIONS.

DUCT SPLICES SHALL BE WATERTIGHT AND PROVIDE A SMOOTH INTERIOR ALIGNMENT WITH NO LIPS OR KINKS. THEY SHALL BE INSTALLED TO THE SAME PLACEMENT TOLERANCE AS CONTINUOUS RUNS OF THE DUCTS. STIRRUP SPACING AT DUCT SPLICES MAY BE ADJUSTED UP TO 4 INCHES PROVIDED THE TOTAL NUMBER OF STIRRUPS WITHIN 3 FEET ON EITHER SIDE OF THE SPLICE IS THE SAME AS REQUIRED BY THE PLANS.

FOLLOWING COMPLETION OF CONCRETE PLACEMENT IN GIRDERS AND BEFORE TRANSPORTING GIRDERS TO THE JOB SITE, DUCTS SHALL BE TESTED FOR OBSTRUCTIONS BY RUNNING A ROUND TORPEDO THROUGH THE DUCT.

DUCT SPLICES IN CLOSURE SPLICE DIAPHRAGMS SHALL BE PRESSURE TESTED FOR ANY LEAKS THAT MAY ALLOW GROUT TO ENTER THE DUCT BEFORE CONCRETE PLACEMENT.

FOLLOWING COMPLETION OF CONCRETE PLACEMENT FOR EACH CLOSURE SPLICE DIAPHRAGM, THE DUCTS SHALL BE TESTED FOR OBSTRUCTIONS BY RUNNING A ROUND TORPEDO THROUGH THE DUCT. THIS STEP SHALL BE PERFORMED BEFORE CONCRETE HAS TAKEN ITS INITIAL SET.

FOLLOWING COMPLETION OF GROUTING DUCTS 1 AND 2, DUCT 3 SHALL BE TESTED FOR OBSTRUCTIONS BY RUNNING A ROUND TORPEDO THROUGH THE DUCT.

TO DEMONSTRATE THAT THE DUCTS ARE NOT BLOCKED, THE CONTRACTOR SHALL PASS A TORPEDO THROUGH THE DUCTS. THE TORPEDO SHALL HAVE DIMENSIONS NOT LESS THAN 1/4" SMALLER THAN THE INSIDE DIAMETER OF THE DUCT.

RECESSES FOR POST-TENSIONING ANCHORAGE IN THE TOP OF GIRDERS SHALL BE PROVIDED WITH SUITABLE DRAIN PIPES TO PREVENT STANDING WATER. DRAIN PIPES SHALL BE MAINTAINED FREE OF OBSTRUCTIONS AT ALL TIMES UNTIL EPOXY GROUT POUR-BACKS ARE INSTALLED AFTER POST-TENSIONING TENDONS HAVE BEEN STRESSED AND GROUTED.

DUCT PLACEMENT TOLERANCE SHALL BE 1/4" +/- IN THE HORIZONTAL DIRECTION AND 1/2" +/- IN THE VERTICAL DIRECTION.

GENERAL NOTES

FOR POST-TENSIONING TENDONS, SEE SPECIAL PROVISIONS.

IN ADDITION TO THE "POST-TENSIONING TENDONS" SPECIAL PROVISION, THE CONTRACTOR SHALL ADHERE TO THE GUIDELINES FOR TENDON INSTALLATION AND GROUTING AS DESCRIBED IN THE FEDERAL HIGHWAY ADMINISTRATION'S PUBLICATION "POST-TENSIONING TENDON INSTALLATION AND GROUTING MANUAL".

FOR 78" POST-TENSIONED PRESTRESSED CONCRETE GIRDERS, SEE SPECIAL PROVISIONS.

NORTH CAROLINA PROFESSIONAL SEAL 024928 ENGINEER RODNEY E. MONEY 1/24/07

PROJECT NO. B-0682
BRUNSWICK COUNTY
STATION: 47+08.03 -L- POT

SHEET 1 OF 2

STATE OF NORTH CAROLINA
DEPARTMENT OF TRANSPORTATION
RALEIGH

78" P/T CONCRETE GIRDER POST-TENSIONING NOTES

SPAN L-N

REVISIONS						SHEET NO.
NO.	BY:	DATE:	NO.	BY:	DATE:	S-109
1			3			TOTAL SHEETS
2			4			207

PREPARED IN THE OFFICE OF TYLIN INTERNATIONAL
RALEIGH, NORTH CAROLINA
Copyright © 2006, TYLI
DWG NO.

DRAWN BY : S. A. MORGAN DATE : NOV. 06
CHECKED BY : R.E. MONEY DATE : NOV. 06

DATE: #DATE#
FILE: #FILENAME#

POST-TENSIONING OPERATIONS

THE POST-TENSIONING OPERATION SHALL BE PERFORMED ACCORDING TO THE REQUIREMENTS OF THE POST-TENSIONING TENDONS SPECIAL PROVISION AND TO THE "POST-TENSIONING TENDON INSTALLATION AND GROUTING MANUAL" PUBLISHED BY THE FEDERAL HIGHWAY ADMINISTRATION.

THE PERSON IN RESPONSIBLE CHARGE OF THE POST-TENSIONING OPERATION SHALL MEET THE QUALIFICATIONS DESCRIBED IN THE "POST-TENSIONING TENDON INSTALLATION AND GROUTING MANUAL" PUBLISHED BY THE FEDERAL HIGHWAY ADMINISTRATION. DOCUMENTATION OF THIS EXPERIENCE SHALL BE SUBMITTED TO THE ENGINEER FOR APPROVAL.

A MEETING BETWEEN THE CONTRACTOR, POST-TENSIONING SUPPLIER, NCDOT REPRESENTATIVES AND THE ENGINEER OF RECORD SHALL BE SCHEDULED AT LEAST THIRTY (30) DAYS PRIOR TO POST-TENSIONING OPERATIONS TO REVIEW THE MEANS AND METHODS OF POST-TENSIONING, DUCT SPLICING AND TESTING TENDON GROUTING AND ALL ASSOCIATED FIELD ACTIVITIES. COMPLETE DETAILS FOR THE POST-TENSIONING SYSTEM, TENDON STRESSING DETAILS, STRESSING SEQUENCES, CALCULATED EXTENSIONS OF EACH JACK, FRICTION COEFFICIENT, AND ANCHOR SET LOSSES SHALL BE REVIEWED. TEMPORARY SUPPORT PLATFORM REQUIREMENTS AND DETAILS SHALL BE REVIEWED AT THIS TIME.

THE CONTRACTOR SHALL NOT STRESS ANY POST-TENSIONING TENDONS UNTIL THE ENGINEER IS SATISFIED THAT THE REQUIREMENTS STATED IN THE SPECIAL PROVISIONS AND THE GUIDELINES OF THE "POST-TENSION TENDON INSTALLATION AND GROUTING MANUAL" PUBLISHED BY THE FEDERAL HIGHWAY ADMINISTRATION HAVE BEEN MET.

STRESSING OF POST-TENSIONING TENDONS FOR SPAN L-N SHALL BE ACCOMPLISHED FOR EACH TENDON USING AN ALTERNATING SYMMETRICAL PATTERN ACROSS THE ROADWAY, BEGINNING AT THE CENTER AND WORKING OUTWARD ALTERNATING SIDES.

FOR FIRST STAGE POST-TENSIONING, TENDON 1 SHALL BE STRESSED IN ALL GIRDERS ACROSS THE WIDTH OF THE BRIDGE AT BOTH ENDS PRIOR TO STRESSING TENDON 2 IN EACH GIRDER. FOR SECOND STAGE POST-TENSIONING, TENDON 3 SHALL BE STRESSED IN ALL GIRDERS ACROSS THE WIDTH OF THE BRIDGE AT BOTH ENDS.

ALL TENDONS SHALL BE STRESSED FROM BOTH ENDS.

IT IS THE CONTRACTOR'S RESPONSIBILITY TO MAINTAIN THE INTEGRITY OF THE POST-TENSIONING STRANDS. STRANDS SHALL BE PROTECTED AND HANDLED WITH CARE TO PREVENT DAMAGE OR RUST DURING STORAGE, INSTALLATION, AND PLACEMENT OF GROUT.

TENDON GROUTING

GROUTING OF POST-TENSIONING TENDONS SHALL BE PERFORMED ACCORDING TO THE REQUIREMENTS OF THE POST-TENSIONING TENDONS SPECIAL PROVISION AND TO THE "POST-TENSIONING TENDON INSTALLATION AND GROUTING MANUAL" PUBLISHED BY THE FEDERAL HIGHWAY ADMINISTRATION.

THE PERSON IN RESPONSIBLE CHARGE OF THE GROUTING OPERATION SHALL MEET THE QUALIFICATIONS DESCRIBED IN THE "POST-TENSIONING TENDON INSTALLATION AND GROUTING MANUAL" PUBLISHED BY THE FEDERAL HIGHWAY ADMINISTRATION. DOCUMENTATION OF EXPERIENCE SHALL BE SUBMITTED TO THE ENGINEER FOR APPROVAL.

A MEETING BETWEEN THE CONTRACTOR, POST-TENSION SUPPLIER, NCDOT REPRESENTATIVES AND THE ENGINEER OF RECORD SHALL BE SCHEDULED AT LEAST THIRTY (30) DAYS PRIOR TO THE FIRST GROUTING OPERATIONS. AT THE MEETING THE GROUTING OPERATION, REQUIRED TESTING, CORRECTIVE PROCEDURES AND ANY OTHER RELEVANT ISSUES SHALL BE DISCUSSED.

AFTER TENDONS HAVE BEEN STRESSED, DUCTS SHALL BE GROUTED. GROUTING OF POST-TENSIONING TENDONS SHALL BE COMPLETED AS SOON AS POSSIBLE AFTER TENSIONING, SEE POST-TENSIONING TENDON SPECIAL PROVISION.

TO THE MAXIMUM EXTENT POSSIBLE, GROUT SHALL BE PUMPED FROM THE LOW POINTS IN THE TENDON PROFILE AND VENTED AT THE HIGH POINTS IN THE TENDON PROFILE.

AFTER TENDONS ARE GROUTED, ANCHORAGES AND DUCTS SHALL BE INSPECTED TO DETERMINE IF THEY HAVE BEEN COMPLETELY FILLED WITH GROUT.

APPROXIMATE GROUT QUANTITIES:		APPROXIMATE DUCT LENGTH:
DUCT 1:	26.2 CF	530'-5¼"
DUCT 2:	26.2 CF	530'-5⅞"
DUCT 3:	25.7 CF	521'-2⅛"

QUANTITIES SHOWN ARE BASED ON RESPECTIVE DUCT LENGTHS, HAVING AN INSIDE DIAMETER OF 3.63" AND EACH TENDON CONTAINING 15-0.6" Ø STRANDS.

THE QUANTITIES SHOWN ARE INTENDED TO ASSIST THE CONTRACTOR AND ENGINEER IN DETERMINING THE AMOUNT OF GROUT NEEDED TO COMPLETELY FILL THE POST-TENSIONING DUCT.

DATE: #DATE#
FILE: #FILENAME#

DRAWN BY : S. A. MORGAN DATE : NOV. 06
CHECKED BY : R.E. MONEY DATE : NOV. 06

PAYMENT

THE COST OF MATERIALS AND INSTALLATION OF POST-TENSIONING TENDONS, WEDGES, ANCHOR DEVICES GROUTING OF TENDONS, EPOXY GROUT POUR-BACKS, AND INCIDENTAL ITEMS RELATED TO POST-TENSIONING SHALL BE INCLUDED IN THE LUMP SUM PRICE BID FOR "POST-TENSIONING TENDONS".

THE COST OF ALL CONCRETE, REINFORCING STEEL, PRESTRESSED STRANDS, POST-TENSION MATERIALS EMBEDDED IN THE CONCRETE, INSERTS EMBEDDED IN THE CONCRETE, BEARING PLATE ASSEMBLIES, ANCHOR DEVICES, TEMPORARY BRACING AND INCIDENTAL ITEMS SHALL BE INCLUDED IN THE CONTRACT UNIT PRICE FOR "78" POST-TENSIONED CONCRETE GIRDERS".

EPOXY GROUT POUR-BACK FOR POST-TENSIONING ANCHORAGES

AFTER TENDONS HAVE BEEN STRESSED, GROUTED AND INSPECTED, POST-TENSIONING ANCHORAGES SHALL BE ENCAPSULATED IN AN EPOXY GROUT POUR-BACK USING THE FOLLOWING PROCEDURE:

CONCRETE SURFACES OF RECESSES AT POST-TENSIONING ANCHORAGES SHALL BE CLEANED AND ROUGHENED PRIOR TO CASTING POUR-BACKS.

ENCAPSULATE ANCHORAGE AND PERMANENT GROUT CAP WITH A POUR-BACK OF AN APPROVED, HIGH-STRENGTH, HIGH-BOND, LOW SHRINKAGE, SAND-FILLED EPOXY GROUT. SEE POST-TENSIONING TENDON SPECIAL PROVISION. FILL ANCHORAGE RECESS TO MATCH ADJACENT SURFACES OF CONCRETE GIRDER, PROVIDING A MINIMUM COVER OF 1½" OVER ANCHORAGE AND PERMANENT GROUT CAP.

FILL DRAIN PIPES FOR ANCHORAGE RECESSES IN TOP OF GIRDERS USING EPOXY GROUT.

COMPLETELY ENCASE TENDON 2 AND TENDON 1 BY PLACING END DIAPHRAGM CONCRETE AND ENCASE TENDON 3 ANCHORAGE BY PLACING DECK SLAB CONCRETE. THE DECK SLAB CONSTRUCTION JOINT SHALL BE SEALED WITH METHYL-METHACRYLATE OR APPROVED EQUAL.

THE PAYMENT OF EPOXY GROUT POUR-BACK SHALL BE INCLUDED IN THE LUMP SUM PRICE BID FOR "POST-TENSIONING TENDONS".

PROJECT NO. B-0682
BRUNSWICK COUNTY
STATION: 47+08.03 -L- POT

SHEET 2 OF 2

NORTH CAROLINA PROFESSIONAL SEAL 024928 ENGINEER RODNEY E. MONEY 2/26/07

STATE OF NORTH CAROLINA
DEPARTMENT OF TRANSPORTATION
RALEIGH

78" P/T CONCRETE GIRDER POST-TENSIONING NOTES

SPAN L-N

PREPARED IN THE OFFICE OF
TYLIN INTERNATIONAL
RALEIGH, NORTH CAROLINA
Copyright © 2006, TYLI
DWG NO.

REVISIONS					
NO.	BY:	DATE:	NO.	BY:	DATE:
1			3		
2			4		

SHEET NO. S-110
TOTAL SHEETS 207

B0682_SD_SS0_05.dgn 02/26/2007 01:41:25 PM

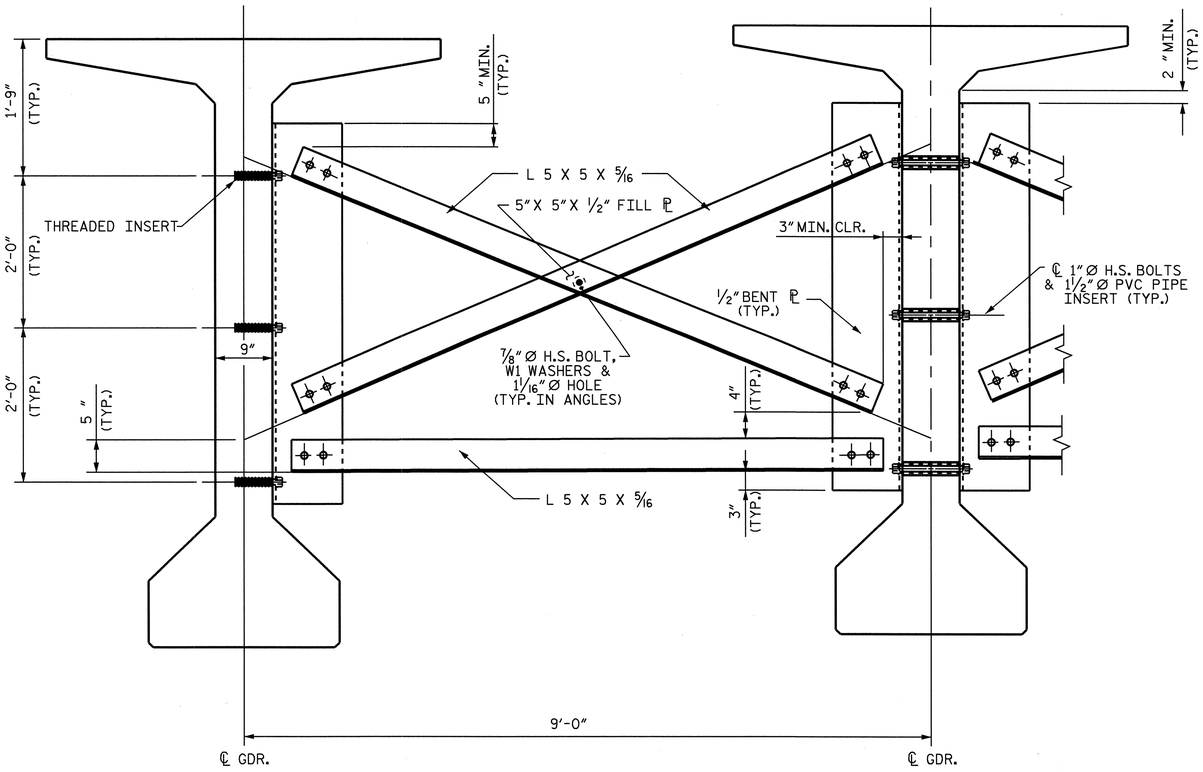

EXTERIOR GIRDER

INTERIOR GIRDER

PART SECTION AT INTERMEDIATE DIAPHRAGM

FOR MODIFIED 78" BULB TEE HAUNCHED GIRDER SEGMENTS

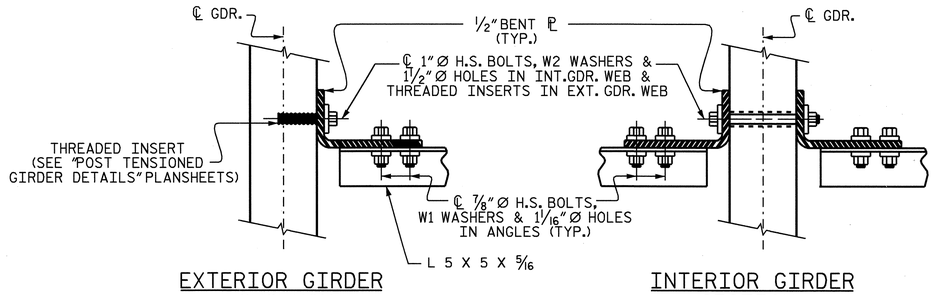

EXTERIOR GIRDER SECTION

INTERIOR GIRDER SECTION

CONNECTION DETAILS

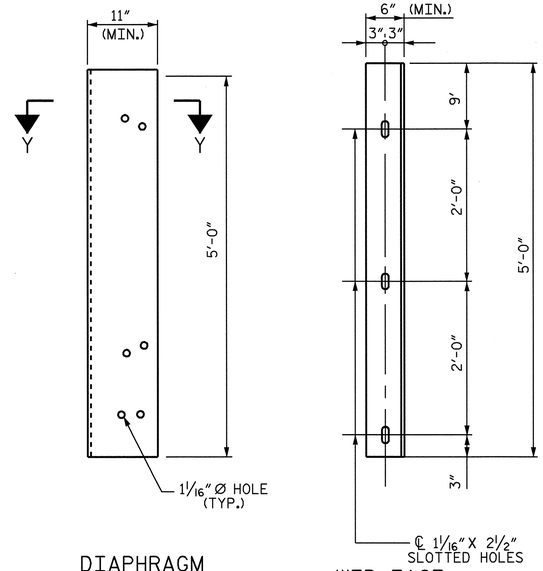

DIAPHRAGM FACE

WEB FACE

CONNECTOR PLATE DETAILS

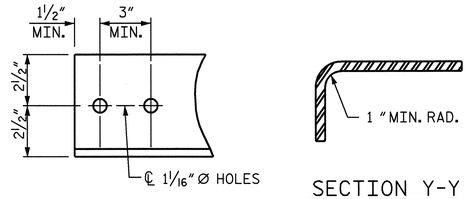

ANGLE END

(L 5 X 5 X 5/16)

SECTION Y-Y

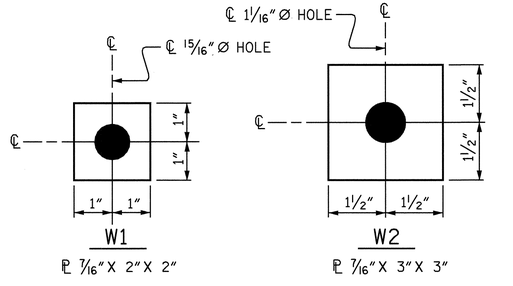

W1

℄ 7/16" X 2" X 2"

USE WITH 7/8" Ø HVY. HEX NUTS & DIRECT TENSION INDICATOR WASHERS AT DIAPHRAGM ANGLE TO CONNECTOR PLATE CONNECTIONS

W2

℄ 7/16" X 3" X 3"

USE WITH 1" Ø HVY. HEX NUTS & DIRECT TENSION INDICATOR WASHERS AT CONNECTOR PLATE TO GIRDER CONNECTIONS

WASHER DETAIL

STRUCTURAL STEEL NOTES

ALL INTERMEDIATE DIAPHRAGM STEEL, CONNECTOR PLATES AND PLATE WASHERS SHALL BE AASHTO M270 GRADE 50 OR APPROVED EQUAL.

TENSION ON THE AASHTO M164 BOLTS THROUGH THE ANGLE OR CHANNEL SHALL BE CALIBRATED USING DIRECT TENSION INDICATOR WASHERS IN ACCORDANCE WITH ARTICLE 440-8 OF THE STANDARD SPECIFICATIONS.

TENSION ON THE AASHTO M164 BOLTS THROUGH THE GIRDER WEB SHALL BE SNUG TIGHTENED FOLLOWED BY AN ADDITIONAL 1/4 TURN.

THE ANGLES, CHANNELS, PLATE WASHERS AND CONNECTOR PLATES SHALL BE METALLIZED IN ACCORDANCE WITH THE STANDARD SPECIFICATIONS. FOR THERMAL SPRAYED COATINGS (METALLIZATION) SEE SPECIAL PROVISIONS.

APPLY AN 8 mil THICK 1350 ALUMINUM (W-Al-1350) THERMAL SPRAYED COATING WITH A 0.5 mil THICK SEAL COAT TO THE ANGLES, CHANNELS, PLATE WASHERS AND CONNECTOR PLATES IN ACCORDANCE WITH THE THERMAL SPRAYED COATINGS SPECIAL PROVISION AND SECTION 442 OF THE STANDARD SPECIFICATIONS. FOR THERMAL SPRAYED COATINGS, SEE SPECIAL PROVISIONS.

APPLY 1 COAT EACH OF 1080-12 BROWN AND 1080-12 GRAY PAINT ON THE EDGES AND THE WEB FACE OF THE CONNECTOR PLATE WHICH COMES IN CONTACT WITH THE CONCRETE GIRDER IN ACCORDANCE WITH SECTION 442 OF THE STANDARD SPECIFICATIONS.

USE A PLATE WASHER WITH STANDARD HOLES UNDER EACH BOLT HEAD AND NUT. THE PLATE WASHERS SHALL HAVE SUFFICIENT SIZE TO COVER THE HOLES AFTER INSTALLATION. DIRECT TENSION INDICATORS ARE TO BE USED IN CONJUNCTION WITH THE PLATE WASHERS.

PROVIDE SUFFICIENT LENGTH OF ALL BOLTS TO ACCOMMODATE WASHERS, DIRECT TENSION INDICATORS, THE THICKNESS OF CONNECTING MEMBER PLUS AT LEAST 1/4" PROJECTION BEYOND THE NUT.

INTERMEDIATE DIAPHRAGM ASSEMBLY SHALL COMPLY WITH SECTION 1072 OF THE STANDARD SPECIFICATIONS.

CONTRACTOR SHALL SUBMIT TWO SETS OF WORKING DRAWINGS FOR THE INTERMEDIATE DIAPHRAGM ASSEMBLY FOR REVIEW, COMMENTS AND ACCEPTANCE. AFTER REVIEW, COMMENTS, AND ACCEPTANCE, SUBMIT SEVEN SETS FOR DISTRIBUTION.

IN THE EXTERIOR BAYS, TEMPORARY STRUTS SHALL BE PLACED BETWEEN PRESTRESSED GIRDERS ADJACENT TO THE STEEL DIAPHRAGMS. STRUTS SHALL REMAIN IN PLACE 3 DAYS AFTER CONCRETE IS PLACED. ALL AASHTO M164 H.S. BOLTS SHALL BE FULLY TIGHTENED AFTER THE STRUTS HAVE BEEN REMOVED.

ALL DIMENSIONS SHOWN ARE HORIZONTAL OR VERTICAL UNLESS OTHERWISE NOTED.

FOR HIGH STRENGTH BOLTS, SEE SPECIAL PROVISIONS.

THE HIGH STRENGTH BOLTS, NUTS AND WASHERS SHALL BE GALVANIZED IN ACCORDANCE WITH THE STANDARD SPECIFICATIONS.

NORTH CAROLINA PROFESSIONAL SEAL 23926 ENGINEER BRIAN C. HANKS 4/27/07

PROJECT NO. B-682

BRUNSWICK COUNTY

STATION: 47+08.03 -L- POT

SHEET 1 OF 3

STATE OF NORTH CAROLINA
DEPARTMENT OF TRANSPORTATION
RALEIGH

SUPERSTRUCTURE

INTERMEDIATE STEEL DIAPHRAGMS

REVISIONS						SHEET NO.
NO.	BY:	DATE:	NO.	BY:	DATE:	S-111
1			3			TOTAL SHEETS
2			4			207

DRAWN BY : H. A. LUCAS DATE : 12/06
CHECKED BY : R. D. MARTIN DATE : 12/06

27-APR-2007 09:23
S:\PG3\Hlucas\B-682 Sunset Beach\B682_sd_SS_Diaph Dtls.dgn
bhanks

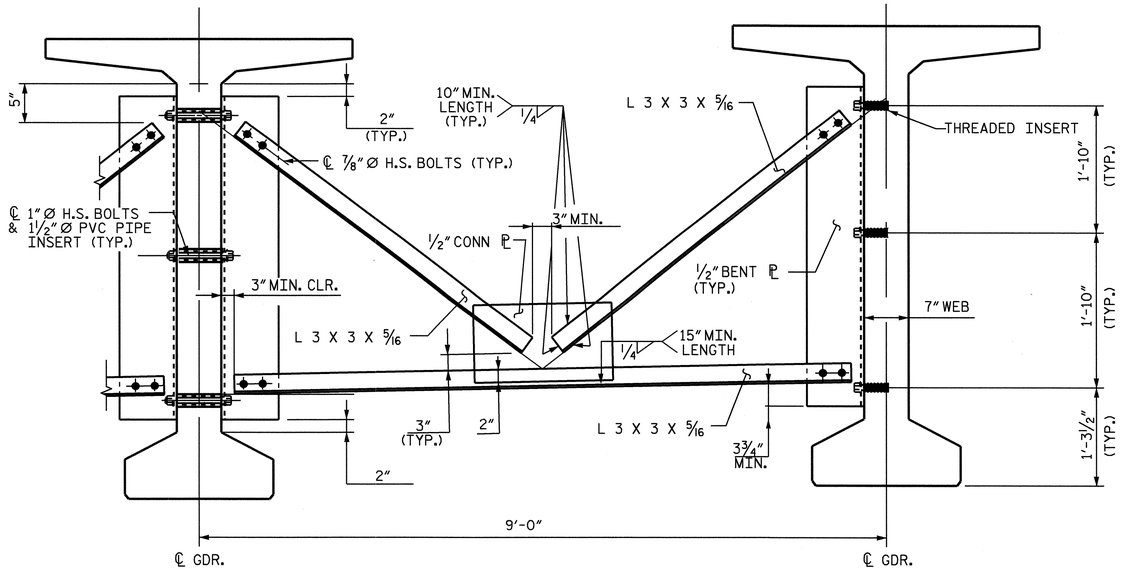

INTERIOR GIRDER EXTERIOR GIRDER

PART SECTION AT INTERMEDIATE DIAPHRAGM

FOR 72" BULB TEE (SPANS A THRU K & SPANS O THRU R)

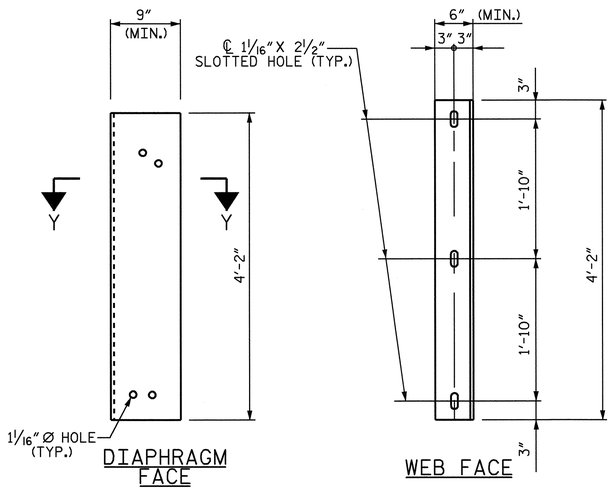

CONNECTOR PLATE DETAILS

FOR 72" BULB TEE (SPANS A THRU K & SPANS O THRU R)

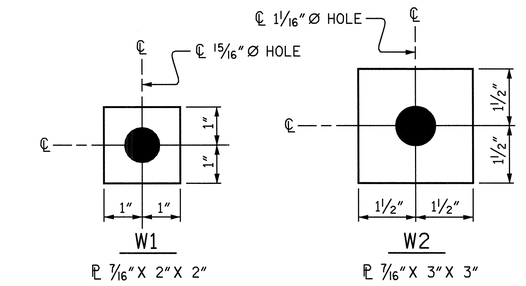

USE WITH 7/8" Ø HVY. HEX NUTS & DIRECT TENSION INDICATOR WASHERS AT DIAPHRAGM ANGLE TO CONNECTOR PLATE CONNECTIONS

USE WITH 1" Ø HVY. HEX NUTS & DIRECT TENSION INDICATOR WASHERS AT CONNECTOR PLATE TO GIRDER CONNECTIONS

WASHER DETAILS

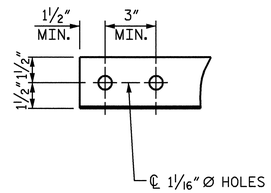

ANGLE END

(L 3 X 3 X 5/16)

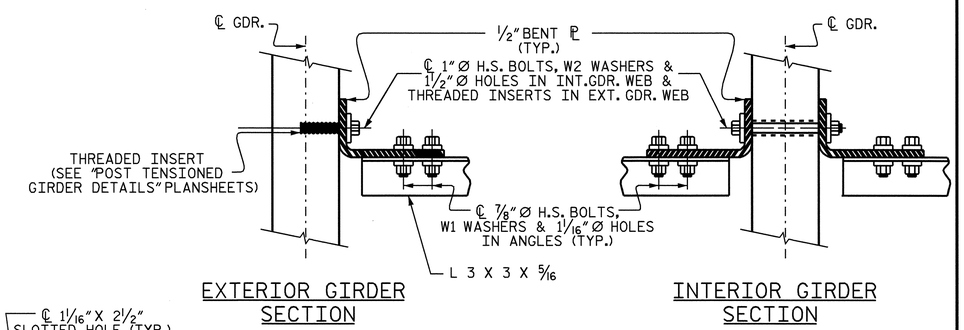

EXTERIOR GIRDER SECTION

INTERIOR GIRDER SECTION

CONNECTION DETAILS

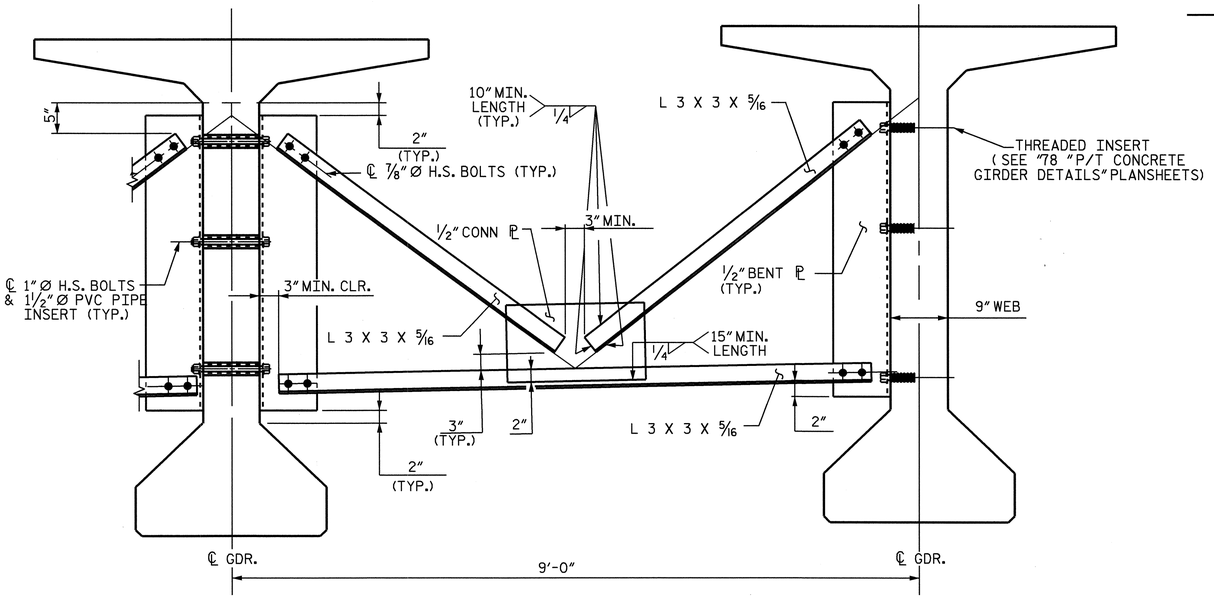

INTERIOR GIRDER EXTERIOR GIRDER

PART SECTION AT INTERMEDIATE DIAPHRAGM

FOR POST-TENSIONED 78" BULB TEE
END GIRDERS (SPANS L & N) & DROP-IN GIRDER SEGMENT (SPAN M)

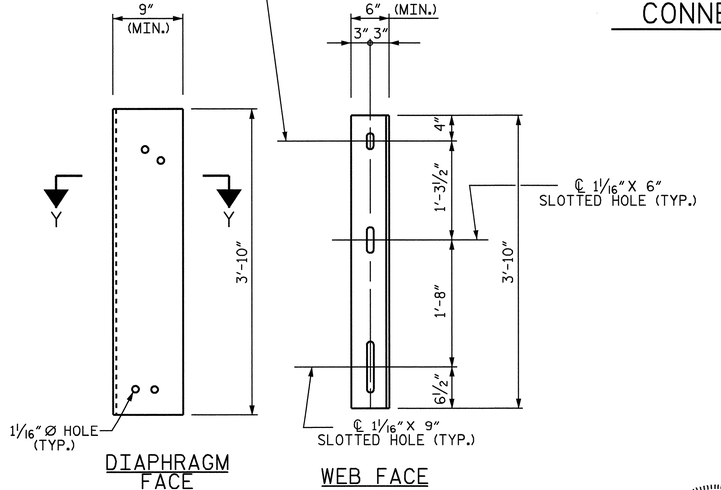

1 " MIN. RAD.

SECTION Y-Y

CONNECTOR PLATE DETAILS

FOR POST-TENSIONED 78" BULB TEE
END GIRDERS (SPANS L & N) & DROP-IN GIRDER SEGMENT (SPAN M)

NORTH CAROLINA PROFESSIONAL SEAL 23926 ENGINEER BRIAN C. HAWKS

2/28/07

PROJECT NO. B-682

BRUNSWICK COUNTY

STATION: 47+08.03 -L- POT

SHEET 2 OF 3

STATE OF NORTH CAROLINA
DEPARTMENT OF TRANSPORTATION
RALEIGH

SUPERSTRUCTURE

INTERMEDIATE STEEL DIAPHRAGMS

REVISIONS						SHEET NO.
NO.	BY:	DATE:	NO.	BY:	DATE:	S-112
1			3			TOTAL SHEETS
2			4			207

DRAWN BY : H. A. LUCAS DATE : 12/06
CHECKED BY : R. D. MARTIN DATE : 12/06

07-FEB-2007 15:19
S:\PGS\hlucas\B-682 Sunset Beach\B682_sd_SS_Diaph Dtls.dgn
hlucas

TABLE

GIRDER TYPE	CHANNEL SIZE	DIM "A"	DIM "B"	DIM "L"
IV	MC 18 x 42.7	1'-9½"	1'-2"	1'-6"

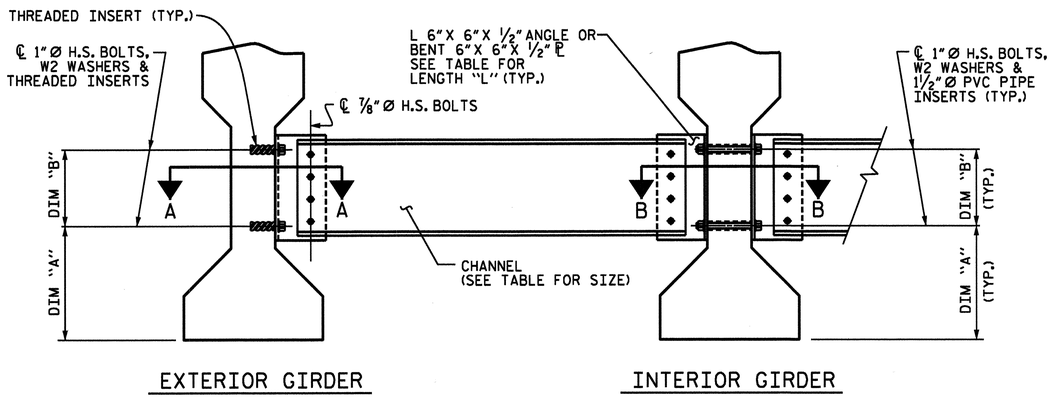

PART SECTION AT INTERMEDIATE DIAPHRAGM

(TYPE III OR TYPE IV GIRDER SHOWN)

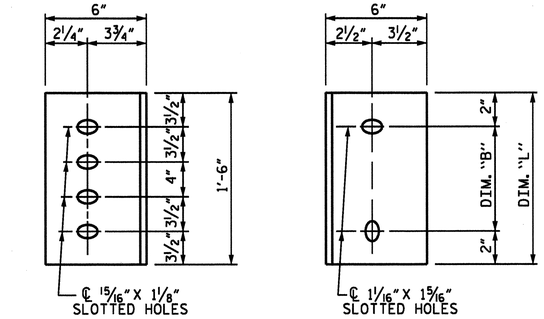

CONNECTOR PLATE DETAILS

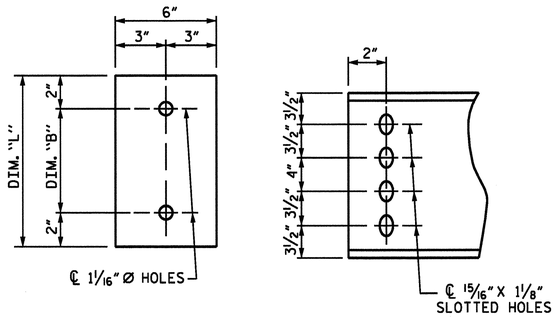

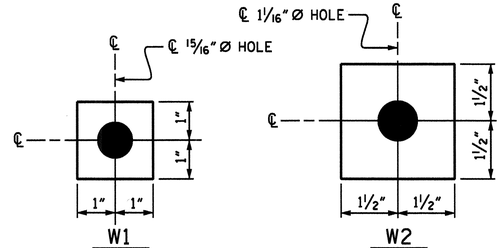

WASHER DETAILS

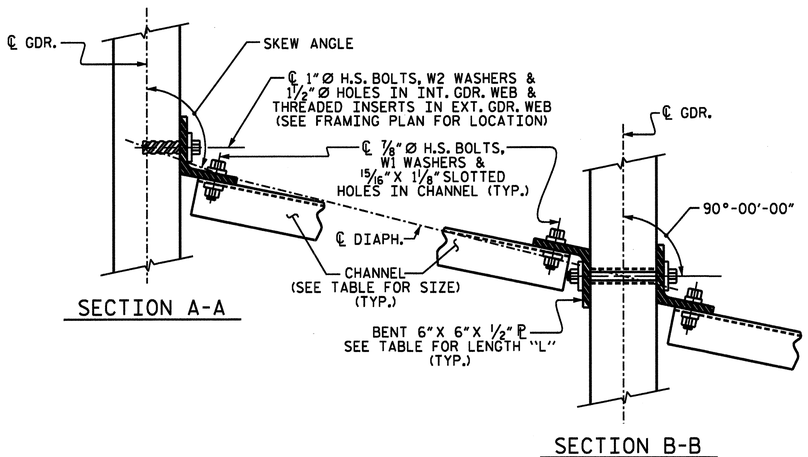

CONNECTION DETAILS

(FOR 70°≤ SKEW < 90° OR 90°< SKEW ≤ 110°)

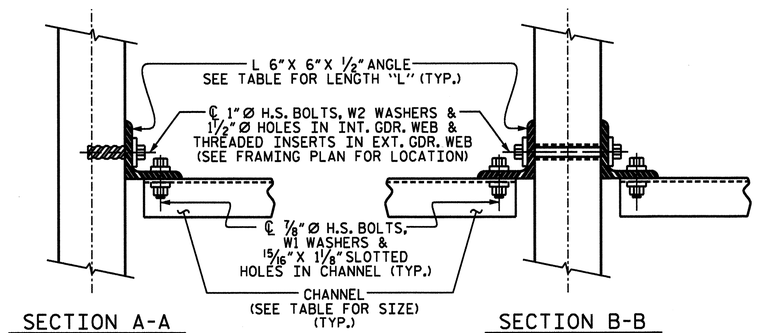

CONNECTION DETAILS

(FOR SKEW = 90°)

THIS STANDARD DRAWING HAS BEEN REVIEWED AND ADAPTED FOR USE AT THE REFERENCED LOCATION BY THE UNDERSIGNED.

NORTH CAROLINA PROFESSIONAL SEAL 15832 ENGINEER
1-17-07

PLANS PREPARED BY:

PARSONS TRANSPORTATION GROUP
Engineers and Planners
RALEIGH, NORTH CAROLINA

PROJECT NO. B-682
BRUNSWICK COUNTY
STATION: 47+08.03 -L- POT

SHEET 3 OF 3

STATE OF NORTH CAROLINA
DEPARTMENT OF TRANSPORTATION
RALEIGH

STANDARD INTERMEDIATE STEEL DIAPHRAGMS FOR TYPE II, III, & IV PRESTRESSED CONCRETE GIRDERS

REVISIONS							SHEET NO.
NO.	BY:	DATE:	NO.	BY:	DATE:		5-113
1			3				TOTAL SHEETS
2			4				207
JOB NO. 645615							
DWG. NO.							

STD.No.PCG12

ASSEMBLED BY : D. H. Carter	DATE : JULY 2006
CHECKED BY : J. A. Lee	DATE : JULY 2006
DRAWN BY : TLA 6/05	ADDED 10/21/05
CHECKED BY : VC 6/05	REV. 5/1/06 TLA/GM

b682_sd_Dia_01.dgn 02/26/2007 12:13:18 PM

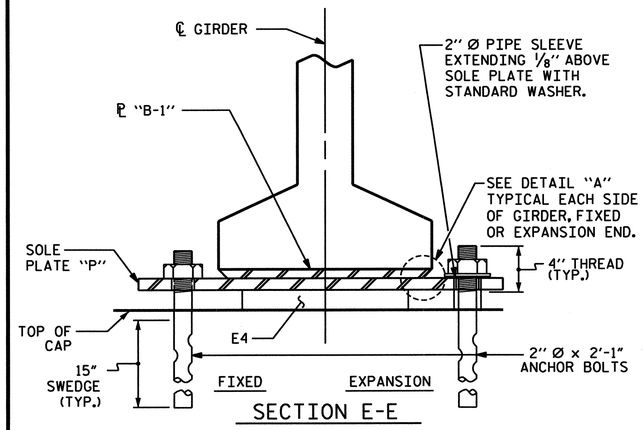

SECTION E-E

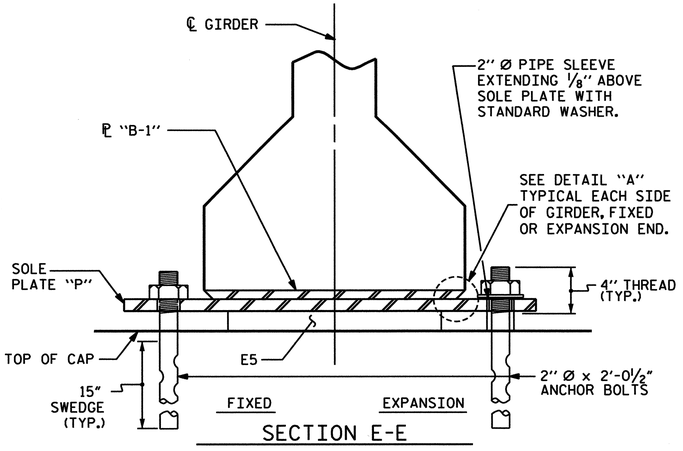

SECTION E-E

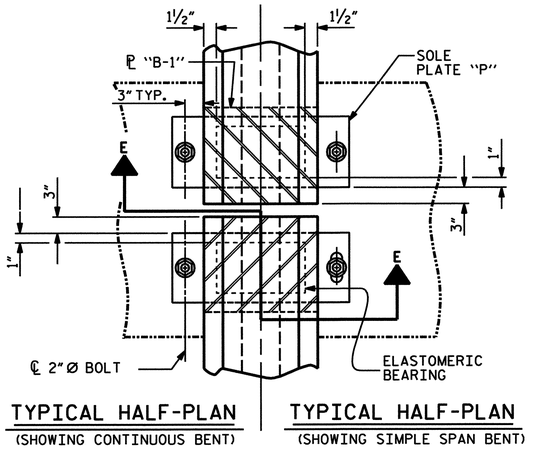

TYPICAL HALF-PLAN
(SHOWING CONTINUOUS BENT)

TYPICAL HALF-PLAN
(SHOWING SIMPLE SPAN BENT)

NOTES

AT ALL FIXED POINTS OF SUPPORT, NUTS FOR ANCHOR BOLTS ARE TO BE TIGHTENED FINGER TIGHT AND THEN BACKED OFF 1/2 TURN. THE THREAD OF THE NUT AND BOLT SHALL THEN BE BURRED WITH A SHARP POINTED TOOL.

THE 2" Ø PIPE SLEEVE SHALL BE CUT FROM SCHEDULE 40 PVC PLASTIC PIPE. THE PVC PLASTIC PIPE SHALL MEET THE REQUIREMENTS OF ASTM D1785.

STEEL SOLE PLATES, ANCHOR BOLTS, NUTS, AND WASHERS SHALL BE GALVANIZED IN ACCORDANCE WITH THE STANDARD SPECIFICATIONS.

PRIOR TO WELDING, GRIND THE GALVANIZED SURFACE OF THE PORTION OF THE EMBEDDED PLATE AND SOLE PLATE THAT ARE TO BE WELDED. AFTER WELDING, DAMAGED GALVANIZED SURFACES SHALL BE REPAIRED IN ACCORDANCE WITH THE STANDARD SPECIFICATIONS.

WHEN WELDING THE SOLE PLATE TO THE EMBEDDED PLATE IN THE GIRDER, USE TEMPERATURE INDICATING WAX PENS, OR OTHER SUITABLE MEANS, TO ENSURE THAT THE TEMPERATURE OF THE SOLE PLATE DOES NOT EXCEED 300°F. TEMPERATURES ABOVE THIS MAY DAMAGE THE ELASTOMER.

SOLE PLATE "P", BOLTS, NUTS, WASHERS, AND PIPE SLEEVE SHALL BE INCLUDED IN THE PAY ITEM FOR PRESTRESSED CONCRETE GIRDERS.

ANCHOR BOLTS SHALL MEET THE REQUIREMENTS OF ASTM A449. NUTS SHALL MEET THE REQUIREMENTS OF AASHTO M291-DH OR AASHTO M292-2H. WASHERS SHALL MEET THE REQUIREMENTS OF AASHTO M293. NO SHOP DRAWINGS ARE REQUIRED FOR ANCHOR BOLTS, NUTS AND WASHERS. SHOP INSPECTION IS REQUIRED.

ALL SURFACES OF BEARING PLATES SHALL BE SMOOTH AND STRAIGHT.

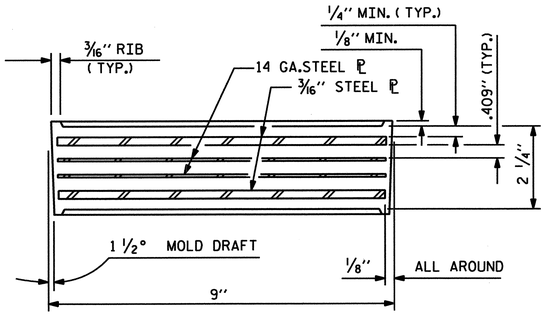

TYPICAL SECTION OF ELASTOMERIC BEARINGS

E1 (72 REQ'D)

PLAN VIEW OF ELASTOMERIC BEARING

TYPE V

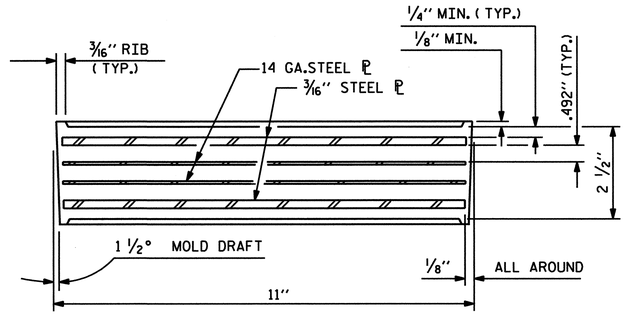

TYPICAL SECTION OF ELASTOMERIC BEARINGS

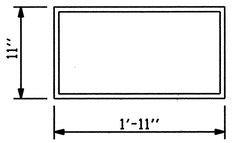

E2 (88 REQ'D)

PLAN VIEW OF ELASTOMERIC BEARING

TYPE VI

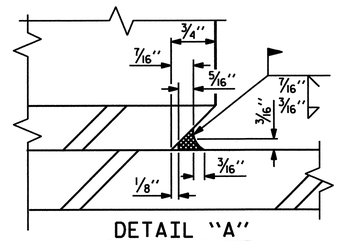

DETAIL "A"

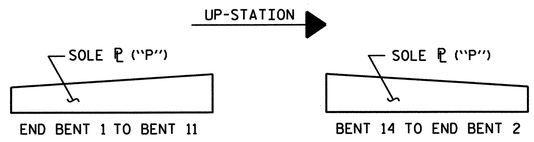

SOLE ℙ PLACEMENT DETAIL

— LOAD RATINGS —	
	MAX.D.L.+ L.L.
TYPE V	180 K
TYPE VI	211 K

SOLE PLATE SCHEDULE (EXP.)								
MARK	A (IN.)	B (IN.)	C (FT.)	D (FT.)	L (IN.)	T1 (IN.)	T2 (IN.)	# REQ.
P1-E	13"	6 1/2"	2'-8"	3'-2"	6 3/4"	1 1/2"	2 3/16"	4
P2-E	13"	6 1/2"	2'-8"	3'-2"	6 3/4"	1 1/4"	1 15/16"	16
P3-E	13"	6 1/2"	2'-8"	3'-2"	6 3/4"	1 1/4"	1 13/16"	4
P4-E	13"	6 1/2"	2'-8"	3'-2"	5 3/4"	1 1/4"	1 11/16"	4
P5-E	13"	6 1/2"	2'-8"	3'-2"	5 3/4"	1 1/4"	1 5/8"	4
P6-E	13"	6 1/2"	2'-8"	3'-2"	7"	1 3/16"	1 1/4"	4
P7-E	13"	6 1/2"	2'-8"	3'-2"	7"	1 13/16"	1 1/4"	4
P8-E	11"	5 1/2"	2'-8"	3'-2"	5 1/4"	1 13/16"	1 1/4"	4
P9-E	11"	5 1/2"	2'-8"	3'-2"	5 1/4"	1 7/8"	1 1/4"	8
P10-E	11"	5 1/2"	2'-8"	3'-2"	5"	2 1/8"	1 1/2"	4

SOLE PLATE SCHEDULE (FIX.)							
MARK	A (IN.)	B (IN.)	C (FT.)	D (FT.)	T1 (IN.)	T2 (IN.)	# REQ.
P1-F	13"	6 1/2"	2'-8"	3'-2"	1 1/4"	1 15/16"	44
P2-F	13"	6 1/2"	2'-8"	3'-2"	1 1/4"	1 13/16"	4
P3-F	13"	6 1/2"	2'-8"	3'-2"	1 1/4"	1 11/16"	4
P4-F	13"	6 1/2"	2'-8"	3'-2"	2"	2 3/8"	4
P5-F	13"	6 1/2"	2'-8"	3'-2"	2 1/4"	1 15/16"	4
P6-F	13"	6 1/2"	2'-8"	3'-2"	1 5/8"	1 1/4"	8
P7-F	13"	6 1/2"	2'-8"	3'-2"	1 3/4"	1 1/4"	8
P8-F	13"	6 1/2"	2'-8"	3'-2"	1 13/16"	1 1/4"	4
P9-F	11"	5 1/2"	2'-8"	3'-2"	1 13/16"	1 1/4"	4
P10-F	11"	5 1/2"	2'-8"	3'-2"	1 7/8"	1 1/4"	20

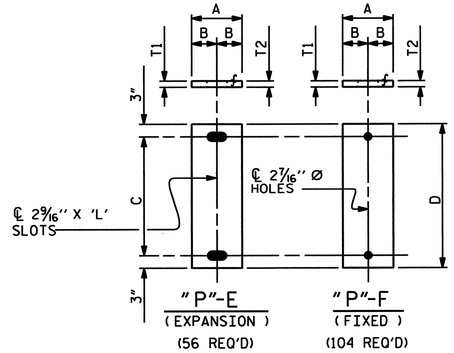

SOLE PLATE DETAILS ("P")

THIS STANDARD DRAWING HAS BEEN REVIEWED AND ADAPTED FOR USE AT THE REFERENCED LOCATION BY THE UNDERSIGNED.

NORTH CAROLINA PROFESSIONAL SEAL 15832 ENGINEER JOEL A. LEE

1-17-07

PLANS PREPARED BY:

PARSONS TRANSPORTATION GROUP
Engineers and Planners
RALEIGH, NORTH CAROLINA

JOB NO. 645615
DWG. NO.

PROJECT NO. B-682
BRUNSWICK COUNTY
STATION: 47+08.03 -L- POT

SHEET 1 OF 2

STATE OF NORTH CAROLINA
DEPARTMENT OF TRANSPORTATION
RALEIGH

STANDARD ELASTOMERIC BEARING DETAILS

PRESTRESSED CONCRETE GIRDER SUPERSTRUCTURE

REVISIONS						SHEET NO.
NO.	BY:	DATE:	NO.	BY:	DATE:	5-114
1			3			TOTAL SHEETS
2			4			207

ASSEMBLED BY : D. H. Carter DATE : July 2006
CHECKED BY : J. A. Lee DATE : July 2006

DRAWN BY : WJH 8/89
CHECKED BY : CRK 8/89

REV. 10/17/00 RWW/LES
REV. 7/10/01 RWW/LES
REV. 5/1/06 TLA/GM

STD. NO. EB4

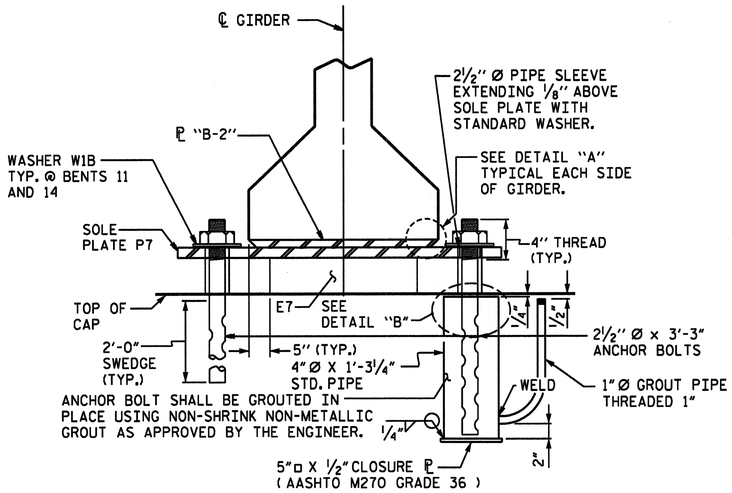

BEARING ELEVATION AT BENTS 11 AND 14

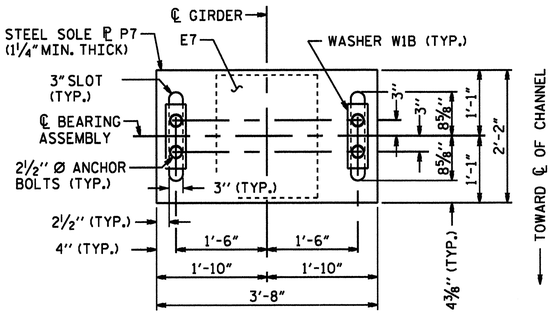

PLAN VIEW OF SOLE PLATE

P7 (8 REQ'D)

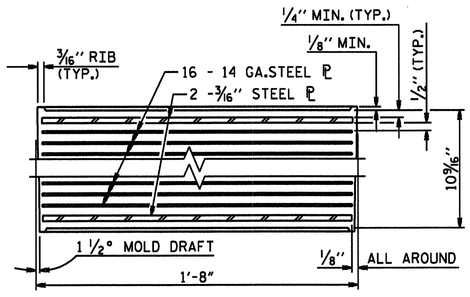

TYPICAL SECTION OF ELASTOMERIC BEARINGS

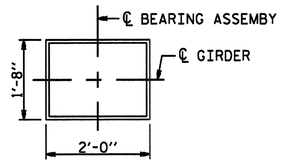

PLAN VIEW OF ELASTOMERIC BEARING

E7 (8 REQ'D)

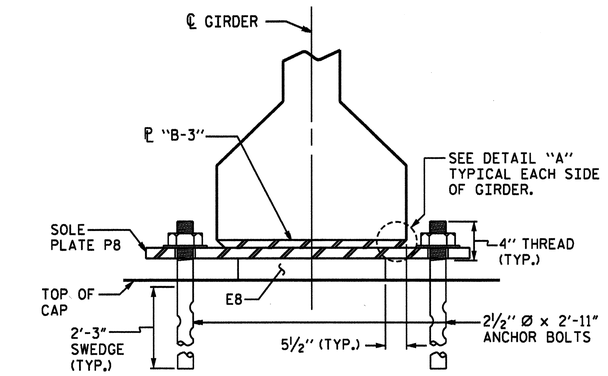

BEARING ELEVATION AT BENTS 12 AND 13

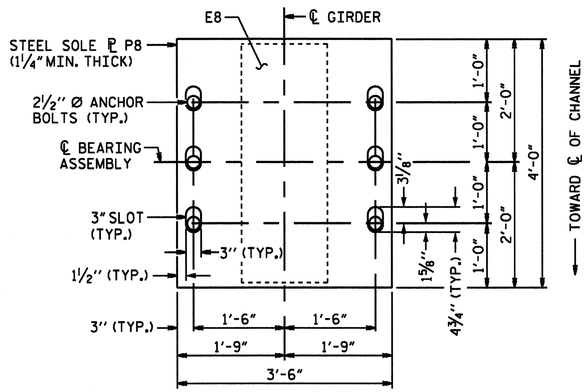

PLAN VIEW OF SOLE PLATE

P8 (8 REQ'D)

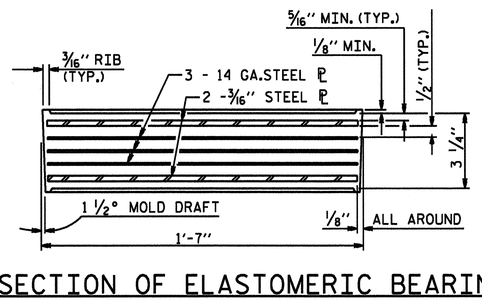

TYPICAL SECTION OF ELASTOMERIC BEARINGS

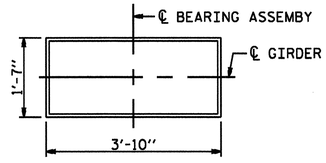

PLAN VIEW OF ELASTOMERIC BEARING

E8 (8 REQ'D)

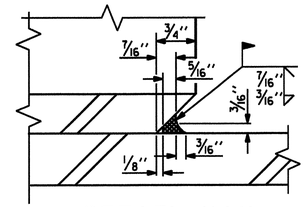

DETAIL "A"

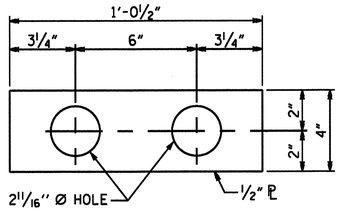

WASHER W1B

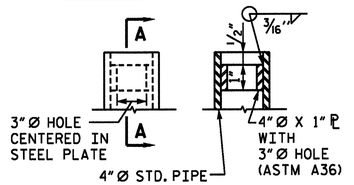

SECTION A-A

DETAIL "B"

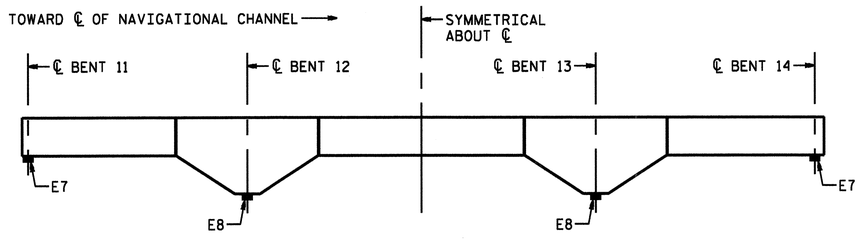

CHANNEL UNIT DIAGRAM

BENT 11 THRU BENT 14

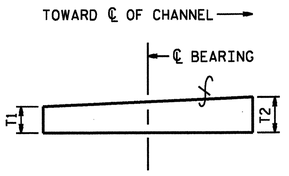

SOLE PLATE BEVEL

	T1	T2
BENT 11	1¼"	1¾"
BENT 12	1¼"	1½"
BENT 13	1¼"	1½"
BENT 14	1¼"	1¾"

NOTES

ELASTOMER IN ALL PADS SHALL HAVE A GRADE 50 DUROMETER HARDNESS.

STEEL PLATES IN ALL PADS SHALL CONFORM TO AASHTO M270 GRADE 36 STEEL.

ANCHOR BOLTS AND SOLE PLATES SHALL CONFORM TO AASHTO M270 GRADE 50 STEEL.

AT ALL FIXED POINTS OF SUPPORT, NUTS FOR ANCHOR BOLTS ARE TO BE TIGHTENED FINGER TIGHT AND THEN BACKED OFF ½ TURN. THE THREAD OF THE NUT AND BOLT SHALL THEN BE BURRED WITH A SHARP POINTED TOOL.

THE 2½" Ø PIPE SLEEVE SHALL BE CUT FROM SCHEDULE 40 PVC PLASTIC PIPE. THE PVC PLASTIC PIPE SHALL MEET THE REQUIREMENTS OF ASTM D1785.

STEEL SOLE PLATES, ANCHOR BOLTS, NUTS, AND WASHERS SHALL BE GALVANIZED IN ACCORDANCE WITH THE STANDARD SPECIFICATIONS.

PRIOR TO WELDING, GRIND THE GALVANIZED SURFACE OF THE PORTION OF THE EMBEDDED PLATE AND SOLE PLATE THAT ARE TO BE WELDED. AFTER WELDING, DAMAGED GALVANIZED SURFACES SHALL BE REPAIRED IN ACCORDANCE WITH THE STANDARD SPECIFICATIONS.

WHEN WELDING THE SOLE PLATE TO THE EMBEDDED PLATE IN THE GIRDER, USE TEMPERATURE INDICATING WAX PENS, OR OTHER SUITABLE MEANS, TO ENSURE THAT THE TEMPERATURE OF THE SOLE PLATE DOES NOT EXCEED 300°F. TEMPERATURES ABOVE THIS MAY DAMAGE THE ELASTOMER.

SOLE PLATE "P", BOLTS, NUTS, WASHERS, AND PIPE SLEEVE SHALL BE INCLUDED IN THE PAY ITEM FOR PRESTRESSED CONCRETE GIRDERS.

ANCHOR BOLTS SHALL MEET THE REQUIREMENTS OF ASTM A449. NUTS SHALL MEET THE REQUIREMENTS OF AASHTO M291-DH OR AASHTO M292-2H. WASHERS SHALL MEET THE REQUIREMENTS OF AASHTO M293. NO SHOP DRAWINGS ARE REQUIRED FOR ANCHOR BOLTS, NUTS AND WASHERS. SHOP INSPECTION IS REQUIRED.

ALL SURFACES OF BEARING PLATES SHALL BE SMOOTH AND STRAIGHT.

BEFORE POURING THE FINAL 7'-0" OF SPAN L AND SPAN N, THE GIRDERS SHALL BE JACKED AND THE ANCHOR BOLTS, SOLE PLATE AND ELASTOMERIC BEARING SHALL BE CENTERED AS NEARLY AS PRACTICAL ABOUT THE EMBEDDED PLATE "B-2". THIS OPERATION SHALL BE PERFORMED AT APPROXIMATELY 60°F.

AFTER BEARING ASSEMBLY IS IN PLACE AND ANCHOR BOLTS HAVE FINALLY BEEN POSITIONED, THEY SHALL BE GROUTED IN PLACE AS SHOWN.

THE CONTRACTOR MAY PROPOSE ALTERNATE METHODS FOR ADJUSTING THE BEARING ASSEMBLY PROVIDED DETAILS ARE SUBMITTED TO THE ENGINEER FOR REVIEW AND APPROVAL.

THE CLOSURE PLATE, GROUT PIPE AND STANDARD PIPE FOR THIS ASSEMBLY SHALL BE GALVANIZED IN ACCORDANCE WITH STANDARD SPECIFICATIONS.

PROJECT NO. B-0682

BRUNSWICK COUNTY

STATION: 47+08.03 -L- POT

SHEET 2 OF 2

NORTH CAROLINA PROFESSIONAL SEAL 024928 ENGINEER RODNEY E. MONEY 3/26/07

STATE OF NORTH CAROLINA
DEPARTMENT OF TRANSPORTATION
RALEIGH

SUPERSTRUCTURE ELASTOMERIC BEARING & SOLE PLATE DETAILS

SPANS L-N

DATE: #DATE#
FILE: #FILENAME#

DRAWN BY : J. W. WRIGHT DATE : NOV. 06
CHECKED BY : R.E. MONEY DATE : NOV. 06

PREPARED IN THE OFFICE OF
TYLIN INTERNATIONAL
RALEIGH, NORTH CAROLINA
Copyright © 2006, TYLI

DWG NO.

REVISIONS						SHEET NO.
NO.	BY:	DATE:	NO.	BY:	DATE:	S-115
1			3			TOTAL SHEETS
2			4			207

B0682_SD_BD0_01.dgn 02/26/2007 01:44:40 PM

DEAD LOAD DEFLECTION & CAMBER TABLE FOR GIRDERS

SPAN A

GIRDER 1 (EXTERIOR)

TENTH POINTS	0	.1	.2	.3	.4	.5	.6	.7	.8	.9	0
CAMBER (GIRDER IN PLACE) ↑	0	.118	.213	.283	.327	.343	.327	.283	.213	.118	0
* DEFLECTION DUE TO DEAD LOAD ↓	0	.038	.074	.103	.121	.127	.121	.103	.074	.038	0
FINAL CAMBER (IN.) ↑	0	15/16	1 11/16	2 3/16	2 1/2	2 5/16	2 1/2	2 3/16	1 11/16	15/16	0

GIRDER 2 (INTERIOR)

TENTH POINTS	0	.1	.2	.3	.4	.5	.6	.7	.8	.9	0
CAMBER (GIRDER IN PLACE) ↑	0	.118	.213	.283	.327	.343	.327	.283	.213	.118	0
* DEFLECTION DUE TO DEAD LOAD ↓	0	.037	.072	.100	.118	.124	.118	.100	.072	.037	0
FINAL CAMBER (IN.) ↑	0	1	1 11/16	2 3/16	2 1/2	2 5/8	2 1/2	2 3/16	1 11/16	1	0

GIRDER 4 (EXTERIOR)

TENTH POINTS	0	.1	.2	.3	.4	.5	.6	.7	.8	.9	0
CAMBER (GIRDER IN PLACE) ↑	0	.118	.213	.283	.327	.343	.327	.283	.213	.118	0
* DEFLECTION DUE TO DEAD LOAD ↓	0	.039	.076	.106	.125	.131	.125	.106	.076	.039	0
FINAL CAMBER (IN.) ↑	0	15/16	1 5/8	2 1/8	2 7/16	2 9/16	2 7/16	2 1/8	1 5/8	15/16	0

GIRDER 3 (INTERIOR)

TENTH POINTS	0	.1	.2	.3	.4	.5	.6	.7	.8	.9	0
CAMBER (GIRDER IN PLACE) ↑	0	.118	.213	.283	.327	.343	.327	.283	.213	.118	0
* DEFLECTION DUE TO DEAD LOAD ↓	0	.037	.072	.100	.118	.124	.118	.100	.072	.037	0
FINAL CAMBER (IN.) ↑	0	1	1 11/16	2 3/16	2 1/2	2 5/8	2 1/2	2 3/16	1 11/16	1	0

SPAN B

GIRDER 1 (EXTERIOR)

TENTH POINTS	0	.1	.2	.3	.4	.5	.6	.7	.8	.9	0
CAMBER (GIRDER IN PLACE) ↑	0	.124	.223	.297	.344	.360	.344	.297	.223	.124	0
* DEFLECTION DUE TO DEAD LOAD ↓	0	.040	.078	.108	.127	.133	.127	.108	.078	.040	0
FINAL CAMBER (IN.) ↑	0	1	1 3/4	2 1/4	2 5/8	2 3/4	2 5/8	2 1/4	1 3/4	1	0

GIRDER 2 (INTERIOR)

TENTH POINTS	0	.1	.2	.3	.4	.5	.6	.7	.8	.9	0
CAMBER (GIRDER IN PLACE) ↑	0	.124	.223	.297	.344	.360	.344	.297	.223	.124	0
* DEFLECTION DUE TO DEAD LOAD ↓	0	.039	.076	.105	.124	.130	.124	.105	.076	.039	0
FINAL CAMBER (IN.) ↑	0	1	1 3/4	2 5/16	2 5/8	2 3/4	2 5/8	2 5/16	1 3/4	1	0

GIRDER 4 (EXTERIOR)

TENTH POINTS	0	.1	.2	.3	.4	.5	.6	.7	.8	.9	0
CAMBER (GIRDER IN PLACE) ↑	0	.124	.223	.297	.344	.360	.344	.297	.223	.124	0
* DEFLECTION DUE TO DEAD LOAD ↓	0	.041	.080	.111	.131	.137	.131	.111	.080	.041	0
FINAL CAMBER (IN.) ↑	0	1	1 11/16	2 1/4	2 5/16	2 11/16	2 5/16	2 1/4	1 11/16	1	0

GIRDER 3 (INTERIOR)

TENTH POINTS	0	.1	.2	.3	.4	.5	.6	.7	.8	.9	0
CAMBER (GIRDER IN PLACE) ↑	0	.124	.223	.297	.344	.360	.344	.297	.223	.124	0
* DEFLECTION DUE TO DEAD LOAD ↓	0	.039	.076	.105	.124	.130	.124	.105	.076	.039	0
FINAL CAMBER (IN.) ↑	0	1	1 3/4	2 5/16	2 5/8	2 3/4	2 5/8	2 5/16	1 3/4	1	0

SPAN C

GIRDER 1 (EXTERIOR)

TENTH POINTS	0	.1	.2	.3	.4	.5	.6	.7	.8	.9	0
CAMBER (GIRDER IN PLACE) ↑	0	.124	.223	.297	.344	.360	.344	.297	.223	.124	0
* DEFLECTION DUE TO DEAD LOAD ↓	0	.040	.078	.108	.127	.133	.127	.108	.078	.040	0
FINAL CAMBER (IN.) ↑	0	1	1 3/4	2 1/4	2 5/8	2 3/4	2 5/8	2 1/4	1 3/4	1	0

GIRDER 2 (INTERIOR)

TENTH POINTS	0	.1	.2	.3	.4	.5	.6	.7	.8	.9	0
CAMBER (GIRDER IN PLACE) ↑	0	.124	.223	.297	.344	.360	.344	.297	.223	.124	0
* DEFLECTION DUE TO DEAD LOAD ↓	0	.039	.076	.105	.124	.130	.124	.105	.076	.039	0
FINAL CAMBER (IN.) ↑	0	1	1 3/4	2 5/16	2 5/8	2 3/4	2 5/8	2 5/16	1 3/4	1	0

GIRDER 4 (EXTERIOR)

TENTH POINTS	0	.1	.2	.3	.4	.5	.6	.7	.8	.9	0
CAMBER (GIRDER IN PLACE) ↑	0	.124	.223	.297	.344	.360	.344	.297	.223	.124	0
* DEFLECTION DUE TO DEAD LOAD ↓	0	.041	.080	.111	.131	.137	.131	.111	.080	.041	0
FINAL CAMBER (IN.) ↑	0	1	1 11/16	2 1/4	2 5/16	2 11/16	2 5/16	2 1/4	1 11/16	1	0

GIRDER 3 (INTERIOR)

TENTH POINTS	0	.1	.2	.3	.4	.5	.6	.7	.8	.9	0
CAMBER (GIRDER IN PLACE) ↑	0	.124	.223	.297	.344	.360	.344	.297	.223	.124	0
* DEFLECTION DUE TO DEAD LOAD ↓	0	.039	.076	.105	.124	.130	.124	.105	.076	.039	0
FINAL CAMBER (IN.) ↑	0	1	1 3/4	2 5/16	2 5/8	2 3/4	2 5/8	2 5/16	1 3/4	1	0

SPAN D

GIRDER 1 (EXTERIOR)

TENTH POINTS	0	.1	.2	.3	.4	.5	.6	.7	.8	.9	0
CAMBER (GIRDER IN PLACE) ↑	0	.124	.223	.297	.344	.360	.344	.297	.223	.124	0
* DEFLECTION DUE TO DEAD LOAD ↓	0	.040	.078	.108	.127	.133	.127	.108	.078	.040	0
FINAL CAMBER (IN.) ↑	0	1	1 3/4	2 1/4	2 5/8	2 3/4	2 5/8	2 1/4	1 3/4	1	0

GIRDER 2 (INTERIOR)

TENTH POINTS	0	.1	.2	.3	.4	.5	.6	.7	.8	.9	0
CAMBER (GIRDER IN PLACE) ↑	0	.124	.223	.297	.344	.360	.344	.297	.223	.124	0
* DEFLECTION DUE TO DEAD LOAD ↓	0	.039	.076	.105	.124	.130	.124	.105	.076	.039	0
FINAL CAMBER (IN.) ↑	0	1	1 3/4	2 5/16	2 5/8	2 3/4	2 5/8	2 5/16	1 3/4	1	0

GIRDER 4 (EXTERIOR)

TENTH POINTS	0	.1	.2	.3	.4	.5	.6	.7	.8	.9	0
CAMBER (GIRDER IN PLACE) ↑	0	.124	.223	.297	.344	.360	.344	.297	.223	.124	0
* DEFLECTION DUE TO DEAD LOAD ↓	0	.041	.080	.111	.131	.137	.131	.111	.080	.041	0
FINAL CAMBER (IN.) ↑	0	1	1 11/16	2 1/4	2 5/16	2 11/16	2 5/16	2 1/4	1 11/16	1	0

GIRDER 3 (INTERIOR)

TENTH POINTS	0	.1	.2	.3	.4	.5	.6	.7	.8	.9	0
CAMBER (GIRDER IN PLACE) ↑	0	.124	.223	.297	.344	.360	.344	.297	.223	.124	0
* DEFLECTION DUE TO DEAD LOAD ↓	0	.039	.076	.105	.124	.130	.124	.105	.076	.039	0
FINAL CAMBER (IN.) ↑	0	1	1 3/4	2 5/16	2 5/8	2 3/4	2 5/8	2 5/16	1 3/4	1	0

SPAN E

GIRDER 1 (EXTERIOR)

TENTH POINTS	0	.1	.2	.3	.4	.5	.6	.7	.8	.9	0
CAMBER (GIRDER IN PLACE) ↑	0	.124	.223	.297	.343	.360	.343	.297	.223	.124	0
* DEFLECTION DUE TO DEAD LOAD ↓	0	.039	.077	.106	.125	.131	.125	.106	.077	.039	0
FINAL CAMBER (IN.) ↑	0	1	1 3/4	2 5/16	2 5/8	2 3/4	2 5/8	2 5/16	1 3/4	1	0

GIRDER 2 (INTERIOR)

TENTH POINTS	0	.1	.2	.3	.4	.5	.6	.7	.8	.9	0
CAMBER (GIRDER IN PLACE) ↑	0	.124	.223	.297	.344	.360	.344	.297	.223	.124	0
* DEFLECTION DUE TO DEAD LOAD ↓	0	.038	.075	.104	.122	.128	.122	.104	.075	.038	0
FINAL CAMBER (IN.) ↑	0	1	1 3/4	2 5/16	2 11/16	2 13/16	2 11/16	2 5/16	1 3/4	1	0

GIRDER 4 (EXTERIOR)

TENTH POINTS	0	.1	.2	.3	.4	.5	.6	.7	.8	.9	0
CAMBER (GIRDER IN PLACE) ↑	0	.124	.224	.298	.345	.361	.345	.298	.224	.124	0
* DEFLECTION DUE TO DEAD LOAD ↓	0	.041	.080	.111	.130	.137	.130	.111	.080	.041	0
FINAL CAMBER (IN.) ↑	0	1	1 3/4	2 1/4	2 5/16	2 11/16	2 5/16	2 1/4	1 3/4	1	0

GIRDER 3 (INTERIOR)

TENTH POINTS	0	.1	.2	.3	.4	.5	.6	.7	.8	.9	0
CAMBER (GIRDER IN PLACE) ↑	0	.124	.223	.297	.344	.361	.344	.297	.223	.124	0
* DEFLECTION DUE TO DEAD LOAD ↓	0	.039	.075	.104	.123	.129	.123	.104	.075	.038	0
FINAL CAMBER (IN.) ↑	0	1	1 3/4	2 5/16	2 11/16	2 3/4	2 11/16	2 5/16	1 3/4	1	0

SPAN F

GIRDER 1 (EXTERIOR)

TENTH POINTS	0	.1	.2	.3	.4	.5	.6	.7	.8	.9	0
CAMBER (GIRDER IN PLACE) ↑	0	.123	.222	.295	.342	.358	.342	.295	.222	.123	0
* DEFLECTION DUE TO DEAD LOAD ↓	0	.038	.075	.104	.123	.129	.123	.104	.075	.038	0
FINAL CAMBER (IN.) ↑	0	1	1 3/4	2 5/16	2 5/8	2 3/4	2 5/8	2 5/16	1 3/4	1	0

GIRDER 2 (INTERIOR)

TENTH POINTS	0	.1	.2	.3	.4	.5	.6	.7	.8	.9	0
CAMBER (GIRDER IN PLACE) ↑	0	.123	.223	.296	.343	.360	.343	.296	.223	.123	0
* DEFLECTION DUE TO DEAD LOAD ↓	0	.038	.075	.103	.121	.128	.121	.103	.075	.038	0
FINAL CAMBER (IN.) ↑	0	1	1 3/4	2 5/16	2 11/16	2 3/4	2 11/16	2 5/16	1 3/4	1	0

GIRDER 4 (EXTERIOR)

TENTH POINTS	0	.1	.2	.3	.4	.5	.6	.7	.8	.9	0
CAMBER (GIRDER IN PLACE) ↑	0	.125	.224	.299	.346	.362	.345	.299	.224	.125	0
* DEFLECTION DUE TO DEAD LOAD ↓	0	.042	.082	.113	.133	.139	.133	.113	.082	.042	0
FINAL CAMBER (IN.) ↑	0	1	1 11/16	2 1/4	2 9/16	2 11/16	2 9/16	2 1/4	1 11/16	1	0

GIRDER 3 (INTERIOR)

TENTH POINTS	0	.1	.2	.3	.4	.5	.6	.7	.8	.9	0
CAMBER (GIRDER IN PLACE) ↑	0	.124	.223	.298	.345	.361	.345	.298	.223	.124	0
* DEFLECTION DUE TO DEAD LOAD ↓	0	.039	.076	.105	.123	.130	.123	.105	.076	.039	0
FINAL CAMBER (IN.) ↑	0	1	1 3/4	2 5/16	2 5/8	2 3/4	2 5/8	2 5/16	1 3/4	1	0

SPAN G

GIRDER 1 (EXTERIOR)

TENTH POINTS	0	.1	.2	.3	.4	.5	.6	.7	.8	.9	0
CAMBER (GIRDER IN PLACE) ↑	0	.123	.222	.295	.342	.358	.342	.295	.222	.123	0
* DEFLECTION DUE TO DEAD LOAD ↓	0	.038	.075	.104	.123	.129	.123	.104	.075	.038	0
FINAL CAMBER (IN.) ↑	0	1	1 3/4	2 5/16	2 5/8	2 3/4	2 5/8	2 5/16	1 3/4	1	0

GIRDER 2 (INTERIOR)

TENTH POINTS	0	.1	.2	.3	.4	.5	.6	.7	.8	.9	0
CAMBER (GIRDER IN PLACE) ↑	0	.123	.223	.296	.343	.360	.343	.296	.223	.123	0
* DEFLECTION DUE TO DEAD LOAD ↓	0	.038	.075	.103	.121	.128	.121	.103	.075	.038	0
FINAL CAMBER (IN.) ↑	0	1	1 3/4	2 5/16	2 11/16	2 3/4	2 11/16	2 5/16	1 3/4	1	0

GIRDER 4 (EXTERIOR)

TENTH POINTS	0	.1	.2	.3	.4	.5	.6	.7	.8	.9	0
CAMBER (GIRDER IN PLACE) ↑	0	.125	.224	.299	.346	.362	.346	.299	.224	.125	0
* DEFLECTION DUE TO DEAD LOAD ↓	0	.042	.082	.113	.133	.139	.133	.113	.082	.042	0
FINAL CAMBER (IN.) ↑	0	1	1 11/16	2 1/4	2 9/16	2 11/16	2 9/16	2 1/4	1 11/16	1	0

GIRDER 3 (INTERIOR)

TENTH POINTS	0	.1	.2	.3	.4	.5	.6	.7	.8	.9	0
CAMBER (GIRDER IN PLACE) ↑	0	.124	.223	.298	.345	.361	.345	.298	.223	.124	0
* DEFLECTION DUE TO DEAD LOAD ↓	0	.039	.076	.105	.123	.130	.123	.105	.076	.039	0
FINAL CAMBER (IN.) ↑	0	1	1 3/4	2 5/16	2 5/8	2 3/4	2 5/8	2 5/16	1 3/4	1	0

SPAN H

GIRDER 1 (EXTERIOR)

TENTH POINTS	0	.1	.2	.3	.4	.5	.6	.7	.8	.9	0
CAMBER (GIRDER IN PLACE) ↑	0	.123	.222	.295	.342	.358	.342	.295	.222	.123	0
* DEFLECTION DUE TO DEAD LOAD ↓	0	.038	.075	.104	.123	.129	.123	.104	.075	.038	0
FINAL CAMBER (IN.) ↑	0	1	1 3/4	2 5/16	2 5/8	2 3/4	2 5/8	2 5/16	1 3/4	1	0
VERTICAL CURVE ORDINATE	0	.037	.067	.089	.102	.107	.103	.090	.069	.039	0
THEORETICAL BUILD-UP (IN.) ALONG ℄ GIRDER	5	4 7/16	4 1/16	3 3/4	3 9/16	3 1/2	3 5/8	3 13/16	4 1/16	4 7/16	5

GIRDER 2 (INTERIOR)

TENTH POINTS	0	.1	.2	.3	.4	.5	.6	.7	.8	.9	0
CAMBER (GIRDER IN PLACE) ↑	0	.123	.223	.296	.343	.360	.343	.296	.223	.123	0
* DEFLECTION DUE TO DEAD LOAD ↓	0	.038	.075	.103	.121	.128	.121	.103	.075	.038	0
FINAL CAMBER (IN.) ↑	0	1	1 3/4	2 5/16	2 11/16	2 3/4	2 11/16	2 5/16	1 3/4	1	0
VERTICAL CURVE ORDINATE	0	.037	.067	.089	.102	.107	.103	.090	.069	.039	0
THEORETICAL BUILD-UP (IN.) ALONG ℄ GIRDER	5	4 7/16	4	3 3/4	3 9/16	3 1/2	3 9/16	3 3/4	4 1/16	4 7/16	5

GIRDER 4 (EXTERIOR)

TENTH POINTS	0	.1	.2	.3	.4	.5	.6	.7	.8	.9	0
CAMBER (GIRDER IN PLACE) ↑	0	.125	.224	.299	.346	.362	.346	.299	.224	.125	0
* DEFLECTION DUE TO DEAD LOAD ↓	0	.042	.082	.113	.133	.139	.133	.113	.082	.042	0
FINAL CAMBER (IN.) ↑	0	1	1 3/4	2 1/4	2 1/2	2 3/4	2 1/2	2 1/4	1 3/4	1	0
VERTICAL CURVE ORDINATE	0	.037	.067	.089	.102	.107	.103	.090	.069	.039	0
THEORETICAL BUILD-UP (IN.) ALONG ℄ GIRDER	5	4 7/16	4 1/16	3 13/16	3 11/16	3 5/8	3 11/16	3 7/8	4 1/8	4 1/2	5

GIRDER 3 (INTERIOR)

TENTH POINTS	0	.1	.2	.3	.4	.5	.6	.7	.8	.9	0
CAMBER (GIRDER IN PLACE) ↑	0	.124	.223	.298	.345	.361	.345	.298	.223	.124	0
* DEFLECTION DUE TO DEAD LOAD ↓	0	.039	.076	.105	.123	.130	.123	.105	.076	.039	0
FINAL CAMBER (IN.) ↑	0	1	1 3/4	2 5/16	2 5/8	2 3/4	2 5/8	2 5/16	1 3/4	1	0
VERTICAL CURVE ORDINATE	0	.037	.067	.089	.102	.107	.103	.090	.069	.038	0
THEORETICAL BUILD-UP (IN.) ALONG ℄ GIRDER	5	4 7/16	4 1/16	3 3/4	3 9/16	3 1/2	3 9/16	3 3/4	4 1/16	4 7/16	5

* INCLUDES FUTURE WEARING SURFACE IN SUPERIMPOSED DEAD LOAD

DEFLECTIONS AND ORDINATES ARE IN FEET.

FINAL GIRDER CAMBER VALUES ARE IN INCHES.

NOTE:

THEORETICAL BUILD-UPS ARE PROVIDED TO ASSIST THE CONTRACTOR AND ARE NOT INTENDED TO BE USED AS A GRADE SETTING TOOL.

PRIOR TO CASTING THE DECK, THE CONTRACTOR SHALL SUBMIT CALCULATIONS USED FOR DETERMINING THE BUILD-UP TO THE ENGINEER FOR APPROVAL.

5" BUILD-UP @ ℄ BEARING FOR 72" MBT. SPANS A-G

DRAWN BY : D. H. Carter DATE : JULY 2006

CHECKED BY : J. A. Lee DATE : JULY 2006

PROJECT NO. B-682

BRUNSWICK COUNTY

STATION: 47+08.03 -L- POT

SHEET 1 OF 5

NORTH CAROLINA PROFESSIONAL SEAL 15832 ENGINEER JOEL A. LEE 1-17-07

PLANS PREPARED BY:

PARSONS TRANSPORTATION GROUP

Engineers and Planners

RALEIGH, NORTH CAROLINA

JOB NO. 645615

DWG. NO.

STATE OF NORTH CAROLINA

DEPARTMENT OF TRANSPORTATION

RALEIGH

SUPERSTRUCTURE

CAMBER (APPROACH SPANS)

REVISIONS						SHEET NO.
NO.	BY:	DATE:	NO.	BY:	DATE:	S-116
1			3			TOTAL SHEETS
2			4			207

DEAD LOAD DEFLECTION & CAMBER TABLE FOR GIRDERS

SPAN I

GIRDER 1 (EXTERIOR)

TENTH POINTS	0	.1	.2	.3	.4	.5	.6	.7	.8	.9	0
CAMBER (GIRDER IN PLACE) ↑	0	.123	.222	.295	.342	.358	.342	.295	.222	.123	0
* DEFLECTION DUE TO DEAD LOAD ↓	0	.038	.075	.104	.123	.129	.123	.104	.075	.038	0
FINAL CAMBER (IN.) ↑	0	1	1 3/4	2 5/16	2 5/8	2 3/4	2 5/8	2 5/16	1 3/4	1	0
VERTICAL CURVE ORDINATE	0	.039	.069	.091	.103	.108	.104	.091	.069	.039	0
THEORETICAL BUILD-UP (IN.) ALONG ℄ GIRDER	5	4 7/16	4 1/16	3 13/16	3 5/8	3 9/16	3 5/8	3 13/16	4 1/16	4 7/16	5

GIRDER 2 (INTERIOR)

TENTH POINTS	0	.1	.2	.3	.4	.5	.6	.7	.8	.9	0
CAMBER (GIRDER IN PLACE) ↑	0	.123	.223	.296	.343	.360	.343	.296	.223	.123	0
* DEFLECTION DUE TO DEAD LOAD ↓	0	.038	.075	.103	.121	.128	.121	.103	.075	.038	0
FINAL CAMBER (IN.) ↑	0	1	1 3/4	2 5/16	2 11/16	2 3/4	2 11/16	2 5/16	1 3/4	1	0
VERTICAL CURVE ORDINATE	0	.039	.069	.091	.103	.108	.104	.091	.069	.039	0
THEORETICAL BUILD-UP (IN.) ALONG ℄ GIRDER	5	4 7/16	4 1/16	3 3/4	3 9/16	3 1/2	3 9/16	3 3/4	4 1/16	4 7/16	5

GIRDER 4 (EXTERIOR)

TENTH POINTS	0	.1	.2	.3	.4	.5	.6	.7	.8	.9	0
CAMBER (GIRDER IN PLACE) ↑	0	.125	.224	.299	.346	.362	.346	.299	.224	.125	0
* DEFLECTION DUE TO DEAD LOAD ↓	0	.042	.082	.113	.133	.139	.133	.113	.082	.042	0
FINAL CAMBER (IN.) ↑	0	1	1 11/16	2 1/4	2 5/16	2 11/16	2 5/16	2 1/4	1 11/16	1	0
VERTICAL CURVE ORDINATE	0	.039	.069	.090	.104	.108	.104	.091	.069	.039	0
THEORETICAL BUILD-UP (IN.) ALONG ℄ GIRDER	5	4 7/16	4 1/8	3 7/8	3 11/16	3 5/8	3 11/16	3 7/8	4 1/8	4 1/2	5

GIRDER 3 (INTERIOR)

TENTH POINTS	0	.1	.2	.3	.4	.5	.6	.7	.8	.9	0
CAMBER (GIRDER IN PLACE) ↑	0	.124	.223	.298	.345	.361	.345	.298	.223	.124	0
* DEFLECTION DUE TO DEAD LOAD ↓	0	.039	.076	.105	.123	.130	.123	.105	.076	.039	0
FINAL CAMBER (IN.) ↑	0	1	1 3/4	2 5/16	2 5/8	2 3/4	2 5/8	2 5/16	1 3/4	1	0
VERTICAL CURVE ORDINATE	0	.039	.069	.091	.104	.108	.104	.091	.069	.039	0
THEORETICAL BUILD-UP (IN.) ALONG ℄ GIRDER	5	4 7/16	4 1/16	3 3/4	3 9/16	3 1/2	3 9/16	3 3/4	4 1/16	4 7/16	5

SPAN J

GIRDER 1 (EXTERIOR)

TENTH POINTS	0	.1	.2	.3	.4	.5	.6	.7	.8	.9	0
CAMBER (GIRDER IN PLACE) ↑	0	.123	.222	.296	.343	.359	.343	.296	.222	.123	0
* DEFLECTION DUE TO DEAD LOAD ↓	0	.039	.076	.105	.124	.130	.124	.105	.076	.039	0
FINAL CAMBER (IN.) ↑	0	1	1 3/4	2 5/16	2 5/8	2 3/4	2 5/8	2 5/16	1 3/4	1	0
VERTICAL CURVE ORDINATE	0	.040	.071	.093	.106	.112	.108	.094	.071	.040	0
THEORETICAL BUILD-UP (IN.) ALONG ℄ GIRDER	5	4 7/16	4 1/8	3 13/16	3 5/8	3 9/16	3 11/16	3 13/16	4 1/8	4 7/16	5

GIRDER 2 (INTERIOR)

TENTH POINTS	0	.1	.2	.3	.4	.5	.6	.7	.8	.9	0
CAMBER (GIRDER IN PLACE) ↑	0	.124	.223	.297	.343	.360	.343	.297	.223	.124	0
* DEFLECTION DUE TO DEAD LOAD ↓	0	.038	.075	.104	.122	.128	.122	.104	.075	.038	0
FINAL CAMBER (IN.) ↑	0	1	1 3/4	2 5/16	2 11/16	2 3/4	2 11/16	2 5/16	1 3/4	1	0
VERTICAL CURVE ORDINATE	0	.039	.069	.091	.105	.109	.105	.092	.070	.039	0
THEORETICAL BUILD-UP (IN.) ALONG ℄ GIRDER	5	4 7/16	4 1/16	3 3/4	3 5/8	3 1/2	3 5/8	3 13/16	4 1/16	4 7/16	5

GIRDER 4 (EXTERIOR)

TENTH POINTS	0	.1	.2	.3	.4	.5	.6	.7	.8	.9	0
CAMBER (GIRDER IN PLACE) ↑	0	.124	.224	.298	.345	.362	.345	.298	.224	.124	0
* DEFLECTION DUE TO DEAD LOAD ↓	0	.041	.081	.112	.131	.138	.131	.112	.081	.041	0
FINAL CAMBER (IN.) ↑	0	1	1 11/16	2 1/4	2 5/16	2 11/16	2 5/16	2 1/4	1 11/16	1	0
VERTICAL CURVE ORDINATE	0	.038	.067	.088	.101	.104	.100	.087	.067	.038	0
THEORETICAL BUILD-UP (IN.) ALONG ℄ GIRDER	5	4 7/16	4 1/16	3 13/16	3 5/8	3 9/16	3 5/8	3 13/16	4 1/16	4 7/16	5

GIRDER 3 (INTERIOR)

TENTH POINTS	0	.1	.2	.3	.4	.5	.6	.7	.8	.9	0
CAMBER (GIRDER IN PLACE) ↑	0	.124	.223	.297	.344	.361	.344	.297	.223	.124	0
* DEFLECTION DUE TO DEAD LOAD ↓	0	.039	.076	.105	.123	.130	.123	.105	.076	.039	0
FINAL CAMBER (IN.) ↑	0	1	1 3/4	2 5/16	2 5/8	2 3/4	2 5/8	2 5/16	1 3/4	1	0
VERTICAL CURVE ORDINATE	0	.038	.068	.090	.102	.107	.102	.089	.068	.038	0
THEORETICAL BUILD-UP (IN.) ALONG ℄ GIRDER	5	4 7/16	4 1/16	3 3/4	3 5/8	3 1/2	3 5/8	3 3/4	4 1/16	4 7/16	5

SPAN K

GIRDER 1 (EXTERIOR)

TENTH POINTS	0	.1	.2	.3	.4	.5	.6	.7	.8	.9	0
CAMBER (GIRDER IN PLACE) ↑	0	.123	.222	.295	.342	.358	.342	.295	.222	.123	0
* DEFLECTION DUE TO DEAD LOAD ↓	0	.038	.075	.104	.123	.129	.123	.104	.075	.038	0
FINAL CAMBER (IN.) ↑	0	1	1 3/4	2 5/16	2 5/8	2 3/4	2 5/8	2 5/16	1 3/4	1	0
VERTICAL CURVE ORDINATE	0	.038	.068	.090	.102	.107	.102	.090	.068	.038	0
THEORETICAL BUILD-UP (IN.) ALONG ℄ GIRDER	5	4 7/16	4 1/16	3 13/16	3 5/8	3 1/2	3 5/8	3 13/16	4 1/16	4 7/16	5

GIRDER 2 (INTERIOR)

TENTH POINTS	0	.1	.2	.3	.4	.5	.6	.7	.8	.9	0
CAMBER (GIRDER IN PLACE) ↑	0	.123	.222	.295	.342	.358	.342	.295	.222	.123	0
* DEFLECTION DUE TO DEAD LOAD ↓	0	.038	.073	.102	.120	.126	.120	.102	.073	.037	0
FINAL CAMBER (IN.) ↑	0	1	1 3/4	2 5/16	2 11/16	2 13/16	2 11/16	2 5/16	1 3/4	1	0
VERTICAL CURVE ORDINATE	0	.038	.068	.090	.102	.107	.102	.090	.068	.038	0
THEORETICAL BUILD-UP (IN.) ALONG ℄ GIRDER	5	4 7/16	4 1/16	3 3/4	3 9/16	3 1/2	3 9/16	3 3/4	4 1/16	4 7/16	5

GIRDER 4 (EXTERIOR)

TENTH POINTS	0	.1	.2	.3	.4	.5	.6	.7	.8	.9	0
CAMBER (GIRDER IN PLACE) ↑	0	.123	.222	.295	.342	.358	.342	.295	.222	.123	0
* DEFLECTION DUE TO DEAD LOAD ↓	0	.040	.078	.107	.126	.133	.126	.107	.078	.040	0
FINAL CAMBER (IN.) ↑	0	1	1 3/4	2 1/4	2 5/16	2 11/16	2 5/16	2 1/4	1 3/4	1	0
VERTICAL CURVE ORDINATE	0	.038	.068	.090	.102	.107	.102	.090	.068	.038	0
THEORETICAL BUILD-UP (IN.) ALONG ℄ GIRDER	5	4 7/16	4 1/16	3 13/16	3 5/8	3 9/16	3 5/8	3 13/16	4 1/16	4 7/16	5

GIRDER 3 (INTERIOR)

TENTH POINTS	0	.1	.2	.3	.4	.5	.6	.7	.8	.9	0
CAMBER (GIRDER IN PLACE) ↑	0	.123	.222	.295	.342	.358	.342	.295	.222	.123	0
* DEFLECTION DUE TO DEAD LOAD ↓	0	.038	.073	.102	.120	.126	.120	.102	.073	.037	0
FINAL CAMBER (IN.) ↑	0	1	1 3/4	2 5/16	2 11/16	2 13/16	2 11/16	2 5/16	1 3/4	1	0
VERTICAL CURVE ORDINATE	0	.038	.068	.090	.102	.107	.102	.090	.068	.038	0
THEORETICAL BUILD-UP (IN.) ALONG ℄ GIRDER	5	4 7/16	4 1/16	3 3/4	3 9/16	3 1/2	3 9/16	3 3/4	4 1/16	4 7/16	5

* INCLUDES FUTURE WEARING SURFACE IN SUPERIMPOSED DEAD LOAD
DEFLECTIONS AND ORDINATES ARE IN FEET.
FINAL GIRDER CAMBER VALUES ARE IN INCHES.

NOTE:

THEORETICAL BUILD-UPS ARE PROVIDED TO ASSIST THE CONTRACTOR AND ARE NOT INTENDED TO BE USED AS A GRADE SETTING TOOL.

PRIOR TO CASTING THE DECK, THE CONTRACTOR SHALL SUBMIT CALCULATIONS USED FOR DETERMINING THE BUILD-UP TO THE ENGINEER FOR APPROVAL.

DRAWN BY : D. H. Carter DATE : JULY 2006
CHECKED BY : J. A. Lee DATE : JULY 2006

PROJECT NO. B-682

BRUNSWICK COUNTY

STATION: 47+08.03 -L- POT

SHEET 2 OF 5

NORTH CAROLINA PROFESSIONAL SEAL 15832 ENGINEER JOEL A. LEE 1-17-07

PLANS PREPARED BY:

PARSONS TRANSPORTATION GROUP
Engineers and Planners
RALEIGH, NORTH CAROLINA

JOB NO. 645615

DWG. NO.

STATE OF NORTH CAROLINA
DEPARTMENT OF TRANSPORTATION
RALEIGH

SUPERSTRUCTURE

CAMBER (APPROACH SPANS)

REVISIONS						SHEET NO.
NO.	BY:	DATE:	NO.	BY:	DATE:	S-117
1			3			TOTAL SHEETS
2			4			207

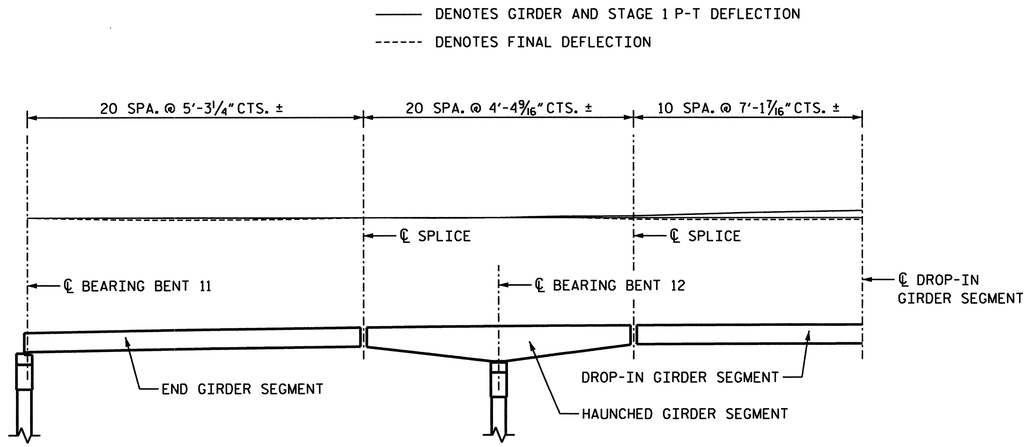

CAMBER DIAGRAM

NOTE:

DATA FOR END GIRDER SEGMENTS, HAUNCHED GIRDER SEGMENTS AND DROP-IN GIRDER SEGMENTS IS SYMMETRICAL ABOUT ℄ DROP-IN GIRDER SEGMENT.

NOTES:

1. ITEMS A, B, C, AND D ARE INTENDED TO ASSIST THE CONTRACTOR AND ENGINEER TO TROUBLE-SHOOT ANY DEFLECTION PROBLEMS THAT MAY OCCUR DURING CONSTRUCTION.
2. THE GIRDER BUILD-UPS ARE USED FOR QUANTITIES AND PEDESTAL SETTINGS, AND THEY ARE NOT INTENDED TO BE USED AS A GRADE SETTING TOOL.

   PRIOR TO CASTING THE DECK, THE CONTRACTOR SHALL SUBMIT TO THE ENGINEER FOR APPROVAL, THE CALCULATIONS USED FOR DETERMINING THE BUILD-UP.
3. THE CONTRACTOR SHALL CAST THE DECK OF SPANS L-N WITHIN 30 DAYS OF DETERMINING THE REQUIRED BUILD-UPS. THE WORK TO BE DONE WITHIN THE 30 DAYS DOES NOT INCLUDE STAGE 2 POST-TENSIONING OR CASTING THE FINAL 7'-0" OF DECK AT EACH END OF SPANS L-N.

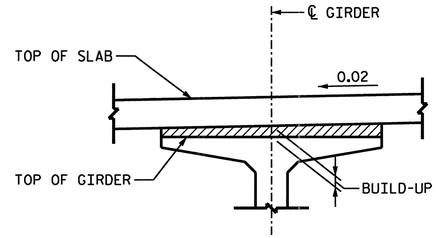

DETAIL SHOWING BUILD-UP OVER GIRDER

GIRDER CAMBER AND DEFLECTION FOR END GIRDER SEGMENTS

	TWENTIETH POINTS	℄ BRG.	0.05	0.10	0.15	0.20	0.25	0.30	0.35	0.40	0.45	0.50	0.55	0.60	0.65	0.70	0.75	0.80	0.85	0.90	0.95	℄ SPLICE
A	DEFLECTION DUE TO GIRDER CAMBER AND FIRST STAGE P-T	0.000	-0.001	-0.001	-0.002	-0.002	-0.003	-0.004	-0.004	-0.004	-0.004	-0.004	-0.004	-0.004	-0.005	-0.005	-0.006	-0.007	-0.007	-0.008	-0.008	0.006
B	DEFLECTION DUE TO DECK PLACEMENT	0.000	-0.005	-0.011	-0.016	-0.020	-0.024	-0.028	-0.030	-0.032	-0.033	-0.033	-0.033	-0.031	-0.029	-0.026	-0.023	-0.019	-0.015	-0.011	-0.007	-0.004
C	DEFLECTION DUE TO SECOND STAGE P-T	0.000	0.000	0.000	0.000	0.001	0.001	0.002	0.003	0.004	0.004	0.005	0.005	0.006	0.006	0.006	0.005	0.004	0.004	0.003	0.002	0.001
D	DEFLECTION DUE TO SUPERIMPOSED DEAD LOAD	0.000	-0.001	-0.001	-0.002	-0.002	-0.003	-0.003	-0.003	-0.004	-0.004	-0.004	-0.004	-0.004	-0.003	-0.003	-0.003	-0.002	-0.002	-0.001	-0.001	0.000
E	FINAL DEFLECTION	0.000	-0.006	-0.013	-0.019	-0.024	-0.029	-0.033	-0.034	-0.036	-0.037	-0.036	-0.035	-0.033	-0.031	-0.029	-0.026	-0.024	-0.021	-0.018	-0.014	0.003
F	VERTICAL CURVE ORDINATE	0.000	0.019	0.035	0.050	0.063	0.073	0.082	0.089	0.094	0.097	0.098	0.097	0.094	0.089	0.082	0.073	0.063	0.050	0.035	0.019	0.000
BU	REQUIRED BUILD-UP	2½"	2 13/16"	3 1/16"	3 5/16"	3 3/16"	3 3/4"	3 7/8"	4"	4 1/16"	4 1/8"	4 1/8"	4 1/16"	4"	3 15/16"	3 13/16"	3 11/16"	3 5/16"	3 3/8"	3 1/8"	2 7/8"	2 7/16"

ALL VALUES ARE SHOWN IN FEET (DECIMAL FORM), EXCEPT "BUILD-UP REQUIRED", WHICH IS GIVEN IN INCHES.

GIRDER CAMBER AND DEFLECTION FOR HAUNCHED GIRDER SEGMENTS

	TWENTIETH POINTS	℄ SPLICE	0.05	0.10	0.15	0.20	0.25	0.30	0.35	0.40	0.45	℄ BRG.	0.55	0.60	0.65	0.70	0.75	0.80	0.85	0.90	0.95	℄ SPLICE
A	DEFLECTION DUE TO GIRDER CAMBER AND FIRST STAGE P-T	0.006	0.002	-0.001	-0.005	-0.006	-0.006	-0.007	-0.006	-0.004	-0.002	0.000	0.004	0.009	0.013	0.018	0.022	0.029	0.036	0.044	0.051	0.027
B	DEFLECTION DUE TO DECK PLACEMENT	-0.004	-0.001	0.001	0.003	0.004	0.004	0.005	0.005	0.003	0.002	0.000	-0.005	-0.009	-0.014	-0.018	-0.023	-0.029	-0.036	-0.044	-0.051	-0.059
C	DEFLECTION DUE TO SECOND STAGE P-T	0.001	0.000	0.000	-0.001	-0.001	-0.001	-0.001	-0.001	-0.001	0.000	0.000	0.001	0.002	0.004	0.005	0.006	0.008	0.009	0.011	0.013	0.015
D	DEFLECTION DUE TO SUPERIMPOSED DEAD LOAD	0.000	0.000	0.000	0.000	0.000	0.001	0.001	0.001	0.000	0.000	0.000	-0.001	-0.001	-0.002	-0.002	-0.003	-0.004	-0.004	-0.005	-0.006	-0.007
E	FINAL DEFLECTION	0.003	0.001	0.000	-0.002	-0.002	-0.003	-0.003	-0.002	-0.002	-0.001	0.000	0.001	0.001	0.002	0.002	0.003	0.004	0.005	0.006	0.007	-0.024
F	VERTICAL CURVE ORDINATE	0.000	0.013	0.024	0.034	0.043	0.051	0.057	0.061	0.065	0.067	0.068	0.067	0.065	0.061	0.057	0.051	0.043	0.034	0.024	0.013	0.000
BU	REQUIRED BUILD-UP	2 7/16"	2 5/8"	2 13/16"	2 15/16"	3 1/16"	3 1/8"	3 3/16"	3 1/4"	3 5/16"	3 5/16"	3 5/16"	3 5/16"	3 1/4"	3 1/4"	3 3/16"	3 1/16"	3"	2 7/8"	2 3/4"	2 9/16"	2 13/16"

ALL VALUES ARE SHOWN IN FEET (DECIMAL FORM), EXCEPT "BUILD-UP REQUIRED", WHICH IS GIVEN IN INCHES.

GIRDER CAMBER AND DEFLECTION FOR DROP-IN GIRDER SEGMENTS

	TWENTIETH POINTS	℄ SPLICE	0.05	0.10	0.15	0.20	0.25	0.30	0.35	0.40	0.45	0.50
A	DEFLECTION DUE TO GIRDER CAMBER AND FIRST STAGE P-T	0.027	0.014	0.033	0.053	0.068	0.079	0.090	0.100	0.103	0.107	0.111
B	DEFLECTION DUE TO DECK PLACEMENT	-0.059	-0.073	-0.087	-0.101	-0.114	-0.125	-0.136	-0.145	-0.149	-0.153	-0.157
C	DEFLECTION DUE TO SECOND STAGE P-T	0.015	0.018	0.021	0.024	0.027	0.030	0.032	0.034	0.035	0.036	0.037
D	DEFLECTION DUE TO SUPERIMPOSED DEAD LOAD	-0.007	-0.009	-0.011	-0.012	-0.014	-0.015	-0.016	-0.017	-0.018	-0.018	-0.019
E	FINAL DEFLECTION	-0.024	-0.049	-0.043	-0.036	-0.032	-0.031	-0.029	-0.028	-0.028	-0.028	-0.029
F	VERTICAL CURVE ORDINATE	0.000	0.034	0.064	0.091	0.114	0.134	0.150	0.162	0.171	0.177	0.179
BU	REQUIRED BUILD-UP	2 13/16"	3½"	3 13/16"	4"	4 1/4"	4½"	4 5/8"	4 13/16"	4 7/8"	4 15/16"	5"

ALL VALUES ARE SHOWN IN FEET (DECIMAL FORM), EXCEPT "BUILD-UP REQUIRED", WHICH IS GIVEN IN INCHES.

NOTE:

DATA FOR END GIRDER SEGMENTS, HAUNCHED GIRDER SEGMENTS AND DROP-IN GIRDER SEGMENTS IS SYMMETRICAL ABOUT ℄ DROP-IN GIRDER SEGMENT.

PROJECT NO. B-0682

BRUNSWICK COUNTY

STATION: 47+08.03 -L- POT

SHEET 3 OF 5

NORTH CAROLINA PROFESSIONAL SEAL 024928 ENGINEER RODNEY E. MONEY 1/24/07

STATE OF NORTH CAROLINA
DEPARTMENT OF TRANSPORTATION
RALEIGH

SUPERSTRUCTURE
CAMBER & DEFLECTIONS

SPANS L-N

PREPARED IN THE OFFICE OF
TYLIN INTERNATIONAL
RALEIGH, NORTH CAROLINA
Copyright © 2006, TYLI

DWG NO.

REVISIONS						SHEET NO.
NO.	BY:	DATE:	NO.	BY:	DATE:	5-11B
1			3			TOTAL SHEETS
2			4			207

DRAWN BY : S. A. MORGAN DATE : NOV. 06
CHECKED BY : R.E. MONEY DATE : NOV. 06

DATE: #DATE#
FILE: #FILENAME#

DEAD LOAD DEFLECTION & CAMBER TABLE FOR GIRDERS

SPAN O

GIRDER 1 (EXTERIOR)

TENTH POINTS	0	.1	.2	.3	.4	.5	.6	.7	.8	.9	0
CAMBER (GIRDER IN PLACE) ↑	0	.068	.118	.152	.172	.178	.172	.152	.118	.068	0
* DEFLECTION DUE TO DEAD LOAD ↓	0	.017	.034	.047	.056	.059	.056	.047	.034	.017	0
FINAL CAMBER (IN.) ↑	0	5/8	1	1 1/4	1 3/8	1 7/16	1 3/8	1 1/4	1	5/8	0
VERTICAL CURVE ORDINATE	0	.027	.048	.063	.072	.075	.072	.063	.048	.027	0
THEORETICAL BUILD-UP (IN.) ALONG ℄ GIRDER	3	2 11/16	2 9/16	2 1/2	2 7/16	2 7/16	2 7/16	2 1/2	2 9/16	2 11/16	3

GIRDER 2 (INTERIOR)

TENTH POINTS	0	.1	.2	.3	.4	.5	.6	.7	.8	.9	0
CAMBER (GIRDER IN PLACE) ↑	0	.068	.118	.152	.172	.178	.172	.152	.118	.068	0
* DEFLECTION DUE TO DEAD LOAD ↓	0	.017	.034	.047	.055	.058	.055	.047	.034	.017	0
FINAL CAMBER (IN.) ↑	0	5/8	1	1 1/4	1 3/8	1 7/16	1 3/8	1 1/4	1	5/8	0
VERTICAL CURVE ORDINATE	0	.027	.048	.063	.072	.075	.072	.063	.048	.027	0
THEORETICAL BUILD-UP (IN.) ALONG ℄ GIRDER	3	2 11/16	2 9/16	2 1/2	2 7/16	2 7/16	2 7/16	2 1/2	2 9/16	2 11/16	3

GIRDER 4 (EXTERIOR)

TENTH POINTS	0	.1	.2	.3	.4	.5	.6	.7	.8	.9	0
CAMBER (GIRDER IN PLACE) ↑	0	.068	.118	.152	.172	.178	.172	.152	.118	.068	0
* DEFLECTION DUE TO DEAD LOAD ↓	0	.017	.033	.046	.054	.057	.054	.046	.033	.017	0
FINAL CAMBER (IN.) ↑	0	5/8	1	1 1/4	1 7/16	1 7/16	1 7/16	1 1/4	1	5/8	0
VERTICAL CURVE ORDINATE	0	.027	.048	.063	.072	.075	.072	.063	.048	.027	0
THEORETICAL BUILD-UP (IN.) ALONG ℄ GIRDER	3	2 11/16	2 9/16	2 1/2	2 7/16	2 7/16	2 7/16	2 1/2	2 9/16	2 11/16	3

GIRDER 3 (INTERIOR)

TENTH POINTS	0	.1	.2	.3	.4	.5	.6	.7	.8	.9	0
CAMBER (GIRDER IN PLACE) ↑	0	.068	.118	.152	.172	.178	.172	.152	.118	.068	0
* DEFLECTION DUE TO DEAD LOAD ↓	0	.017	.034	.047	.055	.058	.055	.047	.034	.017	0
FINAL CAMBER (IN.) ↑	0	5/8	1	1 1/4	1 3/8	1 7/16	1 3/8	1 1/4	1	5/8	0
VERTICAL CURVE ORDINATE	0	.027	.048	.063	.072	.075	.072	.063	.048	.027	0
THEORETICAL BUILD-UP (IN.) ALONG ℄ GIRDER	3	2 11/16	2 9/16	2 1/2	2 7/16	2 7/16	2 7/16	2 1/2	2 9/16	2 11/16	3

SPAN P

GIRDER 1 (EXTERIOR)

TENTH POINTS	0	.1	.2	.3	.4	.5	.6	.7	.8	.9	0
CAMBER (GIRDER IN PLACE) ↑	0	.069	.119	.153	.173	.180	.173	.153	.119	.069	0
* DEFLECTION DUE TO DEAD LOAD ↓	0	.018	.035	.049	.057	.060	.057	.049	.035	.018	0
FINAL CAMBER (IN.) ↑	0	5/8	1	1 1/4	1 3/8	1 7/16	1 3/8	1 1/4	1	5/8	0
VERTICAL CURVE ORDINATE	0	.027	.048	.064	.073	.076	.073	.064	.048	.027	0
THEORETICAL BUILD-UP (IN.) ALONG ℄ GIRDER	3	2 3/4	2 9/16	2 1/2	2 1/2	2 1/2	2 1/2	2 1/2	2 9/16	2 11/16	3

GIRDER 2 (INTERIOR)

TENTH POINTS	0	.1	.2	.3	.4	.5	.6	.7	.8	.9	0
CAMBER (GIRDER IN PLACE) ↑	0	.069	.119	.153	.173	.180	.173	.153	.119	.069	0
* DEFLECTION DUE TO DEAD LOAD ↓	0	.018	.035	.048	.056	.059	.056	.048	.035	.018	0
FINAL CAMBER (IN.) ↑	0	5/8	1	1 1/4	1 3/8	1 7/16	1 3/8	1 1/4	1	5/8	0
VERTICAL CURVE ORDINATE	0	.027	.048	.064	.073	.076	.073	.064	.048	.027	0
THEORETICAL BUILD-UP (IN.) ALONG ℄ GIRDER	3	2 11/16	2 9/16	2 1/2	2 1/2	2 7/16	2 1/2	2 1/2	2 9/16	2 11/16	3

GIRDER 4 (EXTERIOR)

TENTH POINTS	0	.1	.2	.3	.4	.5	.6	.7	.8	.9	0
CAMBER (GIRDER IN PLACE) ↑	0	.069	.119	.153	.173	.180	.173	.153	.119	.069	0
* DEFLECTION DUE TO DEAD LOAD ↓	0	.018	.035	.049	.057	.060	.057	.049	.035	.018	0
FINAL CAMBER (IN.) ↑	0	5/8	1	1 1/4	1 3/8	1 7/16	1 3/8	1 1/4	1	5/8	0
VERTICAL CURVE ORDINATE	0	.027	.048	.064	.073	.076	.073	.064	.048	.027	0
THEORETICAL BUILD-UP (IN.) ALONG ℄ GIRDER	3	2 3/4	2 9/16	2 1/2	2 1/2	2 1/2	2 1/2	2 1/2	2 9/16	2 11/16	3

GIRDER 3 (INTERIOR)

TENTH POINTS	0	.1	.2	.3	.4	.5	.6	.7	.8	.9	0
CAMBER (GIRDER IN PLACE) ↑	0	.069	.119	.153	.173	.180	.173	.153	.119	.069	0
* DEFLECTION DUE TO DEAD LOAD ↓	0	.018	.035	.049	.057	.060	.057	.049	.035	.018	0
FINAL CAMBER (IN.) ↑	0	5/8	1	1 1/4	1 3/8	1 7/16	1 3/8	1 1/4	1	5/8	0
VERTICAL CURVE ORDINATE	0	.027	.048	.064	.073	.076	.073	.064	.048	.027	0
THEORETICAL BUILD-UP (IN.) ALONG ℄ GIRDER	3	2 11/16	2 9/16	2 1/2	2 1/2	2 7/16	2 1/2	2 1/2	2 9/16	2 11/16	3

SPAN Q

GIRDER 1 (EXTERIOR)

TENTH POINTS	0	.1	.2	.3	.4	.5	.6	.7	.8	.9	0
CAMBER (GIRDER IN PLACE) ↑	0	.069	.119	.153	.173	.180	.173	.153	.119	.069	0
* DEFLECTION DUE TO DEAD LOAD ↓	0	.018	.035	.049	.057	.060	.057	.049	.035	.018	0
FINAL CAMBER (IN.) ↑	0	5/8	1	1 1/4	1 3/8	1 7/16	1 3/8	1 1/4	1	5/8	0
VERTICAL CURVE ORDINATE	0	.027	.048	.064	0.73	.076	.073	.064	.048	.027	0
THEORETICAL BUILD-UP (IN.) ALONG ℄ GIRDER	3	2 3/4	2 9/16	2 1/2	2 1/2	2 1/2	2 1/2	2 1/2	2 9/16	2 11/16	3

GIRDER 2 (INTERIOR)

TENTH POINTS	0	.1	.2	.3	.4	.5	.6	.7	.8	.9	0
CAMBER (GIRDER IN PLACE) ↑	0	.069	.119	.153	.173	.180	.173	.153	.119	.069	0
* DEFLECTION DUE TO DEAD LOAD ↓	0	.018	.035	.048	.056	.059	.056	.048	.035	.018	0
FINAL CAMBER (IN.) ↑	0	5/8	1	1 1/4	1 3/8	1 7/16	1 3/8	1 1/4	1	5/8	0
VERTICAL CURVE ORDINATE	0	.027	.048	.064	.073	.076	.073	.064	.048	.027	0
THEORETICAL BUILD-UP (IN.) ALONG ℄ GIRDER	3	2 11/16	2 9/16	2 1/2	2 1/2	2 7/16	2 1/2	2 1/2	2 9/16	2 11/16	3

GIRDER 4 (EXTERIOR)

TENTH POINTS	0	.1	.2	.3	.4	.5	.6	.7	.8	.9	0
CAMBER (GIRDER IN PLACE) ↑	0	.069	.119	.153	.173	.180	.173	.153	.119	.069	0
* DEFLECTION DUE TO DEAD LOAD ↓	0	.017	.034	.048	.056	.059	.056	.048	.034	.017	0
FINAL CAMBER (IN.) ↑	0	5/8	1	1 1/4	1 3/8	1 7/16	1 3/8	1 1/4	1	5/8	0
VERTICAL CURVE ORDINATE	0	.027	.048	.064	.073	.076	.073	.064	.048	.027	0
THEORETICAL BUILD-UP (IN.) ALONG ℄ GIRDER	3	2 11/16	2 9/16	2 1/2	2 7/16	2 7/16	2 7/16	2 1/2	2 9/16	2 11/16	3

GIRDER 3 (INTERIOR)

TENTH POINTS	0	.1	.2	.3	.4	.5	.6	.7	.8	.9	0
CAMBER (GIRDER IN PLACE) ↑	0	.069	.119	.153	.173	.180	.173	.153	.119	.069	0
* DEFLECTION DUE TO DEAD LOAD ↓	0	.018	.035	.048	.056	.059	.056	.048	.035	.018	0
FINAL CAMBER (IN.) ↑	0	5/8	1	1 1/4	1 3/8	1 7/16	1 3/8	1 1/4	1	5/8	0
VERTICAL CURVE ORDINATE	0	.027	.048	.064	.073	.076	.073	.064	.048	.027	0
THEORETICAL BUILD-UP (IN.) ALONG ℄ GIRDER	3	2 11/16	2 9/16	2 1/2	2 1/2	2 7/16	2 1/2	2 1/2	2 9/16	2 11/16	3

SPAN R

GIRDER 1 (EXTERIOR)

TENTH POINTS	0	.1	.2	.3	.4	.5	.6	.7	.8	.9	0
CAMBER (GIRDER IN PLACE) ↑	0	.069	.119	.153	.173	.180	.173	.153	.119	.069	0
* DEFLECTION DUE TO DEAD LOAD ↓	0	.018	.035	.049	.057	.060	.057	.049	.035	.018	0
FINAL CAMBER (IN.) ↑	0	5/8	1	1 1/4	1 3/8	1 7/16	1 3/8	1 1/4	1	5/8	0
VERTICAL CURVE ORDINATE	0	.027	.048	.064	.073	.076	.073	.064	.048	.027	0
THEORETICAL BUILD-UP (IN.) ALONG ℄ GIRDER	3	2 3/4	2 9/16	2 1/2	2 1/2	2 1/2	2 1/2	2 1/2	2 9/16	2 11/16	3

GIRDER 2 (INTERIOR)

TENTH POINTS	0	.1	.2	.3	.4	.5	.6	.7	.8	.9	0
CAMBER (GIRDER IN PLACE) ↑	0	.069	.119	.153	.173	.180	.173	.153	.119	.069	0
* DEFLECTION DUE TO DEAD LOAD ↓	0	.018	.035	.049	.057	.060	.057	.049	.035	.018	0
FINAL CAMBER (IN.) ↑	0	5/8	1	1 1/4	1 3/8	1 7/16	1 3/8	1 1/4	1	5/8	0
VERTICAL CURVE ORDINATE	0	.027	.048	.064	.073	.076	.073	.064	.048	.027	0
THEORETICAL BUILD-UP (IN.) ALONG ℄ GIRDER	3	2 11/16	2 9/16	2 1/2	2 1/2	2 7/16	2 1/2	2 1/2	2 9/16	2 11/16	3

GIRDER 4 (EXTERIOR)

TENTH POINTS	0	.1	.2	.3	.4	.5	.6	.7	.8	.9	0
CAMBER (GIRDER IN PLACE) ↑	0	.069	.119	.153	.173	.180	.173	.153	.119	.069	0
* DEFLECTION DUE TO DEAD LOAD ↓	0	.017	.034	.048	.056	.060	.057	.048	.034	.017	0
FINAL CAMBER (IN.) ↑	0	5/8	1	1 1/4	1 3/8	1 7/16	1 3/8	1 1/4	1	5/8	0
VERTICAL CURVE ORDINATE	0	.027	.048	.064	.073	.076	.073	.064	.048	.027	0
THEORETICAL BUILD-UP (IN.) ALONG ℄ GIRDER	3	2 11/16	2 9/16	2 1/2	2 7/16	2 7/16	2 7/16	2 1/2	2 9/16	2 11/16	3

GIRDER 3 (INTERIOR)

TENTH POINTS	0	.1	.2	.3	.4	.5	.6	.7	.8	.9	0
CAMBER (GIRDER IN PLACE) ↑	0	.069	.119	.153	.173	.180	.173	.153	.119	.069	0
* DEFLECTION DUE TO DEAD LOAD ↓	0	.018	.035	.048	.056	.059	.056	.048	.034	.018	0
FINAL CAMBER (IN.) ↑	0	5/8	1	1 1/4	1 3/8	1 7/16	1 3/8	1 1/4	1	5/8	0
VERTICAL CURVE ORDINATE	0	.027	.048	.064	.073	.076	.073	.064	.048	.027	0
THEORETICAL BUILD-UP (IN.) ALONG ℄ GIRDER	3	2 11/16	2 9/16	2 1/2	2 1/2	2 7/16	2 1/2	2 1/2	2 9/16	2 11/16	3

SPAN S

GIRDER 1 (EXTERIOR)

TENTH POINTS	0	.1	.2	.3	.4	.5	.6	.7	.8	.9	0
CAMBER (GIRDER IN PLACE) ↑	0	.098	.176	.234	.271	.284	.271	.234	.176	.098	0
* DEFLECTION DUE TO DEAD LOAD ↓	0	.027	.054	.074	.088	.092	.088	.074	.054	.027	0
FINAL CAMBER (IN.) ↑	0	7/8	1 7/16	1 15/16	2 3/16	2 5/16	2 3/16	1 15/16	1 7/16	7/8	0
VERTICAL CURVE ORDINATE	0	.021	.037	.049	.055	.056	.053	.044	.031	.015	0
THEORETICAL BUILD-UP (IN.) ALONG ℄ GIRDER	4 1/2	3 15/16	3 1/2	3 3/16	2 15/16	2 7/8	2 15/16	3 1/8	3 3/16	3 13/16	4 1/2

GIRDER 2 (INTERIOR)

TENTH POINTS	0	.1	.2	.3	.4	.5	.6	.7	.8	.9	0
CAMBER (GIRDER IN PLACE) ↑	0	.096	.174	.231	.268	.280	.268	.231	.174	.096	0
* DEFLECTION DUE TO DEAD LOAD ↓	0	.027	.054	.075	.088	.093	.088	.075	.054	.027	0
FINAL CAMBER (IN.) ↑	0	13/16	1 7/16	1 7/8	2 1/8	2 1/4	2 1/8	1 7/8	1 7/16	13/16	0
VERTICAL CURVE ORDINATE	0	.021	.037	.048	.054	.056	.052	.044	.031	.015	0
THEORETICAL BUILD-UP (IN.) ALONG ℄ GIRDER	4 1/2	3 15/16	3 1/2	3 3/16	3	2 15/16	3	3 1/8	3 7/16	3 7/8	4 1/2

GIRDER 4 (EXTERIOR)

TENTH POINTS	0	.1	.2	.3	.4	.5	.6	.7	.8	.9	0
CAMBER (GIRDER IN PLACE) ↑	0	.094	.169	.226	.261	.273	.261	.226	.169	.094	0
* DEFLECTION DUE TO DEAD LOAD ↓	0	.024	.047	.066	.077	.082	.077	.066	.047	.024	0
FINAL CAMBER (IN.) ↑	0	13/16	1 7/16	1 15/16	2 3/16	2 5/16	2 3/16	1 15/16	1 7/16	13/16	0
VERTICAL CURVE ORDINATE	0	.020	.036	.046	.053	.054	.051	.043	.031	.015	0
THEORETICAL BUILD-UP (IN.) ALONG ℄ GIRDER	4 1/2	3 7/8	3 7/16	3 1/8	2 15/16	2 7/8	2 15/16	3 1/8	3 3/8	3 7/8	4 1/2

GIRDER 3 (INTERIOR)

TENTH POINTS	0	.1	.2	.3	.4	.5	.6	.7	.8	.9	0
CAMBER (GIRDER IN PLACE) ↑	0	.095	.171	.228	.264	.277	.264	.228	.171	.095	0
* DEFLECTION DUE TO DEAD LOAD ↓	0	.026	.052	.072	.085	.089	.085	.072	.052	.026	0
FINAL CAMBER (IN.) ↑	0	13/16	1 7/16	1 7/8	2 3/16	2 1/4	2 3/16	1 7/8	1 7/16	13/16	0
VERTICAL CURVE ORDINATE	0	.020	.036	.047	.053	.055	.051	.043	.031	.015	0
THEORETICAL BUILD-UP (IN.) ALONG ℄ GIRDER	4 1/2	3 15/16	3 1/2	3 3/16	3	2 7/8	2 15/16	3 1/8	3 7/16	3 7/8	4 1/2

* INCLUDES FUTURE WEARING SURFACE IN SUPERIMPOSED DEAD LOAD

DEFLECTIONS AND ORDINATES ARE IN FEET.

FINAL GIRDER CAMBER VALUES ARE IN INCHES.

NOTE:

THEORETICAL BUILD-UPS ARE PROVIDED TO ASSIST THE CONTRACTOR AND ARE NOT INTENDED TO BE USED AS A GRADE SETTING TOOL.

PRIOR TO CASTING THE DECK, THE CONTRACTOR SHALL SUBMIT CALCULATIONS USED FOR DETERMINING THE BUILD-UP TO THE ENGINEER FOR APPROVAL.

PROJECT NO. B-682

BRUNSWICK COUNTY

STATION: 47+08.03 -L- POT

SHEET 4 OF 5

NORTH CAROLINA PROFESSIONAL SEAL 15832 ENGINEER JOEL A. LEE 1-17-07

PLANS PREPARED BY:

PARSONS TRANSPORTATION GROUP
Engineers and Planners
RALEIGH, NORTH CAROLINA

JOB NO. 645615

DWG. NO.

STATE OF NORTH CAROLINA
DEPARTMENT OF TRANSPORTATION
RALEIGH

SUPERSTRUCTURE

CAMBER (APPROACH SPANS)

REVISIONS						SHEET NO.
NO.	BY:	DATE:	NO.	BY:	DATE:	S-119
1			3			TOTAL SHEETS
2			4			207

DRAWN BY : D. H. Carter DATE : JULY 2006
CHECKED BY : J. A. Lee DATE : JULY 2006

DEAD LOAD DEFLECTION & CAMBER TABLE FOR GIRDERS

SPAN T

GIRDER 1 (EXTERIOR)

TENTH POINTS	0	.1	.2	.3	.4	.5	.6	.7	.8	.9	0
CAMBER (GIRDER IN PLACE) ↑	0	.099	.178	.237	.274	.287	.274	.237	.178	.099	0
* DEFLECTION DUE TO DEAD LOAD ↓	0	.027	.052	.073	.086	.090	.086	.073	.052	.026	0
FINAL CAMBER (IN.) ↑	0	7/8	1 1/2	2	2 1/4	2 3/8	2 1/4	2	1 1/2	7/8	0

GIRDER 2 (INTERIOR)

TENTH POINTS	0	.1	.2	.3	.4	.5	.6	.7	.8	.9	0
CAMBER (GIRDER IN PLACE) ↑	0	.094	.170	.226	.261	.273	.261	.226	.170	.094	0
* DEFLECTION DUE TO DEAD LOAD ↓	0	.030	.059	.082	.097	.102	.097	.082	.059	.030	0
FINAL CAMBER (IN.) ↑	0	3/4	1 5/16	1 3/4	2	2 1/16	2	1 3/4	1 5/16	3/4	0

GIRDER 4 (EXTERIOR)

TENTH POINTS	0	.1	.2	.3	.4	.5	.6	.7	.8	.9	0
CAMBER (GIRDER IN PLACE) ↑	0	.092	.166	.221	.256	.268	.256	.221	.166	.092	0
* DEFLECTION DUE TO DEAD LOAD ↓	0	.023	.045	.063	.074	.078	.074	.063	.045	.023	0
FINAL CAMBER (IN.) ↑	0	13/16	1 7/16	1 7/8	2 3/16	2 1/4	2 3/16	1 7/8	1 7/16	13/16	0

GIRDER 3 (INTERIOR)

TENTH POINTS	0	.1	.2	.3	.4	.5	.6	.7	.8	.9	0
CAMBER (GIRDER IN PLACE) ↑	0	.092	.166	.221	.255	.267	.255	.221	.166	.092	0
* DEFLECTION DUE TO DEAD LOAD ↓	0	.028	.054	.076	.089	.094	.089	.076	.054	.028	0
FINAL CAMBER (IN.) ↑	0	3/4	1 5/16	1 3/4	2	2 1/16	2	1 3/4	1 5/16	3/4	0

SPAN U

GIRDER 1 (EXTERIOR)

TENTH POINTS	0	.1	.2	.3	.4	.5	.6	.7	.8	.9	0
CAMBER (GIRDER IN PLACE) ↑	0	.082	.144	.185	.209	.217	.209	.185	.144	.082	0
* DEFLECTION DUE TO DEAD LOAD ↓	0	.020	.041	.057	.067	.070	.067	.057	.041	.020	0
FINAL CAMBER (IN.) ↑	0	3/4	1 1/4	1 9/16	1 11/16	1 3/4	1 11/16	1 9/16	1 1/4	3/4	0

GIRDER 2 (INTERIOR)

TENTH POINTS	0	.1	.2	.3	.4	.5	.6	.7	.8	.9	0
CAMBER (GIRDER IN PLACE) ↑	0	.080	.140	.181	.205	.213	.205	.181	.140	.080	0
* DEFLECTION DUE TO DEAD LOAD ↓	0	.023	.046	.064	.075	.079	.075	.064	.046	.023	0
FINAL CAMBER (IN.) ↑	0	11/16	1 1/4	1 7/16	1 9/16	1 5/8	1 9/16	1 7/16	1 1/4	11/16	0

GIRDER 4 (EXTERIOR)

TENTH POINTS	0	.1	.2	.3	.4	.5	.6	.7	.8	.9	0
CAMBER (GIRDER IN PLACE) ↑	0	.076	.134	.173	.196	.204	.196	.173	.134	.076	0
* DEFLECTION DUE TO DEAD LOAD ↓	0	.018	.035	.049	.058	.061	.058	.049	.035	.018	0
FINAL CAMBER (IN.) ↑	0	11/16	1 3/16	1 1/2	1 11/16	1 11/16	1 11/16	1 1/2	1 3/16	11/16	0

GIRDER 3 (INTERIOR)

TENTH POINTS	0	.1	.2	.3	.4	.5	.6	.7	.8	.9	0
CAMBER (GIRDER IN PLACE) ↑	0	.078	.137	.177	.201	.208	.201	.177	.137	.078	0
* DEFLECTION DUE TO DEAD LOAD ↓	0	.021	.043	.059	.070	.073	.070	.059	.043	.021	0
FINAL CAMBER (IN.) ↑	0	11/16	1 1/4	1 7/16	1 9/16	1 5/8	1 9/16	1 7/16	1 1/4	11/16	0

SPAN V

GIRDER 1 (EXTERIOR)

TENTH POINTS	0	.1	.2	.3	.4	.5	.6	.7	.8	.9	0
CAMBER (GIRDER IN PLACE) ↑	0	.082	.144	.185	.209	.217	.209	.185	.144	.082	0
* DEFLECTION DUE TO DEAD LOAD ↓	0	.020	.041	.057	.067	.070	.067	.057	.041	.020	0
FINAL CAMBER (IN.) ↑	0	3/4	1 1/4	1 9/16	1 11/16	1 3/4	1 11/16	1 9/16	1 1/4	3/4	0

GIRDER 2 (INTERIOR)

TENTH POINTS	0	.1	.2	.3	.4	.5	.6	.7	.8	.9	0
CAMBER (GIRDER IN PLACE) ↑	0	.080	.140	.181	.205	.213	.205	.181	.140	.080	0
* DEFLECTION DUE TO DEAD LOAD ↓	0	.023	.046	.064	.075	.079	.075	.064	.046	.023	0
FINAL CAMBER (IN.) ↑	0	11/16	1 1/4	1 7/16	1 9/16	1 5/8	1 9/16	1 7/16	1 1/4	11/16	0

GIRDER 4 (EXTERIOR)

TENTH POINTS	0	.1	.2	.3	.4	.5	.6	.7	.8	.9	0
CAMBER (GIRDER IN PLACE) ↑	0	.076	.134	.173	.196	.204	.196	.173	.134	.076	0
* DEFLECTION DUE TO DEAD LOAD ↓	0	.018	.035	.049	.058	.061	.058	.049	.035	.018	0
FINAL CAMBER (IN.) ↑	0	11/16	1 3/16	1 1/2	1 11/16	1 11/16	1 11/16	1 1/2	1 3/16	11/16	0

GIRDER 3 (INTERIOR)

TENTH POINTS	0	.1	.2	.3	.4	.5	.6	.7	.8	.9	0
CAMBER (GIRDER IN PLACE) ↑	0	.078	.137	.177	.201	.208	.201	.177	.137	.078	0
* DEFLECTION DUE TO DEAD LOAD ↓	0	.021	.043	.059	.070	.073	.070	.059	.043	.021	0
FINAL CAMBER (IN.) ↑	0	11/16	1 1/4	1 7/16	1 9/16	1 5/8	1 9/16	1 7/16	1 1/4	11/16	0

SPAN W

GIRDER 1 (EXTERIOR)

TENTH POINTS	0	.1	.2	.3	.4	.5	.6	.7	.8	.9	0
CAMBER (GIRDER IN PLACE) ↑	0	.081	.141	.182	.206	.214	.206	.182	.141	.081	0
* DEFLECTION DUE TO DEAD LOAD ↓	0	.019	.038	.053	.063	.066	.063	.053	.038	.019	0
FINAL CAMBER (IN.) ↑	0	3/4	1 1/4	1 9/16	1 3/4	1 3/4	1 3/4	1 9/16	1 1/4	3/4	0

GIRDER 2 (INTERIOR)

TENTH POINTS	0	.1	.2	.3	.4	.5	.6	.7	.8	.9	0
CAMBER (GIRDER IN PLACE) ↑	0	.079	.138	.178	.201	.209	.201	.178	.138	.079	0
* DEFLECTION DUE TO DEAD LOAD ↓	0	.022	.043	.060	.071	.074	.071	.060	.043	.022	0
FINAL CAMBER (IN.) ↑	0	11/16	1 1/8	1 7/16	1 9/16	1 5/8	1 9/16	1 7/16	1 1/8	11/16	0

GIRDER 4 (EXTERIOR)

TENTH POINTS	0	.1	.2	.3	.4	.5	.6	.7	.8	.9	0
CAMBER (GIRDER IN PLACE) ↑	0	.075	.131	.169	.192	.199	.192	.169	.131	.075	0
* DEFLECTION DUE TO DEAD LOAD ↓	0	.016	.033	.046	.054	.057	.054	.046	.033	.016	0
FINAL CAMBER (IN.) ↑	0	11/16	1 3/16	1 1/2	1 11/16	1 11/16	1 11/16	1 1/2	1 3/16	11/16	0

GIRDER 3 (INTERIOR)

TENTH POINTS	0	.1	.2	.3	.4	.5	.6	.7	.8	.9	0
CAMBER (GIRDER IN PLACE) ↑	0	.077	.134	.174	.197	.204	.197	.174	.134	.077	0
* DEFLECTION DUE TO DEAD LOAD ↓	0	.020	.040	.055	.065	.069	.065	.055	.040	.020	0
FINAL CAMBER (IN.) ↑	0	11/16	1 1/8	1 7/16	1 9/16	1 5/8	1 9/16	1 7/16	1 1/8	11/16	0

* INCLUDES FUTURE WEARING SURFACE IN SUPERIMPOSED DEAD LOAD
DEFLECTIONS AND ORDINATES ARE IN FEET.
FINAL GIRDER CAMBER VALUES ARE IN INCHES.

NOTE:

4 1/2" BUILD-UP @ ℄ BEARING FOR ALL 54" GIRDERS, SPANS T-W

DRAWN BY : D. H. Carter DATE : JULY 2006
CHECKED BY : J. A. Lee DATE : JULY 2006

PROJECT NO. B-682

BRUNSWICK COUNTY

STATION: 47+08.03 -L- POT

SHEET 5 OF 5

NORTH CAROLINA PROFESSIONAL SEAL 15832 ENGINEER JOEL A. LEE 1-17-07

PLANS PREPARED BY:

PARSONS TRANSPORTATION GROUP
Engineers and Planners
RALEIGH, NORTH CAROLINA

JOB NO. 645615

DWG. NO.

STATE OF NORTH CAROLINA
DEPARTMENT OF TRANSPORTATION
RALEIGH

SUPERSTRUCTURE

CAMBER (APPROACH SPANS)

REVISIONS						SHEET NO.
NO.	BY:	DATE:	NO.	BY:	DATE:	S-120
1			3			TOTAL SHEETS
2			4			257

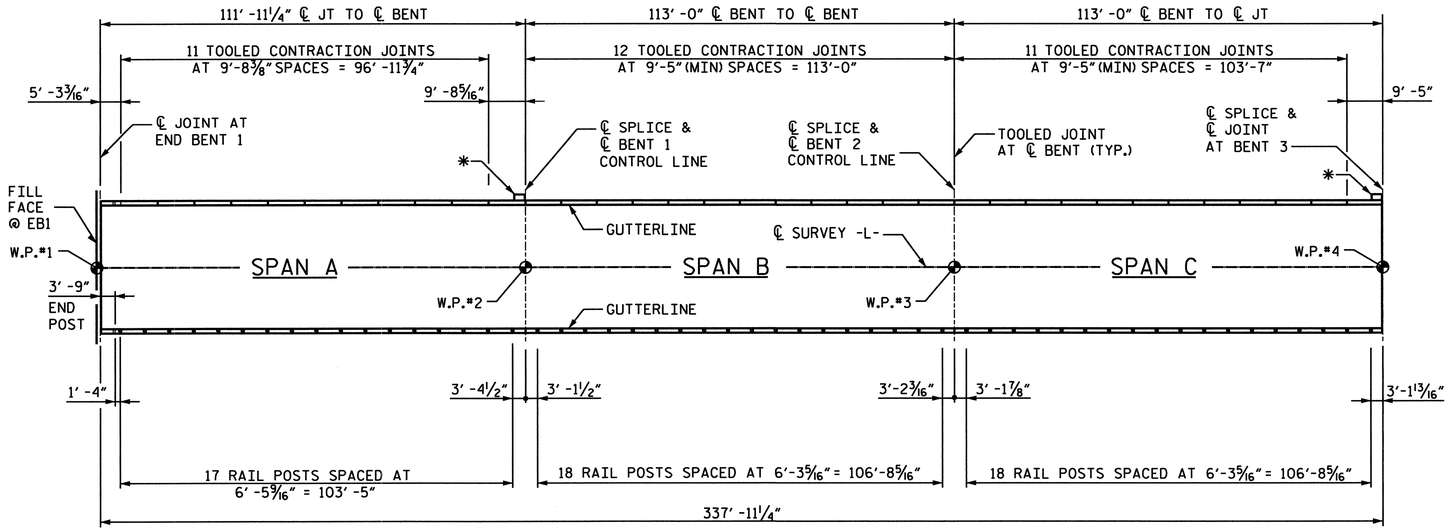

PLAN OF RAIL POST SPACINGS SPANS A, B & C

NOTES:
UNLESS OTHERWISE NOTED, RAIL POST AND TOOLED CONTRACTION JOINT SPACING IS IDENTICAL FOR LEFT & RIGHT PARAPET.

ALL DIMENSIONS ALONG OUTSIDE FACE OF PARAPET.

FOR PARAPET AND END POST DETAILS, SEE SHEET 9 OF 10 AND SHEET 10 OF 10.

*FOR LIGHT POLE BOX DETAILS, SEE SHEET 6 OF 10.

NOTES
STRUCTURAL CONCRETE INSERT

THE STRUCTURAL CONCRETE INSERT ASSEMBLY SHALL CONSIST OF THE FOLLOWING COMPONENTS:

A. FERRULES SHALL BE MADE FROM STEEL MEETING THE REQUIREMENTS OF AASHTO M169, GRADE 12L14 AND SHALL HAVE A MINIMUM LENGTH OF THREADS OF 1½″.

B. 1 - ¾″ Ø X 1⅝″ BOLT WITH WASHER. BOLT SHALL CONFORM TO THE REQUIREMENTS OF ASTM A307. BOLT AND WASHER SHALL BE GALVANIZED. (AT THE CONTRACTOR'S OPTION, STAINLESS STEEL BOLT AND WASHER MAY BE USED AS AN ALTERNATE FOR THE ¾″ Ø X 1⅝″ GALVANIZED BOLT AND WASHER. THEY SHALL CONFORM TO OR EXCEED THE MECHANICAL REQUIREMENTS OF ASTM A307. THE USE OF THIS ALTERNATE SHALL BE APPROVED BY THE ENGINEER.)

C. WIRE STRUT SHOWN IN THE CONCRETE INSERT ASSEMBLY DETAIL IS THE MINIMUM ALLOWABLE SIZE AND SHALL HAVE A MINIMUM TENSILE STRENGTH OF 100,000 PSI. AS AN OPTION, A 7⁄16″ Ø WIRE STRUT WITH A MINIMUM TENSILE STRENGTH OF 90,000 PSI IS ACCEPTABLE.

NOTES
METAL RAIL TO END POST CONNECTION

THE METAL RAIL TO END POST CONNECTION SHALL CONSIST OF THE FOLLOWING COMPONENTS:

A. ½″ PLATES SHALL CONFORM TO AASHTO M270 GRADE 36 AND SHALL BE GALVANIZED AFTER FABRICATION.

B. ¾″ STRUCTURAL CONCRETE INSERT SHALL HAVE A WORKING LOAD SHEAR CAPACITY OF 4800 LBS. THE FERRULES SHALL ENGAGE A ¾″Ø X 1⅝″ BOLT WITH 2″ O.D. WASHER IN PLACE. THE ¾″Ø X 1⅝″ BOLT SHALL HAVE N. C. THREADS.

C. CAP SCREWS FOR RAIL ATTACHMENT TO ANGLE SHALL CONFORM TO THE REQUIREMENTS OF ASTM F593 ALLOY 305 STAINLESS STEEL. CAP SCREWS TO BE CENTERED IN SLOTS AT 60°F.

D. STANDARD CLAMP BARS (SEE METAL RAIL SHEET).

E. ½″ Ø PIPE SLEEVES (IF REQUIRED) TO BE GALVANIZED.

THE COST OF THE STANDARD CLAMP BARS AND CAP SCREWS USED IN THE METAL RAIL TO END POST CONNECTION SHALL BE INCLUDED IN THE UNIT CONTRACT PRICE BID FOR LINEAR FEET OF 1 OR 2 BAR METAL RAILS.

THE ¾″ STRUCTURAL CONCRETE INSERT WITH BOLT SHALL BE ASSEMBLED IN THE SHOP.

THE COST OF THE ¾″ STRUCTURAL CONCRETE INSERT ASSEMBLY, AND THE ½″ PLATES COMPLETE IN PLACE SHALL BE INCLUDED IN THE VARIOUS PAY ITEMS.

THE CONTRACTOR, AT HIS OPTION, MAY USE AN ADHESIVE BONDING SYSTEM IN LIEU OF THE STRUCTURAL CONCRETE INSERT EMBEDDED IN THE END POST. IF THE ADHESIVE BONDING SYSTEM IS USED, THE ¾″ Ø X 1⅝″ BOLT WITH WASHER SHALL BE REPLACED WITH A ¾″Ø X 6½″ BOLT AND 2″ O.D. WASHER. ALL SPECIFICATIONS THAT APPLY TO THE ¾″ Ø X 1⅝″ BOLT SHALL APPLY TO THE ¾″Ø X 6 ½″ BOLT. FIELD TESTING OF THE ADHESIVE BONDING SYSTEM IS NOT REQUIRED.

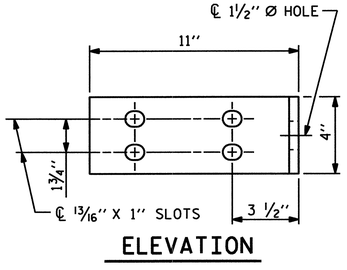

ELEVATION

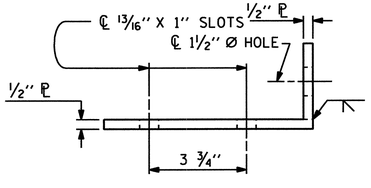

TOP VIEW

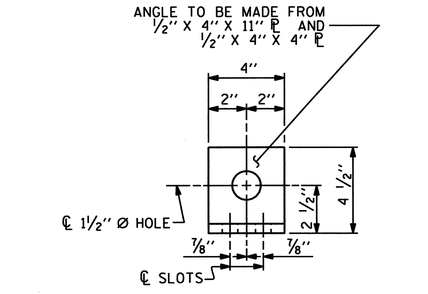

END VIEW (FIX AND EXP.)

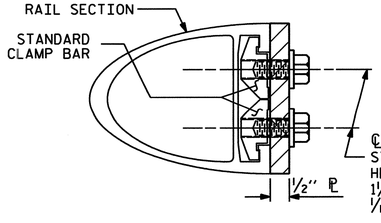

SECTION H-H (FIX)

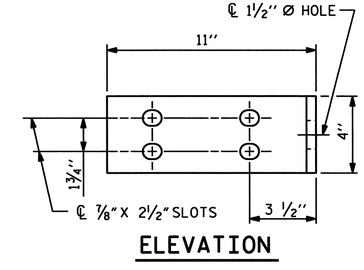

ELEVATION

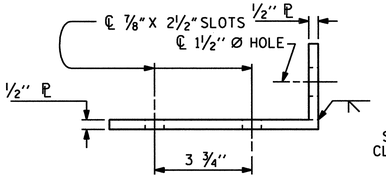

TOP VIEW

FIXED

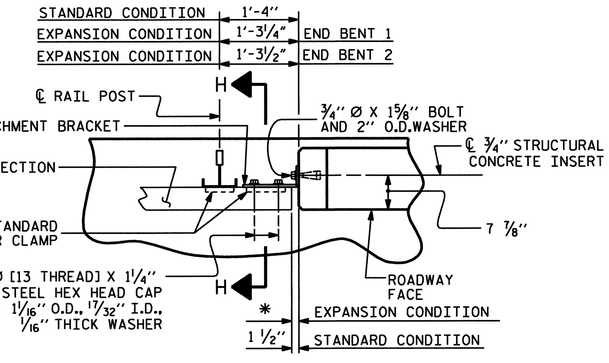

PLAN - RAIL AND END POST

*¾″@ END BENT 1; 1″@ END BENT 2

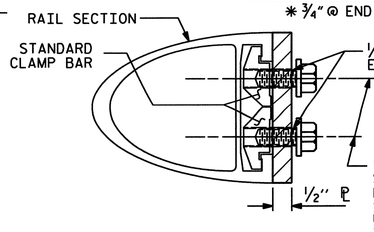

SECTION H-H (EXP.)

EXPANSION

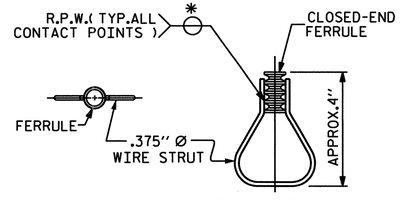

PLAN ELEVATION

STRUCTURAL CONCRETE INSERT

*EACH WELDED ATTACHMENT OF WIRE TO FERRULE SHALL DEVELOP THE TENSILE STRENGTH OF THE WIRE.

DETAILS FOR ATTACHING METAL RAIL TO END POST

THIS STANDARD DRAWING HAS BEEN REVIEWED AND ADAPTED FOR USE AT THE REFERENCED LOCATION BY THE UNDERSIGNED.

NORTH CAROLINA PROFESSIONAL SEAL 15832 ENGINEER JOEL A. LEE 1-17-07

PLANS PREPARED BY:

PARSONS TRANSPORTATION GROUP
Engineers and Planners
RALEIGH, NORTH CAROLINA

JOB NO. 645615
DWG. NO.

PROJECT NO. B-682
BRUNSWICK COUNTY
STATION: 47+08.03 -L- POT

SHEET 1 OF 10

STATE OF NORTH CAROLINA
DEPARTMENT OF TRANSPORTATION
RALEIGH
STANDARD

RAIL POST SPACINGS AND END OF RAIL DETAILS
FOR ONE OR TWO BAR METAL RAILS

REVISIONS						SHEET NO.
NO.	BY:	DATE:	NO.	BY:	DATE:	S-721
1			3			TOTAL SHEETS
2			4			207

ASSEMBLED BY : D. H. Carter	DATE : JULY 2006	
CHECKED BY : J. A. Lee	DATE : JULY 2006	
DRAWN BY : FCJ 1/88	REV. 10/17/00	LES/RDR
CHECKED BY : CRK 3/89	REV. 5/7/03	RWW/JTE
	REV. 5/1/06	TLA/GM

STD. NO. BMR2

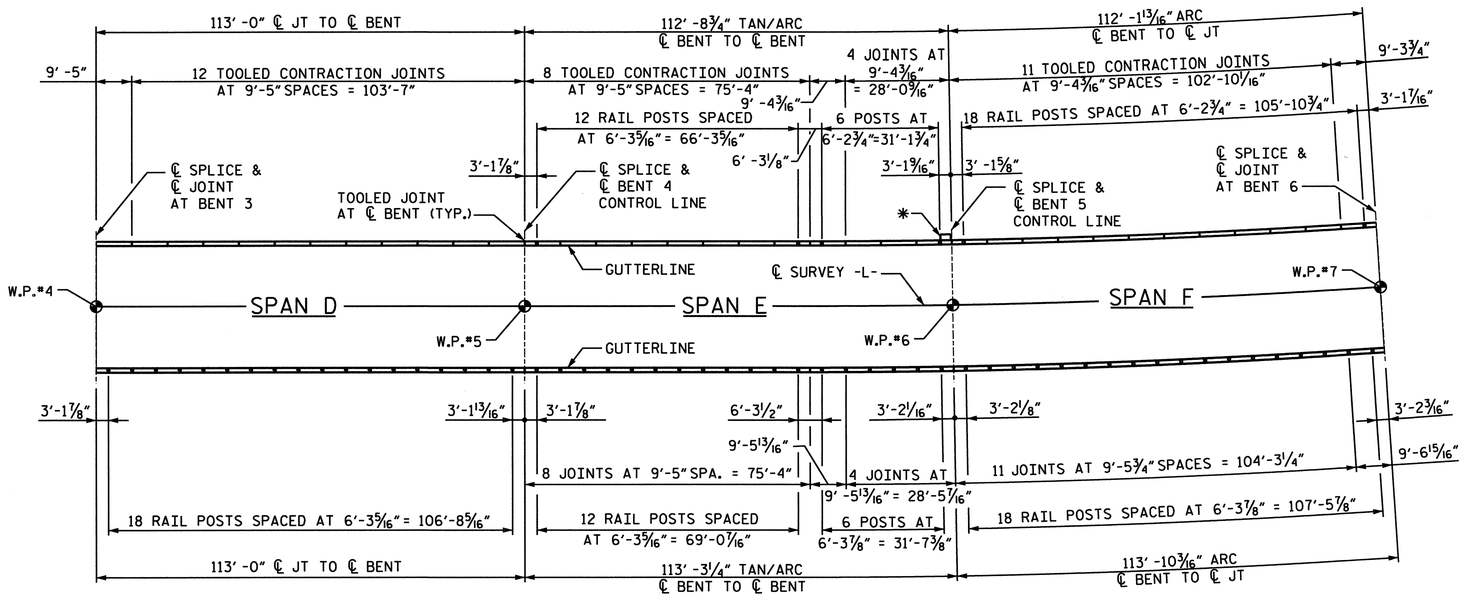

PLAN OF RAIL POST SPACINGS SPANS D, E & F

NOTES:
UNLESS OTHERWISE NOTED, RAIL POST AND TOOLED CONTRACTION JOINT SPACING IS IDENTICAL FOR LEFT & RIGHT PARAPET.

ALL DIMENSIONS ALONG OUTSIDE FACE OF PARAPET.

* FOR LIGHT POLE BOX DETAILS, SEE SHEET 6 OF 10.

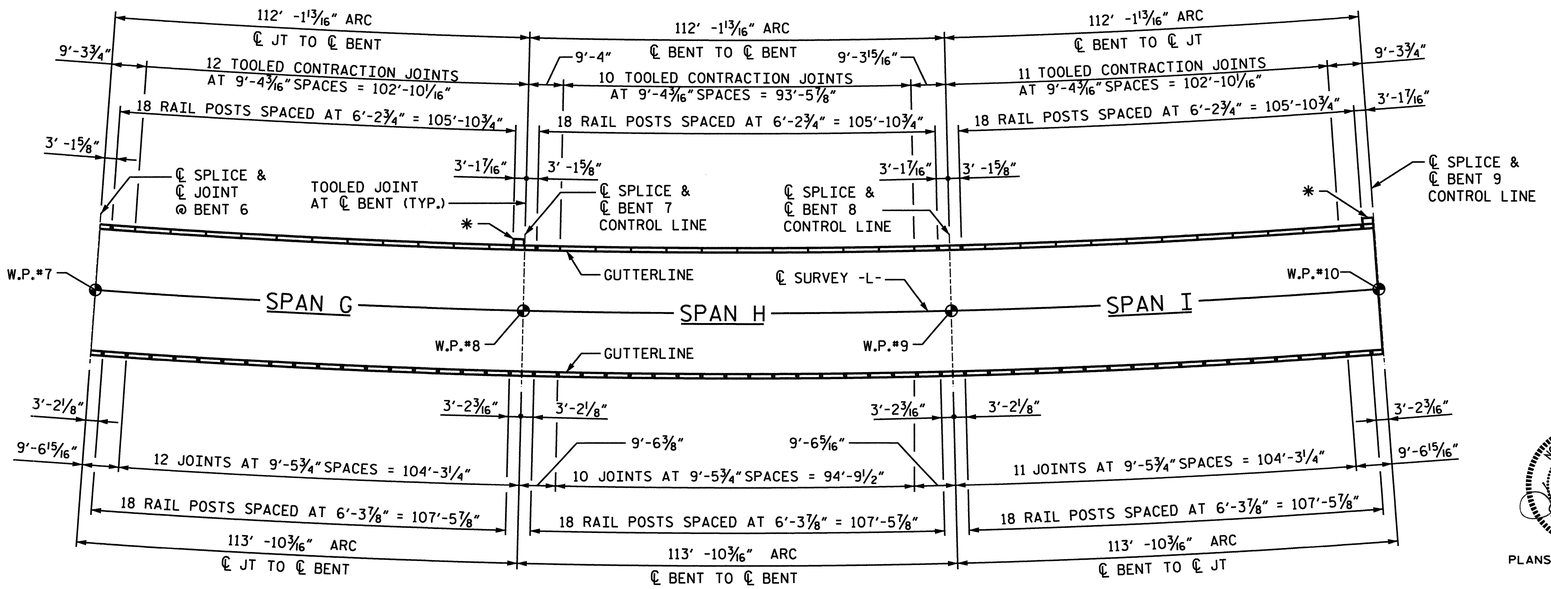

PLAN OF RAIL POST SPACINGS SPANS G, H & I

DRAWN BY : D. H. Carter DATE : JULY 2006
CHECKED BY : J. A. Lee DATE : JULY 2006

PROJECT NO. B-682
BRUNSWICK COUNTY
STATION: 47+08.03 -L- POT

SHEET 2 OF 10

NORTH CAROLINA PROFESSIONAL SEAL 15832 ENGINEER JOEL A. LEE
1-17-07

PLANS PREPARED BY:

PARSONS
TRANSPORTATION GROUP
Engineers and Planners
RALEIGH, NORTH CAROLINA

JOB NO. 645615
DWG. NO.

STATE OF NORTH CAROLINA
DEPARTMENT OF TRANSPORTATION
RALEIGH

RAIL POST SPACINGS
SPANS
D THRU I

REVISIONS						SHEET NO.
NO.	BY:	DATE:	NO.	BY:	DATE:	S-122
1			3			TOTAL SHEETS
2			4			267

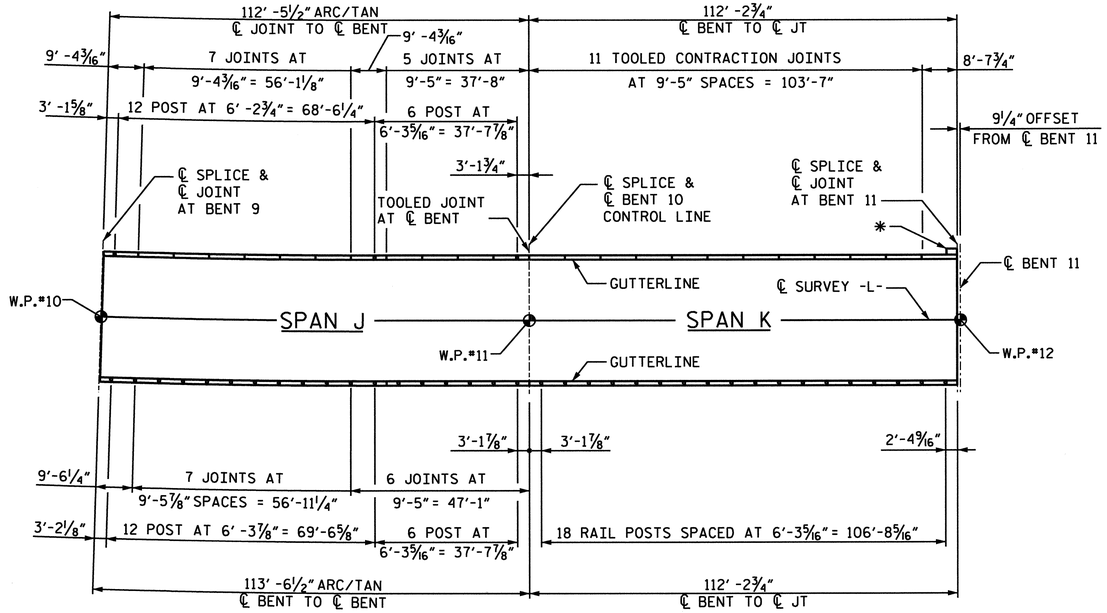

NOTES:
UNLESS SHOWN OTHERWISE, RAIL POST AND TOOLED CONTRACTION JOINT SPACING IS IDENTICAL FOR LEFT & RIGHT PARAPET.

ALL DIMENSIONS ALONG OUTSIDE FACE OF PARAPET.

* FOR LIGHT RAIL POST DETAILS, SEE SHEET 6 OF 10.

PLAN OF RAIL POST SPACINGS SPANS J & K

PROJECT NO. B-682

BRUNSWICK COUNTY

STATION: 47+08.03 -L- POT

SHEET 3 OF 10

NORTH CAROLINA PROFESSIONAL SEAL 15832 ENGINEER JOEL A. LEE
1-17-07

PLANS PREPARED BY:

PARSONS
TRANSPORTATION GROUP
Engineers and Planners
RALEIGH, NORTH CAROLINA

JOB NO. 645615

DWG. NO.

STATE OF NORTH CAROLINA
DEPARTMENT OF TRANSPORTATION
RALEIGH

RAIL POST SPACINGS
SPANS
J THRU K

REVISIONS						SHEET NO.
NO.	BY:	DATE:	NO.	BY:	DATE:	3
1			3			TOTAL SHEETS
2			4			257

DRAWN BY : D. H. Carter DATE : JULY 2006
CHECKED BY : J. A. Lee DATE : JULY 2006

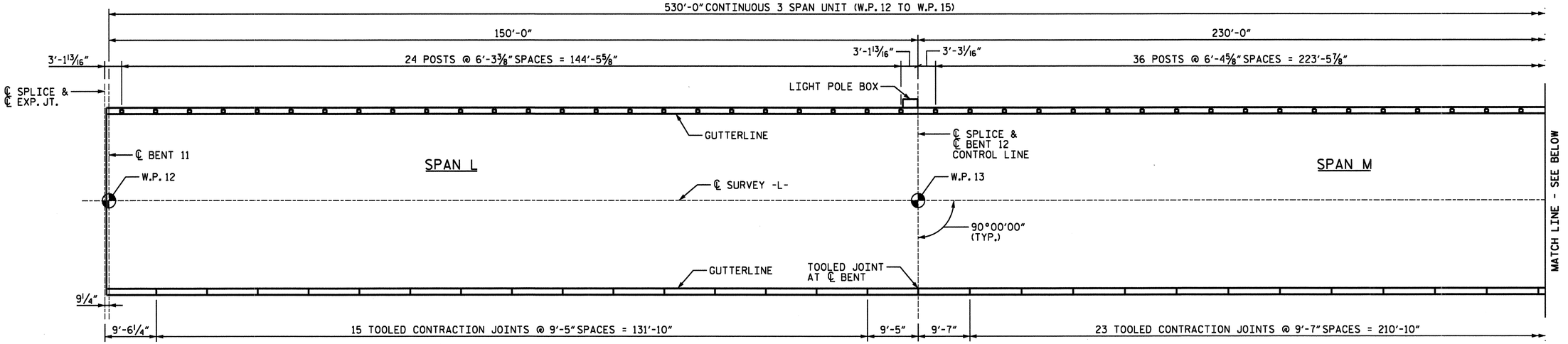

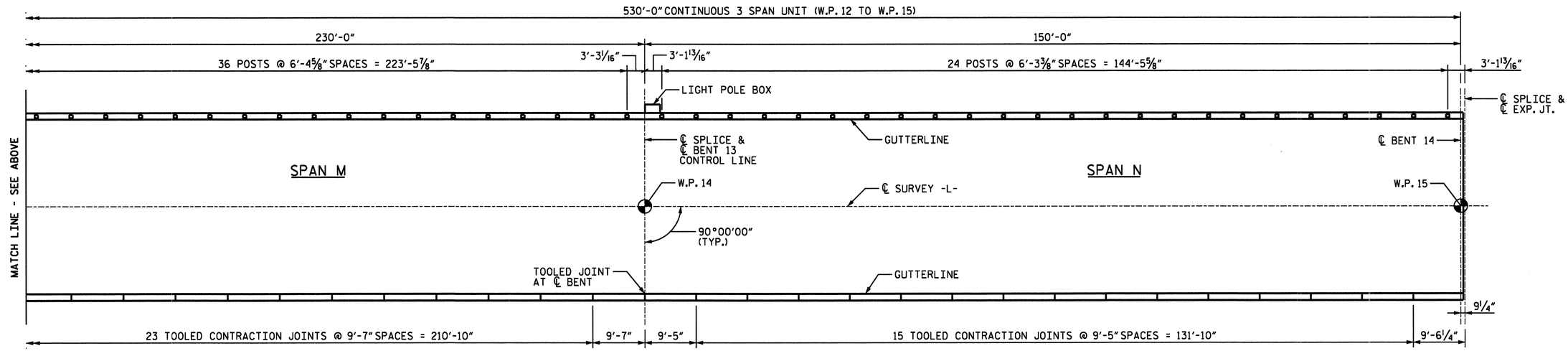

NOTES:

UNLESS NOTED OTHERWISE, RAIL POST AND TOOLED CONTRACTION JOINT SPACING IS IDENTICAL FOR RIGHT AND LEFT PARAPETS.

RAIL POST SPACING IS MEASURED ALONG ℄ OF 4 BOLT METAL RAIL ANCHOR ASSEMBLY, SEE 2 BAR METAL RAIL STANDARD DRAWINGS.

FOR LIGHT POLE BOX, SEE DETAILS.

THE CONTRACTOR'S ATTENTION IS CALLED TO THE FACT THAT THE ℄ OF JOINT IN THE DECK SLAB IS OFFSET FROM THE ℄ OF BENT.

PLAN OF RAIL POST SPACINGS: SPANS L - N

PROJECT NO. B-0682

BRUNSWICK COUNTY

STATION: 47+08.03 -L- POT

SHEET 4 OF 10

STATE OF NORTH CAROLINA
DEPARTMENT OF TRANSPORTATION
RALEIGH

SUPERSTRUCTURE
PLAN OF PARAPET &
RAIL POST SPACINGS

SPANS L-N

NORTH CAROLINA PROFESSIONAL SEAL 024928 ENGINEER RODNEY E. MONEY 2/26/07

PREPARED IN THE OFFICE OF
TYLIN INTERNATIONAL
RALEIGH, NORTH CAROLINA
Copyright © 2006, TYLI

DWG NO.

REVISIONS						SHEET NO.
NO.	BY:	DATE:	NO.	BY:	DATE:	S-124
1			3			TOTAL SHEETS
2			4			207

DRAWN BY : T. S. KELLEY DATE : NOV. 06
CHECKED BY : R.E. MONEY DATE : NOV. 06

DATE: #DATE#
FILE: #FILENAME#

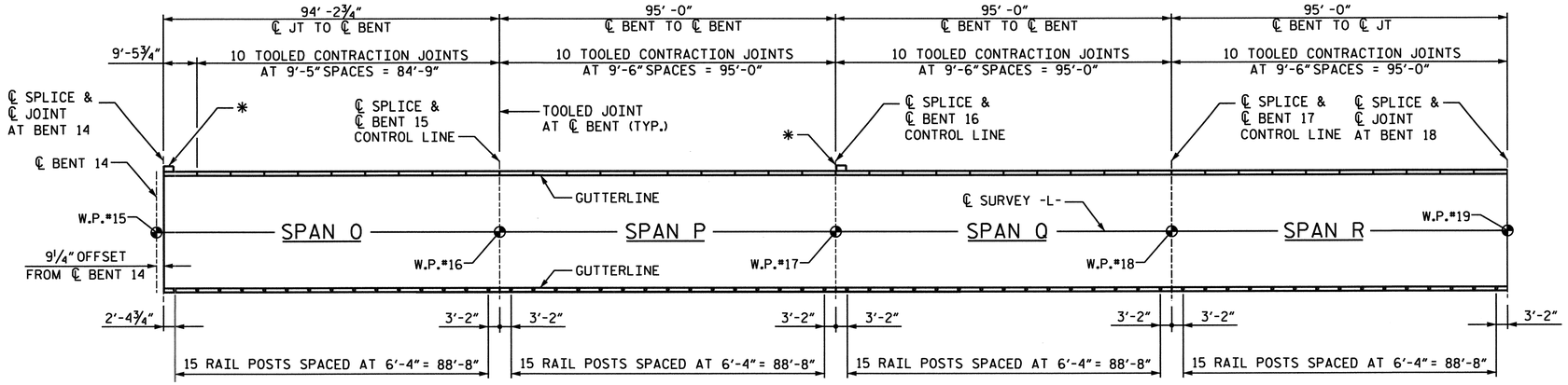

NOTES:
UNLESS OTHERWISE NOTED, RAIL POST AND TOOLED CONTRACTION JOINT SPACING IS IDENTICAL FOR LEFT & RIGHT PARAPET.

ALL DIMENSIONS ALONG OUTSIDE FACE OF PARAPET.

* FOR LIGHT POLE BOX DETAILS, SEE SHEET 6 OF 10.

PLAN OF RAIL POST SPACINGS SPANS O, P, Q & R

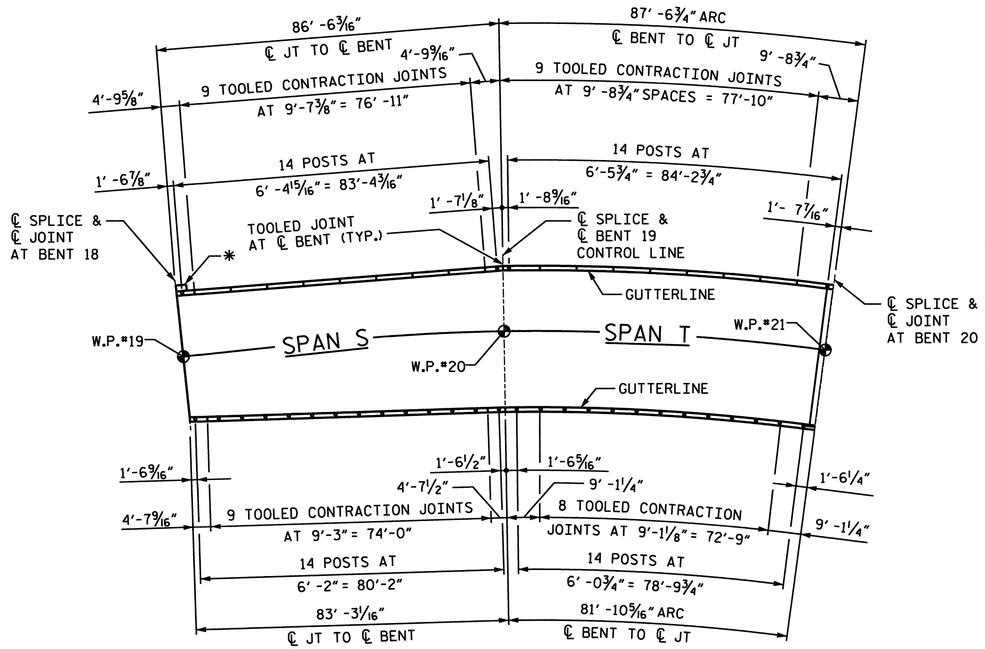

PLAN OF RAIL POST SPACINGS SPANS S & T

DRAWN BY : D. H. Carter DATE : JULY 2006
CHECKED BY : J. A. Lee DATE : JULY 2006

PROJECT NO. B-682
BRUNSWICK COUNTY
STATION: 47+08.03 -L- POT
SHEET 5 OF 10

NORTH CAROLINA PROFESSIONAL SEAL 15832 ENGINEER JOSEPH A. LEE 1-17-07

PLANS PREPARED BY:

PARSONS TRANSPORTATION GROUP
Engineers and Planners
RALEIGH, NORTH CAROLINA

JOB NO. 645615
DWG. NO.

STATE OF NORTH CAROLINA
DEPARTMENT OF TRANSPORTATION
RALEIGH

RAIL POST SPACINGS
SPANS
O THRU T

REVISIONS						SHEET NO.
NO.	BY:	DATE:	NO.	BY:	DATE:	
1			3			TOTAL SHEETS
2			4			

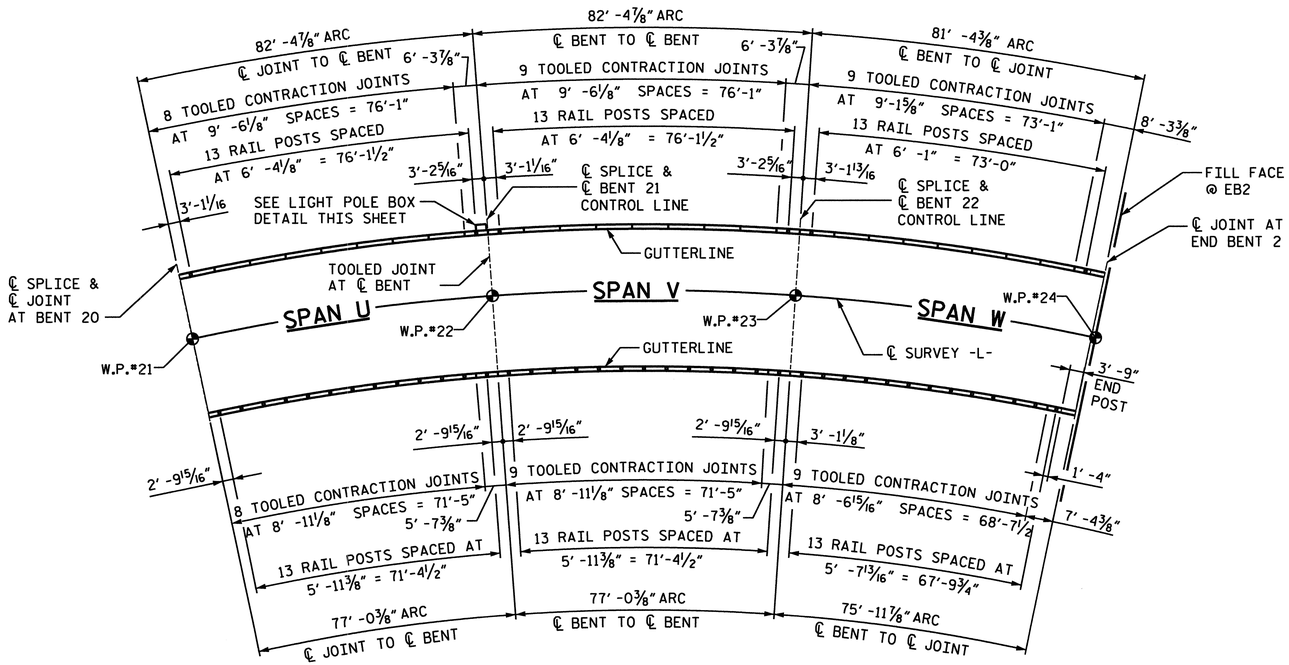

PLAN OF RAIL POST SPACINGS SPANS U, V, & W

NOTES:
UNLESS OTHERWISE NOTED, RAIL POST AND TOOLED CONTRACTION JOINT SPACING IS IDENTICAL FOR LEFT & RIGHT PARAPET.

ALL DIMENSIONS ALONG OUTSIDE FACE OF PARAPET.

FOR PARAPET AND END POST DETAILS, SEE SHEET 9 OF 10 AND SHEET 10 OF 10.

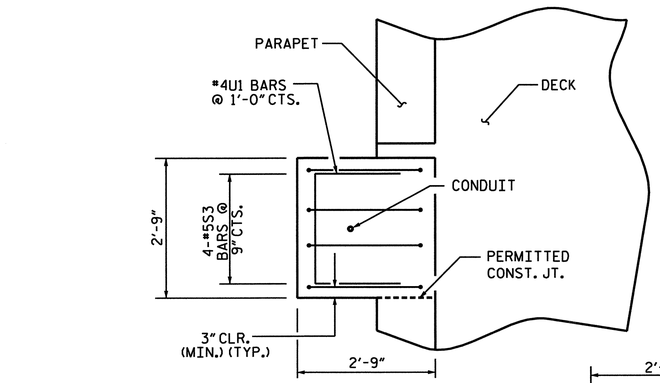

PLAN

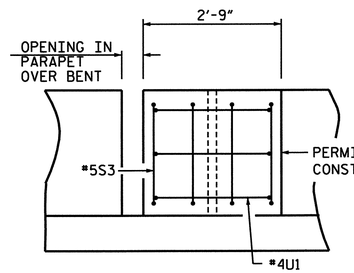

ELEVATION

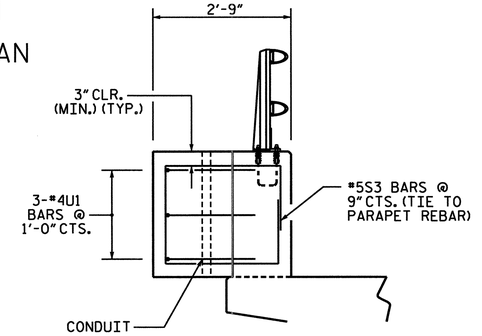

SECTION

LIGHT POLE BOX/CONDUIT DETAILS

PROJECT NO. B-682

BRUNSWICK COUNTY

STATION: 47+08.03 -L- POT

SHEET 6 OF 10

NORTH CAROLINA PROFESSIONAL SEAL 15832 ENGINEER JOEL A. LEE 1.17.07

PLANS PREPARED BY:

PARSONS TRANSPORTATION GROUP
Engineers and Planners
RALEIGH, NORTH CAROLINA

JOB NO. 645615

DWG. NO.

STATE OF NORTH CAROLINA
DEPARTMENT OF TRANSPORTATION
RALEIGH

RAIL POST SPACINGS
SPANS
U THRU W

REVISIONS						SHEET NO.
NO.	BY:	DATE:	NO.	BY:	DATE:	S-126
1			3			TOTAL SHEETS
2			4			207

DRAWN BY : D. H. Carter DATE : JULY 2006
CHECKED BY : J. A. Lee DATE : JULY 2006

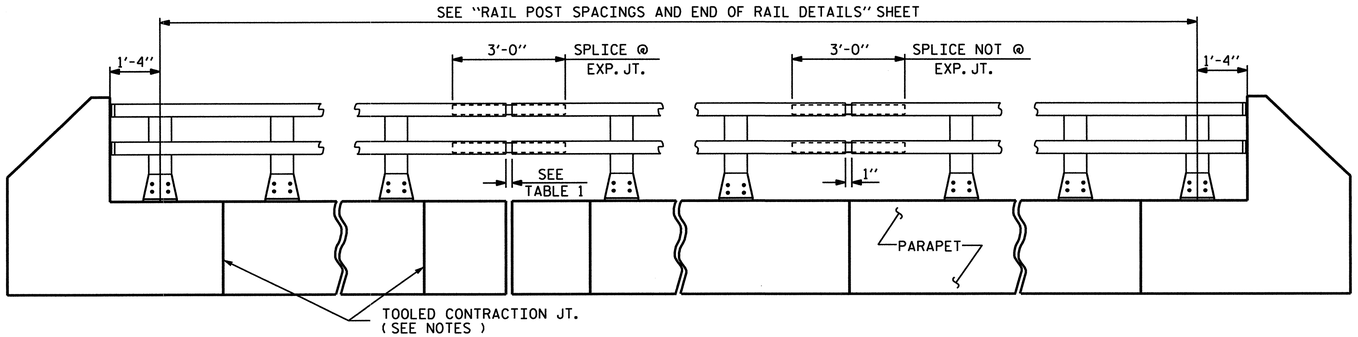

ELEVATION

NOTE : FOR ATTACHMENT OF METAL RAIL TO END POST, SEE STANDARD NO. BMR2.

TABLE 1	
℄ EXP. JT. @	RAIL OPENING
BENT No. 3	2¾"
BENT No. 6	2¾"
BENT No. 9	1¾"
BENT No. 11	3⅜"
BENT No. 14	3⅝"
BENT No. 18	1¾"
BENT No. 20	1¾"

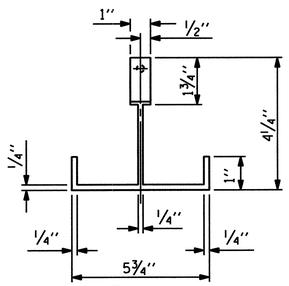

PLAN

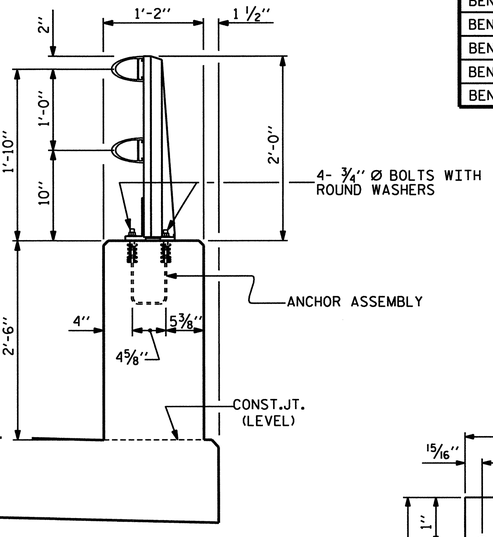

SECTION THRU PARAPET AND RAIL

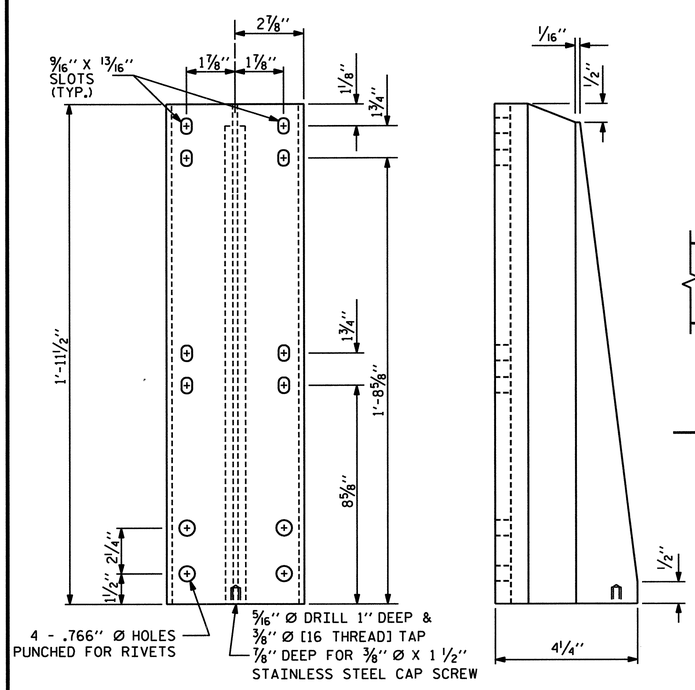

FRONT ELEVATION SIDE ELEVATION

DETAILS OF POST

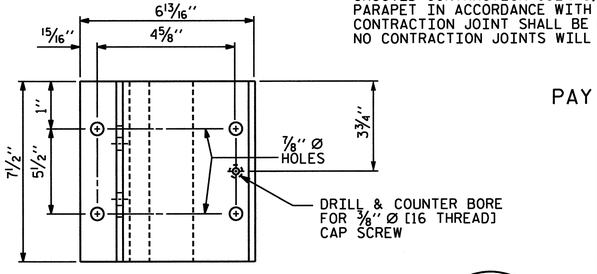

PLAN

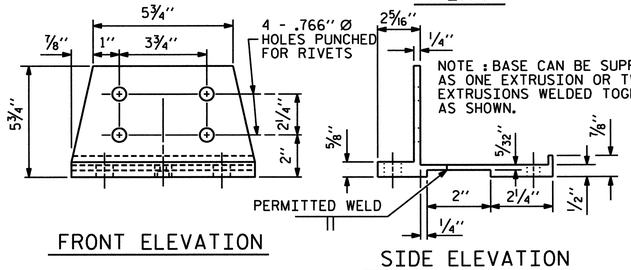

FRONT ELEVATION SIDE ELEVATION

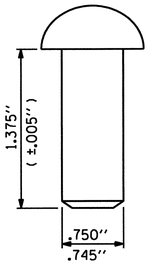

RIVET DETAIL

POST BASE DETAILS

NOTES

AT THE CONTRACTOR'S OPTION, METAL RAIL MAY BE EITHER ALUMINUM OR GALVANIZED STEEL IN ACCORDANCE WITH THE REQUIREMENTS OF THE GENERAL NOTES AND THE FOLLOWING SPECIFICATIONS FOR THE ALTERNATE MATERIALS; HOWEVER, THE CONTRACTOR WILL BE REQUIRED TO USE THE SAME RAIL MATERIAL ON ALL STRUCTURES ON THE PROJECT FOR WHICH METAL RAIL IS DESIGNATED.

ALUMINUM RAILS

MATERIAL FOR POSTS, BASES AND RAILS, EXPANSION BARS AND CLAMP BARS SHALL BE ASTM B-221 ALLOY 6061-T6.

MATERIAL FOR RIVETS SHALL BE ASTM B316 ALLOY 6061-T6. RIVETS SHALL BE STANDARD BUTTON HEAD AND CONE POINT COLD DRIVEN AS PER DRAWING.

THE BASE OF RAIL POSTS, OR ANY OTHER ALUMINUM SURFACE IN CONTACT WITH CONCRETE SHALL BE THOROUGHLY COATED WITH AN ALUMINUM IMPREGNATED CAULKING COMPOUND OF APPROVED QUALITY.

MATERIAL FOR SHIMS TO BE ASTM B209 ALLOY 6061-T6.

GALVANIZED STEEL RAILS

MATERIAL AND GALVANIZING ARE TO CONFORM TO THE FOLLOWING SPECIFICATIONS:

POST, POST BASES, RAILS, EXPANSION BARS AND CLAMP BARS: AASHTO M270 GRADE 36 STRUCTURAL STEEL - GALVANIZED TO AASHTO M111.

RIVETS: RIVETS SHALL MEET THE REQUIREMENTS OF ASTM A502 FOR GRADE 1 RIVETS.

THE CUT ENDS OF GALVANIZED STEEL RAILING, AFTER GRINDING SMOOTH SHALL BE GIVEN TWO COATS OF ZINC RICH PAINT MEETING THE REQUIREMENTS OF FEDERAL SPECIFICATION MIL-P-26915 USAF TYPE 1, OR OF FEDERAL SPECIFICATIONS TT-P-641.

SHIMS: SHIMS SHALL MEET THE REQUIREMENTS OF ASTM A570 FOR GRADE 33 OR A611 FOR GRADE C AND SHALL BE GALVANIZED IN ACCORDANCE WITH AASHTO M111.

RAIL CAPS: RAIL CAPS SHALL MEET THE REQUIREMENTS OF ASTM A570 FOR GRADE 33 OR A611 FOR GRADE C AND SHALL BE GALVANIZED IN ACCORDANCE WITH AASHTO M111.

GENERAL NOTES

RAILING SHALL BE CONTINUOUS FROM END POST TO END POST OF BRIDGE. EACH JOINT IN RAIL LENGTH SHALL BE SPLICED AS DETAILED. PANEL LENGTHS OF RAIL SHALL BE ATTACHED TO A MINIMUM OF THREE POSTS.

FOR END OF RAIL TO CLEAR FACE OF CONCRETE END POST DIMENSION, SEE STANDARD NO. BMR2.

CAP SCREWS SHALL BE ASTM F593 ALLOY 305 STAINLESS STEEL. WASHERS SHALL MEET THE REQUIREMENTS OF ASTM F844 EXCEPT THEY SHALL BE MADE FROM ALLOY 304 STAINLESS STEEL.

CERTIFIED MILL REPORTS ARE REQUIRED FOR RAILS AND POSTS. SHOP INSPECTION IS NOT REQUIRED.

METAL RAIL POSTS SHALL BE SET NORMAL TO CURB GRADE.

METHOD OF MEASUREMENT FOR METAL RAILS: FOR LENGTH OF METAL RAILS TO BE PAID FOR, SEE THE STANDARD SPECIFICATIONS.

CURVED RAIL USAGE: WHERE RAILS ARE TO BE USED ON BRIDGES ON HORIZONTAL AND/OR VERTICAL CURVATURE THE CONTRACTOR MAY, AT HIS OPTION, HAVE THE REQUIRED CURVATURE IN THE RAIL FORMED IN THE SHOP OR IN THE FIELD. IN EITHER EVENT, THE RAIL SHALL CONFORM WITHOUT BUCKLING OR KINKING TO THE REQUIRED CURVATURE IN A UNIFORM MANNER ACCEPTABLE TO THE ENGINEER.

TO INSURE FUTURE IDENTIFICATION OF THE FABRICATOR, A PERMANENT IDENTIFYING MARK SHALL BE PLACED ON EACH POST. THE METHOD OF MARKING AND LOCATION SHALL BE SUCH THAT IT DOES NOT DETRACT FROM THE APPEARANCE OF THE POST, BUT REMAINS VISIBLE AFTER RAIL PLACEMENT.

SHIMS SHALL BE USED AS NECESSARY FOR POST ALIGNMENT.

ALLOY 6351-T5 MAY BE SUBSTITUTED FOR ALLOY 6061-T6 WHERE APPLICABLE.

MINOR VARIATIONS IN DETAILS OF METAL RAIL WILL BE CONSIDERED. DETAILS OF SUCH VARIATIONS, IF DESIRED, SHALL BE SUBMITTED FOR APPROVAL.

GROOVED CONTRACTION JOINTS, ½" IN DEPTH, SHALL BE TOOLED IN ALL EXPOSED FACES OF THE PARAPET IN ACCORDANCE WITH ARTICLE 825-10(B) OF THE STANDARD SPECIFICATIONS. THE CONTRACTION JOINT SHALL BE LOCATED AT A SPACING OF 8FT. TO 10FT. BETWEEN EXPANSION JOINTS. NO CONTRACTION JOINTS WILL BE REQUIRED FOR SEGMENTS LESS THAN 10 FEET IN LENGTH.

PAY LENGTH = 5105.00 LIN. FT.

THIS STANDARD DRAWING HAS BEEN REVIEWED AND ADAPTED FOR USE AT THE REFERENCED LOCATION BY THE UNDERSIGNED.

NORTH CAROLINA PROFESSIONAL SEAL 15832 ENGINEER JOEL A. LEE
1-11-07

PROJECT NO. B-682

BRUNSWICK COUNTY

STATION: 47+08.03 -L- POT

SHEET 7 OF 10

STATE OF NORTH CAROLINA
DEPARTMENT OF TRANSPORTATION
RALEIGH

STANDARD

2 BAR METAL RAIL

STD. NO. BMR3

ASSEMBLED BY : D. H. Carter	DATE : JULY 2006		
CHECKED BY : J. A. Lee	DATE : JULY 2006		
DRAWN BY : EEM 6/94	REV. 10/17/00	LES/RDR	
CHECKED BY : RGW 6/94	REV. 5/7/03R	RWW/JTE	
	REV. 5/1/06	TLA/GM	

PLANS PREPARED BY:

PARSONS TRANSPORTATION GROUP
Engineers and Planners
RALEIGH, NORTH CAROLINA

JOB NO. 645615

DWG. NO.

REVISIONS						SHEET NO.
NO.	BY:	DATE:	NO.	BY:	DATE:	S-177
1			3			TOTAL SHEETS
2			4			237

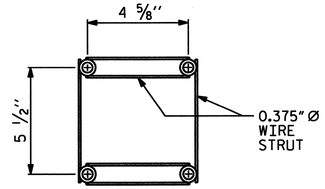

PLAN

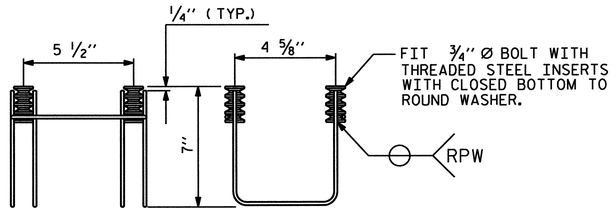

SIDE VIEW ELEVATION

MINIMUM LENGTH OF THREADS IN INSERT (FERRULE): 1 3/4"

4-BOLT METAL RAIL ANCHOR ASSEMBLY

(760 ASSEMBLIES REQUIRED)

NOTES

STRUCTURAL CONCRETE ANCHOR ASSEMBLY

THE STRUCTURAL CONCRETE ANCHOR ASSEMBLY SHALL CONSIST OF THE FOLLOWING COMPONENTS :

A. FERRULES SHALL BE MADE FROM STEEL MEETING THE REQUIREMENTS OF AASHTO M169, GRADE 12L14 AND SHALL HAVE A MINIMUM LENGTH OF THREADS OF 2" FOR 3/4" FERRULES.

B. 4 - 3/4" Ø X 2 1/2" BOLTS WITH WASHERS. BOLTS SHALL CONFORM TO THE REQUIREMENTS OF ASTM A307. BOLTS AND WASHERS SHALL BE GALVANIZED. AT THE CONTRACTOR'S OPTION, STAINLESS STEEL BOLTS AND WASHERS MAY BE USED AS AN ALTERNATE FOR THE 3/4" Ø X 2 1/2" GALVANIZED BOLTS AND WASHERS. THEY SHALL CONFORM TO OR EXCEED THE MECHANICAL REQUIREMENTS OF ASTM A307. THE USE OF THIS ALTERNATE SHALL BE APPROVED BY THE ENGINEER.

C. WIRE STRUT SHOWN IN THE CONCRETE ANCHOR ASSEMBLY DETAIL IS THE MINIMUM ALLOWABLE SIZE AND SHALL HAVE A MINIMUM TENSILE STRENGTH OF 100,000 PSI. AS AN OPTION, A 7/16" Ø WIRE STRUT WITH A MINIMUM TENSILE STRENGTH OF 90,000 PSI IS ACCEPTABLE.

D. THE METAL RAIL ANCHOR ASSEMBLIES TO BE HOT DIPPED GALVANIZED TO CONFORM TO REQUIREMENTS OF AASHTO M111.

E. THE COST OF THE METAL RAIL ANCHOR ASSEMBLY WITH BOLTS AND WASHERS COMPLETE IN PLACE SHALL BE INCLUDED IN THE PRICE BID FOR LINEAR FEET OF METAL RAIL.

F. BOLTS TO BE TIGHTENED ONE-HALF TURN WITH A WRENCH FROM A FINGER-TIGHT POSITION.

THE CONTRACTOR, AT HIS OPTION, MAY USE ADHESIVELY ANCHORED ANCHOR BOLTS IN LIEU OF THE METAL RAIL ANCHOR ASSEMBLY. THE YIELD LOAD OF THE 3/4" Ø BOLT IS 10 KIPS. FIELD TESTING OF THE ADHESIVE BONDING SYSTEM IS REQUIRED.

WHEN ADHESIVELY ANCHORED ANCHOR BOLTS ARE USED, BOLTS SHALL MEET THE REQUIREMENTS OF ASTM F593 ALLOY 304 STAINLESS STEEL WITH MINIMUM 75,000 PSI ULTIMATE STRENGTH. NUTS SHALL MEET THE REQUIREMENTS OF ASTM F594 ALLOY 304 STAINLESS STEEL AND WASHERS SHALL MEET THE REQUIREMENTS OF ASTM F844 EXCEPT THEY SHALL BE MADE FROM ALLOY 304 STAINLESS STEEL.

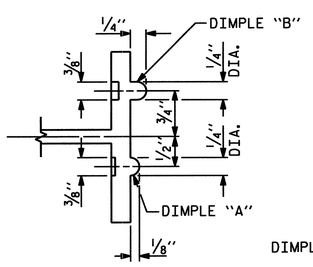

SECTION B - B

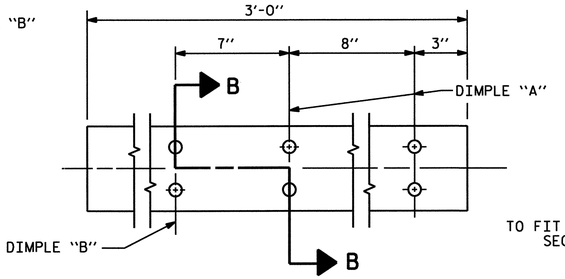

EXPANSION BAR DETAILS

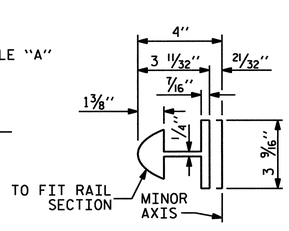

BAR SECTION

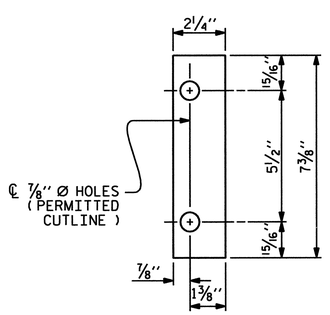

FRONT PLATE

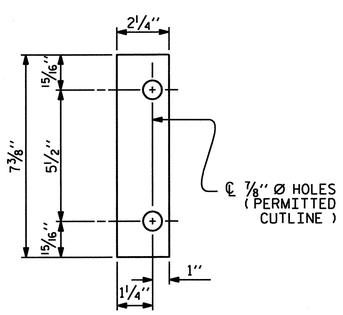

REAR PLATE

SHIM DETAILS

NOTE :
SHIMS MAY BE CUT ALONG PERMITTED CUTLINE OR SLOTTED TO EDGE OF PLATE TO FACILITATE PLACEMENT.

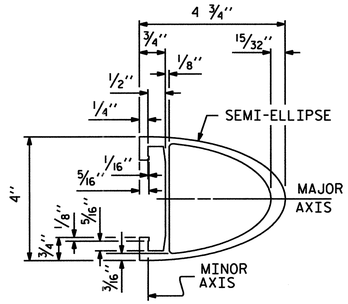

RAIL SECTION

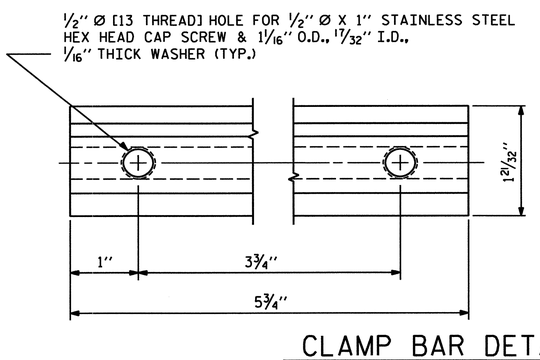

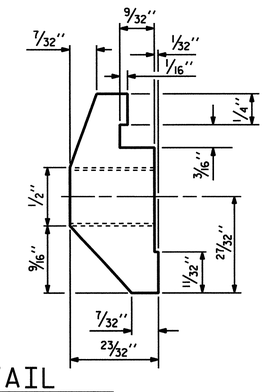

CLAMP BAR DETAIL

(4 REQUIRED PER POST)

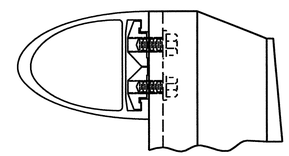

CLAMP ASSEMBLY

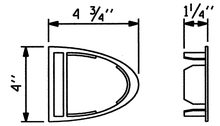

RAIL CAP

THIS STANDARD DRAWING HAS BEEN REVIEWED AND ADAPTED FOR USE AT THE REFERENCED LOCATION BY THE UNDERSIGNED.

NORTH CAROLINA PROFESSIONAL SEAL 15832 ENGINEER JOEL A. LEE
1.17.07

PLANS PREPARED BY:

PARSONS TRANSPORTATION GROUP
Engineers and Planners
RALEIGH, NORTH CAROLINA

JOB NO. 645615
DWG. NO.

PROJECT NO. B-682
BRUNSWICK COUNTY
STATION: 47+08.03 -L- POT

SHEET 8 OF 10

STATE OF NORTH CAROLINA
DEPARTMENT OF TRANSPORTATION
RALEIGH

STANDARD

2 BAR METAL RAIL

REVISIONS						SHEET NO.
NO.	BY:	DATE:	NO.	BY:	DATE:	S-128
1			3			TOTAL SHEETS
2			4			287

STD. NO. BMR4

ASSEMBLED BY : D. H. Carter		DATE : JULY 2006
CHECKED BY : J. A. Lee		DATE : JULY 2006
DRAWN BY : EEM 6/94	REV. 2/6/97	EEM/RGW
CHECKED BY : RGW 6/94	REV. 8/16/99	MAB/LES
	REV. 5/7/03	RWW/JTE

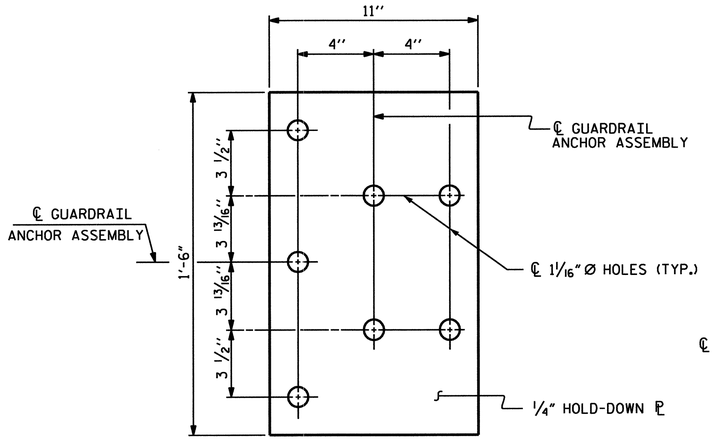

PLAN

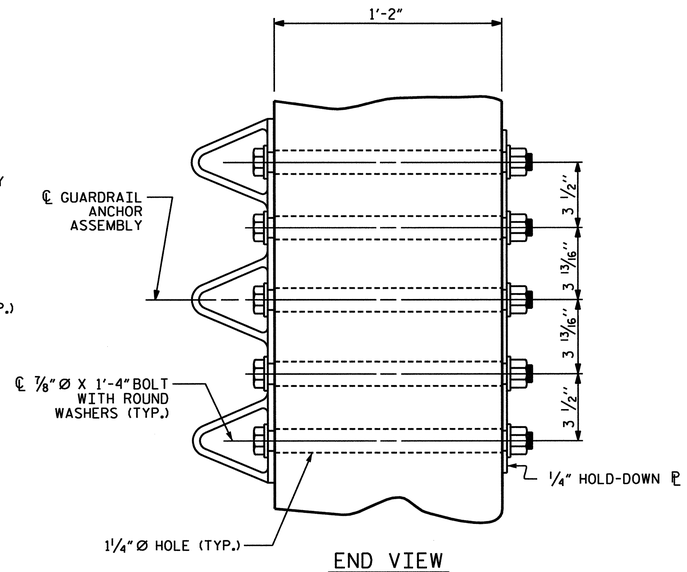

END VIEW

NOTES

THE GUARDRAIL ANCHOR ASSEMBLY SHALL CONSIST OF A 1/4'' HOLD DOWN PLATE AND 7 - 7/8'' Ø BOLTS WITH NUTS AND WASHERS.

THE HOLD-DOWN PLATE SHALL CONFORM TO AASHTO M270 GRADE 36. AFTER FABRICATION, THE HOLD-DOWN PLATE SHALL BE HOT-DIP GALVANIZED IN ACCORDANCE WITH AASHTO M111.

BOLTS SHALL CONFORM TO THE REQUIREMENTS OF ASTM A307 AND NUTS SHALL CONFORM TO THE REQUIREMENTS OF AASHTO M291. BOLTS, NUTS AND WASHERS SHALL BE GALVANIZED. AT THE CONTRACTOR'S OPTION, STAINLESS STEEL BOLTS, NUTS AND WASHERS MAY BE USED AS AN ALTERNATE FOR THE 7/8'' Ø GALVANIZED BOLTS, NUTS AND WASHERS. THEY SHALL CONFORM TO OR EXCEED THE MECHANICAL REQUIREMENTS OF ASTM A307. THE USE OF THIS ALTERNATE SHALL BE APPROVED BY THE ENGINEER.

AFTER INSTALLATION, THE EXPOSED THREAD OF THE BOLT SHALL BE BURRED WITH A SHARP POINTED TOOL.

THE COST OF THE GUARDRAIL ANCHOR ASSEMBLIES WITH BOLTS, NUTS AND WASHERS COMPLETE IN PLACE, SHALL BE INCLUDED IN THE VARIOUS PAY ITEMS.

THE VERTICAL REINFORCING BARS MAY BE SHIFTED SLIGHTLY IN THE END POST TO CLEAR ASSEMBLY BOLTS.

THE 1 1/4'' Ø HOLES SHALL BE FORMED OR DRILLED WITH A CORE BIT. IMPACT TOOLS WILL NOT BE PERMITTED. ANY CONCRETE DAMAGED BY THIS WORK SHALL BE REPAIRED TO THE SATISFACTION OF THE ENGINEER.

GUARDRAIL ANCHOR ASSEMBLY DETAILS

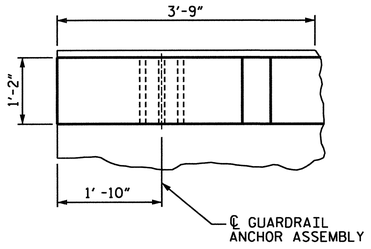

PLAN

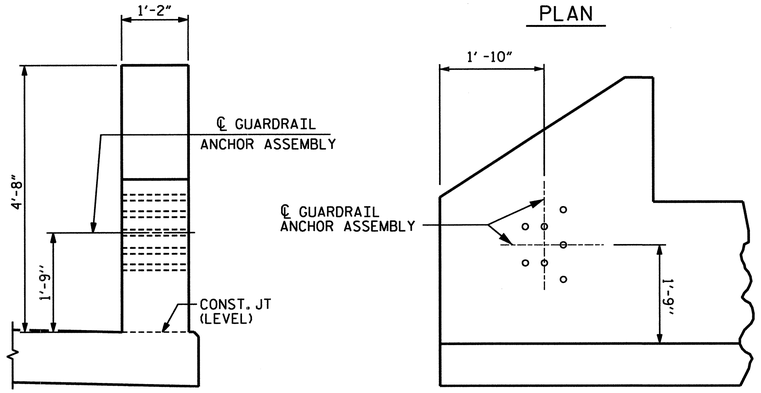

END VIEW ELEVATION

LOCATION OF GUARDRAIL ANCHOR AT END POST

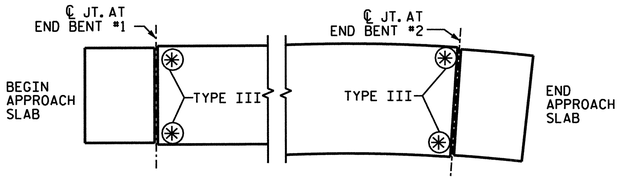

SKETCH SHOWING POINTS OF ATTACHMENT

✳ LOCATION OF GUARDRAIL ATTACHMENT

PROJECT NO. B-682

BRUNSWICK COUNTY

STATION: 47+08.03 -L- POT

SHEET 9 OF 10

STATE OF NORTH CAROLINA
DEPARTMENT OF TRANSPORTATION
RALEIGH

STANDARD
GUARDRAIL ANCHORAGE DETAILS FOR METAL RAILS

THIS STANDARD DRAWING HAS BEEN REVIEWED AND ADAPTED FOR USE AT THE REFERENCED LOCATION BY THE UNDERSIGNED.

NORTH CAROLINA PROFESSIONAL SEAL 15812 ENGINEER JOEL A. LEE
1.17.07

PLANS PREPARED BY:

PARSONS TRANSPORTATION GROUP
Engineers and Planners
RALEIGH, NORTH CAROLINA

JOB NO. 645615
DWG. NO.

REVISIONS						SHEET NO.
NO.	BY:	DATE:	NO.	BY:	DATE:	5-129
1			3			TOTAL SHEETS
2			4			207

ASSEMBLED BY : D. H. Carter DATE : JULY 2006
CHECKED BY : J. A. Lee DATE : JULY 2006

DRAWN BY : EEM 6/94	REV. 10/17/00	RWW/LES
CHECKED BY : RGW 6/94	REV. 5/1/03	RWW/JTE
	REV. 5/1/06	TLA/GM

STD. NO. BMR8

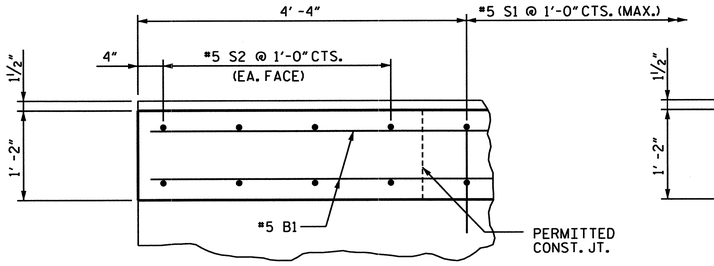

PLAN OF PARAPET

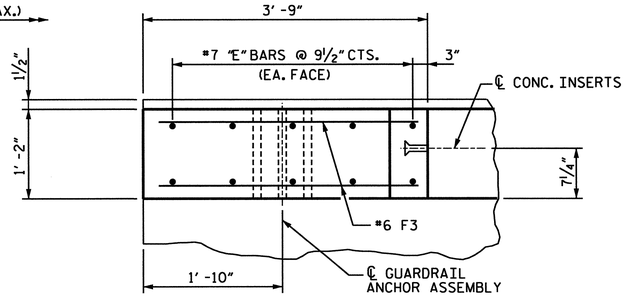

PLAN OF END POST

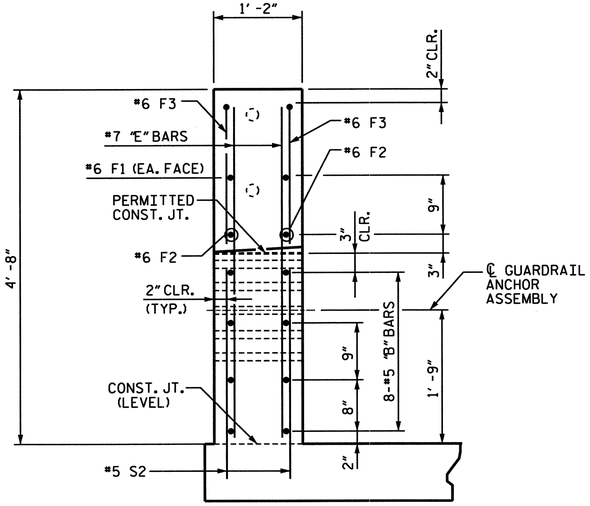

END VIEW

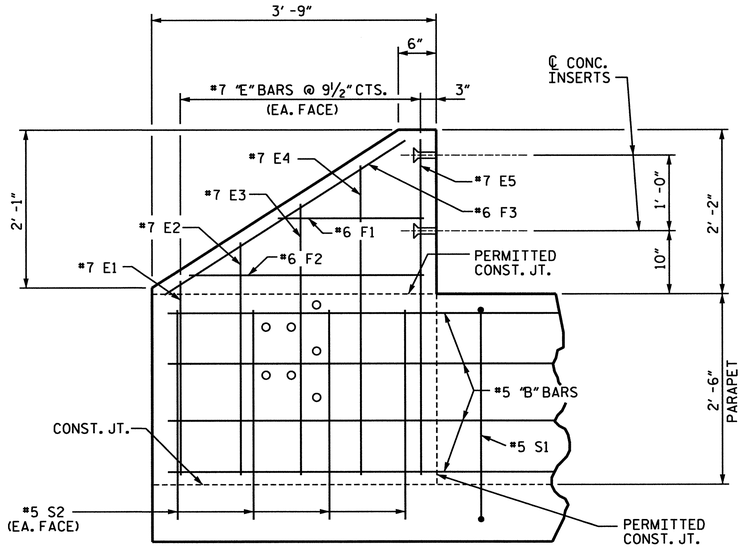

ELEVATION

PARAPET AND END POST DETAILS FOR TWO BAR RAIL

NOTE:

THE *5 S2 BARS SHALL BE INSTALLED USING AN ADHESIVE ANCHORING SYSTEM AFTER SAWING THE JOINT. FOR ADHESIVELY ANCHORED BOLTS OR DOWELS. THE YEILD LOAD OF THE *5 S2 BARS IS 18.6 KIPS, FIELD TESTING OF THE ADHESIVE BONDING SYSTEM IS NOT REQUIRED.

BAR TYPE

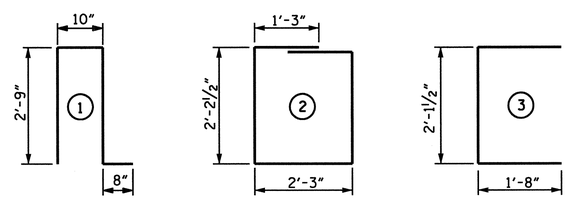

ALL BAR DIMENSIONS ARE OUT TO OUT.

BILL OF MATERIAL
FOR TWO END POSTS
SPANS A, B, & C

BAR	NO.	SIZE	TYPE	LENGTH	WEIGHT
B1	96	*5	STR.	60'-0"	6,008
E1	4	*7	STR.	2'-6"	20
E2	4	*7	STR.	3'-0"	25
E3	4	*7	STR.	3'-6"	29
E4	4	*7	STR.	4'-0"	33
E5	4	*7	STR.	4'-4"	35
F1	4	*6	STR.	1'-10"	11
F2	4	*6	STR.	3'-0"	18
F3	2	*6	STR.	3'-9"	11
S1	668	*5	1	7'-0"	4,877
S2	16	*5	STR.	3'-0"	50
S3	8	*5	2	9-2"	76
U1	6	*4	3	5'-6"	22

EPOXY COATED REINFORCING STEEL 11,215 LBS.

CLASS "AA" CONCRETE * 74.2 C.Y.

CONCRETE PARAPET 668 L.F.

BILL OF MATERIAL
SPANS D, E, & F

BAR	NO.	SIZE	TYPE	LENGTH	WEIGHT
B1	96	*5	STR.	60'-0"	6,008
S1	678	*5	1	7'-0"	4,950
S3	4	*5	2	9-2"	38
U1	3	*4	3	5'-6"	11

EPOXY COATED REINFORCING STEEL 11,007 LBS.

CLASS "AA" CONCRETE * 73.6 C.Y.

CONCRETE PARAPET 678 L.F.

BILL OF MATERIAL
SPANS G, H, & I

BAR	NO.	SIZE	TYPE	LENGTH	WEIGHT
B1	96	*5	STR.	60'-0"	6,008
S1	678	*5	1	7'-0"	4,950
S3	8	*5	2	9-2"	76
U1	6	*4	3	5'-6"	22

EPOXY COATED REINFORCING STEEL 11,056 LBS.

CLASS "AA" CONCRETE * 74.2 C.Y.

CONCRETE PARAPET 679 L.F.

BILL OF MATERIAL
SPANS J & K

BAR	NO.	SIZE	TYPE	LENGTH	WEIGHT
B1	64	*5	STR.	60'-0"	4,005
S1	452	*5	1	7'-0"	3,300
S3	4	*5	2	9-2"	38
U1	3	*4	3	5'-6"	11

EPOXY COATED REINFORCING STEEL 7,354 LBS.

CLASS "AA" CONCRETE * 49.2 C.Y.

CONCRETE PARAPET 452 L.F.

BILL OF MATERIAL
SPANS L, M, & N

BAR	NO.	SIZE	TYPE	LENGTH	WEIGHT
B1	160	*5	STR.	60'-0"	10,013
S1	1062	*5	1	7'-0"	7,754
S3	8	*5	2	9'-2"	76
U1	6	*4	3	5'-6"	22

EPOXY COATED REINFORCING STEEL 17,865 LBS.

CLASS "AA" CONCRETE * 115.8 C.Y.

CONCRETE PARAPET 1,060 L.F.

BILL OF MATERIAL
SPANS O, P, Q, & R

BAR	NO.	SIZE	TYPE	LENGTH	WEIGHT
B1	112	*5	STR.	56'-6"	6,600
S1	760	*5	1	7'-0"	5,549
S3	8	*5	2	9-2"	76
U1	6	*4	3	5'-6"	22

EPOXY COATED REINFORCING STEEL 12,247 LBS.

CLASS "AA" CONCRETE * 82.9 C.Y.

CONCRETE PARAPET 760 L.F.

BILL OF MATERIAL
SPANS S & T

BAR	NO.	SIZE	TYPE	LENGTH	WEIGHT
B2	24	*5	STR.	59'-7"	1491
B3	24	*5	STR.	56'-8"	1418
S1	339	*5	1	7'-0"	2,475
S3	4	*5	2	9-2"	38
U1	3	*4	3	5'-6"	11

EPOXY COATED REINFORCING STEEL 5,433 LBS.

CLASS "AA" CONCRETE * 37.0 C.Y.

CONCRETE PARAPET 339 L.F.

BILL OF MATERIAL
FOR TWO END POSTS
SPANS U, V, & W

BAR	NO.	SIZE	TYPE	LENGTH	WEIGHT
B4	40	*5	STR.	51'-3"	2,138
B5	40	*5	STR.	48'-3"	2,013
E1	4	*7	STR.	2'-6"	20
E2	4	*7	STR.	3'-0"	25
E3	4	*7	STR.	3'-6"	29
E4	4	*7	STR.	4'-0"	33
E5	4	*7	STR.	4'-4"	35
F1	4	*6	STR.	1'-10"	11
F2	4	*6	STR.	3'-0"	18
F3	2	*6	STR.	3'-9"	11
S1	469	*5	1	7'-0"	3,424
S2	16	*5	STR.	3'-0"	50
S3	4	*5	2	9-2"	38
U1	3	*4	3	5'-6"	11

EPOXY COATED REINFORCING STEEL 7,856 LBS.

CLASS "AA" CONCRETE * 53.4 C.Y.

CONCRETE PARAPET 469 L.F.

* INCLUDES QUANTITY FOR LIGHT POLE BOX

PROJECT NO. B-682

BRUNSWICK COUNTY

STATION: 47+08.03 -L- POT

SHEET 10 OF 10

STATE OF NORTH CAROLINA
DEPARTMENT OF TRANSPORTATION
RALEIGH

PARAPET AND END POST DETAILS AND BILL OF MATERIALS

NORTH CAROLINA PROFESSIONAL SEAL 15832 ENGINEER JOEL A. LEE
1-17-07

PLANS PREPARED BY:

PARSONS
TRANSPORTATION GROUP
Engineers and Planners
RALEIGH, NORTH CAROLINA

JOB NO. 645615
DWG. NO.

REVISIONS						SHEET NO.
NO.	BY:	DATE:	NO.	BY:	DATE:	S-130
1			3			TOTAL SHEETS
2			4			207

DRAWN BY : D. H. Carter DATE : JULY 2006
CHECKED BY : J. A. Lee DATE : JULY 2006

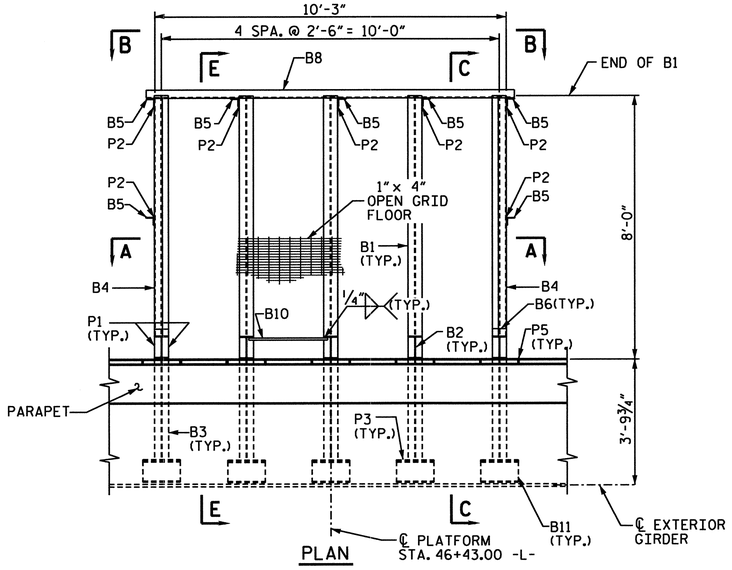

PLAN

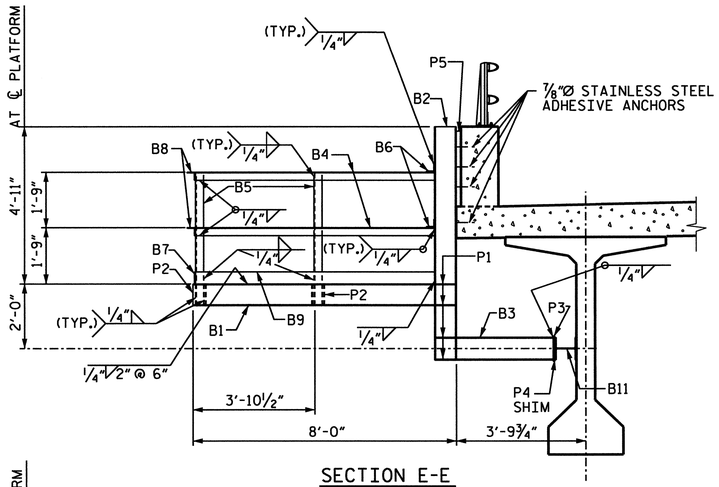

SECTION E-E

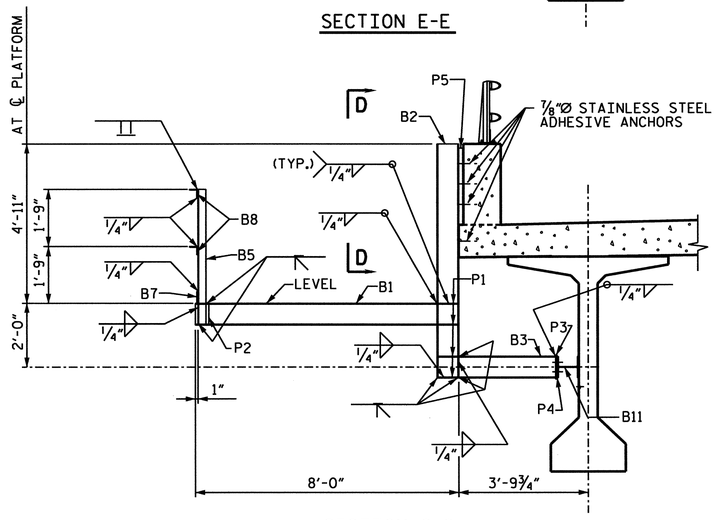

SECTION C-C

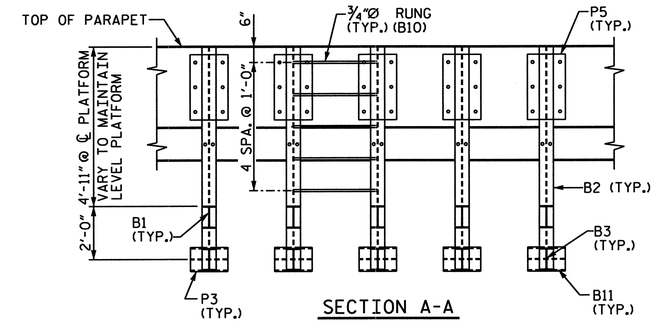

SECTION A-A

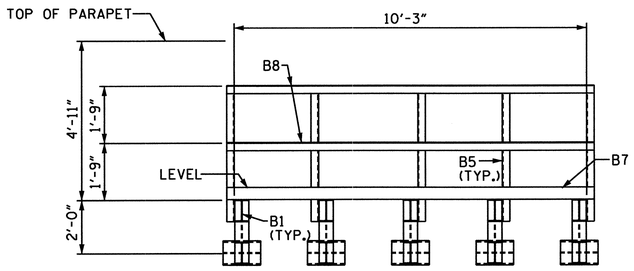

SECTION B-B

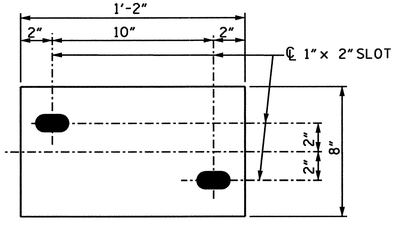

PLATE P4 SHIM DETAIL

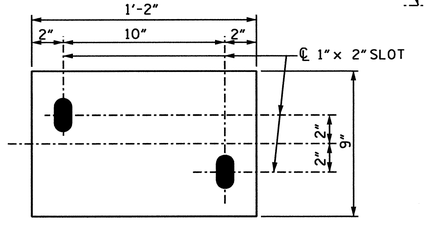

PLATE P3 DETAIL

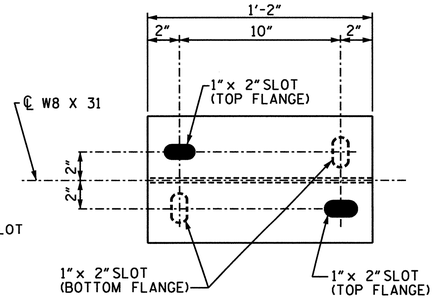

ELEVATION

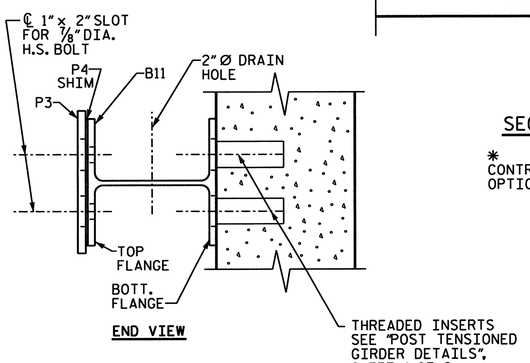

END VIEW

B11 DETAIL

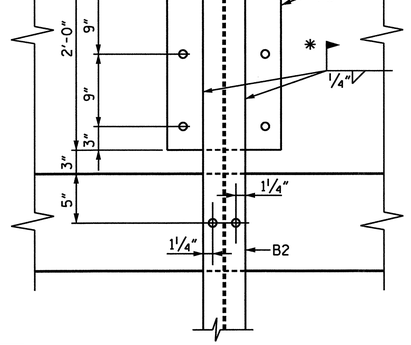

SECTION D-D

* CONTRACTOR HAS THE OPTION TO SHOP WELD

NOTES:

ALL STRUCTURAL STEEL SHALL BE AASHTO M270 GRADE 50.

ALL FABRICATION SHALL CONFORM TO THE APPLICABLE SECTION OF THE NORTH CAROLINA DEPARTMENT OF TRANSPORTATION STANDARD SPECIFICATIONS FOR ROADS AND STRUCTURES.

BAND ALL EDGES OF OPEN GRID FLOOR.

OPEN GRID FLOOR SHALL BE ATTACHED TO EACH HORIZONTAL FLOOR MEMBER USING AN APPROVED FASTENER.

ALL FIELD CONNECTIONS TO BE 7/8" Ø HIGH STRENGTH BOLTS UNLESS OTHERWISE NOTED.

7/8" Ø ADHESIVE ANCHORS SHALL BE STAINLESS STEEL.

ADHESIVE ANCHOR SYSTEM SHALL HAVE A MINIMUM PULLOUT STRENGTH OF 50% OF THE YIELD LOAD. A MINIMUM OF EIGHT (8) ANCHORS SHALL BE TESTED. IF ANY ANCHOR FAILS THE CONTRACTOR SHALL AT HIS EXPENSE TEST ALL ANCHORS UNLESS DIRECTED OTHERWISE BY THE ENGINEER.

FOR SOLAR ARRAY SUPPORT PLATFORM, SEE SPECIAL PROVISIONS.

FOR DETAILS OF NAVIGATIONAL LIGHTING, SEE NAVIGATIONAL LIGHTING AND CONDUIT SYSTEM PLAN SHEET.

BILL OF MATERIAL

ITEM	NUMBER	DESCRIPTION
B1	5	W8 x 18
B2	5	W8 x 18
B3	5	W8 x 18
B4	4	L3 x 3 x 1/4
B5	7	L3 x 3 x 1/4
B6	4	L3 x 3 x 1/4
B7	1	PL 1/4 x 5
B8	2	L3 x 3 x 1/4
B9	2	PL 1/4 x 5
B10	5	3/4"Ø RUNG
B11	5	W8 x 31
P1	40	PL 5/16x 2 1/2x 7 1/2
P2	7	PL 1/4x 5 x 8
P3	5	PL 1/2x 9 x 14
P4	AS REQ'D	PL 3/16x 8 x 14
P5	5	PL 1 3/4"x14 x 24

1"x4" OPEN GRID FLOOR W/ 3/16"x3/4" BRG. BARS

7/8" Ø STAINLESS STEEL ADHESIVE ANCHORS (40 REQ'D.)

7/8" Ø H.S. BOLT W/ WASHER (20 REQ'D.)

PROJECT NO. B-0682

BRUNSWICK COUNTY

STATION: 47+08.03 -L- POT

STATE OF NORTH CAROLINA
DEPARTMENT OF TRANSPORTATION
RALEIGH

SOLAR ARRAY SUPPORT PLATFORM

NORTH CAROLINA PROFESSIONAL SEAL 024928 ENGINEER RODNEY E. MONEY 1/26/07

PREPARED IN THE OFFICE OF
TYLIN INTERNATIONAL
RALEIGH, NORTH CAROLINA
Copyright © 2006, TYLI

DWG NO.

REVISIONS						SHEET NO.
NO.	BY:	DATE:	NO.	BY:	DATE:	S-131
1			3			TOTAL SHEETS
2			4			207

DRAWN BY : T. S. KELLEY DATE : NOV. 06
CHECKED BY : R.E. MONEY DATE : NOV. 06

DATE: $DATE$
FILE: $FILENAME$

REINFORCING BAR SCHEDULE

SPANS A, B AND C

BAR	NO.	SIZE	TYPE	LENGTH (FT)	WEIGHT (LBS.)	BAR	NO.	SIZE	TYPE	LENGTH (FT)	WEIGHT (LBS.)	BAR	NO.	SIZE	TYPE	LENGTH (FT)	WEIGHT (LBS.)	BAR	NO.	SIZE	TYPE	LENGTH (FT)	WEIGHT (LBS.)	BAR	NO.	SIZE	TYPE	LENGTH (FT)	WEIGHT (LBS.)
A1	540	5	STR.	34'-3"	19,290	B1	141	4	STR.	27'-5"	2582	G1	2	5	STR.	34'-3"	71	K1	8	8	2	21-5"	457	S2	180	4	5	2'-9"	331
A2	450	4	STR.	5'-0"	1503	B2	120	5	STR.	30'-0"	3755							K2	8	8	1	14'-4"	306	S3	36	5	6	3'-5"	128
						B3	94	7	STR.	60'-0"	11528							K3	18	6	STR.	5'-1"	137	S4	36	5	4	6'-1"	228
						B4	88	7	STR.	34'-0"	6116							K4	60	4	STR.	8'-1"	324						
						B5	94	7	STR.	23'-3"	4467							K5	12	4	STR.	27'-4"	219	U1	36	4	3	16'-3"	391
						B6	94	4	STR.	23'-9"	1491							K6	12	4	STR.	5'-7"	45						
						B7	141	4	STR.	27'-9"	2614																		

ALL BARS SHALL BE EPOXY COATED.

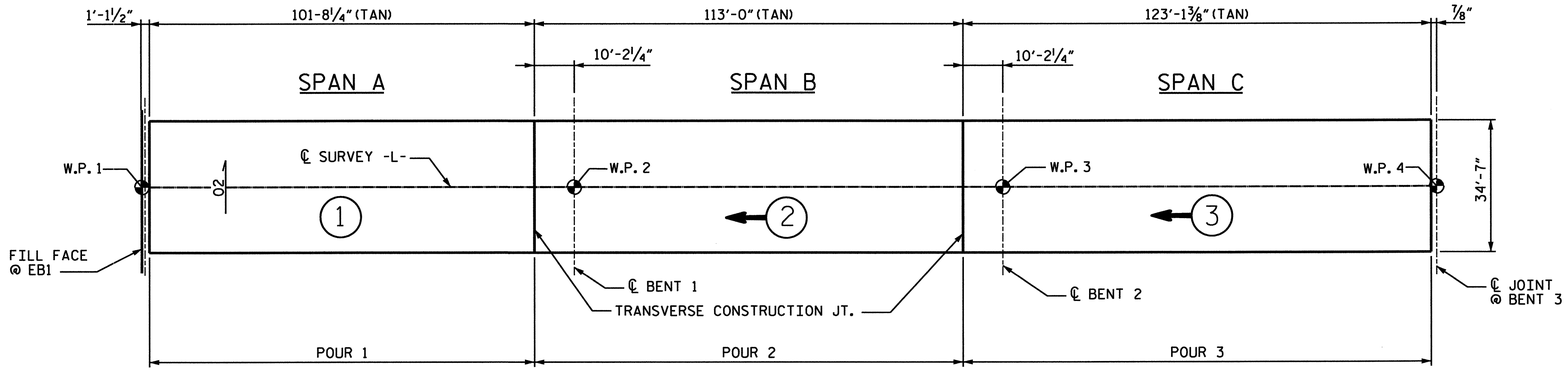

POURING SEQUENCE FOR SPANS A, B & C

THE SEQUENCE OF POURS SHALL PROCEED AS SHOWN IN ORDER OF ASCENDING NUMBERS.

(#) INDICATES POUR NUMBER AND DIRECTION OF POUR.

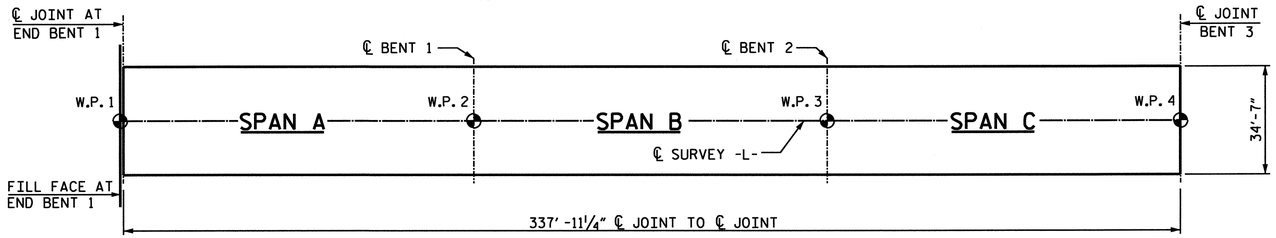

LAYOUT FOR COMPUTING AREA REINFORCED CONCRETE DECK SLAB

(SQ. FT. = 11,694)

BAR TYPES

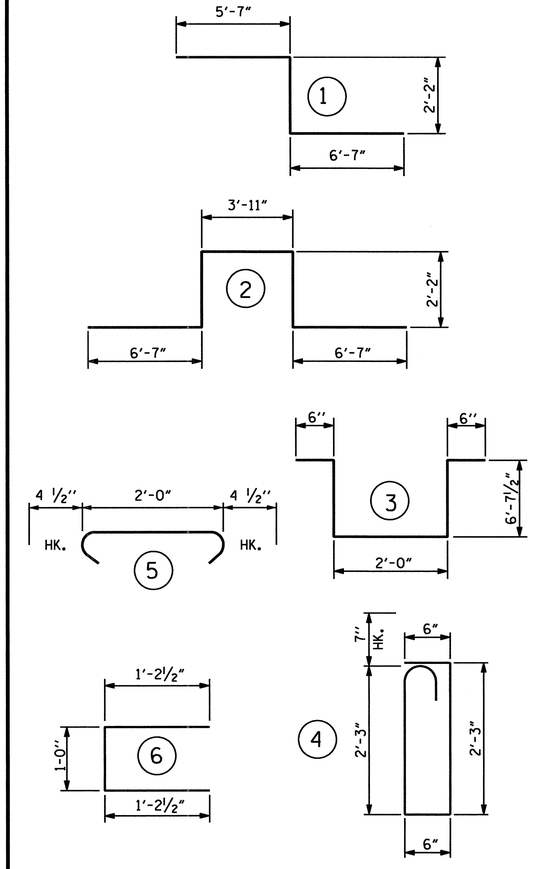

ALL BAR DIMENSIONS ARE OUT TO OUT

SUPERSTRUCTURE BILL OF MATERIAL

	CLASS AA CONCRETE	REINFORCING STEEL	EPOXY COATED REINFORCING STEEL
		(LBS.)	(LBS.)
POUR 1	105.86		
POUR 2	129.46		
POUR 3	141.91		
TOTALS**	377.22		55,983

**QUANTITIES FOR PARAPET AND END POSTS ARE NOT INCLUDED

SUPERSTRUCTURE REINFORCING STEEL LENGTHS ARE BASED ON THE FOLLOWING MINIMUM SPLICE LENGTHS

BAR SIZE	SUPERSTRUCTURE EXCEPT APPROACH SLABS, PARAPET, AND BARRIER RAIL		APPROACH SLABS		PARAPET AND BARRIER RAIL
	EPOXY COATED	UNCOATED	EPOXY COATED	UNCOATED	
#4	2'-0"	1'-9"	2'-0"	1'-9"	2'-9"
#5	2'-6"	2'-2"	2'-6"	2'-2"	3'-5"
#6	3'-0"	2'-7"	3'-10"	2'-7"	4'-4"
#7	5'-3"	3'-6"			
#8	6'-10"	4'-7"			

GROOVING BRIDGE FLOORS

APPROACH SLABS	1,495	SQ.FT.
BRIDGE DECK	75,616	SQ.FT.
TOTAL	77,111	SQ.FT.

THIS STANDARD DRAWING HAS BEEN REVIEWED AND ADAPTED FOR USE AT THE REFERENCED LOCATION BY THE UNDERSIGNED.

NORTH CAROLINA PROFESSIONAL SEAL 15832 ENGINEER JOEL A. LEE
1-17-07

PROJECT NO. B-682

BRUNSWICK COUNTY

STATION: 47+08.03 -L- POT

SHEET 1 OF 8

STATE OF NORTH CAROLINA
DEPARTMENT OF TRANSPORTATION
RALEIGH

STANDARD

SUPERSTRUCTURE BILL OF MATERIAL SPANS A-C

PLANS PREPARED BY:

PARSONS TRANSPORTATION GROUP
Engineers and Planners
RALEIGH, NORTH CAROLINA

JOB NO. 645615

DWG. NO.

REVISIONS						SHEET NO.
NO.	BY:	DATE:	NO.	BY:	DATE:	
1			3			TOTAL SHEETS
2			4			207

STD. NO. BOM2

ASSEMBLED BY : D. H. Carter	DATE : JULY 2006		
CHECKED BY : J. A. Lee	DATE : JULY 2006		
DRAWN BY : JMB 5/87	REV. 6/1/94	EEM/GRP	
CHECKED BY : SJD 9/87	REV. 8/16/99	RWW/LES	
	REV. 5/1/06	TLA/GM	

REINFORCING BAR SCHEDULE

SPANS D, E AND F

BAR	NO.	SIZE	TYPE	LENGTH (FT)	WEIGHT (LBS.)	BAR	NO.	SIZE	TYPE	LENGTH (FT)	WEIGHT (LBS.)	BAR	NO.	SIZE	TYPE	LENGTH (FT)	WEIGHT (LBS.)	BAR	NO.	SIZE	TYPE	LENGTH (FT)	WEIGHT (LBS.)	BAR	NO.	SIZE	TYPE	LENGTH (FT)	WEIGHT (LBS.)
A1	540	5	STR.	34'-3"	19290	A14	7	4	STR.	5'-4"	25	A27	14	4	STR.	4'-4"	41	B1	141	4	STR.	27'-9"	2614	K1	8	8	2	21'-5"	457
A2	254	4	STR.	5'-0"	848	A15	7	4	STR.	5'-5"	25	A28	1	5	STR.	4'-7"	5	B2	272	4	STR.	28'-0"	5069	K2	8	8	1	14'-4"	306
A3	14	4	STR.	5'-2"	48	A16	9	4	STR.	5'-6"	33	A29	1	5	STR.	29'-10"	31	B3	94	7	STR.	60'-0"	11528	K3	18	6	STR.	5'-1"	137
A4	6	4	STR.	5'-1"	20	A17	15	4	STR.	5'-7"	56							B4	88	7	STR.	34'-0"	6116	K4	60	4	STR.	8'-1"	324
A5	4	4	STR.	5'-0"	13	A18	18	4	STR.	5'-8"	68							B5	94	7	STR.	23'-3"	4467	K5	12	4	STR.	27'-4"	219
A6	16	4	STR.	4'-9"	51	A19	4	4	STR.	4'-11"	13							B6	94	4	STR.	24'-0"	1507	K6	12	4	STR.	5'-7"	45
A7	8	4	STR.	4'-10"	26	A20	5	4	STR.	4'-10"	16																		
A8	1	5	STR.	27'-0"	28	A21	5	4	STR.	4'-9"	16							G1	2	5	STR.	34'-3"	71	S2	180	4	5	2'-9"	331
A9	1	5	STR.	11'-7"	12	A22	6	4	STR.	4'-8"	19													S3	36	5	6	3'-5"	128
A10	4	4	STR.	5'-0"	13	A23	7	4	STR.	4'-7"	21													S4	36	5	4	6'-1"	228
A11	5	4	STR.	5'-1"	17	A24	8	4	STR.	4'-6"	24																		
A12	5	4	STR.	5'-2	17	A25	10	4	STR.	4'-5"	30													U1	36	4	3	16'-3"	391
A13	6	4	STR.	5'-3"	21	A26	15	4	STR.	4'-4"	43																		

ALL BARS SHALL BE EPOXY COATED.

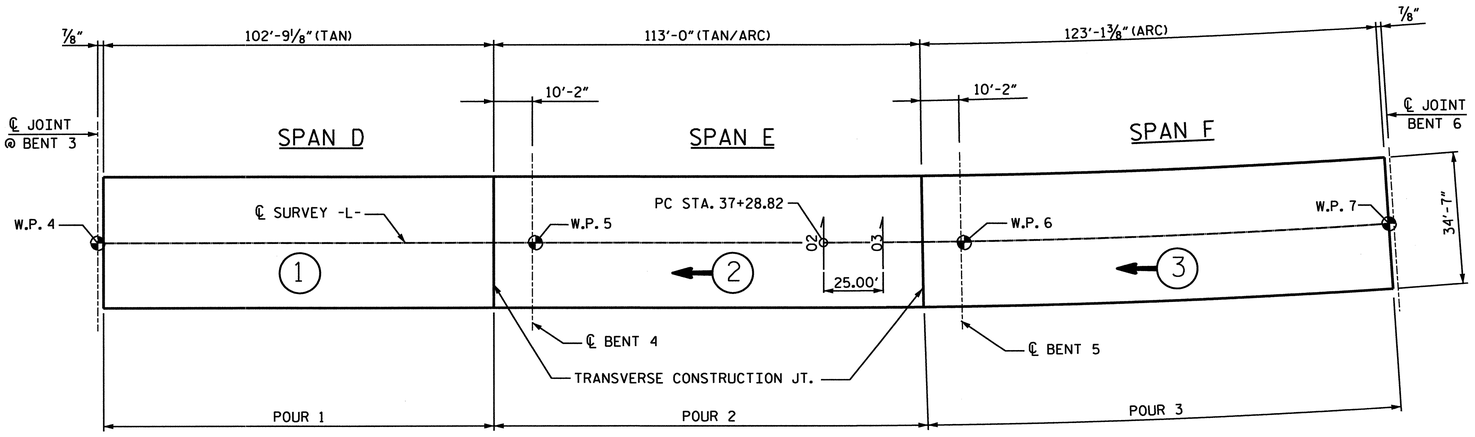

POURING SEQUENCE FOR SPANS D, E & F

THE SEQUENCE OF POURS SHALL PROCEED AS SHOWN IN ORDER OF ASCENDING NUMBERS.

(#) INDICATES POUR NUMBER AND DIRECTION OF POUR.

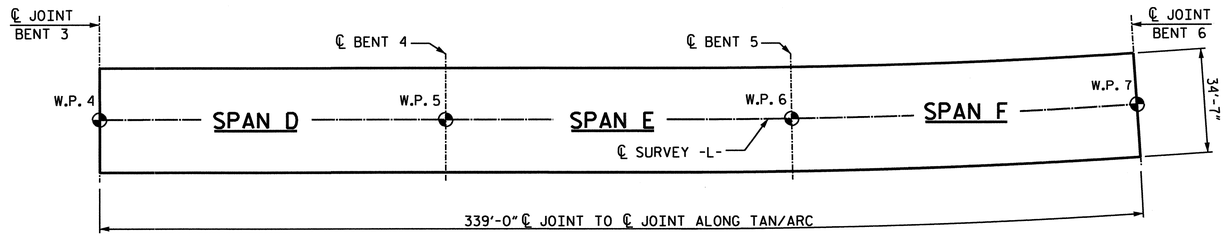

LAYOUT FOR COMPUTING AREA REINFORCED CONCRETE DECK SLAB

(SQ. FT. = 11,719)

BAR TYPES

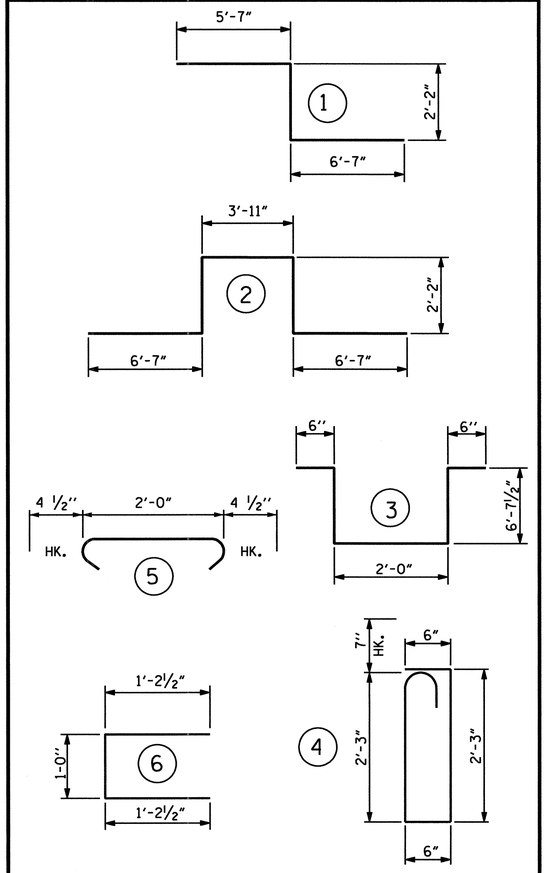

ALL BAR DIMENSIONS ARE OUT TO OUT

SUPERSTRUCTURE BILL OF MATERIAL

	CLASS AA CONCRETE	REINFORCING STEEL	EPOXY COATED REINFORCING STEEL
		(LBS.)	(LBS.)
POUR 1	107.0		
POUR 2	129.5		
POUR 3	142.1		
TOTALS**	378.6		54,808

**QUANTITIES FOR PARAPET AND END POSTS ARE NOT INCLUDED

PROJECT NO. B-682

BRUNSWICK COUNTY

STATION: 47+08.03 -L- POT

SHEET 2 OF 8

STD. NO. BOM2

ASSEMBLED BY : D. H. Carter DATE : JULY 2006
CHECKED BY : J. A. Lee DATE : JULY 2006

DRAWN BY : JMB 5/87
CHECKED BY : SJD 9/87

REV. 6/1/94 EEM/GRP
REV. 8/16/99 RWW/LES
REV. 5/1/06 TLA/GM

THIS STANDARD DRAWING HAS BEEN REVIEWED AND ADAPTED FOR USE AT THE REFERENCED LOCATION BY THE UNDERSIGNED.

NORTH CAROLINA PROFESSIONAL SEAL 15832 ENGINEER JOEL A. LEE
1-17-07

PLANS PREPARED BY:

PARSONS TRANSPORTATION GROUP
Engineers and Planners
RALEIGH, NORTH CAROLINA

JOB NO. 645615
DWG. NO.

STATE OF NORTH CAROLINA
DEPARTMENT OF TRANSPORTATION
RALEIGH

STANDARD

SUPERSTRUCTURE BILL OF MATERIAL SPANS D-F

REVISIONS							SHEET NO.
NO.	BY:	DATE:	NO.	BY:	DATE:		S-133
1			3				TOTAL SHEETS
2			4				237

REINFORCING BAR SCHEDULE

SPANS G, H AND I

BAR	NO.	SIZE	TYPE	LENGTH (FT)	WEIGHT (LBS.)	BAR	NO.	SIZE	TYPE	LENGTH (FT)	WEIGHT (LBS.)	BAR	NO.	SIZE	TYPE	LENGTH (FT)	WEIGHT (LBS.)	BAR	NO.	SIZE	TYPE	LENGTH (FT)	WEIGHT (LBS.)	BAR	NO.	SIZE	TYPE	LENGTH (FT)	WEIGHT (LBS.)
A1	543	5	STR.	34'-3"	19219	A14	13	4	STR.	4'-11"	43							B1	282	4	STR.	28'-1"	5290	K1	8	8	2	21'-5"	457
A2	1	5	STR.	32'-9"	34	A15	16	4	STR.	4'-10"	52							B2	130	5	STR.	28'-2"	3819	K2	8	8	1	14'-4"	306
A3	1	5	STR.	7'-5"	8	A16	16	4	STR.	4'-9"	51							B3	94	7	STR.	60'-0"	11528	K3	18	6	STR.	5'-1"	137
A4	13	4	STR.	5'-0"	43	A17	18	4	STR.	4'-8"	56							B4	88	7	STR.	34'-0"	6116	K4	60	4	STR.	8'-1"	324
A5	17	4	STR.	5'-1"	58	A18	20	4	STR.	4'-7"	61							B5	94	7	STR.	23'-3"	4467	K5	12	4	STR.	27'-4"	219
A6	15	4	STR.	5'-2"	52	A19	23	4	STR.	4'-6"	69							B6	94	4	STR.	24'-3"	1523	K6	12	4	STR.	5'-7"	45
A7	17	4	STR.	5'-3"	60	A20	30	4	STR.	4'-5"	149																		
A8	22	4	STR.	5'-4"	78	A21	46	4	STR.	4'-4"	133							G1	2	5	STR.	34'-3"	71	S2	180	4	5	2'-9"	331
A9	22	4	STR.	5'-5"	80	A22	42	4	STR.	4'-3"	119													S3	36	5	6	3'-5"	128
A10	27	4	STR.	5'-6"	99																			S4	36	5	4	6'-1"	228
A11	42	4	STR.	5'-7"	157																								
A12	53	4	STR.	5'-8	201																			U1	36	4	3	16'-3"	391
A13	1	5	STR.	9'-4"	10																								

ALL BARS SHALL BE EPOXY COATED.

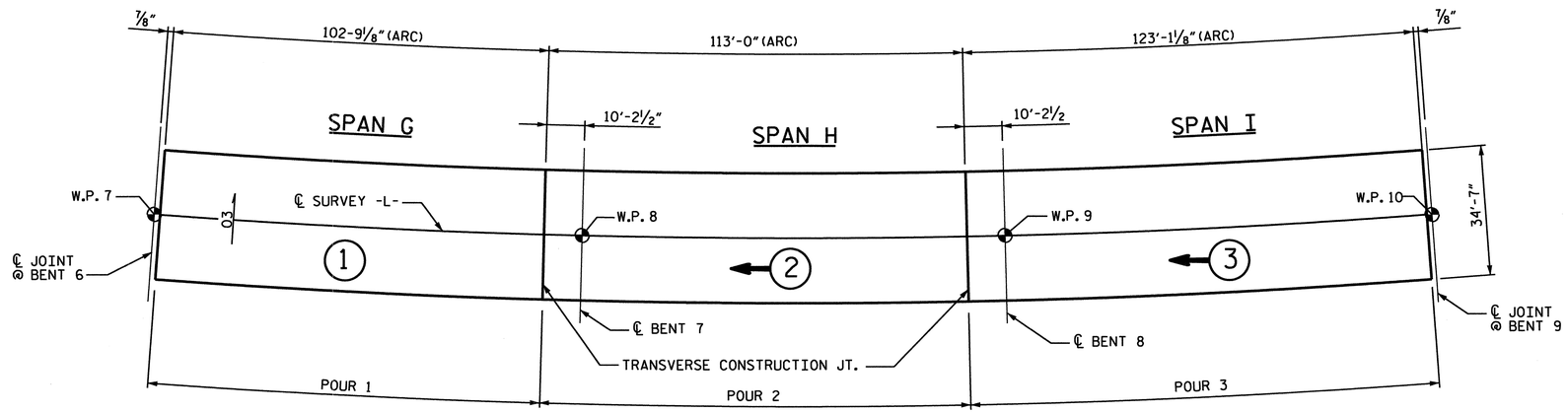

POURING SEQUENCE FOR SPANS G, H & I

THE SEQUENCE OF POURS SHALL PROCEED AS SHOWN IN ORDER OF ASCENDING NUMBERS.

(#) INDICATES POUR NUMBER AND DIRECTION OF POUR.

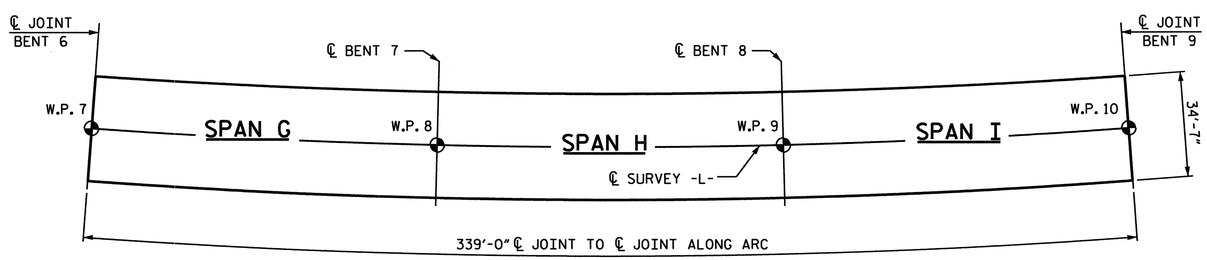

LAYOUT FOR COMPUTING AREA REINFORCED CONCRETE DECK SLAB

(SQ. FT. = 11,716)

BAR TYPES

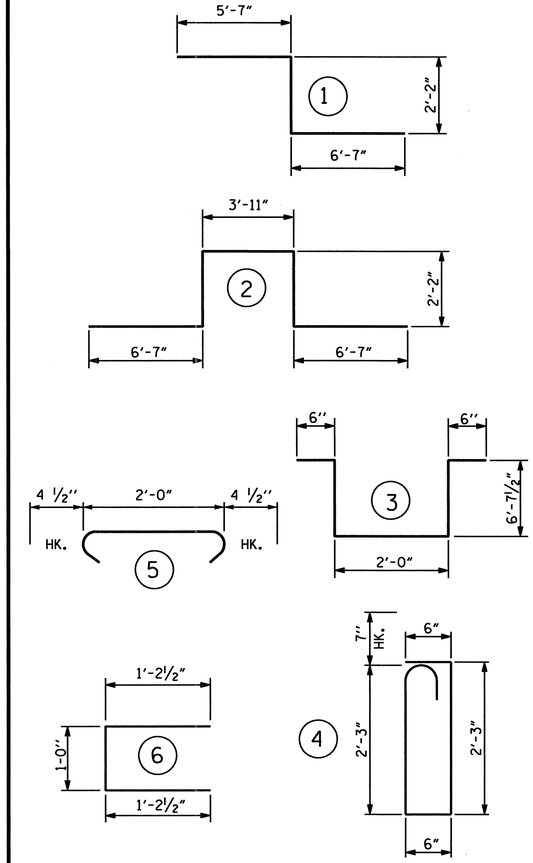

ALL BAR DIMENSIONS ARE OUT TO OUT

SUPERSTRUCTURE BILL OF MATERIAL

	CLASS AA CONCRETE	REINFORCING STEEL	EPOXY COATED REINFORCING STEEL
		(LBS.)	(LBS.)
POUR 1	107.1		
POUR 2	129.3		
POUR 3	143.1		
TOTALS**	379.5		56,212

**QUANTITIES FOR PARAPET AND END POSTS ARE NOT INCLUDED

PROJECT NO. B-682

BRUNSWICK COUNTY

STATION: 47+08.03 -L- POT

SHEET 3 OF 8

STATE OF NORTH CAROLINA
DEPARTMENT OF TRANSPORTATION
RALEIGH

STANDARD

SUPERSTRUCTURE BILL OF MATERIAL SPANS G-I

REVISIONS							SHEET NO.
NO.	BY:	DATE:	NO.	BY:	DATE:		5-134
1			3				TOTAL SHEETS
2			4				267

PLANS PREPARED BY:

PARSONS
TRANSPORTATION GROUP
Engineers and Planners
RALEIGH, NORTH CAROLINA

JOB NO. 645615

DWG. NO.

THIS STANDARD DRAWING HAS BEEN REVIEWED AND ADAPTED FOR USE AT THE REFERENCED LOCATION BY THE UNDERSIGNED.

NORTH CAROLINA PROFESSIONAL SEAL 15832 ENGINEER JOEL A. LEE

1-17-07

ASSEMBLED BY : D. H. Carter	DATE : JULY 2006		
CHECKED BY : J. A. Lee	DATE : JULY 2006		
DRAWN BY : JMB 5/87	REV. 6/1/94	EEM/GRP	
CHECKED BY : SJD 9/87	REV. 8/16/99	RWW/LES	
	REV. 5/1/06	TLA/GM	

STD. NO. BOM2

REINFORCING BAR SCHEDULE

SPANS J AND K

BAR	NO.	SIZE	TYPE	LENGTH (FT)	WEIGHT (LBS.)	BAR	NO.	SIZE	TYPE	LENGTH	WEIGHT	BAR	NO.	SIZE	TYPE	LENGTH	WEIGHT	BAR	NO.	SIZE	TYPE	LENGTH	WEIGHT	BAR	NO.	SIZE	TYPE	LENGTH	WEIGHT
A1	359	5	STR.	34'-3"	12824	A10	9	4	STR.	4'-11"	30	B1	282	4	STR.	28'-1"	5290	K1	8	8	2	21'-5"	457	S2	90	4	5	2'-9"	165
A2	1	5	STR.	14'-9"	15	A11	8	4	STR.	4'-10"	26	B2	80	4	STR.	30'-0"	1603	K2	8	8	1	14'-4"	306	S3	36	5	4	3'-10"	144
A3	155	4	STR.	5'-0"	518	A12	8	4	STR.	4'-9"	25	B3	47	7	STR.	60'-0"	5764	K3	18	6	STR.	5'-1"	137	S4	18	5	3	6'-1"	114
A4	9	4	STR.	5'-1"	31	A13	9	4	STR.	4'-8"	28	B4	44	7	STR.	34'-0"	3058	K4	30	4	STR.	8'-1"	162						
A5	8	4	STR.	5'-2"	28	A14	11	4	STR.	4'-7"	34	B5	47	7	STR.	23'-3"	2234	K5	6	4	STR.	27'-4"	110	U1	18	4	3	16'-3"	195
A6	10	4	STR.	5'-3"	35	A15	15	4	STR.	4'-6"	45							K6	6	4	STR.	5'-7"	22						
A7	10	4	STR.	5'-4"	36	A16	14	4	STR.	4'-5"	41	G1	2	5	STR.	34'-3"	71												
A8	15	4	STR.	5'-5"	54																								
A9	16	4	STR.	5'-6"	59																								

ALL BARS SHALL BE EPOXY COATED.

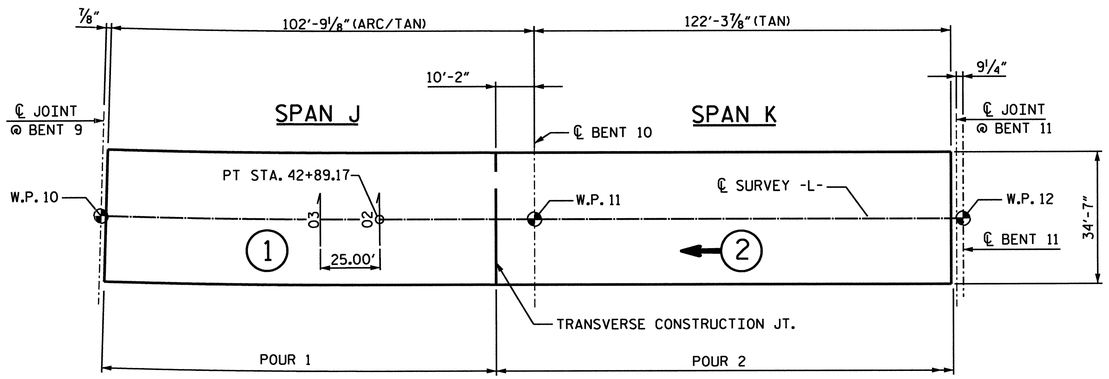

POURING SEQUENCE FOR SPANS J & K

THE SEQUENCE OF POURS SHALL PROCEED AS SHOWN IN ORDER OF ASCENDING NUMBERS.

(#) INDICATES POUR NUMBER AND DIRECTION OF POUR.

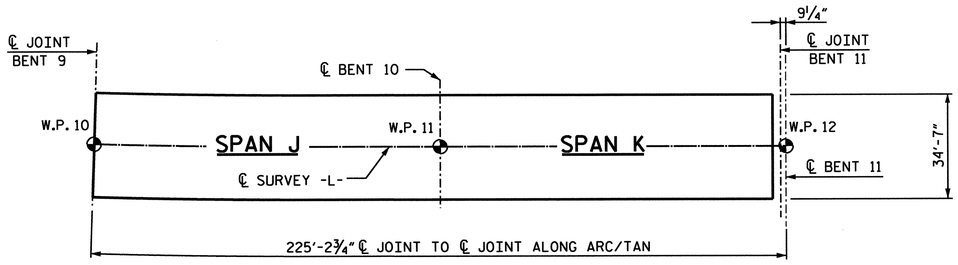

LAYOUT FOR COMPUTING AREA REINFORCED CONCRETE DECK SLAB

(SQ. FT. = 7,769)

BAR TYPES

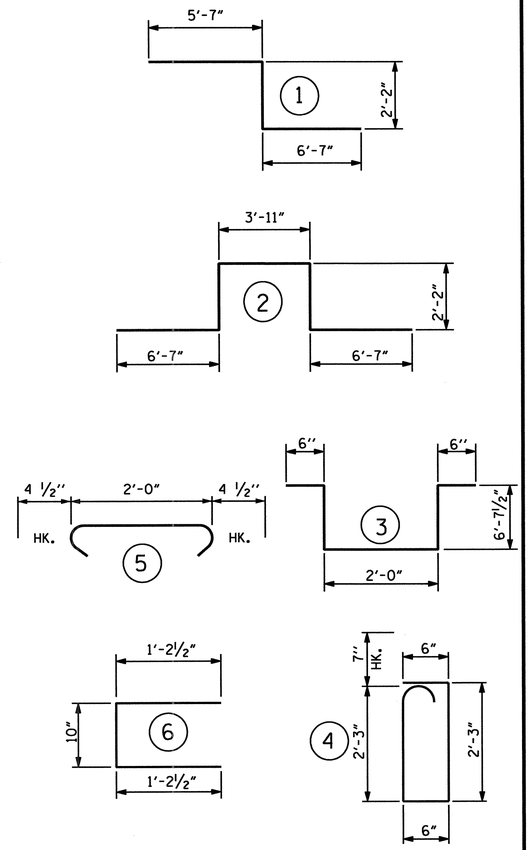

ALL BAR DIMENSIONS ARE OUT TO OUT

SUPERSTRUCTURE BILL OF MATERIAL

	CLASS AA CONCRETE	REINFORCING STEEL	EPOXY COATED REINFORCING STEEL
		(LBS.)	(LBS.)
POUR 1	107.1		
POUR 2	140.6		
TOTALS**	247.7		33,645

**QUANTITIES FOR PARAPET AND END POSTS ARE NOT INCLUDED

PROJECT NO. B-682

BRUNSWICK COUNTY

STATION: 47+08.03 -L- POT

SHEET 4 OF 8

THIS STANDARD DRAWING HAS BEEN REVIEWED AND ADAPTED FOR USE AT THE REFERENCED LOCATION BY THE UNDERSIGNED.

NORTH CAROLINA PROFESSIONAL SEAL 13838 ENGINEER JOEL A. LEE
1-17-07

PLANS PREPARED BY:

PARSONS TRANSPORTATION GROUP
Engineers and Planners
RALEIGH, NORTH CAROLINA

JOB NO. 645615

DWG. NO.

STATE OF NORTH CAROLINA
DEPARTMENT OF TRANSPORTATION
RALEIGH

STANDARD

SUPERSTRUCTURE BILL OF MATERIAL SPANS J-K

REVISIONS						SHEET NO.
NO.	BY:	DATE:	NO.	BY:	DATE:	S-135
1			3			TOTAL SHEETS
2			4			237

STD. NO. BOM2

ASSEMBLED BY : D. H. Carter	DATE : JULY 2006	REV. 6/1/94	EEM/GRP
CHECKED BY : J. A. Lee	DATE : JULY 2006	REV. 8/16/99	RWW/LES
DRAWN BY : JMB 5/87		REV. 5/1/06	TLA/GM
CHECKED BY : SJD 9/87			

REINFORCING BAR SCHEDULE

SPANS L - N

BAR	NO.	SIZE	TYPE	LENGTH	WEIGHT	BAR	NO.	SIZE	TYPE	LENGTH	WEIGHT
A301	1,962	5	STR.	34'-3"	70,088	S300	12	4	3	14'-2"	114
						S301	12	4	STR.	4-11"	39
B301	1,748	4	STR.	30'-0"	35,030	S302	18	4	4	14'-4"	172
B302	204	7	STR.	40'-6"	16,888	S303	156	4	7	1'-9"	182
						S304	24	4	6	7'-11"	127
K300	10	5	STR.	29'-2"	304	S305	84	4	1	19'-0"	1,066
K301	24	5	STR.	6'-2"	154	S306	420	4	7	2'-5"	678
K302	12	5	2	12'-10"	161	S307	18	4	1	25'-2"	303
K304	40	6	STR.	27'-6"	1,652	S308	12	4	5	20'-11"	168
K305	16	8	STR.	28'-2"	1,203	S309	12	4	5	19'-3"	154
K306	16	8	STR.	27'-6"	1,175	S310	486	4	7	2'-3"	730
K307	88	5	STR.	11'-6"	1,056						
K308	88	5	STR.	5'-9"	528						
K309	12	5	STR.	7'-4"	92						
K310	12	5	STR.	3'-4"	42						
K311	12	5	STR.	6'-10"	86						

SUPERSTRUCTURE BILL OF MATERIAL

EPOXY COATED REINFORCING STEEL (LBS.)	132,192
CLASS AA CONCRETE (DECK SLAB)	
POUR #1 (C.Y.)	100.5
POUR #2 (C.Y.)	100.5
POUR #3 (C.Y.)	165.5
POUR #4 (C.Y.)	127.2
POUR #5 (C.Y.)	127.2
POUR #6 (C.Y.)	14.9
CLASS AA CONCRETE (DECK SLAB) TOTAL (C.Y.)	635.8
PRESTRESS +6000 CONCRETE (C.Y.) (CLOSURE SPLICE DIAPHRAGMS)	60.1
CLASS AA CONCRETE (BENT DIAPHRAGMS) (C.Y.)	44.4

QUANTITIES FOR PARAPET ARE NOT INCLUDED

SUPERSTRUCTURE REINFORCING STEEL LENGTHS ARE BASED ON THE FOLLOWING MINIMUM SPLICE LENGTHS

BAR SIZE	SUPERSTRUCTURE EXCEPT APPROACH SLABS, PARAPET, AND BARRIER RAIL		APPROACH SLABS		PARAPET AND BARRIER RAIL
	EPOXY COATED	UNCOATED	EPOXY COATED	UNCOATED	
#4	2'-0"	1'-9"	2'-0"	1'-9"	2'-9"
#5	2'-6"	2'-2"	2'-6"	2'-2"	3'-5"
#6	3'-0"	2'-7"	3'-10"	2'-7"	4'-4"
#7	5'-3"	3'-6"			
#8	6'-10"	4'-7"			

GROOVING BRIDGE FLOORS

BRIDGE DECK TOTAL 15,410 SQ. FT.

SPAN L SPAN M SPAN N

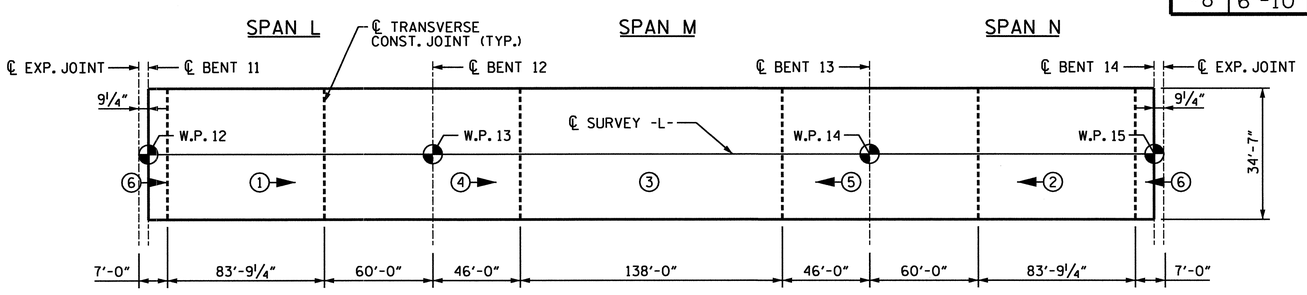

POURING SEQUENCE FOR SPANS L - N

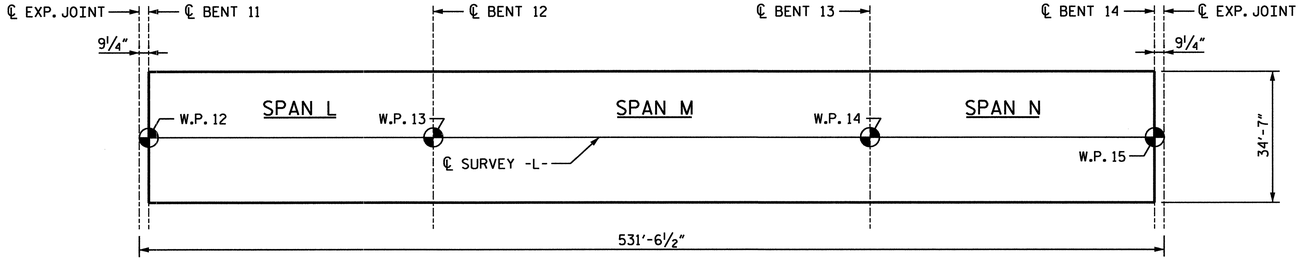

LAYOUT FOR COMPUTING AREA
REINFORCED CONCRETE DECK SLAB
(SQ. FT. 18,377)

BAR TYPES

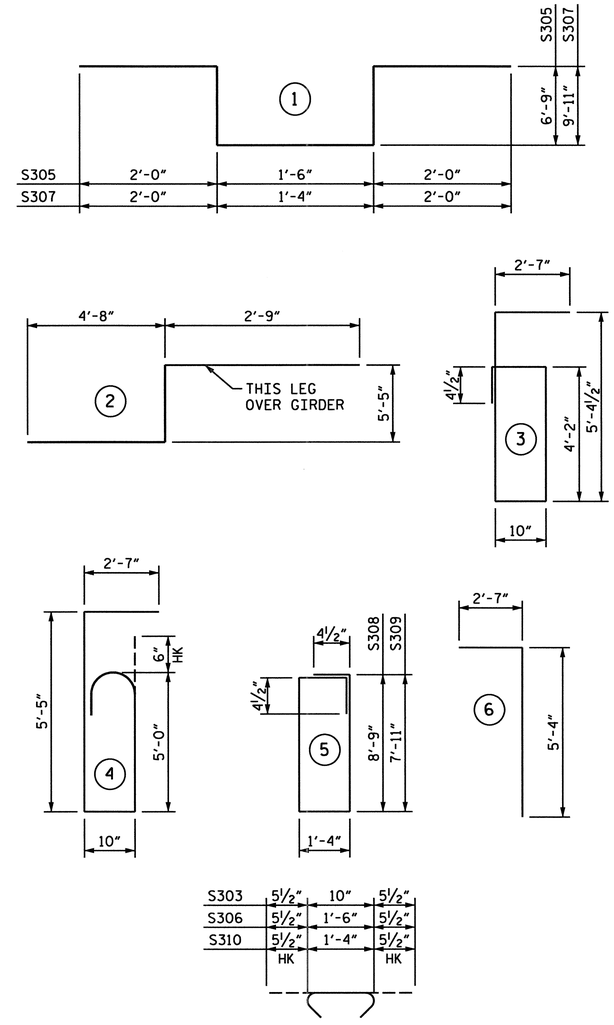

NOTE:
ALL BAR DIMENSIONS ARE OUT TO OUT.

PROJECT NO. B-0682

BRUNSWICK COUNTY

STATION: 47+08.03 -L- POT

SHEET 5 OF 8

NORTH CAROLINA PROFESSIONAL SEAL 024928 ENGINEER RODNEY E. MONEY 2/24/07

STATE OF NORTH CAROLINA
DEPARTMENT OF TRANSPORTATION
RALEIGH

SUPERSTRUCTURE
BILL OF MATERIAL

SPANS L-N

PREPARED IN THE OFFICE OF
TYLIN INTERNATIONAL
RALEIGH, NORTH CAROLINA
Copyright © 2006, TYLI

DWG NO.

REVISIONS						SHEET NO.
NO.	BY:	DATE:	NO.	BY:	DATE:	S-156
1			3			TOTAL SHEETS
2			4			207

DRAWN BY : S. A. MORGAN DATE : NOV. 06
CHECKED BY : R.E. MONEY DATE : NOV. 06

DATE: $DATE$
FILE: $FILENAME$

REINFORCING BAR SCHEDULE

SPANS O, P, Q AND R

BAR	NO.	SIZE	TYPE	LENGTH (FT)	WEIGHT (LBS.)	BAR	NO.	SIZE	TYPE	LENGTH	WEIGHT	BAR	NO.	SIZE	TYPE	LENGTH	WEIGHT	BAR	NO.	SIZE	TYPE	LENGTH	WEIGHT	BAR	NO.	SIZE	TYPE	LENGTH	WEIGHT
						B1	141	4	STR.	23'-3"	2190	G1	2	5	STR.	34.25	71	K1	8	8	2	21'-5"	457						
A1	609	5	STR.	34'-3"	21648	B2	140	4	STR.	28'-11"	2704							K2	8	8	1	14'-3"	304	S2	270	4	5	2'-9"	496
A2	506	4	STR.	5'-0"	1690	B3	141	7	STR.	60'-0"	17292							K3	18	6	STR.	5'-1"	137	S3	36	5	6	3'-4"	125
						B4	132	7	STR.	28'-6"	7690							K4	90	4	STR.	8'-1"	486	S4	36	5	4	6'-0"	225
						B5	141	7	STR.	12'-3"	3530							K5	18	4	STR.	27'-4"	329						
						B6	188	4	STR.	20'-3"	2543							K6	18	4	STR.	5'-4"	64	U1	54	4	3	16'-0"	577
						B7	141	4	STR.	23'-7"	2221																		

ALL BARS SHALL BE EPOXY COATED.

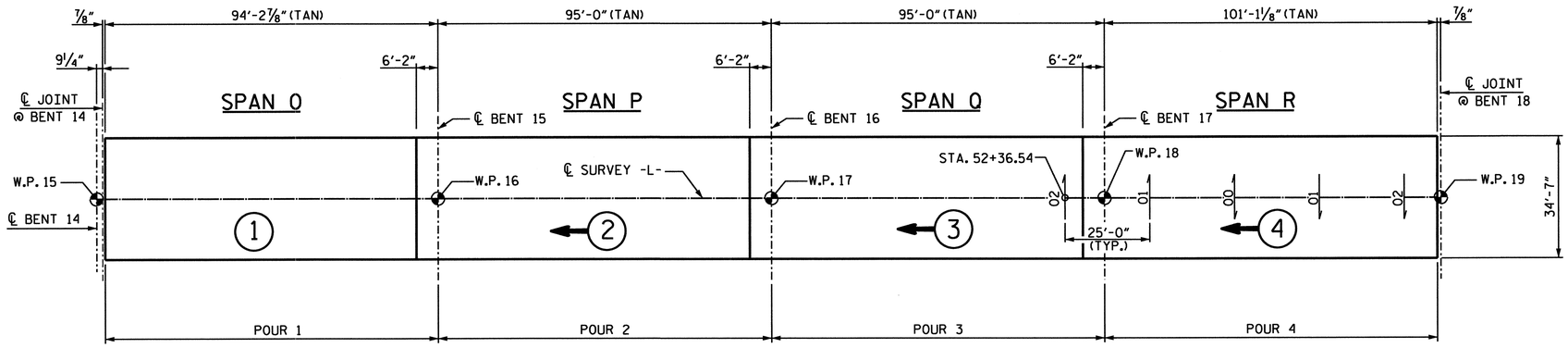

POURING SEQUENCE FOR SPANS O, P, Q & R

THE SEQUENCE OF POURS SHALL PROCEED AS SHOWN IN ORDER OF ASCENDING NUMBERS.

(#) INDICATES POUR NUMBER AND DIRECTION OF POUR.

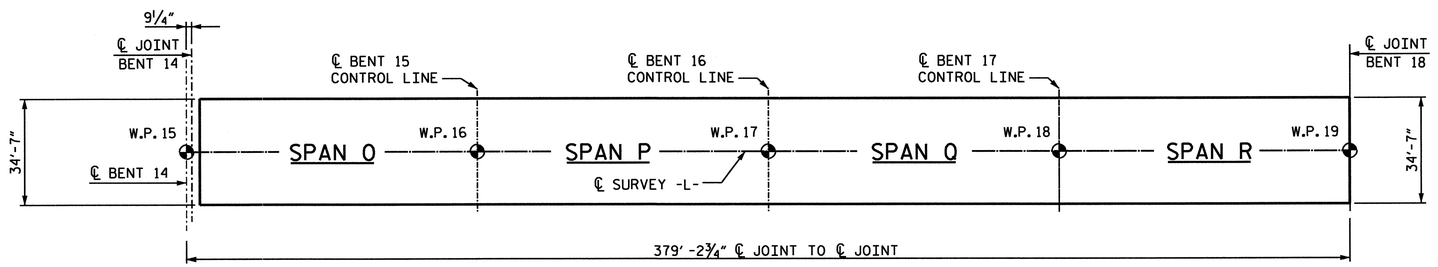

LAYOUT FOR COMPUTING AREA REINFORCED CONCRETE DECK SLAB

(SQ. FT. = 13,095)

BAR TYPES

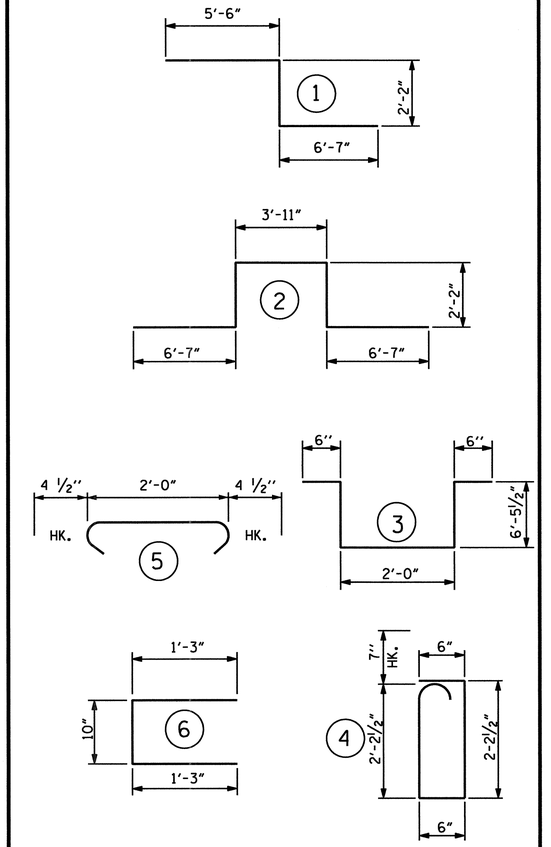

ALL BAR DIMENSIONS ARE OUT TO OUT

SUPERSTRUCTURE BILL OF MATERIAL

	CLASS AA CONCRETE	REINFORCING STEEL	EPOXY COATED REINFORCING STEEL
		(LBS.)	(LBS.)
POUR 1	82.3		
POUR 2	100.5		
POUR 3	100.5		
POUR 4	108.1		
TOTALS**	391.4		64,776

**QUANTITIES FOR PARAPET AND END POSTS ARE NOT INCLUDED

PROJECT NO. B-682

BRUNSWICK COUNTY

STATION: 47+08.03 -L- POT

SHEET 6 OF 8

THIS STANDARD DRAWING HAS BEEN REVIEWED AND ADAPTED FOR USE AT THE REFERENCED LOCATION BY THE UNDERSIGNED.

NORTH CAROLINA PROFESSIONAL SEAL 15882 ENGINEER JOEL A. LEE

1.17.07

PLANS PREPARED BY:

PARSONS TRANSPORTATION GROUP

Engineers and Planners

RALEIGH, NORTH CAROLINA

JOB NO. 645615

DWG. NO.

STATE OF NORTH CAROLINA
DEPARTMENT OF TRANSPORTATION
RALEIGH

STANDARD

SUPERSTRUCTURE BILL OF MATERIAL SPANS O-R

REVISIONS							SHEET NO.
NO.	BY:	DATE:	NO.	BY:	DATE:		S-137
1			3				TOTAL SHEETS
2			4				337

STD. NO. BOM2

ASSEMBLED BY : D. H. Carter		DATE : JULY 2006	
CHECKED BY : J. A. Lee		DATE : JULY 2006	
DRAWN BY : JMB 5/87	REV. 6/1/94	EEM/GRP	
CHECKED BY : SJD 9/87	REV. 8/16/99	RWW/LES	
	REV. 5/1/06	TLA/GM	

REINFORCING BAR SCHEDULE

SPANS S AND T

BAR	NO.	SIZE	TYPE	LENGTH (FT)	WEIGHT (LBS.)	BAR	NO.	SIZE	TYPE	LENGTH (FT)	WEIGHT (LBS.)	BAR	NO.	SIZE	TYPE	LENGTH (FT)	WEIGHT (LBS.)	BAR	NO.	SIZE	TYPE	LENGTH (FT)	WEIGHT (LBS.)	BAR	NO.	SIZE	TYPE	LENGTH (FT)	WEIGHT (LBS.)
A1	6	5	STR.	34′-3″	214	A19	10	5	STR.	35′-9″	373	A37	8	5	STR.	37′-0″	309	A55	2	5	STR.	15′-10″	33	G1	1	5	STR.	34′-3″	36
A2	8	5	STR.	34′-4″	286	A20	2	5	STR.	9′-10″	21	A38	6	5	STR.	37′-1″	232	A56	2	5	STR.	20′-1″	42	G2	1	5	STR.	38′-3″	40
A3	6	5	STR.	34′-5″	215	A21	2	5	STR.	20′-11″	44	A39	8	5	STR.	37′-2″	310	A57	2	5	STR.	24′-3″	51						
A4	8	5	STR.	34′-6″	288	A22	2	5	STR.	32′-1″	67	A40	6	5	STR.	37′-3″	233	A58	2	5	STR.	28′-6″	59	K1	4	8	2	20′-4″	217
A5	6	5	STR.	34′-7″	216	A23	6	5	STR.	35′-10″	224	A41	8	5	STR.	37′-4″	312	A59	2	5	STR.	32′-8″	68	K2	4	8	1	13′-9″	147
A6	8	5	STR.	34′-8″	289	A24	6	5	STR.	35′-11″	225	A42	6	5	STR.	37′-5″	234	A60	2	5	STR.	36′-11″	77	K3	9	6	STR.	7′-0″	95
A7	6	5	STR.	34′-9″	217	A25	8	5	STR.	36′-0″	300	A43	8	5	STR.	37′-6″	313	A61	26	5	STR.	38′-4″	1040	K4	12	4	STR.	9′-0″	72
A8	8	5	STR.	34′-10″	291	A26	6	5	STR.	36′-1″	226	A44	6	5	STR.	37′-7″	235	A62	296	5	STR.	38′-3″	11809	K5	5	4	STR.	31′-4″	105
A9	8	5	STR.	34′-11″	291	A27	8	5	STR.	36′-2″	302	A45	8	5	STR.	37-8″	314	A63	2	5	STR.	37′-8″	79	K6	12	4	STR.	10′-0″	80
A10	6	5	STR.	35″-0″	219	A28	8	5	STR.	36′-3″	302	A46	6	5	STR.	37-9″	236	A64	2	5	STR.	31′-0″	65	K7	6	4	STR.	7′-4″	29
A11	8	5	STR.	35′-1″	293	A29	6	5	STR.	36′-4″	227	A47	8	5	STR.	37′-10″	316	A65	2	5	STR.	24′-3″	51	K8	4	8	2	22′-4″	239
A12	6	5	STR.	35′-2″	220	A30	6	5	STR.	36′-5″	228	A48	8	5	STR.	37′-11″	316	A66	2	5	STR.	17′-6″	37	K9	2	8	1	14′-3″	71
A13	8	5	STR.	35′-3″	294	A31	8	5	STR.	36′-6″	305	A49	6	5	STR.	38′-0″	238	A67	2	5	STR.	10′-11″	23	K10	2	8	1	13′-3″	76
A14	6	5	STR.	35′-4″	221	A32	6	5	STR.	36′-7″	229	A50	8	5	STR.	38′-1″	318	A68	2	5	STR.	4′-1″	9	K11	9	6	STR.	9′-0″	122
A15	8	5	STR.	35′-5″	296	A33	8	5	STR.	36′-8″	306	A51	4	5	STR.	38′-2″	159												
A16	6	5	STR.	35′-6″	222	A34	6	5	STR.	36′-9″	230	A52	2	5	STR.	11′-7″	24	B1	81	4	STR.	21′-1″	1141	S2	96	4	5	2′-9″	176
A17	8	5	STR.	35′-7″	297	A35	8	5	STR.	36′-10″	307	A53	2	5	STR.	7′-5″	15	B2	343	5	STR.	26′-7″	9510	S3	51	5	6	3′-6″	186
A18	6	5	STR.	35′-8″	223	A36	6	5	STR.	36′-11″	231	A54	2	5	STR.	3′-2″	7	B3	27	7	STR.	60′-0″	3311	S4	51	5	4	6′-1″	324
																		B4	24	7	STR.	25′-6″	1251						
																		B5	81	4	STR.	21′-6″	1163	U1	24	4	3	13′-4″	214

ALL BARS SHALL BE EPOXY COATED.

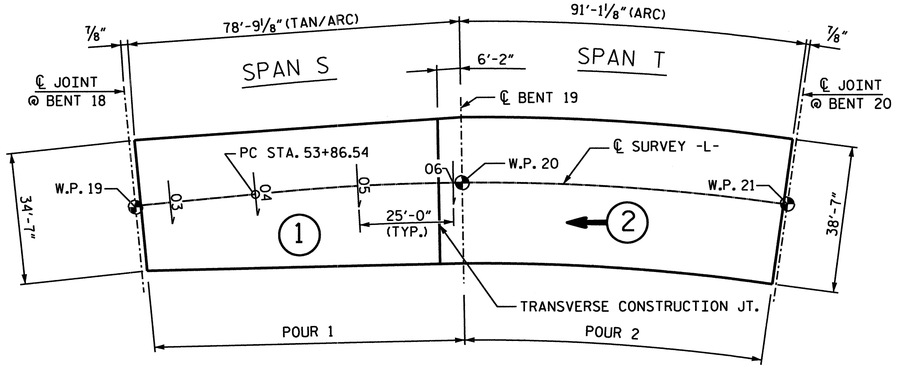

POURING SEQUENCE FOR SPANS S & T

THE SEQUENCE OF POURS SHALL PROCEED AS SHOWN IN ORDER OF ASCENDING NUMBERS.

(#) INDICATES POUR NUMBER AND DIRECTION OF POUR.

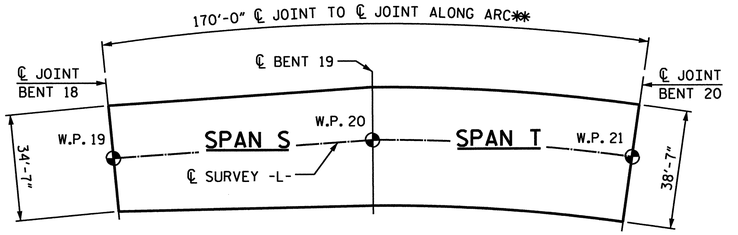

LAYOUT FOR COMPUTING AREA REINFORCED CONCRETE DECK SLAB

(SQ. FT. = 6,365)

BAR TYPES

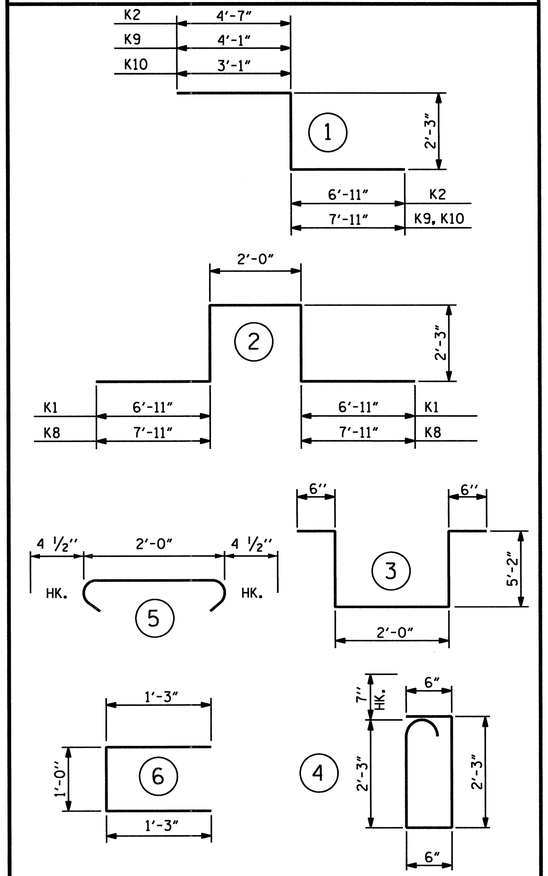

ALL BAR DIMENSIONS ARE OUT TO OUT

SUPERSTRUCTURE BILL OF MATERIAL

	CLASS AA CONCRETE	REINFORCING STEEL	EPOXY COATED REINFORCING STEEL
	(CU. YDS.)	(LBS.)	(LBS.)
POUR 1	102.8		
POUR 2	130.9		
TOTALS**	233.7		44,908

**QUANTITIES FOR PARAPET ARE NOT INCLUDED

PROJECT NO. B-682

BRUNSWICK COUNTY

STATION: 47+08.03 -L- POT

SHEET 7 OF 8

THIS STANDARD DRAWING HAS BEEN REVIEWED AND ADAPTED FOR USE AT THE REFERENCED LOCATION BY THE UNDERSIGNED.

NORTH CAROLINA PROFESSIONAL SEAL 15882 ENGINEER JOEL A. LEE

1-17-07

PLANS PREPARED BY:

PARSONS TRANSPORTATION GROUP

Engineers and Planners

RALEIGH, NORTH CAROLINA

JOB NO. 645615

DWG. NO.

STATE OF NORTH CAROLINA

DEPARTMENT OF TRANSPORTATION

RALEIGH

STANDARD

SUPERSTRUCTURE BILL OF MATERIAL SPANS S-T

REVISIONS							SHEET NO.
NO.	BY:	DATE:	NO.	BY:	DATE:		S-138
1			3				TOTAL SHEETS
2			4				207

STD. NO. BOM2

ASSEMBLED BY : D. H. Carter		DATE : JULY 2006	
CHECKED BY : J. A. Lee		DATE : JULY 2006	
DRAWN BY : JMB 5/87	REV. 6/1/94	EEM/GRP	
CHECKED BY : SJD 9/87	REV. 8/16/99	RWW/LES	
	REV. 5/1/06	TLA/GM	

REINFORCING BAR SCHEDULE

SPANS U, V AND W

BAR	NO.	SIZE	TYPE	LENGTH (FT)	WEIGHT (LBS.)	BAR	NO.	SIZE	TYPE	LENGTH	WEIGHT	BAR	NO.	SIZE	TYPE	LENGTH	WEIGHT	BAR	NO.	SIZE	TYPE	LENGTH	WEIGHT	BAR	NO.	SIZE	TYPE	LENGTH (FT)	WEIGHT (LBS.)
A1	2	5	STR.	2'-5"	5	A11	4	5	STR.	22'-2"	92	A21	2	5	STR.	9'-3"	19	B1	54	4	STR.	29'-1"	1049	K4	24	4	STR.	9'-0"	144
A2	2	5	STR.	9'-7"	20	A12	4	5	STR.	18'-7"	78	A22	2	5	STR.	2'-1"	4	B2	245	5	STR.	50'-9"	12968	K5	10	4	STR.	31'-4"	209
A3	2	5	STR.	16'-9"	35	A13	4	5	STR.	14'-11"	62							B3	54	7	STR.	58'-0"	6402	K6	12	4	STR.	10'-0"	80
A4	2	5	STR.	23'-11"	50	A14	4	5	STR.	11'-4"	47							B4	48	7	STR.	24'-0"	2355	K7	24	4	STR.	7'-4"	118
A5	2	5	STR.	31'-1"	65	A15	4	5	STR.	7'-9"	32							B5	54	4	STR.	16'-3"	586	K8	8	8	2	22'-4"	477
A6	918	5	STR.	38'-4"	36703	A16	4	5	STR.	4'-2"	17							B6	54	4	STR.	28'-7"	1031	K9	4	8	1	14'-3"	153
A7	4	5	STR.	36'-6"	152	A17	2	5	STR.	38'-0"	79													K10	4	8	1	13'-3"	142
A8	4	5	STR.	32'-11"	137	A18	2	5	STR.	30'-9"	64							G2	2	5	STR.	38'-3"	80	K11	18	6	STR.	9'-0"	243
A9	4	5	STR.	29'-4"	122	A19	2	5	STR.	23'-7"	49																		
A10	4	5	STR.	25'-9"	107	A20	2	5	STR.	16'-5"	34													S2	216	4	5	2'-9"	397
																								S3	54	5	6	3'-5"	192
																								S4	54	5	4	6'-1"	343
																								U1	54	4	3	13'-4"	481

ALL SHALL BE EPOXY COATED.

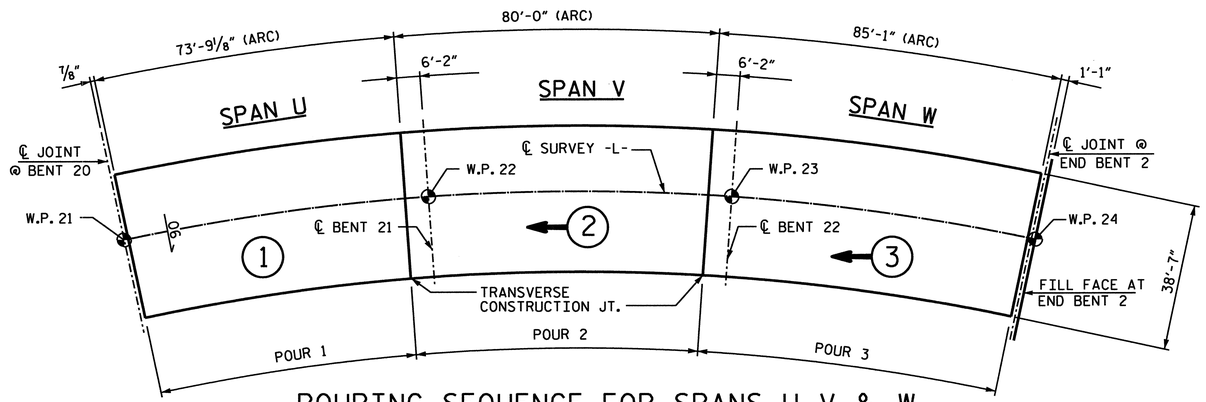

POURING SEQUENCE FOR SPANS U, V & W

THE SEQUENCE OF POURS SHALL PROCEED AS SHOWN IN ORDER OF ASCENDING NUMBERS.

← (#) INDICATES POUR NUMBER AND DIRECTION OF POUR.

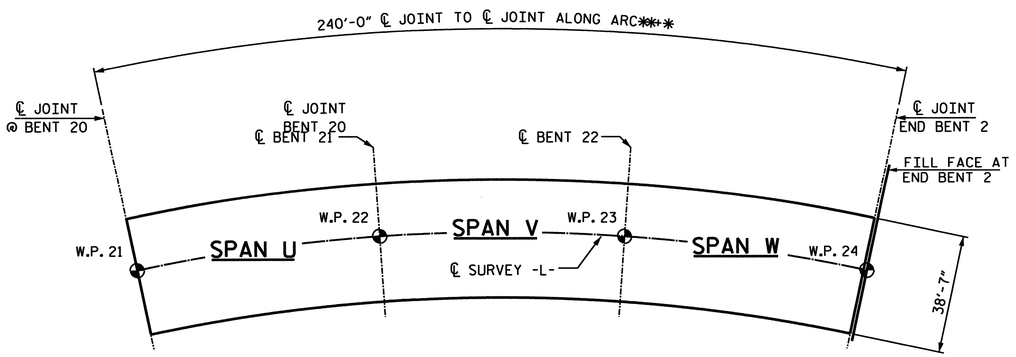

LAYOUT FOR COMPUTING AREA REINFORCED CONCRETE DECK SLAB

(SQ. FT. = 9,183)

BAR TYPES

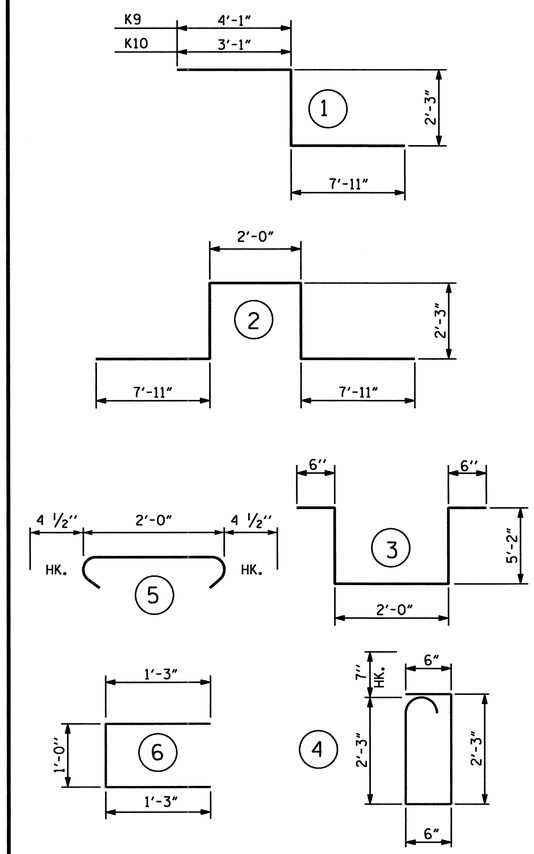

ALL BAR DIMENSIONS ARE OUT TO OUT

SUPERSTRUCTURE BILL OF MATERIAL

	CLASS AA CONCRETE	REINFORCING STEEL	EPOXY COATED REINFORCING STEEL
	(CU. YDS.)	(LBS.)	(LBS.)
POUR 1	94.7		
POUR 2	117.4		
POUR 3	126.5		
TOTALS**	338.6		65,422

**QUANTITIES FOR PARAPET ARE NOT INCLUDED

PROJECT NO. B-682

BRUNSWICK COUNTY

STATION: 47+08.03 -L- POT

SHEET 8 OF 8

STATE OF NORTH CAROLINA
DEPARTMENT OF TRANSPORTATION
RALEIGH

STANDARD

SUPERSTRUCTURE BILL OF MATERIAL SPANS U-W

THIS STANDARD DRAWING HAS BEEN REVIEWED AND ADAPTED FOR USE AT THE REFERENCED LOCATION BY THE UNDERSIGNED.

NORTH CAROLINA PROFESSIONAL SEAL 15832 ENGINEER JOEL A. LEE
1-11-07

PLANS PREPARED BY:

PARSONS TRANSPORTATION GROUP
Engineers and Planners
RALEIGH, NORTH CAROLINA

JOB NO. 645615

DWG. NO.

REVISIONS						SHEET NO.
NO.	BY:	DATE:	NO.	BY:	DATE:	5-139
1			3			TOTAL SHEETS
2			4			269

NO. BOM2

ASSEMBLED BY : D. H. Carter		DATE : JULY 2006	
CHECKED BY : J. A. Lee		DATE : JULY 2006	
BY :	JMB 5/87	REV. 6/1/94	EEM/GRP
	SJD 9/87	REV. 8/16/99	RWW/LES
		REV. 5/1/06	TLA/GM

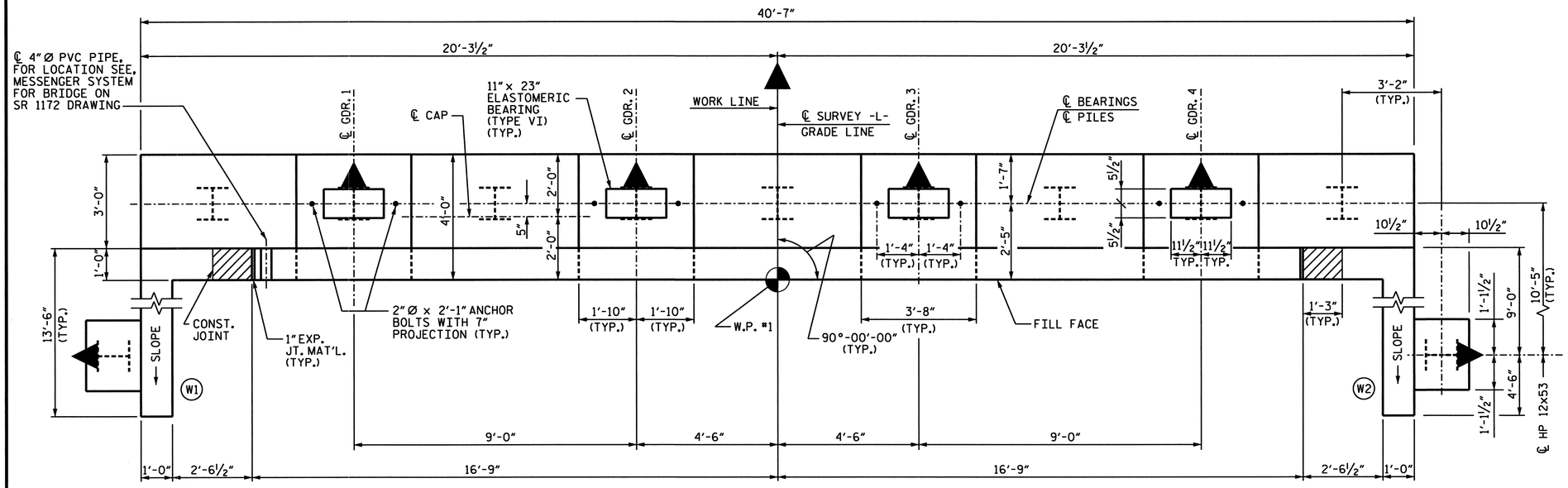

NOTES:

FOR SECTIONS A-A AND B-B, SEE SHEET 2 OF 3.

FOR PILE SPLICE DETAILS, SEE SHEET 2 OF 3.

BACKWALL SHALL BE PLACED BEFORE APPLYING THE EPOXY PROTECTIVE COATING.

THE TOP SURFACE AREAS OF THE END BENT CAPS SHALL BE CURED IN ACCORDANCE WITH THE STANDARD SPECIFICATIONS EXCEPT THAT THE MEMBRANE CURING COMPOUND METHOD SHALL NOT BE USED.

THE TOP SURFACE OF THE CAP EXCEPT THE BRIDGE SEAT BUILDUPS SHALL BE SLOPED TRANSVERSELY FROM THE FILL FACE TO THE BACK FACE AT THE RATE OF 2%.

THE CONCRETE IN THE SHADED AREA OF THE WING SHALL BE POURED AFTER THE JOINT BETWEEN THE DECK AND APPROACH SLAB HAS BEEN SAWED AND THE PARAPET AND END POST ARE CAST IF SLIP FORMING IS USED.

THE CONTRACTOR SHALL PROVIDE FOR INSTALLATION OF THE 4" DIA. DRAIN PIPE THROUGH THE WING WALL AS REQUIRED FOR REINFORCED BRIDGE APPROACH FILLS. SEE THE ROADWAY PLANS. REINFORCING STEEL IN THE WINGWALL MAY BE SHIFTED AS NECESSARY TO CLEAR THE DRAIN PIPE.

STIRRUPS IN CAP MAY BE SHIFTED AS NECESSARY TO CLEAR ANCHOR BOLTS.

PLAN

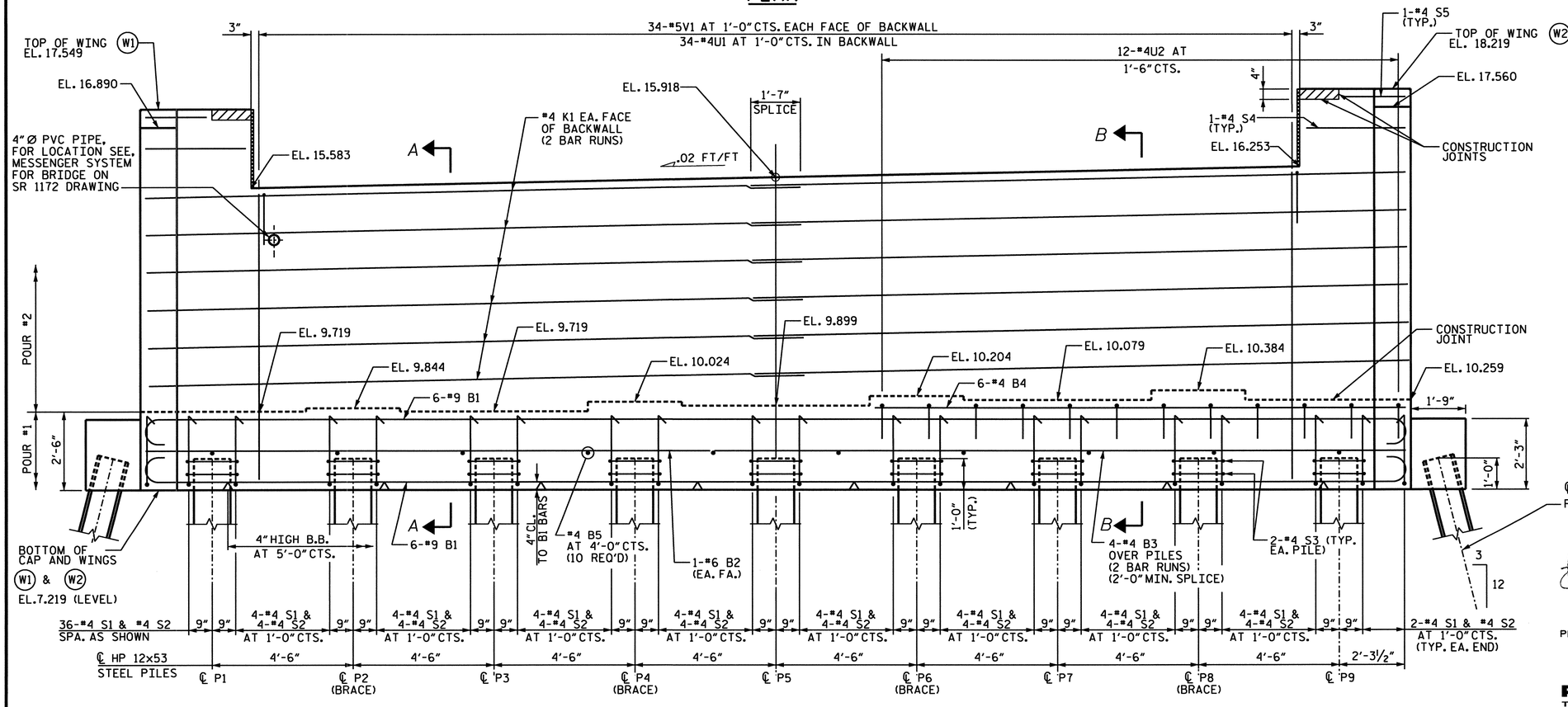

ELEVATION

DRAWN BY : D. RANDALL DATE : JULY 2006
CHECKED BY : I. C. ENGSTROM DATE : JULY 2006

PROJECT NO. B-682

BRUNSWICK COUNTY

STATION: 47+08.03 -L- POT

SHEET 1 OF 3

NORTH CAROLINA PROFESSIONAL SEAL 32206 ENGINEER IAN C. ENGSTROM 02-23-07

PLANS PREPARED BY:

PARSONS TRANSPORTATION GROUP
Engineers and Planners
RALEIGH, NORTH CAROLINA

JOB NO. 645615

DWG. NO.

STATE OF NORTH CAROLINA
DEPARTMENT OF TRANSPORTATION
RALEIGH

SUBSTRUCTURE END BENT 1

REVISIONS						SHEET NO.
NO.	BY:	DATE:	NO.	BY:	DATE:	S-140
1			3			TOTAL SHEETS
2			4			207

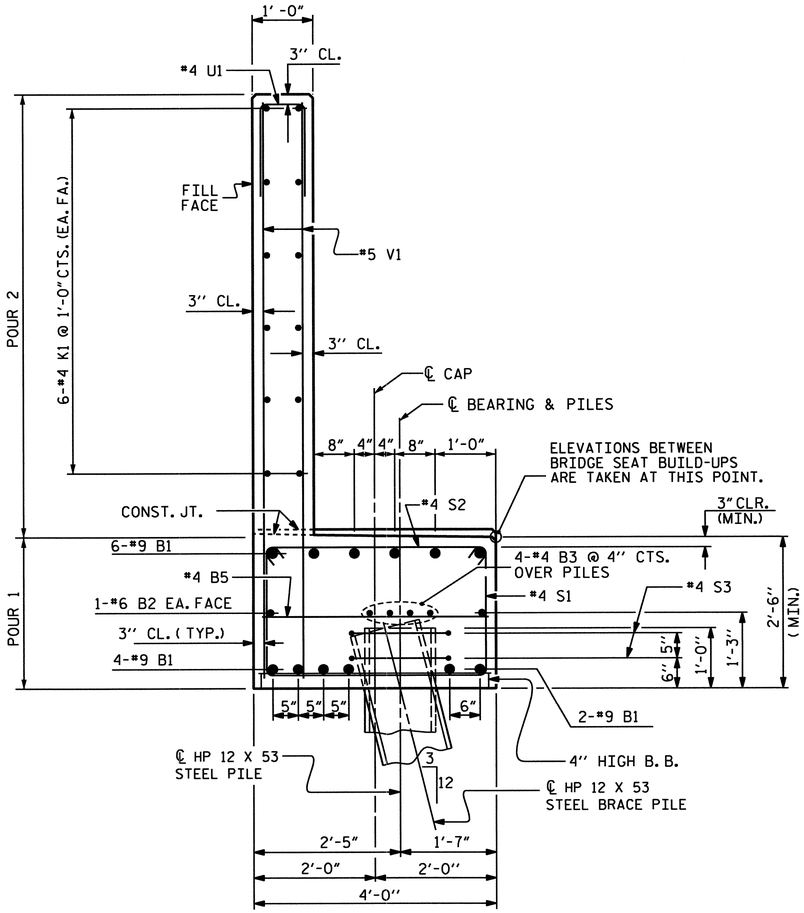

SECTION A-A

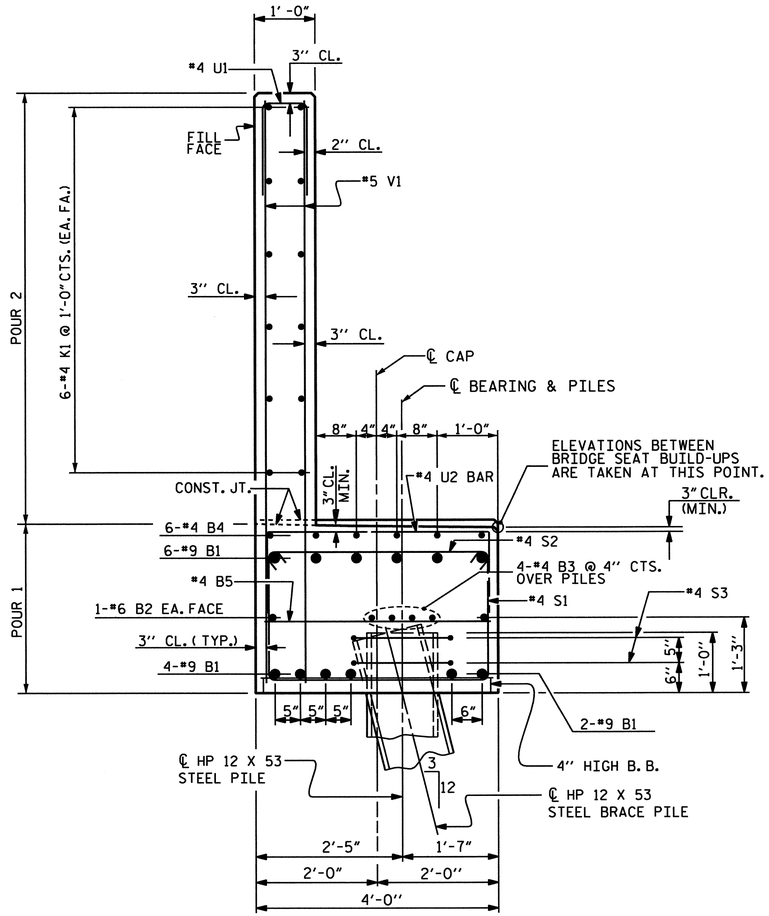

SECTION B-B

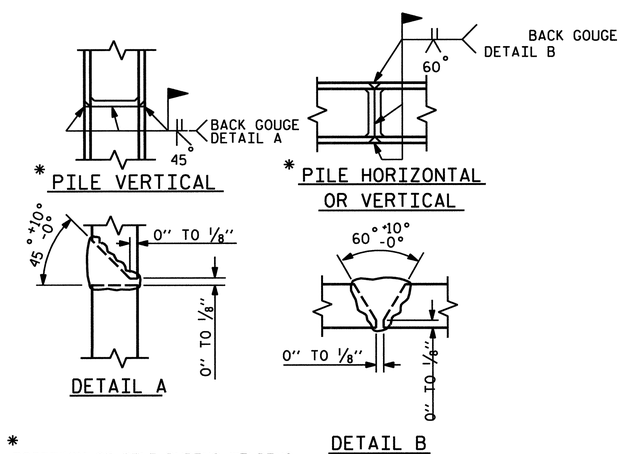

PILE SPLICE DETAILS

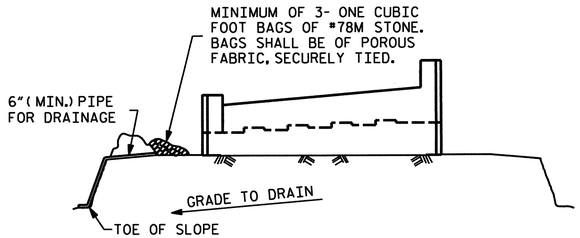

BAGGED STONE AND PIPE SHALL BE PLACED IMMEDIATELY AFTER COMPLETION OF END BENT EXCAVATION. PIPE MAY BE EITHER CONCRETE, CORRUGATED STEEL, CORRUGATED ALUMINUM ALLOY, OR CORRUGATED PLASTIC. PERFORATED PIPE WILL NOT BE ALLOWED.

BAGGED STONE SHALL REMAIN IN PLACE UNTIL THE ENGINEER DIRECTS THAT IT BE REMOVED. THE CONTRACTOR SHALL REMOVE AND DISPOSE OF SILT ACCUMULATIONS AT BAGGED STONE WHEN SO DIRECTED BY THE ENGINEER. BAGS SHALL BE REMOVED AND REPLACED WHENEVER THE ENGINEER DETERMINES THAT THEY HAVE DETERIORATED AND LOST THEIR EFFECTIVENESS.

NO SEPARATE PAYMENT WILL BE MADE FOR THIS WORK AND THE ENTIRE COST OF THIS WORK SHALL BE INCLUDED IN THE UNIT CONTRACT PRICE BID FOR THE SEVERAL PAY ITEMS.

TEMPORARY DRAINAGE AT END BENT

DRAWN BY : D. RANDALL DATE : JULY 2006
CHECKED BY : I. C. ENGSTROM DATE : JULY 2006

NORTH CAROLINA PROFESSIONAL SEAL 32208 ENGINEER I. C. ENGSTROM 01/05/07

PLANS PREPARED BY:

PARSONS TRANSPORTATION GROUP
Engineers and Planners
RALEIGH, NORTH CAROLINA

JOB NO. 645615
DWG. NO.

PROJECT NO. B-682
BRUNSWICK COUNTY
STATION: 47+08.03 -L- POT

SHEET 2 OF 3

STATE OF NORTH CAROLINA
DEPARTMENT OF TRANSPORTATION
RALEIGH

SUBSTRUCTURE END BENT 1

REVISIONS						SHEET NO.
NO.	BY:	DATE:	NO.	BY:	DATE:	S-141
1			3			TOTAL SHEETS
2			4			209

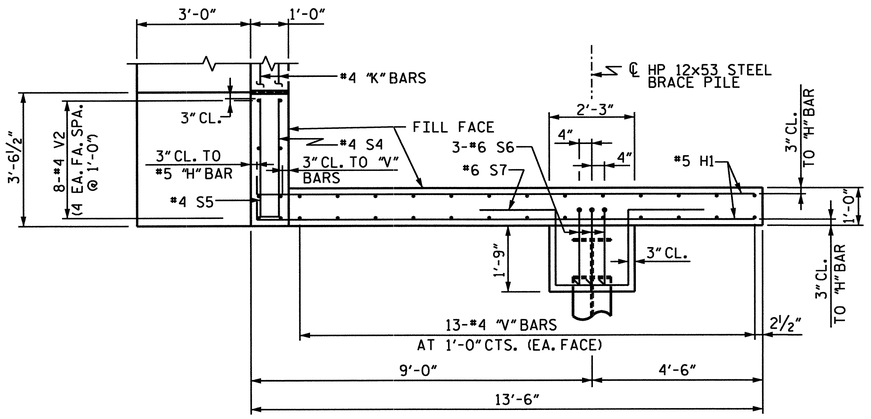

PLAN WING - W1

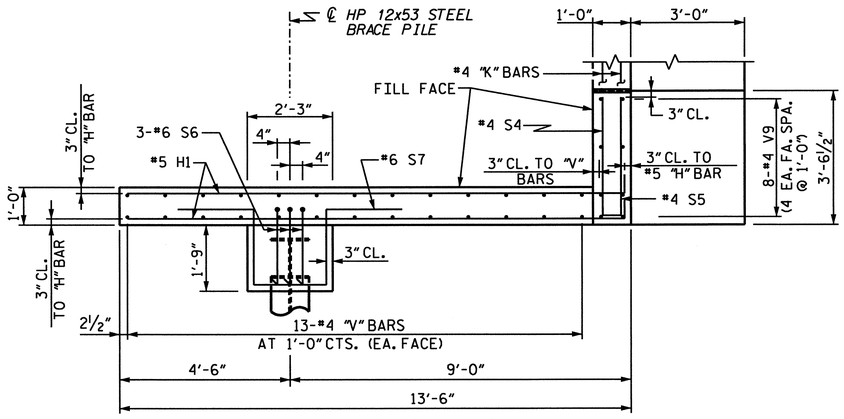

PLAN WING - W2

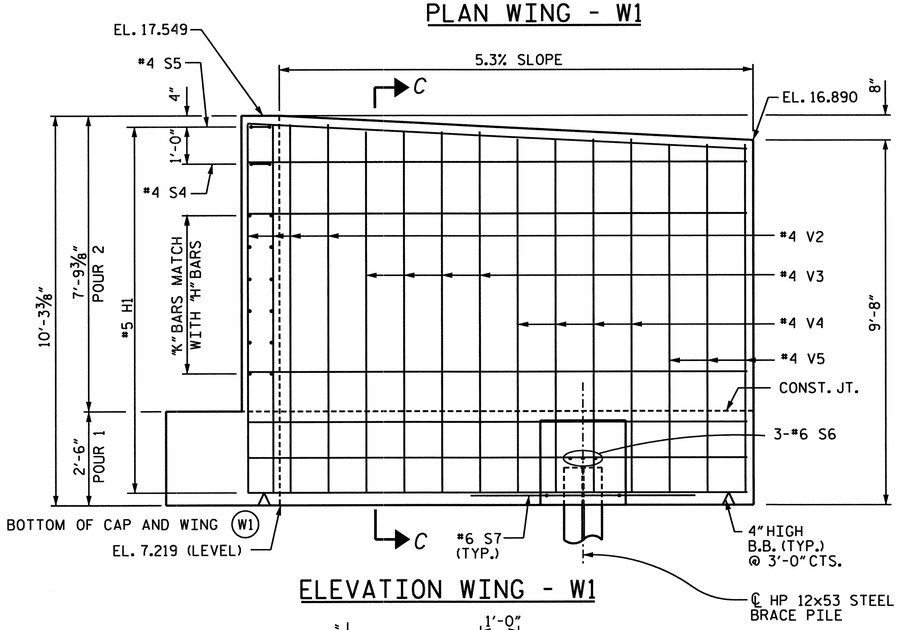

ELEVATION WING - W1

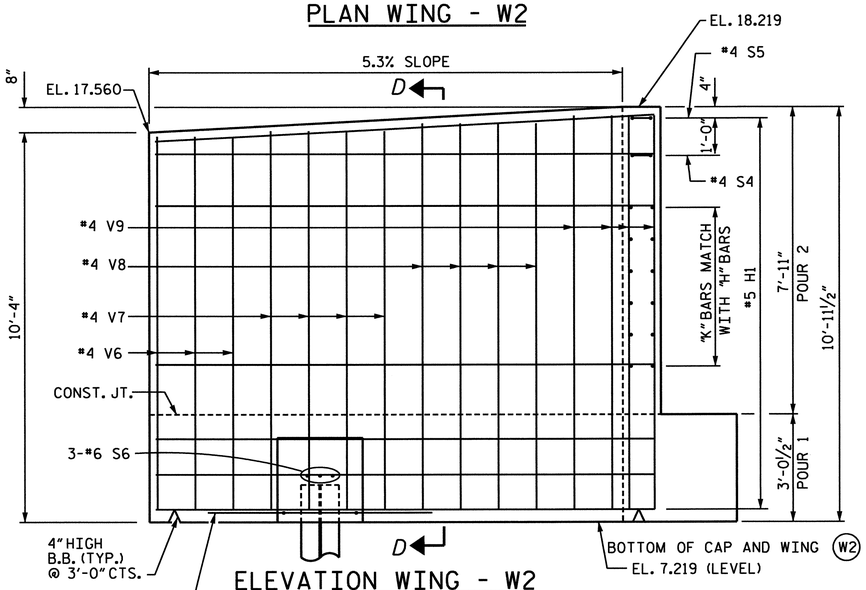

ELEVATION WING - W2

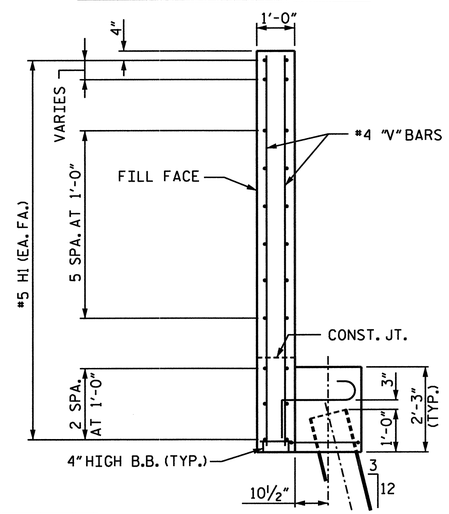

SECTION C-C

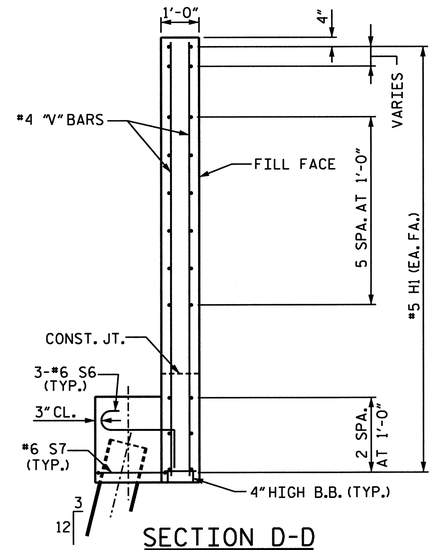

SECTION D-D

BAR TYPES

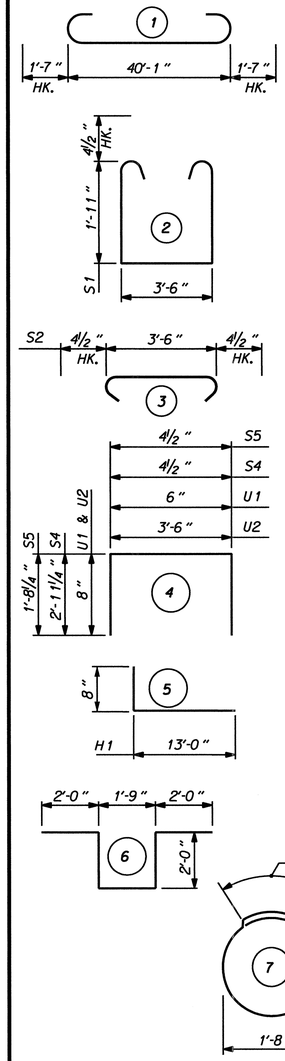

ALL BAR DIMENSIONS ARE OUT TO OUT

BILL OF MATERIAL

END BENT 1

BAR	NO.	SIZE	TYPE	LENGTH (ft.)	WEIGHT (lb.)
B1	12	9	1	43'-3"	1765
B2	2	6	STR.	40'-1"	120
B3	8	4	STR.	21'-1"	113
B4	6	4	STR.	17'-2"	69
B5	10	4	STR	3'-6"	23
H1	44	5	5	13'-8"	627
K1	24	4	STR.	20'-10"	334
S1	36	4	2	8'-1"	194
S2	36	4	3	4'-3"	102
S3	18	4	7	6'-6"	78
S4	2	4	4	6'-3"	8
S5	2	4	4	3'-9"	5
S6	6	6	8	3'-8"	33
S7	2	6	6	9'-9"	29
U1	34	4	4	1'-10"	42
U2	12	4	4	4'-10"	39
V1	68	5	STR.	7'-11"	561
V2	12	4	STR.	9'-8"	77
V3	8	4	STR.	9'-7"	51
V4	8	4	STR.	9'-4"	50
V5	6	4	STR.	9'-2"	49
V6	6	4	STR.	9'-10"	39
V7	8	4	STR.	10'-0"	53
V8	8	4	STR.	10'-3"	55
V9	12	4	STR.	10'-5"	84

EPOXY COATED REINFORCING STEEL 4600 lb.

CLASS "AA" CONCRETE BREAKDOWN

POUR 1	19.2 yd³
POUR 2	17.9 yd³
TOTAL CLASS "AA" CONCRETE	37.1 yd³

HP 12x53 STEEL PILES

NO.		FEET
11		715

PROJECT NO. B-682

BRUNSWICK COUNTY

STATION: 47+08.03 -L- POT

SHEET 3 OF 3

STATE OF NORTH CAROLINA
DEPARTMENT OF TRANSPORTATION
RALEIGH

SUBSTRUCTURE END BENT 1 DETAILS

NORTH CAROLINA PROFESSIONAL SEAL 32208 ENGINEER I. C. ENGSTROM 01/08/07

PLANS PREPARED BY:

PARSONS TRANSPORTATION GROUP
Engineers and Planners
RALEIGH, NORTH CAROLINA

JOB NO. 645615

DWG. NO.

REVISIONS						SHEET NO.
NO.	BY:	DATE:	NO.	BY:	DATE:	S-142
1			3			TOTAL SHEETS
2			4			207

DRAWN BY : D. RANDALL DATE : JULY 2006
CHECKED BY : I. C. ENGSTROM DATE : JULY 2006

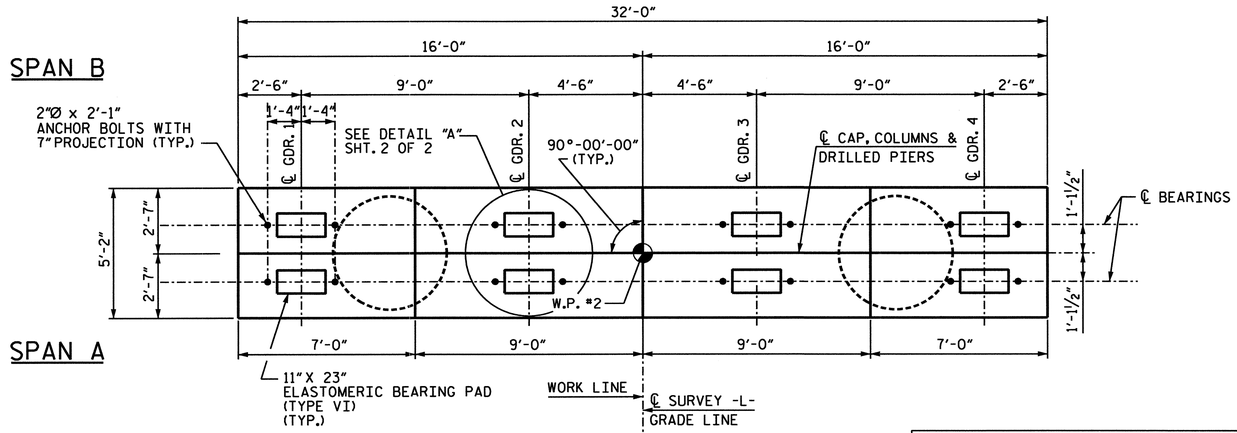

PLAN

TABLE OF BEARING ELEVATIONS				
LOCATION	EL. A	EL. B	EL. C	EL. D
BENT NO. 1 BACK	15.337	15.517	15.697	15.877
BENT NO. 1 FORWARD	15.449	15.629	15.809	15.989

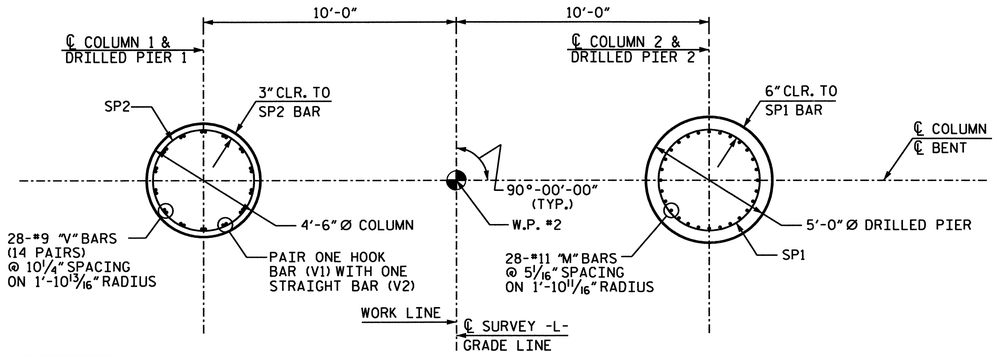

PLAN OF COLUMN / PIERS

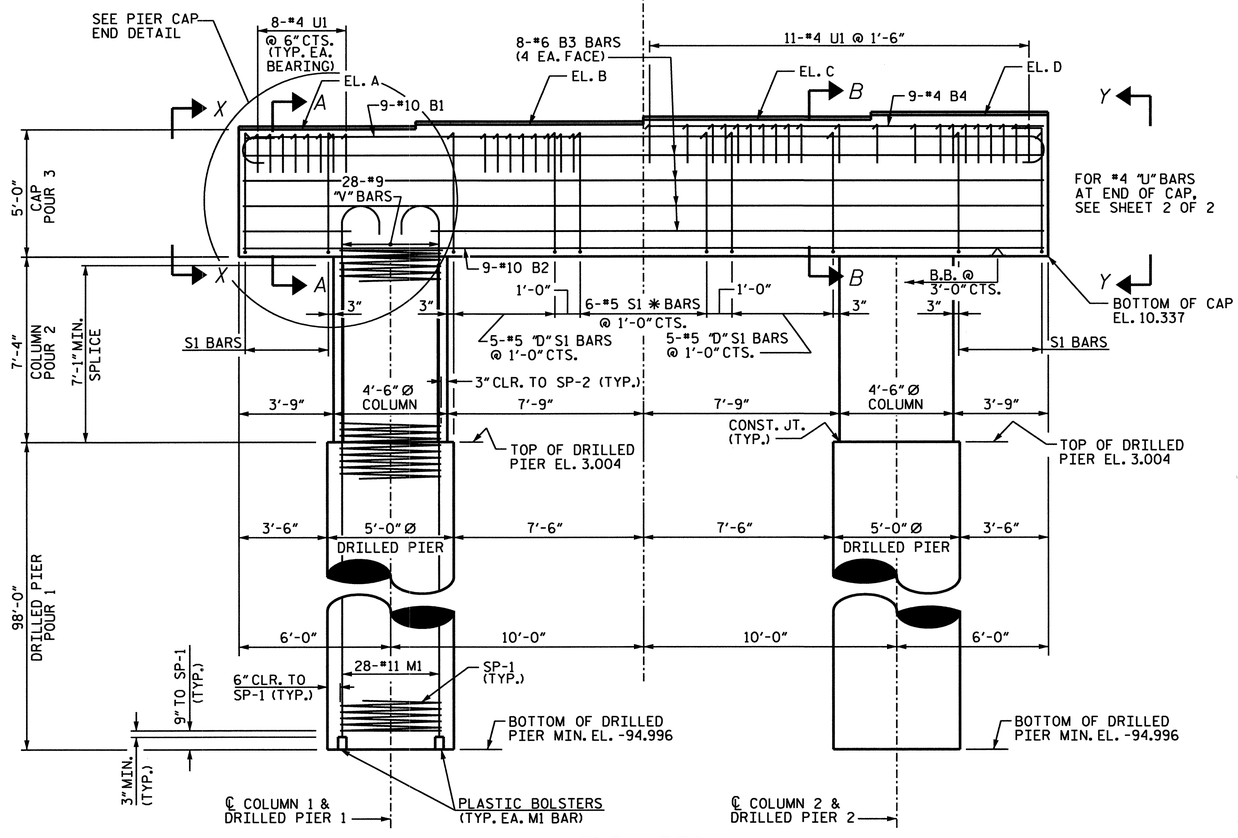

ELEVATION

* INVERT ALTERNATE STIRRUPS
"D" DENOTES DOUBLE STIRRUPS

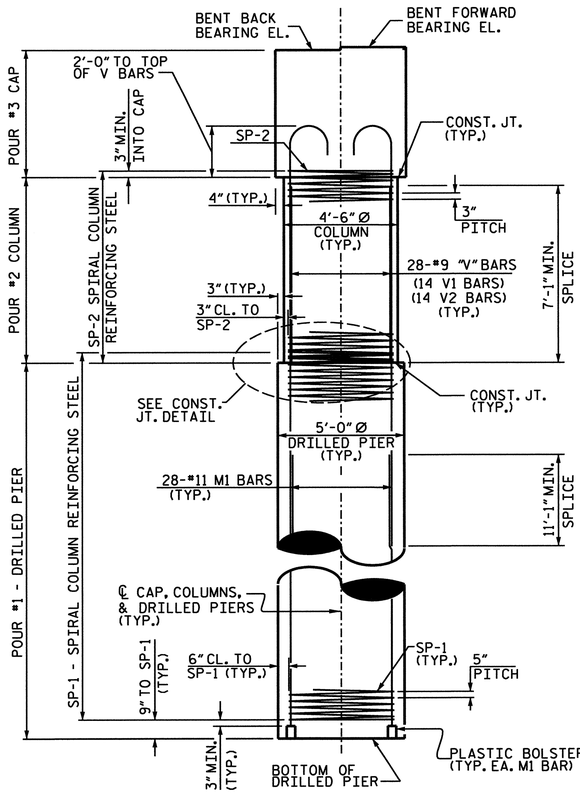

END ELEVATION

NOTES:

FOR DRILLED PIERS, SEE SPECIAL PROVISIONS.

THE CONTRACTOR'S ATTENTION IS CALLED TO THE FACT THAT THE LONGITUDINAL REINFORCEMENT FOR THE DRILLED PIERS IS DETAILED WITH 3 FEET OF EXTRA LENGTH.

ALL STEEL IN THE DRILLED PIERS IS INCLUDED IN THE PAY ITEMS FOR "EPOXY COATED REINFORCING STEEL" OR "EPOXY COATED SPIRAL COLUMN REINFORCING STEEL".

STIRRUPS IN CAP MAY BE SHIFTED AS NECESSARY TO CLEAR ANCHOR BOLTS.

FOR PERMANENT STEEL CASING, SEE SPECIAL PROVISION FOR DRILLED PIERS.

5 FOOT DIAMETER PERMANANT STEEL CASING MAY BE REQUIRED FOR BENT NO. 1. IF REQUIRED, DO NOT EXTEND THE CASING BELOW EL. -30 FEET WITHOUT PRIOR APPROVAL FROM THE ENGINEER. THE ENGINEER WILL DETERMINE THE NEED FOR PERMANANT STEEL CASING.

DRILLED PIERS AT BENT NO. 1 SHALL EXTEND TO AN ELEVATION NO HIGHER THAN -95.0 FEET AND SATISFY THE REQUIRED BEARING CAPACITY.

HOOKS ON "V" BARS MAY BE TURNED AS NECESSARY FOR PLACING REINFORCING STEEL.

ALL BAR SUPPORTS USED IN THE BENT CAP, COLUMNS, AND DRILLED PIERS AND ALL INCIDENTAL REINFORCING STEEL SHALL BE EPOXY COATED IN ACCORDANCE WITH THE STANDARD SPECIFICATIONS.

PROJECT NO. B-682

BRUNSWICK COUNTY

STATION: 47+08.03 -L- POT

SHEET 1 OF 2

STATE OF NORTH CAROLINA
DEPARTMENT OF TRANSPORTATION
RALEIGH

SUBSTRUCTURE BENT 1

NORTH CAROLINA PROFESSIONAL SEAL 32208 ENGINEER I. C. ENGSTROM
02-23-07

PLANS PREPARED BY:

PARSONS TRANSPORTATION GROUP
Engineers and Planners
RALEIGH, NORTH CAROLINA

JOB NO. 645615
DWG. NO.

REVISIONS						SHEET NO.
NO.	BY:	DATE:	NO.	BY:	DATE:	S-143
1			3			TOTAL SHEETS
2			4			257

DRAWN BY : D. RANDALL DATE : JULY 2006
CHECKED BY : I. C. ENGSTROM DATE : JULY 2006

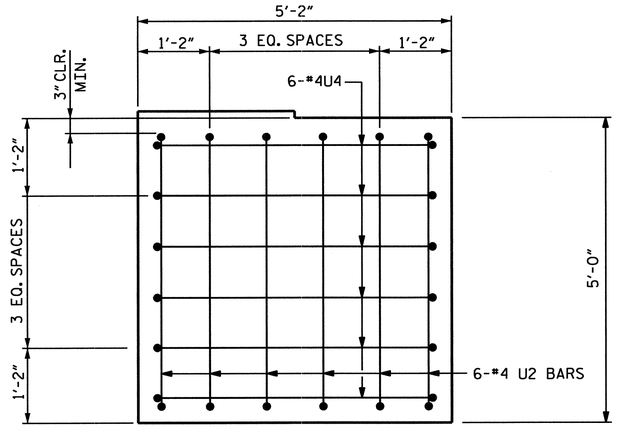

VIEW X-X

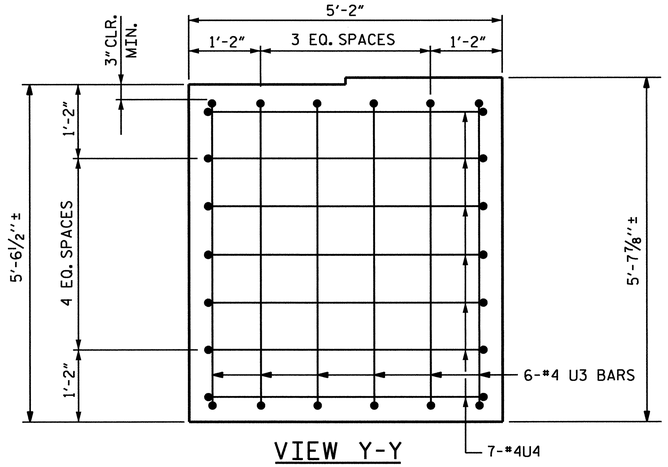

VIEW Y-Y

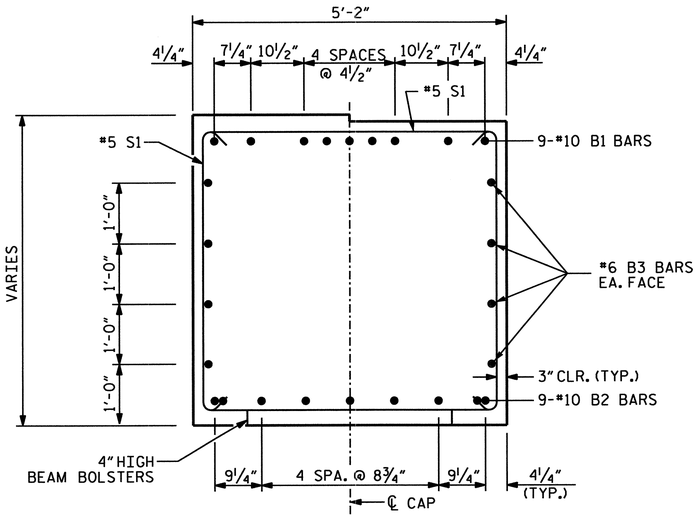

SECTION A-A

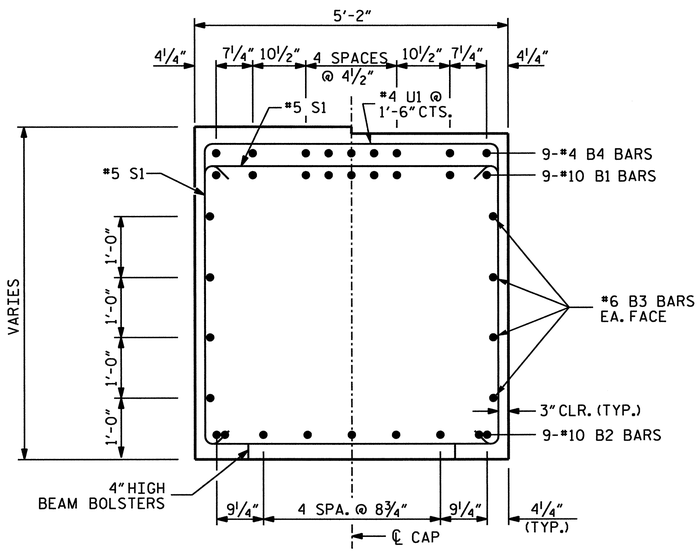

SECTION B-B

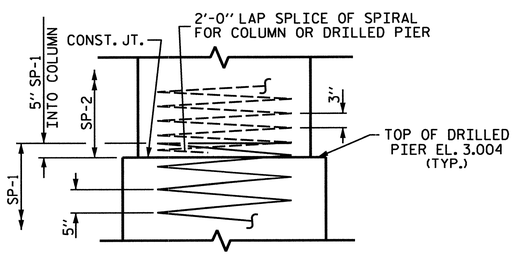

CONSTRUCTION JOINT DETAIL

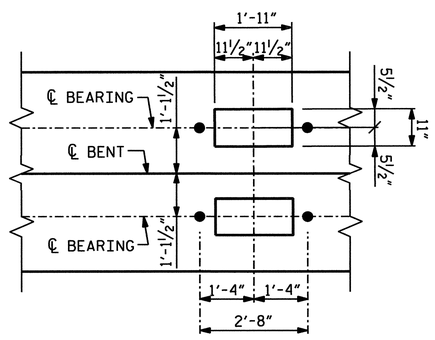

DETAIL A

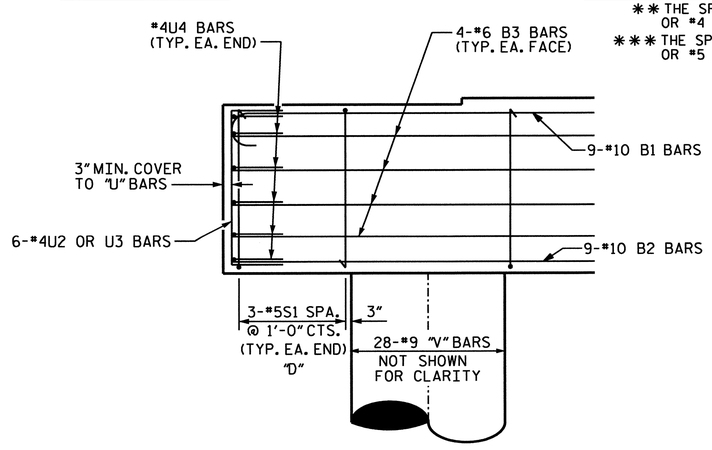

PIER CAP END DETAIL

"D" DENOTES DOUBLE STIRRUPS

BAR TYPES

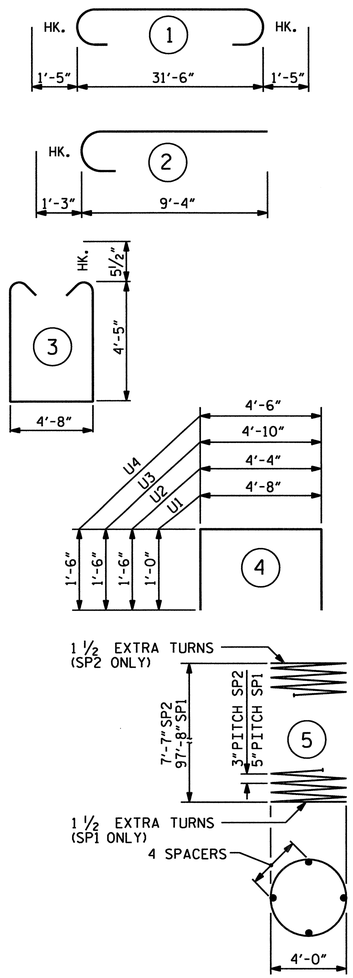

ALL BAR DIMENSIONS ARE OUT TO OUT.

BILL OF MATERIAL

BENT 1

BAR	NO.	SIZE	TYPE	LENGTH (ft)	WEIGHT (lb)
B1	9	10	1	34'-4"	1330
B2	9	10	STR.	31'-6"	1220
B3	8	6	STR.	31'-6"	379
B4	9	4	STR.	15'-6"	93
M1	112	11	STR.	59'-7"	35455
S1	38	5	3	14'-5"	571
U1	43	4	4	6'-8"	192
U2	6	4	4	7'-4"	29
U3	6	4	4	7'-10"	31
U4	13	4	4	7'-6"	65
V1	28	9	2	10'-7"	1008
V2	28	9	STR.	10'-11"	1039

EPOXY COATED REINFORCING STEEL 41,412 lb

SP1	2	***	5	2934'-11"	6132
SP2	2	**	5	404'-3"	562

TOTAL EPOXY COATED SPIRAL COLUMN REINFORCING STEEL 6694 lb

CLASS "AA" CONCRETE BREAKDOWN

POUR 2 - COLUMNS	8.7 yd³
POUR 3 - CAP	32.6 yd³
TOTAL CLASS "AA" CONCRETE	41.3 yd³

5'-0" Ø CONCRETE DRILLED PIER LIN.FOOT: 196

DRILLED PIER CONCRETE

POUR 1 - DRILLED PIER	142.6 yd³

PERMANENT STEEL CASING FOR 5'-0" DIA. DRILLED PIER	LIN.FOOT:	66
SID INSPECTIONS	EA:	2
SPT TESTING	EA:	2

** THE SP2 SPIRAL REINFORCING STEEL SHALL BE W20 OR D-20 COLD DRAWN WIRE OR #4 PLAIN OR DEFORMED BAR.

*** THE SP1 SPIRAL REINFORCING STEEL SHALL BE W31 OR D-31 COLD DRAWN WIRE OR #5 PLAIN OR DEFORMED BAR.

PROJECT NO. B-682

BRUNSWICK COUNTY

STATION: 47+08.03 -L- POT

SHEET 2 OF 2

NORTH CAROLINA PROFESSIONAL SEAL 32208 ENGINEER I. C. ENGSTROM 07-25-07

PLANS PREPARED BY:

PARSONS TRANSPORTATION GROUP
Engineers and Planners
RALEIGH, NORTH CAROLINA

JOB NO. 645615

DWG. NO.

STATE OF NORTH CAROLINA
DEPARTMENT OF TRANSPORTATION
RALEIGH

SUBSTRUCTURE BENT 1 DETAILS

REVISIONS						SHEET NO.
NO.	BY:	DATE:	NO.	BY:	DATE:	S-142
1			3			TOTAL SHEETS
2			4			207

DRAWN BY : D. RANDALL DATE : JULY 2006
CHECKED BY : I. C. ENGSTROM DATE : JULY 2006

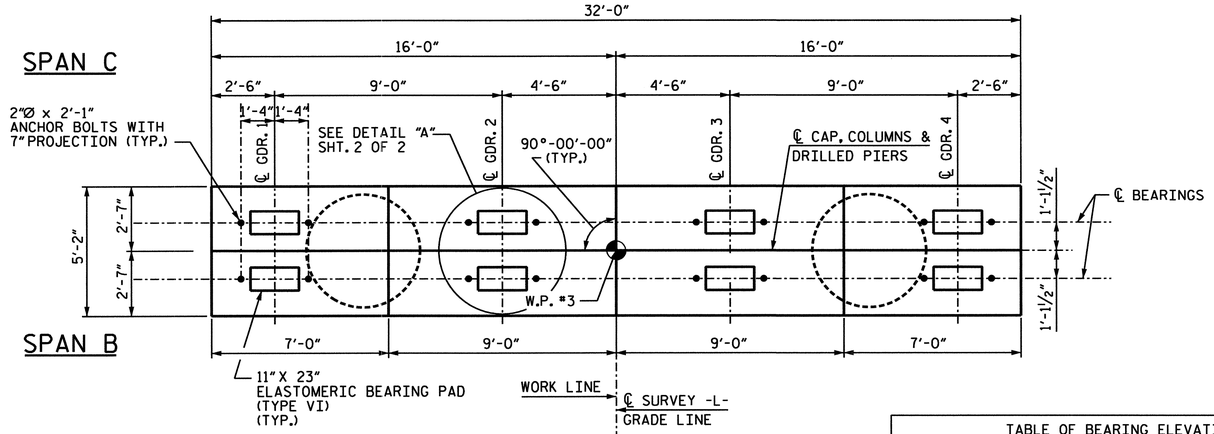

PLAN

TABLE OF BEARING ELEVATIONS				
LOCATION	EL. A	EL. B	EL. C	EL. D
BENT NO. 2 BACK	20.987	21.167	21.347	21.527
BENT NO. 2 FORWARD	21.099	21.279	21.459	21.639

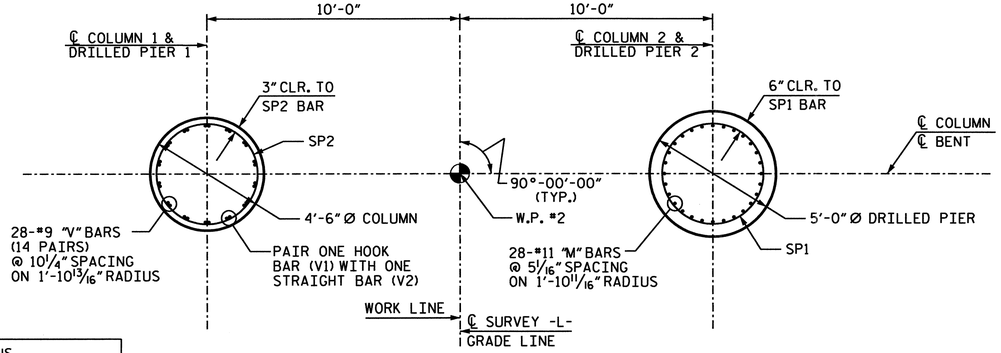

PLAN OF COLUMN / PIERS

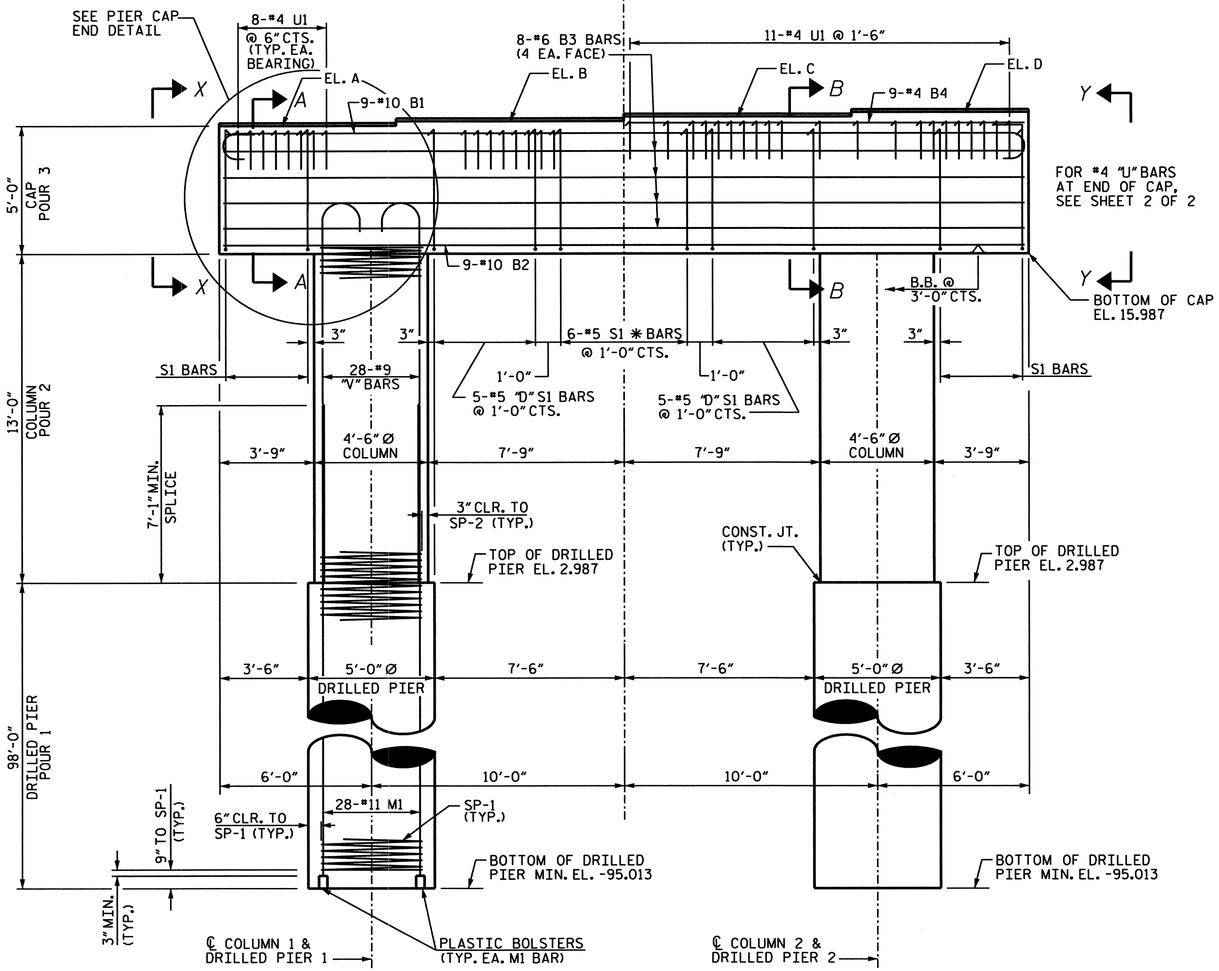

ELEVATION

* INVERT ALTERNATE STIRRUPS
"D" DENOTES DOUBLE STIRRUPS

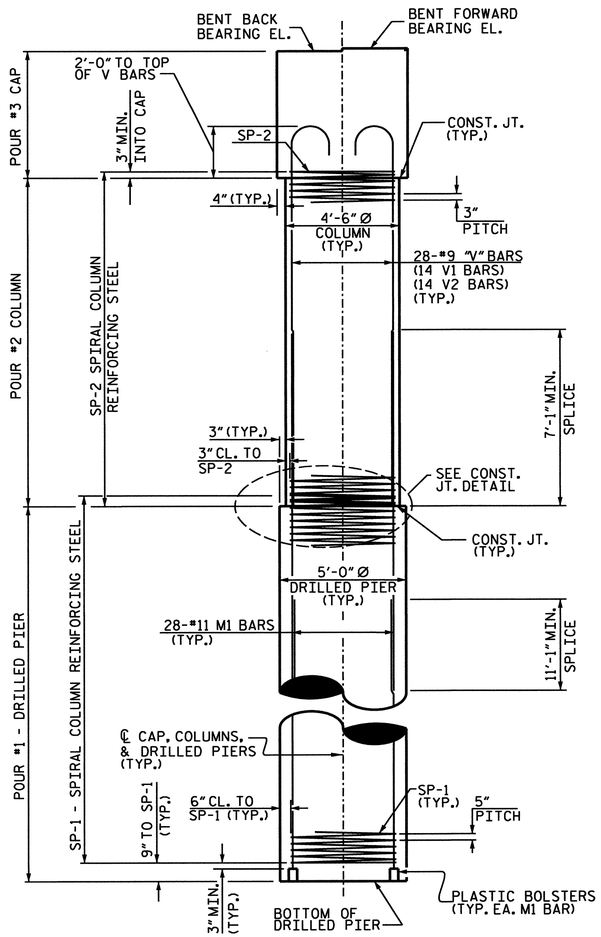

END ELEVATION

NOTES:

FOR DRILLED PIERS, SEE SPECIAL PROVISIONS.

THE CONTRACTOR'S ATTENTION IS CALLED TO THE FACT THAT THE LONGITUDINAL REINFORCEMENT FOR THE DRILLED PIERS IS DETAILED WITH 3 FEET OF EXTRA LENGTH.

ALL STEEL IN THE DRILLED PIERS IS INCLUDED IN THE PAY ITEMS FOR "EPOXY COATED REINFORCING STEEL" OR "EPOXY COATED SPIRAL COLUMN REINFORCING STEEL".

STIRRUPS IN CAP MAY BE SHIFTED AS NECESSARY TO CLEAR ANCHOR BOLTS.

FOR PERMANENT STEEL CASING, SEE SPECIAL PROVISION FOR DRILLED PIERS.

5 FOOT DIAMETER PERMANANT STEEL CASING MAY BE REQUIRED FOR BENT NO. 2. IF REQUIRED, DO NOT EXTEND THE CASING BELOW EL. -30 FEET WITHOUT PRIOR APPROVAL FROM THE ENGINEER. THE ENGINEER WILL DETERMINE THE NEED FOR PERMANANT STEEL CASING.

DRILLED PIERS AT BENT NO. 2 SHALL EXTEND TO AN ELEVATION NO HIGHER THAN -95.0 FEET AND SATISFY THE REQUIRED BEARING CAPACITY.

HOOKS ON "V" BARS MAY BE TURNED AS NECESSARY FOR PLACING REINFORCING STEEL.

ALL BAR SUPPORTS USED IN THE BENT CAP, COLUMNS, AND DRILLED PIERS AND ALL INCIDENTAL REINFORCING STEEL SHALL BE EPOXY COATED IN ACCORDANCE WITH THE STANDARD SPECIFICATIONS.

PROJECT NO. B-682

BRUNSWICK COUNTY

STATION: 47+08.03 -L- POT

SHEET 1 OF 2

NORTH CAROLINA PROFESSIONAL SEAL 32208 ENGINEER IAN C. ENGSTROM 02-25-07

PLANS PREPARED BY:

PARSONS TRANSPORTATION GROUP
Engineers and Planners
RALEIGH, NORTH CAROLINA
JOB NO. 645615
DWG. NO.

STATE OF NORTH CAROLINA
DEPARTMENT OF TRANSPORTATION
RALEIGH

SUBSTRUCTURE
BENT 2

REVISIONS						SHEET NO.
NO.	BY:	DATE:	NO.	BY:	DATE:	S-145
1			3			TOTAL SHEETS
2			4			207

DRAWN BY : D. RANDALL DATE : JULY 2006
CHECKED BY : I. C. ENGSTROM DATE : JULY 2006

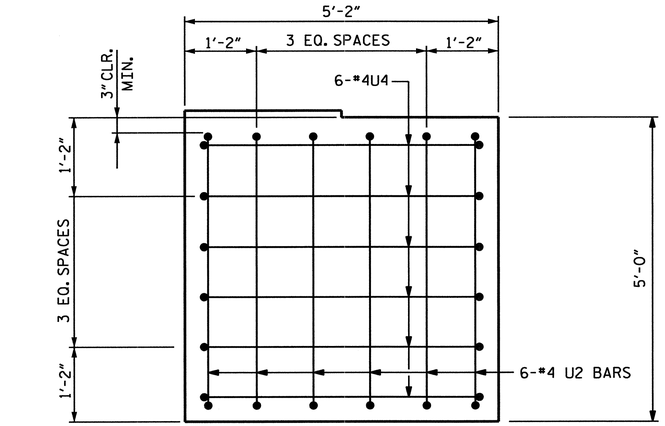

VIEW X-X

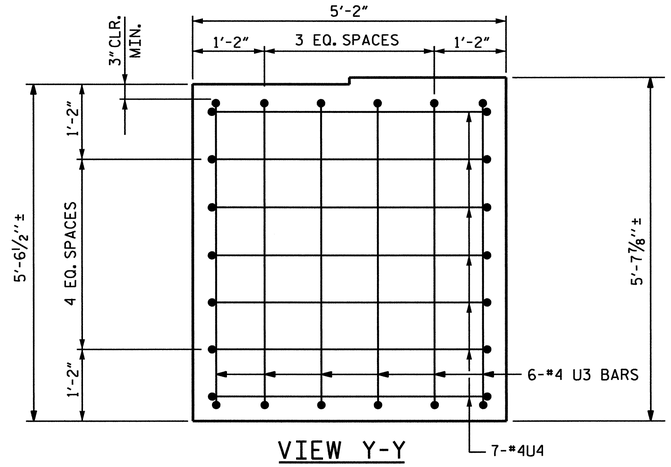

VIEW Y-Y

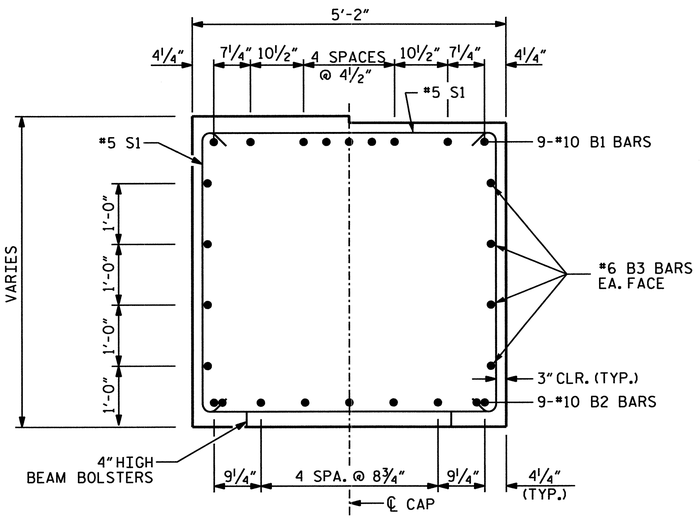

SECTION A-A

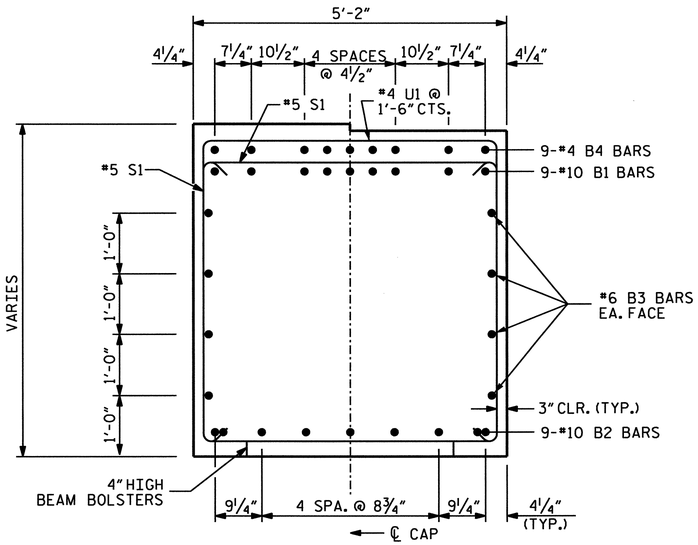

SECTION B-B

BAR TYPES

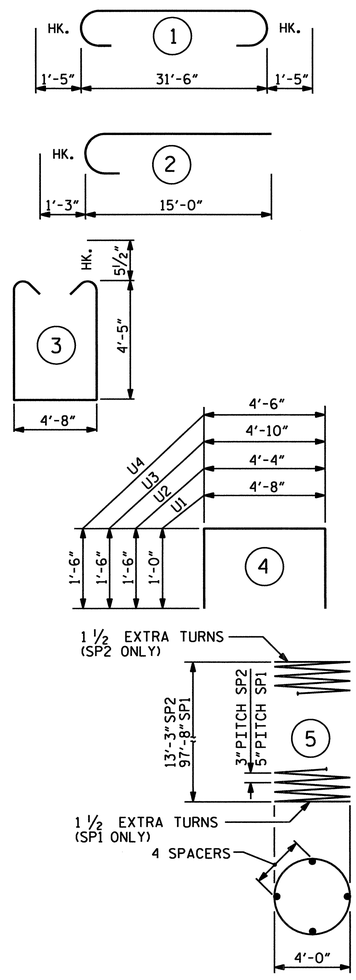

ALL BAR DIMENSIONS ARE OUT TO OUT.

BILL OF MATERIAL

BENT 2

BAR	NO.	SIZE	TYPE	LENGTH (ft)	WEIGHT (lb)
B1	9	10	1	34'-4"	1330
B2	9	10	STR.	31'-6"	1220
B3	8	6	STR.	31'-6"	379
B4	9	4	STR.	15'-6"	93
M1	112	11	STR.	59'-7"	35455
S1	38	5	3	14'-5"	571
U1	43	4	4	6'-8"	192
U2	6	4	4	7'-4"	29
U3	6	4	4	7'-10"	31
U4	13	4	4	7'-6"	65
V1	28	9	2	16'-3"	1547
V2	28	9	STR.	16'-7"	1579

EPOXY COATED REINFORCING STEEL 42,491 lb

SP1	2	***	5	2934'-11"	6132
SP2	2	**	5	677'-11"	962

TOTAL EPOXY COATED SPIRAL COLUMN REINFORCING STEEL 7094 lb

CLASS "AA" CONCRETE BREAKDOWN

POUR 2 - COLUMNS	15.4 yd³
POUR 3 - CAP	32.6 yd³
TOTAL CLASS "AA" CONCRETE	48.0 yd³

5'-0" Ø CONCRETE DRILLED PIER LIN.FOOT: 196

DRILLED PIER CONCRETE

POUR 1 - DRILLED PIER	142.6 yd³

PERMANENT STEEL CASING FOR 5'-0" DIA. DRILLED PIER LIN.FOOT:	66
SID INSPECTIONS EA:	2
SPT TESTING EA:	2

** THE SP2 SPIRAL REINFORCING STEEL SHALL BE W20 OR D-20 COLD DRAWN WIRE OR #4 PLAIN OR DEFORMED BAR.

*** THE SP1 SPIRAL REINFORCING STEEL SHALL BE W31 OR D-31 COLD DRAWN WIRE OR #5 PLAIN OR DEFORMED BAR.

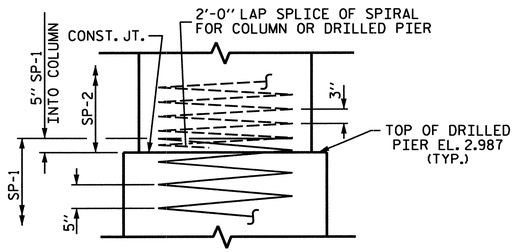

CONSTRUCTION JOINT DETAIL

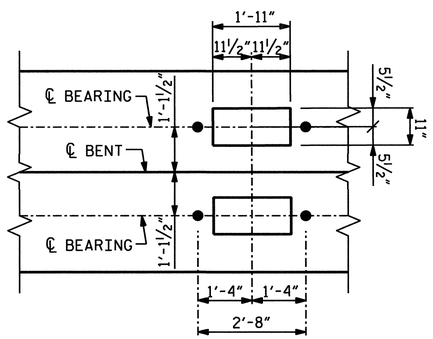

DETAIL A

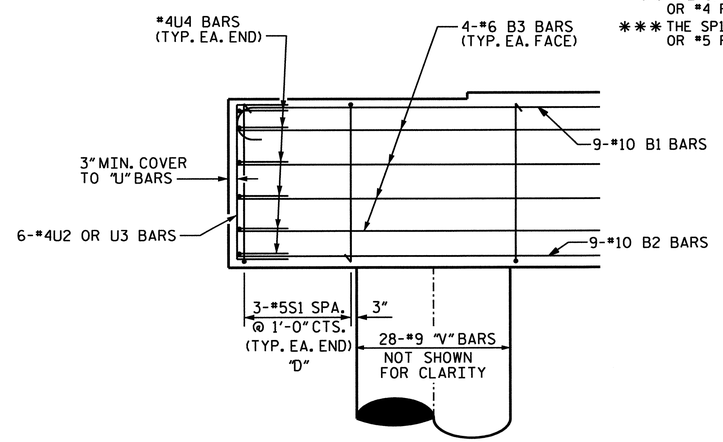

PIER CAP END DETAIL

"D" DENOTES DOUBLE STIRRUPS

PROJECT NO. B-682

BRUNSWICK COUNTY

STATION: 47+08.03 -L- POT

SHEET 2 OF 2

STATE OF NORTH CAROLINA
DEPARTMENT OF TRANSPORTATION
RALEIGH

SUBSTRUCTURE BENT 2 DETAILS

NORTH CAROLINA PROFESSIONAL SEAL 32208 ENGINEER IAN C ENGSTROM
02-23-07

PLANS PREPARED BY:

PARSONS TRANSPORTATION GROUP
Engineers and Planners
RALEIGH, NORTH CAROLINA

JOB NO. 645615

DWG. NO.

REVISIONS						SHEET NO.
NO.	BY:	DATE:	NO.	BY:	DATE:	S-46
1			3			TOTAL SHEETS
2			4			287

DRAWN BY : D. RANDALL DATE : JULY 2006
CHECKED BY : I. C. ENGSTROM DATE : JULY 2006

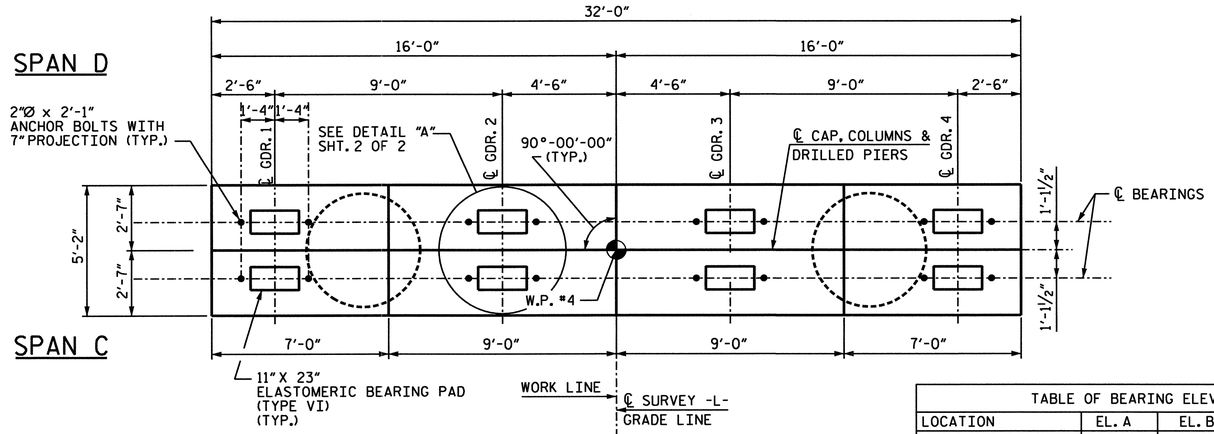

PLAN

TABLE OF BEARING ELEVATIONS				
LOCATION	EL. A	EL. B	EL. C	EL. D
BENT NO. 3 BACK	26.637	26.817	26.997	27.177
BENT NO. 3 FORWARD	26.749	26.929	27.109	27.289

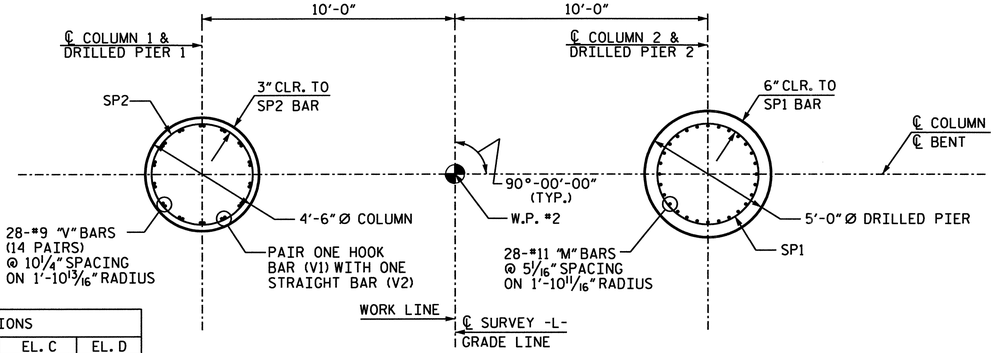

PLAN OF COLUMN / PIERS

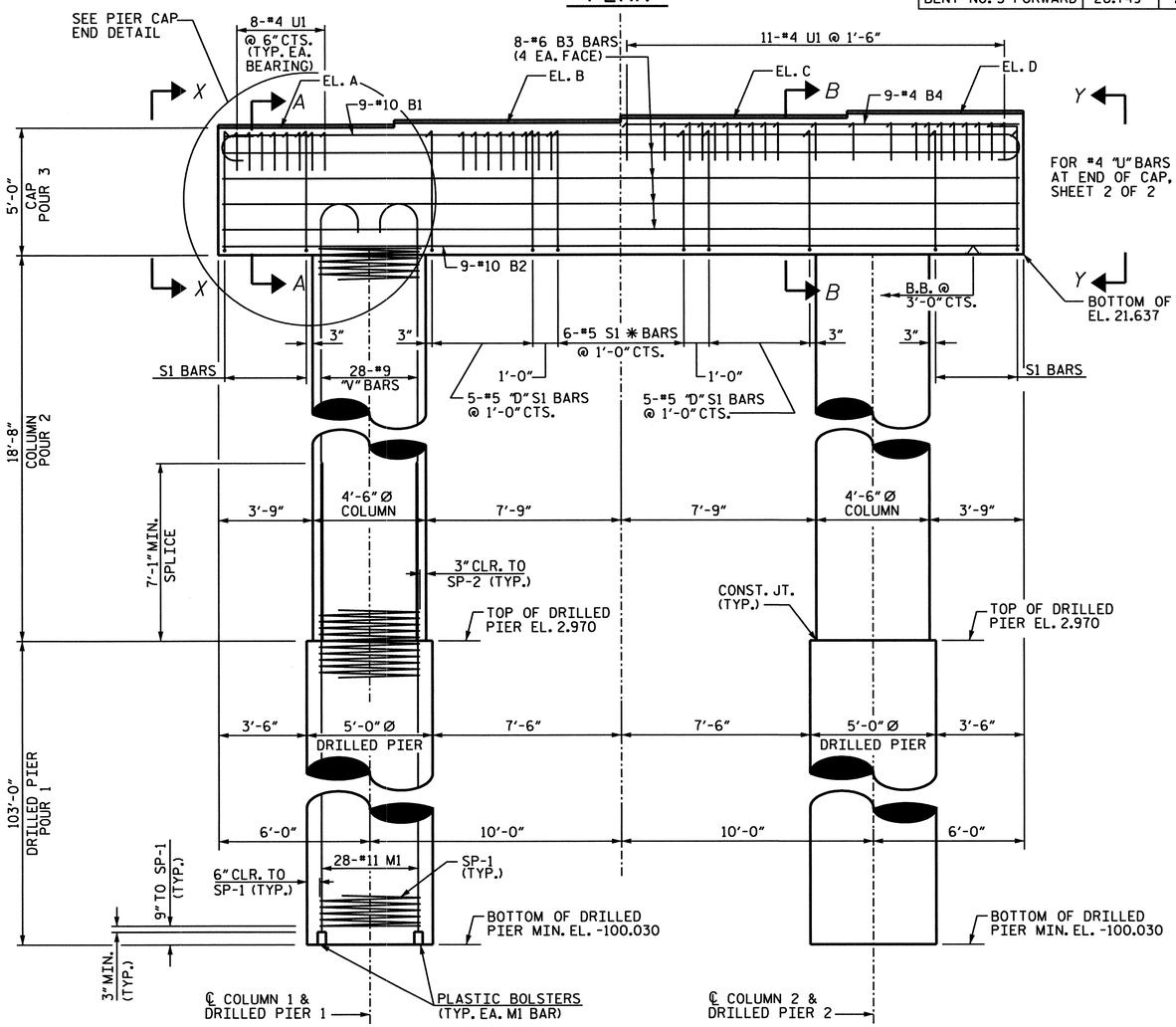

ELEVATION

* INVERT ALTERNATE STIRRUPS
"D" DENOTES DOUBLE STIRRUPS

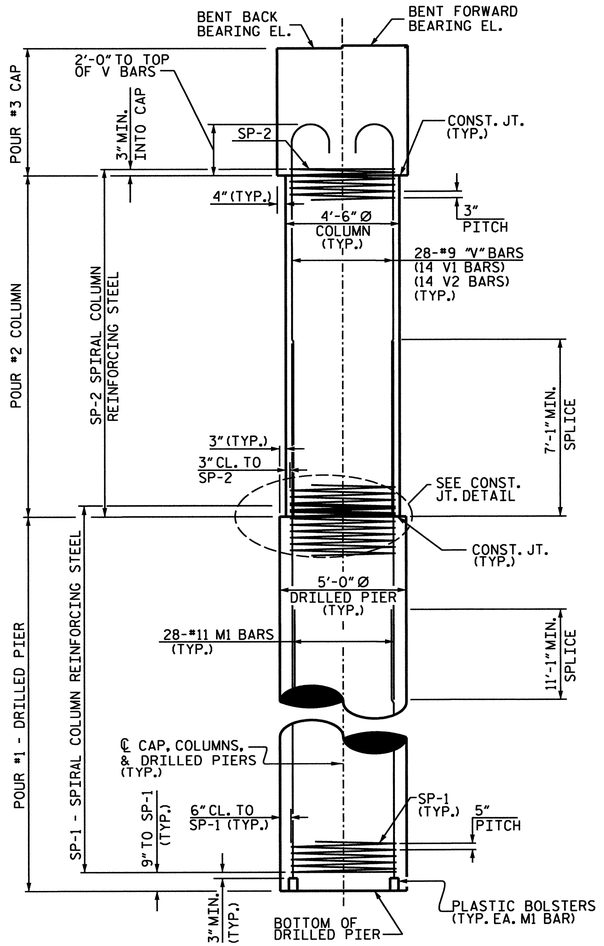

END ELEVATION

NOTES:

FOR DRILLED PIERS, SEE SPECIAL PROVISIONS.

THE CONTRACTOR'S ATTENTION IS CALLED TO THE FACT THAT THE LONGITUDINAL REINFORCEMENT FOR THE DRILLED PIERS IS DETAILED WITH 3 FEET OF EXTRA LENGTH.

ALL STEEL IN THE DRILLED PIERS IS INCLUDED IN THE PAY ITEMS FOR "EPOXY COATED REINFORCING STEEL" OR "EPOXY COATED SPIRAL COLUMN REINFORCING STEEL".

THE TOP SURFACE AREAS OF THE BENT CAP SHALL BE CURED IN ACCORDANCE WITH THE STANDARD SPECIFICATIONS EXCEPT THE MEMBRANE CURING COMPOUND METHOD SHALL NOT BE USED.

STIRRUPS IN CAP MAY BE SHIFTED AS NECESSARY TO CLEAR ANCHOR BOLTS.

FOR PERMANENT STEEL CASING, SEE SPECIAL PROVISION FOR DRILLED PIERS.

5 FOOT DIAMETER PERMANANT STEEL CASING MAY BE REQUIRED FOR BENT NO. 3. IF REQUIRED, DO NOT EXTEND THE CASING BELOW EL. -30 FEET WITHOUT PRIOR APPROVAL FROM THE ENGINEER. THE ENGINEER WILL DETERMINE THE NEED FOR PERMANANT STEEL CASING.

DRILLED PIERS AT BENT NO. 3 SHALL EXTEND TO AN ELEVATION NO HIGHER THAN -100.0 FEET AND SATISFY THE REQUIRED BEARING CAPACITY.

HOOKS ON "V" BARS MAY BE TURNED AS NECESSARY FOR PLACING REINFORCING STEEL.

ALL BAR SUPPORTS USED IN THE BENT CAP, COLUMNS, AND DRILLED PIERS AND ALL INCIDENTAL REINFORCING STEEL SHALL BE EPOXY COATED IN ACCORDANCE WITH THE STANDARD SPECIFICATIONS.

PROJECT NO. B-682

BRUNSWICK COUNTY

STATION: 47+08.03 -L- POT

SHEET 1 OF 2

NORTH CAROLINA PROFESSIONAL SEAL L-39208 ENGINEER IAN C. ENGSTROM 02-23-07

PLANS PREPARED BY:

PARSONS TRANSPORTATION GROUP
Engineers and Planners
RALEIGH, NORTH CAROLINA

STATE OF NORTH CAROLINA
DEPARTMENT OF TRANSPORTATION
RALEIGH

SUBSTRUCTURE BENT 3

REVISIONS						SHEET NO.
NO.	BY:	DATE:	NO.	BY:	DATE:	S-1A1
1			3			TOTAL SHEETS
2			4			257

JOB NO. 645615

DWG. NO.

DRAWN BY : D. RANDALL DATE : JULY 2006
CHECKED BY : I. C. ENGSTROM DATE : JULY 2006

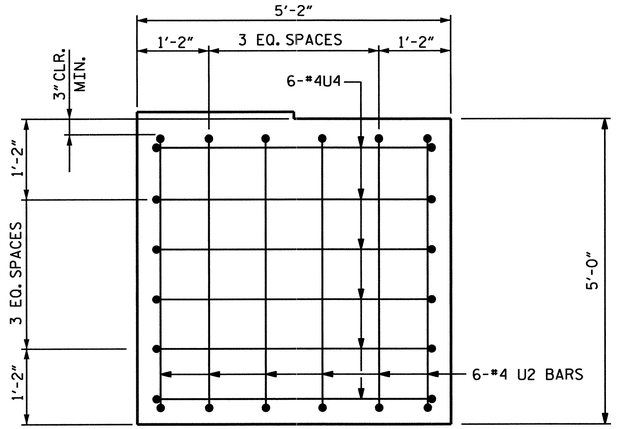

VIEW X-X

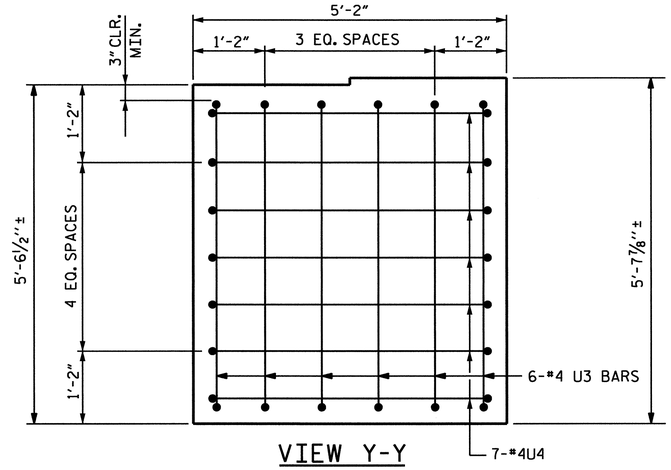

VIEW Y-Y

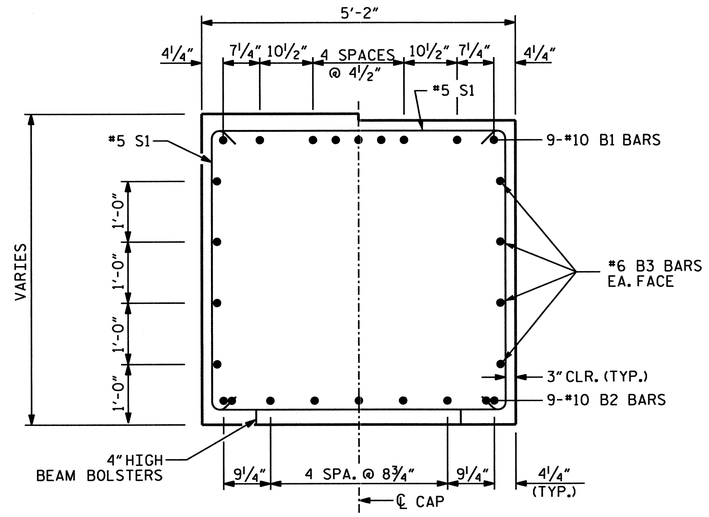

SECTION A-A

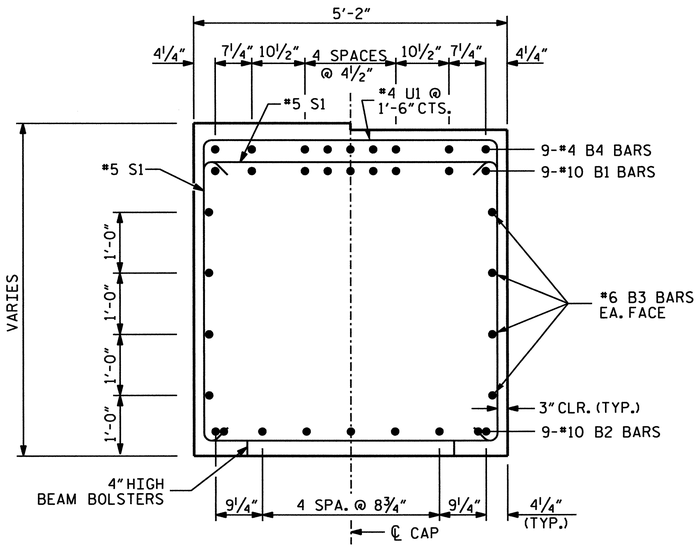

SECTION B-B

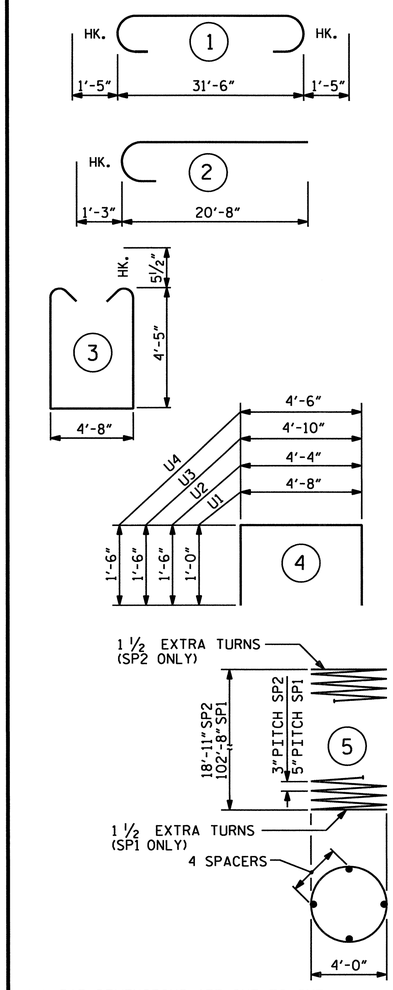

BAR TYPES

ALL BAR DIMENSIONS ARE OUT TO OUT.

BILL OF MATERIAL

BENT 3

BAR	NO.	SIZE	TYPE	LENGTH (ft)	WEIGHT (lb)
B1	9	10	1	34'-4"	1330
B2	9	10	STR.	31'-6"	1220
B3	8	6	STR.	31'-6"	379
B4	9	4	STR.	15'-6"	93
M1	168	11	STR.	45'-1"	40241
S1	38	5	3	14'-5"	571
U1	43	4	4	6'-8"	192
U2	6	4	4	7'-4"	29
U3	6	4	4	7'-10"	31
U4	13	4	4	7'-6"	65
V1	28	9	2	21'-11"	2086
V2	28	9	STR.	22'-3"	2118
EPOXY COATED REINFORCING STEEL 48,355 lb					
SP1	2	***	5	308 3'-10"	6508
SP2	2	**	5	964'-0"	1362

TOTAL EPOXY COATED SPIRAL COLUMN REINFORCING STEEL 7870 lb

CLASS "AA" CONCRETE BREAKDOWN

POUR 2 - COLUMNS	22 yd³
POUR 3 - CAP	32.6 yd³
TOTAL CLASS "AA" CONCRETE	54.6 yd³

5'-0" Ø CONCRETE DRILLED PIER LIN.FOOT: 206

DRILLED PIER CONCRETE

POUR 1 - DRILLED PIER	149.9 yd³

PERMANENT STEEL CASING FOR 5'-0" DIA. DRILLED PIER	LIN.FOOT:	66
SID INSPECTIONS	EA:	2
SPT TESTING	EA:	2

** THE SP2 SPIRAL REINFORCING STEEL SHALL BE W20 OR D-20 COLD DRAWN WIRE OR #4 PLAIN OR DEFORMED BAR.

*** THE SP1 SPIRAL REINFORCING STEEL SHALL BE W31 OR D-31 COLD DRAWN WIRE OR #5 PLAIN OR DEFORMED BAR.

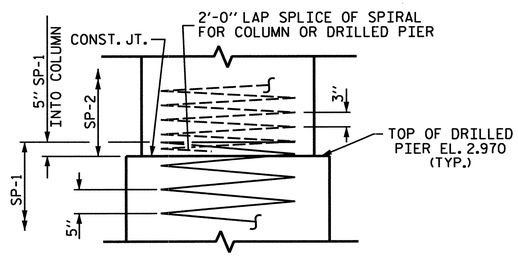

CONSTRUCTION JOINT DETAIL

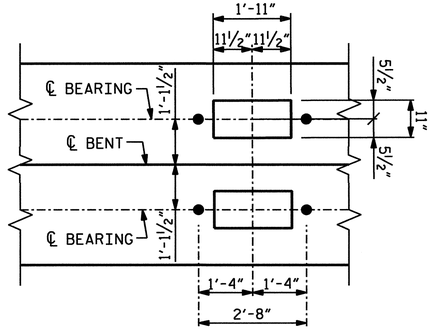

DETAIL A

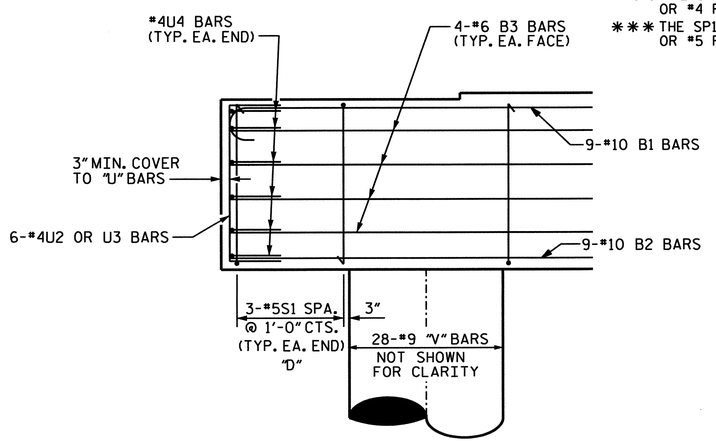

PIER CAP END DETAIL

"D" DENOTES DOUBLE STIRRUPS

PROJECT NO. B-682

BRUNSWICK COUNTY

STATION: 47+08.03 -L- POT

SHEET 2 OF 2

STATE OF NORTH CAROLINA
DEPARTMENT OF TRANSPORTATION
RALEIGH

SUBSTRUCTURE BENT 3 DETAILS

NORTH CAROLINA PROFESSIONAL SEAL 32208 ENGINEER IAN C. ENGSTROM 02-23-07

PLANS PREPARED BY:

PARSONS TRANSPORTATION GROUP
Engineers and Planners
RALEIGH, NORTH CAROLINA

JOB NO. 645615

DWG. NO.

REVISIONS						SHEET NO.
NO.	BY:	DATE:	NO.	BY:	DATE:	5-148
1			3			TOTAL SHEETS
2			4			

DRAWN BY : D. RANDALL DATE : JULY 2006
CHECKED BY : I. C. ENGSTROM DATE : JULY 2006

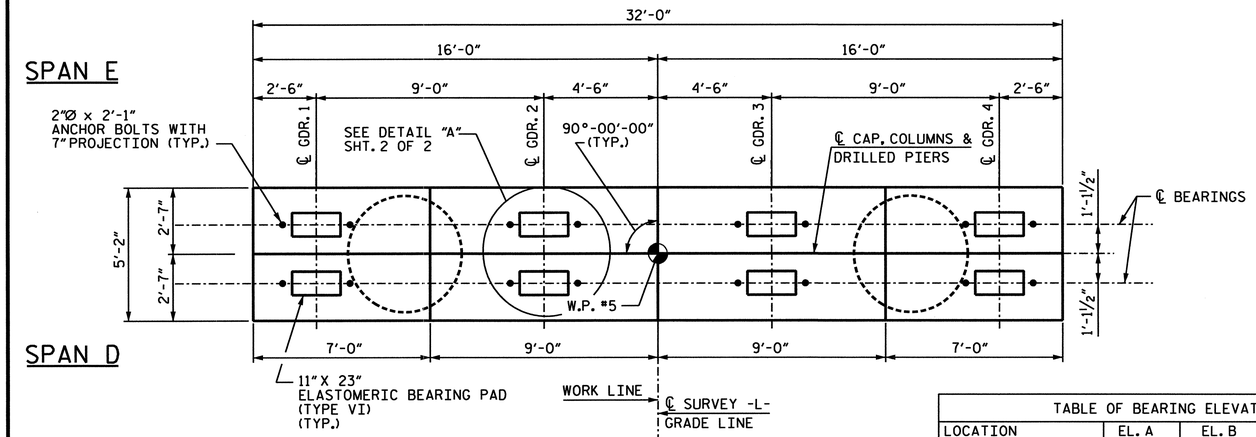

TABLE OF BEARING ELEVATIONS				
LOCATION	EL. A	EL. B	EL. C	EL. D
BENT NO. 4 BACK	32.287	32.467	32.647	32.827
BENT NO. 4 FORWARD	32.399	32.579	32.759	32.939

PLAN

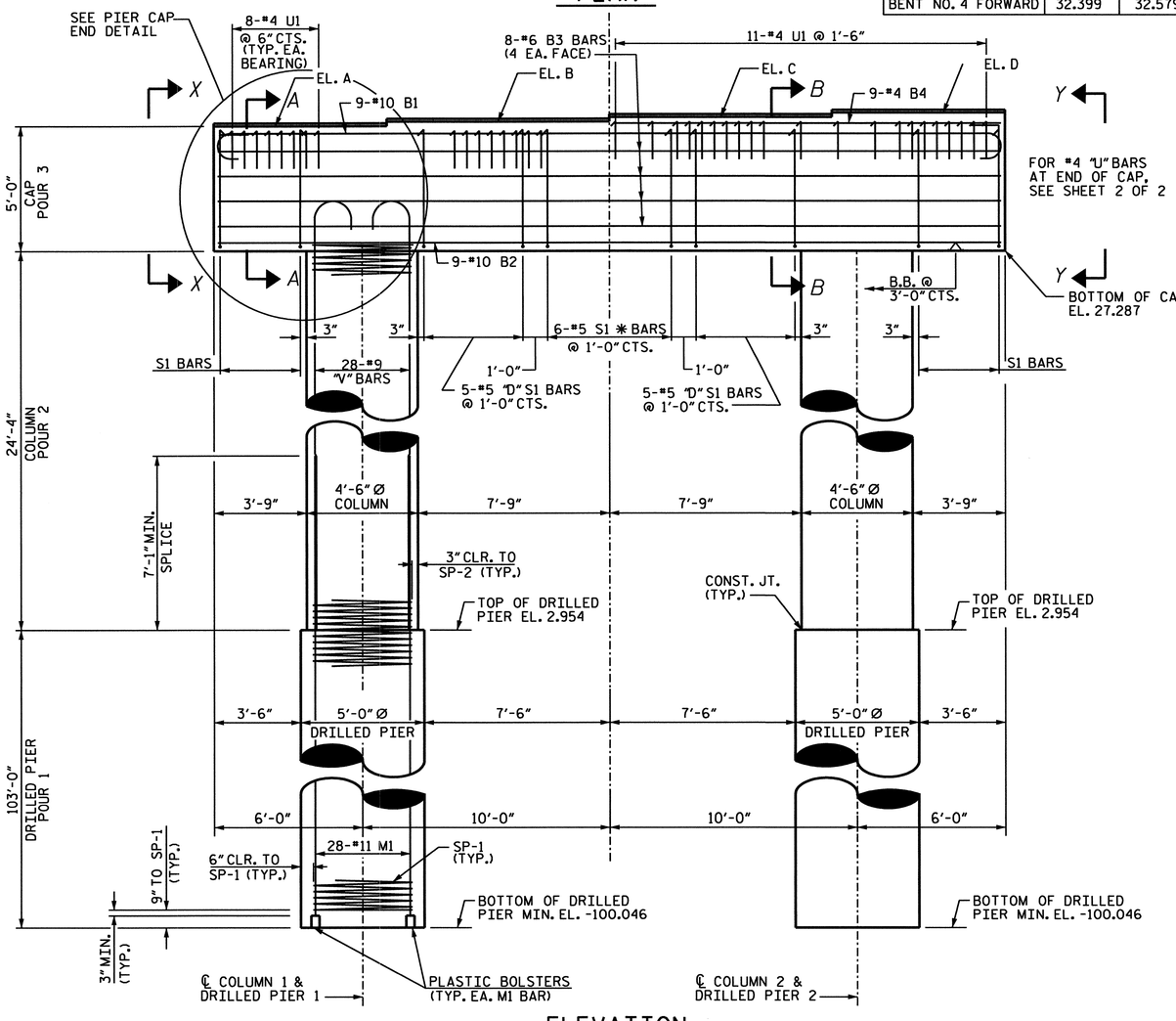

ELEVATION

✱ INVERT ALTERNATE STIRRUPS
"D" DENOTES DOUBLE STIRRUPS

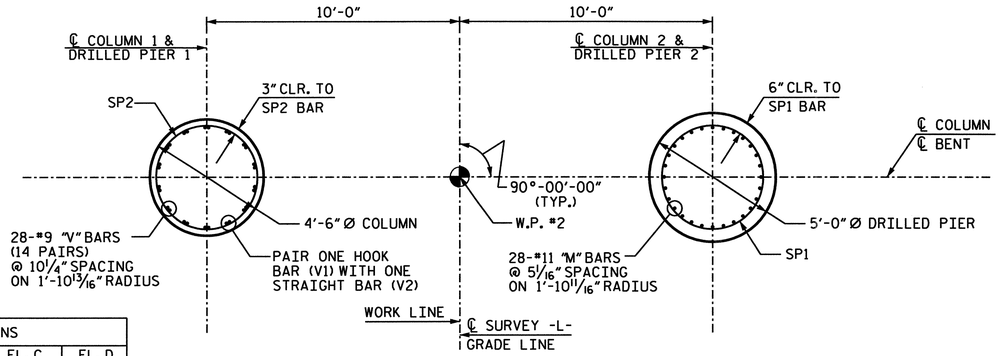

PLAN OF COLUMN / PIERS

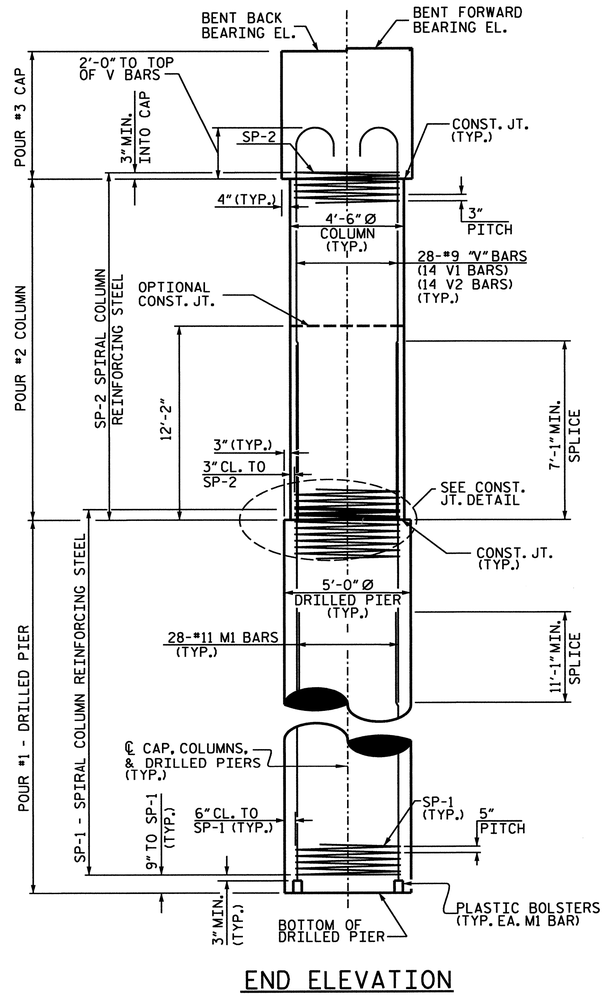

END ELEVATION

NOTES:

FOR DRILLED PIERS, SEE SPECIAL PROVISIONS.

THE CONTRACTOR'S ATTENTION IS CALLED TO THE FACT THAT THE LONGITUDINAL REINFORCEMENT FOR THE DRILLED PIERS IS DETAILED WITH 3 FEET OF EXTRA LENGTH.

ALL STEEL IN THE DRILLED PIERS IS INCLUDED IN THE PAY ITEMS FOR "EPOXY COATED REINFORCING STEEL" OR "EPOXY COATED SPIRAL COLUMN REINFORCING STEEL".

STIRRUPS IN CAP MAY BE SHIFTED AS NECESSARY TO CLEAR ANCHOR BOLTS.

FOR PERMANENT STEEL CASING, SEE SPECIAL PROVISION FOR DRILLED PIERS.

5 FOOT DIAMETER PERMANANT STEEL CASING MAY BE REQUIRED FOR BENT NO. 4. IF REQUIRED, DO NOT EXTEND THE CASING BELOW EL. -30 FEET WITHOUT PRIOR APPROVAL FROM THE ENGINEER. THE ENGINEER WILL DETERMINE THE NEED FOR PERMANANT STEEL CASING.

DRILLED PIERS AT BENT NO. 4 SHALL EXTEND TO AN ELEVATION NO HIGHER THAN -100.0 FEET AND SATISFY THE REQUIRED BEARING CAPACITY.

HOOKS ON "V" BARS MAY BE TURNED AS NECESSARY FOR PLACING REINFORCING STEEL.

ALL BAR SUPPORTS USED IN THE BENT CAP, COLUMNS, AND DRILLED PIERS AND ALL INCIDENTAL REINFORCING STEEL SHALL BE EPOXY COATED IN ACCORDANCE WITH THE STANDARD SPECIFICATIONS.

PROJECT NO. B-682

BRUNSWICK COUNTY

STATION: 47+08.03 -L- POT

SHEET 1 OF 2

STATE OF NORTH CAROLINA
DEPARTMENT OF TRANSPORTATION
RALEIGH

SUBSTRUCTURE BENT 4

NORTH CAROLINA PROFESSIONAL SEAL 32208 ENGINEER IAN C. ENGSTROM 02-23-07

PLANS PREPARED BY:

PARSONS TRANSPORTATION GROUP
Engineers and Planners
RALEIGH, NORTH CAROLINA

JOB NO. 645615
DWG. NO.

REVISIONS						SHEET NO.
NO.	BY:	DATE:	NO.	BY:	DATE:	S-149
1			3			TOTAL SHEETS
2			4			207

DRAWN BY : D. RANDALL DATE : JULY 2006
CHECKED BY : I. C. ENGSTROM DATE : JULY 2006

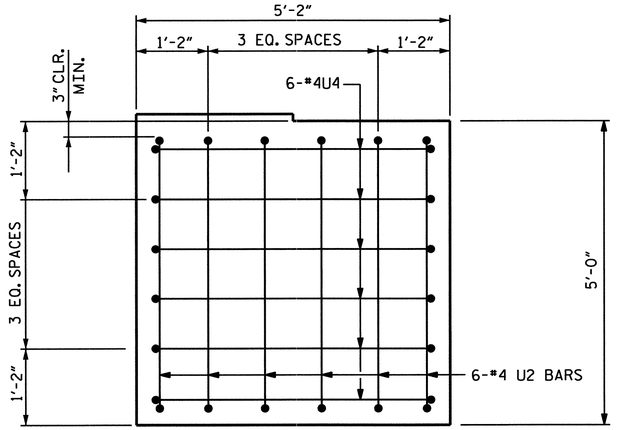

VIEW X-X

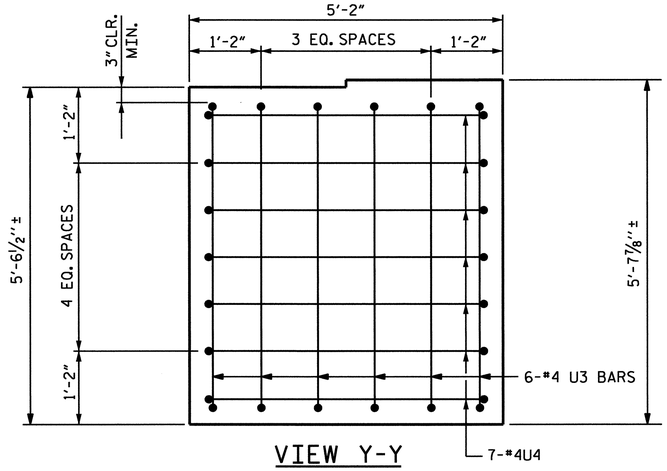

VIEW Y-Y

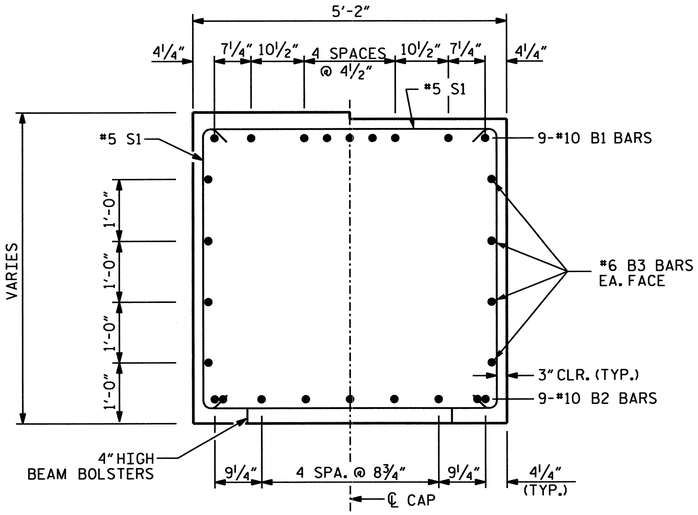

SECTION A-A

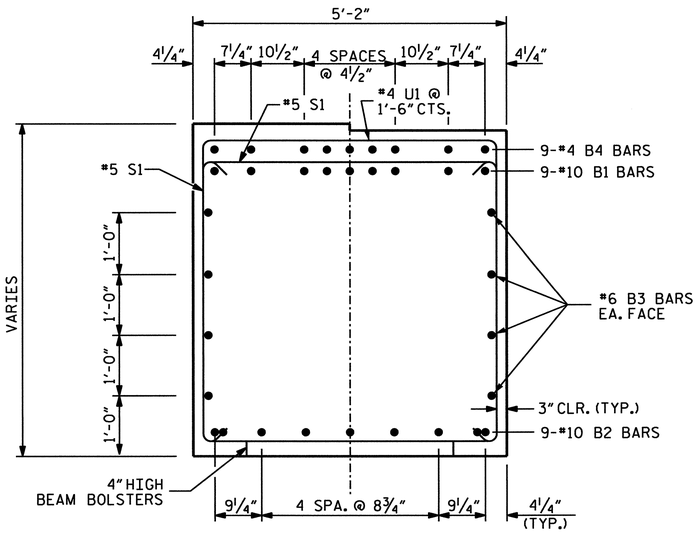

SECTION B-B

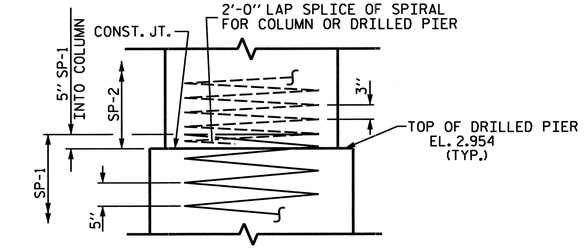

CONSTRUCTION JOINT DETAIL

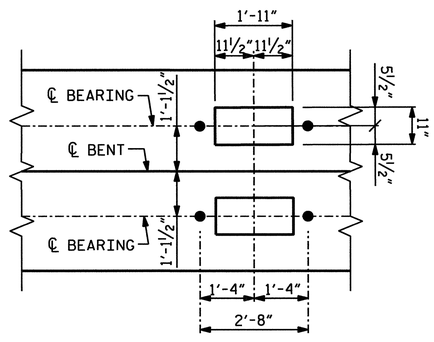

DETAIL A

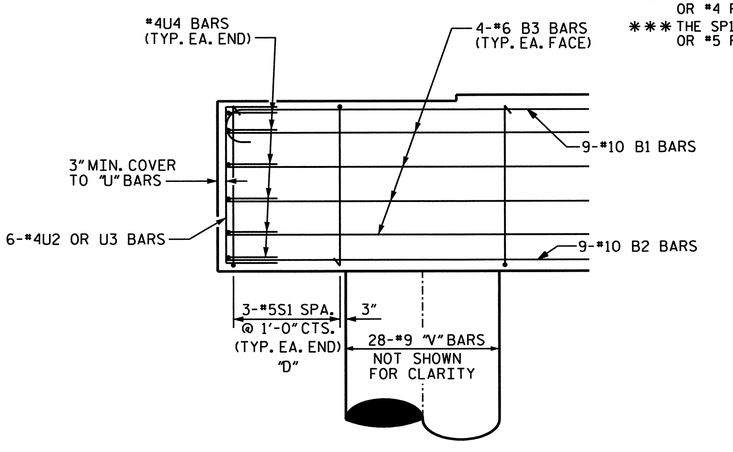

PIER CAP END DETAIL

"D" DENOTES DOUBLE STIRRUPS

BAR TYPES

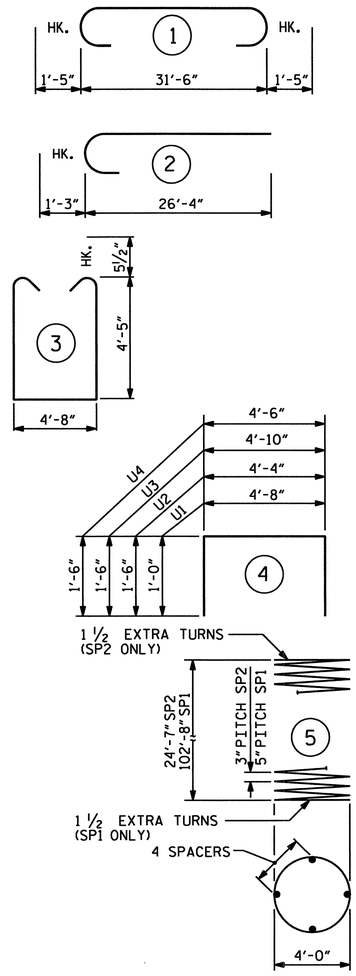

ALL BAR DIMENSIONS ARE OUT TO OUT.

BILL OF MATERIAL

BENT 4

BAR	NO.	SIZE	TYPE	LENGTH (ft)	WEIGHT (lb)
B1	9	10	1	34'-4"	1330
B2	9	10	STR.	31'-6"	1220
B3	8	6	STR.	31'-6"	379
B4	9	4	STR.	15'-6"	93
M1	168	11	STR.	45'-1"	40241
S1	38	5	3	14'-5"	571
U1	43	4	4	6'-8"	192
U2	6	4	4	7'-4"	29
U3	6	4	4	7'-10"	31
U4	13	4	4	7'-6"	65
V1	28	9	2	27'-7"	2626
V2	28	9	STR.	27'-11"	2658

EPOXY COATED REINFORCING STEEL 49,435 lb

SP1	2	***	5	3083'-10"	6508
SP2	2	**	5	1250'-0"	1684

TOTAL EPOXY COATED SPIRAL COLUMN REINFORCING STEEL 8192 lb

CLASS "AA" CONCRETE BREAKDOWN

POUR 2 - COLUMNS	28.7 yd³
POUR 3 - CAP	32.6 yd³
TOTAL CLASS "AA" CONCRETE	61.3 yd³

5'-0" Ø CONCRETE DRILLED PIER LIN.FOOT: 206

DRILLED PIER CONCRETE

POUR 1 - DRILLED PIER	149.9 yd³

PERMANENT STEEL CASING FOR 5'-0" DIA. DRILLED PIER LIN.FOOT: 66

SID INSPECTIONS	EA: 2
SPT TESTING	EA: 2

** THE SP2 SPIRAL REINFORCING STEEL SHALL BE W20 OR D-20 COLD DRAWN WIRE OR #4 PLAIN OR DEFORMED BAR.

*** THE SP1 SPIRAL REINFORCING STEEL SHALL BE W31 OR D-31 COLD DRAWN WIRE OR #5 PLAIN OR DEFORMED BAR.

PROJECT NO. B-682

BRUNSWICK COUNTY

STATION: 47+08.03 -L- POT

SHEET 2 OF 2

NORTH CAROLINA PROFESSIONAL SEAL L. 32208 ENGINEER IAN C. ENGSTROM 02-23-07

PLANS PREPARED BY:

PARSONS TRANSPORTATION GROUP

Engineers and Planners

RALEIGH, NORTH CAROLINA

JOB NO. 645615

DWG. NO.

STATE OF NORTH CAROLINA

DEPARTMENT OF TRANSPORTATION

RALEIGH

SUBSTRUCTURE BENT 4 DETAILS

REVISIONS						SHEET NO.
NO.	BY:	DATE:	NO.	BY:	DATE:	S-153
1			3			TOTAL SHEETS
2			4			207

DRAWN BY : D. RANDALL DATE : JULY 2006

CHECKED BY : I. C. ENGSTROM DATE : JULY 2006

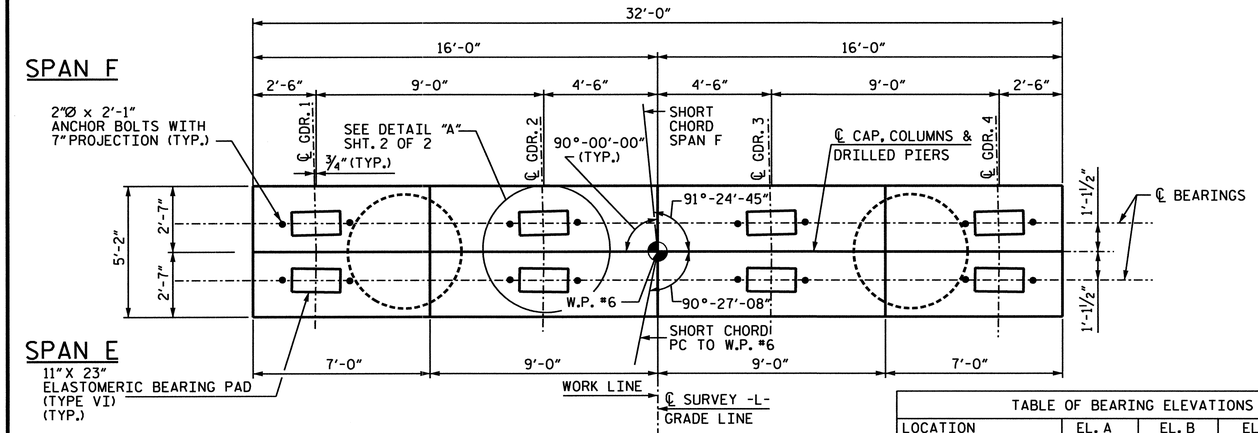

PLAN

TABLE OF BEARING ELEVATIONS				
LOCATION	EL. A	EL. B	EL. C	EL. D
BENT NO. 5 BACK	37.801	38.072	38.342	38.612
BENT NO. 5 FORWARD	37.914	38.184	38.453	38.723

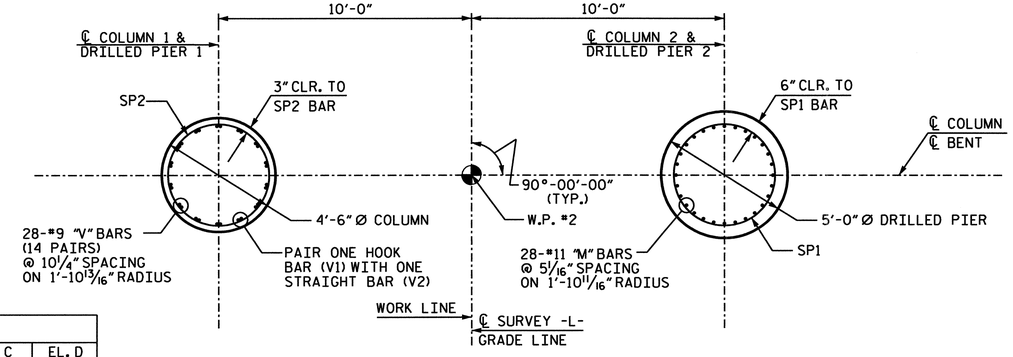

PLAN OF COLUMN / PIERS

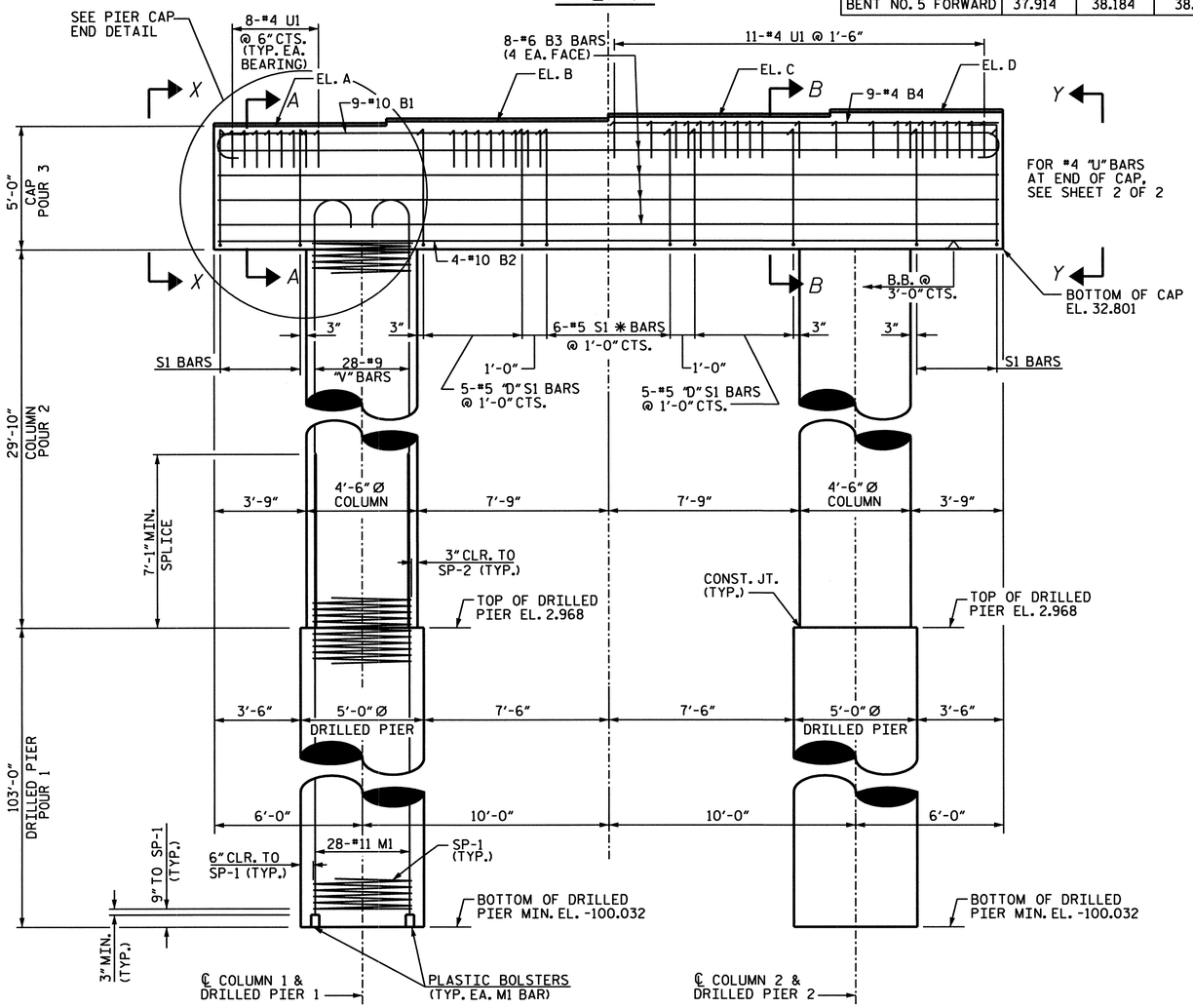

ELEVATION

*INVERT ALTERNATE STIRRUPS
"D" DENOTES DOUBLE STIRRUPS

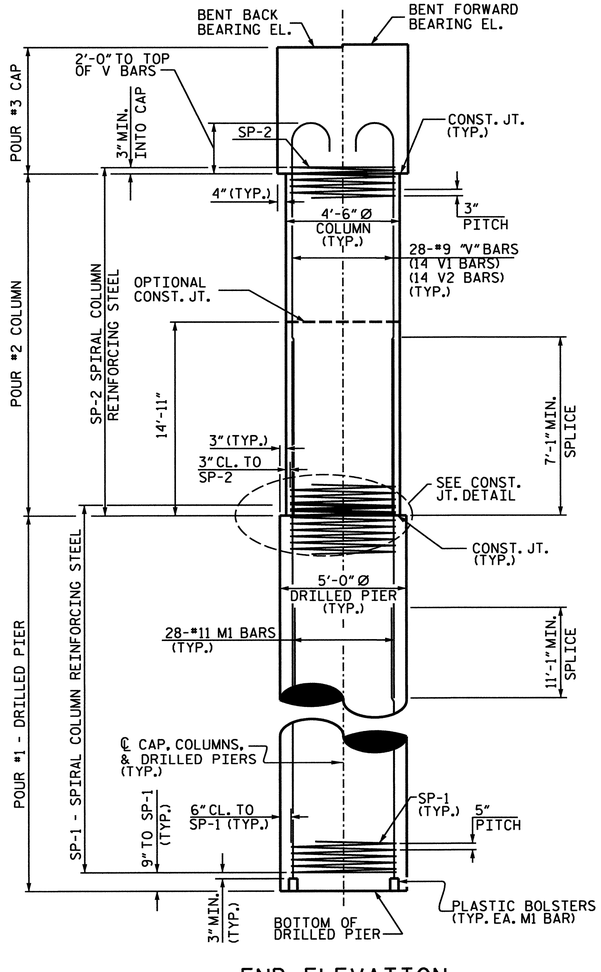

END ELEVATION

NOTES:

FOR DRILLED PIERS, SEE SPECIAL PROVISIONS.

THE CONTRACTOR'S ATTENTION IS CALLED TO THE FACT THAT THE LONGITUDINAL REINFORCEMENT FOR THE DRILLED PIERS IS DETAILED WITH 3 FEET OF EXTRA LENGTH.

ALL STEEL IN THE DRILLED PIERS IS INCLUDED IN THE PAY ITEMS FOR "EPOXY COATED REINFORCING STEEL" OR "EPOXY COATED SPIRAL COLUMN REINFORCING STEEL".

STIRRUPS IN CAP MAY BE SHIFTED AS NECESSARY TO CLEAR ANCHOR BOLTS.

FOR PERMANENT STEEL CASING, SEE SPECIAL PROVISION FOR DRILLED PIERS.

5 FOOT DIAMETER PERMANANT STEEL CASING MAY BE REQUIRED FOR BENT NO. 5. IF REQUIRED, DO NOT EXTEND THE CASING BELOW EL. -30 FEET WITHOUT PRIOR APPROVAL FROM THE ENGINEER. THE ENGINEER WILL DETERMINE THE NEED FOR PERMANANT STEEL CASING.

DRILLED PIERS AT BENT NO. 5 SHALL EXTEND TO AN ELEVATION NO HIGHER THAN -100.0 FEET AND SATISFY THE REQUIRED BEARING CAPACITY.

HOOKS ON "V" BARS MAY BE TURNED AS NECESSARY FOR PLACING REINFORCING STEEL.

ALL BAR SUPPORTS USED IN THE BENT CAP, COLUMNS, AND DRILLED PIERS AND ALL INCIDENTAL REINFORCING STEEL SHALL BE EPOXY COATED IN ACCORDANCE WITH THE STANDARD SPECIFICATIONS.

PROJECT NO. B-682

BRUNSWICK COUNTY

STATION: 47+08.03 -L- POT

SHEET 1 OF 2

NORTH CAROLINA PROFESSIONAL SEAL 32208 ENGINEER I. C. ENGSTROM
DZ-25-07

PLANS PREPARED BY:

PARSONS TRANSPORTATION GROUP
Engineers and Planners
RALEIGH, NORTH CAROLINA

STATE OF NORTH CAROLINA
DEPARTMENT OF TRANSPORTATION
RALEIGH

SUBSTRUCTURE BENT 5

REVISIONS						SHEET NO.
NO.	BY:	DATE:	NO.	BY:	DATE:	S-157
1			3			TOTAL SHEETS
2			4			257

JOB NO. 645615

DWG. NO.

DRAWN BY : D. RANDALL DATE : JULY 2006
CHECKED BY : I. C. ENGSTROM DATE : JULY 2006

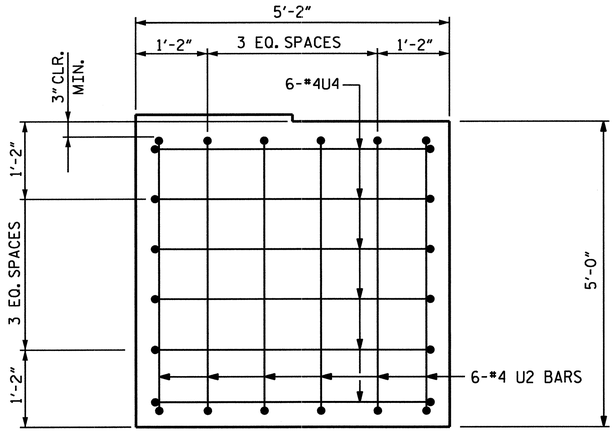

VIEW X-X

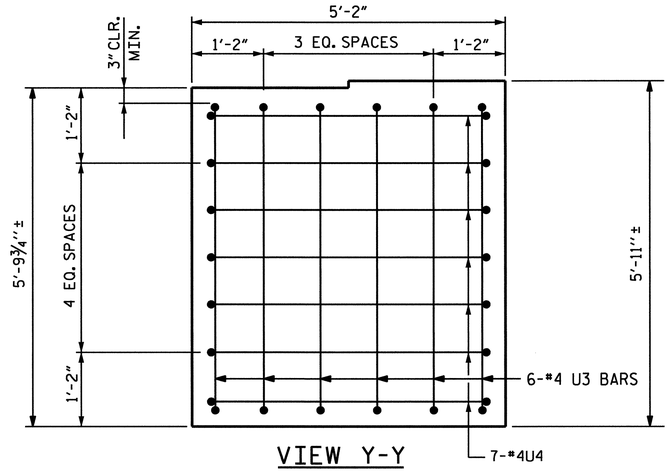

VIEW Y-Y

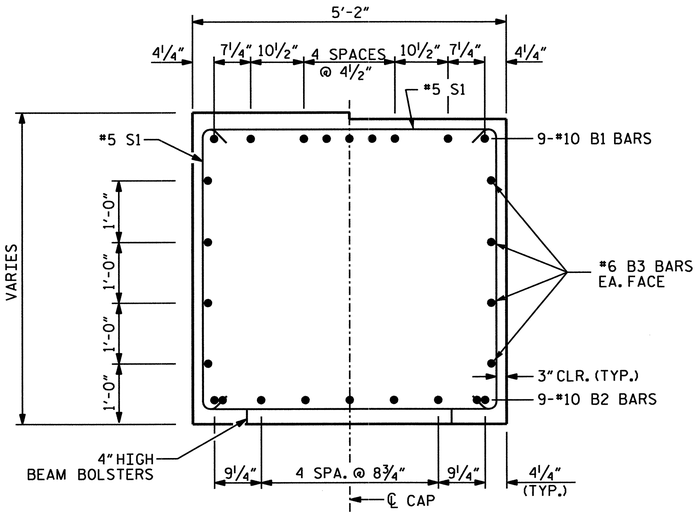

SECTION A-A

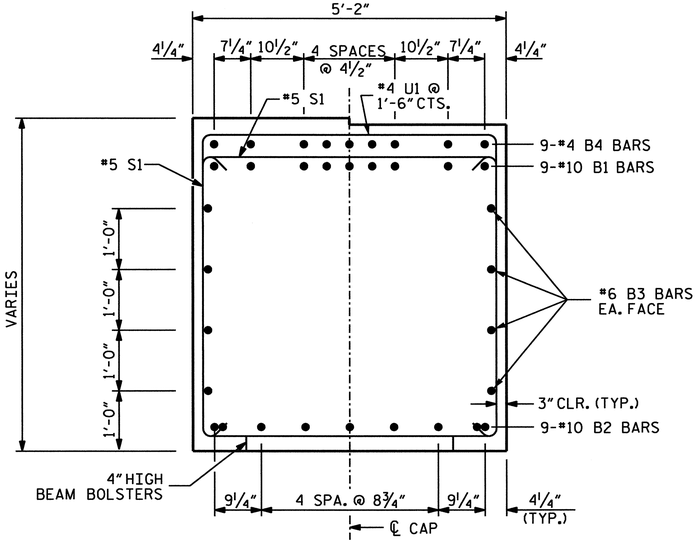

SECTION B-B

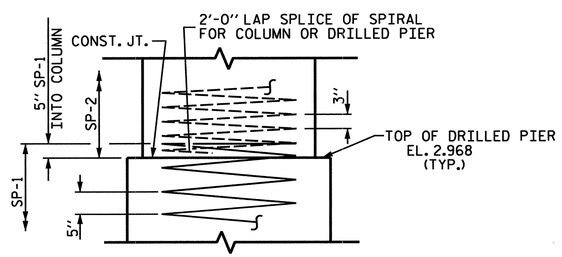

CONSTRUCTION JOINT DETAIL

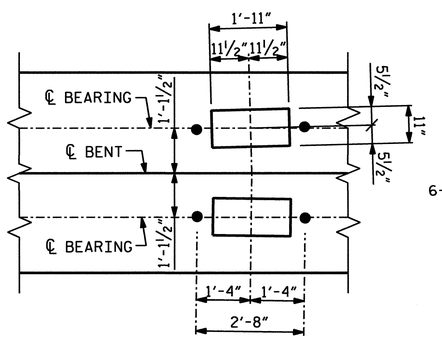

DETAIL A

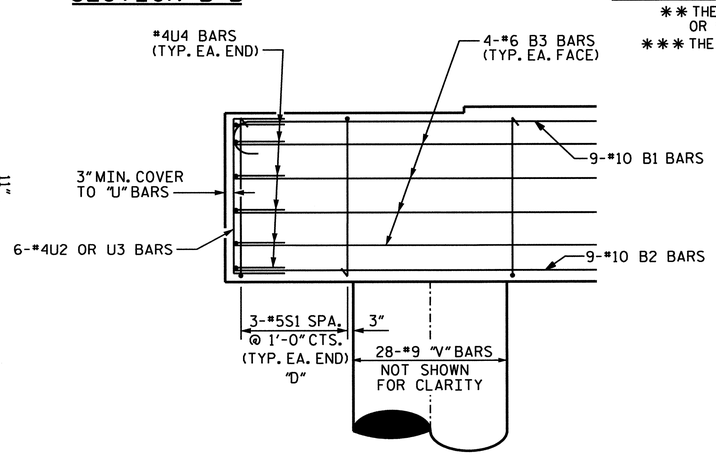

PIER CAP END DETAIL

"D" DENOTES DOUBLE STIRRUPS

BAR TYPES

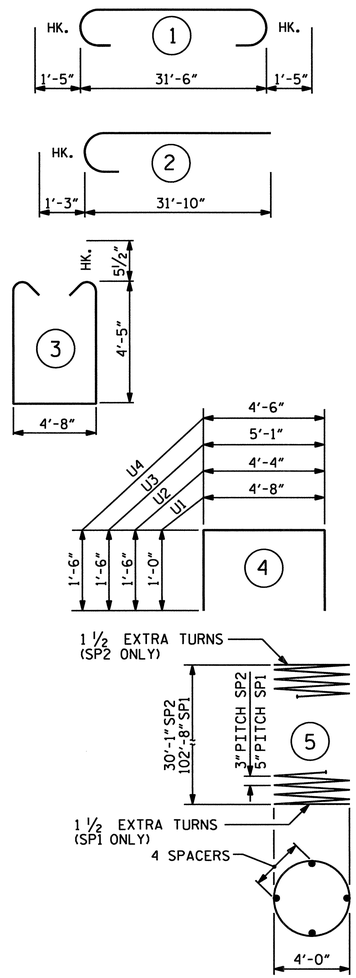

ALL BAR DIMENSIONS ARE OUT TO OUT.

BILL OF MATERIAL

BENT 5

BAR	NO.	SIZE	TYPE	LENGTH (ft)	WEIGHT (lb)
B1	9	10	1	34'-4"	1330
B2	9	10	STR.	31'-6"	1220
B3	8	6	STR.	31'-6"	379
B4	9	4	STR.	15'-6"	93
M1	168	11	STR.	45'-1"	40241
S1	38	5	3	14'-5"	571
U1	43	4	4	6'-8"	192
U2	6	4	4	7'-4"	29
U3	6	4	4	8'-1"	32
U4	13	4	4	7'-6"	65
V1	28	9	2	33'-1"	3150
V2	28	9	STR.	33'-5"	3181

EPOXY COATED REINFORCING STEEL 50,483 lb

SP1	2	*****	5	3083'-10"	6508
SP2	2	**	5	1523'-8"	2084

TOTAL EPOXY COATED SPIRAL COLUMN REINFORCING STEEL 8592 lb

CLASS "AA" CONCRETE BREAKDOWN

POUR 2 - COLUMNS	35.2 yd³
POUR 3 - CAP	33.5 yd³
TOTAL CLASS "AA" CONCRETE	68.7 yd³

5'-0" Ø CONCRETE DRILLED PIER	LIN.FOOT: 206
DRILLED PIER CONCRETE POUR 1 - DRILLED PIER	149.9 yd³
PERMANENT STEEL CASING FOR 5'-0" DIA. DRILLED PIER	LIN.FOOT: 66
SID INSPECTIONS	EA: 2
SPT TESTING	EA: 2

** THE SP2 SPIRAL REINFORCING STEEL SHALL BE W20 OR D-20 COLD DRAWN WIRE OR #4 PLAIN OR DEFORMED BAR.

*** THE SP1 SPIRAL REINFORCING STEEL SHALL BE W31 OR D-31 COLD DRAWN WIRE

DRAWN BY : D. RANDALL DATE : JULY 2006
CHECKED BY : I. C. ENGSTROM DATE : JULY 2006

PROJECT NO. B-682
BRUNSWICK COUNTY
STATION: 47+08.03 -L- POT

SHEET 2 OF 2

NORTH CAROLINA PROFESSIONAL SEAL 32208 ENGINEER I. C. ENGSTROM 02-23-07

PLANS PREPARED BY:

PARSONS TRANSPORTATION GROUP
Engineers and Planners
RALEIGH, NORTH CAROLINA
JOB NO. 645615
DWG. NO.

STATE OF NORTH CAROLINA
DEPARTMENT OF TRANSPORTATION
RALEIGH

SUBSTRUCTURE BENT 5 DETAILS

REVISIONS						SHEET NO.
NO.	BY:	DATE:	NO.	BY:	DATE:	S-147
1			3			TOTAL SHEETS
2			4			207

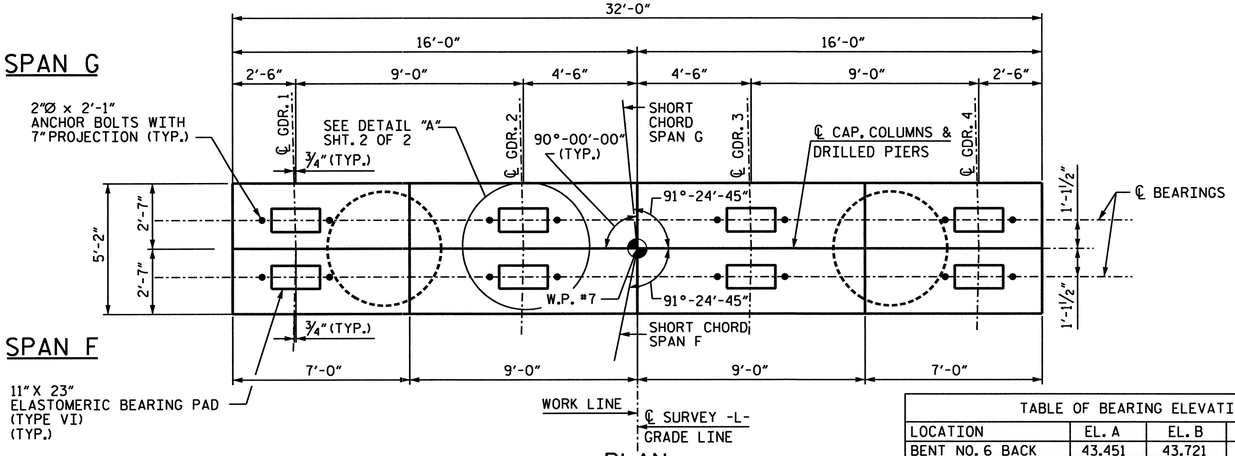

PLAN

TABLE OF BEARING ELEVATIONS				
LOCATION	EL. A	EL. B	EL. C	EL. D
BENT NO. 6 BACK	43.451	43.721	43.991	44.261
BENT NO. 6 FORWARD	43.564	43.834	44.103	44.373

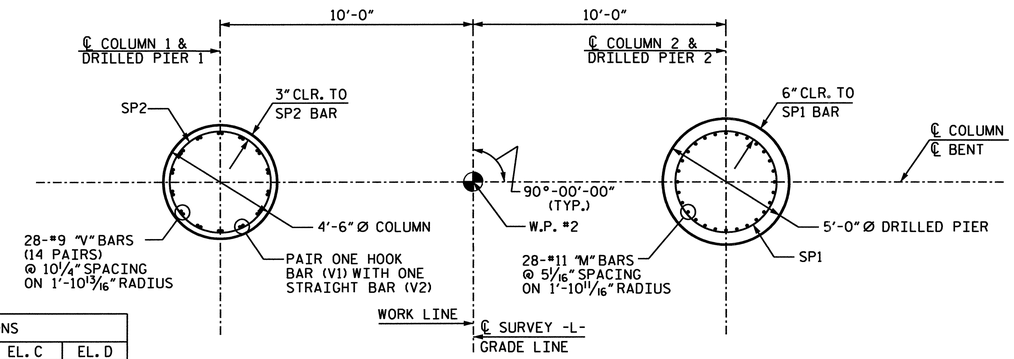

PLAN OF COLUMN / PIERS

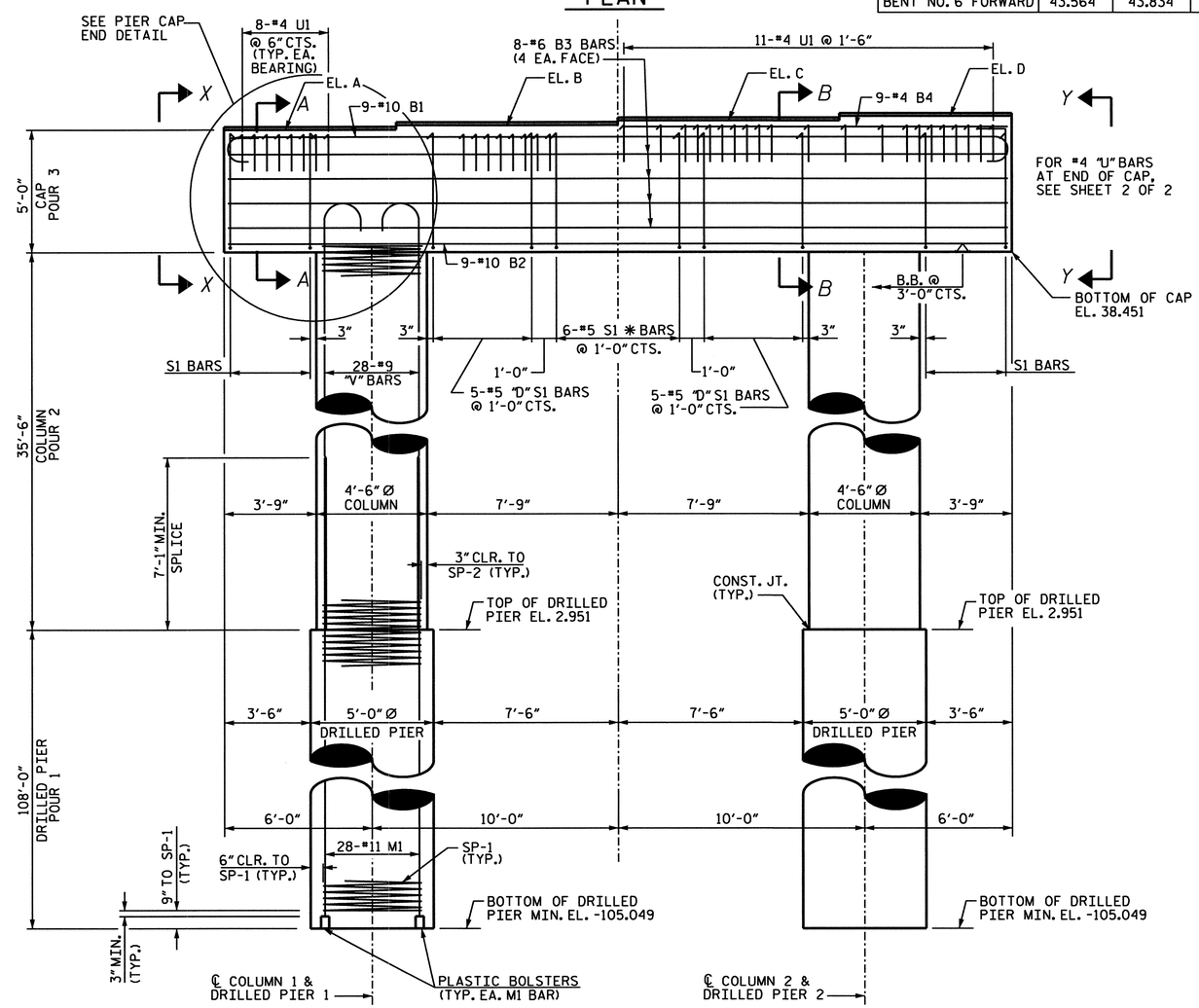

ELEVATION

* INVERT ALTERNATE STIRRUPS
"D" DENOTES DOUBLE STIRRUPS

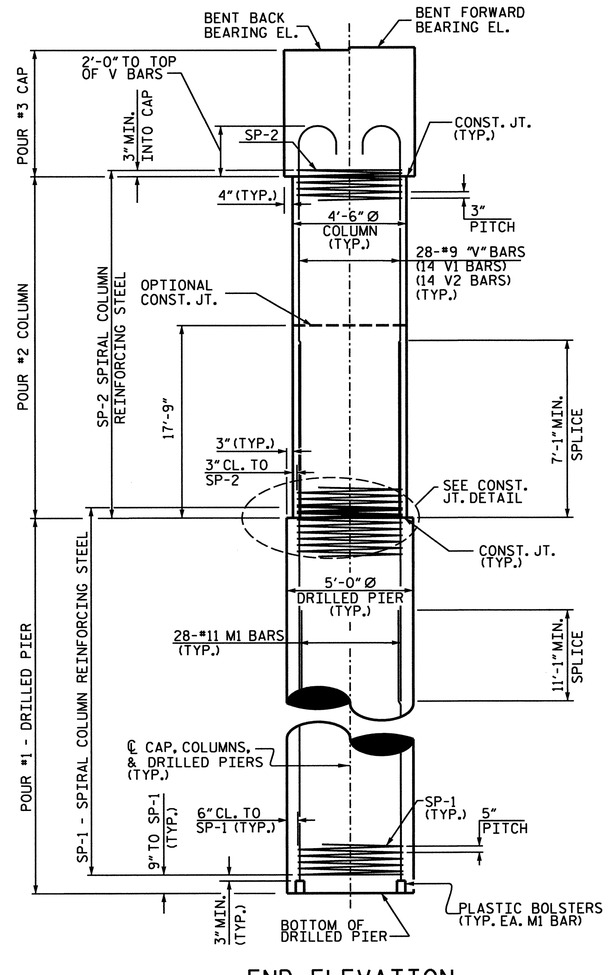

END ELEVATION

NOTES:

FOR DRILLED PIERS, SEE SPECIAL PROVISIONS.

THE CONTRACTOR'S ATTENTION IS CALLED TO THE FACT THAT THE LONGITUDINAL REINFORCEMENT FOR THE DRILLED PIERS IS DETAILED WITH 3 FEET OF EXTRA LENGTH.

ALL STEEL IN THE DRILLED PIERS IS INCLUDED IN THE PAY ITEMS FOR "EPOXY COATED REINFORCING STEEL" OR "EPOXY COATED SPIRAL COLUMN REINFORCING STEEL".

THE TOP SURFACE AREAS OF THE BENT CAP SHALL BE CURED IN ACCORDANCE WITH THE STANDARD SPECIFICATIONS EXCEPT THE MEMBRANE CURING COMPOUND METHOD SHALL NOT BE USED.

STIRRUPS IN CAP MAY BE SHIFTED AS NECESSARY TO CLEAR ANCHOR BOLTS.

FOR PERMANENT STEEL CASING, SEE SPECIAL PROVISION FOR DRILLED PIERS.

5 FOOT DIAMETER PERMANANT STEEL CASING MAY BE REQUIRED FOR BENT NO. 6. IF REQUIRED, DO NOT EXTEND THE CASING BELOW EL. -30 FEET WITHOUT PRIOR APPROVAL FROM THE ENGINEER. THE ENGINEER WILL DETERMINE THE NEED FOR PERMANANT STEEL CASING.

DRILLED PIERS AT BENT NO. 6 SHALL EXTEND TO AN ELEVATION NO HIGHER THAN -105.0 FEET AND SATISFY THE REQUIRED BEARING CAPACITY.

HOOKS ON "V" BARS MAY BE TURNED AS NECESSARY FOR PLACING REINFORCING STEEL.

ALL BAR SUPPORTS USED IN THE BENT CAP, COLUMNS, AND DRILLED PIERS AND ALL INCIDENTAL REINFORCING STEEL SHALL BE EPOXY COATED IN ACCORDANCE WITH THE STANDARD SPECIFICATIONS.

PROJECT NO. B-682

BRUNSWICK COUNTY

STATION: 47+08.03 -L- POT

SHEET 1 OF 2

NORTH CAROLINA PROFESSIONAL SEAL 32208 ENGINEER I. C. ENGSTROM
02-23-07

PLANS PREPARED BY:

PARSONS TRANSPORTATION GROUP
Engineers and Planners
RALEIGH, NORTH CAROLINA

STATE OF NORTH CAROLINA
DEPARTMENT OF TRANSPORTATION
RALEIGH

SUBSTRUCTURE BENT 6

REVISIONS							SHEET NO.
NO.	BY:	DATE:	NO.	BY:	DATE:		S-153
1			3				TOTAL SHEETS
2			4				267

JOB NO. 645615

DWG. NO.

DRAWN BY : D. RANDALL DATE : JULY 2006
CHECKED BY : I. C. ENGSTROM DATE : JULY 2006

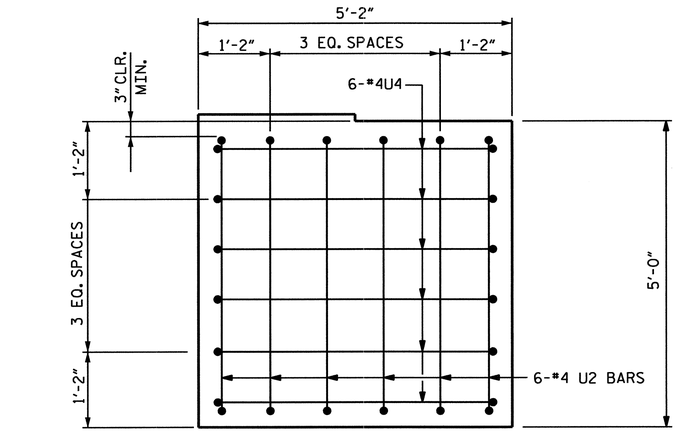

VIEW X-X

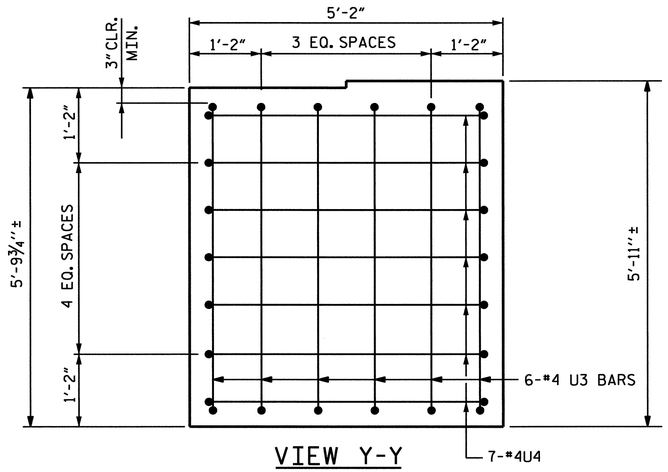

VIEW Y-Y

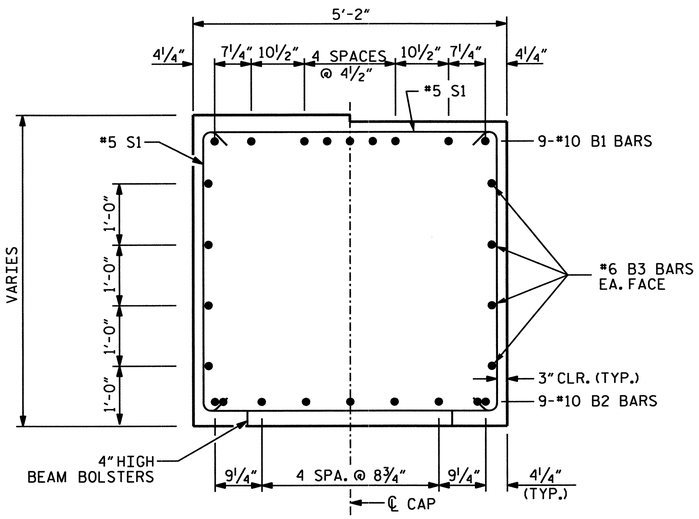

SECTION A-A

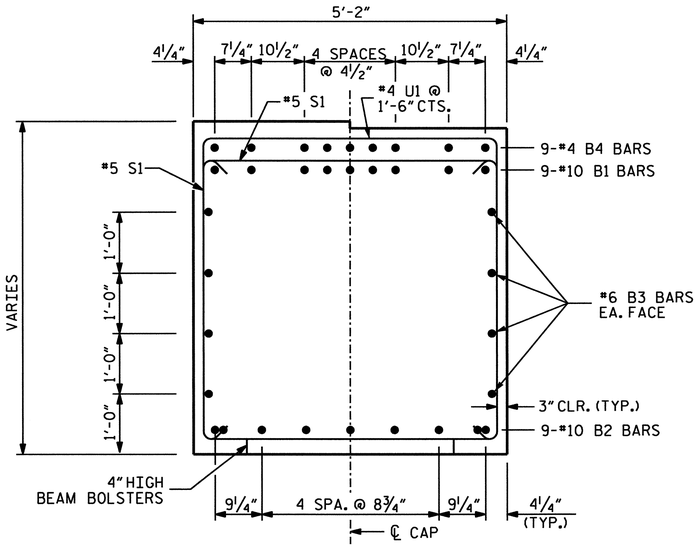

SECTION B-B

BAR TYPES

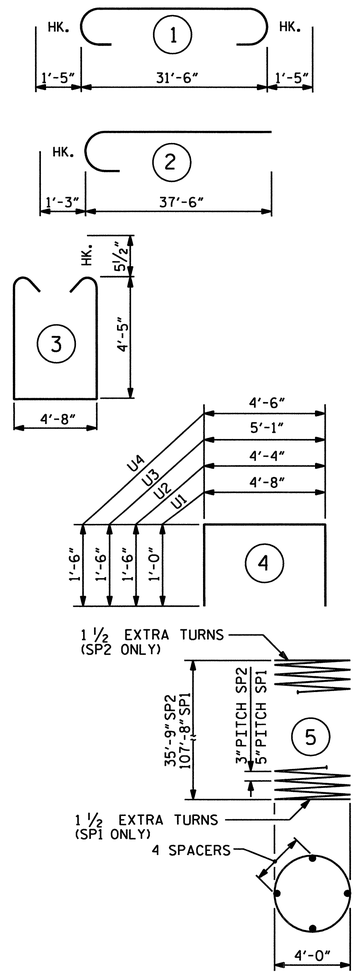

ALL BAR DIMENSIONS ARE OUT TO OUT.

BILL OF MATERIAL

BENT 6

BAR	NO.	SIZE	TYPE	LENGTH (ft)	WEIGHT (lb)
B1	9	10	1	34'-4"	1330
B2	9	10	STR.	31'-6"	1220
B3	8	6	STR.	31'-6"	379
B4	9	4	STR.	15'-6"	93
M1	168	11	STR.	46'-9"	41728
S1	38	5	3	14'-5"	571
U1	43	4	4	6'-8"	192
U2	6	4	4	7'-4"	29
U3	6	4	4	8'-1"	32
U4	13	4	4	7'-6"	65
V1	28	9	2	38'-9"	3689
V2	28	9	STR.	39'-1"	3721
EPOXY COATED REINFORCING STEEL 53,049 lb					
SP1	2	***	5	3232'-9"	6758
SP2	2	**	5	1797'-4"	2404
TOTAL EPOXY COATED SPIRAL COLUMN REINFORCING STEEL 9162 lb					

CLASS "AA" CONCRETE BREAKDOWN

POUR 2 - COLUMNS	41.9 yd³
POUR 3 - CAP	33.5 yd³
TOTAL CLASS "AA" CONCRETE	75.4 yd³

5'-0" Ø CONCRETE DRILLED PIER	LIN.FOOT: 216
DRILLED PIER CONCRETE POUR 1 - DRILLED PIER	157.1 yd³
PERMANENT STEEL CASING FOR 5'-0" DIA. DRILLED PIER	LIN.FOOT: 66
SID INSPECTIONS	EA: 2
SPT TESTING	EA: 2

** THE SP2 SPIRAL REINFORCING STEEL SHALL BE W20 OR D-20 COLD DRAWN WIRE OR #4 PLAIN OR DEFORMED BAR.

*** THE SP1 SPIRAL REINFORCING STEEL SHALL BE W31 OR D-31 COLD DRAWN WIRE OR #5 PLAIN OR DEFORMED BAR.

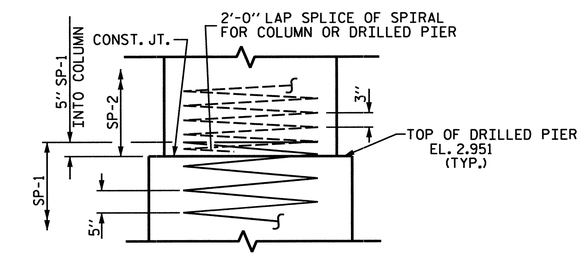

CONSTRUCTION JOINT DETAIL

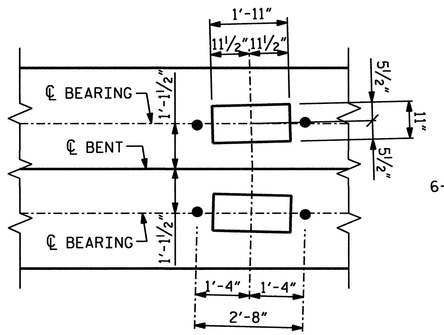

DETAIL A

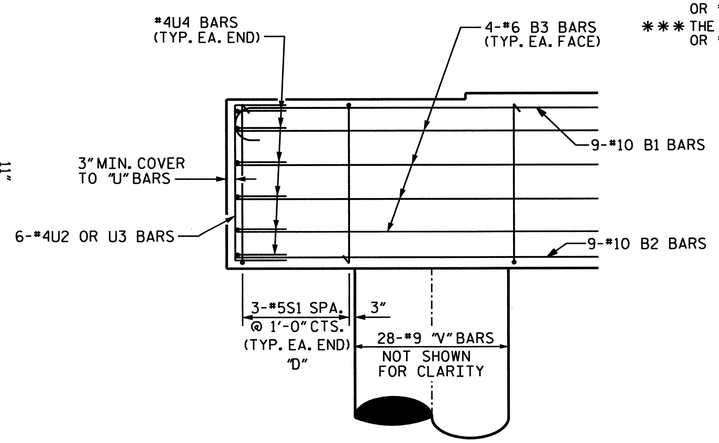

PIER CAP END DETAIL

"D" DENOTES DOUBLE STIRRUPS

PROJECT NO. B-682

BRUNSWICK COUNTY

STATION: 47+08.03 -L- POT

SHEET 2 OF 2

STATE OF NORTH CAROLINA
DEPARTMENT OF TRANSPORTATION
RALEIGH

SUBSTRUCTURE BENT 6 DETAILS

NORTH CAROLINA PROFESSIONAL SEAL 32208 ENGINEER I. C. ENGSTROM
02-23-07

PLANS PREPARED BY:

PARSONS
TRANSPORTATION GROUP
Engineers and Planners
RALEIGH, NORTH CAROLINA

JOB NO. 645615

DWG. NO.

REVISIONS						SHEET NO.
NO.	BY:	DATE:	NO.	BY:	DATE:	
1			3			TOTAL SHEETS
2			4			267

DRAWN BY : D. RANDALL DATE : JULY 2006
CHECKED BY : I. C. ENGSTROM DATE : JULY 2006

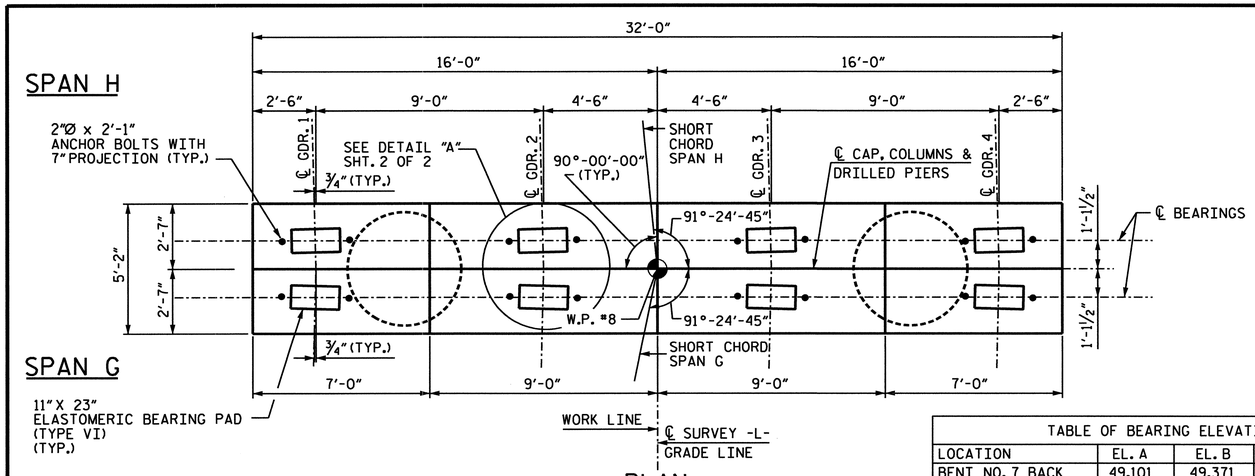

PLAN

TABLE OF BEARING ELEVATIONS				
LOCATION	EL. A	EL. B	EL. C	EL. D
BENT NO. 7 BACK	49.101	49.371	49.641	49.911
BENT NO. 7 FORWARD	49.214	49.484	49.753	50.023

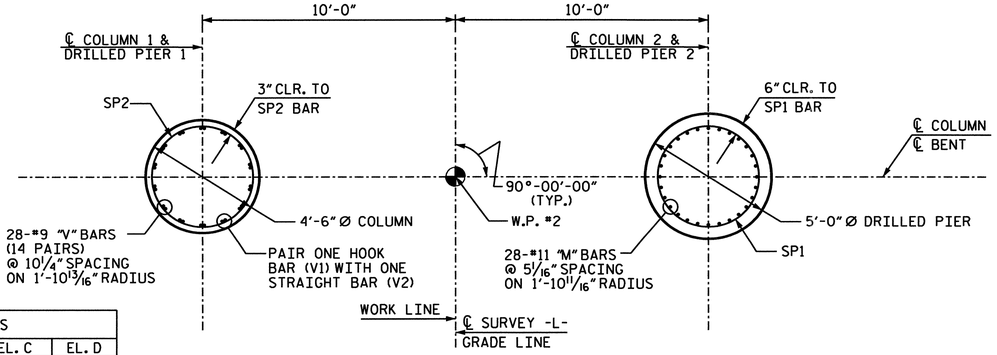

PLAN OF COLUMN / PIERS

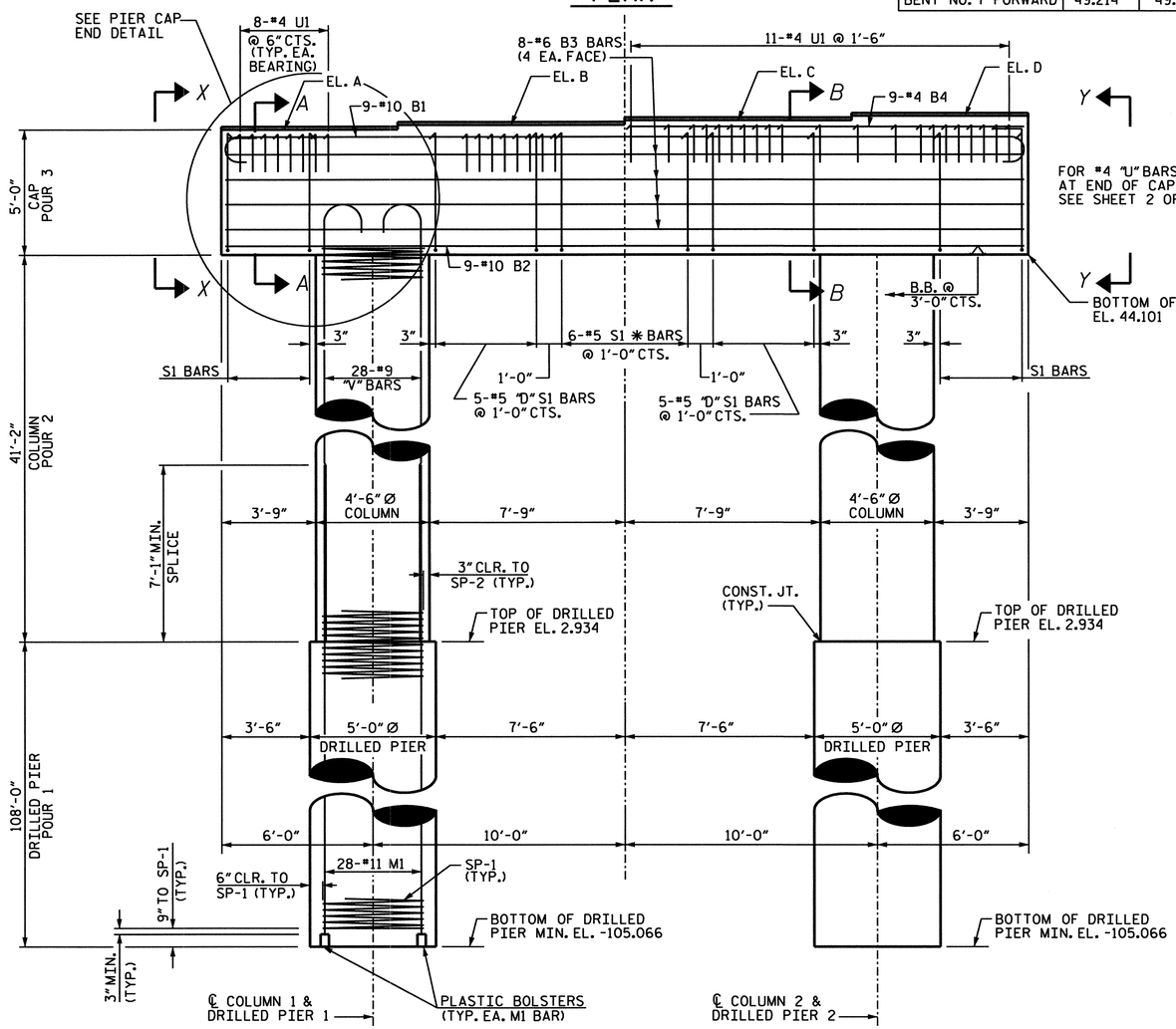

ELEVATION

*INVERT ALTERNATE STIRRUPS
"D" DENOTES DOUBLE STIRRUPS

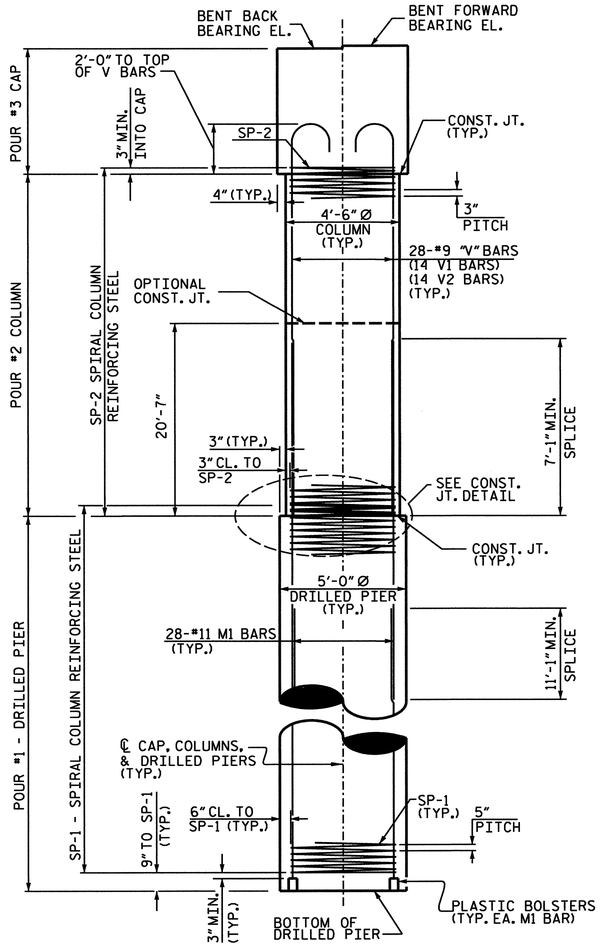

END ELEVATION

NOTES:

FOR DRILLED PIERS, SEE SPECIAL PROVISIONS.

THE CONTRACTOR'S ATTENTION IS CALLED TO THE FACT THAT THE LONGITUDINAL REINFORCEMENT FOR THE DRILLED PIERS IS DETAILED WITH 3 FEET OF EXTRA LENGTH.

ALL STEEL IN THE DRILLED PIERS IS INCLUDED IN THE PAY ITEMS FOR "EPOXY COATED REINFORCING STEEL" OR "EPOXY COATED SPIRAL COLUMN REINFORCING STEEL".

STIRRUPS IN CAP MAY BE SHIFTED AS NECESSARY TO CLEAR ANCHOR BOLTS.

FOR PERMANENT STEEL CASING, SEE SPECIAL PROVISION FOR DRILLED PIERS.

5 FOOT DIAMETER PERMANANT STEEL CASING MAY BE REQUIRED FOR BENT NO. 7. IF REQUIRED, DO NOT EXTEND THE CASING BELOW EL. -30 FEET WITHOUT PRIOR APPROVAL FROM THE ENGINEER. THE ENGINEER WILL DETERMINE THE NEED FOR PERMANANT STEEL CASING.

DRILLED PIERS AT BENT NO. 7 SHALL EXTEND TO AN ELEVATION NO HIGHER THAN -105.0 FEET AND SATISFY THE REQUIRED BEARING CAPACITY.

HOOKS ON "V" BARS MAY BE TURNED AS NECESSARY FOR PLACING REINFORCING STEEL.

ALL BAR SUPPORTS USED IN THE BENT CAP, COLUMNS, AND DRILLED PIERS AND ALL INCIDENTAL REINFORCING STEEL SHALL BE EPOXY COATED IN ACCORDANCE WITH THE STANDARD SPECIFICATIONS.

DRAWN BY : D. RANDALL DATE : JULY 2006
CHECKED BY : I. C. ENGSTROM DATE : JULY 2006

PROJECT NO. B-682
BRUNSWICK COUNTY
STATION: 47+08.03 -L- POT

SHEET 1 OF 2

NORTH CAROLINA PROFESSIONAL SEAL 032208 ENGINEER I. C. ENGSTROM DE-2507

PLANS PREPARED BY:

PARSONS TRANSPORTATION GROUP
Engineers and Planners
RALEIGH, NORTH CAROLINA

JOB NO. 645615
DWG. NO.

STATE OF NORTH CAROLINA
DEPARTMENT OF TRANSPORTATION
RALEIGH

SUBSTRUCTURE
BENT 7

REVISIONS						SHEET NO.
NO.	BY:	DATE:	NO.	BY:	DATE:	S-155
1			3			TOTAL SHEETS
2			4			207

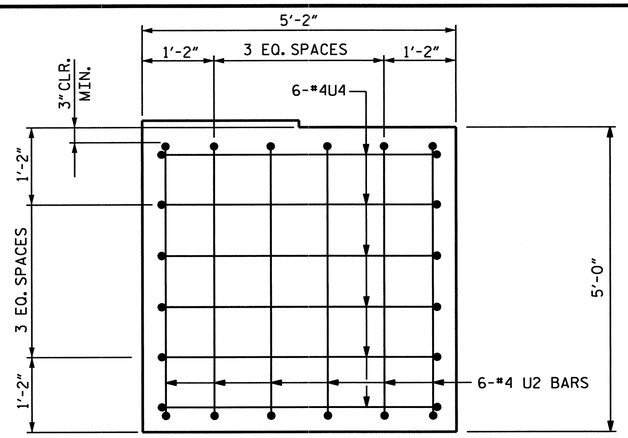

VIEW X-X

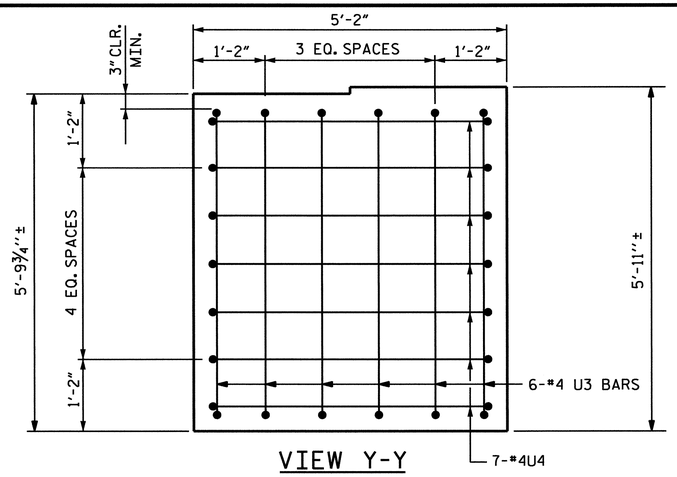

VIEW Y-Y

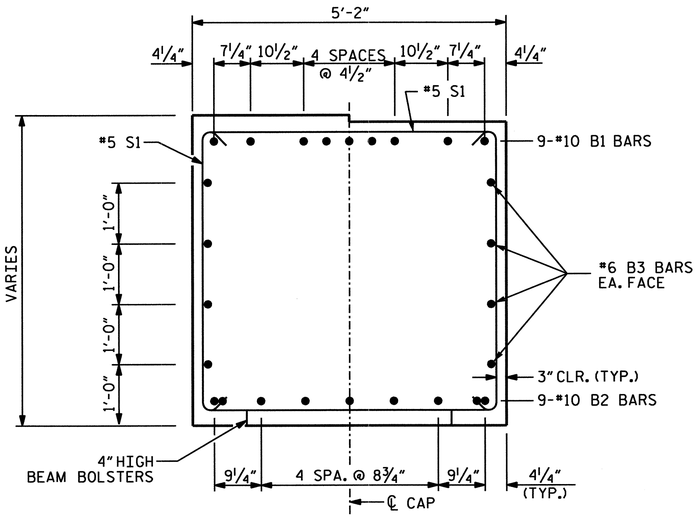

SECTION A-A

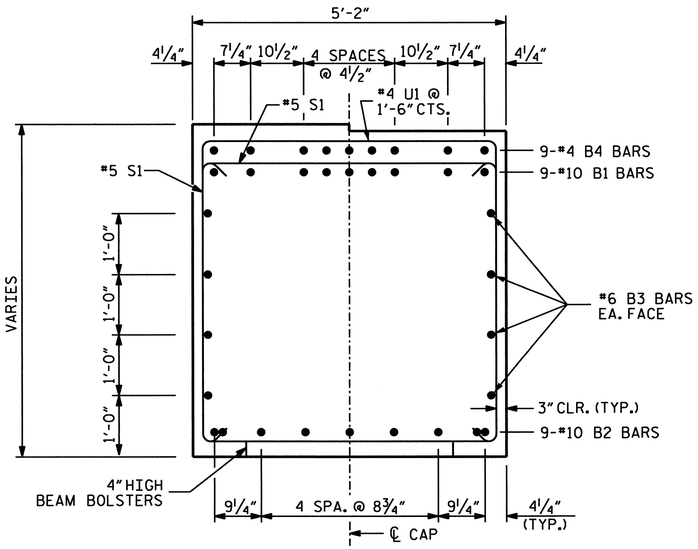

SECTION B-B

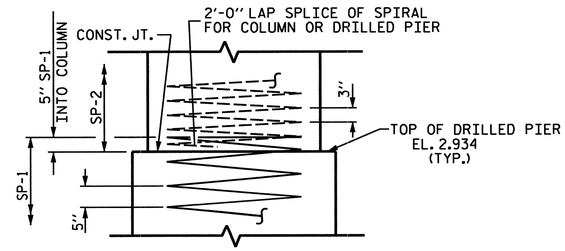

CONSTRUCTION JOINT DETAIL

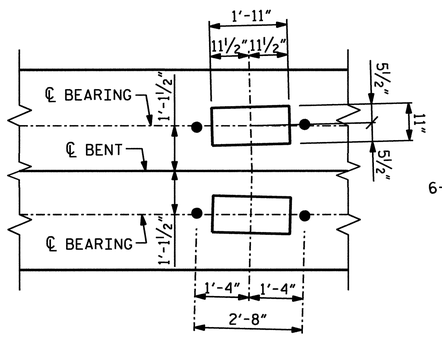

DETAIL A

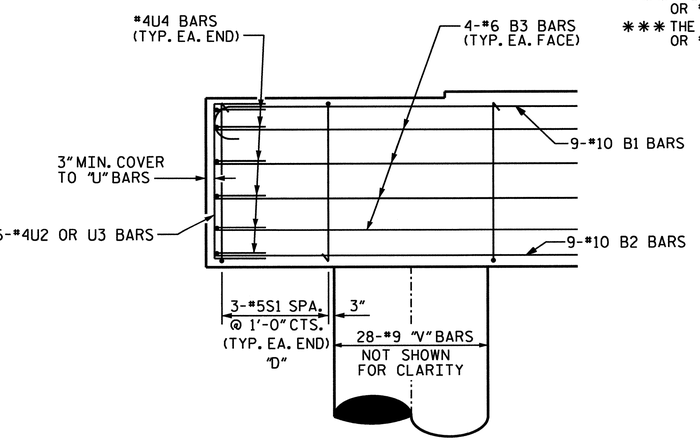

PIER CAP END DETAIL

"D" DENOTES DOUBLE STIRRUPS

BAR TYPES

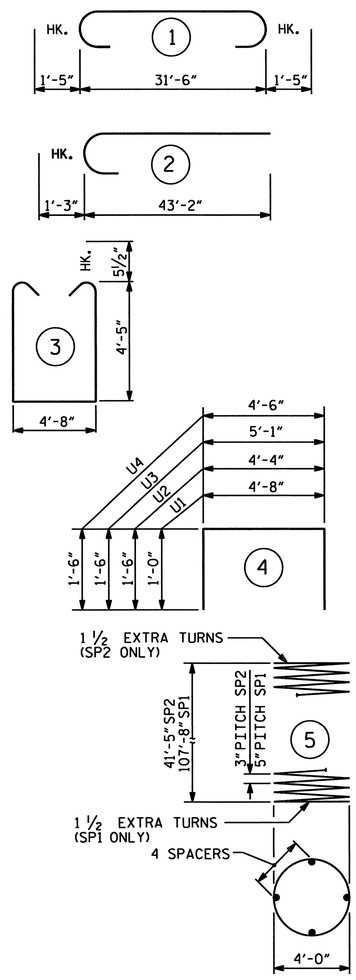

ALL BAR DIMENSIONS ARE OUT TO OUT.

BILL OF MATERIAL

BENT 7

BAR	NO.	SIZE	TYPE	LENGTH (ft)	WEIGHT (lb)
B1	9	10	1	34'-4"	1330
B2	9	10	STR.	31'-6"	1220
B3	8	6	STR.	31'-6"	379
B4	9	4	STR.	15'-6"	93
M1	168	11	STR.	46'-9"	41728
S1	38	5	3	14'-5"	571
U1	43	4	4	6'-8"	192
U2	6	4	4	7'-4"	29
U3	6	4	4	8'-1"	32
U4	13	4	4	7'-6"	65
V1	28	9	2	44'-5"	4228
V2	28	9	STR.	44'-9"	4260

EPOXY COATED REINFORCING STEEL 54,127 lb

SP1	2	***	5	3232'-9"	6758
SP2	2	**	5	2083'-5"	2806

TOTAL EPOXY COATED SPIRAL COLUMN REINFORCING STEEL 9564 lb

CLASS "AA" CONCRETE BREAKDOWN

POUR 2 - COLUMNS	48.5 yd³
POUR 3 - CAP	33.5 yd³
TOTAL CLASS "AA" CONCRETE	82.0 yd³

5'-0" Ø CONCRETE DRILLED PIER	LIN.FOOT: 216
DRILLED PIER CONCRETE POUR 1 - DRILLED PIER	157.1 yd³
PERMANENT STEEL CASING FOR 5'-0" DIA. DRILLED PIER	LIN.FOOT: 66
SID INSPECTIONS	EA: 2
SPT TESTING	EA: 2

** THE SP2 SPIRAL REINFORCING STEEL SHALL BE W20 OR D-20 COLD DRAWN WIRE OR #4 PLAIN OR DEFORMED BAR.

*** THE SP1 SPIRAL REINFORCING STEEL SHALL BE W31 OR D-31 COLD DRAWN WIRE OR #5 PLAIN OR DEFORMED BAR.

PROJECT NO. B-682

BRUNSWICK COUNTY

STATION: 47+08.03 -L- POT

SHEET 2 OF 2

STATE OF NORTH CAROLINA
DEPARTMENT OF TRANSPORTATION
RALEIGH

SUBSTRUCTURE BENT 7 DETAILS

NORTH CAROLINA PROFESSIONAL SEAL 32208 ENGINEER I. C. ENGSTROM
02-23-07

PLANS PREPARED BY:

PARSONS
TRANSPORTATION GROUP
Engineers and Planners
RALEIGH, NORTH CAROLINA

JOB NO. 645615

DWG. NO.

REVISIONS						SHEET NO.
NO.	BY:	DATE:	NO.	BY:	DATE:	S-15
1			3			TOTAL SHEETS
2			4			267

DRAWN BY : D. RANDALL DATE : JULY 2006
CHECKED BY : I. C. ENGSTROM DATE : JULY 2006

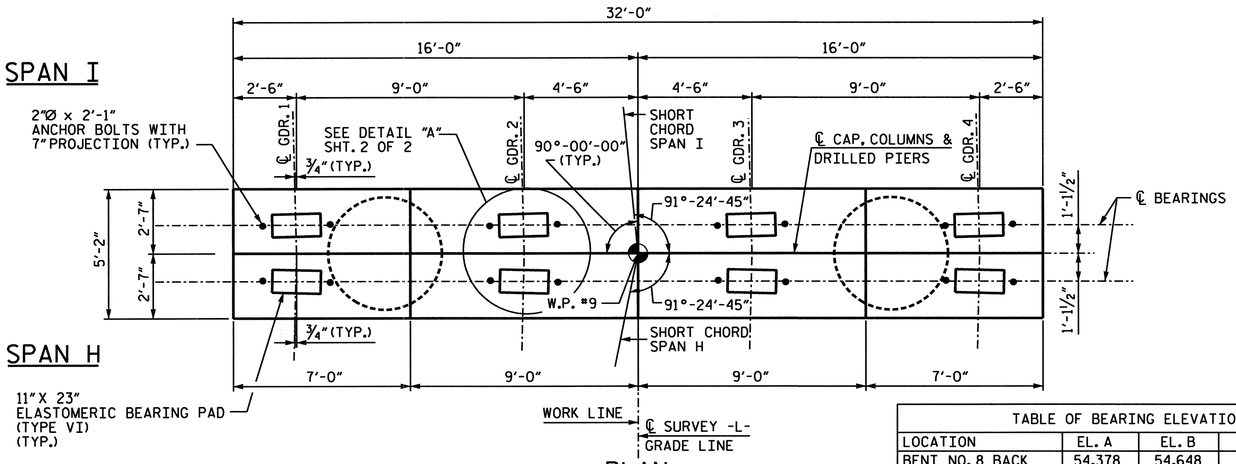

PLAN

TABLE OF BEARING ELEVATIONS				
LOCATION	EL. A	EL. B	EL. C	EL. D
BENT NO. 8 BACK	54.378	54.648	54.918	55.189
BENT NO. 8 FORWARD	54.480	54.750	55.019	55.289

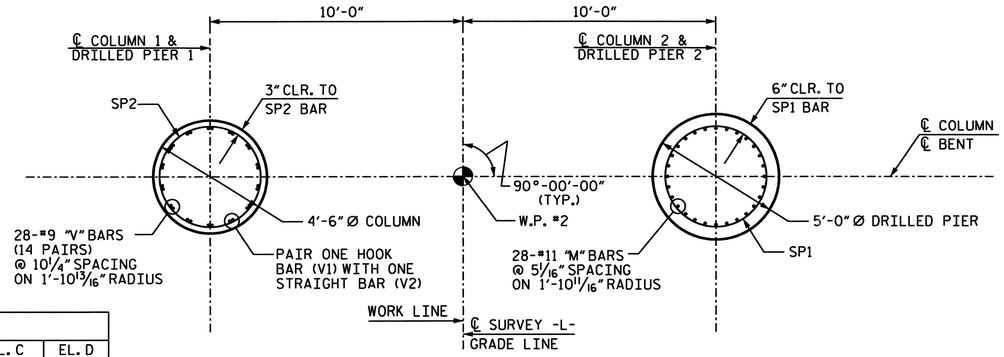

PLAN OF COLUMN / PIERS

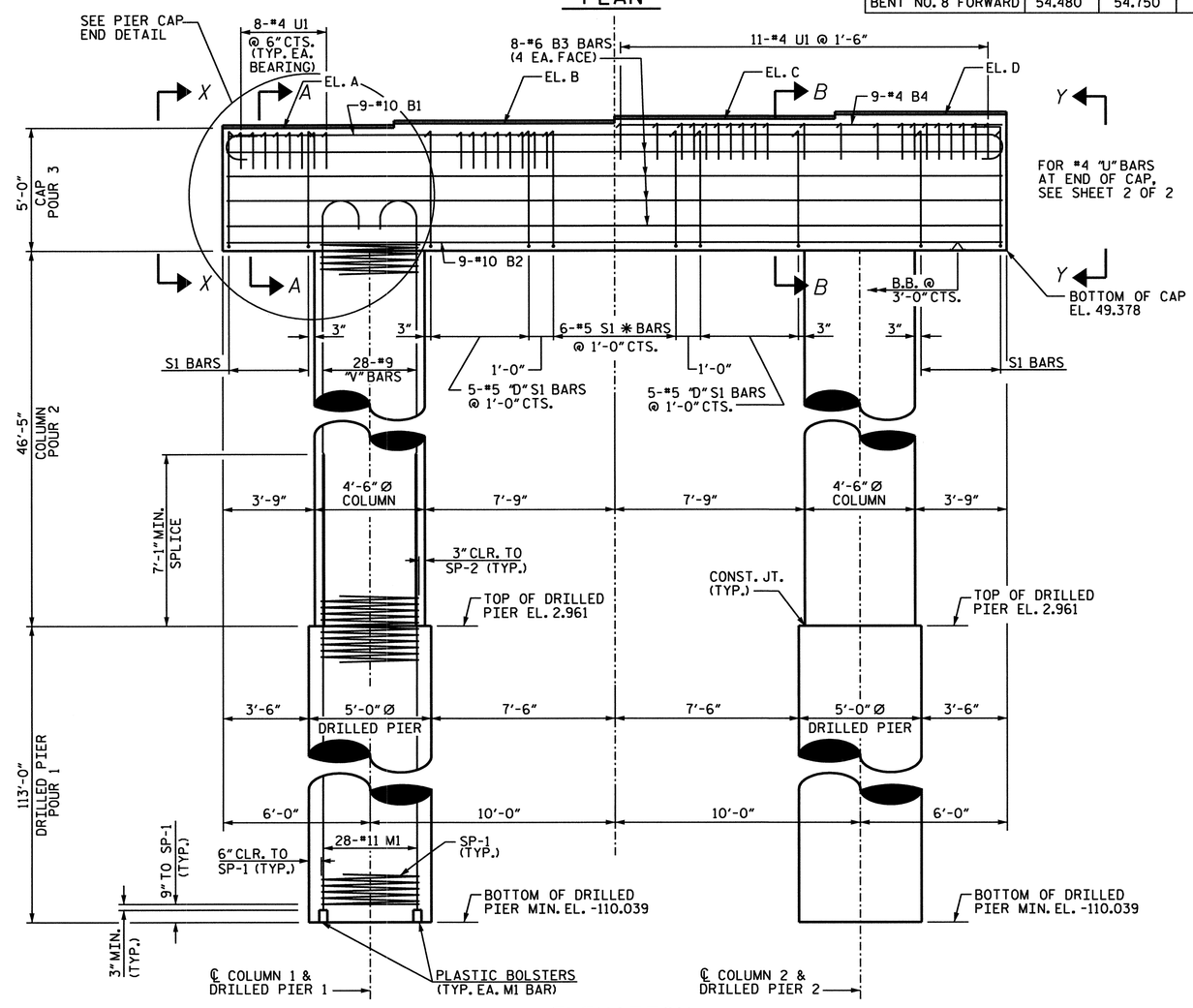

ELEVATION

* INVERT ALTERNATE STIRRUPS
"D" DENOTES DOUBLE STIRRUPS

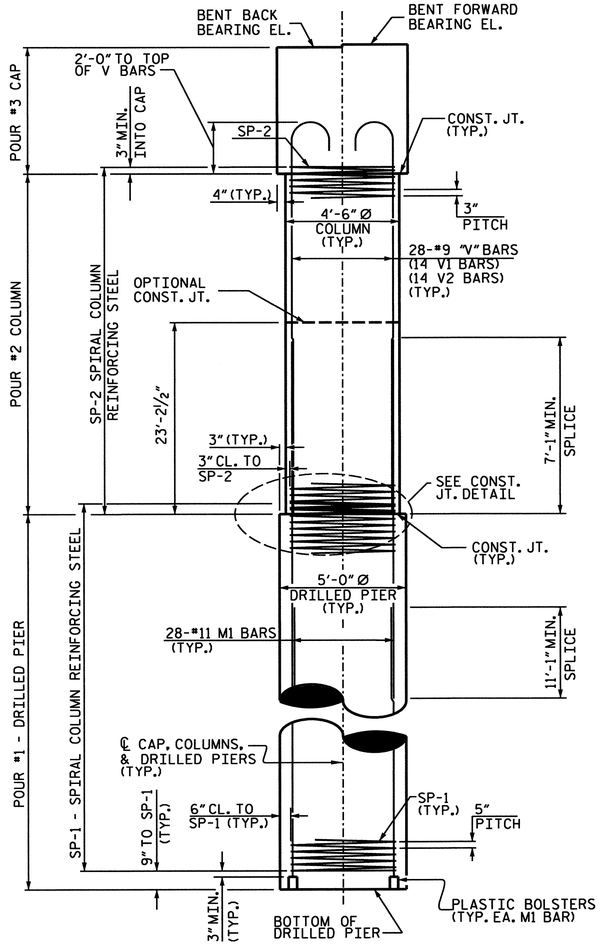

END ELEVATION

NOTES:

FOR DRILLED PIERS, SEE SPECIAL PROVISIONS.

THE CONTRACTOR'S ATTENTION IS CALLED TO THE FACT THAT THE LONGITUDINAL REINFORCEMENT FOR THE DRILLED PIERS IS DETAILED WITH 3 FEET OF EXTRA LENGTH.

ALL STEEL IN THE DRILLED PIERS IS INCLUDED IN THE PAY ITEMS FOR "EPOXY COATED REINFORCING STEEL" OR "EPOXY COATED SPIRAL COLUMN REINFORCING STEEL".

STIRRUPS IN CAP MAY BE SHIFTED AS NECESSARY TO CLEAR ANCHOR BOLTS.

FOR PERMANENT STEEL CASING, SEE SPECIAL PROVISION FOR DRILLED PIERS.

5 FOOT DIAMETER PERMANANT STEEL CASING MAY BE REQUIRED FOR BENT NO. 8. IF REQUIRED, DO NOT EXTEND THE CASING BELOW EL. -30 FEET WITHOUT PRIOR APPROVAL FROM THE ENGINEER. THE ENGINEER WILL DETERMINE THE NEED FOR PERMANANT STEEL CASING.

DRILLED PIERS AT BENT NO. 8 SHALL EXTEND TO AN ELEVATION NO HIGHER THAN -110.0 FEET AND SATISFY THE REQUIRED BEARING CAPACITY.

HOOKS ON "V" BARS MAY BE TURNED AS NECESSARY FOR PLACING REINFORCING STEEL.

ALL BAR SUPPORTS USED IN THE BENT CAP, COLUMNS, AND DRILLED PIERS AND ALL INCIDENTAL REINFORCING STEEL SHALL BE EPOXY COATED IN ACCORDANCE WITH THE STANDARD SPECIFICATIONS.

PROJECT NO. B-682

BRUNSWICK COUNTY

STATION: 47+08.03 -L- POT

SHEET 1 OF 2

STATE OF NORTH CAROLINA
DEPARTMENT OF TRANSPORTATION
RALEIGH

SUBSTRUCTURE BENT 8

NORTH CAROLINA PROFESSIONAL SEAL 32208 ENGINEER I. C. ENGSTROM
02-23-07

PLANS PREPARED BY:

PARSONS
TRANSPORTATION GROUP
Engineers and Planners
RALEIGH, NORTH CAROLINA

JOB NO. 645615

DWG. NO.

REVISIONS							SHEET NO.
NO.	BY:	DATE:	NO.	BY:	DATE:		
1			3				TOTAL SHEETS
2			4				

DRAWN BY : D. RANDALL DATE : JULY 2006
CHECKED BY : I. C. ENGSTROM DATE : JULY 2006

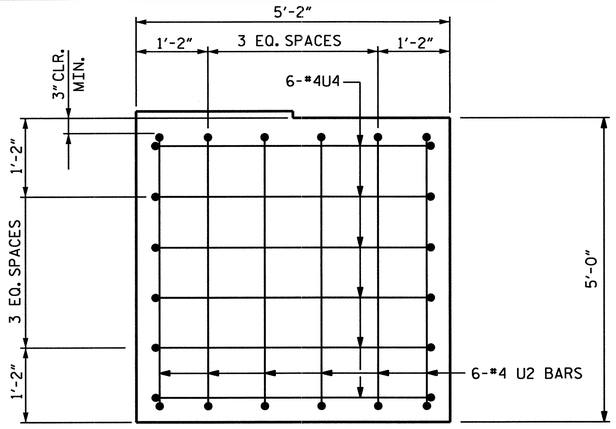

VIEW X-X

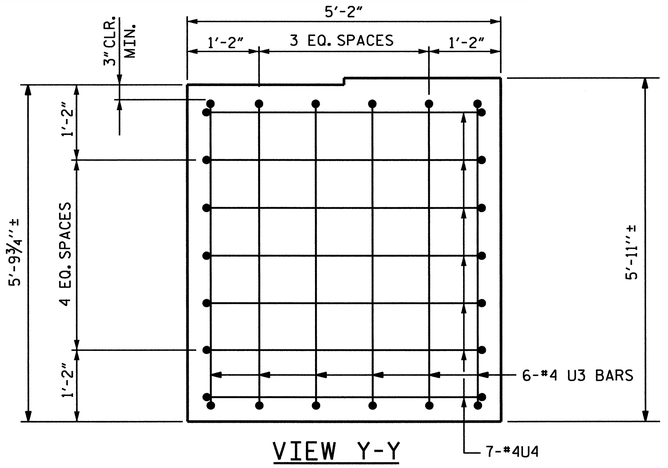

VIEW Y-Y

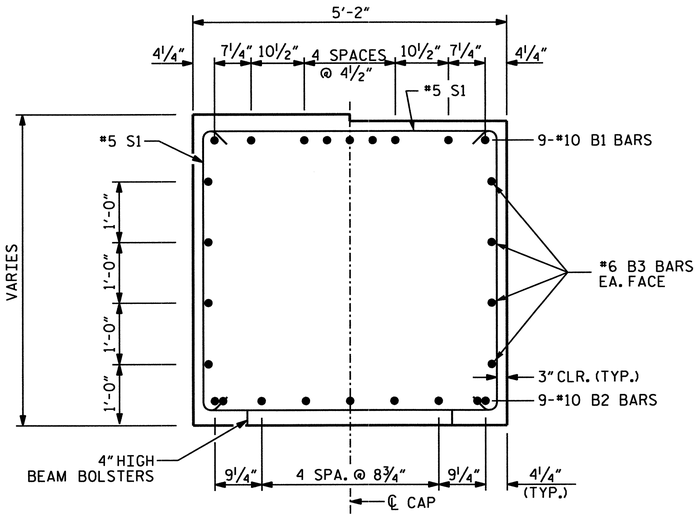

SECTION A-A

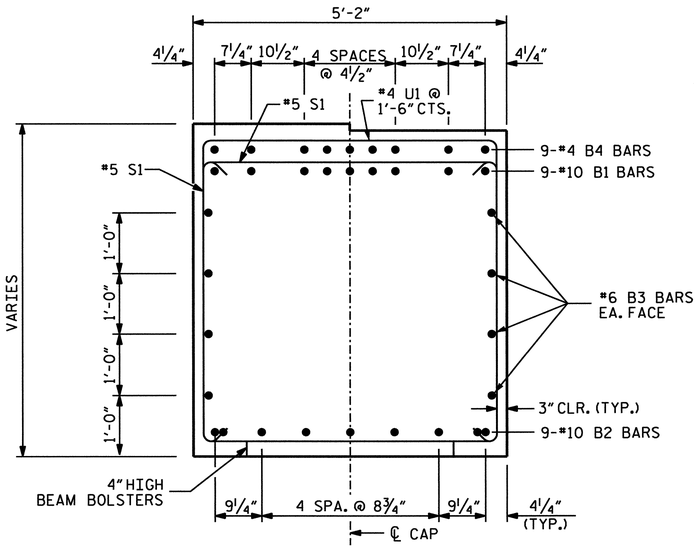

SECTION B-B

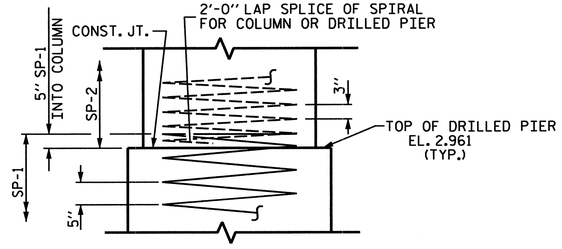

CONSTRUCTION JOINT DETAIL

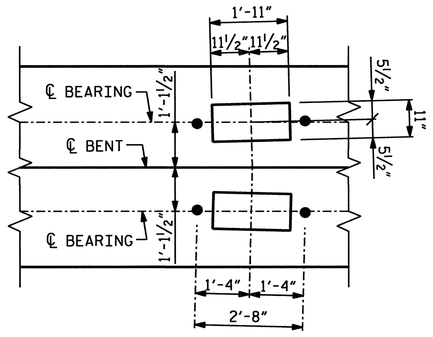

DETAIL A

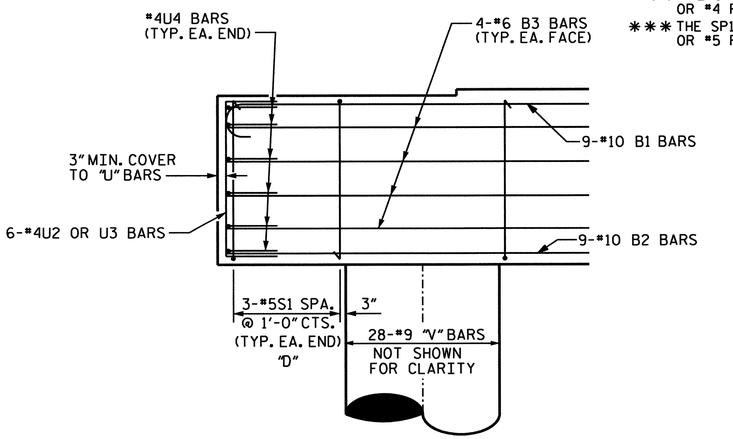

PIER CAP END DETAIL

"D" DENOTES DOUBLE STIRRUPS

BAR TYPES

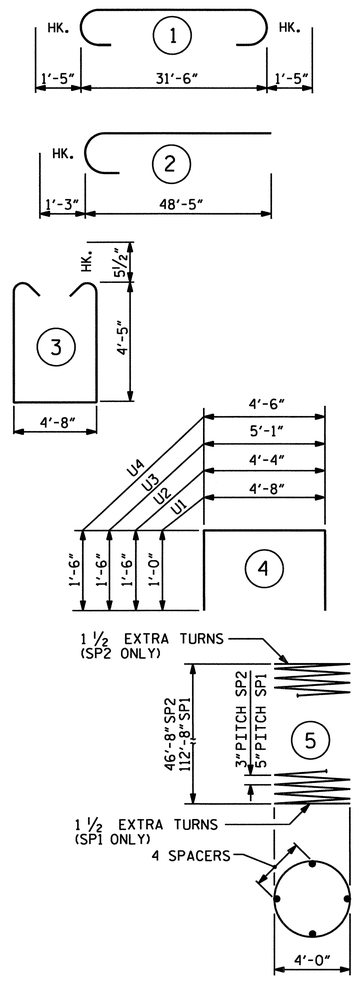

ALL BAR DIMENSIONS ARE OUT TO OUT.

BILL OF MATERIAL

BENT 8

BAR	NO.	SIZE	TYPE	LENGTH (ft)	WEIGHT (lb)
B1	9	10	1	34'-4"	1330
B2	9	10	STR.	31'-6"	1220
B3	8	6	STR.	31'-6"	379
B4	9	4	STR.	15'-6"	93
M1	168	11	STR.	48'-5"	43216
S1	38	5	3	14'-5"	571
U1	43	4	4	6'-8"	192
U2	6	4	4	7'-4"	29
U3	6	4	4	8'-1"	32
U4	13	4	4	7'-6"	65
V1	28	9	2	49'-8"	4728
V2	28	9	STR.	50'-0"	4760
EPOXY COATED REINFORCING STEEL 56615 lb					
SP1	2	***	5	3381'-8"	7134
SP2	2	**	5	2344'-7"	3206
TOTAL EPOXY COATED SPIRAL COLUMN REINFORCING STEEL					10340 lb

CLASS "AA" CONCRETE BREAKDOWN

POUR 2 - COLUMNS	54.7 yd³
POUR 3 - CAP	33.4 yd³
TOTAL CLASS "AA" CONCRETE	88.1 yd³

5'-0" Ø CONCRETE DRILLED PIER	LIN.FOOT:	226
DRILLED PIER CONCRETE POUR 1 - DRILLED PIER		164.4 yd³
PERMANENT STEEL CASING FOR 5'-0" DIA. DRILLED PIER	LIN.FOOT:	66
SID INSPECTIONS	EA:	2
SPT TESTING	EA:	2

** THE SP2 SPIRAL REINFORCING STEEL SHALL BE W20 OR D-20 COLD DRAWN WIRE OR #4 PLAIN OR DEFORMED BAR.

*** THE SP1 SPIRAL REINFORCING STEEL SHALL BE W31 OR D-31 COLD DRAWN WIRE OR #5 PLAIN OR DEFORMED BAR.

PROJECT NO. B-682

BRUNSWICK COUNTY

STATION: 47+08.03 -L- POT

SHEET 2 OF 2

STATE OF NORTH CAROLINA
DEPARTMENT OF TRANSPORTATION
RALEIGH

SUBSTRUCTURE BENT 8 DETAILS

NORTH CAROLINA PROFESSIONAL SEAL 32208 ENGINEER I. C. ENGSTROM
02-23-07

PLANS PREPARED BY:

PARSONS TRANSPORTATION GROUP
Engineers and Planners
RALEIGH, NORTH CAROLINA

JOB NO. 645615

DWG. NO.

REVISIONS							SHEET NO.
NO.	BY:	DATE:	NO.	BY:	DATE:		S-158
1			3				TOTAL SHEETS
2			4				287

DRAWN BY : D. RANDALL DATE : JULY 2006
CHECKED BY : I. C. ENGSTROM DATE : JULY 2006

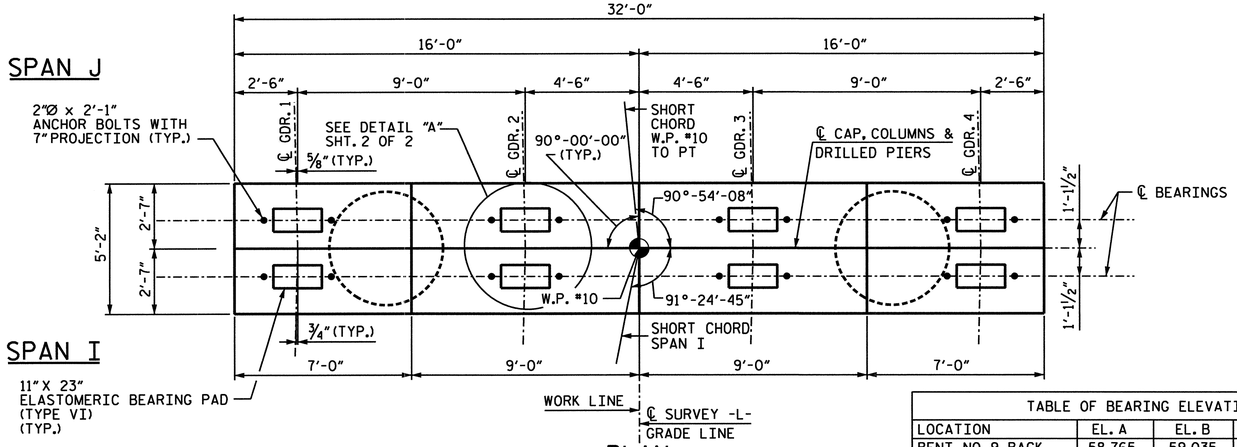

PLAN

TABLE OF BEARING ELEVATIONS				
LOCATION	EL. A	EL. B	EL. C	EL. D
BENT NO. 9 BACK	58.765	59.035	59.305	59.576
BENT NO. 9 FORWARD	58.849	59.119	59.389	59.658

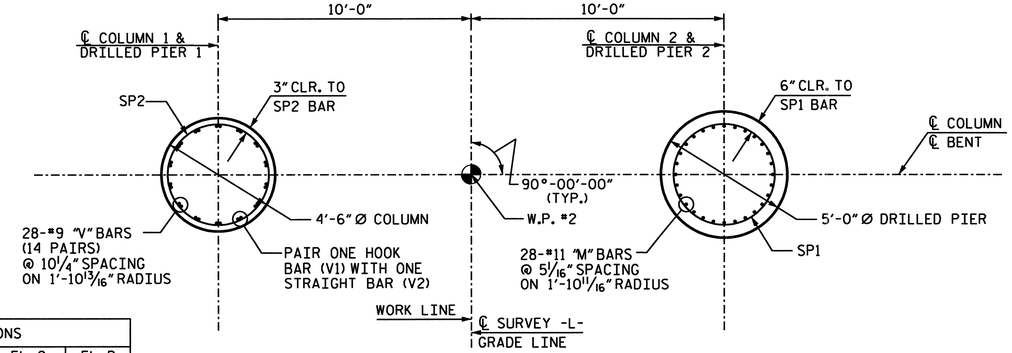

PLAN OF COLUMN / PIERS

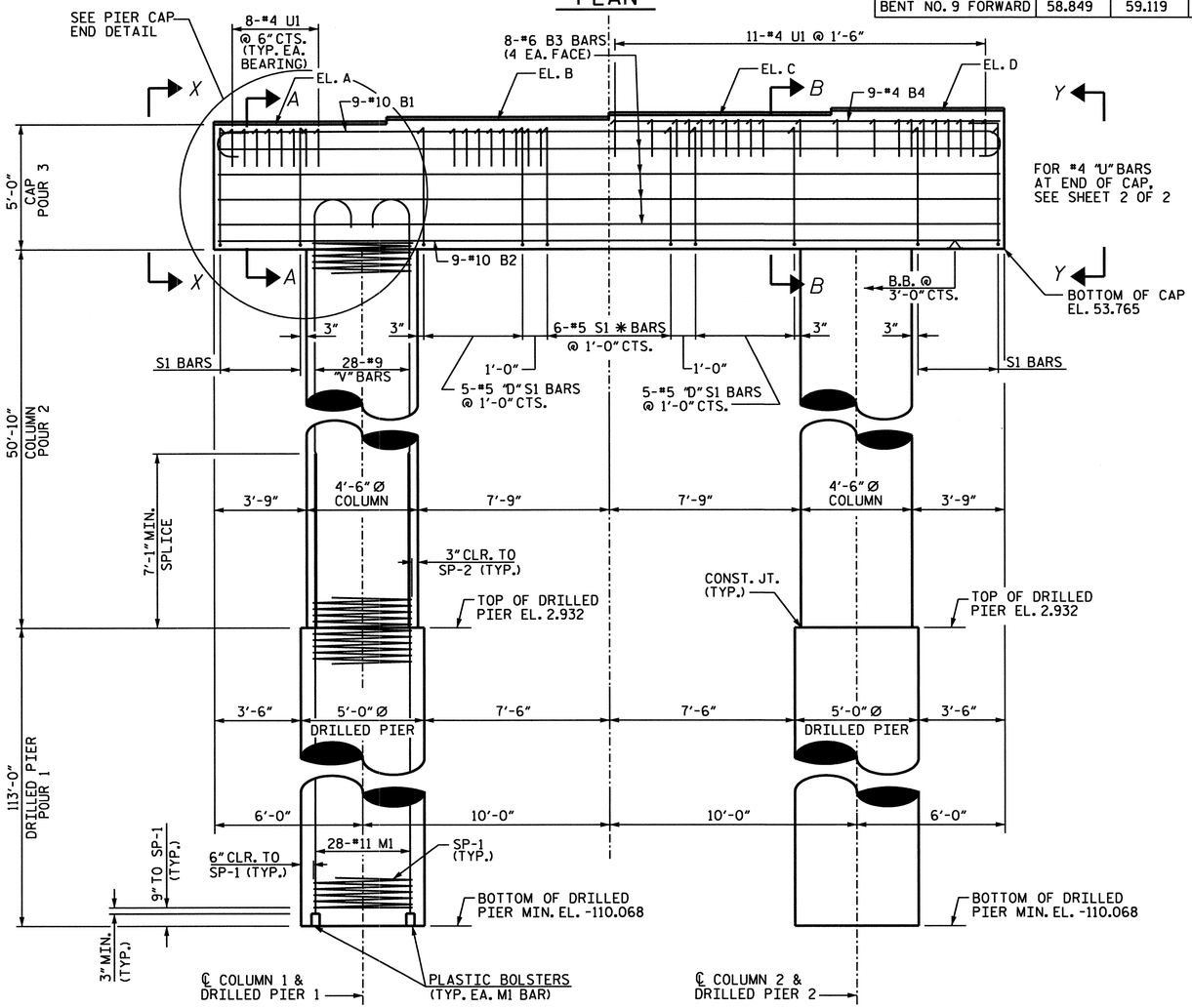

ELEVATION

✱ INVERT ALTERNATE STIRRUPS
"D" DENOTES DOUBLE STIRRUPS

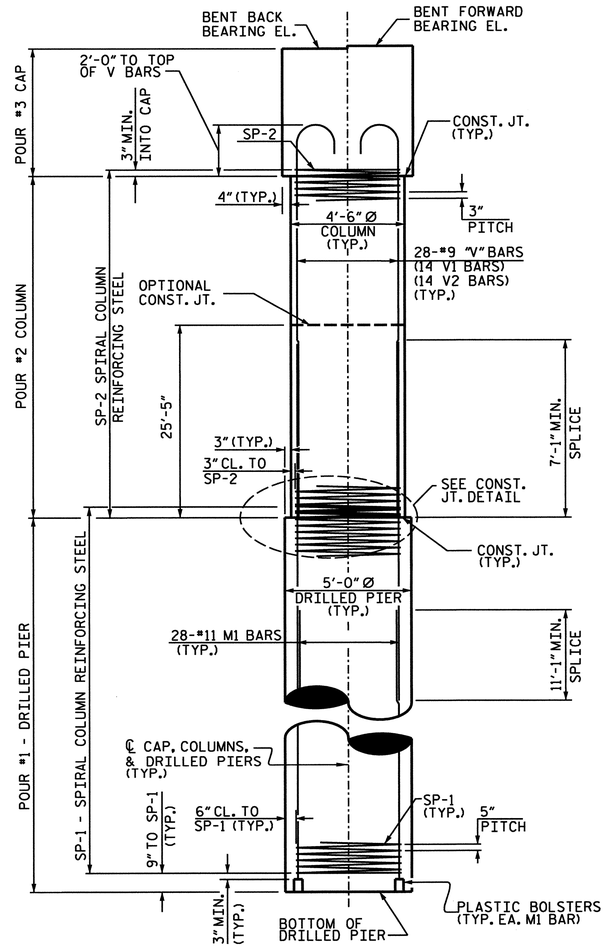

END ELEVATION

NOTES:

FOR DRILLED PIERS, SEE SPECIAL PROVISIONS.

THE CONTRACTOR'S ATTENTION IS CALLED TO THE FACT THAT THE LONGITUDINAL REINFORCEMENT FOR THE DRILLED PIERS IS DETAILED WITH 3 FEET OF EXTRA LENGTH.

ALL STEEL IN THE DRILLED PIERS IS INCLUDED IN THE PAY ITEMS FOR "EPOXY COATED REINFORCING STEEL" OR "EPOXY COATED SPIRAL COLUMN REINFORCING STEEL".

THE TOP SURFACE AREAS OF THE BENT CAP SHALL BE CURED IN ACCORDANCE WITH THE STANDARD SPECIFICATIONS EXCEPT THE MEMBRANE CURING COMPOUND METHOD SHALL NOT BE USED.

STIRRUPS IN CAP MAY BE SHIFTED AS NECESSARY TO CLEAR ANCHOR BOLTS.

FOR PERMANENT STEEL CASING, SEE SPECIAL PROVISION FOR DRILLED PIERS.

5 FOOT DIAMETER PERMANANT STEEL CASING IS REQUIRED FOR BENT NO. 9. DO NOT EXTEND THE CASING BELOW EL. -30 FEET WITHOUT PRIOR APPROVAL FROM THE ENGINEER.

DRILLED PIERS AT BENT NO. 9 SHALL EXTEND TO AN ELEVATION NO HIGHER THAN -110.0 FEET AND SATISFY THE REQUIRED BEARING CAPACITY.

HOOKS ON "V" BARS MAY BE TURNED AS NECESSARY FOR PLACING REINFORCING STEEL.

ALL BAR SUPPORTS USED IN THE BENT CAP, COLUMNS, AND DRILLED PIERS AND ALL INCIDENTAL REINFORCING STEEL SHALL BE EPOXY COATED IN ACCORDANCE WITH THE STANDARD SPECIFICATIONS.

PROJECT NO. B-682

BRUNSWICK COUNTY

STATION: 47+08.03 -L- POT

SHEET 1 OF 2

STATE OF NORTH CAROLINA
DEPARTMENT OF TRANSPORTATION
RALEIGH

SUBSTRUCTURE BENT 9

NORTH CAROLINA PROFESSIONAL SEAL 32208 ENGINEER I. C. ENGSTROM
07-23-07

PLANS PREPARED BY:

PARSONS
TRANSPORTATION GROUP
Engineers and Planners
RALEIGH, NORTH CAROLINA

JOB NO. 645615
DWG. NO.

REVISIONS							SHEET NO.
NO.	BY:	DATE:	NO.	BY:	DATE:		5-119
1			3				TOTAL SHEETS
2			4				207

DRAWN BY : D. RANDALL DATE : JULY 2006
CHECKED BY : I. C. ENGSTROM DATE : JULY 2006

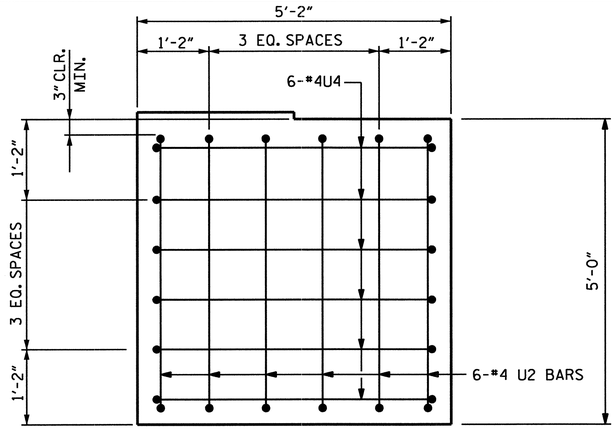

VIEW X-X

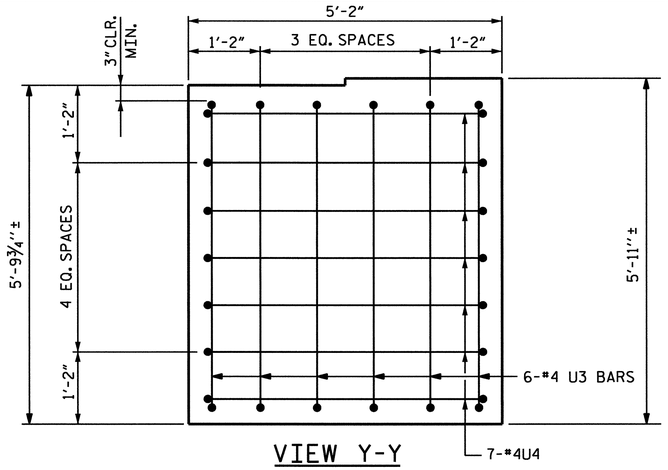

VIEW Y-Y

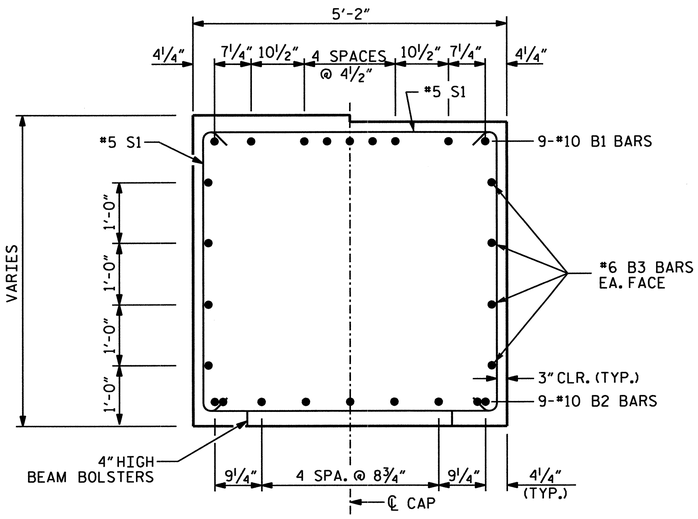

SECTION A-A

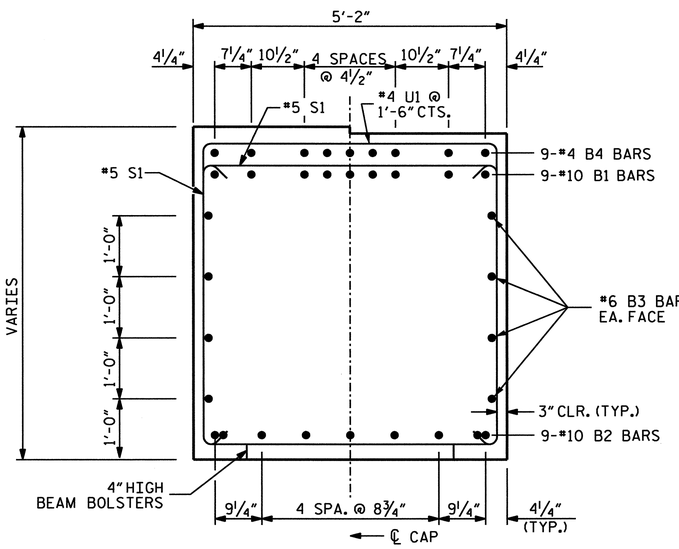

SECTION B-B

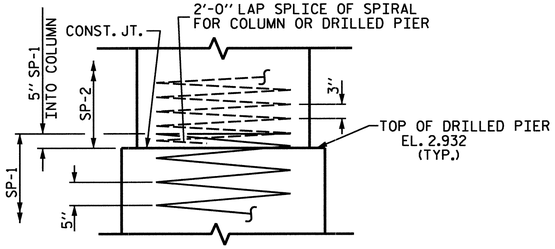

CONSTRUCTION JOINT DETAIL

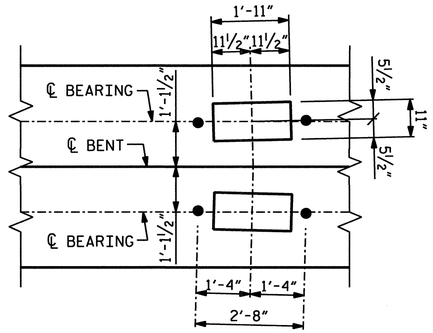

DETAIL A

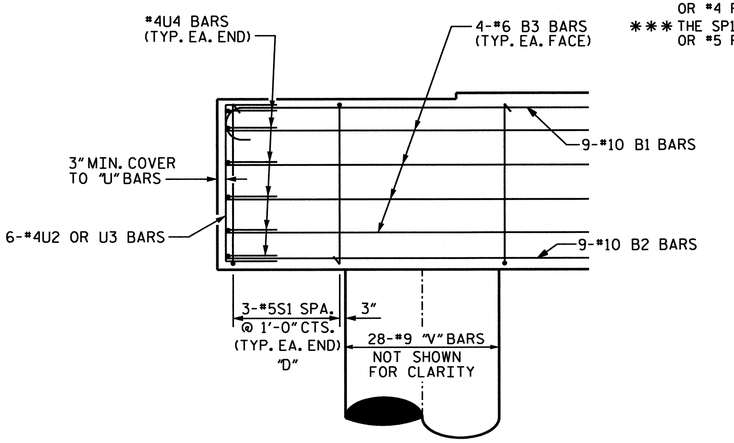

PIER CAP END DETAIL

"D" DENOTES DOUBLE STIRRUPS

BAR TYPES

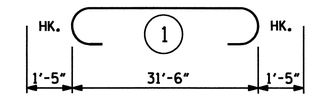

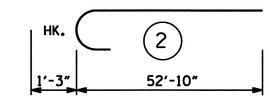

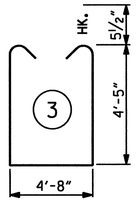

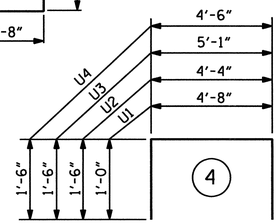

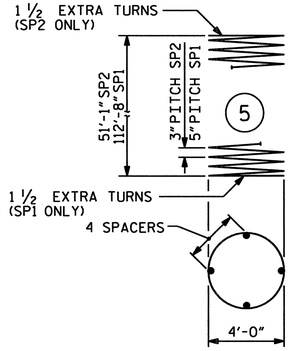

ALL BAR DIMENSIONS ARE OUT TO OUT.

BILL OF MATERIAL

BENT 9

BAR	NO.	SIZE	TYPE	LENGTH (ft)	WEIGHT (lb)
B1	9	10	1	34'-4"	1330
B2	9	10	STR.	31'-6"	1220
B3	8	6	STR.	31'-6"	379
B4	9	4	STR.	15'-6"	93
M1	168	11	STR.	48'-5"	43216
S1	38	5	3	14'-5"	571
U1	43	4	4	6'-8"	192
U2	6	4	4	7'-4"	29
U3	6	4	4	8'-1"	32
U4	13	4	4	7'-6"	65
V1	28	9	2	54'-1"	5149
V2	28	9	STR.	54'-5"	5180

EPOXY COATED REINFORCING STEEL 57,456 lb

SP1	2	***	5	3381'-8"	7134
SP2	2	**	5	2568'-6"	3446

TOTAL EPOXY COATED SPIRAL COLUMN REINFORCING STEEL 10580 lb

CLASS "AA" CONCRETE BREAKDOWN

POUR 2 - COLUMNS	59.9 yd³
POUR 3 - CAP	33.4 yd³
TOTAL CLASS "AA" CONCRETE	93.3 yd³

5'-0" Ø CONCRETE DRILLED PIER LIN.FOOT: 226

DRILLED PIER CONCRETE

POUR 1 - DRILLED PIER	164.4 yd³

PERMANENT STEEL CASING FOR 5'-0" DIA. DRILLED PIER	LIN.FOOT:	66
SID INSPECTIONS	EA:	2
SPT TESTING	EA:	2

** THE SP2 SPIRAL REINFORCING STEEL SHALL BE W20 OR D-20 COLD DRAWN WIRE OR #4 PLAIN OR DEFORMED BAR.

*** THE SP1 SPIRAL REINFORCING STEEL SHALL BE W31 OR D-31 COLD DRAWN WIRE OR #5 PLAIN OR DEFORMED BAR.

PROJECT NO. B-682

BRUNSWICK COUNTY

STATION: 47+08.03 -L- POT

SHEET 2 OF 2

NORTH CAROLINA PROFESSIONAL SEAL 32208 ENGINEER IAN C. ENGSTROM 02-23-07

PLANS PREPARED BY:

PARSONS TRANSPORTATION GROUP
Engineers and Planners
RALEIGH, NORTH CAROLINA

JOB NO. 645615

DWG. NO.

STATE OF NORTH CAROLINA
DEPARTMENT OF TRANSPORTATION
RALEIGH

SUBSTRUCTURE BENT 9 DETAILS

REVISIONS						SHEET NO.
NO.	BY:	DATE:	NO.	BY:	DATE:	S-160
1			3			TOTAL SHEETS
2			4			207

DRAWN BY : D. RANDALL DATE : JULY 2006
CHECKED BY : I. C. ENGSTROM DATE : JULY 2006

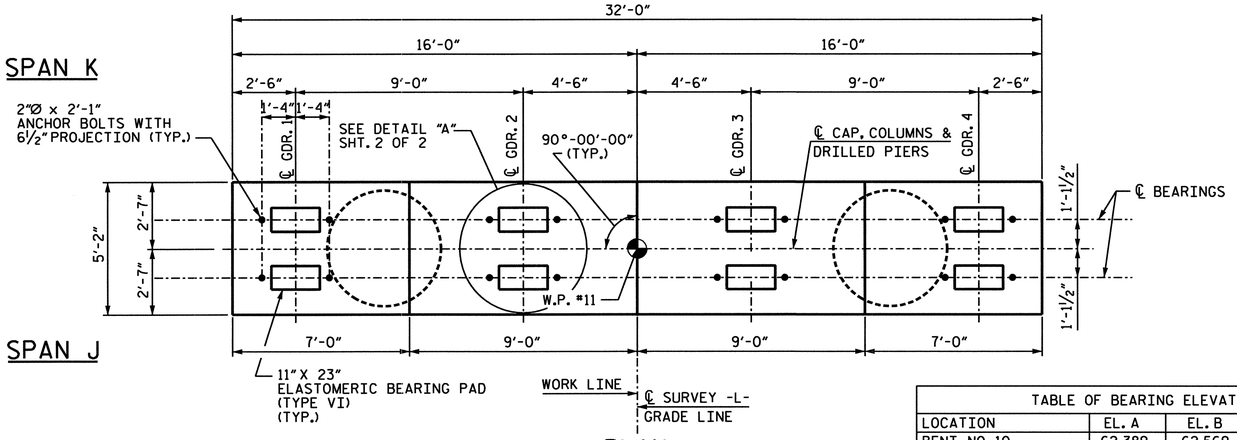

PLAN

TABLE OF BEARING ELEVATIONS				
LOCATION	EL. A	EL. B	EL. C	EL. D
BENT NO. 10	62.389	62.569	62.749	62.929

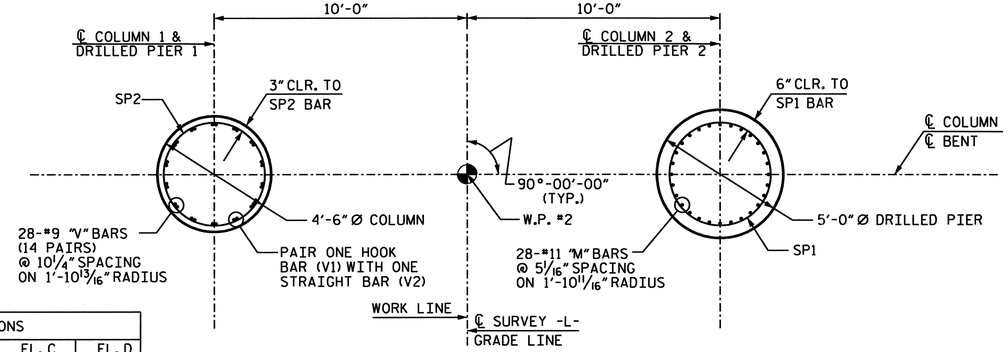

PLAN OF COLUMN / PIERS

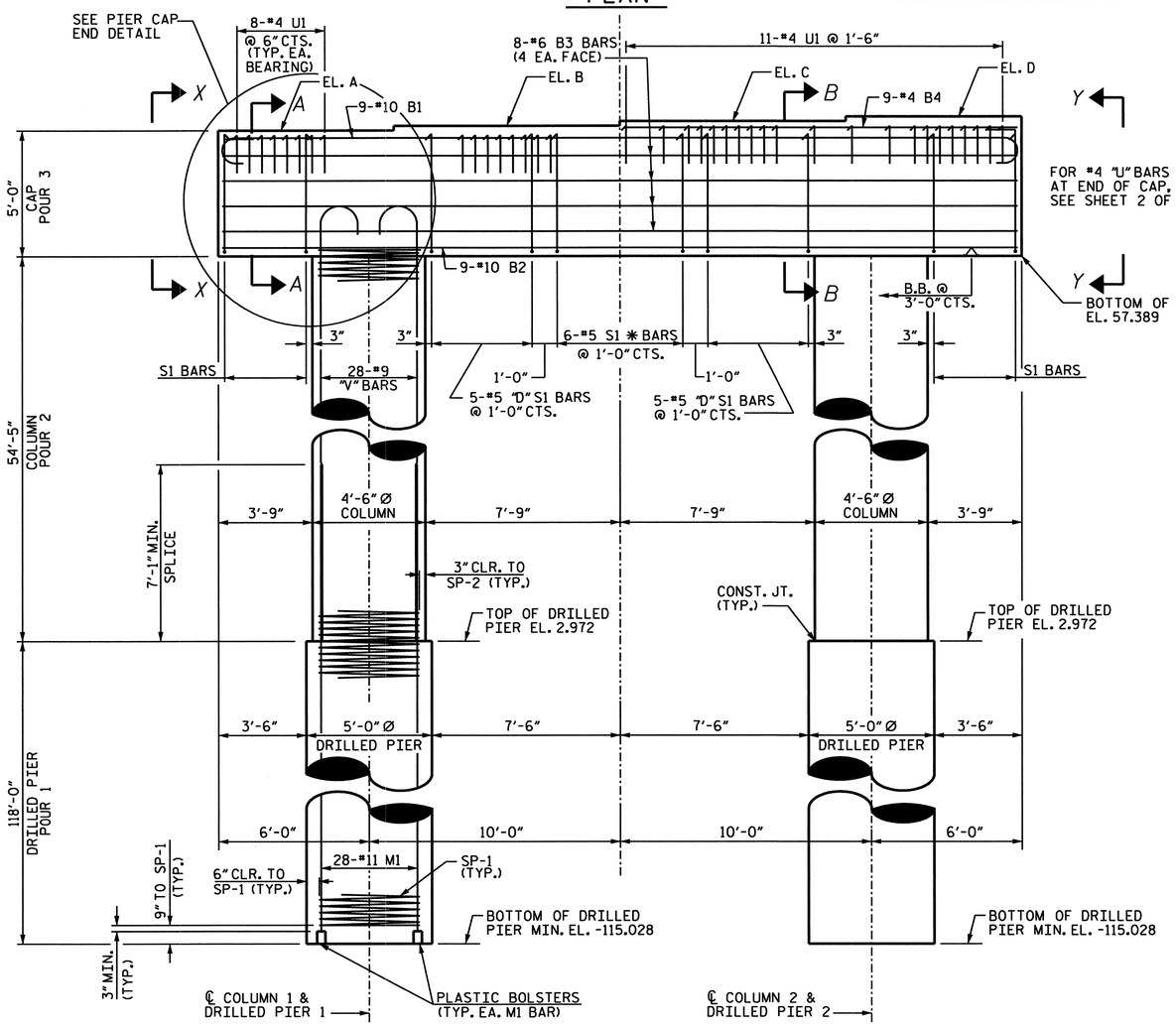

ELEVATION

* INVERT ALTERNATE STIRRUPS
"D" DENOTES DOUBLE STIRRUPS

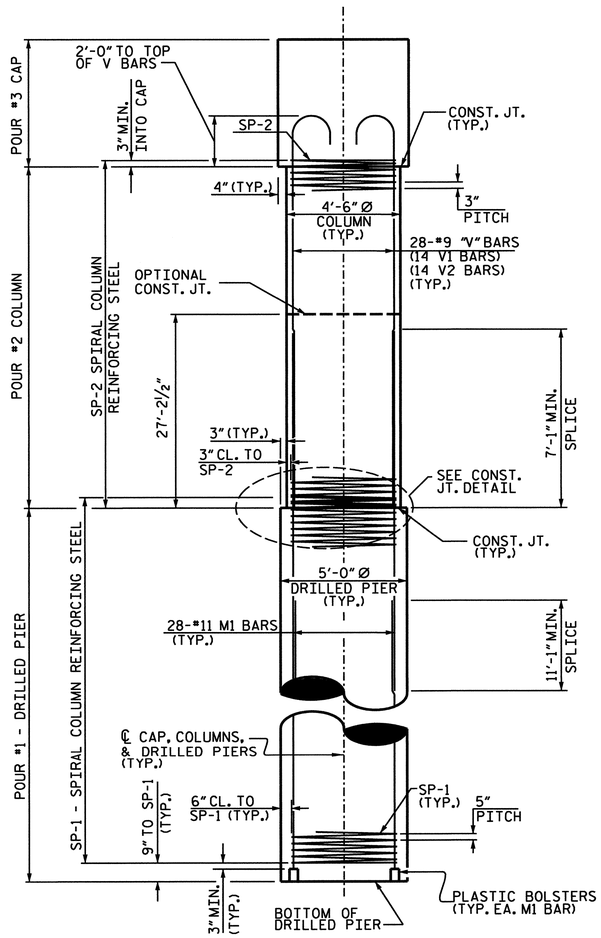

END ELEVATION

NOTES:

FOR DRILLED PIERS, SEE SPECIAL PROVISIONS.

THE CONTRACTOR'S ATTENTION IS CALLED TO THE FACT THAT THE LONGITUDINAL REINFORCEMENT FOR THE DRILLED PIERS IS DETAILED WITH 3 FEET OF EXTRA LENGTH.

ALL STEEL IN THE DRILLED PIERS IS INCLUDED IN THE PAY ITEMS FOR "EPOXY COATED REINFORCING STEEL" OR "EPOXY COATED SPIRAL COLUMN REINFORCING STEEL".

STIRRUPS IN CAP MAY BE SHIFTED AS NECESSARY TO CLEAR ANCHOR BOLTS.

FOR PERMANENT STEEL CASING, SEE SPECIAL PROVISION FOR DRILLED PIERS.

5 FOOT DIAMETER PERMANANT STEEL CASING IS REQUIRED FOR BENT NO. 10. DO NOT EXTEND THE CASING BELOW EL. -30 FEET WITHOUT PRIOR APPROVAL FROM THE ENGINEER.

DRILLED PIERS AT BENT NO. 10 SHALL EXTEND TO AN ELEVATION NO HIGHER THAN -115.0 FEET AND SATISFY THE REQUIRED BEARING CAPACITY.

HOOKS ON "V" BARS MAY BE TURNED AS NECESSARY FOR PLACING REINFORCING STEEL.

ALL BAR SUPPORTS USED IN THE BENT CAP, COLUMNS, AND DRILLED PIERS AND ALL INCIDENTAL REINFORCING STEEL SHALL BE EPOXY COATED IN ACCORDANCE WITH THE STANDARD SPECIFICATIONS.

PROJECT NO. B-682

BRUNSWICK COUNTY

STATION: 47+08.03 -L- POT

SHEET 1 OF 2

NORTH CAROLINA PROFESSIONAL SEAL 32208 ENGINEER IAN C. ENGSTROM 02-23-07

PLANS PREPARED BY:

PARSONS TRANSPORTATION GROUP
Engineers and Planners
RALEIGH, NORTH CAROLINA

JOB NO. 645615

DWG. NO.

STATE OF NORTH CAROLINA
DEPARTMENT OF TRANSPORTATION
RALEIGH

SUBSTRUCTURE
BENT 10

REVISIONS						SHEET NO.
NO.	BY:	DATE:	NO.	BY:	DATE:	S-161
1			3			TOTAL SHEETS
2			4			207

DRAWN BY : D. RANDALL DATE : JULY 2006
CHECKED BY : I. C. ENGSTROM DATE : JULY 2006

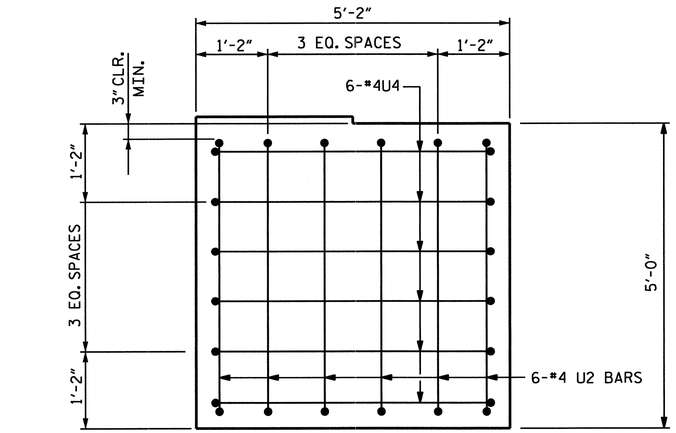

VIEW X-X

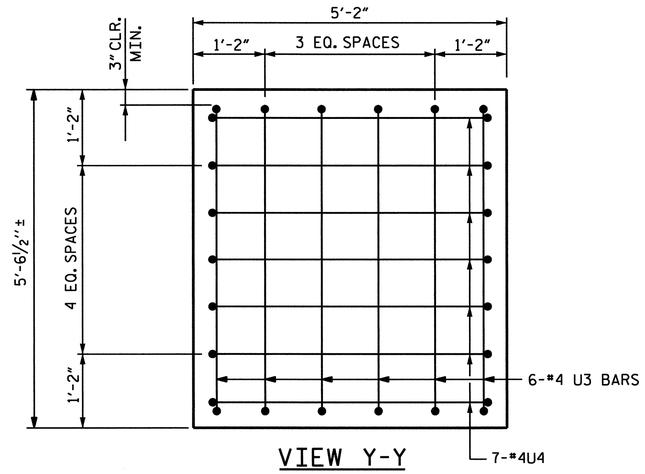

VIEW Y-Y

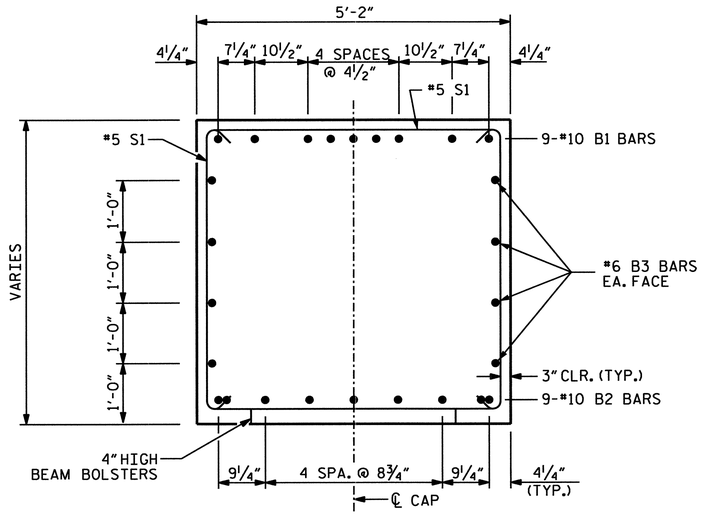

SECTION A-A

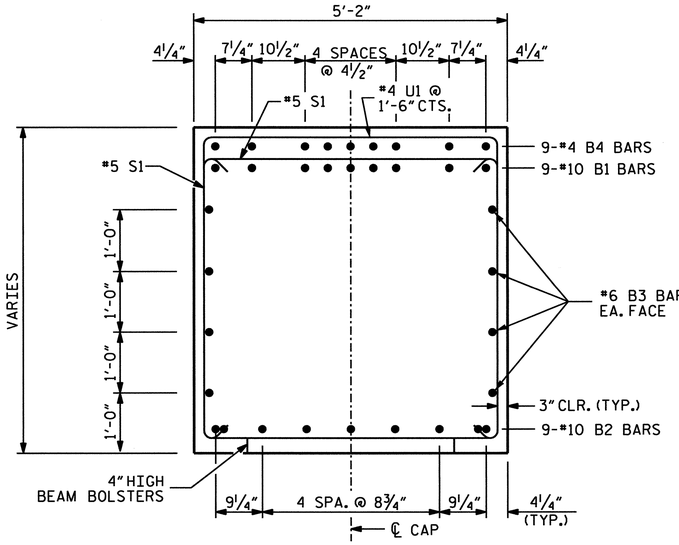

SECTION B-B

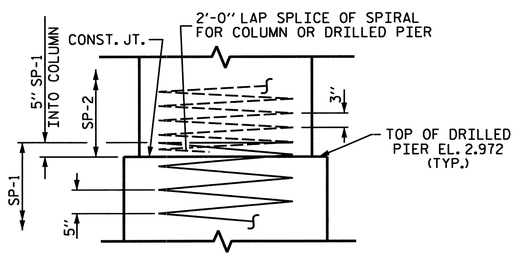

CONSTRUCTION JOINT DETAIL

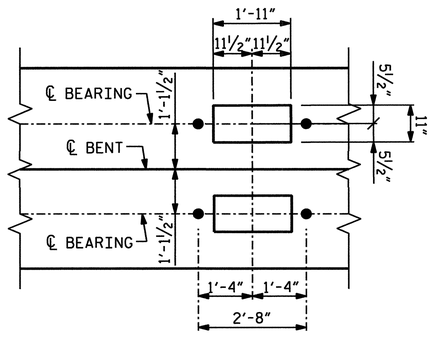

DETAIL A

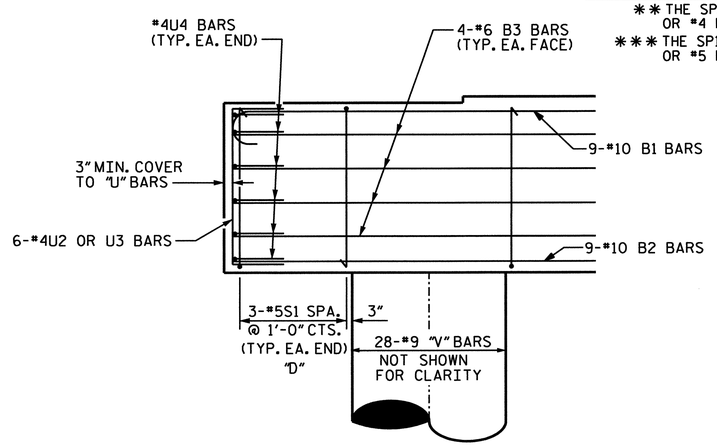

PIER CAP END DETAIL

"D" DENOTES DOUBLE STIRRUPS

BAR TYPES

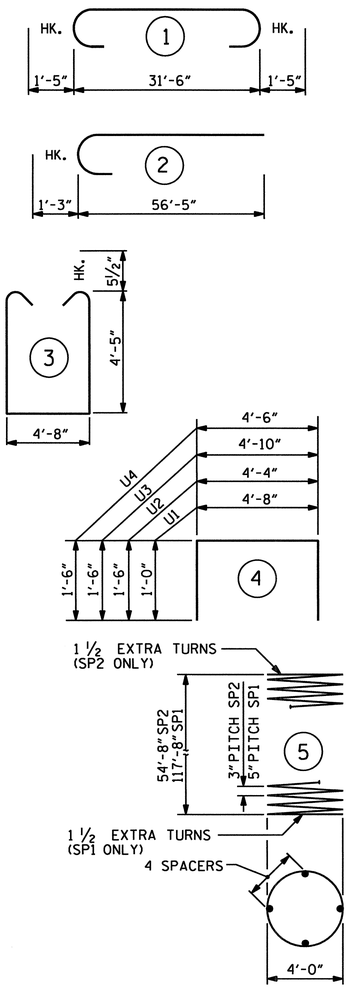

ALL BAR DIMENSIONS ARE OUT TO OUT.

BILL OF MATERIAL

BENT 10

BAR	NO.	SIZE	TYPE	LENGTH (ft)	WEIGHT (lb)
B1	9	10	1	34'-4"	1330
B2	9	10	STR.	31'-6"	1220
B3	8	6	STR.	31'-6"	379
B4	9	4	STR.	15'-6"	93
M1	168	11	STR.	50'-1"	44704
S1	38	5	3	14'-5"	571
U1	43	4	4	6'-8"	192
U2	6	4	4	7'-4"	29
U3	6	4	4	7'-10"	31
U4	13	4	4	7'-6"	65
V1	28	9	2	57'-8"	5490
V2	28	9	STR.	58'-1"	5530

EPOXY COATED REINFORCING STEEL 59,634 lb

SP1	2	***	5	3530'-7"	7384
SP2	2	**	5	2742'-7"	3688

TOTAL EPOXY COATED SPIRAL COLUMN REINFORCING STEEL 11072 lb

CLASS "AA" CONCRETE BREAKDOWN

POUR 2 - COLUMNS	64.2 yd³
POUR 3 - CAP	32.3 yd³
TOTAL CLASS "AA" CONCRETE	96.5 yd³

5'-0" Ø CONCRETE DRILLED PIER	LIN.FOOT: 236
DRILLED PIER CONCRETE POUR 1 - DRILLED PIER	171.7 yd³
PERMANENT STEEL CASING FOR 5'-0" DIA. DRILLED PIER	LIN.FOOT: 66
SID INSPECTIONS	EA: 2
SPT TESTING	EA: 2

** THE SP2 SPIRAL REINFORCING STEEL SHALL BE W20 OR D-20 COLD DRAWN WIRE OR #4 PLAIN OR DEFORMED BAR.

*** THE SP1 SPIRAL REINFORCING STEEL SHALL BE W31 OR D-31 COLD DRAWN WIRE OR #5 PLAIN OR DEFORMED BAR.

PROJECT NO. B-682

BRUNSWICK COUNTY

STATION: 47+08.03 -L- POT

SHEET 2 OF 2

STATE OF NORTH CAROLINA
DEPARTMENT OF TRANSPORTATION
RALEIGH

SUBSTRUCTURE BENT 10 DETAILS

NORTH CAROLINA PROFESSIONAL SEAL 032208 ENGINEER I. C. ENGSTROM
02-23-07

PLANS PREPARED BY:

PARSONS
TRANSPORTATION GROUP
Engineers and Planners
RALEIGH, NORTH CAROLINA

JOB NO. 645615

DWG. NO.

REVISIONS						SHEET NO.
NO.	BY:	DATE:	NO.	BY:	DATE:	S-162
1			3			TOTAL SHEETS
2			4			207

DRAWN BY : D. RANDALL DATE : JULY 2006
CHECKED BY : I. C. ENGSTROM DATE : JULY 2006

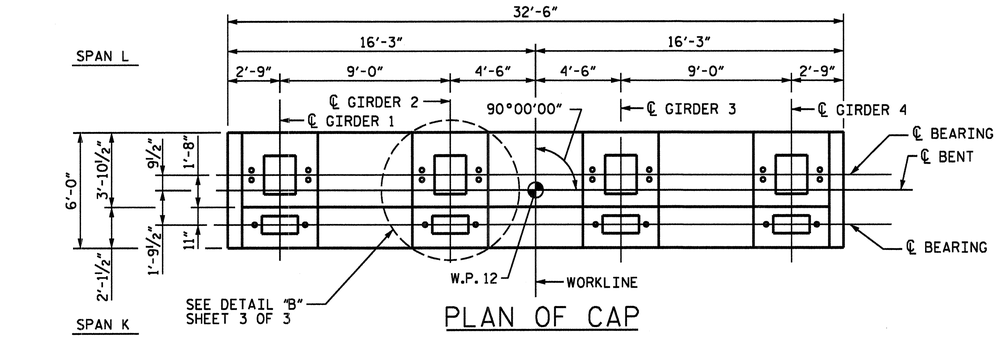

PLAN OF CAP

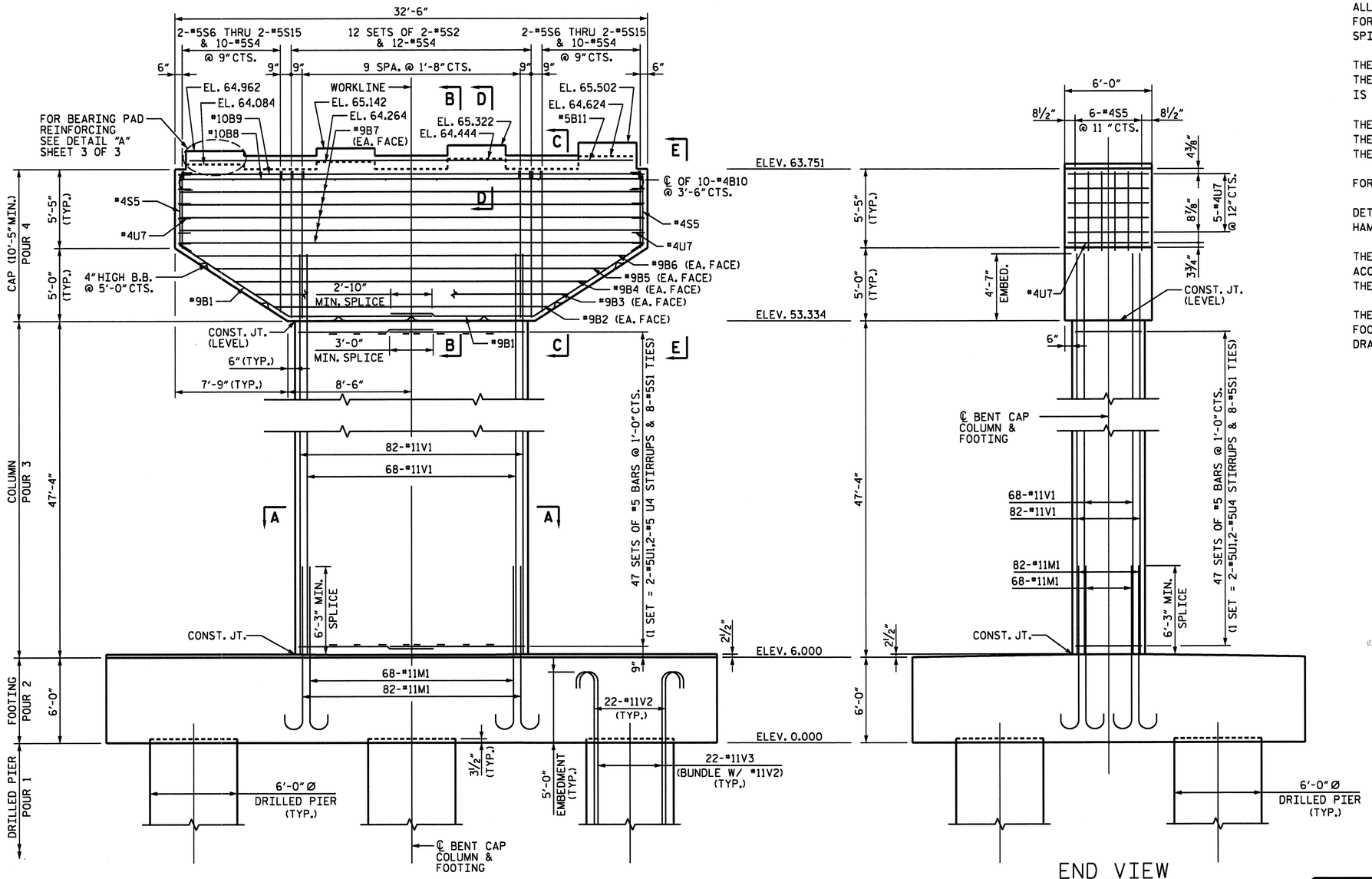

ELEVATION

END VIEW

NOTES:

STIRRUPS IN CAP MAY BE SHIFTED AS NECESSARY TO CLEAR ANCHOR BOLTS.

HOOKS ON M1 BARS MAY BE TURNED AS NECESSARY FOR PLACING REINFORCING STEEL.

T5 & T6 BARS IN TOP OF FOOTING MAY BE SHIFTED AS NECESSARY TO CLEAR M1 BARS IN FOOTING.

FOR SECTION A-A, SEE SHEET 2 OF 3.

FOR SECTIONS B-B, C-C, D-D AND E-E, SEE SHEET 3 OF 3.

FOR DETAILS A & B, SEE SHEET 3 OF 3.

FOR FOOTING DETAILS AND REINFORCEMENT, SEE SHEET 2 OF 3.

ALL STEEL IN THE DRILLED PIERS IS INCLUDED IN THE PAY ITEM FOR "EPOXY COATED REINFORCING STEEL" AND "EPOXY COATED SPIRAL COLUMN REINFORCING STEEL".

THE CONTRACTOR'S ATTENTION IS CALLED TO THE FACT THAT THE LONGITUDINAL REINFORCEMENT FOR THE DRILLED PIERS IS DETAILED WITH 3 FEET ADDITIONAL LENGTH.

THE CONTRACTOR'S ATTENTION IS CALLED TO THE FACT THAT THE CENTERLINE JOINT IN THE DECK SLAB IS OFFSET FROM THE CENTERLINE BENT.

FOR MASS CONCRETE, SEE SPECIAL PROVISIONS.

DETAILED DRAWINGS FOR FALSEWORK AND FORMS FOR THIS HAMMERHEAD BENT SHALL BE SUBMITTED, SEE SHEET S-N.

THE TOP SURFACE AREAS OF THE CAP SHALL BE CURED IN ACCORDANCE WITH THE STANDARD SPECIFICATIONS EXCEPT THE MEMBRANE CURING COMPOUND METHOD SHALL NOT BE USED.

THE FOOTING HAS A DROP OF 2½" FROM THE CENTER OF THE FOOTING TO THE EDGE OF THE FOOTING TO ACCOMMODATE DRAINAGE.

NORTH CAROLINA PROFESSIONAL SEAL 024928 ENGINEER RODNEY E. MONEY 2/26/07

PROJECT NO. B-0682

BRUNSWICK COUNTY

STATION: 47+08.03 -L- POT

SHEET 1 OF 3

STATE OF NORTH CAROLINA
DEPARTMENT OF TRANSPORTATION
RALEIGH

SUBSTRUCTURE

BENT 11

DRAWN BY : T. S. KELLEY DATE : NOV. 06
CHECKED BY : J. W. WRIGHT DATE : NOV. 06

DATE: #DATE#
FILE: #FILENAME#

PREPARED IN THE OFFICE OF TYLIN INTERNATIONAL RALEIGH, NORTH CAROLINA
Copyright © 2006, TYLI
DWG NO.

REVISIONS						SHEET NO.
NO.	BY:	DATE:	NO.	BY:	DATE:	S-163
1			3			TOTAL SHEETS
2			4			207

B0682_SD_PR1_01.dgn 02/26/2007 09:17:15 AM

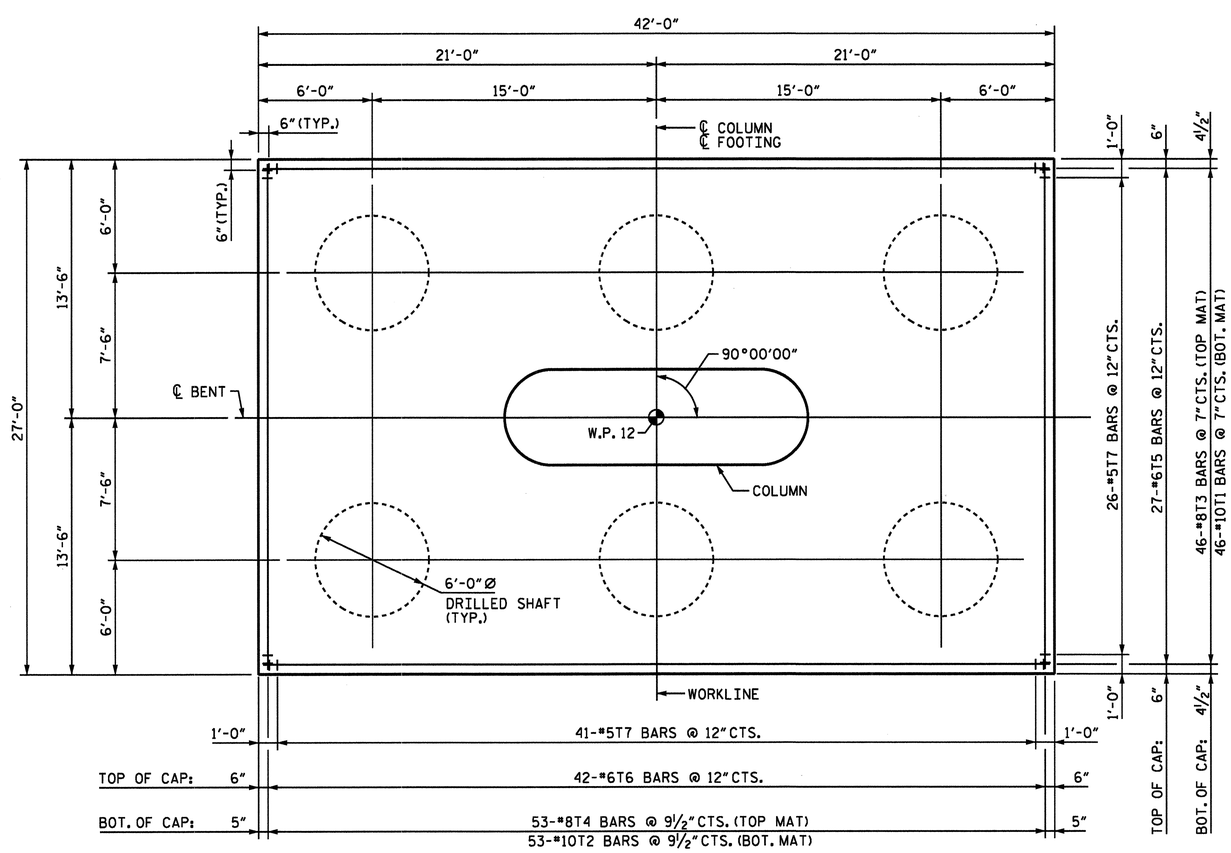

PLAN OF FOOTING

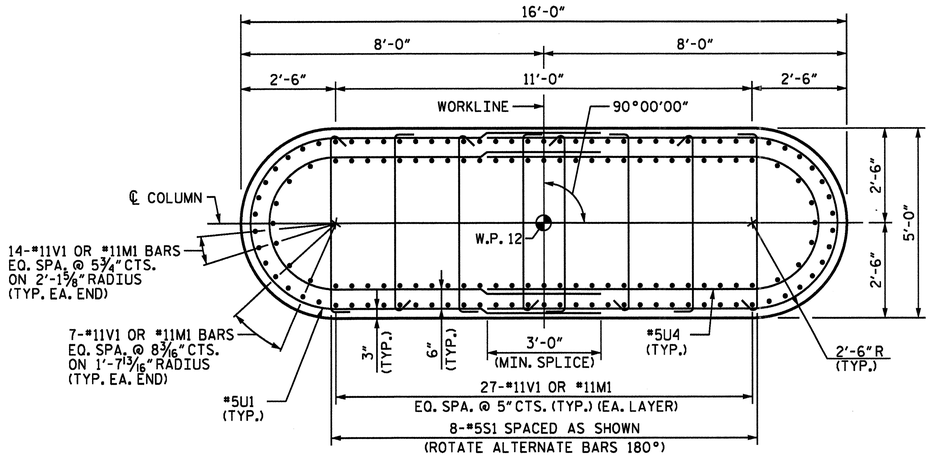

SECTION A-A

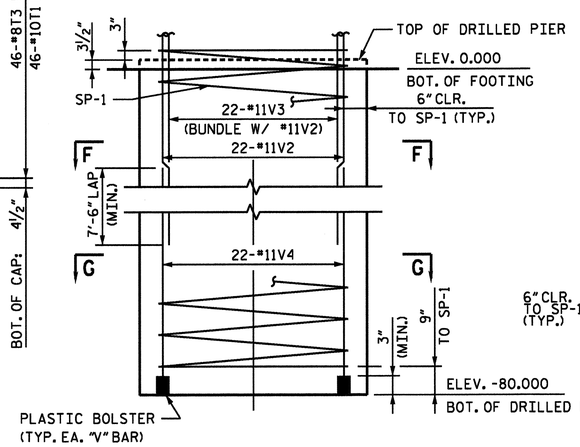

DRILLED PIER ELEVATION

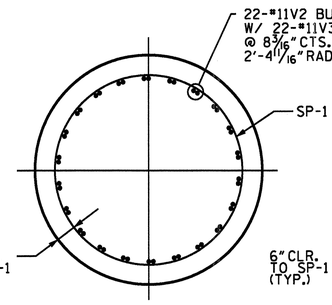

SECTION F-F

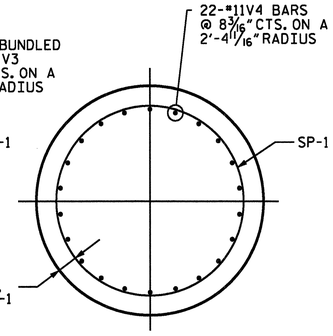

SECTION G-G

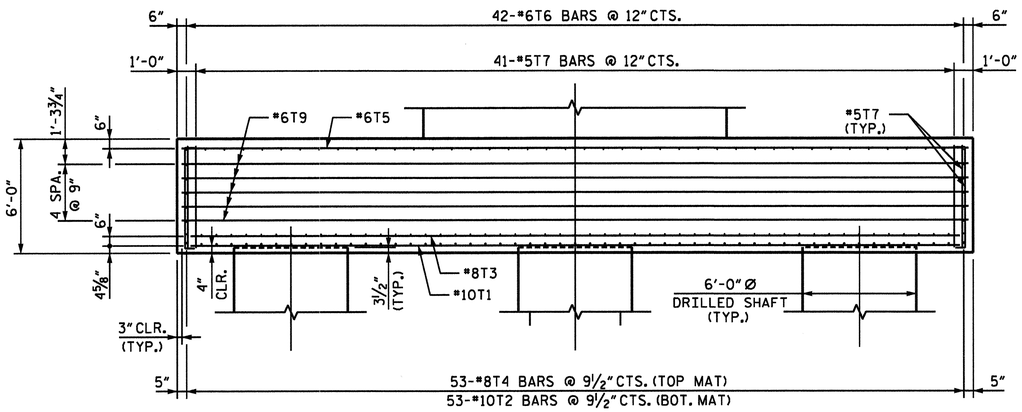

ELEVATION

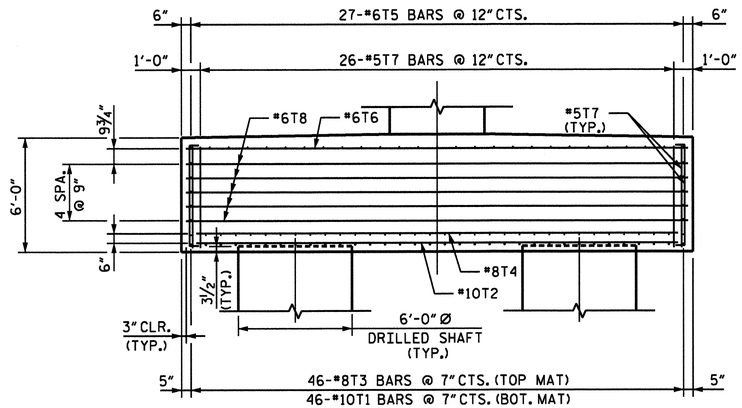

SIDE ELEVATION

NORTH CAROLINA PROFESSIONAL SEAL 024928 RODNEY E. MONEY ENGINEER 1/26/07

PROJECT NO. B-0682

BRUNSWICK COUNTY

STATION: 47+08.03 -L- POT

SHEET 2 OF 3

STATE OF NORTH CAROLINA
DEPARTMENT OF TRANSPORTATION
RALEIGH

SUBSTRUCTURE

BENT 11 DETAILS

DRAWN BY : T. S. KELLEY DATE : NOV. 06
CHECKED BY : J. W. WRIGHT DATE : NOV. 06

DATE: #DATE#
FILE: #FILENAME#

PREPARED IN THE OFFICE OF
TYLIN INTERNATIONAL
RALEIGH, NORTH CAROLINA
Copyright © 2006, TYLI
DWG NO.

REVISIONS						SHEET NO.
NO.	BY:	DATE:	NO.	BY:	DATE:	S-164
1			3			TOTAL SHEETS
2			4			207

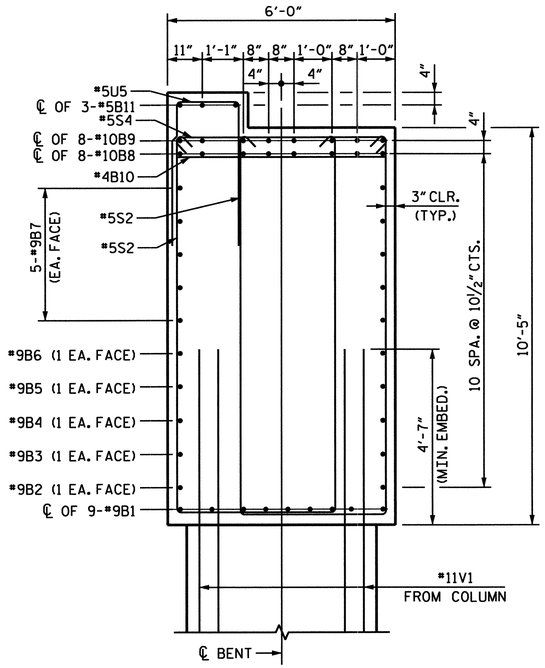

SECTION B-B

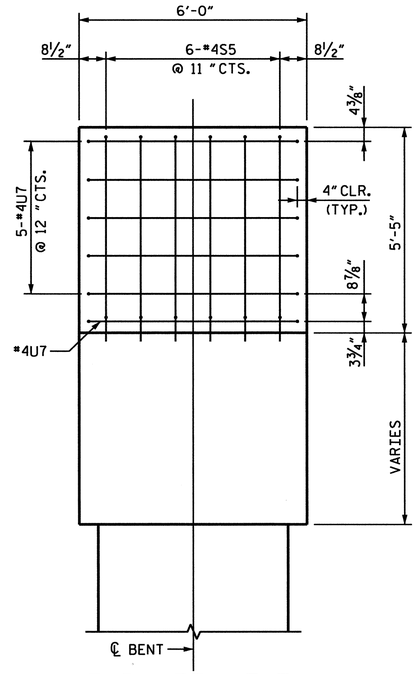

END VIEW E-E

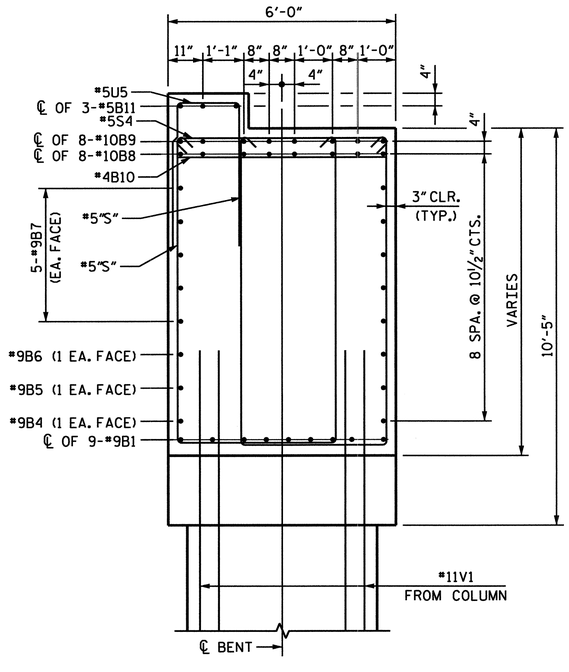

SECTION C-C

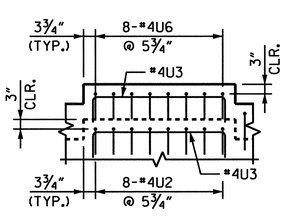

DETAIL A

(CAP REINFORCING NOT SHOWN)

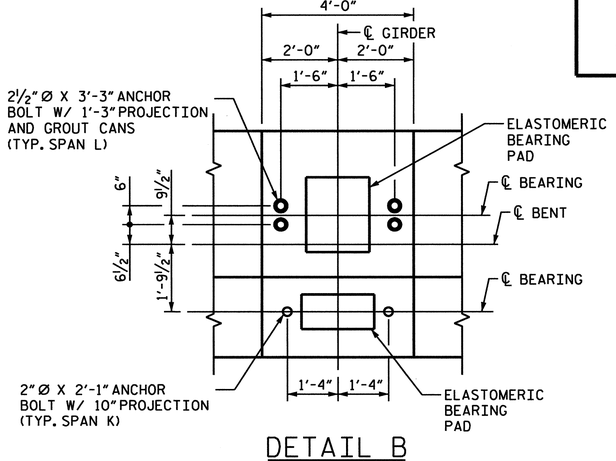

DETAIL B

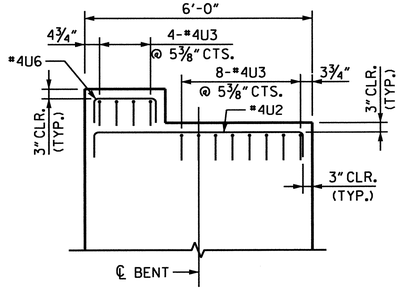

SECTION D-D

(CAP REINFORCING NOT SHOWN)

BAR TYPES

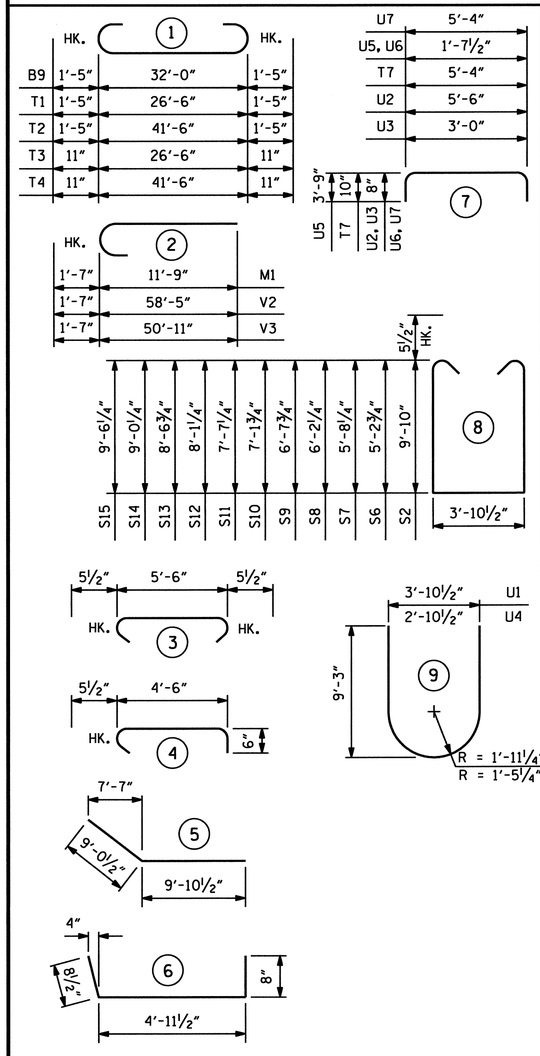

NOTE:
ALL BAR DIMENSIONS ARE OUT TO OUT.
*THE SP-1 SPIRAL REINFORCING STEEL SHALL BE W31 OR D-31 COLD DRAWN WIRE FOR *5 PLAIN OR DEFORMED BAR.

BILL OF MATERIAL

BENT 11

BAR	NO.	SIZE	TYPE	LENGTH	WEIGHT
B1	18	9	5	18' - 11"	1,158
B2	2	9	STR	18' - 9"	128
B3	2	9	STR	21' - 6"	146
B4	2	9	STR	24' - 2"	164
B5	2	9	STR	26' - 11"	183
B6	2	9	STR	29' - 8"	202
B7	10	9	STR	32' - 0"	1,088
B8	8	10	STR	32' - 0"	1,102
B9	8	10	1	34' - 10"	1,199
B10	10	4	STR	5' - 6"	37
B11	3	5	STR	30'-6"	95
M1	150	11	2	13' - 4"	10,626
S1	376	5	4	5' - 6"	2,157
S2	24	5	8	24' - 6"	613
S4	32	5	3	6' - 5"	214
S5	12	4	6	6' - 4"	51
S6	4	5	8	15'-3"	64
S7	4	5	8	16'-2"	67
S8	4	5	8	17'-2"	72
S9	4	5	8	18'-1"	75
S10	4	5	8	19'-1"	80
S11	4	5	8	20'-0"	83
S12	4	5	8	21'-0"	88
S13	4	5	8	21'-11"	91
S14	4	5	8	22'-10"	95
S15	4	5	8	23'-10"	99

BAR	NO.	SIZE	TYPE	LENGTH	WEIGHT
T1	46	10	1	29' - 4"	5,806
T2	53	10	1	44' - 4"	10,111
T3	46	8	1	28' - 4"	3,480
T4	53	8	1	43' - 4"	6,132
T5	27	6	STR	41' - 6"	1,683
T6	42	6	STR	26' - 6"	1,672
T7	134	5	7	7' - 0"	978
T8	10	6	STR	26' - 6"	398
T9	10	6	STR	41' - 0"	616
U1	94	5	9	21' - 1"	2,067
U2	32	4	7	6' - 10"	146
U3	48	4	7	4' - 4"	139
U4	94	5	9	16' - 8"	1,634
U5	32	5	7	9'-2"	306
U6	32	4	7	4'-4"	93
U7	12	4	7	6'-8"	53
V1	150	11	STR	53'-0"	42,238
V2	132	11	2	60'-0"	42,079
V3	132	11	2	52'-6"	36,819
V4	132	11	STR	34'-1"	23,903

EPOXY COATED REINFORCING STEEL				LBS	200,330
SP-1	6	*	10	3,038'-8"	12,179
EPOXY COATED SPIRAL COLUMN REINFORCING STEEL				LBS	12,179

CLASS AA CONC. BREAKDOWN:		
POUR 2 - PILE CAP	CY	256.4
POUR 3 - COLUMN	CY	130.8
POUR 4 - CAP	CY	69.8
TOTAL - CLASS AA CONC.	CY	457.0
6'-0" Ø CONCRETE DRILLED PIER	LIN. FT.	481.75
POUR 1 - DRILLED PIER	CY	504.4
PERMANENT STEEL CASING FOR 6'-0" Ø DRILLED PIER	LIN. FT.	180.00
SPT TESTING	EA.	6
SID INSPECTION	EA.	6

PROJECT NO. B-0682

BRUNSWICK COUNTY

STATION: 47+08.03 -L- POT

SHEET 3 OF 3

STATE OF NORTH CAROLINA
DEPARTMENT OF TRANSPORTATION
RALEIGH

SUBSTRUCTURE DETAIL & BILL OF MATERIAL

BENT 11

NORTH CAROLINA PROFESSIONAL SEAL 024928 ENGINEER RODNEY E. MONEY 2/2/07

PREPARED IN THE OFFICE OF
TYLIN INTERNATIONAL
RALEIGH, NORTH CAROLINA
Copyright © 2006, TYLI

DWG NO.

REVISIONS						SHEET NO.
NO.	BY:	DATE:	NO.	BY:	DATE:	S-165
1			3			TOTAL SHEETS
2			4			237

DRAWN BY : T. S. KELLEY DATE : NOV. 06
CHECKED BY : J. W. WRIGHT DATE : NOV. 06

DATE: #DATE#
FILE: #FILENAME#

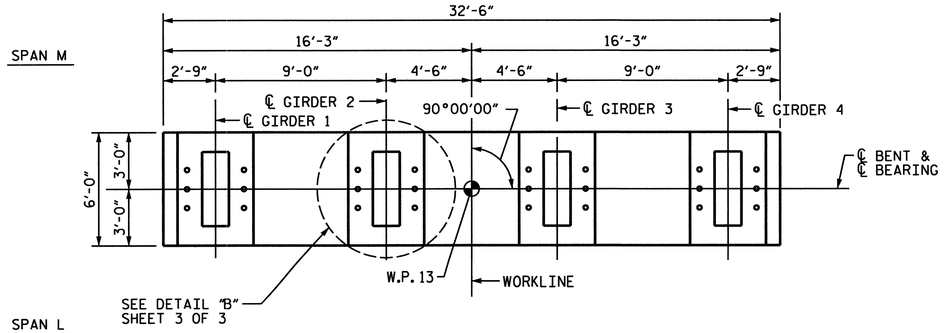

PLAN OF CAP

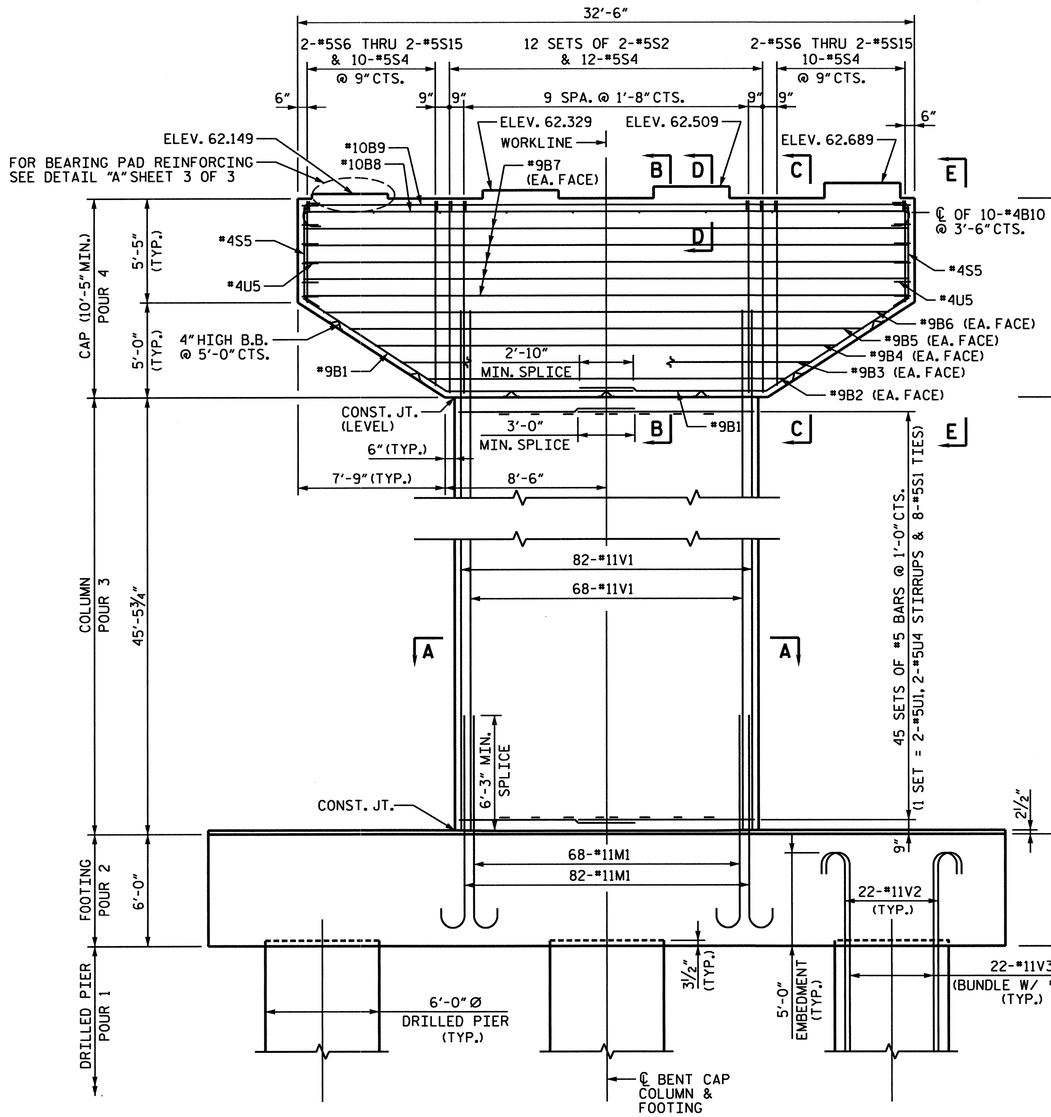

ELEVATION

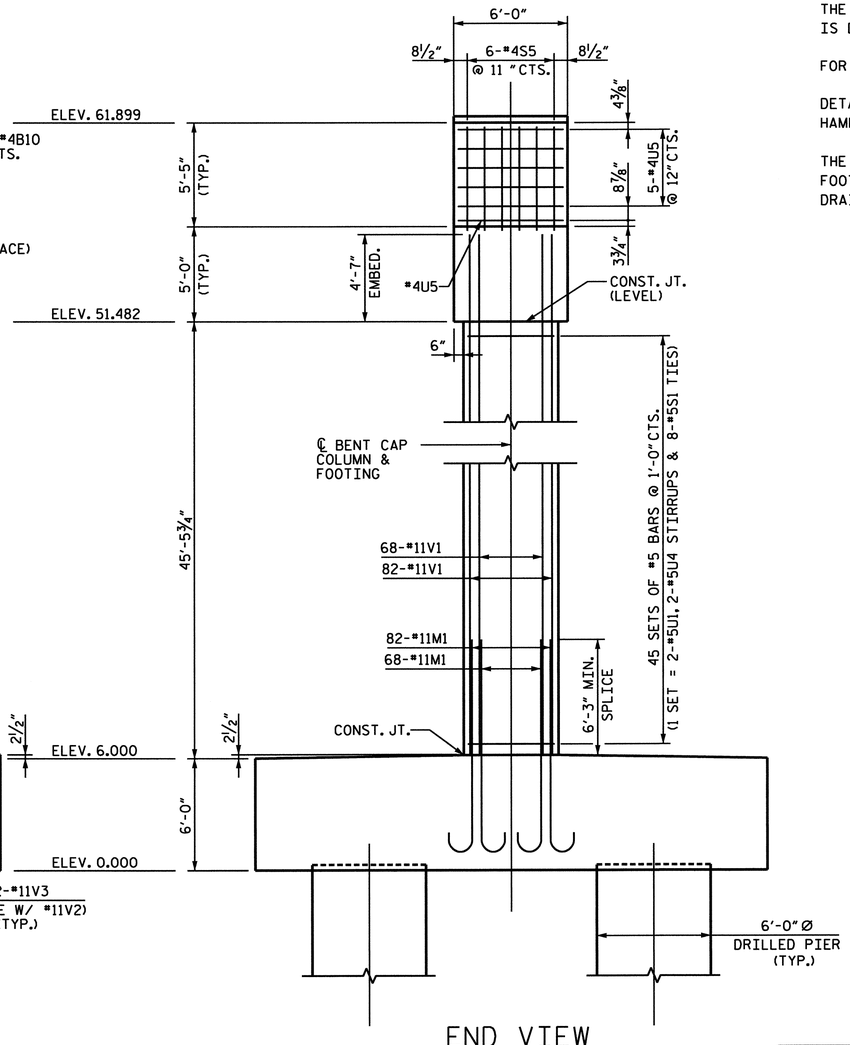

END VIEW

NOTES:

STIRRUPS IN CAP MAY BE SHIFTED AS NECESSARY TO CLEAR ANCHOR BOLTS.

HOOKS ON M1 BARS MAY BE TURNED AS NECESSARY FOR PLACING REINFORCING STEEL.

T5 & T6 BARS IN TOP OF FOOTING MAY BE SHIFTED AS NECESSARY TO CLEAR M1 BARS IN FOOTING.

FOR SECTION A-A, SEE SHEET 2 OF 3.

FOR SECTIONS B-B, C-C, D-D AND E-E, SEE SHEET 3 OF 3.

FOR DETAILS A & B, SEE SHEET 3 OF 3.

FOR FOOTING DETAILS AND REINFORCEMENT, SEE SHEET 2 OF 3.

ALL STEEL IN THE DRILLED PIERS IS INCLUDED IN THE PAY ITEM FOR "EPOXY COATED REINFORCING STEEL" AND "EPOXY COATED SPIRAL COLUMN REINFORCING STEEL".

THE CONTRACTOR'S ATTENTION IS CALLED TO THE FACT THAT THE LONGITUDINAL REINFORCEMENT FOR THE DRILLED PIERS IS DETAILED WITH 3 FEET ADDITIONAL LENGTH.

FOR MASS CONCRETE, SEE SPECIAL PROVISIONS.

DETAILED DRAWINGS FOR FALSEWORK AND FORMS FOR THIS HAMMERHEAD BENT SHALL BE SUBMITTED, SEE SHEET S-N.

THE FOOTING HAS A DROP OF 2½" FROM THE CENTER OF THE FOOTING TO THE EDGE OF THE FOOTING TO ACCOMMODATE DRAINAGE.

NORTH CAROLINA PROFESSIONAL SEAL 024928 ENGINEER RODNEY E. MONEY 3/26/07

PROJECT NO. B-0682

BRUNSWICK COUNTY

STATION: 47+08.03 -L- POT

SHEET 1 OF 3

STATE OF NORTH CAROLINA
DEPARTMENT OF TRANSPORTATION
RALEIGH

SUBSTRUCTURE

BENT 12

DRAWN BY : T. S. KELLEY DATE : NOV. 06
CHECKED BY : J. W. WRIGHT DATE : NOV. 06

PREPARED IN THE OFFICE OF TYLIN INTERNATIONAL RALEIGH, NORTH CAROLINA
Copyright © 2006, TYLI
DWG NO.

REVISIONS						SHEET NO.
NO.	BY:	DATE:	NO.	BY:	DATE:	
1			3			TOTAL SHEETS
2			4			

DATE: #DATE#
FILE: #FILENAME#

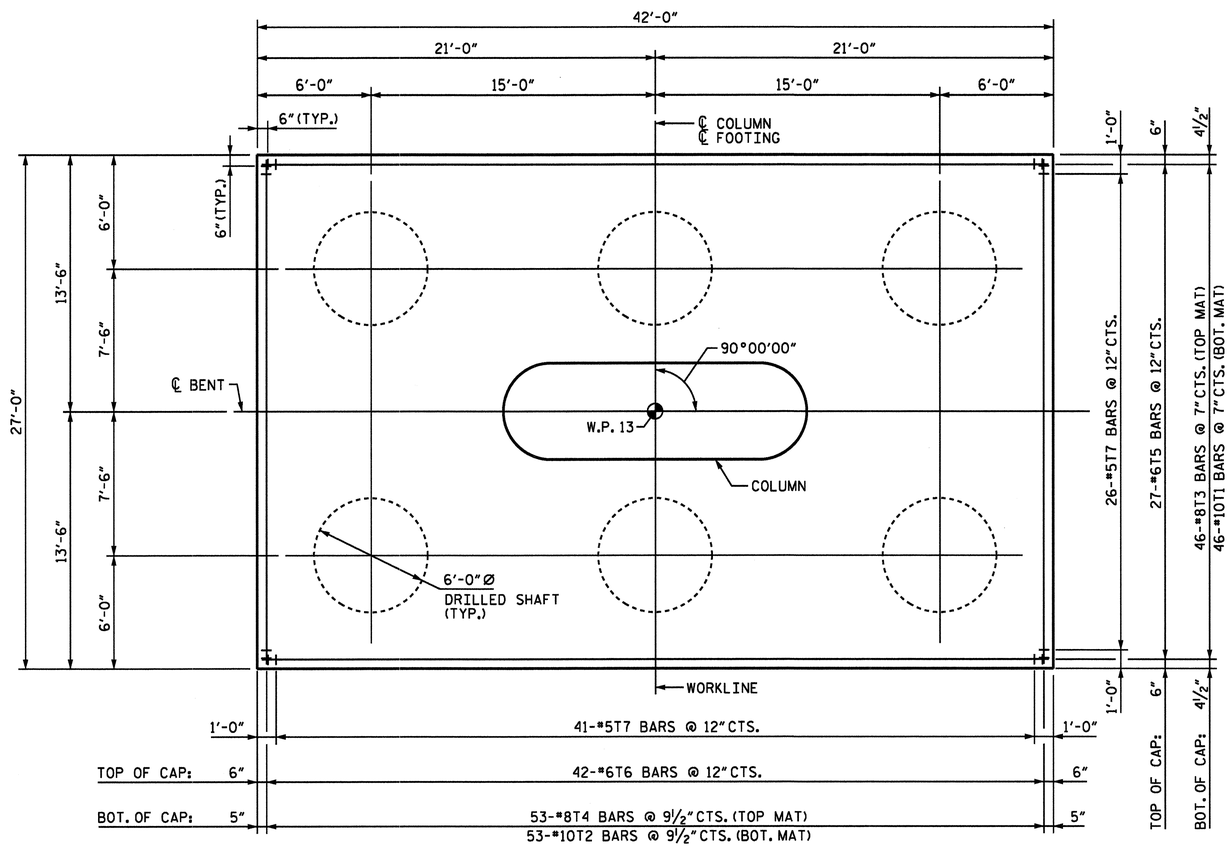

PLAN OF FOOTING

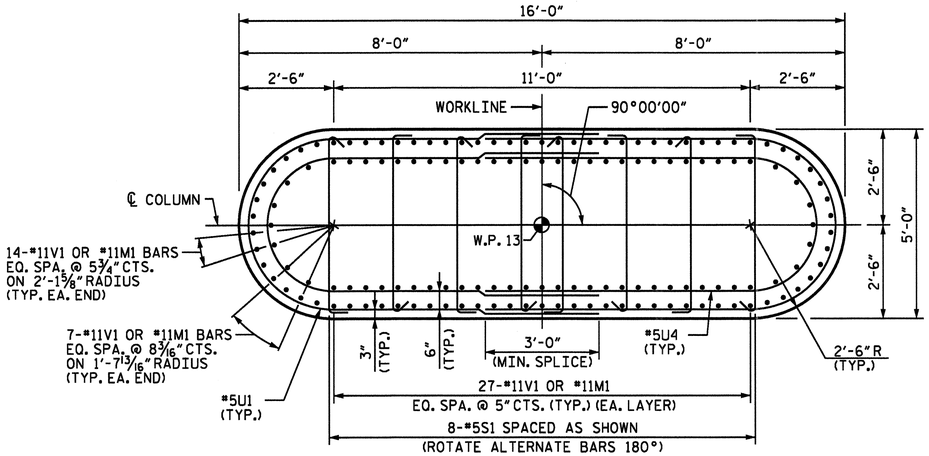

SECTION A-A

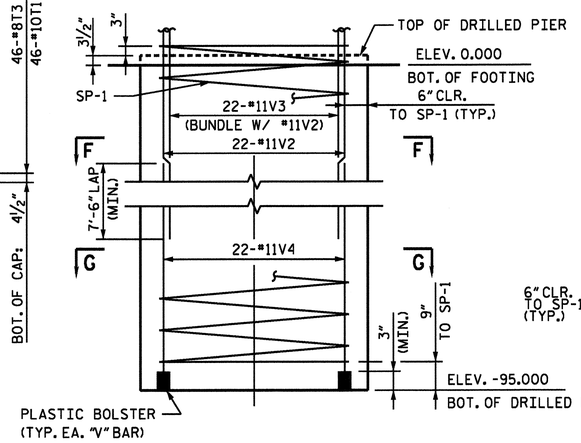

DRILLED PIER ELEVATION

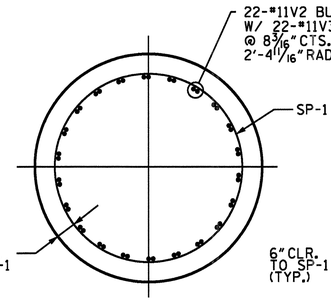

SECTION F-F

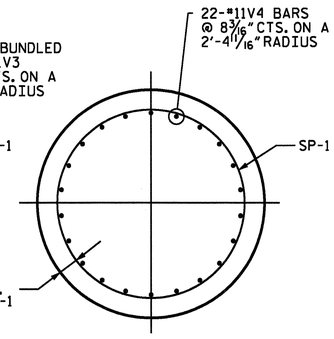

SECTION G-G

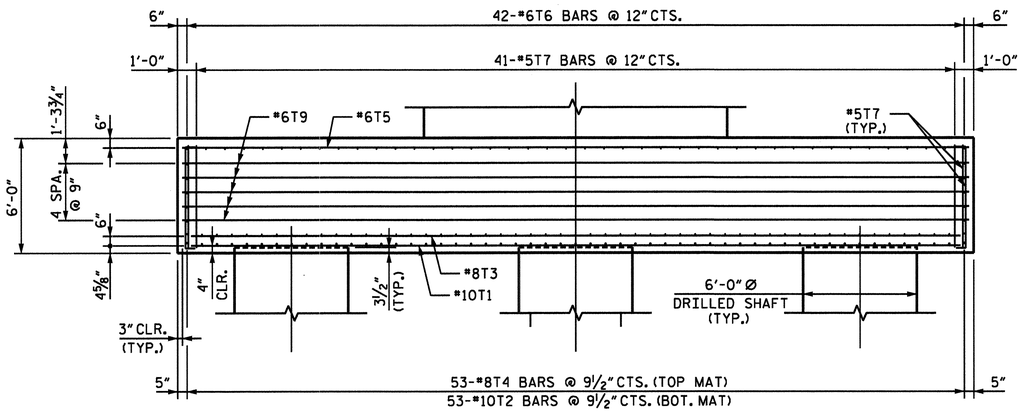

ELEVATION

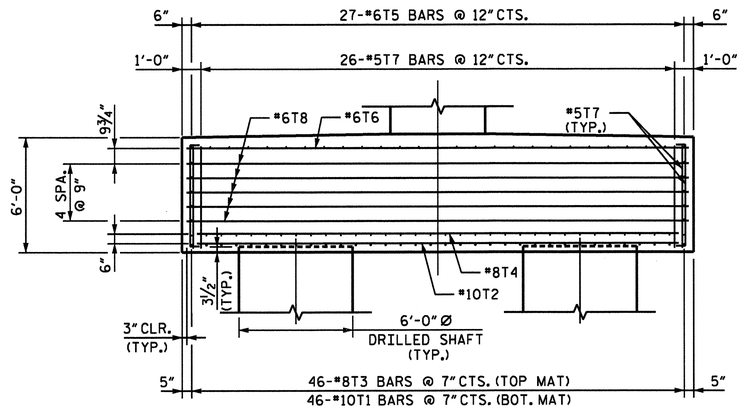

SIDE ELEVATION

NORTH CAROLINA PROFESSIONAL SEAL 024928 ENGINEER RODNEY E. MONEY 2/26/07

PROJECT NO. B-0682

BRUNSWICK COUNTY

STATION: 47+08.03 -L- POT

SHEET 2 OF 3

STATE OF NORTH CAROLINA
DEPARTMENT OF TRANSPORTATION
RALEIGH

SUBSTRUCTURE

BENT 12 DETAILS

DATE: #DATE#
FILE: #FILENAME#

DRAWN BY : T. S. KELLEY DATE : NOV. 06
CHECKED BY : J. W. WRIGHT DATE : NOV. 06

PREPARED IN THE OFFICE OF
TYLIN INTERNATIONAL
RALEIGH, NORTH CAROLINA
Copyright © 2006, TYLI

DWG NO.

REVISIONS						SHEET NO.
NO.	BY:	DATE:	NO.	BY:	DATE:	S-167
1			3			TOTAL SHEETS
2			4			237

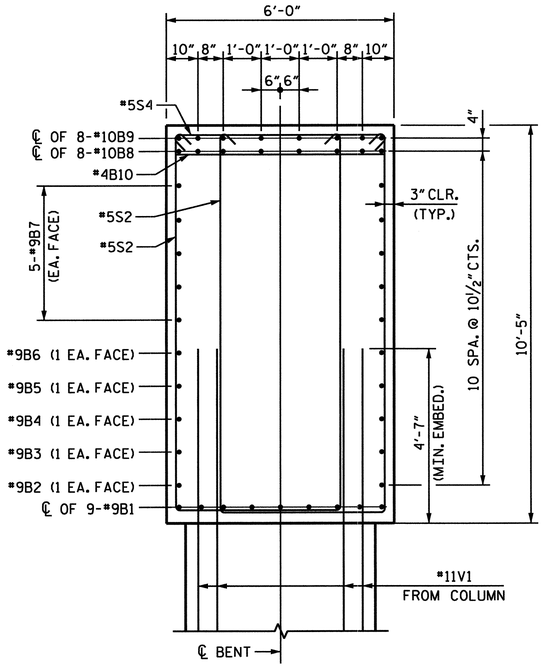

SECTION B-B

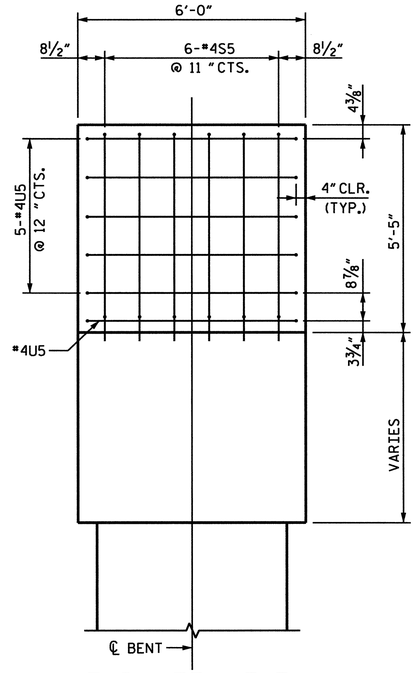

END VIEW E-E

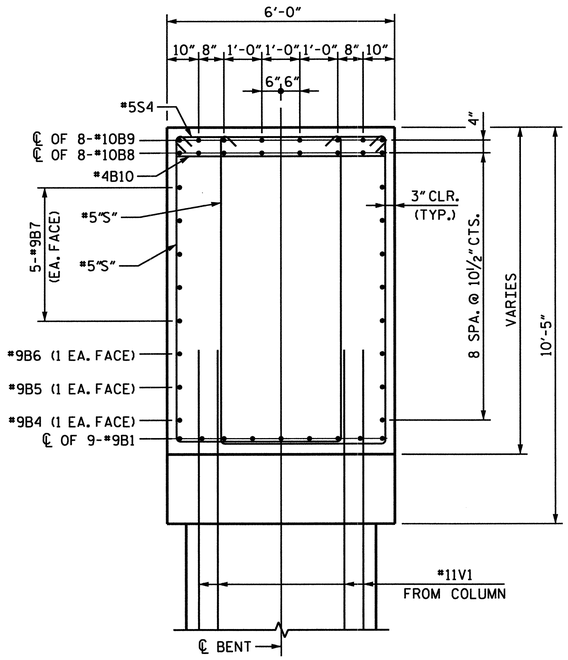

SECTION C-C

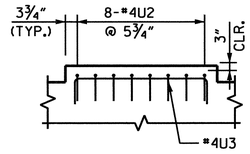

DETAIL A

(CAP REINFORCING NOT SHOWN)

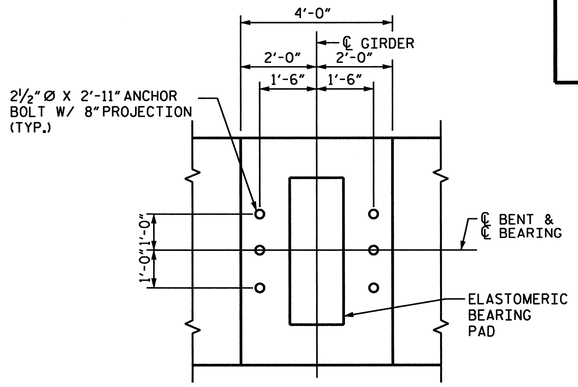

DETAIL B

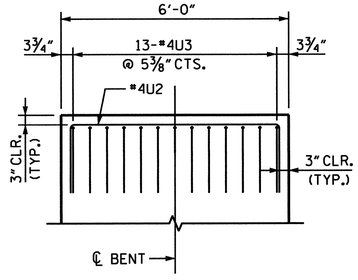

SECTION D-D

(CAP REINFORCING NOT SHOWN)

BAR TYPES

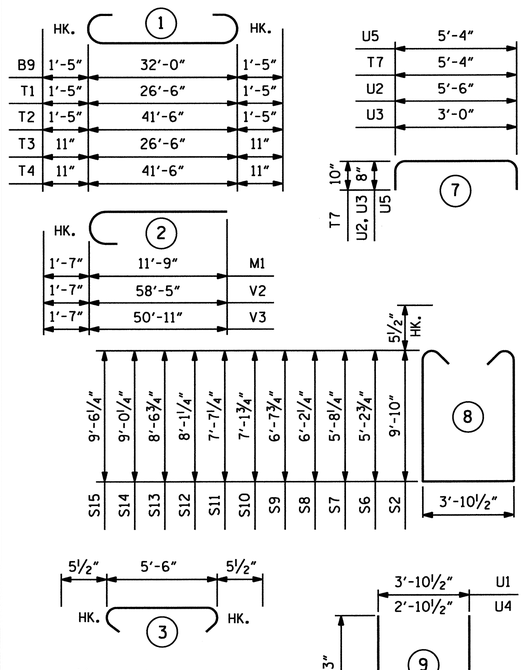

NOTE:
ALL BAR DIMENSIONS ARE OUT TO OUT.
* THE SP-1 SPIRAL REINFORCING STEEL SHALL BE W31 OR D-31 COLD DRAWN WIRE FOR *5 PLAIN OR DEFORMED BAR.

BILL OF MATERIAL

BENT 12

BAR	NO.	SIZE	TYPE	LENGTH	WEIGHT
B1	18	9	5	18' - 11"	1,158
B2	2	9	STR	18' - 9"	128
B3	2	9	STR	21' - 6"	146
B4	2	9	STR	24' - 2"	164
B5	2	9	STR	26' - 11"	183
B6	2	9	STR	29' - 8"	202
B7	10	9	STR	32' - 0"	1,088
B8	8	10	STR	32' - 0"	1,102
B9	8	10	1	34' - 10"	1,199
B10	10	4	STR	5' - 6"	37
M1	150	11	2	13' - 4"	10,626
S1	360	5	4	5' - 6"	2,065
S2	24	5	8	24' - 6"	613
S4	32	5	3	6' - 5"	214
S5	12	4	6	6' - 4"	51
S6	4	5	8	15'-3"	64
S7	4	5	8	16'-2"	67
S8	4	5	8	17'-2"	72
S9	4	5	8	18'-1"	75
S10	4	5	8	19'-1"	80
S11	4	5	8	20'-0"	83
S12	4	5	8	21'-0"	88
S13	4	5	8	21'-11"	91
S14	4	5	8	22'-10"	95
S15	4	5	8	23'-10"	99

BAR	NO.	SIZE	TYPE	LENGTH	WEIGHT
T1	46	10	1	29' - 4"	5,806
T2	53	10	1	44' - 4"	10,111
T3	46	8	1	28' - 4"	3,480
T4	53	8	1	43' - 4"	6,132
T5	27	6	STR	41' - 6"	1,683
T6	42	6	STR	26' - 6"	1,672
T7	134	5	7	7' - 0"	978
T8	10	6	STR	26' - 6"	398
T9	10	6	STR	41' - 0"	616
U1	90	5	9	21' - 1"	1,979
U2	32	4	7	6' - 10"	146
U3	52	4	7	4' - 4"	151
U4	90	5	9	16' - 8"	1,565
U5	12	4	7	6'-8"	53
V1	150	11	STR	51'-0"	40,644
V2	132	11	2	60'-0"	42,079
V3	132	11	2	52'-6"	36,819
V4	132	11	STR	49'-1"	34,423

EPOXY COATED REINFORCING STEEL				LBS	208,525
SP-1	6	*	10	3,599'-8"	14,428
EPOXY COATED SPIRAL COLUMN REINFORCING STEEL				LBS	14,428

CLASS AA CONC. BREAKDOWN:		
POUR 2 - PILE CAP	CY	256.4
POUR 3 - COLUMN	CY	125.8
POUR 4 - CAP	CY	67.4
TOTAL - CLASS AA CONC.	CY	449.6
6'-0" Ø CONCRETE DRILLED PIER	LIN. FT.	571.75
POUR 1 - DRILLED PIER	CY	598.6
PERMANENT STEEL CASING FOR 6'-0" Ø DRILLED PIER	LIN. FT.	180.00
SPT TESTING	EA.	6
SID INSPECTION	EA.	6

PROJECT NO. B-0682

BRUNSWICK COUNTY

STATION: 47+08.03 -L- POT

SHEET 3 OF 3

STATE OF NORTH CAROLINA
DEPARTMENT OF TRANSPORTATION
RALEIGH

SUBSTRUCTURE DETAILS & BILL OF MATERIAL

BENT 12

NORTH CAROLINA PROFESSIONAL SEAL 024928 ENGINEER RODNEY E. MOREY 2/26/07

PREPARED IN THE OFFICE OF
TY LIN INTERNATIONAL
RALEIGH, NORTH CAROLINA
Copyright © 2006, TYLI
DWG NO.

REVISIONS						SHEET NO.
NO.	BY:	DATE:	NO.	BY:	DATE:	S-128
1			3			TOTAL SHEETS
2			4			287

DRAWN BY : T. S. KELLEY DATE : NOV. 06
CHECKED BY : J. W. WRIGHT DATE : NOV. 06

DATE: *DATE*
FILE: *FILENAME*

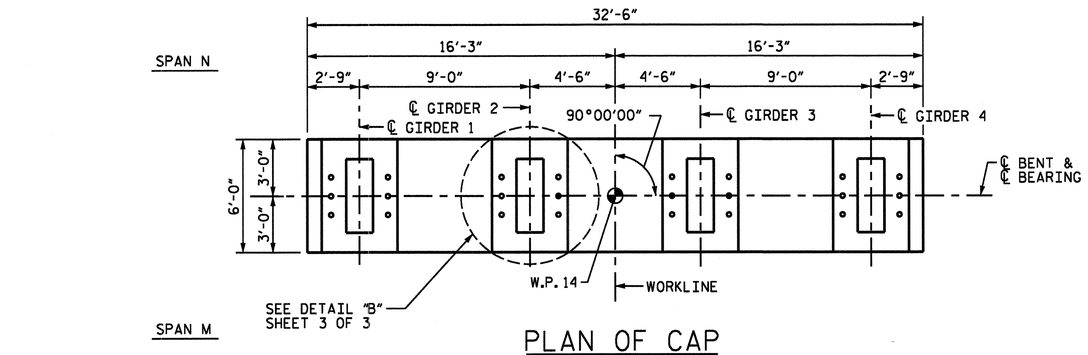

PLAN OF CAP

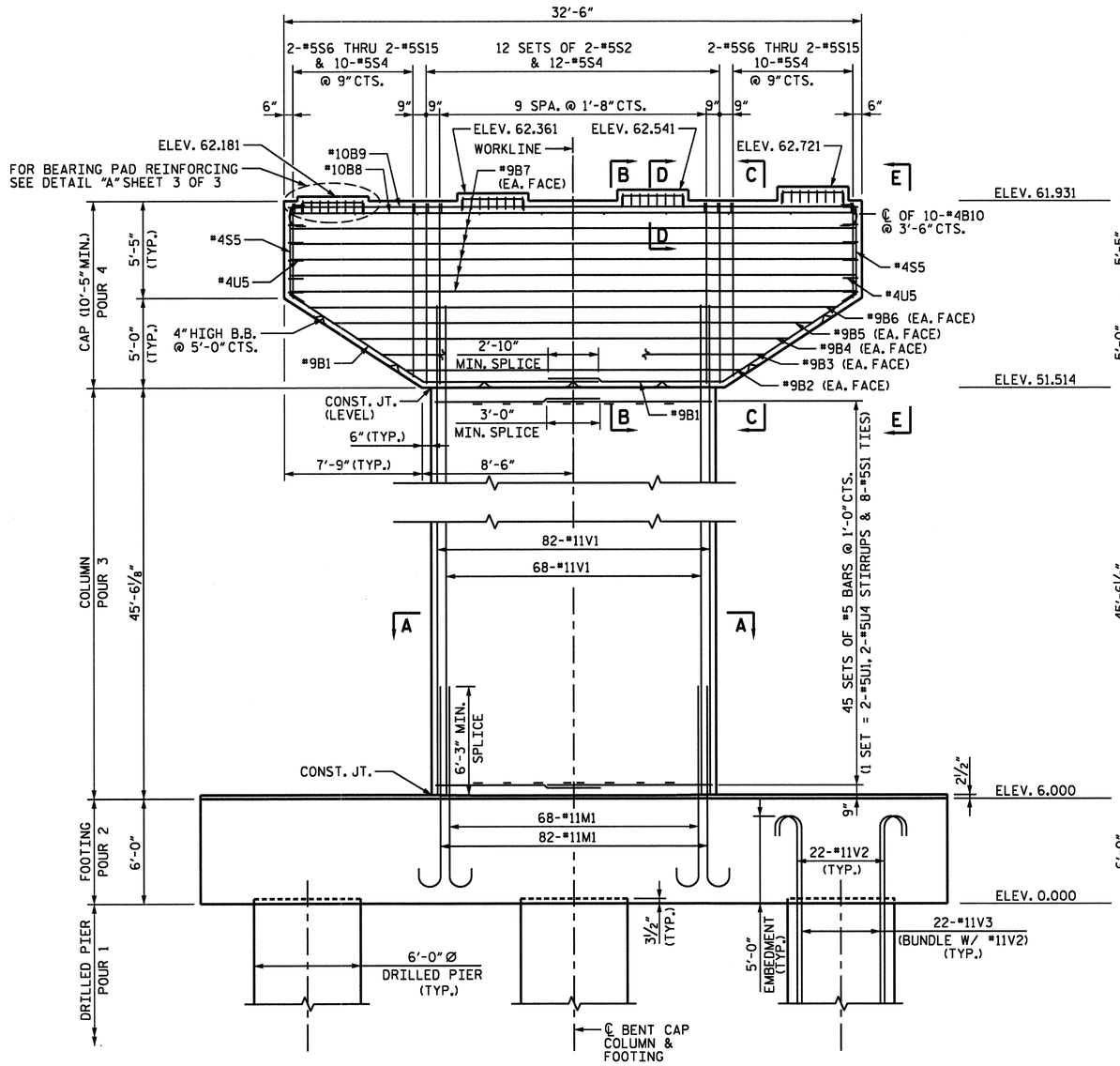

ELEVATION

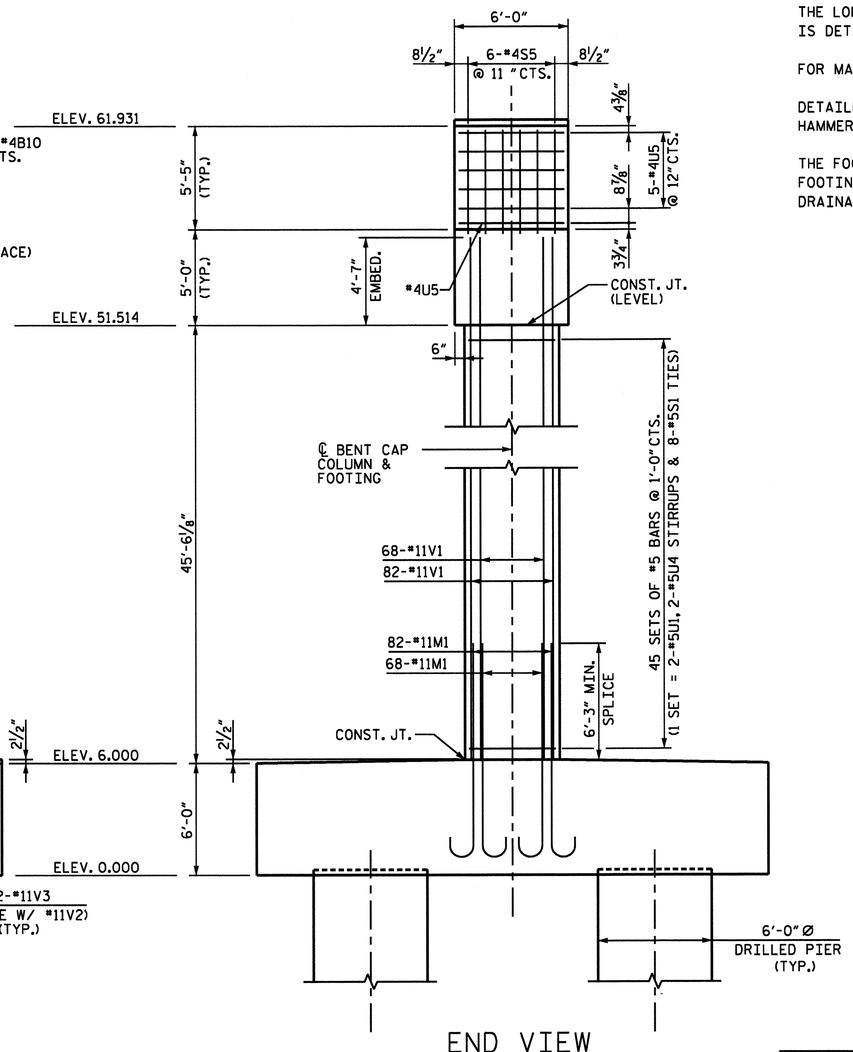

END VIEW

NOTES:

STIRRUPS IN CAP MAY BE SHIFTED AS NECESSARY TO CLEAR ANCHOR BOLTS.

HOOKS ON M1 BARS MAY BE TURNED AS NECESSARY FOR PLACING REINFORCING STEEL.

T5 & T6 BARS IN TOP OF FOOTING MAY BE SHIFTED AS NECESSARY TO CLEAR M1 BARS IN FOOTING.

FOR SECTION A-A, SEE SHEET 2 OF 3.

FOR SECTIONS B-B, C-C, D-D AND E-E, SEE SHEET 3 OF 3.

FOR DETAILS A & B, SEE SHEET 3 OF 3.

FOR FOOTING DETAILS AND REINFORCEMENT, SEE SHEET 2 OF 3.

ALL STEEL IN THE DRILLED PIERS IS INCLUDED IN THE PAY ITEM FOR "EPOXY COATED REINFORCING STEEL" AND "EPOXY COATED SPIRAL COLUMN REINFORCING STEEL".

THE CONTRACTOR'S ATTENTION IS CALLED TO THE FACT THAT THE LONGITUDINAL REINFORCEMENT FOR THE DRILLED PIERS IS DETAILED WITH 3 FEET ADDITIONAL LENGTH.

FOR MASS CONCRETE, SEE SPECIAL PROVISIONS.

DETAILED DRAWINGS FOR FALSEWORK AND FORMS FOR THIS HAMMERHEAD BENT SHALL BE SUBMITTED, SEE SHEET S-N.

THE FOOTING HAS A DROP OF 2½" FROM THE CENTER OF THE FOOTING TO THE EDGE OF THE FOOTING TO ACCOMMODATE DRAINAGE.

NORTH CAROLINA PROFESSIONAL SEAL 024928 ENGINEER RODNEY E. MCKINNEY 1/26/07

PROJECT NO. B-0682

BRUNSWICK COUNTY

STATION: 47+08.03 -L- POT

SHEET 1 OF 3

STATE OF NORTH CAROLINA
DEPARTMENT OF TRANSPORTATION
RALEIGH

SUBSTRUCTURE

BENT 13

REVISIONS						SHEET NO.
NO.	BY:	DATE:	NO.	BY:	DATE:	S-169
1			3			TOTAL SHEETS
2			4			207

PREPARED IN THE OFFICE OF
TYLIN INTERNATIONAL
RALEIGH, NORTH CAROLINA
Copyright © 2006, TYLI
DWG NO.

DRAWN BY : T. S. KELLEY DATE : NOV. 06
CHECKED BY : J. W. WRIGHT DATE : NOV. 06

DATE: #DATE#
FILE: #FILENAME#

B0682_SD_PR3_01.dgn 02/26/2007 02:33:05 PM

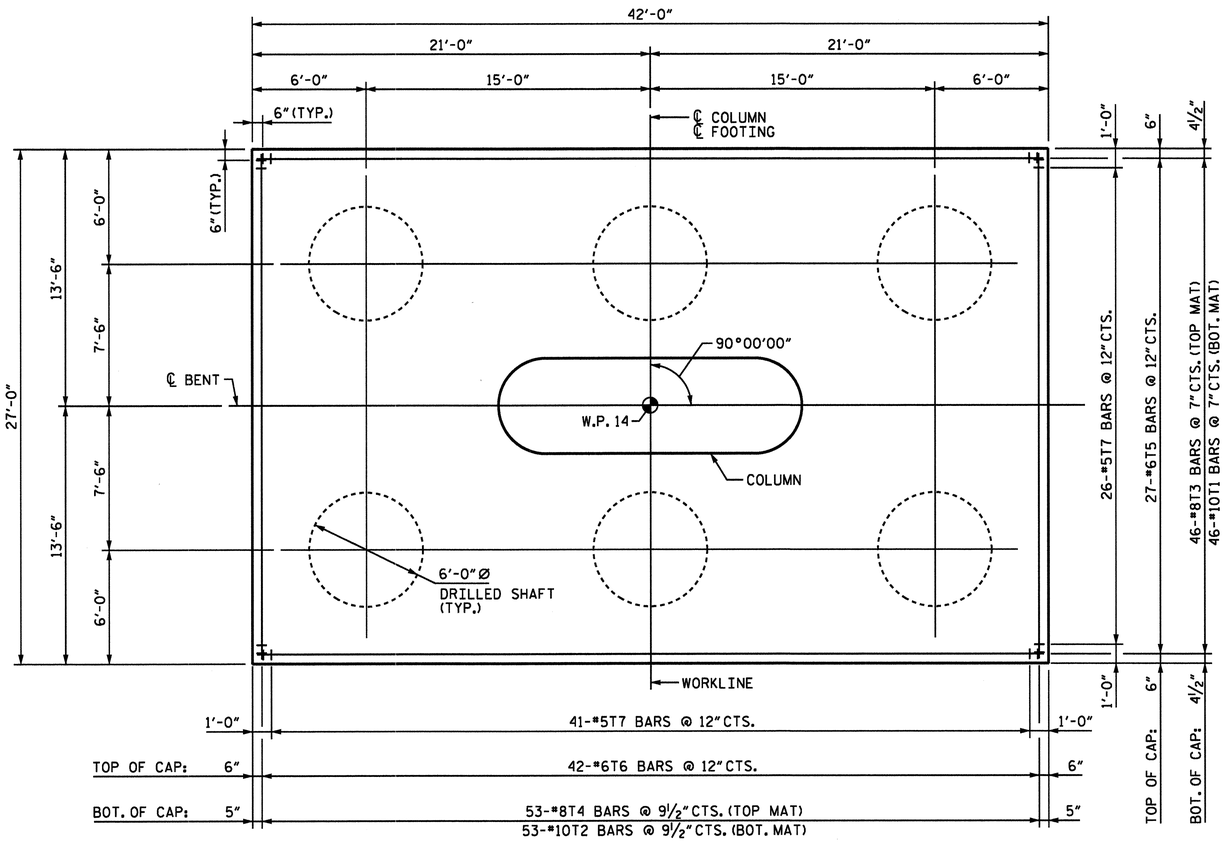

PLAN OF FOOTING

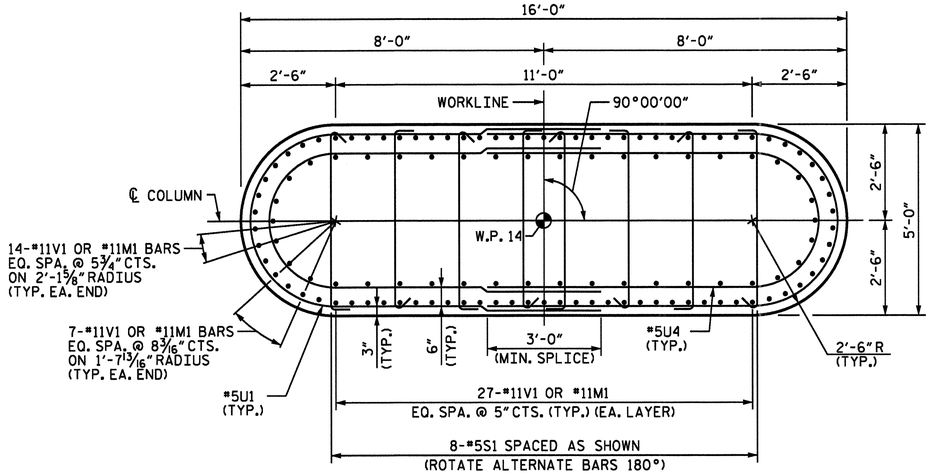

SECTION A-A

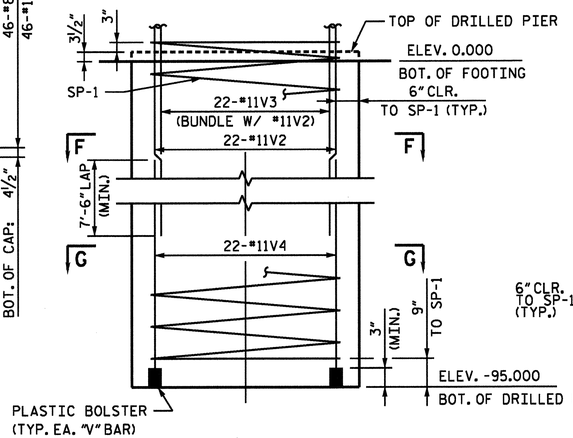

DRILLED PIER ELEVATION

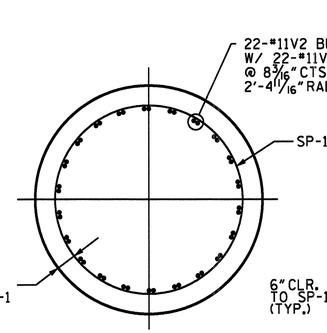

SECTION F-F

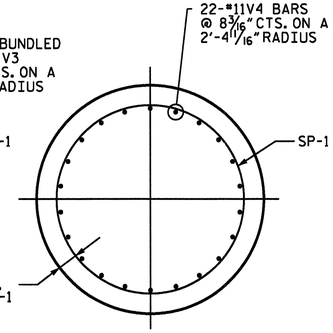

SECTION G-G

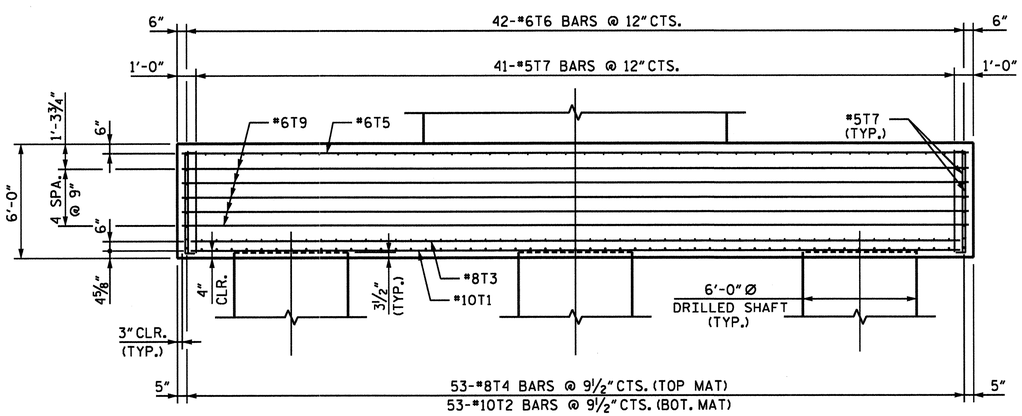

ELEVATION

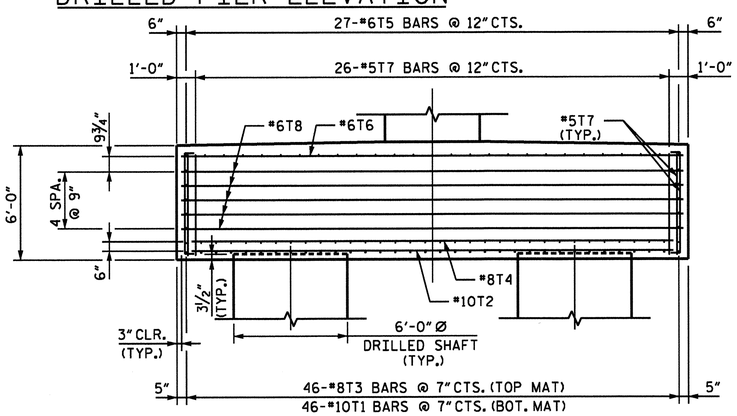

SIDE ELEVATION

NORTH CAROLINA PROFESSIONAL SEAL 024928 ENGINEER RODNEY E. MONEY 2/26/07

PROJECT NO. B-0682

BRUNSWICK COUNTY

STATION: 47+08.03 -L- POT

SHEET 2 OF 3

STATE OF NORTH CAROLINA
DEPARTMENT OF TRANSPORTATION
RALEIGH

SUBSTRUCTURE

BENT 13 DETAILS

PREPARED IN THE OFFICE OF
TYLIN INTERNATIONAL
RALEIGH, NORTH CAROLINA
Copyright © 2006, TYLI
DWG NO.

REVISIONS						SHEET NO.
NO.	BY:	DATE:	NO.	BY:	DATE:	S-170
1			3			TOTAL SHEETS
2			4			267

DATE: #DATE#
FILE: #FILENAME#

DRAWN BY : T. S. KELLEY DATE : NOV. 06
CHECKED BY : J. W. WRIGHT DATE : NOV. 06

B0682_SD_PR3_02.dgn 02/26/2007 09:24:02 AM

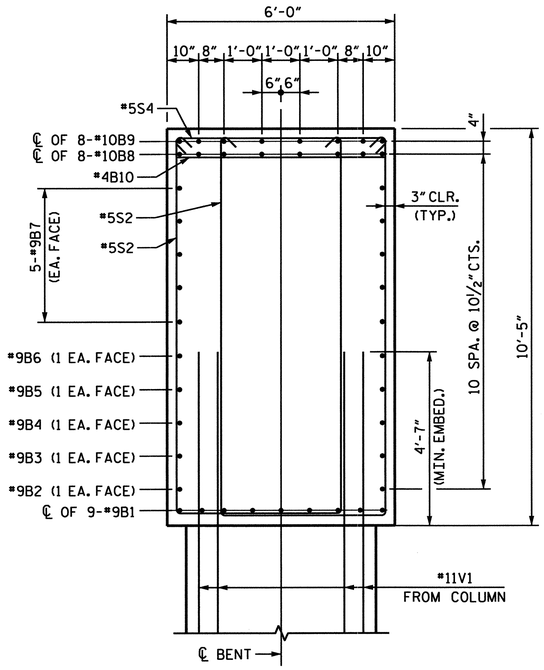

SECTION B-B

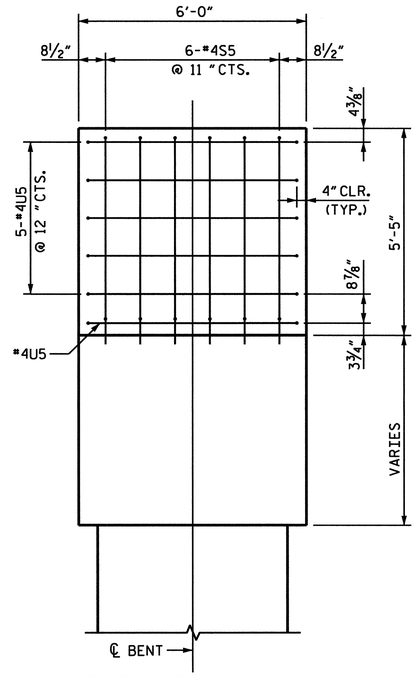

END VIEW E-E

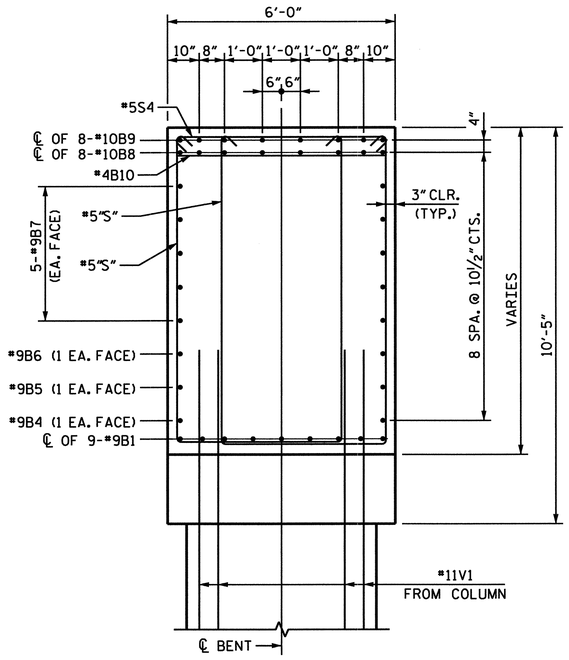

SECTION C-C

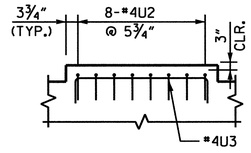

DETAIL A

(CAP REINFORCING NOT SHOWN)

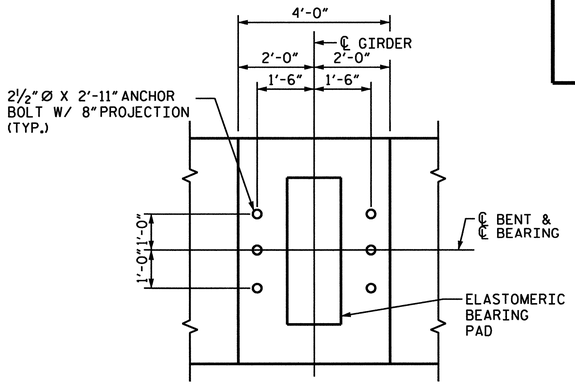

DETAIL B

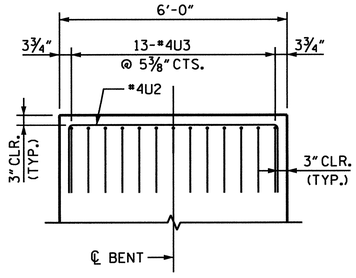

SECTION D-D

(CAP REINFORCING NOT SHOWN)

BAR TYPES

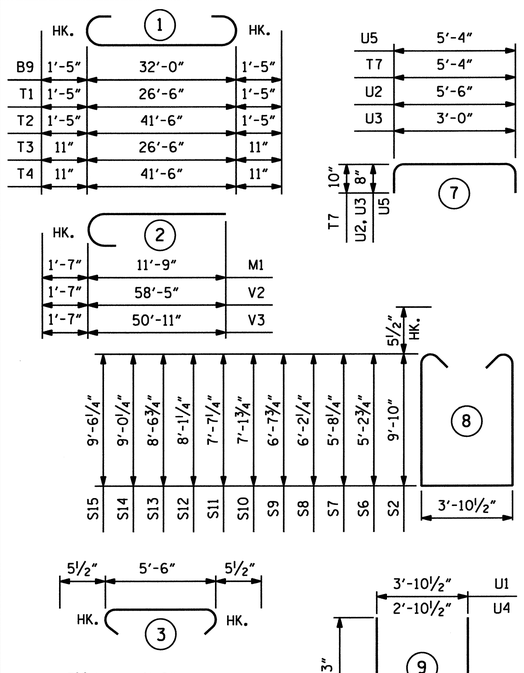

NOTE:
ALL BAR DIMENSIONS ARE OUT TO OUT.
*THE SP-1 SPIRAL REINFORCING STEEL SHALL BE W31 OR D-31 COLD DRAWN WIRE FOR *5 PLAIN OR DEFORMED BAR.

BILL OF MATERIAL

BENT 13

BAR	NO.	SIZE	TYPE	LENGTH	WEIGHT
B1	18	9	5	18' - 11"	1,158
B2	2	9	STR	18' - 9"	128
B3	2	9	STR	21' - 6"	146
B4	2	9	STR	24' - 2"	164
B5	2	9	STR	26' - 11"	183
B6	2	9	STR	29' - 8"	202
B7	10	9	STR	32' - 0"	1,088
B8	8	10	STR	32' - 0"	1,102
B9	8	10	1	34' - 10"	1,199
B10	10	4	STR	5' - 6"	37
M1	150	11	2	13' - 4"	10,626
S1	360	5	4	5' - 6"	2,065
S2	24	5	8	24' - 6"	613
S4	32	5	3	6' - 5"	214
S5	12	4	6	6' - 4"	51
S6	4	5	8	15'-3"	64
S7	4	5	8	16'-2"	67
S8	4	5	8	17'-2"	72
S9	4	5	8	18'-1"	75
S10	4	5	8	19'-1"	80
S11	4	5	8	20'-0"	83
S12	4	5	8	21'-0"	88
S13	4	5	8	21'-11"	91
S14	4	5	8	22'-10"	95
S15	4	5	8	23'-10"	99

BAR	NO.	SIZE	TYPE	LENGTH	WEIGHT
T1	46	10	1	29' - 4"	5,806
T2	53	10	1	44' - 4"	10,111
T3	46	8	1	28' - 4"	3,480
T4	53	8	1	43' - 4"	6,132
T5	27	6	STR	41' - 6"	1,683
T6	42	6	STR	26' - 6"	1,672
T7	134	5	7	7' - 0"	978
T8	10	6	STR	26' - 6"	398
T9	10	6	STR	41' - 0"	616
U1	90	5	9	21' - 1"	1,979
U2	32	4	7	6' - 10"	146
U3	52	4	7	4' - 4"	151
U4	90	5	9	16' - 8"	1,565
U5	12	4	7	6'-8"	53
V1	150	11	STR	51'-0"	40,644
V2	132	11	2	60'-0"	42,079
V3	132	11	2	52'-6"	36,819
V4	132	11	STR	49'-1"	34,423

EPOXY COATED REINFORCING STEEL			LBS	208,525
SP-1	6	*	10	3,599'-8"	14,428
EPOXY COATED SPIRAL COLUMN REINFORCING STEEL			LBS	14,428

CLASS AA CONC. BREAKDOWN:		
POUR 2 - PILE CAP	CY	256.4
POUR 3 - COLUMN	CY	125.9
POUR 4 - CAP	CY	67.4
TOTAL - CLASS AA CONC.	CY	449.7
6'-0" Ø CONCRETE DRILLED PIER	LIN. FT.	571.75
POUR 1 - DRILLED PIER	CY	598.6
PERMANENT STEEL CASING FOR 6'-0" Ø DRILLED PIER	LIN. FT.	180.00
SPT TESTING	EA.	6
SID INSPECTION	EA.	6

PROJECT NO. B-0682

BRUNSWICK COUNTY

STATION: 47+08.03 -L- POT

SHEET 3 OF 3

STATE OF NORTH CAROLINA
DEPARTMENT OF TRANSPORTATION
RALEIGH

SUBSTRUCTURE DETAILS & BILL OF MATERIAL

BENT 13

NORTH CAROLINA PROFESSIONAL SEAL 024928 ENGINEER RODNEY E. MONEY 2/24/07

PREPARED IN THE OFFICE OF
TYLIN INTERNATIONAL
RALEIGH, NORTH CAROLINA
Copyright © 2006, TYLI
DWG NO.

REVISIONS						SHEET NO.
NO.	BY:	DATE:	NO.	BY:	DATE:	
1			3			TOTAL SHEETS
2			4			

DRAWN BY : T. S. KELLEY DATE : NOV. 06
CHECKED BY : J. W. WRIGHT DATE : NOV. 06

DATE: #DATE#
FILE: #FILENAME#

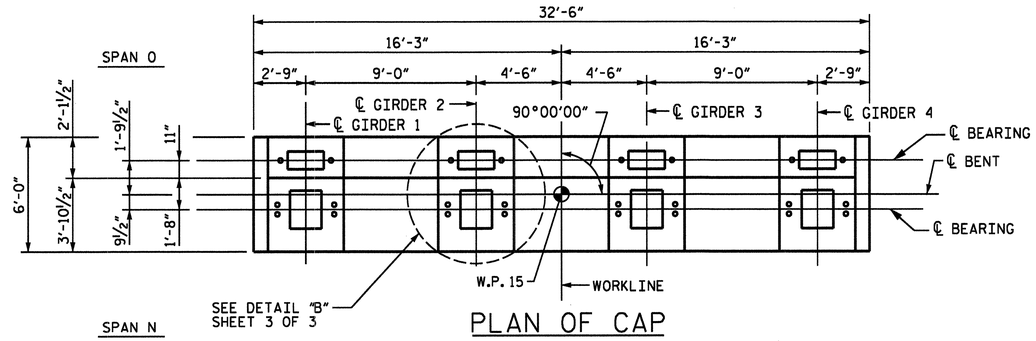

PLAN OF CAP

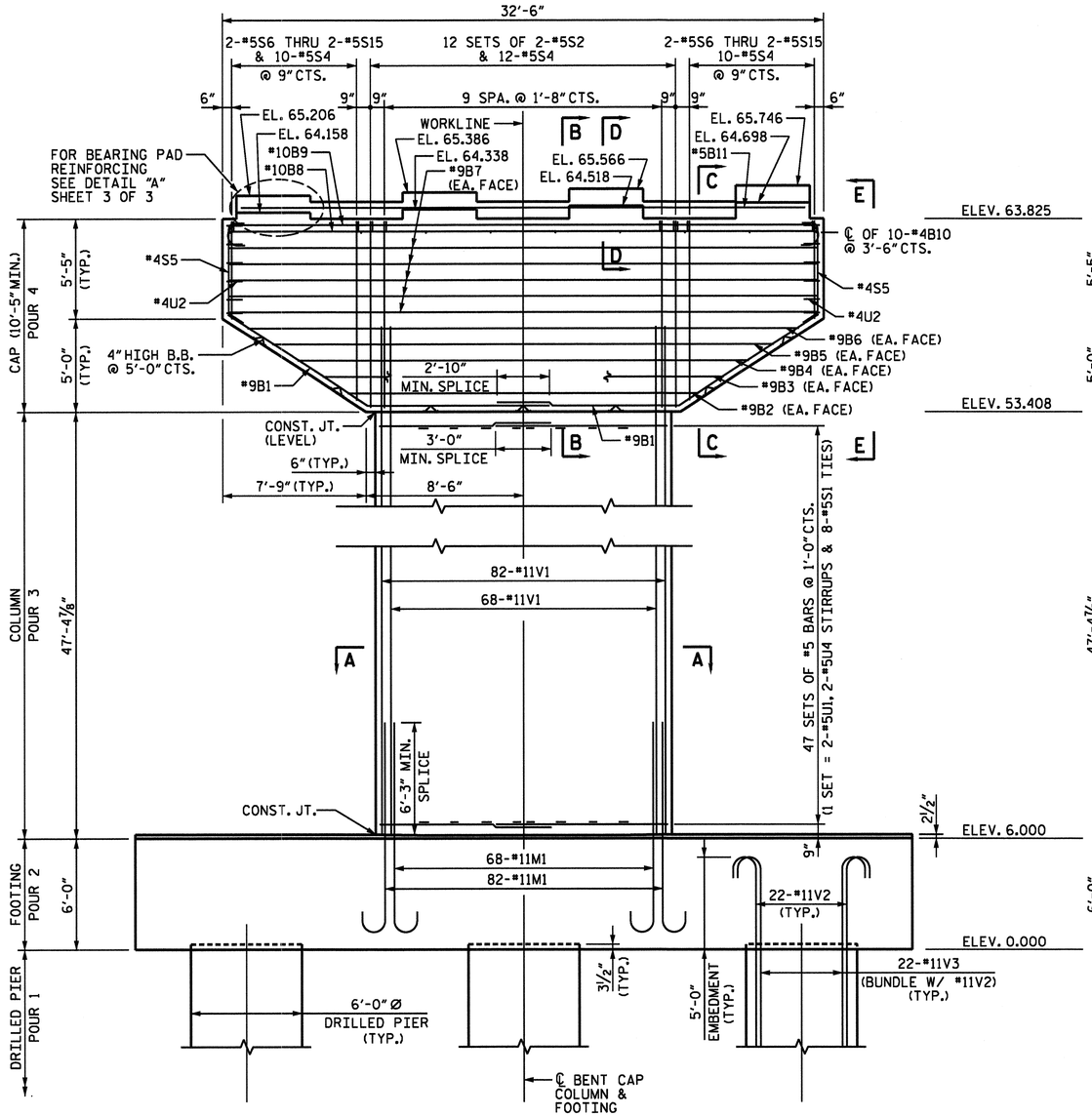

ELEVATION

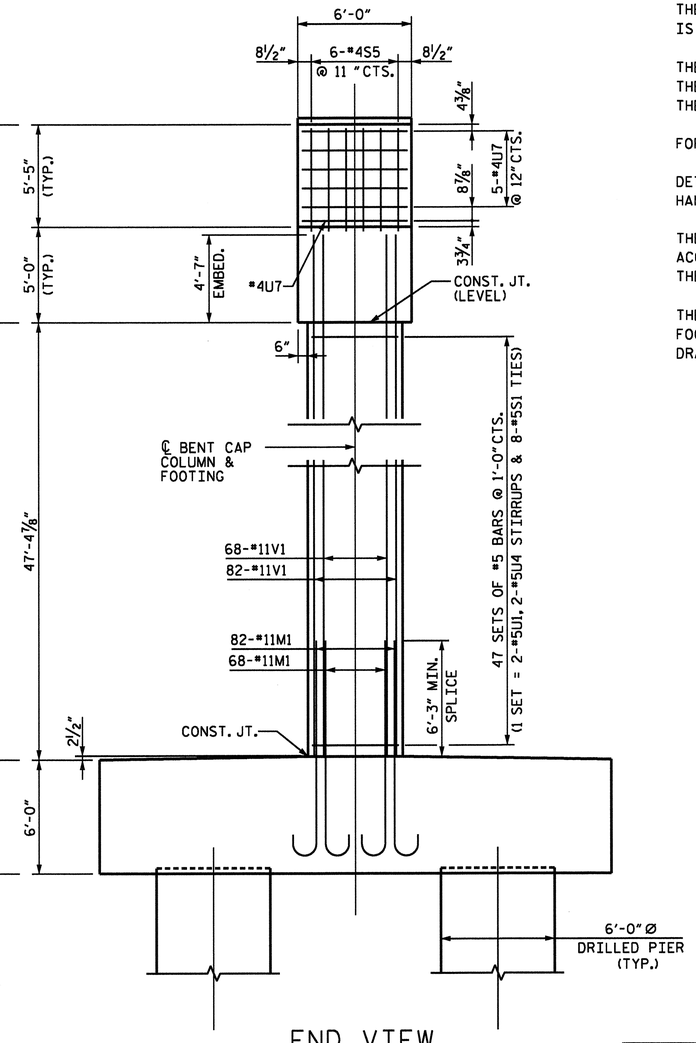

END VIEW

NOTES:

STIRRUPS IN CAP MAY BE SHIFTED AS NECESSARY TO CLEAR ANCHOR BOLTS.

HOOKS ON M1 BARS MAY BE TURNED AS NECESSARY FOR PLACING REINFORCING STEEL.

T5 & T6 BARS IN TOP OF FOOTING MAY BE SHIFTED AS NECESSARY TO CLEAR M1 BARS IN FOOTING.

FOR SECTION A-A, SEE SHEET 2 OF 3.

FOR SECTIONS B-B, C-C, D-D AND E-E, SEE SHEET 3 OF 3.

FOR DETAILS A & B, SEE SHEET 3 OF 3.

FOR FOOTING DETAILS AND REINFORCEMENT, SEE SHEET 2 OF 3.

ALL STEEL IN THE DRILLED PIERS IS INCLUDED IN THE PAY ITEM FOR "EPOXY COATED REINFORCING STEEL" AND "EPOXY COATED SPIRAL COLUMN REINFORCING STEEL".

THE CONTRACTOR'S ATTENTION IS CALLED TO THE FACT THAT THE LONGITUDINAL REINFORCEMENT FOR THE DRILLED PIERS IS DETAILED WITH 3 FEET ADDITIONAL LENGTH.

THE CONTRACTOR'S ATTENTION IS CALLED TO THE FACT THAT THE CENTERLINE JOINT IN THE DECK SLAB IS OFFSET FROM THE CENTERLINE BENT.

FOR MASS CONCRETE, SEE SPECIAL PROVISIONS.

DETAILED DRAWINGS FOR FALSEWORK AND FORMS FOR THIS HAMMERHEAD BENT SHALL BE SUBMITTED, SEE SHEET S-N.

THE TOP SURFACE AREAS OF THE CAP SHALL BE CURED IN ACCORDANCE WITH THE STANDARD SPECIFICATIONS EXCEPT THE MEMBRANE CURING COMPOUND METHOD SHALL NOT BE USED.

THE FOOTING HAS A DROP OF 2½" FROM THE CENTER OF THE FOOTING TO THE EDGE OF THE FOOTING TO ACCOMMODATE DRAINAGE.

NORTH CAROLINA PROFESSIONAL SEAL 024928 ENGINEER RODNEY E. MONEY 2/26/07

PROJECT NO. B-0682

BRUNSWICK COUNTY

STATION: 47+08.03 -L- POT

SHEET 1 OF 3

STATE OF NORTH CAROLINA
DEPARTMENT OF TRANSPORTATION
RALEIGH

SUBSTRUCTURE

BENT 14

PREPARED IN THE OFFICE OF
TYLIN INTERNATIONAL
RALEIGH, NORTH CAROLINA
Copyright © 2006, TYLI

DWG NO.

REVISIONS						SHEET NO.
NO.	BY:	DATE:	NO.	BY:	DATE:	S-1??
1			3			TOTAL SHEETS
2			4			207

DRAWN BY : T. S. KELLEY DATE : NOV. 06
CHECKED BY : J. W. WRIGHT DATE : NOV. 06

DATE: #DATE#
FILE: #FILENAME#

B0682_SD_PR4_01.dgn 02/26/2007 09:25:18 AM

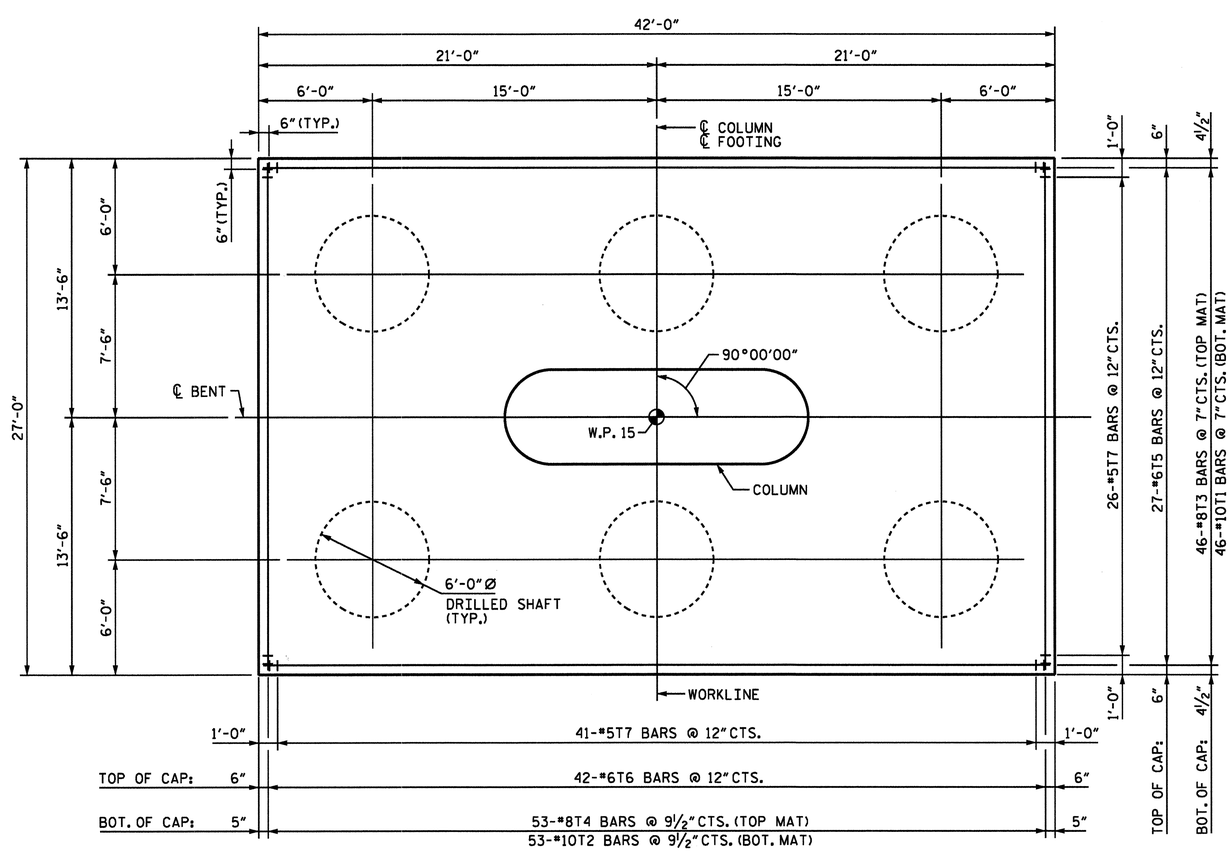

PLAN OF FOOTING

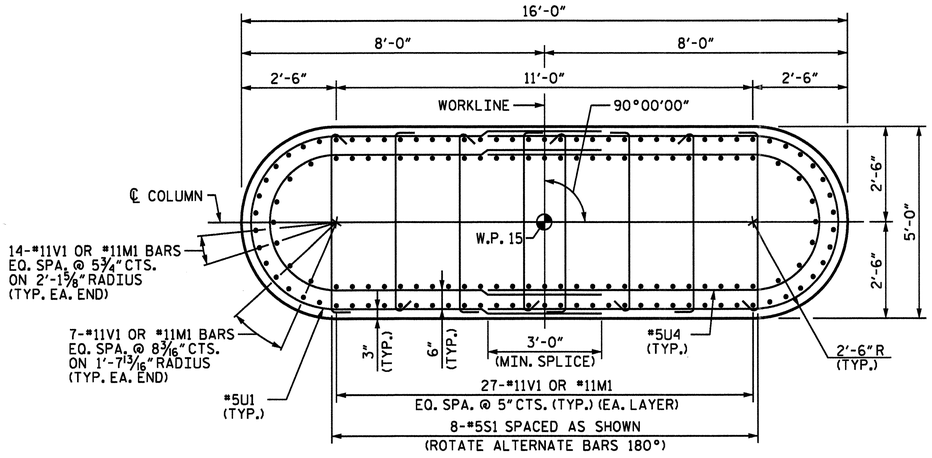

SECTION A-A

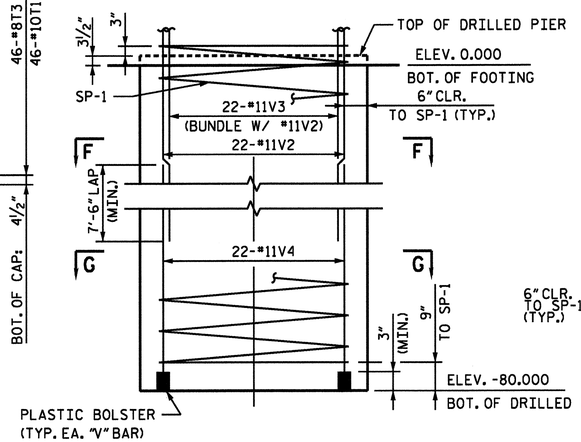

DRILLED PIER ELEVATION

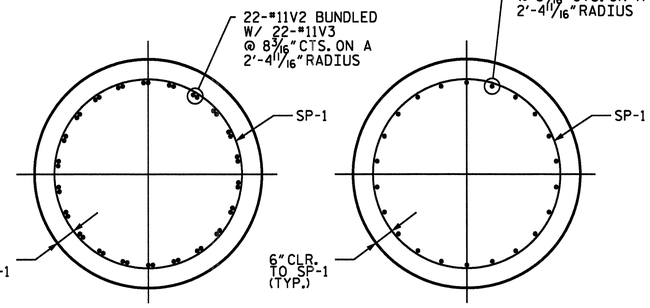

SECTION F-F

SECTION G-G

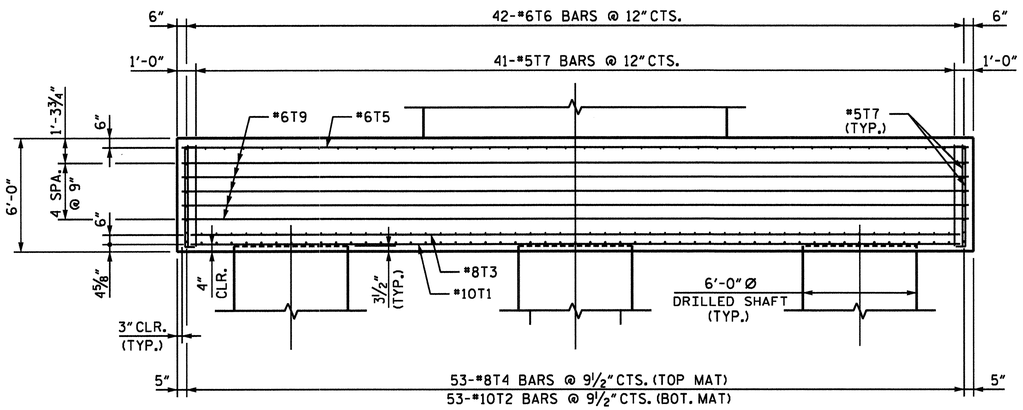

ELEVATION

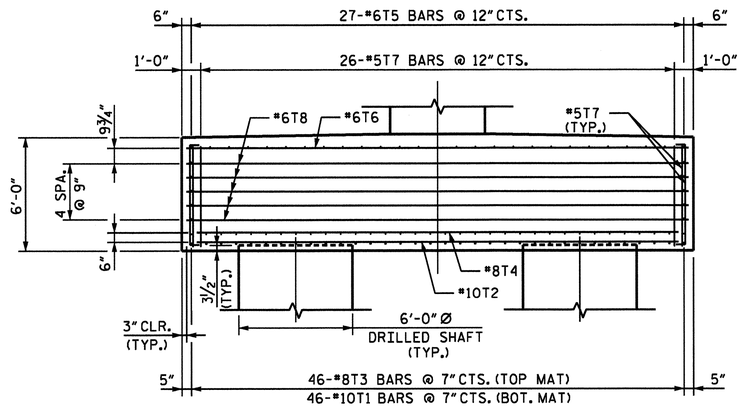

SIDE ELEVATION

NORTH CAROLINA PROFESSIONAL SEAL 024928 ENGINEER RODNEY E. MONEY 2/26/07

PROJECT NO. B-0682

BRUNSWICK COUNTY

STATION: 47+08.03 -L- POT

SHEET 2 OF 3

STATE OF NORTH CAROLINA
DEPARTMENT OF TRANSPORTATION
RALEIGH

SUBSTRUCTURE

BENT 14 DETAILS

DRAWN BY : T. S. KELLEY DATE : NOV. 06
CHECKED BY : J. W. WRIGHT DATE : NOV. 06

DATE: $DATE$
FILE: $FILENAME$

PREPARED IN THE OFFICE OF
TYLIN INTERNATIONAL
RALEIGH, NORTH CAROLINA
Copyright © 2006, TYLI

DWG NO.

REVISIONS						SHEET NO.
NO.	BY:	DATE:	NO.	BY:	DATE:	S-173
1			3			TOTAL SHEETS
2			4			207

B0682_SD_PR4_02.dgn 02/26/2007 10:10:46 AM

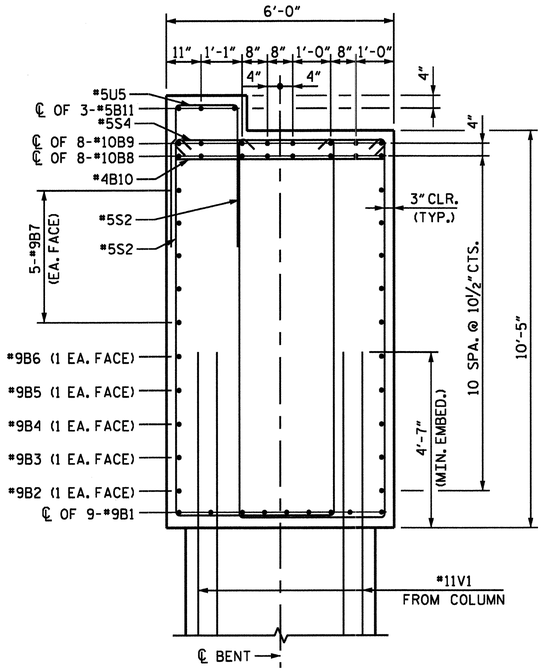

SECTION B-B

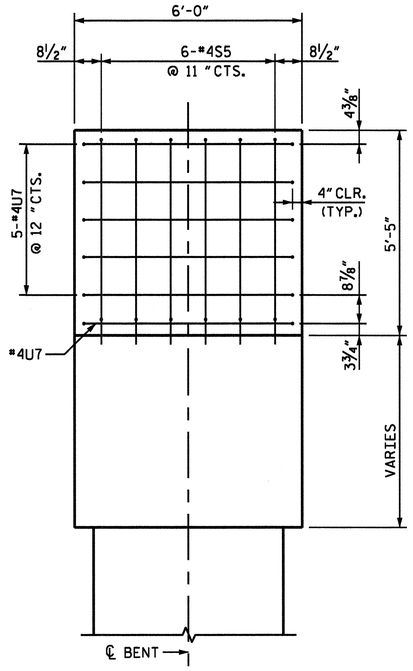

END VIEW E-E

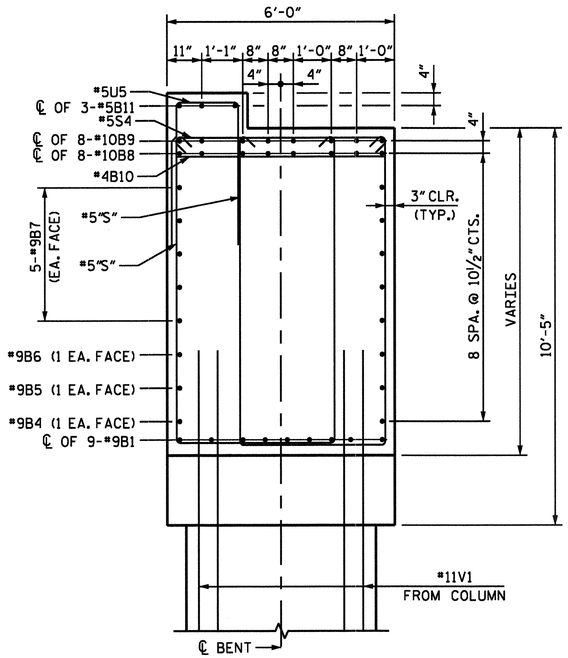

SECTION C-C

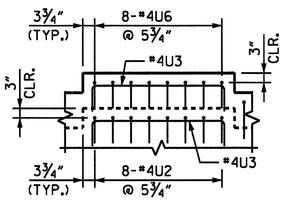

DETAIL A

(CAP REINFORCING NOT SHOWN)

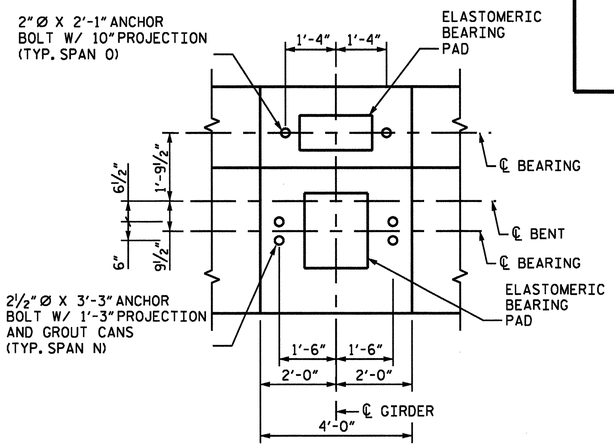

DETAIL B

BAR TYPES

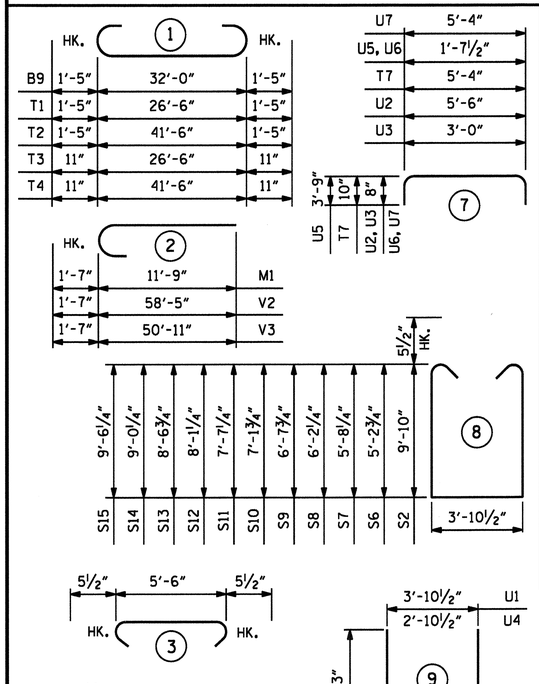

NOTE:
ALL BAR DIMENSIONS ARE OUT TO OUT.
* THE SP-1 SPIRAL REINFORCING STEEL SHALL BE W31 OR D-31 COLD DRAWN WIRE FOR *5 PLAIN OR DEFORMED BAR.

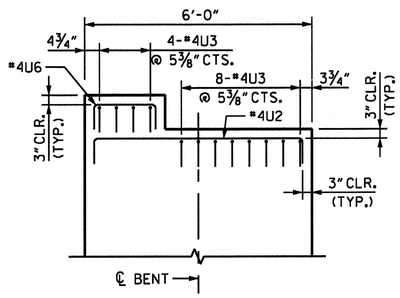

SECTION D-D

(CAP REINFORCING NOT SHOWN)

BILL OF MATERIAL

BENT 14

BAR	NO.	SIZE	TYPE	LENGTH	WEIGHT
B1	18	9	5	18' - 11"	1,158
B2	2	9	STR	18' - 9"	128
B3	2	9	STR	21' - 6"	146
B4	2	9	STR	24' - 2"	164
B5	2	9	STR	26' - 11"	183
B6	2	9	STR	29' - 8"	202
B7	10	9	STR	32' - 0"	1,088
B8	8	10	STR	32' - 0"	1,102
B9	8	10	1	34' - 10"	1,199
B10	10	4	STR	5' - 6"	37
B11	3	5	STR	30'-6"	95
M1	150	11	2	13' - 4"	10,626
S1	376	5	4	5' - 6"	2,157
S2	24	5	8	24' - 6"	613
S4	32	5	3	6' - 5"	214
S5	12	4	6	6' - 4"	51
S6	4	5	8	15'-3"	64
S7	4	5	8	16'-2"	67
S8	4	5	8	17'-2"	72
S9	4	5	8	18'-1"	75
S10	4	5	8	19'-1"	80
S11	4	5	8	20'-0"	83
S12	4	5	8	21'-0"	88
S13	4	5	8	21'-11"	91
S14	4	5	8	22'-10"	95
S15	4	5	8	23'-10"	99

BAR	NO.	SIZE	TYPE	LENGTH	WEIGHT
T1	46	10	1	29' - 4"	5,806
T2	53	10	1	44' - 4"	10,111
T3	46	8	1	28' - 4"	3,480
T4	53	8	1	43' - 4"	6,132
T5	27	6	STR	41' - 6"	1,683
T6	42	6	STR	26' - 6"	1,672
T7	134	5	7	7' - 0"	978
T8	10	6	STR	26' - 6"	398
T9	10	6	STR	41' - 0"	616
U1	94	5	9	21' - 1"	2,067
U2	32	4	7	6' - 10"	146
U3	48	4	7	4' - 4"	139
U4	94	5	9	16' - 8"	1,634
U5	32	5	7	9'-2"	306
U6	32	4	7	4'-4"	93
U7	12	4	7	6'-8"	53
V1	150	11	STR	53'-0"	42,238
V2	132	11	2	60'-0"	42,079
V3	132	11	2	52'-6"	36,819
V4	132	11	STR	34'-1"	23,903

EPOXY COATED REINFORCING STEEL				LBS	200,330
SP-1	6	*	10	3,038'-8"	12,179
EPOXY COATED SPIRAL COLUMN REINFORCING STEEL				LBS	12,179

CLASS AA CONC. BREAKDOWN:		
POUR 2 - PILE CAP	CY	256.4
POUR 3 - COLUMN	CY	130.8
POUR 4 - CAP	CY	69.8
TOTAL - CLASS AA CONC.	CY	457.0
6'-0" Ø CONCRETE DRILLED PIER	LIN. FT.	481.75
POUR 1 - DRILLED PIER	CY	504.4
PERMANENT STEEL CASING FOR 6'-0" Ø DRILLED PIER	LIN. FT.	180.00
SPT TESTING	EA.	6
SID INSPECTION	EA.	6

PROJECT NO. B-0682

BRUNSWICK COUNTY

STATION: 47+08.03 -L- POT

SHEET 3 OF 3

STATE OF NORTH CAROLINA
DEPARTMENT OF TRANSPORTATION
RALEIGH

SUBSTRUCTURE DETAIL & BILL OF MATERIAL

BENT 14

NORTH CAROLINA PROFESSIONAL SEAL 024928 ENGINEER RODNEY E. MONKEY 3/26/07

PREPARED IN THE OFFICE OF
TYLIN INTERNATIONAL
RALEIGH, NORTH CAROLINA
Copyright © 2006, TYLI

DWG NO.

REVISIONS						SHEET NO.
NO.	BY:	DATE:	NO.	BY:	DATE:	S-174
1			3			TOTAL SHEETS
2			4			261

DRAWN BY : T. S. KELLEY DATE : NOV. 06
CHECKED BY : J. W. WRIGHT DATE : NOV. 06

DATE: #DATE#
FILE: #FILENAME#

B0682_SD_PR4_03.dgn 02/26/2007 02:38:01 PM

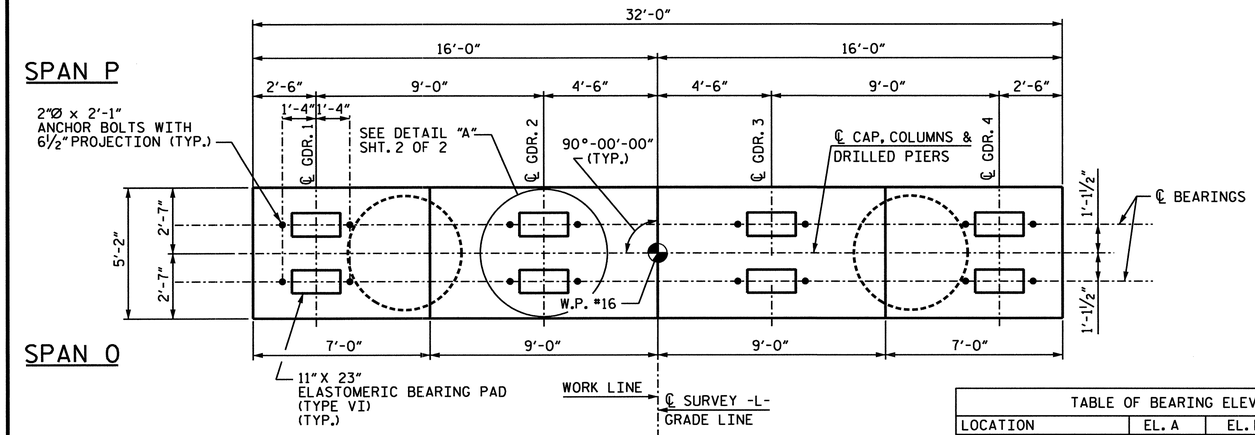

PLAN

TABLE OF BEARING ELEVATIONS				
LOCATION	EL. A	EL. B	EL. C	EL. D
BENT NO. 15	63.131	63.311	63.491	63.671

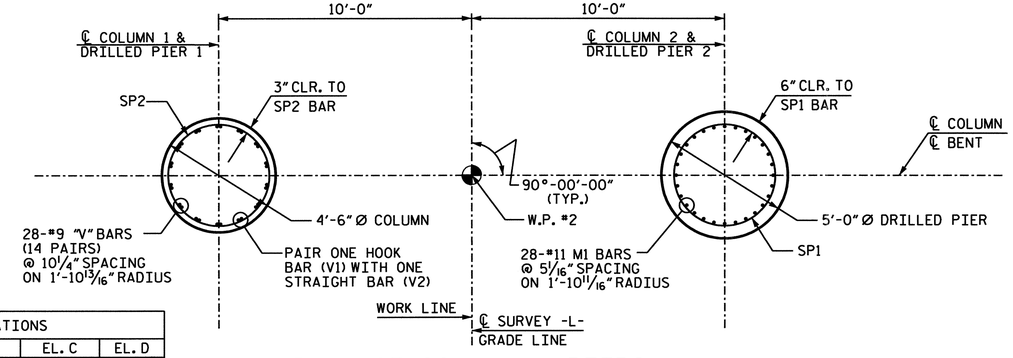

PLAN OF COLUMN / PIERS

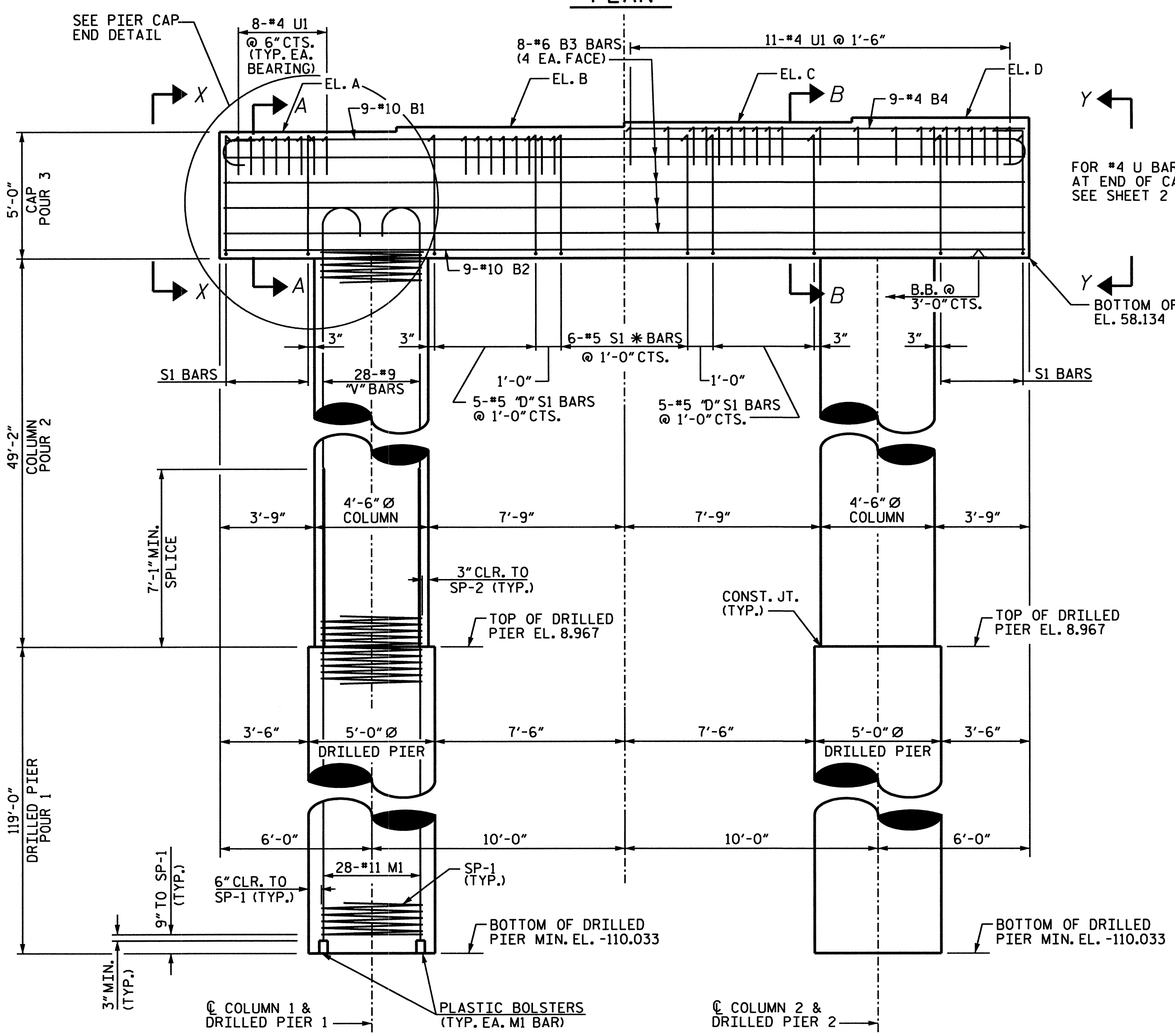

ELEVATION

*INVERT ALTERNATE STIRRUPS
"D" DENOTES DOUBLE STIRRUPS

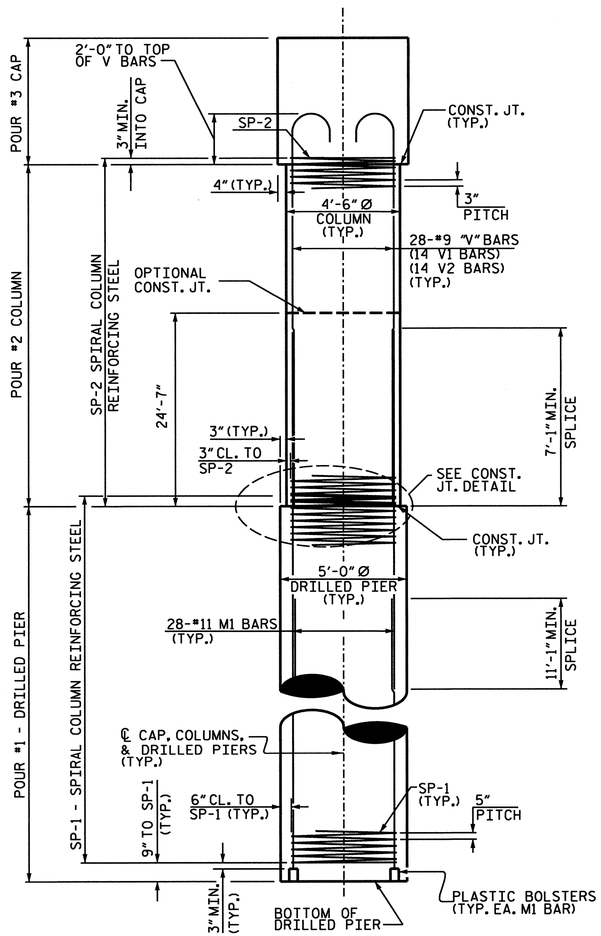

END ELEVATION

NOTES:

FOR DRILLED PIERS, SEE SPECIAL PROVISIONS.

THE CONTRACTOR'S ATTENTION IS CALLED TO THE FACT THAT THE LONGITUDINAL REINFORCEMENT FOR THE DRILLED PIERS IS DETAILED WITH 3 FEET OF EXTRA LENGTH.

ALL STEEL IN THE DRILLED PIERS IS INCLUDED IN THE PAY ITEMS FOR "EPOXY COATED REINFORCING STEEL" OR "EPOXY COATED SPIRAL COLUMN REINFORCING STEEL".

STIRRUPS IN CAP MAY BE SHIFTED AS NECESSARY TO CLEAR ANCHOR BOLTS.

DRILLED PIERS AT BENT NO. 15 SHALL EXTEND TO AN ELEVATION NO HIGHER THAN -110.0 FEET AND SATISFY THE REQUIRED BEARING CAPACITY.

HOOKS ON "V" BARS MAY BE TURNED AS NECESSARY FOR PLACING REINFORCING STEEL.

ALL BAR SUPPORTS USED IN THE BENT CAP, COLUMNS, AND DRILLED PIERS AND ALL INCIDENTAL REINFORCING STEEL SHALL BE EPOXY COATED IN ACCORDANCE WITH THE STANDARD SPECIFICATIONS.

PERMANENT STEEL CASING IS NOT REQUIRED FOR DRILLED PIERS AT BENT NO. 15.

DRAWN BY : D. RANDALL DATE : JULY 2006
CHECKED BY : I. C. ENGSTROM DATE : JULY 2006

NORTH CAROLINA PROFESSIONAL SEAL 32208 ENGINEER I. C. ENGSTROM
02-23-07

PLANS PREPARED BY:

PARSONS TRANSPORTATION GROUP
Engineers and Planners
RALEIGH, NORTH CAROLINA

JOB NO. 645615
DWG. NO.

PROJECT NO. B-682
BRUNSWICK COUNTY
STATION: 47+08.03 -L- POT

SHEET 1 OF 2

STATE OF NORTH CAROLINA
DEPARTMENT OF TRANSPORTATION
RALEIGH

SUBSTRUCTURE BENT 15

REVISIONS						SHEET NO.
NO.	BY:	DATE:	NO.	BY:	DATE:	S-177
1			3			TOTAL SHEETS
2			4			207

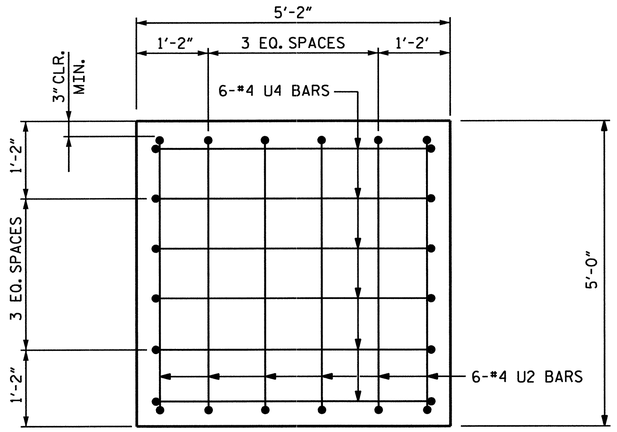

VIEW X-X

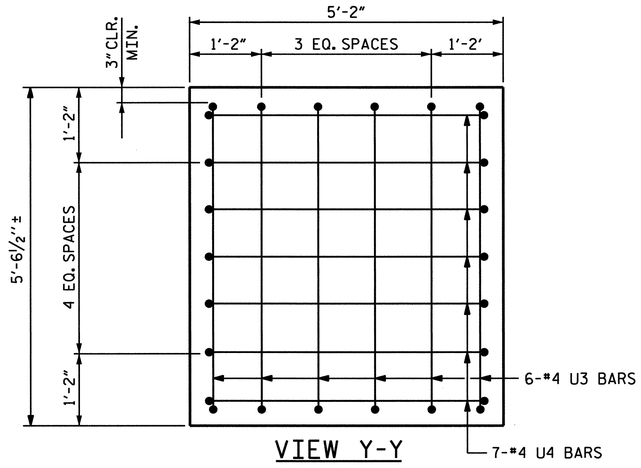

VIEW Y-Y

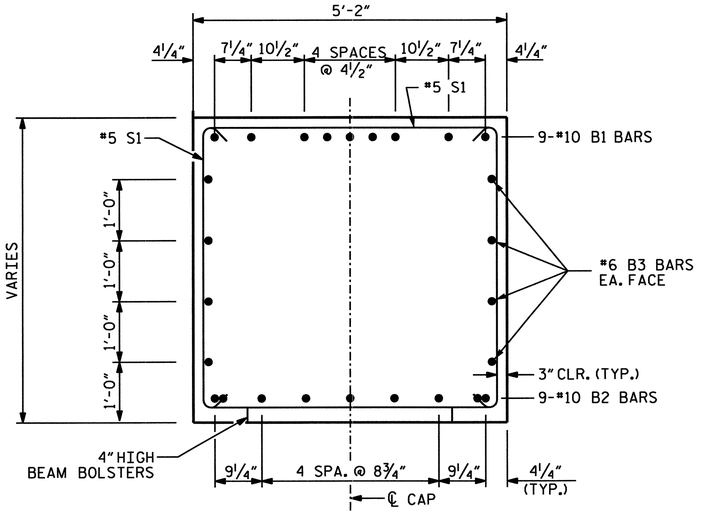

SECTION A-A

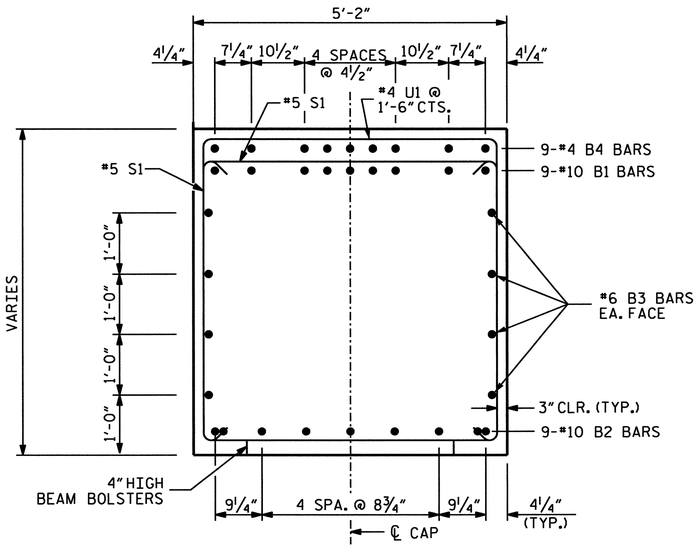

SECTION B-B

BAR TYPES

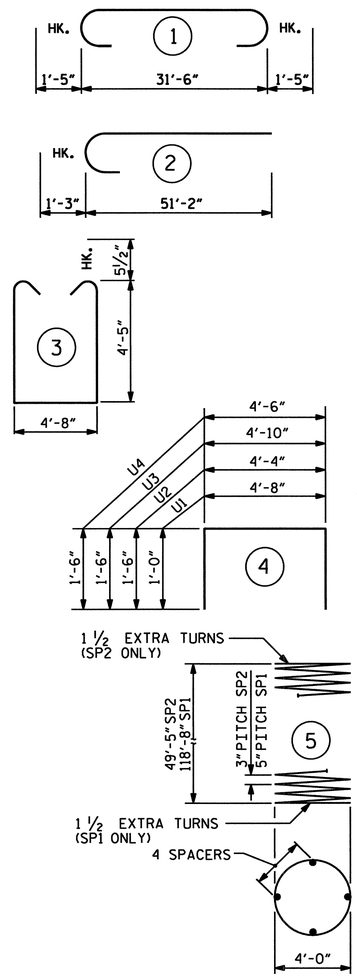

ALL BAR DIMENSIONS ARE OUT TO OUT.

BILL OF MATERIAL

BENT 15

BAR	NO.	SIZE	TYPE	LENGTH (ft)	WEIGHT (lb)
B1	9	10	1	34'-4"	1330
B2	9	10	STR.	31'-6"	1220
B3	8	6	STR.	31'-6"	379
B4	9	4	STR.	15'-6"	93
M1	168	11	STR.	50'-5"	45001
S1	38	5	3	14'-5"	571
U1	43	4	4	6'-8"	192
U2	6	4	4	7'-4"	29
U3	6	4	4	7'-10"	31
U4	13	4	4	7'-6"	65
V1	28	9	2	52'-5"	4990
V2	28	9	STR.	52'-9"	5022

EPOXY COATED REINFORCING STEEL 58,923 lb

SP1	2	***	5	3555'-5"	7510
SP2	2	**	5	2481'-5"	3366

TOTAL EPOXY COATED SPIRAL COLUMN REINFORCING STEEL 10876 lb

CLASS "AA" CONCRETE BREAKDOWN

POUR 2 - COLUMNS	58.0 yd³
POUR 3 - CAP	32.3 yd³
TOTAL CLASS "AA" CONCRETE	90.3 yd³

5'-0" Ø CONCRETE DRILLED PIER	LIN.FOOT: 238
DRILLED PIER CONCRETE	
POUR 1 - DRILLED PIER	173.1 yd³
SID INSPECTIONS	EA: 2
SPT TESTING	EA: 2

** THE SP2 SPIRAL REINFORCING STEEL SHALL BE W20 OR D-20 COLD DRAWN WIRE OR #4 PLAIN OR DEFORMED BAR.

*** THE SP1 SPIRAL REINFORCING STEEL SHALL BE W31 OR D-31 COLD DRAWN WIRE OR #5 PLAIN OR DEFORMED BAR.

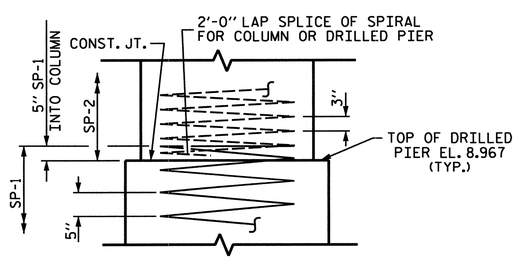

CONSTRUCTION JOINT DETAIL

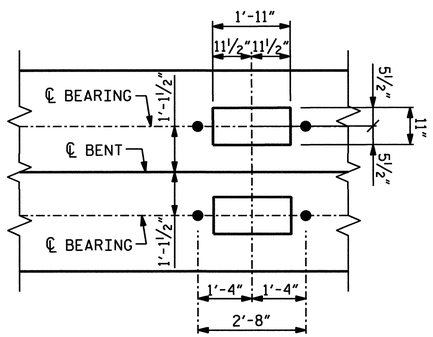

DETAIL A

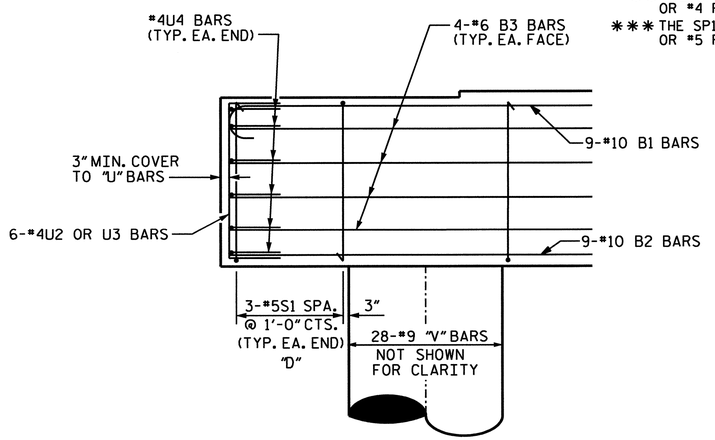

PIER CAP END DETAIL

"D" DENOTES DOUBLE STIRRUPS

PROJECT NO. B-682

BRUNSWICK COUNTY

STATION: 47+08.03 -L- POT

SHEET 2 OF 2

STATE OF NORTH CAROLINA
DEPARTMENT OF TRANSPORTATION
RALEIGH

SUBSTRUCTURE BENT 15 DETAILS

NORTH CAROLINA PROFESSIONAL SEAL 32208 ENGINEER I. C. ENGSTROM
DZ-23-07

PLANS PREPARED BY:

PARSONS TRANSPORTATION GROUP
Engineers and Planners
RALEIGH, NORTH CAROLINA

JOB NO. 645615

DWG. NO.

REVISIONS						SHEET NO.
NO.	BY:	DATE:	NO.	BY:	DATE:	S-176
1			3			TOTAL SHEETS
2			4			267

DRAWN BY : D. RANDALL DATE : JULY 2006
CHECKED BY : I. C. ENGSTROM DATE : JULY 2006

SPAN Q

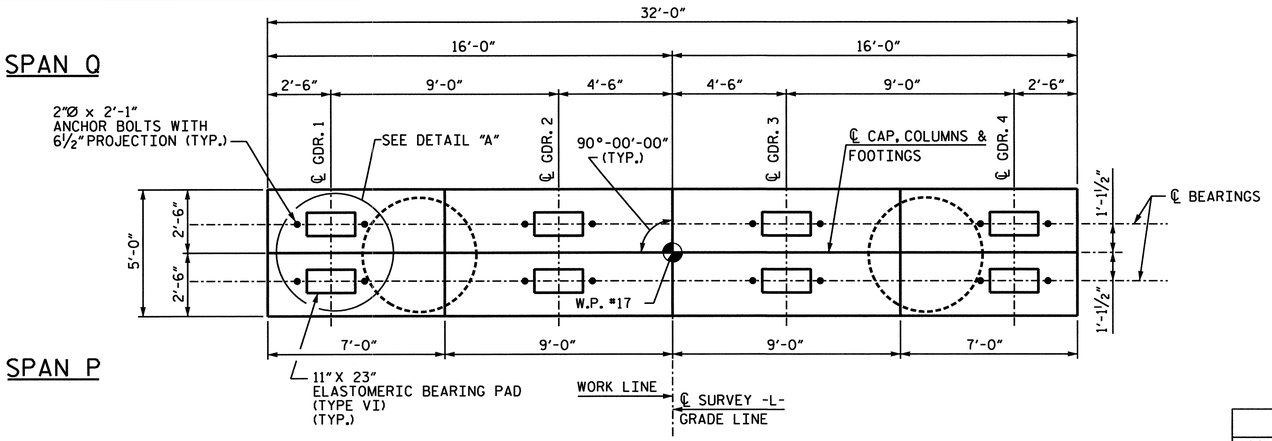

SPAN P

PLAN

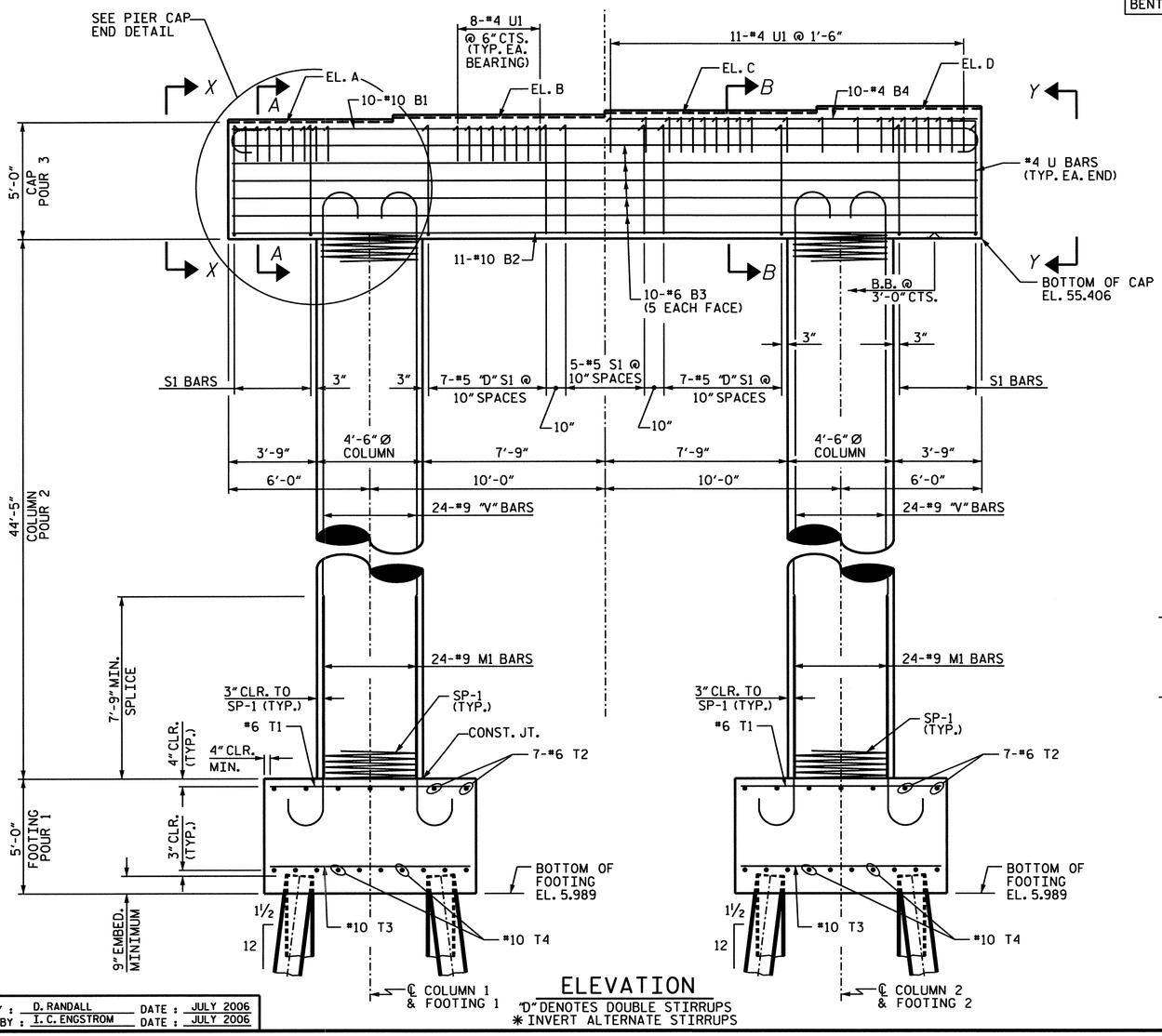

ELEVATION

"D" DENOTES DOUBLE STIRRUPS
* INVERT ALTERNATE STIRRUPS

NOTES:

ALL STEEL IN THE FOOTING IS INCLUDED IN THE PAY ITEMS FOR "EPOXY COATED REINFORCING STEEL" OR "EPOXY COATED SPIRAL COLUMN REINFORCING STEEL".

STIRRUPS IN CAP MAY BE SHIFTED AS NECESSARY TO CLEAR ANCHOR BOLTS.

DRIVE PILES AT BENT NO. 16 TO AN ALLOWABLE BEARING CAPACITY OF 75 TONS PER PILE.

HOOKS ON "V" BARS MAY BE TURNED AS NECESSARY FOR PLACING REINFORCING STEEL.

TABLE OF BEARING ELEVATIONS				
LOCATION	EL. A	EL. B	EL. C	EL. D
BENT NO. 16 BACK	60.483	60.663	60.843	61.023
BENT NO. 16 FORWARD	60.406	60.586	60.766	60.946

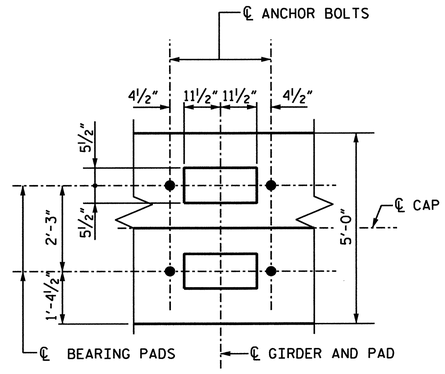

DETAIL "A"

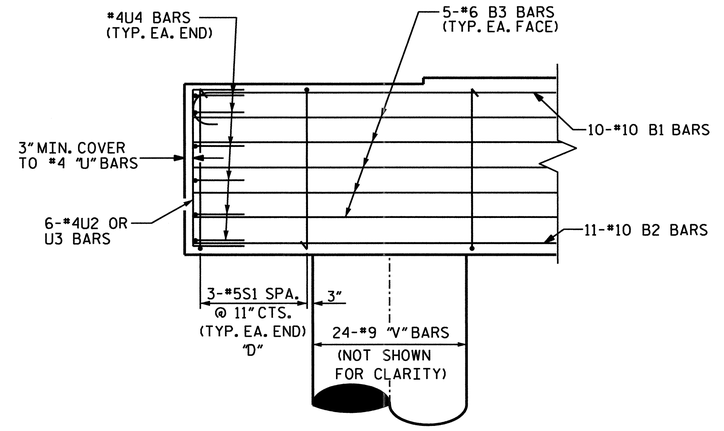

PIER CAP END DETAIL

"D" DENOTES DOUBLE STIRRUPS

PROJECT NO. B-682

BRUNSWICK COUNTY

STATION: 47+08.03 -L- POT

SHEET 1 OF 3

STATE OF NORTH CAROLINA
DEPARTMENT OF TRANSPORTATION
RALEIGH

SUBSTRUCTURE
BENT 16

NORTH CAROLINA PROFESSIONAL SEAL 32208 ENGINEER I. C. ENGSTROM

02-23-07

PLANS PREPARED BY:

PARSONS TRANSPORTATION GROUP
Engineers and Planners
RALEIGH, NORTH CAROLINA

JOB NO. 645615

DWG. NO.

REVISIONS						SHEET NO.
NO.	BY:	DATE:	NO.	BY:	DATE:	S-177
1			3			TOTAL SHEETS
2			4			S-177

DRAWN BY : D. RANDALL DATE : JULY 2006
CHECKED BY : I. C. ENGSTROM DATE : JULY 2006

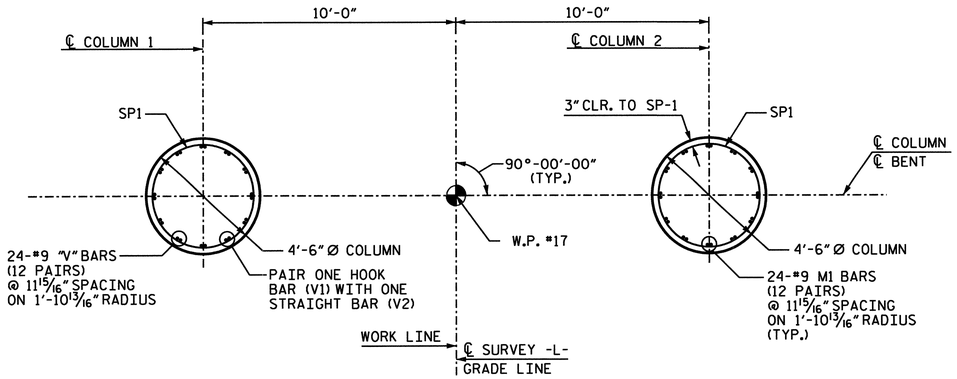

PLAN OF COLUMNS

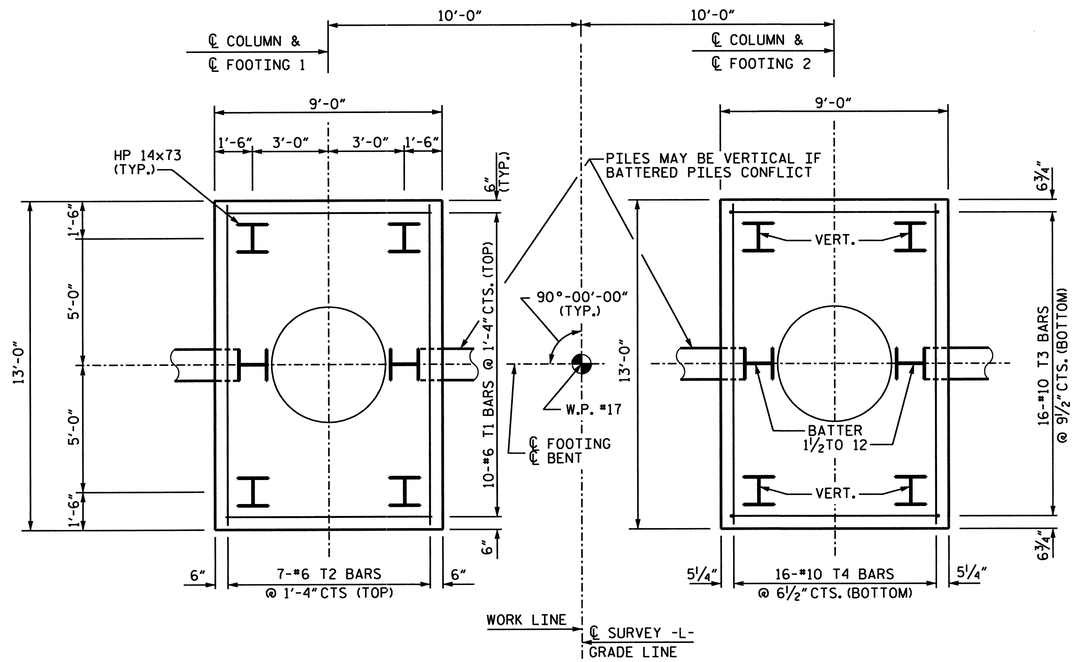

PLAN OF FOOTING

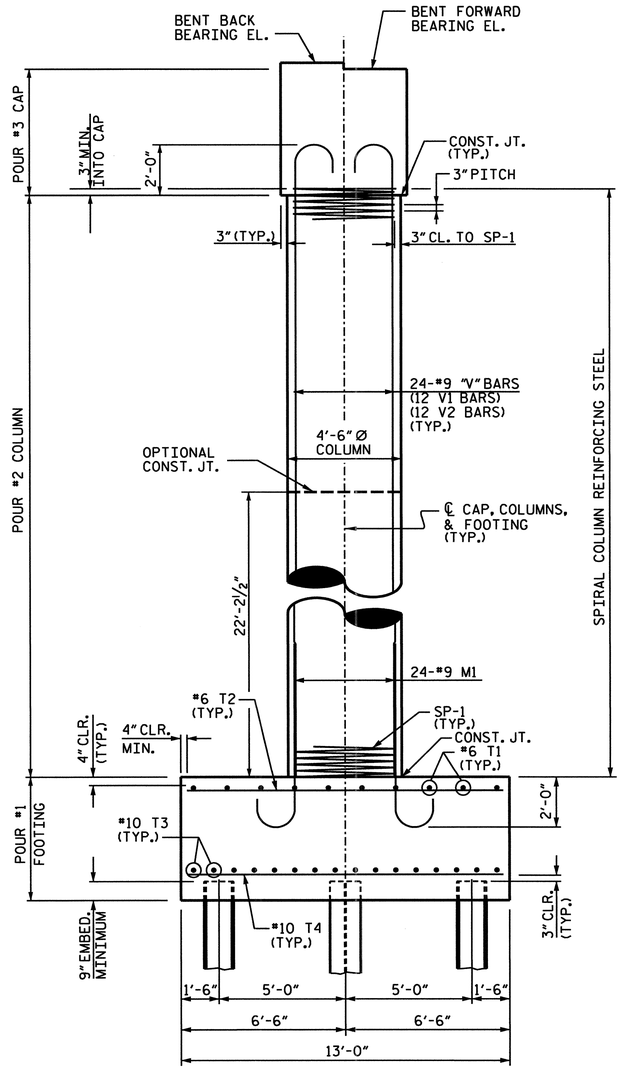

END ELEVATION

PROJECT NO. B-682

BRUNSWICK COUNTY

STATION: 47+08.03 -L- POT

SHEET 2 OF 3

NORTH CAROLINA PROFESSIONAL SEAL 32208 ENGINEER I. C. ENGSTROM
01/08/07

PLANS PREPARED BY:

PARSONS TRANSPORTATION GROUP
Engineers and Planners
RALEIGH, NORTH CAROLINA

JOB NO. 645615

DWG. NO.

STATE OF NORTH CAROLINA
DEPARTMENT OF TRANSPORTATION
RALEIGH

SUBSTRUCTURE BENT 16

REVISIONS						SHEET NO.
NO.	BY:	DATE:	NO.	BY:	DATE:	S-178
1			3			TOTAL SHEETS
2			4			237

DRAWN BY : D. RANDALL DATE : JULY 2006
CHECKED BY : I. C. ENGSTROM DATE : JULY 2006

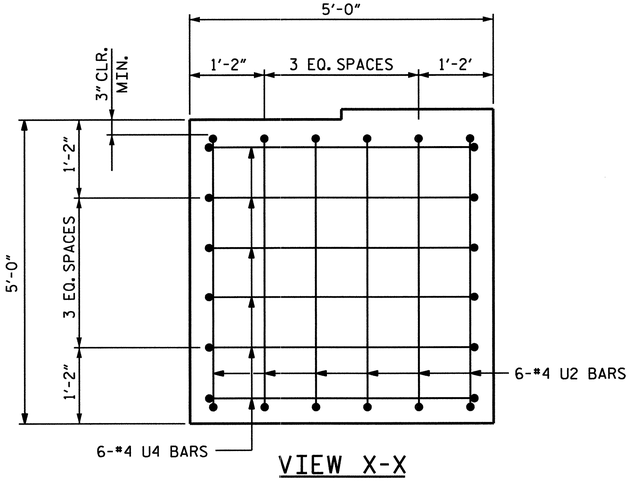

VIEW X-X

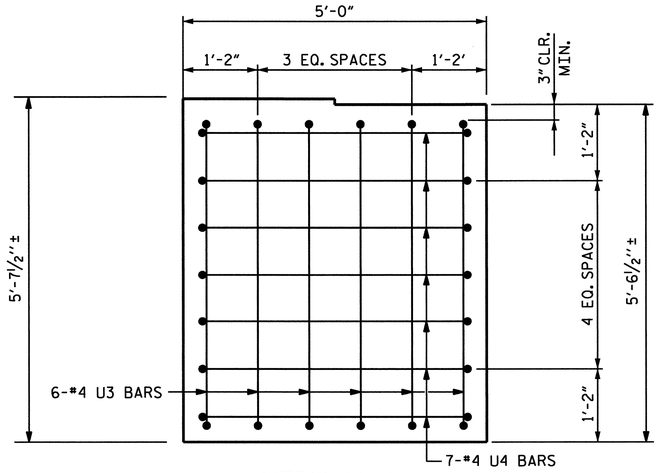

VIEW Y-Y

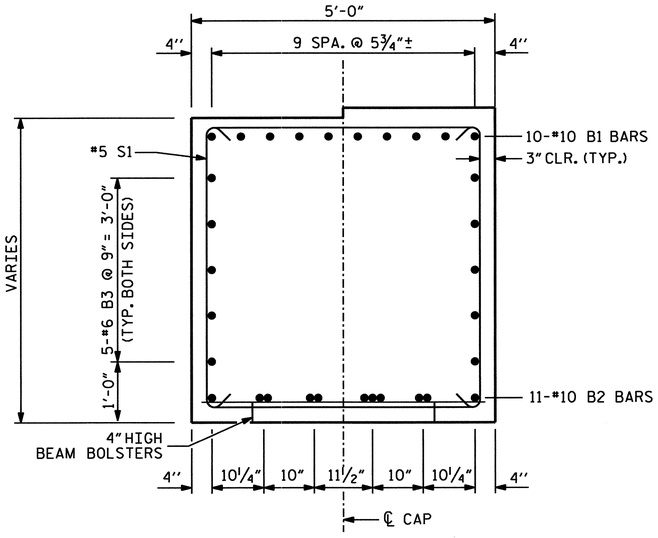

SECTION A-A

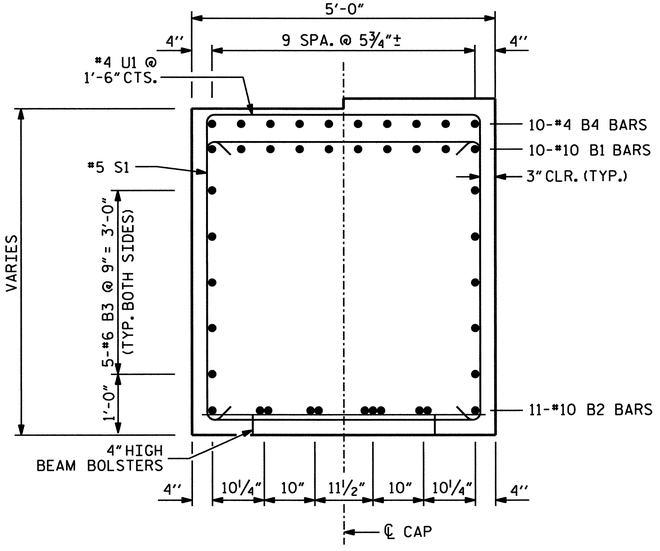

SECTION B-B

BAR TYPES

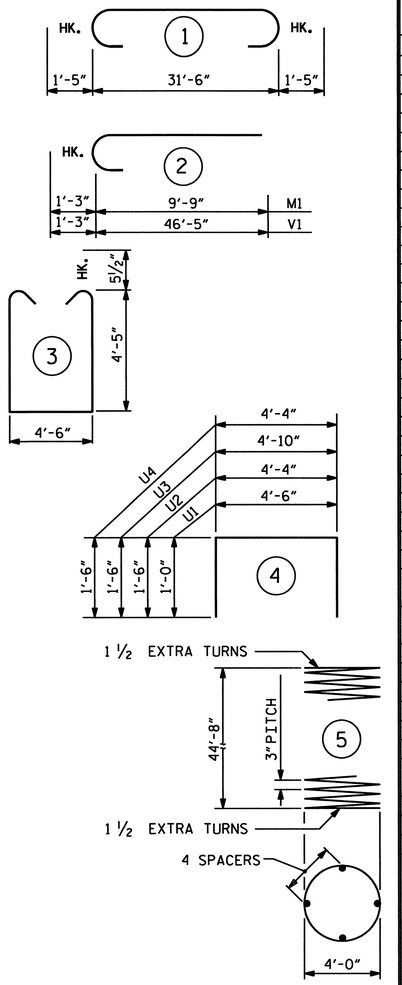

ALL BAR DIMENSIONS ARE OUT TO OUT.

BILL OF MATERIAL

BENT 16

BAR	NO.	SIZE	TYPE	LENGTH (ft)	WEIGHT (lb)
B1	10	10	1	34'-4"	1477
B2	11	10	STR.	31'-6"	1491
B3	10	6	STR.	31'-6"	473
B4	10	4	STR	15'-6"	104
M1	48	9	2	11'-0"	1795
S1	45	5	3	14'-3"	669
U1	43	4	4	6'-6"	187
U2	6	4	4	7'-4"	29
U3	6	4	4	7'-10"	31
U4	13	4	4	7'-4"	64
T1	20	6	STR.	8'-4"	250
T2	14	6	STR.	12'-4"	259
T3	32	10	STR.	8'-4"	1147
T4	32	10	STR.	12'-4"	1698
V1	24	9	2	47'-8"	3890
V2	24	9	STR.	48'-0"	3917

EPOXY COATED REINFORCING STEEL 17,481 lb

SP1	2	**	5	2264'-0"	3046

TOTAL EPOXY COATED SPIRAL COLUMN REINFORCING STEEL 3046 lb.

CLASS "AA" CONCRETE BREAKDOWN

POUR 1 - FOOTING	43.4 yd³
POUR 2 - COLUMNS	52.3 yd³
POUR 3 - CAP	31.5 yd³
TOTAL CLASS "AA" CONCRETE	127.2 yd³

HP 14x73 STEEL PILES

NO. 12 LIN.FOOT: 960

** THE SP1 SPIRAL REINFORCING STEEL SHALL BE W20 OR D-20 COLD DRAWN WIRE OR #4 PLAIN OR DEFORMED BAR.

PROJECT NO. B-682

BRUNSWICK COUNTY

STATION: 47+08.03 -L- POT

SHEET 3 OF 3

NORTH CAROLINA PROFESSIONAL SEAL 32208 ENGINEER IAN C. ENGSTROM
DEC 23 07

PLANS PREPARED BY:

PARSONS TRANSPORTATION GROUP
Engineers and Planners
RALEIGH, NORTH CAROLINA

STATE OF NORTH CAROLINA
DEPARTMENT OF TRANSPORTATION
RALEIGH

SUBSTRUCTURE
BENT 16 DETAILS

REVISIONS						SHEET NO.
NO.	BY:	DATE:	NO.	BY:	DATE:	
1			3			TOTAL SHEETS
2			4			

JOB NO. 645615

DWG. NO.

DRAWN BY : D. RANDALL DATE : JULY 2006
CHECKED BY : I. C. ENGSTROM DATE : JULY 2006

SPAN R

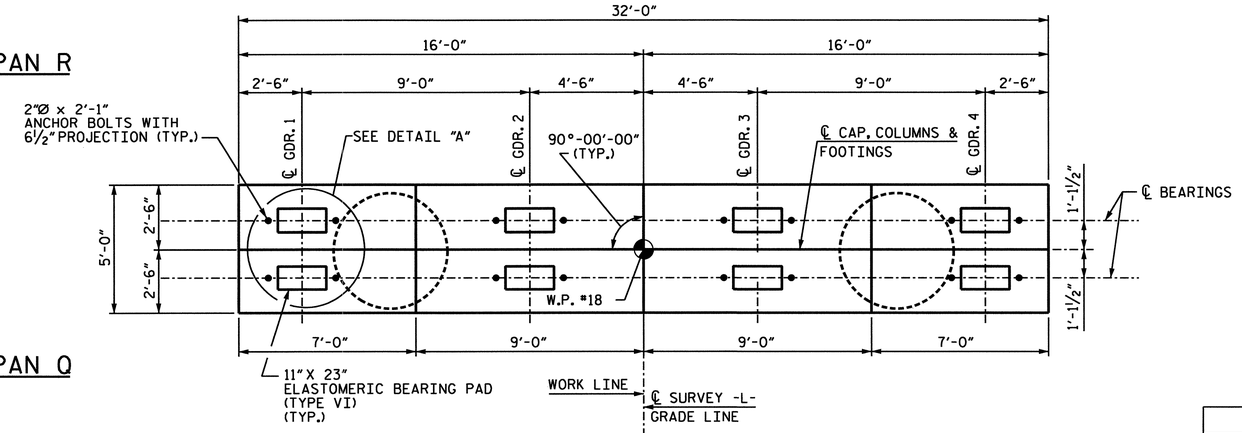

SPAN Q

PLAN

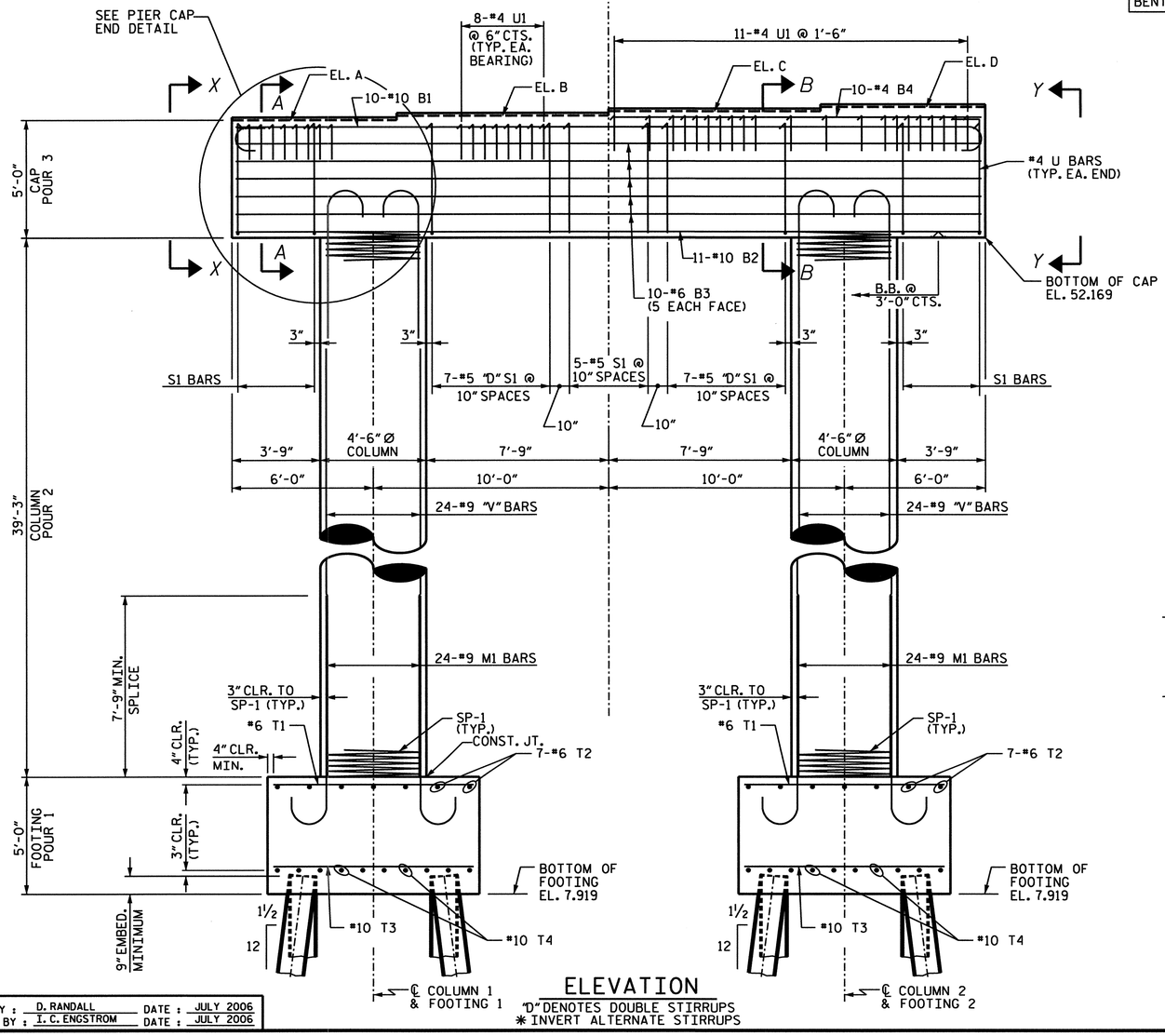

ELEVATION

"D" DENOTES DOUBLE STIRRUPS
* INVERT ALTERNATE STIRRUPS

TABLE OF BEARING ELEVATIONS				
LOCATION	EL. A	EL. B	EL. C	EL. D
BENT NO. 17 BACK	57.246	57.353	57.460	57.567
BENT NO. 17 FORWARD	57.169	57.268	57.367	57.466

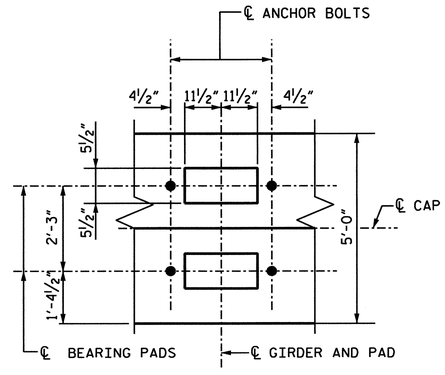

DETAIL "A"

NOTES:

ALL STEEL IN THE FOOTING IS INCLUDED IN THE PAY ITEMS FOR "EPOXY COATED REINFORCING STEEL" OR "EPOXY COATED SPIRAL COLUMN REINFORCING STEEL".

STIRRUPS IN CAP MAY BE SHIFTED AS NECESSARY TO CLEAR ANCHOR BOLTS.

DRIVE PILES AT BENT NO. 17 TO AN ALLOWABLE BEARING CAPACITY OF 75 TONS PER PILE.

HOOKS ON "V" BARS MAY BE TURNED AS NECESSARY FOR PLACING REINFORCING STEEL.

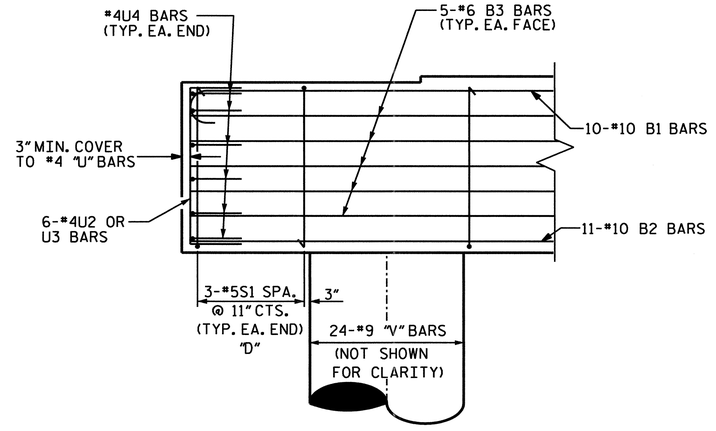

PIER CAP END DETAIL

"D" DENOTES DOUBLE STIRRUPS

PROJECT NO. B-682

BRUNSWICK COUNTY

STATION: 47+08.03 -L- POT

SHEET 1 OF 3

NORTH CAROLINA PROFESSIONAL SEAL 32208 ENGINEER I. C. ENGSTROM 02-23-07

PLANS PREPARED BY:

PARSONS TRANSPORTATION GROUP
Engineers and Planners
RALEIGH, NORTH CAROLINA

JOB NO. 645615

DWG. NO.

STATE OF NORTH CAROLINA
DEPARTMENT OF TRANSPORTATION
RALEIGH

SUBSTRUCTURE
BENT 17

REVISIONS						SHEET NO.
NO.	BY:	DATE:	NO.	BY:	DATE:	S-103
1			3			TOTAL SHEETS
2			4			207

DRAWN BY : D. RANDALL DATE : JULY 2006
CHECKED BY : I. C. ENGSTROM DATE : JULY 2006

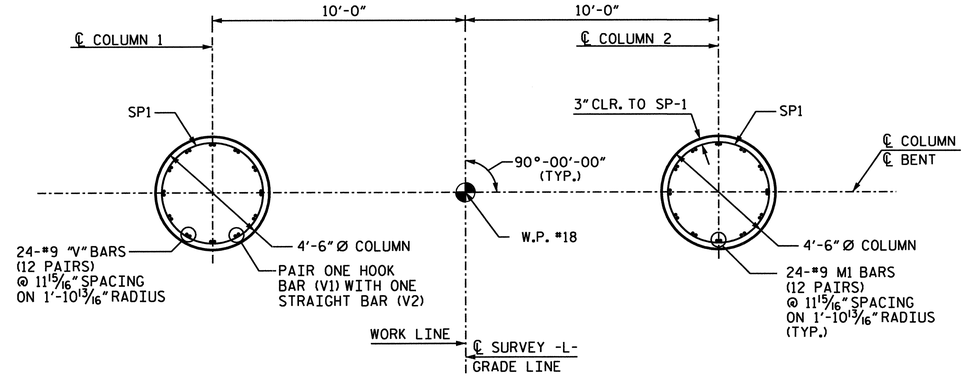

PLAN OF COLUMNS

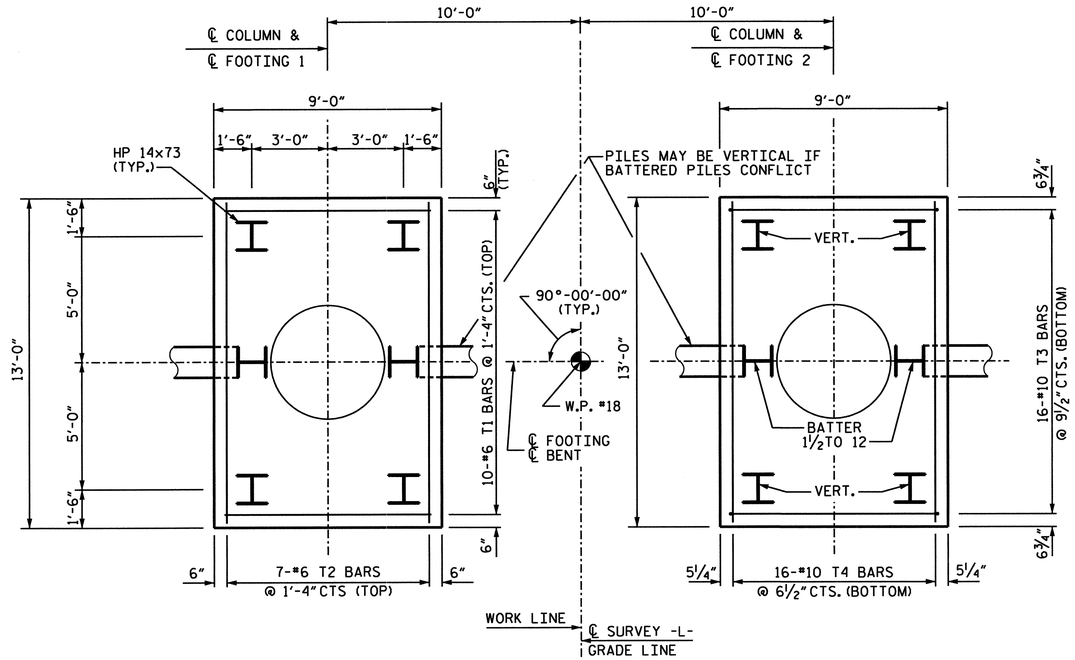

PLAN OF FOOTING

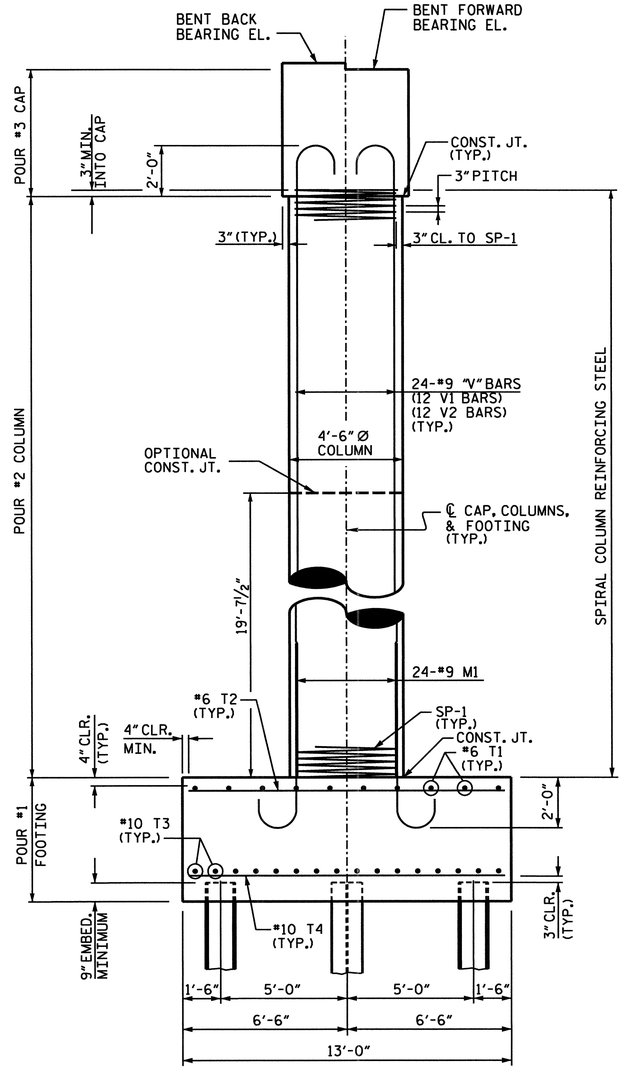

END ELEVATION

PROJECT NO. B-682

BRUNSWICK COUNTY

STATION: 47+08.03 -L- POT

SHEET 2 OF 3

NORTH CAROLINA PROFESSIONAL SEAL 32208 ENGINEER IAN C. ENGSTROM 01/08/07

PLANS PREPARED BY:

PARSONS TRANSPORTATION GROUP
Engineers and Planners
RALEIGH, NORTH CAROLINA

JOB NO. 645615

DWG. NO.

STATE OF NORTH CAROLINA
DEPARTMENT OF TRANSPORTATION
RALEIGH

SUBSTRUCTURE BENT 17

REVISIONS						SHEET NO.
NO.	BY:	DATE:	NO.	BY:	DATE:	S-181
1			3			TOTAL SHEETS
2			4			287

DRAWN BY : D. RANDALL DATE : JULY 2006
CHECKED BY : I. C. ENGSTROM DATE : JULY 2006

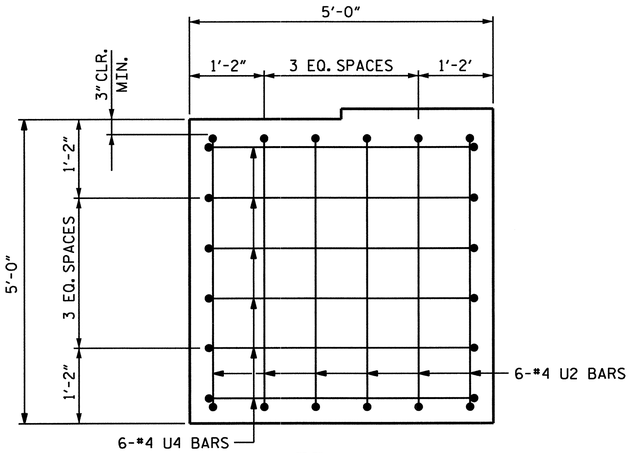

VIEW X-X

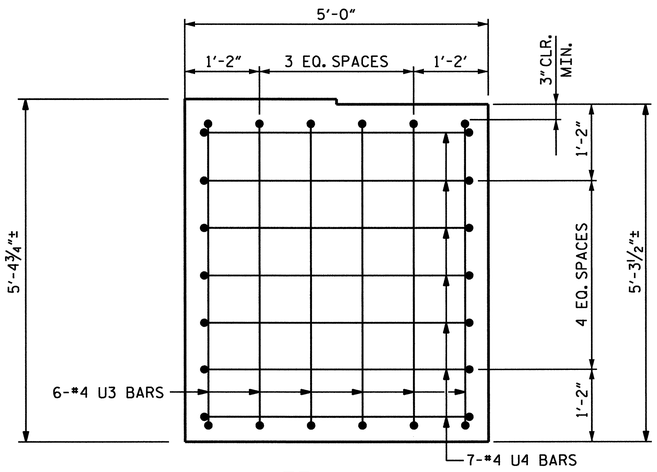

VIEW Y-Y

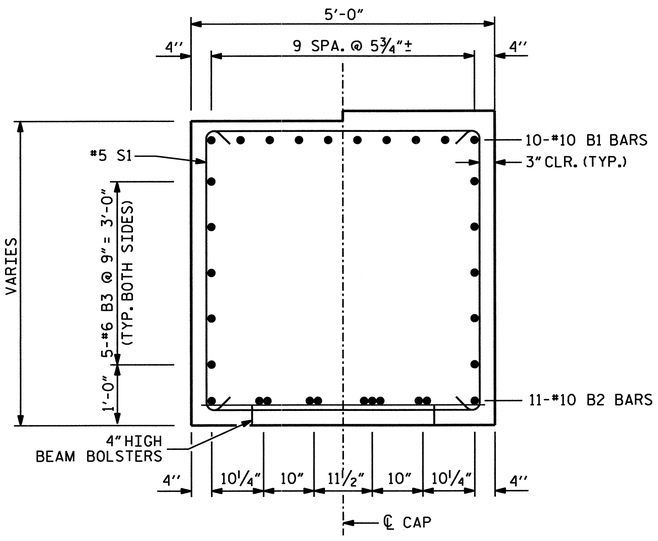

SECTION A-A

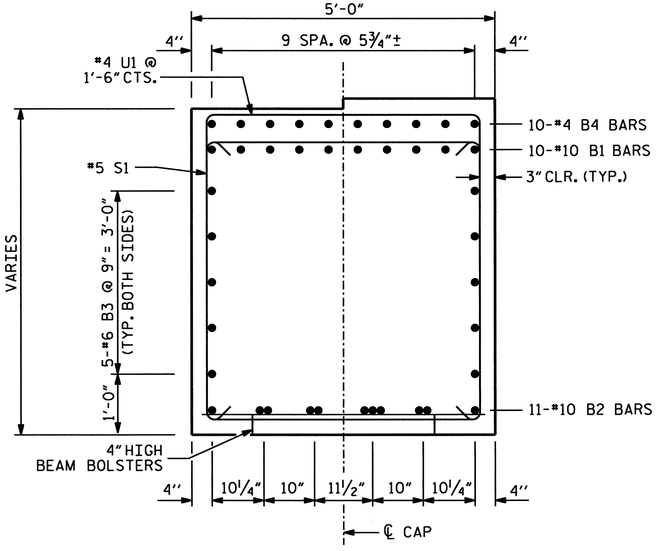

SECTION B-B

BAR TYPES

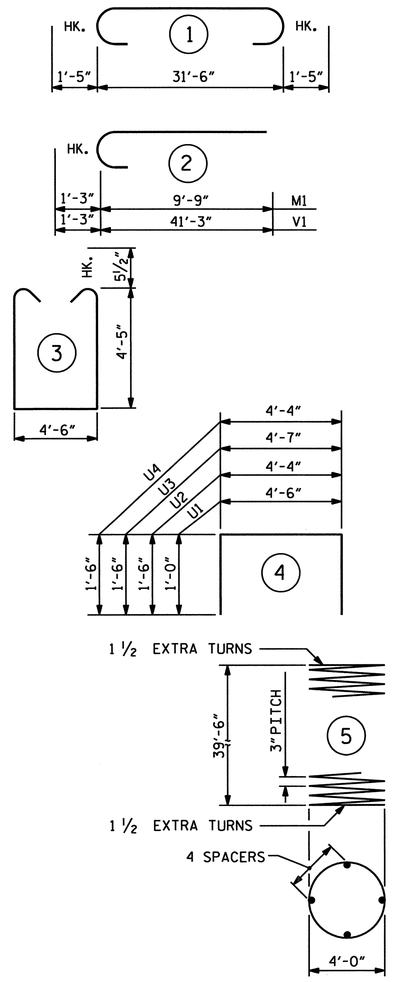

ALL BAR DIMENSIONS ARE OUT TO OUT.

BILL OF MATERIAL

BENT 17

BAR	NO.	SIZE	TYPE	LENGTH (ft)	WEIGHT (lb)
B1	10	10	1	34'-4"	1477
B2	11	10	STR.	31'-6"	1491
B3	10	6	STR.	31'-6"	473
B4	10	4	STR	15'-6"	104
M1	48	9	2	11'-0"	1795
S1	45	5	3	14'-3"	669
U1	43	4	4	6'-6"	187
U2	6	4	4	7'-4"	29
U3	6	4	4	7'-7"	30
U4	13	4	4	7'-4"	64
T1	20	6	STR.	8'-4"	250
T2	14	6	STR.	12'-4"	259
T3	32	10	STR.	8'-4"	1147
T4	32	10	STR.	12'-4"	1698
V1	24	9	2	42'-6"	3468
V2	24	9	STR.	42'-10"	3495

EPOXY COATED REINFORCING STEEL 16636 lb

SP1	2	**	5	2002'-7"	2726

TOTAL EPOXY COATED SPIRAL COLUMN REINFORCING STEEL 2726 lb.

CLASS "AA" CONCRETE BREAKDOWN

POUR 1 - FOOTING	43.4 yd³
POUR 2 - COLUMNS	46.2 yd³
POUR 3 - CAP	30.8 yd³
TOTAL CLASS "AA" CONCRETE	120.4 yd³

HP 14x73 STEEL PILES

NO. 12 LIN.FOOT: 960

** THE SP1 SPIRAL REINFORCING STEEL SHALL BE W20 OR D-20 COLD DRAWN WIRE OR #4 PLAIN OR DEFORMED BAR.

PROJECT NO. B-682

BRUNSWICK COUNTY

STATION: 47+08.03 -L- POT

SHEET 3 OF 3

NORTH CAROLINA PROFESSIONAL SEAL 32208 ENGINEER IAN C. ENGSTROM
02-23-07

PLANS PREPARED BY:

PARSONS
TRANSPORTATION GROUP
Engineers and Planners
RALEIGH, NORTH CAROLINA

JOB NO. 645615

DWG. NO.

STATE OF NORTH CAROLINA
DEPARTMENT OF TRANSPORTATION
RALEIGH

SUBSTRUCTURE
BENT 17 DETAILS

REVISIONS						SHEET NO.
NO.	BY:	DATE:	NO.	BY:	DATE:	5-182
1			3			TOTAL SHEETS
2			4			209

DRAWN BY : D. RANDALL DATE : JULY 2006
CHECKED BY : I. C. ENGSTROM DATE : JULY 2006

SPAN S

SPAN R

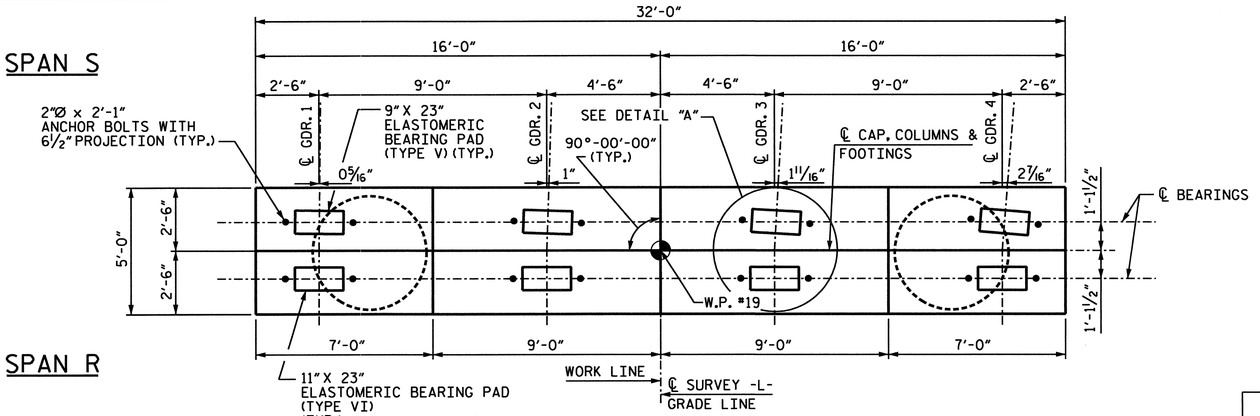

PLAN

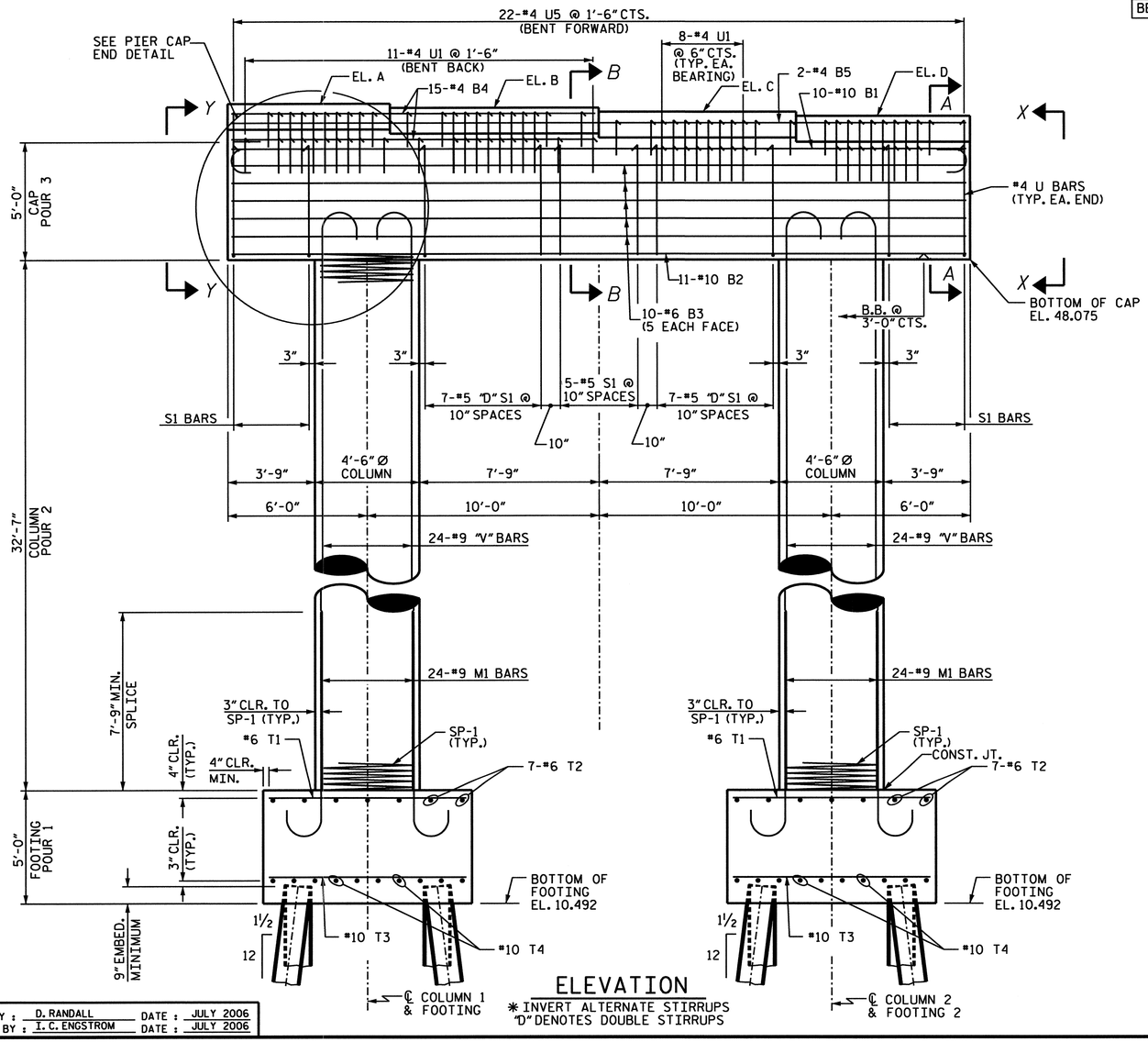

ELEVATION

✱ INVERT ALTERNATE STIRRUPS
"D" DENOTES DOUBLE STIRRUPS

TABLE OF BEARING ELEVATIONS				
LOCATION	EL. A	EL. B	EL. C	EL. D
BENT NO. 18 BACK	53.780	53.545	53.310	53.075
BENT NO. 18 FORWARD	55.003	54.759	54.515	54.271

NOTES:

ALL STEEL IN THE FOOTING IS INCLUDED IN THE PAY ITEMS FOR "REINFORCING STEEL" OR "EPOXY COATED SPIRAL COLUMN REINFORCING STEEL".

THE TOP SURFACE AREAS OF THE BENT CAP SHALL BE CURED IN ACCORDANCE WITH THE STANDARD SPECIFICATIONS EXCEPT THE MEMBRANE CURING COMPOUND METHOD SHALL NOT BE USED.

STIRRUPS IN CAP MAY BE SHIFTED AS NECESSARY TO CLEAR ANCHOR BOLTS.

DRIVE PILES AT BENT 18 TO AN ALLOWABLE BEARING CAPACITY OF 65 TONS PER PILE.

HOOKS ON "V" BARS MAY BE TURNED AS NECESSARY FOR PLACING REINFORCING STEEL.

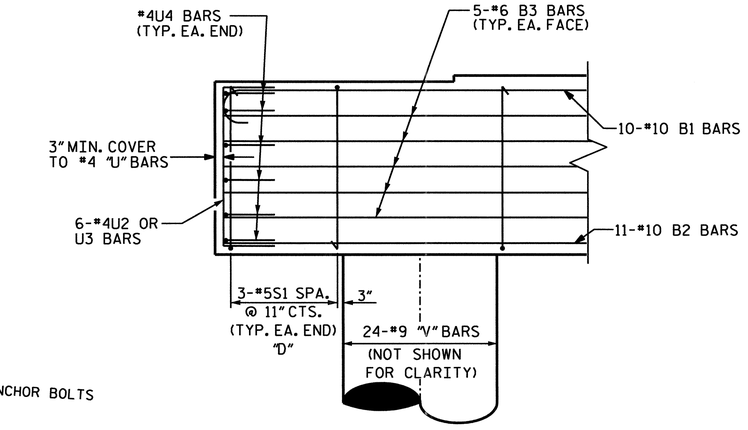

PIER CAP END DETAIL

"D" DENOTES DOUBLE STIRRUPS

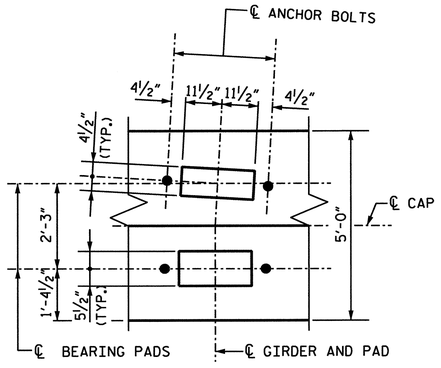

DETAIL "A"

PROJECT NO. B-682

BRUNSWICK COUNTY

STATION: 47+08.03 -L- POT

SHEET 1 OF 3

STATE OF NORTH CAROLINA
DEPARTMENT OF TRANSPORTATION
RALEIGH

SUBSTRUCTURE BENT 18

NORTH CAROLINA PROFESSIONAL SEAL 32208 ENGINEER IAN C. ENGSTROM 02-25-07

PLANS PREPARED BY:

PARSONS TRANSPORTATION GROUP
Engineers and Planners
RALEIGH, NORTH CAROLINA

JOB NO. 645615

DWG. NO.

REVISIONS							SHEET NO.
NO.	BY:	DATE:	NO.	BY:	DATE:		S-183
1			3			TOTAL SHEETS	
2			4			207	

DRAWN BY : D. RANDALL DATE : JULY 2006
CHECKED BY : I. C. ENGSTROM DATE : JULY 2006

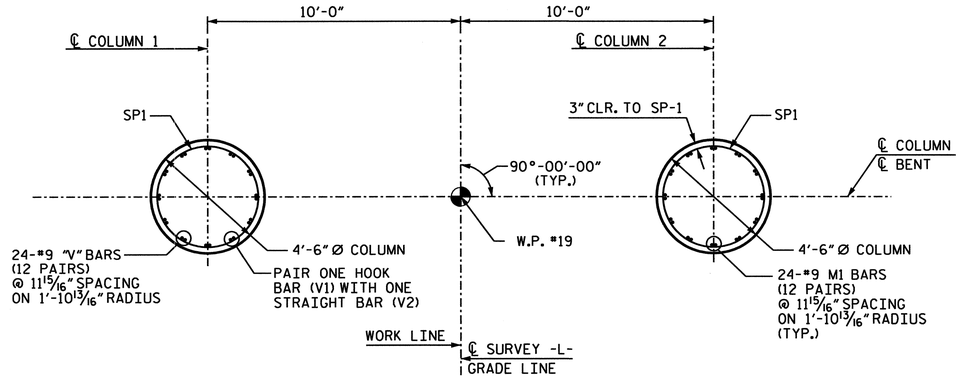

PLAN OF COLUMNS

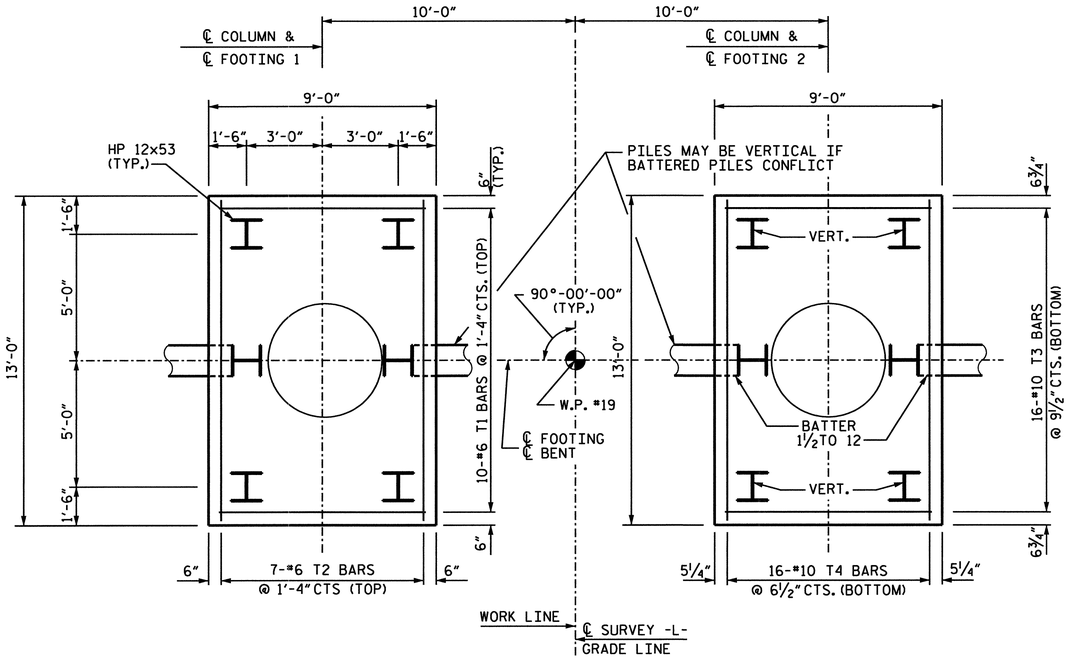

PLAN OF FOOTING

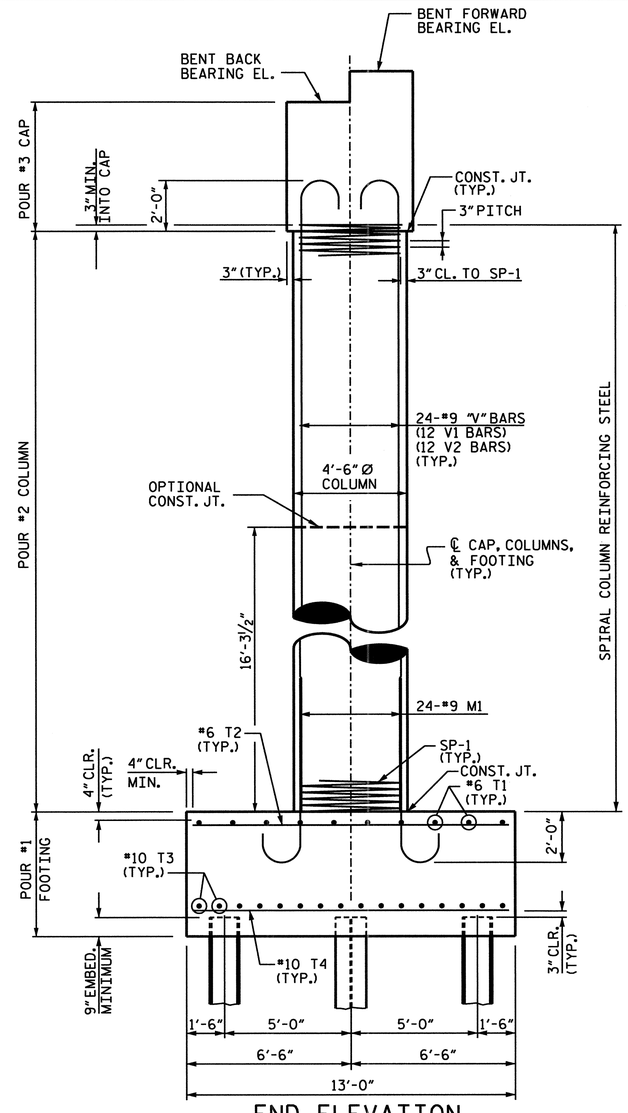

END ELEVATION

PROJECT NO. B-682

BRUNSWICK COUNTY

STATION: 47+08.03 -L- POT

SHEET 2 OF 3

NORTH CAROLINA PROFESSIONAL SEAL 32208 ENGINEER IAN C. ENGSTROM
02-25-07

PLANS PREPARED BY:

PARSONS
TRANSPORTATION GROUP
Engineers and Planners
RALEIGH, NORTH CAROLINA

STATE OF NORTH CAROLINA
DEPARTMENT OF TRANSPORTATION
RALEIGH

SUBSTRUCTURE
BENT 18

REVISIONS						SHEET NO.
NO.	BY:	DATE:	NO.	BY:	DATE:	5-184
JOB NO. 645615	1			3		
DWG. NO.	2			4		TOTAL SHEETS 187

DRAWN BY : D. RANDALL DATE : JULY 2006
CHECKED BY : I. C. ENGSTROM DATE : JULY 2006

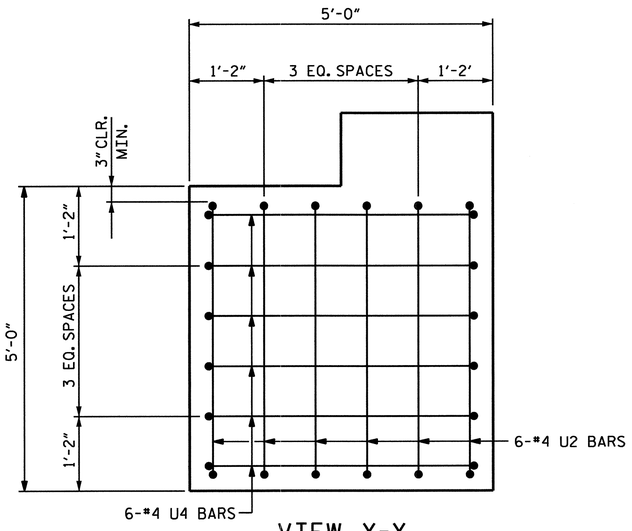

VIEW X-X

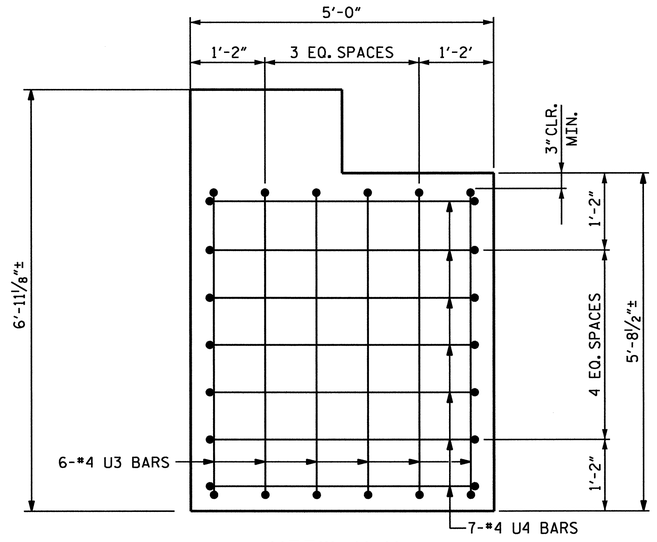

VIEW Y-Y

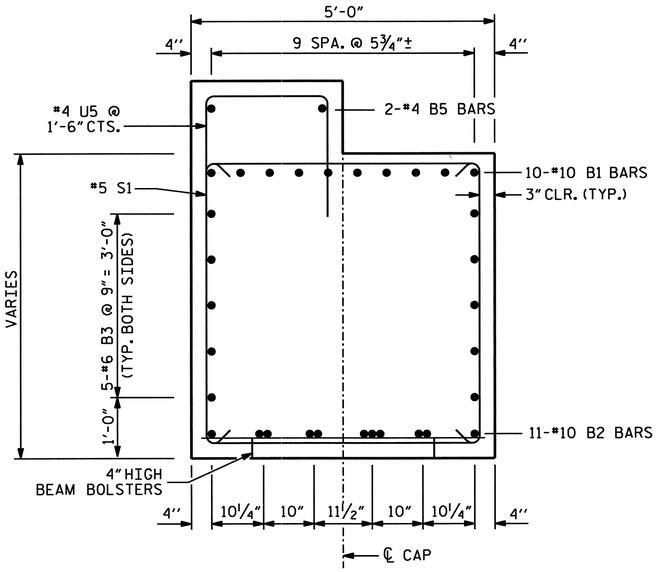

SECTION A-A

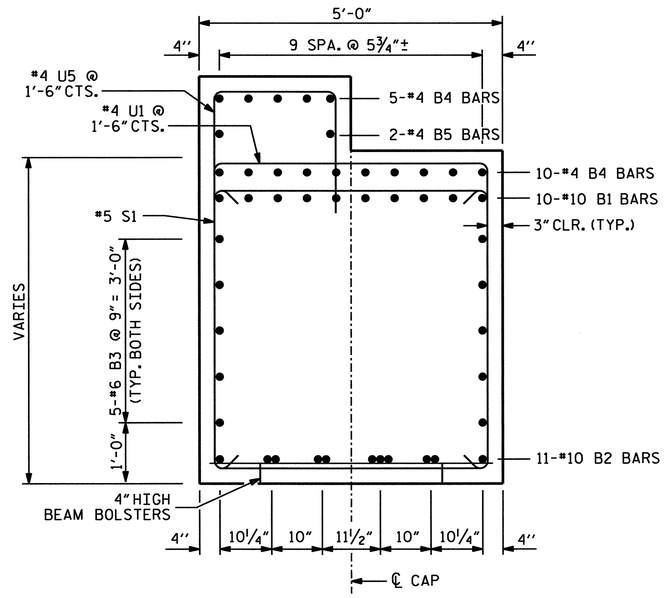

SECTION B-B

BAR TYPES

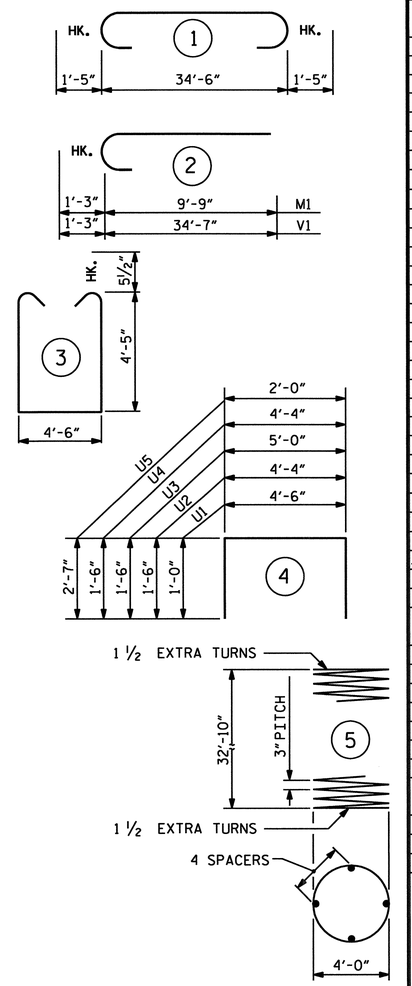

ALL BAR DIMENSIONS ARE OUT TO OUT.

BILL OF MATERIAL

BENT 18

BAR	NO.	SIZE	TYPE	LENGTH (ft)	WEIGHT (lb)
B1	10	10	1	34'-4"	1477
B2	11	10	STR.	31'-6"	1491
B3	10	6	STR.	31'-6"	473
B4	15	4	STR	15'-6"	155
B5	2	4	STR	31'-6"	42
M1	48	9	2	11'-0"	1795
S1	45	5	3	14'-3"	669
U1	43	4	4	6'-6"	187
U2	6	4	4	7'-4"	29
U3	6	4	4	8'-0"	32
U4	13	4	4	7'-4"	64
U5	22	4	4	7'-2"	105
T1	20	6	STR.	8'-4"	250
T2	14	6	STR.	12'-4"	259
T3	32	10	STR.	8'-4"	1147
T4	32	10	STR.	12'-4"	1698
V1	24	9	2	35'-10"	2924
V2	24	9	STR.	36'-2"	2951

EPOXY COATED REINFORCING STEEL 15,746 lb

SP1	2	**	5	1679'-2"	2244

TOTAL EPOXY COATED SPIRAL COLUMN REINFORCING STEEL 2244 lb.

CLASS "AA" CONCRETE BREAKDOWN

POUR 1 - FOOTING	43.4 yd³
POUR 2 - COLUMNS	38.4 yd³
POUR 3 - CAP	35.1 yd³
TOTAL CLASS "AA" CONCRETE	120.2 yd³

HP 12x53 STEEL PILES

NO. 12 LIN.FOOT: 960

** THE SP1 SPIRAL REINFORCING STEEL SHALL BE W20 OR D-20 COLD DRAWN WIRE OR #4 PLAIN OR DEFORMED BAR.

PROJECT NO. B-682

BRUNSWICK COUNTY

STATION: 47+08.03 -L- POT

SHEET 3 OF 3

NORTH CAROLINA PROFESSIONAL SEAL 032208 ENGINEER IAN C ENGSTROM

02-22-07

PLANS PREPARED BY:

PARSONS TRANSPORTATION GROUP
Engineers and Planners
RALEIGH, NORTH CAROLINA

JOB NO. 645615

DWG. NO.

STATE OF NORTH CAROLINA
DEPARTMENT OF TRANSPORTATION
RALEIGH

SUBSTRUCTURE
BENT 18 DETAILS

REVISIONS						SHEET NO.
NO.	BY:	DATE:	NO.	BY:	DATE:	S-184
1			3			TOTAL SHEETS
2			4			285

DRAWN BY : D. RANDALL DATE : JULY 2006
CHECKED BY : I. C. ENGSTROM DATE : JULY 2006

SPAN T

SPAN S

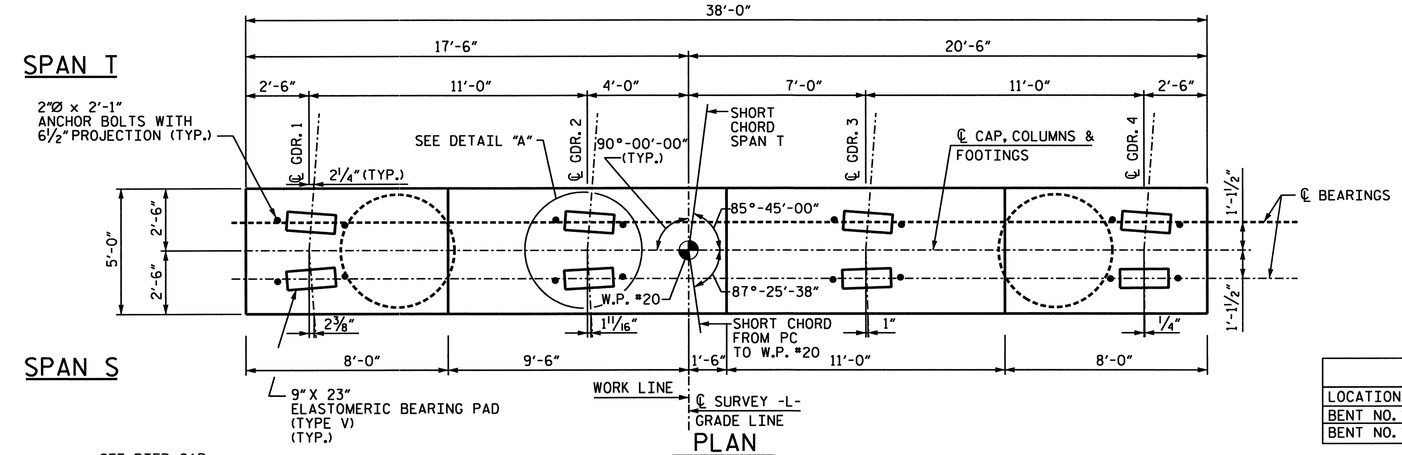

PLAN

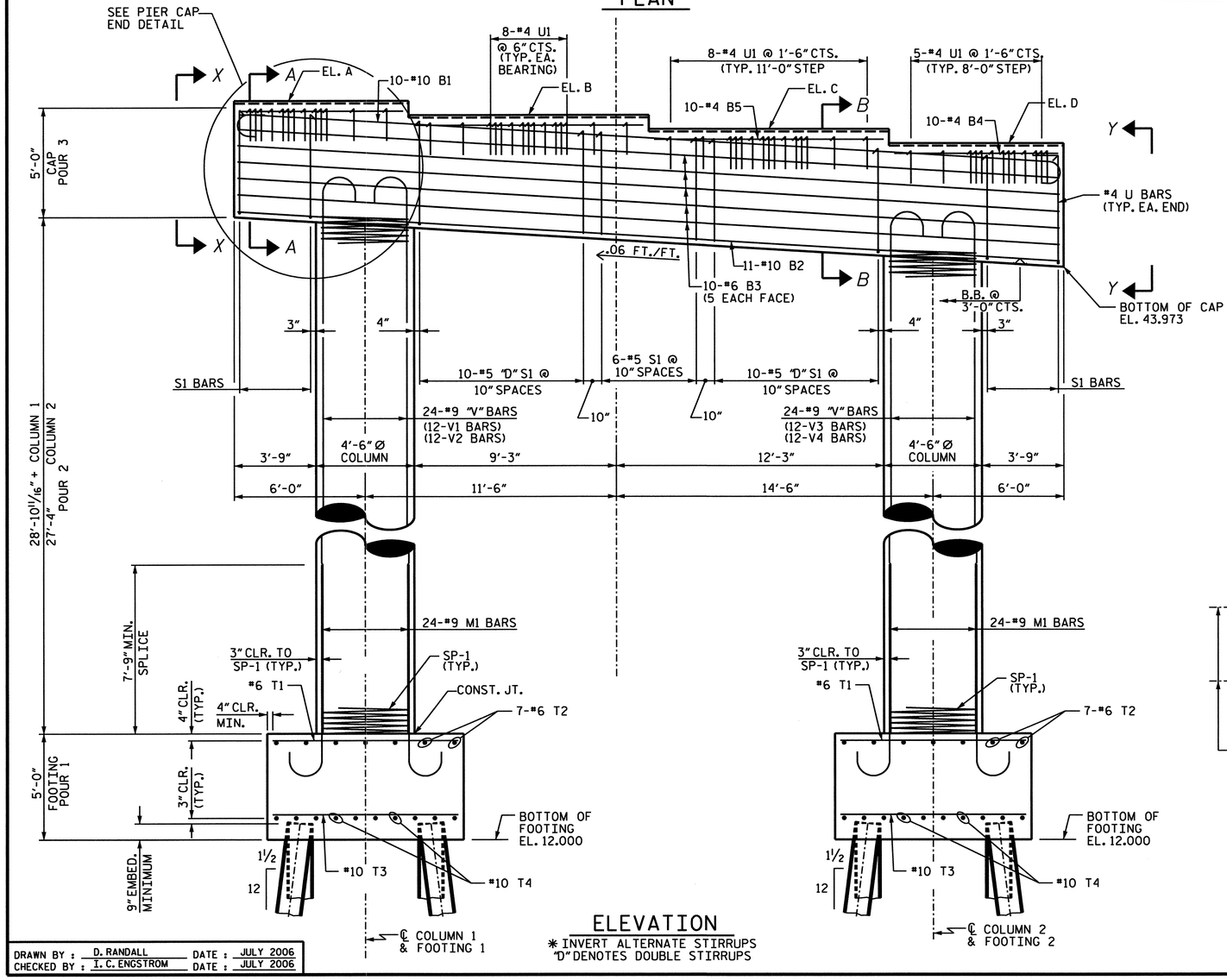

ELEVATION

* INVERT ALTERNATE STIRRUPS
"D" DENOTES DOUBLE STIRRUPS

NOTES:

ALL STEEL IN THE FOOTING IS INCLUDED IN THE PAY ITEMS FOR "EPOXY COATED REINFORCING STEEL" OR "EPOXY COATED SPIRAL COLUMN REINFORCING STEEL".

STIRRUPS IN CAP MAY BE SHIFTED AS NECESSARY TO CLEAR ANCHOR BOLTS.

DRIVE PILES AT BENT NO. 19 TO AN ALLOWABLE BEARING CAPACITY OF 65 TONS PER PILE.

HOOKS ON "V" BARS MAY BE TURNED AS NECESSARY FOR PLACING REINFORCING STEEL.

TABLE OF BEARING ELEVATIONS				
LOCATION	EL. A	EL. B	EL. C	EL. D
BENT NO. 19 BACK	51.547	50.889	50.232	49.575
BENT NO. 19 FORWARD	51.435	50.774	50.113	49.452

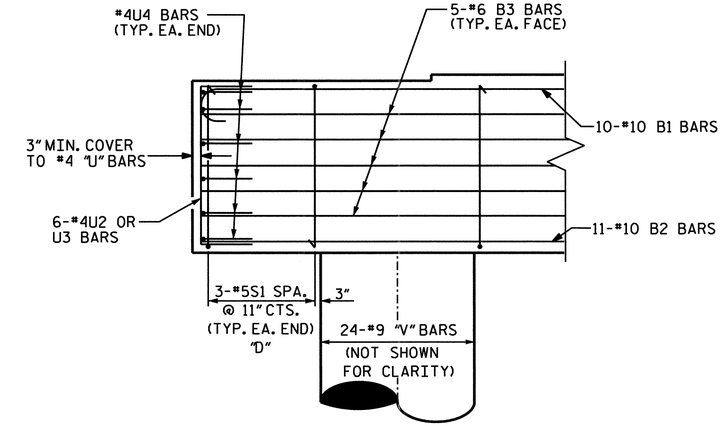

PIER CAP END DETAIL

"D" DENOTES DOUBLE STIRRUPS

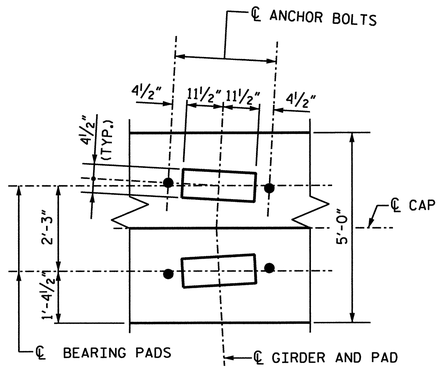

DETAIL "A"

PROJECT NO. B-682

BRUNSWICK COUNTY

STATION: 47+08.03 -L- POT

SHEET 1 OF 3

NORTH CAROLINA PROFESSIONAL SEAL 32208 ENGINEER IAN C. ENGSTROM 02-28-07

PLANS PREPARED BY:

PARSONS TRANSPORTATION GROUP
Engineers and Planners
RALEIGH, NORTH CAROLINA

STATE OF NORTH CAROLINA
DEPARTMENT OF TRANSPORTATION
RALEIGH

SUBSTRUCTURE BENT 19

REVISIONS						SHEET NO.
NO.	BY:	DATE:	NO.	BY:	DATE:	S-186
JOB NO. 645615	1			3		TOTAL SHEETS
DWG. NO.	2			4		207

DRAWN BY : D. RANDALL DATE : JULY 2006
CHECKED BY : I. C. ENGSTROM DATE : JULY 2006

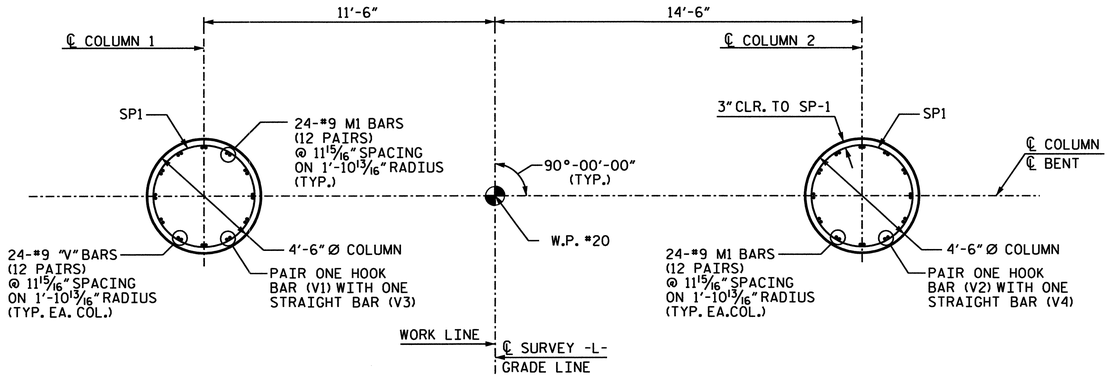

PLAN OF COLUMNS

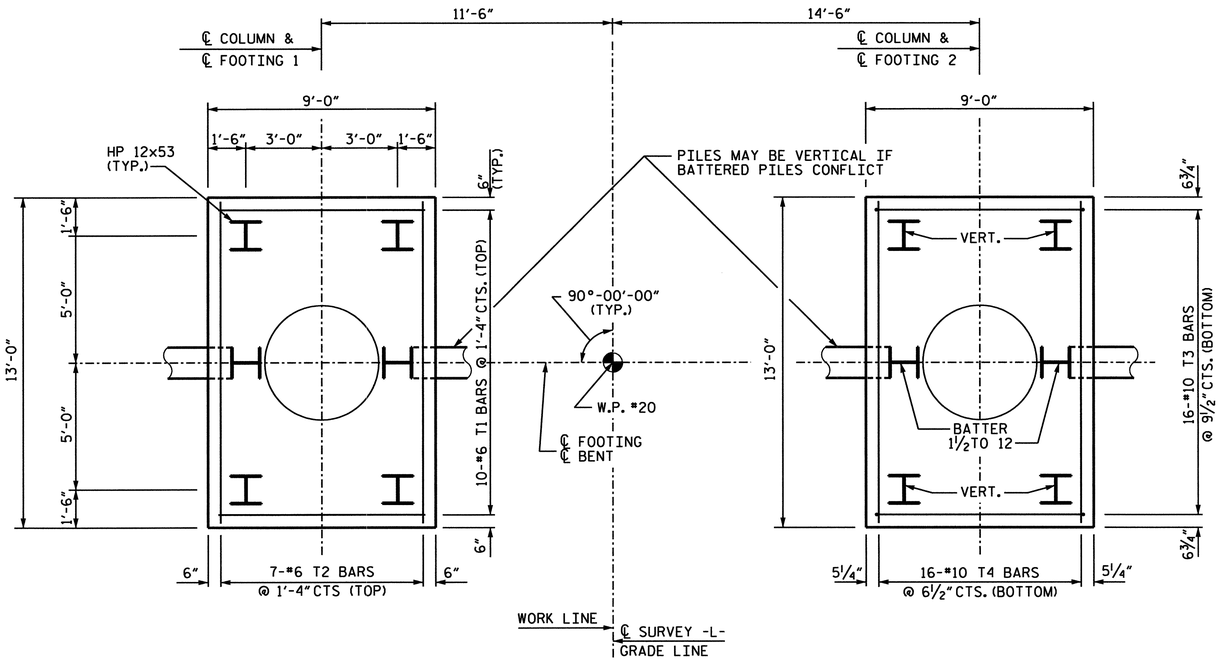

PLAN OF FOOTING

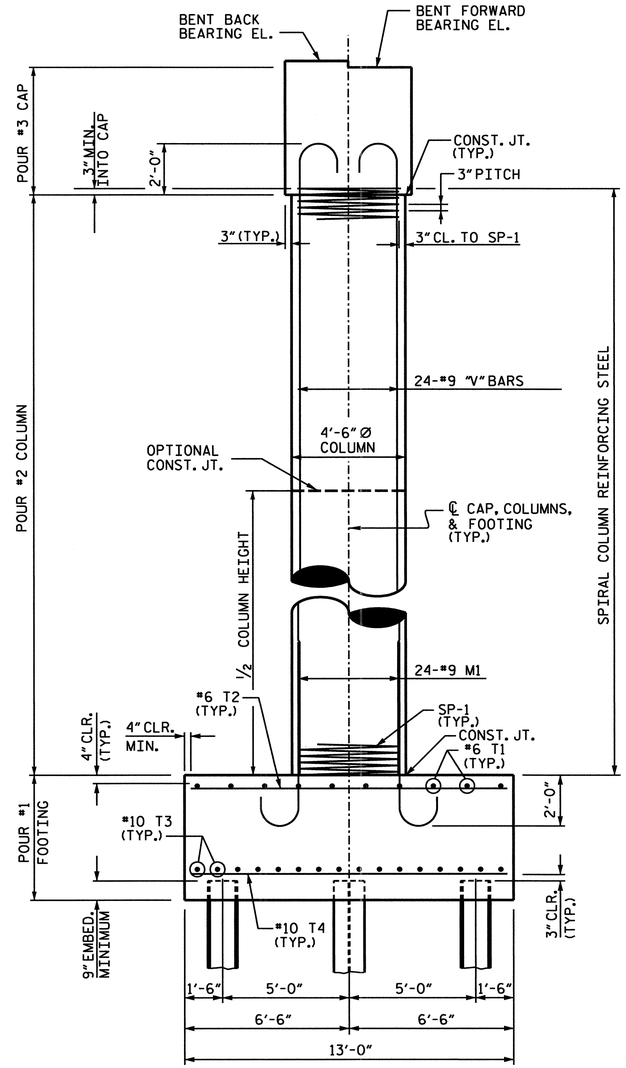

END ELEVATION

PROJECT NO. B-682

BRUNSWICK COUNTY

STATION: 47+08.03 -L- POT

SHEET 2 OF 3

STATE OF NORTH CAROLINA
DEPARTMENT OF TRANSPORTATION
RALEIGH

SUBSTRUCTURE BENT 19

NORTH CAROLINA PROFESSIONAL SEAL 32208 ENGINEER I. C. ENGSTROM
02-23-07

PLANS PREPARED BY:

PARSONS TRANSPORTATION GROUP
Engineers and Planners
RALEIGH, NORTH CAROLINA

JOB NO. 645615

DWG. NO.

REVISIONS							SHEET NO.
NO.	BY:	DATE:	NO.	BY:	DATE:		
1			3				TOTAL SHEETS
2			4				

DRAWN BY : D. RANDALL DATE : JULY 2006
CHECKED BY : I. C. ENGSTROM DATE : JULY 2006

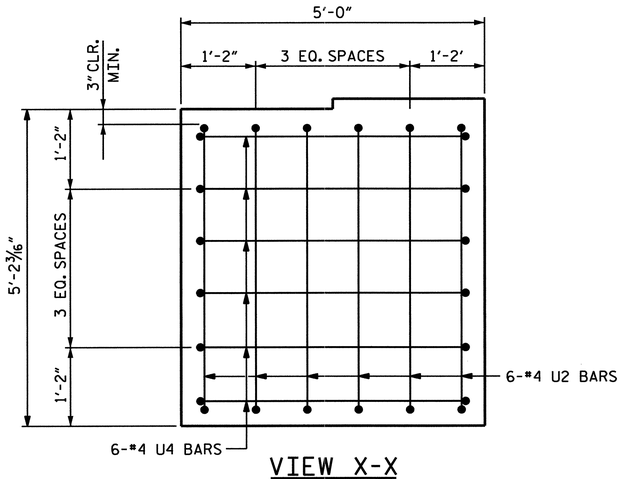

VIEW X-X

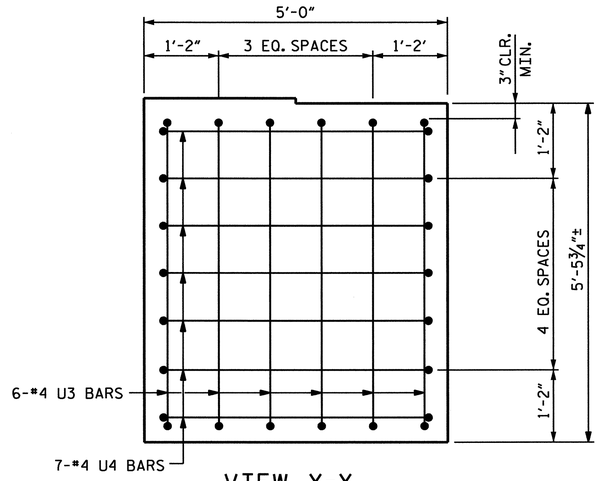

VIEW Y-Y

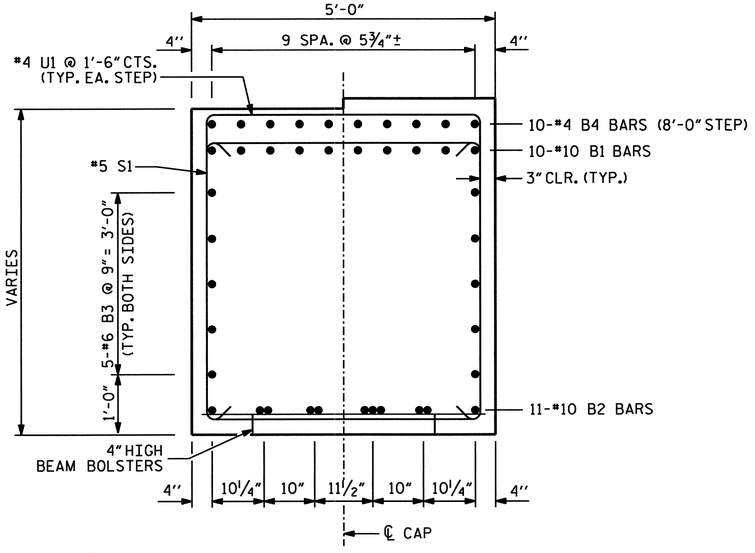

SECTION A-A

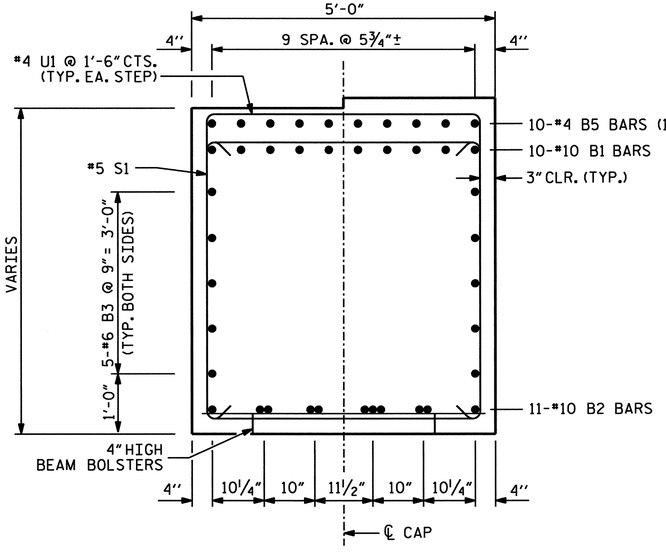

SECTION B-B

BAR TYPES

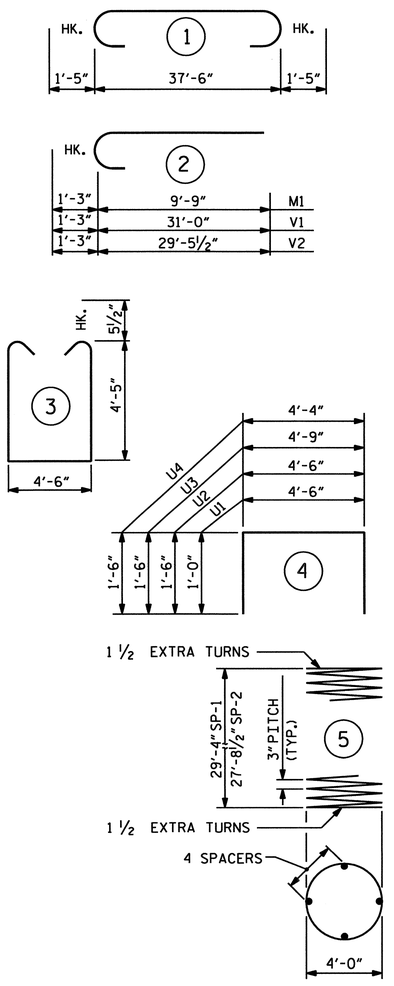

ALL BAR DIMENSIONS ARE OUT TO OUT.

BILL OF MATERIAL

BENT 19

BAR	NO.	SIZE	TYPE	LENGTH (ft)	WEIGHT (lb)
B1	10	10	1	40'-4"	1736
B2	11	10	STR.	37'-6"	1775
B3	10	6	STR.	37'-6"	563
B4	20	4	STR	7'-6"	100
B5	20	4	STR	10'-6"	140
M1	48	9	2	11'-0"	1795
S1	58	5	3	14'-3"	862
U1	58	4	4	6'-6"	252
U2	6	4	4	7'-6"	30
U3	6	4	4	7'-9"	31
U4	13	4	4	7'-4"	64
T1	20	6	STR.	8'-4"	250
T2	14	6	STR.	12'-4"	259
T3	32	10	STR.	8'-4"	1147
T4	32	10	STR.	12'-4"	1698
V1	12	9	2	32'-3"	1316
V2	12	9	2	30'-9"	1255
V3	12	9	STR.	32'-7"	1329
V4	12	9	STR.	31'-1"	1268
EPOXY COATED REINFORCING STEEL					15,870 lb
SP1	2	**	5	1505'-0"	1042
SP2	2	**	5	1418'-0"	962
TOTAL EPOXY COATED SPIRAL COLUMN REINFORCING STEEL					2004 lb

CLASS "AA" CONCRETE BREAKDOWN	
POUR 1 - FOOTING	43.4 yd³
POUR 2 - COLUMNS	33.1 yd³
POUR 3 - CAP	37.9 yd³
TOTAL CLASS "AA" CONCRETE	114.4 yd³

HP 12x53 STEEL PILES	
NO. 12	LIN.FOOT: 960

** THE SP1 AND SP2 SPIRAL REINFORCING STEEL SHALL BE W20 OR D-20 COLD DRAWN WIRE OR #4 PLAIN OR DEFORMED BAR.

PROJECT NO. B-682

BRUNSWICK COUNTY

STATION: 47+08.03 -L- POT

SHEET 3 OF 3

NORTH CAROLINA PROFESSIONAL SEAL 32208 ENGINEER IAN C. ENGSTROM 02-28-07

PLANS PREPARED BY:

PARSONS TRANSPORTATION GROUP
Engineers and Planners
RALEIGH, NORTH CAROLINA

JOB NO. 645615

DWG. NO.

STATE OF NORTH CAROLINA
DEPARTMENT OF TRANSPORTATION
RALEIGH

SUBSTRUCTURE
BENT 19 DETAILS

REVISIONS						SHEET NO.
NO.	BY:	DATE:	NO.	BY:	DATE:	S-1488
1			3			TOTAL SHEETS
2			4			207

DRAWN BY : D. RANDALL DATE : JULY 2006
CHECKED BY : I. C. ENGSTROM DATE : JULY 2006

SPAN U

SPAN T

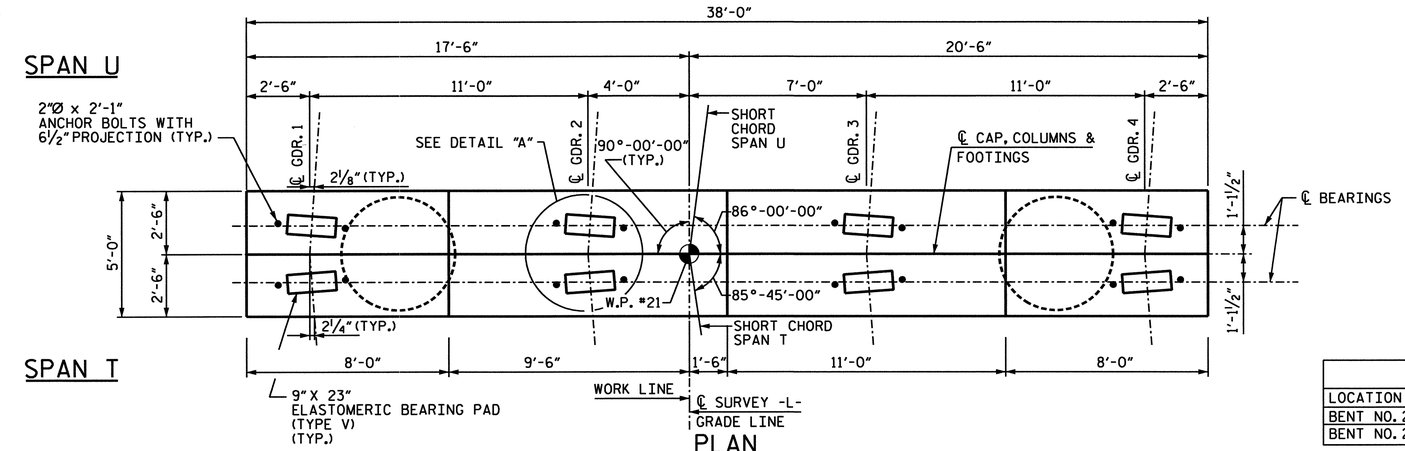

PLAN

TABLE OF BEARING ELEVATIONS				
LOCATION	EL. A	EL. B	EL. C	EL. D
BENT NO. 20 BACK	47.295	46.636	45.977	45.318
BENT NO. 20 FORWARD	47.185	46.524	45.863	45.202

NOTES:

ALL STEEL IN THE FOOTING IS INCLUDED IN THE PAY ITEMS FOR "EPOXY COATED REINFORCING STEEL" OR "EPOXY COATED SPIRAL COLUMN REINFORCING STEEL".

THE TOP SURFACE AREAS OF THE BENT CAP SHALL BE CURED IN ACCORDANCE WITH THE STANDARD SPECIFICATIONS EXCEPT THE MEMBRANE CURING COMPOUND METHOD SHALL NOT BE USED.

STIRRUPS IN CAP MAY BE SHIFTED AS NECESSARY TO CLEAR ANCHOR BOLTS.

DRIVE PILES AT BENT NO. 20 TO AN ALLOWABLE BEARING CAPACITY OF 60 TONS PER PILE.

HOOKS ON "V" BARS MAY BE TURNED AS NECESSARY FOR PLACING REINFORCING STEEL.

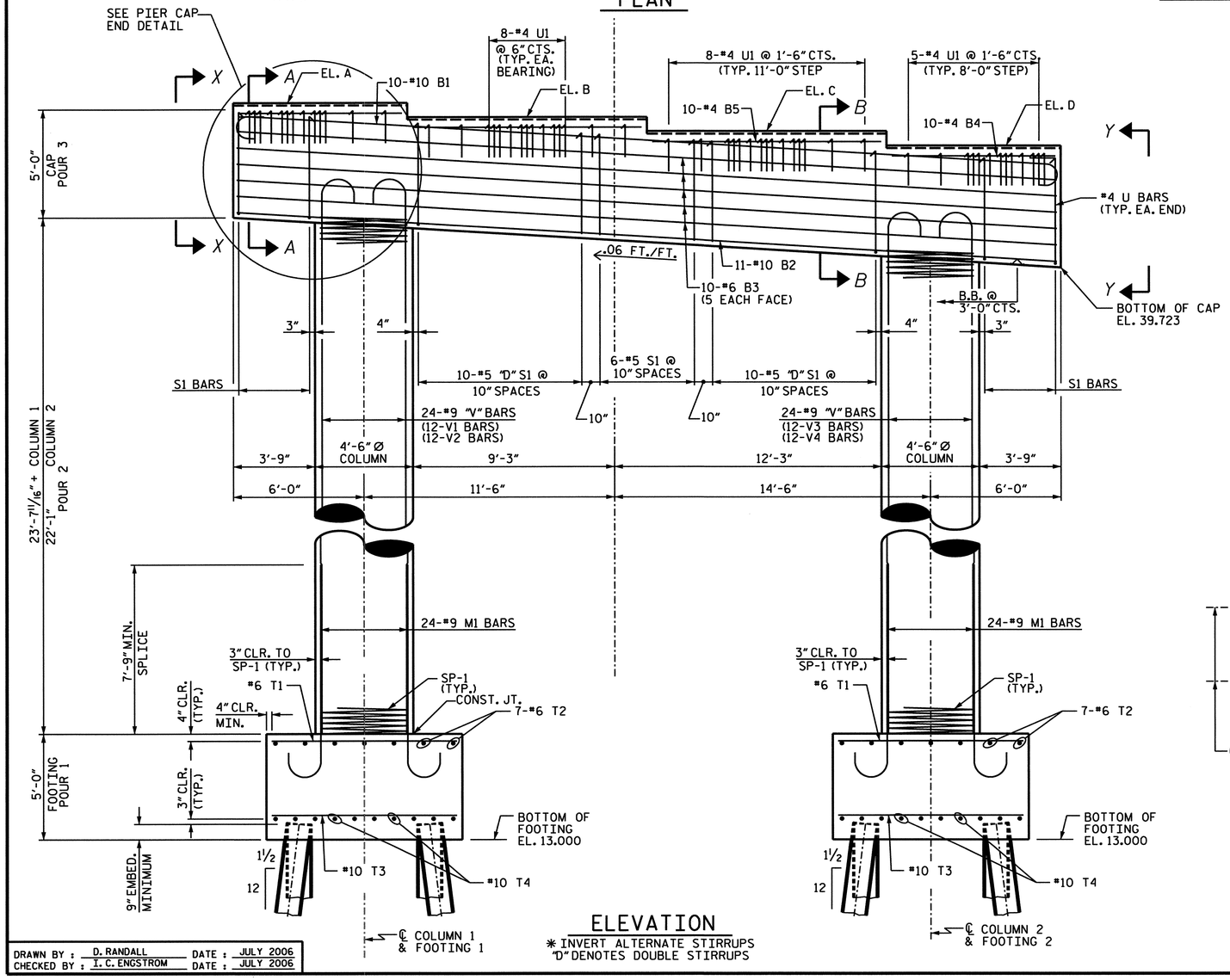

ELEVATION

* INVERT ALTERNATE STIRRUPS
"D" DENOTES DOUBLE STIRRUPS

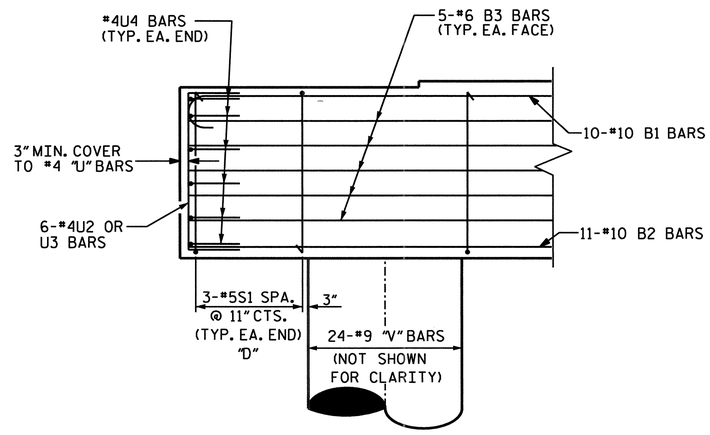

PIER CAP END DETAIL

"D" DENOTES DOUBLE STIRRUPS

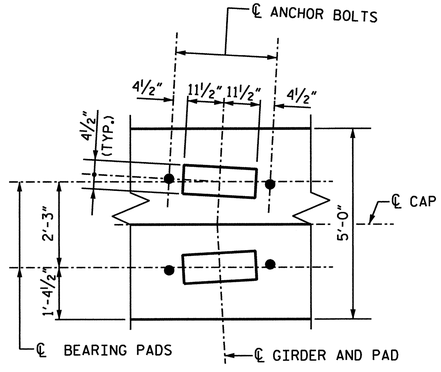

DETAIL "A"

PROJECT NO. B-682

BRUNSWICK COUNTY

STATION: 47+08.03 -L- POT

SHEET 1 OF 3

STATE OF NORTH CAROLINA
DEPARTMENT OF TRANSPORTATION
RALEIGH

SUBSTRUCTURE BENT 20

NORTH CAROLINA PROFESSIONAL SEAL 032208 ENGINEER I. C. ENGSTROM
02-23-07

PLANS PREPARED BY:

PARSONS TRANSPORTATION GROUP
Engineers and Planners
RALEIGH, NORTH CAROLINA

JOB NO. 645615

DWG. NO.

REVISIONS						SHEET NO.
NO.	BY:	DATE:	NO.	BY:	DATE:	S-129
1			3			TOTAL SHEETS
2			4			287

DRAWN BY : D. RANDALL DATE : JULY 2006
CHECKED BY : I. C. ENGSTROM DATE : JULY 2006

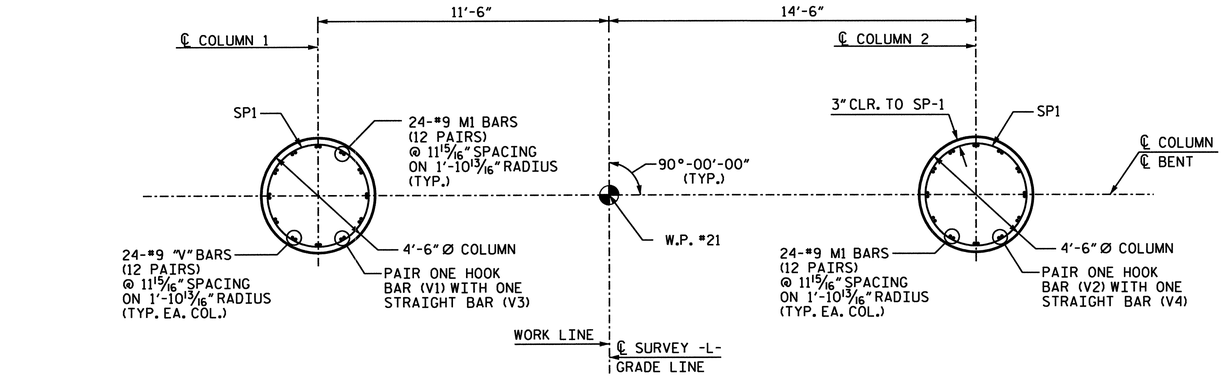

PLAN OF COLUMNS

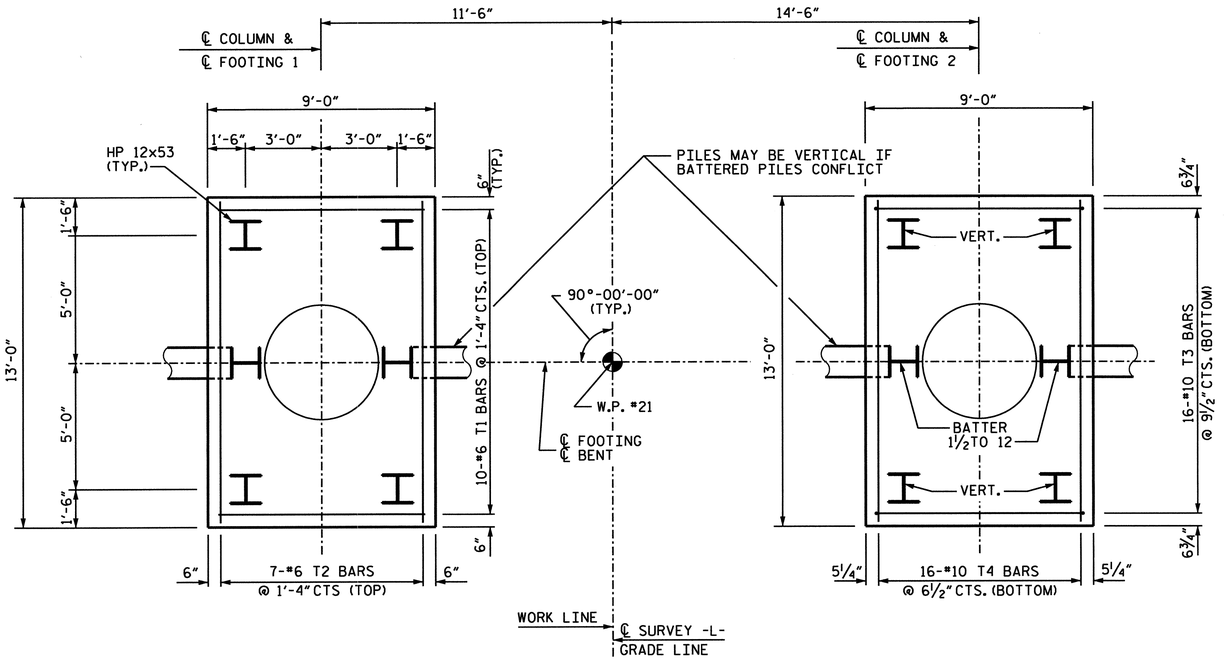

PLAN OF FOOTING

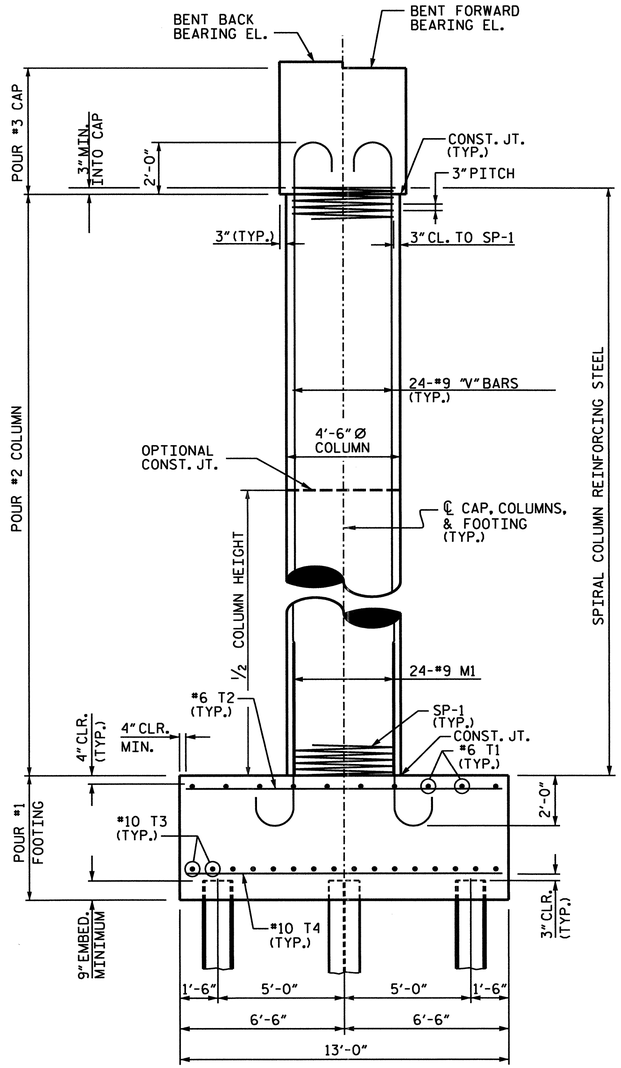

END ELEVATION

PROJECT NO. B-682

BRUNSWICK COUNTY

STATION: 47+08.03 -L- POT

SHEET 2 OF 3

NORTH CAROLINA PROFESSIONAL SEAL 32208 ENGINEER I. C. ENGSTROM
01/08/07

PLANS PREPARED BY:

PARSONS
TRANSPORTATION GROUP
Engineers and Planners
RALEIGH, NORTH CAROLINA

STATE OF NORTH CAROLINA
DEPARTMENT OF TRANSPORTATION
RALEIGH

SUBSTRUCTURE
BENT 20

REVISIONS						SHEET NO.
NO.	BY:	DATE:	NO.	BY:	DATE:	S-190
1			3			TOTAL SHEETS
2			4			287

JOB NO. 645615

DWG. NO.

DRAWN BY : D. RANDALL DATE : JULY 2006
CHECKED BY : I. C. ENGSTROM DATE : JULY 2006

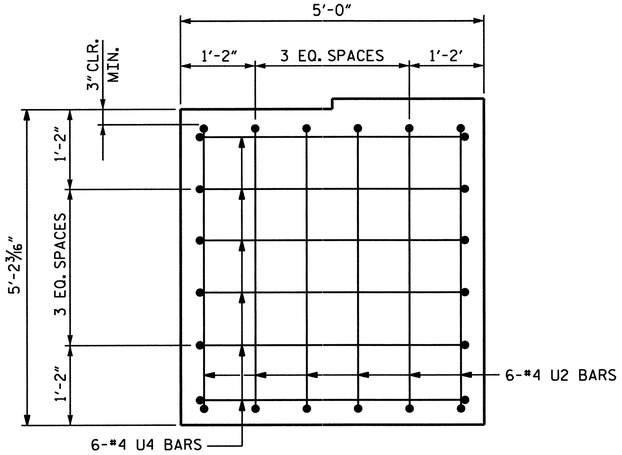

VIEW X-X

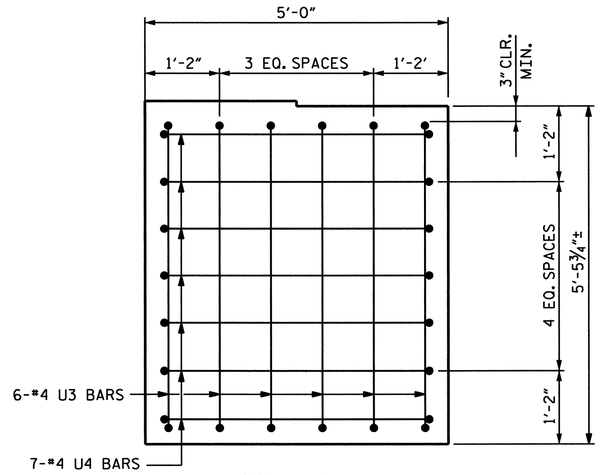

VIEW Y-Y

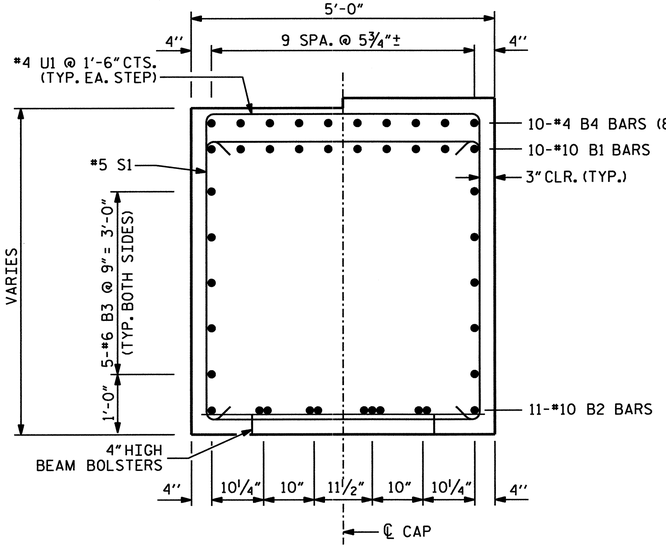

SECTION A-A

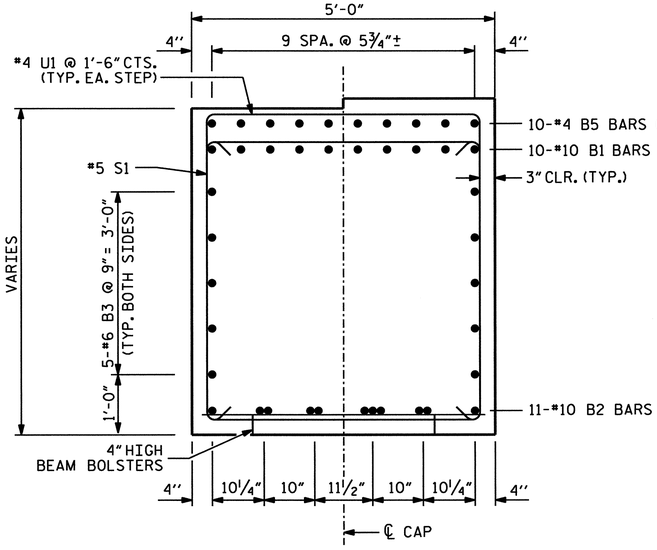

SECTION B-B

BAR TYPES

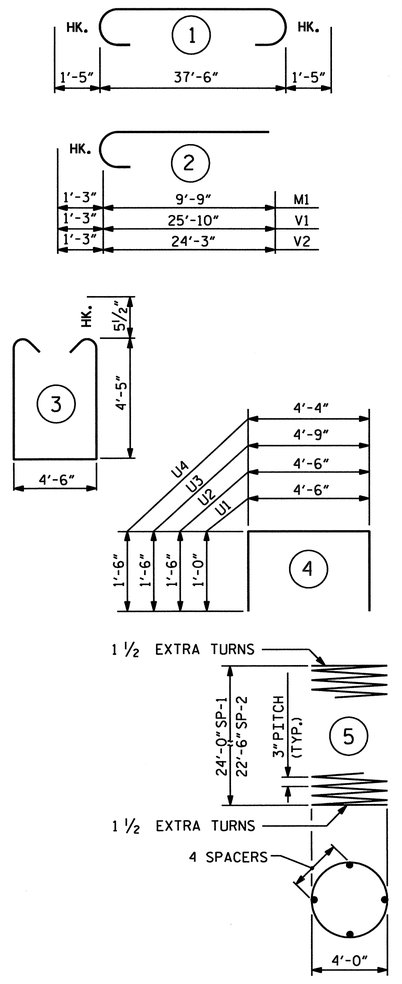

ALL BAR DIMENSIONS ARE OUT TO OUT.

BILL OF MATERIAL

BENT 20

BAR	NO.	SIZE	TYPE	LENGTH (ft)	WEIGHT (lb)
B1	10	10	1	40'-4"	1736
B2	11	10	STR.	37'-6"	1775
B3	10	6	STR.	37'-6"	563
B4	20	4	STR	7'-6"	100
B5	20	4	STR	10'-6"	140
M1	48	9	2	11'-0"	1795
S1	58	5	3	14'-3"	862
U1	58	4	4	6'-6"	252
U2	6	4	4	7'-6"	30
U3	6	4	4	7'-9"	31
U4	13	4	4	7'-4"	64
T1	20	6	STR.	8'-4"	250
T2	14	6	STR.	12'-4"	259
T3	32	10	STR.	8'-4"	1147
T4	32	10	STR.	12'-4"	1698
V1	12	9	2	27'-1"	1105
V2	12	9	2	25'-6"	1040
V3	12	9	STR.	27'-5"	1119
V4	12	9	STR.	25'-10"	1054
EPOXY COATED REINFORCING STEEL					15,020 lb
SP1	2	**	5	1231'-5"	842
SP2	2	**	5	1156'-9"	802
TOTAL EPOXY COATED SPIRAL COLUMN REINFORCING STEEL					1644 lb

CLASS "AA" CONCRETE BREAKDOWN	
POUR 1 - FOOTING	43.4 yd³
POUR 2 - COLUMNS	26.9 yd³
POUR 3 - CAP	37.9 yd³
TOTAL CLASS "AA" CONCRETE	108.3 yd³

HP 12x53 STEEL PILES	
NO. 12	LIN.FOOT: 900

** THE SP1 AND SP2 SPIRAL REINFORCING STEEL SHALL BE W20 OR D-20 COLD DRAWN WIRE OR #4 PLAIN OR DEFORMED BAR.

PROJECT NO. B-682

BRUNSWICK COUNTY

STATION: 47+08.03 -L- POT

SHEET 3 OF 3

NORTH CAROLINA PROFESSIONAL SEAL 32208 ENGINEER I.N.C. ENGSTROM
02-23-07

PLANS PREPARED BY:

PARSONS
TRANSPORTATION GROUP
Engineers and Planners
RALEIGH, NORTH CAROLINA

STATE OF NORTH CAROLINA
DEPARTMENT OF TRANSPORTATION
RALEIGH

SUBSTRUCTURE
BENT 20 DETAILS

REVISIONS						SHEET NO.
NO.	BY:	DATE:	NO.	BY:	DATE:	
1			3			TOTAL SHEETS
2			4			

JOB NO. 645615

DWG. NO.

DRAWN BY : D. RANDALL DATE : JULY 2006
CHECKED BY : I. C. ENGSTROM DATE : JULY 2006

SPAN V

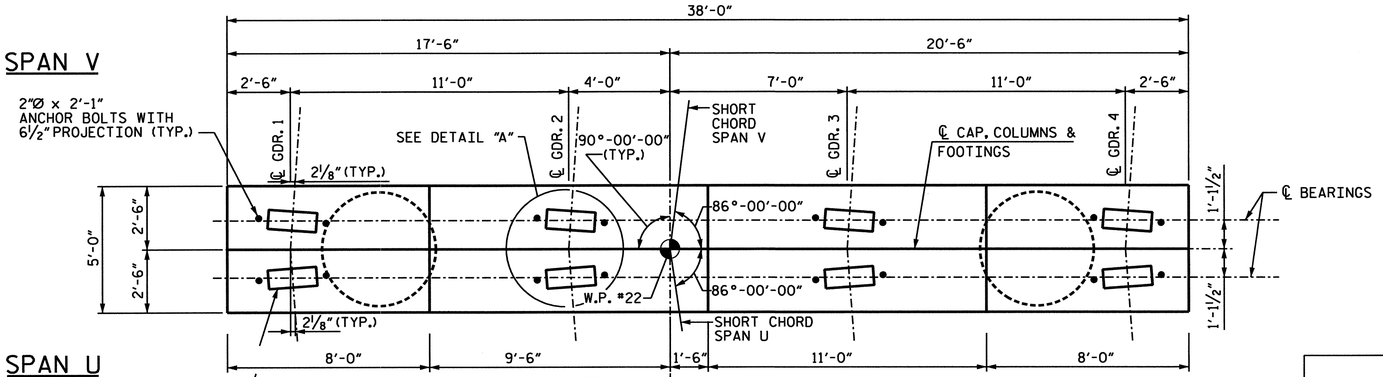

SPAN U

PLAN

TABLE OF BEARING ELEVATIONS				
LOCATION	EL. A	EL. B	EL. C	EL. D
BENT NO. 21 BACK	43.295	42.636	41.977	41.318
BENT NO. 21 FORWARD	43.185	42.524	41.863	41.202

NOTES:

ALL STEEL IN THE FOOTING IS INCLUDED IN THE PAY ITEMS FOR "EPOXY COATED REINFORCING STEEL" OR "EPOXY COATED SPIRAL COLUMN REINFORCING STEEL".

STIRRUPS IN CAP MAY BE SHIFTED AS NECESSARY TO CLEAR ANCHOR BOLTS.

DRIVE PILES AT BENT NO. 21 TO AN ALLOWABLE BEARING CAPACITY OF 60 TONS PER PILE.

HOOKS ON "V" BARS MAY BE TURNED AS NECESSARY FOR PLACING REINFORCING STEEL.

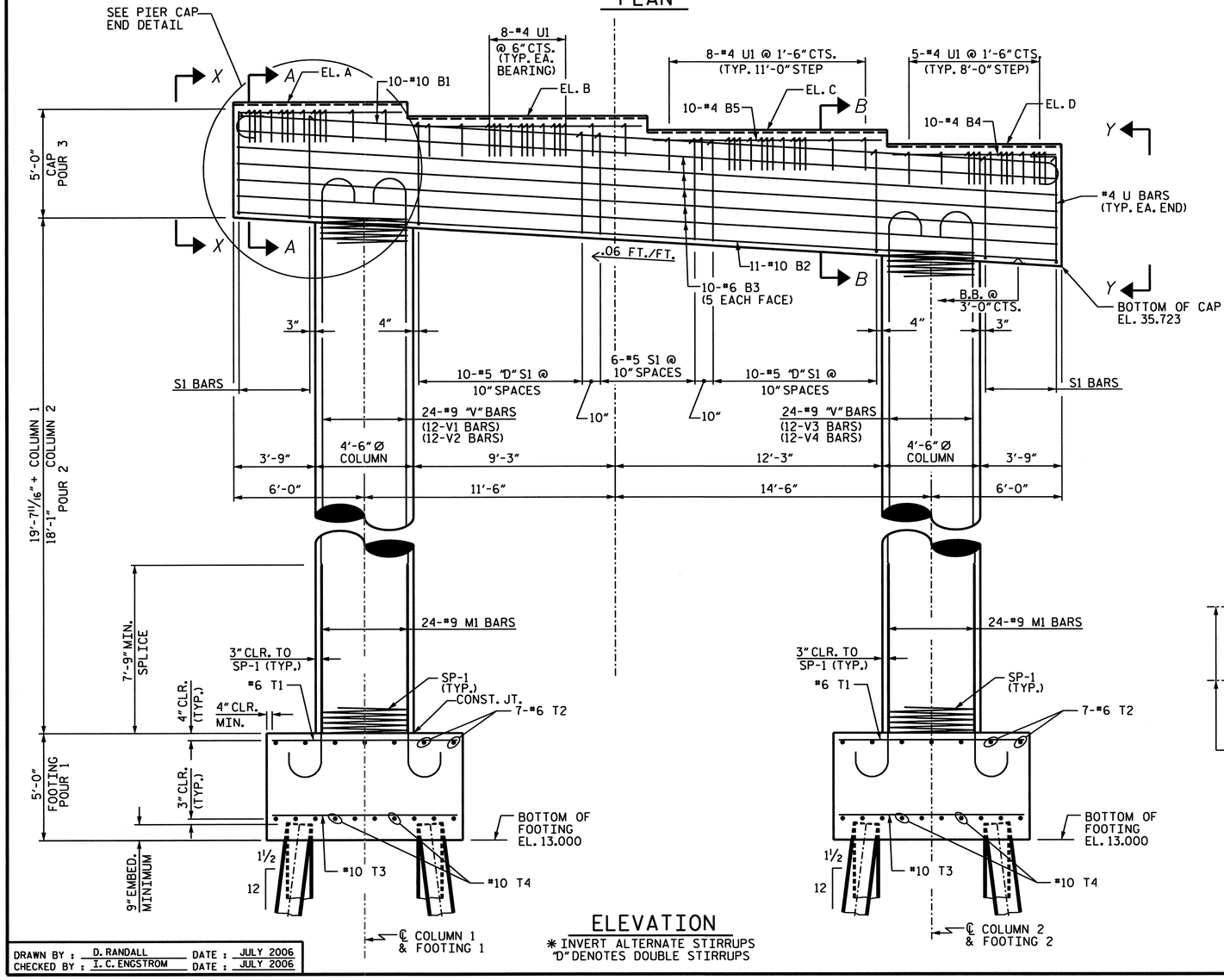

ELEVATION

* INVERT ALTERNATE STIRRUPS
"D" DENOTES DOUBLE STIRRUPS

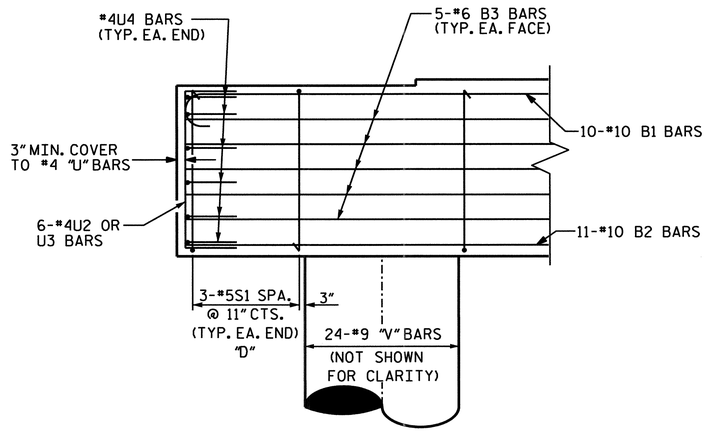

PIER CAP END DETAIL

"D" DENOTES DOUBLE STIRRUPS

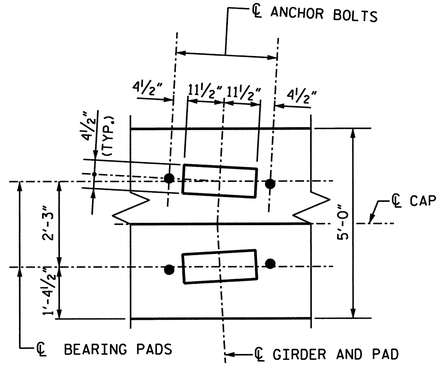

DETAIL "A"

PROJECT NO. B-682

BRUNSWICK COUNTY

STATION: 47+08.03 -L- POT

SHEET 1 OF 3

STATE OF NORTH CAROLINA
DEPARTMENT OF TRANSPORTATION
RALEIGH

SUBSTRUCTURE BENT 21

NORTH CAROLINA PROFESSIONAL SEAL 32208 ENGINEER I. C. ENGSTROM 02-25-07

PLANS PREPARED BY:

PARSONS TRANSPORTATION GROUP
Engineers and Planners
RALEIGH, NORTH CAROLINA

JOB NO. 645615
DWG. NO.

REVISIONS						SHEET NO.
NO.	BY:	DATE:	NO.	BY:	DATE:	5-197
1			3			TOTAL SHEETS
2			4			257

DRAWN BY : D. RANDALL DATE : JULY 2006
CHECKED BY : I. C. ENGSTROM DATE : JULY 2006

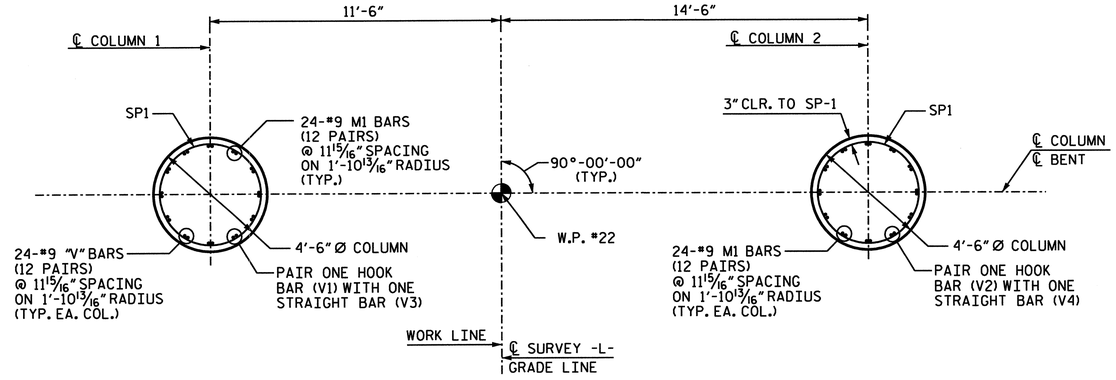

PLAN OF COLUMNS

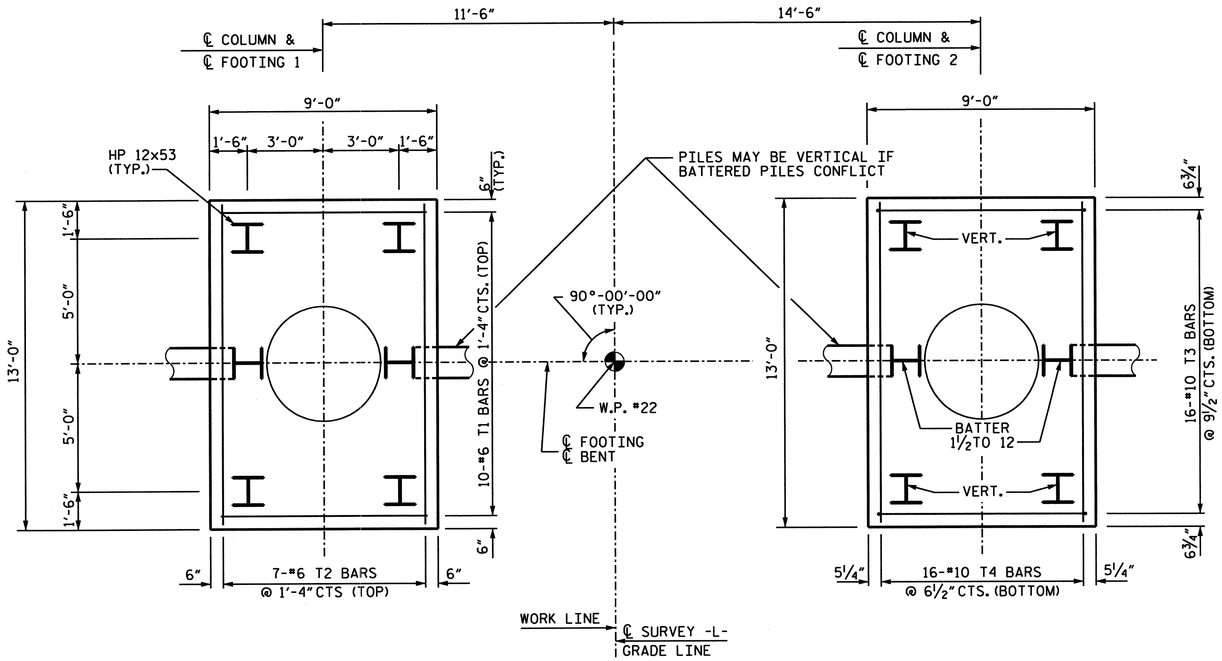

PLAN OF FOOTING

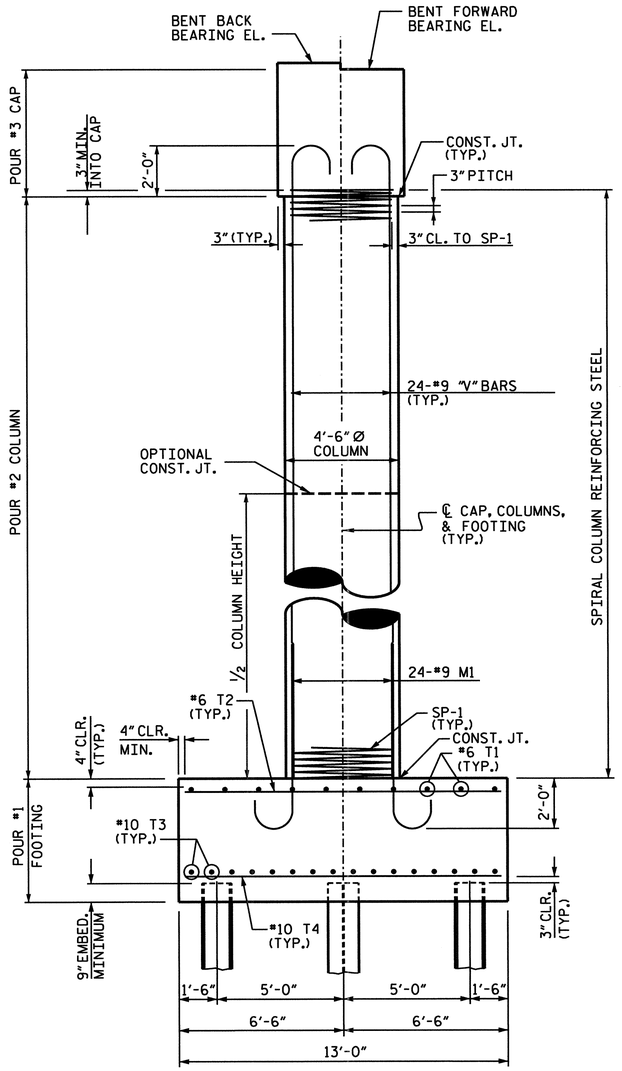

END ELEVATION

PROJECT NO. B-682

BRUNSWICK COUNTY

STATION: 47+08.03 -L- POT

SHEET 2 OF 3

STATE OF NORTH CAROLINA
DEPARTMENT OF TRANSPORTATION
RALEIGH

SUBSTRUCTURE BENT 21

NORTH CAROLINA PROFESSIONAL SEAL 32208 ENGINEER I. C. ENGSTROM
01/08/07

PLANS PREPARED BY:

PARSONS TRANSPORTATION GROUP
Engineers and Planners
RALEIGH, NORTH CAROLINA

JOB NO. 645615
DWG. NO.

REVISIONS						SHEET NO.
NO.	BY:	DATE:	NO.	BY:	DATE:	S-193
1			3			TOTAL SHEETS
2			4			257

DRAWN BY : D. RANDALL DATE : JULY 2006
CHECKED BY : I. C. ENGSTROM DATE : JULY 2006

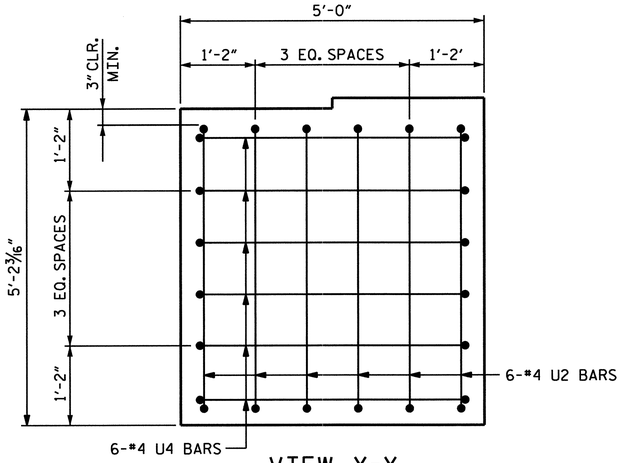

VIEW X-X

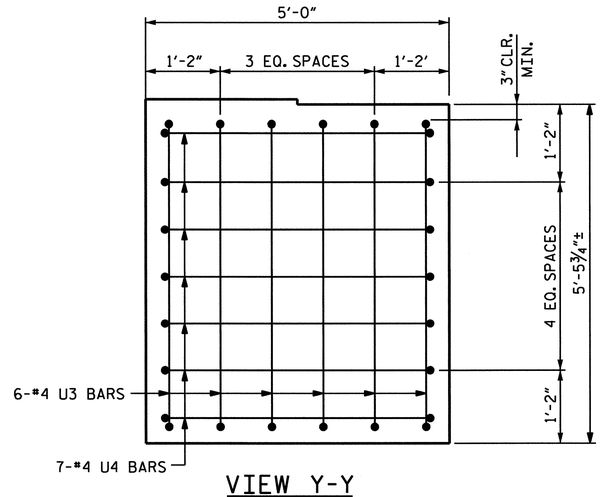

VIEW Y-Y

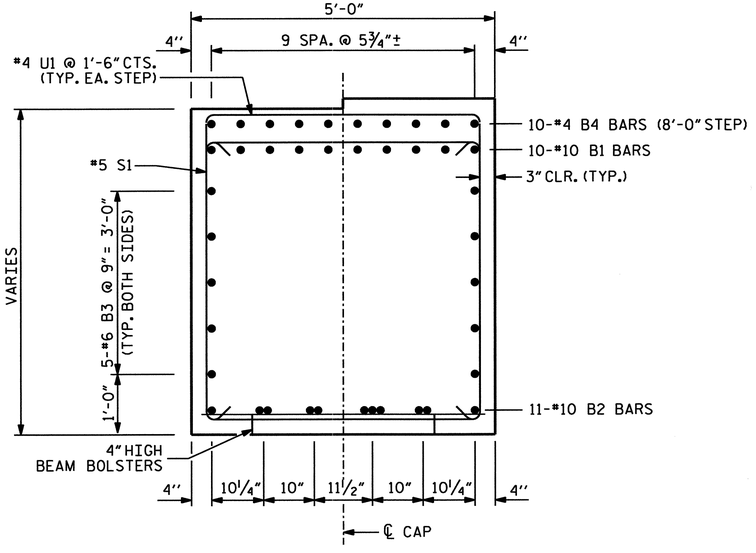

SECTION A-A

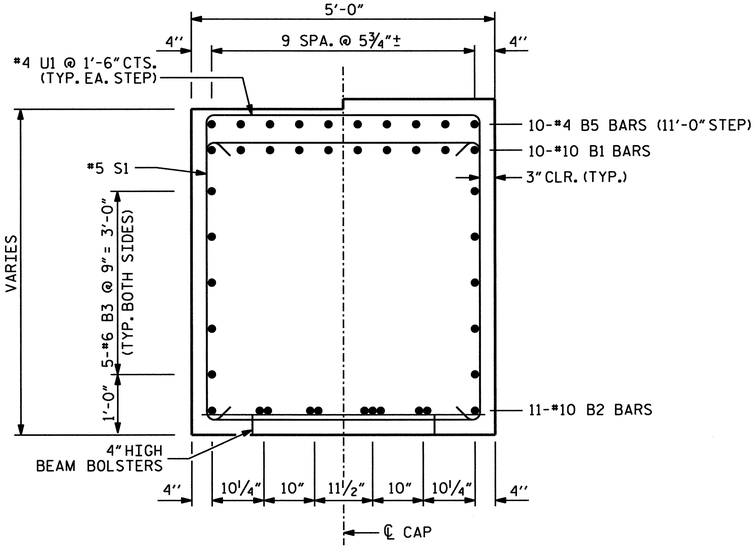

SECTION B-B

BAR TYPES

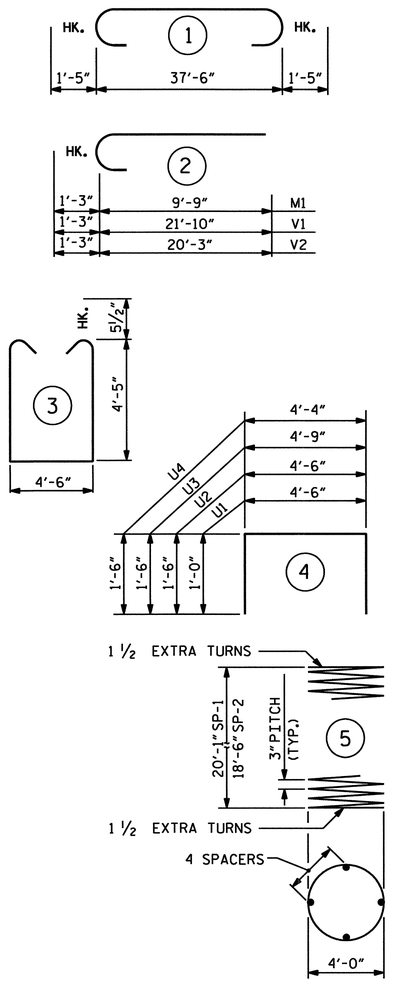

ALL BAR DIMENSIONS ARE OUT TO OUT.

BILL OF MATERIAL

BENT 21

BAR	NO.	SIZE	TYPE	LENGTH (ft)	WEIGHT (lb)
B1	10	10	1	40'-4"	1736
B2	11	10	STR.	37'-6"	1775
B3	10	6	STR.	37'-6"	563
B4	20	4	STR	7'-6"	100
B5	20	4	STR	10'-6"	140
M1	48	9	2	11'-0"	1795
S1	58	5	3	14'-3"	862
U1	58	4	4	6'-6"	252
U2	6	4	4	7'-6"	30
U3	6	4	4	7'-9"	31
U4	13	4	4	7'-4"	64
T1	20	6	STR.	8'-4"	250
T2	14	6	STR.	12'-4"	259
T3	32	10	STR.	8'-4"	1147
T4	32	10	STR.	12'-4"	1698
V1	12	9	2	23'-1"	942
V2	12	9	2	21'-6"	877
V3	12	9	STR.	23'-5"	955
V4	12	9	STR.	21'-10"	891
EPOXY COATED REINFORCING STEEL					14,367 lb
SP1	2	**	5	1044'-10"	721
SP2	2	**	5	957'-9"	641
TOTAL EPOXY COATED SPIRAL COLUMN REINFORCING STEEL					1362 lb

CLASS "AA" CONCRETE BREAKDOWN	
POUR 1 - FOOTING	43.4 yd³
POUR 2 - COLUMNS	22.2 yd³
POUR 3 - CAP	37.9 yd³
TOTAL CLASS "AA" CONCRETE	103.5 yd³

HP 12x53 STEEL PILES	
NO. 12	LIN.FOOT: 900

** THE SP1 AND SP2 SPIRAL REINFORCING STEEL SHALL BE W20 OR D-20 COLD DRAWN WIRE OR #4 PLAIN OR DEFORMED BAR.

PROJECT NO. B-682

BRUNSWICK COUNTY

STATION: 47+08.03 -L- POT

SHEET 3 OF 3

NORTH CAROLINA PROFESSIONAL SEAL 32208 ENGINEER IAN C. ENGSTROM 02-23-07

PLANS PREPARED BY:

PARSONS TRANSPORTATION GROUP
Engineers and Planners
RALEIGH, NORTH CAROLINA

STATE OF NORTH CAROLINA
DEPARTMENT OF TRANSPORTATION
RALEIGH

SUBSTRUCTURE
BENT 21 DETAILS

REVISIONS						SHEET NO.
NO.	BY:	DATE:	NO.	BY:	DATE:	
JOB NO. 645615	1			3		
DWG. NO.	2			4		TOTAL SHEETS

DRAWN BY : D. RANDALL DATE : JULY 2006
CHECKED BY : I. C. ENGSTROM DATE : JULY 2006

SPAN W

SPAN V

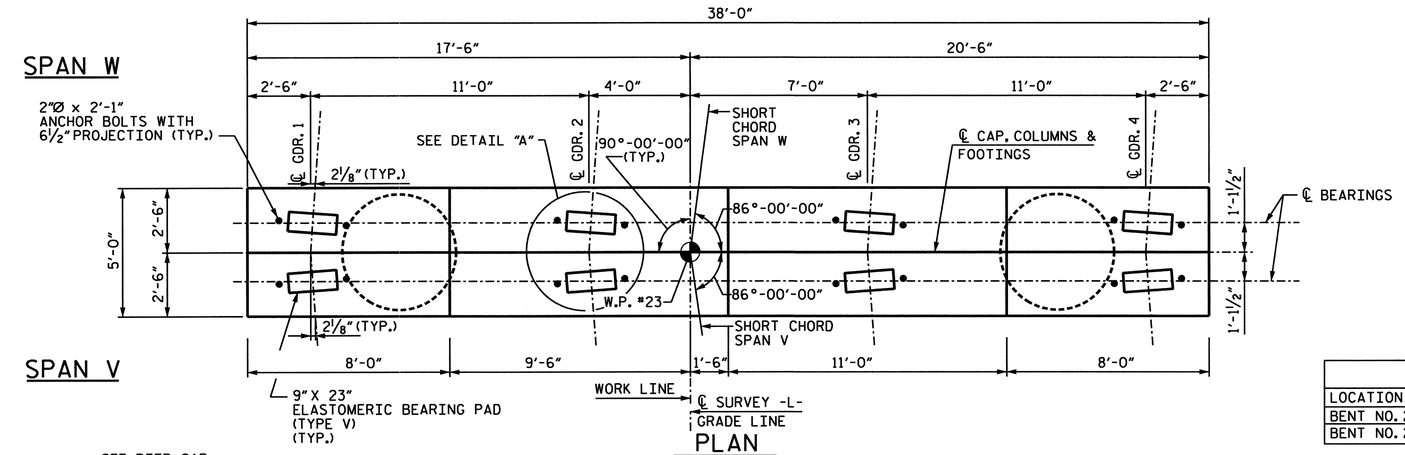

PLAN

TABLE OF BEARING ELEVATIONS				
LOCATION	EL. A	EL. B	EL. C	EL. D
BENT NO. 22 BACK	39.295	38.636	37.977	37.318
BENT NO. 22 FORWARD	39.185	38.524	37.863	37.202

NOTES:

ALL STEEL IN THE FOOTING IS INCLUDED IN THE PAY ITEMS FOR "EPOXY COATED REINFORCING STEEL" OR "EPOXY COATED SPIRAL COLUMN REINFORCING STEEL".

STIRRUPS IN CAP MAY BE SHIFTED AS NECESSARY TO CLEAR ANCHOR BOLTS.

DRIVE PILES AT BENT NO. 22 TO AN ALLOWABLE BEARING CAPACITY OF 60 TONS PER PILE.

HOOKS ON "V" BARS MAY BE TURNED AS NECESSARY FOR PLACING REINFORCING STEEL.

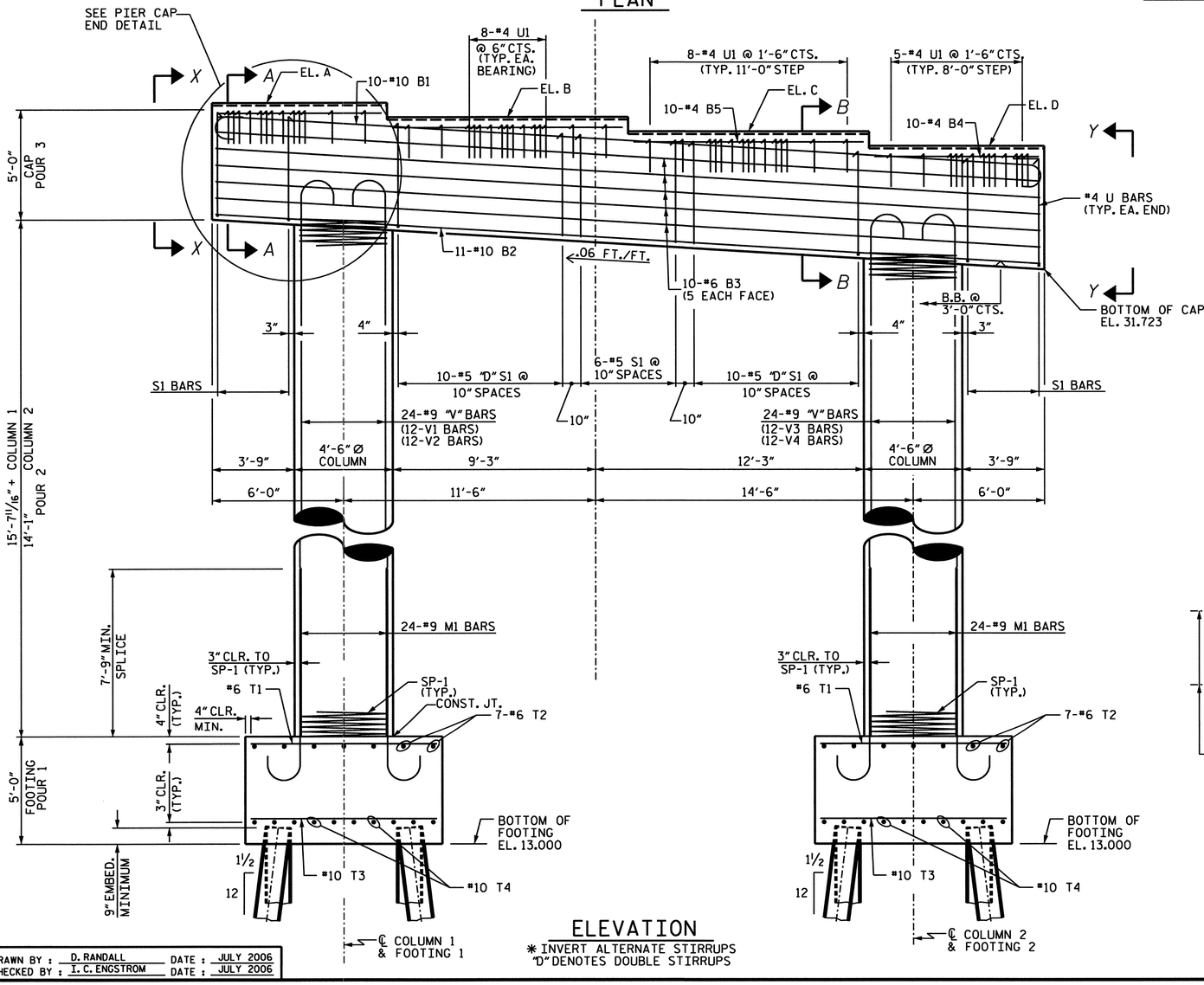

ELEVATION

* INVERT ALTERNATE STIRRUPS
"D" DENOTES DOUBLE STIRRUPS

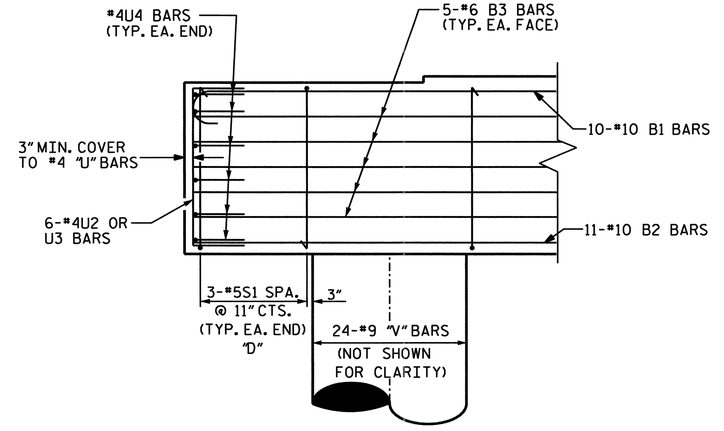

PIER CAP END DETAIL

"D" DENOTES DOUBLE STIRRUPS

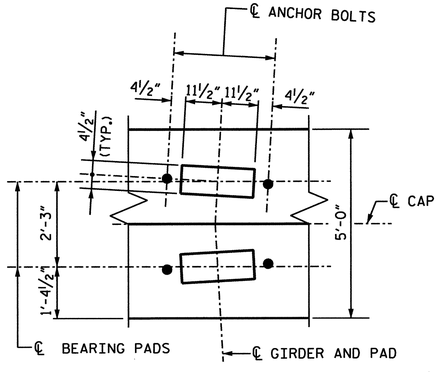

DETAIL "A"

PROJECT NO. B-682

BRUNSWICK COUNTY

STATION: 47+08.03 -L- POT

SHEET 1 OF 3

STATE OF NORTH CAROLINA
DEPARTMENT OF TRANSPORTATION
RALEIGH

SUBSTRUCTURE BENT 22

NORTH CAROLINA PROFESSIONAL SEAL 032208 ENGINEER IAN C. ENGSTROM
02-25-07

PLANS PREPARED BY:

PARSONS TRANSPORTATION GROUP
Engineers and Planners
RALEIGH, NORTH CAROLINA

JOB NO. 645615
DWG. NO.

REVISIONS						SHEET NO.
NO.	BY:	DATE:	NO.	BY:	DATE:	5-195
1			3			TOTAL SHEETS
2			4			287

DRAWN BY : D. RANDALL DATE : JULY 2006
CHECKED BY : I. C. ENGSTROM DATE : JULY 2006

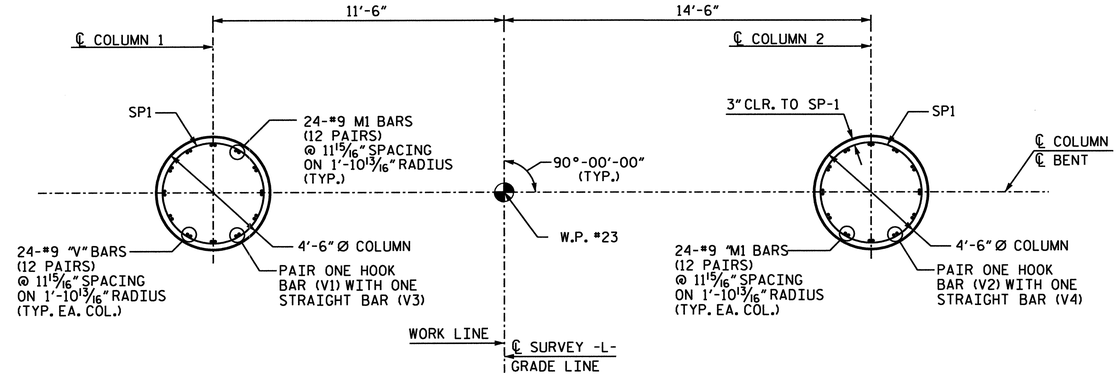

PLAN OF COLUMNS

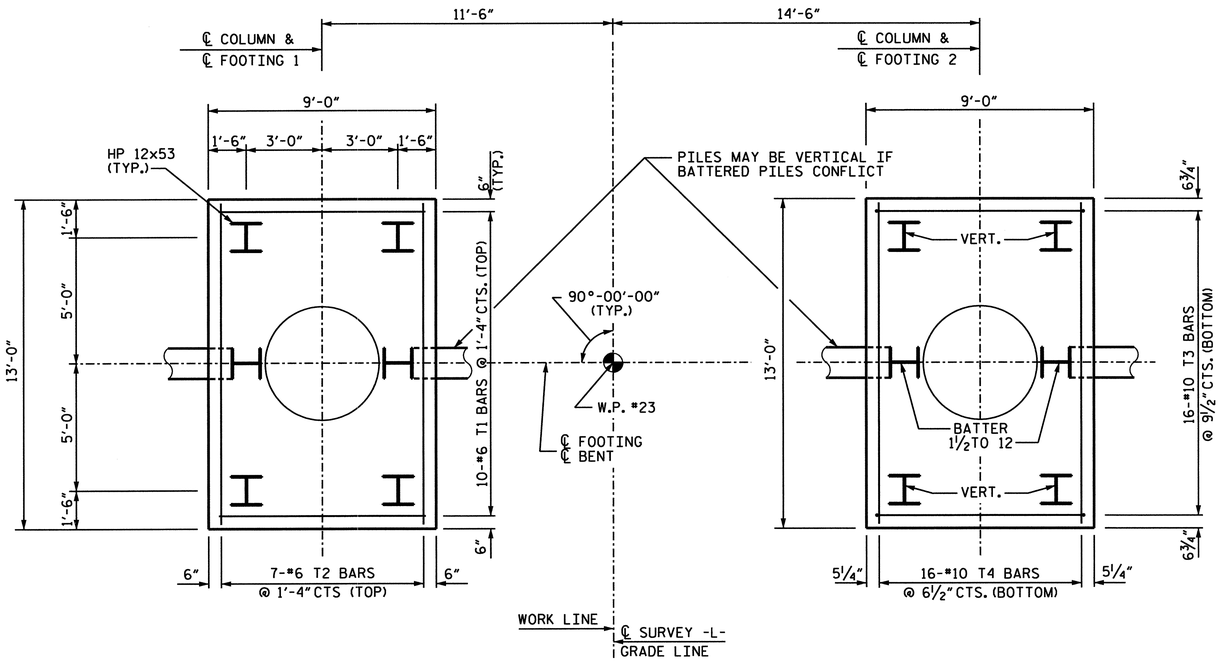

PLAN OF FOOTING

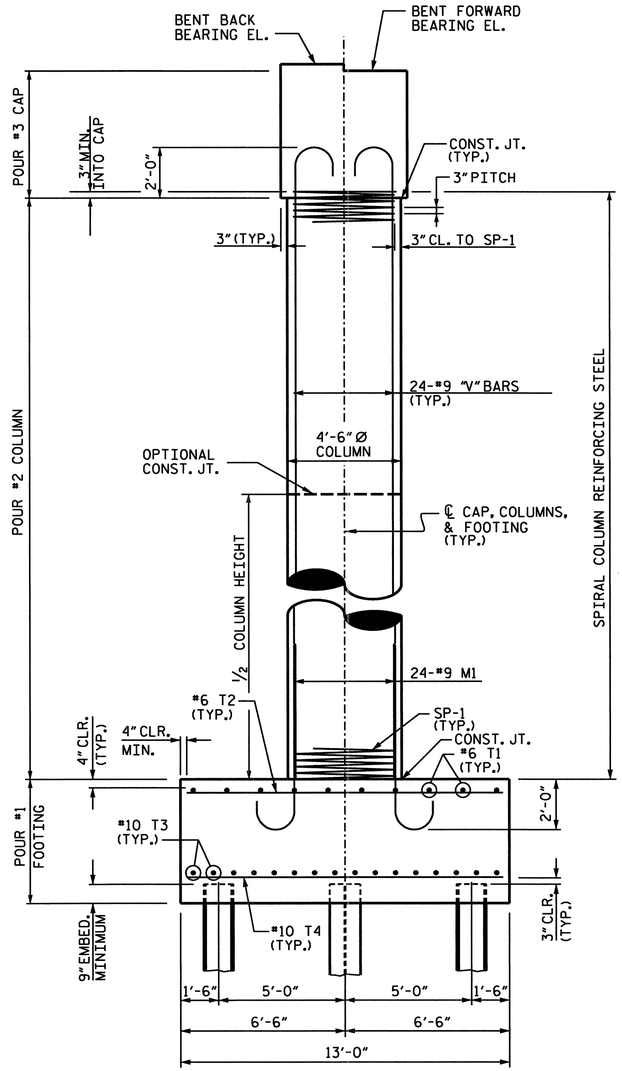

END ELEVATION

PROJECT NO. B-682

BRUNSWICK COUNTY

STATION: 47+08.03 -L- POT

SHEET 2 OF 3

STATE OF NORTH CAROLINA
DEPARTMENT OF TRANSPORTATION
RALEIGH

SUBSTRUCTURE BENT 22

NORTH CAROLINA PROFESSIONAL SEAL 32208 ENGINEER I. C. ENGSTROM
01/08/07

PLANS PREPARED BY:

PARSONS TRANSPORTATION GROUP
Engineers and Planners
RALEIGH, NORTH CAROLINA

JOB NO. 645615
DWG. NO.

REVISIONS						SHEET NO.
NO.	BY:	DATE:	NO.	BY:	DATE:	S-196
1			3			TOTAL SHEETS
2			4			207

DRAWN BY : D. RANDALL DATE : JULY 2006
CHECKED BY : I. C. ENGSTROM DATE : JULY 2006

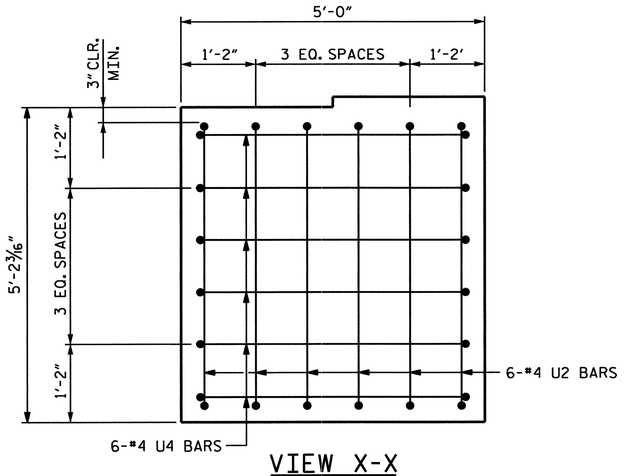

VIEW X-X

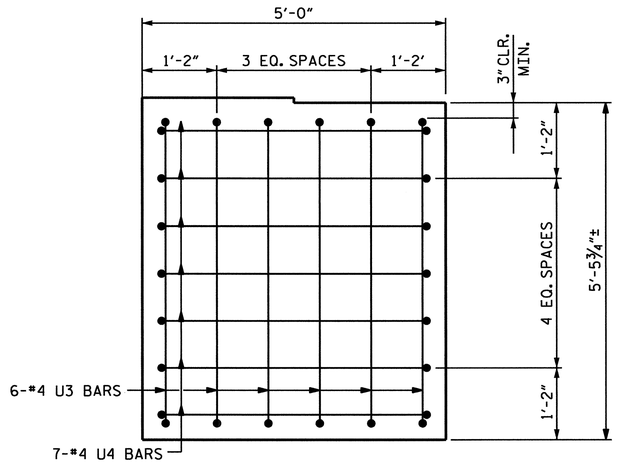

VIEW Y-Y

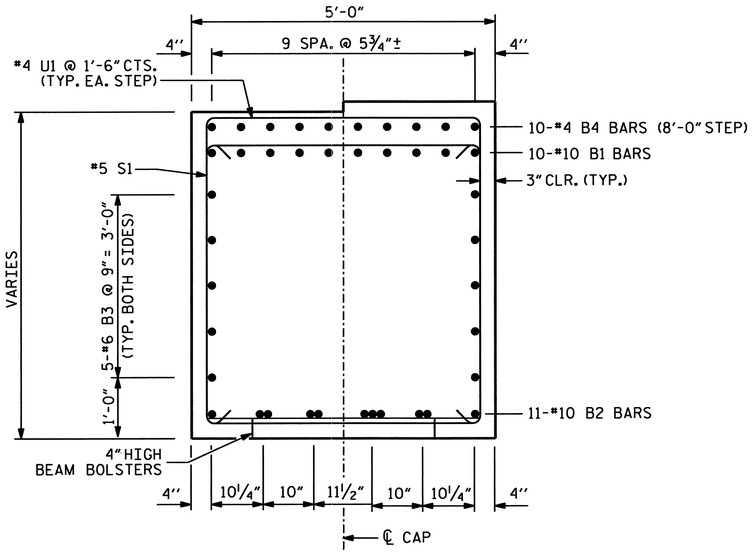

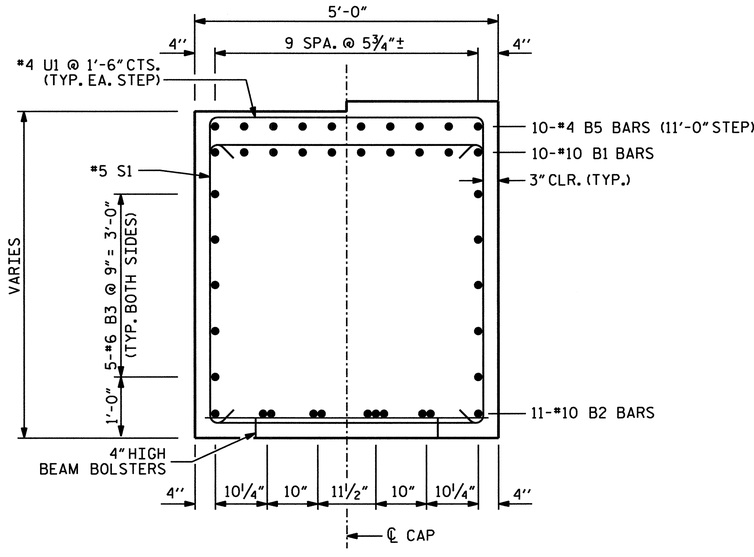

SECTION B-B

BAR TYPES

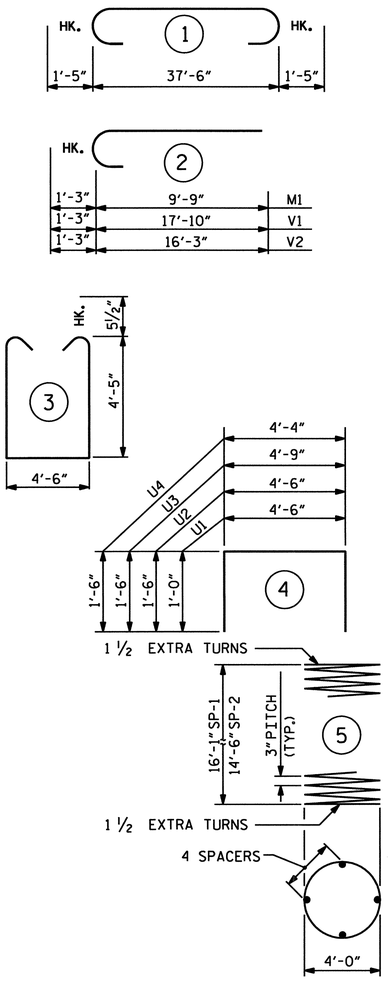

ALL BAR DIMENSIONS ARE OUT TO OUT.

BILL OF MATERIAL

BENT 22

BAR	NO.	SIZE	TYPE	LENGTH (ft)	WEIGHT (lb)
B1	10	10	1	40'-4"	1736
B2	11	10	STR.	37'-6"	1775
B3	10	6	STR.	37'-6"	563
B4	20	4	STR	7'-6"	100
B5	20	4	STR	10'-6"	140
M1	48	9	2	11'-0"	1795
S1	58	5	3	14'-3"	862
U1	58	4	4	6'-6"	252
U2	6	4	4	7'-6"	30
U3	6	4	4	7'-9"	31
U4	13	4	4	7'-4"	64
T1	20	6	STR.	8'-4"	250
T2	14	6	STR.	12'-4"	259
T3	32	10	STR.	8'-4"	1147
T4	32	10	STR.	12'-4"	1698
V1	12	9	2	19'-1"	779
V2	12	9	2	17'-6"	714
V3	12	9	STR.	19'-5"	792
V4	12	9	STR.	17'-10"	728
EPOXY COATED REINFORCING STEEL					13,715 lb
SP1	2	**	5	845'-10"	601
SP2	2	**	5	758'-9"	521
TOTAL EPOXY COATED SPIRAL COLUMN REINFORCING STEEL					1122 lb

CLASS "AA" CONCRETE BREAKDOWN	
POUR 1 - FOOTING	43.4 yd³
POUR 2 - COLUMNS	17.5 yd³
POUR 3 - CAP	37.9 yd³
TOTAL CLASS "AA" CONCRETE	98.8 yd³

HP 12x53 STEEL PILES	
NO. 12	LIN.FOOT: 900

** THE SP1 AND SP2 SPIRAL REINFORCING STEEL SHALL BE W20 OR D-20 COLD DRAWN WIRE OR #4 PLAIN OR DEFORMED BAR.

PROJECT NO. B-682

BRUNSWICK COUNTY

STATION: 47+08.03 -L- POT

SHEET 3 OF 3

NORTH CAROLINA PROFESSIONAL SEAL 032208 ENGINEER IAN C. ENGSTROM 12-23-07

PLANS PREPARED BY:

PARSONS TRANSPORTATION GROUP
Engineers and Planners
RALEIGH, NORTH CAROLINA

STATE OF NORTH CAROLINA
DEPARTMENT OF TRANSPORTATION
RALEIGH

SUBSTRUCTURE
BENT 22 DETAILS

REVISIONS						SHEET NO.
NO.	BY:	DATE:	NO.	BY:	DATE:	S-127
1			3			TOTAL SHEETS
2			4			227

JOB NO. 645615

DWG. NO.

DRAWN BY : D. RANDALL DATE : JULY 2006
CHECKED BY : I. C. ENGSTROM DATE : JULY 2006

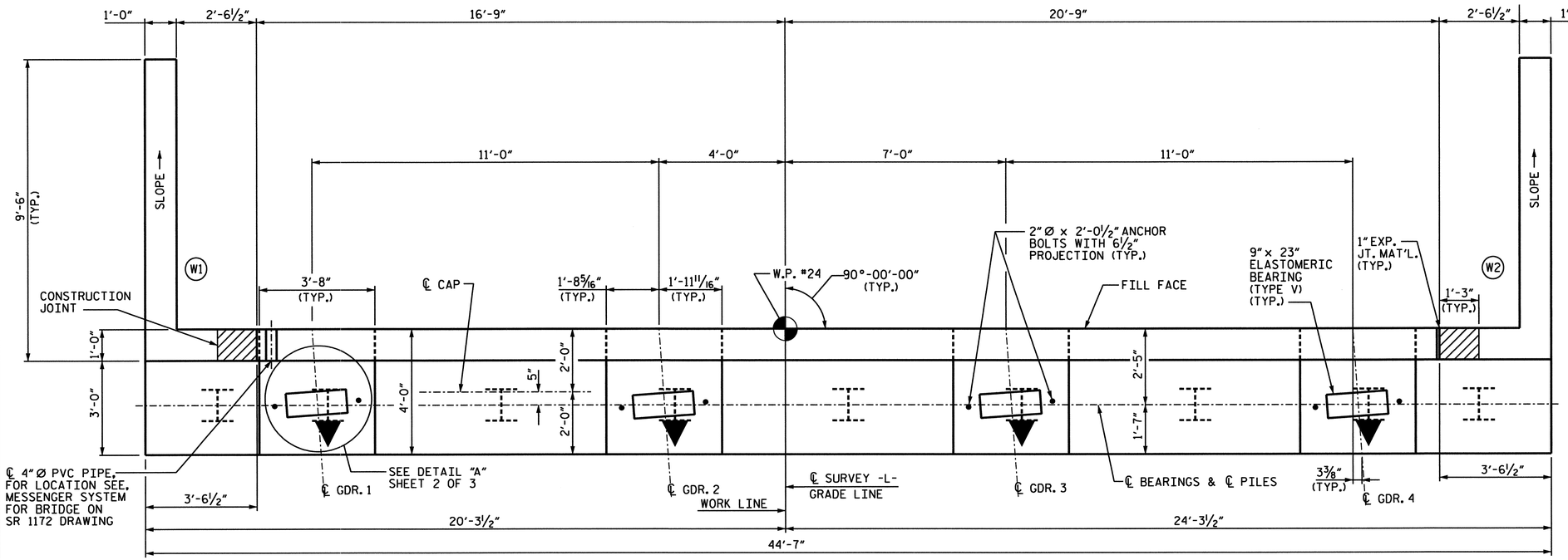

PLAN

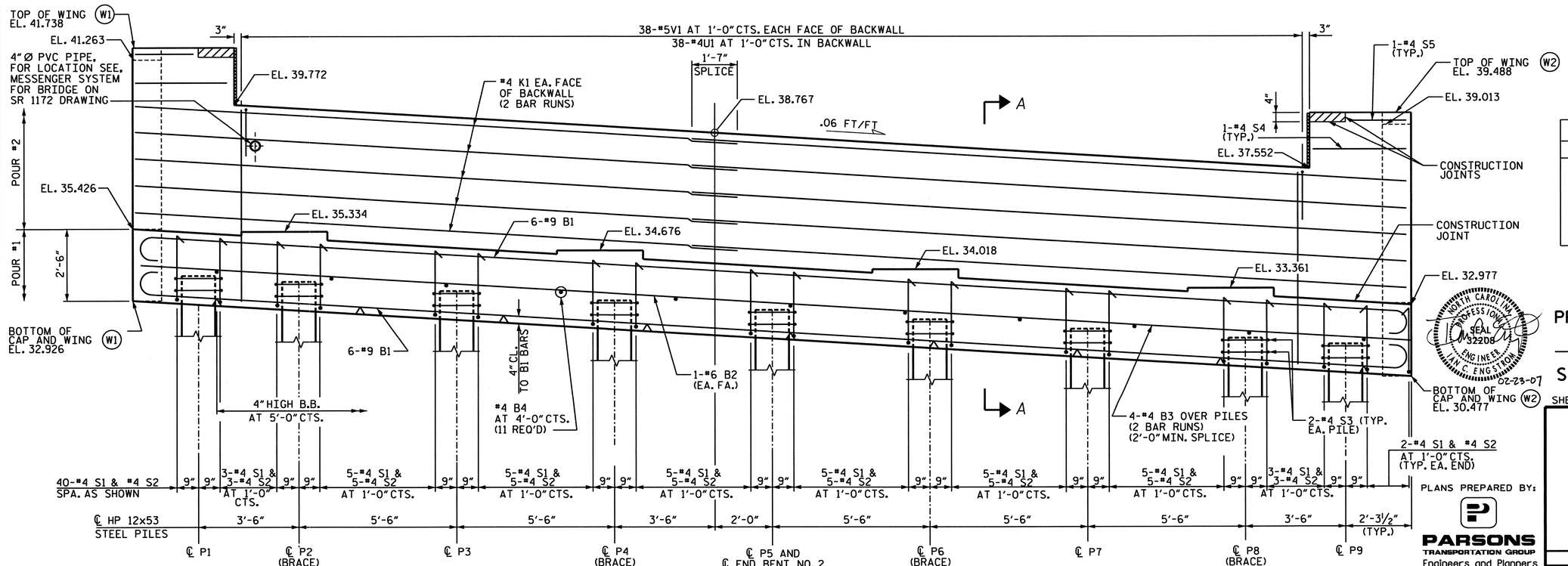

ELEVATION

NOTES:

FOR SECTIONS A-A AND B-B, SEE SHEET 2 OF 3.

FOR PILE SPLICE DETAILS, SEE SHEET 2 OF 3.

BACKWALL SHALL BE PLACED BEFORE APPLYING THE EPOXY PROTECTIVE COATING.

THE TOP SURFACE AREAS OF THE END BENT CAPS SHALL BE CURED IN ACCORDANCE WITH THE STANDARD SPECIFICATIONS EXCEPT THAT THE MEMBRANE CURING COMPOUND METHOD SHALL NOT BE USED.

THE TOP SURFACE OF THE CAP EXCEPT THE BRIDGE SEAT BUILDUPS SHALL BE SLOPED TRANSVERSELY FROM THE FILL FACE TO THE BACK FACE AT THE RATE OF 2%.

THE CONCRETE IN THE SHADED AREA OF THE WING SHALL BE POURED AFTER THE JOINT BETWEEN THE DECK AND APPROACH SLAB HAS BEEN SAWED AND THE PARAPET AND END POST ARE CAST IF SLIP FORMING IS USED.

THE CONTRACTOR SHALL PROVIDE FOR INSTALLATION OF THE 4" DIA. DRAIN PIPE THROUGH THE WING WALL AS REQUIRED FOR REINFORCED BRIDGE APPROACH FILLS. SEE THE ROADWAY PLANS. REINFORCING STEEL IN THE WINGWALL MAY BE SHIFTED AS NECESSARY TO CLEAR THE DRAIN PIPE.

STIRRUPS IN CAP MAY BE SHIFTED AS NECESSARY TO CLEAR ANCHOR BOLTS.

TOP OF PILE ELEVATIONS			
MARK	ELEV.	MARK	ELEV.
P1	33.828	P6	32.427
P2	33.635	P7	32.125
P3	33.333	P8	31.823
P4	33.031	P9	31.630
P5	32.729		

NORTH CAROLINA PROFESSIONAL SEAL 32208 ENGINEER IAN C ENGSTROM 02-23-07

PROJECT NO. B-682

BRUNSWICK COUNTY

STATION: 47+08.03 -L- POT

SHEET 1 OF 3

STATE OF NORTH CAROLINA
DEPARTMENT OF TRANSPORTATION
RALEIGH

SUBSTRUCTURE END BENT 2

PLANS PREPARED BY:

PARSONS TRANSPORTATION GROUP
Engineers and Planners
RALEIGH, NORTH CAROLINA

JOB NO. 645615

DWG. NO.

REVISIONS							SHEET NO.
NO.	BY:	DATE:	NO.	BY:	DATE:		S-138
1			3				TOTAL SHEETS
2			4				257

DRAWN BY : D. RANDALL DATE : JULY 2006
CHECKED BY : I. C. ENGSTROM DATE : JULY 2006

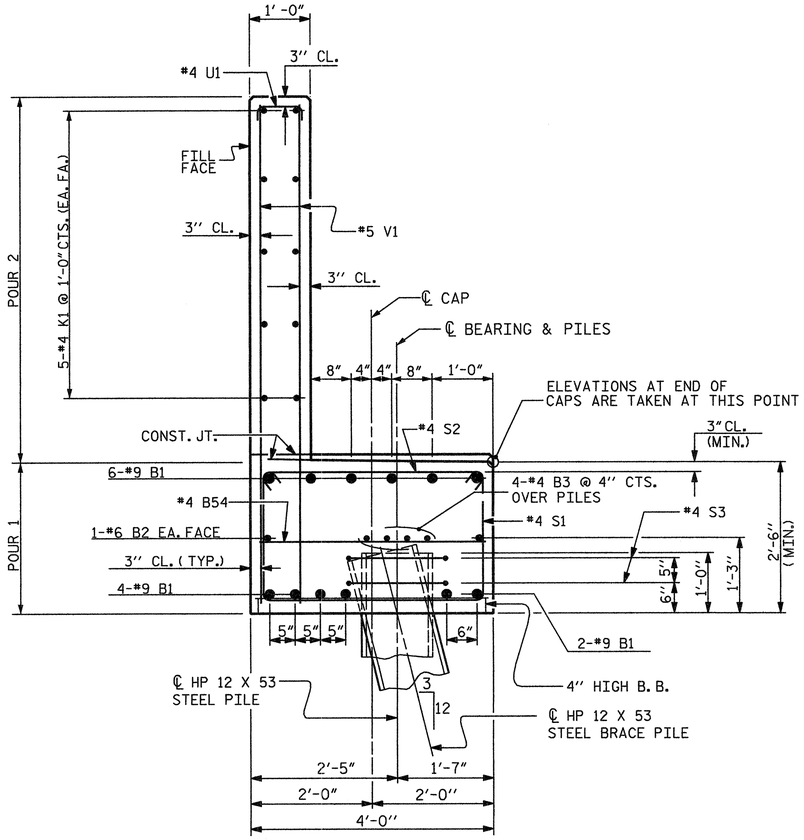

SECTION A-A

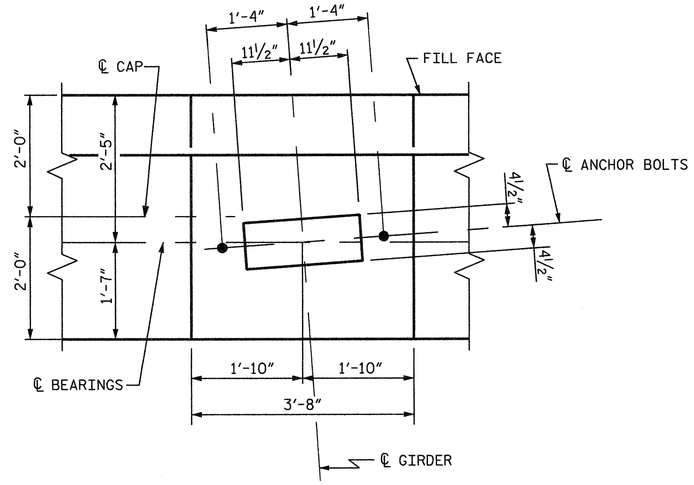

DETAIL "A" (TYP.)

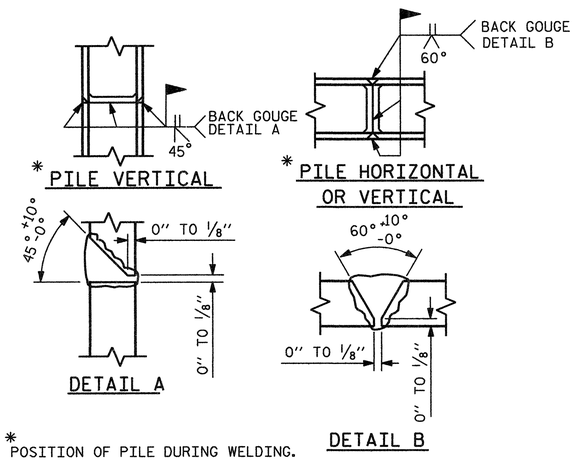

* POSITION OF PILE DURING WELDING.

PILE SPLICE DETAILS

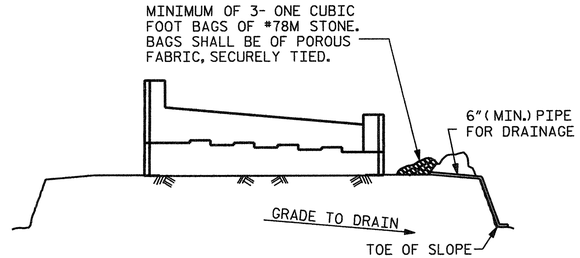

BAGGED STONE AND PIPE SHALL BE PLACED IMMEDIATELY AFTER COMPLETION OF END BENT EXCAVATION. PIPE MAY BE EITHER CONCRETE, CORRUGATED STEEL, CORRUGATED ALUMINUM ALLOY, OR CORRUGATED PLASTIC. PERFORATED PIPE WILL NOT BE ALLOWED.

BAGGED STONE SHALL REMAIN IN PLACE UNTIL THE ENGINEER DIRECTS THAT IT BE REMOVED. THE CONTRACTOR SHALL REMOVE AND DISPOSE OF SILT ACCUMULATIONS AT BAGGED STONE WHEN SO DIRECTED BY THE ENGINEER. BAGS SHALL BE REMOVED AND REPLACED WHENEVER THE ENGINEER DETERMINES THAT THEY HAVE DETERIORATED AND LOST THEIR EFFECTIVENESS.

NO SEPARATE PAYMENT WILL BE MADE FOR THIS WORK AND THE ENTIRE COST OF THIS WORK SHALL BE INCLUDED IN THE UNIT CONTRACT PRICE BID FOR THE SEVERAL PAY ITEMS.

TEMPORARY DRAINAGE AT END BENT

DRAWN BY : D. RANDALL DATE : JULY 2006
CHECKED BY : I. C. ENGSTROM DATE : JULY 2006

PROJECT NO. B-682
BRUNSWICK COUNTY
STATION: 47+08.03 -L- POT

SHEET 2 OF 3

NORTH CAROLINA PROFESSIONAL SEAL 32208 ENGINEER IAN C. ENGSTROM
01/08/07

PLANS PREPARED BY:

PARSONS TRANSPORTATION GROUP
Engineers and Planners
RALEIGH, NORTH CAROLINA

STATE OF NORTH CAROLINA
DEPARTMENT OF TRANSPORTATION
RALEIGH

SUBSTRUCTURE END BENT 2

JOB NO. 645615	REVISIONS						SHEET NO.
	NO.	BY:	DATE:	NO.	BY:	DATE:	S-199
DWG. NO.	1			3			TOTAL SHEETS
	2			4			227

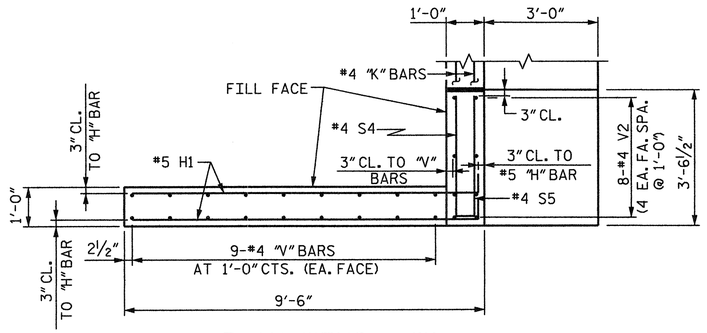

PLAN WING - W1

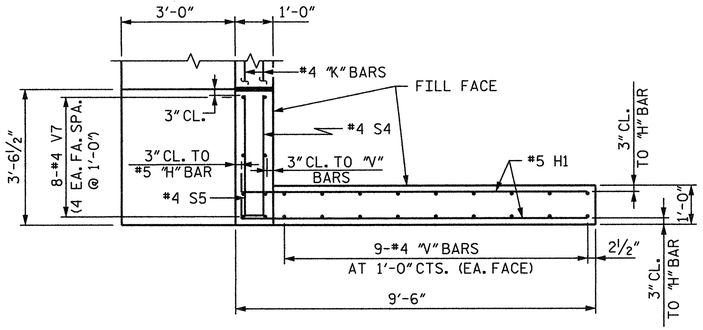

PLAN WING - W2

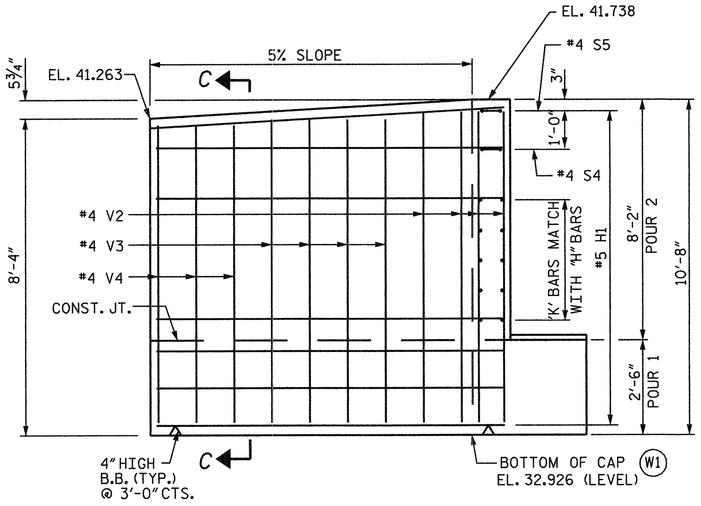

ELEVATION WING - W1

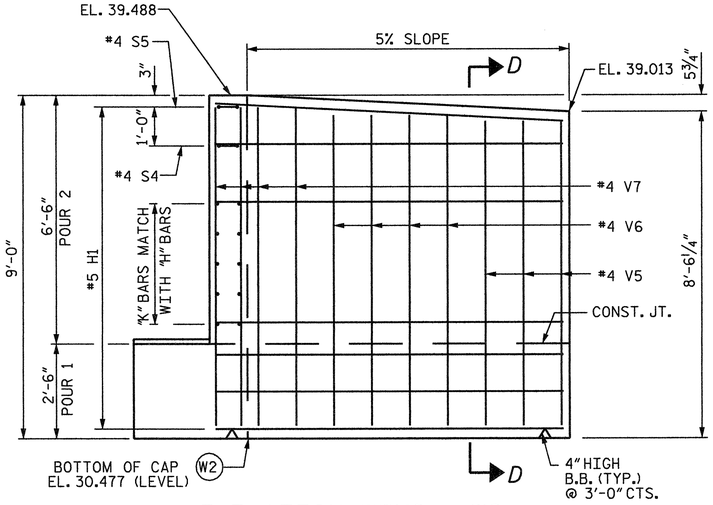

ELEVATION WING - W2

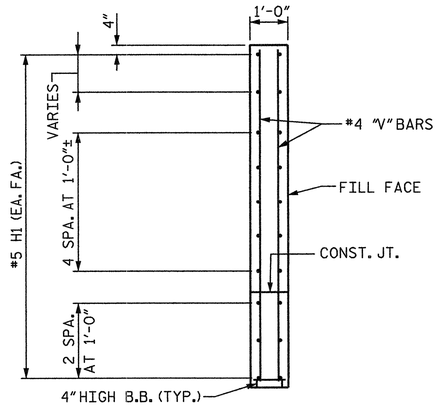

SECTION C-C

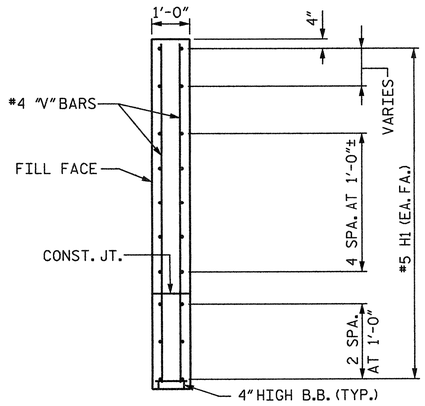

SECTION D-D

BAR TYPES

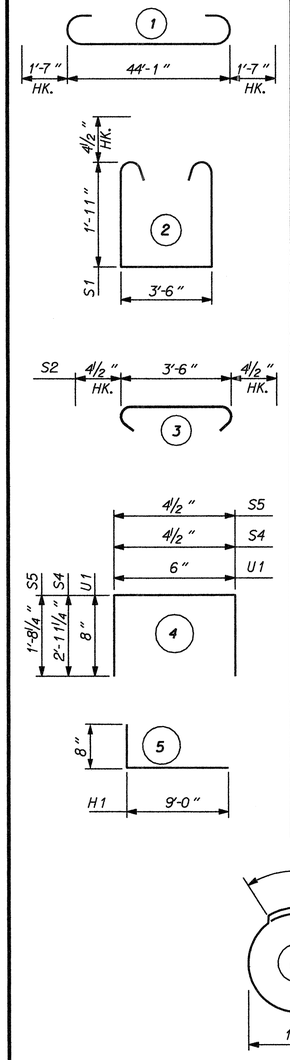

ALL BAR DIMENSIONS ARE OUT TO OUT

BILL OF MATERIAL
END BENT 2

BAR	NO.	SIZE	TYPE	LENGTH (ft)	WEIGHT (lb)
B1	12	9	1	47'-3"	1928
B2	2	6	STR.	44'-1"	132
B3	8	4	STR.	23'-1"	123
B4	11	4	STR.	3'-6"	36
H1	40	5	5	9'-8"	403
K1	20	4	STR.	22'-10"	305
S1	40	4	2	8'-1"	216
S2	40	4	3	4'-3"	114
S3	18	4	6	6'-6"	78
S4	2	4	4	6'-3"	8
S5	2	4	4	3'-9"	5
U1	38	4	4	1'-10"	47
V1	76	5	STR.	6'-6"	515
V2	12	4	STR.	8'-2"	65
V3	8	4	STR.	8'-0"	43
V4	6	4	STR.	7'-10"	31
V5	6	4	STR.	8'-1"	32
V6	8	4	STR.	8'-3"	44
V7	12	4	STR.	8'-5"	67

EPOXY COATED REINFORCING STEEL 4192 lb.

CLASS "AA" CONCRETE BREAKDOWN
POUR 1 18.7 yd³
POUR 2 13.5 yd³
TOTAL CLASS "AA" CONCRETE 32.2 yd³

HP 12x53 STEEL PILES
NO.9 FEET 675

DRAWN BY : D. RANDALL DATE : JULY 2006
CHECKED BY : I. C. ENGSTROM DATE : JULY 2006

PROJECT NO. B-682
BRUNSWICK COUNTY
STATION: 47+08.03 -L- POT

SHEET 3 OF 3

NORTH CAROLINA PROFESSIONAL SEAL 32208 ENGINEER IAN C. ENGSTROM
6/08/07

PLANS PREPARED BY:
PARSONS TRANSPORTATION GROUP
Engineers and Planners
RALEIGH, NORTH CAROLINA
JOB NO. 645615
DWG. NO.

STATE OF NORTH CAROLINA
DEPARTMENT OF TRANSPORTATION
RALEIGH

SUBSTRUCTURE
END BENT 2 DETAILS

REVISIONS						SHEET NO.
NO.	BY:	DATE:	NO.	BY:	DATE:	S-253
1			3			TOTAL SHEETS
2			4			257

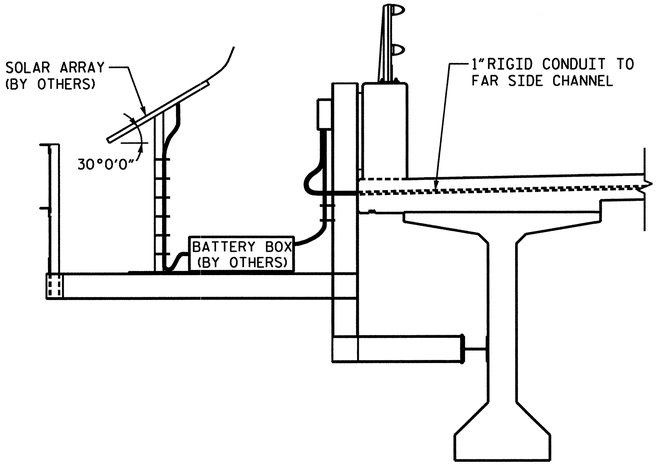

SECTION B-B

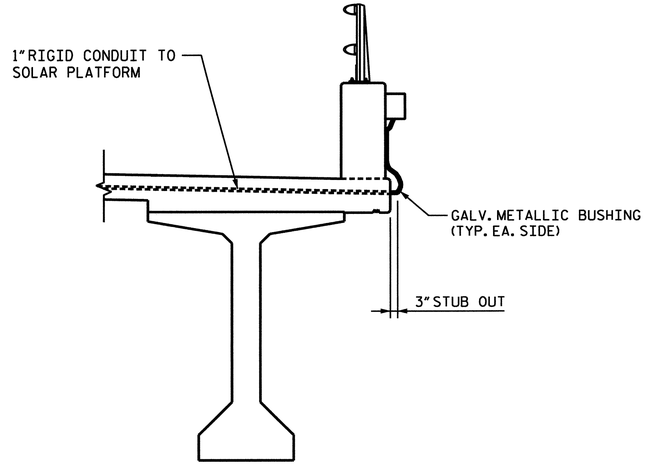

SECTION A-A

NOTES:

FOR NAVIGATIONAL LIGHTING SYSTEM, SEE SPECIAL PROVISIONS.

REFERENCE "SOLAR ARRAY SUPPORT PLATFORM" DRAWING FOR ADDITIONAL DETAILS.

1"RIGID CONDUIT TO BE PLACED DURING SPAN "M" CONSTRUCTION.

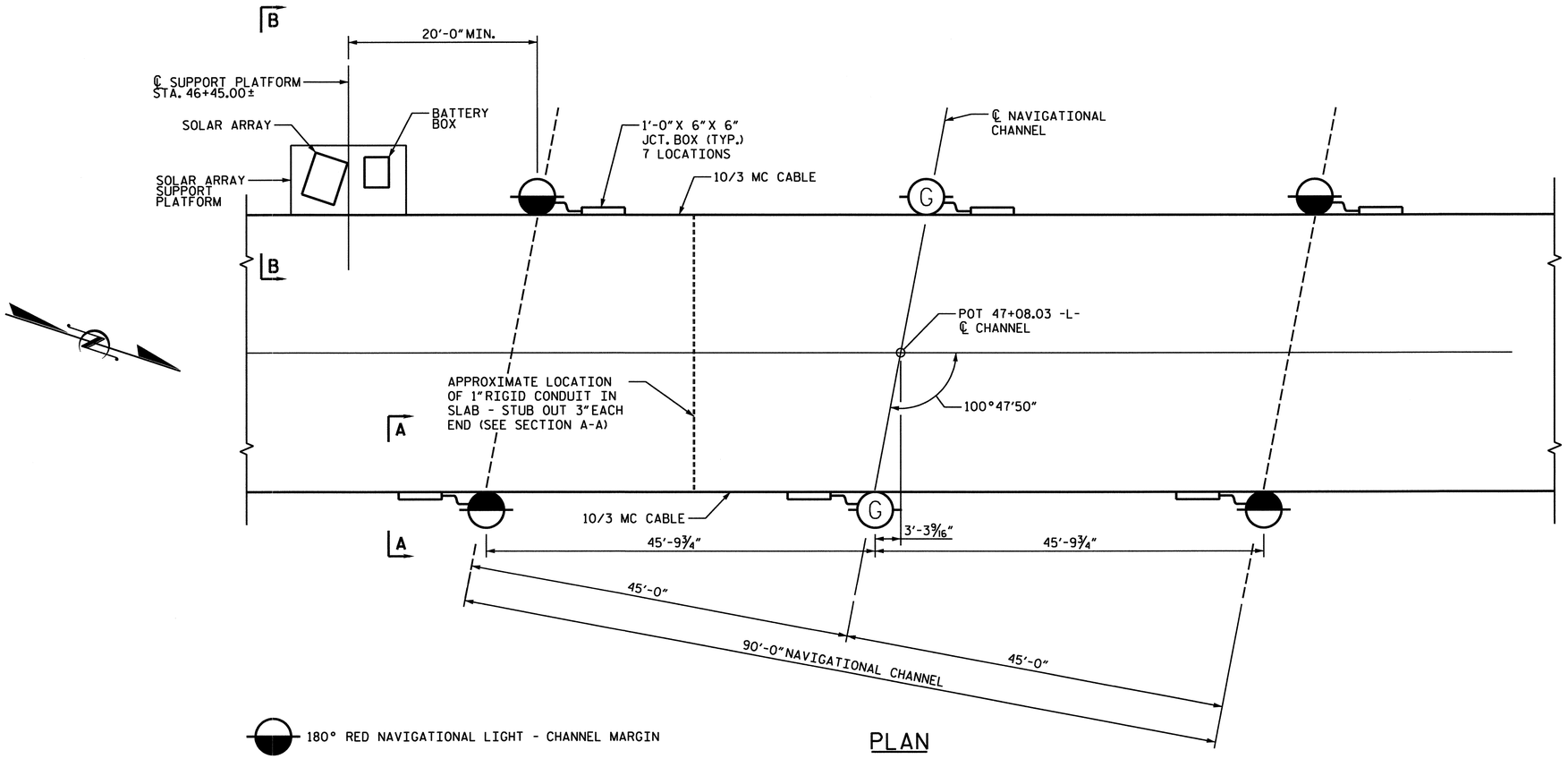

PLAN

PROJECT NO. B-0682

BRUNSWICK COUNTY

STATION: 47+08.03 -L- POT

NORTH CAROLINA PROFESSIONAL SEAL 024928 ENGINEER RODNEY E. MONEY 2/26/07

STATE OF NORTH CAROLINA
DEPARTMENT OF TRANSPORTATION
RALEIGH

NAVIGATIONAL LIGHTING AND CONDUIT SYSTEM

PREPARED IN THE OFFICE OF
TYLIN INTERNATIONAL
RALEIGH, NORTH CAROLINA
Copyright © 2006, TYLI

DWG NO.

REVISIONS						SHEET NO.
NO.	BY:	DATE:	NO.	BY:	DATE:	S-201
1			3			TOTAL SHEETS
2			4			207

DRAWN BY : T. S. KELLEY DATE : NOV. 06
CHECKED BY : R.E. MONEY DATE : NOV. 06

DATE: $DATE$
FILE: $FILENAME$

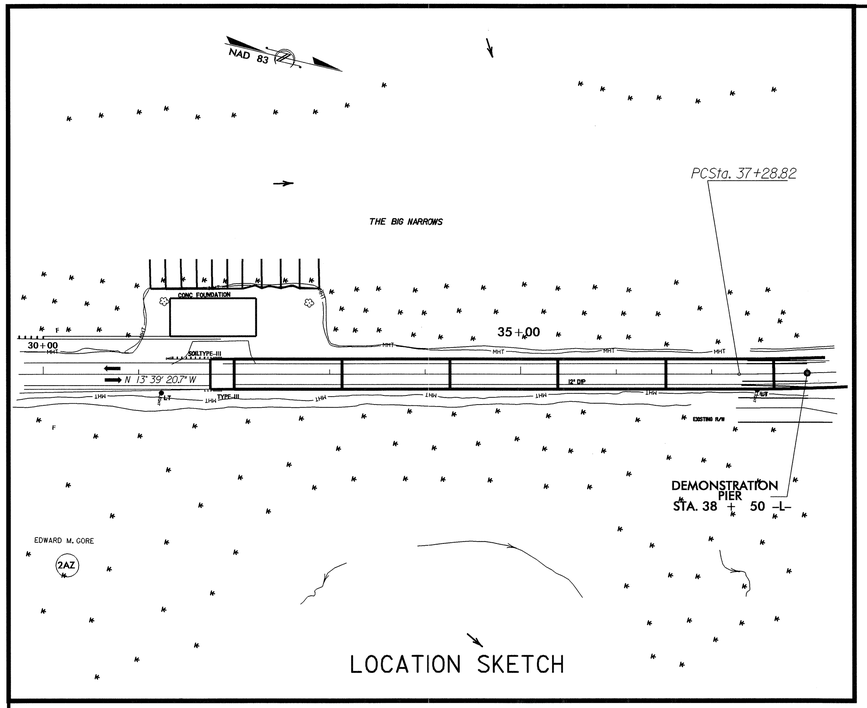

LOCATION SKETCH

NOTES:

THE CONTRACTOR'S ATTENTION IS CALLED TO THE FACT THAT THE V2 BARS ARE DETAILED WITH 1.5 FEET OF EXTRA LENGTH.

FOR DRILLED PIERS, SEE SPECIAL PROVISIONS.

PERMANENT STEEL CASING IS NOT REQUIRED FOR DEMONSTRATION PIER.

SPT TESTING IS REQUIRED TO DETERMINE THE END BEARING CAPACITY OF THE DEMONSTRATION PIER. SEE DRILLED PIERS SPECIAL PROVISION.

POLYMER SLURRY IS REQUIRED FOR THE DEMONSTRATION PIER. SEE DRILLED PIERS SPECIAL PROVISION.

SID INSPECTIONS ARE REQUIRED TO INSPECT THE BOTTOM CLEANLINESS OF THE DEMONSTRATION PIER. SEE DRILLED PIERS SPECIAL PROVISION.

FOR AXIAL LOAD TEST SEE AXIAL LOAD TEST SPECIAL PROVISION.

CSL TUBES AND CSL TESTING ARE REQUIRED FOR THE DEMONSTRATION PIER. SEE CROSSHOLE SONIC LOGGING SPECIAL PROVISION.

DEMONSTRATION PIER SHALL EXTEND TO ELEVATION -80 FT.

FOR MATERIAL PROPERTIES, SEE SPECIAL PROVISIONS ("DRILLED PIERS").

CONSTRUCT DEMONSTRATION PIER IN ACCORDANCE WITH THE DRILLED PIER SPECIAL PROVISION AND THE AXIAL LOAD TEST SPECIAL PROVISION.

SONIC CALIPER TESTING (SCT) IS REQUIRED TO INSPECT THE VERTICALITY AND DIAMETER OF THE DEMONSTRATION PIER. SEE SONIC CALIPER TESTING SPECIAL PROVISION.

FOR WELDING OF BARS TO THE OSTERBERG CELLS, SEE SPECIAL PROVISIONS.

THE "SP" SPIRAL REINFORCING STEEL SHALL BE W31 OR D31 COLD DRAWN WIRE OR #5 PLAIN OR DEFORMED BAR.

PUMP CONCRETE IN A PIPE WITH A DIAMETER SIZE THAT ALLOWS THE PIPE TO PASS THROUGH THE BEARING PLATES TO THE BOTTOM OF THE DEMONSTRATION PIER.

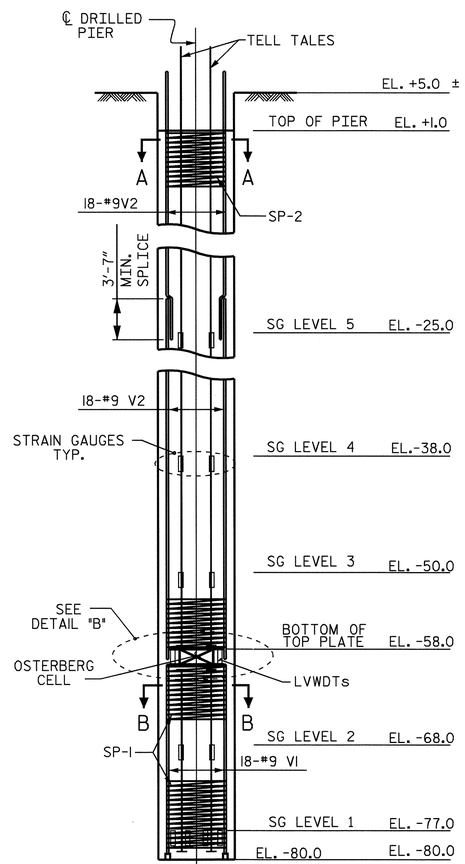

ELEVATION

SG LEVEL # DENOTES STRAIN GAUGE ELEVATIONS

BAR TYPES

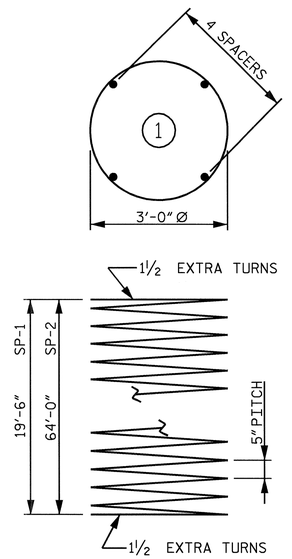

ALL BAR DIMENSIONS ARE OUT TO OUT.

BILL OF MATERIAL

DEMONSTRATION PIER

BAR	NUMBER	SIZE	TYPE	LENGTH	WEIGHT
V1	18	#9	STR	19'-6"	1193
V2	36	#9	STR	35'-6"	4345
SP-1	1	#5	1	441'-6"	460
SP-2	1	#5	1	1450'-10"	1513

EPOXY COATED REINFORCING STEEL (LBS.)		5538
SPIRAL REINFORCING STEEL (LBS.)		1973
4'-0" Ø DRILLED PIER	(LIN. FT.)	81.00
DRILLED PIER CONCRETE POUR #1 DRILLED PIERS	(C.Y.)	37.7

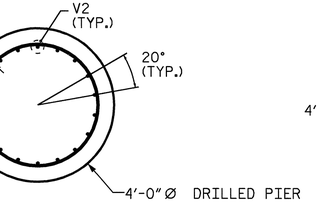

SECTION A-A

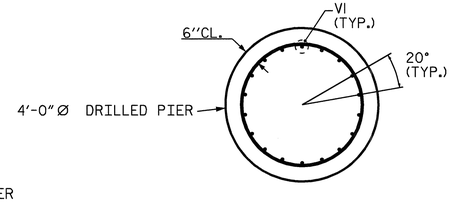

SECTION B-B

FOR CLARITY, SECTIONS "A-A" AND "B-B" OMITTED DETAILS OF TEST INSTRUMENTATION.

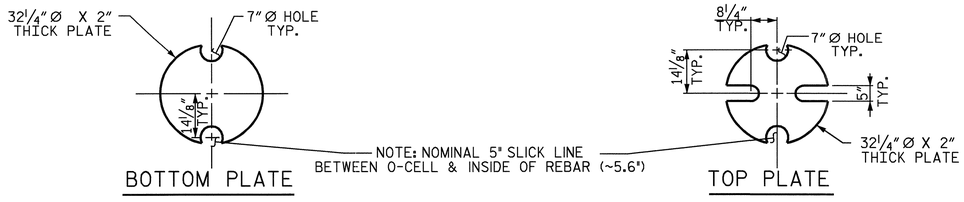

32.25" Ø X 2" THICK PLATE

(32.25" OR INSIDE DIAMETER OF REBAR CAGE)

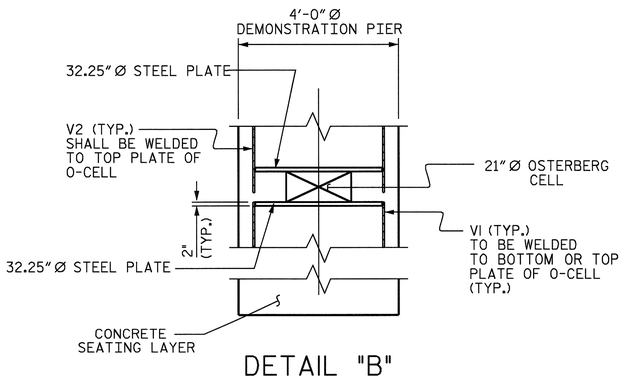

DETAIL "B"

ASSEMBLY STEPS:

1. O-CELL FITTED WITH TOP AND BOTTOM STEEL PLATES.
2. TOP AND BOTTOM STEEL PLATES OF O-CELL ASSEMBLY WELDED TO NON-CONTINUOUS REINFORCING CAGE WITH FILLET WELDS ON BOTH SIDES OF REBAR.
3. REINFORCING CAGE LOWERED INTO EXCAVATION AND SECURED AT REQUIRED ELEVATION.

PROJECT NO. B-0682

BRUNSWICK COUNTY

STATION: 47+08.03 -L- POT

STATE OF NORTH CAROLINA
DEPARTMENT OF TRANSPORTATION
RALEIGH

AXIAL LOAD TEST

REVISIONS						SHEET NO.
NO.	BY:	DATE:	NO.	BY:	DATE:	5-207
1			3			TOTAL SHEETS
2			4			257

DRAWN BY : H. A. LUCAS DATE : 12/06
CHECKED BY : R.D. MARTIN DATE : 2/07

PROJECT REFERENCE NO.	SHEET NO.
B-682	E1

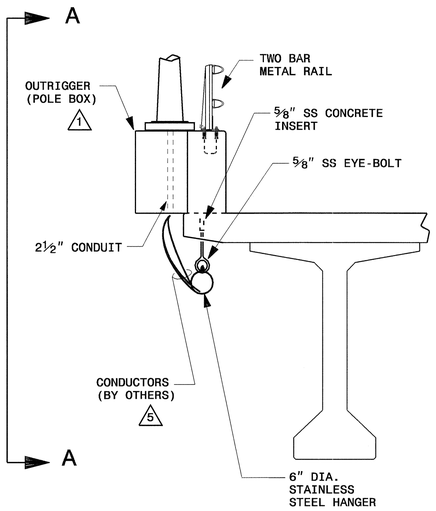

VIEW A-A

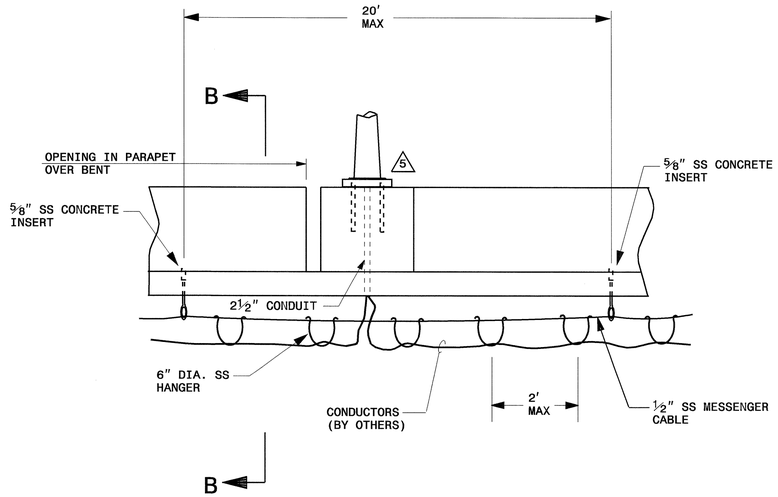

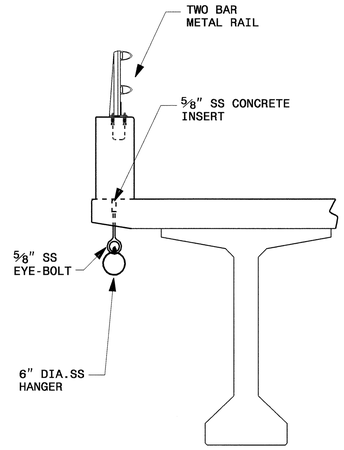

VIEW B-B

NOTES

1. SEE RAIL POST SPACING PLANS FOR LOCATIONS AND DETAILS FOR OUTRIGGERS (POLE BOXES) AND ANCHOR BOLTS.
2. MARK LOCATION OF STUB-OUT WITH POLYETHYLENE WARNING TAPE BURIED WITH CONDUIT AND EXPOSED ON TOP OF GROUND.
3. POLYMER CONCRETE JUNCTION BOX 17"(W) X 30"(L) X 24"(H).
4. INSTALL MESSENGER IN MAXIMUM LENGTHS OF 300 FT. TERMINATE EACH END WITH A STAINLESS STEEL DEADEND.
5. INSTALL ANCHOR BOLTS ACCORDING TO POLE MANUFACTURER SPECIFICATIONS.

SS = STAINLESS STEEL

MESSENGER SYSTEM INSTALLATION DETAILS

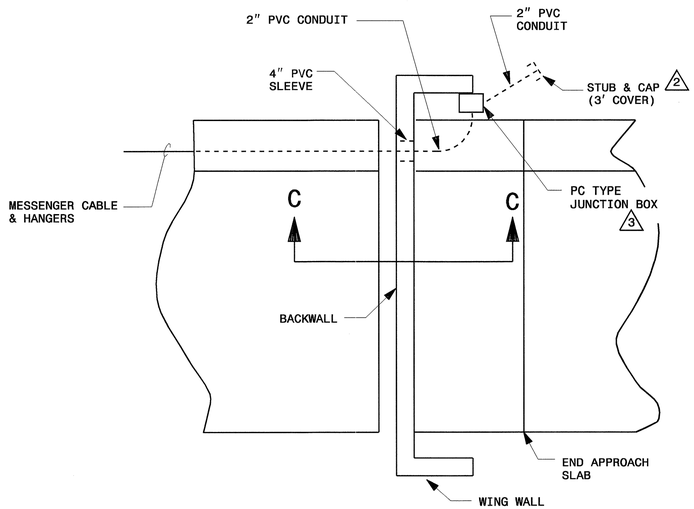

PLAN VIEW

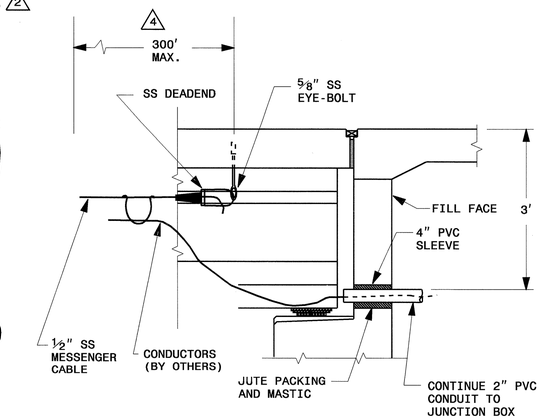

VIEW C-C

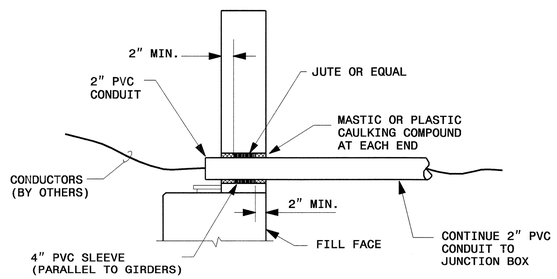

INSTALLATION AT PVC SLEEVE

TERMINATION OF MESSENGER AT END OF BRIDGE

TYPICAL @ EACH END BENT

SEE PROJECT SPECIAL PROVISIONS TITLED "MESSENGER CABLE SYSTEM" FOR MATERIALS, CONSTRUCTION METHODS AND PAYMENT.

NORTH CAROLINA PROFESSIONAL SEAL 022582 ENGINEER KI-BUN CHUNG
11/30/06

PROJECT NO. B-682

BRUNSWICK COUNTY

STATION: 47+08.03 -L- POT

SHEET 1 OF 1

STATE OF NORTH CAROLINA
DEPARTMENT OF TRANSPORTATION
RALEIGH
DESIGN SERVICES LIGHTING & ELECTRICAL

MESSENGER SYSTEM FOR BRIDGE ON SR 1172 OVER ATLANTIC INTRACOASTAL WATERWAY AT SUNSET BEACH

REVISIONS						SHEET NO.
NO.	BY:	DATE:	NO.	BY:	DATE:	E-703
1			3			TOTAL SHEETS
2			4			7

DRAWN BY : P.K.CHAN DATE : 11/30/06
CHECKED BY : DATE : 11-30-06

30-NOV-2006 11:31 r:\lightunge\electrical\ecs\b682_1e_mess_sys.dgn $$$$USERNAME$$$$

2/3/98

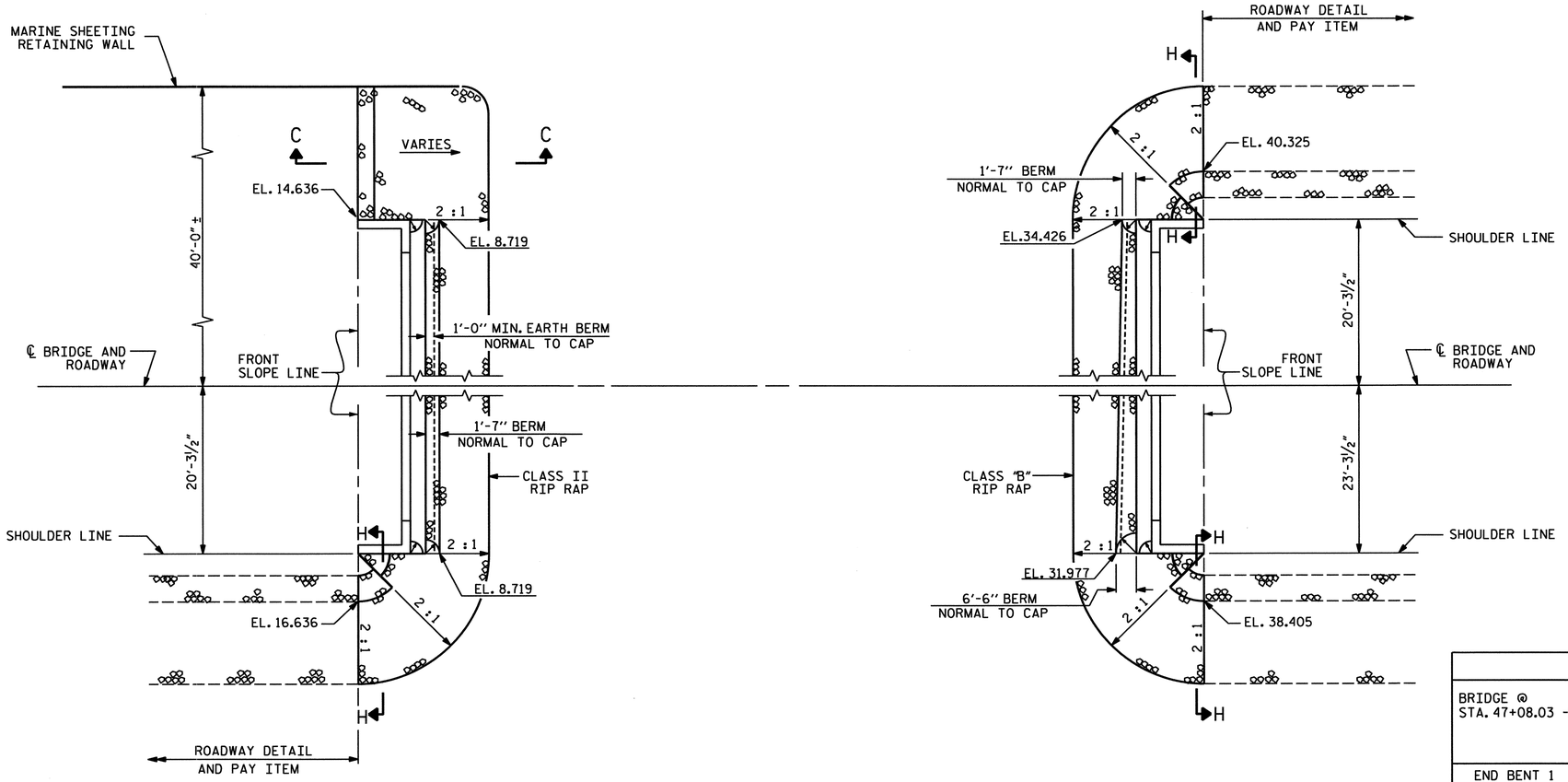

ESTIMATED QUANTITIES			
BRIDGE @ STA. 47+08.03 -L -	RIP RAP CLASS II	RIP RAP CLASS B	FILTER FABRIC FOR DRAINAGE
	TONS	TONS	SQUARE YARDS
END BENT 1	219		243.3
END BENT 2		445	493.5

SHOULDER RIP RAP IS HIGHER THAN BERM RIP RAP

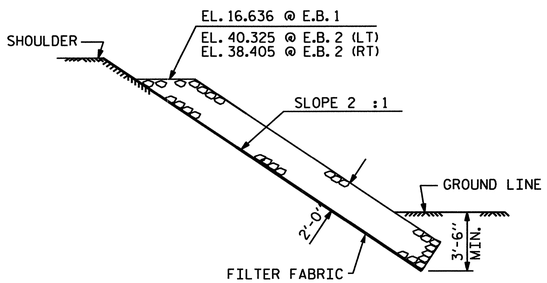

SECTION H-H

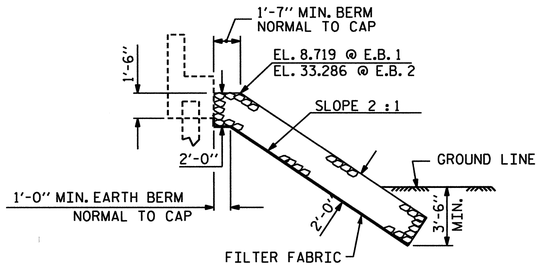

℄ SECTION @ END BENTS
BERM RIP RAPPED

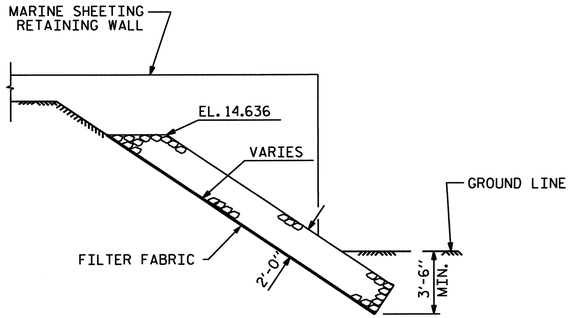

SECTION C-C

THIS STANDARD DRAWING HAS BEEN REVIEWED AND ADAPTED FOR USE AT THE REFERENCED LOCATION BY THE UNDERSIGNED.

NORTH CAROLINA PROFESSIONAL SEAL 15832 ENGINEER JOEL A. LEE
1.17.07

PLANS PREPARED BY:

PARSONS
TRANSPORTATION GROUP
Engineers and Planners
RALEIGH, NORTH CAROLINA

PROJECT NO. B-682
BRUNSWICK COUNTY
STATION: 47+08.03 -L- POT

STATE OF NORTH CAROLINA
DEPARTMENT OF TRANSPORTATION
RALEIGH
STANDARD
RIP RAP DETAILS

REVISIONS						SHEET NO.
NO.	BY:	DATE:	NO.	BY:	DATE:	
JOB NO. 645615	1			3		TOTAL SHEETS
DWG. NO.	2			4		

STD. NO. SP1

ASSEMBLED BY : D. H. Carter		DATE : JULY 2006	
CHECKED BY : J. A. Lee		DATE : JULY 2006	
DRAWN BY : ELR 5/92	REV. 7/10/01	LES/RDR	
CHECKED BY : GRP 6/92	REV. 5/7/03	RWW/JTE	
	REV. 5/1/06	TLA/GM	

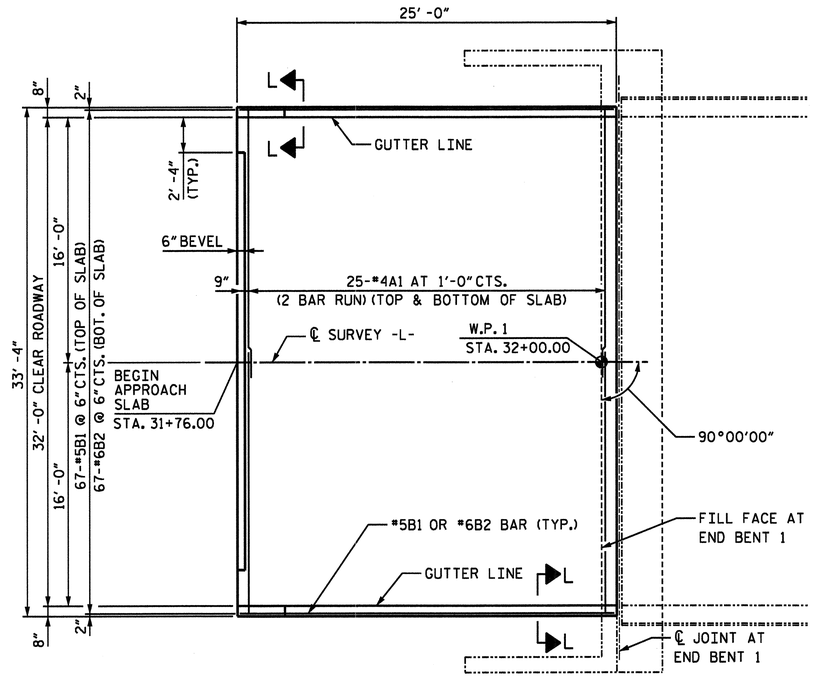

PLAN - APPROACH SLAB 1

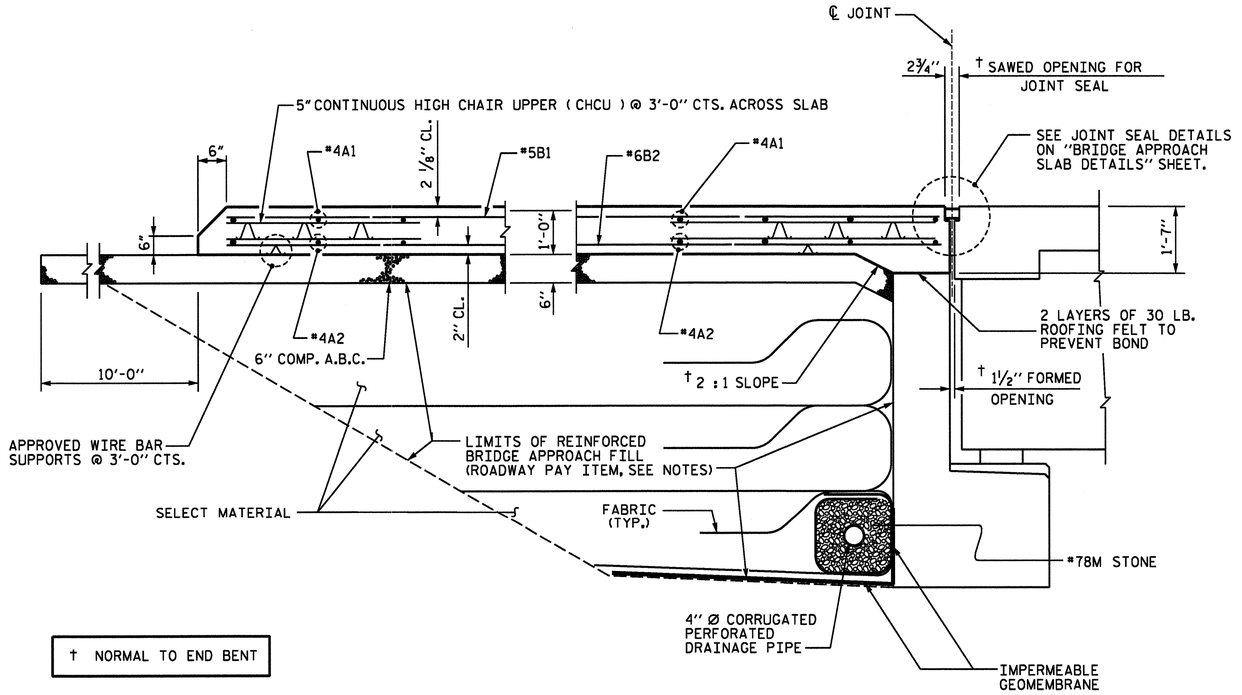

† NORMAL TO END BENT

SECTION THRU SLAB

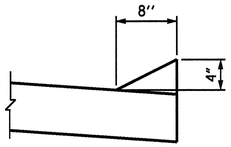

SECTION L-L

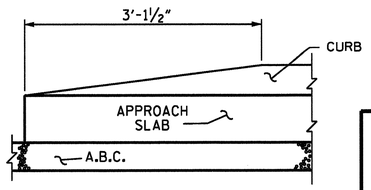

END OF CURB WITHOUT SHOULDER BERM GUTTER

CURB DETAILS

NOTES

APPROACH SLAB SHALL NOT BE CONSTRUCTED PRIOR TO COMPLETION OF THE BRIDGE DECK.

FOR REINFORCED BRIDGE APPROACH FILL INCLUDING FABRIC, IMPERMEABLE GEOMEMBRANE, 4" Ø DRAINAGE PIPE, #78M STONE, AND SELECT MATERIAL, SEE ROADWAY PLANS.

TEMPORARY DRAINAGE AND TEMPORARY BERM AND SLOPE DRAINS WILL BE PAID FOR UNDER THE LUMP SUM PRICE FOR BRIDGE APPROACH SLAB.

AREA BETWEEN THE WINGWALL AND APPROACH SLAB SHALL BE GRADED TO DRAIN THE WATER AWAY FROM THE FILL FACE OF THE BRIDGE AND SHALL BE PAVED, SEE ROADWAY PLANS.

THE 6" COMP. A.B.C. SHALL EXTEND 10'-0" BEYOND THE END OF THE APPROACH SLAB AND 1'-0" OUTSIDE OF EACH EDGE OF THE SLAB.

THE CONTRACTOR MAY USE 4" TYPE B-25.0B ASPHALT CONCRETE BASE COURSE IN LIEU OF 6" COMP. A.B.C. IF THIS OPTION IS USED, THE BASE COURSE SHALL EXTEND 1'-0" BEYOND THE END OF THE APPROACH SLAB AND THE WIDTH SHALL BE THE SAME AS THAT OF THE APPROACH SLAB.

THE CONTRACTOR MAY USE 5" CLASS "A" CONCRETE BASE IN LIEU OF 6" COMP. A.B.C. IF THIS OPTION IS USED, THE CONCRETE BASE SHALL EXTEND 1'-0" BEYOND THE END OF THE APPROACH SLAB AND THE WIDTH SHALL BE THE SAME AS THAT OF THE APPROACH SLAB. THE CONCRETE SHALL BE FINISHED TO A SMOOTH SURFACE AND A LAYER OF 30 LB ROOFING FELT SHALL BE PLACED BETWEEN THE CONCRETE BASE AND THE APPROACH SLAB TO PREVENT BOND. THE APPROACH SLAB SHALL NOT BE CAST UNTIL THE CONCRETE BASE HAS REACHED AN AGE OF THREE CURING DAYS.

THE JOINT SHALL BE SAWED PRIOR TO THE CASTING OF THE PARAPET AND END POST.

WITH EVAZOTE JOINT SEAL

FOR EVAZOTE JOINT SEALS, SEE SPECIAL PROVISIONS.

THE NOMINAL UNCOMPRESSED SEAL WIDTH OF THE EVAZOTE JOINT SEAL SHALL BE 3⅜".

BILL OF MATERIAL

APPROACH SLAB AT EB #1

BAR	NO.	SIZE	TYPE	LENGTH	WEIGHT
A1	100	#4	STR	17'-6"	1169
B1	67	#5	STR	24'-2"	1,689
B2	67	#6	STR	24'-8"	2,482
REINFORCING STEEL				LBS.	
EPOXY COATED REINFORCING STEEL				LBS.	5340
CLASS AA CONCRETE				C.Y.	32.5

** ALL REINFORCING STEEL TO BE EPOXY COATED

MINIMUM SPLICE
#4A1
2'-0"

THIS STANDARD DRAWING HAS BEEN REVIEWED AND ADAPTED FOR USE AT THE REFERENCED LOCATION BY THE UNDERSIGNED.

NORTH CAROLINA PROFESSIONAL SEAL 15832 ENGINEER JOEL A. LEE
1-17-07

PROJECT NO. _____

_____ COUNTY

STATION: _____

SHEET 1 OF 3

STATE OF NORTH CAROLINA
DEPARTMENT OF TRANSPORTATION
RALEIGH

STANDARD
BRIDGE APPROACH SLAB FOR FLEXIBLE PAVEMENT

REVISIONS						SHEET NO.
NO.	BY:	DATE:	NO.	BY:	DATE:	S-203
1			3			TOTAL SHEETS
2			4			207

DWG. NO.

STD. NO. BAS4

ASSEMBLED BY : D. H. Carter	DATE : JULY 2006	
CHECKED BY : J. A. Lee	DATE : JULY 2006	
DRAWN BY : EEM 3/95	REV. 7/10/01	LES/RDR
CHECKED BY : VAP 3/95	REV. 5/7/03	RWW/JTE
	REV. 5/1/06	TLA/GM

b682_sd_as_01.dgn 02/26/2007 03:16:11 PM

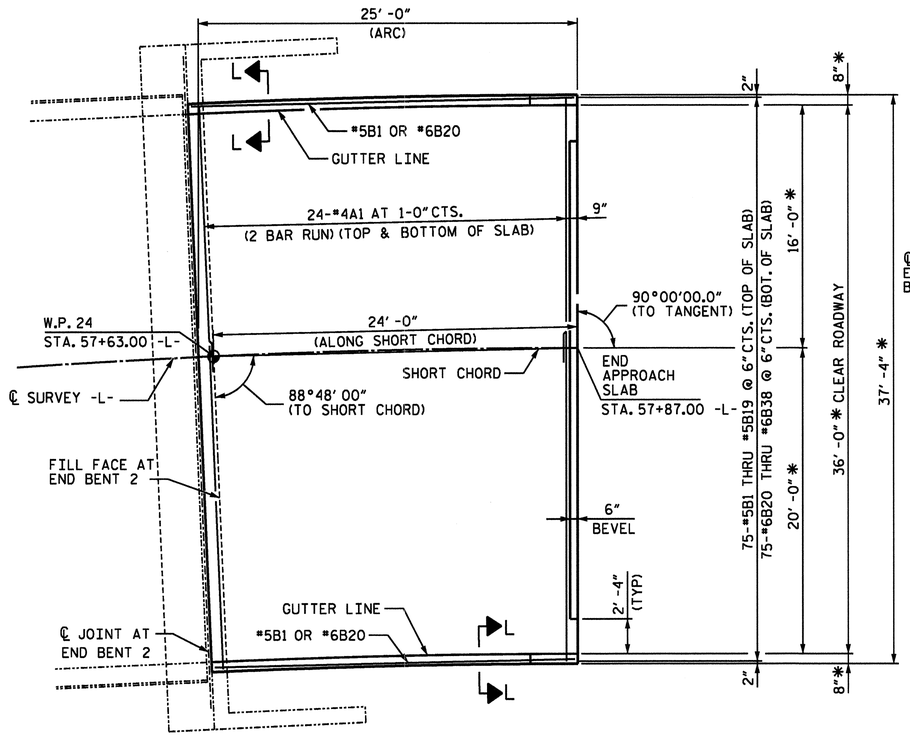

* RADIAL

PLAN - APPROACH SLAB 2

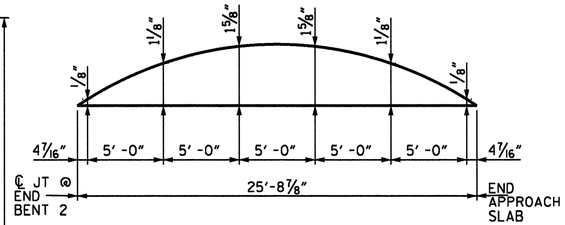

ARC OFFSETS - LEFT SIDE

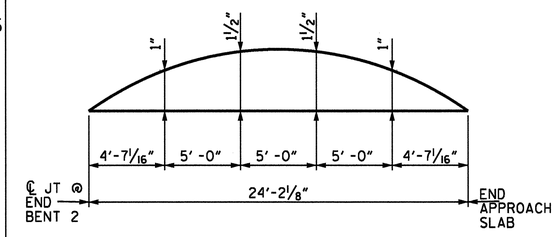

ARC OFFSETS - RIGHT SIDE

NOTES

APPROACH SLAB SHALL NOT BE CONSTRUCTED PRIOR TO COMPLETION OF THE BRIDGE DECK.

FOR REINFORCED BRIDGE APPROACH FILL INCLUDING FABRIC, IMPERMEABLE GEOMEMBRANE, 4" Ø DRAINAGE PIPE, #78M STONE, AND SELECT MATERIAL, SEE ROADWAY PLANS.

TEMPORARY DRAINAGE AND TEMPORARY BERM AND SLOPE DRAINS WILL BE PAID FOR UNDER THE LUMP SUM PRICE FOR BRIDGE APPROACH SLAB.

AREA BETWEEN THE WINGWALL AND APPROACH SLAB SHALL BE GRADED TO DRAIN THE WATER AWAY FROM THE FILL FACE OF THE BRIDGE AND SHALL BE PAVED, SEE ROADWAY PLANS.

THE 6" COMP. A.B.C. SHALL EXTEND 10'-0" BEYOND THE END OF THE APPROACH SLAB AND 1'-0" OUTSIDE OF EACH EDGE OF THE SLAB.

THE CONTRACTOR MAY USE 4" TYPE B-25.0B ASPHALT CONCRETE BASE COURSE IN LIEU OF 6" COMP. A.B.C. IF THIS OPTION IS USED, THE BASE COURSE SHALL EXTEND 1'-0" BEYOND THE END OF THE APPROACH SLAB AND THE WIDTH SHALL BE THE SAME AS THAT OF THE APPROACH SLAB.

THE CONTRACTOR MAY USE 5" CLASS "A" CONCRETE BASE IN LIEU OF 6" COMP. A.B.C. IF THIS OPTION IS USED, THE CONCRETE BASE SHALL EXTEND 1'-0" BEYOND THE END OF THE APPROACH SLAB AND THE WIDTH SHALL BE THE SAME AS THAT OF THE APPROACH SLAB. THE CONCRETE SHALL BE FINISHED TO A SMOOTH SURFACE AND A LAYER OF 30 LB ROOFING FELT SHALL BE PLACED BETWEEN THE CONCRETE BASE AND THE APPROACH SLAB TO PREVENT BOND. THE APPROACH SLAB SHALL NOT BE CAST UNTIL THE CONCRETE BASE HAS REACHED AN AGE OF THREE CURING DAYS.

THE JOINT SHALL BE SAWED PRIOR TO THE CASTING OF THE PARAPET AND END POST.

WITH EVAZOTE JOINT SEAL

FOR EVAZOTE JOINT SEALS, SEE SPECIAL PROVISIONS.

THE NOMINAL UNCOMPRESSED SEAL WIDTH OF THE EVAZOTE JOINT SEAL SHALL BE 2 ½".

MINIMUM SPLICE
*4A1
2'-0"

BILL OF MATERIAL

APPROACH SLAB AT EB #2

BAR	NO.	SIZE	TYPE	LENGTH	WEIGHT
A1	100	#4	STR	19'-6"	1303
B1	3	#5	STR	23'-4"	73
B2	4	#5	STR	23'-5"	98
B3	4	#5	STR	23'-6"	98
B4	4	#5	STR	23'-7"	98
B5	4	#5	STR	23'-8"	99
B6	4	#5	STR	23'-9"	99
B7	4	#5	STR	23'-10"	99
B8	4	#5	STR	23'-11"	100
B9	4	#5	STR	24'-0"	100
B10	4	#5	STR	24'-1"	100
B11	4	#5	STR	24'-2"	101
B12	4	#5	STR	24'-3"	101
B13	4	#5	STR	24'-4"	102
B14	4	#5	STR	24'-5"	102
B15	4	#5	STR	24'-6"	102
B16	4	#5	STR	24'-7"	103
B17	4	#5	STR	24'-8"	103
B18	4	#5	STR	24'-9"	103
B19	4	#5	STR	24'-10"	104
B20	3	#6	STR	23'-10"	107
B21	4	#6	STR	23'-11"	144
B22	4	#6	STR	24'-0"	144
B23	4	#6	STR	24'-1"	145
B24	4	#6	STR	24'-2"	145
B25	4	#6	STR	24'-3"	146
B26	4	#6	STR	24'-4"	146
B27	4	#6	STR	24'-5"	147
B28	4	#6	STR	24'-6"	147
B29	4	#6	STR	24'-7"	148
B30	4	#6	STR	24'-8"	148
B31	4	#6	STR	24'-9"	149
B32	4	#6	STR	24'-10"	149
B33	4	#6	STR	24'-11"	150
B34	4	#6	STR	25'-0"	150
B35	4	#6	STR	25'-1"	151
B36	4	#6	STR	25'-2"	151
B37	4	#6	STR	25'-3"	152
B38	4	#6	STR	25'-4"	152

REINFORCING STEEL	LBS.	
*EPOXY COATED REINFORCING STEEL	LBS.	5,959
CLASS AA CONCRETE	C.Y.	36.2

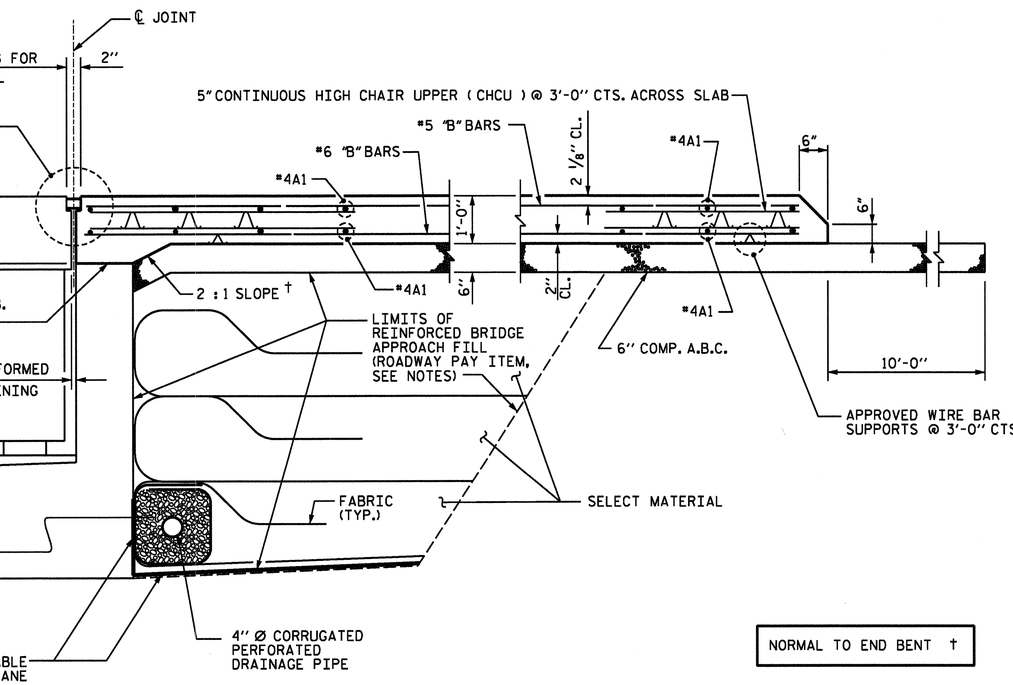

SECTION THRU SLAB

NORMAL TO END BENT †

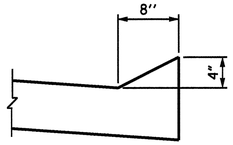

SECTION L-L

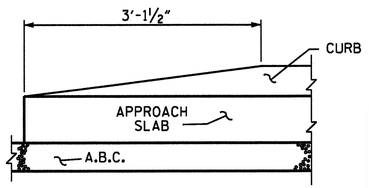

END OF CURB WITHOUT SHOULDER BERM GUTTER

CURB DETAILS

THIS STANDARD DRAWING HAS BEEN REVIEWED AND ADAPTED FOR USE AT THE REFERENCED LOCATION BY THE UNDERSIGNED.

NORTH CAROLINA PROFESSIONAL SEAL 15832 ENGINEER JOEL A. LEWIS
1-11-07

PLANS PREPARED BY:

PARSONS TRANSPORTATION GROUP
Engineers and Planners
RALEIGH, NORTH CAROLINA
JOB NO. 645615
DWG. NO.

PROJECT NO. B-682
BRUNSWICK COUNTY
STATION: 47+08.03 -L- POT

SHEET 2 OF 3

STATE OF NORTH CAROLINA
DEPARTMENT OF TRANSPORTATION
RALEIGH

STANDARD
BRIDGE APPROACH SLAB FOR FLEXIBLE PAVEMENT

REVISIONS						SHEET NO.
NO.	BY:	DATE:	NO.	BY:	DATE:	S-256
1			3			TOTAL SHEETS
2			4			287

STD. NO. BAS4

ASSEMBLED BY : D. H. Carter	DATE : JULY 2006	
CHECKED BY : J. A. Lee	DATE : JULY 2006	
DRAWN BY : EEM 3/95	REV. 10/17/00	RWW/LES
CHECKED BY : VAP 3/95	REV. 7/10/01	LES/RDR
	REV. 5/7/03R	RWW/JTE

b682_sd_as_02.dgn 02/26/2007 03:15:53 PM

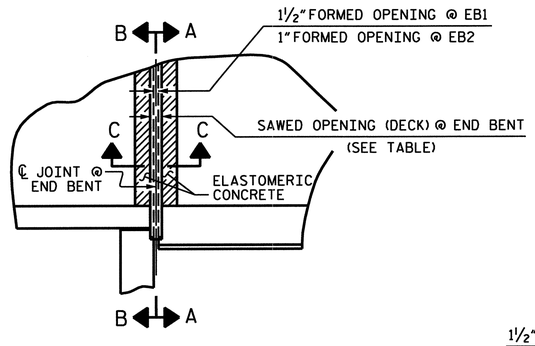

PLAN

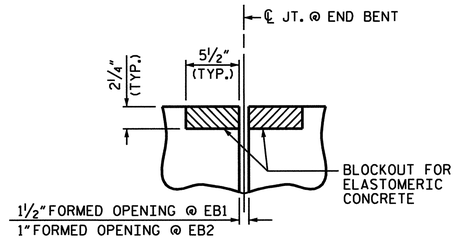

SECTION C-C

EVAZOTE JOINT SEAL
(PRE-SAWED ELASTOMERIC CONCRETE DIMENSIONS)

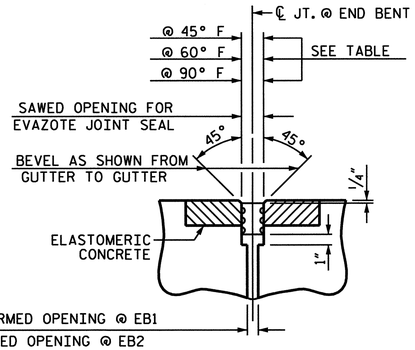

SECTION C-C

EVAZOTE JOINT SEAL
(FOR EVAZOTE JOINT SEAL
SEE SPECIAL PROVISIONS)

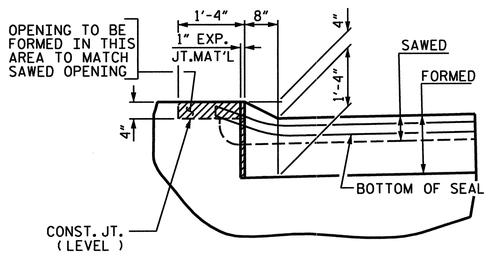

SECTION B-B

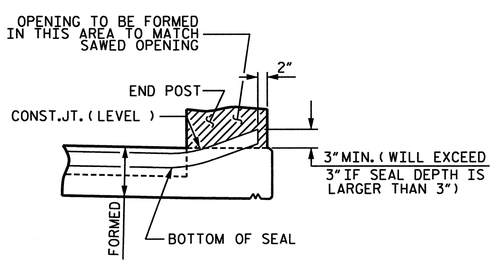

SECTION A-A

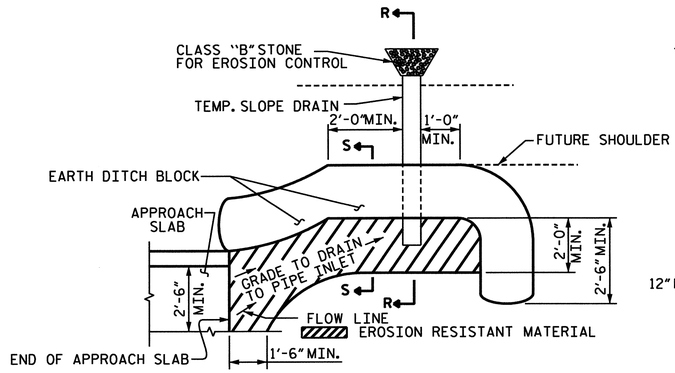

NOTE: IMMEDIATELY AFTER THE CONSTRUCTION OF THE APPROACH SLAB, THE CONTRACTOR SHALL PROVIDE TEMPORARY BERM AND SLOPE DRAIN. CONTRACTOR SHALL GRADE TO PIPE INLET AND PROVIDE EROSION RESISTANT MATERIAL AS SHOWN. THE EROSION RESISTANT MATERIAL SHALL BE EITHER 1) ASPHALT PLANT MIX, TYPE 1 OR TYPE 2, MIN. 2" DEPTH, 2) EROSION CONTROL MAT, OR 3) CONCRETE, AS DIRECTED BY THE ENGINEER. THE SLOPE DRAIN SHALL CONSIST OF A NON-PERFORATED TEMPORARY DRAINAGE PIPE, 12 INCHES IN DIAMETER.

PLAN VIEW

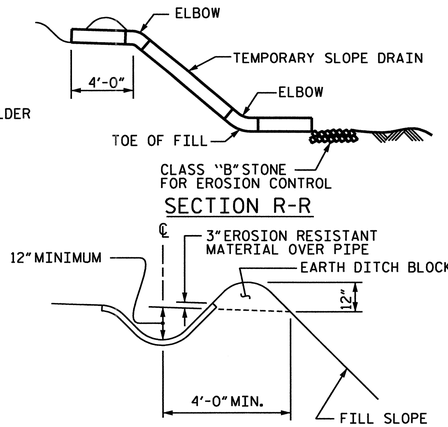

SECTION R-R

SECTION S-S

TEMPORARY BERM AND SLOPE DRAIN DETAILS

ELASTOMERIC CONCRETE	
END BENT NO.	ELASTOMERIC CONCRETE * (CU. FT.)
1	5.5
2	6.2
TOTAL	11.7

* BASED ON THE MINIMUM BLOCKOUT SHOWN.

NOTE: FOR ELASTOMERIC CONCRETE, SEE SPECIAL PROVISIONS

FOR EVAZOTE JOINT SEALS, SEE SPECIAL PROVISIONS.

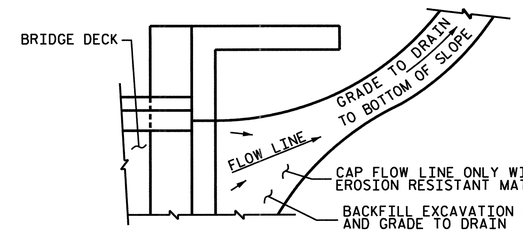

NOTE: IF THE APPROACH SLAB IS NOT CONSTRUCTED IMMEDIATELY AFTER THE BACKFILLING OF THE END BENT EXCAVATION, GRADE TO DRAIN TO THE BOTTOM OF THE SLOPE AND PROVIDE EROSION RESISTANT MATERIAL, SUCH AS FIBERGLASS ROVING OR AS DIRECTED BY THE ENGINEER TO PREVENT SOIL EROSION AND TO PROTECT THE AREA ADJACENT TO THE STRUCTURE. THE CONTRACTOR WILL BE REQUIRED TO REMOVE THESE MATERIALS PRIOR TO CONSTRUCTION OF THE APPROACH SLAB.

TEMPORARY DRAINAGE DETAIL

JOINT SEAL DETAILS @ END BENT

(FOR METAL RAILS WITH CURB)

SAWED OPENING WIDTH				
END BENT NO.	SKEW ANGLE	SAWED OPENING AT 45° F	SAWED OPENING AT 60° F	SAWED OPENING AT 90° F
1	90°	3"	2¾"	2¼"
2	90°	2⅛"	2"	1⅝"

STD. NO. BAS10

ASSEMBLED BY : D. H. Carter		DATE : JULY 2006	
CHECKED BY : J. A. Lee		DATE : JULY 2006	
DRAWN BY : FCJ	11/88	REV. 8/16/99	MAB/LES
CHECKED BY : ARB	11/88	REV. 10/17/00	RWW/LES
		REV. 5/7/03	RWW/JTE

THIS STANDARD DRAWING HAS BEEN REVIEWED AND ADAPTED FOR USE AT THE REFERENCED LOCATION BY THE UNDERSIGNED.

NORTH CAROLINA PROFESSIONAL SEAL 15832 ENGINEER JOEL A. LEE
1-17-07

PLANS PREPARED BY:

PARSONS TRANSPORTATION GROUP
Engineers and Planners
RALEIGH, NORTH CAROLINA

JOB NO. 645615
DWG. NO.

PROJECT NO. B-682

BRUNSWICK COUNTY

STATION: 47+08.03 -L- POT

SHEET 3 OF 3

STATE OF NORTH CAROLINA
DEPARTMENT OF TRANSPORTATION
RALEIGH

STANDARD

BRIDGE APPROACH SLAB DETAILS

REVISIONS						SHEET NO.
NO.	BY:	DATE:	NO.	BY:	DATE:	S-257
			3			TOTAL SHEETS
1			4			267
2						

F.A. PROJ. NO.: BRS-1813 (3)

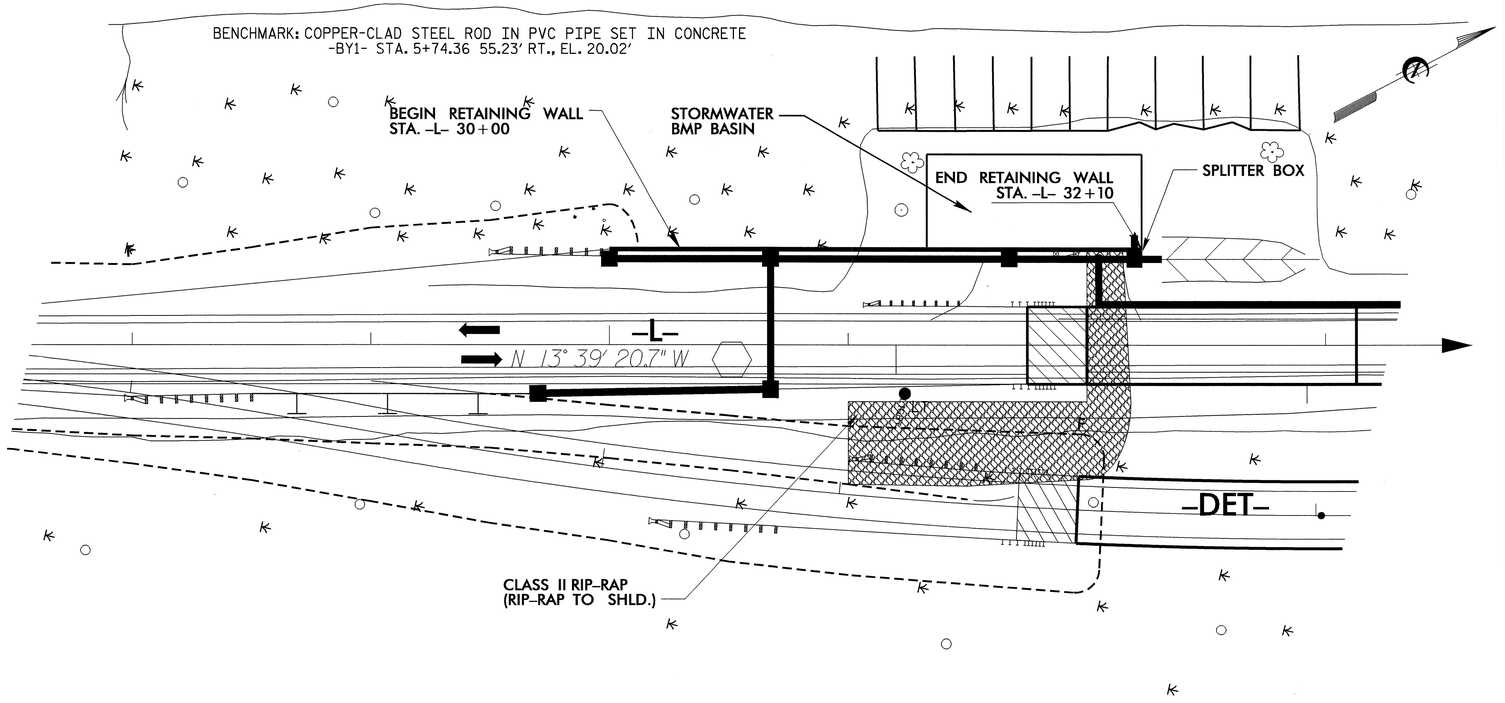

FOR UTILITY INFORMATION, SEE UTILITY PLANS AND SPECIAL PROVISIONS.

LOCATION SKETCH

NOTES

FOR STEEL SHEET PILE RETAINING WALL, SEE SPECIAL PROVISIONS.

FOR CRANE SAFETY, SEE SPECIAL PROVISIONS.

FOR FALSEWORK AND FORMWORK, SEE SPECIAL PROVISIONS.

FOR SUBMITTAL OF WORKING DRAWINGS, SEE SPECIAL PROVISIONS.

THE RETAINING WALL SHALL BE CONSTRUCTED IN ACCORDANCE WITH SECTION 452 OF THE STANDARD SPECIFICATIONS.

THE RETAINING WALL WILL BE MEASURED AND PAID AS THE ACTUAL NUMBER OF SQUARE FEET OF EXPOSED FACE AREA INCORPORATED INTO THE COMPLETED RETAINING WALL. THE RETAINING WALL HEIGHT IS MEASURED AS THE DIFFERENCE BETWEEN THE TOP AND BOTTOM OF THE RETAINING WALL. THE TOP OF THE RETAINING WALL IS DEFINED AS THE TOP OF THE CONCRETE CAP. THE BOTTOM OF THE RETAINING WALL IS DEFINED AS THE EXISTING GROUND LINE.

CLASS AA CONCRETE SHALL BE USED IN THE CAST-IN-PLACE CAP AND SHALL CONTAIN CALCIUM NITRITE CORROSION INHIBITOR.

VERTICAL GROOVED CONTRACTION JOINTS, ½" IN DEPTH, SHALL BE TOOLED IN ALL EXPOSED FACES OF THE CONCRETE CAP AND SPACED A MAXIMUM OF 10 FEET.

INSTALL THE SHEETING TO THE REQUIRED EMBEDMENT AS SHOWN ON THE PLANS.

STEEL SHEET PILING SHALL CONFORM TO THE REQUIREMENTS OF ASTM A690 AND SHALL BE GALVANIZED IN ACCORDANCE WITH THE STANDARD SPECIFICATIONS.

STEEL SHEET PILING SHALL BE HOT ROLLED.

THE SCOUR CRITICAL ELEVATION FOR THE RETAINING WALL IS -10 ft. THE SCOUR CRITICAL ELEVATION IS USED BY MAINTENANCE FORCES TO MONITOR POSSIBLE SCOUR PROBLEMS DURING THE LIFE OF THE STRUCTURE.

USE SELECT MATERIAL CLASS III, ACCORDING TO SECTION 1016 OF THE NCDOT STANDARD SPECIFICATIONS, AS BACKFILL BEHIND THE RETAINING WALL. NO SEPARATE PAYMENT WILL BE MADE FOR THIS ITEM. ALL MATERIALS, EQUIPMENT OR LABOR FOR PLACING AND COMPACTING THIS MATERIAL SHALL BE INCLUDED IN THE CONTRACT BID PRICE FOR SQUARE FOOT OF 22.6" STEEL SHEET PILE RETAINING WALLS.

THE FINISH GRADE OF THE BACK FILL SHALL BE GRADED TO PROVIDE ADEQUATE DRAINAGE AS DIRECTED BY THE ENGINEER.

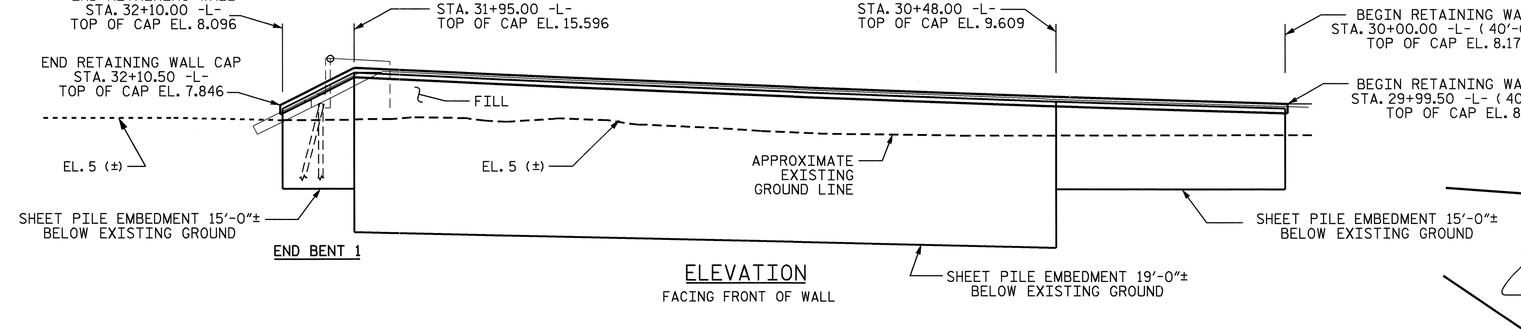

ELEVATION
FACING FRONT OF WALL

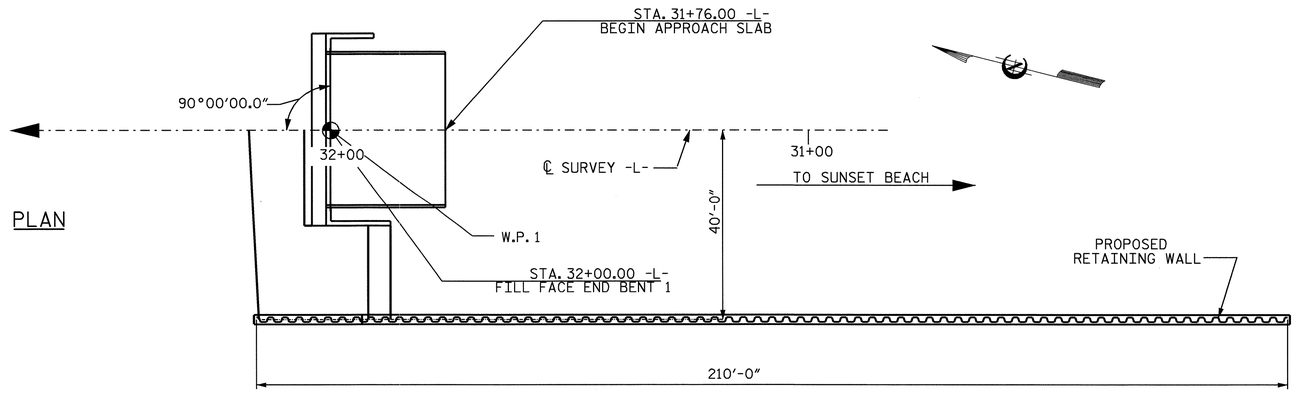

PLAN

PLAN

TOTAL BILL OF MATERIAL

22.6" STEEL SHEET PILE RETAINING WALLS ..... 1897 SQ. FT.

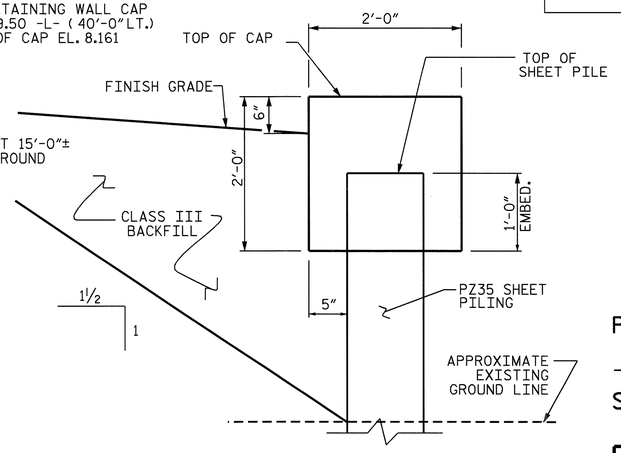

RETAINING WALL CAP DETAIL

PROJECT NO. B-682

BRUNSWICK COUNTY

STATION: 30+00.00 -L-

STATE OF NORTH CAROLINA
DEPARTMENT OF TRANSPORTATION
RALEIGH

STEEL SHEET PILE RETAINING WALL

NORTH CAROLINA PROFESSIONAL SEAL 26962 ENGINEER ERIC N. WILLIAMS 2/28/07

REVISIONS						SHEET NO.
NO.	BY:	DATE:	NO.	BY:	DATE:	W-1
1			3			TOTAL SHEETS
2			4			1

DRAWN BY : H. A. LUCAS DATE : 10/31/06
CHECKED BY : R.D. MARTIN DATE : 2/07

07-FEB-2007 12:33
S:\PG3\hlucas\B-682 Sunset Beach\B682_Retaining_Wall.dgn
hlucas

NCDOS

STANDARD NOTES

DESIGN DATA:

SPECIFICATIONS	A.A.S.H.T.O. (CURRENT)
LIVE LOAD	SEE PLANS
IMPACT ALLOWANCE	SEE A.A.S.H.T.O.
STRESS IN EXTREME FIBER OF	
STRUCTURAL STEEL - AASHTO M270 GRADE 36	20,000 LBS. PER SQ. IN.
- AASHTO M270 GRADE 50W	27,000 LBS. PER SQ. IN.
- AASHTO M270 GRADE 50	27,000 LBS. PER SQ. IN.
REINFORCING STEEL IN TENSION	
GRADE 60	24,000 LBS. PER SQ. IN.
CONCRETE IN COMPRESSION	1,200 LBS. PER SQ. IN.
CONCRETE IN SHEAR	SEE A.A.S.H.T.O.
STRUCTURAL TIMBER - TREATED OR	
UNTREATED - EXTREME FIBER STRESS	1,800 LBS. PER SQ. IN.
COMPRESSION PERPENDICULAR TO GRAIN OF TIMBER	375 LBS. PER SQ. IN.
EQUIVALENT FLUID PRESSURE OF EARTH	30 LBS. PER CU. FT. (MINIMUM)

MATERIAL AND WORKMANSHIP:

EXCEPT AS MAY OTHERWISE BE SPECIFIED ON PLANS OR IN THE SPECIAL PROVISIONS, ALL MATERIAL AND WORKMANSHIP SHALL BE IN ACCORDANCE WITH THE 2002 STANDARD SPECIFICATIONS "FOR ROADS AND STRUCTURES" OF THE N. C. DEPARTMENT OF TRANSPORTATION.

STEEL SHEET PILING FOR PERMANENT OR TEMPORARY APPLICATIONS SHALL BE HOT ROLLED.

CONCRETE:

UNLESS OTHERWISE REQUIRED ON PLANS, CLASS A CONCRETE SHALL BE USED FOR ALL PORTIONS OF ALL STRUCTURES WITH THE EXCEPTION THAT: CLASS AA CONCRETE SHALL BE USED IN BRIDGE SUPERSTRUCTURES, ABUTMENT BACKWALLS, AND APPROACH SLABS; CLASS B CONCRETE SHALL BE USED FOR SLOPE PROTECTION AND RIP RAP; AND CLASS S SHALL BE USED FOR UNDERWATER FOOTING SEALS.

CONCRETE CHAMFERS:

UNLESS OTHERWISE NOTED ON THE PLANS, ALL EXPOSED CORNERS ON STRUCTURES SHALL BE CHAMFERED 3/4" WITH THE FOLLOWING EXCEPTIONS: TOP CORNERS OF CURBS MAY BE ROUNDED TO 1-1/2" RADIUS WHICH IS BUILT INTO CURB FORMS; CORNERS OF TRANSVERSE FLOOR EXPANSION JOINTS SHALL BE ROUNDED WITH A 1/4" FINISHING TOOL UNLESS OTHERWISE REQUIRED ON PLANS; AND CORNERS OF EXPANSION JOINTS IN THE ROADWAY FACES AND TOPS OF CURBS AND SIDEWALKS SHALL BE ROUNDED TO A 1/4" RADIUS WITH A FINISHING STONE OR TOOL UNLESS OTHERWISE REQUIRED ON PLANS.

DOWELS:

DOWELS WHEN INDICATED ON PLANS AS FOR CULVERT EXTENSIONS, SHALL BE EMBEDDED AT LEAST 12" INTO THE OLD CONCRETE AND GROUTED INTO PLACE WITH 1:2 CEMENT MORTAR.

ALLOWANCE FOR DEAD LOAD DEFLECTION, SETTLEMENT, ETC. IN CASTING SUPERSTRUCTURES:

BRIDGES SHALL BE BUILT ON THE GRADE OR VERTICAL CURVE SHOWN ON PLANS. SLABS, CURBS AND PARAPETS SHALL CONFORM TO THE GRADE OR CURVE.

ALL DIMENSIONS WHICH ARE GIVEN IN SECTION AND ARE AFFECTED BY DEAD LOAD DEFLECTIONS ARE DIMENSIONS AT CENTER LINE OF BEARING UNLESS OTHERWISE NOTED ON PLANS. IN SETTING FORMS FOR STEEL BEAM BRIDGES AND PRESTRESSED CONCRETE GIRDER BRIDGES, ADJUSTMENTS SHALL BE MADE DUE TO THE DEAD LOAD DEFLECTIONS FOR THE ELEVATIONS SHOWN. WHERE BLOCKS ARE SHOWN OVER BEAMS FOR BUILDING UP TO THE SLAB, THE VERTICAL DIMENSIONS OF THE BLOCKS SHALL BE ADJUSTED BETWEEN BEARINGS TO COMPENSATE FOR DEAD LOAD DEFLECTIONS, VERTICAL CURVE ORDINATE, AND ACTUAL BEAM CAMBER. WHERE BOTTOM OF SLAB IS IN LINE WITH BOTTOM OF TOP FLANGES, DEPTH OF SLAB BETWEEN BEARINGS SHALL BE ADJUSTED TO COMPENSATE FOR DEAD LOAD DEFLECTION, VERTICAL CURVE ORDINATE, AND ACTUAL BEAM CAMBER.

IN SETTING FALSEWORK AND FORMS FOR REINFORCED CONCRETE SPANS, AN ALLOWANCE SHALL BE MADE FOR DEAD LOAD DEFLECTIONS, SETTLEMENT OF FALSEWORK, AND PERMANENT CAMBER WHICH SHALL BE PROVIDED FOR IN ADDITION TO THE ELEVATIONS SHOWN. AFTER REMOVAL OF THE FALSEWORK, THE FINISHED STRUCTURES SHALL CONFORM TO THE PROFILE AND ELEVATIONS SHOWN ON THE PLANS AND CONSTRUCTION ELEVATIONS FURNISHED BY THE ENGINEER.

DETAILED DRAWINGS FOR FALSEWORK OR FORMS FOR BRIDGE SUPERSTRUCTURE AND ANY STRUCTURE OR PARTS OF A STRUCTURE AS NOTED ON THE PLANS SHALL BE SUBMITTED TO THE ENGINEER FOR APPROVAL BEFORE CONSTRUCTION OF THE FALSEWORK OR FORMS IS STARTED.

REINFORCING STEEL:

ALL REINFORCING STEEL SHALL BE DEFORMED WITH THE EXCEPTION OF #2 BARS WHICH MAY BE FABRICATED FROM COLD DRAWN STEEL WIRE. DIMENSIONS RELATIVE TO PLACEMENT OF REINFORCING ARE TO CENTERS OF BARS UNLESS OTHERWISE INDICATED IN THE PLANS. DIMENSIONS ON BAR DETAILS ARE TO CENTERS OF BARS OR ARE OUT TO OUT AS INDICATED ON PLANS.

WIRE BAR SUPPORTS SHALL BE PROVIDED FOR REINFORCING STEEL WHERE INDICATED ON THE PLANS. WHEN BAR SUPPORT PIECES ARE PLACED IN CONTINUOUS LINES, THEY SHALL BE SO PLACED THAT THE ENDS OF THE SUPPORTING WIRES SHALL BE LAPPED TO LOCK LEGS ON ADJOINING PIECES.

STRUCTURAL STEEL:

AT THE CONTRACTOR'S OPTION, HE MAY SUBSTITUTE 7/8" Ø SHEAR STUDS FOR THE 3/4" Ø STUDS SPECIFIED ON THE PLANS. THIS SUBSTITUTION SHALL BE MADE AT THE RATE OF 3 - 7/8" Ø STUDS FOR 4 - 3/4" Ø STUDS, AND STUD SPACING CHANGES SHALL BE MADE AS NECESSARY TO PROVIDE THE SAME EQUIVALENT NUMBER OF 7/8" Ø STUDS ALONG THE BEAM AS SHOWN FOR 3/4" Ø STUDS BASED ON THE RATIO OF 3 - 7/8" Ø STUDS FOR 4 - 3/4" Ø STUDS. STUDS OF THE LENGTH SPECIFIED ON THE PLANS MUST BE PROVIDED. THE MAXIMUM SPACING SHALL BE 2'-0".

EXCEPT AT THE INTERIOR SUPPORTS OF CONTINUOUS BEAMS WHERE THE COVER PLATE IS IN CONTACT WITH BEARING PLATE, THE CONTRACTOR MAY, AT HIS OPTION, SUBSTITUTE FOR THE COVER PLATES DESIGNATED ON THE PLANS COVER PLATES OF THE EQUIVALENT AREA PROVIDED THESE PLATES ARE AT LEAST 5/16" IN THICKNESS AND DO NOT EXCEED A WIDTH EQUAL TO THE FLANGE WIDTH LESS 2" OR A THICKNESS EQUAL TO 2 TIMES THE FLANGE THICKNESS. THE SIZE OF FILLET WELDS SHALL CONFORM TO THE REQUIREMENTS OF THE CURRENT ANSI/AASHTO/AWS "BRIDGE WELDING CODE". ELECTROSLAG WELDING WILL NOT BE PERMITTED.

PLACEMENT OF BEAM OR GIRDER MEMBERS ON TRUCKS FOR HAULING SHALL BE DONE IN COMPLIANCE WITH LIMITS SHOWN ON SKETCHES PROVIDED TO THE MATERIALS AND TEST UNIT APPROVED BY THE STRUCTURE DESIGN UNIT DATED MAY 8, 1991. THESE SKETCHES PRIMARILY LIMIT THE UNSUPPORTED CANTILEVER LENGTH OF MEMBERS. WHEN THE CONTRACTOR WISHES TO PLACE MEMBERS ON TRUCKS NOT IN ACCORDANCE WITH THESE LIMITS, TO SHIP BY RAIL, TO ATTACH SHIPPING RESTRAINTS TO THE MEMBERS OR TO INVERT MEMBERS, HE SHALL SUBMIT A SKETCH FOR APPROVAL PRIOR TO SHIPPING. SEE ALSO ARTICLE 1072-11.

WITH THE SOLE EXCEPTION OF EDGES AT SURFACES WHICH BEAR ON OTHER SURFACES, ALL SHARP EDGES AND ENDS OF SHAPES AND PLATES SHALL BE SLIGHTLY ROUNDED BY SUITABLE MEANS TO A RADIUS OF APPROXIMATELY 1/16 INCH OR EQUIVALENT FLAT SURFACE AT A SUITABLE ANGLE PRIOR TO PAINTING, GALVANIZING, OR METALLIZING.

HANDRAILS AND POSTS:

METAL STANDARDS AND FACES OF THE CONCRETE END POSTS FOR THE METAL RAIL SHALL BE SET NORMAL TO THE GRADE OF THE CURB, UNLESS OTHERWISE SHOWN ON PLANS. THE METAL RAIL AND TOPS OF CONCRETE POSTS USED WITH THE ALUMINUM RAIL SHALL BE BUILT PARALLEL TO THE GRADE OF THE CURB.

METAL HANDRAILS SHALL BE IN ACCORDANCE WITH THE PLANS. RAILS SHALL BE AS MANUFACTURED FOR BRIDGE RAILING. CASTINGS SHALL BE OF A UNIFORM APPEARANCE. FINS AND OTHER DEFORMATIONS RESULTING FROM CASTING OR OTHERWISE SHALL BE REMOVED IN A MANNER SO THAT A UNIFORM COLORING OF THE COMPLETED CASTING SHALL BE OBTAINED. CASTINGS WITH DISCOLORATIONS OR OF NON-UNIFORM COLORING WILL NOT BE ACCEPTED. CERTIFIED MILL REPORTS ARE REQUIRED FOR METAL RAILS AND POSTS.

SPECIAL NOTES:

GENERALLY, IN CASE OF DISCREPANCY, THIS STANDARD SHEET OF NOTES SHALL GOVERN OVER THE SPECIFICATIONS, BUT THE REMAINDER OF THE PLANS SHALL GOVERN OVER NOTES HEREON, AND SPECIAL PROVISIONS SHALL GOVERN OVER ALL. SEE SPECIFICATIONS ARTICLE 105-4.

ENGLISH

JANUARY, 1990