PART 2 OF 2

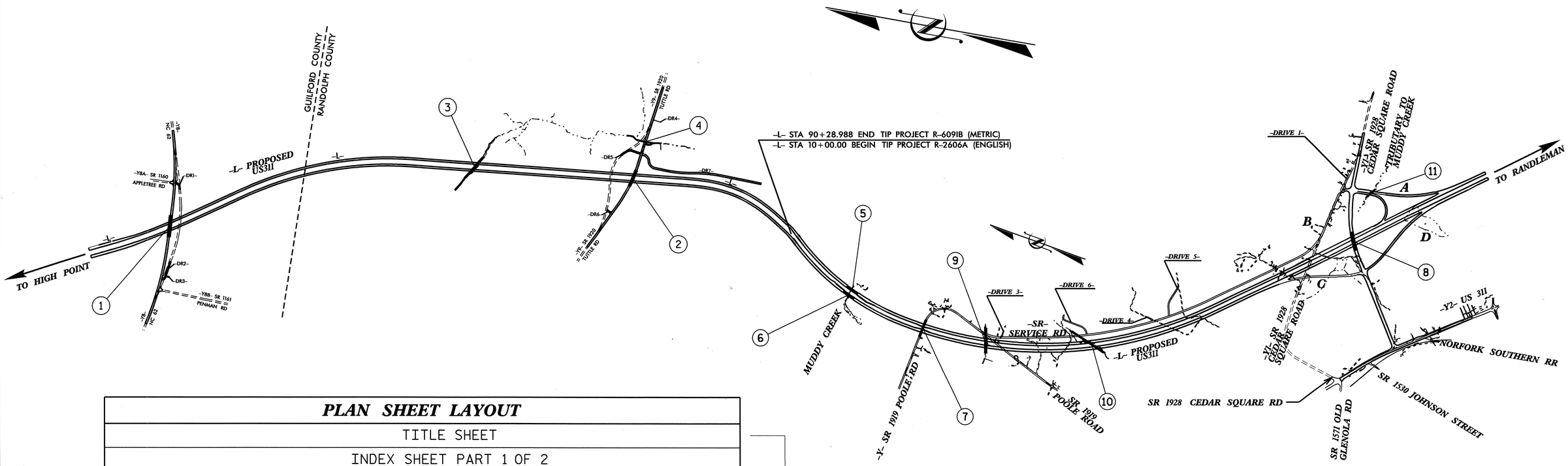

PLAN SHEET LAYOUT

TITLE SHEET

INDEX SHEET PART 1 OF 2

STR.	STATION	DESCRIPTION	SHEETS
1	64+02.541 -L-	NC 62 OVER US 311	S-1 THRU S-28
2	83+34.392 -L-	SR 1920 OVER US 311	S-29 THRU S-76
3	76+90.000 -L-	DOUBLE 2.1m X 2.1m RCBC	C-1 THRU C-4
4	12+23.000 -Y9-	DOUBLE 1.8m X 2.4m RCBC	C-5 THRU C-7

PART 1 OF 2
R-609IB (METRIC)

INDEX SHEET PART 2 OF 2

METRIC TOTAL BILLS OF MATERIALS SHEET (R-2606A STRUCTURES)

STR.	STATION	DESCRIPTION	SHEETS
5	22+65.00 -L-	US 311 (LEFT LANE) OVER MUDDY CREEK	S-77 THRU S-104
6	22+65.00 -L-	US 311 (RIGHT LANE) OVER MUDDY CREEK	S-105 THRU S-132
7	35+60.41 -L-	POOLE ROAD (SR 1919) OVER US 311	S-133 THRU S-166
8	108+24.11 -L-	CEDAR SQUARE ROAD (SR 1928) OVER US 311	S-167 THRU S-199
9	45+99.00 -L-	SINGLE 12'-0" X 8'-0" RCBC	C-8 THRU C-15
10	63+06.00 -L-	SINGLE 8'-0" X 5'-0" RCBC	C-16 THRU C-18
11	14+72.00 -RAMPA-	SINGLE 6'-0" X 6'-0" RCBC	C-19 THRU C-21

PART 2 OF 2
R-2606A (ENGLISH)

PROJECT NO. R-0609IB/R-2606A

GUILFORD-RANDOLPH COUNTY

STATE OF NORTH CAROLINA
DEPARTMENT OF TRANSPORTATION
RALEIGH

INDEX SHEET
PART 2 OF 2

REVISIONS						SHEET NO.
NO.	BY:	DATE:	NO.	BY:	DATE:	
1			3			TOTAL SHEETS
2			4			

DRAWN BY : R.D. MARTIN/TPG DATE : 4/18/05
CHECKED BY : T.P. GARRETT DATE : 7/28/06

31-JUL-2006 08:33
S:\PGS\PGARRETT\r0609ib_r2606
pgarrett

R–2606A: METRIC TOTAL BILLS OF MATERIALS

STR. 5 STATION 22+65.00-L- LT. LN. — **BRIDGE ON US311 (LEFT LANE)**

TOTAL BILL OF MATERIAL

	REINFORCED CONCRETE DECK SLAB	GROOVING BRIDGE FLOORS	CLASS A CONCRETE	BRIDGE APPROACH SLABS	REINFORCING STEEL	STRUCTURAL STEEL	HP 310 X 79 STEEL PILES		STEEL PILE POINTS	CONCRETE BARRIER RAIL	PLAIN RIP RAP CLASS II (600mm THICK)	FILTER FABRIC FOR DRAINAGE	EVAZOTE JOINT SEALS
	SQ.METERS	SQ.METERS	CU.METERS	LUMP SUM	kg.	APPROX. kg.	NO.	METERS	EA.	METERS	METRIC TONS	SQ.METERS	LUMP SUM
SUPERSTRUCTURE	636.2	719.1		LUMP SUM		140300				96.530			LUMP SUM
END BENT NO.1			21.9		1401		11	33.5	11		222.2	227.5	
END BENT NO.2			21.5		1374		11	67.0			503.9	516.0	
TOTAL	636.2	719.1	43.4	LUMP SUM	2775	140300	22	100.5	11	96.530	726.1	743.5	LUMP SUM

STR. 6 STATION 22+65.00-L- RT. LN. — **BRIDGE ON US311 (RIGHT LANE)**

TOTAL BILL OF MATERIAL

	REINFORCED CONCRETE DECK SLAB	GROOVING BRIDGE FLOORS	CLASS A CONCRETE	BRIDGE APPROACH SLABS	REINFORCING STEEL	STRUCTURAL STEEL	HP 310 X 79 STEEL PILES		STEEL PILE POINTS	CONCRETE BARRIER RAIL	PLAIN RIP RAP CLASS II (600 mm THICK)	FILTER FABRIC FOR DRAINAGE	EVAZOTE JOINT SEALS
	SQ.METERS	SQ.METERS	CU.METERS	LUMP SUM	kg.	APPROX. kg.	NO.	METERS	EA.	METERS	METRIC TONS	SQ.METERS	LUMP SUM
SUPERSTRUCTURE	636.2	719.1		LUMP SUM		140300				96.530			LUMP SUM
END BENT NO.1			21.5		1374		11	33.5	11		198.3	203.1	
END BENT NO.2			21.7		1388		11	83.8			266.0	272.3	
TOTAL	636.2	719.1	43.2	LUMP SUM	2762	140300	22	117.3	11	96.530	464.3	475.4	LUMP SUM

STR. 7 STATION 35+60.41-L- — **BRIDGE ON POOLE ROAD**

TOTAL BILL OF MATERIAL

	PILE EXCAVATION IN SOIL	PILE EXCAVATION NOT IN SOIL	FOUNDATION EXCAVATION	REINFORCED CONCRETE DECK SLAB	GROOVING BRIDGE FLOORS	CLASS A CONCRETE	BRIDGE APPROACH SLABS	REINFORCING STEEL	STRUCTURAL STEEL	HP 310 X 79 STEEL PILES		STEEL PILE POINTS	CONCRETE BARRIER RAIL	100mm SLOPE PROTECTION	POT BEARINGS	EVAZOTE JOINT SEALS
	METERS	METERS	LUMP SUM	SQ. METERS	SQ. METERS	CU. METERS	LUMP SUM	kg.	APPROX. kg.	NO.	METERS	EA.	METERS	SQ. METERS	LUMP SUM	LUMP SUM
SUPERSTRUCTURE				667.4	667.4		L. S.		102850				135.788		L. S.	L. S.
END BENT 1	15.2	8.5				16.2		1596		7	32.0	7		130		
BENT 1			L.S.			63.8		6524								
END BENT 2						19.0		1808		7	32.0	7		125		
TOTAL	15.2	8.5	LUMP SUM	667.4	667.4	99.0	LUMP SUM	9928	102850	14	64.0	14	135.788	255	LUMP SUM	LUMP SUM

STR. 8 STATION 108+24.11-L- — **BRIDGE ON CEDAR SQUARE ROAD**

TOTAL BILL OF MATERIAL

	REINFORCED CONCRETE DECK SLAB	GROOVING BRIDGE FLOORS	CLASS A CONCRETE	BRIDGE APPROACH SLABS	REINFORCING STEEL	SPIRAL COLUMN REINFORCING STEEL	STRUCTURAL STEEL	HP 310 x 79 STEEL PILES		STEEL PILE POINTS	CONCRETE BARRIER RAIL	100mm SLOPE PROTECTION	POT BEARINGS	EVAZOTE JOINT SEALS
	SQ. METERS	SQ. METERS	CU. METERS	LUMP SUM	kg.	kg.	APPROX. kg.	NO.	METERS	EA.	METERS	SQ. METERS	LUMP SUM	LUMP SUM
SUPERSTRUCTURE	1176.8	1337.4		L. S.			166050				139.809		L. S.	L. S.
END BENT 1			40.5		3333			11	134.1			407		
BENT 1			69.6		7168	899		30	182.9	30				
END BENT 2			41.5		3444			11	150.9			336		
TOTAL	1176.8	1337.4	151.6	LUMP SUM	13945	899	166050	52	467.9	30	139.809	743	LUMP SUM	LUMP SUM

STR. 9 STATION 45+99.00-L-
SINGLE 12' X 8' RCBC

TOTAL STRUCTURE QUANTITIES

CLASS A CONCRETE		
BARREL (SECTION 1) @ 4.202 CM/M	140.9	C.M.
BARREL (SECTION 2) @ 5.217 CM/M	375.9	C.M.
TAPERED INLET (SECTION 3)	13.5	C.M.
INLET WINGS, ETC.	9.5	C.M.
OUTLET WINGS, ETC.	10.5	C.M.
SILL	6.2	C.M.
TOTAL	556.5	C.M.
REINFORCING STEEL		
BARREL (SECTION 1)	14590	kg.
BARREL (SECTION 2)	35625	kg.
TAPERED INLET (SECTION 3)	1569	kg.
INLET WINGS, ETC.	327	kg.
OUTLET WINGS, ETC.	377	kg.
SILL	56	kg.
TOTAL	52544	kg.
CULVERT EXCAVATION	LUMP SUM	
FOUNDATION COND. MAT'L	308 METRIC TONS	

STR. 10 STATION 63+06.00-L-
PRECAST THREE-SIDED CULVERT
(SINGLE 8' X 5' RCBC)

TOTAL STRUCTURE QUANTITIES

PRECAST REINFORCED CONCRETE THREE-SIDED CULVERT ..... LUMP SUM	
CLASS A CONCRETE	217.9 C.M.

STR. 11 STATION 14+72.00-RAMP A-
SINGLE 6' X 6' RCBC

TOTAL STRUCTURE QUANTITIES

CLASS A CONCRETE		
BARREL @ 1.605 C.M./M.	85.5	C.M.
WING ETC.	15.6	C.M.
TOTAL	101.1	C.M.
REINFORCING STEEL		
BARREL	6981	kg.
WINGS ETC.	529	kg.
TOTAL	7510	kg.
CULVERT EXCAVATION	LUMP SUM	
FOUNDATION COND. MAT'L	81.6 METRIC TONS	

PROJECT NO. R-0609IB/R-2606A

GUILFORD-RANDOLPH COUNTY

STATE OF NORTH CAROLINA
DEPARTMENT OF TRANSPORTATION
RALEIGH

METRIC TOTAL BILLS OF MATERIALS SHEET
(R-2606A STRUCTURES)

NORTH CAROLINA PROFESSIONAL SEAL 18090 ENGINEER THOMAS PAUL GARRETT
Thomas Paul Garrett
August 1, 2006

REVISIONS						SHEET NO.
NO.	BY:	DATE:	NO.	BY:	DATE:	
1			3			TOTAL SHEETS
2			4			

DRAWN BY : R.D. MARTIN/TPG DATE : 5/19/06
CHECKED BY : T.P. GARRETT DATE : 7/31/06

01-AUG-2006 12:12
S:\PG3\PGARRETT\r0609ib_r2606aTPG.dgn
pgarrett

F.A. PROJECT NO. NHF-311(18)

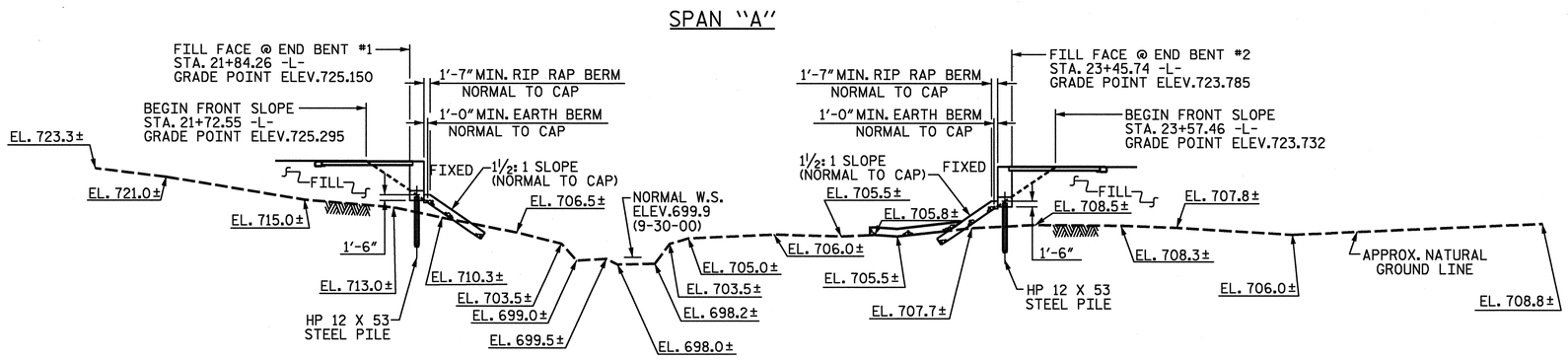

SECTION ALONG BRIDGE CONTROL LINE (LEFT LANE)

(BENTS ON SECTION AT RIGHT ANGLES TO BENTS)

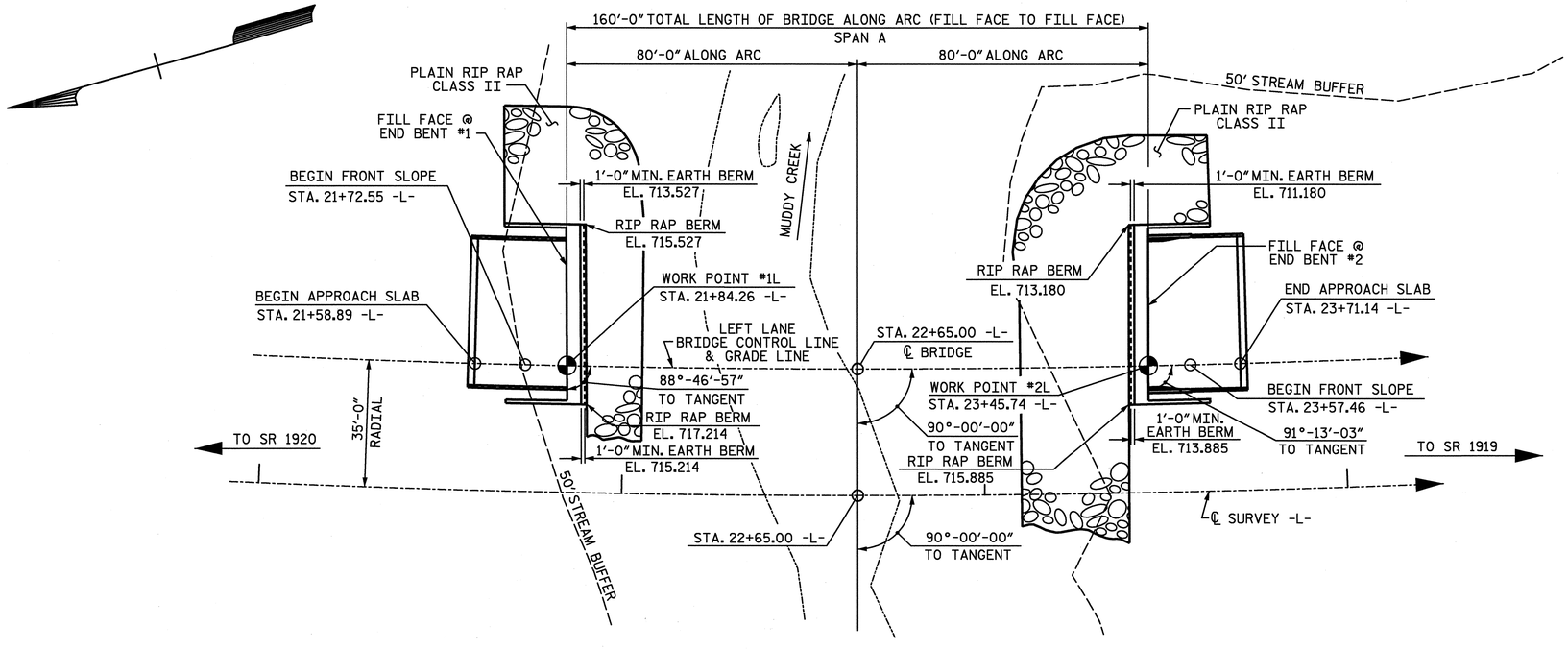

PLAN

-2.1163% +1.2881%

PI = 23+60.00
EL = 720.53'
VC = 750'

-L- GRADE DATA

HYDRAULIC DATA

DESIGN DISCHARGE_____4400 CFS
FREQUENCY OF DESIGN FLOOD_____50 YEARS
DESIGN HIGH WATER ELEVATION_____712.2
DRAINAGE AREA_____10.0 SQ. MI.
BASIC DISCHARGE (Q100)_____4800 CFS
BASIC HIGH WATER ELEVATION_____712.6

OVERTOPPING FLOOD DATA

OVERTOPPING DISCHARGE_____10,000+ CFS
FREQUENCY OF OVERTOPPING FLOOD____500+ YRS.
OVERTOPPING FLOOD ELEVATION_____724.85

-L- HORIZONTAL CURVE DATA

PI STA. 22+50.68
△ = 30°-54'-42.0"LT
D = 1°-30'-28.0"
L = 2050.14'
T = 1050.68'
R = 3800.00'
SE = 0.055

PROJECT NO. R-2606A
RANDOLPH COUNTY
STATION: 22+65.00 -L-

SHEET 1 OF 4 BRIDGE NO. 516

STATE OF NORTH CAROLINA
DEPARTMENT OF TRANSPORTATION
RALEIGH

GENERAL DRAWING

BRIDGE ON US 311
OVER MUDDY CREEK
BETWEEN SR 1920 AND SR 1919
(LEFT LANE)

REVISIONS						SHEET NO.
NO.	BY:	DATE:	NO.	BY:	DATE:	S-77
1			3			TOTAL SHEETS
2			4			199

PLANS PREPARED BY:
ARCADIS
ARCADIS G&M OF NORTH CAROLINA, INC.
801 CORPORATE CENTER DRIVE, SUITE 300
RALEIGH, NORTH CAROLINA 27607-5073
TEL: 919/854-1282 FAX: 919/854-5448
WWW.ARCADIS-US.COM

DRAWN BY : D.G.VESTER DATE : 01/05
CHECKED BY : J.A.BATTS DATE : 01/05

NORTH CAROLINA PROFESSIONAL SEAL 8058 ENGINEER JOHN A. BATTS 1/27/05

1/28/2005 3:06:47 PM g:\tra\60303\drawings\final\left lane\r2606a_sd_gd1_01l.dgn

STR.#5

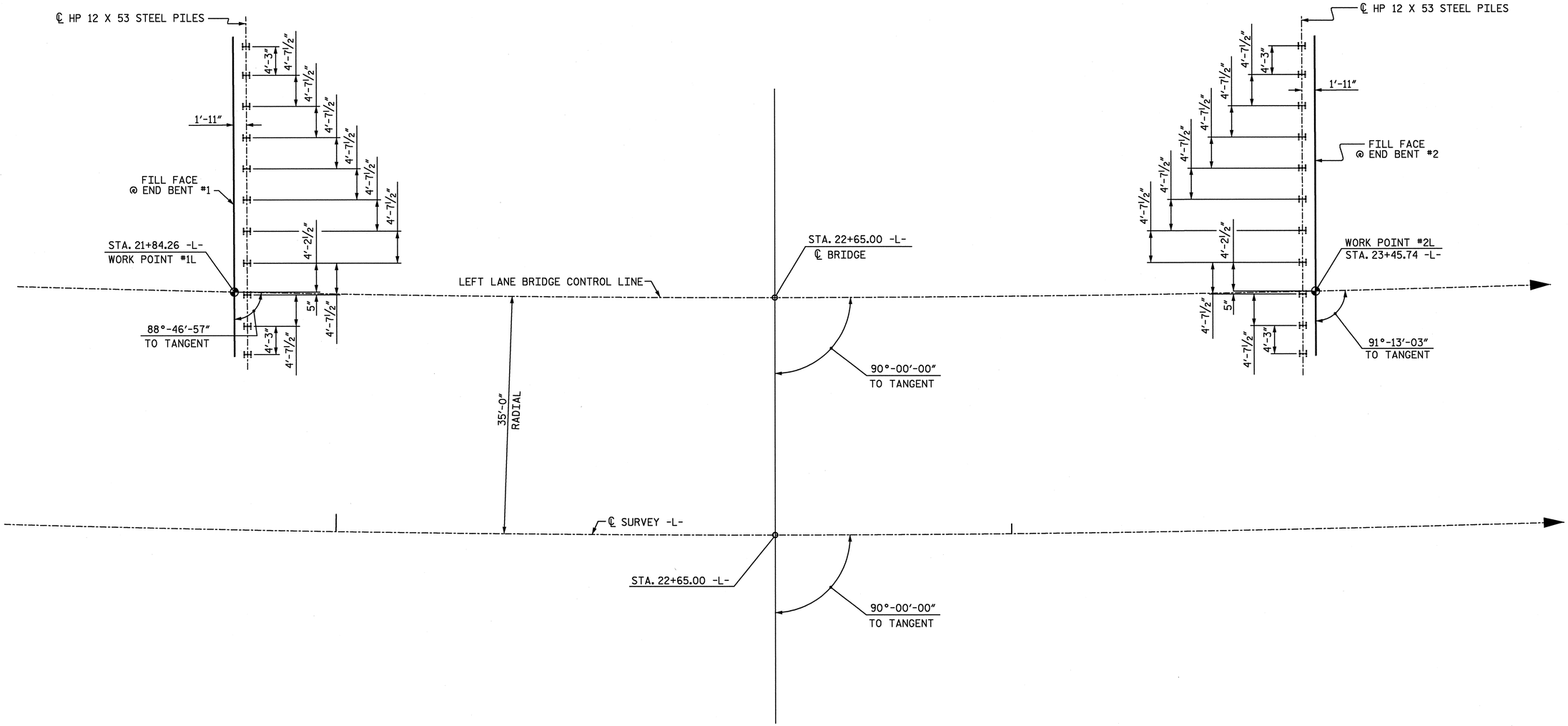

FOUNDATION LAYOUT PLAN

PROJECT NO. R-2606A

RANDOLPH COUNTY

STATION: 22+65.00 -L-

SHEET 2 OF 4

STATE OF NORTH CAROLINA
DEPARTMENT OF TRANSPORTATION
RALEIGH

GENERAL DRAWING

BRIDGE ON US 311
OVER MUDDY CREEK
BETWEEN SR 1920 AND SR 1919
(LEFT LANE)

REVISIONS						SHEET NO.
NO.	BY:	DATE:	NO.	BY:	DATE:	S-78
1			3			TOTAL SHEETS
2			4			199

PLANS PREPARED BY:
ARCADIS
ARCADIS G&M OF NORTH CAROLINA, INC.
801 CORPORATE CENTER DRIVE, SUITE 300
RALEIGH, NORTH CAROLINA 27607-5073
TEL: 919/854-1282 FAX: 919/854-5448
WWW.ARCADIS-US.COM

DRAWN BY : D.G.VESTER DATE : 01/05
CHECKED BY : J.A.BATTS DATE : 01/05

NORTH CAROLINA PROFESSIONAL SEAL 18056 ENGINEER JOHN A. BATTS 1/28/05

1/28/2005 3:06:47 PM g:\tra\60303\drawings\final\left lane\r2606a_sd_gd2_011.dgn

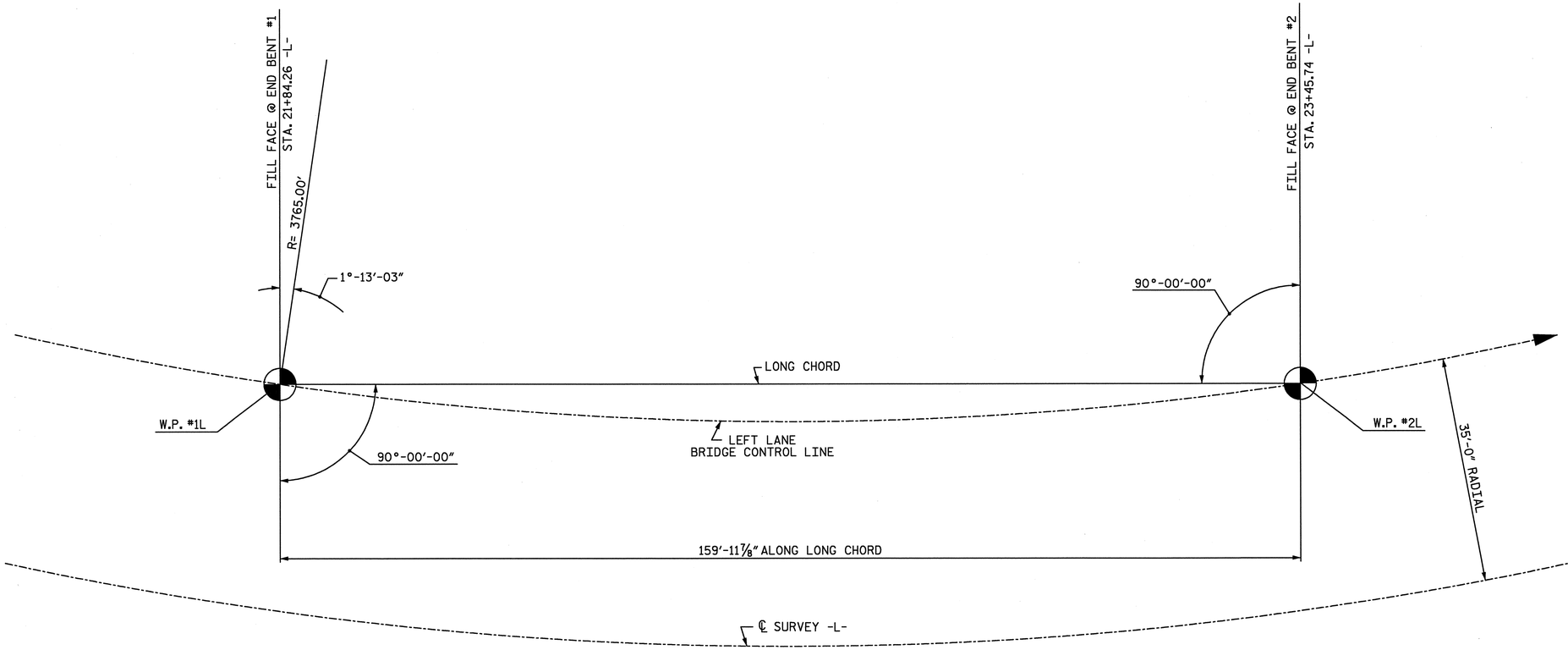

LONG CHORD LAYOUT

(END BENTS ARE PARALLEL)
(NOT TO SCALE)

-L- HORIZONTAL CURVE DATA

PI STA. 22+50.68

Δ = 30°-54'-42.0"LT

D = 1°-30'-28.0"

L = 2050.14'

T = 1050.68'

R = 3800.00'

SE = 0.055

BEARING IN = S 31°-46'-16.8"W

BEARING OUT = S 0°-51'-34.8"W

PLANS PREPARED BY:
ARCADIS
ARCADIS G&M OF NORTH CAROLINA, INC.
801 CORPORATE CENTER DRIVE, SUITE 300
RALEIGH, NORTH CAROLINA 27607-5073
TEL: 919/854-1282 FAX: 919/854-5448
WWW.ARCADIS-US.COM

DRAWN BY : D.G.VESTER DATE : 01/05
CHECKED BY : J.A.BATTS DATE : 01/05

NORTH CAROLINA PROFESSIONAL SEAL 18056 ENGINEER JOHN A. BATTS 1-31-05

PROJECT NO. R-2606A
RANDOLPH COUNTY
STATION: 22+65.00 -L-
SHEET 3 OF 4

STATE OF NORTH CAROLINA
DEPARTMENT OF TRANSPORTATION
RALEIGH

GENERAL DRAWING

BRIDGE ON US 311
OVER MUDDY CREEK
BETWEEN SR 1920 AND SR 1919
(LEFT LANE)

REVISIONS						SHEET NO.
NO.	BY:	DATE:	NO.	BY:	DATE:	S-79
1			3			TOTAL SHEETS
2			4			199

1/28/2005 3:06:48 PM g:\tra\603031\drawings\final\left lane\r2606a_sd_gd3_ 011.dgn

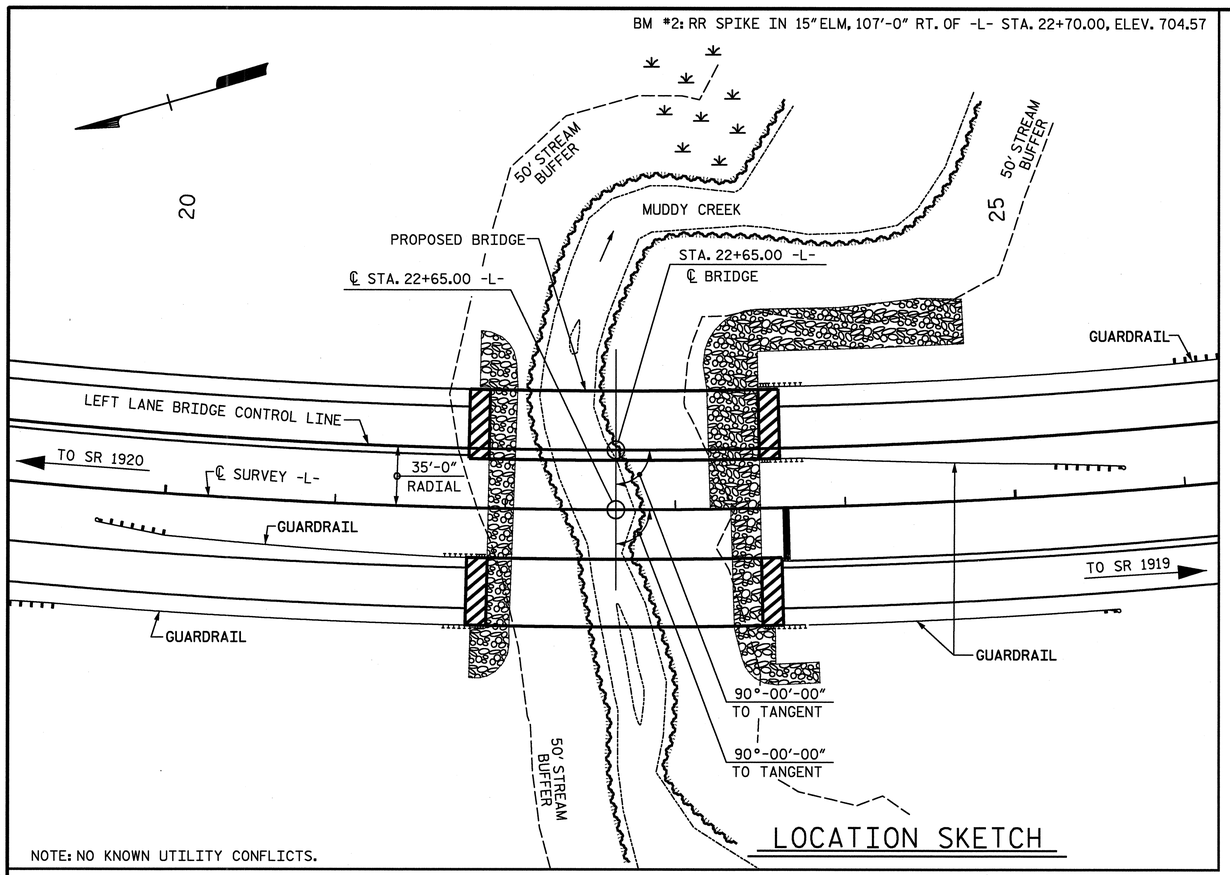

NOTES

ASSUMED LIVE LOAD = HS 20 OR ALTERNATE LOADING.

FOR OTHER DESIGN DATA AND GENERAL NOTES, SEE SHEET SN.

FOR EROSION CONTROL MEASURES SEE EROSION CONTROL PLANS.

THIS BRIDGE HAS BEEN DESIGNED BY THE STRENGTH DESIGN METHOD AS SPECIFIED IN AASHTO STANDARD SPECIFICATIONS.

ALL STRUCTURAL STEEL SHALL BE AASHTO M270 GRADE 50W AND PAINTED IN ACCORDANCE WITH SYSTEM 4 OF ARTICLE 442-7 OF THE STANDARD SPECIFICATIONS UNLESS OTHERWISE NOTED ON THE PLANS.

REMOVABLE FORMS MAY BE USED IN LIEU OF METAL STAY-IN-PLACE FORMS IN ACCORDANCE WITH ARTICLE 420-3 OF THE STANDARD SPECIFICATIONS.

THE NOMINAL UNCOMPRESSED SEAL WIDTH OF THE EVAZOTE JOINT SEAL SHALL BE 2 1/2" AT APPROACH SLAB NO.1 AND APPROACH SLAB NO.2. FOR EVAZOTE JOINT SEALS, SEE SPECIAL PROVISIONS.

FOR ELASTOMERIC CONCRETE, SEE SPECIAL PROVISIONS.

ALL METALLIZED SURFACES SHALL RECEIVE A SEAL COATING AS SPECIFIED IN THE SPECIAL PROVISION FOR THERMAL SPRAYED COATINGS (METALLIZATION).

THIS STRUCTURE HAS BEEN DESIGNED IN ACCORDANCE WITH HEC 18,"EVALUATING SCOUR AT BRIDGES", NOVEMBER, 1995.

THIS BRIDGE HAS BEEN DESIGNED IN ACCORDANCE WITH THE REQUIREMENTS OF THE AASHTO STANDARD SPECIFICATIONS FOR SEISMIC DESIGN OF HIGHWAY BRIDGES FOR SEISMIC PERFORMANCE CATEGORY A.

THE CONTRACTOR SHALL PROVIDE INDEPENDENT ASSURANCE SAMPLES OF REINFORCING STEEL AS FOLLOWS: FOR PROJECTS REQUIRING UP TO 400 TONS OF REINFORCING STEEL, ONE 30 INCH SAMPLE OF EACH SIZE BAR USED, AND FOR PROJECTS REQUIRING OVER 400 TONS OF REINFORCING STEEL, TWO 30 INCH SAMPLES OF EACH SIZE BAR USED. THE BARS FROM WHICH THE SAMPLES ARE TAKEN MUST THEN BE SPLICED WITH REPLACEMENT BARS OF THE SIZE AND LENGTH OF THE SAMPLE, PLUS A MINIMUM LAP SPLICE OF THIRTY BAR DIAMETERS.

NEEDLE BEAMS WILL NOT BE ALLOWED UNLESS OTHERWISE CALLED FOR ON THE PLANS OR APPROVED BY THE ENGINEER.

FOR SUBMITTAL OF WORKING DRAWINGS, SEE SPECIAL PROVISIONS.

FOR FALSEWORK AND FORMWORK, SEE SPECIAL PROVISIONS.

PILES FOR END BENT NO. 1 AND END BENT NO. 2 SHALL BE DRIVEN TO MINIMUM BEARING CAPACITY OF 60 TONS EACH.

STEEL PILE POINTS ARE REQUIRED FOR PILES AT END BENT NO. 1. SEE SPECIAL PROVISIONS.

WHEN DRIVING PILES, THE MAXIMUM BLOW COUNT SHALL NOT BE EXCEEDED.

FOR CRANE SAFETY, SEE SPECIAL PROVISIONS.

FOR METRIC STRUCTURAL STEEL, SEE SPECIAL PROVISIONS.

FOR STEEL H PILES, SEE SPECIAL PROVISIONS.

TOTAL BILL OF MATERIAL

	REINFORCED CONCRETE DECK SLAB	GROOVING BRIDGE FLOORS	CLASS A CONCRETE	BRIDGE APPROACH SLABS	REINFORCING STEEL	STRUCTURAL STEEL	HP 12 X 53 STEEL PILES		STEEL PILE POINTS	CONCRETE BARRIER RAIL	PLAIN RIP RAP CLASS II (2'-0" THICK)	FILTER FABRIC FOR DRAINAGE	~~ELASTOMERIC BEARINGS~~	EVAZOTE JOINT SEALS
	SQ.FT.	SQ.FT.	CU.YDS.	LUMP SUM	LBS.	APPROX.LBS.	NO.	LIN.FT.	EA.	LIN.FT.	TONS	SQ.YDS.	~~LUMP SUM~~	LUMP SUM
SUPERSTRUCTURE	6,847.9	7,740.7		LUMP SUM		309,300				316.7			~~LUMP SUM~~	LUMP SUM
END BENT NO.1			28.6		3,088		11	110.0	11		244.9	272.1		
END BENT NO.2			28.1		3,029		11	220.0			555.5	617.1		
TOTAL	6,847.9	7,740.7	56.7	LUMP SUM	6,117	309,300	22	330.0	11	316.7	800.4	889.2	~~LUMP SUM~~	LUMP SUM

PROJECT NO. R-2606A

RANDOLPH COUNTY

STATION: 22+65.00 -L-

SHEET 4 OF 4

STATE OF NORTH CAROLINA
DEPARTMENT OF TRANSPORTATION
RALEIGH

GENERAL DRAWING

BRIDGE ON US 311
OVER MUDDY CREEK
BETWEEN SR 1920 AND SR 1919
(LEFT LANE)

REVISIONS						SHEET NO.
NO.	BY:	DATE:	NO.	BY:	DATE:	S-80
1			3			TOTAL SHEETS
2			4			199

PLANS PREPARED BY:
ARCADIS
ARCADIS G&M OF NORTH CAROLINA, INC.
801 CORPORATE CENTER DRIVE, SUITE 300
RALEIGH, NORTH CAROLINA 27607-5073
TEL: 919/854-1282 FAX: 919/854-5448
WWW.ARCADIS-US.COM

DRAWN BY : D.G.VESTER DATE : 01/05
CHECKED BY : J.A.BATTS DATE : 01/05

NORTH CAROLINA PROFESSIONAL SEAL 18056 ENGINEER JOHN A. BATTS
1-31-05

1/28/2005 3:06:48 PM g:\tra\603031\drawings\final\left lane\r2606a_sd_gd4_01l.dgn

$$$$$$$$$$$$$$$$$$$$$$$$$$$$$$$$DGN$$$$$$$$$$$$$$$$$$$$$$$$
$$$$USERNAME$$$$

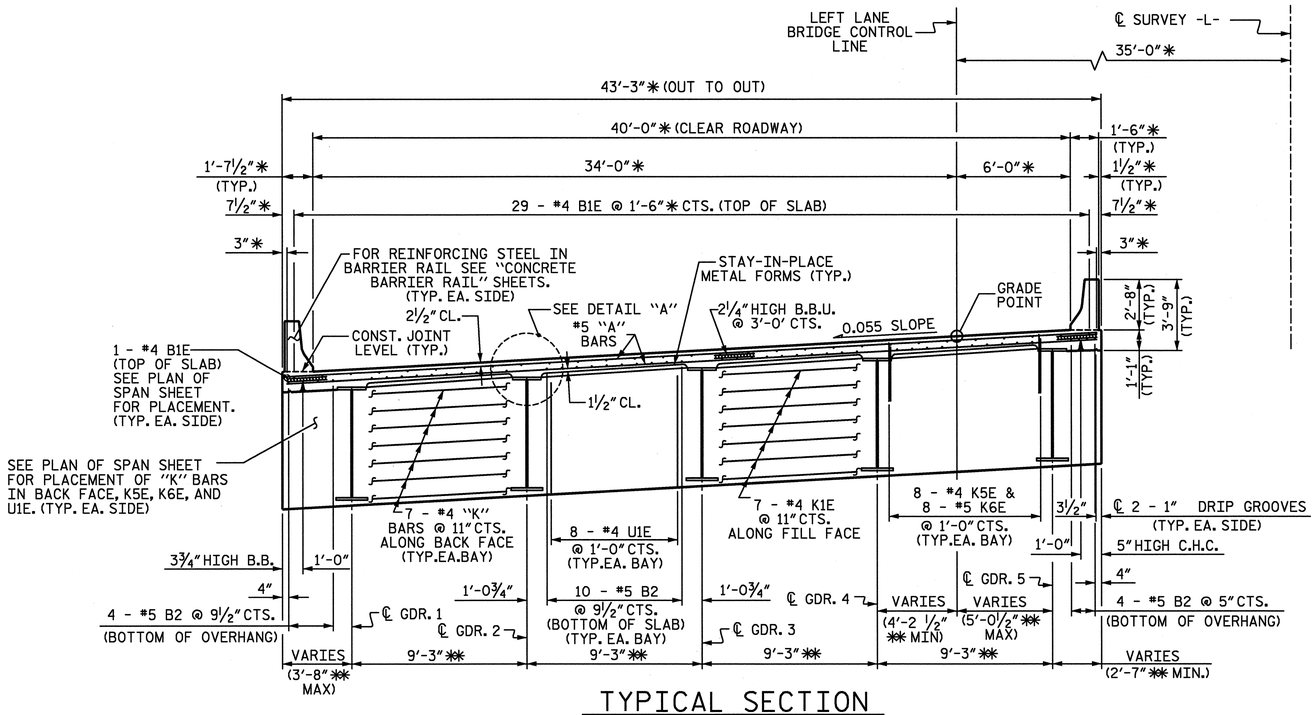

TYPICAL SECTION

SHOWING INTEGRAL END BENT
* - RADIAL DIMENSIONS
** - DIMENSIONS ARE TO ARCS CONCENTRIC WITH THE ℄ SURVEY -L-.
GIRDERS ARE ON THE CHORDS OF THE CONCENTRIC ARCS.

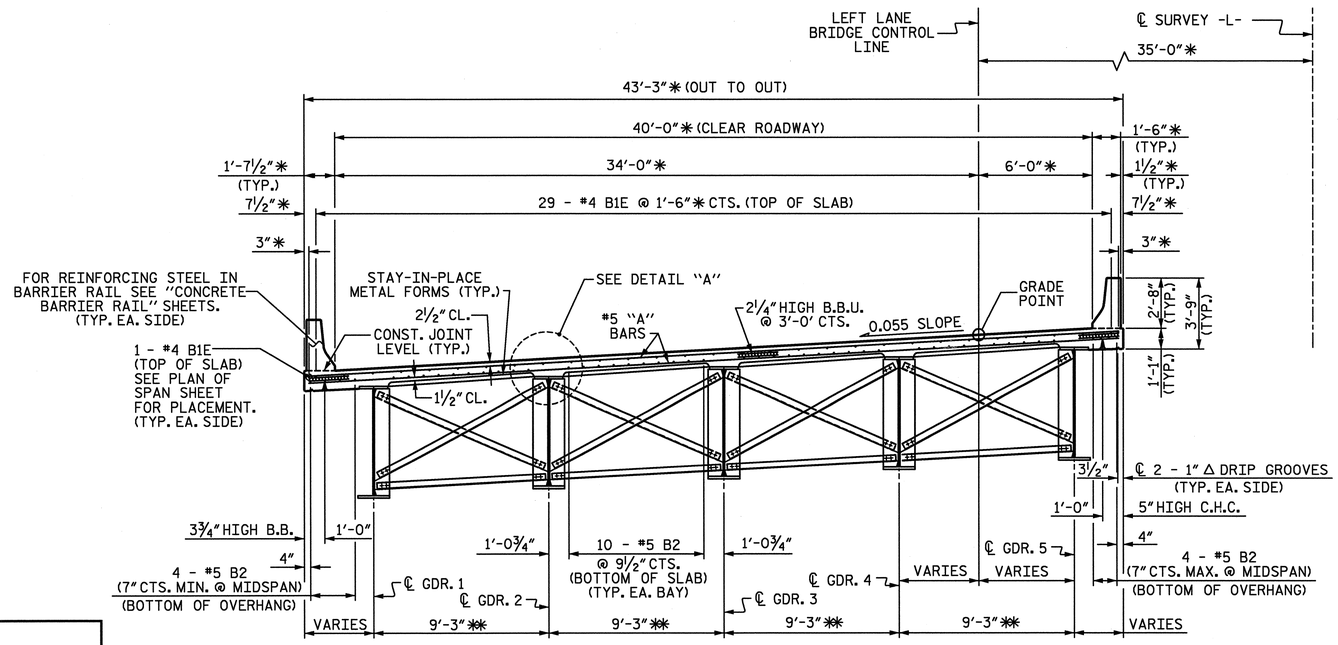

TYPICAL SECTION

SHOWING INTERMEDIATE DIAPHRAMS
* - RADIAL DIMENSIONS
** - DIMENSIONS ARE TO ARCS CONCENTRIC WITH THE ℄ SURVEY -L-.
GIRDERS ARE ON THE CHORDS OF THE CONCENTRIC ARCS.

NOTES

PROVIDE 1¼" HIGH BEAM BOLSTERS UPPER AT 4'-0" CTS. ATOP THE METAL STAY-IN-PLACE FORMS TO SUPPORT THE BOTTOM MAT OF 'A' BARS. WHEN USING REMOVABLE FORMS, PROVIDE CONTINUOUS HIGH CHAIRS FOR METAL DECK (C.H.C.M.) @ 4'-0" CTS. WITH A HEIGHT TO SUPPORT THE BOTTOM MAT OF 'A' BARS A CLEAR DISTANCE OF 2½" ABOVE THE TOP OF THE REMOVABLE FORM.

BARRIER RAIL IN THE SPAN SHALL NOT BE CAST UNTIL ALL SLAB CONCRETE IN THAT SPAN HAS BEEN CAST AND HAS REACHED A MINIMUM COMPRESSIVE STRENGTH OF 3,000 PSI.

PREVIOUSLY CAST CONCRETE IN THE SPAN SHALL HAVE ATTAINED A MINIMUM COMPRESSIVE STRENGTH OF 3,000 PSI BEFORE ADDITIONAL CONCRETE IS CAST IN THE SPAN.

THE CONTRACTOR MAY, WHEN NECESSARY, PROPOSE A SCHEME FOR AVOIDING INTERFERENCE BETWEEN METAL STAY-IN-PLACE FORM SUPPORTS OR FORMS AND BEAM/GIRDER STIFFENERS OR CONNECTOR PLATES. THE PROPOSAL SHALL BE INDICATED, AS APPROPRIATE, ON EITHER THE STEEL WORKING DRAWINGS OR THE METAL STAY-IN-PLACE FORM WORKING DRAWINGS.

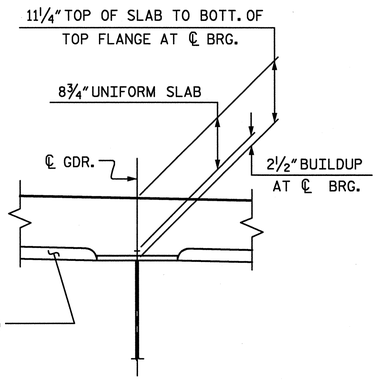

DETAIL "A"

PROJECT NO. R-2606A
RANDOLPH COUNTY
STATION: 22+65.00 -L-

SHEET 1 OF 2

STATE OF NORTH CAROLINA
DEPARTMENT OF TRANSPORTATION
RALEIGH

SUPERSTRUCTURE

TYPICAL SECTION

(LEFT LANE)

REVISIONS						SHEET NO.
NO.	BY:	DATE:	NO.	BY:	DATE:	S-81
1			3			TOTAL SHEETS
2			4			199

PLANS PREPARED BY:

ARCADIS

ARCADIS G&M OF NORTH CAROLINA, INC.
801 CORPORATE CENTER DRIVE, SUITE 300
RALEIGH, NORTH CAROLINA 27607-5073
TEL: 919/854-1282 FAX: 919/854-5448
WWW.ARCADIS-US.COM

DRAWN BY : D.G.VESTER DATE : 01/05
CHECKED BY : J.A.BATTS DATE : 01/05

NORTH CAROLINA PROFESSIONAL SEAL 18056 ENGINEER JOHN A. BATTS 1-31-05

1/28/2005 3:06:48 PM g:\tra\603031\drawings\final\left lane\r2606a_sd_ts_01l.dgn

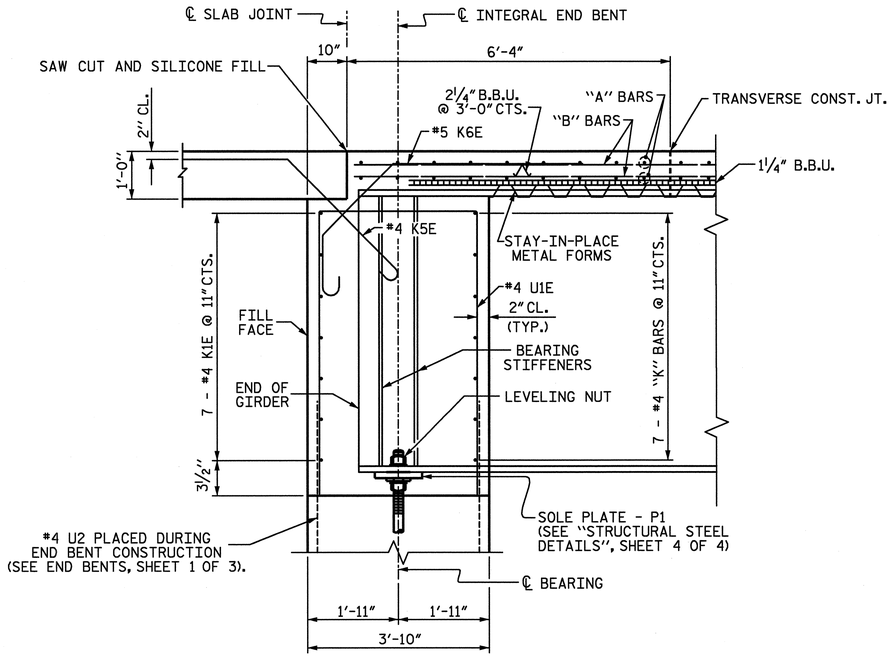

SECTION AT INTEGRAL END BENT

FOR TOP OF SOLE PLATE - P1 ELEVATIONS, SEE CHART BELOW.

	GIRDER	TOP OF SOLE PLATE (P1) ELEV.
END BENT #1	AG1	716.646
	AG2	717.152
	AG3	717.659
	AG4	718.165
	AG5	718.672
END BENT #2	AG1	715.302
	AG2	715.812
	AG3	716.322
	AG4	716.831
	AG5	717.341

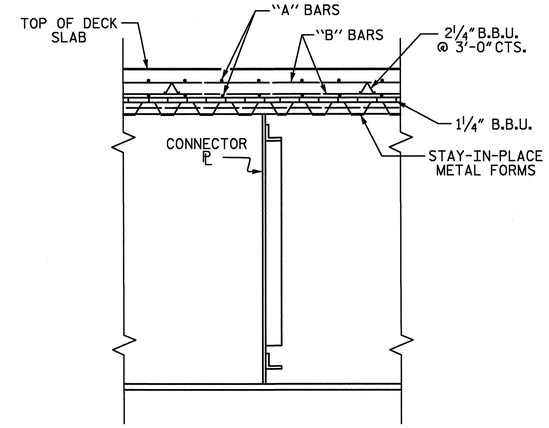

SECTION AT INTERMEDIATE DIAPHRAGM

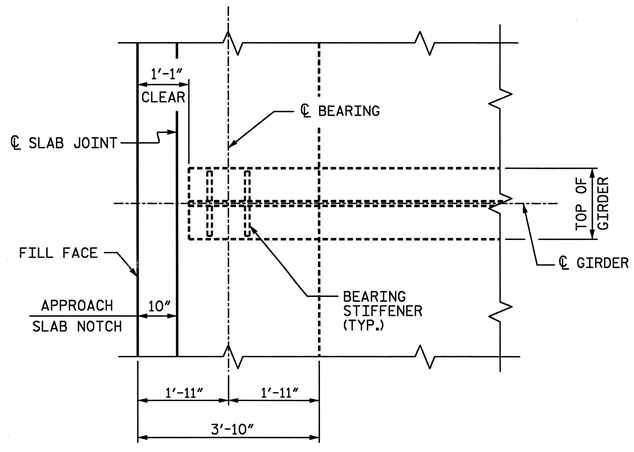

PLAN OF GIRDER AT END BENT

(TYPICAL EACH END BENT)

PROJECT NO. R-2606A

RANDOLPH COUNTY

STATION: 22+65.00 -L-

SHEET 2 OF 2

STATE OF NORTH CAROLINA
DEPARTMENT OF TRANSPORTATION
RALEIGH

SUPERSTRUCTURE

TYPICAL SECTION

(LEFT LANE)

NORTH CAROLINA PROFESSIONAL SEAL 18056 ENGINEER JOHN A. BATTS 1-31-05

REVISIONS						SHEET NO.
NO.	BY:	DATE:	NO.	BY:	DATE:	S-82
1			3			TOTAL SHEETS
2			4			199

PLANS PREPARED BY:

ARCADIS

ARCADIS G&M OF NORTH CAROLINA, INC.
801 CORPORATE CENTER DRIVE, SUITE 300
RALEIGH, NORTH CAROLINA 27607-5073
TEL: 919/854-1282 FAX: 919/854-5448
WWW.ARCADIS-US.COM

DRAWN BY : D.G.VESTER DATE : 01/05
CHECKED BY : J.A.BATTS DATE : 01/05

1/28/2005 3:06:48 PM g:\tra\603031\drawings\final\left lane\r2606a_sd_ts_011.dgn

#####USERNAME#####

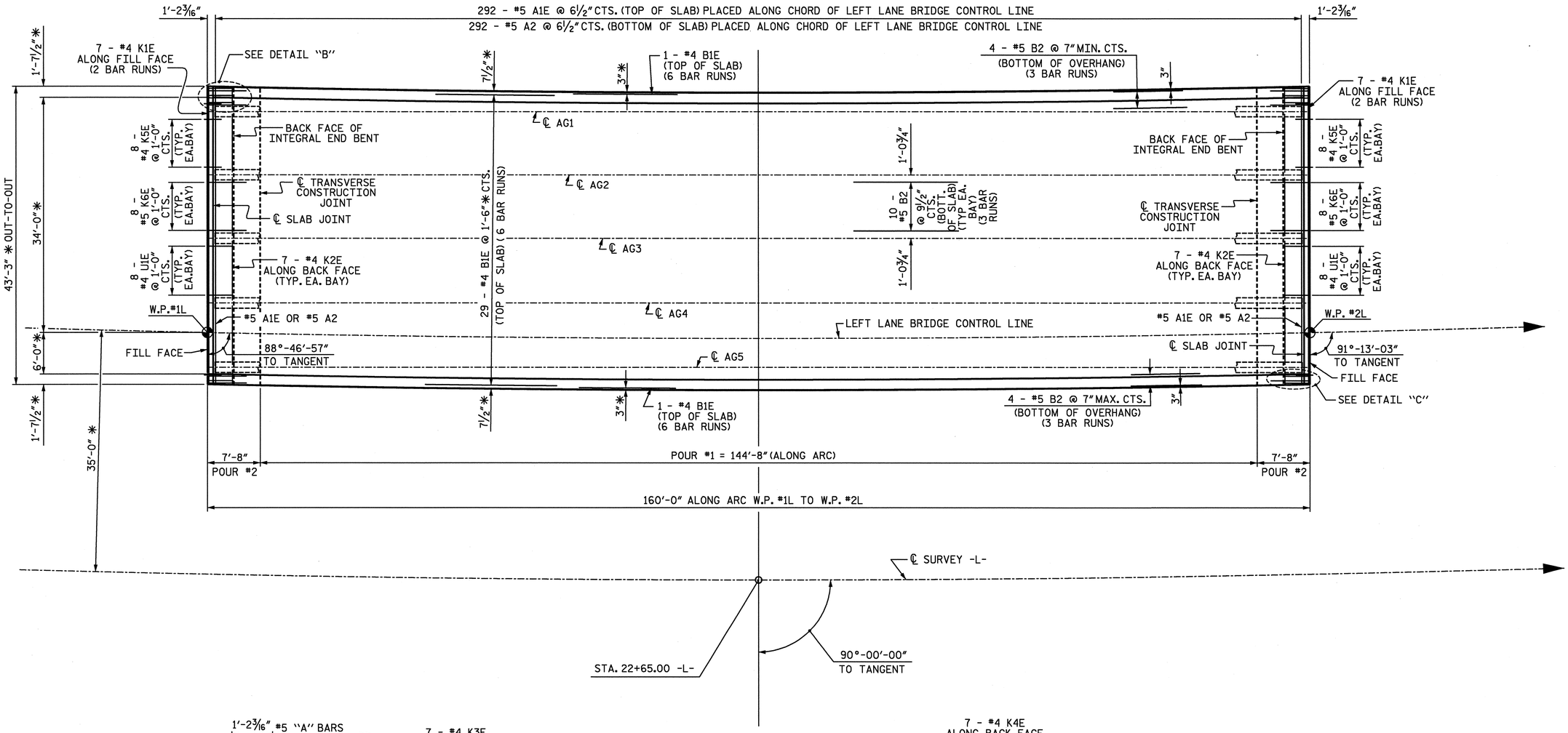

SPAN A

* - RADIAL DIMENSIONS

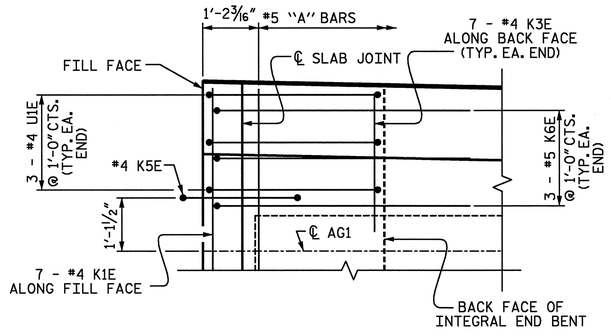

DETAIL "B"

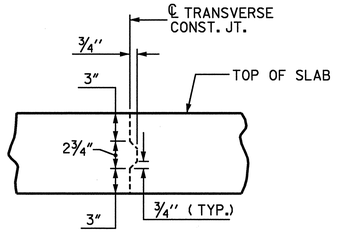

TRANSVERSE CONSTRUCTION JOINT DETAIL

NOTE: REINFORCING STEEL IN SLAB NOT SHOWN. LONGITUDINAL REINFORCING STEEL SHALL BE CONTINUOUS THRU JOINT.

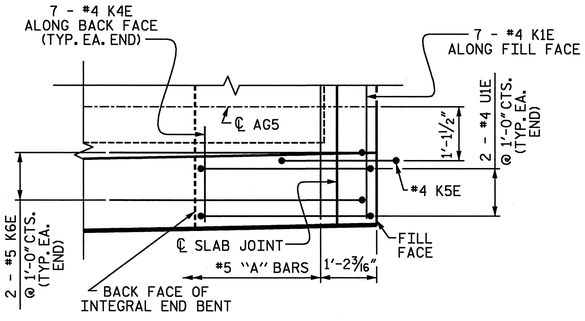

DETAIL "C"

PROJECT NO. R-2606A

RANDOLPH COUNTY

STATION: 22+65.00 -L-

SHEET 1 OF 2

STATE OF NORTH CAROLINA
DEPARTMENT OF TRANSPORTATION
RALEIGH

SUPERSTRUCTURE

PLAN OF SPAN A

(LEFT LANE)

REVISIONS						SHEET NO.
NO.	BY:	DATE:	NO.	BY:	DATE:	S-83
1			3			TOTAL SHEETS
2			4			199

PLANS PREPARED BY:

ARCADIS

ARCADIS G&M OF NORTH CAROLINA, INC.
801 CORPORATE CENTER DRIVE, SUITE 300
RALEIGH, NORTH CAROLINA 27607-5073
TEL: 919/854-1282 FAX: 919/854-5448
WWW.ARCADIS-US.COM

DRAWN BY : D.G.VESTER DATE : 01/05

CHECKED BY : J.A.BATTS DATE : 01/05

NORTH CAROLINA PROFESSIONAL SEAL 18058 ENGINEER JOHN A. BATTS 1-31-05

1/28/2005 3:06:49 PM g:\tra\603031\drawings\final\left lane\r2606a_sd_s1_01l.dgn

$$$$$$$SYSTIME$$$$$$
$$$$$$$$$$$$$$$$$$$$$$$$$$DGN$$$$$$$$$$$$$$$$$$$$$$$$$$
$$$$USERNAME$$$$

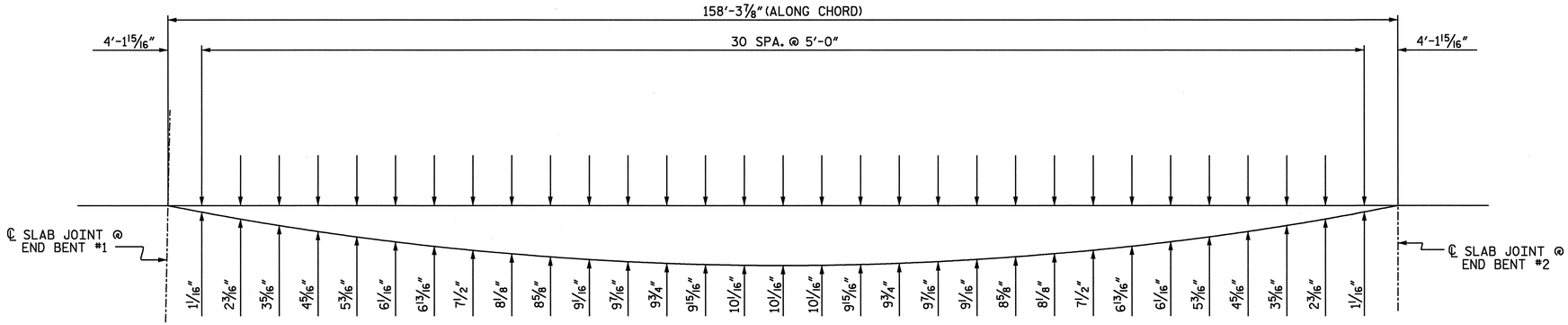

SPAN "A" ARC OFFSET (LT. SIDE)

OUTSIDE EDGE OF SUPERSTRUCTURE

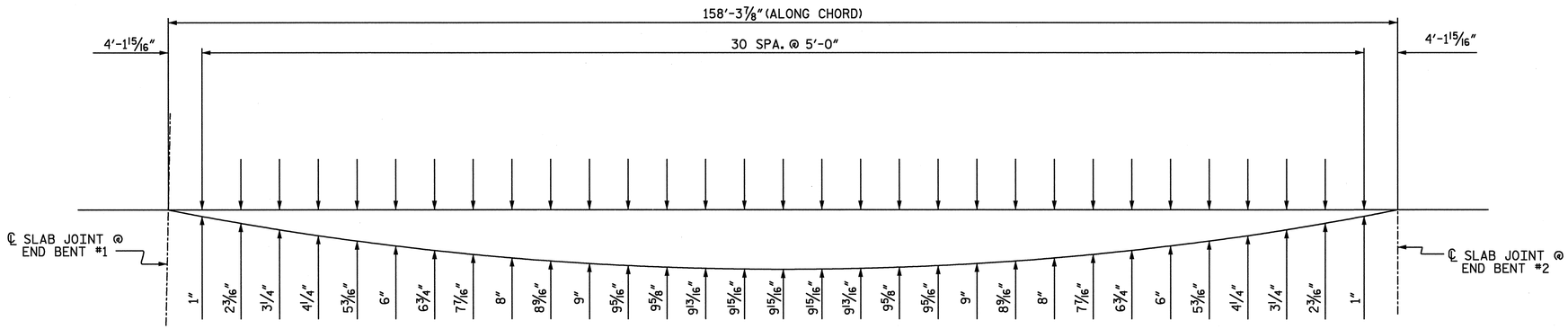

SPAN "A" ARC OFFSET (RT. SIDE)

OUTSIDE EDGE OF SUPERSTRUCTURE

PROJECT NO. R-2606A

RANDOLPH COUNTY

STATION: 22+65.00 -L-

SHEET 2 OF 2

STATE OF NORTH CAROLINA
DEPARTMENT OF TRANSPORTATION
RALEIGH

SUPERSTRUCTURE

PLAN OF SPAN A ARC OFFSETS

(LEFT LANE)

REVISIONS						SHEET NO.
NO.	BY:	DATE:	NO.	BY:	DATE:	S-84
1			3			TOTAL SHEETS
2			4			199

PLANS PREPARED BY:
ARCADIS
ARCADIS G&M OF NORTH CAROLINA, INC.
801 CORPORATE CENTER DRIVE, SUITE 300
RALEIGH, NORTH CAROLINA 27607-5073
TEL: 919/854-1282 FAX: 919/854-5448
WWW.ARCADIS-US.COM

DRAWN BY : D.G.VESTER DATE : 01/05
CHECKED BY : J.A.BATTS DATE : 01/05

NORTH CAROLINA PROFESSIONAL SEAL 18056 ENGINEER JOHN A. BATTS
1-31-05

1/28/2005 3:06:49 PM g:\tro\603031\drawings\final\left lane\r2606a_sd_s1_01l.dgn

****DGN****
****USERNAME****

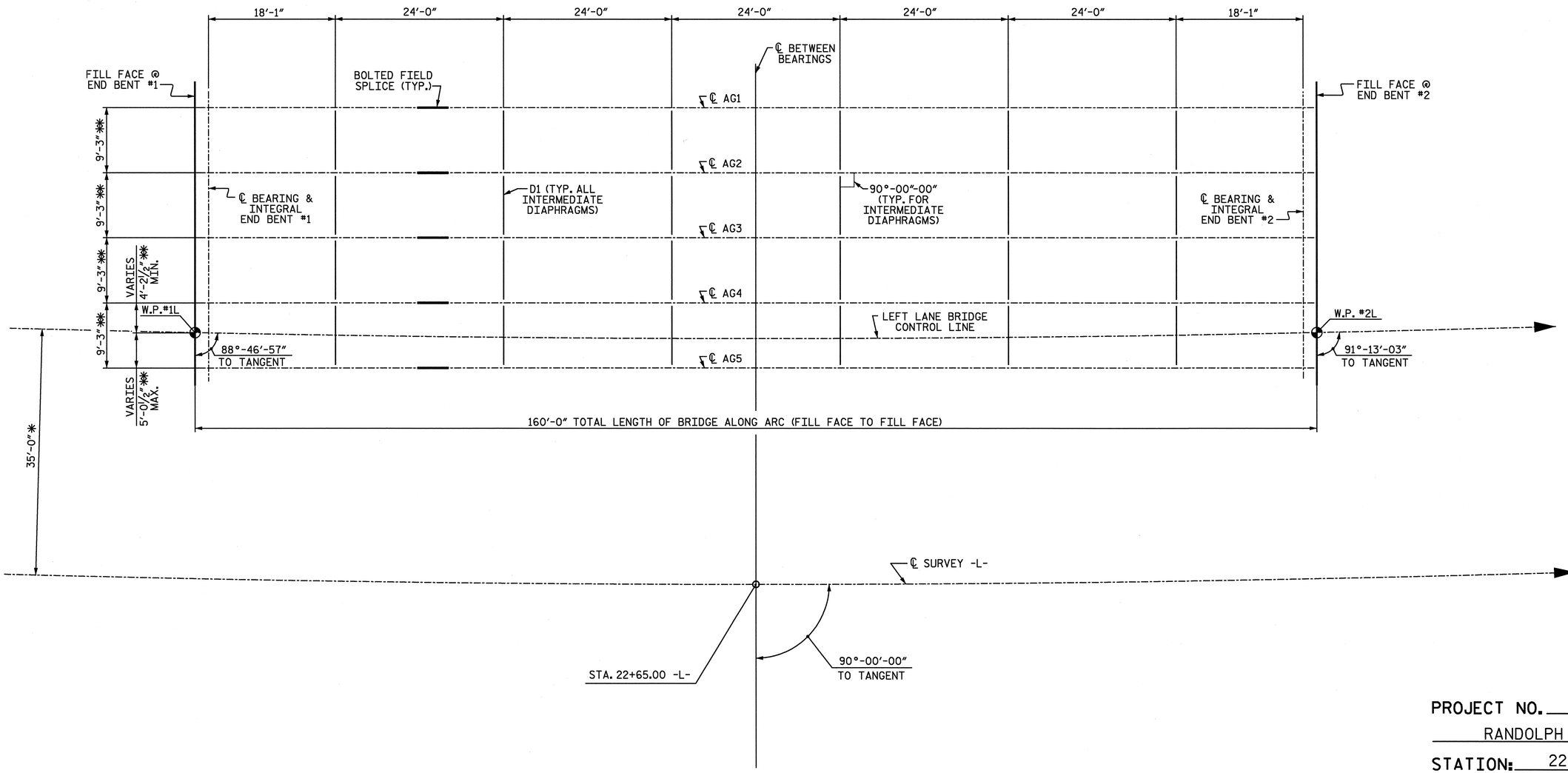

SPAN A

FRAMING PLAN

*- RADIAL DIMENSIONS
**- DIMENSIONS ARE TO ARCS CONCENTRIC WITH THE ℄ SURVEY -L-. GIRDERS ARE ON THE CHORDS OF THE CONCENTRIC ARCS.

PROJECT NO. R-2606A

RANDOLPH COUNTY

STATION: 22+65.00 -L-

SHEET 1 OF 4

STATE OF NORTH CAROLINA
DEPARTMENT OF TRANSPORTATION
RALEIGH

SUPERSTRUCTURE
STRUCTURAL STEEL DETAILS
FRAMING PLAN
(LEFT LANE)

REVISIONS						SHEET NO.
NO.	BY:	DATE:	NO.	BY:	DATE:	S-85
1			3			TOTAL SHEETS
2			4			199

PLANS PREPARED BY:
ARCADIS
ARCADIS G&M OF NORTH CAROLINA, INC.
801 CORPORATE CENTER DRIVE, SUITE 300
RALEIGH, NORTH CAROLINA 27607-5073
TEL: 919/854-1282 FAX: 919/854-5448
WWW.ARCADIS-US.COM

DRAWN BY : D.G.VESTER DATE : 01/05
CHECKED BY : J.A.BATTS DATE : 01/05

NORTH CAROLINA PROFESSIONAL SEAL 18054 ENGINEER JOHN A. BATTS 1-31-05

1/28/2005 3:06:49 PM g:\tra\60303\drawings\final\left lane\r-2606a_sd_ss_011.dgn

$$$$$$SYSTIME$$$$$
$$$$$$$$$$$$$$$$$$$$$$$$$$DGN$$$$$$$$$$$$$$$$$$$$$$$$$$
$$$$USERNAME$$$$

SPAN A

GIRDER ELEVATION
(NOT TO SCALE)

SHEAR STUD DETAILS

DETAIL "D"

SPAN A

BOTTOM FLANGE DETAIL
(NOT TO SCALE)

PROJECT NO. R-2606A
RANDOLPH COUNTY
STATION: 22+65.00 -L-

SHEET 2 OF 4

STATE OF NORTH CAROLINA
DEPARTMENT OF TRANSPORTATION
RALEIGH

SUPERSTRUCTURE
STRUCTURAL STEEL DETAILS
(LEFT LANE)

NORTH CAROLINA PROFESSIONAL ENGINEER SEAL 18056 JOHN A. BATTS
1-31-05

REVISIONS					
NO.	BY:	DATE:	NO.	BY:	DATE:
1			3		
2			4		

SHEET NO. S-86
TOTAL SHEETS 199

PLANS PREPARED BY:
ARCADIS
ARCADIS G&M OF NORTH CAROLINA, INC.
801 CORPORATE CENTER DRIVE, SUITE 300
RALEIGH, NORTH CAROLINA 27607-5073
TEL: 919/854-1282 FAX: 919/854-5448
WWW.ARCADIS-US.COM

DRAWN BY : D.G.VESTER DATE : 01/05
CHECKED BY : J.A.BATTS DATE : 01/05

1/28/2005 3:06:49 PM g:\tra\603031\drawings\final\left lane\r2606a_sd_ss_01l.dgn

$$$$$$SYSTIME$$$$$$
$$$$$$$$$$$$$$$$$$$$$$$$DGN$$$$$$$$$$$$$$$$$$$$$$$$
$$$$USERNAME$$$$

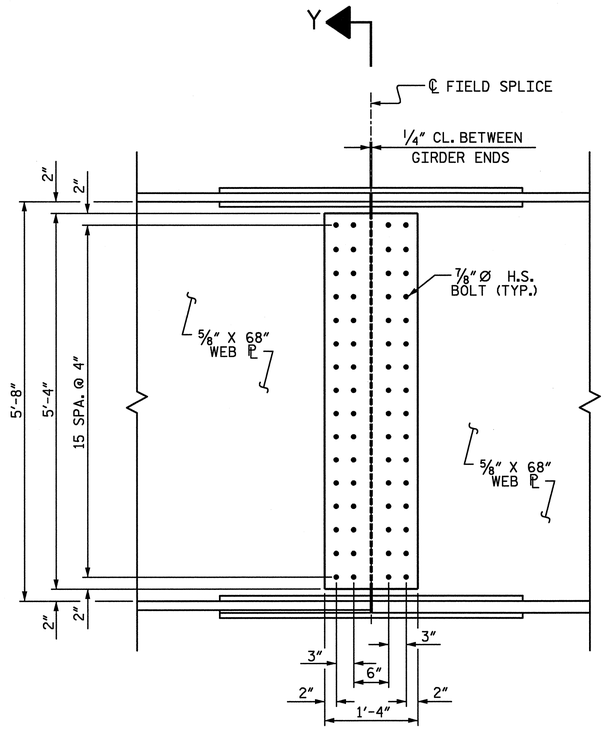

WEB SECTION

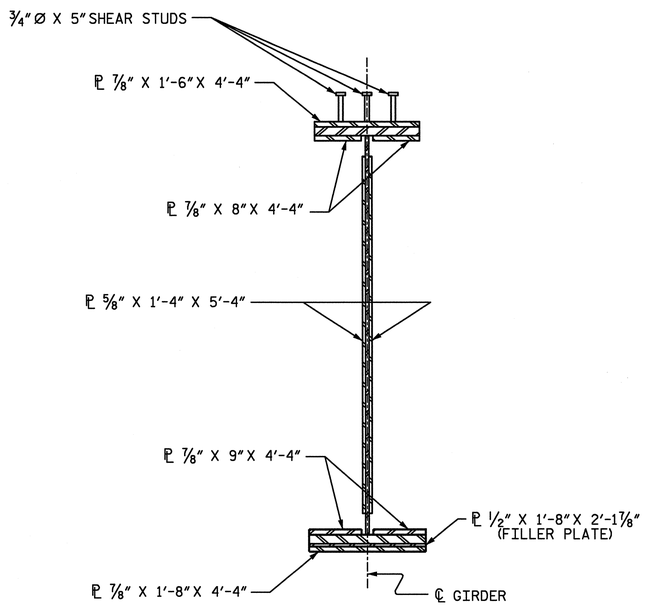

SECTION Y-Y

NOTES

ALL STRUCTURAL STEEL SHALL BE AASHTO M270 GRADE 50W AND PAINTED IN ACCORDANCE WITH SYSTEM 4 OF ARTICLE 442-7 OF THE STANDARD SPECIFICATIONS UNLESS OTHERWISE NOTED ON THE PLANS.

ALL DIMENSIONS SHOWN ARE HORIZONTAL OR VERTICAL, UNLESS OTHERWISE NOTED.

ALL FIELD CONNECTIONS TO BE 7/8" DIA. HIGH STRENGTH BOLTS UNLESS OTHERWISE NOTED.

BEARING STIFFENERS ARE TO BE PLACED NORMAL TO THE WEB OF THE GIRDER AND SHALL BE PLUMB.

A CHARPY V-NOTCH TEST IS REQUIRED FOR WEB PLATES, BOTTOM FLANGE PLATES, BOTTOM FLANGE SPLICE PLATES AND WEB SPLICE PLATES FOR ALL GIRDERS AND IN ACCORDANCE WITH ARTICLE 1072-9 OF THE STANDARD SPECIFICATIONS.

SHOP SPLICES ARE PERMITTED TO LIMIT THE MAXIMUM REQUIRED FLANGE PIECE LENGTHS TO 60 FEET AND WEB PIECE LENGTHS TO 45 FEET. PERMITTED FLANGE AND WEB SHOP SPLICES SHALL NOT BE LOCATED WITHIN 15 FEET OF MAXIMUM DEAD LOAD DEFLECTION. KEEP 6" MINIMUM BETWEEN CONNECTOR PLATE OR TRANSVERSE STIFFENER WELDS AND WEB OR FLANGE SHOP SPLICES.

STUDS ON GIRDERS MAY BE SHIFTED UP TO 1" IF NECESSARY TO CLEAR FLANGE SPLICE WELD.

TENSION ON THE AASHTO M164 BOLTS SHALL BE CALIBRATED USING TENSION INDICATOR WASHERS IN ACCORDANCE WITH ARTICLE 440-1-0 OF THE STANDARD SPECIFICATIONS.

ENDS OF GIRDERS SHALL BE PLUMB.

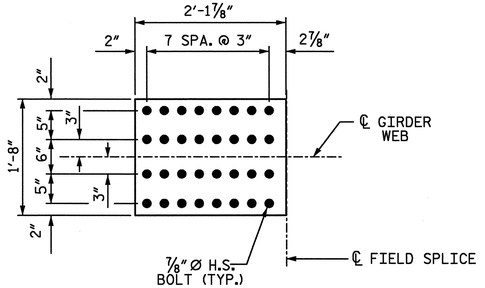

FILLER PLATE
(FOR BOTTOM FLANGE SPLICE)

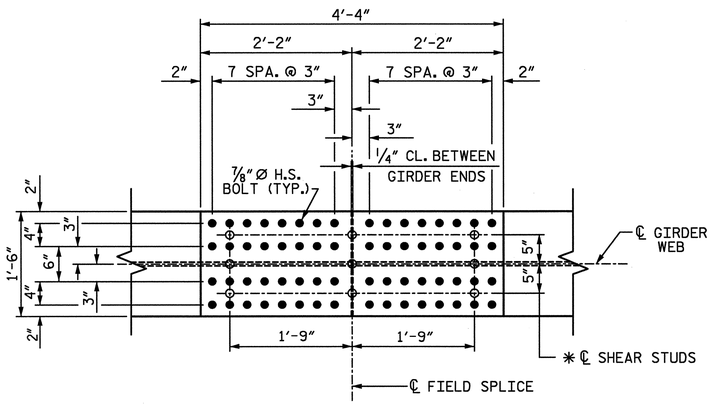

TOP FLANGE
(TOP OF TOP FLANGE)

* SHEAR STUDS ARE TO BE SHOP WELDED ON TOP OF THE PLATE BEFORE FIELD ASSEMBLY.

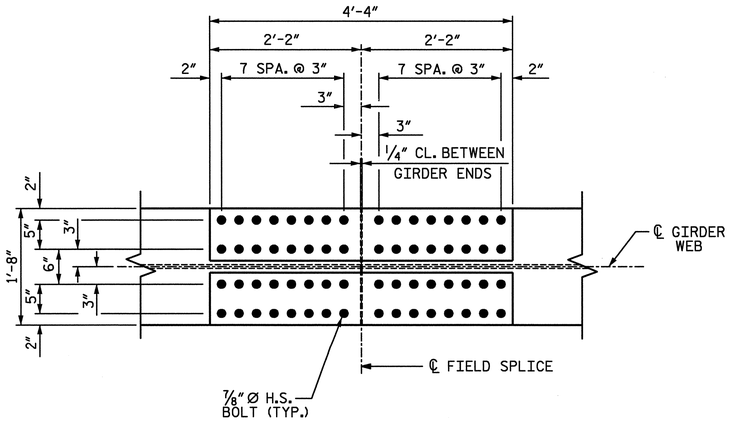

BOTTOM FLANGE
(TOP OF BOTTOM FLANGE)

BOLTED FIELD SPLICE DETAILS

PROJECT NO. R-2606A

RANDOLPH COUNTY

STATION: 22+65.00 -L-

SHEET 3 OF 4

STATE OF NORTH CAROLINA
DEPARTMENT OF TRANSPORTATION
RALEIGH

SUPERSTRUCTURE

STRUCTURAL STEEL DETAILS

(LEFT LANE)

REVISIONS						SHEET NO.
NO.	BY:	DATE:	NO.	BY:	DATE:	S-87
1			3			TOTAL SHEETS
2			4			199

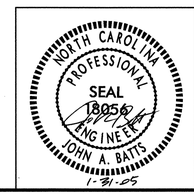

PLANS PREPARED BY:
ARCADIS
ARCADIS G&M OF NORTH CAROLINA, INC.
801 CORPORATE CENTER DRIVE, SUITE 300
RALEIGH, NORTH CAROLINA 27607-5073
TEL: 919/854-1282 FAX: 919/854-5448
WWW.ARCADIS-US.COM

DRAWN BY : D.G.VESTER DATE : 01/05
CHECKED BY : J.A.BATTS DATE : 01/05

1/28/2005 3:06:49 PM g:\tra\603031\drawings\final\left lane\r2606a_sd_ss_01l.dgn

$$$$$$SYSTIME$$$$$
$$$$$$$$$$$$$$$$$$$$$$$$$DGN$$$$$$$$$$$$$$$$$$$$$$$$$
$$$$USERNAME$$$$

TYPICAL INTERMEDIATE DIAPHRAGM (D1)

CONNECTOR PLATE DETAILS

TYPICAL GUESSET PLATE CONNECTION

TYPICAL "TEE" TO GUSSET PLATE CONNECTION

TYPICAL STIFFENER OR CONNECTOR PLATE CONNECTIONS

WELD TERMINATION DETAILS

BEARING STIFFENER DETAILS

SOLE PLATE (P1) DETAILS

(10 REQUIRED)

PLATE (P2) DETAILS

(10 REQUIRED)

PLATE (P2) IS TO BE PLACED DURING END BENT CONSTRUCTION.

TYPICAL FLANGE AND WEB BUTT JOINT

* GRIND SMOOTH AND FLUSH ON OUTER FACE OF EXTERIOR GIRDERS

PLANS PREPARED BY:
ARCADIS
ARCADIS G&M OF NORTH CAROLINA, INC.
801 CORPORATE CENTER DRIVE, SUITE 300
RALEIGH, NORTH CAROLINA 27607-5073
TEL: 919/854-1282 FAX: 919/854-5448
WWW.ARCADIS-US.COM

DRAWN BY : D.G.VESTER DATE : 01/05
CHECKED BY : J.A.BATTS DATE : 01/05

1/28/2005 3:06:49 PM g:\tra\603031\drawings\final\left lane\r2606a_sd_ss_011.dgn

PROJECT NO. R-2606A
RANDOLPH COUNTY
STATION: 22+65.00 -L-

SHEET 4 OF 4

STATE OF NORTH CAROLINA
DEPARTMENT OF TRANSPORTATION
RALEIGH

SUPERSTRUCTURE
STRUCTURAL STEEL DETAILS
(LEFT LANE)

REVISIONS						SHEET NO.
NO.	BY:	DATE:	NO.	BY:	DATE:	S-88
1			3			TOTAL SHEETS
2			4			199

$$$$$$$$$$ | $$$$$$$$$$$$$$$$$$$$$$$$$$$$$$$$DGN$$$$$$$$$$$$$$$$$$$$$$$$$$
$$$$USERNAME$$$$

DEAD LOAD DEFLECTION TABLE FOR GIRDER

	SPAN A																				
	GIRDERS 1 & 5																				
TWENTIETH POINTS	0	.05	.10	.15	.20	.25	.30	.35	.40	.45	.50	.55	.60	.65	.70	.75	.80	.85	.90	.95	1.00
DEFLECTION DUE TO WEIGHT OF GIRDER	0	.026	.051	.074	.096	.114	.130	.143	.152	.158	.160	.158	.152	.143	.130	.114	.096	.074	.051	.026	0
DEFLECTION DUE TO WEIGHT OF SLAB *	0	.072	.142	.207	.267	.319	.363	.399	.425	.440	.446	.440	.425	.399	.363	.319	.267	.207	.142	.072	0
DEFLECTION DUE TO WEIGHT OF BARRIER RAILS	0	.007	.015	.021	.027	.033	.037	.041	.043	.045	.046	.045	.043	.041	.037	.033	.027	.021	.015	.007	0
TOTAL DEAD LOAD DEFLECTION	0	.105	.208	.302	.390	.466	.530	.583	.620	.643	.652	.643	.620	.583	.530	.466	.390	.302	.208	.105	0
VERTICAL CURVE ORDINATE	0	-.027	-.051	-.072	-.090	-.105	-.118	-.128	-.135	-.139	-.141	-.139	-.135	-.128	-.118	-.105	-.090	-.072	-.051	-.027	0
SUPERELEVATION ORDINATE	0	-.008	-.016	-.023	-.028	-.033	-.037	-.040	-.042	-.044	-.044	-.044	-.042	-.040	-.037	-.033	-.028	-.023	-.016	-.008	0
REQUIRED CAMBER	0	13/16"	1 11/16"	2 1/2"	3 1/4"	3 15/16"	4 1/2"	5"	5 5/16"	5 1/2"	5 5/8"	5 1/2"	5 5/16"	5"	4 1/2"	3 15/16"	3 1/4"	2 1/2"	1 11/16"	13/16"	0

DEAD LOAD DEFLECTION TABLE FOR GIRDER

	SPAN A																				
	GIRDER 2																				
TWENTIETH POINTS	0	.05	.10	.15	.20	.25	.30	.35	.40	.45	.50	.55	.60	.65	.70	.75	.80	.85	.90	.95	1.00
DEFLECTION DUE TO WEIGHT OF GIRDER	0	.027	.053	.078	.100	.120	.136	.150	.159	.165	.167	.165	.159	.150	.136	.120	.100	.078	.053	.027	0
DEFLECTION DUE TO WEIGHT OF SLAB *	0	.083	.163	.238	.306	.366	.416	.457	.487	.505	.511	.505	.487	.457	.416	.366	.306	.238	.163	.083	0
DEFLECTION DUE TO WEIGHT OF BARRIER RAILS	0	.007	.014	.020	.026	.031	.036	.039	.042	.043	.044	.043	.042	.039	.036	.031	.026	.020	.014	.007	0
TOTAL DEAD LOAD DEFLECTION	0	.117	.230	.336	.432	.517	.588	.646	.688	.713	.722	.713	.688	.646	.588	.517	.432	.336	.230	.117	0
VERTICAL CURVE ORDINATE	0	-.027	-.051	-.073	-.091	-.107	-.120	-.130	-.137	-.141	-.143	-.141	-.137	-.130	-.120	-.107	-.091	-.073	-.051	-.027	0
SUPERELEVATION ORDINATE	0	-.008	-.016	-.023	-.028	-.033	-.037	-.040	-.042	-.044	-.044	-.044	-.042	-.040	-.037	-.033	-.028	-.023	-.016	-.008	0
REQUIRED CAMBER	0	1"	1 15/16"	2 7/8"	3 3/4"	4 1/2"	5 3/16"	5 11/16"	6 1/8"	6 5/16"	6 7/16"	6 5/16"	6 1/8"	5 11/16"	5 3/16"	4 1/2"	3 3/4"	2 7/8"	1 15/16"	1"	0

DEAD LOAD DEFLECTION TABLE FOR GIRDER

	SPAN A																				
	GIRDERS 3 & 4																				
TWENTIETH POINTS	0	.05	.10	.15	.20	.25	.30	.35	.40	.45	.50	.55	.60	.65	.70	.75	.80	.85	.90	.95	1.00
DEFLECTION DUE TO WEIGHT OF GIRDER	0	.027	.053	.078	.100	.120	.136	.150	.159	.165	.167	.165	.159	.150	.136	.120	.100	.078	.053	.027	0
DEFLECTION DUE TO WEIGHT OF SLAB *	0	.083	.163	.238	.306	.366	.416	.457	.487	.505	.511	.505	.487	.457	.416	.366	.306	.238	.163	.083	0
DEFLECTION DUE TO WEIGHT OF BARRIER RAILS	0	.007	.014	.020	.026	.031	.036	.039	.042	.043	.044	.043	.042	.039	.036	.031	.026	.020	.014	.007	0
TOTAL DEAD LOAD DEFLECTION	0	.117	.230	.336	.432	.517	.588	.646	.688	.713	.722	.713	.688	.646	.588	.517	.432	.336	.230	.117	0
VERTICAL CURVE ORDINATE	0	-.027	-.051	-.072	-.090	-.106	-.119	-.129	-.136	-.140	-.141	-.140	-.136	-.129	-.119	-.106	-.090	-.072	-.051	-.027	0
SUPERELEVATION ORDINATE	0	-.008	-.016	-.023	-.028	-.033	-.037	-.040	-.042	-.044	-.044	-.044	-.042	-.040	-.037	-.033	-.028	-.023	-.016	-.008	0
REQUIRED CAMBER	0	1"	1 15/16"	2 7/8"	3 3/4"	4 9/16"	5 3/16"	5 3/4"	6 1/8"	6 3/8"	6 7/16"	6 3/8"	6 1/8"	5 3/4"	5 3/16"	4 9/16"	3 3/4"	2 7/8"	1 15/16"	1"	0

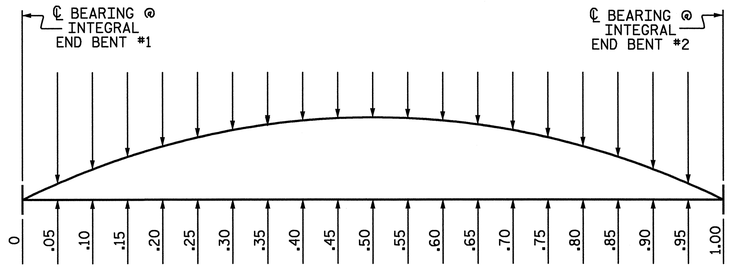

SPAN A

SCHEMATIC CAMBER ORDINATES

PROJECT NO. R-2606A

RANDOLPH COUNTY

STATION: 22+65.00 -L-

* INCLUDES SLAB, BUILD-UP, AND STAY-IN-PLACE METAL FORMS.
ALL VALUES ARE SHOWN IN FEET (DECIMAL FORM), EXCEPT "REQUIRED CAMBER", WHICH IS GIVEN IN INCHES (FRACTION FORM).

PLANS PREPARED BY:
ARCADIS
ARCADIS G&M OF NORTH CAROLINA, INC.
801 CORPORATE CENTER DRIVE, SUITE 300
RALEIGH, NORTH CAROLINA 27607-5073
TEL: 919/854-1282 FAX: 919/854-5448
WWW.ARCADIS-US.COM

DRAWN BY : D.G.VESTER DATE : 01/05
CHECKED BY : J.A.BATTS DATE : 01/05

NORTH CAROLINA PROFESSIONAL SEAL 19854 ENGINEER JOHN A. BATTS
1-31-05

STATE OF NORTH CAROLINA
DEPARTMENT OF TRANSPORTATION
RALEIGH
SUPERSTRUCTURE

DEAD LOAD DEFLECTION AND CAMBER TABLES

(LEFT LANE)

REVISIONS						SHEET NO.
NO.	BY:	DATE:	NO.	BY:	DATE:	S-89
1			3			TOTAL SHEETS
2			4			199

1/28/2005 3:06:49 PM g:\tra\603031\drawings\final\left lane\r2606a_sd_dl_01l.dgn

$$$$$$SYSTIME$$$$$
$$$$$$$$$$$$$$$$$$$$$$$$DGN$$$$$$$$$$$$$$$$$$$$$$$$
$$$$USERNAME$$$$

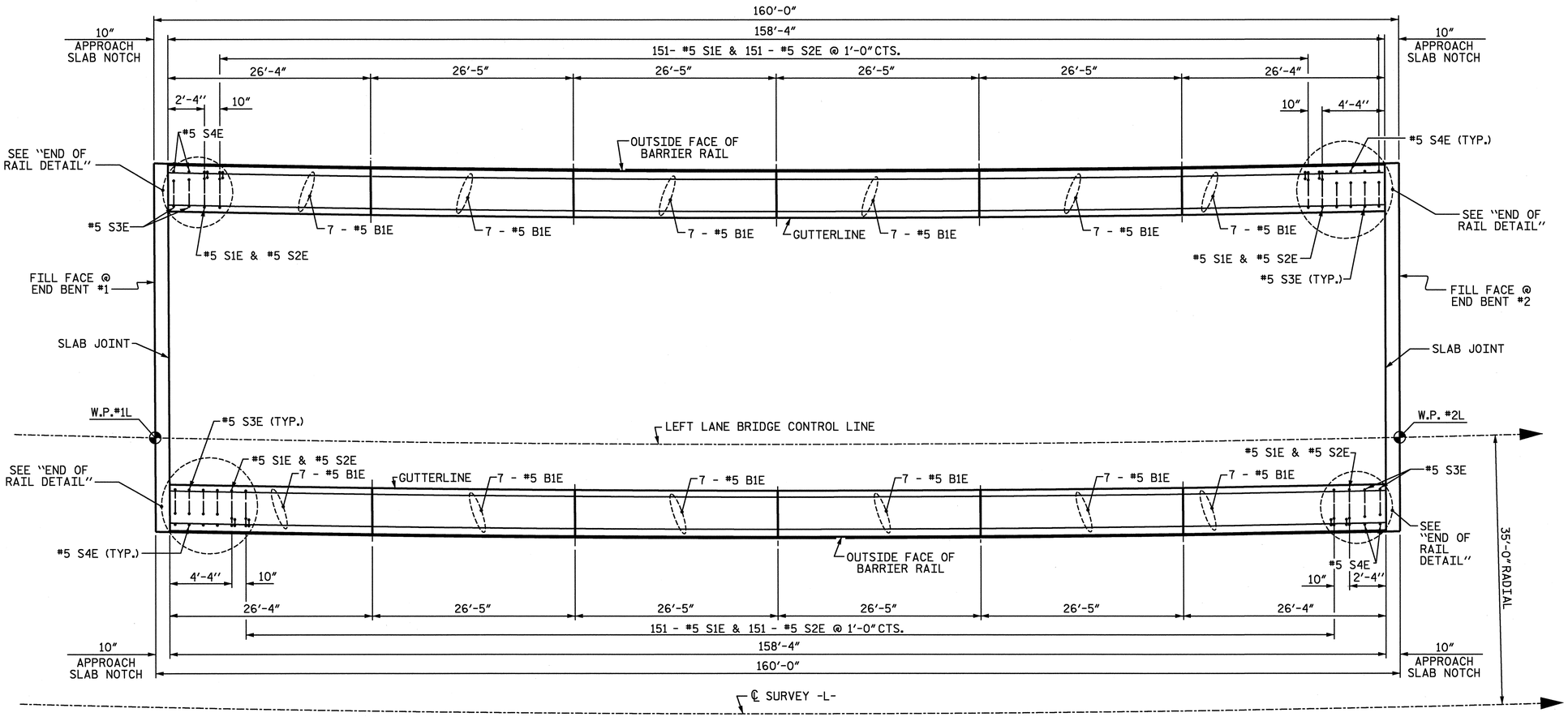

SPAN A

PLAN OF BARRIER RAIL

SEE END OF RAIL DETAILS, PLAN VIEW FOR LOCATION OF BARS, SHEET 2 OF 2.

NOTE: ALL DIMENSIONS ARE MEASURED ALONG OUTSIDE EDGE OF BARRIER RAIL.

PROJECT NO. R-2606A

RANDOLPH COUNTY

STATION: 22+65.00 -L-

SHEET 1 OF 2

STATE OF NORTH CAROLINA
DEPARTMENT OF TRANSPORTATION
RALEIGH

SUPERSTRUCTURE

CONCRETE BARRIER RAIL

(LEFT LANE)

REVISIONS						SHEET NO.
NO.	BY:	DATE:	NO.	BY:	DATE:	S-90
1			3			TOTAL SHEETS
2			4			199

PLANS PREPARED BY:
ARCADIS
ARCADIS G&M OF NORTH CAROLINA, INC.
801 CORPORATE CENTER DRIVE, SUITE 300
RALEIGH, NORTH CAROLINA 27607-5073
TEL: 919/854-1282 FAX: 919/854-5448
WWW.ARCADIS-US.COM

DRAWN BY : D.G.VESTER DATE : 01/05
CHECKED BY : J.A.BATTS DATE : 01/05

NORTH CAROLINA PROFESSIONAL SEAL 18056 ENGINEER JOHN A. BATTS 1-31-05

1/28/2005 3:06:50 PM g:\tra\60303\drawings\final\left lane\r2606a_sd_br_01l.dgn

$$$$$$SYSTIME$$$$$
$$$$$$$$$$$$$$$$$$$$$$$$DGN$$$$$$$$$$$$$$$$$$$$$$$$
$$$$USERNAME$$$$

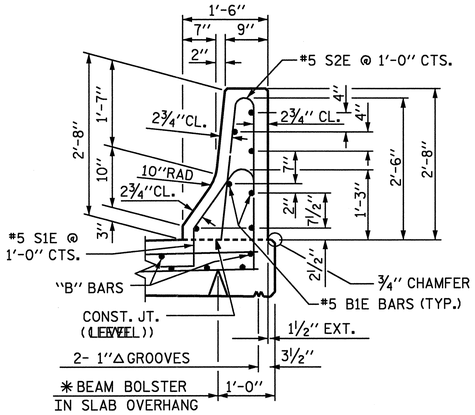

SECTION THRU RAIL

✱HEIGHT VARIES
(SEE SUPERSTRUCTURE TYPICAL SECTION)

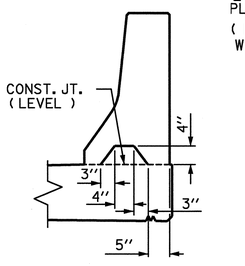

SECTION S-S

AT DAM IN OPEN JOINT
(THIS IS TO BE USED ONLY
WHEN SLIP FORM IS USED)

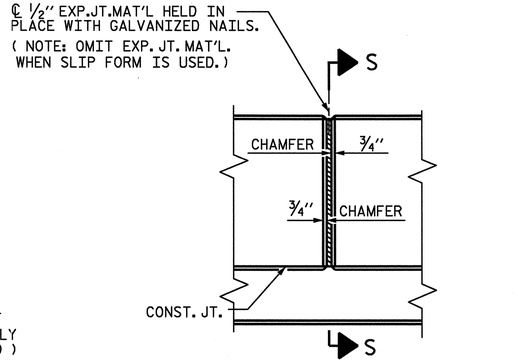

ELEVATION AT EXPANSION JOINTS

BARRIER RAIL DETAILS

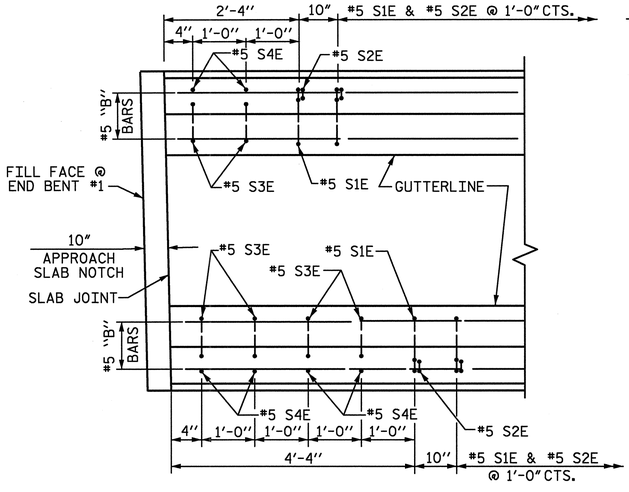

PLAN @ END BENT #1

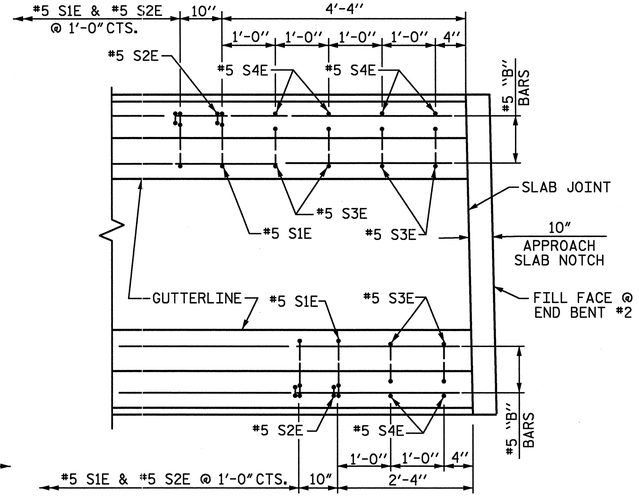

PLAN @ END BENT #2

END OF RAIL DETAILS

END VIEW

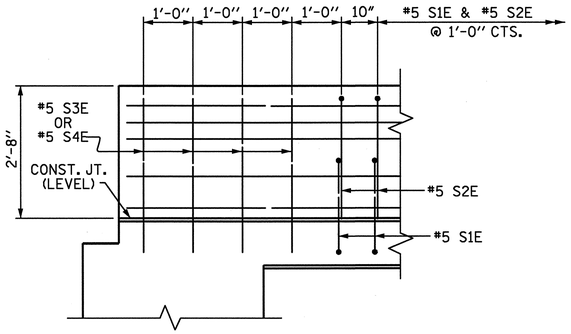

SIDE VIEW

NOTES

THE BARRIER RAIL IN EACH SPAN SHALL NOT BE CAST UNTIL ALL SLAB CONCRETE IN THAT SPAN HAS BEEN CAST AND HAS REACHED A MINIMUM COMPRESSIVE STRENGTH OF 3,000 PSI.

THE SLAB JOINT SHALL BE SAWED PRIOR TO THE CASTING OF BARRIER RAIL.

ALL REINFORCING STEEL IN BARRIER RAILS SHALL BE EPOXY COATED.

THE #5 S3E AND #5 S4E BARS SHALL BE INSTALLED, USING AN ADHESIVE ANCHORING SYSTEM, AFTER SAWING THE SLAB JOINT. FOR ADHESIVELY ANCHORED ANCHOR BOLTS OR DOWELS, SEE SPECIAL PROVISIONS. THE YIELD LOAD FOR THE #5 S3E AND #5 S4E BARS IS 18.6 KIPS. FIELD TESTING FOR THE ADHESIVE BONDING SYSTEM IS NOT REQUIRED.

VERTICAL GROOVED CONTRACTION JOINTS, ½" IN DEPTH, SHALL BE TOOLED IN ALL EXPOSED FACES OF THE BARRIER RAIL AND IN ACCORDANCE WITH ARTICLE 825-10(B) OF THE STANDARD SPECIFICATIONS. THE CONTRACTION JOINT SHALL BE LOCATED AT EACH THIRD POINT BETWEEN BARRIER RAIL EXPANSION JOINTS. ONLY ONE CONTRACTION JOINT IS REQUIRED AT MIDPOINT OF BARRIER RAIL SEGMENTS LESS THAN 20 FEET IN LENGTH AND NO CONTRACTION JOINTS ARE REQUIRED FOR THOSE SEGMENTS LESS THAN 10 FEET IN LENGTH.

BAR TYPES

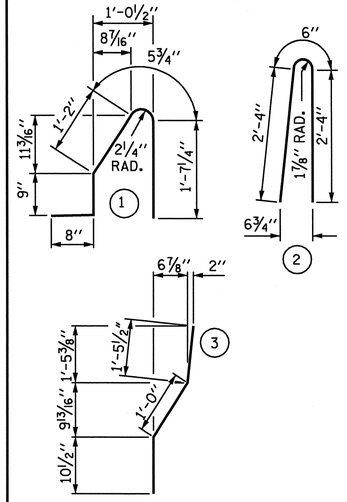

ALL BAR DIMENSIONS ARE OUT TO OUT

BILL OF MATERIAL

FOR CONCRETE BARRIER RAIL ONLY

BAR	NO.	SIZE	TYPE	LENGTH	WEIGHT
B1E	84	#5	STR	26'-0"	2278
S1E	306	#5	1	4'-8"	1489
S2E	306	#5	2	5'-2"	1649
S3E	12	#5	3	3'-4"	42
S4E	12	#5	STR	3'-0"	38

EPOXY COATED REINFORCING STEEL	5496 LBS.
CLASS AA CONCRETE	31.7 CU. YDS.
CONCRETE BARRIER RAIL	316.7 LIN. FT.

PROJECT NO. R-2606A

RANDOLPH COUNTY

STATION: 22+65.00 -L-

SHEET 2 OF 2

STATE OF NORTH CAROLINA
DEPARTMENT OF TRANSPORTATION
RALEIGH

SUPERSTRUCTURE

CONCRETE BARRIER RAIL

(LEFT LANE)

REVISIONS						SHEET NO.
NO.	BY:	DATE:	NO.	BY:	DATE:	S-91
1			3			TOTAL SHEETS
2			4			199

PLANS PREPARED BY:
ARCADIS
ARCADIS G&M OF NORTH CAROLINA, INC.
801 CORPORATE CENTER DRIVE, SUITE 300
RALEIGH, NORTH CAROLINA 27607-5073
TEL: 919/854-1282 FAX: 919/854-5448
WWW.ARCADIS-US.COM

DRAWN BY : D.G.VESTER DATE : 01/05
CHECKED BY : J.A.BATTS DATE : 01/05

NORTH CAROLINA PROFESSIONAL SEAL 18058 ENGINEER JOHN A. BATTS 1-31-05

1/28/2005 3:06:50 PM g:\tra\603031\drawings\final\left lane\r2606a_sd_br_011.dgn

$$$$$$$SYSTIME$$$$$
$$$$$$$$$$$$$$$$$$$$$$DGN$$$$$$$$$$$$$$$$$$$$$$$$
$$$$USERNAME$$$$

SUPERSTRUCTURE REINFORCING STEEL LENGTHS ARE BASED ON THE FOLLOWING MINIMUM SPLICE LENGTHS

BAR SIZE	SUPERSTRUCTURE EXCEPT APPROACH SLABS, PARAPET, AND BARRIER RAIL		APPROACH SLABS		PARAPET AND BARRIER RAIL
	EPOXY COATED	UNCOATED	EPOXY COATED	UNCOATED	
#4	2′-0″	1′-9″	2′-0″	1′-9″	2′-9″
#5	2′-6″	2′-2″	2′-6″	2′-2″	3′-5″
#6	3′-0″	2′-7″	3′-10″	2′-7″	4′-4″
#7	5′-3″	3′-6″	——	——	——
#8	6′-10″	4′-7″	——	——	——

GROOVING BRIDGE FLOORS

APPROACH SLABS	1894.7 SQ.FT.
BRIDGE DECK	5846.0 SQ.FT.
TOTAL	7740.7 SQ.FT.

SUPERSTRUCTURE BILL OF MATERIAL

	CLASS AA CONCRETE	REINFORCING STEEL	EPOXY COATED REINFORCING STEEL
	(CU.YDS.)	(LBS.)	(LBS.)
SPAN A	278.6	21,231	19,012

QUANTITIES FOR BARRIER RAIL ARE NOT INCLUDED

REINFORCING BAR SCHEDULE

SPAN A

BAR	NO.	SIZE	TYPE	LENGTH	WEIGHT
A1E	292	5	STR	42′-9″	13020
A2	292	5	STR	42′-9″	13020
B1E	186	4	STR	28′-4″	3520
B2	144	5	STR	54′-8″	8211
K1E	28	4	STR	22′-4″	418
K2E	56	4	STR	8′-5″	315
K3E	14	4	STR	3′-0″	28
K4E	14	4	STR	1′-11″	18
K5E	68	4	2	7′-0″	318
K6E	74	5	1	8′-0″	617
U1E	74	4	3	15′-4″	758
REINFORCING STEEL			LBS		21231
EPOXY COATED REINFORCING STEEL			LBS		19012
CLASS "AA" CONCRETE BREAKDOWN					
POUR #1			CU. YARDS		185.8
POUR #2			CU. YARDS		92.8
TOTAL CLASS "AA" CONCRETE			CU. YARDS		278.6

"E" INDICATES EPOXY COATED REINFORCING STEEL.

BAR TYPES

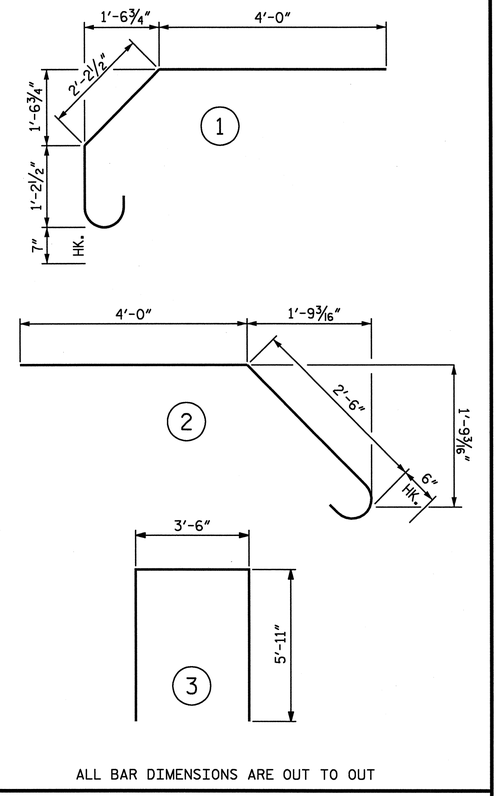

ALL BAR DIMENSIONS ARE OUT TO OUT

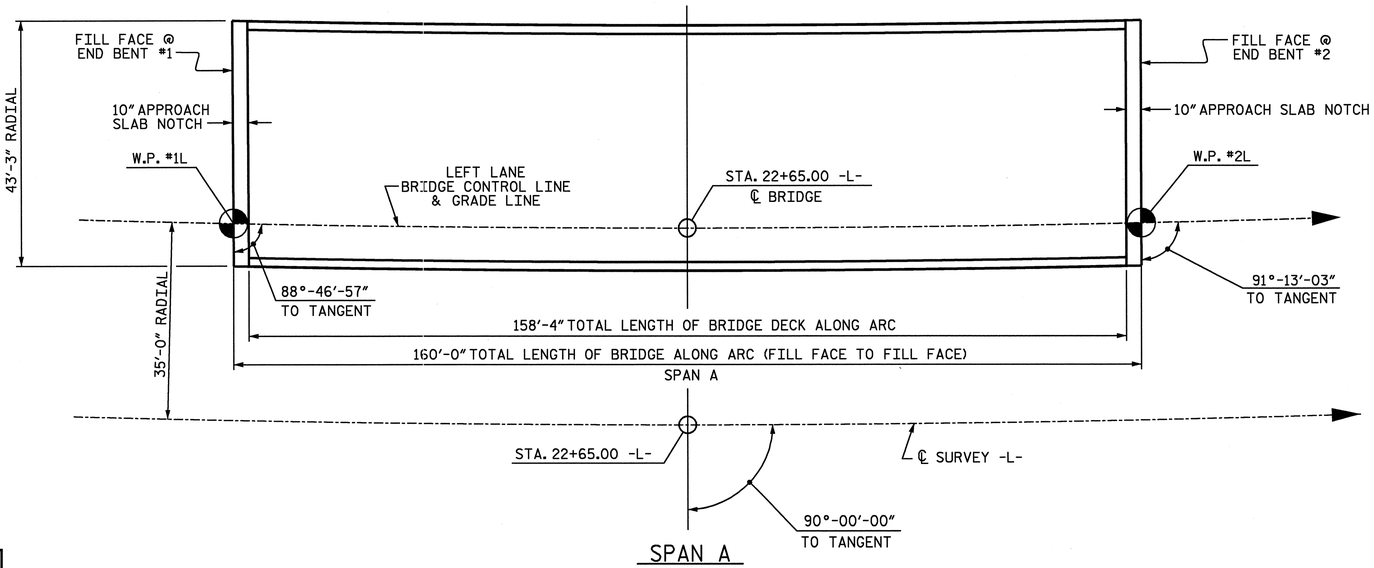

SPAN A

LAYOUT FOR COMPUTING AREA OF REINFORCED CONCRETE DECK SLAB
(SQ.FT. = 6847.9)

PROJECT NO. R-2606A

RANDOLPH COUNTY

STATION: 22+65.00 -L-

STATE OF NORTH CAROLINA
DEPARTMENT OF TRANSPORTATION
RALEIGH

SUPERSTRUCTURE

BILL OF MATERIAL

(LEFT LANE)

REVISIONS						SHEET NO.
NO.	BY:	DATE:	NO.	BY:	DATE:	S-92
1			3			TOTAL SHEETS
2			4			199

NORTH CAROLINA PROFESSIONAL SEAL 18058 ENGINEER JOHN A. BATTS 1-31-05

PLANS PREPARED BY:

ARCADIS

ARCADIS G&M OF NORTH CAROLINA, INC.
801 CORPORATE CENTER DRIVE, SUITE 300
RALEIGH, NORTH CAROLINA 27607-5072
TEL: 919/854-1282 FAX: 919/854-5448
WWW.ARCADIS-US.COM

DRAWN BY : D.G.VESTER DATE : 01/05
CHECKED BY : J.A.BATTS DATE : 01/05

1/28/2005 3:06:50 PM g:\tra\603031\drawings\final\left lane\r-2606a_sd_bm_01l.dgn

$$$$$$SYSTIME$$$$$
$$$$$$$$$$$$$$$$$$$$$$$$DGN$$$$$$$$$$$$$$$$$$$$$$$$
$$$$USERNAME$$$$

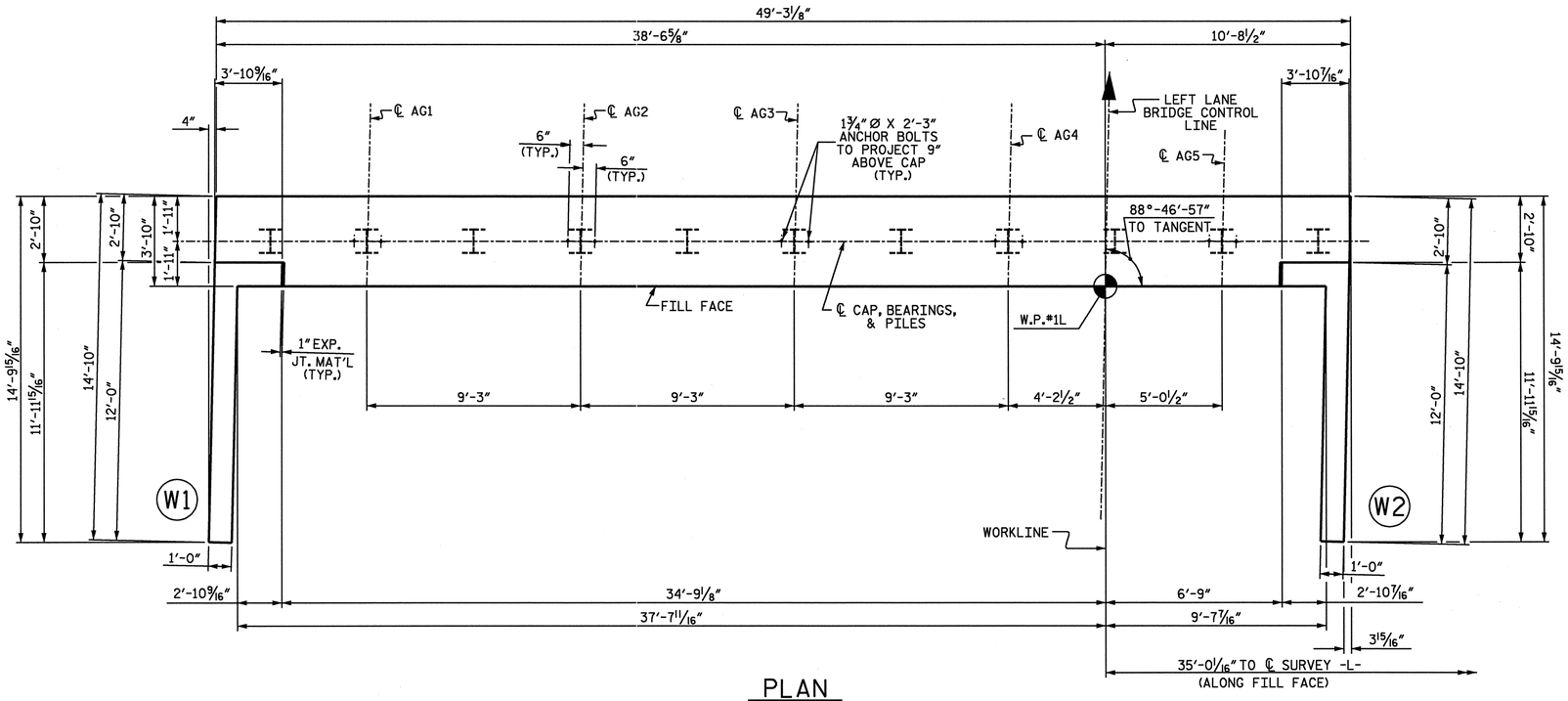

PLAN

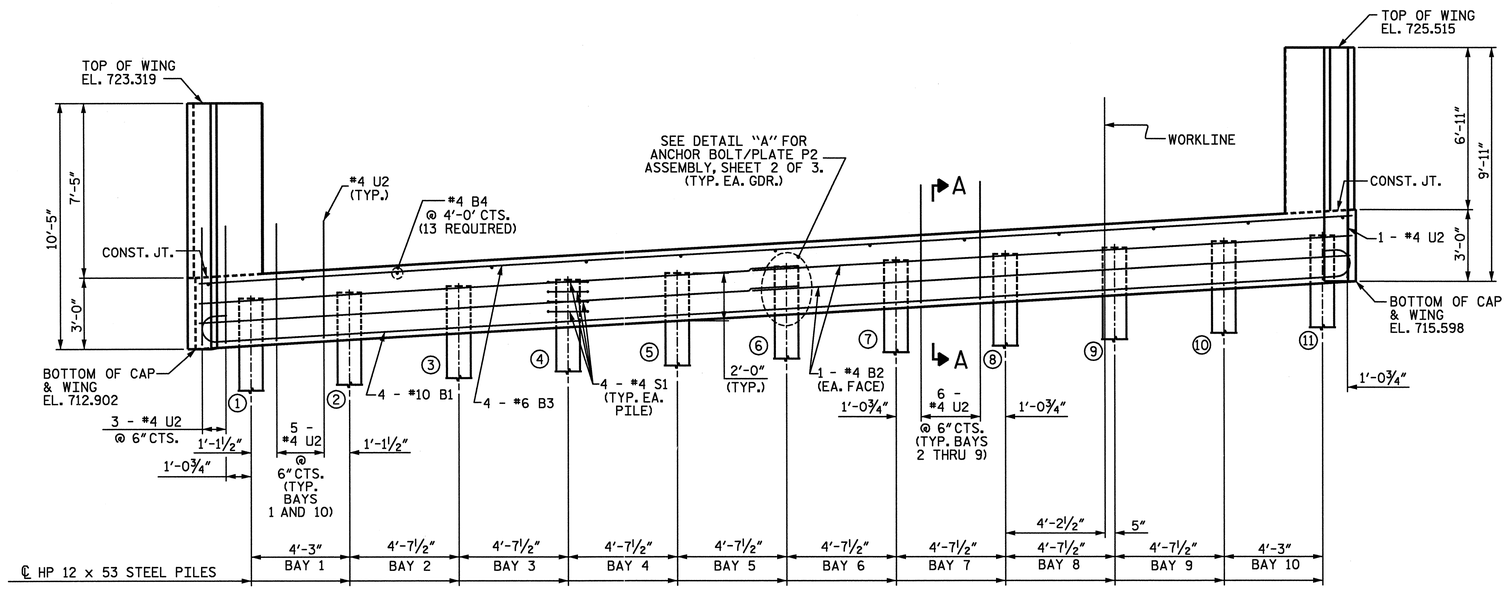

ELEVATION

*4 B2 SPLICE LENGTH = 2'-5"

NOTES

PILES FOR END BENT #1 SHALL BE DRIVEN TO MINIMUM BEARING CAPACITY OF 60 TONS EACH.

STEEL PILE POINTS ARE REQUIRED FOR PILES AT END BENT #1. SEE SPECIAL PROVISION FOR STEEL PILE POINTS.

WHEN DRIVING PILES, THE MAXIMUM BLOW COUNT SHALL NOT BE EXCEEDED.

TOP OF PILE ELEVATION	
PILE NUMBER	ELEVATION
1	715.030
2	715.263
3	715.516
4	715.769
5	716.022
6	716.275
7	716.528
8	716.782
9	717.035
10	717.288
11	717.521

NOTE: TOP OF PILE ELEVATIONS ARE GIVEN AT CENTERLINE OF PILE.

PROJECT NO. R-2606A

RANDOLPH COUNTY

STATION: 22+65.00 -L-

SHEET 1 OF 3

STATE OF NORTH CAROLINA
DEPARTMENT OF TRANSPORTATION
RALEIGH

SUBSTRUCTURE

END BENT #1

(LEFT LANE)

REVISIONS						SHEET NO.
NO.	BY:	DATE:	NO.	BY:	DATE:	S-93
1			3			TOTAL SHEETS
2			4			199

NORTH CAROLINA PROFESSIONAL SEAL 19056 ENGINEER JOHN A. BATTS 1-31-05

PLANS PREPARED BY:

ARCADIS

ARCADIS G&M OF NORTH CAROLINA, INC.
801 CORPORATE CENTER DRIVE, SUITE 300
RALEIGH, NORTH CAROLINA 27607-5073
TEL: 919/854-1282 FAX: 919/854-5448
WWW.ARCADIS-US.COM

DRAWN BY : D.G.VESTER DATE : 01/05
CHECKED BY : J.A.BATTS DATE : 01/05

1/28/2005 3:06:51 PM g:\tra\60303i\drawings\final\left lane\r2606a_sd_e1_01l.dgn

$$$$$$SYSTIME$$$$$
$$$$$$$$$$$$$$$$$$$$$$$$$$DGN$$$$$$$$$$$$$$$$$$$$$$$$
$$$$USERNAME$$$$

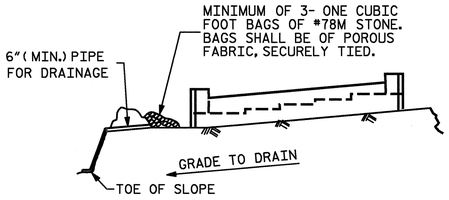

BAGGED STONE AND PIPE SHALL BE PLACED IMMEDIATELY AFTER COMPLETION OF END BENT EXCAVATION. PIPE MAY BE EITHER CONCRETE, CORRUGATED STEEL, CORRUGATED ALUMINUM ALLOY, OR CORRUGATED PLASTIC. PERFORATED PIPE WILL NOT BE ALLOWED.

BAGGED STONE SHALL REMAIN IN PLACE UNTIL THE ENGINEER DIRECTS THAT IT BE REMOVED. THE CONTRACTOR SHALL REMOVE AND DISPOSE OF SILT ACCUMULATIONS AT BAGGED STONE WHEN SO DIRECTED BY THE ENGINEER. BAGS SHALL BE REMOVED AND REPLACED WHENEVER THE ENGINEER DETERMINES THAT THEY HAVE DETERIORATED AND LOST THEIR EFFECTIVENESS.

NO SEPARATE PAYMENT WILL BE MADE FOR THIS WORK AND THE ENTIRE COST OF THIS WORK SHALL BE INCLUDED IN THE UNIT CONTRACT PRICE BID FOR THE SEVERAL PAY ITEMS.

TEMPORARY DRAINAGE AT END BENT

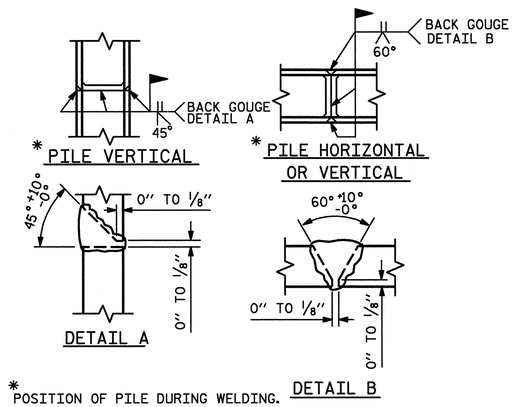

* POSITION OF PILE DURING WELDING.

PILE SPLICE DETAILS

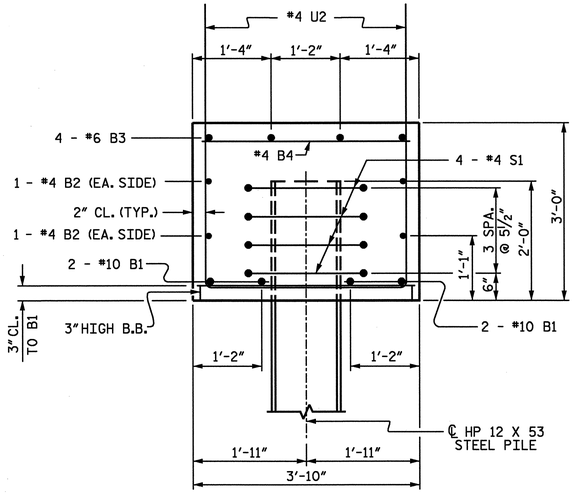

SECTION A-A

GIRDER	TOP OF PLATE (P2) ELEV.
AG1	715.554
AG2	716.061
AG3	716.567
AG4	717.073
AG5	717.580

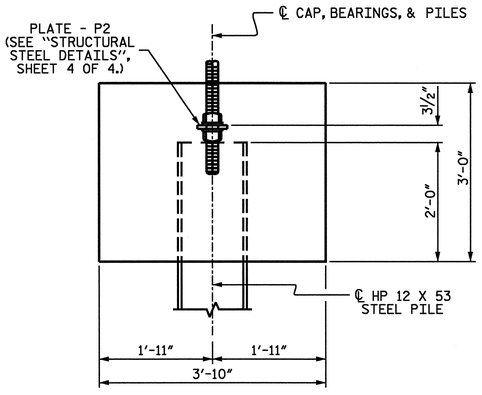

DETAIL "A"

PROJECT NO. R-2606A

RANDOLPH COUNTY

STATION: 22+65.00 -L-

SHEET 2 OF 3

STATE OF NORTH CAROLINA
DEPARTMENT OF TRANSPORTATION
RALEIGH

SUBSTRUCTURE

END BENT #1

(LEFT LANE)

REVISIONS						SHEET NO.
NO.	BY:	DATE:	NO.	BY:	DATE:	S-94
1			3			TOTAL SHEETS
2			4			199

PLANS PREPARED BY:
ARCADIS
ARCADIS G&M OF NORTH CAROLINA, INC.
801 CORPORATE CENTER DRIVE, SUITE 300
RALEIGH, NORTH CAROLINA 27607-5073
TEL: 919/854-1282 FAX: 919/854-5448
WWW.ARCADIS-US.COM

DRAWN BY : D.G.VESTER DATE : 01/05
CHECKED BY : J.A.BATTS DATE : 01/05

NORTH CAROLINA PROFESSIONAL SEAL 18058 ENGINEER JOHN A. BATTS 1-31-05

1/28/2005 3:06:51 PM g:\trg\603031\drawings\final\left lane\r2606a_sd_e1_011.dgn

$$$$$$$STSTIME$$$$$$
$$$$$$$$$$$$$$$$$$$$$$$$$$DGN$$$$$$$$$$$$$$$$$$$$$$$$$$
$$$$USERNAME$$$$

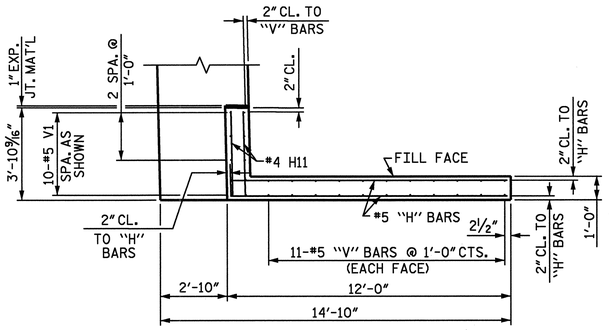

PLAN OF WING (W1)

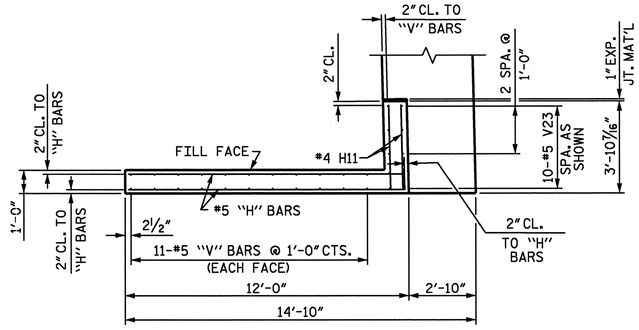

PLAN OF WING (W2)

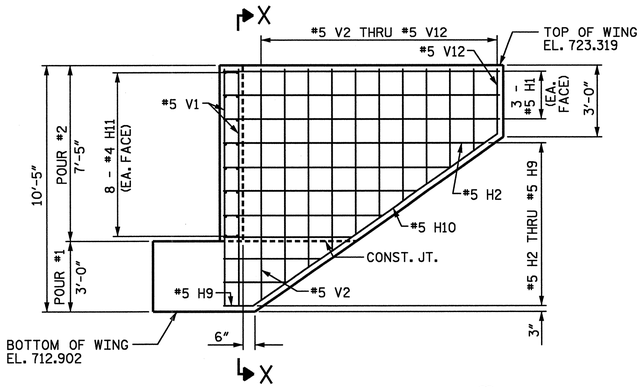

ELEVATION OF WING (W1)

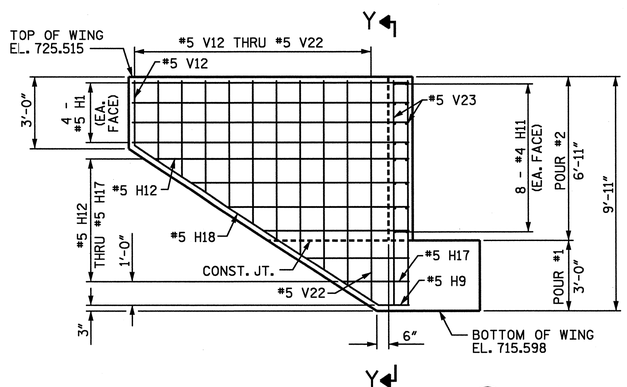

ELEVATION OF WING (W2)

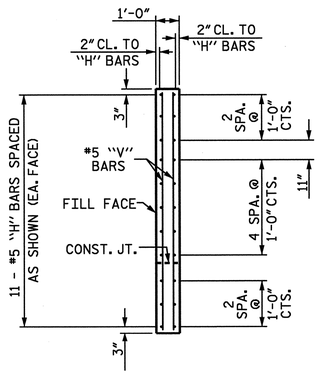

SECTION X-X

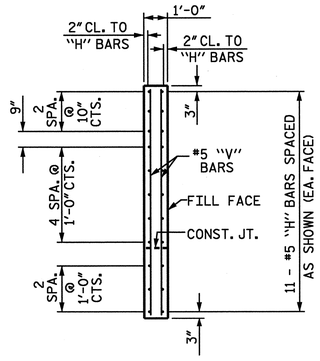

SECTION Y-Y

BAR TYPES

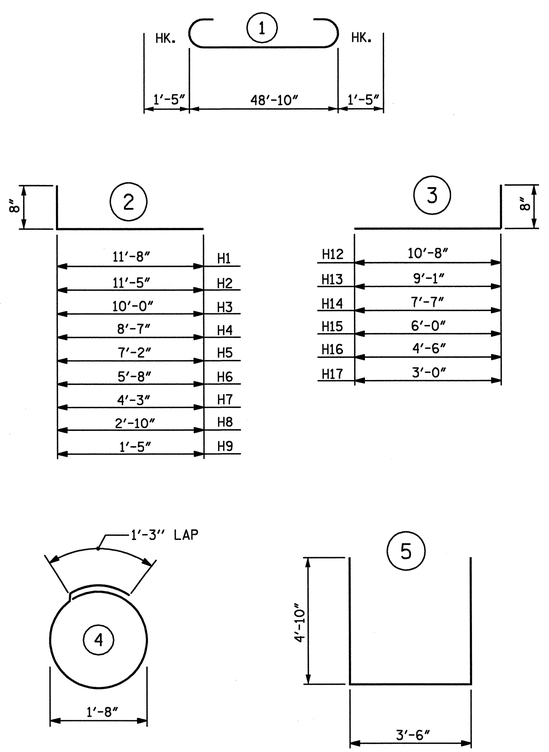

ALL BAR DIMENSIONS ARE OUT TO OUT.

BILL OF MATERIAL

END BENT NO. 1

BAR	NO.	SIZE	TYPE	LENGTH	WEIGHT
B1	4	10	1	51'-8"	889
B2	8	4	STR	25'-9"	138
B3	4	6	STR	48'-11"	294
B4	13	4	STR	3'-6"	30
H1	14	5	2	12'-4"	180
H2	2	5	2	12'-1"	25
H3	2	5	2	10'-8"	22
H4	2	5	2	9'-3"	19
H5	2	5	2	7'-10"	16
H6	2	5	2	6'-4"	13
H7	2	5	2	4'-11"	10
H8	2	5	2	3'-6"	7
H9	4	5	2	2'-1"	9
H10	2	5	STR	12'-7"	26
H11	32	4	STR	3'-6"	75
H12	2	5	3	11'-4"	24
H13	2	5	3	9'-9"	20
H14	2	5	3	8'-3"	17
H15	2	5	3	6'-8"	14
H16	2	5	3	5'-2"	11
H17	2	5	3	3'-8"	8
H18	2	5	STR	12'-3"	26
S1	44	4	4	6'-6"	191
U2	62	4	5	13'-2"	545
V1	10	5	STR	9'-11"	103
V2	2	5	STR	9'-8"	20
V3	2	5	STR	9'-0"	19
V4	2	5	STR	8'-3"	17
V5	2	5	STR	7'-7"	16
V6	2	5	STR	6'-11"	14
V7	2	5	STR	6'-2"	13
V8	2	5	STR	5'-6"	11
V9	2	5	STR	4'-9"	10
V10	2	5	STR	4'-1"	9
V11	2	5	STR	3'-5"	7
V12	4	5	STR	2'-8"	11
V13	2	5	STR	3'-4"	7
V14	2	5	STR	4'-0"	8
V15	2	5	STR	4'-8"	10
V16	2	5	STR	5'-3"	11
V17	2	5	STR	5'-11"	12
V18	2	5	STR	6'-7"	14
V19	2	5	STR	7'-3"	15
V20	2	5	STR	7'-11"	17
V21	2	5	STR	8'-6"	18
V22	2	5	STR	9'-2"	19
V23	10	5	STR	9'-5"	98

REINFORCING STEEL	LBS.	3088
CLASS "A" CONCRETE BREAKDOWN		
POUR #1 (CAP & WINGS)	CU. YDS.	21.6
POUR #2 (BACKWALL & WINGS)	CU. YDS.	7.0
TOTAL CLASS "A" CONCRETE	CU. YDS.	28.6
HP 12 X 53 STEEL PILES NO. 11	LIN. FT.	110.0
STEEL PILE POINTS	EA.	11

PLANS PREPARED BY:
ARCADIS
ARCADIS G&M OF NORTH CAROLINA, INC.
801 CORPORATE CENTER DRIVE, SUITE 300
RALEIGH, NORTH CAROLINA 27607-5073
TEL: 919/854-1282 FAX: 919/854-5448
WWW.ARCADIS-US.COM

DRAWN BY : D.G.VESTER DATE : 01/05
CHECKED BY : J.A.BATTS DATE : 01/05

NORTH CAROLINA PROFESSIONAL SEAL 18058 ENGINEER JOHN A. BATTS 1-31-05

PROJECT NO. R-2606A
RANDOLPH COUNTY
STATION: 22+65.00 -L-
SHEET 3 OF 3

STATE OF NORTH CAROLINA
DEPARTMENT OF TRANSPORTATION
RALEIGH
SUBSTRUCTURE
END BENT #1
(LEFT LANE)

REVISIONS						SHEET NO.
NO.	BY:	DATE:	NO.	BY:	DATE:	S-95
1			3			TOTAL SHEETS
2			4			197

1/28/2005 3:06:51 PM g:\tra\603031\drawings\final\left lane\r-2606a_sd_e1_011.dgn

$$$$$$SYSTIME$$$$$
$$$$$$$$$$$$$$$$$$$$$$$$$$DGN$$$$$$$$$$$$$$$$$$$$$$$$$$
$$$$USERNAME$$$$

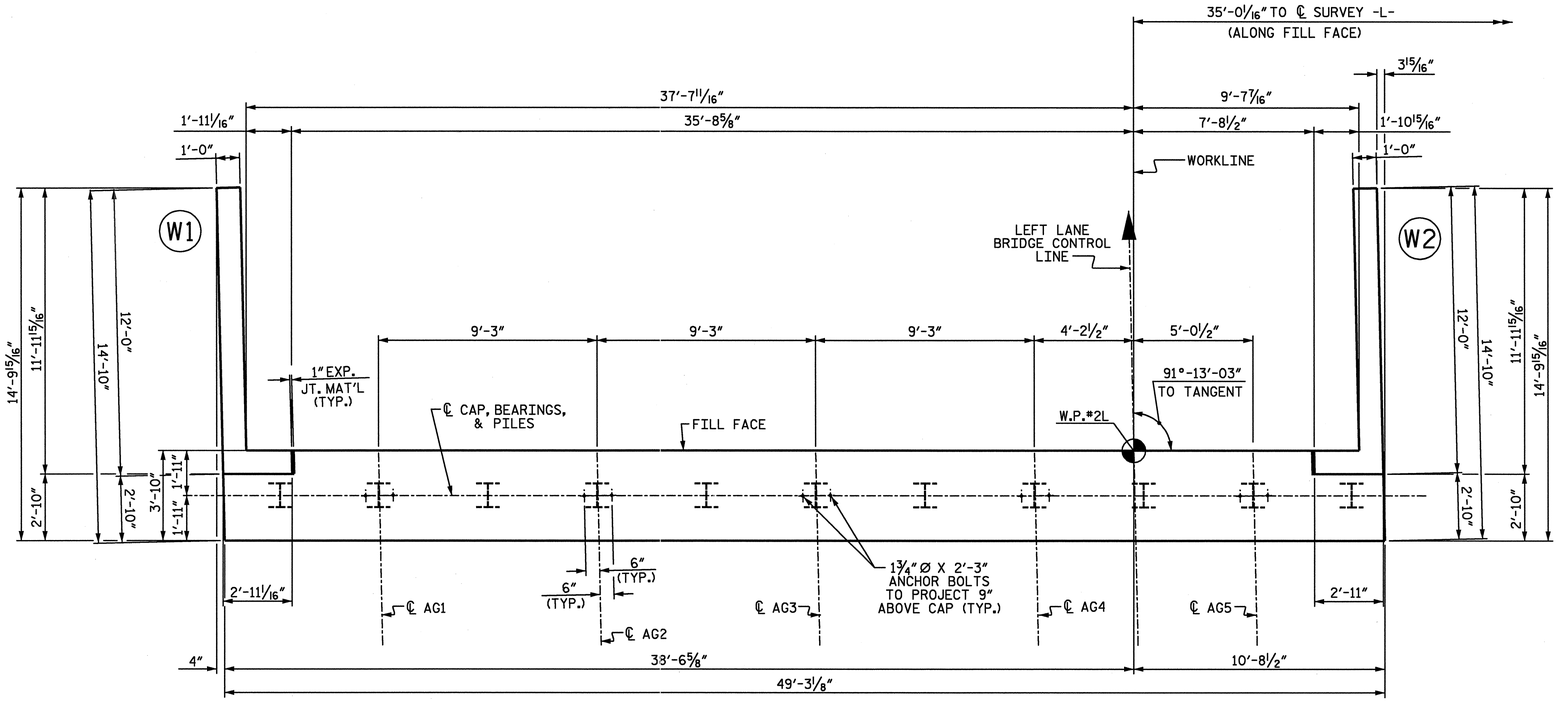

PLAN

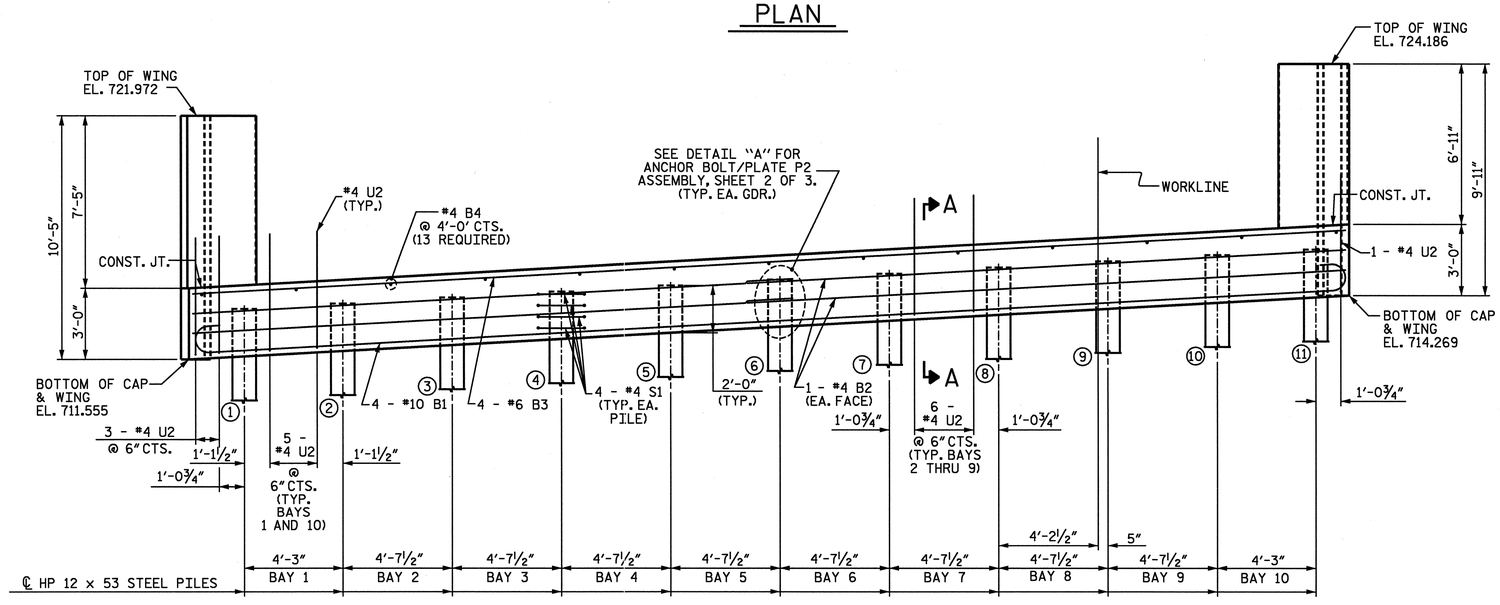

ELEVATION

#4 B2 SPLICE LENGTH = 2'-5"

NOTES

PILES FOR END BENT #2 SHALL BE DRIVEN TO MINIMUM BEARING CAPACITY OF 60 TONS EACH.

WHEN DRIVING PILES, THE MAXIMUM BLOW COUNT SHALL NOT BE EXCEEDED.

TOP OF PILE ELEVATION	
PILE NUMBER	ELEVATION
1	713.685
2	713.919
3	714.173
4	714.428
5	714.683
6	714.938
7	715.193
8	715.447
9	715.702
10	715.957
11	716.191

NOTE: TOP OF PILE ELEVATIONS ARE GIVEN AT CENTERLINE OF PILE.

PROJECT NO. R-2606A

RANDOLPH COUNTY

STATION: 22+65.00 -L-

SHEET 1 OF 3

STATE OF NORTH CAROLINA
DEPARTMENT OF TRANSPORTATION
RALEIGH

SUBSTRUCTURE

END BENT #2

(LEFT LANE)

REVISIONS						SHEET NO.
NO.	BY:	DATE:	NO.	BY:	DATE:	S-96
1			3			TOTAL SHEETS
2			4			199

PLANS PREPARED BY:
ARCADIS
ARCADIS G&M OF NORTH CAROLINA, INC.
801 CORPORATE CENTER DRIVE, SUITE 300
RALEIGH, NORTH CAROLINA 27607-5073
TEL: 919/854-1282 FAX: 919/854-5448
WWW.ARCADIS-US.COM

DRAWN BY : D.G.VESTER DATE : 01/05
CHECKED BY : J.A.BATTS DATE : 01/05

NORTH CAROLINA PROFESSIONAL SEAL 19858 ENGINEER JOHN A. BATTS 1-31-05

1/28/2005 3:06:51 PM g:\tra\603031\drawings\finalNleft lane\r2606a_sd_e2_011.dgn

$$$$$$SYSTIME$$$$$
$$$$$$$$$$$$$$$$$$$$$$$$$$DGN$$$$$$$$$$$$$$$$$$$$$$$$$
$$$$USERNAME$$$$$

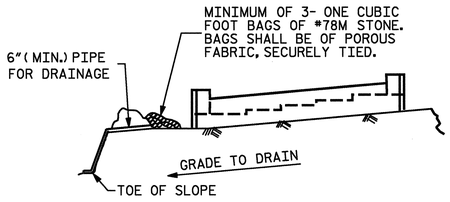

BAGGED STONE AND PIPE SHALL BE PLACED IMMEDIATELY AFTER COMPLETION OF END BENT EXCAVATION. PIPE MAY BE EITHER CONCRETE, CORRUGATED STEEL, CORRUGATED ALUMINUM ALLOY, OR CORRUGATED PLASTIC. PERFORATED PIPE WILL NOT BE ALLOWED.

BAGGED STONE SHALL REMAIN IN PLACE UNTIL THE ENGINEER DIRECTS THAT IT BE REMOVED. THE CONTRACTOR SHALL REMOVE AND DISPOSE OF SILT ACCUMULATIONS AT BAGGED STONE WHEN SO DIRECTED BY THE ENGINEER. BAGS SHALL BE REMOVED AND REPLACED WHENEVER THE ENGINEER DETERMINES THAT THEY HAVE DETERIORATED AND LOST THEIR EFFECTIVENESS.

NO SEPARATE PAYMENT WILL BE MADE FOR THIS WORK AND THE ENTIRE COST OF THIS WORK SHALL BE INCLUDED IN THE UNIT CONTRACT PRICE BID FOR THE SEVERAL PAY ITEMS.

TEMPORARY DRAINAGE AT END BENT

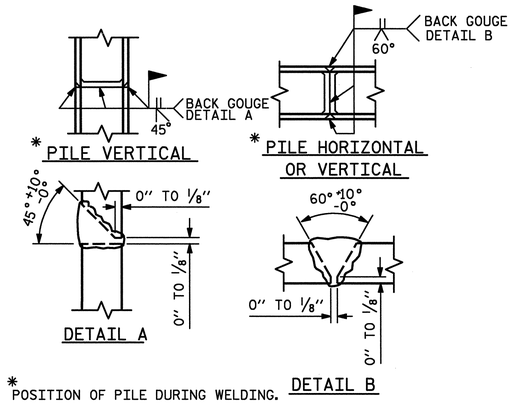

* POSITION OF PILE DURING WELDING.

PILE SPLICE DETAILS

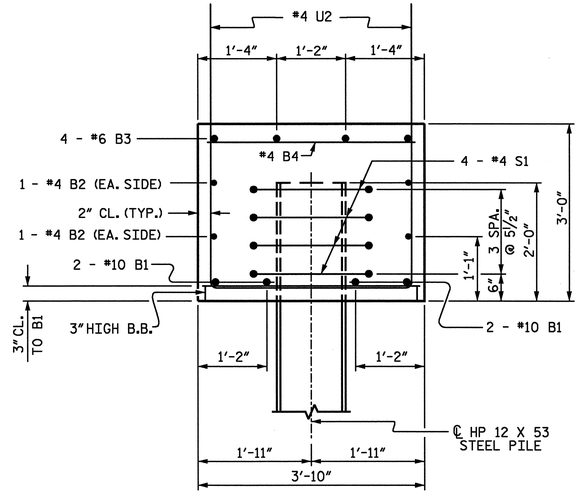

SECTION A-A

GIRDER	TOP OF PLATE (P2) ELEV.
AG1	714.210
AG2	714.720
AG3	715.230
AG4	715.739
AG5	716.249

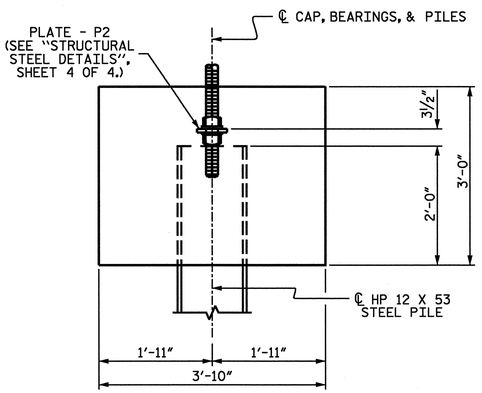

DETAIL "A"

PROJECT NO. R-2606A

RANDOLPH COUNTY

STATION: 22+65.00 -L-

SHEET 2 OF 3

STATE OF NORTH CAROLINA
DEPARTMENT OF TRANSPORTATION
RALEIGH

SUBSTRUCTURE

END BENT #2

(LEFT LANE)

REVISIONS						SHEET NO.
NO.	BY:	DATE:	NO.	BY:	DATE:	S-97
1			3			TOTAL SHEETS
2			4			199

PLANS PREPARED BY:
ARCADIS
ARCADIS G&M OF NORTH CAROLINA, INC.
801 CORPORATE CENTER DRIVE, SUITE 300
RALEIGH, NORTH CAROLINA 27607-5073
TEL: 919/854-1282 FAX: 919/854-5448
WWW.ARCADIS-US.COM

DRAWN BY : D.G.VESTER DATE : 01/05
CHECKED BY : J.A.BATTS DATE : 01/05

NORTH CAROLINA PROFESSIONAL SEAL 18058 ENGINEER JOHN A. BATTS
1-31-05

1/28/2005 3:06:51 PM g:\tra\603031\drawings\final\left lane\r2606a_sd_e2_011.dgn

$$$$$$SYSTIME$$$$$
$$$$$$$$$$$$$$$$$$$$$$$$$$DGN$$$$$$$$$$$$$$$$$$$$$$$$$$
$$$$USERNAME$$$$

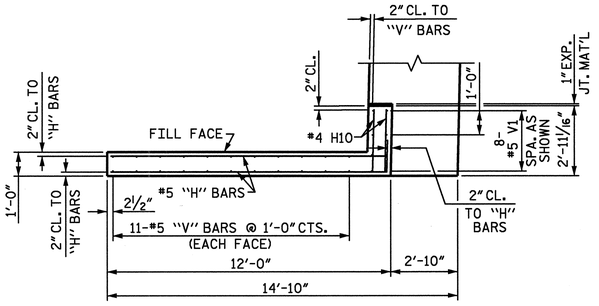

PLAN OF WING (W1)

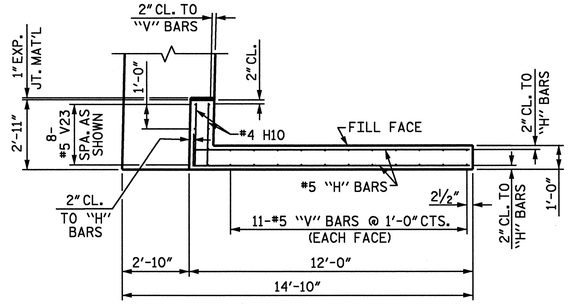

PLAN OF WING (W2)

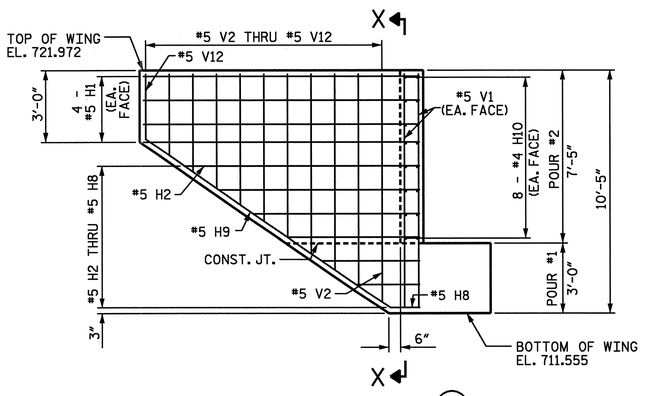

ELEVATION OF WING (W1)

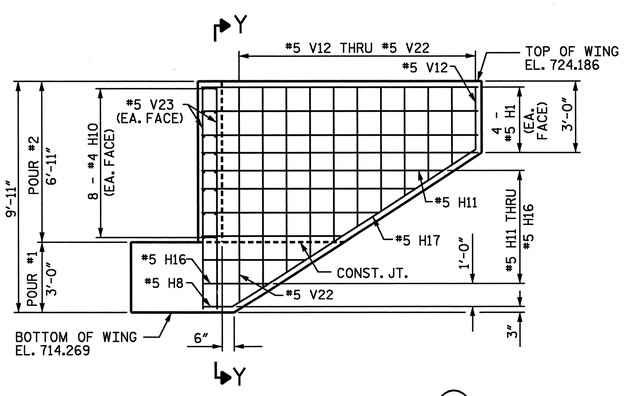

ELEVATION OF WING (W2)

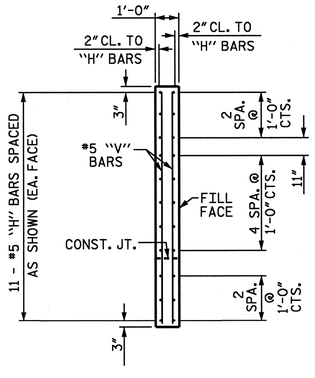

SECTION X-X

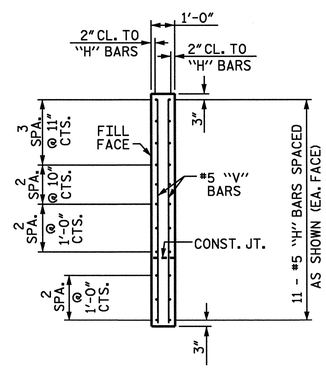

SECTION Y-Y

BAR TYPES

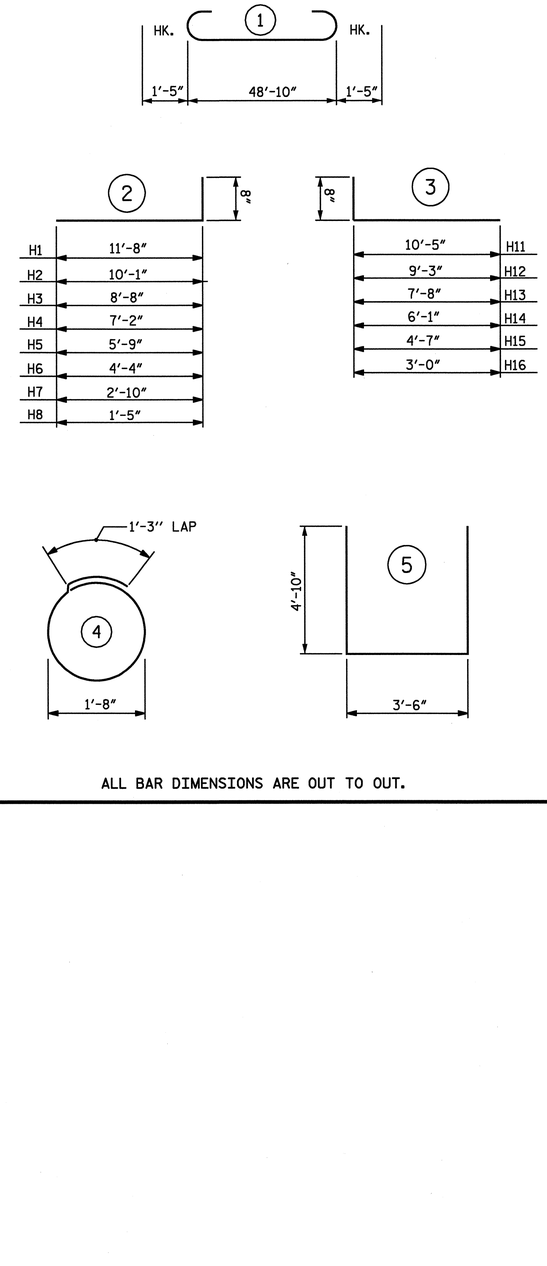

ALL BAR DIMENSIONS ARE OUT TO OUT.

BILL OF MATERIAL

END BENT NO. 2

BAR	NO.	SIZE	TYPE	LENGTH	WEIGHT
B1	4	10	1	51'-8"	889
B2	8	4	STR	25'-9"	138
B3	4	6	STR	48'-11"	294
B4	13	4	STR	3'-6"	30
H1	16	5	2	12'-4"	206
H2	2	5	2	10'-9"	22
H3	2	5	2	9'-4"	19
H4	2	5	2	7'-10"	16
H5	2	5	2	6'-5"	13
H6	2	5	2	5'-0"	10
H7	2	5	2	3'-6"	7
H8	4	5	2	2'-1"	9
H9	2	5	STR	12'-7"	26
H10	32	4	STR	2'-7"	55
H11	2	5	3	11'-1"	23
H12	2	5	3	9'-11"	21
H13	2	5	3	8'-4"	17
H14	2	5	3	6'-9"	14
H15	2	5	3	5'-3"	11
H16	2	5	3	3'-8"	8
H17	2	5	STR	12'-3"	26
S1	44	4	4	6'-6"	191
U2	62	4	5	13'-2"	545
V1	8	5	STR	9'-11"	83
V2	2	5	STR	9'-8"	20
V3	2	5	STR	8'-11"	19
V4	2	5	STR	8'-3"	17
V5	2	5	STR	7'-6"	16
V6	2	5	STR	6'-10"	14
V7	2	5	STR	6'-2"	13
V8	2	5	STR	5'-5"	11
V9	2	5	STR	4'-9"	10
V10	2	5	STR	4'-1"	9
V11	2	5	STR	3'-5"	7
V12	4	5	STR	2'-8"	11
V13	2	5	STR	3'-4"	7
V14	2	5	STR	4'-0"	8
V15	2	5	STR	4'-7"	10
V16	2	5	STR	5'-3"	11
V17	2	5	STR	5'-11"	12
V18	2	5	STR	6'-6"	14
V19	2	5	STR	7'-2"	15
V20	2	5	STR	7'-10"	16
V21	2	5	STR	8'-6"	18
V22	2	5	STR	9'-1"	19
V23	8	5	STR	9'-5"	79

REINFORCING STEEL LBS. 3029

CLASS "A" CONCRETE BREAKDOWN
POUR #1 (CAP & WINGS) CU. YDS. 21.6
POUR #2 (BACKWALL & WINGS) CU. YDS. 6.5
TOTAL CLASS "A" CONCRETE CU. YDS. 28.1

HP 12 X 53 STEEL PILES
NO. 11 LIN. FT. 220.0

PROJECT NO. R-2606A

RANDOLPH COUNTY

STATION: 22+65.00 -L-

SHEET 3 OF 3

STATE OF NORTH CAROLINA
DEPARTMENT OF TRANSPORTATION
RALEIGH

SUBSTRUCTURE

END BENT #2

(LEFT LANE)

REVISIONS						SHEET NO.
NO.	BY:	DATE:	NO.	BY:	DATE:	S-98
1			3			TOTAL SHEETS
2			4			199

PLANS PREPARED BY:
ARCADIS
ARCADIS G&M OF NORTH CAROLINA, INC.
801 CORPORATE CENTER DRIVE, SUITE 300
RALEIGH, NORTH CAROLINA 27607-5073
TEL: 919/854-1282 FAX: 919/854-5448
WWW.ARCADIS-US.COM

DRAWN BY : D.G.VESTER DATE : 01/05
CHECKED BY : J.A.BATTS DATE : 01/05

NORTH CAROLINA PROFESSIONAL SEAL 18050 ENGINEER JOHN A. BATTS 1-31-05

1/28/2005 3:06:51 PM g:\tra\603031\drawings\final\left lane\r2606a_sd_e2_011.dgn

$$$$$$SYSTIME$$$$$
$$$$$$$$$$$$$$$$$$$$$$$$DGN$$$$$$$$$$$$$$$$$$$$$$$$
$$$$USERNAME$$$$

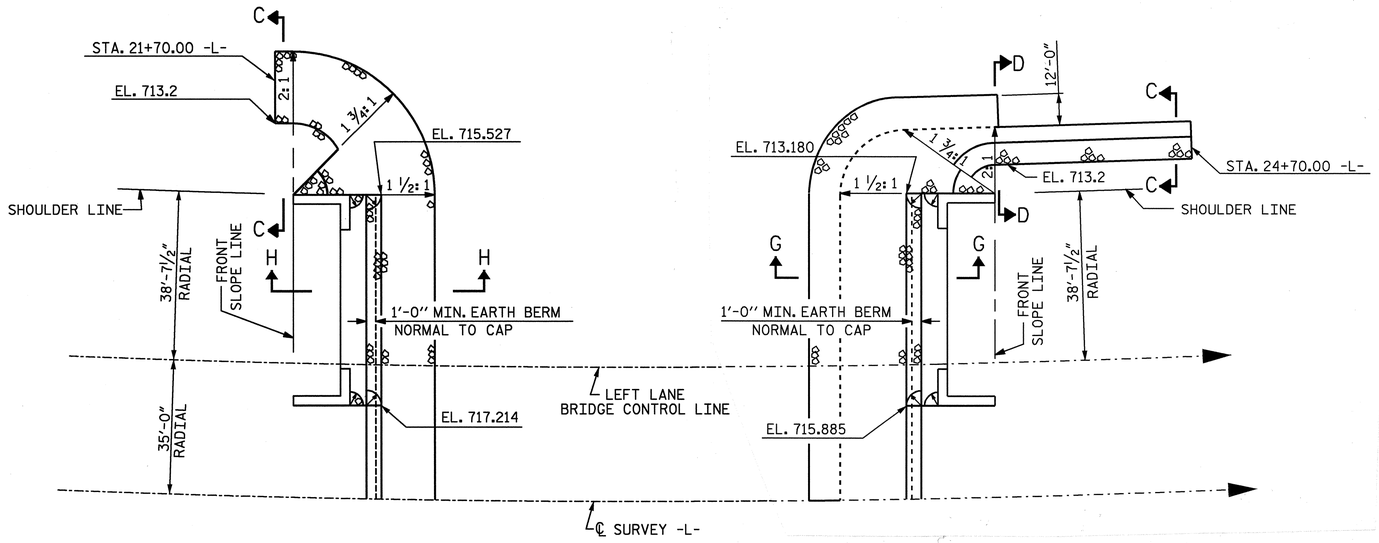

END BENT #1 END BENT #2

NOTES :

FOR BERM WIDTH DIMENSIONS, SEE GENERAL DRAWING.

ESTIMATED QUANTITIES		
BRIDGE @ STA. 22+65.00 -L-	PLAIN RIP RAP CLASS II	FILTER FABRIC FOR DRAINAGE
	TONS	SQUARE YARDS
END BENT 1	244.9	272.1
END BENT 2	555.5	617.1

BERM RIP RAPPED

PLAIN RIP RAP PLAN

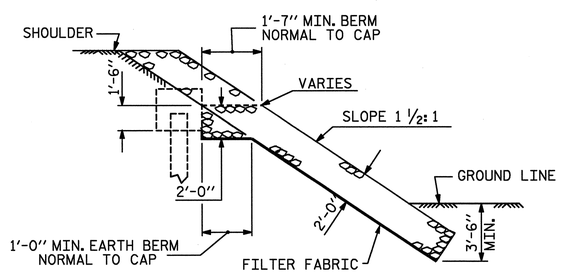

SECTION H-H

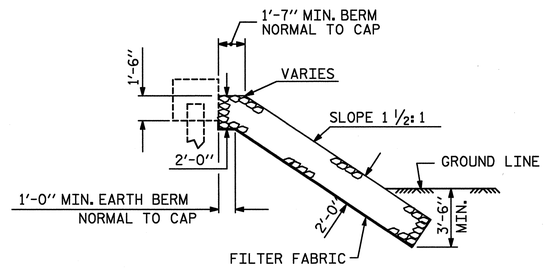

SECTION @ LEFT LANE BRIDGE CONTROL LINE

BERM RIP RAPPED @ END BENT #1

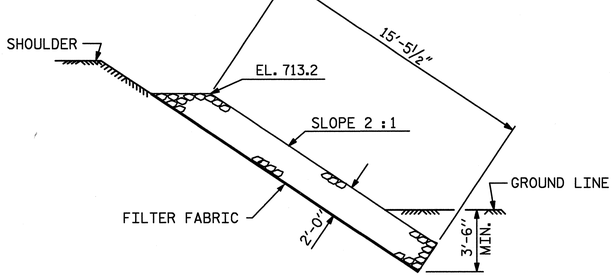

SECTION C-C

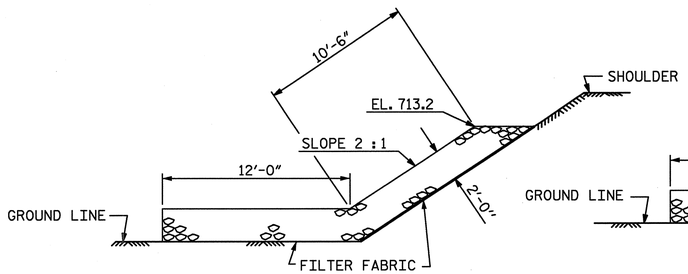

SECTION D-D

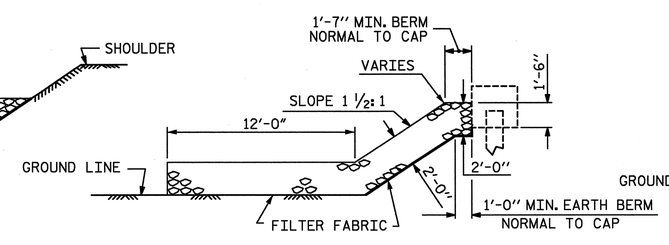

SECTION @ LEFT LANE BRIDGE CONTROL LINE

BERM RIP RAPPED @ END BENT #2

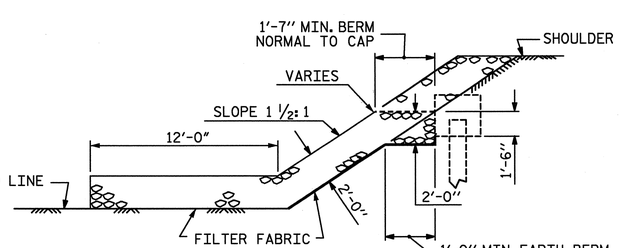

SECTION G-G

PROJECT NO. R-2606A

RANDOLPH COUNTY

STATION: 22+65.00 -L-

STATE OF NORTH CAROLINA
DEPARTMENT OF TRANSPORTATION
RALEIGH

SUBSTRUCTURE

RIP RAP DETAILS

(LEFT LANE)

REVISIONS						SHEET NO.
NO.	BY:	DATE:	NO.	BY:	DATE:	S-99
1			3			TOTAL SHEETS
2			4			199

NORTH CAROLINA PROFESSIONAL SEAL 18056 ENGINEER JOHN A. BATTS 1-31-05

PLANS PREPARED BY:

ARCADIS
ARCADIS G&M OF NORTH CAROLINA, INC.
801 CORPORATE CENTER DRIVE, SUITE 300
RALEIGH, NORTH CAROLINA 27607-5073
TEL: 919/854-1282 FAX: 919/854-5448
WWW.ARCADIS-US.COM

DRAWN BY : D.G.VESTER DATE : 01/05
CHECKED BY : J.A.BATTS DATE : 01/05

1/28/2005 3:06:52 PM g:\tra\60303\drawings\final\left lane\r2606a_sd_rr_011.dgn

$$$$$$SYSTIMB$$$$$$
$$$$$$$$$$$$$$$$$$$$$$$$$$DGN$$$$$$$$$$$$$$$$$$$$$$$$$$
$$$$USERNAME$$$$$

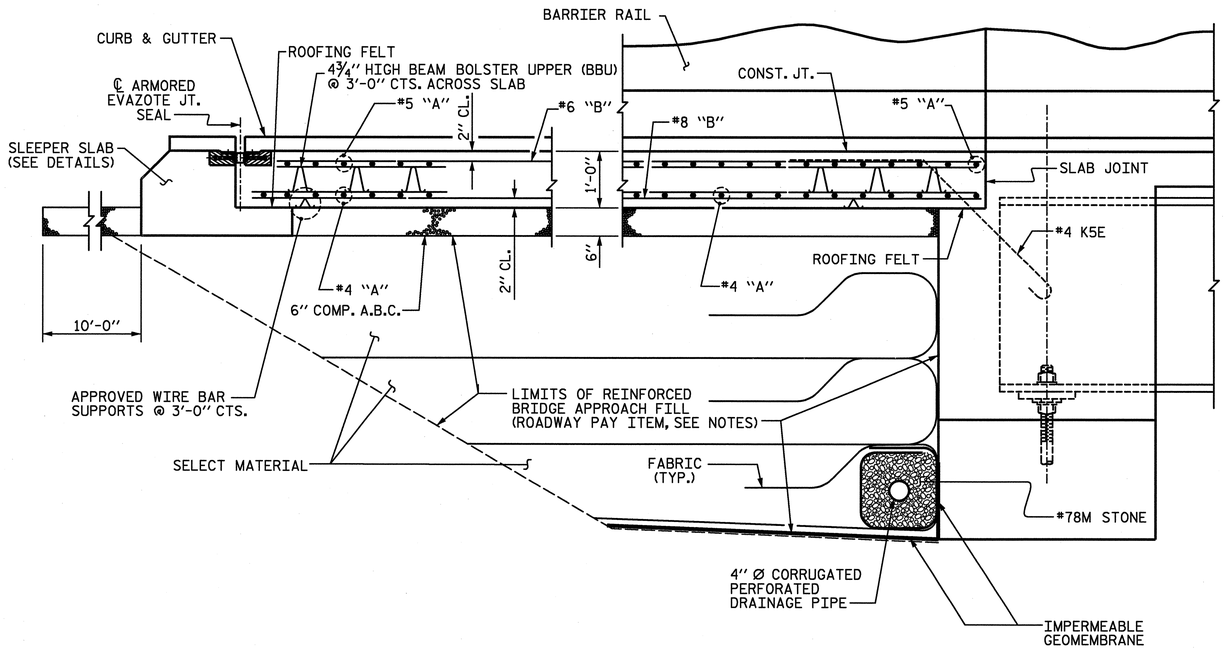

SECTION THRU SLAB

▨ ELASTOMERIC CONCRETE IN BLOCKOUT

#4 K5E BARS ARE TO BE PLACED DURING INTEGRAL END BENT CONSTRUCTION.

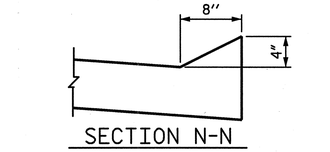

SECTION N-N

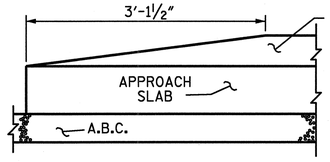

END OF CURB WITHOUT SHOULDER BERM GUTTER

CURB DETAILS

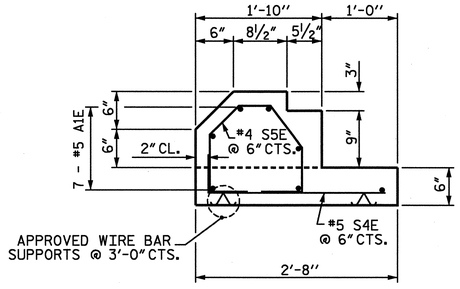

SLEEPER SLAB DETAIL

NOTES

THE COST OF THE BARRIER RAIL ON THE APPROACH SLAB SHALL BE INCLUDED IN THE LUMP SUM CONTRACT PRICE BID FOR BRIDGE APPROACH SLABS.

APPROACH SLAB SHALL NOT BE CONSTRUCTED PRIOR TO COMPLETION OF THE BRIDGE DECK.

FOR REINFORCED BRIDGE APPROACH FILL INCLUDING FABRIC, IMPERMEABLE GEOMEMBRANE, 4" Ø DRAINAGE PIPE, #78M STONE, AND SELECT MATERIAL, SEE ROADWAY PLANS.

TEMPORARY DRAINAGE AND TEMPORARY BERM AND SLOPE DRAINS WILL BE PAID FOR UNDER THE LUMP SUM PRICE FOR BRIDGE APPROACH SLAB.

AREA BETWEEN THE WINGWALL AND APPROACH SLAB SHALL BE GRADED TO DRAIN THE WATER AWAY FROM THE FILL FACE OF THE BRIDGE.

THE 6" COMP. A.B.C. SHALL EXTEND 10'-0" BEYOND THE END OF THE SLEEPER SLAB AND 1'-0" OUTSIDE OF EACH EDGE OF THE SLAB.

THE CONTRACTOR MAY USE 4" TYPE B-25.0B ASPHALT CONCRETE BASE COURSE IN LIEU OF 6" COMP. A.B.C. IF THIS OPTION IS USED, THE BASE COURSE SHALL EXTEND 1'-0" BEYOND THE END OF THE SLEEPER SLAB AND THE WIDTH SHALL BE THE SAME AS THAT OF THE APPROACH SLAB.

THE CONTRACTOR MAY USE 5" CLASS "A" CONCRETE BASE IN LIEU OF 6" COMP. A.B.C. IF THIS OPTION IS USED, THE CONCRETE BASE SHALL EXTEND 1'-0" BEYOND THE END OF THE SLEEPER SLAB AND THE WIDTH SHALL BE THE SAME AS THAT OF THE APPROACH SLAB. THE CONCRETE SHALL BE FINISHED TO A SMOOTH SURFACE AND A LAYER OF 30 LB ROOFING FELT SHALL BE PLACED BETWEEN THE CONCRETE BASE AND THE APPROACH SLAB TO PREVENT BOND. THE APPROACH SLAB SHALL NOT BE CAST UNTIL THE CONCRETE BASE HAS REACHED AN AGE OF THREE CURING DAYS.

THE #5 S1E AND #5 S3E BARS SHALL BE INSTALLED, USING AN ADHESIVE ANCHORING SYSTEM, AFTER SAWING OF THE SLAB JOINT. FOR ADHESIVELY ANCHORED ANCHOR BOLTS OR DOWELS, SEE SPECIAL PROVISIONS, THE YIELD LOAD FOR THE #5 S1E AND #5 S3E BARS IS 18.6 KIPS. FIELD TESTING FOR THE ADHESIVE BONDING SYSTEM IS NOT REQUIRED.

WITH EVAZOTE JOINT SEAL

FOR EVAZOTE JOINT SEALS, SEE SPECIAL PROVISIONS.

THE NOMINAL UNCOMPRESSED SEAL WIDTH OF THE EVAZOTE JOINT SEAL SHALL BE 2 ½".

BILL OF MATERIAL

APPROACH SLAB #1

BAR	NO.	SIZE	TYPE	LENGTH	WEIGHT
A3E	58	#5	STR	41'-9"	2526
A4	104	#4	STR	21'-9"	1511
B1E	13	#6	STR	24'-2"	472
B2E	11	#6	STR	24'-4"	402
B3E	12	#6	STR	24'-6"	442
B4E	12	#6	STR	24'-8"	445
B5E	11	#6	STR	24'-10"	410
B6E	12	#6	STR	25'-0"	451
B7E	13	#6	STR	25'-2"	491
B8	13	#8	STR	24'-8"	856
B9	12	#8	STR	24'-10"	796
B10	12	#8	STR	25'-0"	801
B11	12	#8	STR	25'-2"	806
B12	12	#8	STR	25'-4"	812
B13	12	#8	STR	25'-6"	817
B14	11	#8	STR	25'-8"	754
B15E	14	#5	STR	11'-8"	170
B16E	2	#5	3	6'-5"	13
S1E	28	#5	STR	3'-3"	95
S2E	20	#5	1	4'-1"	85
S3E	10	#5	2	2'-3"	23
S4E	84	#5	1	3'-0"	263
S5E	84	#4	4	4'-1"	229

REINFORCING STEEL	LBS.	7153
EPOXY COATED REINFORCING STEEL	LBS.	6517

CLASS AA CONCRETE BREAKDOWN

POUR 1 SLEEPER SLAB	C.Y.	4.3
POUR 2 SLAB & CURBS	C.Y.	40.1
POUR 3 RAIL	C.Y.	1.0
CLASS AA CONCRETE	C.Y.	45.4

APPROACH SLAB #2

BAR	NO.	SIZE	TYPE	LENGTH	WEIGHT
A1E	58	#5	STR	42'-6"	2571
A2	104	#4	STR	22'-4"	1552
B1E	13	#6	STR	24'-2"	472
B2E	12	#6	STR	24'-4"	439
B3E	12	#6	STR	24'-6"	442
B4E	12	#6	STR	24'-8"	445
B5E	12	#6	STR	24'-10"	448
B6E	12	#6	STR	25'-0"	451
B7E	13	#6	STR	25'-2"	491
B8	13	#8	STR	24'-8"	856
B9	12	#8	STR	24'-10"	796
B10	12	#8	STR	25'-0"	801
B11	12	#8	STR	25'-2"	806
B12	12	#8	STR	25'-4"	812
B13	12	#8	STR	25'-6"	817
B14	13	#8	STR	25'-8"	891
B15E	14	#5	STR	11'-8"	170
B16E	2	#5	3	6'-5"	13
S1E	56	#5	STR	3'-3"	190
S2E	40	#5	1	4'-1"	170
S3E	20	#5	2	2'-3"	47
S4E	86	#5	1	3'-0"	269
S5E	86	#4	4	4'-1"	235

REINFORCING STEEL	LBS.	7331
EPOXY COATED REINFORCING STEEL	LBS.	6853

CLASS AA CONCRETE BREAKDOWN

POUR 1 SLEEPER SLAB	C.Y.	4.4
POUR 2 SLAB & CURBS	C.Y.	40.9
POUR 3 RAILS	C.Y.	2.1
CLASS AA CONCRETE	C.Y.	47.4

BAR TYPES

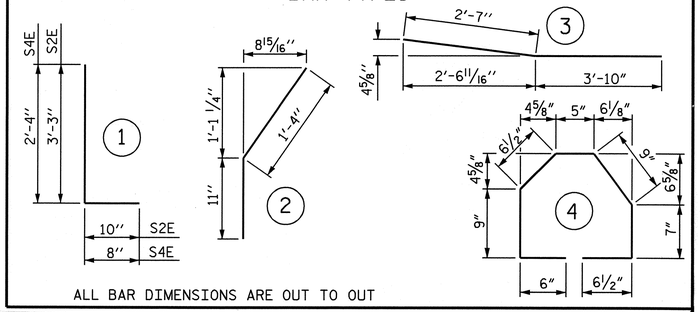

ALL BAR DIMENSIONS ARE OUT TO OUT

PROJECT NO. R-2606A

RANDOLPH COUNTY

STATION: 22+65.00 -L-

SHEET 1 OF 4

STATE OF NORTH CAROLINA
DEPARTMENT OF TRANSPORTATION
RALEIGH

SUBSTRUCTURE

BRIDGE APPROACH SLAB WITH BARRIER RAIL

(LEFT LANE)

REVISIONS						SHEET NO.
NO.	BY:	DATE:	NO.	BY:	DATE:	S-100
1			3			TOTAL SHEETS
2			4			199

NORTH CAROLINA PROFESSIONAL SEAL 18055 ENGINEER JOHN A. BATTS 1-31-05

PLANS PREPARED BY:
ARCADIS
ARCADIS G&M OF NORTH CAROLINA, INC.
801 CORPORATE CENTER DRIVE, SUITE 300
RALEIGH, NORTH CAROLINA 27607-5073
TEL: 919/854-1282 FAX: 919/854-5448
WWW.ARCADIS-US.COM

DRAWN BY : D.G.VESTER DATE : 01/05
CHECKED BY : J.A.BATTS DATE : 01/05

1/31/2005 11:15:31 AM g:\tra\603031\drawings\final\left lane\r2606a_sd_as_01l.dgn

$$$$$$$STSTIME$$$$$
$$$$$$$$$$$$$$$$$$$$$$$$DGN$$$$$$$$$$$$$$$$$$$$$$$$
$$$$USERNAME$$$$

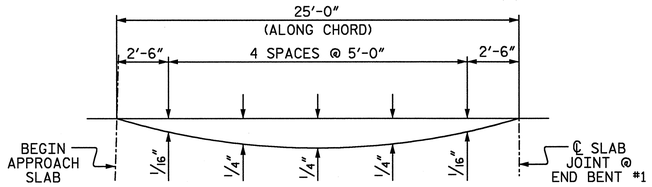

ARC OFFSET (LT. SIDE)

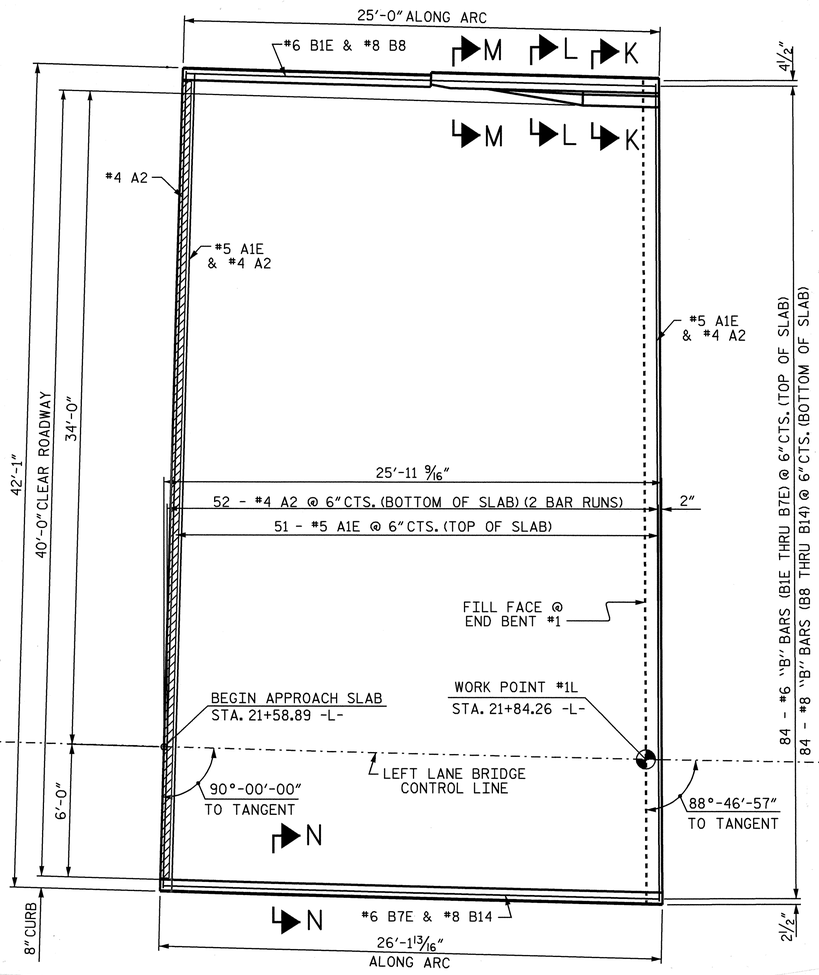

ELASTOMERIC CONCRETE IN BLOCKOUT

SEE SECTION N-N ON SHEET 1 OF 4.

PLAN OF APPROACH SLAB @ END BENT #1

NOTE: SLEEPER SLAB NOT SHOWN FOR CLARITY.

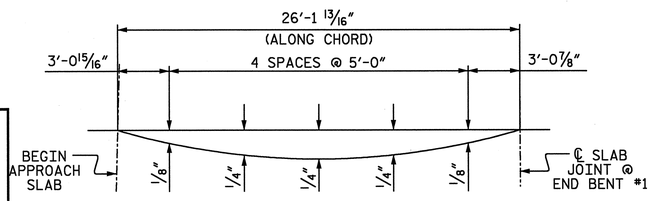

ARC OFFSET (RT. SIDE)

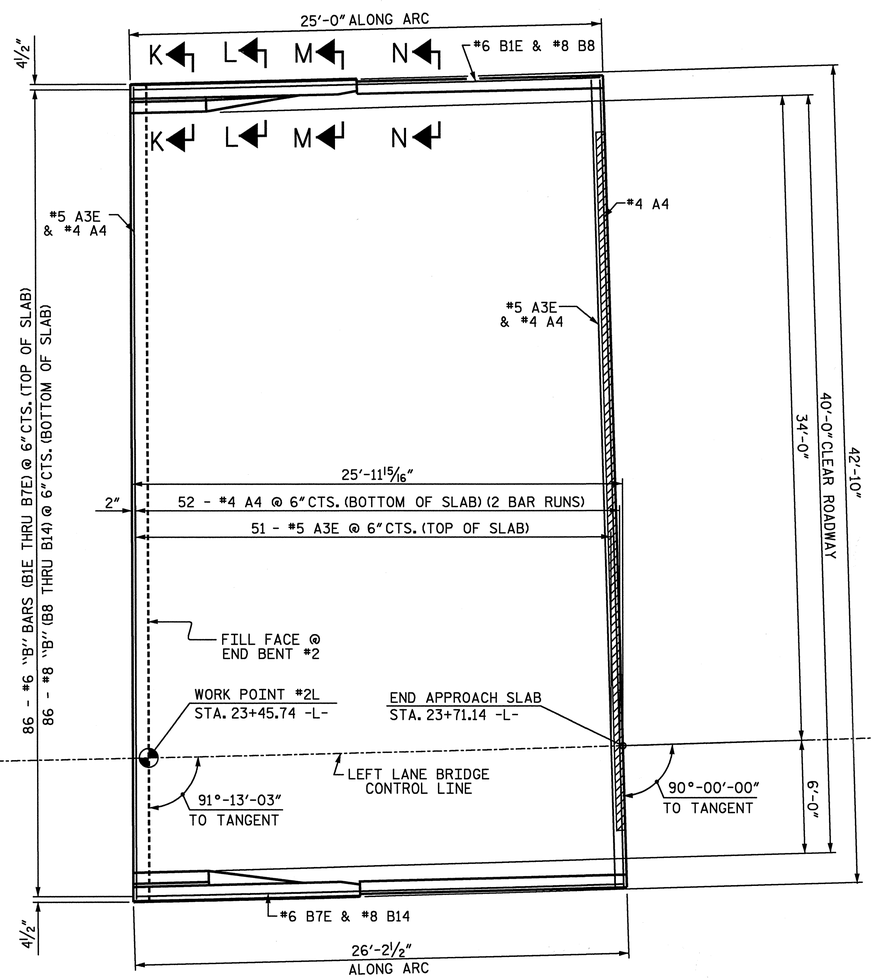

PLAN OF APPROACH SLAB @ END BENT #2

NOTE: SLEEPER SLAB NOT SHOWN FOR CLARITY.

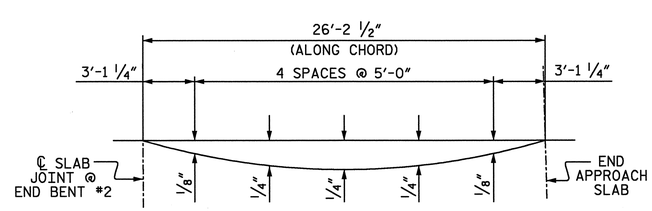

ARC OFFSET (RT. SIDE)

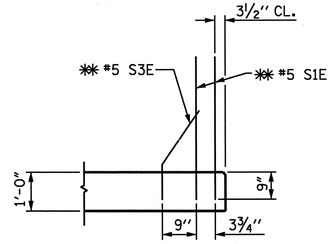

SECTION K-K

** ADHESIVELY ANCHORED

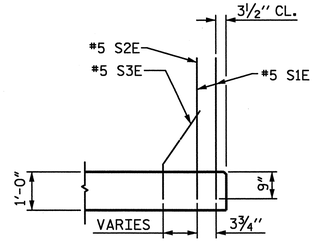

SECTION L-L

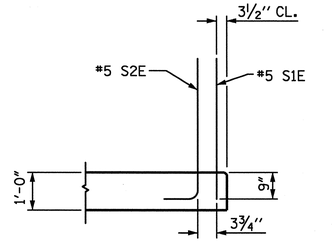

SECTION M-M

PROJECT NO. R-2606A

RANDOLPH COUNTY

STATION: 22+65.00 -L-

SHEET 2 OF 4

STATE OF NORTH CAROLINA
DEPARTMENT OF TRANSPORTATION
RALEIGH

SUBSTRUCTURE

BRIDGE APPROACH SLAB DETAILS

(LEFT LANE)

REVISIONS						SHEET NO.
NO.	BY:	DATE:	NO.	BY:	DATE:	S-101
1			3			TOTAL SHEETS
2			4			199

PLANS PREPARED BY:
ARCADIS
ARCADIS G&M OF NORTH CAROLINA, INC.
801 CORPORATE CENTER DRIVE, SUITE 300
RALEIGH, NORTH CAROLINA 27607-5073
TEL: 919/854-1282 FAX: 919/854-5448
WWW.ARCADIS-US.COM

DRAWN BY : D.G.VESTER DATE : 01/05
CHECKED BY : J.A.BATTS DATE : 01/05

NORTH CAROLINA PROFESSIONAL SEAL 18050 ENGINEER JOHN A. BATTS 1-31-05

1/28/2005 3:06:52 PM g:\tra\60303\drawings\final\left lane\r2606a_sd_as_011.dgn

$$$$$$SYSTIME$$$$$
$$$$$$$$$$$$$$$$$$$$$$$$$$DGN$$$$$$$$$$$$$$$$$$$$$$$$$$
$$$$USERNAME$$$$

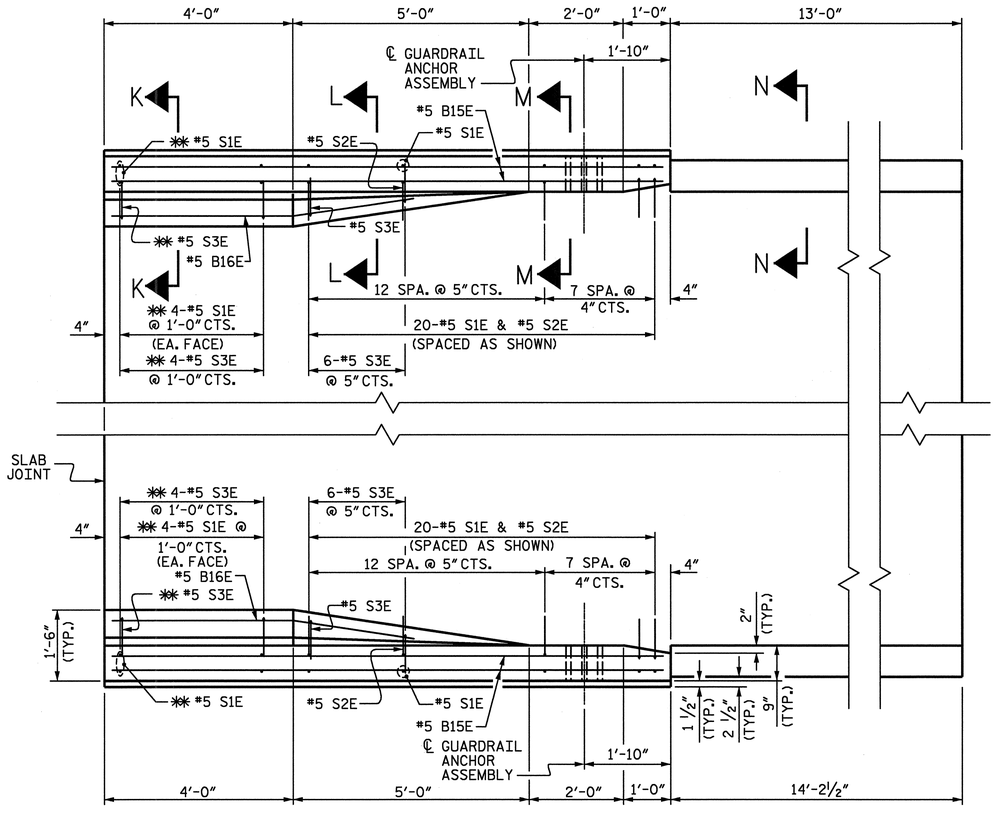

PLAN

END APPROACH SLAB SHOWN
SEE SECTION N-N, SHEET 1 OF 4.

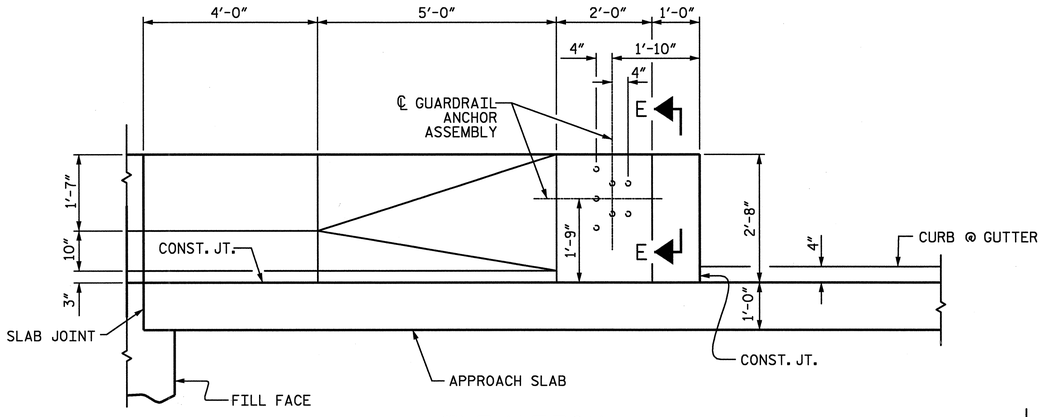

ELEVATION

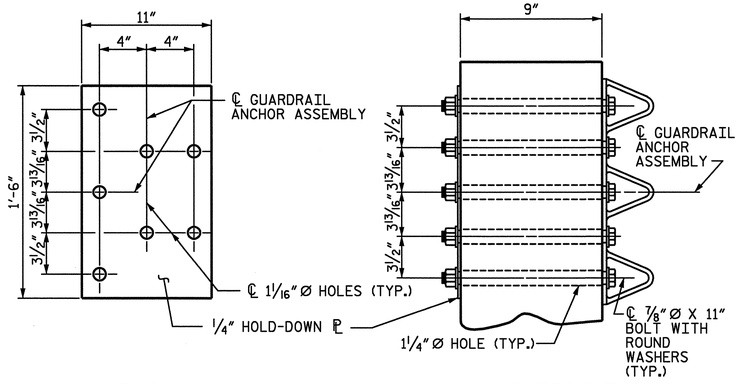

PLAN SECTION E-E

NOTES

THE GUARDRAIL ANCHOR ASSEMBLY SHALL CONSIST OF A 1/4" HOLD DOWN PLATE AND 7 - 7/8" Ø BOLTS WITH NUTS AND WASHERS.

THE HOLD-DOWN PLATE SHALL CONFORM TO AASHTO M270 GRADE 36. AFTER FABRICATION, THE HOLD-DOWN PLATE SHALL BE HOT-DIP GALVANIZED IN ACCORDANCE WITH AASHTO M111.

BOLTS SHALL CONFORM TO THE REQUIREMENTS OF ASTM A307 AND NUTS SHALL CONFORM TO THE REQUIREMENTS OF AASHTO M291. BOLTS, NUTS AND WASHERS SHALL BE GALVANIZED. AT THE CONTRACTOR'S OPTION, STAINLESS STEEL BOLTS, NUTS AND WASHERS MAY BE USED AS AN ALTERNATE FOR THE 7/8" Ø GALVANIZED BOLTS, NUTS AND WASHERS. THEY SHALL CONFORM TO OR EXCEED THE MECHANICAL REQUIREMENTS OF ASTM A307. THE USE OF THIS ALTERNATE SHALL BE APPROVED BY THE ENGINEER.

AFTER INSTALLATION, THE EXPOSED THREAD OF THE BOLT SHALL BE BURRED WITH A SHARP POINTED TOOL.

THE COST OF THE GUARDRAIL ANCHOR ASSEMBLIES WITH BOLTS, NUTS AND WASHERS COMPLETE IN PLACE, SHALL BE INCLUDED IN THE LUMP SUM CONTRACT PRICE BID FOR BRIDGE APPROACH SLABS.

THE 1 1/4" Ø HOLES SHALL BE FORMED OR DRILLED WITH A CORE BIT. IMPACT TOOLS WILL NOT BE PERMITTED. ANY CONCRETE DAMAGED BY THIS WORK SHALL BE REPAIRED TO THE SATISFACTION OF THE ENGINEER.

GUARDRAIL ANCHOR ASSEMBLY DETAILS

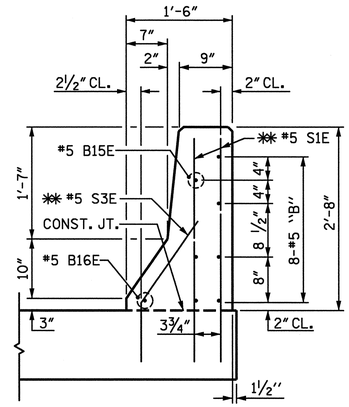

SECTION K-K

✱✱ ADHESIVELY ANCHORED

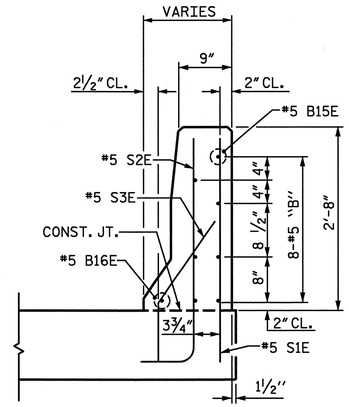

SECTION L-L

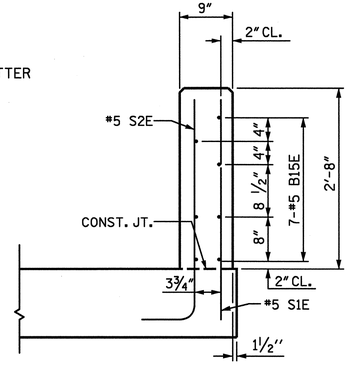

SECTION M-M

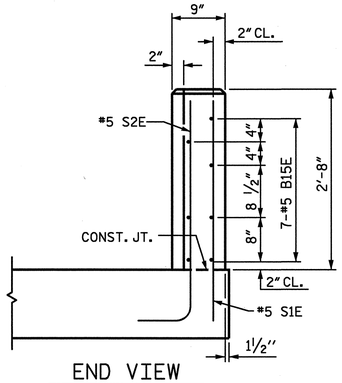

END VIEW

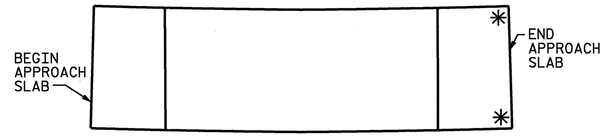

SKETCH SHOWING POINTS OF ATTACHMENT

✱ INDICATES POINTS OF ATTACHMENT

PROJECT NO. R-2606A

RANDOLPH COUNTY

STATION: 22+65.00 -L-

SHEET 3 OF 4

STATE OF NORTH CAROLINA
DEPARTMENT OF TRANSPORTATION
RALEIGH

SUBSTRUCTURE

BRIDGE APPROACH SLAB DETAILS

(LEFT LANE)

REVISIONS						SHEET NO.
NO.	BY:	DATE:	NO.	BY:	DATE:	S-102
1			3			TOTAL SHEETS
2			4			199

NORTH CAROLINA PROFESSIONAL SEAL 18050 ENGINEER JOHN A. BATTS 1-31-05

PLANS PREPARED BY:

ARCADIS

ARCADIS G&M OF NORTH CAROLINA, INC.
801 CORPORATE CENTER DRIVE, SUITE 300
RALEIGH, NORTH CAROLINA 27607-5073
TEL: 919/854-1282 FAX: 919/854-5448
WWW.ARCADIS-US.COM

DRAWN BY : D.G.VESTER DATE : 01/05
CHECKED BY : J.A.BATTS DATE : 01/05

1/28/2005 3:06:52 PM g:\tra\603031\drawings\final\left lane\r2606a_sd_as_01l.dgn

$$$$$$$STSTIME$$$$$
$$$$$$$$$$$$$$$$$$$$$$$$$$$DGN$$$$$$$$$$$$$$$$$$$$$$$$$
$$$$USERNAME$$$$

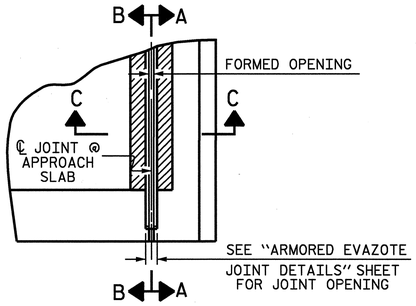

PLAN

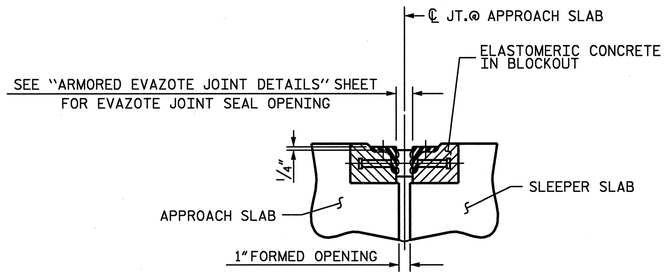

SECTION C-C
ARMORED EVAZOTE JOINT SEAL

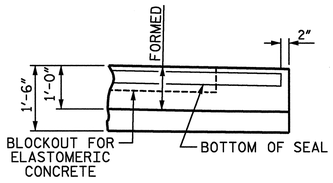

SECTION A-A

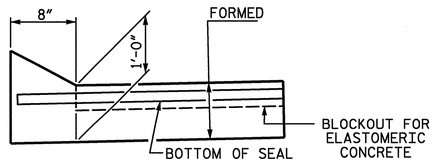

SECTION B-B

JOINT SEAL DETAILS @ APPROACH SLAB

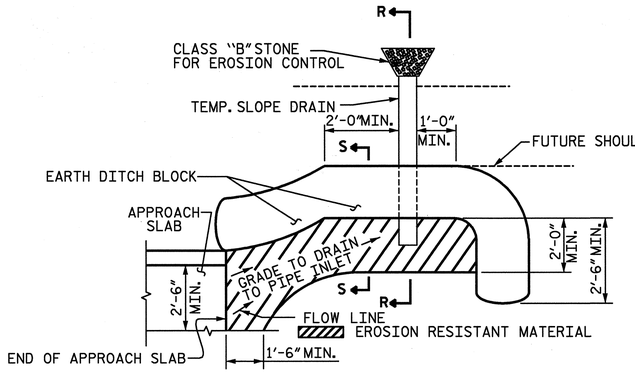

NOTE: IMMEDIATELY AFTER THE CONSTRUCTION OF THE APPROACH SLAB, THE CONTRACTOR SHALL PROVIDE TEMPORARY BERM AND SLOPE DRAIN. CONTRACTOR SHALL GRADE TO PIPE INLET AND PROVIDE EROSION RESISTANT MATERIAL AS SHOWN. THE EROSION RESISTANT MATERIAL SHALL BE EITHER 1) ASPHALT PLANT MIX, TYPE 1 OR TYPE 2, MIN. 2" DEPTH, 2) EROSION CONTROL MAT, OR 3) CONCRETE, AS DIRECTED BY THE ENGINEER. THE SLOPE DRAIN SHALL CONSIST OF A NON-PERFORATED TEMPORARY DRAINAGE PIPE, 12 INCHES IN DIAMETER.

PLAN VIEW

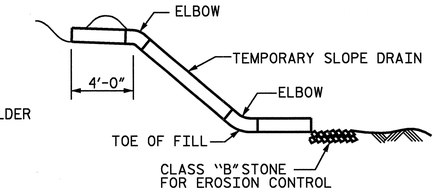

SECTION R-R

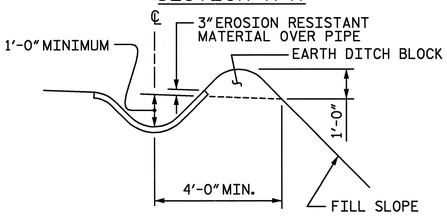

SECTION S-S

TEMPORARY BERM AND SLOPE DRAIN DETAILS

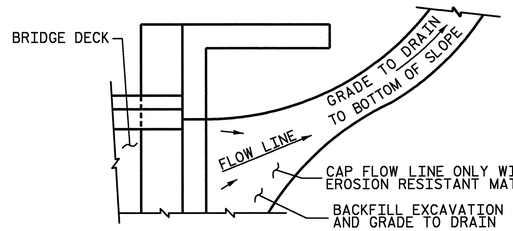

NOTE: IF THE APPROACH SLAB IS NOT CONSTRUCTED IMMEDIATELY AFTER THE BACKFILLING OF THE END BENT EXCAVATION, GRADE TO DRAIN TO THE BOTTOM OF THE SLOPE AND PROVIDE EROSION RESISTANT MATERIAL, SUCH AS FIBERGLASS ROVING OR AS DIRECTED BY THE ENGINEER TO PREVENT SOIL EROSION AND TO PROTECT THE AREA ADJACENT TO THE STRUCTURE. THE CONTRACTOR WILL BE REQUIRED TO REMOVE THESE MATERIALS PRIOR TO CONSTRUCTION OF THE APPROACH SLAB.

TEMPORARY DRAINAGE DETAIL

PROJECT NO. R-2606A

RANDOLPH COUNTY

STATION: 22+65.00 -L-

SHEET 4 OF 4

STATE OF NORTH CAROLINA
DEPARTMENT OF TRANSPORTATION
RALEIGH

SUBSTRUCTURE

BRIDGE APPROACH SLAB DETAILS

(LEFT LANE)

REVISIONS						SHEET NO.
NO.	BY:	DATE:	NO.	BY:	DATE:	S-103
1			3			TOTAL SHEETS
2			4			199

PLANS PREPARED BY:
ARCADIS
ARCADIS G&M OF NORTH CAROLINA, INC.
801 CORPORATE CENTER DRIVE, SUITE 300
RALEIGH, NORTH CAROLINA 27607-5073
TEL: 919/854-1282 FAX: 919/854-5448
WWW.ARCADIS-US.COM

DRAWN BY : D.G.VESTER DATE : 01/05
CHECKED BY : J.A.BATTS DATE : 01/05

NORTH CAROLINA PROFESSIONAL SEAL 18058 ENGINEER JOHN A. BATTS 1-31-05

1/28/2005 3:06:52 PM g:\tra\603031\drawings\final\left lane\r2606a_sd_as_011.dgn

$$$$$$SYSTIME$$$$$
$$$$$$$$$$$$$$$$$$$$$$$$DGN$$$$$$$$$$$$$$$$$$$$$$$$
$$$$USERNAME$$$$

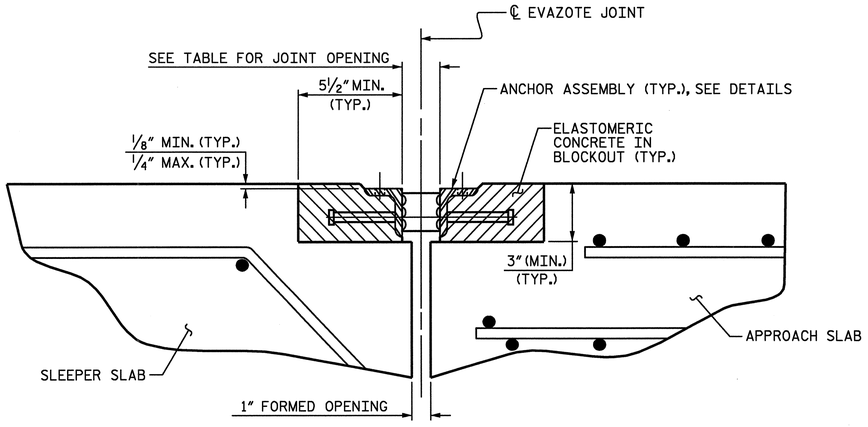

ARMORED JOINT DETAILS

SECTION NORMAL TO JOINT AT APPROACH SLAB

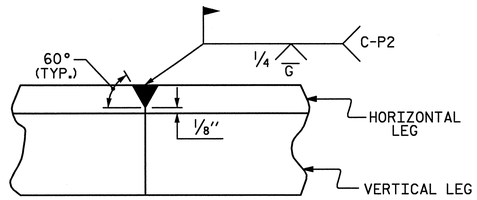

DETAIL- FIELD WELD SPLICE OF ANGLE

NOTES

ANGLES SHALL CONFORM TO AASHTO M270 GRADE 36 STEEL OR APPROVED EQUAL. ALL STUD ANCHORS SHALL CONFORM TO AASHTO M169 GRADES 1010 THRU 1020 OR APPROVED EQUAL.

STUD ANCHORS SHALL BE SHOP WELDED AND ALL HOLES SHALL BE SHOP DRILLED AS SHOWN ON THE PLANS. STUD ANCHORS SHALL BE ELECTRIC ARC END WELDED WITH COMPLETE FUSION.

UPON COMPLETION OF SHOP FABRICATION, THE ENTIRE ANCHOR ASSEMBLY SHALL BE METALLIZED. THE ½" DIA. STUD ANCHORS AND ANCHOR TABS NEED NOT BE METALLIZED. SEE SPECIAL PROVISION FOR THERMAL SPRAYED COATINGS (METALLIZATION).

ANCHOR ASSEMBLY SHALL BE MADE CONTINUOUS THE LENGTH OF THE JOINT FROM GUTTER TO GUTTER. FOR FIELD SPLICES AT ALL CROWN BREAK POINTS, THE ENDS OF THE STEEL ANGLES SHALL BE CUT PARALLEL TO THE BRIDGE CENTERLINE. FINISHED FIELD WELDS SHALL BE GROUND SMOOTH AND COATED WITH A MINIMUM THICKNESS OF 4 DRY MILS OF ZINC-RICH PAINT IN ACCORDANCE WITH THE STANDARD SPECIFICATIONS.

ANCHOR ASSEMBLY SEGMENTS SHALL NOT BE LESS THAN 12 FEET NOR MORE THAN 20 FEET IN LENGTH. SHORTER SEGMENTS MAY BE USED AT THE EDGE OF ROADWAY OR AT POINTS OF STAGED CONSTRUCTION.

THE ANCHOR ASSEMBLY SHALL BE SECURED AND LEVELED AS SHOWN IN THE "ARMORED JOINT ANCHOR ASSEMBLY DETAILS". NO SUBMITTALS ARE REQUIRED FOR ⅜" Ø EXPANSION ANCHORS, NUTS OR WASHERS. THE CONTRACTOR MAY SUBMIT FOR APPROVAL AN ALTERNATE METHOD OF ALIGNING AND LEVELING THE ANGLES. THE ALTERNATE METHOD SHALL NOT INCLUDE ANY WELDING TO THE OUTSIDE FACE OF THE ANGLES.

AFTER THE ELASTOMERIC CONCRETE HAS BEEN CAST ON BOTH SIDES OF THE JOINT, REMOVE ANY EXCESS CONCRETE THAT COMES THROUGH THE WEEP HOLES AND THOROUGHLY CLEAN THE ANGLES. ANY DAMAGED STEEL SHALL BE COATED WITH A MINIMUM OF 4 MILS OF ZINC-RICH PAINT IN ACCORDANCE WITH THE STANDARD SPECIFICATIONS.

SEE SPECIAL PROVISIONS FOR EVAZOTE JOINT SEALS.

SEE SPECIAL PROVISIONS FOR ELASTOMERIC CONCRETE.

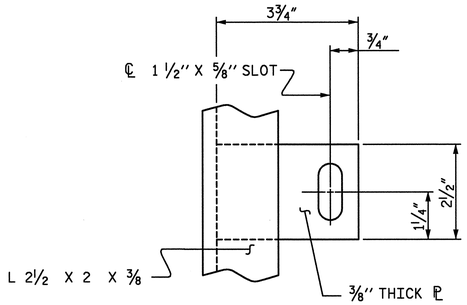

PLAN VIEW OF TAB

MOVEMENT AND SETTING AT EVAZOTE JOINT						
APPROACH SLAB @ END BENT NO.	SKEW ANGLE	NOMINAL UNCOMPRESSED SEAL WIDTH	TOTAL MOVEMENT (ALONG ℄ RDWY)	PERPENDICULAR JOINT OPENING AT 45° F	PERPENDICULAR JOINT OPENING AT 60° F	PERPENDICULAR JOINT OPENING AT 90° F
1	90°-00'-00"	2 ½"	13/16"	2"	1 ⅞"	1 ⅝"
2	90°-00'-00"	2 ½"	13/16"	2"	1 ⅞"	1 ⅝"

TOTAL MOVEMENT IS CALCULATED ALONG THE CENTERLINE OF ROADWAY.
JOINT OPENINGS ARE MEASURED PERPENDICULAR TO THE JOINT.

BILL OF MATERIAL		
APPROACH SLAB @ END BENT NO.	ELASTOMERIC CONCRETE * (CU. FT.)	TOTAL LENGTH OF ANGLE (FT)
1	9.5	83'-0"
2	9.5	83'-0"

* BASED ON THE MINIMUM BLOCKOUT SHOWN.

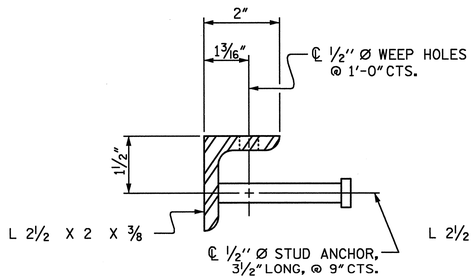

SECTION VIEW OF STUD

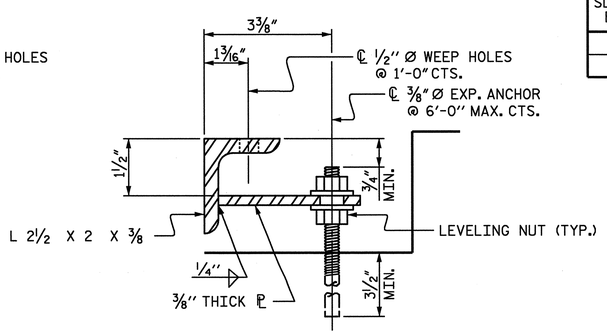

SECTION VIEW OF TAB

ARMORED JOINT ANCHOR ASSEMBLY DETAILS

PROJECT NO. R-2606A

RANDOLPH COUNTY

STATION: 22+65.00 -L-

STATE OF NORTH CAROLINA
DEPARTMENT OF TRANSPORTATION
RALEIGH

SUBSTRUCTURE

ARMORED EVAZOTE JOINT DETAILS

(LEFT LANE)

REVISIONS						SHEET NO.
NO.	BY:	DATE:	NO.	BY:	DATE:	S-104
1			3			TOTAL SHEETS
2			4			199

PLANS PREPARED BY:

ARCADIS
ARCADIS G&M OF NORTH CAROLINA, INC.
801 CORPORATE CENTER DRIVE, SUITE 300
RALEIGH, NORTH CAROLINA 27607-5073
TEL: 919/854-1282 FAX: 919/854-5448
WWW.ARCADIS-US.COM

DRAWN BY : D.G.VESTER DATE : 01/05
CHECKED BY : J.A.BATTS DATE : 01/05

NORTH CAROLINA PROFESSIONAL SEAL 18050 ENGINEER JOHN A. BATTS 1-31-05

1/28/2005 3:06:53 PM g:\tra\60303\1\drawings\finalleft lane\r2606a_sd_js_011.dgn

F.A. PROJECT NO. NHF-311(18)

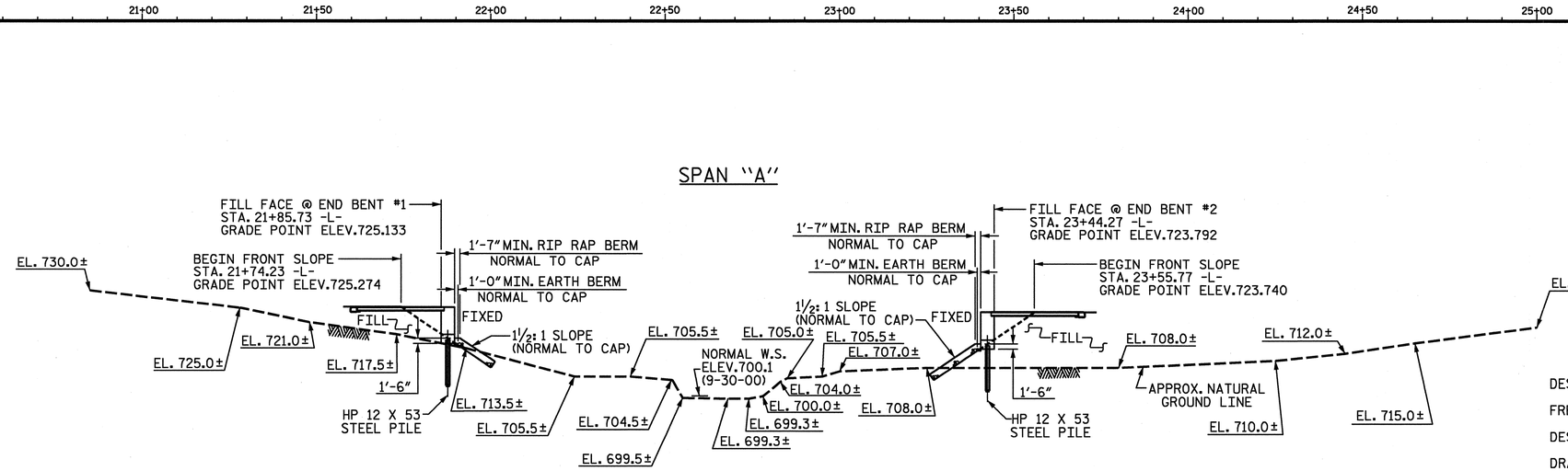

SECTION ALONG BRIDGE CONTROL LINE (RIGHT LANE)

(BENTS ON SECTION AT RIGHT ANGLES TO BENTS)

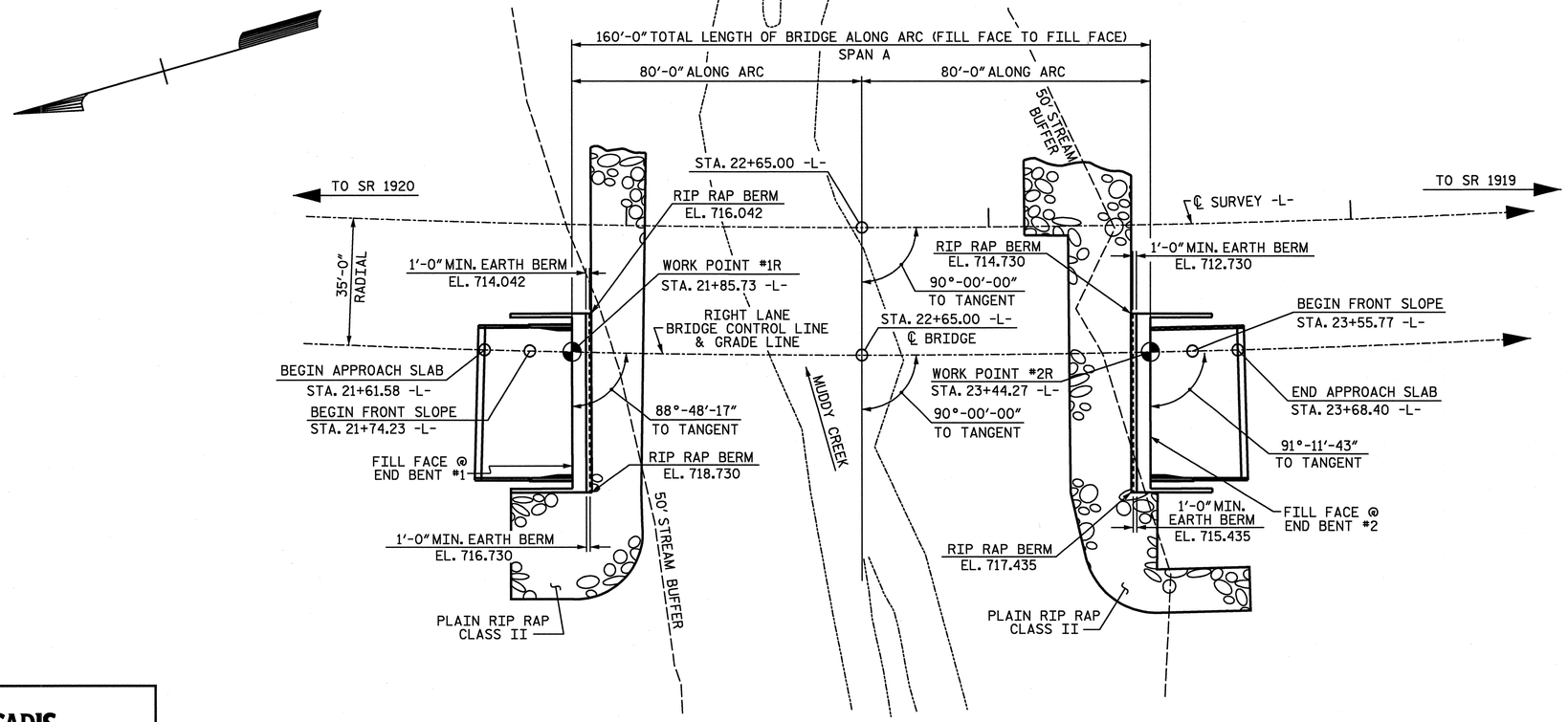

PLAN

-2.1163% +1.2881%

PI = 23+60.00
EL = 720.53'
VC = 750'

-L- GRADE DATA

HYDRAULIC DATA

DESIGN DISCHARGE_____4400 CFS
FREQUENCY OF DESIGN FLOOD_____50 YEARS
DESIGN HIGH WATER ELEVATION_____712.2
DRAINAGE AREA_____10.0 SQ. MI.
BASIC DISCHARGE (Q100)_____4800 CFS
BASIC HIGH WATER ELEVATION_____712.6

OVERTOPPING FLOOD DATA

OVERTOPPING DISCHARGE_____10,000+ CFS
FREQUENCY OF OVERTOPPING FLOOD____500+ YRS.
OVERTOPPING FLOOD ELEVATION_____724.85

-L- HORIZONTAL CURVE DATA

PI STA. 22+50.68
Δ = 30°-54'-42.0" LT
D = 1°-30'-28.0"
L = 2050.14'
T = 1050.68'
R = 3800.00'
SE = 0.055

PROJECT NO. R-2606A
RANDOLPH COUNTY
STATION: 22+65.00 -L-

SHEET 1 OF 4 BRIDGE NO. 517

STATE OF NORTH CAROLINA
DEPARTMENT OF TRANSPORTATION
RALEIGH

GENERAL DRAWING

BRIDGE ON US 311
OVER MUDDY CREEK
BETWEEN SR 1920 AND SR 1919
(RIGHT LANE)

REVISIONS						SHEET NO.
NO.	BY:	DATE:	NO.	BY:	DATE:	S-105
1			3			TOTAL SHEETS
2			4			199

PLANS PREPARED BY:

ARCADIS
ARCADIS G&M OF NORTH CAROLINA, INC.
801 CORPORATE CENTER DRIVE, SUITE 300
RALEIGH, NORTH CAROLINA 27607-5073
TEL: 919/854-1282 FAX: 919/854-5448
WWW.ARCADIS-US.COM

DRAWN BY : D.G.VESTER DATE : 01/05
CHECKED BY : J.A.BATTS DATE : 01/05

NORTH CAROLINA PROFESSIONAL SEAL 18056 ENGINEER JOHN A. BATTS 1-31-05

1/28/2005 2:48:19 PM g:\tra\60303\drawings\final\right lane\r2606a_sd_gd1_01r.dgn

STR#6

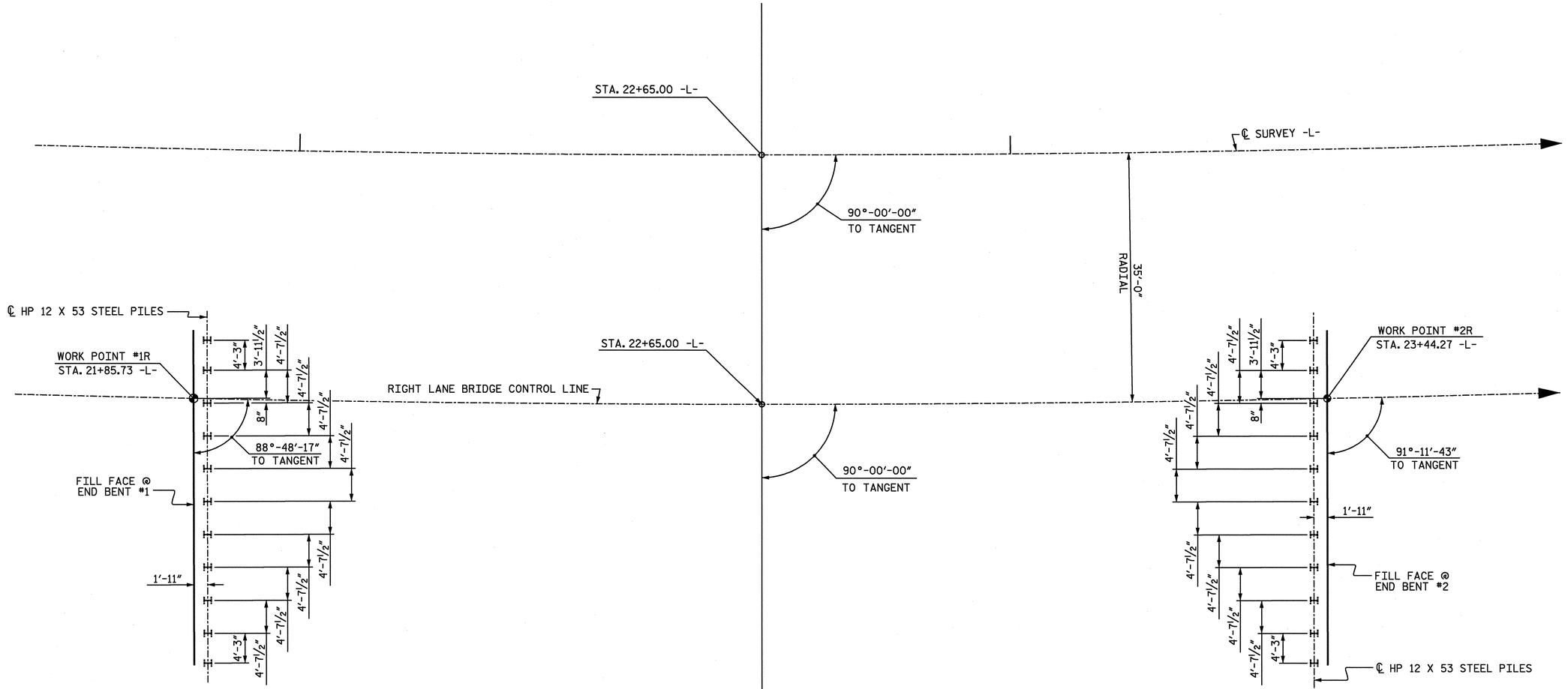

END BENT #1

END BENT #2

FOUNDATION LAYOUT PLAN

PROJECT NO. R-2606A

RANDOLPH COUNTY

STATION: 22+65.00 -L-

SHEET 2 OF 4

STATE OF NORTH CAROLINA
DEPARTMENT OF TRANSPORTATION
RALEIGH

GENERAL DRAWING

BRIDGE ON US 311
OVER MUDDY CREEK
BETWEEN SR 1920 AND SR 1919
(RIGHT LANE)

REVISIONS						SHEET NO.
NO.	BY:	DATE:	NO.	BY:	DATE:	S-106
1			3			TOTAL SHEETS
2			4			197

NORTH CAROLINA PROFESSIONAL SEAL 18056 ENGINEER JOHN A. BATTS 1-31-05

PLANS PREPARED BY:
ARCADIS
ARCADIS G&M OF NORTH CAROLINA, INC.
801 CORPORATE CENTER DRIVE, SUITE 300
RALEIGH, NORTH CAROLINA 27607-5073
TEL: 919/854-1282 FAX: 919/854-5448
WWW.ARCADIS-US.COM

DRAWN BY : D.G.VESTER DATE : 01/05
CHECKED BY : J.A.BATTS DATE : 01/05

1/28/2005 2:48:19 PM g:\trg\603031\drawings\final\right lane\r2606a_sd_gd2_01r.dgn

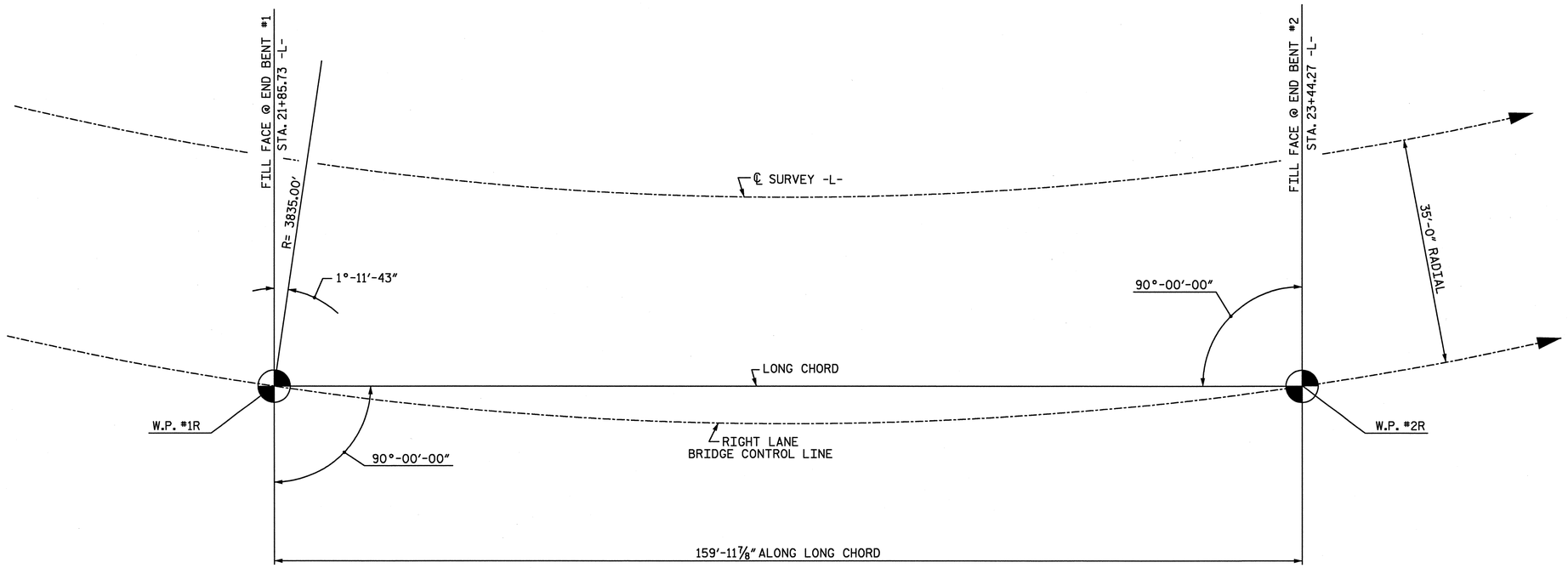

LONG CHORD LAYOUT

(END BENTS ARE PARALLEL)
(NOT TO SCALE)

-L- HORIZONTAL CURVE DATA

PI STA. 22+50.68

Δ = 30°-54'-42.0" LT

D = 1°-30'-28.0"

L = 2050.14'

T = 1050.68'

R = 3800.00'

SE = 0.055

BEARING IN = S 31°-46'-16.8" W

BEARING OUT = S 0°-51'-34.8" W

PLANS PREPARED BY:

ARCADIS

ARCADIS G&M OF NORTH CAROLINA, INC.
801 CORPORATE CENTER DRIVE, SUITE 300
RALEIGH, NORTH CAROLINA 27607-5073
TEL: 919/854-1282 FAX: 919/854-5448
WWW.ARCADIS-US.COM

DRAWN BY : D.G.VESTER DATE : 01/05
CHECKED BY : J.A.BATTS DATE : 01/05

NORTH CAROLINA PROFESSIONAL SEAL 18026 ENGINEER JOHN A. BATTS 1-31-05

PROJECT NO. R-2606A

RANDOLPH COUNTY

STATION: 22+65.00 -L-

SHEET 3 OF 4

STATE OF NORTH CAROLINA
DEPARTMENT OF TRANSPORTATION
RALEIGH

GENERAL DRAWING

BRIDGE ON US 311
OVER MUDDY CREEK
BETWEEN SR 1920 AND SR 1919
(RIGHT LANE)

REVISIONS						SHEET NO.
NO.	BY:	DATE:	NO.	BY:	DATE:	S-107
1			3			TOTAL SHEETS
2			4			199

1/28/2005 2:48:19 PM g:\tra\603031\drawings\final\rlght lane\r2606a_sd_gd3_01r.dgn

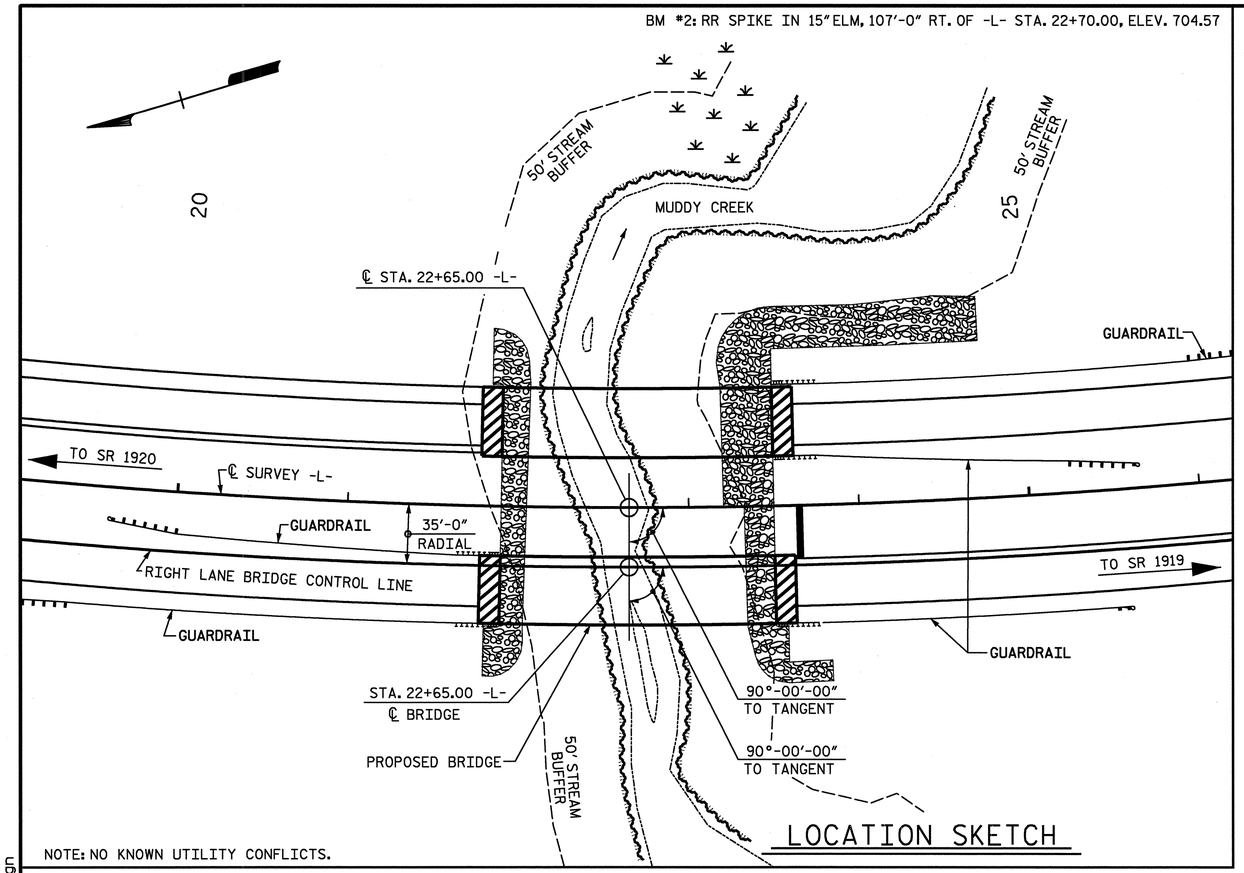

NOTES

ASSUMED LIVE LOAD = HS 20 OR ALTERNATE LOADING.

FOR OTHER DESIGN DATA AND GENERAL NOTES, SEE SHEET SN.

FOR EROSION CONTROL MEASURES SEE EROSION CONTROL PLANS.

THIS BRIDGE HAS BEEN DESIGNED BY THE STRENGTH DESIGN METHOD AS SPECIFIED IN AASHTO STANDARD SPECIFICATIONS.

ALL STRUCTURAL STEEL SHALL BE AASHTO M270 GRADE 50W AND PAINTED IN ACCORDANCE WITH SYSTEM 4 OF ARTICLE 442-7 OF THE STANDARD SPECIFICATIONS UNLESS OTHERWISE NOTED ON THE PLANS.

REMOVABLE FORMS MAY BE USED IN LIEU OF METAL STAY-IN-PLACE FORMS IN ACCORDANCE WITH ARTICLE 420-3 OF THE STANDARD SPECIFICATIONS.

THE NOMINAL UNCOMPRESSED SEAL WIDTH OF THE EVAZOTE JOINT SEAL SHALL BE 2 1/2" AT APPROACH SLAB NO.1 AND APPROACH SLAB NO.2. FOR EVAZOTE JOINT SEALS, SEE SPECIAL PROVISIONS.

FOR ELASTOMERIC CONCRETE, SEE SPECIAL PROVISIONS.

ALL METALLIZED SURFACES SHALL RECEIVE A SEAL COATING AS SPECIFIED IN THE SPECIAL PROVISION FOR THERMAL SPRAYED COATINGS (METALLIZATION).

THIS STRUCTURE HAS BEEN DESIGNED IN ACCORDANCE WITH HEC 18, "EVALUATING SCOUR AT BRIDGES", NOVEMBER, 1995.

THIS BRIDGE HAS BEEN DESIGNED IN ACCORDANCE WITH THE REQUIREMENTS OF THE AASHTO STANDARD SPECIFICATIONS FOR SEISMIC DESIGN OF HIGHWAY BRIDGES FOR SEISMIC PERFORMANCE CATEGORY A.

THE CONTRACTOR SHALL PROVIDE INDEPENDENT ASSURANCE SAMPLES OF REINFORCING STEEL AS FOLLOWS: FOR PROJECTS REQUIRING UP TO 400 TONS OF REINFORCING STEEL, ONE 30 INCH SAMPLE OF EACH SIZE BAR USED, AND FOR PROJECTS REQUIRING OVER 400 TONS OF REINFORCING STEEL, TWO 30 INCH SAMPLES OF EACH SIZE BAR USED. THE BARS FROM WHICH THE SAMPLES ARE TAKEN MUST THEN BE SPLICED WITH REPLACEMENT BARS OF THE SIZE AND LENGTH OF THE SAMPLE, PLUS A MINIMUM LAP SPLICE OF THIRTY BAR DIAMETERS.

NEEDLE BEAMS WILL NOT BE ALLOWED UNLESS OTHERWISE CALLED FOR ON THE PLANS OR APPROVED BY THE ENGINEER.

FOR SUBMITTAL OF WORKING DRAWINGS, SEE SPECIAL PROVISIONS.

FOR FALSEWORK AND FORMWORK, SEE SPECIAL PROVISIONS.

PILES FOR END BENT NO. 1 AND END BENT NO. 2 SHALL BE DRIVEN TO MINIMUM BEARING CAPACITY OF 60 TONS EACH.

STEEL PILE POINTS ARE REQUIRED FOR PILES AT END BENT NO. 1. SEE SPECIAL PROVISIONS.

WHEN DRIVING PILES, THE MAXIMUM BLOW COUNT SHALL NOT BE EXCEEDED.

FOR CRANE SAFETY, SEE SPECIAL PROVISIONS.

FOR METRIC STRUCTURAL STEEL, SEE SPECIAL PROVISIONS.

FOR STEEL H PILES, SEE SPECIAL PROVISIONS.

TOTAL BILL OF MATERIAL

	REINFORCED CONCRETE DECK SLAB	GROOVING BRIDGE FLOORS	CLASS A CONCRETE	BRIDGE APPROACH SLABS	REINFORCING STEEL	STRUCTURAL STEEL	HP 12 X 53 STEEL PILES		STEEL PILE POINTS	CONCRETE BARRIER RAIL	PLAIN RIP RAP CLASS II (2'-0" THICK)	FILTER FABRIC FOR DRAINAGE	~~ELASTOMERIC BEARINGS~~	EVAZOTE JOINT SEALS
	SQ.FT.	SQ.FT.	CU.YDS.	LUMP SUM	LBS.	APPROX.LBS.	NO.	LIN.FT.	EA.	LIN.FT.	TONS	SQ.YDS.	~~LUMP SUM~~	LUMP SUM
SUPERSTRUCTURE	6,847.9	7,740.7		LUMP SUM		309,300				316.7			~~LUMP SUM~~	LUMP SUM
END BENT NO.1			28.1		3,029		11	110.0	11		218.6	242.9		
END BENT NO.2			28.4		3,059		11	275.0			293.2	325.7		
TOTAL	6,847.9	7,740.7	56.5	LUMP SUM	6,088	309,300	22	385.0	11	316.7	511.8	568.6	~~LUMP SUM~~	LUMP SUM

PROJECT NO. R-2606A

RANDOLPH COUNTY

STATION: 22+65.00 -L-

SHEET 4 OF 4

PLANS PREPARED BY:
ARCADIS
ARCADIS G&M OF NORTH CAROLINA, INC.
801 CORPORATE CENTER DRIVE, SUITE 300
RALEIGH, NORTH CAROLINA 27607-5073
TEL: 919/854-1282 FAX: 919/854-5448
WWW.ARCADIS-US.COM

DRAWN BY : D.G.VESTER DATE : 01/05

CHECKED BY : J.A.BATTS DATE : 01/05

NORTH CAROLINA PROFESSIONAL SEAL 18056 ENGINEER JOHN A. BATTS 1-31-05

STATE OF NORTH CAROLINA
DEPARTMENT OF TRANSPORTATION
RALEIGH

GENERAL DRAWING

BRIDGE ON US 311
OVER MUDDY CREEK
BETWEEN SR 1920 AND SR 1919
(RIGHT LANE)

REVISIONS						SHEET NO.
NO.	BY:	DATE:	NO.	BY:	DATE:	S-108
1			3			TOTAL SHEETS
2			4			199

1/28/2005 2:48:19 PM g:\tra\603031\drawings\final\right lane\r2606a_sd_gd4_01r.dgn

$$$$$$$SYSTIME$$$$$$$
$$$$$$$$$$$$$$$$$$$$$$$$$$$$DGN$$$$$$$$$$$$$$$$$$$$$$$$
$$$$USERNAME$$$$

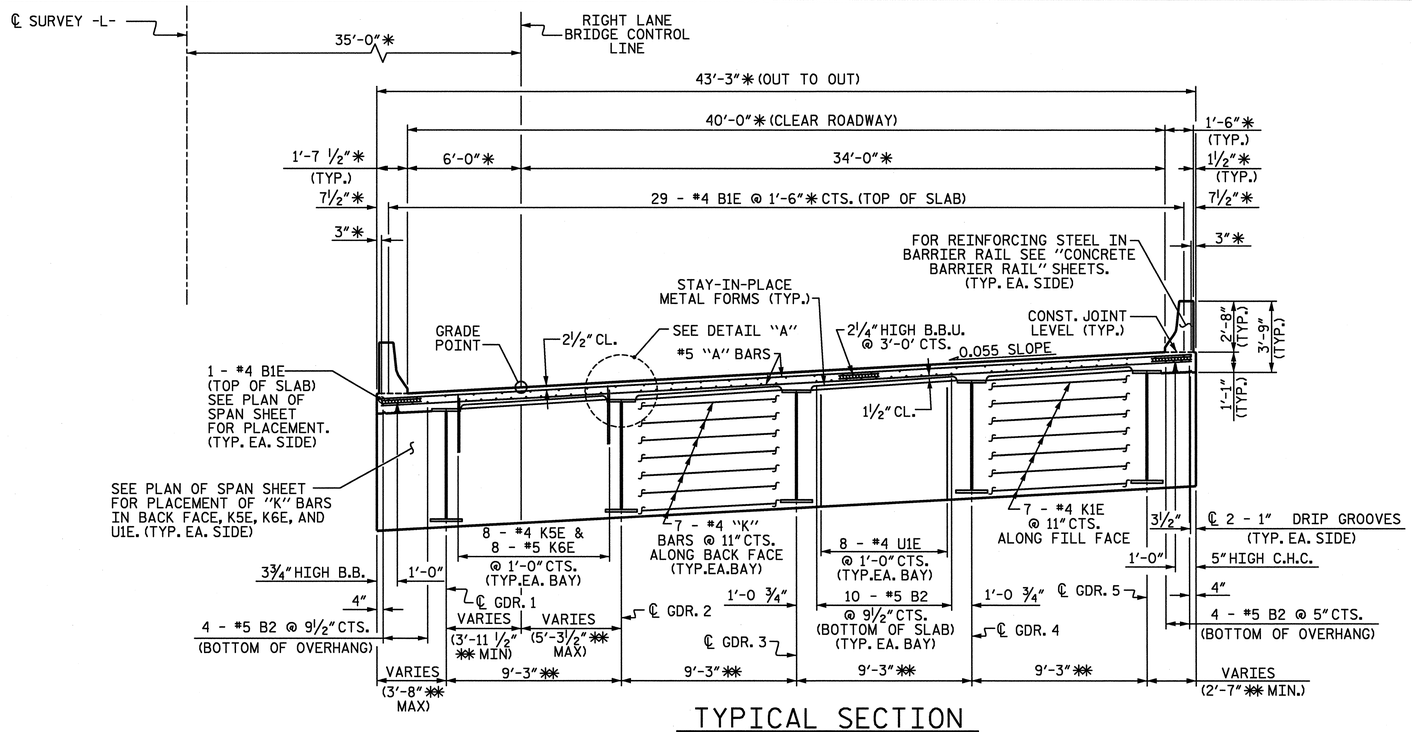

TYPICAL SECTION

SHOWING INTEGRAL END BENT
* - RADIAL DIMENSIONS
** - DIMENSIONS ARE TO ARCS CONCENTRIC WITH THE ℄ SURVEY -L-.
GIRDERS ARE ON THE CHORDS OF THE CONCENTRIC ARCS.

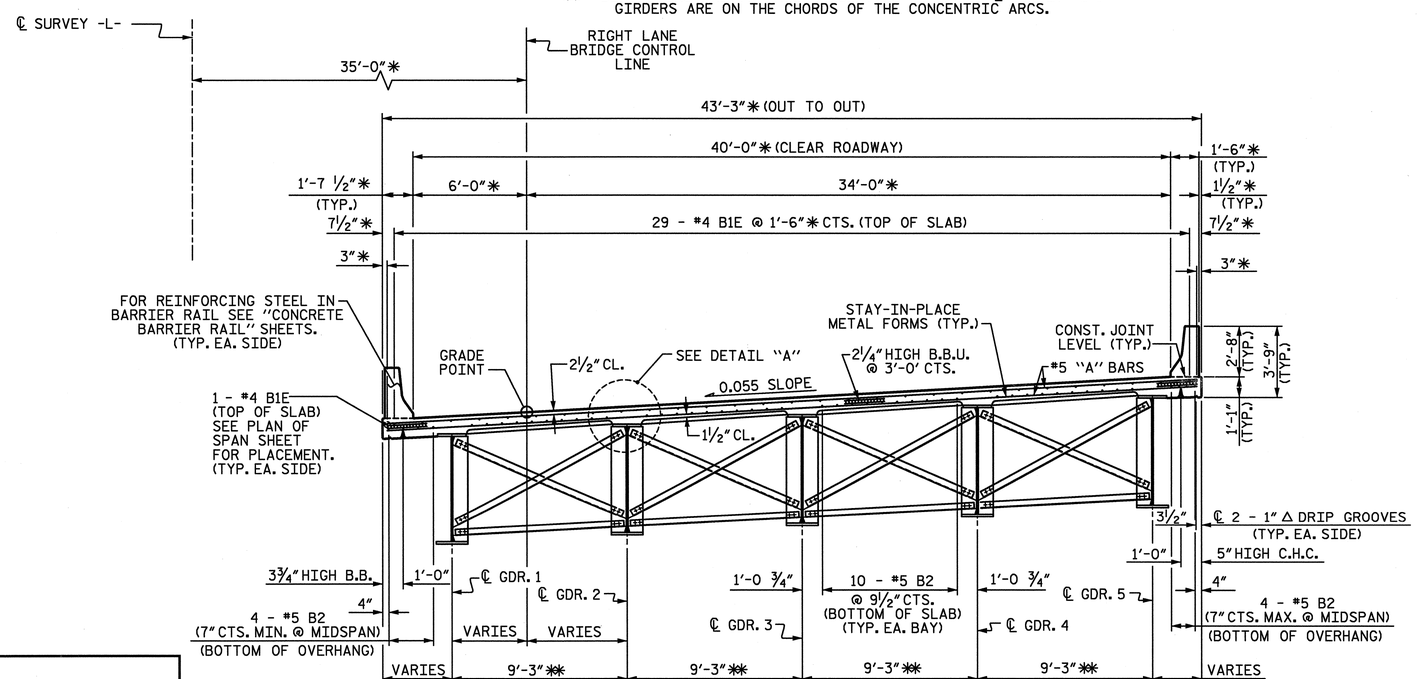

TYPICAL SECTION

SHOWING INTERMEDIATE DIAPHRAMS
* - RADIAL DIMENSIONS
** - DIMENSIONS ARE TO ARCS CONCENTRIC WITH THE ℄ SURVEY -L-.
GIRDERS ARE ON THE CHORDS OF THE CONCENTRIC ARCS.

NOTES

PROVIDE 1 1/4" HIGH BEAM BOLSTERS UPPER AT 4'-0" CTS. ATOP THE METAL STAY-IN-PLACE FORMS TO SUPPORT THE BOTTOM MAT OF 'A' BARS. WHEN USING REMOVABLE FORMS, PROVIDE CONTINUOUS HIGH CHAIRS FOR METAL DECK (C.H.C.M.) @ 4'-0" CTS. WITH A HEIGHT TO SUPPORT THE BOTTOM MAT OF 'A' BARS A CLEAR DISTANCE OF 2 1/2" ABOVE THE TOP OF THE REMOVABLE FORM.

BARRIER RAIL IN THE SPAN SHALL NOT BE CAST UNTIL ALL SLAB CONCRETE IN THAT SPAN HAS BEEN CAST AND HAS REACHED A MINIMUM COMPRESSIVE STRENGTH OF 3,000 PSI.

PREVIOUSLY CAST CONCRETE IN THE SPAN SHALL HAVE ATTAINED A MINIMUM COMPRESSIVE STRENGTH OF 3,000 PSI BEFORE ADDITIONAL CONCRETE IS CAST IN THE SPAN.

THE CONTRACTOR MAY, WHEN NECESSARY, PROPOSE A SCHEME FOR AVOIDING INTERFERENCE BETWEEN METAL STAY-IN-PLACE FORM SUPPORTS OR FORMS AND BEAM/GIRDER STIFFENERS OR CONNECTOR PLATES. THE PROPOSAL SHALL BE INDICATED, AS APPROPRIATE, ON EITHER THE STEEL WORKING DRAWINGS OR THE METAL STAY-IN-PLACE FORM WORKING DRAWINGS.

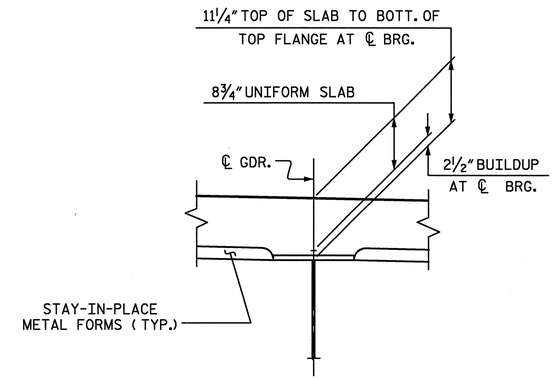

DETAIL "A"

PROJECT NO. R-2606A
RANDOLPH COUNTY
STATION: 22+65.00 -L-

SHEET 1 OF 2

STATE OF NORTH CAROLINA
DEPARTMENT OF TRANSPORTATION
RALEIGH
SUPERSTRUCTURE

TYPICAL SECTION

(RIGHT LANE)

REVISIONS						SHEET NO.
NO.	BY:	DATE:	NO.	BY:	DATE:	S-109
1			3			TOTAL SHEETS
2			4			199

NORTH CAROLINA PROFESSIONAL SEAL 18056 ENGINEER JOHN A. BATTS 1-31-05

PLANS PREPARED BY:
ARCADIS
ARCADIS G&M OF NORTH CAROLINA, INC.
801 CORPORATE CENTER DRIVE, SUITE 300
RALEIGH, NORTH CAROLINA 27607-5073
TEL: 919/854-1282 FAX: 919/854-5448
WWW.ARCADIS-US.COM

DRAWN BY : D.G.VESTER DATE : 01/05
CHECKED BY : J.A.BATTS DATE : 01/05

1/28/2005 2:48:20 PM g:\trg\603031\drawings\final\right lane\r2606a_sd_ts_01r.dgn

$$$$$$$$$$$$$$$$$$$$$$$$$$DGN$$$$$$$$$$$$$$$$$$$$$$$$$$
$$$$USERNAME$$$$

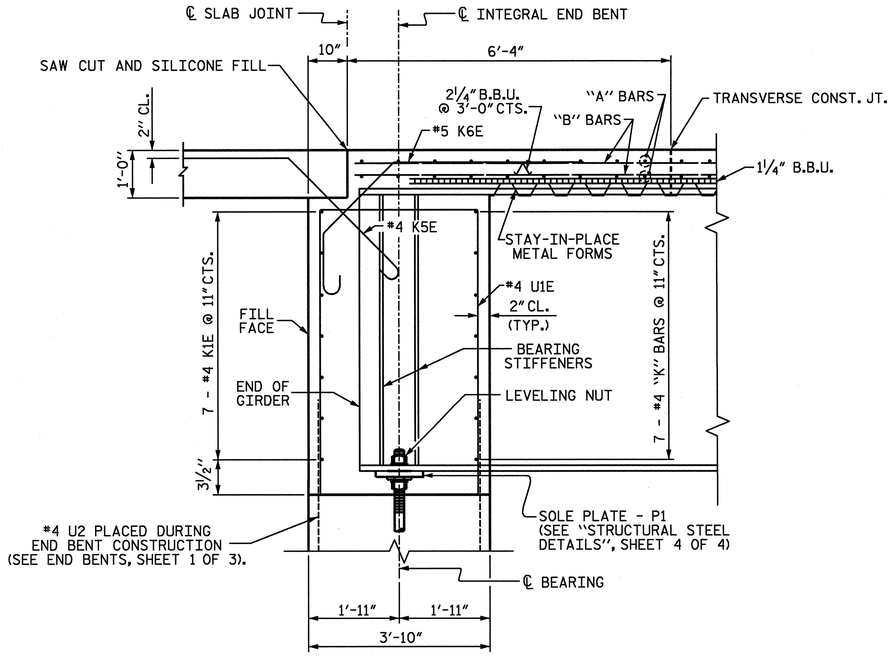

SECTION AT INTEGRAL END BENT

FOR TOP OF SOLE PLATE - P1 ELEVATIONS, SEE CHART BELOW.

	GIRDER	TOP OF SOLE PLATE (P1) ELEV.
END BENT #1	AG1	718.102
	AG2	718.609
	AG3	719.115
	AG4	719.622
	AG5	720.128
END BENT #2	AG1	716.793
	AG2	717.302
	AG3	717.812
	AG4	718.322
	AG5	718.831

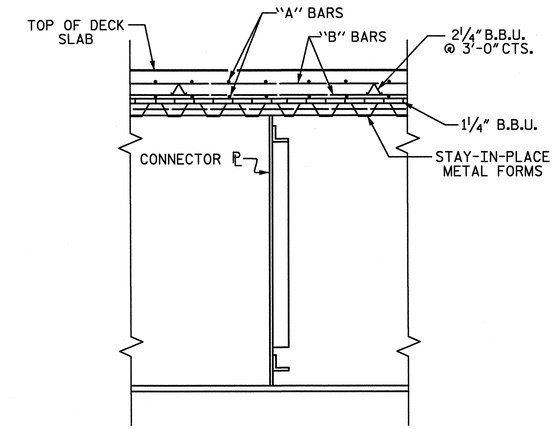

SECTION AT INTERMEDIATE DIAPHRAGM

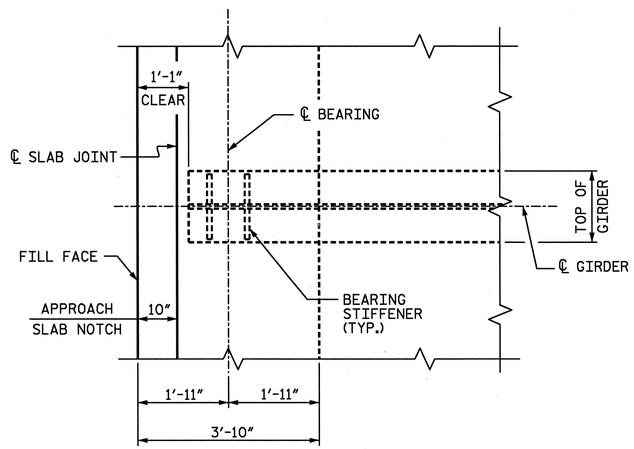

PLAN OF GIRDER AT END BENT

(TYPICAL EACH END BENT)

PROJECT NO. R-2606A

RANDOLPH COUNTY

STATION: 22+65.00 -L-

SHEET 2 OF 2

STATE OF NORTH CAROLINA
DEPARTMENT OF TRANSPORTATION
RALEIGH

SUPERSTRUCTURE

TYPICAL SECTION

(RIGHT LANE)

REVISIONS						SHEET NO.
NO.	BY:	DATE:	NO.	BY:	DATE:	S-110
1			3			TOTAL SHEETS
2			4			199

PLANS PREPARED BY:
ARCADIS
ARCADIS G&M OF NORTH CAROLINA, INC.
801 CORPORATE CENTER DRIVE, SUITE 300
RALEIGH, NORTH CAROLINA 27607-5073
TEL: 919/854-1282 FAX: 919/854-5448
WWW.ARCADIS-US.COM

DRAWN BY : D.G.VESTER DATE : 01/05
CHECKED BY : J.A.BATTS DATE : 01/05

NORTH CAROLINA PROFESSIONAL SEAL 18056 ENGINEER JOHN A. BATTS 1-31-05

1/28/2005 2:48:20 PM g:\tra\603031\drawings\final\right lane\r2606a_sd_ts_01r.dgn

$$$$$SYSTIML$$$$$
DGN
$$$$USERNAME$$$$

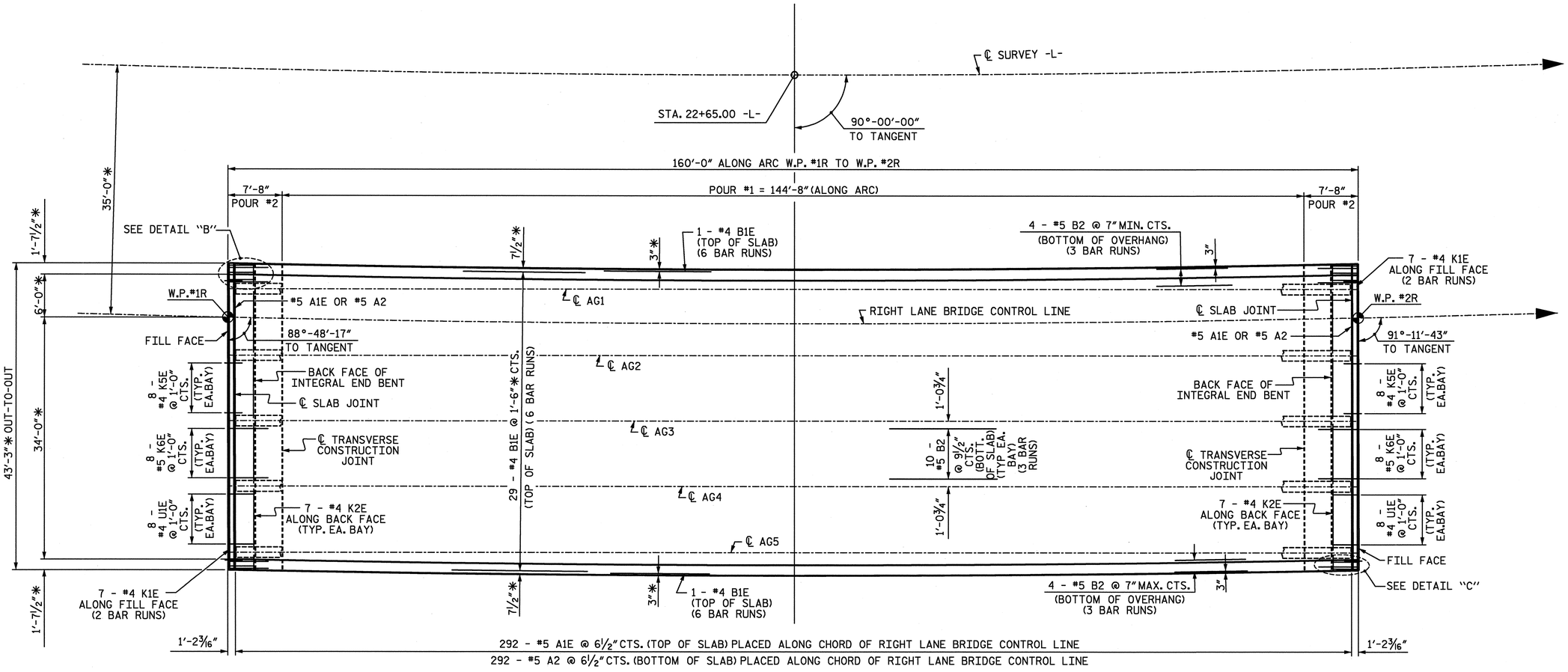

SPAN A

*RADIAL DIMENSIONS

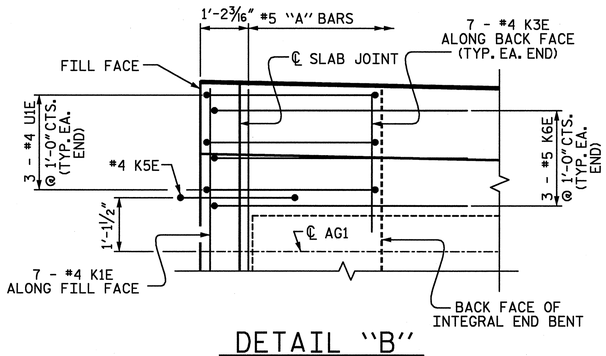

DETAIL "B"

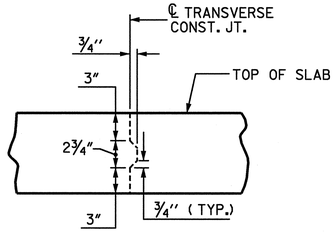

TRANSVERSE CONSTRUCTION JOINT DETAIL

NOTE: REINFORCING STEEL IN SLAB NOT SHOWN. LONGITUDINAL REINFORCING STEEL SHALL BE CONTINUOUS THRU JOINT.

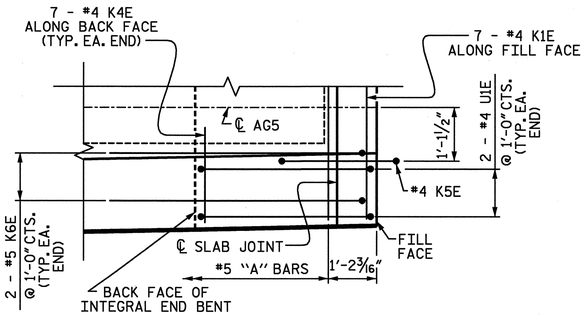

DETAIL "C"

PROJECT NO. R-2606A

RANDOLPH COUNTY

STATION: 22+65.00 -L-

SHEET 1 OF 2

STATE OF NORTH CAROLINA
DEPARTMENT OF TRANSPORTATION
RALEIGH

SUPERSTRUCTURE

PLAN OF SPAN A

(RIGHT LANE)

REVISIONS						SHEET NO.
NO.	BY:	DATE:	NO.	BY:	DATE:	S-111
1			3			TOTAL SHEETS
2			4			197

PLANS PREPARED BY:
ARCADIS
ARCADIS G&M OF NORTH CAROLINA, INC.
801 CORPORATE CENTER DRIVE, SUITE 300
RALEIGH, NORTH CAROLINA 27607-5073
TEL: 919/854-1282 FAX: 919/854-5448
WWW.ARCADIS-US.COM

DRAWN BY : D.G.VESTER DATE : 01/05
CHECKED BY : J.A.BATTS DATE : 01/05

NORTH CAROLINA PROFESSIONAL SEAL 18056 ENGINEER JOHN A. BATTS 1-31-05

1/31/2005 10:19:37 AM g:\TRA\60303\Drawings\Final\Right Lane\R2606A_SD_S1_01R.DGN

$$$$$$$$$$$$$$$$$$$$$$$$$$$$$$$$DGN$$$$$$$$$$$$$$$$$$$$$$$$
$$$$USERNAME$$$$

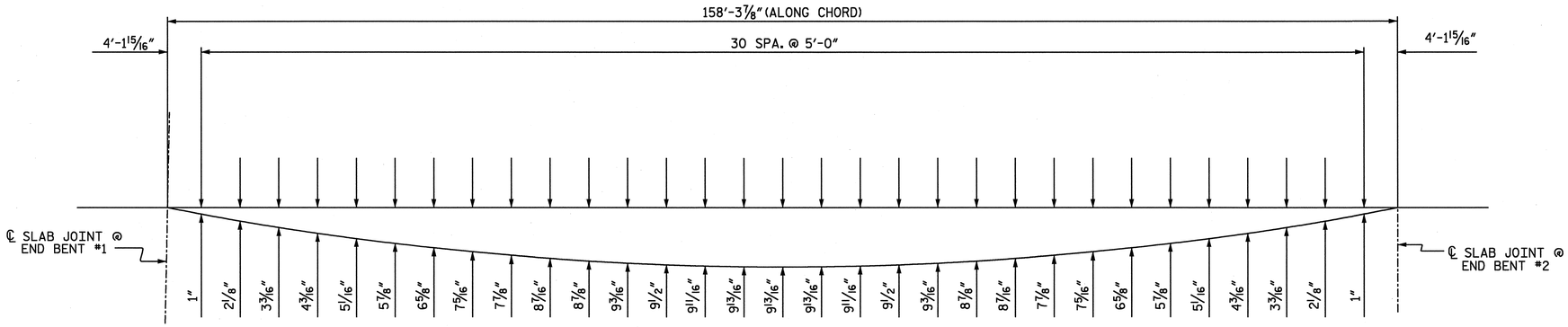

SPAN "A" ARC OFFSET (LT. SIDE)

OUTSIDE EDGE OF SUPERSTRUCTURE

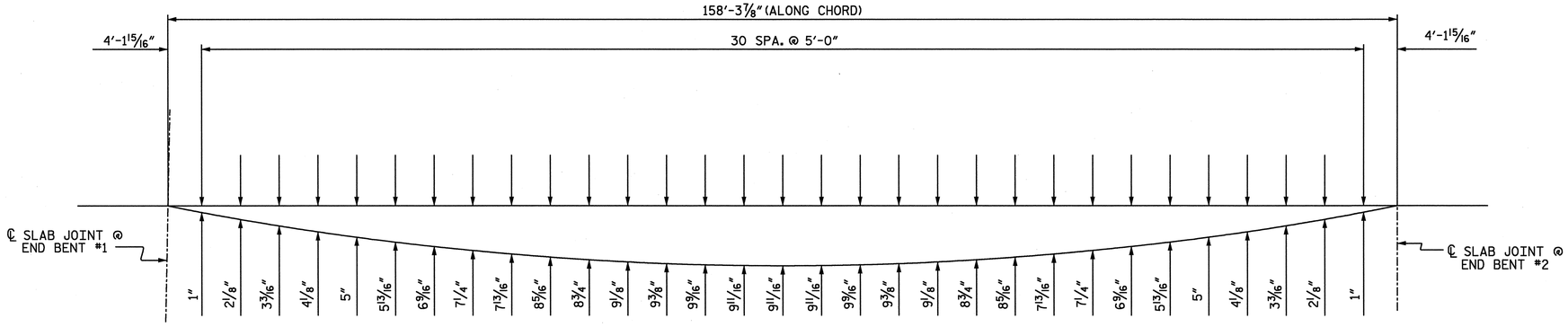

SPAN "A" ARC OFFSET (RT. SIDE)

OUTSIDE EDGE OF SUPERSTRUCTURE

PROJECT NO. R-2606A

RANDOLPH COUNTY

STATION: 22+65.00 -L-

SHEET 2 OF 2

STATE OF NORTH CAROLINA
DEPARTMENT OF TRANSPORTATION
RALEIGH

SUPERSTRUCTURE

PLAN OF SPAN A ARC OFFSETS

(RIGHT LANE)

REVISIONS						SHEET NO.
NO.	BY:	DATE:	NO.	BY:	DATE:	S-112
1			3			TOTAL SHEETS
2			4			191

PLANS PREPARED BY:

ARCADIS
ARCADIS G&M OF NORTH CAROLINA, INC.
801 CORPORATE CENTER DRIVE, SUITE 300
RALEIGH, NORTH CAROLINA 27607-5073
TEL: 919/854-1282 FAX: 919/854-5448
WWW.ARCADIS-US.COM

DRAWN BY : D.G.VESTER DATE : 01/05
CHECKED BY : J.A.BATTS DATE : 01/05

NORTH CAROLINA PROFESSIONAL SEAL 18056 ENGINEER JOHN A. BATTS 1-31-05

1/28/2005 2:48:20 PM g:\tra\603031\drawings\final\right lane\r2606a_sd_s1_01r.dgn

$$$$$$SYSTIME$$$$$
$$$$$$$$$$$$$$$$$$$$$$$$$DGN$$$$$$$$$$$$$$$$$$$$$$$$$
$$$$USERNAME$$$$

SPAN A

FRAMING PLAN

✳ - RADIAL DIMENSIONS
✳✳ - DIMENSIONS ARE TO ARCS CONCENTRIC WITH THE ℄ SURVEY -L-. GIRDERS ARE ON THE CHORDS OF THE CONCENTRIC ARCS.

1/28/2005 2:48:21 PM g:\tra\603031\drawings\final\right lane\r2606a_sd_ss_01r.dgn

PLANS PREPARED BY:
ARCADIS
ARCADIS G&M OF NORTH CAROLINA, INC.
801 CORPORATE CENTER DRIVE, SUITE 300
RALEIGH, NORTH CAROLINA 27607-5073
TEL: 919/854-1282 FAX: 919/854-5448
WWW.ARCADIS-US.COM

DRAWN BY : D.G.VESTER DATE : 01/05
CHECKED BY : J.A.BATTS DATE : 01/05

NORTH CAROLINA PROFESSIONAL ENGINEER SEAL 18056 JOHN A. BATTS 1-31-05

PROJECT NO. R-2606A
RANDOLPH COUNTY
STATION: 22+65.00 -L-

SHEET 1 OF 4

STATE OF NORTH CAROLINA
DEPARTMENT OF TRANSPORTATION
RALEIGH

SUPERSTRUCTURE
STRUCTURAL STEEL DETAILS
FRAMING PLAN
(RIGHT LANE)

REVISIONS					
NO.	BY:	DATE:	NO.	BY:	DATE:
1			3		
2			4		

SHEET NO. S-113
TOTAL SHEETS 199

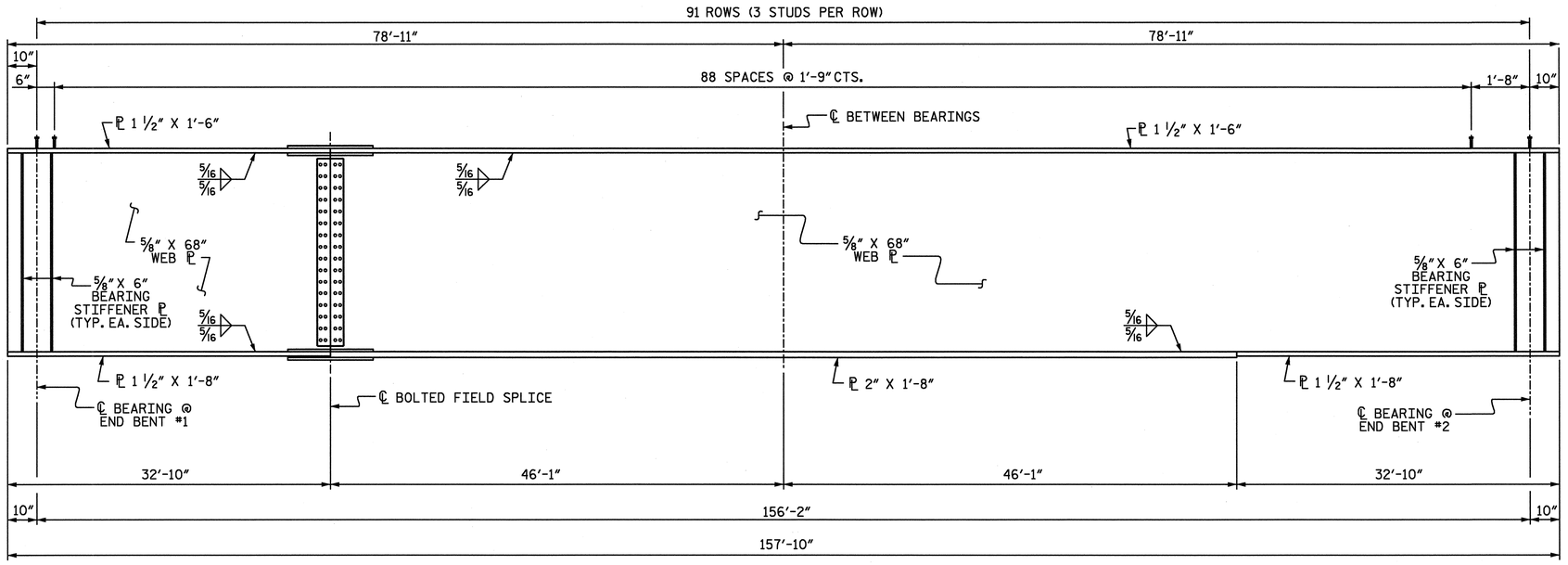

SPAN A

GIRDER ELEVATION

(NOT TO SCALE)

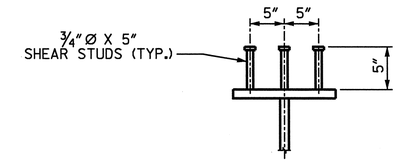

SHEAR STUD DETAILS

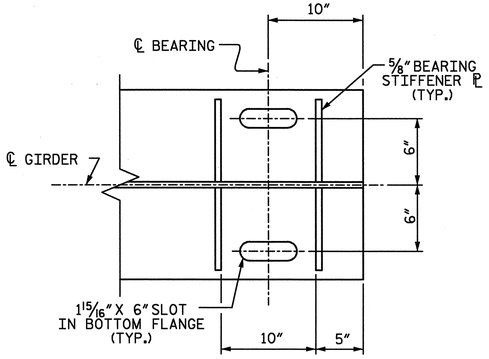

DETAIL "D"

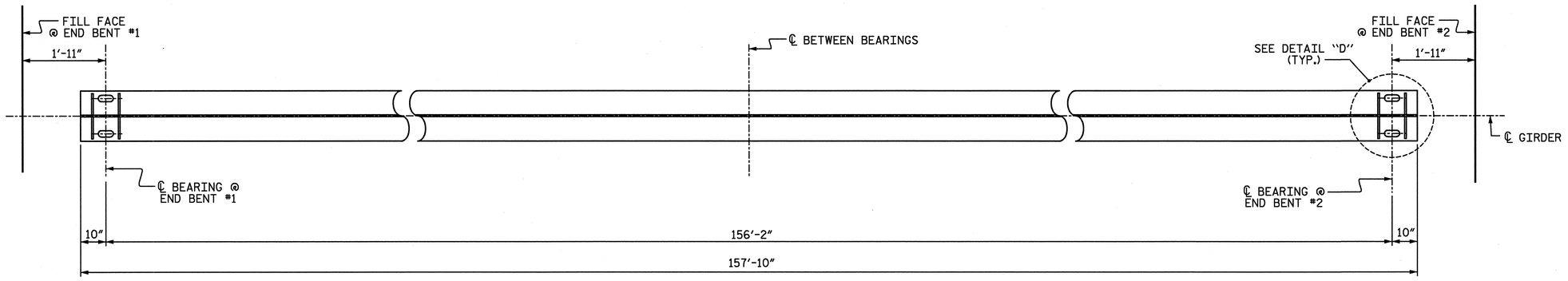

SPAN A

BOTTOM FLANGE DETAIL

(NOT TO SCALE)

PROJECT NO. R-2606A

RANDOLPH COUNTY

STATION: 22+65.00 -L-

SHEET 2 OF 4

STATE OF NORTH CAROLINA
DEPARTMENT OF TRANSPORTATION
RALEIGH

SUPERSTRUCTURE

STRUCTURAL STEEL DETAILS

(RIGHT LANE)

REVISIONS						SHEET NO.
NO.	BY:	DATE:	NO.	BY:	DATE:	S-114
1			3			TOTAL SHEETS
2			4			199

PLANS PREPARED BY:

ARCADIS

ARCADIS G&M OF NORTH CAROLINA, INC.
801 CORPORATE CENTER DRIVE, SUITE 300
RALEIGH, NORTH CAROLINA 27607-5073
TEL: 919/854-1282 FAX: 919/854-5448
WWW.ARCADIS-US.COM

DRAWN BY : D.G.VESTER DATE : 01/05

CHECKED BY : J.A.BATTS DATE : 01/05

NORTH CAROLINA PROFESSIONAL SEAL 18056 ENGINEER JOHN A. BATTS 1-31-05

1/28/2005 2:48:20 PM g:\tra\603031\drawings\final\rlght lane\r2606a_sd_ss_01r.dgn

$$$$$$SYSTIME$$$$$
$$$$$$$$$$$$$$$$$$$$$$$$DGN$$$$$$$$$$$$$$$$$$$$$$$$
$$$$USERNAME$$$$

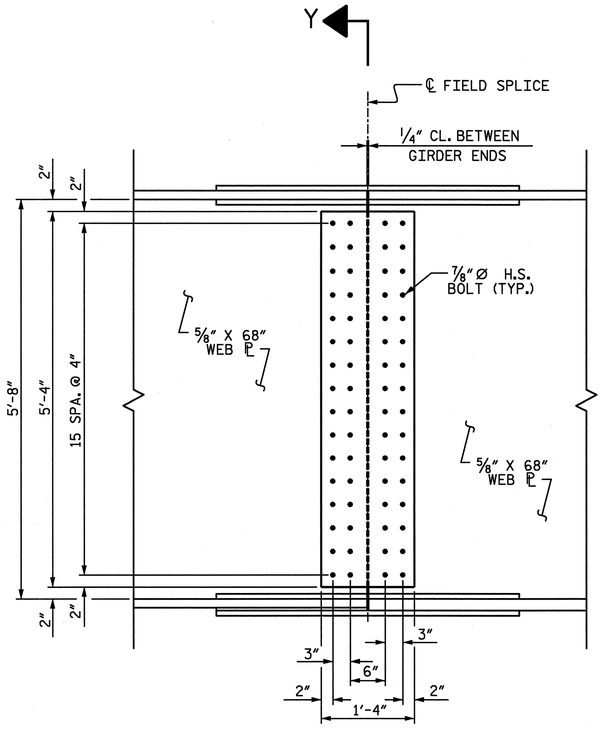

WEB SECTION

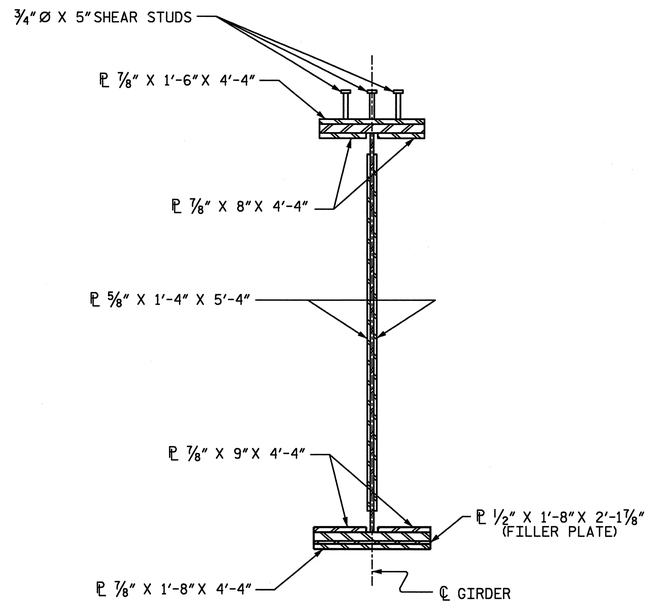

SECTION Y-Y

NOTES

ALL STRUCTURAL STEEL SHALL BE AASHTO M270 GRADE 50W AND PAINTED IN ACCORDANCE WITH SYSTEM 4 OF ARTICLE 442-7 OF THE STANDARD SPECIFICATIONS UNLESS OTHERWISE NOTED ON THE PLANS.

ALL DIMENSIONS SHOWN ARE HORIZONTAL OR VERTICAL, UNLESS OTHERWISE NOTED.

ALL FIELD CONNECTIONS TO BE 7/8" DIA. HIGH STRENGTH BOLTS UNLESS OTHERWISE NOTED.

BEARING STIFFENERS ARE TO BE PLACED NORMAL TO THE WEB OF THE GIRDER AND SHALL BE PLUMB.

A CHARPY V-NOTCH TEST IS REQUIRED FOR WEB PLATES, BOTTOM FLANGE PLATES, BOTTOM FLANGE SPLICE PLATES AND WEB SPLICE PLATES FOR ALL GIRDERS AND IN ACCORDANCE WITH ARTICLE 1072-9 OF THE STANDARD SPECIFICATIONS.

SHOP SPLICES ARE PERMITTED TO LIMIT THE MAXIMUM REQUIRED FLANGE PIECE LENGTHS TO 60 FEET AND WEB PIECE LENGTHS TO 45 FEET. PERMITTED FLANGE AND WEB SHOP SPLICES SHALL NOT BE LOCATED WITHIN 15 FEET OF MAXIMUM DEAD LOAD DEFLECTION. KEEP 6" MINIMUM BETWEEN CONNECTOR PLATE OR TRANSVERSE STIFFENER WELDS AND WEB OR FLANGE SHOP SPLICES.

STUDS ON GIRDERS MAY BE SHIFTED UP TO 1" IF NECESSARY TO CLEAR FLANGE SPLICE WELD.

TENSION ON THE AASHTO M164 BOLTS SHALL BE CALIBRATED USING TENSION INDICATOR WASHERS IN ACCORDANCE WITH ARTICLE 440-1-0 OF THE STANDARD SPECIFICATIONS.

ENDS OF GIRDERS SHALL BE PLUMB.

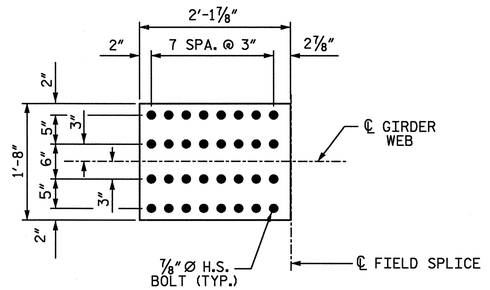

FILLER PLATE
(FOR BOTTOM FLANGE SPLICE)

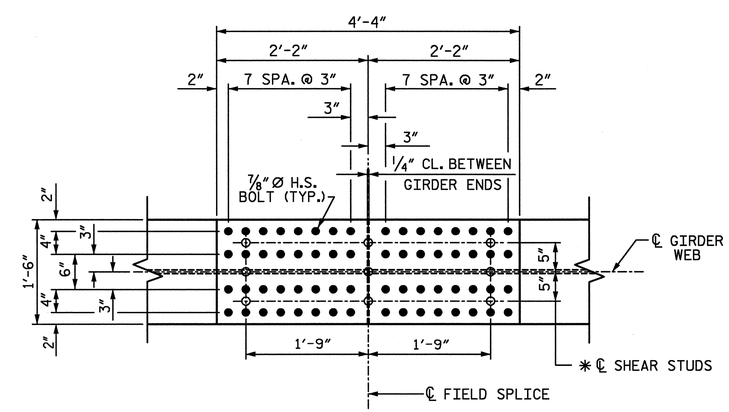

TOP FLANGE
(TOP OF TOP FLANGE)

*SHEAR STUDS ARE TO BE SHOP WELDED ON TOP OF THE PLATE BEFORE FIELD ASSEMBLY.

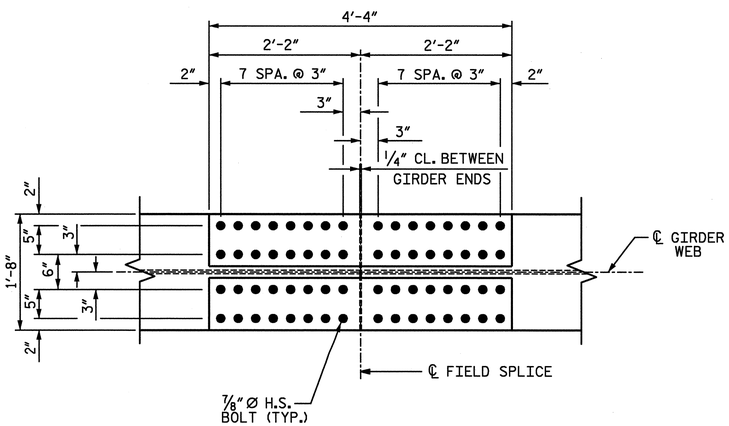

BOTTOM FLANGE
(TOP OF BOTTOM FLANGE)

PROJECT NO. R-2606A

RANDOLPH COUNTY

STATION: 22+65.00 -L-

SHEET 3 OF 4

STATE OF NORTH CAROLINA
DEPARTMENT OF TRANSPORTATION
RALEIGH

SUPERSTRUCTURE

STRUCTURAL STEEL DETAILS

(RIGHT LANE)

REVISIONS						SHEET NO.
NO.	BY:	DATE:	NO.	BY:	DATE:	S-115
1			3			TOTAL SHEETS
2			4			199

NORTH CAROLINA PROFESSIONAL SEAL 18056 ENGINEER JOHN A. BATTS
1-31-05

PLANS PREPARED BY:

ARCADIS

ARCADIS G&M OF NORTH CAROLINA, INC.
801 CORPORATE CENTER DRIVE, SUITE 300
RALEIGH, NORTH CAROLINA 27607-5073
TEL: 919/854-1282 FAX: 919/854-5448
WWW.ARCADIS-US.COM

DRAWN BY : D.G.VESTER DATE : 01/05
CHECKED BY : J.A.BATTS DATE : 01/05

BOLTED FIELD SPLICE DETAILS

1/28/2005 2:48:21 PM g:\trg\60303\drawings\final\right lane\r2606a_sd_ss_01r.dgn

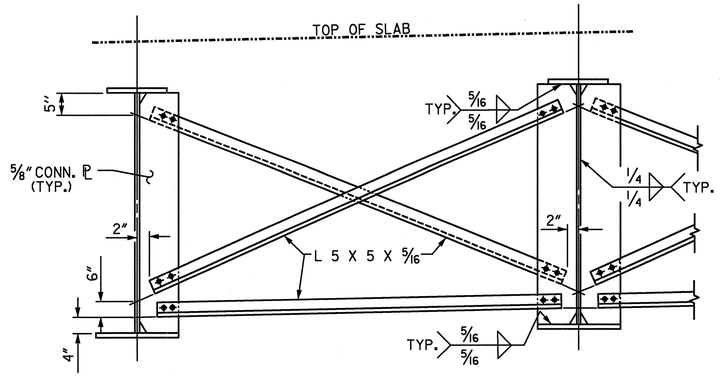

TYPICAL INTERMEDIATE DIAPHRAGM (D1)

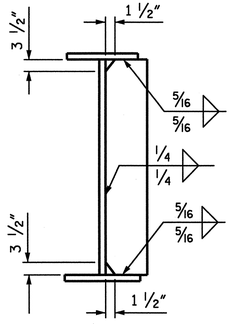

CONNECTOR PLATE DETAILS

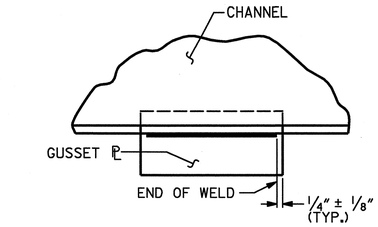

TYPICAL GUESSET PLATE CONNECTION

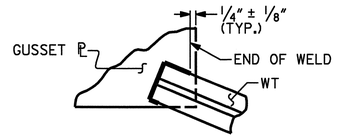

TYPICAL "TEE" TO GUSSET PLATE CONNECTION

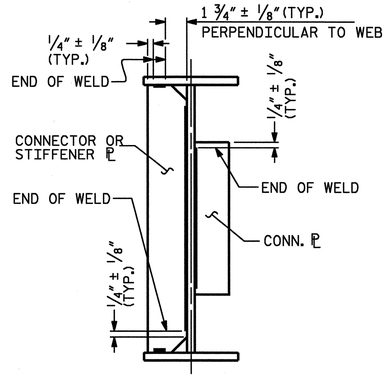

TYPICAL STIFFENER OR CONNECTOR PLATE CONNECTIONS

WELD TERMINATION DETAILS

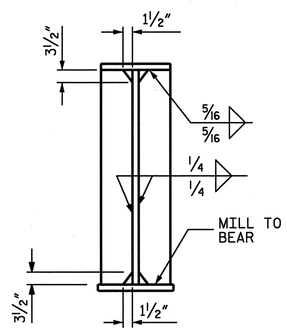

BEARING STIFFENER DETAILS

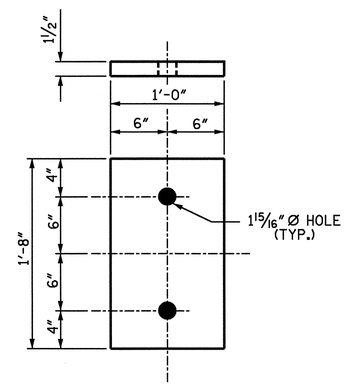

SOLE PLATE (P1) DETAILS

(10 REQUIRED)

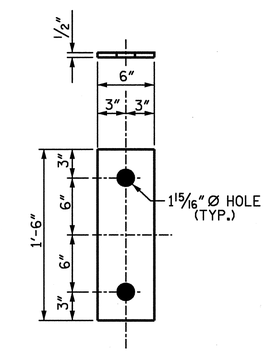

PLATE (P2) DETAILS

(10 REQUIRED)

PLATE (P2) IS TO BE PLACED DURING END BENT CONSTRUCTION.

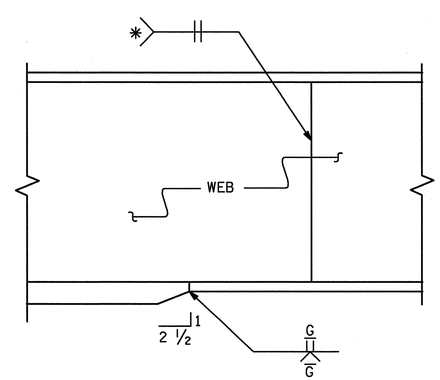

TYPICAL FLANGE AND WEB BUTT JOINT

* GRIND SMOOTH AND FLUSH ON OUTER FACE OF EXTERIOR GIRDERS

PROJECT NO. R-2606A

RANDOLPH COUNTY

STATION: 22+65.00 -L-

SHEET 4 OF 4

STATE OF NORTH CAROLINA
DEPARTMENT OF TRANSPORTATION
RALEIGH

SUPERSTRUCTURE

STRUCTURAL STEEL DETAILS

(RIGHT LANE)

NORTH CAROLINA PROFESSIONAL SEAL 18056 ENGINEER JOHN A. BATTS 1-31-05

REVISIONS						SHEET NO.
NO.	BY:	DATE:	NO.	BY:	DATE:	S-116
1			3			TOTAL SHEETS
2			4			199

PLANS PREPARED BY:

ARCADIS

ARCADIS G&M OF NORTH CAROLINA, INC.
801 CORPORATE CENTER DRIVE, SUITE 300
RALEIGH, NORTH CAROLINA 27607-5073
TEL: 919/854-1282 FAX: 919/854-5448
WWW.ARCADIS-US.COM

DRAWN BY : D.G.VESTER DATE : 01/05
CHECKED BY : J.A.BATTS DATE : 01/05

1/28/2005 2:48:21 PM g:\tra\603031\drawings\final\right lane\r2606a_sd_ss_01r.dgn

DGN
USERNAME

DEAD LOAD DEFLECTION TABLE FOR GIRDER

	SPAN A																				
	GIRDERS 1 & 5																				
TWENTIETH POINTS	0	.05	.10	.15	.20	.25	.30	.35	.40	.45	.50	.55	.60	.65	.70	.75	.80	.85	.90	.95	1.00
DEFLECTION DUE TO WEIGHT OF GIRDER	0	.026	.051	.074	.096	.114	.130	.143	.152	.158	.160	.158	.152	.143	.130	.114	.096	.074	.051	.026	0
DEFLECTION DUE TO WEIGHT OF SLAB *	0	.072	.142	.207	.267	.319	.363	.399	.425	.440	.446	.440	.425	.399	.363	.319	.267	.207	.142	.072	0
DEFLECTION DUE TO WEIGHT OF BARRIER RAILS	0	.007	.015	.021	.027	.033	.037	.041	.043	.045	.046	.045	.043	.041	.037	.033	.027	.021	.015	.007	0
TOTAL DEAD LOAD DEFLECTION	0	.105	.208	.302	.390	.466	.530	.583	.620	.643	.652	.643	.620	.583	.530	.466	.390	.302	.208	.105	0
VERTICAL CURVE ORDINATE	0	-.025	-.048	-.068	-.086	-.100	-.112	-.122	-.128	-.132	-.134	-.132	-.128	-.122	-.112	-.100	-.086	-.068	-.048	-.025	0
SUPERELEVATION ORDINATE	0	-.008	-.016	-.023	-.028	-.033	-.037	-.040	-.042	-.044	-.044	-.044	-.042	-.040	-.037	-.033	-.028	-.023	-.016	-.008	0
REQUIRED CAMBER	0	7/8"	1 3/4"	2 9/16"	3 5/16"	4"	4 9/16"	5 1/16"	5 3/8"	5 5/8"	5 11/16"	5 5/8"	5 3/8"	5 1/16"	4 9/16"	4"	3 5/16"	2 9/16"	1 3/4"	7/8"	0

DEAD LOAD DEFLECTION TABLE FOR GIRDER

	SPAN A																				
	GIRDER 2																				
TWENTIETH POINTS	0	.05	.10	.15	.20	.25	.30	.35	.40	.45	.50	.55	.60	.65	.70	.75	.80	.85	.90	.95	1.00
DEFLECTION DUE TO WEIGHT OF GIRDER	0	.027	.053	.078	.100	.120	.136	.150	.159	.165	.167	.165	.159	.150	.136	.120	.100	.078	.053	.027	0
DEFLECTION DUE TO WEIGHT OF SLAB *	0	.083	.163	.238	.306	.366	.416	.457	.487	.505	.511	.505	.487	.457	.416	.366	.306	.238	.163	.083	0
DEFLECTION DUE TO WEIGHT OF BARRIER RAILS	0	.007	.014	.020	.026	.031	.036	.039	.042	.043	.044	.043	.042	.039	.036	.031	.026	.020	.014	.007	0
TOTAL DEAD LOAD DEFLECTION	0	.117	.230	.336	.432	.517	.588	.646	.688	.713	.722	.713	.688	.646	.588	.517	.432	.336	.230	.117	0
VERTICAL CURVE ORDINATE	0	-.026	-.049	-.069	-.087	-.102	-.114	-.123	-.130	-.134	-.136	-.134	-.130	-.123	-.114	-.102	-.087	-.069	-.049	-.026	0
SUPERELEVATION ORDINATE	0	-.008	-.016	-.023	-.028	-.033	-.037	-.040	-.042	-.044	-.044	-.044	-.042	-.040	-.037	-.033	-.028	-.023	-.016	-.008	0
REQUIRED CAMBER	0	1"	2"	2 15/16"	3 13/16"	4 9/16"	5 1/4"	5 13/16"	6 3/16"	6 7/16"	6 1/2"	6 7/16"	6 3/16"	5 13/16"	5 1/4"	4 9/16"	3 13/16"	2 15/16"	2"	1"	0

DEAD LOAD DEFLECTION TABLE FOR GIRDER

	SPAN A																				
	GIRDERS 3 & 4																				
TWENTIETH POINTS	0	.05	.10	.15	.20	.25	.30	.35	.40	.45	.50	.55	.60	.65	.70	.75	.80	.85	.90	.95	1.00
DEFLECTION DUE TO WEIGHT OF GIRDER	0	.027	.053	.078	.100	.120	.136	.150	.159	.165	.167	.165	.159	.150	.136	.120	.100	.078	.053	.027	0
DEFLECTION DUE TO WEIGHT OF SLAB *	0	.083	.163	.238	.306	.366	.416	.457	.487	.505	.511	.505	.487	.457	.416	.366	.306	.238	.163	.083	0
DEFLECTION DUE TO WEIGHT OF BARRIER RAILS	0	.007	.014	.020	.026	.031	.036	.039	.042	.043	.044	.043	.042	.039	.036	.031	.026	.020	.014	.007	0
TOTAL DEAD LOAD DEFLECTION	0	.117	.230	.336	.432	.517	.588	.646	.688	.713	.722	.713	.688	.646	.588	.517	.432	.336	.230	.117	0
VERTICAL CURVE ORDINATE	0	-.026	-.048	-.068	-.086	-.101	-.113	-.122	-.129	-.133	-.134	-.133	-.129	-.122	-.113	-.101	-.086	-.068	-.048	-.026	0
SUPERELEVATION ORDINATE	0	-.008	-.016	-.023	-.028	-.033	-.037	-.040	-.042	-.044	-.044	-.044	-.042	-.040	-.037	-.033	-.028	-.023	-.016	-.008	0
REQUIRED CAMBER	0	1"	2"	2 15/16"	3 13/16"	4 5/8"	5 1/4"	5 13/16"	6 3/16"	6 7/16"	6 1/2"	6 7/16"	6 3/16"	5 13/16"	5 1/4"	4 5/8"	3 13/16"	2 15/16"	2"	1"	0

* INCLUDES SLAB, BUILD-UP, AND STAY-IN-PLACE METAL FORMS.
ALL VALUES ARE SHOWN IN FEET (DECIMAL FORM), EXCEPT "REQUIRED CAMBER", WHICH IS GIVEN IN INCHES (FRACTION FORM).

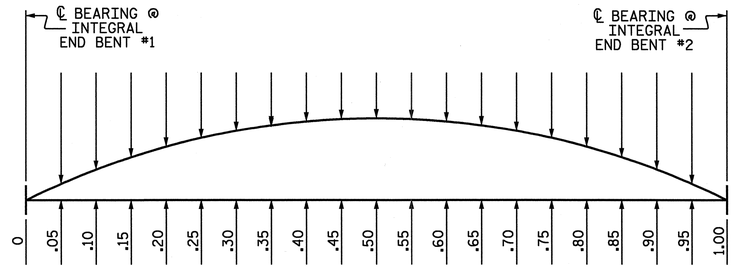

SPAN A

SCHEMATIC CAMBER ORDINATES

PROJECT NO. R-2606A

RANDOLPH COUNTY

STATION: 22+65.00 -L-

PLANS PREPARED BY:
ARCADIS
ARCADIS G&M OF NORTH CAROLINA, INC.
801 CORPORATE CENTER DRIVE, SUITE 300
RALEIGH, NORTH CAROLINA 27607-5073
TEL: 919/854-1282 FAX: 919/854-5448
WWW.ARCADIS-US.COM

DRAWN BY : D.G.VESTER DATE : 01/05
CHECKED BY : J.A.BATTS DATE : 01/05

NORTH CAROLINA PROFESSIONAL SEAL 28056 ENGINEER JOHN A. BATTS 1-31-05

STATE OF NORTH CAROLINA
DEPARTMENT OF TRANSPORTATION
RALEIGH
SUPERSTRUCTURE

DEAD LOAD DEFLECTION AND CAMBER TABLES

(RIGHT LANE)

REVISIONS						SHEET NO.
NO.	BY:	DATE:	NO.	BY:	DATE:	S-117
1			3			TOTAL SHEETS
2			4			199

1/28/2005 2:48:21 PM g:\tra\603031\drawings\final\right lane\r2606a_sd_dl_01r.dgn

$$$$$$STSTIME$$$$$
$$$$$$$$$$$$$$$$$$$$$$$$$DGN$$$$$$$$$$$$$$$$$$$$$$$$$
$$$$USERNAME$$$$

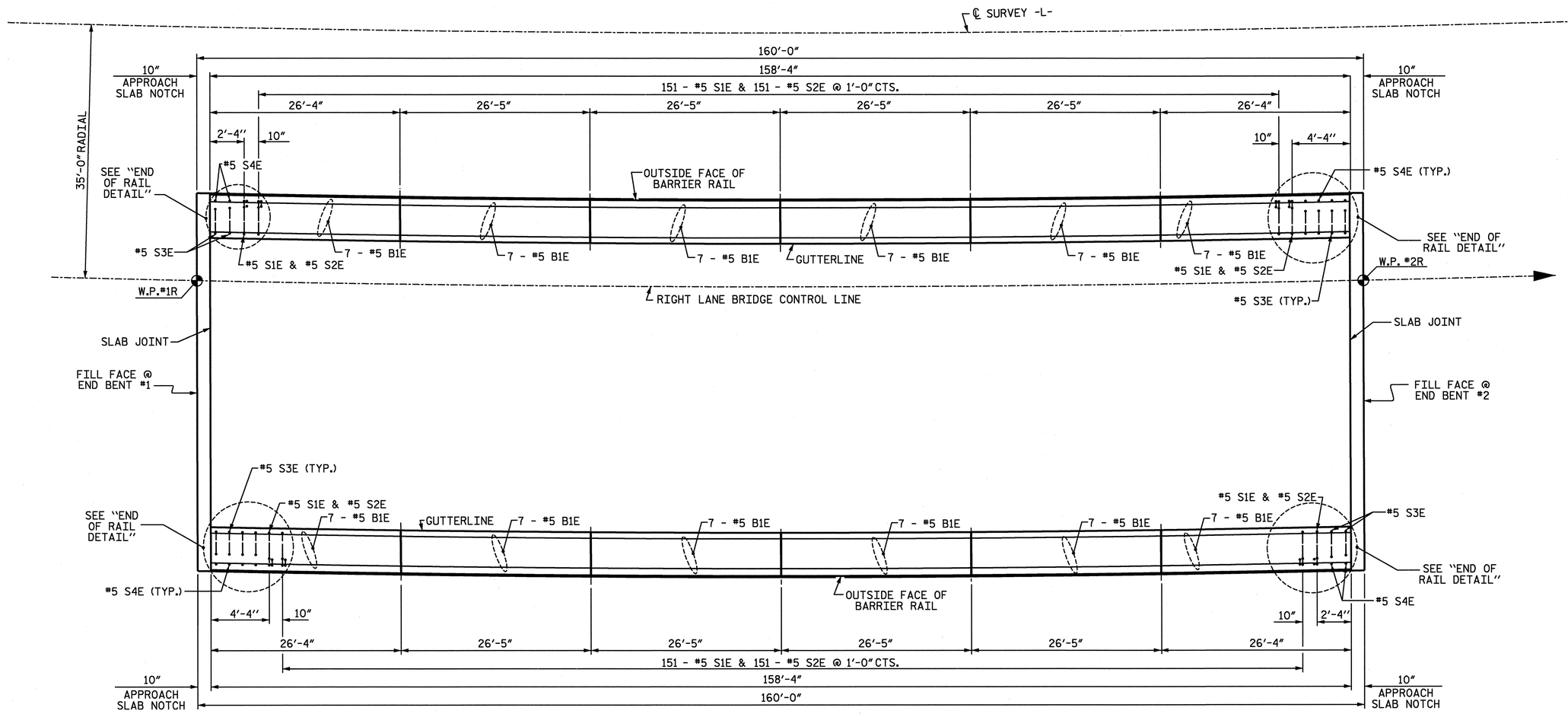

SPAN A

PLAN OF BARRIER RAIL

SEE END OF RAIL DETAILS, PLAN VIEW FOR LOCATION OF BARS, SHEET 2 OF 2.

NOTE: ALL DIMENSIONS ARE MEASURED ALONG OUTSIDE EDGE OF BARRIER RAIL.

PROJECT NO. R-2606A

RANDOLPH COUNTY

STATION: 22+65.00 -L-

SHEET 1 OF 2

STATE OF NORTH CAROLINA
DEPARTMENT OF TRANSPORTATION
RALEIGH

SUPERSTRUCTURE

CONCRETE BARRIER RAIL

(RIGHT LANE)

REVISIONS						SHEET NO.
NO.	BY:	DATE:	NO.	BY:	DATE:	S-118
1			3			TOTAL SHEETS
2			4			199

PLANS PREPARED BY:
ARCADIS
ARCADIS G&M OF NORTH CAROLINA, INC.
801 CORPORATE CENTER DRIVE, SUITE 300
RALEIGH, NORTH CAROLINA 27607-5073
TEL: 919/854-1282 FAX: 919/854-5448
WWW.ARCADIS-US.COM

DRAWN BY : D.G.VESTER DATE : 01/05
CHECKED BY : J.A.BATTS DATE : 01/05

NORTH CAROLINA PROFESSIONAL SEAL 18056 ENGINEER JOHN A. BATTS 1-31-05

1/31/2005 12:46:36 PM g:\TRA\603031\Drawings\Final\Right Lane\R2606A_SD_BR_01R.DGN

####USERNAME####
####DGN####

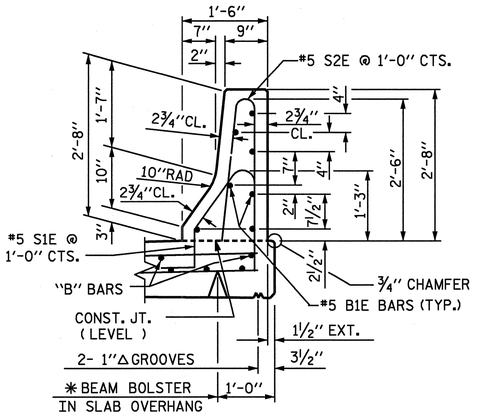

SECTION THRU RAIL

✳HEIGHT VARIES
(SEE SUPERSTRUCTURE TYPICAL SECTION)

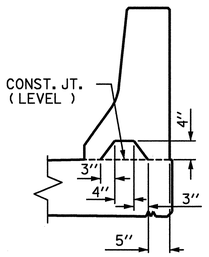

SECTION S-S

AT DAM IN OPEN JOINT
(THIS IS TO BE USED ONLY
WHEN SLIP FORM IS USED)

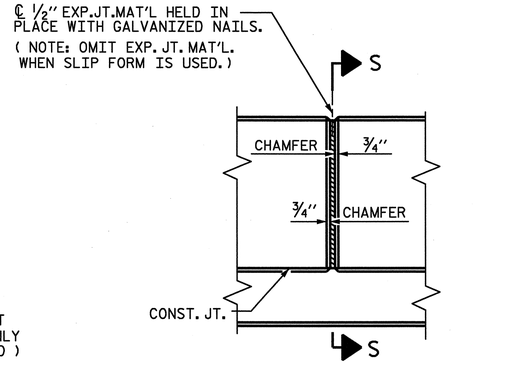

ELEVATION AT EXPANSION JOINTS

BARRIER RAIL DETAILS

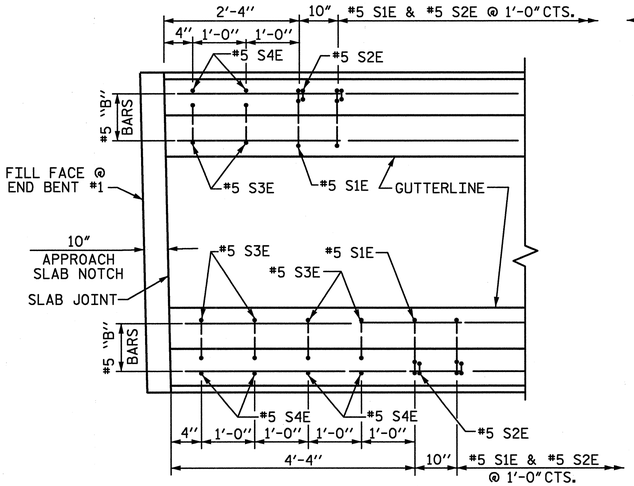

PLAN @ END BENT #1

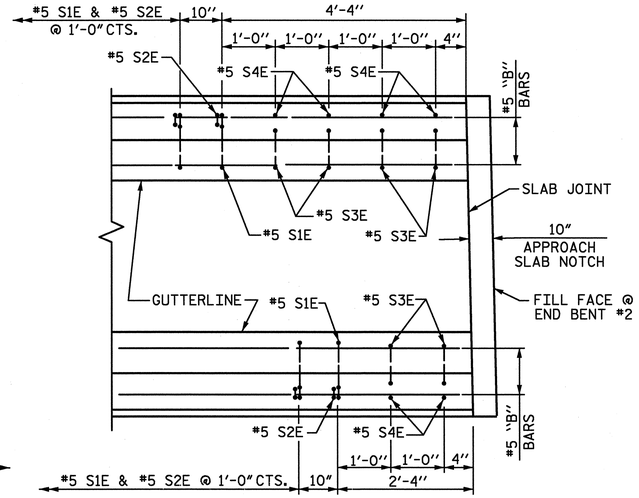

PLAN @ END BENT #2

END OF RAIL DETAILS

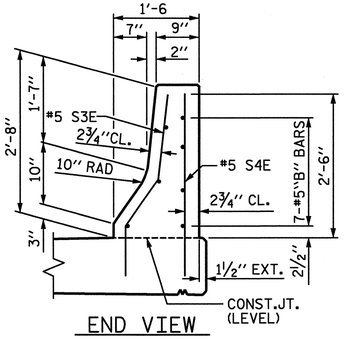

END VIEW

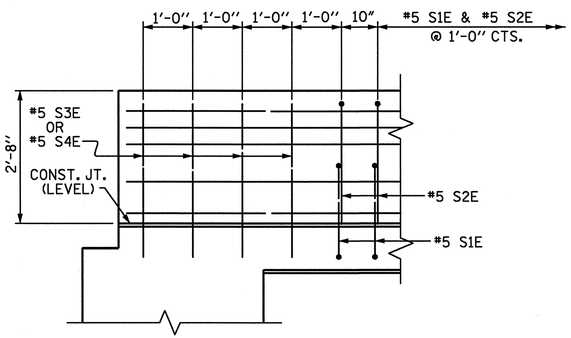

SIDE VIEW

NOTES

THE BARRIER RAIL IN EACH SPAN SHALL NOT BE CAST UNTIL ALL SLAB CONCRETE IN THAT SPAN HAS BEEN CAST AND HAS REACHED A MINIMUM COMPRESSIVE STRENGTH OF 3,000 PSI.

THE SLAB JOINT SHALL BE SAWED PRIOR TO THE CASTING OF BARRIER RAIL.

ALL REINFORCING STEEL IN BARRIER RAILS SHALL BE EPOXY COATED.

THE #5 S3E AND #5 S4E BARS SHALL BE INSTALLED, USING AN ADHESIVE ANCHORING SYSTEM, AFTER SAWING THE SLAB JOINT. FOR ADHESIVELY ANCHORED ANCHOR BOLTS OR DOWELS, SEE SPECIAL PROVISIONS. THE YIELD LOAD FOR THE #5 S3E AND #5 S4E BARS IS 18.6 KIPS. FIELD TESTING FOR THE ADHESIVE BONDING SYSTEM IS NOT REQUIRED.

VERTICAL GROOVED CONTRACTION JOINTS, ½" IN DEPTH, SHALL BE TOOLED IN ALL EXPOSED FACES OF THE BARRIER RAIL AND IN ACCORDANCE WITH ARTICLE 825-10(B) OF THE STANDARD SPECIFICATIONS. THE CONTRACTION JOINT SHALL BE LOCATED AT EACH THIRD POINT BETWEEN BARRIER RAIL EXPANSION JOINTS. ONLY ONE CONTRACTION JOINT IS REQUIRED AT MIDPOINT OF BARRIER RAIL SEGMENTS LESS THAN 20 FEET IN LENGTH AND NO CONTRACTION JOINTS ARE REQUIRED FOR THOSE SEGMENTS LESS THAN 10 FEET IN LENGTH.

BAR TYPES

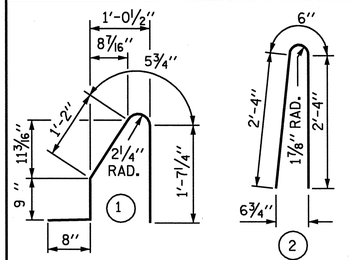

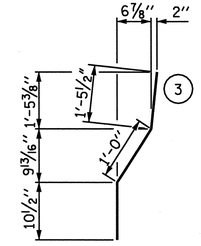

ALL BAR DIMENSIONS ARE OUT TO OUT

BILL OF MATERIAL

FOR CONCRETE BARRIER RAIL ONLY

BAR	NO.	SIZE	TYPE	LENGTH	WEIGHT
B1E	84	#5	STR	26'-0"	2278
S1E	306	#5	1	4'-8"	1489
S2E	306	#5	2	5'-2"	1649
S3E	12	#5	3	3'-4"	42
S4E	12	#5	STR	3'-0"	38

EPOXY COATED REINFORCING STEEL	5496 LBS.
CLASS AA CONCRETE	31.7 CU. YDS.
CONCRETE BARRIER RAIL	316.7 LIN. FT.

PROJECT NO. R-2606A

RANDOLPH COUNTY

STATION: 22+65.00 -L-

SHEET 2 OF 2

STATE OF NORTH CAROLINA
DEPARTMENT OF TRANSPORTATION
RALEIGH

SUPERSTRUCTURE

CONCRETE

BARRIER RAIL

(RIGHT LANE)

REVISIONS						SHEET NO.
NO.	BY:	DATE:	NO.	BY:	DATE:	S-119
1			3			TOTAL SHEETS
2			4			199

PLANS PREPARED BY:
ARCADIS
ARCADIS G&M OF NORTH CAROLINA, INC.
801 CORPORATE CENTER DRIVE, SUITE 300
RALEIGH, NORTH CAROLINA 27607-5073
TEL: 919/854-1282 FAX: 919/854-5448
WWW.ARCADIS-US.COM

DRAWN BY : D.G.VESTER DATE : 01/05
CHECKED BY : J.A.BATTS DATE : 01/05

NORTH CAROLINA PROFESSIONAL SEAL 18056 ENGINEER JOHN A. BATTS 1-31-05

1/28/2005 2:48:21 PM g:\trg\603031\drawings\final\right lane\r2606a_sd_br_01r.dgn

DGN
USERNAME

SUPERSTRUCTURE REINFORCING STEEL LENGTHS ARE BASED ON THE FOLLOWING MINIMUM SPLICE LENGTHS

BAR SIZE	SUPERSTRUCTURE EXCEPT APPROACH SLABS, PARAPET, AND BARRIER RAIL		APPROACH SLABS		PARAPET AND BARRIER RAIL
	EPOXY COATED	UNCOATED	EPOXY COATED	UNCOATED	
#4	2′-0″	1′-9″	2′-0″	1′-9″	2′-9″
#5	2′-6″	2′-2″	2′-6″	2′-2″	3′-5″
#6	3′-0″	2′-7″	3′-10″	2′-7″	4′-4″
#7	5′-3″	3′-6″	——	——	——
#8	6′-10″	4′-7″	——	——	——

GROOVING BRIDGE FLOORS

APPROACH SLABS	1894.7 SQ.FT.
BRIDGE DECK	5846.0 SQ.FT.
TOTAL	7740.7 SQ.FT.

SUPERSTRUCTURE BILL OF MATERIAL

	CLASS AA CONCRETE	REINFORCING STEEL	EPOXY COATED REINFORCING STEEL
	(CU.YDS.)	(LBS.)	(LBS.)
SPAN A	277.7	21,231	19,012

QUANTITIES FOR BARRIER RAIL ARE NOT INCLUDED

REINFORCING BAR SCHEDULE

SPAN A

BAR	NO.	SIZE	TYPE	LENGTH	WEIGHT
A1E	292	5	STR	42′-9″	13020
A2	292	5	STR	42′-9″	13020
B1E	186	4	STR	28′-4″	3520
B2	144	5	STR	54′-8″	8211
K1E	28	4	STR	22′-4″	418
K2E	56	4	STR	8′-5″	315
K3E	14	4	STR	3′-0″	28
K4E	14	4	STR	1′-11″	18
K5E	68	4	2	7′-0″	318
K6E	74	5	1	8′-0″	617
U1E	74	4	3	15′-4″	758
REINFORCING STEEL				LBS	21231
EPOXY COATED REINFORCING STEEL				LBS	19012
CLASS "AA" CONCRETE BREAKDOWN					
POUR #1				CU. YDS.	185.8
POUR #2				CU. YDS.	92.8
TOTAL CLASS "AA" CONCRETE				CU. YDS.	278.6

"E" INDICATES EPOXY COATED REINFORCING STEEL.

BAR TYPES

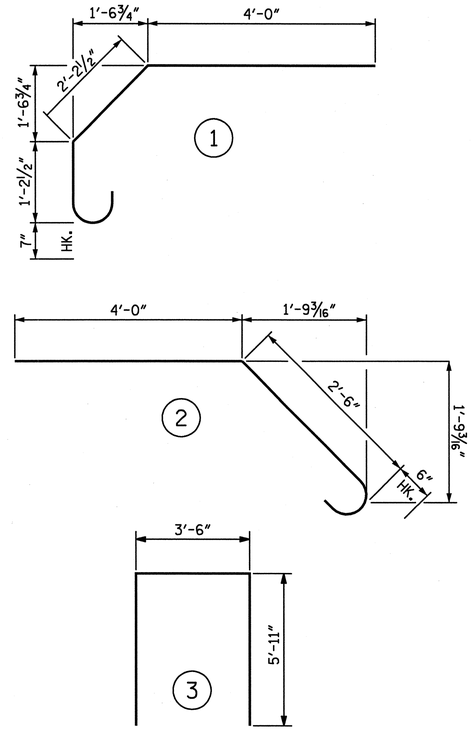

ALL BAR DIMENSIONS ARE OUT TO OUT

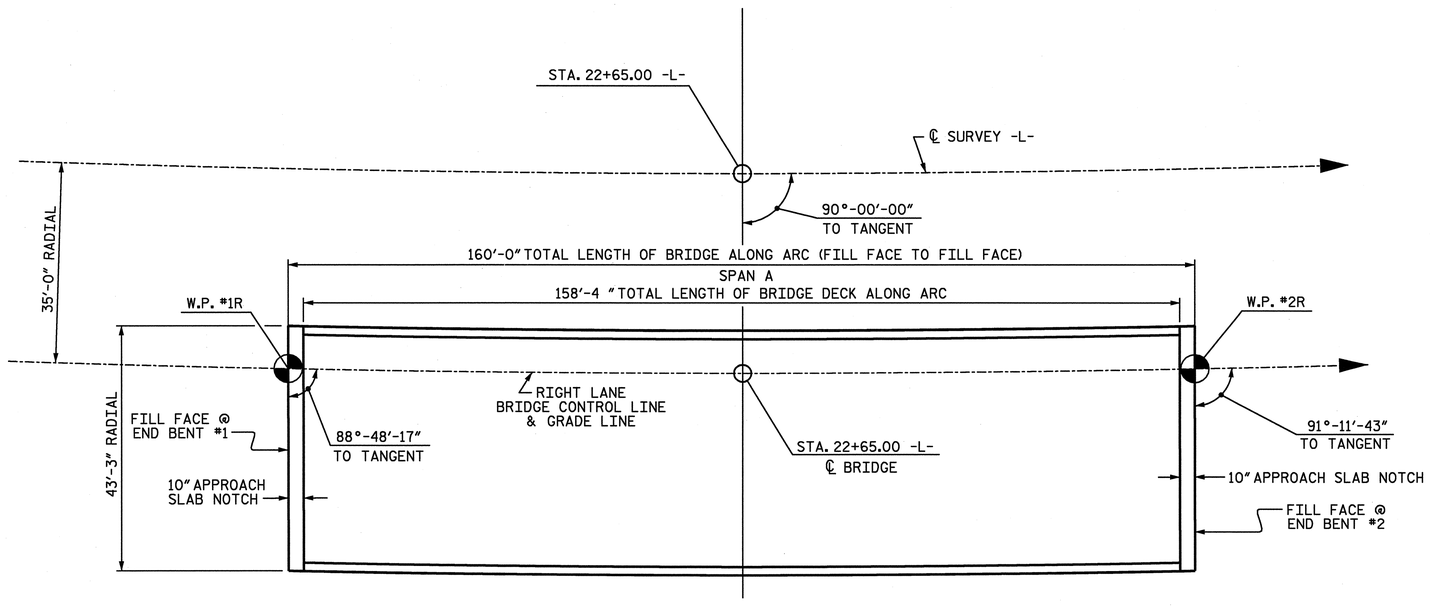

SPAN A

LAYOUT FOR COMPUTING AREA OF REINFORCED CONCRETE DECK SLAB (SQ. FT. = 6847.9)

PROJECT NO. R-2606A

RANDOLPH COUNTY

STATION: 22+65.00 -L-

PLANS PREPARED BY:
ARCADIS
ARCADIS G&M OF NORTH CAROLINA, INC.
801 CORPORATE CENTER DRIVE, SUITE 300
RALEIGH, NORTH CAROLINA 27607-5073
TEL: 919/854-1282 FAX: 919/854-5448
WWW.ARCADIS-US.COM

DRAWN BY : D.G.VESTER DATE : 01/05

CHECKED BY : J.A.BATTS DATE : 01/05

NORTH CAROLINA PROFESSIONAL SEAL 18058 ENGINEER JOHN A. BATTS 1-31-05

STATE OF NORTH CAROLINA
DEPARTMENT OF TRANSPORTATION
RALEIGH

SUPERSTRUCTURE

BILL OF MATERIAL

(RIGHT LANE)

REVISIONS						SHEET NO.
NO.	BY:	DATE:	NO.	BY:	DATE:	S-120
1			3			TOTAL SHEETS
2			4			199

1/28/2005 2:48:22 PM g:\tra\603031\drawings\final\right lane\r2606a_sd_bm_01r.dgn

$$$$$$$$$$$$$$$$$$$$$$$$$$$$$$$$DGN$$$$$$$$$$$$$$$$$$$$$$$$
$$$$USERNAME$$$$

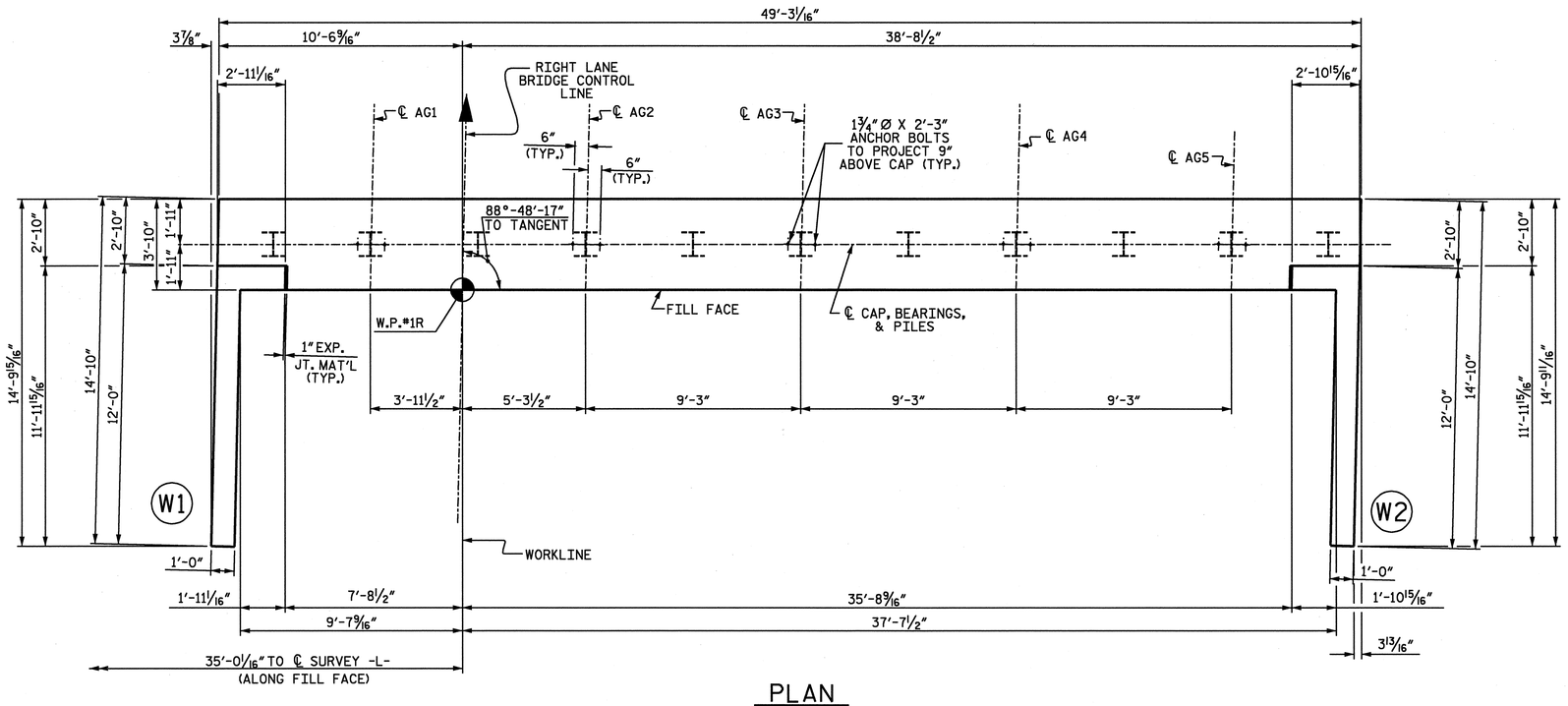

PLAN

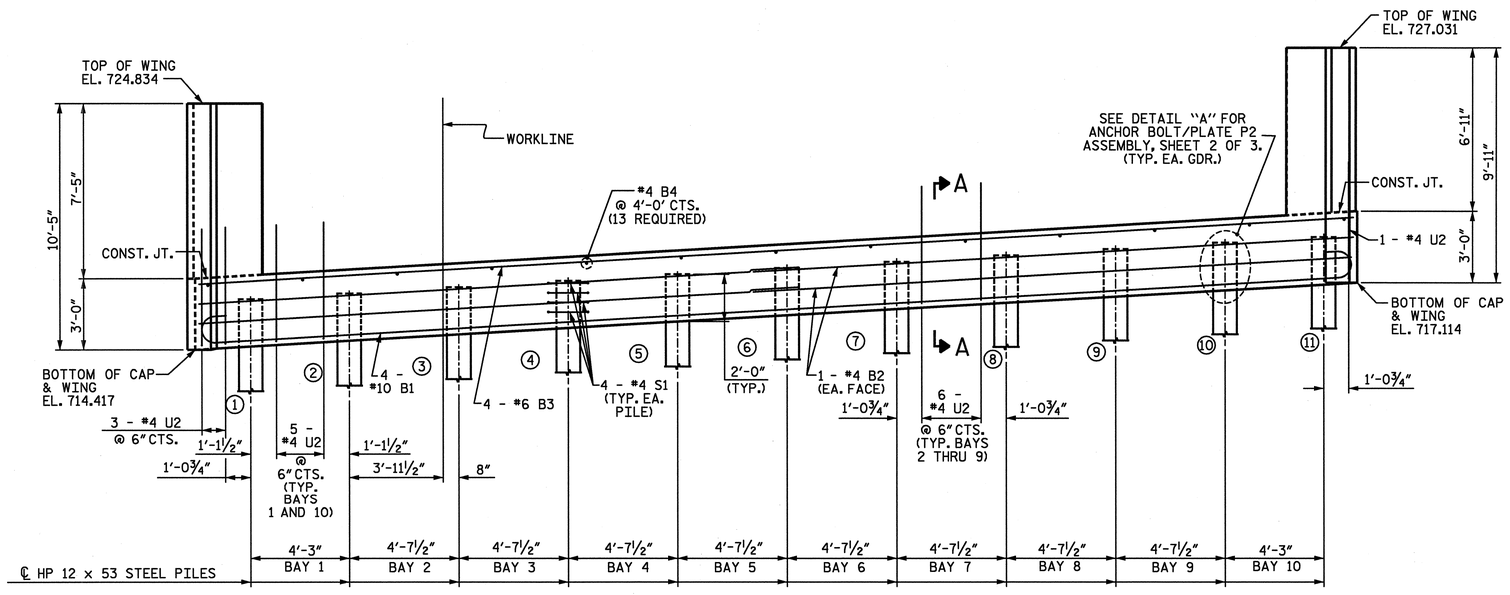

ELEVATION

#4 B2 SPLICE LENGTH = 2'-5"

NOTES

PILES FOR END BENT #1 SHALL BE DRIVEN TO MINIMUM BEARING CAPACITY OF 60 TONS EACH.

STEEL PILE POINTS ARE REQUIRED FOR PILES AT END BENT #1. SEE SPECIAL PROVISION FOR STEEL PILE POINTS.

WHEN DRIVING PILES, THE MAXIMUM BLOW COUNT SHALL NOT BE EXCEEDED.

TOP OF PILE ELEVATION	
PILE NUMBER	ELEVATION
1	716.545
2	716.778
3	717.031
4	717.284
5	717.537
6	717.791
7	718.044
8	718.297
9	718.550
10	718.803
11	719.036

NOTE: TOP OF PILE ELEVATIONS ARE GIVEN AT CENTERLINE OF PILE.

PROJECT NO. R-2606A

RANDOLPH COUNTY

STATION: 22+65.00 -L-

SHEET 1 OF 3

STATE OF NORTH CAROLINA
DEPARTMENT OF TRANSPORTATION
RALEIGH

SUBSTRUCTURE

END BENT #1

(RIGHT LANE)

REVISIONS					
NO.	BY:	DATE:	NO.	BY:	DATE:
1			3		
2			4		

SHEET NO. S-121

TOTAL SHEETS S-199

PLANS PREPARED BY:

ARCADIS

ARCADIS G&M OF NORTH CAROLINA, INC.
801 CORPORATE CENTER DRIVE, SUITE 300
RALEIGH, NORTH CAROLINA 27607-5073
TEL: 919/854-1282 FAX: 919/854-5448
WWW.ARCADIS-US.COM

DRAWN BY : D.G.VESTER DATE : 01/05
CHECKED BY : J.A.BATTS DATE : 01/05

NORTH CAROLINA PROFESSIONAL SEAL 18050 ENGINEER JOHN A. BATTS
1-31-05

1/28/2005 2:48:22 PM g:\tra\603031\drawings\final\right lane\r2606a_sd_e1_01r.dgn

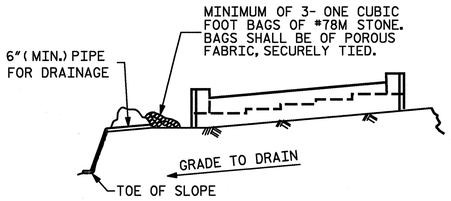

BAGGED STONE AND PIPE SHALL BE PLACED IMMEDIATELY AFTER COMPLETION OF END BENT EXCAVATION. PIPE MAY BE EITHER CONCRETE, CORRUGATED STEEL, CORRUGATED ALUMINUM ALLOY, OR CORRUGATED PLASTIC. PERFORATED PIPE WILL NOT BE ALLOWED.

BAGGED STONE SHALL REMAIN IN PLACE UNTIL THE ENGINEER DIRECTS THAT IT BE REMOVED. THE CONTRACTOR SHALL REMOVE AND DISPOSE OF SILT ACCUMULATIONS AT BAGGED STONE WHEN SO DIRECTED BY THE ENGINEER. BAGS SHALL BE REMOVED AND REPLACED WHENEVER THE ENGINEER DETERMINES THAT THEY HAVE DETERIORATED AND LOST THEIR EFFECTIVENESS.

NO SEPARATE PAYMENT WILL BE MADE FOR THIS WORK AND THE ENTIRE COST OF THIS WORK SHALL BE INCLUDED IN THE UNIT CONTRACT PRICE BID FOR THE SEVERAL PAY ITEMS.

TEMPORARY DRAINAGE AT END BENT

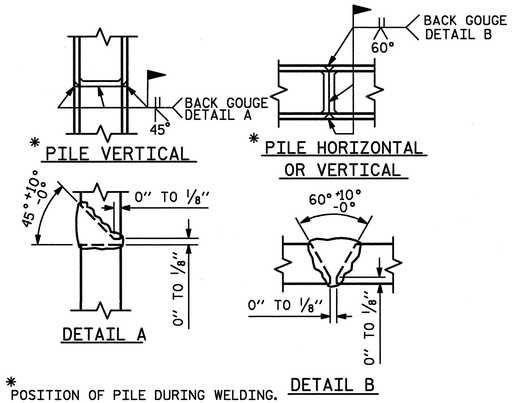

* POSITION OF PILE DURING WELDING.

PILE SPLICE DETAILS

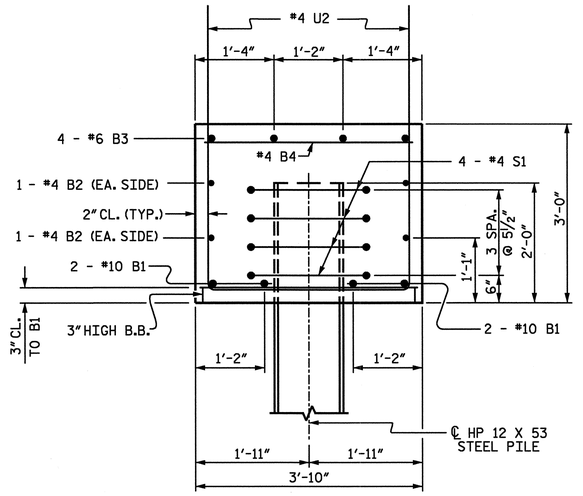

SECTION A-A

GIRDER	TOP OF PLATE (P2) ELEV.
AG1	717.069
AG2	717.576
AG3	718.082
AG4	718.589
AG5	719.095

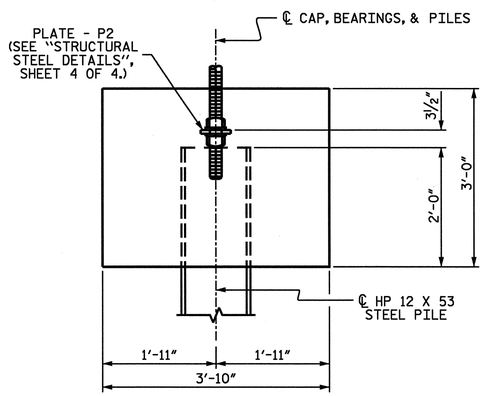

DETAIL "A"

PROJECT NO. R-2606A

RANDOLPH COUNTY

STATION: 22+65.00 -L-

SHEET 2 OF 3

STATE OF NORTH CAROLINA
DEPARTMENT OF TRANSPORTATION
RALEIGH

SUBSTRUCTURE

END BENT #1

(RIGHT LANE)

REVISIONS						SHEET NO.
NO.	BY:	DATE:	NO.	BY:	DATE:	S-122
1			3			TOTAL SHEETS
2			4			199

PLANS PREPARED BY:

ARCADIS

ARCADIS G&M OF NORTH CAROLINA, INC.
801 CORPORATE CENTER DRIVE, SUITE 300
RALEIGH, NORTH CAROLINA 27607-5073
TEL: 919/854-1282 FAX: 919/854-5448
WWW.ARCADIS-US.COM

DRAWN BY : D.G.VESTER DATE : 01/05
CHECKED BY : J.A.BATTS DATE : 01/05

NORTH CAROLINA PROFESSIONAL SEAL 18056 ENGINEER JOHN A. BATTS 1-31-05

1/28/2005 2:48:22 PM g:\tra\603031\drawings\final\right lane\r2606a_sd_e1_01r.dgn

$$$$$$$SYS11ML$$$$$$
$$$$$$$$$$$$$$$$$$$$$$DGN$$$$$$$$$$$$$$$$$$$$$$$$
$$$$USERNAME$$$$

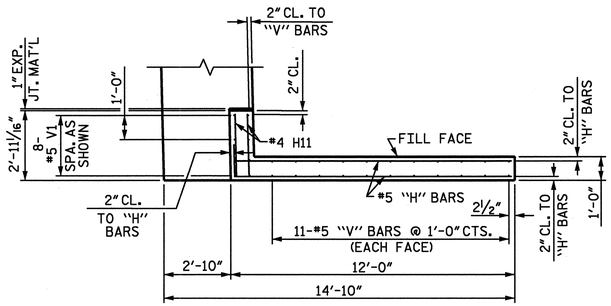

PLAN OF WING (W1)

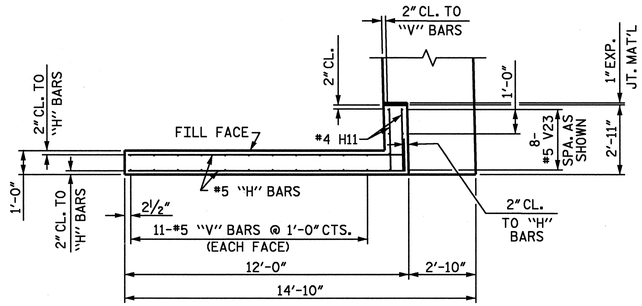

PLAN OF WING (W2)

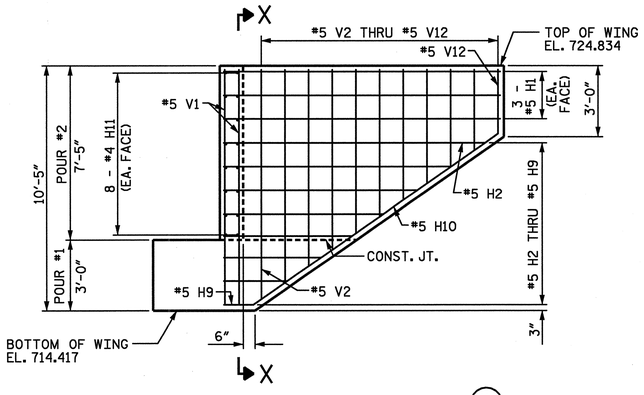

ELEVATION OF WING (W1)

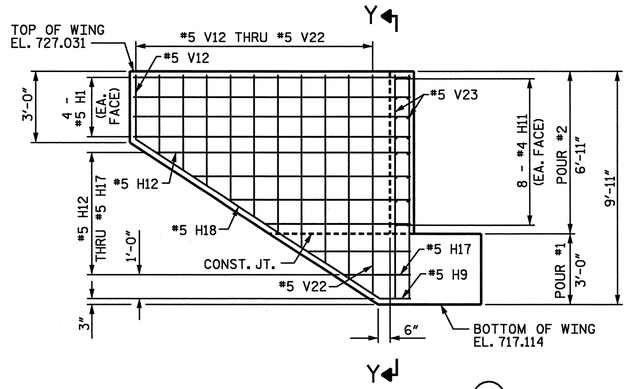

ELEVATION OF WING (W2)

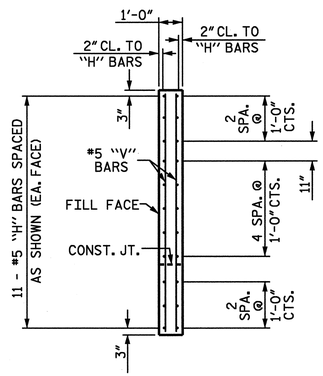

SECTION X-X

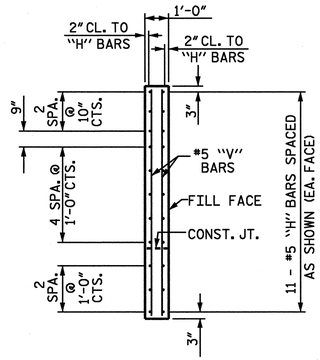

SECTION Y-Y

BAR TYPES

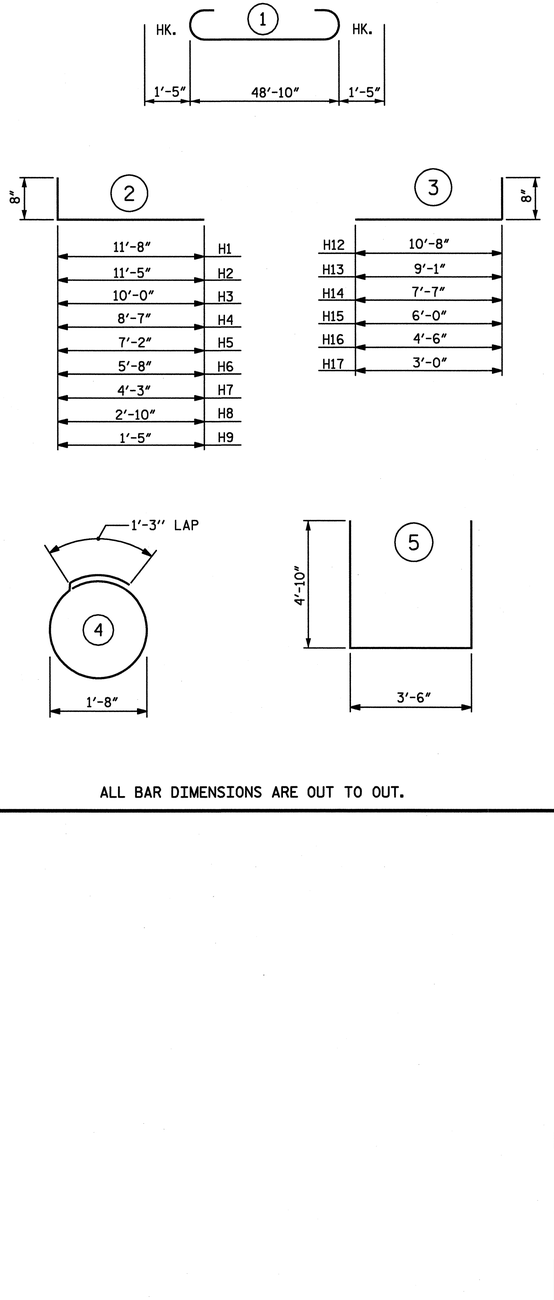

ALL BAR DIMENSIONS ARE OUT TO OUT.

BILL OF MATERIAL

END BENT NO. 1

BAR	NO.	SIZE	TYPE	LENGTH	WEIGHT
B1	4	10	1	51'-8"	889
B2	8	4	STR	25'-9"	138
B3	4	6	STR	48'-11"	294
B4	13	4	STR	3'-6"	30
H1	14	5	2	12'-4"	180
H2	2	5	2	12'-1"	25
H3	2	5	2	10'-8"	22
H4	2	5	2	9'-3"	19
H5	2	5	2	7'-10"	16
H6	2	5	2	6'-4"	13
H7	2	5	2	4'-11"	10
H8	2	5	2	3'-6"	7
H9	4	5	2	2'-1"	9
H10	2	5	STR	12'-7"	26
H11	32	4	STR	2'-7"	55
H12	2	5	3	11'-4"	24
H13	2	5	3	9'-9"	20
H14	2	5	3	8'-3"	17
H15	2	5	3	6'-8"	14
H16	2	5	3	5'-2"	11
H17	2	5	3	3'-8"	8
H18	2	5	STR	12'-3"	26
S1	44	4	4	6'-6"	191
U2	62	4	5	13'-2"	545
V1	8	5	STR	9'-11"	83
V2	2	5	STR	9'-8"	20
V3	2	5	STR	9'-0"	19
V4	2	5	STR	8'-3"	17
V5	2	5	STR	7'-7"	16
V6	2	5	STR	6'-11"	14
V7	2	5	STR	6'-2"	13
V8	2	5	STR	5'-6"	11
V9	2	5	STR	4'-9"	10
V10	2	5	STR	4'-1"	9
V11	2	5	STR	3'-5"	7
V12	4	5	STR	2'-8"	11
V13	2	5	STR	3'-4"	7
V14	2	5	STR	4'-0"	8
V15	2	5	STR	4'-8"	10
V16	2	5	STR	5'-3"	11
V17	2	5	STR	5'-11"	12
V18	2	5	STR	6'-7"	14
V19	2	5	STR	7'-3"	15
V20	2	5	STR	7'-11"	17
V21	2	5	STR	8'-6"	18
V22	2	5	STR	9'-2"	19
V23	8	5	STR	9'-5"	79

REINFORCING STEEL	LBS.	3029
CLASS "A" CONCRETE BREAKDOWN		
POUR #1 (CAP & WINGS)	CU. YDS.	21.6
POUR #2 (BACKWALL & WINGS)	CU. YDS.	6.5
TOTAL CLASS "A" CONCRETE	CU. YDS.	28.1
HP 12 X 53 STEEL PILES NO. 11	LIN. FT.	110.0
STEEL PILE POINTS	EA.	11.0

PROJECT NO. R-2606A

RANDOLPH COUNTY

STATION: 22+65.00 -L-

SHEET 3 OF 3

STATE OF NORTH CAROLINA
DEPARTMENT OF TRANSPORTATION
RALEIGH

SUBSTRUCTURE

END BENT #1

(RIGHT LANE)

REVISIONS						SHEET NO.
NO.	BY:	DATE:	NO.	BY:	DATE:	S-123
1			3			TOTAL SHEETS
2			4			194

PLANS PREPARED BY:

ARCADIS

ARCADIS G&M OF NORTH CAROLINA, INC.
801 CORPORATE CENTER DRIVE, SUITE 300
RALEIGH, NORTH CAROLINA 27607-5073
TEL: 919/854-1282 FAX: 919/854-5448
WWW.ARCADIS-US.COM

DRAWN BY : D.G.VESTER DATE : 01/05
CHECKED BY : J.A.BATTS DATE : 01/05

NORTH CAROLINA PROFESSIONAL SEAL 18056 ENGINEER JOHN A. BATTS 1-31-05

1/28/2005 2:48:22 PM g:\tra\60303\drawings\final\right lane\r2606a_sd_e1_01r.dgn

$$$$$$SYS1.DOCS$$$$
$$$$$$$$$$$$$$$$$$$$$$$$DGN$$$$$$$$$$$$$$$$$$$$$$$$
$$$$USERNAME$$$$

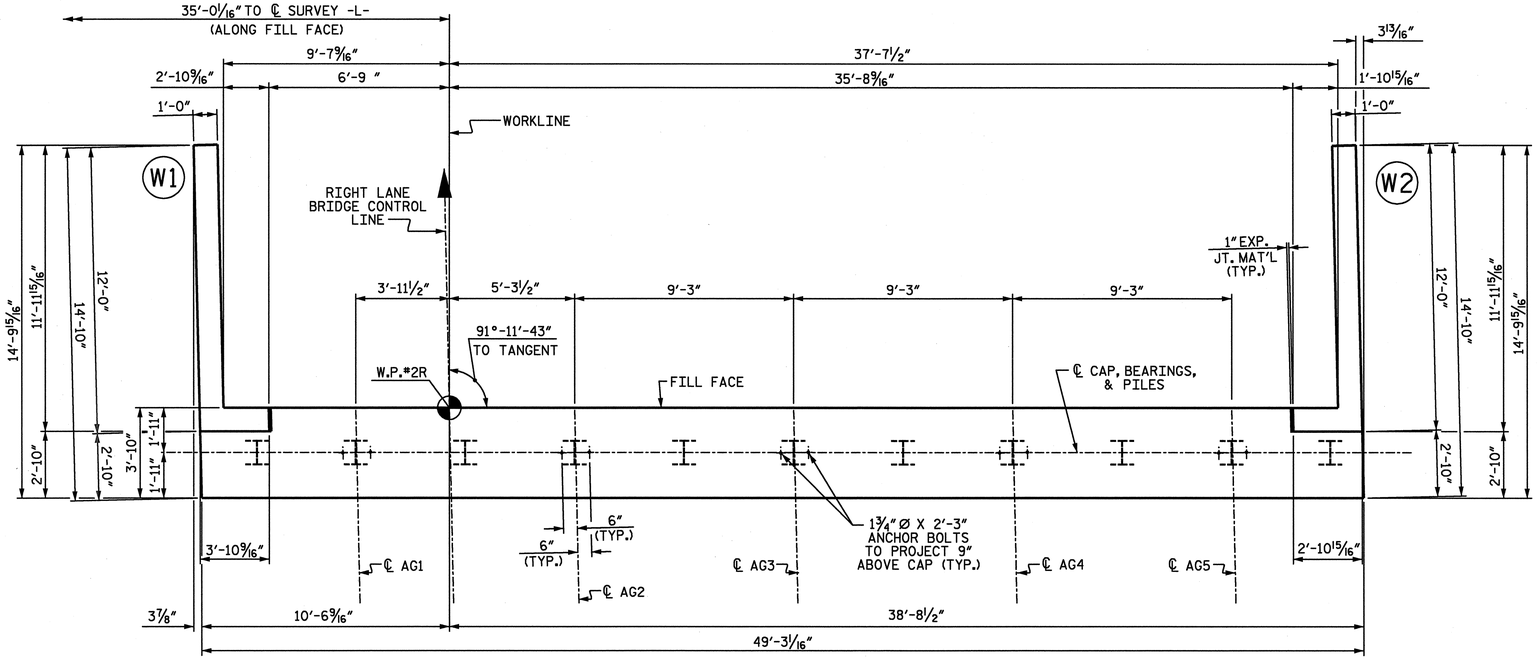

PLAN

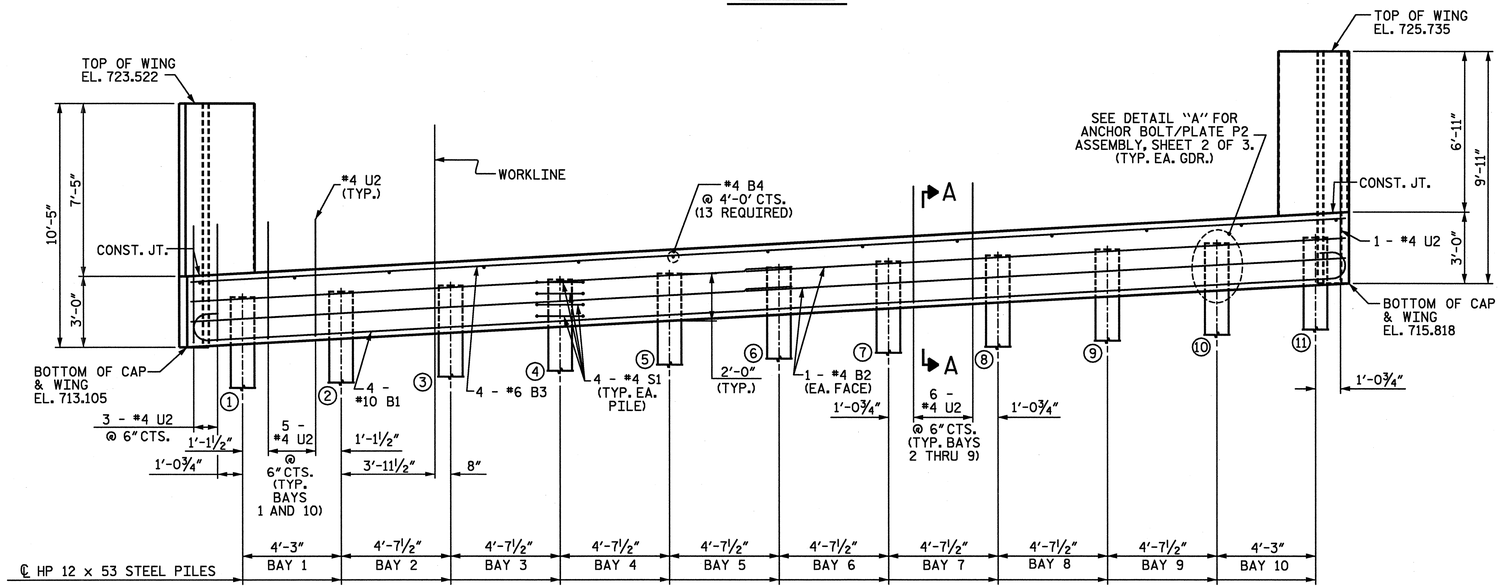

ELEVATION

#4 B2 SPLICE LENGTH = 2'-5"

NOTES

PILES FOR END BENT #2 SHALL BE DRIVEN TO MINIMUM BEARING CAPACITY OF 60 TONS EACH.

WHEN DRIVING PILES, THE MAXIMUM BLOW COUNT SHALL NOT BE EXCEEDED.

TOP OF PILE ELEVATION	
PILE NUMBER	ELEVATION
1	715.234
2	715.468
3	715.723
4	715.978
5	716.232
6	716.487
7	716.742
8	716.997
9	717.252
10	717.506
11	717.740

NOTE: TOP OF PILE ELEVATIONS ARE GIVEN AT CENTERLINE OF PILE.

PROJECT NO. R-2606A

RANDOLPH COUNTY

STATION: 22+65.00 -L-

SHEET 1 OF 3

STATE OF NORTH CAROLINA
DEPARTMENT OF TRANSPORTATION
RALEIGH

SUBSTRUCTURE

END BENT #2

(RIGHT LANE)

REVISIONS					
NO.	BY:	DATE:	NO.	BY:	DATE:
1			3		
2			4		

SHEET NO. S-124

TOTAL SHEETS 197

PLANS PREPARED BY:
ARCADIS
ARCADIS G&M OF NORTH CAROLINA, INC.
801 CORPORATE CENTER DRIVE, SUITE 300
RALEIGH, NORTH CAROLINA 27607-5073
TEL: 919/854-1282 FAX: 919/854-5448
WWW.ARCADIS-US.COM

DRAWN BY : D.G.VESTER DATE : 01/05
CHECKED BY : J.A.BATTS DATE : 01/05

NORTH CAROLINA PROFESSIONAL SEAL 18056 ENGINEER JOHN A. BATTS 1-31-05

1/28/2005 2:48:23 PM g:\tra\60303\drawings\final\right lane\r2606a_sd_e2_01r.dgn

$$$$$$SYSTIME$$$$$
$$$$$$$$$$$$$$$$$$$$$$$$$$DGN$$$$$$$$$$$$$$$$$$$$$$$$$$
$$$$USERNAME$$$$

BAGGED STONE AND PIPE SHALL BE PLACED IMMEDIATELY AFTER COMPLETION OF END BENT EXCAVATION. PIPE MAY BE EITHER CONCRETE, CORRUGATED STEEL, CORRUGATED ALUMINUM ALLOY, OR CORRUGATED PLASTIC. PERFORATED PIPE WILL NOT BE ALLOWED.

BAGGED STONE SHALL REMAIN IN PLACE UNTIL THE ENGINEER DIRECTS THAT IT BE REMOVED. THE CONTRACTOR SHALL REMOVE AND DISPOSE OF SILT ACCUMULATIONS AT BAGGED STONE WHEN SO DIRECTED BY THE ENGINEER. BAGS SHALL BE REMOVED AND REPLACED WHENEVER THE ENGINEER DETERMINES THAT THEY HAVE DETERIORATED AND LOST THEIR EFFECTIVENESS.

NO SEPARATE PAYMENT WILL BE MADE FOR THIS WORK AND THE ENTIRE COST OF THIS WORK SHALL BE INCLUDED IN THE UNIT CONTRACT PRICE BID FOR THE SEVERAL PAY ITEMS.

TEMPORARY DRAINAGE AT END BENT

*POSITION OF PILE DURING WELDING.

PILE SPLICE DETAILS

SECTION A-A

GIRDER	TOP OF PLATE (P2) ELEV.
AG1	715.760
AG2	716.269
AG3	716.779
AG4	717.288
AG5	717.798

DETAIL "A"

PROJECT NO. R-2606A

RANDOLPH COUNTY

STATION: 22+65.00 -L-

SHEET 2 OF 3

STATE OF NORTH CAROLINA
DEPARTMENT OF TRANSPORTATION
RALEIGH

SUBSTRUCTURE

END BENT #2

(RIGHT LANE)

REVISIONS						SHEET NO.
NO.	BY:	DATE:	NO.	BY:	DATE:	S-125
1			3			TOTAL SHEETS
2			4			199

PLANS PREPARED BY:
ARCADIS
ARCADIS G&M OF NORTH CAROLINA, INC.
801 CORPORATE CENTER DRIVE, SUITE 300
RALEIGH, NORTH CAROLINA 27607-5073
TEL: 919/854-1282 FAX: 919/854-5448
WWW.ARCADIS-US.COM

DRAWN BY : D.G.VESTER DATE : 01/05
CHECKED BY : J.A.BATTS DATE : 01/05

1/28/2005 2:48:23 PM g:\tra\603031\drawings\final\right lane\r2606a_sd_e2_01r.dgn

$$$$DGN$$$$
$$$$USERNAME$$$$

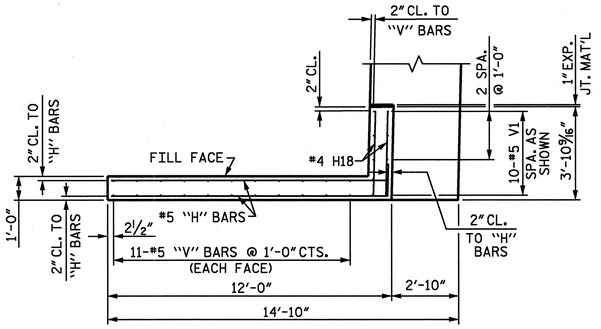

PLAN OF WING (W1)

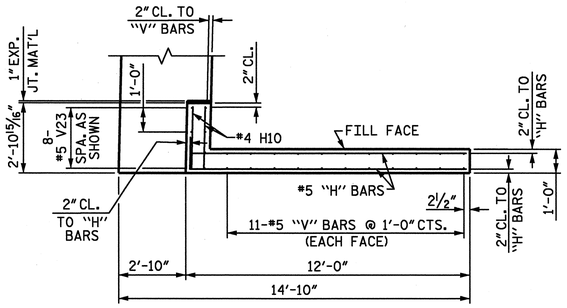

PLAN OF WING (W2)

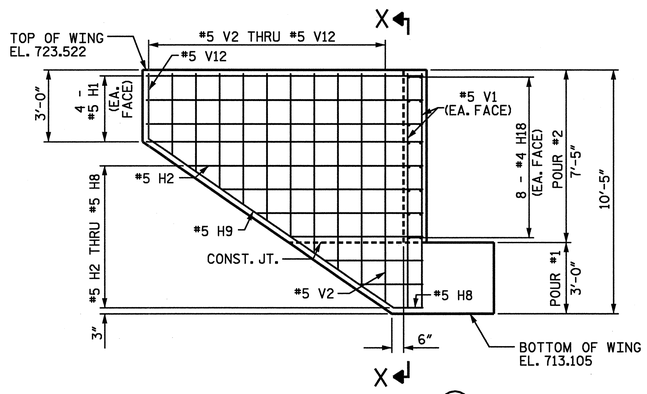

ELEVATION OF WING (W1)

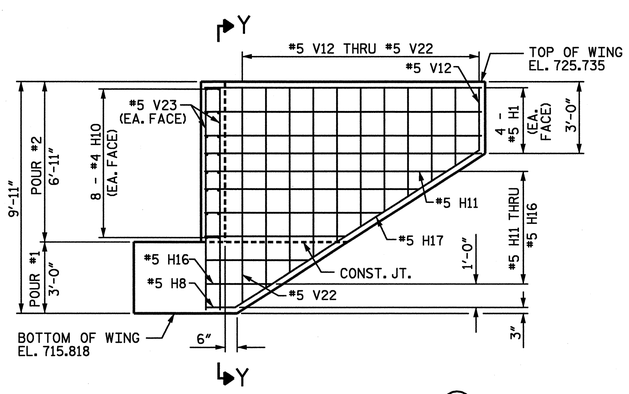

ELEVATION OF WING (W2)

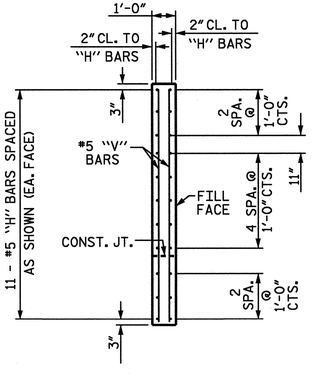

SECTION X-X

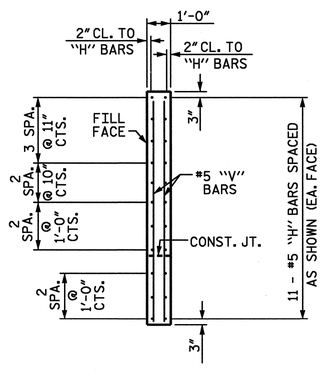

SECTION Y-Y

BAR TYPES

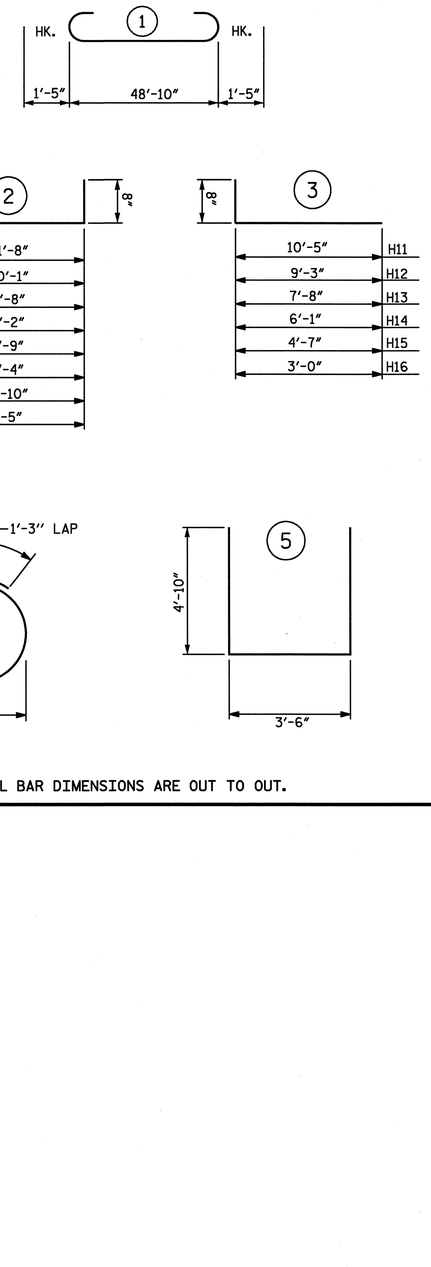

ALL BAR DIMENSIONS ARE OUT TO OUT.

BILL OF MATERIAL

END BENT NO. 2

BAR	NO.	SIZE	TYPE	LENGTH	WEIGHT
B1	4	10	1	51'-8"	889
B2	8	4	STR	25'-9"	138
B3	4	6	STR	48'-11"	294
B4	13	4	STR	3'-6"	30
H1	16	5	2	12'-4"	206
H2	2	5	2	10'-9"	22
H3	2	5	2	9'-4"	19
H4	2	5	2	7'-10"	16
H5	2	5	2	6'-5"	13
H6	2	5	2	5'-0"	10
H7	2	5	2	3'-6"	7
H8	4	5	2	2'-1"	9
H9	2	5	STR	12'-7"	26
H10	16	4	STR	2'-7"	28
H11	2	5	3	11'-1"	23
H12	2	5	3	9'-11"	21
H13	2	5	3	8'-4"	17
H14	2	5	3	6'-9"	14
H15	2	5	3	5'-3"	11
H16	2	5	3	3'-8"	8
H17	2	5	STR	12'-3"	26
H18	16	4	STR	3'-6"	37
S1	44	4	4	6'-6"	191
U2	62	4	5	13'-2"	545
V1	10	5	STR	9'-11"	103
V2	2	5	STR	9'-7"	20
V3	2	5	STR	8'-11"	19
V4	2	5	STR	8'-3"	17
V5	2	5	STR	7'-6"	16
V6	2	5	STR	6'-10"	14
V7	2	5	STR	6'-2"	13
V8	2	5	STR	5'-6"	11
V9	2	5	STR	4'-9"	10
V10	2	5	STR	4'-1"	9
V11	2	5	STR	3'-5"	7
V12	4	5	STR	2'-8"	11
V13	2	5	STR	3'-4"	7
V14	2	5	STR	4'-0"	8
V15	2	5	STR	4'-7"	10
V16	2	5	STR	5'-3"	11
V17	2	5	STR	5'-11"	12
V18	2	5	STR	6'-6"	14
V19	2	5	STR	7'-2"	15
V20	2	5	STR	7'-10"	16
V21	2	5	STR	8'-6"	18
V22	2	5	STR	9'-1"	19
V23	8	5	STR	9'-5"	79

REINFORCING STEEL	LBS.	3059
CLASS "A" CONCRETE BREAKDOWN		
POUR #1 (CAP & WINGS)	CU. YDS.	21.6
POUR #2 (BACKWALL & WINGS)	CU. YDS.	6.8
TOTAL CLASS "A" CONCRETE	CU. YDS.	28.4
HP 12 X 53 STEEL PILES NO. 11	LIN. FT.	275.0

PROJECT NO. R-2606A

RANDOLPH COUNTY

STATION: 22+65.00 -L-

SHEET 3 OF 3

STATE OF NORTH CAROLINA
DEPARTMENT OF TRANSPORTATION
RALEIGH

SUBSTRUCTURE

END BENT #2

(RIGHT LANE)

REVISIONS						SHEET NO.
NO.	BY:	DATE:	NO.	BY:	DATE:	S-126
1			3			TOTAL SHEETS
2			4			199

PLANS PREPARED BY:
ARCADIS
ARCADIS G&M OF NORTH CAROLINA, INC.
801 CORPORATE CENTER DRIVE, SUITE 300
RALEIGH, NORTH CAROLINA 27607-5073
TEL: 919/854-1282 FAX: 919/854-5448
WWW.ARCADIS-US.COM

DRAWN BY : D.G.VESTER DATE : 01/05
CHECKED BY : J.A.BATTS DATE : 01/05

NORTH CAROLINA PROFESSIONAL SEAL 18056 ENGINEER JOHN A. BATTS 1-31-05

1/28/2005 2:48:23 PM g:\tra\603031\drawings\final\right lane\r2606a_sd_e2_01r.dgn

$$$$$$$$$$$$$$$$$$$$$$$$$$$$$$$$DGN$$$$$$$$$$$$$$$$$$$$$$$$$$$$
$$$$USERNAME$$$$

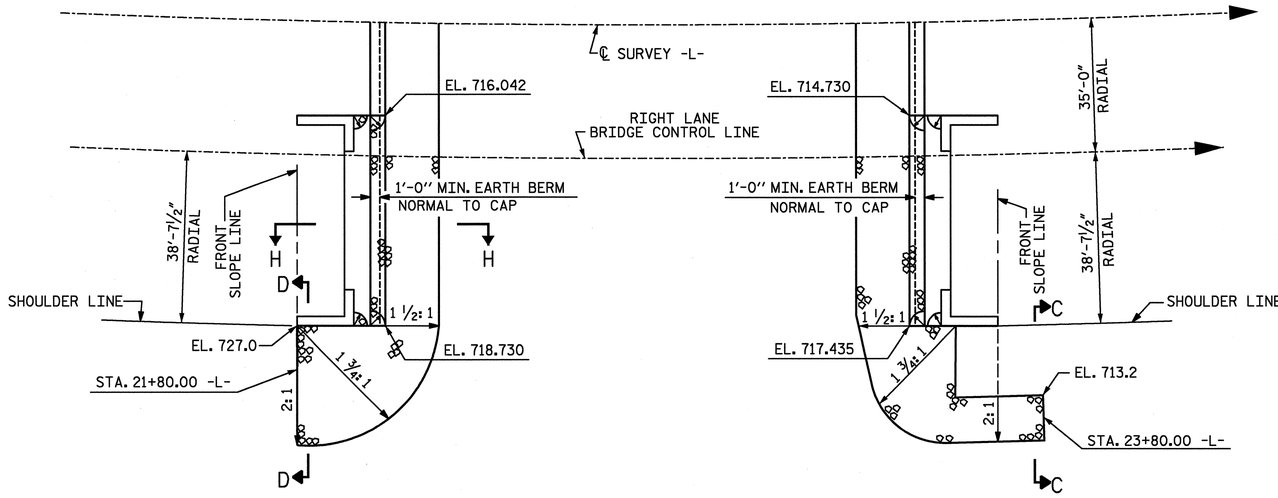

END BENT #1 END BENT #2

BERM RIP RAPPED

PLAIN RIP RAP PLAN

NOTES :

FOR BERM WIDTH DIMENSIONS, SEE GENERAL DRAWING.

ESTIMATED QUANTITIES		
BRIDGE @ STA. 22+65.00 -L-	PLAIN RIP RAP CLASS II	FILTER FABRIC FOR DRAINAGE
	TONS	SQUARE YARDS
END BENT 1	218.6	242.9
END BENT 2	293.2	325.7

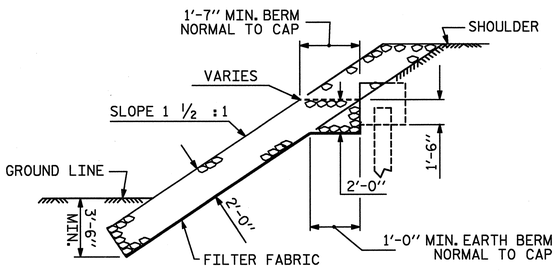

SECTION H-H

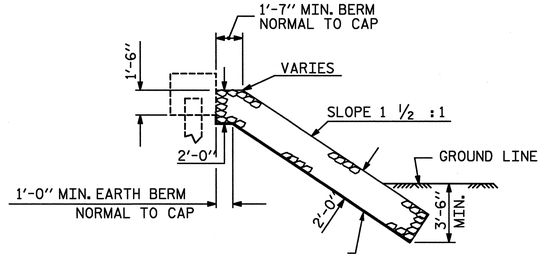

SECTION @ RIGHT LANE BRIDGE CONTROL LINE

BERM RIP RAPPED

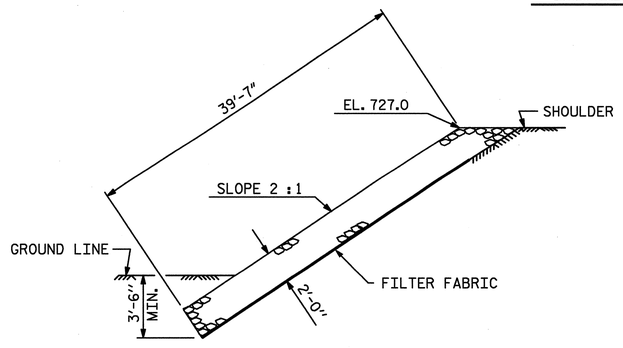

SECTION D-D

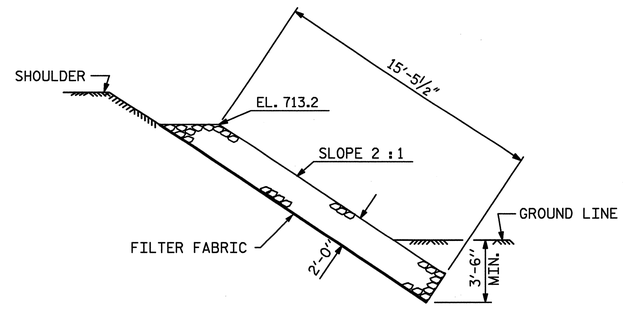

SECTION C-C

PROJECT NO. R-2606A

RANDOLPH COUNTY

STATION: 22+65.00 -L-

STATE OF NORTH CAROLINA
DEPARTMENT OF TRANSPORTATION
RALEIGH

SUBSTRUCTURE

RIP RAP DETAILS

(RIGHT LANE)

PLANS PREPARED BY:
ARCADIS
ARCADIS G&M OF NORTH CAROLINA, INC.
801 CORPORATE CENTER DRIVE, SUITE 300
RALEIGH, NORTH CAROLINA 27607-5073
TEL: 919/854-1282 FAX: 919/854-5448
WWW.ARCADIS-US.COM

DRAWN BY : D.G.VESTER DATE : 01/05
CHECKED BY : J.A.BATTS DATE : 01/05

NORTH CAROLINA PROFESSIONAL SEAL 18056 ENGINEER JOHN A. BATTS 1-31-05

REVISIONS					
NO.	BY:	DATE:	NO.	BY:	DATE:
1			3		
2			4		

SHEET NO. S-127

TOTAL SHEETS 199

1/28/2005 2:48:23 PM g:\tra\603031\drawings\final\rlght lane\r2606a_sd_rr_01r.dgn

$$$$$$STSTIMES$$$$$$
$$$$$$$$$$$$$$$$$$$$$$$$DGN$$$$$$$$$$$$$$$$$$$$$$$$
$$$$USERNAME$$$$

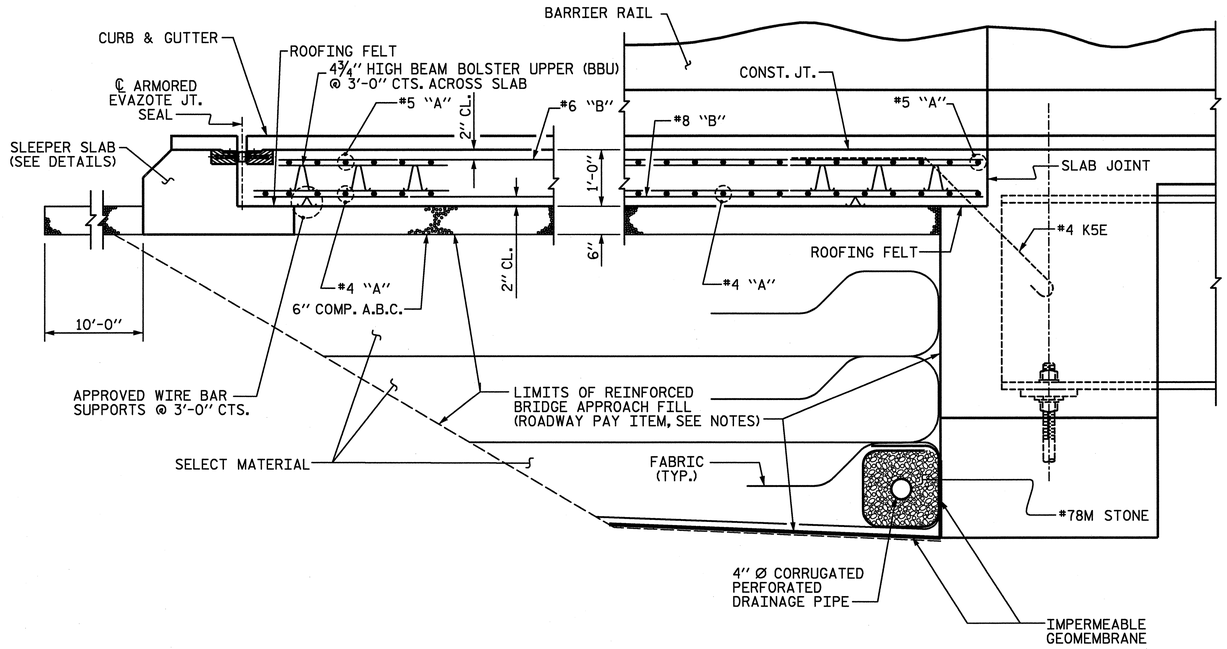

SECTION THRU SLAB

ELASTOMERIC CONCRETE IN BLOCKOUT

*#4 K5E BARS ARE TO BE PLACED DURING INTEGRAL END BENT CONSTRUCTION.

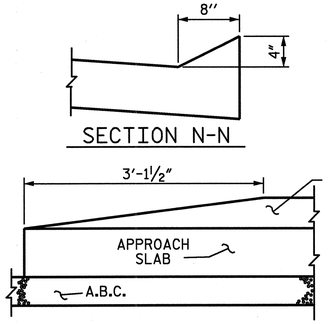

END OF CURB WITHOUT SHOULDER BERM GUTTER

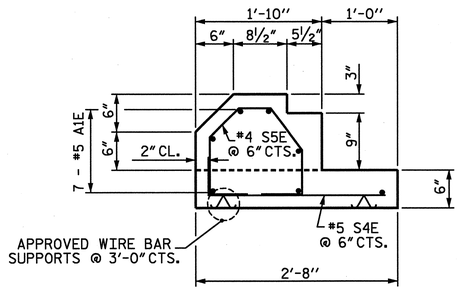

SLEEPER SLAB DETAIL

CURB DETAILS

NOTES

THE COST OF THE BARRIER RAIL ON THE APPROACH SLAB SHALL BE INCLUDED IN THE LUMP SUM CONTRACT PRICE BID FOR BRIDGE APPROACH SLABS.

APPROACH SLAB SHALL NOT BE CONSTRUCTED PRIOR TO COMPLETION OF THE BRIDGE DECK.

FOR REINFORCED BRIDGE APPROACH FILL INCLUDING FABRIC, IMPERMEABLE GEOMEMBRANE, 4" Ø DRAINAGE PIPE, #78M STONE, AND SELECT MATERIAL, SEE ROADWAY PLANS.

TEMPORARY DRAINAGE AND TEMPORARY BERM AND SLOPE DRAINS WILL BE PAID FOR UNDER THE LUMP SUM PRICE FOR BRIDGE APPROACH SLAB.

AREA BETWEEN THE WINGWALL AND APPROACH SLAB SHALL BE GRADED TO DRAIN THE WATER AWAY FROM THE FILL FACE OF THE BRIDGE.

THE 6" COMP. A.B.C. SHALL EXTEND 10'-0" BEYOND THE END OF THE SLEEPER SLAB AND 1'-0" OUTSIDE OF EACH EDGE OF THE SLAB.

THE CONTRACTOR MAY USE 4" TYPE B-25.0B ASPHALT CONCRETE BASE COURSE IN LIEU OF 6" COMP. A.B.C. IF THIS OPTION IS USED, THE BASE COURSE SHALL EXTEND 1'-0" BEYOND THE END OF THE SLEEPER SLAB AND THE WIDTH SHALL BE THE SAME AS THAT OF THE APPROACH SLAB.

THE CONTRACTOR MAY USE 5" CLASS "A" CONCRETE BASE IN LIEU OF 6" COMP. A.B.C. IF THIS OPTION IS USED, THE CONCRETE BASE SHALL EXTEND 1'-0" BEYOND THE END OF THE SLEEPER SLAB AND THE WIDTH SHALL BE THE SAME AS THAT OF THE APPROACH SLAB. THE CONCRETE SHALL BE FINISHED TO A SMOOTH SURFACE AND A LAYER OF 30 LB ROOFING FELT SHALL BE PLACED BETWEEN THE CONCRETE BASE AND THE APPROACH SLAB TO PREVENT BOND. THE APPROACH SLAB SHALL NOT BE CAST UNTIL THE CONCRETE BASE HAS REACHED AN AGE OF THREE CURING DAYS.

THE #5 S1E AND #5 S3E BARS SHALL BE INSTALLED, USING AN ADHESIVE ANCHORING SYSTEM, AFTER SAWING OF THE SLAB JOINT. FOR ADHESIVELY ANCHORED ANCHOR BOLTS OR DOWELS, SEE SPECIAL PROVISIONS, THE YIELD LOAD FOR THE #5 S1E AND #5 S3E BARS IS 18.6 KIPS. FIELD TESTING FOR THE ADHESIVE BONDING SYSTEM IS NOT REQUIRED.

WITH EVAZOTE JOINT SEAL

FOR EVAZOTE JOINT SEALS, SEE SPECIAL PROVISIONS.

THE NOMINAL UNCOMPRESSED SEAL WIDTH OF THE EVAZOTE JOINT SEAL SHALL BE 2 ½".

BILL OF MATERIAL

APPROACH SLAB #1

BAR	NO.	SIZE	TYPE	LENGTH	WEIGHT
A1E	58	#5	STR	42'-6"	2571
A2	104	#4	STR	22'-4"	1552
B1E	13	#6	STR	24'-2"	472
B2E	12	#6	STR	24'-4"	439
B3E	12	#6	STR	24'-6"	442
B4E	12	#6	STR	24'-8"	445
B5E	12	#6	STR	24'-10"	448
B6E	12	#6	STR	25'-0"	451
B7E	13	#6	STR	25'-2"	491
B8	13	#8	STR	24'-8"	856
B9	12	#8	STR	24'-10"	796
B10	12	#8	STR	25'-0"	801
B11	12	#8	STR	25'-2"	806
B12	12	#8	STR	25'-4"	812
B13	12	#8	STR	25'-6"	817
B14	13	#8	STR	25'-8"	891
B15E	14	#5	STR	11'-8"	170
B16E	2	#5	3	6'-5"	13
S1E	56	#5	STR	3'-3"	190
S2E	40	#5	1	4'-1"	170
S3E	20	#5	2	2'-3"	47
S4E	86	#5	1	3'-0"	269
S5E	86	#4	4	4'-1"	235

REINFORCING STEEL	LBS.	7331
EPOXY COATED REINFORCING STEEL	LBS.	6853

CLASS AA CONCRETE BREAKDOWN

POUR 1 SLEEPER SLAB	C.Y.	4.4
POUR 2 SLAB & CURBS	C.Y.	40.9
POUR 3 RAILS	C.Y.	2.1
CLASS AA CONCRETE	C.Y.	47.4

APPROACH SLAB #2

BAR	NO.	SIZE	TYPE	LENGTH	WEIGHT
A3E	58	#5	STR	41'-9"	2526
A4	104	#4	STR	21'-9"	1511
B1E	13	#6	STR	24'-2"	472
B2E	11	#6	STR	24'-4"	402
B3E	12	#6	STR	24'-6"	442
B4E	12	#6	STR	24'-8"	445
B5E	11	#6	STR	24'-10"	410
B6E	12	#6	STR	25'-0"	451
B7E	13	#6	STR	25'-2"	491
B8	13	#8	STR	24'-8"	856
B9	12	#8	STR	24'-10"	796
B10	12	#8	STR	25'-0"	801
B11	12	#8	STR	25'-2"	806
B12	12	#8	STR	25'-4"	812
B13	12	#8	STR	25'-6"	817
B14	11	#8	STR	25'-8"	754
B15E	14	#5	STR	11'-8"	170
B16E	2	#5	3	6'-5"	13
S1E	28	#5	STR	3'-3"	95
S2E	20	#5	1	4'-1"	85
S3E	10	#5	2	2'-3"	23
S4E	84	#5	1	3'-0"	263
S5E	84	#4	4	4'-1"	229

REINFORCING STEEL	LBS.	7153
EPOXY COATED REINFORCING STEEL	LBS.	6517

CLASS AA CONCRETE BREAKDOWN

POUR 1 SLEEPER SLAB	C.Y.	4.3
POUR 2 SLAB & CURBS	C.Y.	40.1
POUR 3 RAIL	C.Y.	1.0
CLASS AA CONCRETE	C.Y.	45.4

BAR TYPES

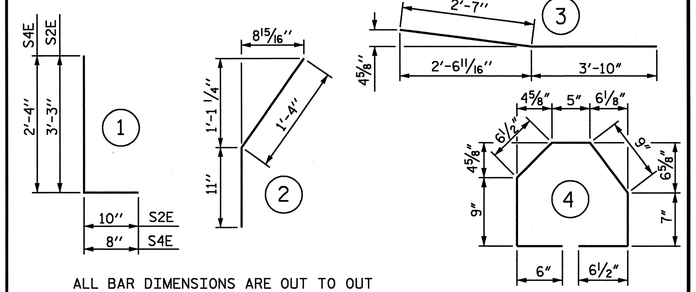

ALL BAR DIMENSIONS ARE OUT TO OUT

PROJECT NO. R-2606A

RANDOLPH COUNTY

STATION: 22+65.00 -L-

SHEET 1 OF 4

STATE OF NORTH CAROLINA
DEPARTMENT OF TRANSPORTATION
RALEIGH

SUBSTRUCTURE

BRIDGE APPROACH SLAB WITH BARRIER RAIL

(RIGHT LANE)

REVISIONS						SHEET NO.
NO.	BY:	DATE:	NO.	BY:	DATE:	S-128
1			3			TOTAL SHEETS
2			4			199

NORTH CAROLINA PROFESSIONAL SEAL 18056 ENGINEER JOHN A. BATTS
1-31-05

PLANS PREPARED BY:
ARCADIS
ARCADIS G&M OF NORTH CAROLINA, INC.
801 CORPORATE CENTER DRIVE, SUITE 300
RALEIGH, NORTH CAROLINA 27607-5073
TEL: 919/854-1282 FAX: 919/854-5448
WWW.ARCADIS-US.COM

DRAWN BY : D.G.VESTER DATE : 01/05
CHECKED BY : J.A.BATTS DATE : 01/05

1/31/2005 11:15:40 AM g:\TRA\60303\Drawings\Final\Right Lane\R2606A_SD_AS_01R.DGN

USERNAME
DGN

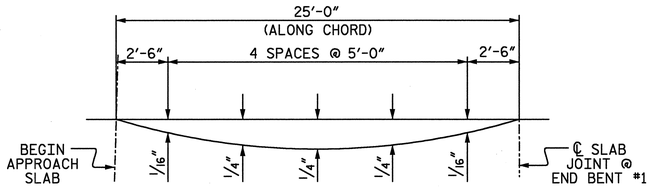

ARC OFFSET (LT. SIDE)

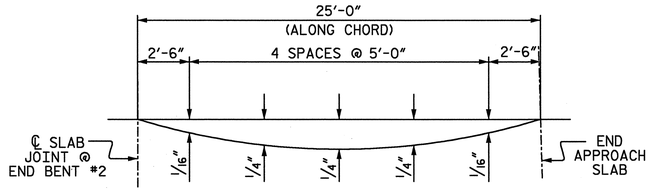

ARC OFFSET (LT. SIDE)

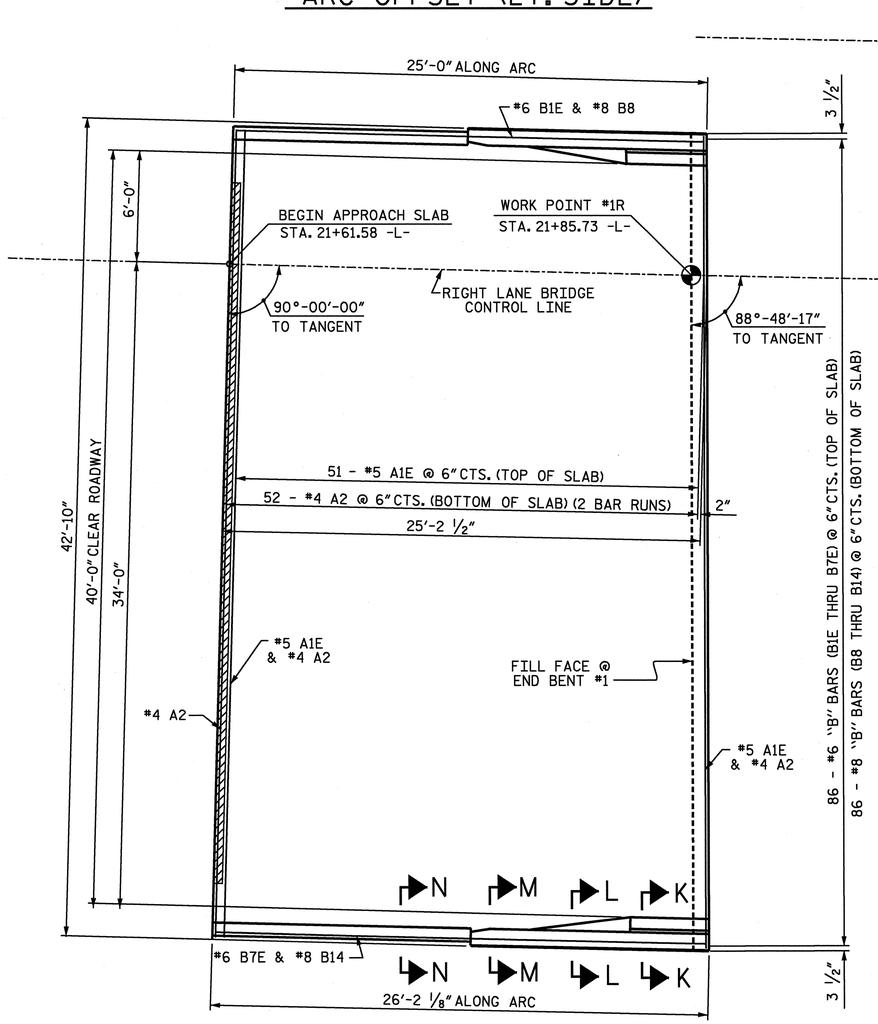

PLAN OF APPROACH SLAB @ END BENT #1

NOTE: SLEEPER SLAB NOT SHOWN FOR CLARITY.

ELASTOMERIC CONCRETE IN BLOCKOUT

SEE SECTION N-N ON SHEET 1 OF 4.

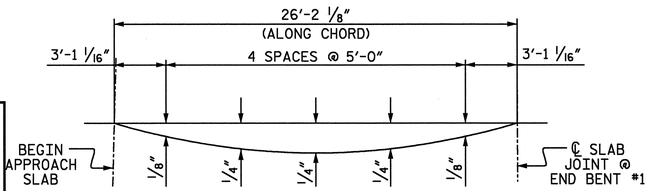

ARC OFFSET (RT. SIDE)

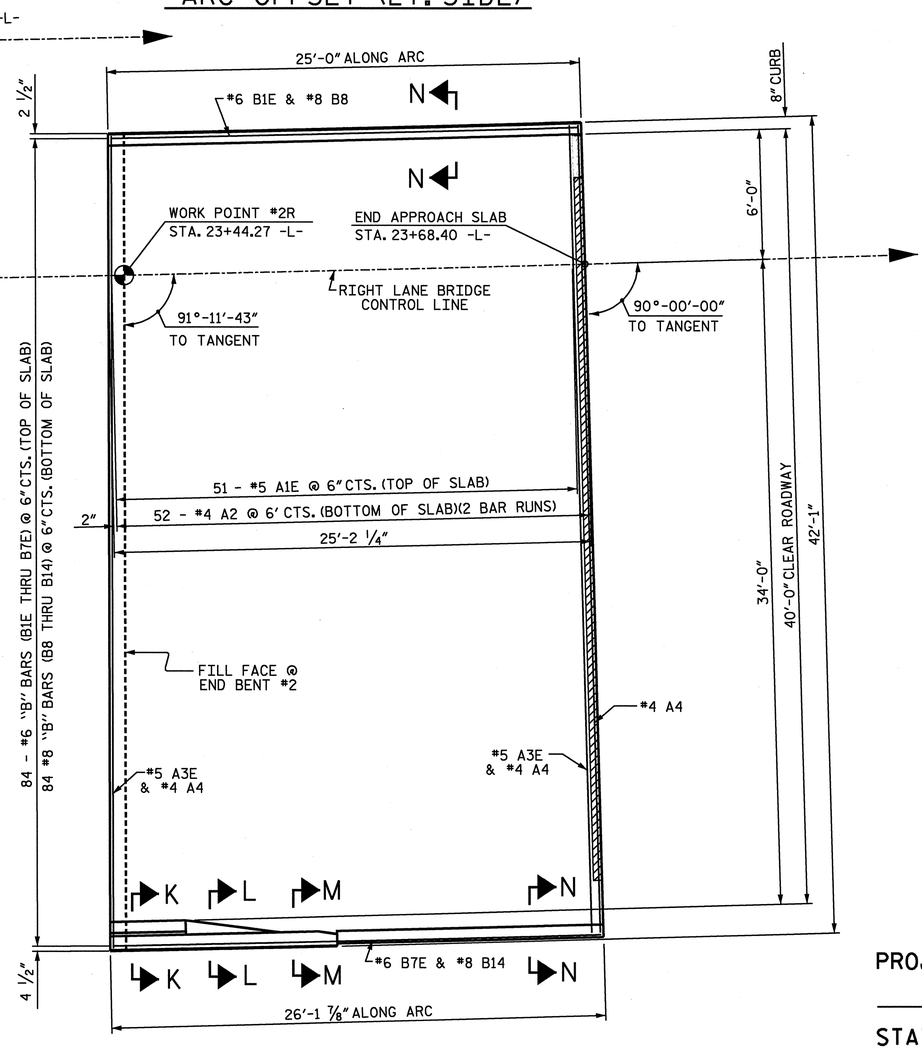

PLAN OF APPROACH SLAB @ END BENT #2

NOTE: SLEEPER SLAB NOT SHOWN FOR CLARITY.

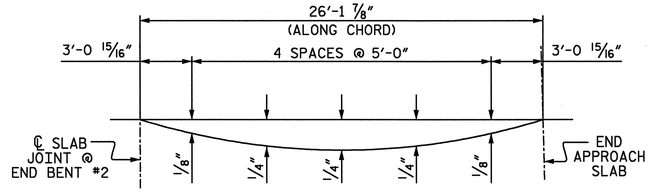

ARC OFFSET (RT. SIDE)

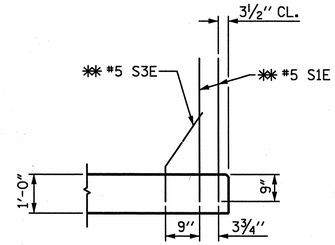

SECTION K-K

** ADHESIVELY ANCHORED

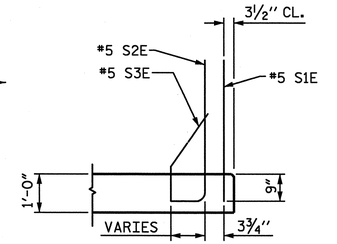

SECTION L-L

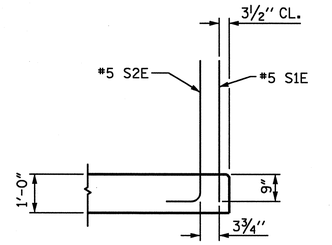

SECTION M-M

PROJECT NO. R-2606A

RANDOLPH COUNTY

STATION: 22+65.00 -L-

SHEET 2 OF 4

PLANS PREPARED BY:
ARCADIS
ARCADIS G&M OF NORTH CAROLINA, INC.
801 CORPORATE CENTER DRIVE, SUITE 300
RALEIGH, NORTH CAROLINA 27607-5073
TEL: 919/854-1282 FAX: 919/854-5448
WWW.ARCADIS-US.COM

DRAWN BY : D.G.VESTER DATE : 01/05

CHECKED BY : J.A.BATTS DATE : 01/05

NORTH CAROLINA PROFESSIONAL SEAL 18056 ENGINEER JOHN A. BATTS 1-31-05

STATE OF NORTH CAROLINA
DEPARTMENT OF TRANSPORTATION
RALEIGH

SUBSTRUCTURE

BRIDGE APPROACH SLAB DETAILS

(RIGHT LANE)

REVISIONS						SHEET NO.
NO.	BY:	DATE:	NO.	BY:	DATE:	S-129
1			3			TOTAL SHEETS
2			4			199

1/28/2005 2:48:23 PM g:\tra\603031\drawings\final\right lane\r2606a_sd_as_01r.dgn

$$$$$$SYSTIME$$$$$
$$$$$$$$$$$$$$$$$$$$$$$$DGN$$$$$$$$$$$$$$$$$$$$$$$$$
$$$$USERNAME$$$$

PLAN

BEGIN APPROACH SLAB SHOWN,
RIGHT SIDE OF END APPROACH SLAB SIMILAR
SEE SECTION N-N, SHEET 1 OF 4.

ELEVATION

PLAN

SECTION E-E

GUARDRAIL ANCHOR ASSEMBLY DETAILS

NOTES

THE GUARDRAIL ANCHOR ASSEMBLY SHALL CONSIST OF A 1/4" HOLD DOWN PLATE AND 7 - 7/8" Ø BOLTS WITH NUTS AND WASHERS.

THE HOLD-DOWN PLATE SHALL CONFORM TO AASHTO M270 GRADE 36. AFTER FABRICATION, THE HOLD-DOWN PLATE SHALL BE HOT-DIP GALVANIZED IN ACCORDANCE WITH AASHTO M111.

BOLTS SHALL CONFORM TO THE REQUIREMENTS OF ASTM A307 AND NUTS SHALL CONFORM TO THE REQUIREMENTS OF AASHTO M291. BOLTS, NUTS AND WASHERS SHALL BE GALVANIZED. AT THE CONTRACTOR'S OPTION, STAINLESS STEEL BOLTS, NUTS AND WASHERS MAY BE USED AS AN ALTERNATE FOR THE 7/8" Ø GALVANIZED BOLTS, NUTS AND WASHERS. THEY SHALL CONFORM TO OR EXCEED THE MECHANICAL REQUIREMENTS OF ASTM A307. THE USE OF THIS ALTERNATE SHALL BE APPROVED BY THE ENGINEER.

AFTER INSTALLATION, THE EXPOSED THREAD OF THE BOLT SHALL BE BURRED WITH A SHARP POINTED TOOL.

THE COST OF THE GUARDRAIL ANCHOR ASSEMBLIES WITH BOLTS, NUTS AND WASHERS COMPLETE IN PLACE, SHALL BE INCLUDED IN THE LUMP SUM CONTRACT PRICE BID FOR BRIDGE APPROACH SLABS.

THE 1 1/4" Ø HOLES SHALL BE FORMED OR DRILLED WITH A CORE BIT. IMPACT TOOLS WILL NOT BE PERMITTED. ANY CONCRETE DAMAGED BY THIS WORK SHALL BE REPAIRED TO THE SATISFACTION OF THE ENGINEER.

SECTION K-K

✱✱ ADHESIVELY ANCHORED

SECTION L-L

SKETCH SHOWING POINTS OF ATTACHMENT

✱ INDICATES POINTS OF ATTACHMENT

SECTION M-M

END VIEW

PROJECT NO. R-2606A

RANDOLPH COUNTY

STATION: 22+65.00 -L-

SHEET 3 OF 4

STATE OF NORTH CAROLINA
DEPARTMENT OF TRANSPORTATION
RALEIGH

SUBSTRUCTURE

BRIDGE APPROACH SLAB DETAILS

(RIGHT LANE)

REVISIONS					
NO.	BY:	DATE:	NO.	BY:	DATE:
1			3		
2			4		

SHEET NO. S-130

TOTAL SHEETS 199

PLANS PREPARED BY:

ARCADIS

ARCADIS G&M OF NORTH CAROLINA, INC.
801 CORPORATE CENTER DRIVE, SUITE 300
RALEIGH, NORTH CAROLINA 27607-5073
TEL: 919/854-1282 FAX: 919/854-5448
WWW.ARCADIS-US.COM

DRAWN BY : D.G.VESTER DATE : 01/05
CHECKED BY : J.A.BATTS DATE : 01/05

1/28/2005 2:48:24 PM g:\tra\603031\drawings\final\right lane\r2606a_sd_as_01r.dgn

$$$$$$SYSTIME$$$$$
$$$$$$$$$$$$$$$$$$$$$$$$$DGN$$$$$$$$$$$$$$$$$$$$$$$$$
$$$$USERNAME$$$$

PLAN

SECTION C-C
ARMORED EVAZOTE JOINT SEAL

SECTION A-A

SECTION B-B

JOINT SEAL DETAILS @ APPROACH SLAB

NOTE: IMMEDIATELY AFTER THE CONSTRUCTION OF THE APPROACH SLAB, THE CONTRACTOR SHALL PROVIDE TEMPORARY BERM AND SLOPE DRAIN. CONTRACTOR SHALL GRADE TO PIPE INLET AND PROVIDE EROSION RESISTANT MATERIAL AS SHOWN. THE EROSION RESISTANT MATERIAL SHALL BE EITHER 1) ASPHALT PLANT MIX, TYPE 1 OR TYPE 2, MIN. 2" DEPTH, 2) EROSION CONTROL MAT, OR 3) CONCRETE, AS DIRECTED BY THE ENGINEER. THE SLOPE DRAIN SHALL CONSIST OF A NON-PERFORATED TEMPORARY DRAINAGE PIPE, 12 INCHES IN DIAMETER.

PLAN VIEW

SECTION R-R

SECTION S-S

TEMPORARY BERM AND SLOPE DRAIN DETAILS

NOTE: IF THE APPROACH SLAB IS NOT CONSTRUCTED IMMEDIATELY AFTER THE BACKFILLING OF THE END BENT EXCAVATION, GRADE TO DRAIN TO THE BOTTOM OF THE SLOPE AND PROVIDE EROSION RESISTANT MATERIAL, SUCH AS FIBERGLASS ROVING OR AS DIRECTED BY THE ENGINEER TO PREVENT SOIL EROSION AND TO PROTECT THE AREA ADJACENT TO THE STRUCTURE. THE CONTRACTOR WILL BE REQUIRED TO REMOVE THESE MATERIALS PRIOR TO CONSTRUCTION OF THE APPROACH SLAB.

TEMPORARY DRAINAGE DETAIL

PROJECT NO. R-2606A
RANDOLPH COUNTY
STATION: 22+65.00 -L-

SHEET 4 OF 4

STATE OF NORTH CAROLINA
DEPARTMENT OF TRANSPORTATION
RALEIGH

SUBSTRUCTURE

BRIDGE APPROACH SLAB DETAILS

(RIGHT LANE)

REVISIONS						SHEET NO.
NO.	BY:	DATE:	NO.	BY:	DATE:	S-131
1			3			TOTAL SHEETS
2			4			199

NORTH CAROLINA PROFESSIONAL SEAL 18056 ENGINEER JOHN A. BATTS 1-31-05

PLANS PREPARED BY:
ARCADIS
ARCADIS G&M OF NORTH CAROLINA, INC.
801 CORPORATE CENTER DRIVE, SUITE 300
RALEIGH, NORTH CAROLINA 27607-5073
TEL: 919/854-1282 FAX: 919/854-5448
WWW.ARCADIS-US.COM

DRAWN BY : D.G.VESTER DATE : 01/05
CHECKED BY : J.A.BATTS DATE : 01/05

1/28/2005 2:48:24 PM g:\tra\603031\drawings\final\right lane\r2606a_sd_as_01r.dgn

$$$$$$SYSTIME$$$$$
$$$$$$$$$$$$$$$$$$$$$$$$$$DGN$$$$$$$$$$$$$$$$$$$$$$$$
$$$$USERNAME$$$$

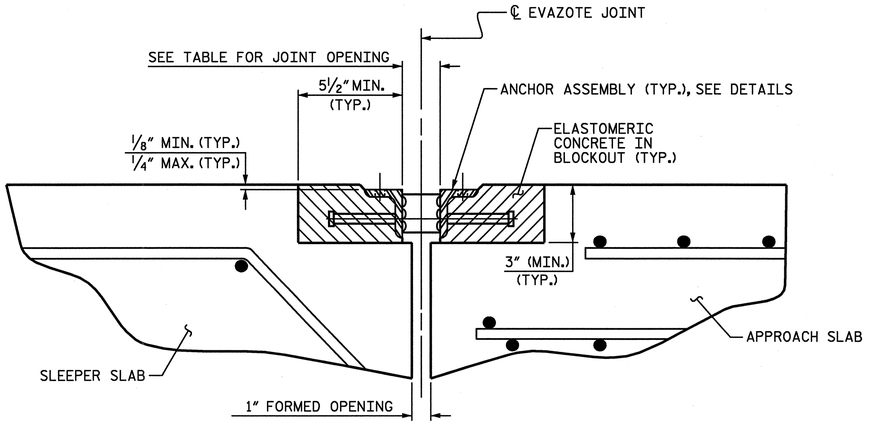

ARMORED JOINT DETAILS

SECTION NORMAL TO JOINT AT APPROACH SLAB

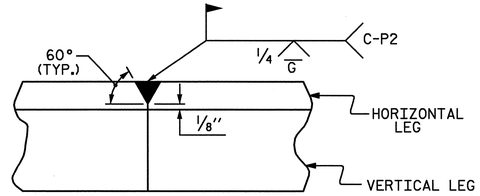

DETAIL- FIELD WELD SPLICE OF ANGLE

NOTES

ANGLES SHALL CONFORM TO AASHTO M270 GRADE 36 STEEL OR APPROVED EQUAL. ALL STUD ANCHORS SHALL CONFORM TO AASHTO M169 GRADES 1010 THRU 1020 OR APPROVED EQUAL.

STUD ANCHORS SHALL BE SHOP WELDED AND ALL HOLES SHALL BE SHOP DRILLED AS SHOWN ON THE PLANS. STUD ANCHORS SHALL BE ELECTRIC ARC END WELDED WITH COMPLETE FUSION.

UPON COMPLETION OF SHOP FABRICATION, THE ENTIRE ANCHOR ASSEMBLY SHALL BE METALLIZED TO A MINIMUM THICKNESS OF 6 MILS. THE ½" Ø STUD ANCHORS AND ANCHOR TABS NEED NOT BE METALLIZED. SEE SPECIAL PROVISION FOR THERMAL SPRAYED COATINGS (METALLIZATION).

ANCHOR ASSEMBLY SHALL BE MADE CONTINUOUS THE LENGTH OF THE JOINT FROM GUTTER TO GUTTER. FOR FIELD SPLICES AT ALL CROWN BREAK POINTS, THE ENDS OF THE STEEL ANGLES SHALL BE CUT PARALLEL TO THE BRIDGE CENTERLINE. FINISHED FIELD WELDS SHALL BE GROUND SMOOTH AND COATED WITH A MINIMUM THICKNESS OF 4 DRY MILS OF ZINC-RICH PAINT IN ACCORDANCE WITH THE STANDARD SPECIFICATIONS.

ANCHOR ASSEMBLY SEGMENTS SHALL NOT BE LESS THAN 12 FEET NOR MORE THAN 20 FEET IN LENGTH. SHORTER SEGMENTS MAY BE USED AT THE EDGE OF ROADWAY OR AT POINTS OF STAGED CONSTRUCTION.

THE ANCHOR ASSEMBLY SHALL BE SECURED AND LEVELED AS SHOWN IN THE "ARMORED JOINT ANCHOR ASSEMBLY DETAILS". NO SUBMITTALS ARE REQUIRED FOR ⅜" Ø EXPANSION ANCHORS, NUTS OR WASHERS. THE CONTRACTOR MAY SUBMIT FOR APPROVAL AN ALTERNATE METHOD OF ALIGNING AND LEVELING THE ANGLES. THE ALTERNATE METHOD SHALL NOT INCLUDE ANY WELDING TO THE OUTSIDE FACE OF THE ANGLES.

AFTER THE ELASTOMERIC CONCRETE HAS BEEN CAST ON BOTH SIDES OF THE JOINT, REMOVE ANY EXCESS CONCRETE THAT COMES THROUGH THE WEEP HOLES AND THOROUGHLY CLEAN THE ANGLES. ANY DAMAGED STEEL SHALL BE COATED WITH A MINIMUM OF 4 MILS OF ZINC-RICH PAINT IN ACCORDANCE WITH THE STANDARD SPECIFICATIONS.

SEE SPECIAL PROVISIONS FOR EVAZOTE JOINT SEALS.

SEE SPECIAL PROVISIONS FOR ELASTOMERIC CONCRETE.

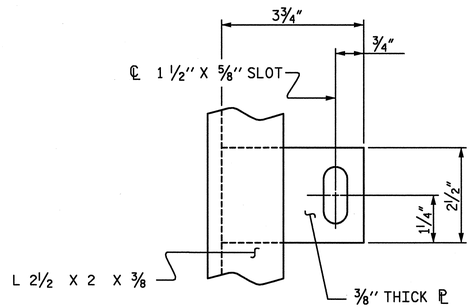

PLAN VIEW OF TAB

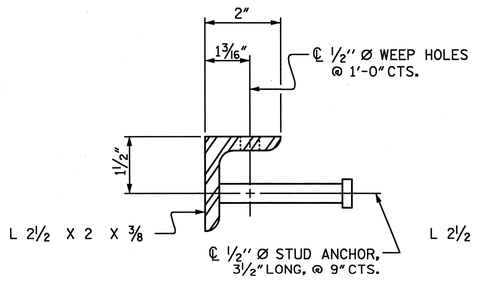

SECTION VIEW OF STUD

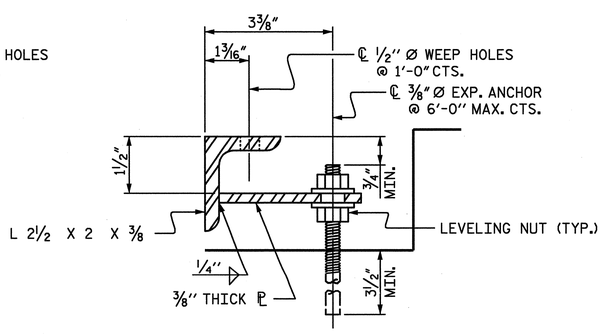

SECTION VIEW OF TAB

MOVEMENT AND SETTING AT EVAZOTE JOINT						
APPROACH SLAB @ END BENT NO.	SKEW ANGLE	NOMINAL UNCOMPRESSED SEAL WIDTH	TOTAL MOVEMENT (ALONG ℄ RDWY)	PERPENDICULAR JOINT OPENING AT 45° F	PERPENDICULAR JOINT OPENING AT 60° F	PERPENDICULAR JOINT OPENING AT 90° F
1	90°-00'-00"	2 ½"	13⁄16"	2"	1 7⁄8"	1 5⁄8"
2	90°-00'-00"	2 ½"	13⁄16"	2"	1 7⁄8"	1 5⁄8"

TOTAL MOVEMENT IS CALCULATED ALONG THE CENTERLINE OF ROADWAY.
JOINT OPENINGS ARE MEASURED PERPENDICULAR TO THE JOINT.

BILL OF MATERIAL		
APPROACH SLAB @ END BENT NO.	ELASTOMERIC CONCRETE * (CU. FT.)	TOTAL LENGTH OF ANGLE (FT)
1	9.5	83'-0"
2	9.5	83'-0"

* BASED ON THE MINIMUM BLOCKOUT SHOWN.

ARMORED JOINT ANCHOR ASSEMBLY DETAILS

PLANS PREPARED BY:
ARCADIS
ARCADIS G&M OF NORTH CAROLINA, INC.
801 CORPORATE CENTER DRIVE, SUITE 300
RALEIGH, NORTH CAROLINA 27607-5073
TEL: 919/854-1282 FAX: 919/854-5448
WWW.ARCADIS-US.COM

DRAWN BY : D.G.VESTER DATE : 01/05
CHECKED BY : J.A.BATTS DATE : 01/05

NORTH CAROLINA PROFESSIONAL SEAL 18056 ENGINEER JOHN A. BATTS 1-31-05

PROJECT NO. R-2606A
RANDOLPH COUNTY
STATION: 22+65.00 -L-

STATE OF NORTH CAROLINA
DEPARTMENT OF TRANSPORTATION
RALEIGH
SUBSTRUCTURE
ARMORED EVAZOTE JOINT DETAILS
(RIGHT LANE)

REVISIONS						SHEET NO.
NO.	BY:	DATE:	NO.	BY:	DATE:	S-132
1			3			TOTAL SHEETS
2			4			199

1/28/2005 2:48:24 PM g:\tra\60303\drawings\final\right lane\r2606a_sd_js_01r.dgn

F.A. PROJECT NO. NHF-311(18)

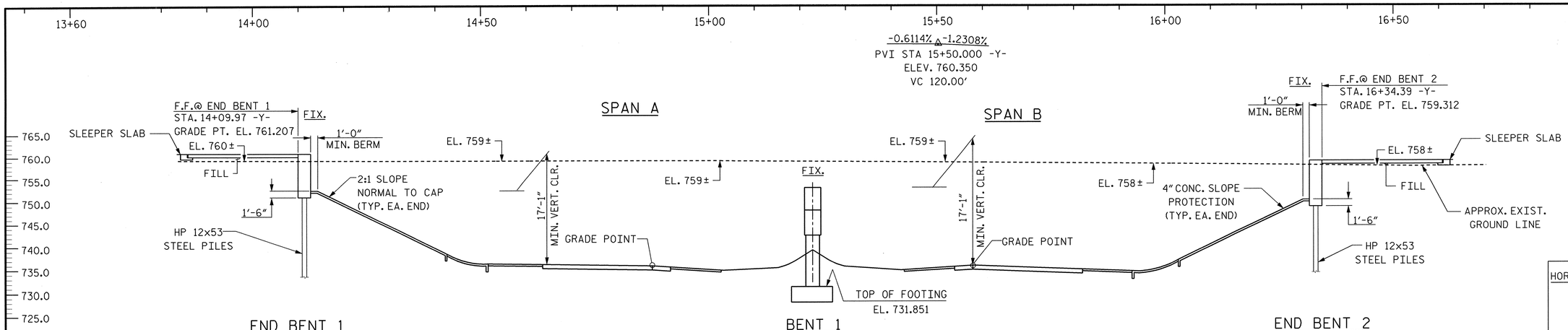

SECTION ALONG ℄ -Y-

(BENTS ON SECTION @ RIGHT ANGLES TO BENTS)

HORIZONTAL CURVE DATA -Y-
PI STA. 17+54.57-Y-
Δ = 37°-44'-28.5"(RT)
T = 119.63'
L = 230.55'
R = 350.00'

HORIZONTAL CURVE DATA -L-
PI STA. 59+01.51-L-
Δ = 45°-38'-52.0"(LT)
T = 2651.37'
L = 5019.24'
R = 6300.00'

-L- GRADE POINT LINE
VERTICAL CURVE DATA
+1.2881% Δ +0.9447%
PVI STA 43+00.00-L-
ELEV. 745.517
VC 180.00'

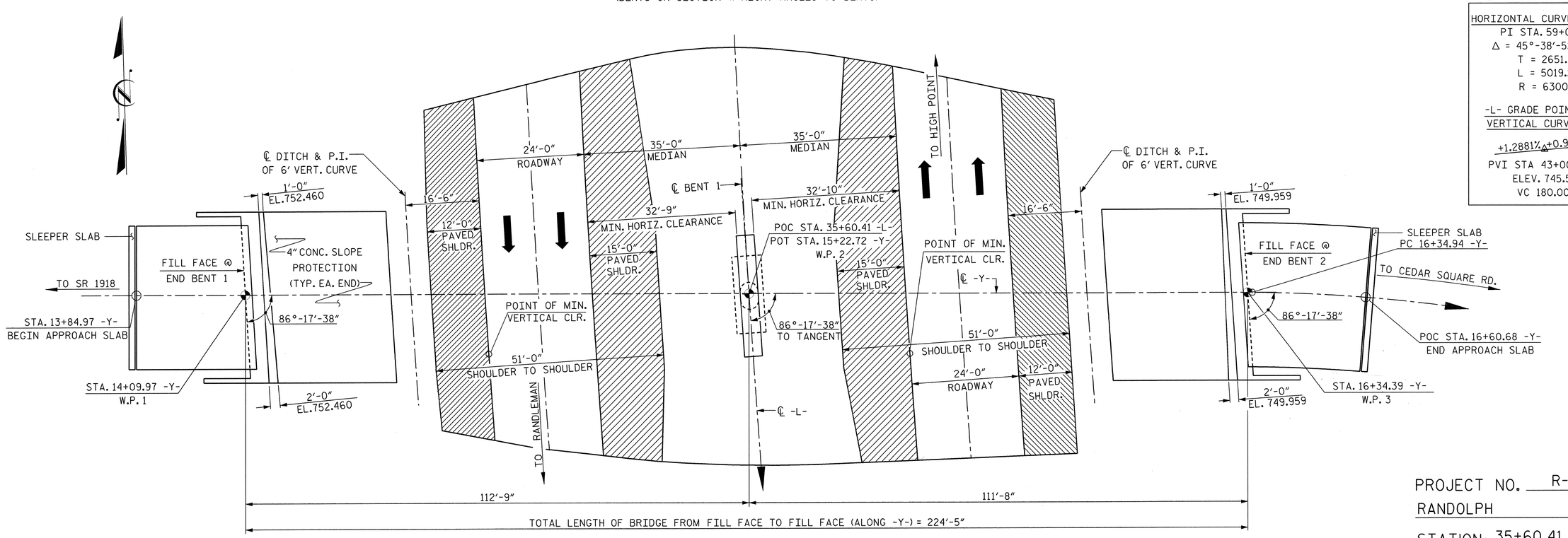

PLAN

NOTE: PILES NOT SHOWN FOR CLARITY PURPOSES

PROJECT NO. R-2606A

RANDOLPH COUNTY

STATION: 35+60.41 -L- POC
15+22.72 -Y- POT

SHEET 1 OF 3 BRIDGE NO. 518

STATE OF NORTH CAROLINA
DEPARTMENT OF TRANSPORTATION
RALEIGH

GENERAL DRAWING FOR BRIDGE ON POOLE ROAD OVER US 311 BETWEEN SR 1918 AND CEDAR SQUARE ROAD

NORTH CAROLINA PROFESSIONAL SEAL 11725 ENGINEER DAVID R. RUGGLES
David Ruggles
1-26-05

NORTH CAROLINA PROFESSIONAL SEAL 23020 ENGINEER JAMES L. BOLDEN, JR.
James L. Bolden, Jr.
1-26-05

REVISIONS						SHEET NO.
NO.	BY:	DATE:	NO.	BY:	DATE:	S-133
1			3			TOTAL SHEETS
2			4			144

DRAWN BY: A.P. TUAZAMA DATE: 8-04
CHECKED BY: J.L. BOLDEN, JR. DATE: 8-04

DWG. 1 OF 34

STR.#7

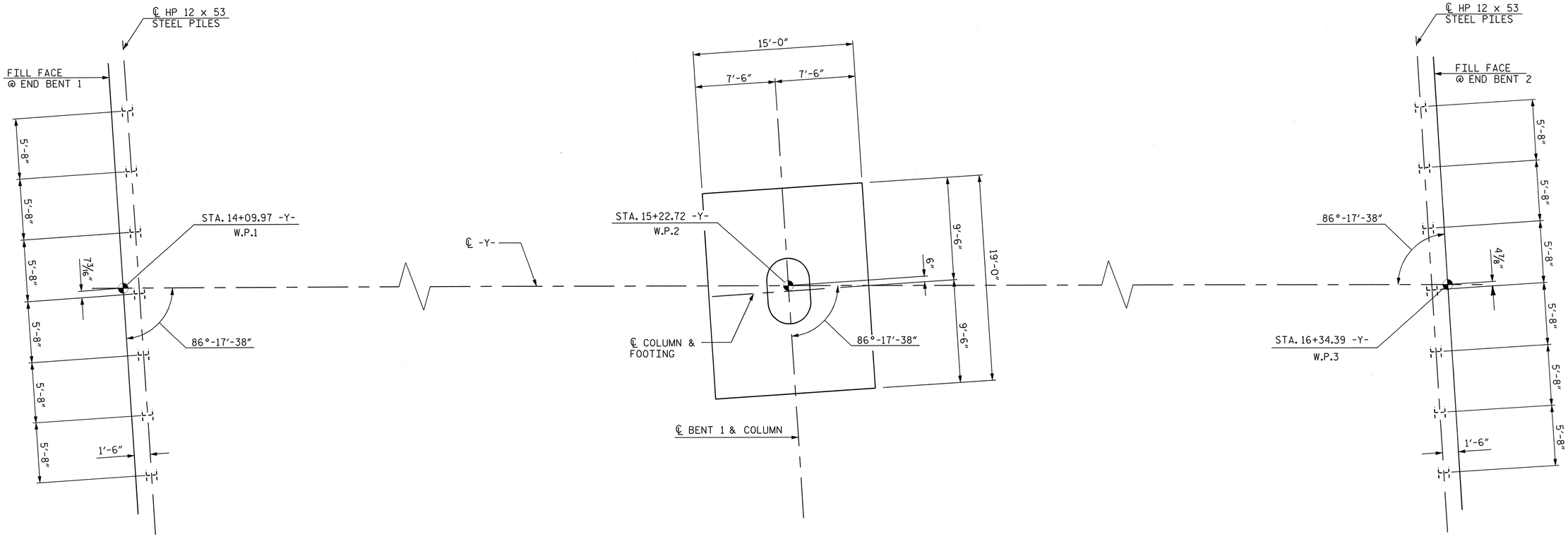

END BENT 1

BENT 1

END BENT 2

FOUNDATION LAYOUT

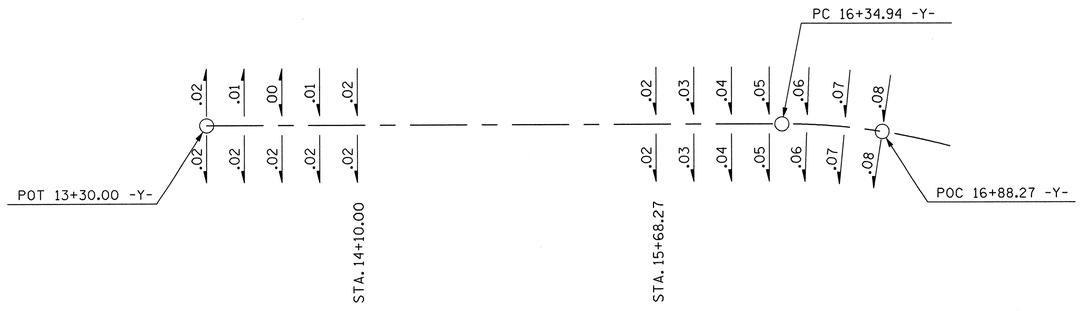

SKETCH SHOWING SUPERELEVATION TRANSITION

NOTES

ALL PILES ARE HP 12 x 53 STEEL PILES.

PILE DIMENSIONS ARE SHOWN TO THE CENTERLINE OF THE PILE AT THE BOTTOM OF THE END BENT CAP.

NORTH CAROLINA PROFESSIONAL ENGINEER SEAL 11725 DAVID R. RUGGLES
8-3-06

NORTH CAROLINA PROFESSIONAL ENGINEER SEAL 23020 JAMES L. BOLDEN, JR.
8-3-06

PROJECT NO. R-2606A

RANDOLPH COUNTY

STATION: 35+60.41 -L- POC
15+22.72 -Y- POT

SHEET 2 OF 3

STATE OF NORTH CAROLINA
DEPARTMENT OF TRANSPORTATION
RALEIGH

GENERAL DRAWING
FOR BRIDGE ON POOLE ROAD
OVER US 311 BETWEEN SR 1918
AND CEDAR SQUARE ROAD

REVISIONS						SHEET NO.
NO.	BY:	DATE:	NO.	BY:	DATE:	S-134
1			3			TOTAL SHEETS
2			4			199

DWG. 2 OF 34

DRAWN BY: A. P. TUAZAMA DATE : 8-04
CHECKED BY: J. L. BOLDEN, JR. DATE : 8-04

GENERAL NOTES:

ASSUMED LIVE LOAD = HS 20 OR ALTERNATE LOADING.

FOR OTHER DESIGN DATA AND GENERAL NOTES, SEE SHEET SN.

THIS BRIDGE HAS BEEN DESIGNED BY THE STRENGTH DESIGN METHOD AS SPECIFIED IN AASHTO STANDARD SPECIFICATIONS.

ALL STRUCTURAL STEEL SHALL BE AASHTO M270 GRADE 50W AND PAINTED IN ACCORDANCE WITH SYSTEM 4 OF ARTICLE 442-7 OF THE STANDARD SPECIFICATIONS UNLESS OTHERWISE NOTED ON THE PLANS.

FOR EROSION CONTROL MEASURES SEE EROSION CONTROL PLANS.

REMOVABLE FORMS MAY BE USE IN LIEU OF METAL STAY-IN-PLACE FORMS IN ACCORDANCE WITH ARTICLE 420-3 OF THE STANDARD SPECIFICATION.

THE CLASS AA CONCRETE IN THE BRIDGE DECK SHALL CONTAIN FLY ASH OR GROUND GRANULATED BLAST FURNACE SLAG AT THE SUBSTITUTION RATE SPECIFIED IN ARTICLE 1024-1 AND IN ACCORDANCE WITH ARTICLES 1024-5 AND 1024-6 OF THE STANDARD SPECIFICATIONS. NO PAYMENT WILL BE MADE FOR THIS SUBSTITUTION AS IT IS CONSIDERED INCIDENTAL TO THE COST OF THE REINFORCED CONCRETE DECK SLAB

THIS BRIDGE HAS BEEN DESIGNED IN ACCORDANCE WITH THE REQUIREMENTS OF THE STANDARD SPECIFICATIONS FOR SEISMIC DESIGN OF HIGHWAY BRIDGES FOR SEISMIC PERFORMANCE CATEGORY A.

THE CONTRACTOR SHALL PROVIDE INDEPENDENT ASSURANCE SAMPLES OF REINFORCING STEEL AS FOLLOWS: FOR PROJECTS REQUIRING UP TO 400 TONS OF REINFORCING STEEL, ONE 30 INCH SAMPLE OF EACH SIZE BAR USED, AND FOR PROJECTS REQUIRING OVER 400 TONS OF REINFORCING STEEL, TWO 30 INCH SAMPLES OF EACH SIZE BAR USED. THE BARS FROM WHICH THE SAMPLES ARE TAKEN MUST THEN BE SPLICED WITH REPLACEMENT BARS OF THE SIZE AND LENGTH OF THE SAMPLE PLUS A MINIMUM LAP SPLICE OF THIRTY BAR DIAMETERS.

FOR SUBMITTAL OF WORKING DRAWINGS, SEE SPECIAL PROVISIONS.

NEEDLE BEAMS WILL NOT BE ALLOWED UNLESS OTHERWISE CALLED FOR ON THE PLANS OR APPROVED BY THE ENGINEER.

FOR FALSEWORK AND FORMWORK, SEE SPECIAL PROVISIONS.

THE REQUIRED BEARING CAPACITY OF THE SPREAD FOOTINGS AT BENT NO. 1 IS 5 TSF. THE REQUIRED BEARING CAPACITY SHALL BE VERIFIED

THE FOOTING AT BENT NO. 1 SHALL BE KEYED AT LEAST 12 INCHES INTO ROCK WITH THE MINIMUM THICKNESS AS SHOWN ON THE PLANS.

PILES FOR END BENTS 1 AND 2 SHALL BE DRIVEN TO A MINIMUM BEARING CAPACITY OF 60 TONS.

PILE EXCAVATION SHALL BE UTILIZED TO INSTALL PILES TO ELEVATION 740.0 FEET AT END BENT NO. 1. SEE PILE EXCAVATION SPECIAL PROVISION.

WHEN DRIVING PILES, THE MAXIMUM BLOW COUNT SHALL NOT BE EXCEEDED.

STEEL PILE POINTS ARE REQUIRED FOR PILES AT END BENT NO. 1 AND END BENT NO. 2. SEE SPECIAL PROVISIONS FOR STEEL PILE POINTS.

FOR CRANE SAFETY, SEE SPECIAL PROVISIONS.

WORK SHALL NOT BE STARTED ON THIS BRIDGE UNTIL ROADWAY SECTION HAS BEEN EXCAVATED.

FOR STEEL H PILES, SEE SPECIAL PROVISIONS.

FOR METRIC STRUCTURAL STEEL, SEE SPECIAL PROVISIONS.

BENCH MARK: BM #3 ELEV.= 757.60, RR SPIKE IN BASE OF 24" OAK: STA.18+52.85-Y- 40.1132' OFFSET LEFT

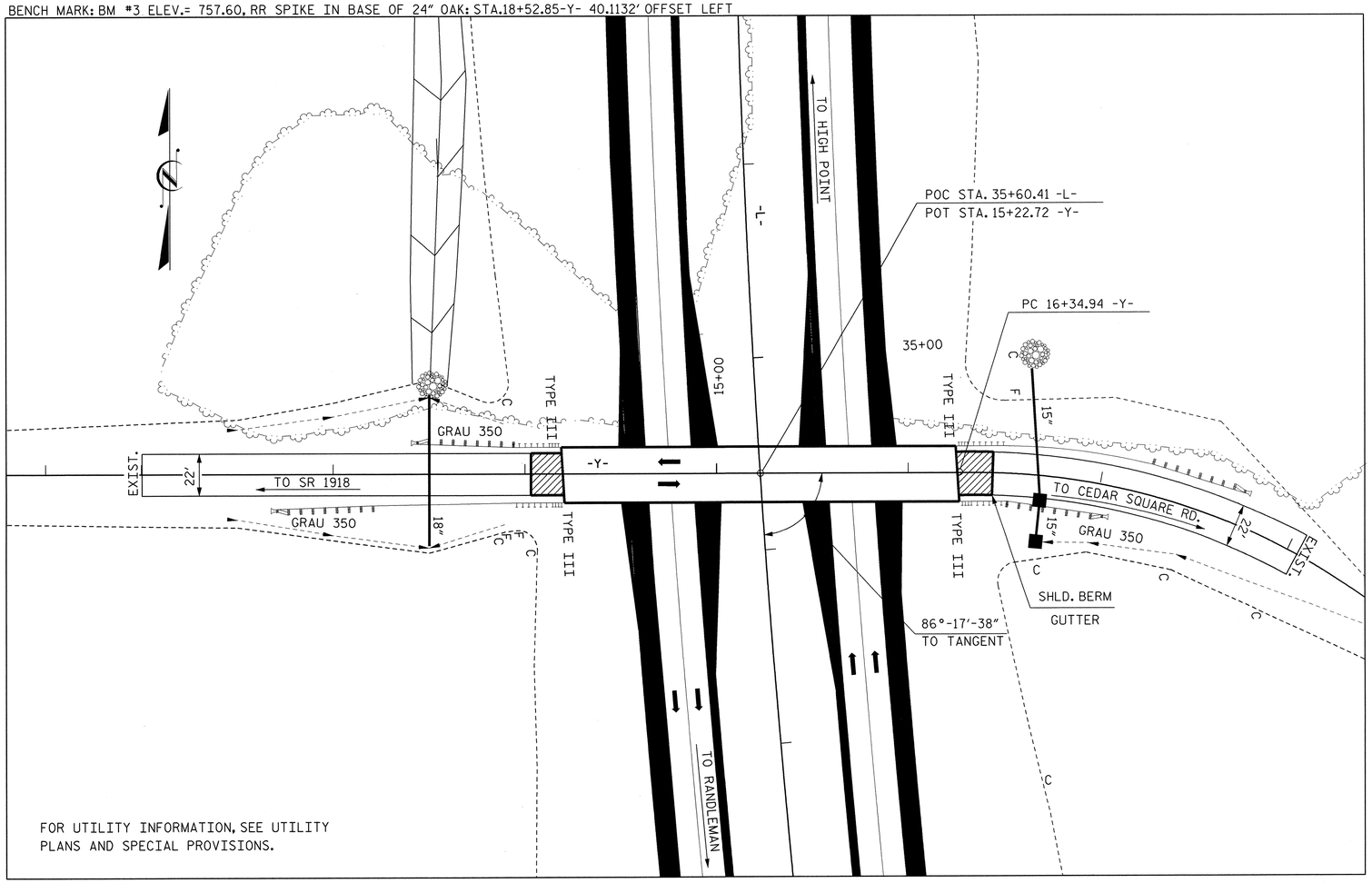

FOR UTILITY INFORMATION, SEE UTILITY PLANS AND SPECIAL PROVISIONS.

LOCATION SKETCH

TOTAL BILL OF MATERIAL

	PILE EXCAVATION IN SOIL	PILE EXCAVATION NOT IN SOIL	FOUNDATION EXCAVATION	REINFORCED CONCRETE DECK SLAB	GROOVING BRIDGE FLOORS	CLASS A CONCRETE	BRIDGE APPROACH SLABS	REINFORCING STEEL	STRUCTURAL STEEL	HP 12 X 53 STEEL PILES		STEEL PILE POINTS	CONCRETE BARRIER RAIL	4" SLOPE PROTECTION	POT BEARINGS	EVAZOTE JOINT SEALS
	FEET	FEET	LUMP SUM	SQ. FEET	SQ. FEET	CU. FEET	LUMP SUM	LBS.	APPROX. LBS.	NO.	FEET	EA.	LIN. FEET	SQ. YARDS	LUMP SUM	LUMP SUM
SUPERSTRUCTURE				7,184	7,185		L. S.		226,800				445.50		L. S.	L. S.
END BENT 1	50.0	28.0				21.2		3,519		7	105.0	7		155		
BENT 1			L.S.			83.4		14,384								
END BENT 2						24.9		3,986		7	105.0	7		150		
TOTAL	50.0	28.0	LUMP SUM	7,184	7,185	129.5	LUMP SUM	21,889	226,800	14	210.0	14	445.50	305	LUMP SUM	LUMP SUM

PROJECT NO. R-2606A

RANDOLPH COUNTY

STATION: 35+60.41 -L- POC
15+22.72 -Y- POT

SHEET 3 OF 3

STATE OF NORTH CAROLINA
DEPARTMENT OF TRANSPORTATION
RALEIGH

GENERAL DRAWING
FOR BRIDGE ON POOLE ROAD
OVER US 311 BETWEEN SR 1918
AND CEDAR SQUARE ROAD

NORTH CAROLINA PROFESSIONAL SEAL 11725 ENGINEER DAVID R. RUGGLES
David Ruggles 1-26-05

NORTH CAROLINA PROFESSIONAL SEAL 23020 ENGINEER JAMES L. BOLDEN, JR.
James L. Bolden, Jr. 1-26-05

DRAWN BY: A. P. TUAZAMA DATE : 8-04
CHECKED BY: J.L. BOLDEN, JR. DATE : 8-04

DWG. 3 OF 34

REVISIONS						SHEET NO.
NO.	BY:	DATE:	NO.	BY:	DATE:	S-135
1			3			TOTAL SHEETS
2			4			199

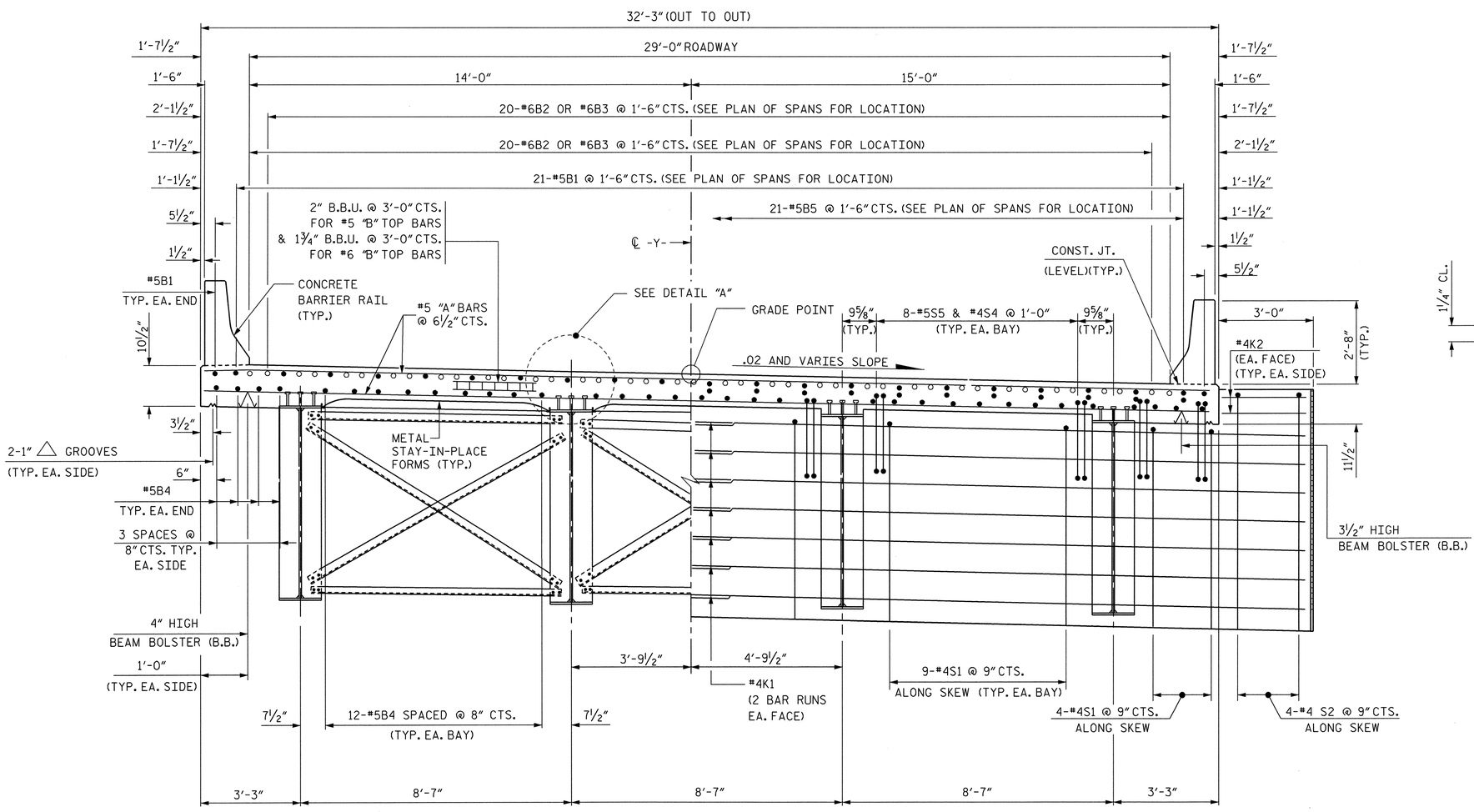

HALF SECTION @ INTERMEDIATE AND BENT DIAPHRAGMS D1

HALF SECTION @ END BENT

END BENT DIAPHRAGMS NOT SHOWN FOR CLARITY

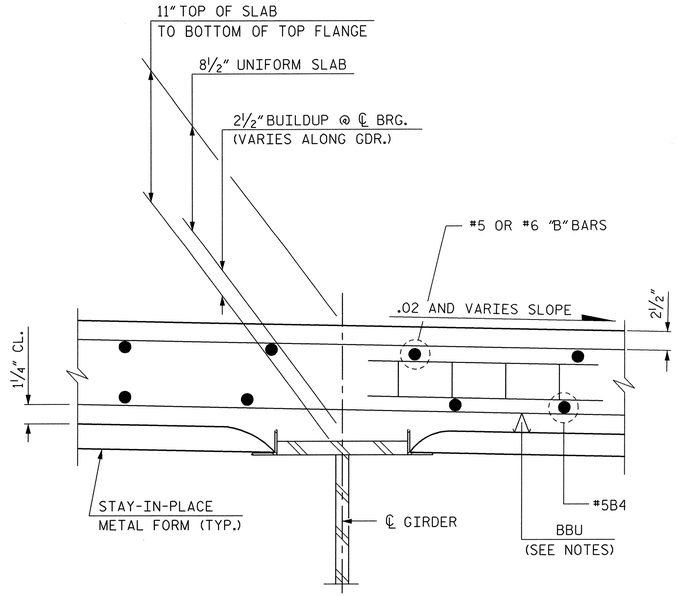

DETAIL "A"

TYPICAL SECTION

NOTES:

PROVIDE 1 1/4 " HIGH BEAM BOLSTERS UPPER AT 4'-0" CTS. ATOP THE METAL STAY-IN-PLACE FORMS TO SUPPORT THE BOTTOM MAT OF 'A' BARS. WHEN USING REMOVABLE FORMS, PROVIDE CONTINUOUS HIGH CHAIRS FOR METAL DECK (C.H.C.M.) @ 4'-0" CTS. WITH A HEIGHT TO SUPPORT THE BOTTOM MAT OF 'A' BARS A CLEAR DISTANCE OF 2½" ABOVE THE TOP OF THE REMOVABLE FORM.

PREVIOUSLY CAST CONCRETE IN A CONTINUOUS UNIT SHALL HAVE ATTAINED A MINIMUM COMPRESSIVE STRENGTH OF 3,000 PSI BEFORE ADDITIONAL CONCRETE IS CAST IN THE UNIT.

STRUCTURAL STEEL ERECTION IN A CONTINUOUS UNIT SHALL BE COMPLETE BEFORE FALSEWORK OR FORMS ARE PLACED ON THE UNIT.

THE CONTRACTOR MAY, WHEN NECESSARY, PROPOSE A SCHEME FOR AVOIDING INTERFERENCE BETWEEN METAL STAY-IN-PLACE FORM SUPPORTS OR FORMS AND BEAM/GIRDER STIFFENERS OR CONNECTOR PLATES. THE PROPOSAL SHALL BE INDICATED, AS APPROPRIATE, ON EITHER THE STEEL WORKING DRAWINGS OR THE METAL STAY-IN-PLACE FORM WORKING DRAWINGS.

THE CONTRACTOR SHALL ADJUST THE GIRDER BUILDUPS AS NECESSARY TO INCORPORATE A MAXIMUM PERMISSIBLE VARIATION IN POT BEARING DEPTH OF ½". SEE SPECIAL PROVISION FOR POT BEARINGS.

METAL STAY-IN-PLACE FORMS SHALL NOT BE WELDED TO BEAM OR GIRDER FLANGES IN THE ZONES REQUIRING CHARPY V-NOTCH TEST. SEE STRUCTURAL STEEL DETAIL SHEETS.

NORTH CAROLINA PROFESSIONAL SEAL 11725 ENGINEER DAVID R. RUGGLES
1-26-05

NORTH CAROLINA PROFESSIONAL SEAL 23020 ENGINEER JAMES L. BOLDEN JR.
1-26-05

DRAWN BY: A. P. TUAZAMA DATE: 8-04
CHECKED BY: J. L. BOLDEN, JR. DATE: 8-04

PROJECT NO. R-2606A
RANDOLPH COUNTY
STATION: 35+60.41 -L- POC

SHEET 1 OF 2

STATE OF NORTH CAROLINA
DEPARTMENT OF TRANSPORTATION
RALEIGH

SUPERSTRUCTURE
TYPICAL SECTION

REVISIONS						SHEET NO.
NO.	BY:	DATE:	NO.	BY:	DATE:	S-136
1			3			TOTAL SHEETS
2			4			149

DWG. 4 OF 34

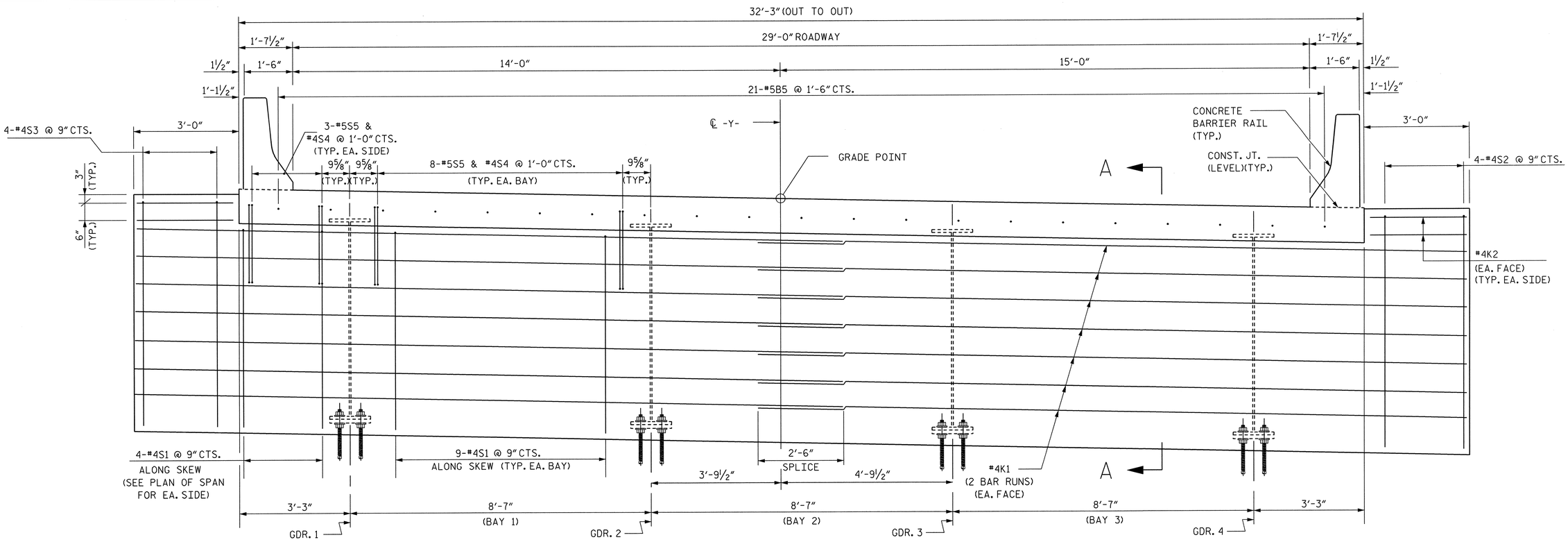

TYPICAL SECTION @ INTEGRAL ABUTMENT

END BENT DIAPHRAGMS NOT SHOWN FOR CLARITY

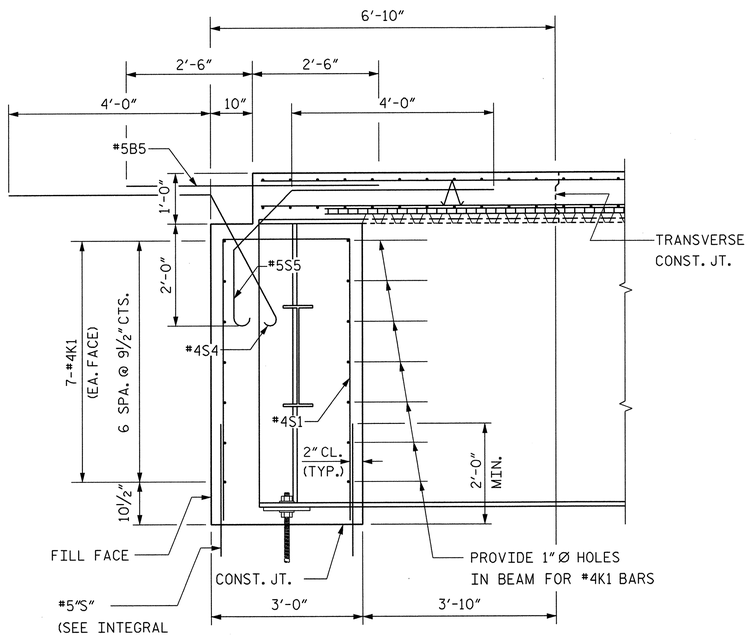

SECTION A-A

SHOWN NORMAL TO FILL FACE

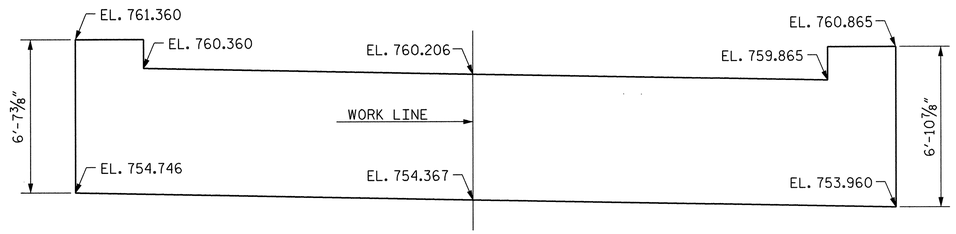

END BENT 1

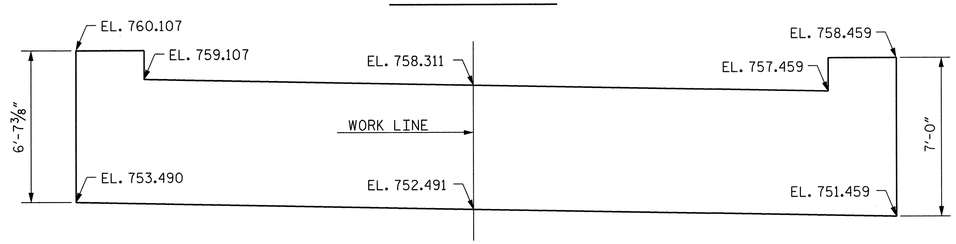

END BENT 2

NORTH CAROLINA PROFESSIONAL SEAL 11725 ENGINEER DAVID R. RUGGLES
David Ruggles 1-26-05

NORTH CAROLINA PROFESSIONAL SEAL 23020 ENGINEER JAMES L. BOLDEN, JR.
James L. Bolden Jr. 1-26-05

PROJECT NO. R-2606A

RANDOLPH COUNTY

STATION: 35+60.41 -L- POC

SHEET 2 OF 2

STATE OF NORTH CAROLINA
DEPARTMENT OF TRANSPORTATION
RALEIGH

SUPERSTRUCTURE
TYPICAL SECTION

REVISIONS						SHEET NO.
NO.	BY:	DATE:	NO.	BY:	DATE:	S-137
1			3			TOTAL SHEETS
2			4			199

DWG. 5 OF 34

DRAWN BY: A. P. TUAZAMA DATE: 8-04
CHECKED BY: J. L. BOLDEN, JR. DATE: 8-04

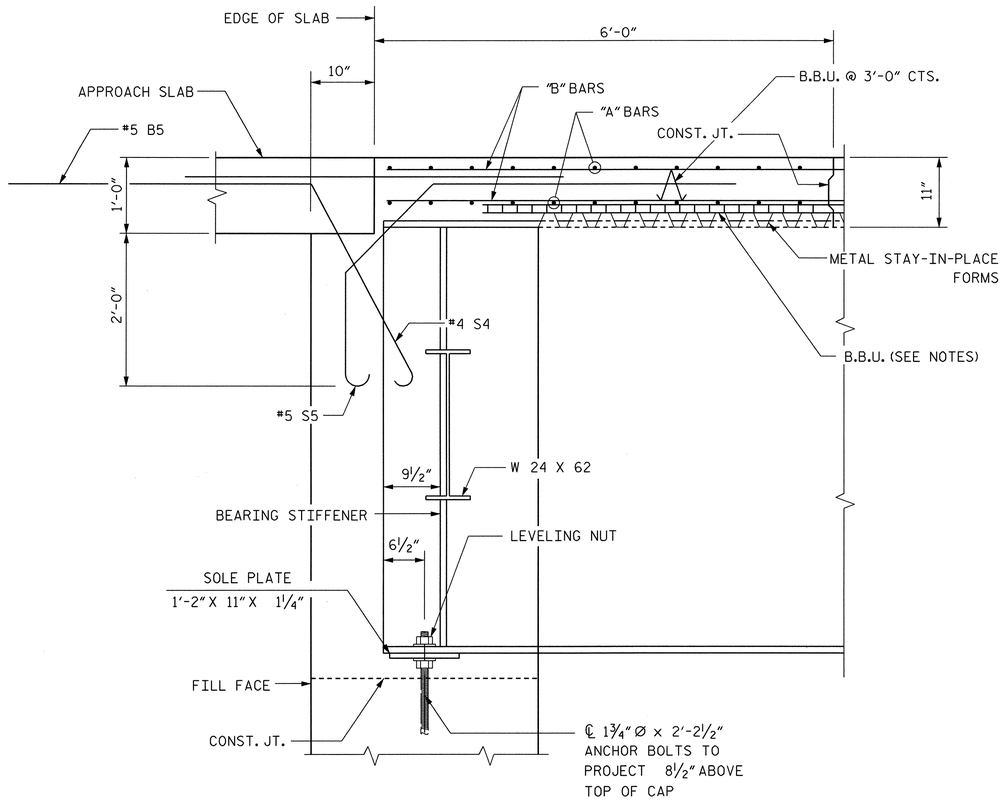

SECTION A-A AT END BENT 1

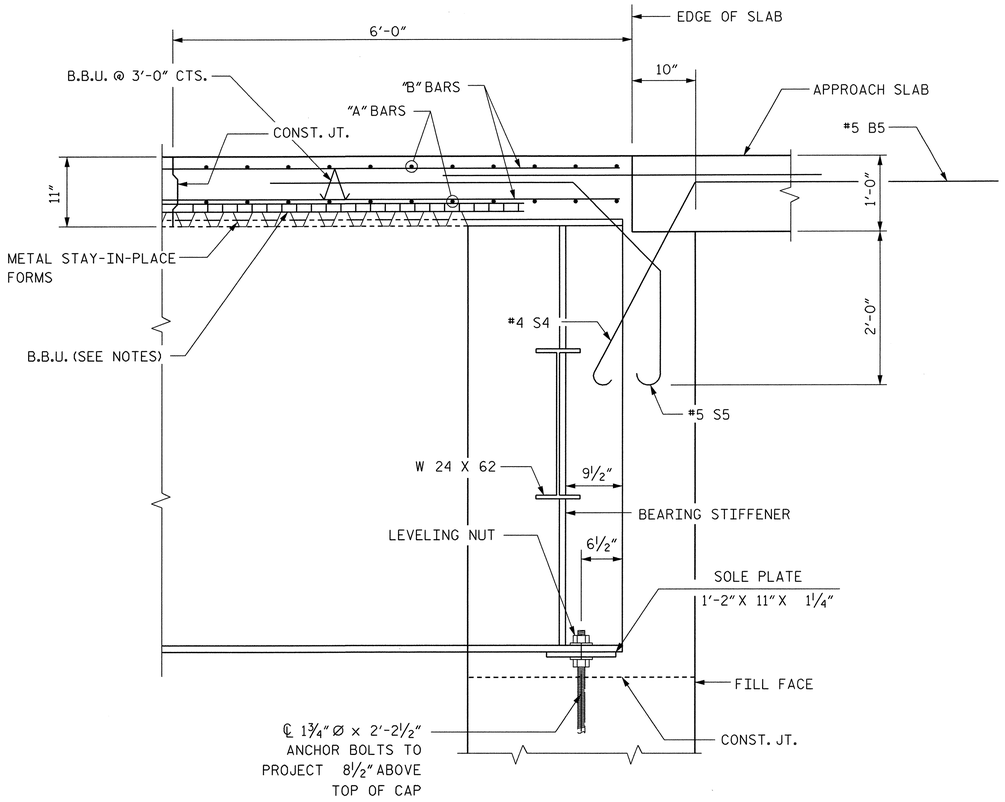

SECTION B-B AT END BENT 2

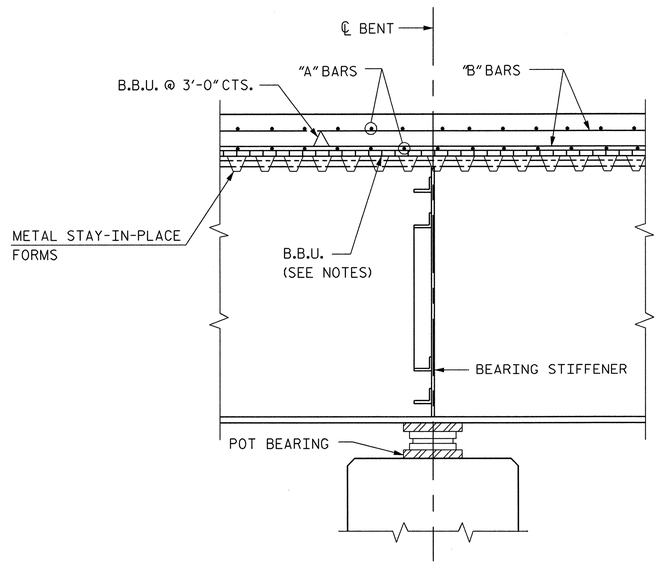

SECTION C-C AT INTERIOR BENT

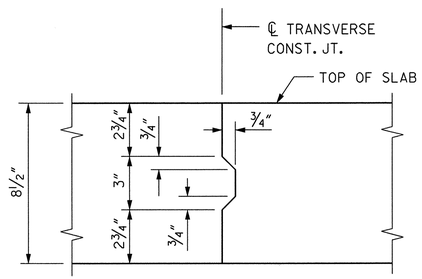

NOTE: REINFORCING STEEL IN SLAB NOT SHOWN. LONGITUDINAL REINFORCING STEEL SHALL BE CONTINUOUS THRU JOINT.

TRANSVERSE CONSTRUCTION JOINT IN DECK SLAB

PROJECT NO. R-2606A

RANDOLPH COUNTY

STATION: 35+60.41 -L- POC

STATE OF NORTH CAROLINA
DEPARTMENT OF TRANSPORTATION
RALEIGH

SUPERSTRUCTURE DETAILS

NORTH CAROLINA PROFESSIONAL SEAL 11725 ENGINEER DAVID R. RUGGLES
David Ruggles 1-26-05

NORTH CAROLINA PROFESSIONAL SEAL 23020 ENGINEER JAMES L. BOLDEN, JR.
James L. Bolden, Jr. 1-24-05

REVISIONS						SHEET NO.
NO.	BY:	DATE:	NO.	BY:	DATE:	S-138
1			3			TOTAL SHEETS
2			4			199

DRAWN BY: R.C. NELSON DATE : 8-04
CHECKED BY: J.L. BOLDEN, JR. DATE : 8-04

DWG. 6 OF 34

NOTES:

FOR SPLICE LENGTH, SEE TABLE ON "SUPERSTRUCTURE BILL OF MATERIAL" SHEET.

FOR CONCRETE BARRIER RAIL REINFORCMENT AND JOINT SPACING, SEE "SUPERSTRUCTURE PLAN OF BARRIER RAIL" SHEET.

FOR SECTIONS A-A AND C-C, SEE "SUPERSTRUCTURE DETAILS" SHEET.

#5 "A" BARS ARE NORMAL TO -Y-

FOR TRANSVERSE CONSTRUCTION JOINT DETAIL, SEE "SUPERSTRUCTURE DETAILS" SHEET.

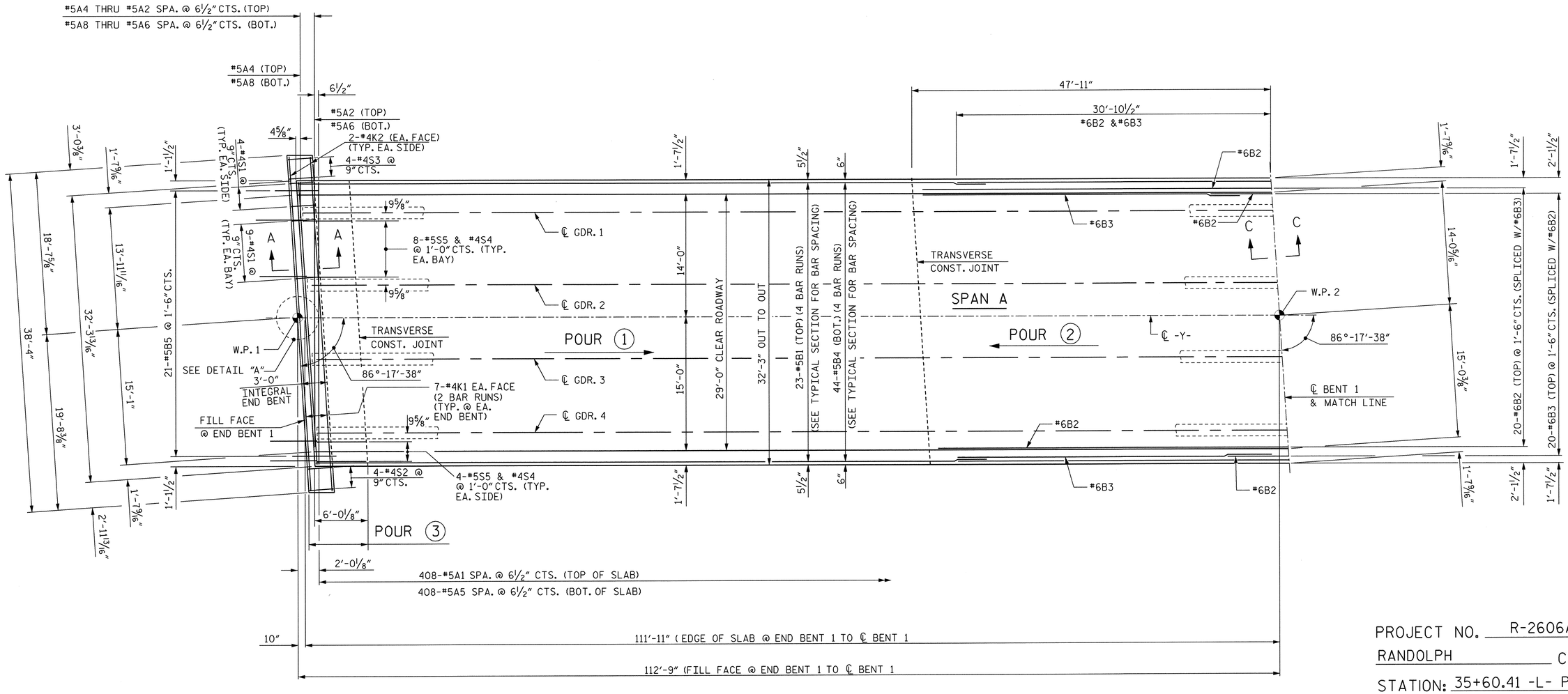

PLAN OF SPAN A

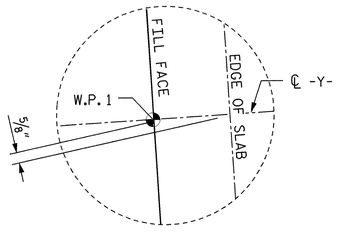

DETAIL "A"

PROJECT NO. R-2606A

RANDOLPH COUNTY

STATION: 35+60.41 -L- POC

STATE OF NORTH CAROLINA
DEPARTMENT OF TRANSPORTATION
RALEIGH

SUPERSTRUCTURE
PLAN OF SPAN A

NORTH CAROLINA PROFESSIONAL SEAL 11725 ENGINEER DAVID R. RUGGLES
David Ruggles
1-26-05

NORTH CAROLINA PROFESSIONAL SEAL 23020 ENGINEER JAMES L. BOLDEN, JR.
James L. Bolden Jr.
1-26-05

REVISIONS						SHEET NO.
NO.	BY:	DATE:	NO.	BY:	DATE:	S-139
1			3			TOTAL SHEETS
2			4			199

DRAWN BY: A. P. TUAZAMA DATE : 8-04
CHECKED BY: J. L. BOLDEN, JR. DATE : 8-04

DWG. 7 OF 34

NOTES:

FOR SPLICE LENGTH, SEE TABLE ON "SUPERSTRUCTURE BILL OF MATERIAL" SHEET.

FOR CONCRETE BARRIER RAIL REINFORCMENT AND JOINT SPACING, SEE "SUPERSTRUCTURE PLAN OF BARRIER RAIL" SHEET.

FOR SECTIONS B-B AND C-C, SEE "SUPERSTRUCTURE DETAILS" SHEET.

#5 "A" BARS ARE NORMAL TO -Y-

FOR TRANSVERSE CONSTRUCTION JOINT DETAIL, SEE "SUPERSTRUCTURE DETAILS" SHEET.

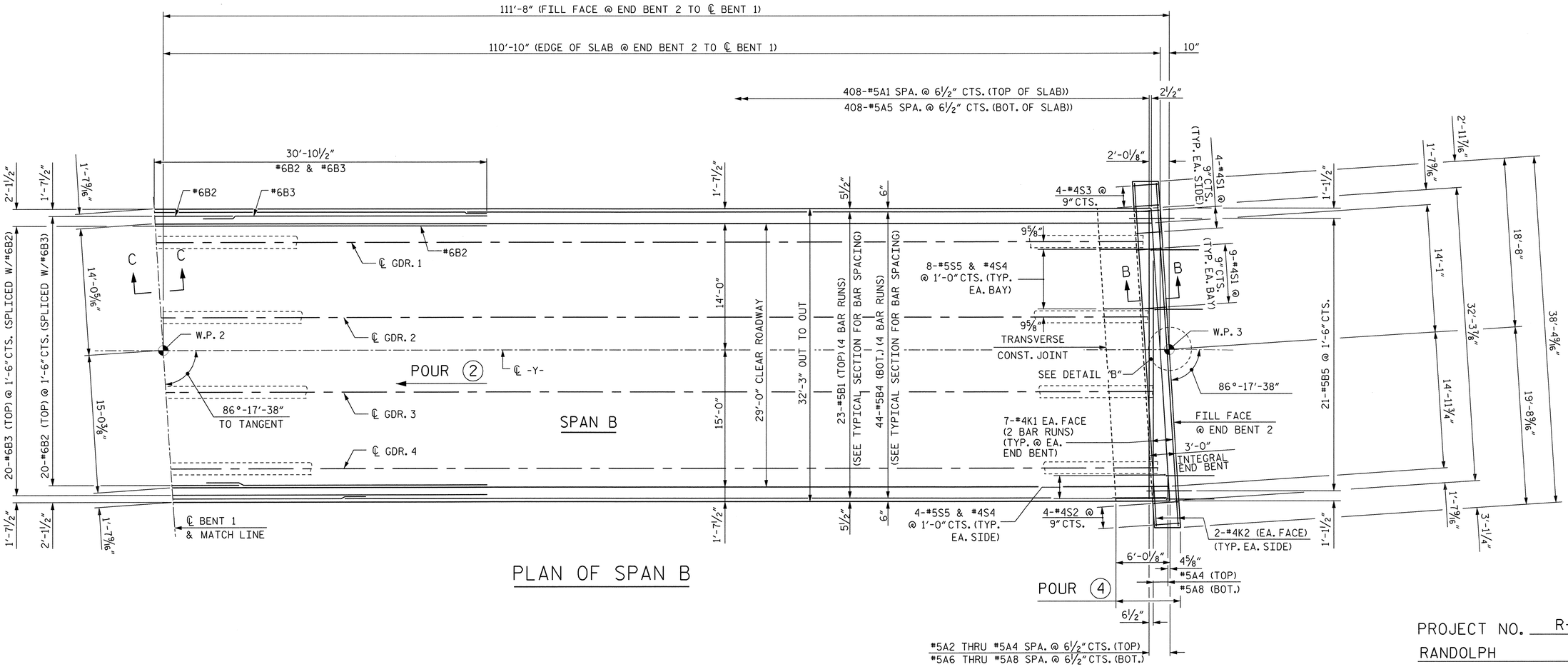

PLAN OF SPAN B

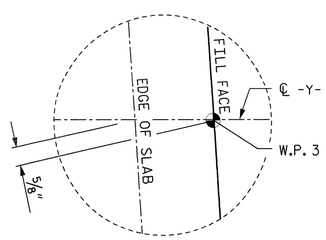

DETAIL "B"

PROJECT NO. R-2606A

RANDOLPH COUNTY

STATION: 35+60.41 -L- POC

STATE OF NORTH CAROLINA
DEPARTMENT OF TRANSPORTATION
RALEIGH

SUPERSTRUCTURE
PLAN OF SPAN B

NORTH CAROLINA PROFESSIONAL SEAL 11725 ENGINEER DAVID R. RUGGLES
David Ruggles
1-26-05

NORTH CAROLINA PROFESSIONAL SEAL 23020 ENGINEER JAMES L. BOLDEN, JR.
James L. Bolden, Jr.
1-26-05

REVISIONS						SHEET NO.
NO.	BY:	DATE:	NO.	BY:	DATE:	S-140
1			3			TOTAL SHEETS
2			4			144

DWG. 8 OF 34

DRAWN BY: A. P. TUAZAMA DATE : 8-04
CHECKED BY: J. L. BOLDEN, JR. DATE : 8-04

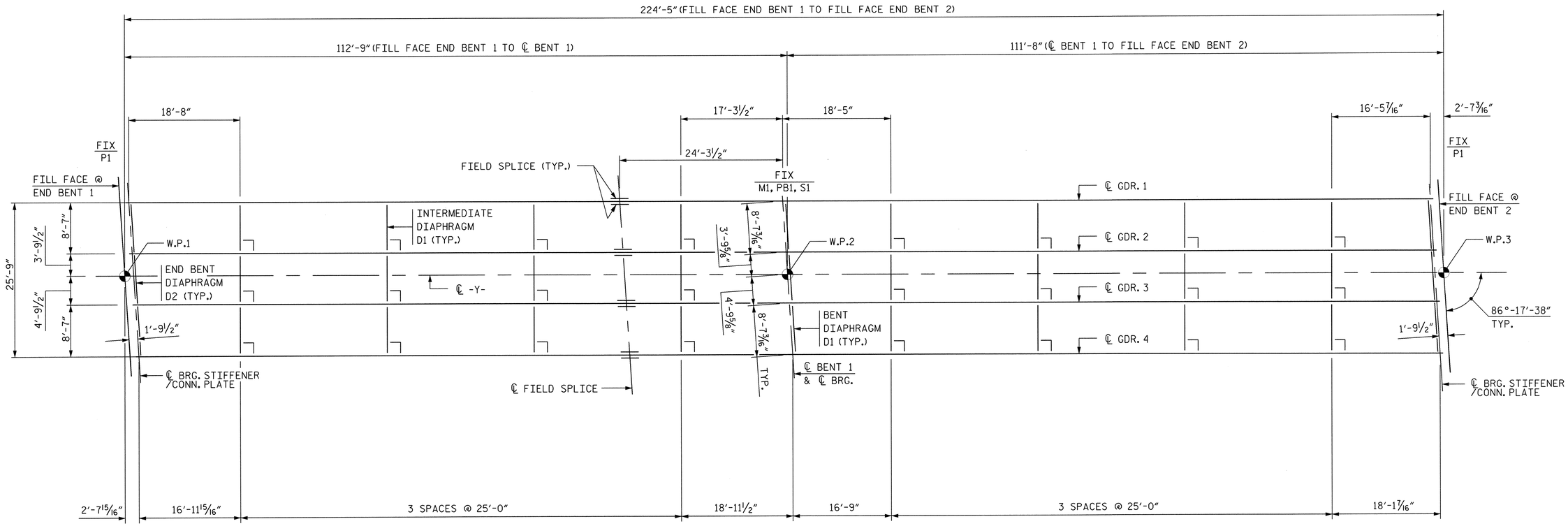

SPAN A

SPAN B

FRAMING PLAN

NOTES:
BENT DIAPHRAGMS ARE PARALLEL TO BENT 1.

ALL INTERMEDIATE DIAPHRAGMS ARE PLACED NORMAL TO ℄ OF GIRDERS.

ALL DIMENSIONS ON THIS SHEET ARE HORIZONTAL.

℄ BRG. STIFFENER / CONN. PLATE IS OFFSET 3½″FROM ℄ OF BEARING.

PROJECT NO. R-2606A

RANDOLPH COUNTY

STATION: 35+60.41 -L- POC

STATE OF NORTH CAROLINA
DEPARTMENT OF TRANSPORTATION
RALEIGH

SUPERSTRUCTURE
FRAMING LAYOUT

NORTH CAROLINA PROFESSIONAL SEAL 11725 ENGINEER DAVID R. RUGGLES
1-26-05

NORTH CAROLINA PROFESSIONAL SEAL 23020 ENGINEER JAMES L. BOLDEN, JR.
1-26-05

REVISIONS						SHEET NO.
NO.	BY:	DATE:	NO.	BY:	DATE:	S-141
1			3			TOTAL SHEETS
2			4			199

DWG. 9 OF 34

DRAWN BY: A. P. TUAZAMA DATE : 8-04
CHECKED BY: J.L. BOLDEN, JR. DATE : 8-04

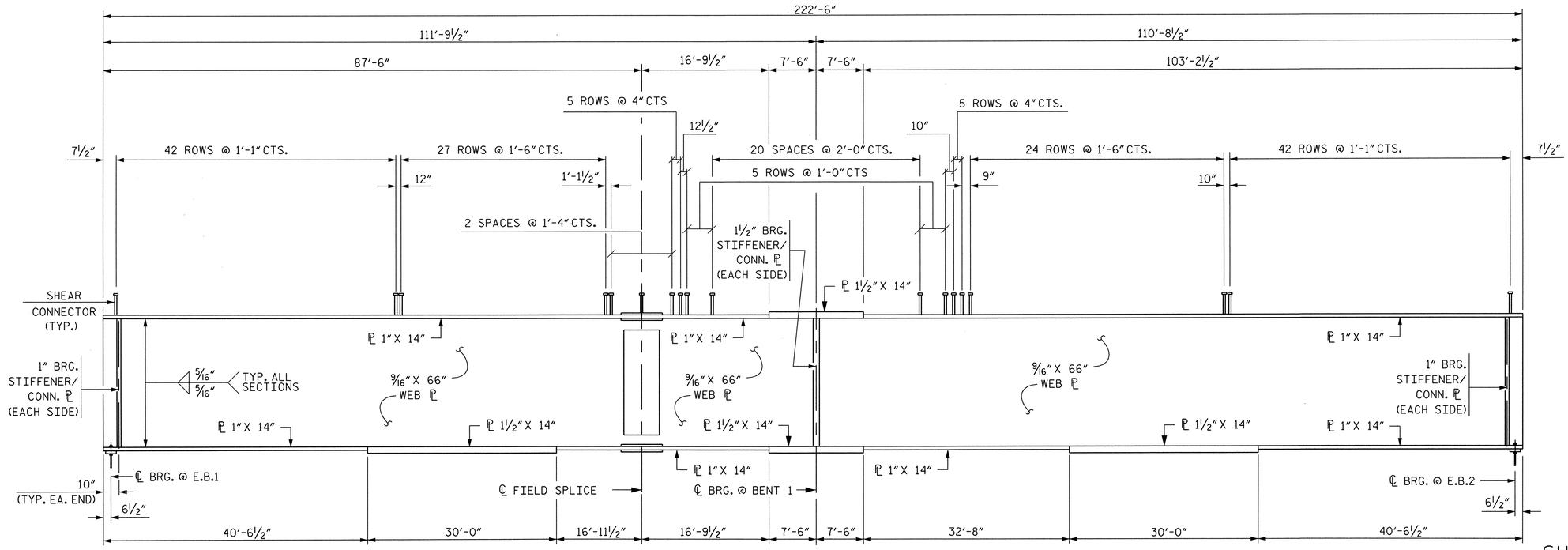

SPAN A

SPAN B

GIRDER ELEVATION

(CONNECTOR PLATES NOT SHOWN FOR CLARITY)

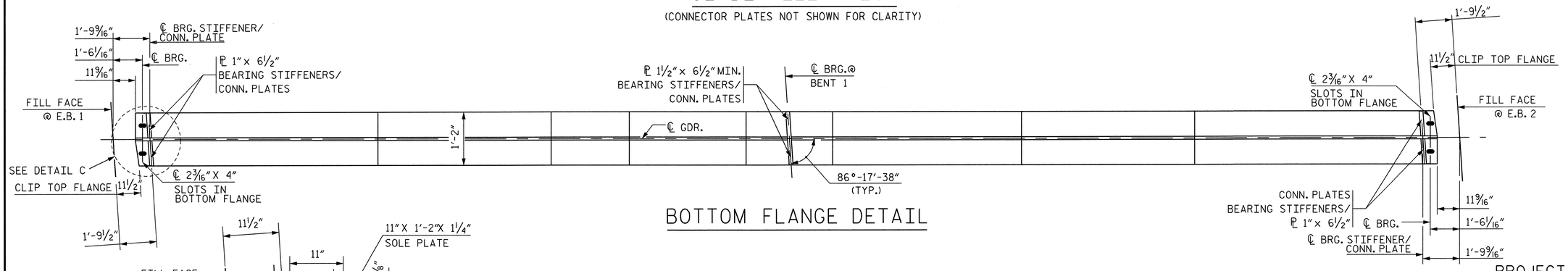

BOTTOM FLANGE DETAIL

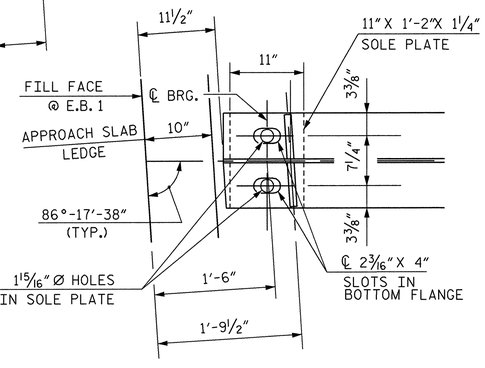

DETAIL C

END BENT 1 SHOWN, END BENT 2 SIMILAR

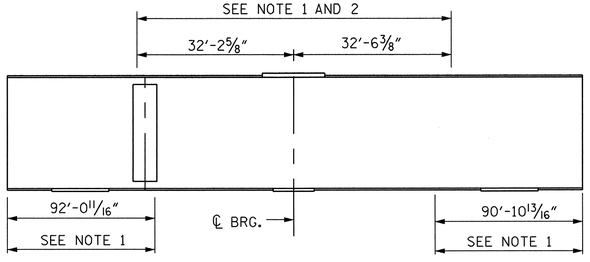

CHARPY V-NOTCH TESTS FOR CONTINUOUS PLATE GIRDER

NOTE 1: CHARPY V-NOTCH TESTS ARE REQUIRED FOR ALL TOP OR BOTTOM FLANGE PLATES WHICH FALL WITHIN THESE LIMITS, ALL WEB PLATES, AND ALL SPLICE PLATES. IF A PERMITTED SHOP FLANGE SPLICE IS NOT USED, CHARPY V-NOTCH TESTS WILL BE REQUIRED FOR THE ENTIRE FLANGE PLATE.

NOTE 2: NO WELDING OF FORMS OR FALSEWORK TO THE TOP FLANGE WILL BE PERMITTED IN THIS REGION.

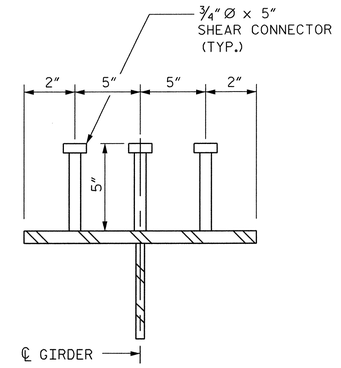

SHEAR CONNECTOR DETAIL

PROJECT NO. R-2606A

RANDOLPH COUNTY

STATION: 35+60.41 -L- POC

SHEET 1 OF 3

STATE OF NORTH CAROLINA
DEPARTMENT OF TRANSPORTATION
RALEIGH

SUPERSTRUCTURE
STRUCTURAL STEEL DETAILS

NORTH CAROLINA PROFESSIONAL SEAL 11725 ENGINEER DAVID R. RUGGLES
1-26-05

NORTH CAROLINA PROFESSIONAL SEAL 23020 ENGINEER JAMES L. BOLDEN JR.
1-26-05

DRAWN BY: A. P. TUAZAMA DATE : 8-04
CHECKED BY: J. L. BOLDEN, JR. DATE : 8-04

DWG. 10 OF 34

REVISIONS						SHEET NO.
NO.	BY:	DATE:	NO.	BY:	DATE:	S-142
1			3			TOTAL SHEETS
2			4			199

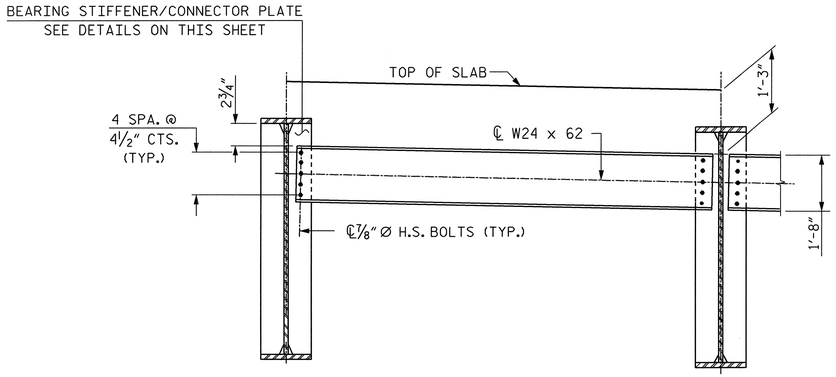

TYPICAL END CROSSFRAME D2

USE AT END BENTS 1 & 2

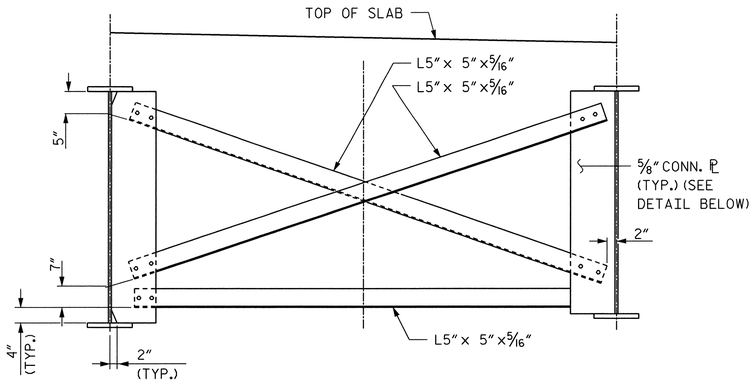

TYPICAL INTERMEDIATE DIAPHRAGM D1 & BENT DIAPHRAGM

NOTES:
ALL STRUCTURAL STEEL SHALL BE AASHTO M270 GRADE 50W AND PAINTED IN ACCORDANCE WITH SYSTEM 4 OF ARTICLE 442-7 OF THE STANDARD SPECIFICATIONS, UNLESS OTHERWISE NOTED ON THE PLANS.

ALL DIMENSIONS SHOWN ARE HORIZONTAL OR VERTICAL, UNLESS OTHERWISE NOTED.

ALL FIELD CONNECTIONS TO BE 7/8" DIAMETER HIGH STRENGTH BOLTS UNLESS OTHERWISE NOTED.

BEARING STIFFENERS ARE TO BE PLACED PARALLEL TO THE CENTERLINE OF BENT OR END BENT AND SHALL BE PLUMB.

ALL CONNECTOR PLATES AT DIAPHRAGMS SHALL BE PLACED IN PAIRS EXCEPT AT EXTERIOR GIRDERS WHERE THEY WILL BE PLACED ON THE INSIDE FACE ONLY.

ENDS OF THE PLATE GIRDERS SHALL BE IN A PLUMB POSITION AFTER THE TOTAL DEAD LOAD DEFLECTION HAS OCCURRED.

INTERMEDIATE DIAPHRAGM CONNECTOR PLATES SHALL BE PLACED NORMAL TO THE GIRDER FLANGES AND WEB.

SHOP SPLICES ARE PERMITTED TO LIMIT THE MAXIMUM REQUIRED FLANGE SPLICE LENGTHS TO 60'-0" AND WEB PIECE LENGTHS TO 45'-0". PERMITTED FLANGE AND WEB SHOP SPLICES SHALL NOT BE LOCATED WITHIN 15'-0" OF MAXIMUM DEAD LOAD DEFLECTION (NOR WITHIN 15'-0" OF INTERMEDIATE BEARINGS OF CONTINUOUS UNITS). KEEP 2'-0" MINIMUM BETWEEN WEB AND FLANGE SHOP SPLICES. KEEP 6" MINIMUM BETWEEN CONNECTOR PLATE OR TRANSVERSE STIFFENER WELDS AND WEB OR FLANGE SHOP SPLICES.

STUDS ON GIRDERS MAY BE SHIFTED UP TO 1" IF NECESSARY TO CLEAR FLANGE SPLICE WELDS.

TENSION ON THE AASHTO M164 BOLTS SHALL BE CALIBRATED USING DIRECT TENSION INDICATOR WASHERS IN ACCORDANCE WITH ARTICLE 440-10 OF THE STANDARD SPECIFICATIONS.

MAIN TENSION MEMBERS SHALL BE CHARPY V-NOTCH (CVN) IMPACT TESTED IN ACCORDANCE WITH ARTICLE 1072-9 OF THE STANDARD SPECIFICATIONS. FOR THE PURPOSE OF IMPACT THE FOLLOWING PLATES AND SHAPES SHALL BE CLASSIFIED AS MAIN TENSION MEMBERS:

ALL FLANGE PLATES WHICH FALL WITHIN THE "TENSION ZONE", SEE NOTES 1 AND 2 ON THE SHEET ENTITLED "STRUCTURAL STEEL DETAIL", SHEET 1 OF 3

ALL WEB PLATES
ALL GIRDER SPLICE PLATES

CAMBERED GIRDER LENGTHS SHALL BE ADJUSTED AND BEARINGS ARE TO BE PLACED ON THE CAMBERED GIRDER SO AS TO BE ALIGNED WITH THE ANCHORS AFTER THE DEAD LOAD DEFLECTION HAS OCCURRED. SHOP DRAWINGS SHALL BE PREPARED ACCORDINGLY.

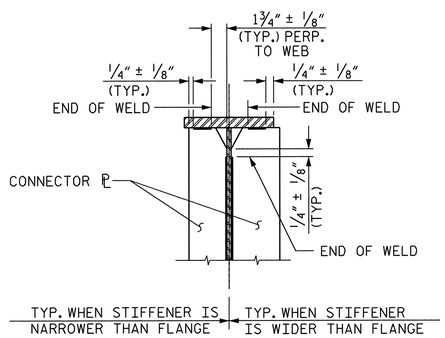

TYPICAL CONNECTOR PLATE CONNECTION

WELD TERMINATION DETAILS

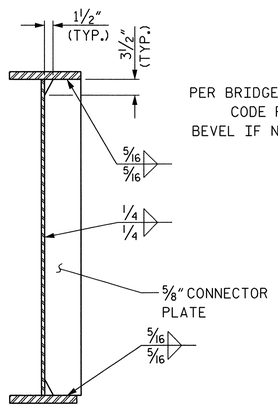

CONNECTOR PLATE DETAIL

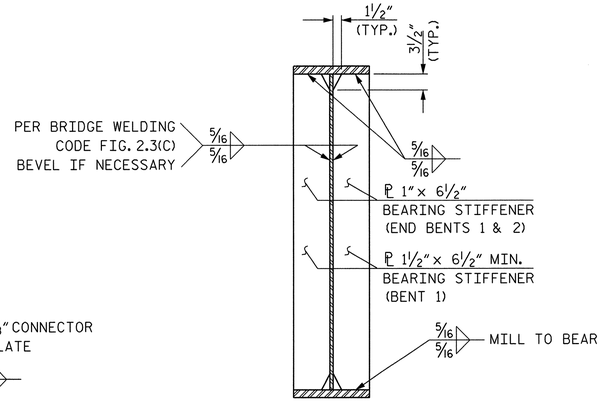

BEARING STIFFENER/CONNECTOR PLATE DETAIL

BEARING STIFFENER MAY REQUIRE COPING IF WIDER THAN BOTTOM FLANGE TO AVOID INTERFERENCE WITH ANCHOR BOLTS.

PROJECT NO. R-2606A
RANDOLPH COUNTY
STATION: 35+60.41 -L- POC

SHEET 2 OF 3

STATE OF NORTH CAROLINA
DEPARTMENT OF TRANSPORTATION
RALEIGH

SUPERSTRUCTURE STRUCTURAL STEEL DETAILS

NORTH CAROLINA PROFESSIONAL SEAL 11725 ENGINEER DAVID R. RUGGLES
David Ruggles
1-26-05

NORTH CAROLINA PROFESSIONAL SEAL 23020 ENGINEER JAMES L. BOLDEN JR.
James L. Bolden
1-26-05

REVISIONS						SHEET NO.
NO.	BY:	DATE:	NO.	BY:	DATE:	S-143
1			3			TOTAL SHEETS
2			4			199

DWG. 11 OF 34

DRAWN BY: A. P. TUAZAMA DATE: 8-04
CHECKED BY: J. L. BOLDEN, JR. DATE: 8-04

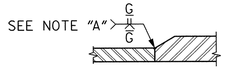

ELEVATION - FLANGE

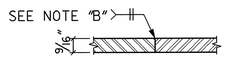

PLAN - WEB

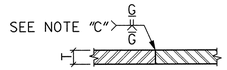

ELEVATION - FLANGE

NOTES:

A: SHOP FLANGE SPLICE - TYP. BOTH TOP AND BOTTOM FLANGES.

B: PERMISSIBLE SHOP WEB SPLICE - GRIND SMOOTH AND FLUSH ON OUTSIDE FACE OF EXTERIOR GIRDERS.

C: PERMISSIBLE FLANGE SPLICE FOR "T" OVER 5/8" THRU 2".

TYPICAL FLANGE AND WEB BUTT JOINT

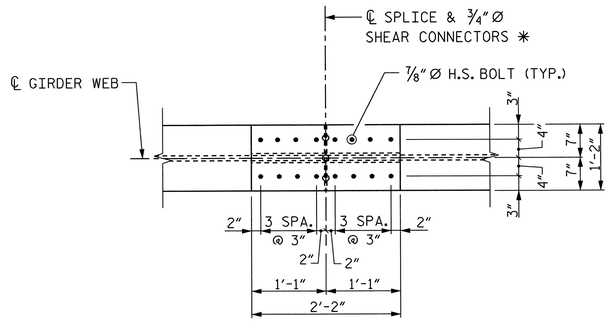

TOP FLANGE

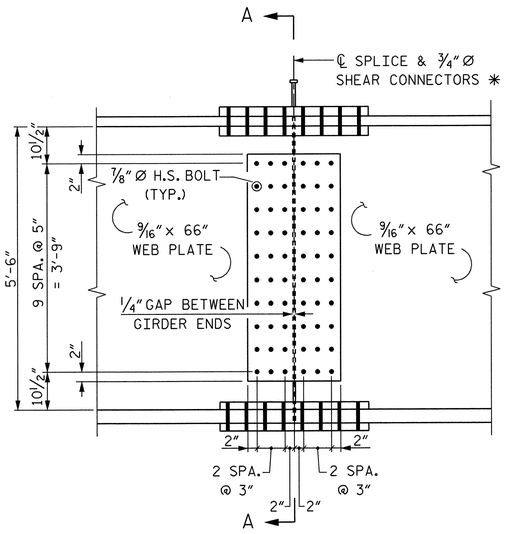

ELEVATION

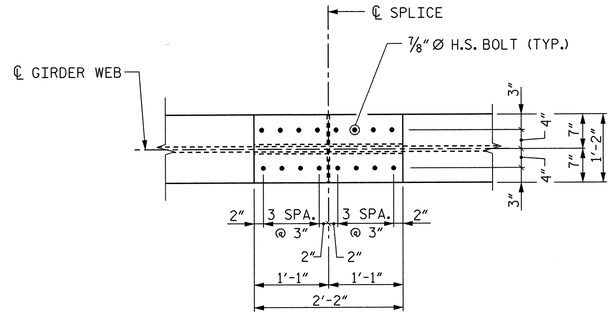

BOTTOM FLANGE

FIELD SPLICE DETAILS

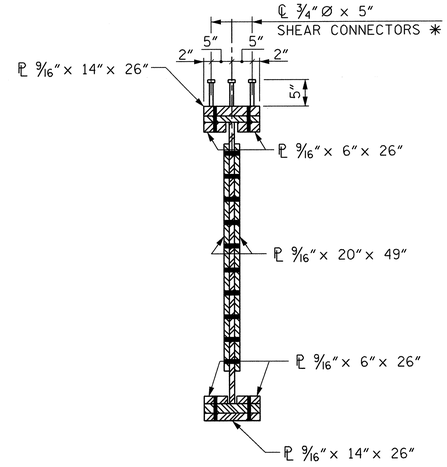

SECTION A-A

* SHEAR CONNECTORS ARE TO BE SHOP WELDED ON TOP OF THE PLATE BEFORE FIELD ASSEMBLY.

PROJECT NO. R-2606A

RANDOLPH COUNTY

STATION: 35+60.41 -L- POC

SHEET 3 OF 3

STATE OF NORTH CAROLINA
DEPARTMENT OF TRANSPORTATION
RALEIGH

SUPERSTRUCTURE
STRUCTURAL STEEL
SPLICE DETAIL

NORTH CAROLINA PROFESSIONAL SEAL 11725 ENGINEER DAVID R. RUGGLES
David Ruggles 1-26-05

NORTH CAROLINA PROFESSIONAL SEAL 23020 ENGINEER JAMES L. BOLDEN, JR.
James L. Bolden 1-26-05

REVISIONS						SHEET NO.
NO.	BY:	DATE:	NO.	BY:	DATE:	S-144
1			3			TOTAL SHEETS
2			4			144

DWG. 12 OF 34

DRAWN BY: A. P. TUAZAMA DATE : 8-04

CHECKED BY: J.L. BOLDEN, JR. DATE : 8-04

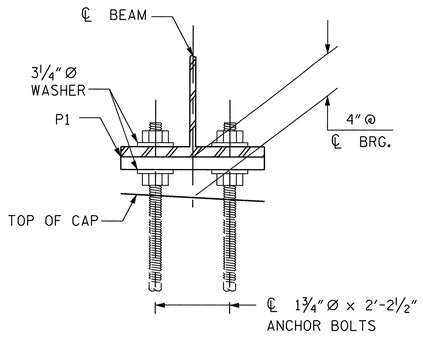

END VIEW
P1 (8 REQ'D.)

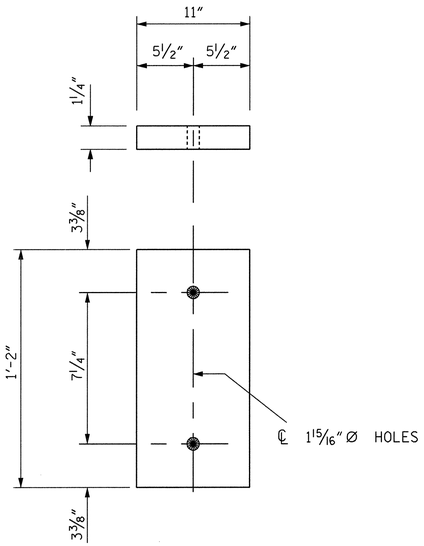

PLAN VIEW
P1 (8 REQ'D.)

SOLE PLATE DETAILS ("P")

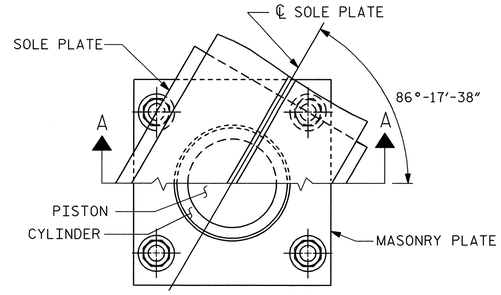

CUT-AWAY PLAN

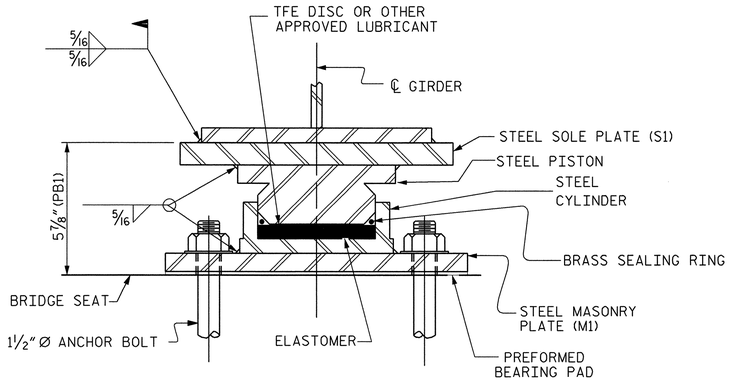

SECTION A-A

PB1, FIXED
(4 REQ'D.)

POT BEARING DETAILS

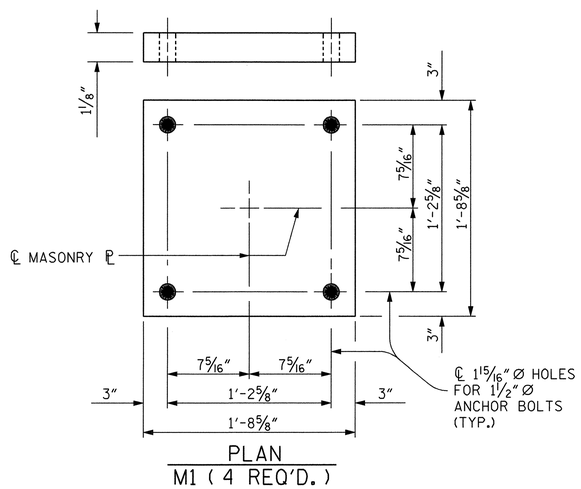

PLAN
M1 (4 REQ'D.)

MASONRY PLATE DETAILS

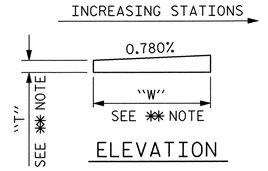

ELEVATION

✱✱ NOTE:
DIMENSIONS "W" AND "T" ARE TO BE DETERMINED BY THE MANUFACTURER.

SOLE PLATE DETAILS

NOTES

FOR POT BEARINGS, SEE SPECIAL PROVISIONS.

AT ALL POINTS OF SUPPORT IN SPANS A & B, NUTS FOR ANCHOR BOLTS SHALL BE TIGHTENED FINGER TIGHT AND GIVEN AN ADDITIONAL ¼ TURN. THE THREAD OF THE NUT AND BOLT SHALL THEN BE BURRED WITH A SHARP POINTED TOOL.

WHEN WELDING THE SOLE PLATE TO THE GIRDER, USE TEMPERATURE INDICATING WAX PENS, OR OTHER SUITABLE MEANS, TO ENSURE THAT THE TEMPERATURE OF THE BEARING DOES NOT EXCEED 250°F TEMPERATURES ABOVE THIS MAY DAMAGE THE TFE OR ELASTOMER.

SOLE PLATES SHOULD BE WELDED TO BEAM FLANGES BEFORE FALSEWORK IS PLACED.

ALL SURFACES OF BEARING PLATES SHALL BE SMOOTH AND STRAIGHT.

FOR THERMAL SPRAYED COATINGS (METALLIZATION), SEE SPECIAL PROVISIONS.

THE CONTRACTOR MAY SUBSTITUTE DISC BEARINGS FOR THE POT BEARINGS SHOWN. FOR OPTIONAL DISC BEARINGS, SEE SPECIAL PROVISIONS.

ANCHOR BOLT TABLE

BEARING	LOCATION	NUMBER OF ANCHOR BOLTS	LENGTH (IN)	DIAMETER (IN)
P1	END BENT 1	8	26½"	1¾
PB1	BENT 1	16	18½	1½
P1	END BENT 2	8	26½"	1¾

TABLE FOR LOADS AND MOVEMENTS

BEARING	LOCATION	VERTICAL LOAD (KIPS)			LATERAL LOAD (KIPS)	TOTAL MOVEMENT (INCHES)
		DEAD	LIVE	TOTAL		
PB1 (FIXED)	BENT 1	239	87	326	48	-

PROJECT NO. R-2606A

RANDOLPH COUNTY

STATION: 35+60.41 -L- POC

STATE OF NORTH CAROLINA
DEPARTMENT OF TRANSPORTATION
RALEIGH

BEARING DETAILS

ASSEMBLED BY : A. P. TUAZAMA	DATE : 8-04
CHECKED BY : J. L. BOLDEN, JR.	DATE : 8-04
DRAWN BY : RWW 8/99	REV. 10/17/00 RWW/LES
CHECKED BY : LES 8/99	REV. 7/10/01 LES/RDR
	REV. 5/7/03 RWW/JTE

NORTH CAROLINA PROFESSIONAL SEAL 11725 ENGINEER DAVID R. RUGGLES
David Ruggles
1-26-05

NORTH CAROLINA PROFESSIONAL SEAL 23020 ENGINEER JAMES L. BOLDEN, JR.
James L. Bolden Jr.
1-26-05

REVISIONS						SHEET NO.
NO.	BY:	DATE:	NO.	BY:	DATE:	S-145
1			3			TOTAL SHEETS
2			4			199

DWG. 13 OF 34

		1.00	1.05	1.10	1.15	1.20	1.25	1.30	1.35	1.40	1.45	1.50	1.55	1.60	1.65	1.70	1.75	1.80	1.85	1.90	1.95	2.00
GIRDER 1	DEFLECTION DUE TO WEIGHT OF STEEL	0.000	0.005	0.009	0.013	0.017	0.020	0.022	0.023	0.024	0.024	0.023	0.021	0.019	0.017	0.014	0.011	0.008	0.005	0.002	0.000	0.000
	DEFLECTION DUE TO WEIGHT OF SLAB, ETC. *	0.000	0.016	0.032	0.046	0.058	0.068	0.076	0.080	0.082	0.082	0.079	0.073	0.066	0.057	0.048	0.036	0.026	0.015	0.008	0.003	0.000
	DEFLECTION DUE TO WEIGHT OF RAIL	0.000	0.004	0.007	0.011	0.014	0.016	0.018	0.019	0.020	0.020	0.019	0.018	0.016	0.014	0.012	0.009	0.007	0.004	0.002	0.001	0.000
	TOTAL DEAD LOAD DEFLECTION	0.000	0.025	0.048	0.070	0.089	0.104	0.116	0.122	0.126	0.126	0.121	0.114	0.101	0.088	0.074	0.056	0.041	0.024	0.012	0.004	0.000
	VERTICAL CURVE ORDINATE	0.000	0.001	0.003	0.004	0.005	0.007	0.008	0.009	0.011	0.012	0.013	0.014	0.016	0.017	0.018	0.019	0.019	0.016	0.013	0.007	0.000
	SUPERELEVATION ORDINATE	0.000	0.000	0.000	0.000	0.000	0.000	0.000	0.000	0.000	0.000	0.000	0.000	0.000	0.000	0.000	0.000	0.000	0.000	0.000	0.000	0.000
	REQUIRED CAMBER	0	5/16	5/8	7/8	1 1/8	1 5/16	1 1/2	1 3/16	1 5/8	1 5/8	1 5/8	1 1/2	1 3/8	1 1/4	1 1/8	7/8	11/16	1/2	5/16	1/8	0

CONTINUOUS SPAN A

		2.00	2.05	2.10	2.15	2.20	2.25	2.30	2.35	2.40	2.45	2.50	2.55	2.60	2.65	2.70	2.75	2.80	2.85	2.90	2.95	3.00
GIRDER 1	DEFLECTION DUE TO WEIGHT OF STEEL	0.000	0.002	0.002	0.004	0.007	0.010	0.013	0.015	0.018	0.020	0.021	0.022	0.022	0.022	0.021	0.019	0.016	0.013	0.009	0.005	0.000
	DEFLECTION DUE TO WEIGHT OF SLAB, ETC. *	0.000	0.000	0.006	0.013	0.023	0.033	0.044	0.053	0.061	0.068	0.073	0.076	0.077	0.075	0.071	0.064	0.056	0.043	0.030	0.016	0.000
	DEFLECTION DUE TO WEIGHT OF RAIL	0.000	0.000	0.002	0.004	0.006	0.009	0.011	0.013	0.015	0.017	0.018	0.018	0.018	0.018	0.017	0.015	0.013	0.010	0.007	0.004	0.000
	TOTAL DEAD LOAD DEFLECTION	0.000	0.002	0.010	0.021	0.036	0.052	0.068	0.081	0.094	0.105	0.112	0.116	0.117	0.115	0.109	0.098	0.084	0.066	0.046	0.025	0.000
	VERTICAL CURVE ORDINATE	0.000	0.014	0.027	0.038	0.048	0.056	0.062	0.067	0.070	0.072	0.072	0.071	0.068	0.063	0.057	0.049	0.040	0.030	0.020	0.010	0.000
	SUPERELEVATION ORDINATE	0.000	-0.020	-0.039	-0.059	-0.079	-0.099	-0.118	-0.138	-0.158	-0.158	-0.143	-0.129	-0.115	-0.100	-0.086	-0.072	-0.057	-0.043	-0.029	-0.014	0.000
	REQUIRED CAMBER	0	-1/16	0	0	1/16	1/8	1/8	1/8	1/16	1/4	1/2	11/16	13/16	15/16	15/16	15/16	13/16	5/8	7/16	1/4	0

CONTINUOUS SPAN B

		1.00	1.05	1.10	1.15	1.20	1.25	1.30	1.35	1.40	1.45	1.50	1.55	1.60	1.65	1.70	1.75	1.80	1.85	1.90	1.95	2.00
GIRDER 2	DEFLECTION DUE TO WEIGHT OF STEEL	0.000	0.005	0.009	0.013	0.017	0.020	0.022	0.023	0.024	0.024	0.023	0.021	0.019	0.017	0.014	0.011	0.008	0.005	0.002	0.000	0.000
	DEFLECTION DUE TO WEIGHT OF SLAB, ETC. *	0.000	0.018	0.035	0.051	0.064	0.075	0.084	0.089	0.091	0.090	0.087	0.081	0.073	0.063	0.053	0.040	0.029	0.017	0.009	0.003	0.000
	DEFLECTION DUE TO WEIGHT OF RAIL	0.000	0.004	0.007	0.010	0.013	0.016	0.017	0.018	0.019	0.019	0.019	0.017	0.016	0.014	0.012	0.009	0.007	0.004	0.002	0.001	0.000
	TOTAL DEAD LOAD DEFLECTION	0.000	0.027	0.051	0.074	0.094	0.111	0.123	0.130	0.134	0.133	0.129	0.119	0.108	0.094	0.079	0.060	0.044	0.026	0.013	0.004	0.000
	VERTICAL CURVE ORDINATE	0.000	0.001	0.003	0.004	0.005	0.007	0.008	0.010	0.011	0.012	0.014	0.015	0.016	0.018	0.019	0.020	0.019	0.017	0.013	0.007	0.000
	SUPERELEVATION ORDINATE	0.000	0.000	0.000	0.000	0.000	0.000	0.000	0.000	0.000	0.000	0.000	0.000	0.000	0.000	0.000	0.000	0.000	0.000	0.000	0.000	0.000
	REQUIRED CAMBER	0	5/16	5/8	15/16	1 3/16	1 7/16	1 9/16	1 11/16	1 3/4	1 3/4	1 11/16	1 5/8	1 1/2	1 5/16	1 3/16	15/16	3/4	1/2	5/16	1/8	0

CONTINUOUS SPAN A

		2.00	2.05	2.10	2.15	2.20	2.25	2.30	2.35	2.40	2.45	2.50	2.55	2.60	2.65	2.70	2.75	2.80	2.85	2.90	2.95	3.00
GIRDER 2	DEFLECTION DUE TO WEIGHT OF STEEL	0.000	0.002	0.002	0.004	0.007	0.010	0.013	0.015	0.018	0.020	0.021	0.022	0.022	0.022	0.021	0.019	0.016	0.013	0.009	0.005	0.000
	DEFLECTION DUE TO WEIGHT OF SLAB, ETC. *	0.000	0.000	0.007	0.015	0.026	0.036	0.048	0.058	0.068	0.076	0.081	0.084	0.085	0.083	0.079	0.071	0.061	0.048	0.033	0.017	0.000
	DEFLECTION DUE TO WEIGHT OF RAIL	0.000	0.000	0.002	0.003	0.006	0.008	0.011	0.013	0.015	0.016	0.017	0.018	0.018	0.017	0.016	0.015	0.012	0.010	0.007	0.004	0.000
	TOTAL DEAD LOAD DEFLECTION	0.000	0.002	0.011	0.022	0.039	0.054	0.072	0.086	0.101	0.112	0.119	0.124	0.125	0.122	0.116	0.105	0.089	0.071	0.049	0.026	0.000
	VERTICAL CURVE ORDINATE	0.000	0.014	0.027	0.038	0.047	0.055	0.062	0.067	0.070	0.072	0.072	0.070	0.067	0.063	0.057	0.049	0.040	0.030	0.020	0.010	0.000
	SUPERELEVATION ORDINATE	0.000	-0.006	-0.012	-0.018	-0.024	-0.031	-0.037	-0.043	-0.049	-0.048	-0.043	-0.039	-0.035	-0.030	-0.026	-0.022	-0.017	-0.013	-0.009	-0.004	0.000
	REQUIRED CAMBER	0	1/8	5/16	1/2	3/4	15/16	1 3/16	1 5/16	1 7/16	1 5/8	1 3/4	1 7/8	1 7/8	1 7/8	1 3/4	1 5/16	1 5/16	1 1/16	3/4	3/8	0

CONTINUOUS SPAN B

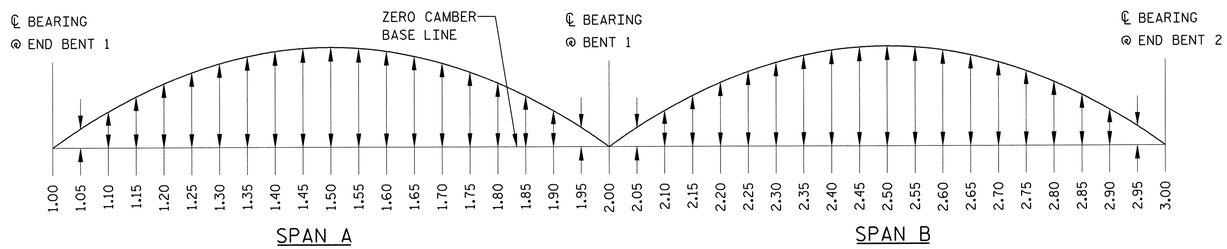

SCHEMATIC CAMBER ORDINATES

NOTES:

VALUES ARE SHOWN IN FEET, EXCEPT "REQUIRED CAMBER" WHICH IS GIVEN IN INCHES.

"*" DENOTES INCLUSION OF SLAB, BUILDUPS AND STAY-IN-PLACE FORMS.

SLOPE FOR THE ZERO CAMBER BASE LINE VARIES.

FOR GIRDER DESIGNATIONS, SEE STRUCTURAL STEEL FRAMING PLAN.

NORTH CAROLINA PROFESSIONAL SEAL 11725 ENGINEER DAVID R. RUGGLES
David Ruggles 1-26-05

NORTH CAROLINA PROFESSIONAL SEAL 23020 ENGINEER JAMES L. BOLDEN, JR.
James L. Bolden, Jr. 1-26-05

DRAWN BY: A. P. TUAZAMA DATE: 8-04
CHECKED BY: J. L. BOLDEN, JR. DATE: 8-04

PROJECT NO. R-2606A
RANDOLPH COUNTY
STATION: 35+60.41 -L- POC

SHEET 1 OF 2

STATE OF NORTH CAROLINA
DEPARTMENT OF TRANSPORTATION
RALEIGH

SUPERSTRUCTURE DEAD LOAD DEFLECTION AND CAMBER ORDINATES GIRDERS 1 & 2

REVISIONS						SHEET NO.
NO.	BY:	DATE:	NO.	BY:	DATE:	S-146
1			3			TOTAL SHEETS
2			4			199

DWG. 14 OF 34

		1.00	1.05	1.10	1.15	1.20	1.25	1.30	1.35	1.40	1.45	1.50	1.55	1.60	1.65	1.70	1.75	1.80	1.85	1.90	1.95	2.00
GIRDER 3	DEFLECTION DUE TO WEIGHT OF STEEL	0.000	0.005	0.009	0.013	0.017	0.020	0.022	0.023	0.024	0.024	0.023	0.021	0.019	0.017	0.014	0.011	0.008	0.005	0.002	0.000	0.000
	DEFLECTION DUE TO WEIGHT OF SLAB, ETC. *	0.000	0.018	0.035	0.051	0.064	0.075	0.084	0.089	0.091	0.090	0.087	0.081	0.073	0.063	0.053	0.040	0.029	0.017	0.009	0.003	0.000
	DEFLECTION DUE TO WEIGHT OF RAIL	0.000	0.004	0.007	0.010	0.013	0.016	0.017	0.018	0.019	0.019	0.019	0.017	0.016	0.014	0.012	0.009	0.007	0.004	0.002	0.001	0.000
	TOTAL DEAD LOAD DEFLECTION	0.000	0.027	0.051	0.074	0.094	0.111	0.123	0.130	0.134	0.133	0.129	0.119	0.108	0.094	0.079	0.060	0.044	0.026	0.013	0.004	0.000
	VERTICAL CURVE ORDINATE	0.000	0.001	0.003	0.004	0.006	0.007	0.008	0.010	0.011	0.013	0.014	0.015	0.017	0.018	0.020	0.020	0.020	0.017	0.013	0.007	0.000
	SUPERELEVATION ORDINATE	0.000	0.000	0.000	0.000	0.000	0.000	0.000	0.000	0.000	0.000	0.000	0.000	0.000	0.000	0.000	0.000	0.000	0.000	0.000	0.000	0.000
	REQUIRED CAMBER	0	5/16	5/8	15/16	1 3/16	1 7/16	1 9/16	1 11/16	1 3/4	1 3/4	1 11/16	1 5/8	1 1/2	1 3/8	1 3/16	1 5/16	3/4	1/2	5/16	1/8	0

CONTINUOUS SPAN A

		2.00	2.05	2.10	2.15	2.20	2.25	2.30	2.35	2.40	2.45	2.50	2.55	2.60	2.65	2.70	2.75	2.80	2.85	2.90	2.95	3.00
GIRDER 3	DEFLECTION DUE TO WEIGHT OF STEEL	0.000	0.002	0.002	0.004	0.007	0.010	0.013	0.015	0.018	0.020	0.021	0.022	0.022	0.022	0.021	0.019	0.016	0.013	0.009	0.005	0.000
	DEFLECTION DUE TO WEIGHT OF SLAB, ETC. *	0.000	0.000	0.007	0.015	0.026	0.036	0.048	0.058	0.068	0.076	0.081	0.084	0.085	0.083	0.079	0.071	0.061	0.048	0.033	0.017	0.000
	DEFLECTION DUE TO WEIGHT OF RAIL	0.000	0.000	0.002	0.003	0.006	0.008	0.011	0.013	0.015	0.016	0.017	0.018	0.018	0.017	0.016	0.015	0.012	0.010	0.007	0.004	0.000
	TOTAL DEAD LOAD DEFLECTION	0.000	0.002	0.011	0.022	0.039	0.054	0.072	0.086	0.101	0.112	0.119	0.124	0.125	0.122	0.116	0.105	0.089	0.071	0.049	0.026	0.000
	VERTICAL CURVE ORDINATE	0.000	0.014	0.027	0.038	0.047	0.055	0.062	0.066	0.070	0.071	0.071	0.070	0.067	0.062	0.056	0.048	0.039	0.029	0.020	0.010	0.000
	SUPERELEVATION ORDINATE	0.000	0.008	0.016	0.023	0.031	0.039	0.047	0.054	0.062	0.060	0.054	0.049	0.043	0.038	0.033	0.027	0.022	0.016	0.011	0.005	0.000
	REQUIRED CAMBER	0	5/16	5/8	15/16	1 7/16	1 3/4	2 3/16	2 1/2	2 13/16	2 15/16	2 15/16	2 15/16	2 13/16	2 11/16	2 7/16	2 3/16	1 13/16	1 3/8	15/16	1/2	0

CONTINUOUS SPAN B

		1.00	1.05	1.10	1.15	1.20	1.25	1.30	1.35	1.40	1.45	1.50	1.55	1.60	1.65	1.70	1.75	1.80	1.85	1.90	1.95	2.00
GIRDER 4	DEFLECTION DUE TO WEIGHT OF STEEL	0.000	0.005	0.009	0.013	0.017	0.020	0.022	0.023	0.024	0.024	0.023	0.021	0.019	0.017	0.014	0.011	0.008	0.005	0.002	0.000	0.000
	DEFLECTION DUE TO WEIGHT OF SLAB, ETC. *	0.000	0.017	0.032	0.046	0.058	0.068	0.076	0.080	0.082	0.082	0.079	0.074	0.067	0.058	0.048	0.036	0.026	0.016	0.008	0.003	0.000
	DEFLECTION DUE TO WEIGHT OF RAIL	0.000	0.004	0.007	0.011	0.014	0.016	0.018	0.019	0.020	0.020	0.019	0.018	0.016	0.014	0.012	0.009	0.007	0.004	0.002	0.001	0.000
	TOTAL DEAD LOAD DEFLECTION	0.000	0.026	0.048	0.070	0.089	0.104	0.116	0.122	0.126	0.126	0.121	0.113	0.102	0.089	0.074	0.056	0.041	0.025	0.012	0.004	0.000
	VERTICAL CURVE ORDINATE	0.000	0.001	0.003	0.004	0.006	0.007	0.009	0.010	0.012	0.013	0.015	0.016	0.017	0.019	0.020	0.021	0.020	0.017	0.013	0.007	0.000
	SUPERELEVATION ORDINATE	0.000	0.000	0.000	0.000	0.000	0.000	0.000	0.000	0.000	0.000	0.000	0.000	0.000	0.000	0.000	0.000	0.000	0.000	0.000	0.000	0.000
	REQUIRED CAMBER	0	5/16	5/8	7/8	1 1/8	1 5/16	1 1/2	1 9/16	1 5/8	1 11/16	1 5/8	1 9/16	1 7/16	1 5/16	1 1/8	1 5/16	3/4	1/2	5/16	1/8	0

CONTINUOUS SPAN A

		2.00	2.05	2.10	2.15	2.20	2.25	2.30	2.35	2.40	2.45	2.50	2.55	2.60	2.65	2.70	2.75	2.80	2.85	2.90	2.95	3.00
GIRDER 4	DEFLECTION DUE TO WEIGHT OF STEEL	0.000	0.002	0.002	0.004	0.007	0.010	0.013	0.015	0.018	0.020	0.021	0.022	0.022	0.022	0.021	0.019	0.016	0.013	0.009	0.005	0.000
	DEFLECTION DUE TO WEIGHT OF SLAB, ETC. *	0.000	0.000	0.006	0.013	0.023	0.033	0.044	0.053	0.062	0.068	0.074	0.077	0.077	0.075	0.071	0.064	0.055	0.043	0.030	0.016	0.000
	DEFLECTION DUE TO WEIGHT OF RAIL	0.000	0.000	0.002	0.004	0.006	0.009	0.011	0.013	0.015	0.017	0.018	0.018	0.018	0.018	0.017	0.015	0.013	0.010	0.007	0.004	0.000
	TOTAL DEAD LOAD DEFLECTION	0.000	0.002	0.010	0.021	0.036	0.052	0.068	0.081	0.095	0.105	0.113	0.117	0.117	0.115	0.109	0.098	0.084	0.066	0.046	0.025	0.000
	VERTICAL CURVE ORDINATE	0.000	0.014	0.027	0.038	0.047	0.055	0.061	0.066	0.069	0.071	0.071	0.070	0.066	0.062	0.056	0.048	0.039	0.029	0.019	0.010	0.000
	SUPERELEVATION ORDINATE	0.000	0.022	0.044	0.066	0.088	0.109	0.131	0.153	0.175	0.164	0.149	0.134	0.120	0.105	0.090	0.075	0.060	0.045	0.030	0.015	0.000
	REQUIRED CAMBER	0	7/16	15/16	1 1/2	2 1/16	2 5/8	3 1/8	3 5/8	4 1/16	4 1/16	4	3 3/8	3 5/8	3 3/8	3 1/16	2 5/8	2 3/16	1 11/16	1 1/8	5/8	0

CONTINUOUS SPAN B

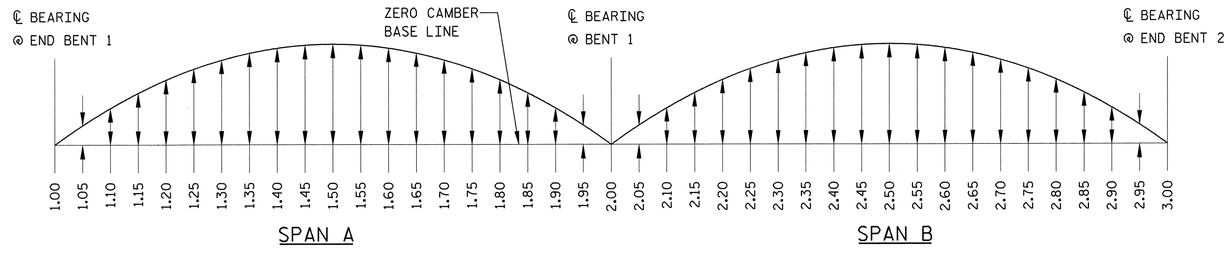

SCHEMATIC CAMBER ORDINATES

NOTES:

VALUES ARE SHOWN IN FEET, EXCEPT "REQUIRED CAMBER" WHICH IS GIVEN IN INCHES.

"*" DENOTES INCLUSION OF SLAB, BUILDUPS AND STAY-IN-PLACE FORMS.

SLOPE FOR THE ZERO CAMBER BASE LINE VARIES.

FOR GIRDER DESIGNATIONS, SEE STRUCTURAL STEEL FRAMING PLAN.

DRAWN BY: A. P. TUAZAMA DATE : 8-04
CHECKED BY: J. L. BOLDEN, JR. DATE : 8-04

NORTH CAROLINA PROFESSIONAL SEAL 11725 ENGINEER DAVID R. RUGGLES
David Ruggles 1-26-05

NORTH CAROLINA PROFESSIONAL SEAL 23020 ENGINEER JAMES L. BOLDEN, JR.
James L. Bolden 1-26-05

PROJECT NO. R-2606A
RANDOLPH COUNTY
STATION: 35+60.41 -L- POC

SHEET 2 OF 2

STATE OF NORTH CAROLINA
DEPARTMENT OF TRANSPORTATION
RALEIGH

SUPERSTRUCTURE
DEAD LOAD DEFLECTION
AND CAMBER ORDINATES
GIRDERS 3 & 4

REVISIONS						SHEET NO.
NO.	BY:	DATE:	NO.	BY:	DATE:	S-147
1			3			TOTAL SHEETS
2			4			197

DWG. 15 OF 34

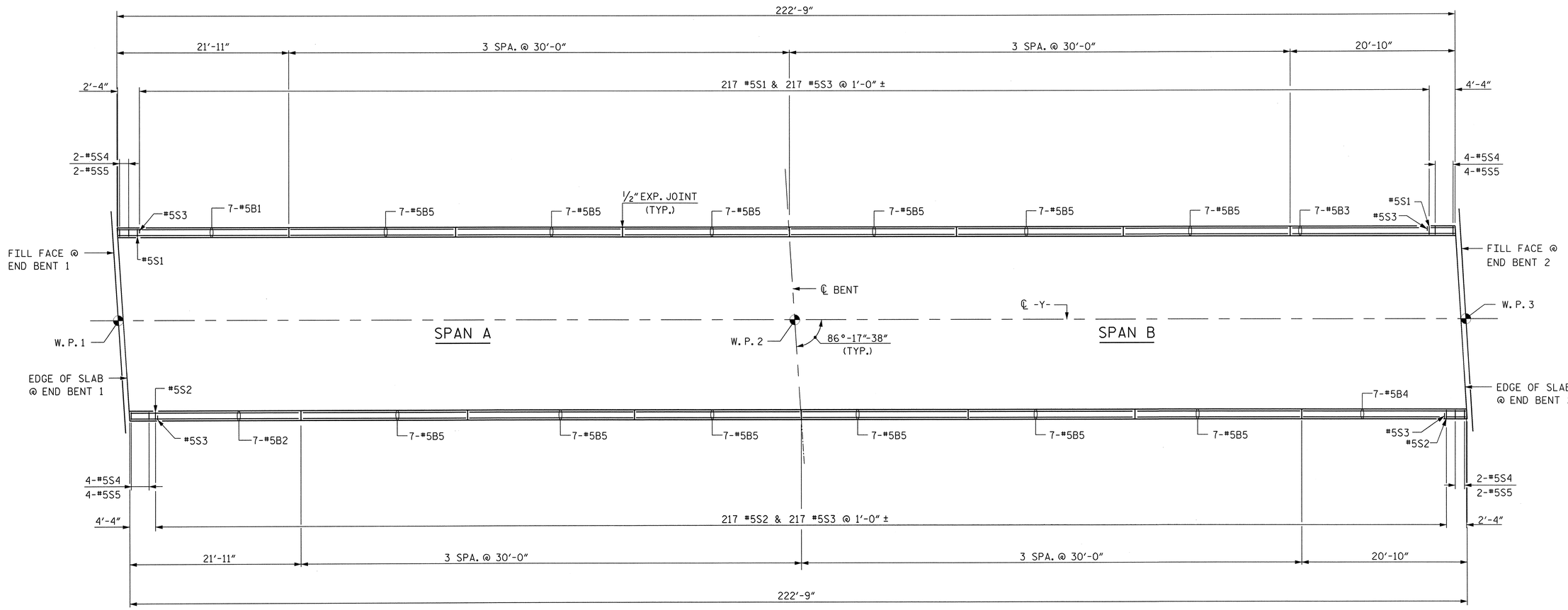

PLAN OF BARRIER RAIL SPANS A AND B

PROJECT NO. R-2606A

RANDOLPH COUNTY

STATION: 35+60.41 -L- POC

SHEET 1 OF 2

STATE OF NORTH CAROLINA
DEPARTMENT OF TRANSPORTATION
RALEIGH

SUPERSTRUCTURE
PLAN OF BARRIER RAIL
FOR SPANS A AND B

NORTH CAROLINA PROFESSIONAL SEAL 11725 ENGINEER DAVID R. RUGGLES
David Ruggles
1-26-05

NORTH CAROLINA PROFESSIONAL SEAL 23020 ENGINEER JAMES L. BOLDEN, JR.
James L. Bolden
1-26-05

DRAWN BY: A. P. TUAZAMA DATE : 8-04
CHECKED BY: J. L. BOLDEN, JR. DATE : 8-04

DWG. 16 OF 34

REVISIONS						SHEET NO.
NO.	BY:	DATE:	NO.	BY:	DATE:	S-148
1			3			TOTAL SHEETS
2			4			199

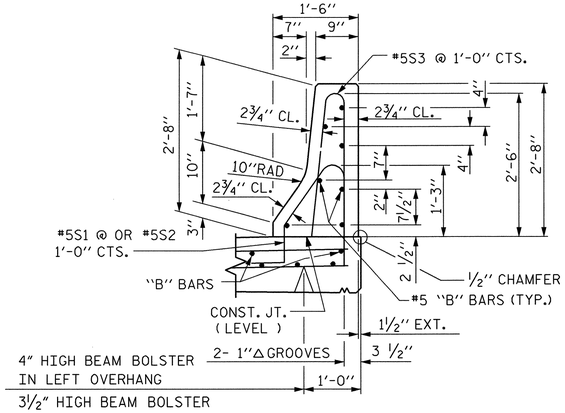

SECTION THRU RAIL

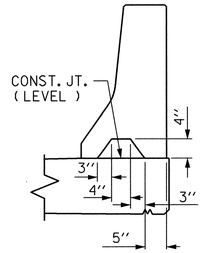

SECTION S-S

AT DAM IN OPEN JOINT
(THIS IS TO BE USED ONLY
WHEN SLIP FORM IS USED)

BARRIER RAIL DETAILS

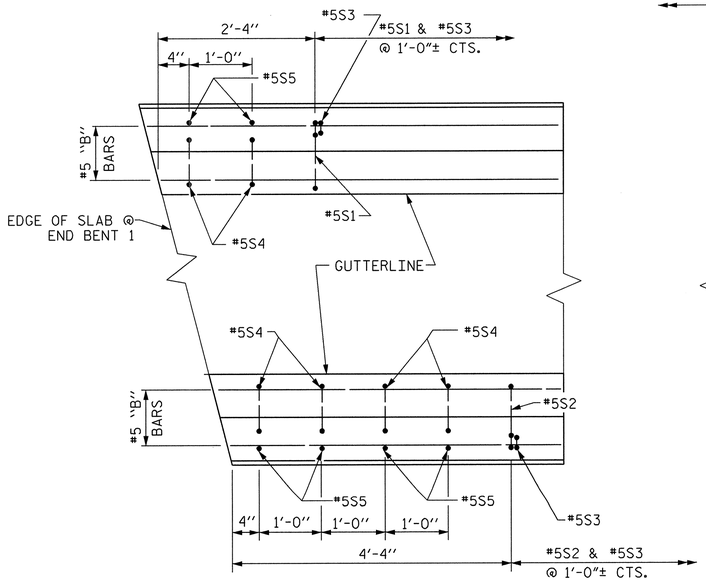

PLAN @ END BENT 1

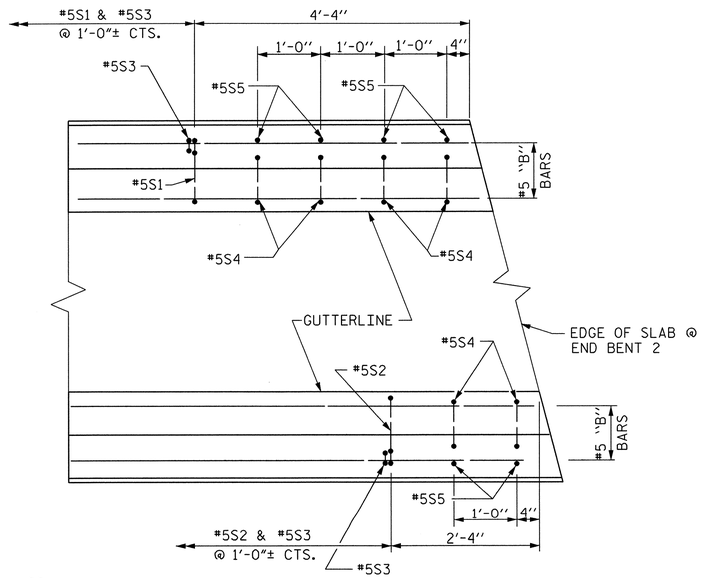

PLAN @ END BENT 2

END OF RAIL DETAILS

FOR ADHESIVE ANCHORING AT SAWED JOINTS

NOTES

THE BARRIER RAIL IN EACH SPAN SHALL NOT BE CAST UNTIL ALL SLAB CONCRETE IN THAT SPAN HAS BEEN CAST AND HAS REACHED A MINIMUM COMPRESSIVE STRENGTH OF 3,000 PSI.

THE JOINT AT THE INTERFACE BETWEEN DECK AND APPROACH SLAB SHALL BE SAWED PRIOR TO THE CASTING OF BARRIER RAIL.

ALL REINFORCING STEEL IN BARRIER RAILS SHALL BE EPOXY COATED.

THE #5 S5 AND #5 S4 BARS SHALL BE INSTALLED, USING AN ADHESIVE ANCHORING SYSTEM, AFTER SAWING THE JOINT. FOR ADHESIVELY ANCHORED ANCHOR BOLTS OR DOWELS, SEE SPECIAL PROVISIONS. THE YIELD LOAD FOR THE #5 S5 AND #5 S4 BARS IS 18.6 KIPS. FIELD TESTING FOR THE ADHESIVE BONDING SYSTEM IS NOT REQUIRED.

VERTICAL GROOVED CONTRACTION JOINTS, ½" IN DEPTH, SHALL BE TOOLED IN ALL EXPOSED FACES OF THE BARRIER RAIL AND IN ACCORDANCE WITH ARTICLE 825-10(B) OF THE STANDARD SPECIFICATIONS. THE CONTRACTION JOINT SHALL BE LOCATED AT EACH THIRD POINT BETWEEN BARRIER RAIL EXPANSION JOINTS. ONLY ONE CONTRACTION JOINT IS REQUIRED AT MIDPOINT OF BARRIER RAIL SEGMENTS LESS THAN 20 FEET IN LENGTH AND NO CONTRACTION JOINTS ARE REQUIRED FOR THOSE SEGMENTS LESS THAN 10 FEET IN LENGTH.

SEE "SUPERSTRUCTURE PLAN OF BARRIER RAIL" SHEET FOR CONCRETE BARRIER RAIL PLAN VIEW

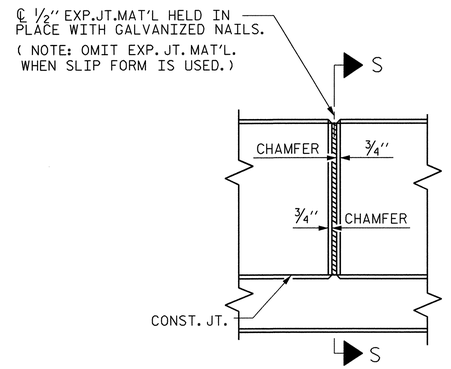

ELEVATION AT EXPANSION JOINTS

BARRIER RAIL DETAILS

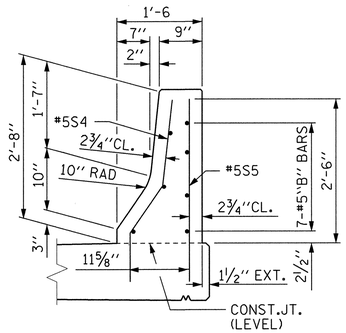

END VIEW

BAR TYPES

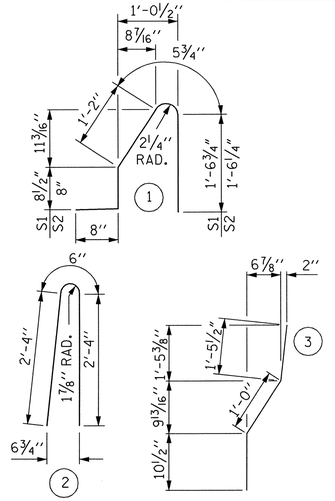

ALL BAR DIMENSIONS ARE OUT TO OUT

BILL OF MATERIAL

FOR CONCRETE BARRIER RAIL ONLY

BAR	NO.	SIZE	TYPE	LENGTH	WEIGHT
* B1	7	#5	STR	21'-5"	156
* B2	7	#5	STR	21'-7"	158
* B3	7	#5	STR	20-6"	150
* B4	7	#5	STR	20'-4"	148
* B5	84	#5	STR	29'-7"	2,592
* S1	217	#5	1	4'-7"	1,037
* S2	217	#5	1	4'-6"	1,018
* S3	446	#5	2	5'-2"	2,403
* S4	12	#5	3	3'-4"	42
* S5	12	#5	STR.	3'-2"	40

* EPOXY COATED REINFORCING STEEL	7,744 LBS.
CLASS AA CONCRETE	44.7 CU. YDS.
CONCRETE BARRIER RAIL	445.50 LIN. FT.

PROJECT NO. R-2606A

RANDOLPH COUNTY

STATION: 35+60.41 -L- POC

SHEET 2 OF 2

STATE OF NORTH CAROLINA
DEPARTMENT OF TRANSPORTATION
RALEIGH

STANDARD
CONCRETE
BARRIER RAIL

ASSEMBLED BY : A. P. TUAZAMA	DATE : 8-04
CHECKED BY : J. L. BOLDEN, JR.	DATE : 8-04
DRAWN BY : ARB 5/87	REV. 8/16/99 RWW/LES
CHECKED BY : SJD 9/87	REV. 10/17/00 RWW/LES
	REV. 5/7/03R RWW/JTE

NORTH CAROLINA PROFESSIONAL SEAL 11725 ENGINEER DAVID R. RUGGLES
David Ruggles
1-26-05

NORTH CAROLINA PROFESSIONAL SEAL 23020 ENGINEER JAMES L. BOLDEN, JR.
James L. Bolden Jr.
1-26-05

REVISIONS						SHEET NO.
NO.	BY:	DATE:	NO.	BY:	DATE:	S-199
1			3			TOTAL SHEETS
2			4			199

DWG. 17 OF 34

SUPERSTRUCTURE REINFORCING STEEL LENGTHS ARE BASED ON THE FOLLOWING MINIMUM SPLICE LENGTHS					
BAR SIZE	SUPERSTRUCTURE EXCEPT APPROACH SLABS, PARAPET, AND BARRIER RAIL		APPROACH SLABS		PARAPET AND BARRIER RAIL
	EPOXY COATED	UNCOATED	EPOXY COATED	UNCOATED	
#4	2'-0"	1'-9"	2'-0"	1'-9"	2'-9"
#5	2'-6"	2'-2"	2'-6"	2'-2"	3'-5"
#6	3'-0"	2'-7"	3'-10"	2'-7"	4'-4"

GROOVING BRIDGE FLOORS	
BRIDGE DECK	5,783 SQ. FEET
APPROACH SLABS	1,402 SQ. FEET
TOTAL	7,185 SQ. FEET

BAR TYPES

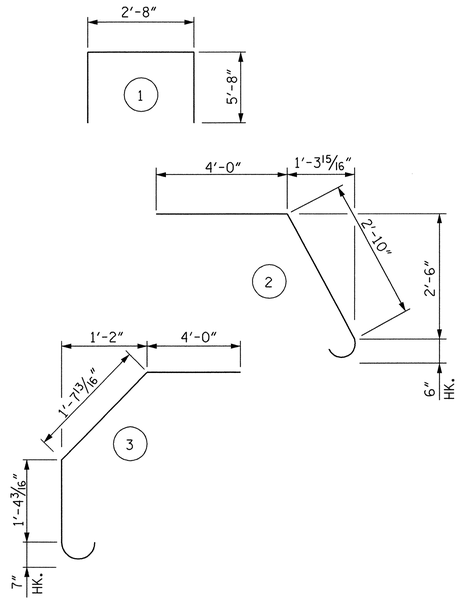

ALL BAR DIMENSIONS ARE OUT TO OUT.

SUPERSTRUCTURE BILL OF MATERIAL

	CLASS AA CONCRETE	REINFORCING STEEL	EPOXY COATED REINFORCING STEEL
	(CU. YARDS)	LB	LB
SPANS "A" & "B"		25,750	24,026
POUR 1	58.5		
POUR 2	154.0		
POUR 3 (@ E.B.#1)	31.7		
POUR 4 (@ E.B.#2)	31.9		
TOTALS**	276.1	25,750	24,026

** QUANTITIES FOR BARRIER RAIL ARE NOT INCLUDED

REINFORCING BAR SCHEDULE

SPANS A & B

BAR	NO.	SIZE	TYPE	LENGTH	WEIGHT
A1*	408	#5	STR.	31'-10'	13,546
A2*	2	#5	STR.	21'-11"	46
A3*	2	#5	STR.	13'-7"	28
A4*	2	#5	STR.	5'-3"	11
A5	408	#5	STR.	31'-10"	13,546
A6	2	#5	STR.	21'-11"	46
A7	2	#5	STR.	13'-7"	28
A8	2	#5	STR.	5'-3"	11
B1*	92	#5	STR.	57'-6"	5,517
B2*	40	#6	STR.	40'-0"	2,403
B3*	40	#6	STR.	24'-9"	1,487
B4	176	#5	STR.	57'-3"	10,509
B5*	42	#5	STR.	5'-0"	219
K1	56	#4	STR.	20'-3"	758
K2	16	#4	STR.	2'-8"	29
S1	70	#4	1	14'-0"	655
S2	8	#4	1	15'-10"	85
S3	8	#4	1	15'-6"	83
S4*	60	#4	2	7'-4"	294
S5*	60	#5	3	7'-7"	475

NOTE: BARS MARKED WITH A "*" SUFFIX SHALL BE EPOXY COATED.

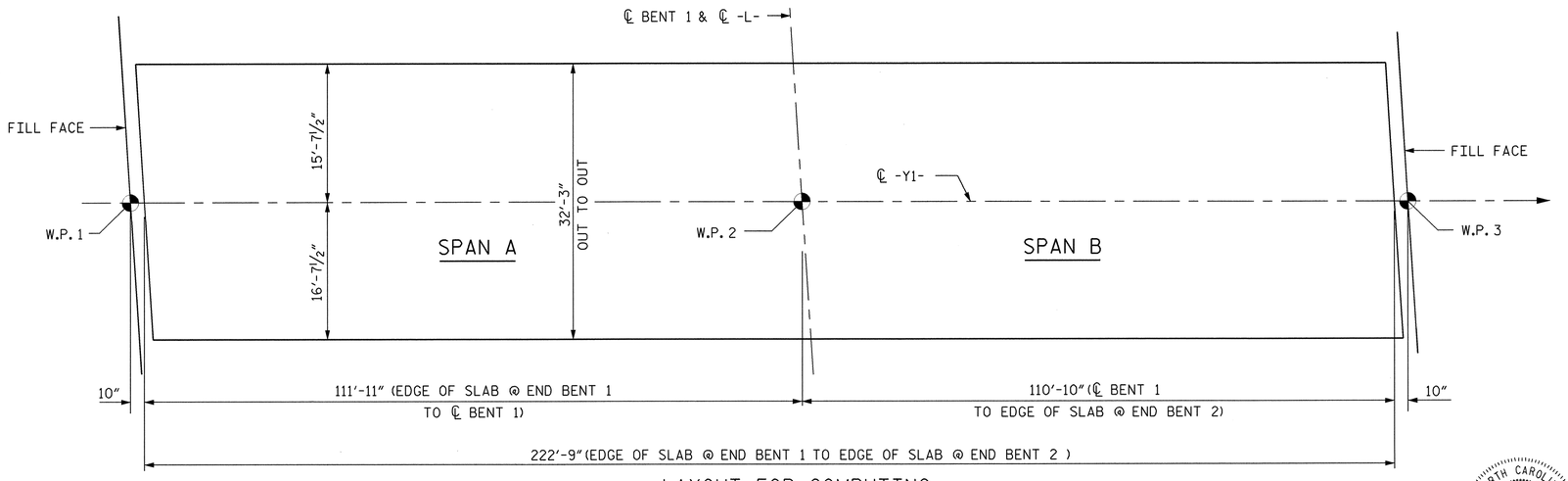

LAYOUT FOR COMPUTING
AREA OF REINFORCED CONCRETE
DECK SLAB
(SQ. FEET= 7,184)

NORTH CAROLINA PROFESSIONAL SEAL 11725 ENGINEER DAVID R. RUGGLES
David Ruggles 1-26-05

NORTH CAROLINA PROFESSIONAL SEAL 23020 ENGINEER JAMES L. BOLDEN, JR.
James L. Bolden, Jr. 1-26-05

PROJECT NO. R-2606A
RANDOLPH COUNTY
STATION: 35+60.41 -L- POC

STATE OF NORTH CAROLINA
DEPARTMENT OF TRANSPORTATION
RALEIGH

STANDARD
SUPERSTRUCTURE
BILL OF MATERIAL

REVISIONS						SHEET NO.
NO.	BY:	DATE:	NO.	BY:	DATE:	S-150
1			3			TOTAL SHEETS
2			4			199

DRAWN BY: A. P. TUAZAMA DATE : 8-04
CHECKED BY: J. L. BOLDEN, JR. DATE : 8-04

DWG. 18 OF 34

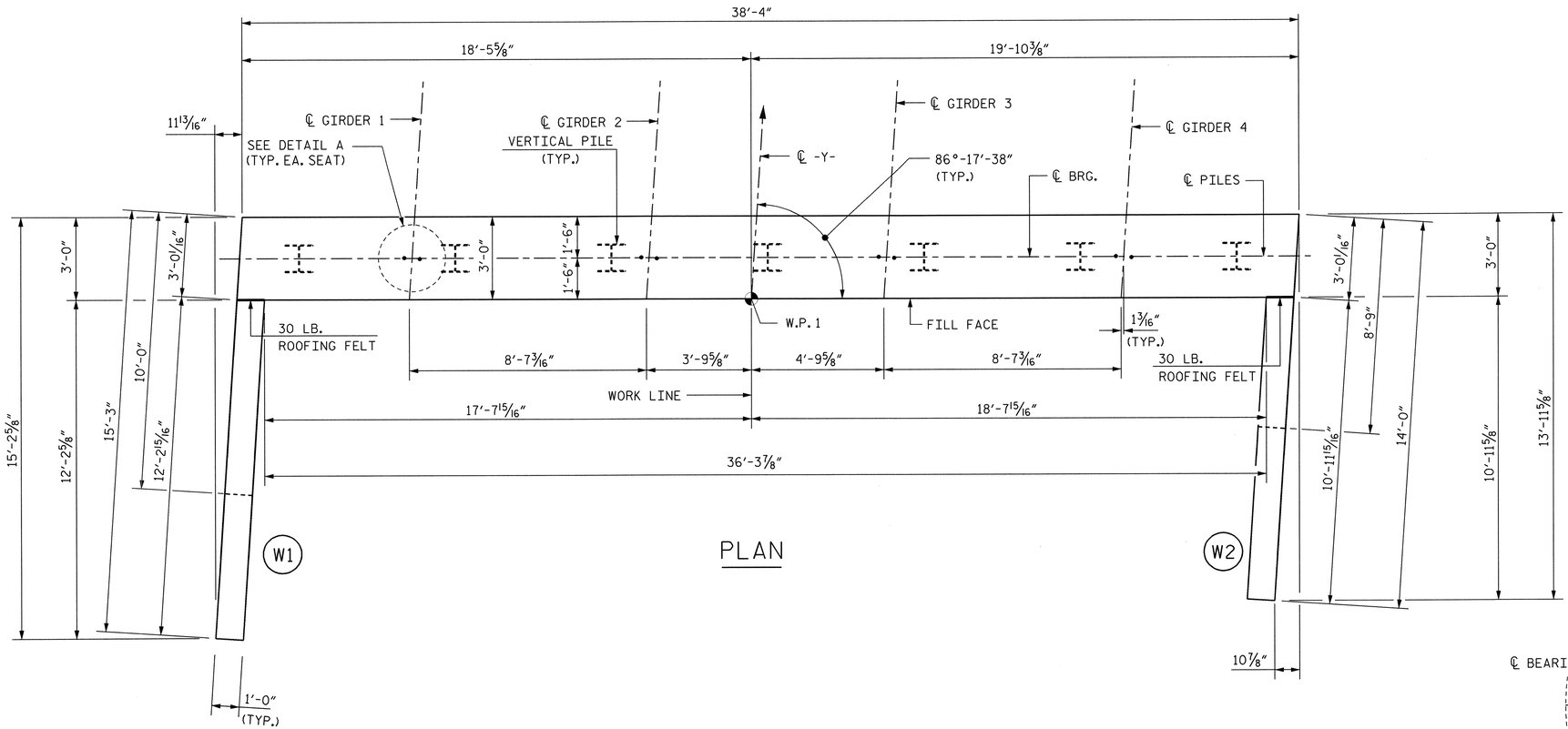

PLAN

SEE SHEET 3 OF 3 FOR NOTES.

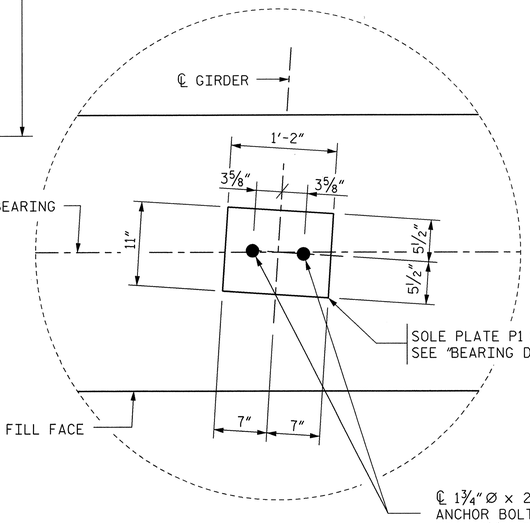

DETAIL A

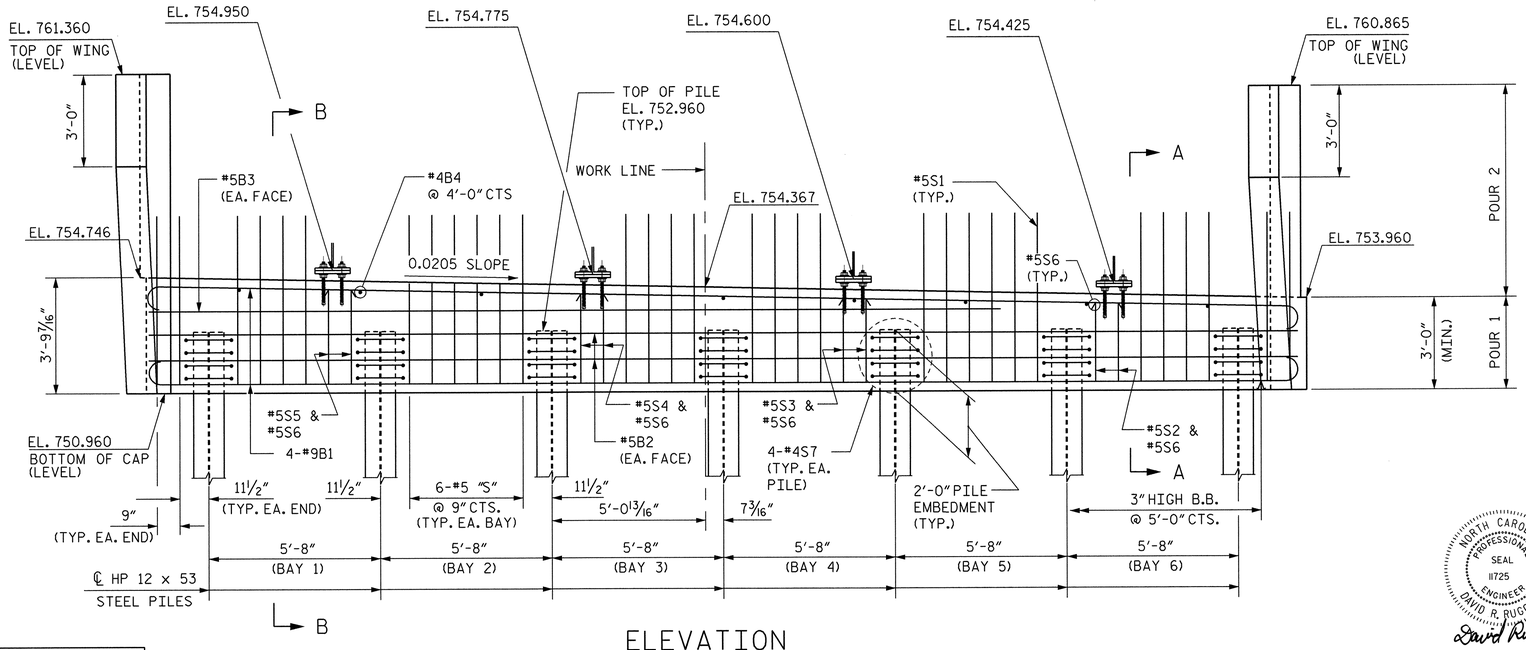

ELEVATION

PROJECT NO. R-2606A

RANDOLPH COUNTY

STATION: 35+60.41 -L- POC

SHEET 1 OF 3

STATE OF NORTH CAROLINA
DEPARTMENT OF TRANSPORTATION
RALEIGH

SUBSTRUCTURE
END BENT 1

NORTH CAROLINA PROFESSIONAL SEAL 11725 ENGINEER DAVID R. RUGGLES
David Ruggles 1-26-05

NORTH CAROLINA PROFESSIONAL SEAL 23020 ENGINEER JAMES L. BOLDEN, JR.
James L. Bolden 1-26-05

REVISIONS						SHEET NO.
NO.	BY:	DATE:	NO.	BY:	DATE:	S-1151
1			3			TOTAL SHEETS
2			4			199

DRAWN BY: A. P. TUAZAMA DATE : 8-04
CHECKED BY: J. L. BOLDEN, JR. DATE : 8-04

DWG. 19 OF 34

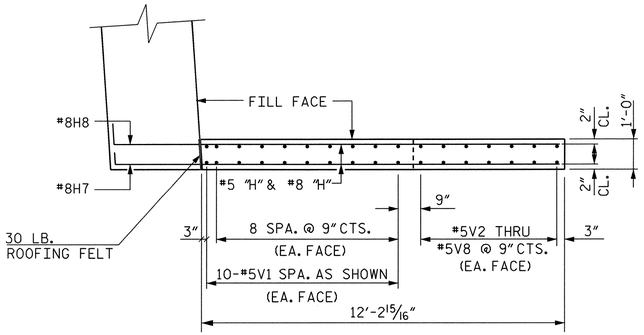

PLAN OF WING W1

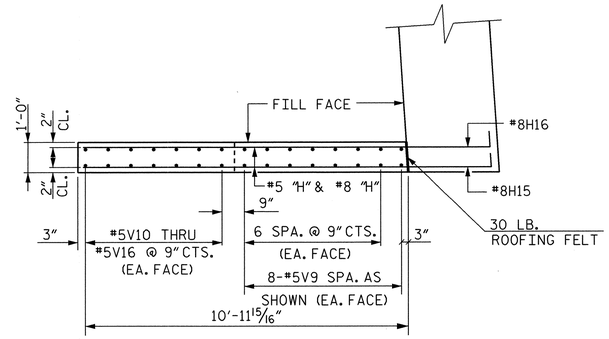

PLAN OF WING W2

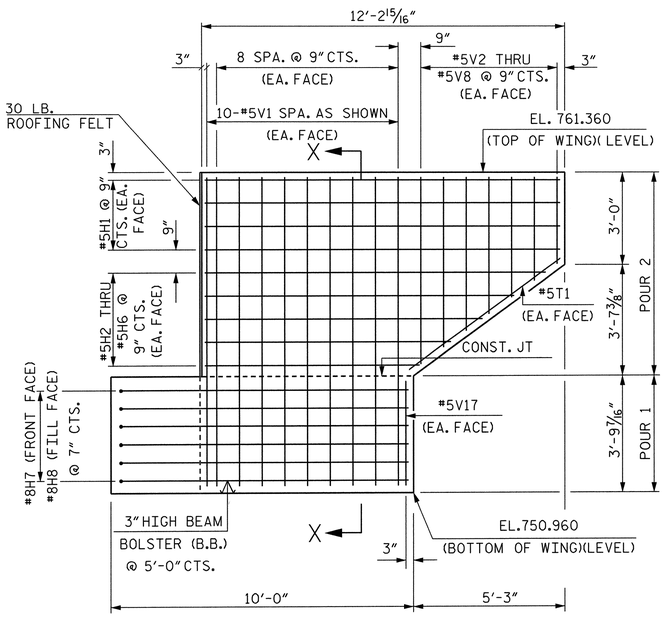

ELEVATION OF WING W1

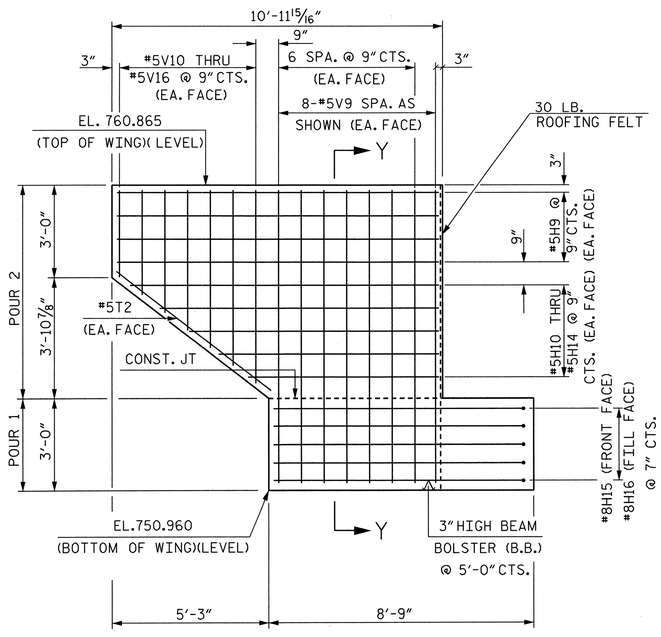

ELEVATION OF WING W2

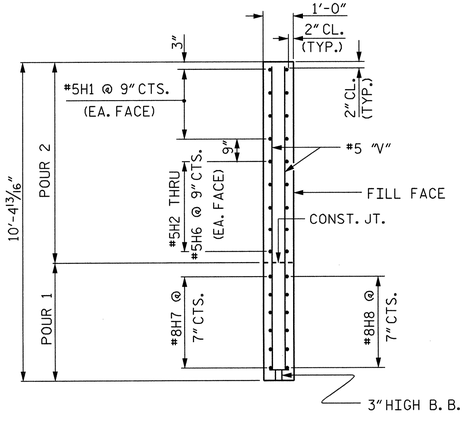

SECTION X-X

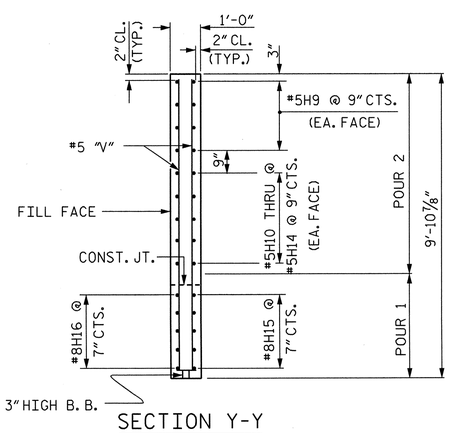

SECTION Y-Y

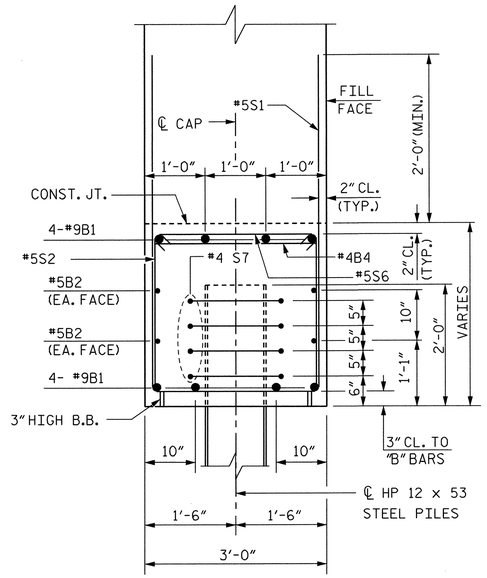

SECTION A-A

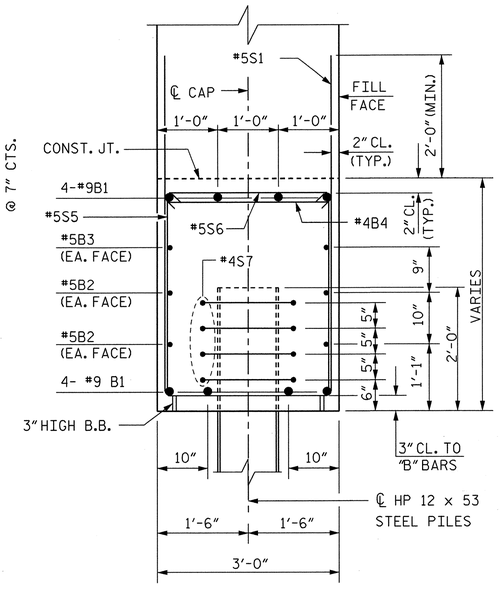

SECTION B-B

BAR TYPES

ALL BAR DIMENSIONS ARE OUT TO OUT.

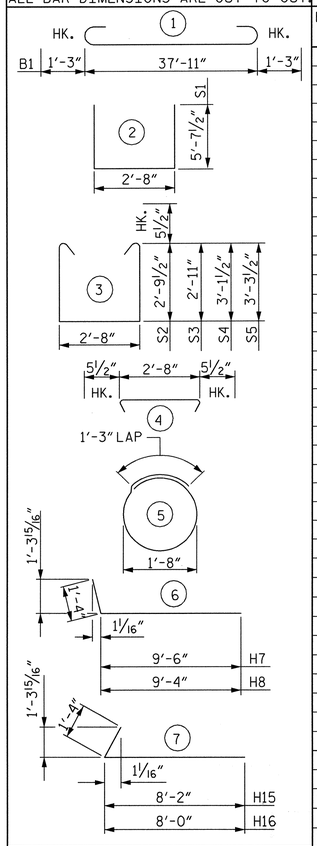

CLASS A CONCRETE:	
POUR 1 (CAP & LOWER WINGS) CU. YARDS	16.1
POUR 2 (UPPER WINGS) CU. YARDS	5.1
TOTAL CU. YARDS	21.2
HP 12 X 53 STEEL PILES:	
NO.	7
LIN. FEET	105
STEEL PILE POINTS NO.	7
PILE EXCAVATION IN SOIL LIN. FEET	50.0
PILE EXCAVATION NOT IN SOIL LIN. FT.	28.0

BILL OF MATERIAL

END BENT 1

BAR	NO.	SIZE	TYPE	LENGTH	WEIGHT
B1	8	9	1	40'-5"	1,099
B2	4	5	STR.	37'-11"	158
B3	2	5	STR.	28'-3"	59
B4	9	4	STR.	2'-8"	16
H1	8	5	STR.	11'-11"	99
H2	2	5	STR.	11'-4"	24
H3	2	5	STR.	10'-3"	21
H4	2	5	STR.	9'-2"	19
H5	2	5	STR.	8'-0"	17
H6	2	5	STR.	6'-11"	14
H7	6	8	6	10'-9"	172
H8	6	8	6	10'-7"	170
H9	8	5	STR.	10'-7"	88
H10	2	5	STR.	10'-0"	21
H11	2	5	STR.	9'-0"	19
H12	2	5	STR.	8'-0"	17
H13	2	5	STR.	7'-0"	15
H14	2	5	STR.	6'-0"	13
H15	5	8	7	9'-6"	127
H16	5	8	7	9'-4"	125
S1	32	5	2	13'-11"	464
S2	2	5	3	9'-2"	19
S3	2	5	3	9'-5"	20
S4	2	5	3	9'-10"	21
S5	2	5	3	10'-2"	21
S6	8	5	4	3'-7"	30
S7	28	4	5	6'-6"	122
V1	20	5	STR.	10'-0"	209
V2	2	5	STR.	5'-9"	12
V3	2	5	STR.	5'-3"	11
V4	2	5	STR.	4'-9"	10
V5	2	5	STR.	4'-3"	9
V6	2	5	STR.	3'-9"	8
V7	2	5	STR.	3'-2"	7
V8	2	5	STR.	2'-8"	6
V9	16	5	STR.	9'-6"	159
V10	2	5	STR.	6'-1"	13
V11	2	5	STR.	5'-6"	11
V12	2	5	STR.	4'-11"	10
V13	2	5	STR.	4'-4"	9
V14	2	5	STR.	3'-10"	8
V15	2	5	STR.	3'-3"	7
V16	2	5	STR.	2'-8"	6
V17	2	5	STR.	3'-4"	7
T1	2	5	STR.	6'-4"	13
T2	2	5	STR.	6'-6"	14

REINFORCING STEEL, LB.: 3,519

PROJECT NO. R-2606A

RANDOLPH COUNTY

STATION: 35+60.41 -L- POC

SHEET 2 OF 3

STATE OF NORTH CAROLINA
DEPARTMENT OF TRANSPORTATION
RALEIGH

SUBSTRUCTURE
END BENT 1

NORTH CAROLINA PROFESSIONAL SEAL 11725 ENGINEER DAVID R. RUGGLES
David Ruggles 1-26-05

NORTH CAROLINA PROFESSIONAL SEAL 23020 ENGINEER JAMES L. BOLDEN, JR.
James L. Bolden, Jr. 1-26-05

DRAWN BY: A. P. TUAZAMA DATE : 8-04
CHECKED BY: J. L. BOLDEN, JR. DATE : 8-04

REVISIONS						SHEET NO.
NO.	BY:	DATE:	NO.	BY:	DATE:	S-152
1			3			TOTAL SHEETS
2			4			199

DWG. 20 OF 34

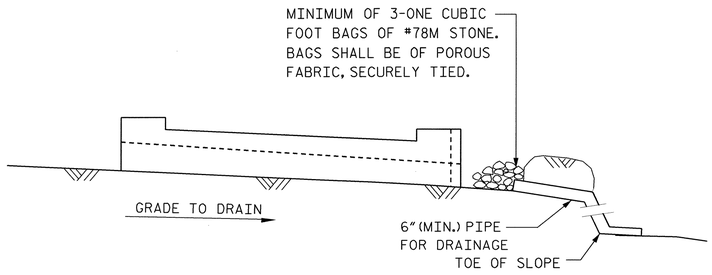

BAGGED STONE AND PIPE SHALL BE PLACED IMMEDIATELY AFTER COMPLETION OF END BENT EXCAVATION. PIPE MAY BE EITHER CONCRETE, CORRUGATED STEEL, CORRUGATED ALUMINUM ALLOY, OR CORRUGATED PLASTIC. PERFORATED PIPE WILL NOT BE ALLOWED.

BAGGED STONE SHALL REMAIN IN PLACE UNTIL THE ENGINEER DIRECTS THAT IT BE REMOVED. THE CONTRACTOR SHALL REMOVE AND DISPOSE OF SILT ACCUMULATIONS AT BAGGED STONE WHEN SO DIRECTED BY THE ENGINEER. BAGS SHALL BE REMOVED AND REPLACED WHENEVER THE ENGINEER DETERMINES THAT THEY HAVE DETERIORATED AND LOST THEIR EFFECTIVENESS.

NO SEPARATE PAYMENT WILL BE MADE FOR THIS WORK AND THE ENTIRE COST OF THIS WORK SHALL BE INCLUDED IN THE UNIT CONTRACT PRICE FOR THE SEVERAL PAY ITEMS.

TEMPORARY DRAINAGE AT END BENT

END BENT 1 SHOWN, END BENT 2 SIMILAR

NOTES:

STIRRUPS IN CAP MAY BE SHIFTED AS NECESSARY TO CLEAR ANCHOR BOLTS.

THE TOP SURFACE AREAS OF THE END BENT CAP SHALL BE CURED IN ACCORDANCE WITH THE STANDARD SPECIFICATIONS EXCEPT THAT THE MEMBRANE CURING COMPOUND METHOD SHALL NOT BE USED.

THE CONTRACTOR SHALL PROVIDE FOR INSTALLATION OF THE 4"DIAMETER DRAIN PIPE THROUGH THE WING WALL AS REQUIRED FOR REINFORCED BRIDGE APPROACH FILLS, SEE THE ROADWAY PLANS. REINFORCING STEEL IN THE WING WALL MAY BE SHIFTED AS NECESSARY TO CLEAR THE DRAIN PIPE.

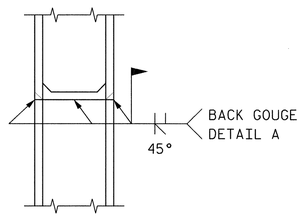

✳ PILE VERTICAL

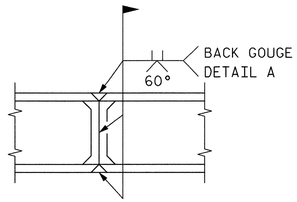

✳ PILE HORIZONTAL OR VERTICAL

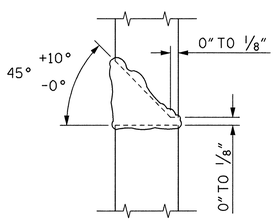

DETAIL A

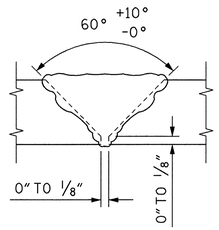

DETAIL B

✳POSITION OF PILE DURING WELDING

PILE SPLICE DETAILS

PROJECT NO. R-2606A

RANDOLPH COUNTY

STATION: 35+60.41 -L- POC

SHEET 3 OF 3

STATE OF NORTH CAROLINA
DEPARTMENT OF TRANSPORTATION
RALEIGH

SUBSTRUCTURE
END BENT 1

NORTH CAROLINA PROFESSIONAL SEAL 11725 ENGINEER DAVID R. RUGGLES
David Ruggles
1-26-05

NORTH CAROLINA PROFESSIONAL SEAL 23020 ENGINEER JAMES L. BOLDEN, JR.
James L. Bolden
1-26-05

REVISIONS						SHEET NO.
NO.	BY:	DATE:	NO.	BY:	DATE:	S-153
1			3			TOTAL SHEETS
2			4			199

DWG. 21 OF 34

DRAWN BY: A. P. TUAZAMA DATE : 8-04
CHECKED BY: J. L. BOLDEN, JR. DATE : 8-04

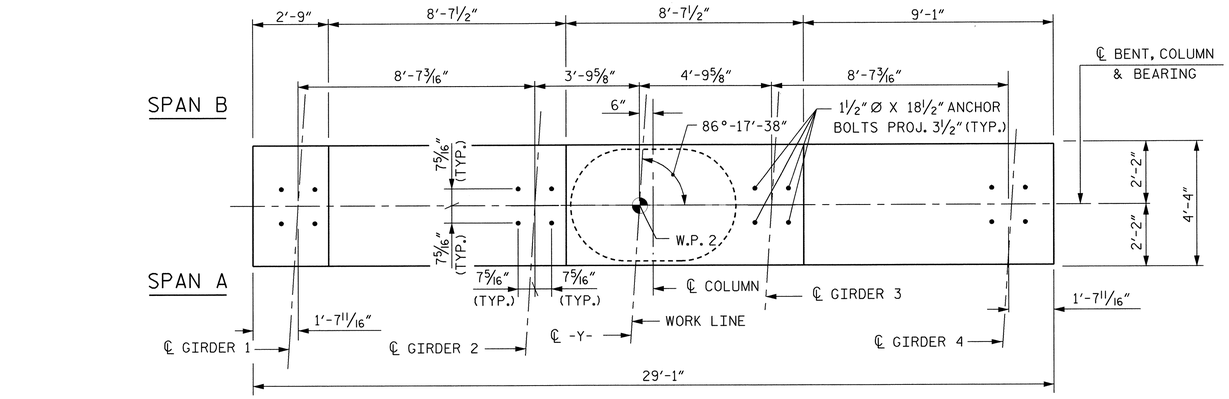

PLAN OF CAP

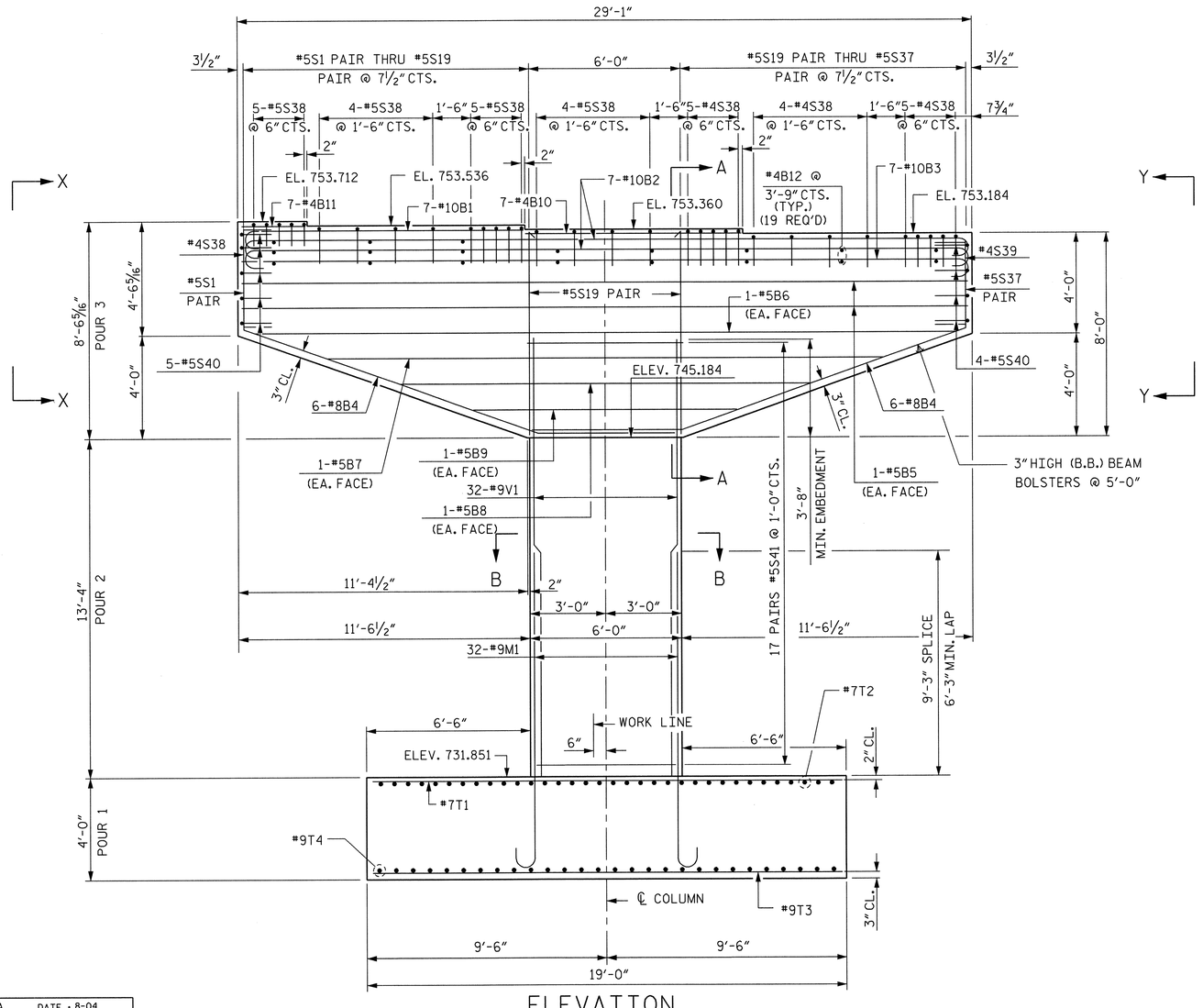

ELEVATION

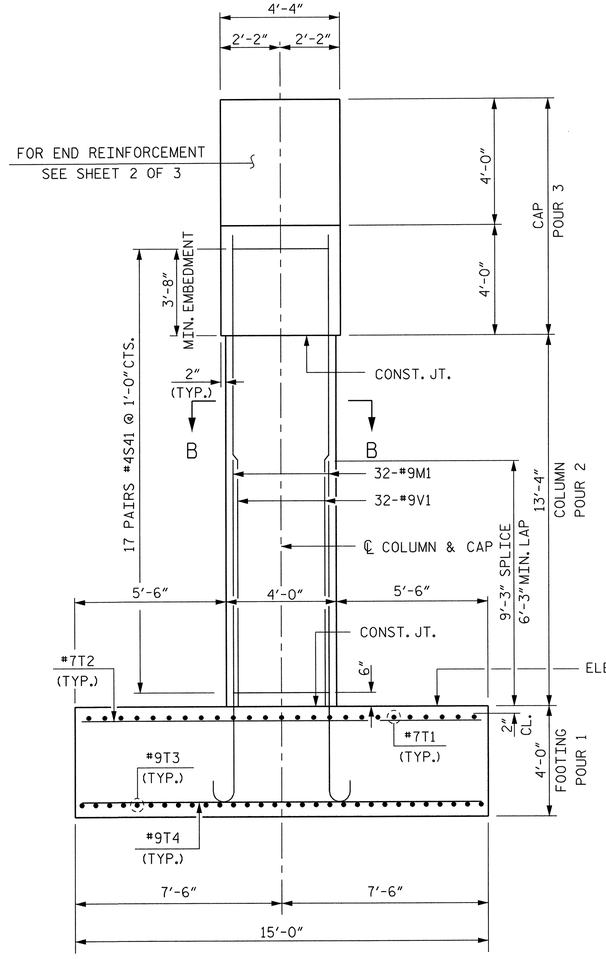

RIGHT END ELEVATION

PROJECT NO. R-2606A

RANDOLPH COUNTY

STATION: 35+60.41 -L- POC

SHEET 1 OF 3

STATE OF NORTH CAROLINA
DEPARTMENT OF TRANSPORTATION
RALEIGH

SUBSTRUCTURE
BENT 1

NORTH CAROLINA PROFESSIONAL SEAL 11725 ENGINEER DAVID R. RUGGLES
David Ruggles
1-26-05

NORTH CAROLINA PROFESSIONAL SEAL 23020 ENGINEER JAMES L. BOLDEN, JR.
James L. Bolden
1-26-05

REVISIONS						SHEET NO.
NO.	BY:	DATE:	NO.	BY:	DATE:	S-154
1			3			TOTAL SHEETS
2			4			154

DWG. 22 OF 34

DRAWN BY: A. P. TUAZAMA DATE : 8-04
CHECKED BY: J. L. BOLDEN, JR. DATE : 8-04

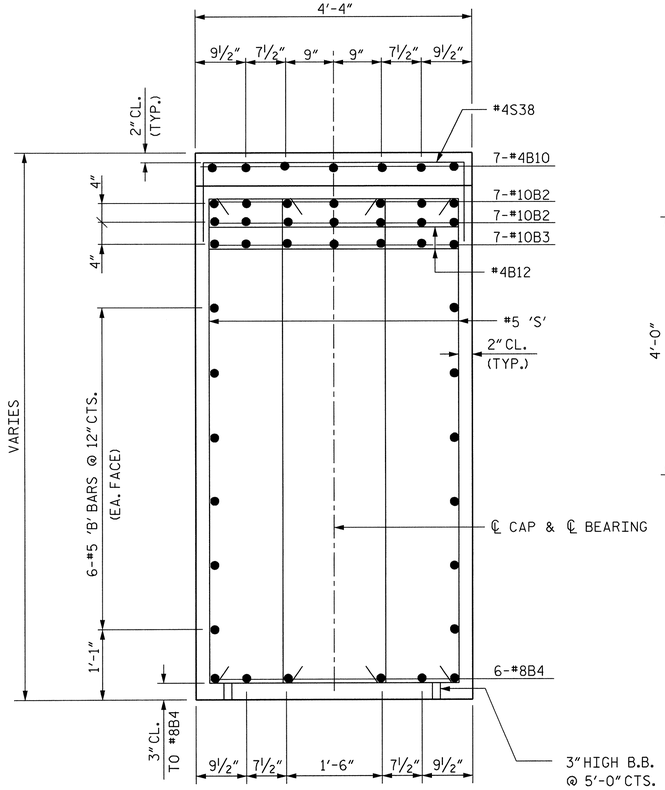

SECTION A-A

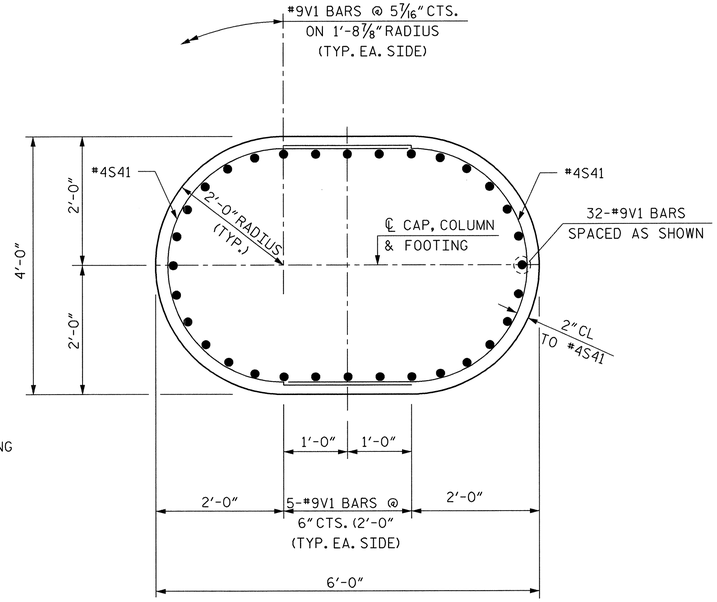

SECTION B-B

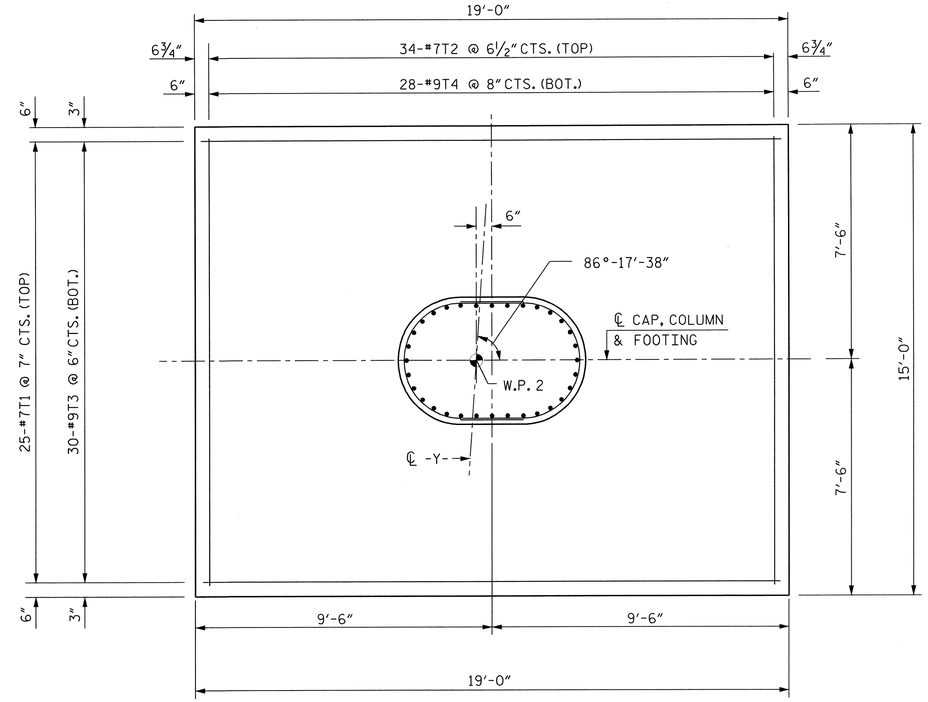

PLAN OF FOOTING

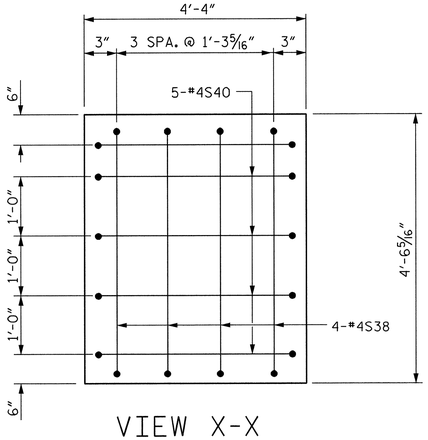

VIEW X-X

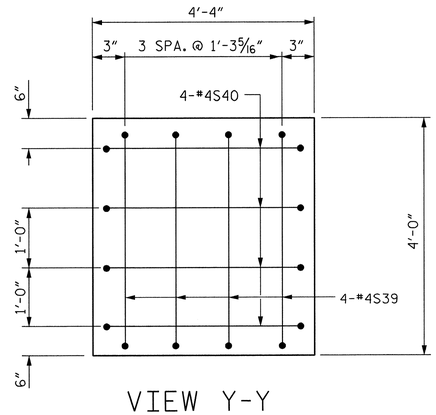

VIEW Y-Y

NOTES:

STIRRUPS TO BE PLACED VERTICALLY AND INVERTED ALTERNATELY.

STIRRUPS IN CAP MAY BE SHIFTED AS NECESSARY TO CLEAR ANCHOR BOLTS.

FOR POT BEARING DETAILS, SEE POT BEARING SHEET.

FOR BILL OF MATERIAL, SEE SHEET 3 OF 3.

DETAILED DRAWINGS FOR FALSEWORK AND FORMS FOR THIS HAMMERHEAD BENT SHALL BE SUBMITTED FOR BENT CAP. SEE SHEET SN.

THE REQUIRED BEARING CAPACITY OF THE SPREAD FOOTING AT BENT NO. 1 IS 5 TONS/SQ. FT. THE REQUIRED BEARING CAPACITY SHALL BE VERIFIED.

THE FOOTING AT BENT NO. 1 SHALL BE KEYED AT LEAST 12 INCHES INTO ROCK WITH THE MINIMUM THICKNESS AS SHOWN ON THE PLANS.

NORTH CAROLINA PROFESSIONAL SEAL 11725 ENGINEER DAVID R. RUGGLES
1-26-05

NORTH CAROLINA PROFESSIONAL SEAL 23020 ENGINEER JAMES L. BOLDEN, JR.
1-26-05

PROJECT NO. R-2606A

RANDOLPH COUNTY

STATION: 35+60.41 -L- POC

SHEET 2 OF 3

STATE OF NORTH CAROLINA
DEPARTMENT OF TRANSPORTATION
RALEIGH

SUBSTRUCTURE
BENT 1

REVISIONS						SHEET NO.
NO.	BY:	DATE:	NO.	BY:	DATE:	S-155
1			3			TOTAL SHEETS
2			4			199

DWG. 23 OF 34

DRAWN BY: A. P. TUAZAMA DATE: 8-04
CHECKED BY: J. L. BOLDEN, JR. DATE: 8-04

BILL OF MATERIAL
BENT 1

BAR	NO.	SIZE	TYPE	LENGTH	WEIGHT	BAR	NO.	SIZE	TYPE	LENGTH	WEIGHT
B1	7	10	1	12′-5″	374	S18	2	5	4	19′-4″	40
B2	14	10	2	31′-6″	1,898	S19	4	5	4	18′-11″	79
B3	7	10	1	30′-1″	906	S20	2	5	4	18′-7″	39
B4	12	8	3	17′-7″	563	S21	2	5	4	18′-2″	38
B5	4	5	STR.	28′-9″	120	S22	2	5	4	17′-9″	37
B6	2	5	STR.	28′-6″	59	S23	2	5	4	17′-3″	36
B7	2	5	STR.	22′-10″	48	S24	2	5	4	16′-10″	35
B8	2	5	STR.	17′-2″	36	S25	2	5	4	16′-5″	34
B9	2	5	STR.	11′-5″	24	S26	2	5	4	16′-0″	33
B10	7	4	STR.	8′-5″	39	S27	2	5	4	15′-6″	32
B11	7	4	STR.	2′-5″	11	S28	2	5	4	15′-1″	31
B12	19	4	STR.	4′-0″	51	S29	2	5	4	14′-8″	30
						S30	2	5	4	14′-2″	30
M1	32	9	1	14′-1″	1,532	S31	2	5	4	13′-9″	29
						S32	2	5	4	13′-4″	28
S1	2	5	4	11′-10″	25	S33	2	5	4	12′-11″	27
S2	2	5	4	12′-3″	26	S34	2	5	4	12′-5″	26
S3	2	5	4	12′-9″	27	S35	2	5	4	12′-0″	25
S4	2	5	4	13′-2″	27	S36	2	5	4	11′-7″	24
S5	2	5	4	13′-7″	28	S37	2	5	4	11′-2″	23
S6	2	5	4	14′-0″	29	S38	36	4	5	6′-6″	156
S7	2	5	4	14′-6″	30	S39	4	4	5	6′-0″	16
S8	2	5	4	14′-11″	31	S40	9	4	5	6′-4″	38
S9	2	5	4	15′-4″	32	S41	34	4	6	9′-8″	220
S10	2	5	4	15′-9″	33						
S11	2	5	4	16′-3″	34	V1	32	9	STR	17′-0″	1,850
S12	2	5	4	16′-8″	35						
S13	2	5	4	17′-1″	36	T1	25	7	STR	18′-6″	945
S14	2	5	4	17′-7″	37	T2	34	7	STR	14′-6″	1,008
S15	2	5	4	18′-0″	37	T3	30	9	STR	18′-6″	1,887
S16	2	5	4	18′-6″	38	T4	28	9	STR	14′-6″	1,380
S17	2	5	4	18′-10″	39						

TABLE			
BAR	"L"	BAR	"L"
S1	4′-1″	S20	7′-5½″
S2	4′-3½″	S21	7′-3″
S3	4′-6½″	S22	7′-0½″
S4	4′-9″	S23	6′-9½″
S5	4′-11½″	S24	6′-7″
S6	5′-2″	S25	6′-4½″
S7	5′-5″	S26	6′-2″
S8	5′-7½″	S27	5′-11″
S9	5′-10″	S28	5′-8½″
S10	6′-0½″	S29	5′-6″
S11	6′-3½″	S30	5′-3″
S12	6′-6″	S31	5′-0½″
S13	6′-8½″	S32	4′-10″
S14	6′-11½″	S33	4′-7½″
S15	7′-2″	S34	4′-4½″
S16	7′-5″	S35	4′-2″
S17	7′-7″	S36	3′-11½″
S18	7′-10″	S37	3′-9″
S19	7′-7½″		

QUANTITES - BENT 1		
REINFORCING STEEL:	LBS.	14,384
CLASS A CONCRETE:		
POUR 1	CU. YARDS	42.2
POUR 2	CU. YARDS	10.2
POUR 3	CU. YARDS	31.0
TOTAL	CU. YARDS	83.4
FOUNDATION EXCAVATION		LUMP SUM

BAR TYPES
ALL BAR DIMENSIONS ARE OUT TO OUT

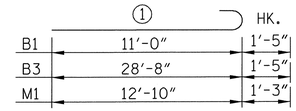

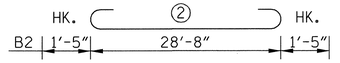

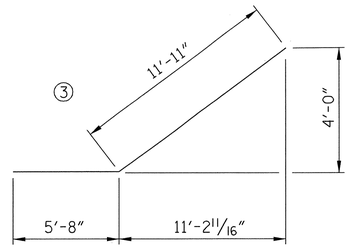

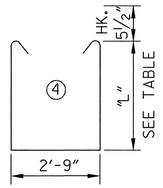

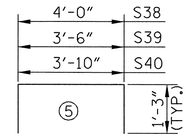

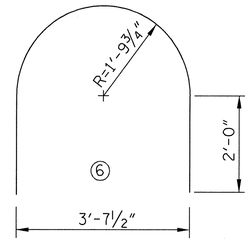

PROJECT NO. R-2606A

RANDOLPH COUNTY

STATION: 35+60.41 -L- POC

SHEET 3 OF 3

STATE OF NORTH CAROLINA
DEPARTMENT OF TRANSPORTATION
RALEIGH

SUBSTRUCTURE
BENT 1

NORTH CAROLINA PROFESSIONAL SEAL 11725 ENGINEER DAVID R. RUGGLES
David Ruggles
1-26-05

NORTH CAROLINA PROFESSIONAL SEAL 23020 ENGINEER JAMES L. BOLDEN, JR.
Jas L. Bolden Jr
1-26-05

REVISIONS						SHEET NO.
NO.	BY:	DATE:	NO.	BY:	DATE:	S-156
1			3			TOTAL SHEETS
2			4			199

DWG. 24 OF 34

DRAWN BY: A. P. TUAZAMA DATE : 8-04
CHECKED BY: J. L. BOLDEN, JR. DATE : 8-04

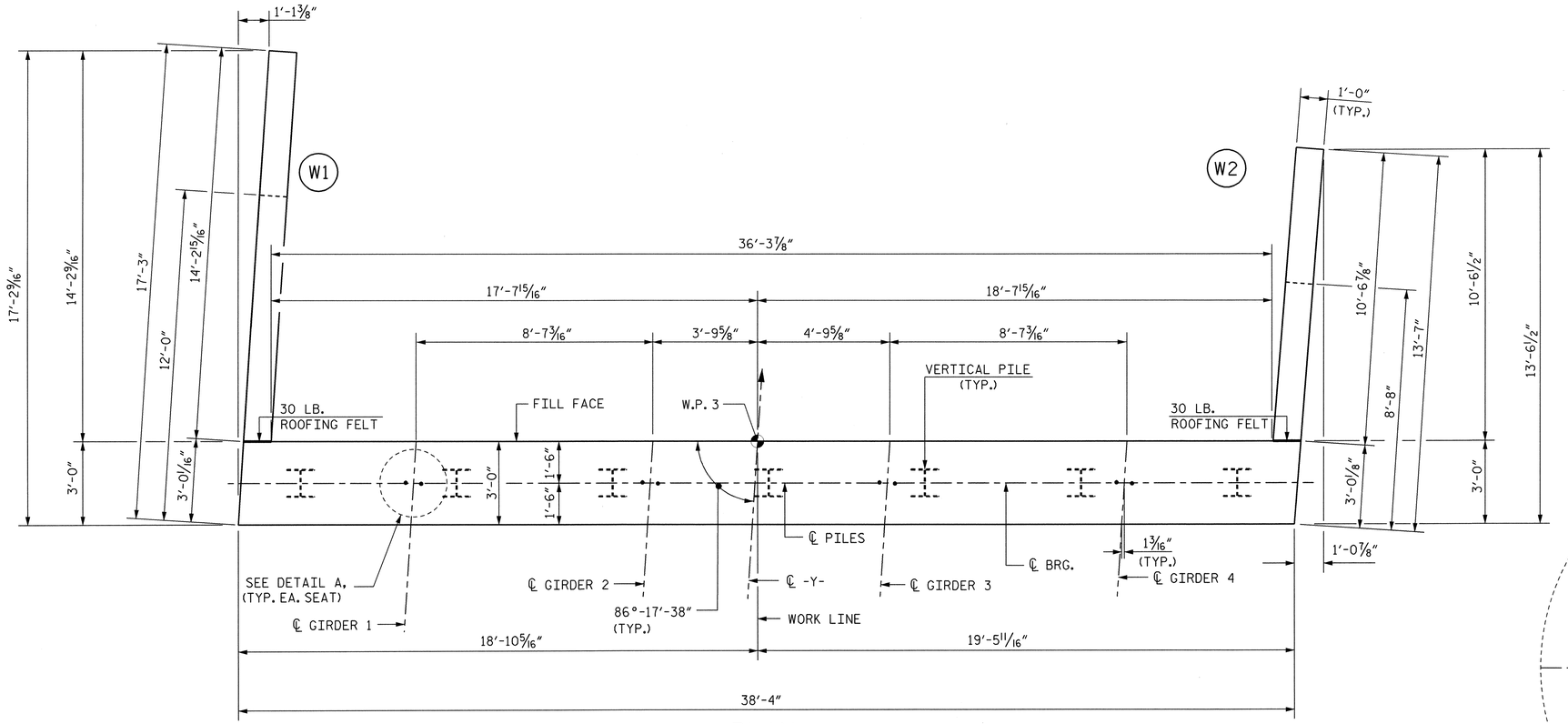

PLAN

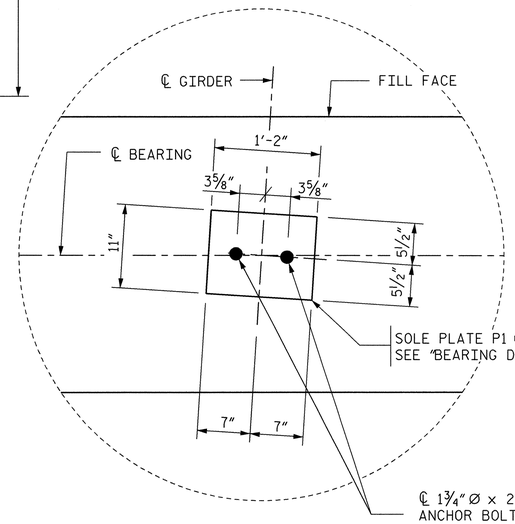

DETAIL A

SEE END BENT 1, SHEET 3 OF 3 FOR NOTES.

FOR PIPE DRAIN DETAILS, PILE SPLICE DETAILS AND TEMPORARY DRAINAGE AT END BENT, SEE END BENT 1, SHEET 3 OF 3.

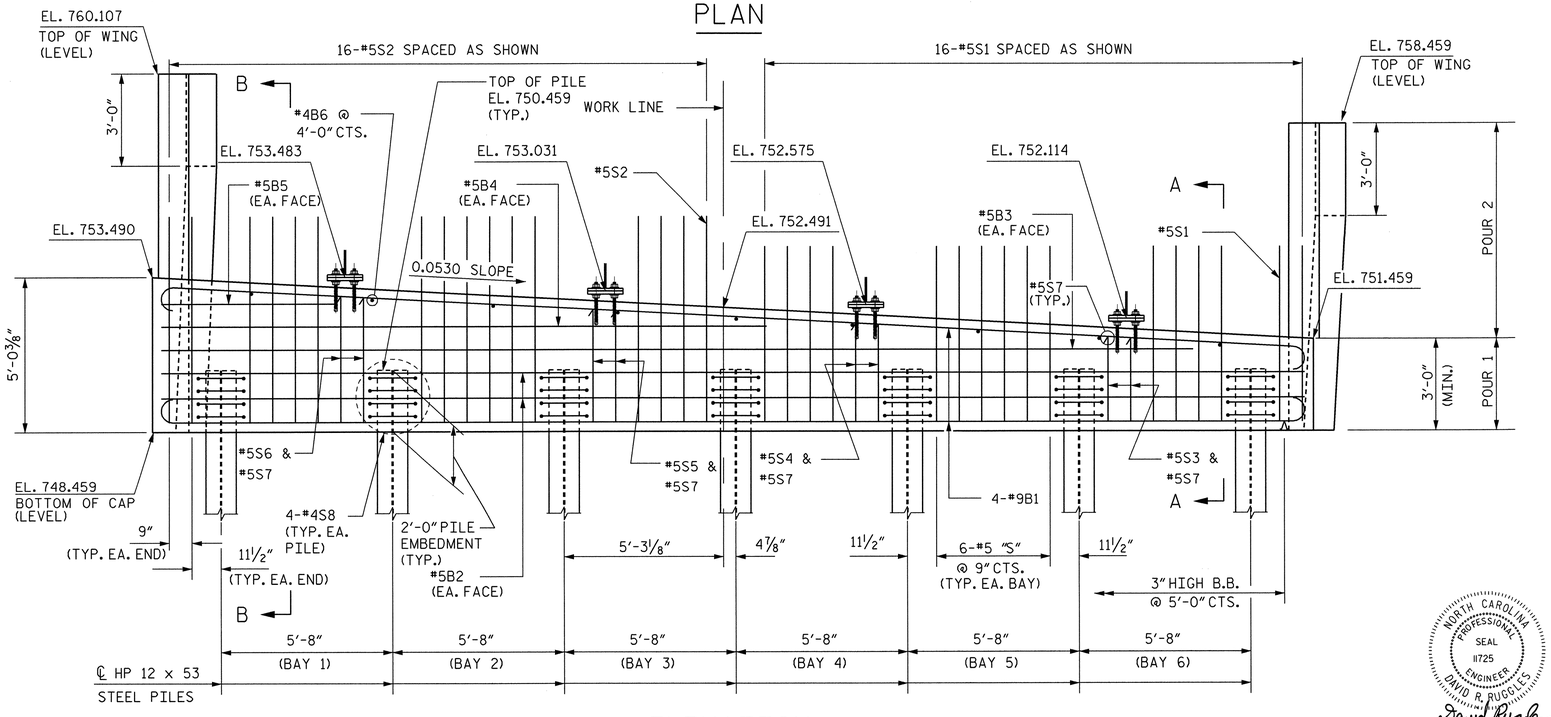

ELEVATION

PROJECT NO. R-2606A

RANDOLPH COUNTY

STATION: 35+60.41 -L- POC

SHEET 1 OF 2

STATE OF NORTH CAROLINA
DEPARTMENT OF TRANSPORTATION
RALEIGH

SUBSTRUCTURE
END BENT 2

NORTH CAROLINA PROFESSIONAL SEAL 11725 ENGINEER DAVID R. PUGGLES
David Puggles 1-26-05

NORTH CAROLINA PROFESSIONAL SEAL 23020 ENGINEER JAMES L. BOLDEN, JR.
James L. Bolden 1-26-05

REVISIONS						SHEET NO.
NO.	BY:	DATE:	NO.	BY:	DATE:	S-157
1			3			TOTAL SHEETS
2			4			199

DWG. 25 OF 34

DRAWN BY: A. P. TUAZAMA DATE : 8-04

CHECKED BY: J. L. BOLDEN, JR. DATE : 8-04

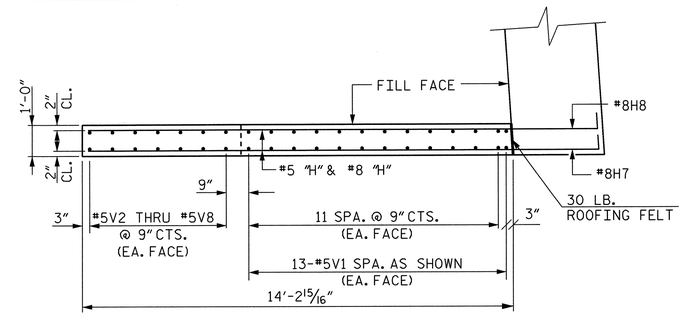

PLAN OF WING W1

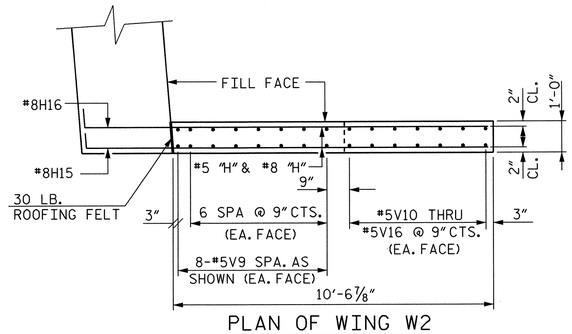

PLAN OF WING W2

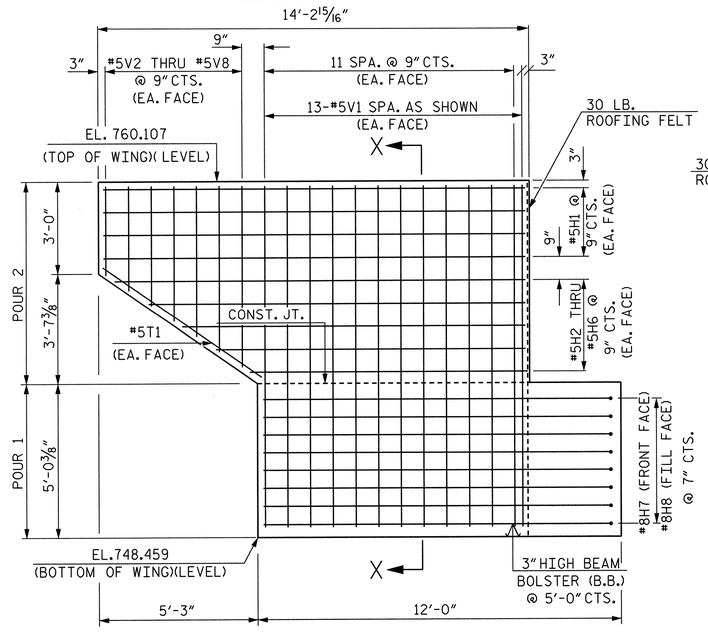

ELEVATION OF WING W1

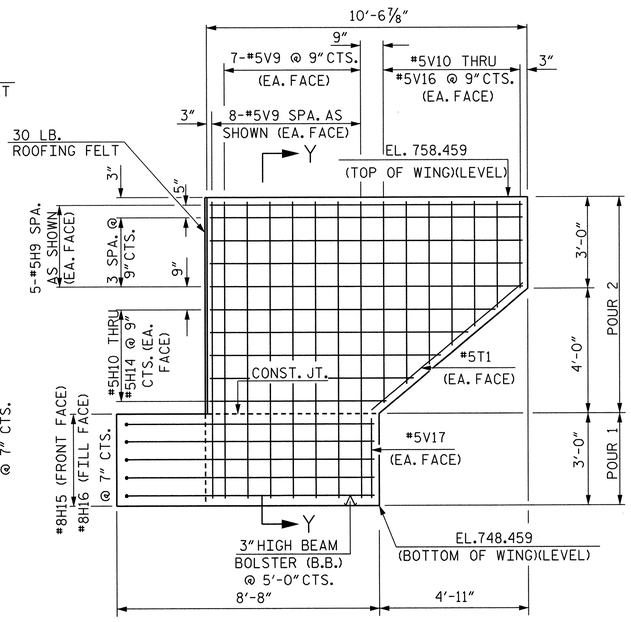

ELEVATION OF WING W2

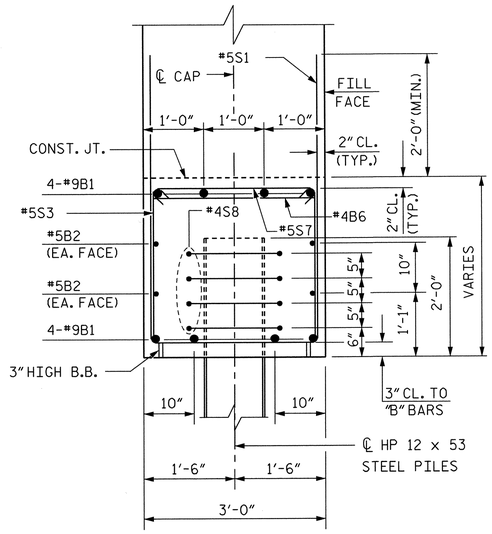

SECTION A-A

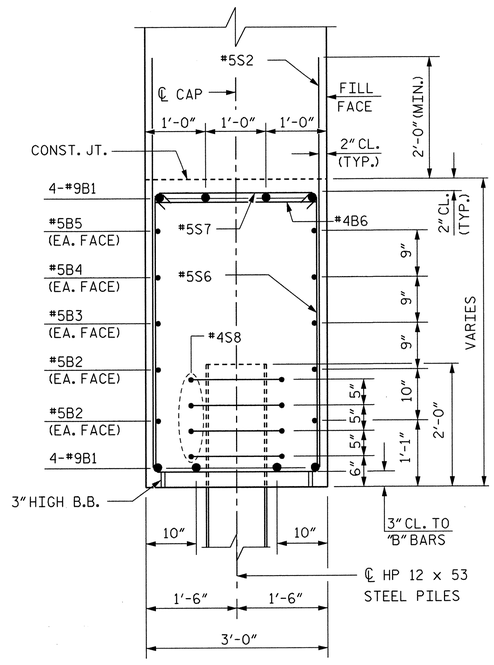

SECTION B-B

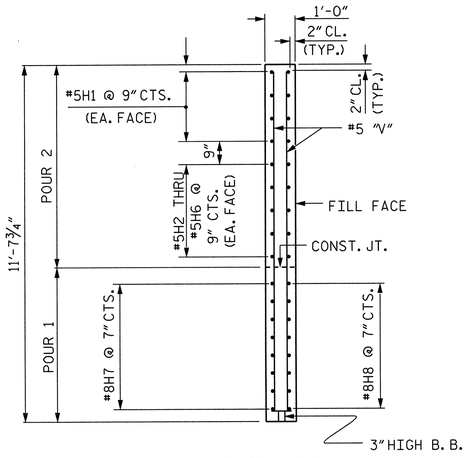

SECTION X-X

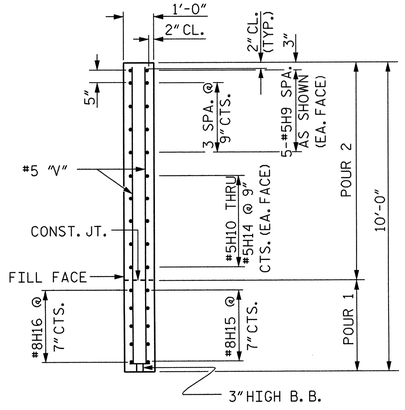

SECTION Y-Y

BAR TYPES						
ALL BAR DIMENSIONS ARE OUT TO OUT.						
BILL OF MATERIAL						
END BENT 2						
BAR	NO.	SIZE	TYPE	LENGTH	WEIGHT	
B1	8	9	1	40'-5"	1,099	
B2	4	5	STR.	37'-11"	158	
B3	2	5	STR.	34'-4"	72	
B4	2	5	STR.	20'-3"	42	
B5	2	5	STR.	6'-1"	13	
B6	9	4	STR.	2'-8"	16	
H1	8	5	STR.	13'-10"	115	
H2	2	5	STR.	13'-3"	28	
H3	2	5	STR.	12'-2"	25	
H4	2	5	STR.	11'-1"	23	
H5	2	5	STR.	10'-0"	21	
H6	2	5	STR.	8'-11"	19	
H7	8	8	6	12'-9"	272	
H8	8	8	6	12'-6"	267	
H9	10	5	STR.	10'-3"	106	
H10	2	5	STR.	9'-3"	19	
H11	2	5	STR.	8'-4"	17	
H12	2	5	STR.	7'-5"	15	
H13	2	5	STR.	6'-6"	14	
H14	2	5	STR.	5'-7"	12	
H15	5	8	7	9'-5"	126	
H16	5	8	7	9'-4"	125	
S1	16	5	2	14'-3"	238	
S2	16	5	2	16'-4"	273	
S3	2	5	3	9'-6"	20	
S4	2	5	3	10'-5"	22	
S5	2	5	3	11'-4"	24	
S6	2	5	3	12'-3"	26	
S7	8	5	4	3'-7"	30	
S8	28	4	5	6'-6"	122	
V1	26	5	STR.	11'-3"	305	
V2	2	5	STR.	5'-9"	12	
V3	2	5	STR.	5'-3"	11	
V4	2	5	STR.	4'-9"	10	
V5	2	5	STR.	4'-3"	9	
V6	2	5	STR.	3'-9"	8	
V7	2	5	STR.	3'-2"	7	
V8	2	5	STR.	2'-8"	6	
V9	16	5	STR.	9'-7"	160	
V10	2	5	STR.	6'-5"	13	
V11	2	5	STR.	5'-9"	12	
V12	2	5	STR.	5'-2"	11	
V13	2	5	STR.	4'-7"	10	
V14	2	5	STR.	3'-11"	8	
V15	2	5	STR.	3'-4"	7	
V16	2	5	STR.	2'-9"	6	
V17	2	5	STR.	2'-7"	5	
T1	4	5	STR.	6'-4"	26	

CLASS A CONCRETE:	
POUR 1 (CAP & LOWER WINGS) CU. YARDS	19.4
POUR 2 (UPPER WINGS) CU. YARDS	5.5
TOTAL CU. YARDS	24.9
HP 12 X 53 STEEL PILES:	
NO.	7
LIN. FEET	105
STEEL PILE POINTS EA.	7
REINFORCING STEEL, LB.:	3,986

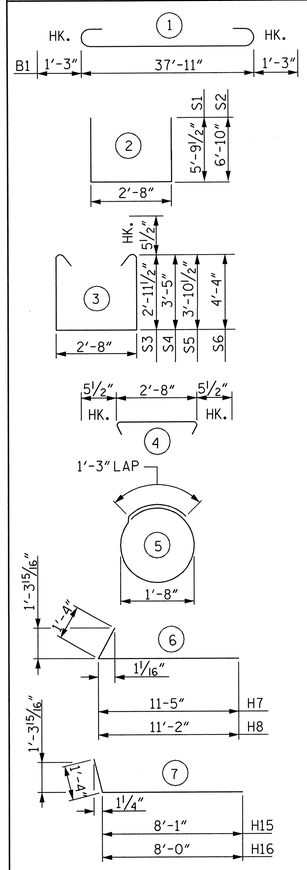

PROJECT NO. R-2606A

RANDOLPH COUNTY

STATION: 35+60.41 -L- POC

SHEET 2 OF 2

STATE OF NORTH CAROLINA
DEPARTMENT OF TRANSPORTATION
RALEIGH

SUBSTRUCTURE
END BENT 2

REVISIONS						SHEET NO.
NO.	BY:	DATE:	NO.	BY:	DATE:	S-158
1			3			TOTAL SHEETS
2			4			199

DWG. 26 OF 34

NORTH CAROLINA PROFESSIONAL SEAL 11725 ENGINEER DAVID R. BUGGLES
David Buggles
1-26-05

NORTH CAROLINA PROFESSIONAL SEAL 23020 ENGINEER JAMES L. BOLDEN JR.
James L. Bolden
1-26-05

DRAWN BY: A. P. TUAZAMA DATE : 8-04
CHECKED BY: J. L. BOLDEN, JR. DATE : 8-04

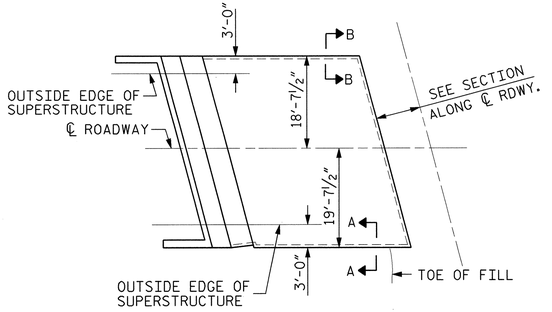

PLAN

END BENT 1 SHOWN, END BENT 2 SIMILAR BY ROTATION

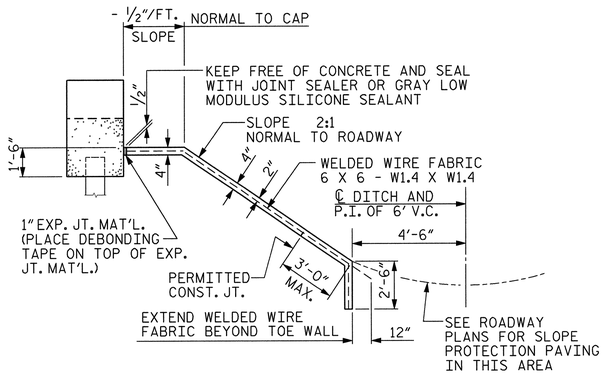

SECTION ALONG ℄ ROADWAY WHEN FILL CATCHES IN DITCH

DETAILS FOR ALTERNATE "A"

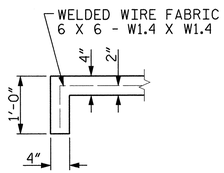

SECTION A-A

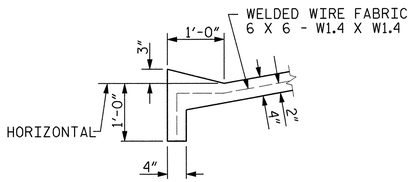

SECTION B-B

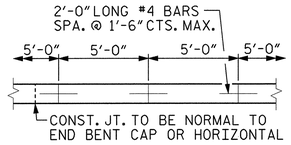

STRIP WIDTHS MAY VARY IN CURVED PORTION.

POURING DETAIL

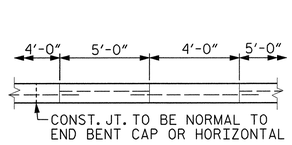

POUR A 4'-0" STRIP FIRST. STRIP WIDTHS MAY VARY IN CURVED PORTION.

OPTIONAL POURING DETAIL

GENERAL NOTES

SLOPE PROTECTION SHALL BE PLACED UNDER THE ENDS OF THE BRIDGE AS SHOWN IN THE DETAILS. THE CONTRACTOR, AT HIS OPTION, MAY USE ALTERNATE "B" ONLY FOR HIGHWAY OVER HIGHWAY GRADE SEPARATIONS WITH 2:1 END BENT SLOPE IN RURAL, UNPOPULATED AREAS. STRAIGHT EDGING WILL NOT BE REQUIRED UNLESS, IN THE OPINION OF THE ENGINEER, VISUAL INSPECTION INDICATES A NEED FOR IT. METHOD OF MEASUREMENT AND BASIS OF PAYMENT SHALL BE AS PRESCRIBED IN SECTION 462 OF THE STANDARD SPECIFICATIONS. FOR BERM WIDTH, SEE GENERAL DRAWING.

ALTERNATE "A"

ALTERNATE "A" SHALL CONSIST OF 4" POURED-IN-PLACE CONCRETE PAVING AS SHOWN IN THE DETAILS ON THIS SHEET. CONCRETE SHALL BE CLASS "B". THE CONCRETE SURFACE SHALL BE FLOATED WITH A WOODEN FLOAT AND FINISHED. WELDED WIRE FABRIC REINFORCING SHALL BE 6 X 6 - W1.4 X W1.4, 60" WIDE. SLOPE PROTECTION SHALL BE POURED IN 5' STRIPS AS SHOWN IN THE "POURING DETAIL" WITH 2'-0" LONG #4 BARS PLACED ALONG THE SLOPE BETWEEN STRIPS AT 1'-6" MAXIMUM SPACING. SLOPE PROTECTION MAY BE POURED IN ALTERNATE 4' AND 5' STRIPS AS SHOWN IN THE "OPTIONAL POURING DETAIL" WITH ADJACENT RUNS OF WELDED WIRE FABRIC LAPPING AT LEAST 6". THE COST OF THE WELDED WIRE FABRIC AND #4 BARS, IF USED, SHALL BE INCLUDED IN THE CONTRACT UNIT PRICE BID PER SQUARE YARD FOR SLOPE PROTECTION.

BRIDGE @ STA. 15+22.72 -Y- POT	4" SLOPE PROTECTION	* WELDED WIRE FABRIC 60" WIDE
	SQUARE YARDS	APPROX. L.F.
END BENT 1	155 SQ. YARDS	279'
END BENT 2	150 SQ. YARDS	270'

* QUANTITY SHOWN IS BASED ON 5' POURS.

PROJECT NO. R-2606A

RANDOLPH COUNTY

STATION: 35+60.41 -L- POC

SHEET 1 OF 2

STATE OF NORTH CAROLINA
DEPARTMENT OF TRANSPORTATION
RALEIGH

STANDARD
SLOPE PROTECTION
DETAILS

NORTH CAROLINA PROFESSIONAL SEAL 11725 ENGINEER DAVID R. RUGGLES
David Ruggles
1-26-05

NORTH CAROLINA PROFESSIONAL SEAL 23020 ENGINEER JAMES L. BOLDEN, JR.
James L. Bolden, Jr.
1-26-05

ASSEMBLED BY : A. P. TUAZAMA	DATE : 12-04
CHECKED BY : J. L. BOLDEN, JR.	DATE : 12-04
DRAWN BY : ELR 5/92	REV. 10/17/00 LES/RDR
CHECKED BY : GRP 6/92	REV. 7/10/01 LES/RDR
	REV. 5/7/03 RWW/JTE

DWG. 27 OF 34

REVISIONS						SHEET NO.
NO.	BY:	DATE:	NO.	BY:	DATE:	S-159
1			3			TOTAL SHEETS
2			4			199

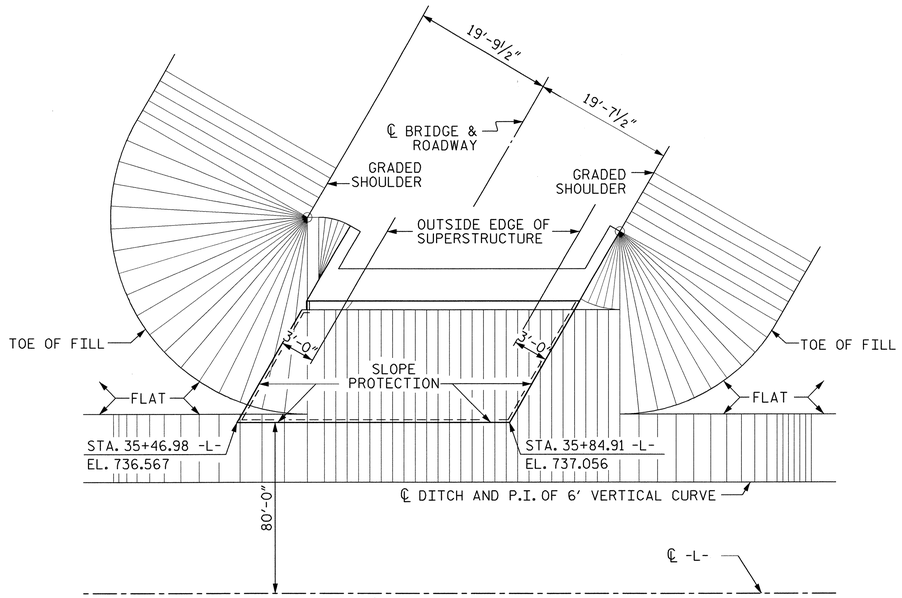

PLAN - END BENT WITH SWEPT BACK WINGS - SKEWED

(END BENT 2) (2:1 SLOPE)

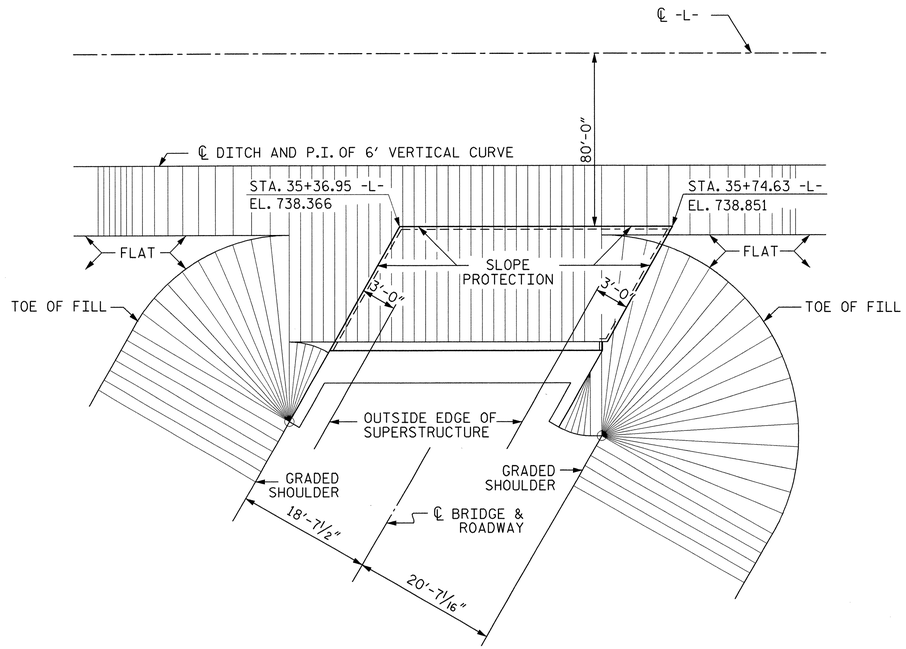

PLAN - END BENT WITH SWEPT BACK WINGS - SKEWED

(END BENT 1) (2:1 SLOPE)

ASSEMBLED BY : A. P. TUAZAMA		DATE :	12-04
CHECKED BY : J. L. BOLDEN, JR.		DATE :	12-04
DRAWN BY : WJH 10/88	REV. 8/28/92		ELR/GRP
CHECKED BY : FCJ 10/88	REV. 2/6/97		EEM/RGW
	REV. 7/17/98		REK/RWW

NORTH CAROLINA PROFESSIONAL SEAL 11725 ENGINEER DAVID R. RUGGLES
David Ruggles 1-26-05

NORTH CAROLINA PROFESSIONAL SEAL 23020 ENGINEER JAMES L. BOLDEN, JR.
James L. Bolden, Jr. 1-26-05

PROJECT NO. R-2606A

RANDOLPH COUNTY

STATION: 35+60.41 -L- POC

SHEET 2 OF 2

STATE OF NORTH CAROLINA
DEPARTMENT OF TRANSPORTATION
RALEIGH

STANDARD
SLOPE PROTECTION
DETAILS

REVISIONS						SHEET NO.
NO.	BY:	DATE:	NO.	BY:	DATE:	S-160
1			3			TOTAL SHEETS
2			4			199

DWG. 28 OF 34

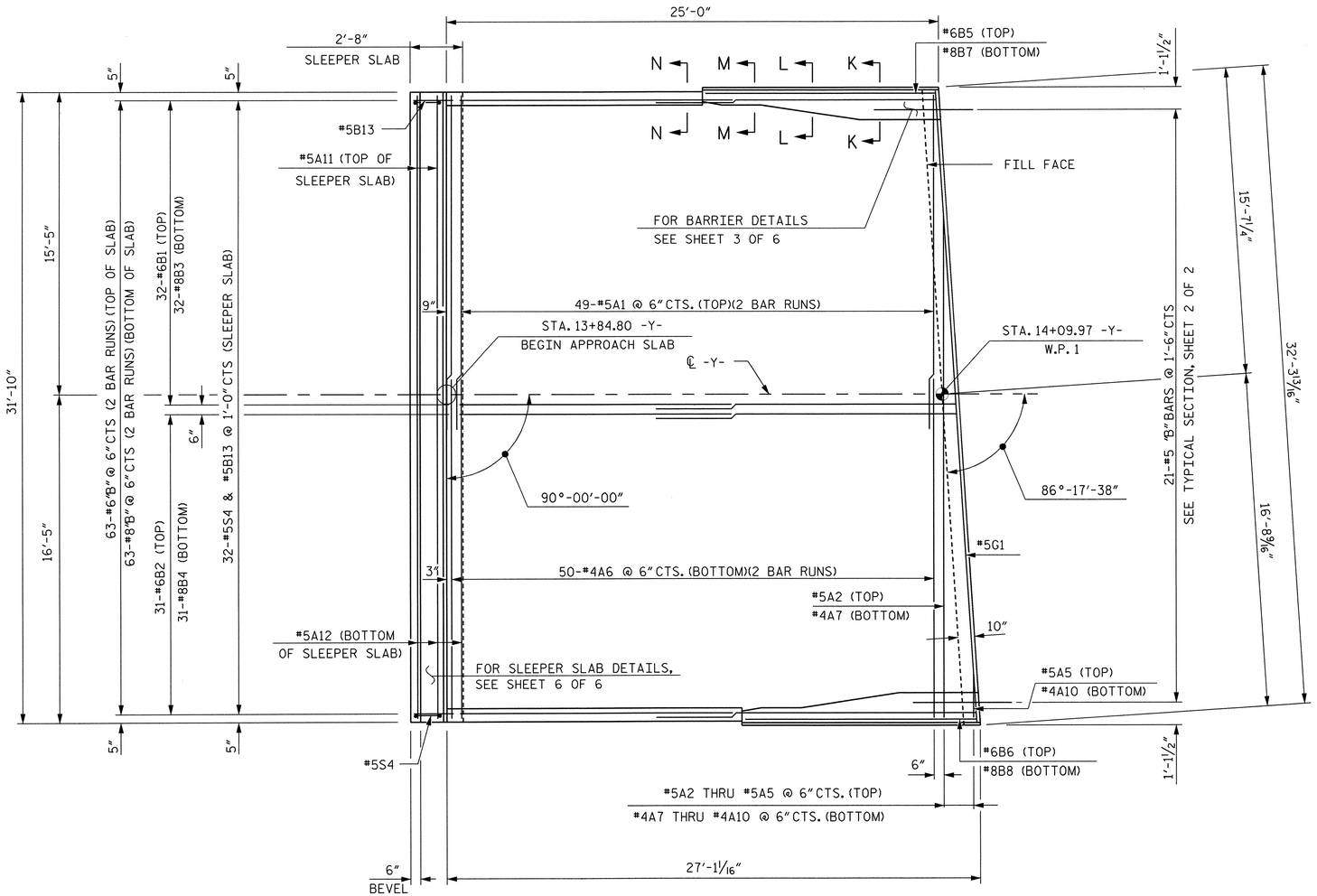

PLAN OF APPROACH SLAB

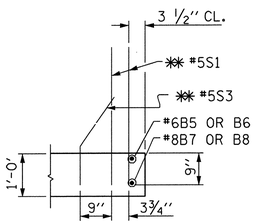

SECTION K-K

** ADHESIVELY ANCHORED

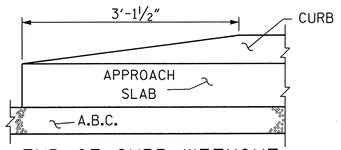

END OF CURB WITHOUT SHOULDER BERM GUTTER

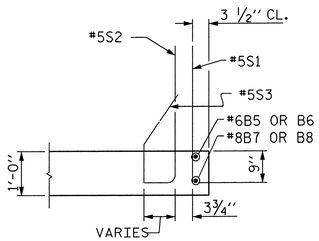

SECTION L-L

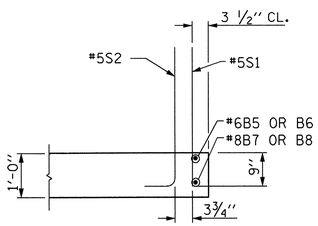

SECTION M-M

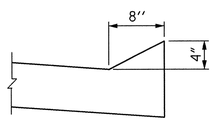

SECTION N-N

NOTES

THE COST OF THE BARRIER RAIL ON THE APPROACH SLAB SHALL BE INCLUDED IN THE LUMP SUM CONTRACT PRICE BID FOR BRIDGE APPROACH SLABS.

APPROACH SLAB SHALL NOT BE CONSTRUCTED PRIOR TO COMPLETION OF THE BRIDGE DECK.

FOR REINFORCED BRIDGE APPROACH FILL INCLUDING FABRIC, IMPERMEABLE GEOMEMBRANE, 4" Ø DRAINAGE PIPE, #78M STONE, AND SELECT MATERIAL, SEE ROADWAY PLANS.

TEMPORARY DRAINAGE AND TEMPORARY BERM AND SLOPE DRAINS WILL BE PAID FOR UNDER THE LUMP SUM PRICE FOR BRIDGE APPROACH SLAB.

AREA BETWEEN THE WINGWALL AND APPROACH SLAB SHALL BE PAVED AND GRADED TO DRAIN THE WATER AWAY FROM THE FILL FACE OF THE BRIDGE.

THE 6" COMP. A.B.C. SHALL EXTEND 10'-0" BEYOND THE END OF THE SLEEPER SLAB AND 1'-0" OUTSIDE OF EACH EDGE OF THE SLAB.

THE CONTRACTOR MAY USE 4" TYPE B-25.0B ASPHALT CONCRETE BASE COURSE IN LIEU OF 6" COMP. A.B.C. IF THIS OPTION IS USED, THE BASE COURSE SHALL EXTEND 1'-0" BEYOND THE END OF THE SLEEPER SLAB AND THE WIDTH SHALL BE THE SAME AS THAT OF THE APPROACH SLAB.

THE CONTRACTOR MAY USE 5" CLASS "A" CONCRETE BASE IN LIEU OF 6" COMP. A.B.C. IF THIS OPTION IS USED, THE CONCRETE BASE SHALL EXTEND 1'-0" BEYOND THE END OF THE SLEEPER SLAB AND THE WIDTH SHALL BE THE SAME AS THAT OF THE APPROACH SLAB. THE CONCRETE SHALL BE FINISHED TO A SMOOTH SURFACE AND A LAYER OF 30 LB ROOFING FELT SHALL BE PLACED BETWEEN THE CONCRETE BASE AND THE APPROACH SLAB TO PREVENT BOND. THE APPROACH SLAB SHALL NOT BE CAST UNTIL THE CONCRETE BASE HAS REACHED AN AGE OF THREE CURING DAYS.

THE JOINT AT THE INTERFACE BETWEEN DECK AND APPROACH SLAB SHALL BE SAWED PRIOR TO THE CASTING OF THE BARRIER RAIL.

WITH EVAZOTE JOINT SEAL

FOR EVAZOTE JOINT SEALS, SEE SPECIAL PROVISIONS.

THE NOMINAL UNCOMPRESSED SEAL WIDTH OF THE EVAZOTE JOINT SEAL SHALL BE 2 ½".

SLEEPER SLAB SHALL BE PAID FOR UNDER THE LUMP SUM PAY ITEM FOR "BRIDGE APPROACH SLABS".

THE JOINT SEALER MATERIAL SHALL CONFORM TO THE REQUIREMENTS OF TYPE B LOW MODULUS SILICONE SEALANT.

PROJECT NO. R-2606A

RANDOLPH COUNTY

STATION: 35+60.41 -L- POC

SHEET 1 OF 6

STATE OF NORTH CAROLINA
DEPARTMENT OF TRANSPORTATION
RALEIGH

BRIDGE APPROACH SLAB FOR FLEXIBLE PAVEMENT WITH BARRIER RAIL (@ END BENT 1)

NORTH CAROLINA PROFESSIONAL SEAL 11725 ENGINEER DAVID R. RUGGLES
David Ruggles 1-26-05

NORTH CAROLINA PROFESSIONAL SEAL 23020 ENGINEER JAMES L. BOLDEN, JR.
James L. Bolden Jr. 1-26-05

REVISIONS						SHEET NO.
NO.	BY:	DATE:	NO.	BY:	DATE:	S-1601
1			3			TOTAL SHEETS
2			4			191

DWG. 29 OF 34

ASSEMBLED BY : A. P. TUAZAMA	DATE : 12-04
CHECKED BY : J.L. BOLDEN, JR.	DATE : 12-04
DRAWN BY : LES 8/01	REV. 5/7/03R RWW/JTE
CHECKED BY : RDR 8/01	

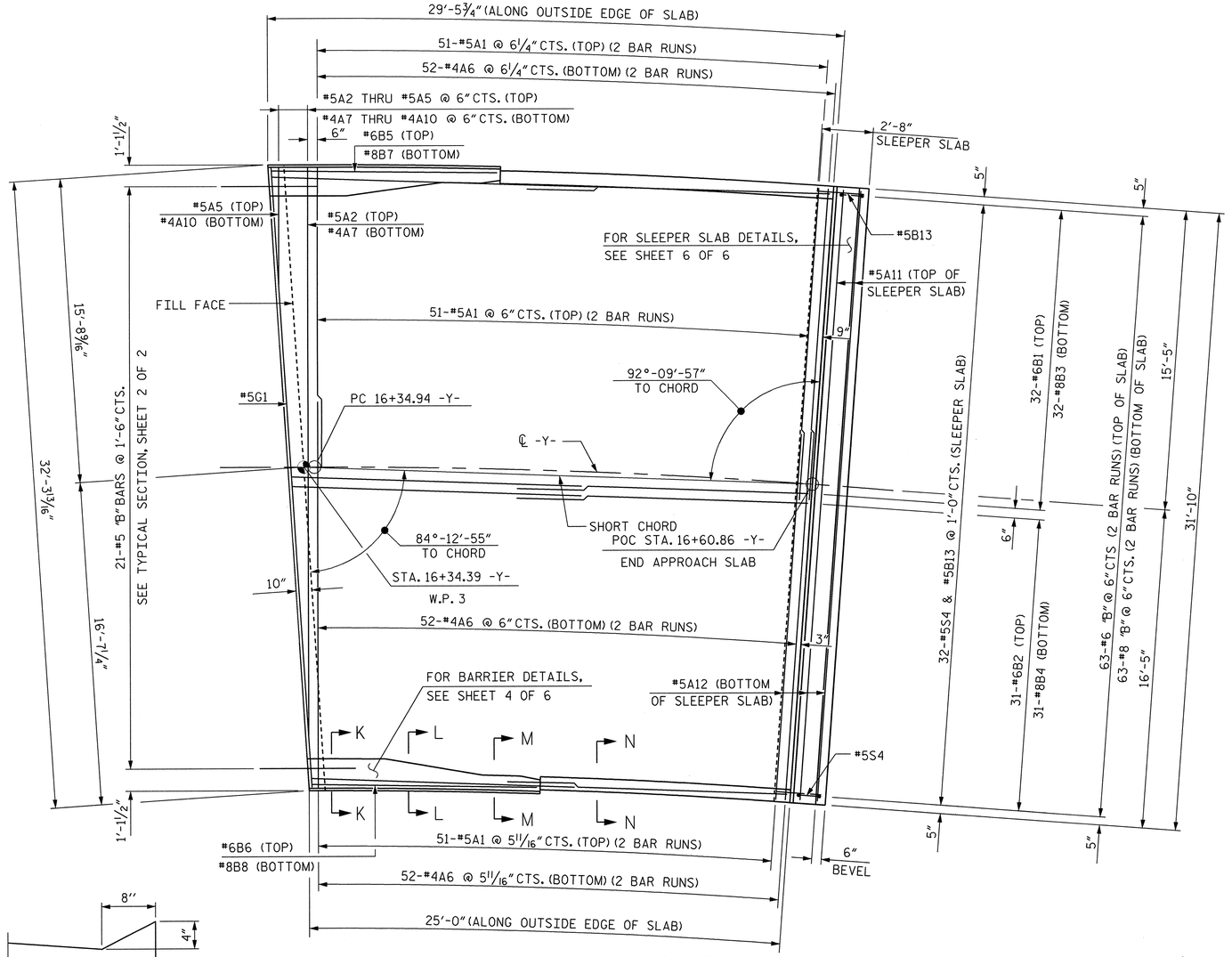

PLAN OF APPROACH SLAB

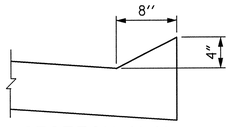

SECTION N-N

NOTE:
"A" BARS ARE SPACED RADIALLY ALONG ℄ -Y-.

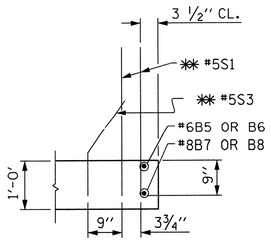

SECTION K-K

✱✱ ADHESIVELY ANCHORED

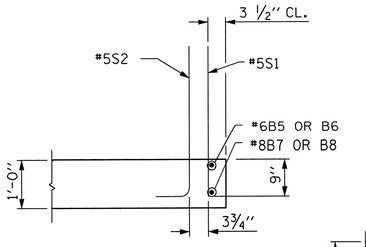

SECTION M-M

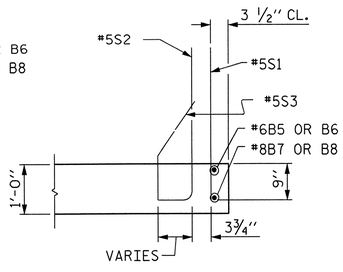

SECTION L-L

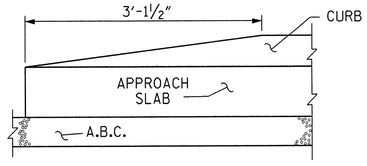

END OF CURB WITHOUT SHOULDER BERM GUTTER

NOTES

THE COST OF THE BARRIER RAIL ON THE APPROACH SLAB SHALL BE INCLUDED IN THE LUMP SUM CONTRACT PRICE BID FOR BRIDGE APPROACH SLABS.

APPROACH SLAB SHALL NOT BE CONSTRUCTED PRIOR TO COMPLETION OF THE BRIDGE DECK.

FOR REINFORCED BRIDGE APPROACH FILL INCLUDING FABRIC, IMPERMEABLE GEOMEMBRANE, 4″ Ø DRAINAGE PIPE, #78M STONE, AND SELECT MATERIAL, SEE ROADWAY PLANS.

TEMPORARY DRAINAGE AND TEMPORARY BERM AND SLOPE DRAINS WILL BE PAID FOR UNDER THE LUMP SUM PRICE FOR BRIDGE APPROACH SLAB.

AREA BETWEEN THE WINGWALL AND APPROACH SLAB SHALL BE PAVED AND GRADED TO DRAIN THE WATER AWAY FROM THE FILL FACE OF THE BRIDGE.

THE 6″ COMP. A.B.C. SHALL EXTEND 10′-0″ BEYOND THE END OF THE SLEEPER SLAB AND 1′-0″ OUTSIDE OF EACH EDGE OF THE SLAB.

THE CONTRACTOR MAY USE 4″ TYPE B-25.0B ASPHALT CONCRETE BASE COURSE IN LIEU OF 6″ COMP. A.B.C. IF THIS OPTION IS USED, THE BASE COURSE SHALL EXTEND 1′-0″ BEYOND THE END OF THE SLEEPER SLAB AND THE WIDTH SHALL BE THE SAME AS THAT OF THE APPROACH SLAB.

THE CONTRACTOR MAY USE 5″ CLASS "A" CONCRETE BASE IN LIEU OF 6″ COMP. A.B.C. IF THIS OPTION IS USED, THE CONCRETE BASE SHALL EXTEND 1′-0″ BEYOND THE END OF THE SLEEPER SLAB AND THE WIDTH SHALL BE THE SAME AS THAT OF THE APPROACH SLAB. THE CONCRETE SHALL BE FINISHED TO A SMOOTH SURFACE AND A LAYER OF 30 LB ROOFING FELT SHALL BE PLACED BETWEEN THE CONCRETE BASE AND THE APPROACH SLAB TO PREVENT BOND. THE APPROACH SLAB SHALL NOT BE CAST UNTIL THE CONCRETE BASE HAS REACHED AN AGE OF THREE CURING DAYS.

THE JOINT AT THE INTERFACE BETWEEN DECK AND APPROACH SLAB SHALL BE SAWED PRIOR TO THE CASTING OF THE BARRIER RAIL.

WITH EVAZOTE JOINT SEAL

FOR EVAZOTE JOINT SEALS, SEE SPECIAL PROVISIONS.

THE NOMINAL UNCOMPRESSED SEAL WIDTH OF THE EVAZOTE JOINT SEAL SHALL BE 2 ½″.

SLEEPER SLAB SHALL BE PAID FOR UNDER THE LUMP SUM PAY ITEM FOR "BRIDGE APPROACH SLABS".

THE JOINT SEALER MATERIAL SHALL CONFORM TO THE REQUIREMENTS OF TYPE B LOW MODULUS SILICONE SEALANT.

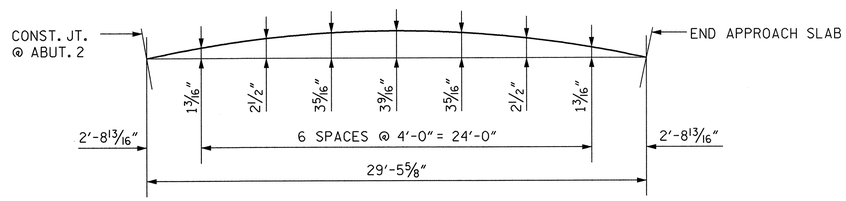

LEFT EDGE OF APPROACH SLAB CURVE OFFSETS

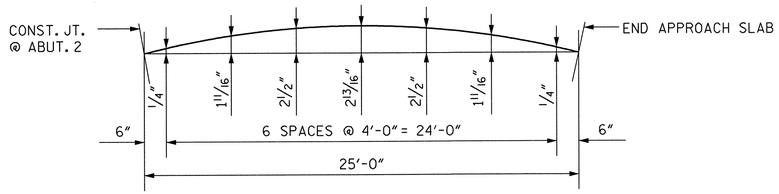

RIGHT EDGE OF APPROACH SLAB CURVE OFFSETS

PROJECT NO. R-2606A

RANDOLPH COUNTY

STATION: 35+60.41 -L- POC

SHEET 2 OF 6

STATE OF NORTH CAROLINA
DEPARTMENT OF TRANSPORTATION
RALEIGH

BRIDGE APPROACH SLAB FOR FLEXIBLE PAVEMENT WITH BARRIER RAIL (@ END BENT 2)

NORTH CAROLINA PROFESSIONAL SEAL 11725 ENGINEER DAVID R. RUGGLES
David Ruggles 1-26-05

NORTH CAROLINA PROFESSIONAL SEAL 23020 ENGINEER JAMES L. BOLDEN, JR.
1-26-05

REVISIONS						SHEET NO.
NO.	BY:	DATE:	NO.	BY:	DATE:	S-162
1			3			TOTAL SHEETS
2			4			199

DWG. 30 OF 34

ASSEMBLED BY : A. P. TUAZAMA	DATE : 12-04
CHECKED BY : J.L. BOLDEN, JR.	DATE : 12-04
DRAWN BY : LES 8/01	REV. 5/7/03R RWW/JTE
CHECKED BY : RDR 8/01	

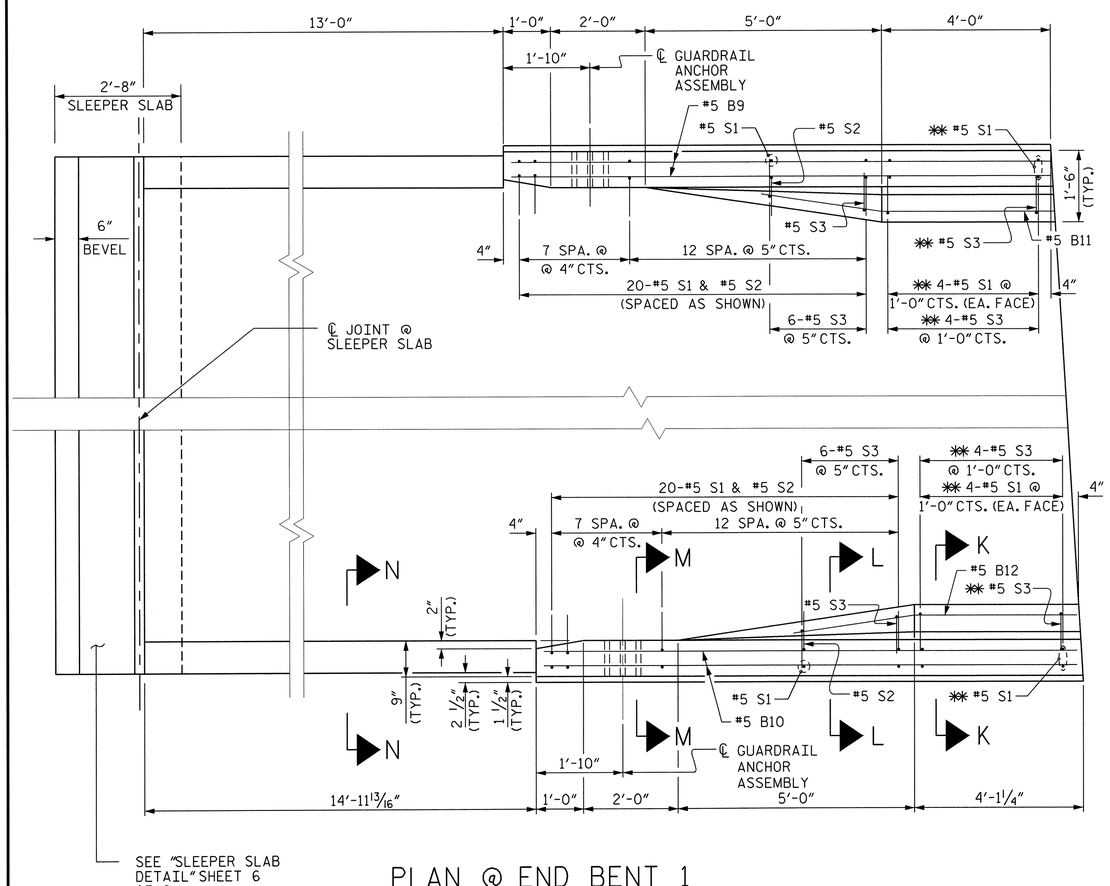

PLAN @ END BENT 1

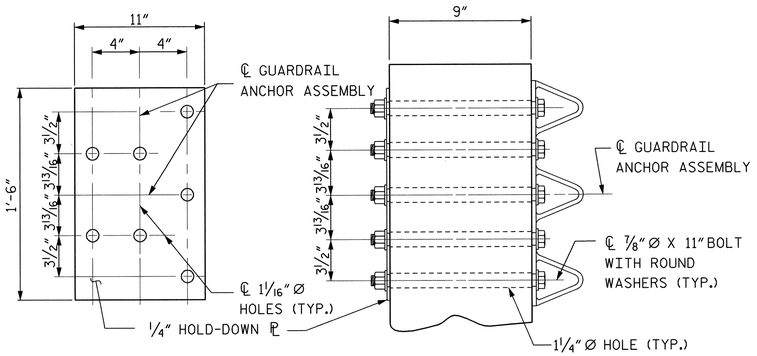

PLAN SECTION E-E

GUARDRAIL ANCHOR ASSEMBLY DETAILS

NOTES

THE GUARDRAIL ANCHOR ASSEMBLY SHALL CONSIST OF A 1/4" HOLD DOWN PLATE AND 7 - 7/8" Ø BOLTS WITH NUTS AND WASHERS.

THE HOLD-DOWN PLATE SHALL CONFORM TO AASHTO M270 GRADE 36. AFTER FABRICATION, THE HOLD-DOWN PLATE SHALL BE HOT-DIP GALVANIZED IN ACCORDANCE WITH AASHTO M111.

BOLTS SHALL CONFORM TO THE REQUIREMENTS OF ASTM A307 AND NUTS SHALL CONFORM TO THE REQUIREMENTS OF AASHTO M291. BOLTS, NUTS AND WASHERS SHALL BE GALVANIZED. AT THE CONTRACTOR'S OPTION, STAINLESS STEEL BOLTS, NUTS AND WASHERS MAY BE USED AS AN ALTERNATE FOR THE 7/8" Ø GALVANIZED BOLTS, NUTS AND WASHERS. THEY SHALL CONFORM TO OR EXCEED THE MECHANICAL REQUIREMENTS OF ASTM A307. THE USE OF THIS ALTERNATE SHALL BE APPROVED BY THE ENGINEER.

AFTER INSTALLATION, THE EXPOSED THREAD OF THE BOLT SHALL BE BURRED WITH A SHARP POINTED TOOL.

THE COST OF THE GUARDRAIL ANCHOR ASSEMBLIES WITH BOLTS, NUTS AND WASHERS COMPLETE IN PLACE, SHALL BE INCLUDED IN THE LUMP SUM CONTRACT PRICE BID FOR BRIDGE APPROACH SLABS.

THE 1 1/4" Ø HOLES SHALL BE FORMED OR DRILLED WITH A CORE BIT. IMPACT TOOLS WILL NOT BE PERMITTED. ANY CONCRETE DAMAGED BY THIS WORK SHALL BE REPAIRED TO THE SATISFACTION OF THE ENGINEER.

THE #5 S1 AND #5 S3 BARS SHALL BE INSTALLED, WHERE NOTED ON THE PLANS, USING AN ADHESIVE ANCHORING SYSTEM AFTER SAWING THE JOINT. FOR ADHESIVELY ANCHORED ANCHOR BOLTS OR DOWELS, SEE SPECIAL PROVISIONS. THE YIELD LOAD FOR THE #5 S1 AND #5 S3 BARS IS 18.6 KIPS. FIELD TESTING FOR THE ADHESIVE BONDING SYSTEM IS NOT REQUIRED.

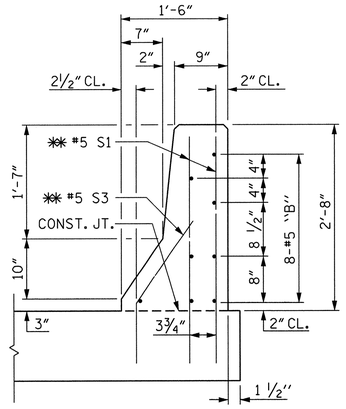

SECTION K-K

✱✱ ADHESIVELY ANCHORED

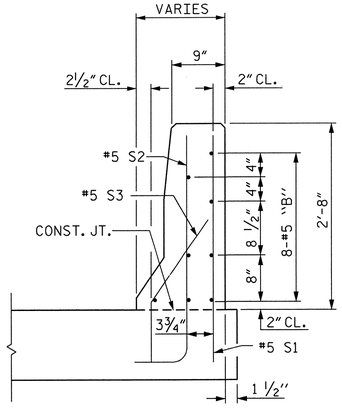

SECTION L-L

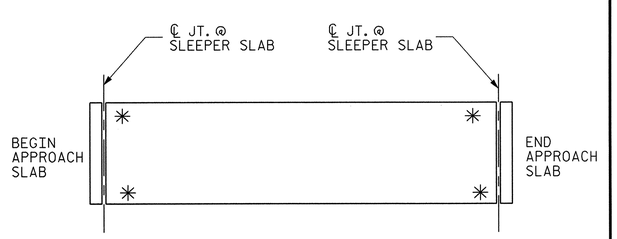

SKETCH SHOWING POINTS OF ATTACHMENT

✱ INDICATES POINTS OF ATTACHMENT

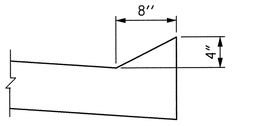

SECTION N-N

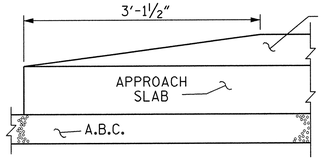

END OF CURB WITHOUT SHOULDER BERM GUTTER

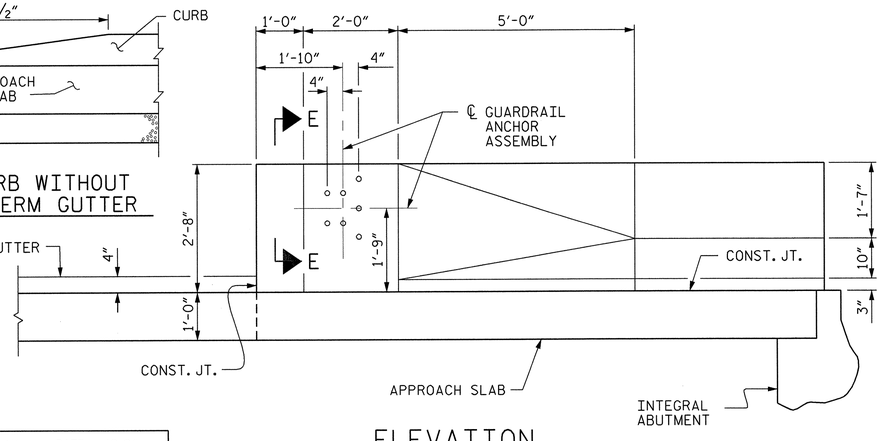

ELEVATION

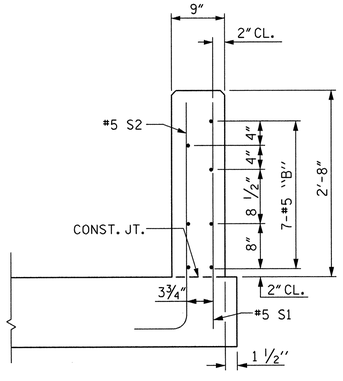

SECTION M-M

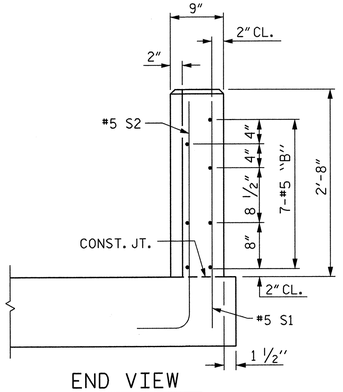

END VIEW

PROJECT NO. R-2606A

RANDOLPH COUNTY

STATION: 35+60.41 -L- POC

SHEET 3 OF 6

STATE OF NORTH CAROLINA
DEPARTMENT OF TRANSPORTATION
RALEIGH

STANDARD

BRIDGE APPROACH SLAB DETAILS FOR FLEXIBLE PAVEMENT WITH BARRIER RAIL @ END BENT 1

REVISIONS						SHEET NO.
NO.	BY:	DATE:	NO.	BY:	DATE:	S-163
1			3			TOTAL SHEETS
2			4			199

DWG. 31 OF 34

ASSEMBLED BY : A. P. TUAZAMA	DATE : 12-04
CHECKED BY : J.L. BOLDEN, JR.	DATE : 12-04
DRAWN BY : LES 8/01	REV. 5/7/03R RWW/JTE
CHECKED BY : RDR 8/01	

01/26/05
:\dgn\R2606A_SD_AS3_02.dgn
Stewart Engineering, Inc.

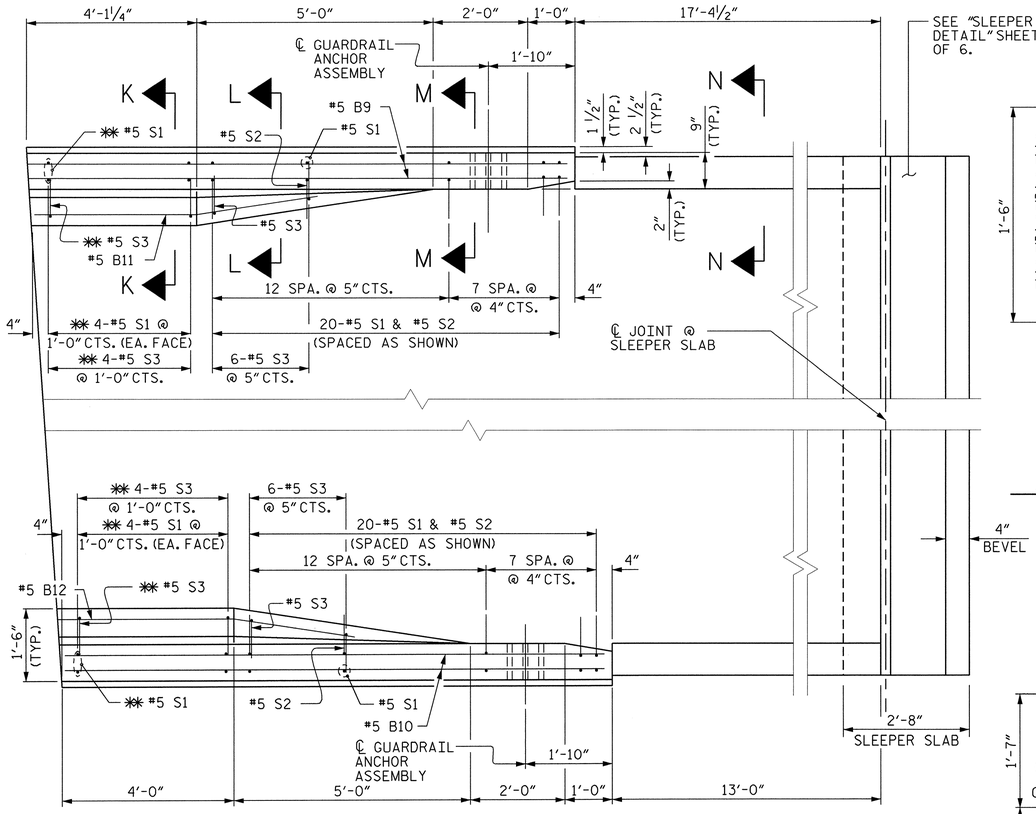

PLAN @ END BENT 2

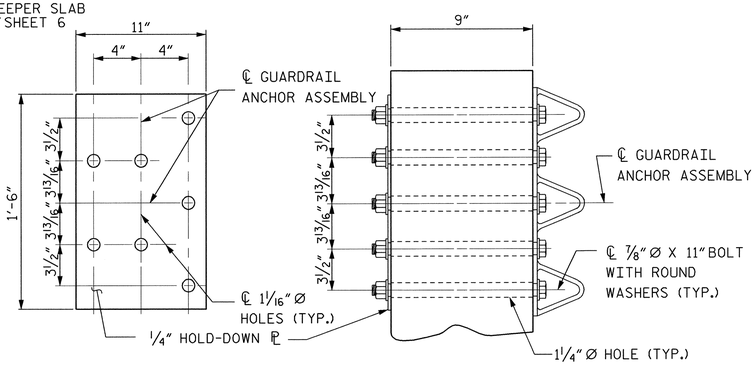

PLAN SECTION E-E

GUARDRAIL ANCHOR ASSEMBLY DETAILS

NOTES

THE GUARDRAIL ANCHOR ASSEMBLY SHALL CONSIST OF A ¼" HOLD DOWN PLATE AND 7 - ⅞" Ø BOLTS WITH NUTS AND WASHERS.

THE HOLD-DOWN PLATE SHALL CONFORM TO AASHTO M270 GRADE 36. AFTER FABRICATION, THE HOLD-DOWN PLATE SHALL BE HOT-DIP GALVANIZED IN ACCORDANCE WITH AASHTO M111.

BOLTS SHALL CONFORM TO THE REQUIREMENTS OF ASTM A307 AND NUTS SHALL CONFORM TO THE REQUIREMENTS OF AASHTO M291. BOLTS, NUTS AND WASHERS SHALL BE GALVANIZED. AT THE CONTRACTOR'S OPTION, STAINLESS STEEL BOLTS, NUTS AND WASHERS MAY BE USED AS AN ALTERNATE FOR THE ⅞" Ø GALVANIZED BOLTS, NUTS AND WASHERS. THEY SHALL CONFORM TO OR EXCEED THE MECHANICAL REQUIREMENTS OF ASTM A307. THE USE OF THIS ALTERNATE SHALL BE APPROVED BY THE ENGINEER.

AFTER INSTALLATION, THE EXPOSED THREAD OF THE BOLT SHALL BE BURRED WITH A SHARP POINTED TOOL.

THE COST OF THE GUARDRAIL ANCHOR ASSEMBLIES WITH BOLTS, NUTS AND WASHERS COMPLETE IN PLACE, SHALL BE INCLUDED IN THE LUMP SUM CONTRACT PRICE BID FOR BRIDGE APPROACH SLABS.

THE 1 ¼" Ø HOLES SHALL BE FORMED OR DRILLED WITH A CORE BIT. IMPACT TOOLS WILL NOT BE PERMITTED. ANY CONCRETE DAMAGED BY THIS WORK SHALL BE REPAIRED TO THE SATISFACTION OF THE ENGINEER.

THE #5 S1 AND #5 S3 BARS SHALL BE INSTALLED, WHERE NOTED ON THE PLANS, USING AN ADHESIVE ANCHORING SYSTEM AFTER SAWING THE JOINT. FOR ADHESIVELY ANCHORED ANCHOR BOLTS OR DOWELS, SEE SPECIAL PROVISIONS. THE YIELD LOAD FOR THE #5 S1 AND #5 S3 BARS IS 18.6 KIPS. FIELD TESTING FOR THE ADHESIVE BONDING SYSTEM IS NOT REQUIRED.

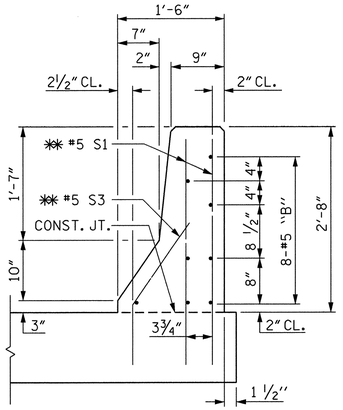

SECTION K-K

✱✱ ADHESIVELY ANCHORED

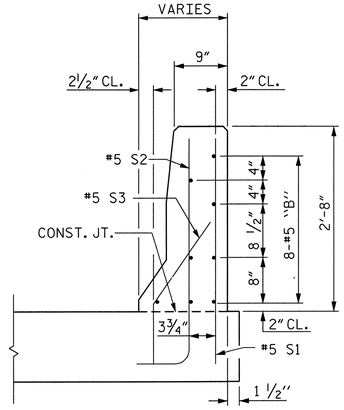

SECTION L-L

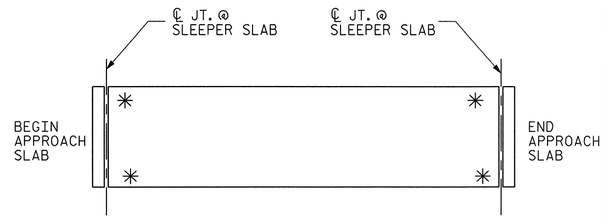

SKETCH SHOWING POINTS OF ATTACHMENT

✱ INDICATES POINTS OF ATTACHMENT

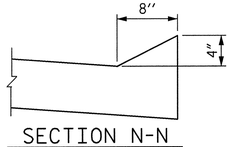

SECTION N-N

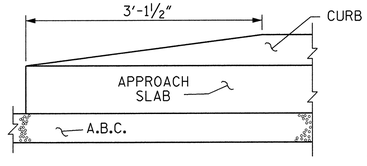

END OF CURB WITHOUT SHOULDER BERM GUTTER

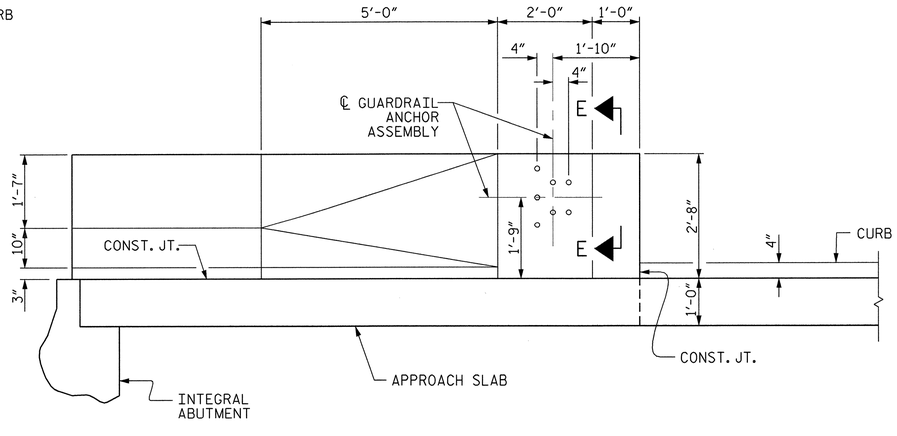

ELEVATION

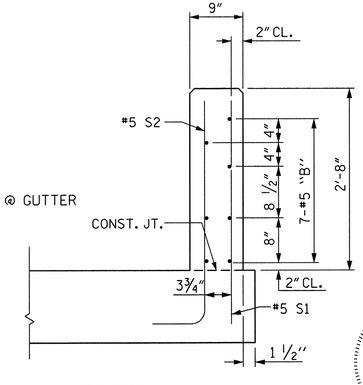

SECTION M-M

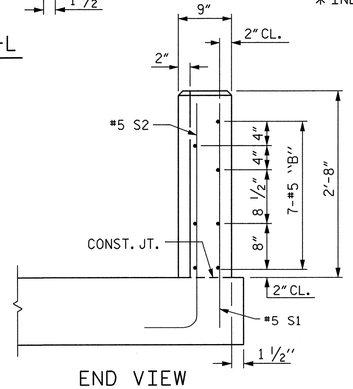

END VIEW

PROJECT NO. R-2606A

RANDOLPH COUNTY

STATION: 35+60.41 -L- POC

SHEET 4 OF 6

STATE OF NORTH CAROLINA
DEPARTMENT OF TRANSPORTATION
RALEIGH

STANDARD

BRIDGE APPROACH SLAB DETAILS FOR FLEXIBLE PAVEMENT WITH BARRIER RAIL (@ END BENT 2)

REVISIONS						SHEET NO.
NO.	BY:	DATE:	NO.	BY:	DATE:	S-164
1			3			TOTAL SHEETS
2			4			199

DWG. 32 OF 34

ASSEMBLED BY : A. P. TUAZAMA	DATE : 12-04
CHECKED BY : J.L. BOLDEN, JR.	DATE : 12-04
DRAWN BY : LES 8/01	REV. 5/7/03R RWW/JTE
CHECKED BY : RDR 8/01	

01/26/05
...\dgn\R2606A_SD_AS4_02.dgn
Stewart Engineering, Inc.

APPROACH SLAB @ E.B. 1

BAR	NO.	SIZE	TYPE	LENGTH	WEIGHT
✳ A1	98	#5	STR.	17'-3"	1,763
✳ A2	1	#5	STR.	25'-7"	27
✳ A3	1	#5	STR.	17'-11"	19
✳ A4	1	#5	STR.	10'-2"	11
✳ A5	1	#5	STR.	2'-6"	3
A6	100	#4	STR.	16'-10"	1,124
A7	1	#4	STR.	25'-7"	17
A8	1	#4	STR.	17'-11"	12
A9	1	#4	STR.	10'-2"	7
A10	1	#4	STR.	2'-6"	2
✳ A11	2	#5	STR.	31'-6"	66
A12	3	#5	STR.	31'-6"	99
✳ B1	64	#6	STR.	14'-7"	1,402
✳ B2	62	#6	STR.	15'-1"	1,405
B3	64	#8	STR.	15'-2"	2,592
B4	62	#8	STR.	15'-8"	2,593
✳ B5	1	#6	STR.	11'-8"	18
✳ B6	1	#6	STR.	11'-9"	18
B7	1	#8	STR.	11'-8"	31
B8	1	#8	STR.	11'-9"	31
✳ B9	7	#5	STR.	11'-8"	85
✳ B10	7	#5	STR.	11'-9"	86
✳ B11	1	#5	3	6'-6"	7
✳ B12	1	#5	3	6'-5"	7
B13	32	#5	3	2'-2"	72

APPROACH SLAB @ E.B. 1

BAR	NO.	SIZE	TYPE	LENGTH	WEIGHT
✳ G1	1	#5	STR.	31'-11"	33
✳ S1	56	#5	STR.	3'-3"	190
✳ S2	40	#5	1	4'-1"	170
✳ S3	20	#5	2	2'-3"	47
✳ S4	32	#5	4	3'-1"	103
REINFORCING STEEL				LBS.	6,580
✳ EPOXY COATED REINFORCING STEEL				LBS.	5,460
CLASS AA CONCRETE BREAKDOWN					
POUR 1 SLAB & CURB				C. Y.	31.0
POUR 2 RAIL				C. Y.	2.3
SLEEPER SLAB				C. Y.	3.4
CLASS AA CONCRETE				C. Y.	36.7

APPROACH SLAB @ E.B. 2

BAR	NO.	SIZE	TYPE	LENGTH	WEIGHT
✳ A1	102	#5	STR.	17'-3"	1,835
✳ A2	1	#5	STR.	29'-3"	31
✳ A3	1	#5	STR.	21'-6"	22
✳ A4	1	#5	STR.	13'-9"	14
✳ A5	1	#5	STR.	6'-0"	6
A6	104	#4	STR.	16'-10"	1,169
A7	1	#4	STR.	29'-3"	20

APPROACH SLAB @ E.B. 2

BAR	NO.	SIZE	TYPE	LENGTH	WEIGHT
A8	1	#4	STR.	21'-6"	14
A9	1	#4	STR.	13'-9"	9
A10	1	#4	STR.	6'-0"	4
✳ A11	2	#5	STR.	31'-6"	66
A12	3	#5	STR.	31'-6"	99
✳ B1	64	#6	STR.	16'-6"	1,586
✳ B2	62	#6	STR.	15'-5"	1,436
B3	64	#8	STR.	16'-11"	2,891
B4	62	#8	STR.	15'-9"	2,607
✳ B5	1	#6	STR.	11'-9"	18
✳ B6	1	#6	STR.	11'-8"	18
B7	1	#8	STR.	11'-9"	31
B8	1	#8	STR.	11'-8"	31
✳ B9	7	#5	STR.	11'-9"	86
✳ B10	7	#5	STR.	11'-8"	85
✳ B11	1	#5	3	6'-5"	7
✳ B12	1	#5	3	6'-6"	7
B13	32	#5	3	2'-2"	72
✳ G1	1	#5	STR.	31'-11"	33
✳ S1	56	#5	STR.	3'-3"	190
✳ S2	40	#5	1	4'-1"	170
✳ S3	20	#5	2	2'-3"	47
✳ S4	32	#5	4	3'-1"	103

APPROACH SLAB @ E.B. 2

REINFORCING STEEL	LBS.	6,947
✳ EPOXY COATED REINFORCING STEEL	LBS.	5,760
CLASS AA CONCRETE BREAKDOWN		
POUR 1 SLAB & CURB	C. Y.	32.4
POUR 2 RAIL	C. Y.	2.3
SLEEPER SLAB	C. Y.	3.4
CLASS AA CONCRETE	C. Y.	38.1

BAR TYPES

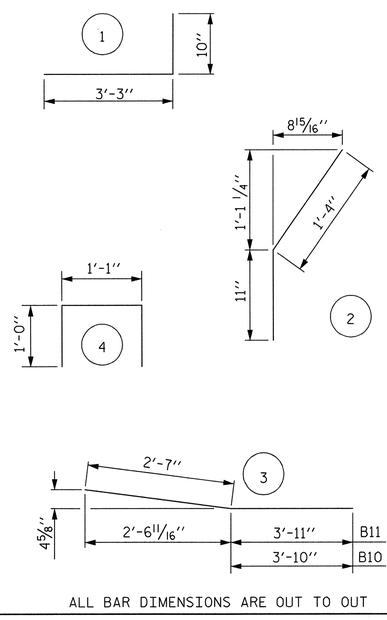

ALL BAR DIMENSIONS ARE OUT TO OUT

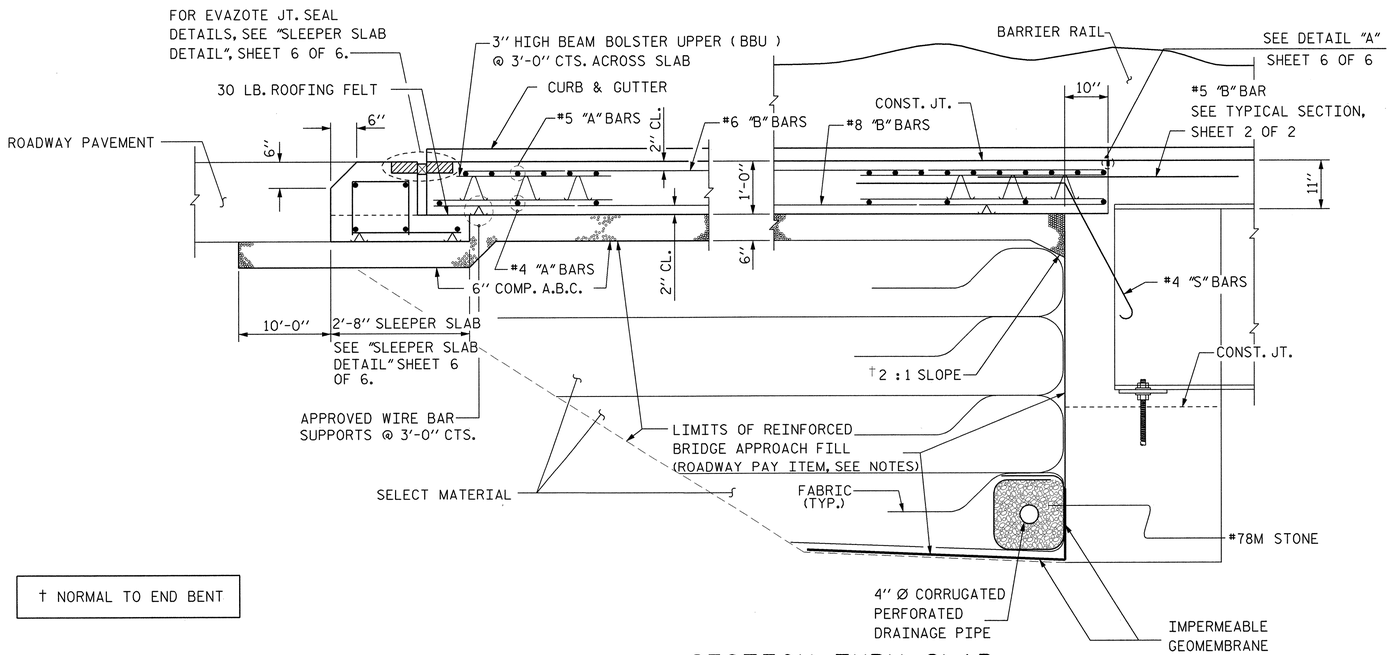

† NORMAL TO END BENT

SECTION THRU SLAB

ASSEMBLED BY : A .P. TUAZAMA	DATE : 12-04
CHECKED BY : J. L. BOLDEN, JR.	DATE : 12-04
DRAWN BY : LES 8/01	REV. 5/7/03 RWW/JTE
CHECKED BY : RDR 8/01	

NORTH CAROLINA PROFESSIONAL SEAL 11725 ENGINEER DAVID R. RUGGLES
David Ruggles 1-26-05

NORTH CAROLINA PROFESSIONAL SEAL 23020 ENGINEER JAMES L. BOLDEN, JR.
James L. Bolden 1-26-05

PROJECT NO. R-2606A

RANDOLPH COUNTY

STATION: 35+60.41 -L- POC

SHEET 5 OF 6

STATE OF NORTH CAROLINA
DEPARTMENT OF TRANSPORTATION
RALEIGH

BRIDGE APPROACH SLAB FOR FLEXIBLE PAVEMENT WITH BARRIER RAIL (@ END BENT 1 & 2)

REVISIONS						SHEET NO.
NO.	BY:	DATE:	NO.	BY:	DATE:	S-165
1			3			TOTAL SHEETS
2			4			199

DWG. 33 OF 34

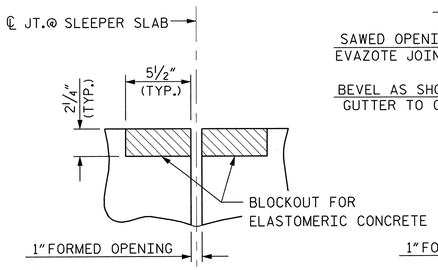

SECTION C-C

PRE-SAWED ELASTOMERIC CONCRETE DIMENSIONS

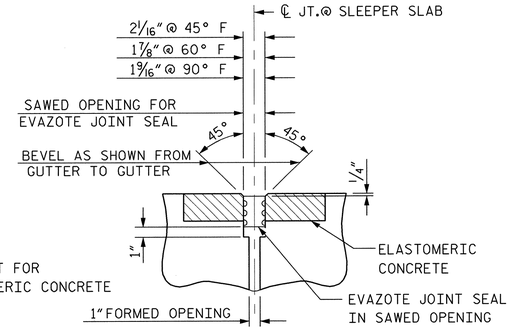

SECTION C-C

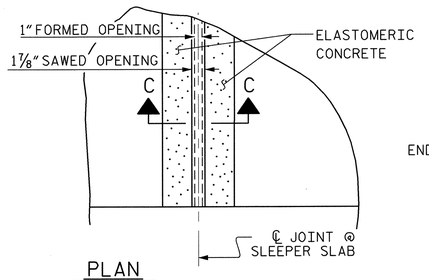

PLAN

JOINT SEAL DETAILS @ SLEEPER SLAB

FOR ELASTOMERIC CONCRETE, SEE SPECIAL PROVISIONS

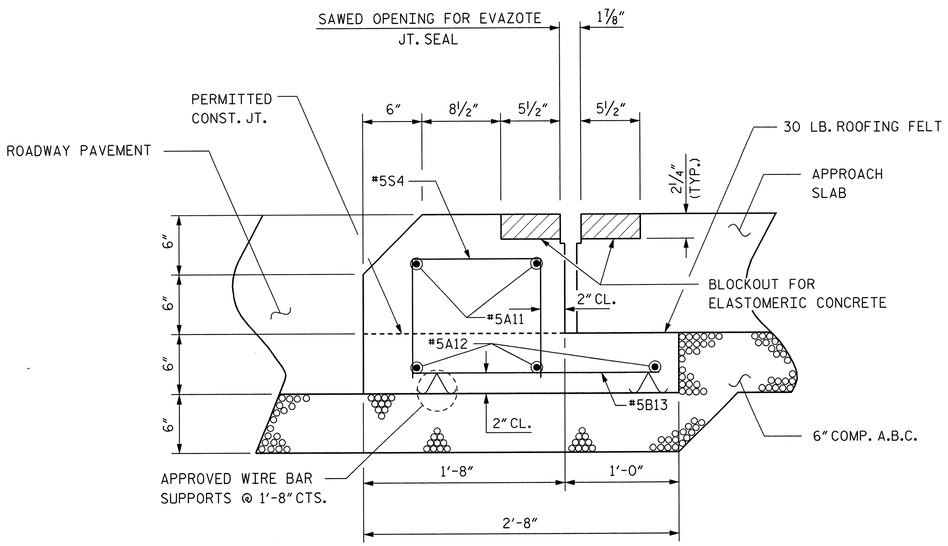

SLEEPER SLAB DETAIL

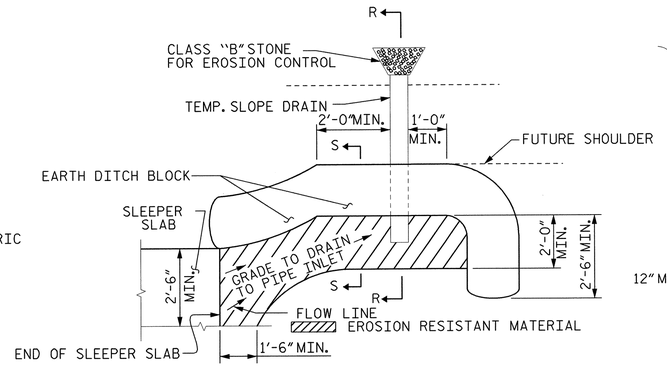

NOTE: IMMEDIATELY AFTER THE CONSTRUCTION OF THE APPROACH SLAB, THE CONTRACTOR SHALL PROVIDE TEMPORARY BERM AND SLOPE DRAIN. CONTRACTOR SHALL GRADE TO PIPE INLET AND PROVIDE EROSION RESISTANT MATERIAL AS SHOWN. THE EROSION RESISTANT MATERIAL SHALL BE EITHER 1) ASPHALT PLANT MIX, TYPE 1 OR TYPE 2, MIN. 2" DEPTH, 2) EROSION CONTROL MAT, OR 3) CONCRETE, AS DIRECTED BY THE ENGINEER. THE SLOPE DRAIN SHALL CONSIST OF A NON-PERFORATED TEMPORARY DRAINAGE PIPE, 12 INCHES IN DIAMETER.

PLAN VIEW

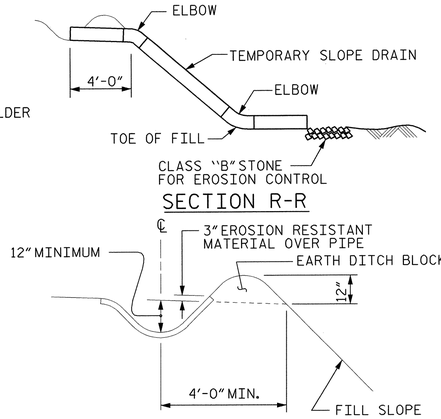

SECTION S-S

TEMPORARY BERM AND SLOPE DRAIN DETAILS

BILL OF MATERIAL	
BENT NO.	ELASTOMERIC CONCRETE * (CU. FT.)
E.B. 1	5.5
E.B. 2	5.5

* BASED ON THE MINIMUM BLOCKOUT SHOWN.

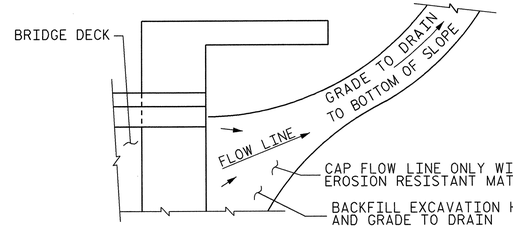

NOTE: IF THE APPROACH SLAB IS NOT CONSTRUCTED IMMEDIATELY AFTER THE BACKFILLING OF THE END BENT EXCAVATION, GRADE TO DRAIN TO THE BOTTOM OF THE SLOPE AND PROVIDE EROSION RESISTANT MATERIAL, SUCH AS FIBERGLASS ROVING OR AS DIRECTED BY THE ENGINEER TO PREVENT SOIL EROSION AND TO PROTECT THE AREA ADJACENT TO THE STRUCTURE. THE CONTRACTOR WILL BE REQUIRED TO REMOVE THESE MATERIALS PRIOR TO CONSTRUCTION OF THE APPROACH SLAB.

TEMPORARY DRAINAGE DETAIL

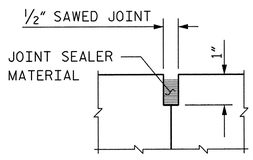

DETAIL A

SEE SECTION VIEW, SHEET 5 OF 6

PROJECT NO. R-2606A

RANDOLPH COUNTY

STATION: 35+60.41 -L- POC

SHEET 6 OF 6

STATE OF NORTH CAROLINA
DEPARTMENT OF TRANSPORTATION
RALEIGH

STANDARD

BRIDGE APPROACH SLAB DETAILS FOR FLEXIBLE PAVEMENT WITH BARRIER RAIL (@ END BENT 2)

REVISIONS						SHEET NO.
NO.	BY:	DATE:	NO.	BY:	DATE:	5-166
1			3			TOTAL SHEETS
2			4			199

DWG. 34 OF 34

NORTH CAROLINA PROFESSIONAL SEAL 11725 ENGINEER DAVID R. BUGGLES
David Buggles 1-26-05

NORTH CAROLINA PROFESSIONAL SEAL 23020 ENGINEER JAMES L. BOLDEN, JR.
James L. Bolden Jr. 1-26-05

ASSEMBLED BY : A. P. TUAZAMA	DATE : 12-04	
CHECKED BY : J.L. BOLDEN, JR.	DATE : 12-04	
DRAWN BY : LES 8/01	REV. 5/7/03R	RWW/JTE
CHECKED BY : RDR 8/01		

01/26/05
:\dgn\R2606A_SD_A55_02.dgn
Stewart Engineering, Inc.

F.A. PROJECT NO. NHF-311(18)

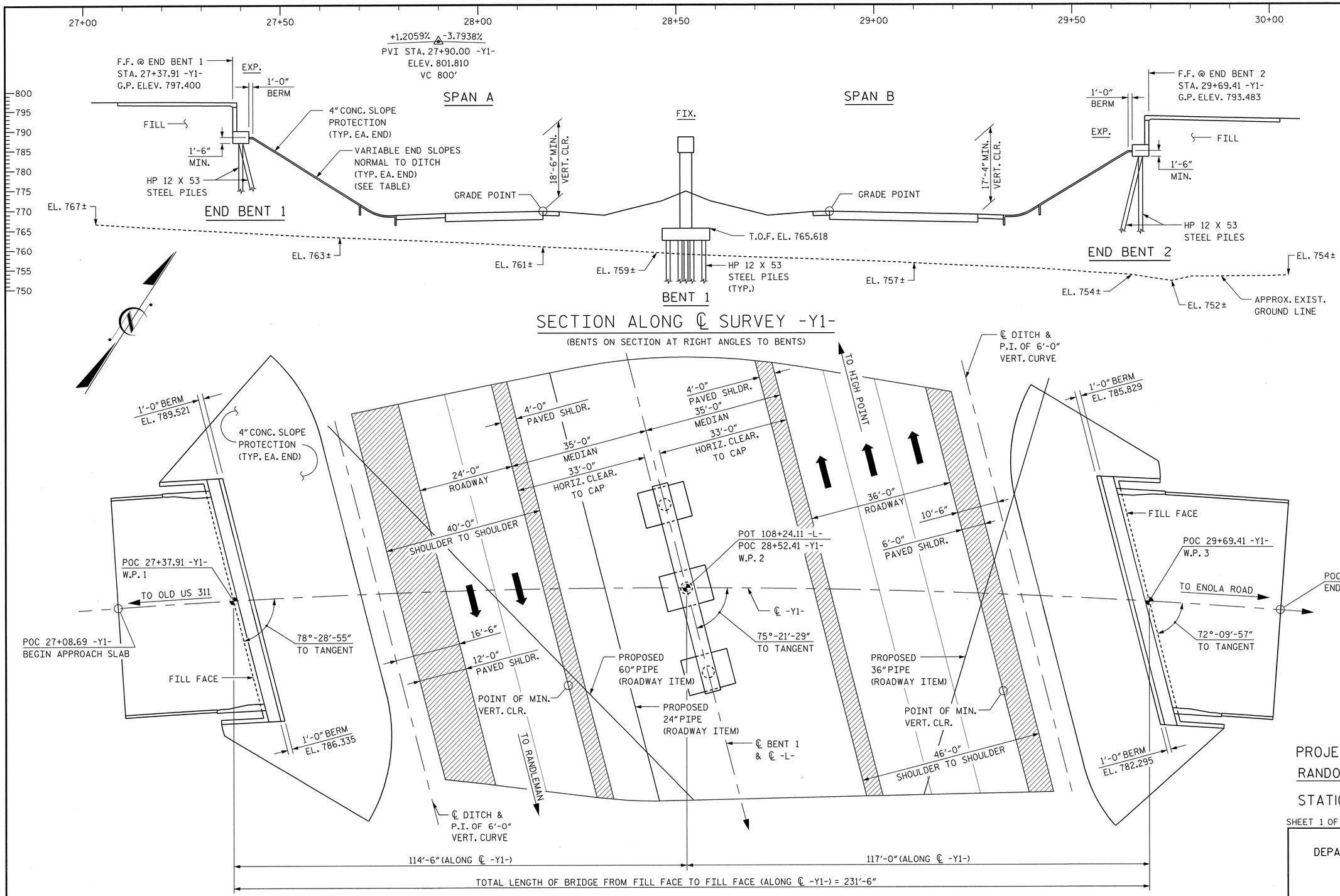

SECTION ALONG ℄ SURVEY -Y1-

(BENTS ON SECTION AT RIGHT ANGLES TO BENTS)

PLAN

NOTE: PILES NOT SHOWN FOR CLARITY PURPOSES

-Y1-
HORIZONTAL CURVE DATA
PI STA. 31+48.02
Δ = 29°-02'-25.5" (RT.)
T = 543.89'
L = 1064.39'
R = 2100.00'

-L- GRADE POINT LINE
VERTICAL CURVE DATA
-0.5000% +1.7628%
PVI STA. 112+00.00 -L-
ELEV. 767.906
VC 500'

CALCULATED END SLOPES

SIDE:	LEFT	RIGHT
END BENT 1	1.5:1	1.8:1
END BENT 2	1.5:1	1.8:1

PROJECT NO. R-2606A
RANDOLPH COUNTY
STATION: 108+24.11 -L- POT
28+52.41 -Y1- POC

SHEET 1 OF 4 BRIDGE NO. 519

STATE OF NORTH CAROLINA
DEPARTMENT OF TRANSPORTATION
RALEIGH

GENERAL DRAWING
FOR BRIDGE ON
CEDAR SQUARE ROAD
OVER US 311 BETWEEN
OLD US 311 AND ENOLA RD.

NORTH CAROLINA PROFESSIONAL SEAL 11725 ENGINEER DAVID R. RUGGLES
David Ruggles 1-10-05

NORTH CAROLINA PROFESSIONAL SEAL 25934 ENGINEER CHARLES P. LEWIS
1-10-05

REVISIONS						SHEET NO.
NO.	BY:	DATE:	NO.	BY:	DATE:	S-167
1			3			TOTAL SHEETS
2			4			199

DWG. 1 OF 33

DRAWN BY: A.P. TUAZAMA DATE: 11-04
CHECKED BY: C.P. LEWIS DATE: 11-04

STR.#8

END BENT 1

BENT 1

END BENT 2

FOUNDATION LAYOUT

NOTES:

ALL PILES ARE HP 12 X 53 STEEL PILES.

PILE DIMENSIONS ARE SHOWN TO THE CENTERLINE OF PILE AT THE BOTTOM OF THE END BENT CAP AND BENT FOOTING.

▲ INDICATES DIRECTION OF 3 : 12 BATTER AT END BENT 1 AND END BENT 2

△ INDICATES DIRECTION OF 1½: 12 BATTER AT BENT 1

PROJECT NO. R-2606A

RANDOLPH COUNTY

STATION: 108+24.11 -L- POT
28+52.41 -Y1- POC

SHEET 2 OF 4

STATE OF NORTH CAROLINA
DEPARTMENT OF TRANSPORTATION
RALEIGH

GENERAL DRAWING
FOR BRIDGE ON
CEDAR SQUARE ROAD
OVER US 311 BETWEEN
OLD US 311 AND ENOLA RD.

NORTH CAROLINA PROFESSIONAL SEAL 11725 ENGINEER DAVID R. RUGGLES
David Ruggles
1-10-05

NORTH CAROLINA PROFESSIONAL SEAL 25934 ENGINEER CHARLES P. LEWIS
1-10-05

REVISIONS						SHEET NO.
NO.	BY:	DATE:	NO.	BY:	DATE:	S-168
1			3			TOTAL SHEETS
2			4			199

DWG. 2 OF 33

$$$$SYSTIME$$$$ $$$$DGN$$$$ $$$$USERNAME$$$$

DRAWN BY: A.P. TUAZAMA	DATE : II-04
CHECKED BY: C.P. LEWIS	DATE : II-04

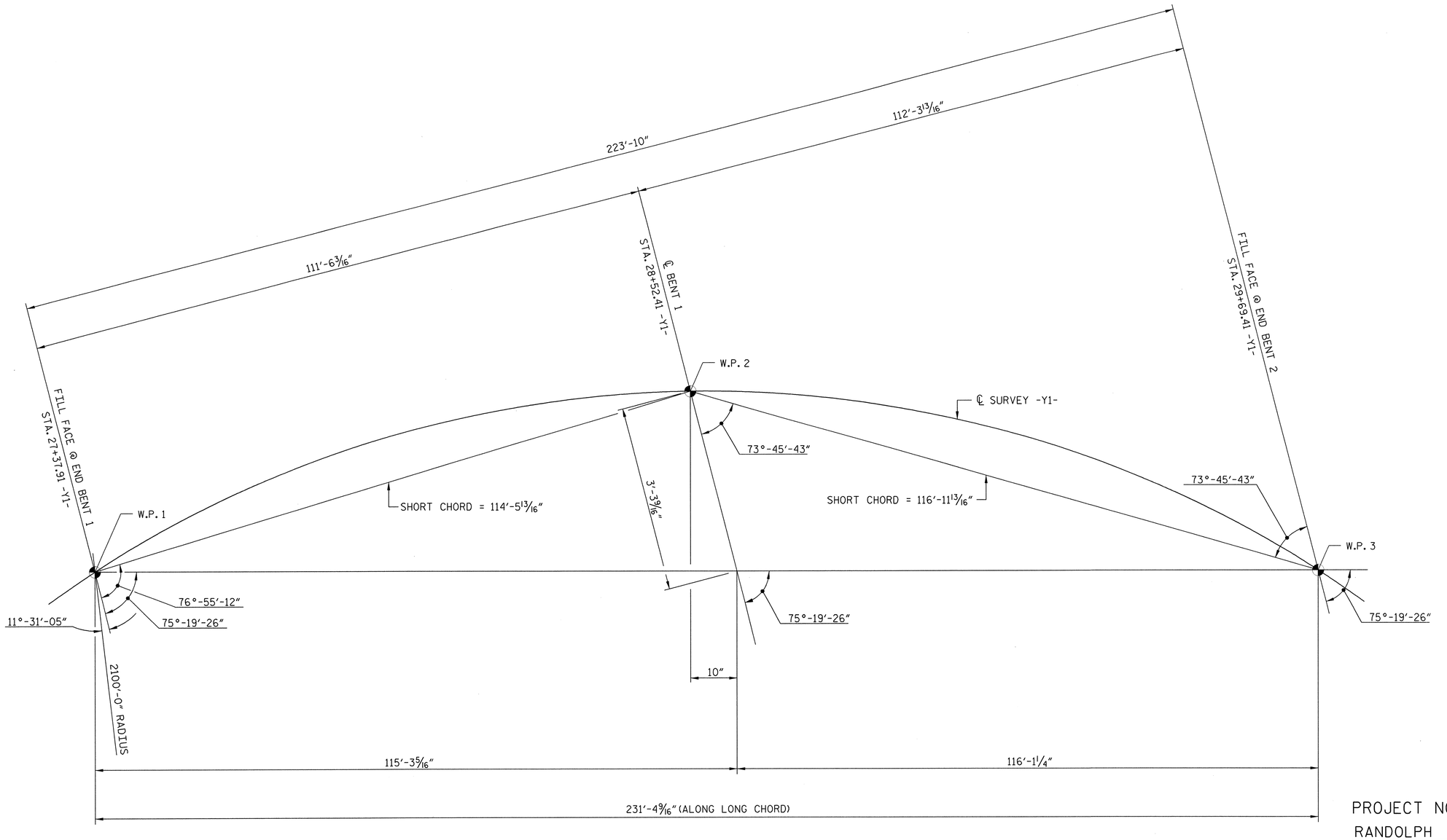

LONG CHORD LAYOUT

NOTE: ALL BENTS ARE PARALLEL

PROJECT NO. R-2606A

RANDOLPH COUNTY

STATION: 108+24.11 -L- POT
28+52.41 -Y1- POC

SHEET 3 OF 4

STATE OF NORTH CAROLINA
DEPARTMENT OF TRANSPORTATION
RALEIGH

GENERAL DRAWING
FOR BRIDGE ON
CEDAR SQUARE ROAD
OVER US 311 BETWEEN
OLD US 311 AND ENOLA RD.

NORTH CAROLINA PROFESSIONAL SEAL 11725 ENGINEER DAVID R. RUGGLES
David Ruggles
1-10-05

NORTH CAROLINA PROFESSIONAL SEAL 25934 ENGINEER CHARLES P. LEWIS
1-10-05

DRAWN BY: R.C. NELSON DATE : 11-04
CHECKED BY: C.P. LEWIS DATE : 11-04

DWG. 3 OF 33

REVISIONS						SHEET NO.
NO.	BY:	DATE:	NO.	BY:	DATE:	S-169
1			3			TOTAL SHEETS
2			4			199

$$$$USERNAME$$$$ $$$$DGN$$$$ $$$$SYSTIME$$$$

BENCH MARK: #10 RR SPIKE IN BASE OF 15" WILLOW OAK AT STA. 31+48.49 -Y1-, 131.46' RT., ELEV. 753.40

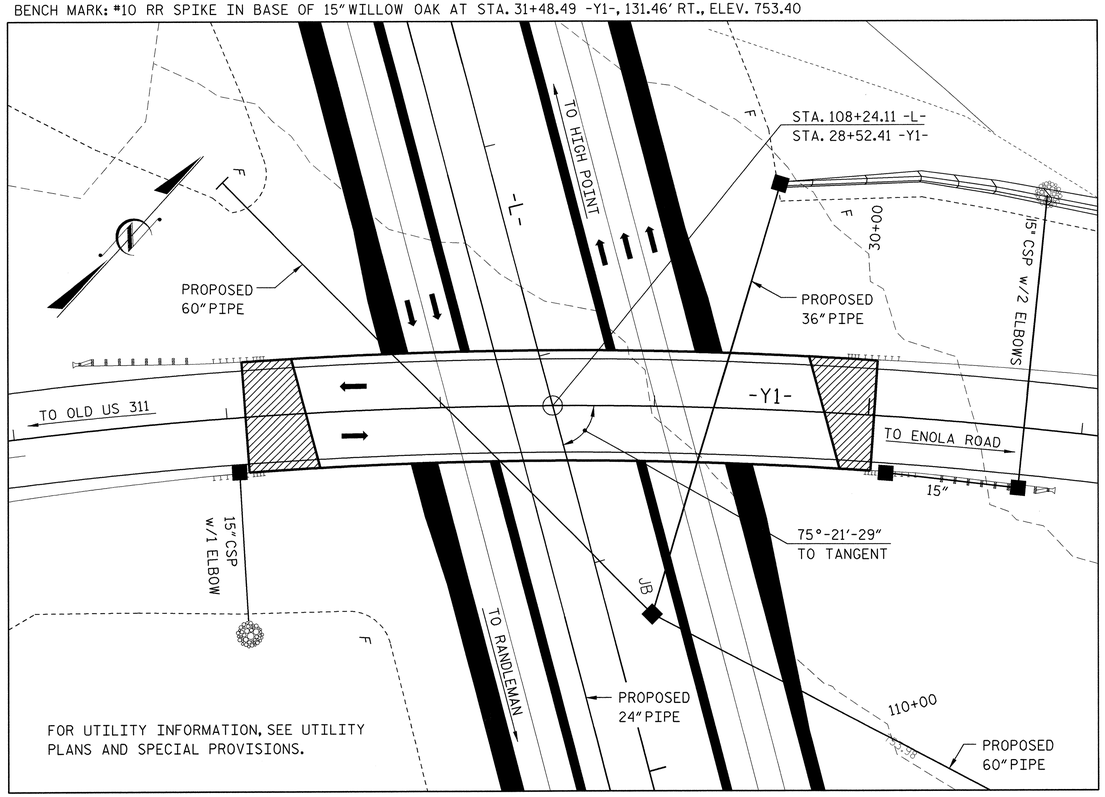

LOCATION SKETCH

GENERAL NOTES:

ASSUMED LIVE LOAD = HS 20 OR ALTERNATE LOADING.

FOR OTHER DESIGN DATA AND GENERAL NOTES, SEE SHEET SN.

THIS BRIDGE HAS BEEN DESIGNED BY THE STRENGTH DESIGN METHOD AS SPECIFIED IN AASHTO STANDARD SPECIFICATIONS.

ALL STRUCTURAL STEEL SHALL BE AASHTO M270 GRADE 50W AND PAINTED IN ACCORDANCE WITH SYSTEM 4 OF ARTICLE 442-7 OF THE STANDARD SPECIFICATIONS UNLESS OTHERWISE NOTED ON THE PLANS.

THE CLASS AA CONCRETE IN THE BRIDGE DECK SHALL CONTAIN FLY ASH OR GROUND GRANULATED BLAST FURNACE SLAG AT THE SUBSTITUTION RATE SPECIFIED IN ARTICLE 1024-1 AND IN ACCORDANCE WITH ARTICLES 1024-5 AND 1024-6 OF THE STANDARD SPECIFICATIONS. NO PAYMENT WILL BE MADE FOR THIS SUBSTITUTION AS IT IS CONSIDERED INCIDENTAL TO THE COST OF THE REINFORCED CONCRETE DECK SLAB

THIS BRIDGE HAS BEEN DESIGNED IN ACCORDANCE WITH THE REQUIREMENTS OF THE STANDARD SPECIFICATIONS FOR SEISMIC DESIGN OF HIGHWAY BRIDGES FOR SEISMIC PERFORMANCE CATEGORY A.

THE CONTRACTOR SHALL PROVIDE INDEPENDENT ASSURANCE SAMPLES OF REINFORCING STEEL AS FOLLOWS: FOR PROJECTS REQUIRING UP TO 400 TONS OF REINFORCING STEEL, ONE 30 INCH SAMPLE OF EACH SIZE BAR USED, AND FOR PROJECTS REQUIRING OVER 400 TONS OF REINFORCING STEEL, TWO 30 INCH SAMPLES OF EACH SIZE BAR USED. THE BARS FROM WHICH THE SAMPLES ARE TAKEN MUST THEN BE SPLICED WITH REPLACEMENT BARS OF THE SIZE AND LENGTH OF THE SAMPLE, PLUS A MINIMUM LAP SPLICE OF THIRTY BAR DIAMETERS.

NEEDLE BEAMS WILL NOT BE ALLOWED UNLESS OTHERWISE CALLED FOR ON THE PLANS OR APPROVED BY THE ENGINEER.

FOR SUBMITTAL OF WORKING DRAWINGS, SEE SPECIAL PROVISIONS.

FOR FALSEWORK AND FORMWORK, SEE SPECIAL PROVISIONS.

PILES FOR BENT NO. 1 SHALL BE DRIVEN TO A MINIMUM BEARING CAPACITY OF 60 TONS EACH.

PILES FOR END BENTS NO. 1 AND 2 SHALL BE DRIVEN TO A MINIMUM BEARING CAPACITY OF 60 TONS EACH.

STEEL PILE POINTS ARE REQUIRED FOR PILES AT BENT NO. 1. SEE SPECIAL PROVISION FOR STEEL PILE POINTS.

WHEN DRIVING PILES, THE MAXIMUM BLOW COUNT SHALL NOT BE EXCEEDED.

THE CONTRACTOR SHALL OBSERVE A 1 MONTH WAITING PERIOD BEFORE BEGINNING ANY WORK FOR THE END BENT CONSTRUCTION AFTER COMPLETION OF THE EMBANKMENT AT EACH END BENT.

FOR CRANE SAFETY, SEE SPECIAL PROVISIONS.

FOR METRIC STRUCTURAL STEEL, SEE SPECIAL PROVISIONS.

FOR STEEL H PILES, SEE SPECIAL PROVISIONS.

TOTAL BILL OF MATERIAL

	REINFORCED CONCRETE DECK SLAB	GROOVING BRIDGE FLOORS	CLASS A CONCRETE	BRIDGE APPROACH SLABS	REINFORCING STEEL	SPIRAL COLUMN REINFORCING STEEL	STRUCTURAL STEEL	HP 12 x 53 STEEL PILES		STEEL PILE POINTS	CONCRETE BARRIER RAIL	4" SLOPE PROTECTION	POT BEARINGS	EVAZOTE JOINT SEALS
	SQ. FEET	SQ. FEET	CU. YARDS	LUMP SUM	LBS	LBS	APPROX. LB	NO.	LIN. FEET	EA.	LIN. FEET	SQ. YARDS	LUMP SUM	LUMP SUM
SUPERSTRUCTURE	12,667	14,396		L. S.			366,100				458.69		L. S.	L. S.
END BENT 1			53.0		7,347			11	440.0			487		
BENT 1			91.0		15,803	1,981		30	600.0	30				
END BENT 2			54.3		7,593			11	495.0			402		
TOTAL	12,667	14,396	198.3	LUMP SUM	30,743	1,981	366,100	52	1535.0	30	458.69	889	LUMP SUM	LUMP SUM

NORTH CAROLINA PROFESSIONAL SEAL 11725 ENGINEER DAVID R. RUGGLES
David R. Ruggles
1-10-05

NORTH CAROLINA PROFESSIONAL SEAL 25934 ENGINEER CHARLES P. LEWIS
1-10-05

PROJECT NO. R-2606A

RANDOLPH COUNTY

STATION: 108+24.11 -L- POT
28+52.41 -Y1- POC

SHEET 4 OF 4

STATE OF NORTH CAROLINA
DEPARTMENT OF TRANSPORTATION
RALEIGH

GENERAL DRAWING
FOR BRIDGE ON
CEDAR SQUARE ROAD
OVER US 311 BETWEEN
OLD US 311 AND ENOLA RD.

REVISIONS						SHEET NO.
NO.	BY:	DATE:	NO.	BY:	DATE:	S-170
1			3			TOTAL SHEETS
2			4			199

DWG. 4 OF 33

DRAWN BY: A.P. TUAZAMA DATE: 11-04
CHECKED BY: C.P. LEWIS DATE: 11-04

$$$$SYSTIME$$$$
$$$$USERNAME$$$$

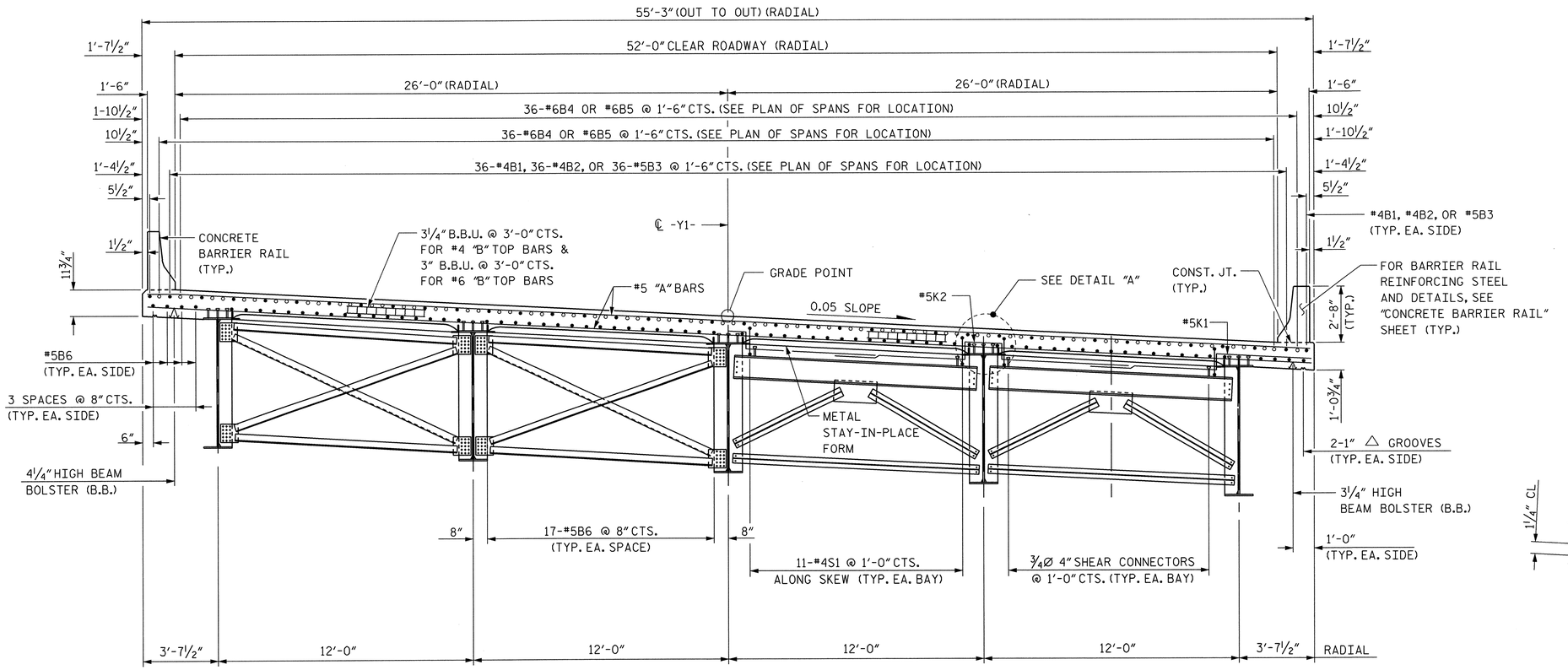

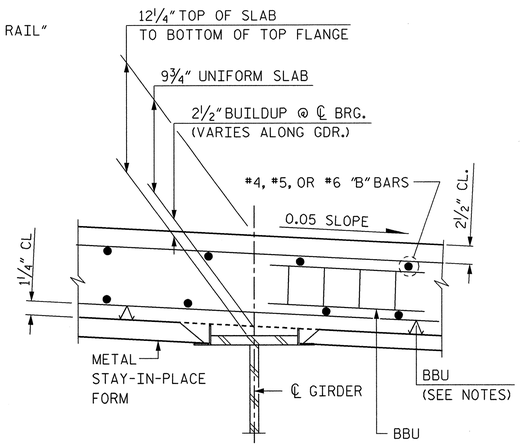

DETAIL "A"

HALF SECTION @ INTERMEDIATE AND BENT CROSSFRAMES D1

HALF SECTION @ END BENT CROSSFRAMES D2

TYPICAL SECTION

NOTES:

ALL HORIZONTAL DIMENSIONS ON TYPICAL SECTION ARE RADIAL.

PROVIDE 1 1/4" HIGH BEAM BOLSTERS UPPER AT 4'-0" CTS. ATOP THE METAL STAY-IN-PLACE FORMS TO SUPPORT THE BOTTOM MAT OF 'A' BARS. WHEN USING REMOVABLE FORMS, PROVIDE CONTINUOUS HIGH CHAIRS FOR METAL DECK (C.H.C.M.) @ 4'-0" CTS. WITH A HEIGHT TO SUPPORT THE BOTTOM MAT OF 'A' BARS A CLEAR DISTANCE OF 2 1/2" ABOVE THE TOP OF THE REMOVABLE FORM.

PREVIOUSLY CAST CONCRETE IN A CONTINUOUS UNIT SHALL HAVE ATTAINED A MINIMUM COMPRESSIVE STRENGTH OF 3,000 PSI BEFORE ADDITIONAL CONCRETE IS CAST IN THE UNIT.

STRUCTURAL STEEL ERECTION IN A CONTINUOUS UNIT SHALL BE COMPLETE BEFORE FALSEWORK OR FORMS ARE PLACED ON THE UNIT.

THE CONTRACTOR MAY, WHEN NECESSARY, PROPOSE A SCHEME FOR AVOIDING INTERFERENCE BETWEEN METAL STAY-IN-PLACE FORM SUPPORTS OR FORMS AND GIRDER STIFFENERS OR CONNECTOR PLATES. THE PROPOSAL SHALL BE INDICATED, AS APPROPRIATE, ON EITHER THE STEEL WORKING DRAWINGS OR THE METAL STAY-IN-PLACE FORM WORKING DRAWINGS.

THE CONTRACTOR SHALL ADJUST THE GIRDER BUILDUPS AS NECESSARY TO INCORPORATE A MAXIMUM PERMISSIBLE VARIATION IN POT BEARING DEPTH OF 1/2", SEE SPECIAL PROVISION FOR POT BEARINGS.

METAL STAY-IN-PLACE FORMS SHALL NOT BE WELDED TO BEAM OR GIRDER FLANGES IN THE ZONES REQUIRING CHARPY V-NOTCH TEST. SEE STRUCTURAL STEEL DETAIL SHEETS.

NORTH CAROLINA PROFESSIONAL SEAL 11725 ENGINEER DAVID R. RIGGLES
1-10-05

NORTH CAROLINA PROFESSIONAL SEAL 25934 ENGINEER CHARLES P. LEWIS
1-10-05

DRAWN BY: A.P. TUAZAMA DATE: 11-04
CHECKED BY: C.P. LEWIS DATE: 11-04

PROJECT NO. R-2606A
RANDOLPH COUNTY
STATION: 108+24.11 -L- POT

STATE OF NORTH CAROLINA
DEPARTMENT OF TRANSPORTATION
RALEIGH

SUPERSTRUCTURE
TYPICAL SECTION

REVISIONS						SHEET NO.
NO.	BY:	DATE:	NO.	BY:	DATE:	S-171
1			3			TOTAL SHEETS
2			4			199

DWG. 5 OF 33

$$$$$$$$SYSTIME$$$$
$$$$$$$$DGN$$$$$$$$
$$$$$$$$USERNAME$$$$

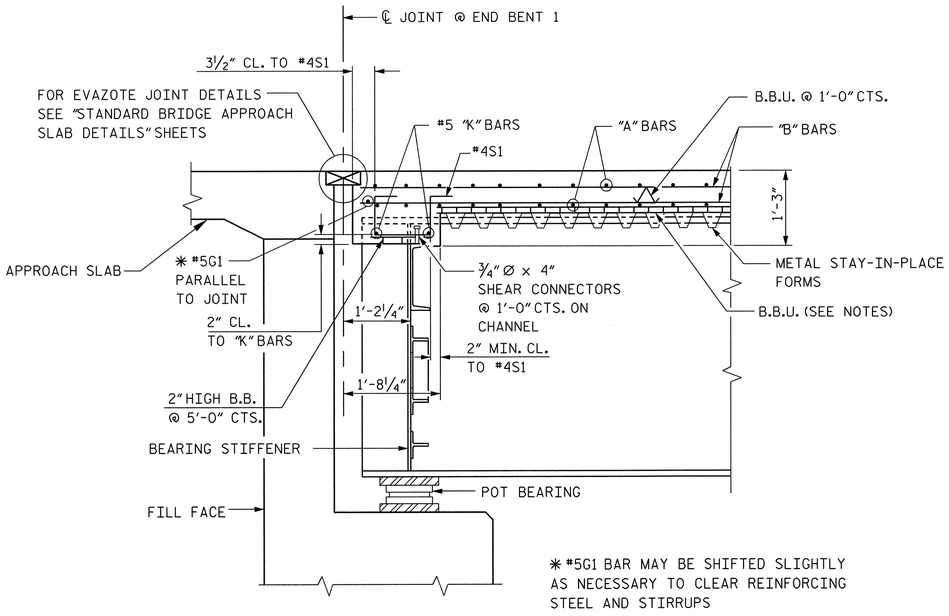

SECTION A-A AT END BENT 1

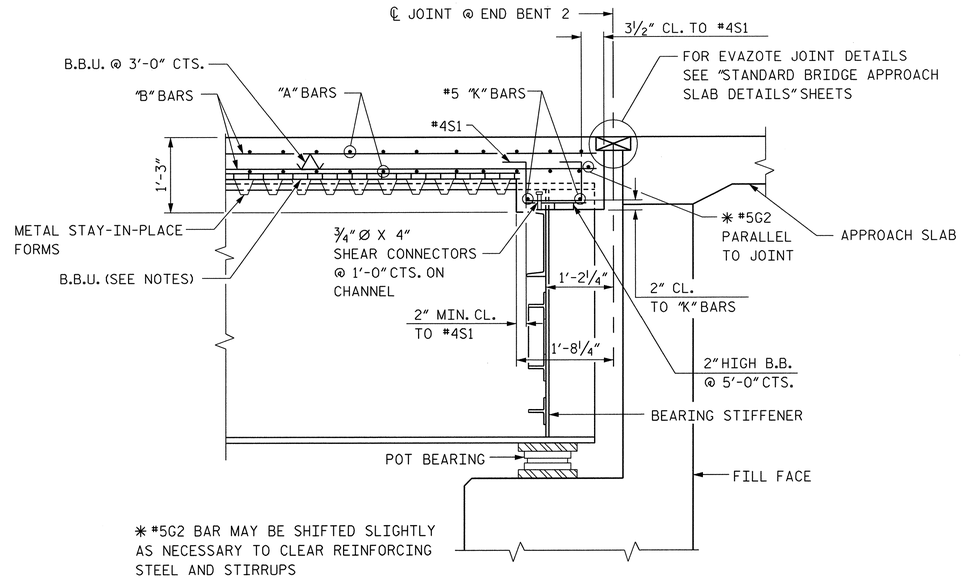

SECTION B-B AT END BENT 2

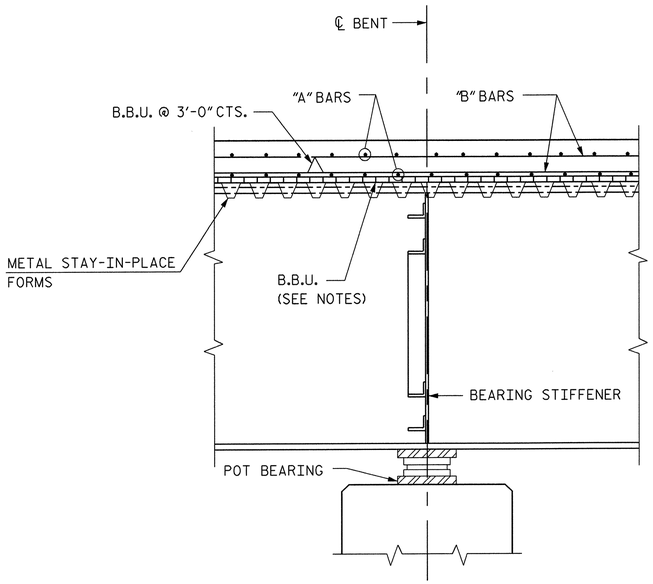

SECTION C-C AT INTERIOR BENT

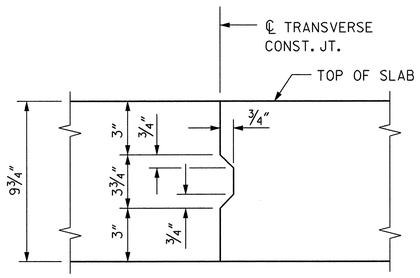

NOTE: REINFORCING STEEL IN SLAB NOT SHOWED. LONGITUDINAL REINFORCING STEEL SHALL BE CONTINUOUS THRU JOINT.

TRANSVERSE CONSTRUCTION JOINT IN DECK SLAB

PROJECT NO. R-2606A

RANDOLPH COUNTY

STATION: 108+24.11 -L- POT

STATE OF NORTH CAROLINA
DEPARTMENT OF TRANSPORTATION
RALEIGH

SUPERSTRUCTURE DETAILS

NORTH CAROLINA PROFESSIONAL SEAL 11725 ENGINEER DAVID R. RUGGLES
1-10-05

NORTH CAROLINA PROFESSIONAL SEAL 25934 ENGINEER CHARLES P. LEWIS
1-10-05

REVISIONS						SHEET NO.
NO.	BY:	DATE:	NO.	BY:	DATE:	S-172
1			3			TOTAL SHEETS
2			4			199

DWG. 6 OF 33

DRAWN BY: A.P. TUAZAMA DATE: 11-04
CHECKED BY: C.P. LEWIS DATE: 11-04

\$\$\$\$\$SYSTIME\$\$\$\$
\$\$\$\$\$USERNAME\$\$\$\$

NOTES:

FOR SPLICE LENGTH, SEE TABLE ON "SUPERSTRUCTURE BILL OF MATERIAL" SHEET.

FOR CONCRETE BARRIER RAIL REINFORCMENT AND JOINT SPACING, SEE "SUPERSTRUTURE PLAN OF BARRIER RAIL" SHEET.

#5G1 BAR MAY BE SHIFTED SLIGHTLY AS NECESSARY TO CLEAR REINFORCING STEEL AND STIRRUPS.

#5G1 BAR IS PARALLEL TO JOINT.

FOR SECTIONS A-A AND C-C, SEE "SUPERSTRUCTURE DETAILS" SHEET.

#5 "A" BARS ARE PLACED RADIALLY ALONG SLAB.

FOR TRANSVERSE CONSTRUCTION JOINT DETAIL, SEE "SUPERSTRUCTURE DETAILS" SHEET.

PLAN OF SPAN A

DETAIL "A"

PROJECT NO. R-2606A

RANDOLPH COUNTY

STATION: 108+24.11 -L- POT

STATE OF NORTH CAROLINA
DEPARTMENT OF TRANSPORTATION
RALEIGH

SUPERSTRUCTURE
PLAN OF SPAN A

NORTH CAROLINA PROFESSIONAL SEAL 11725 ENGINEER DAVID R. RUGGLES
David Ruggles 1-10-05

NORTH CAROLINA PROFESSIONAL SEAL 25934 ENGINEER CHARLES P. LEWIS
1-10-05

REVISIONS						SHEET NO.
NO.	BY:	DATE:	NO.	BY:	DATE:	S-173
1			3			TOTAL SHEETS 199
2			4			

DWG. 7 OF 33

DRAWN BY: A. P. TUAZAMA DATE: 11-04
CHECKED BY: C.P. LEWIS DATE: 11-04

$$$$SYSTIME$$$$ $$$$DGN$$$$ $$$$USERNAME$$$$

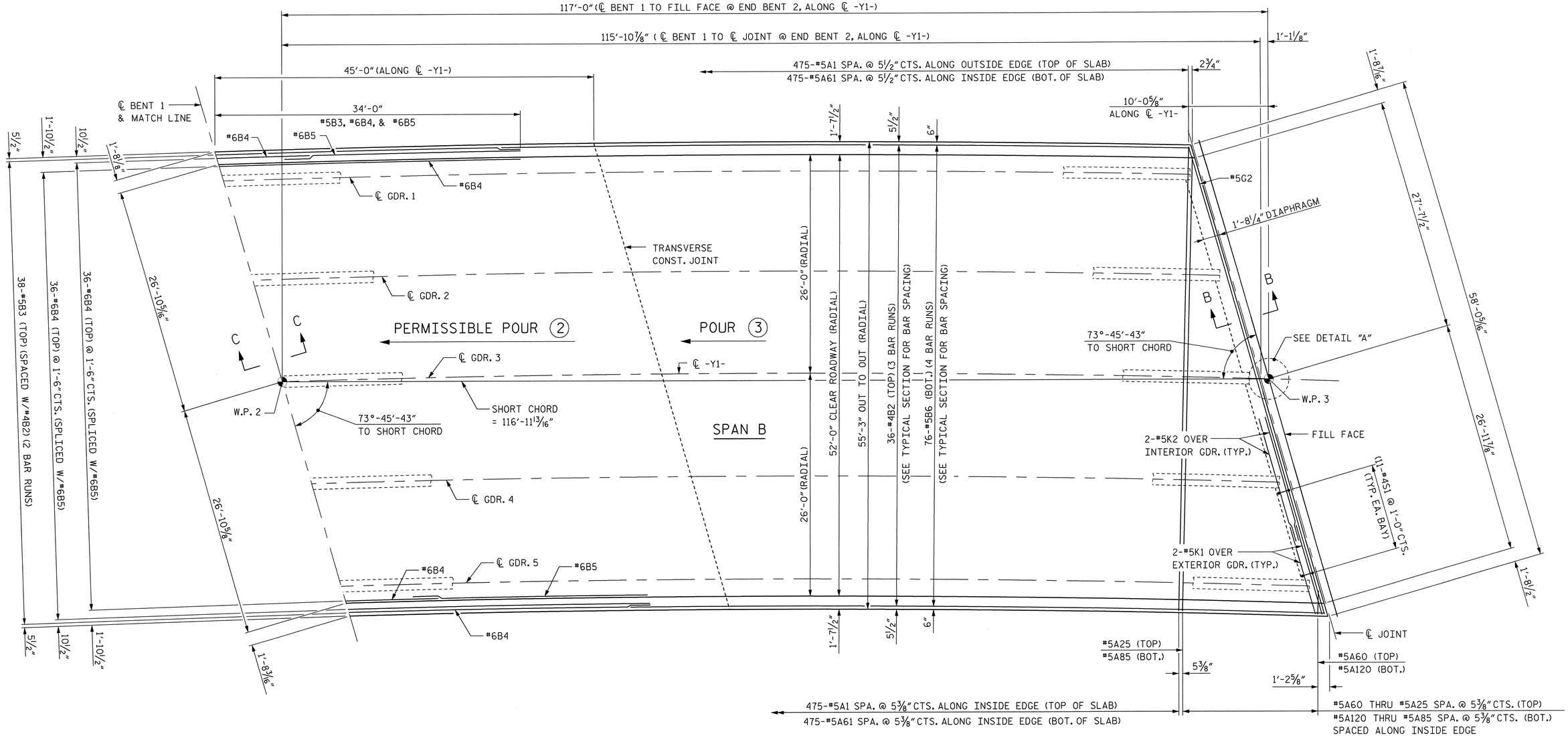

PLAN OF SPAN B

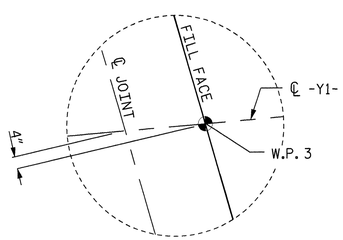

DETAIL "A"

NOTES:

FOR SPLICE LENGTH, SEE TABLE ON "SUPERSTRUCTURE BILL OF MATERIAL" SHEET.

FOR CONCRETE BARRIER RAIL REINFORCMENT AND JOINT SPACING, SEE "SUPERSTRUTURE PLAN OF BARRIER RAIL" SHEET.

#5G2 BAR MAY BE SHIFTED SLIGHTLY AS NECESSARY TO CLEAR REINFORCING STEEL AND STIRRUPS.

#5G2 BAR IS PARALLEL TO JOINT.

FOR SECTIONS B-B AND C-C, SEE "SUPERSTRUCTURE DETAILS" SHEET.

#5 "A" BARS ARE PLACED RADIALLY ALONG SLAB.

FOR TRANSVERSE CONSTRUCTION JOINT DETAIL, SEE "SUPERSTRUCTURE DETAILS" SHEET.

PROJECT NO. R-2606A

RANDOLPH COUNTY

STATION: 108+24.11 -L- POT

STATE OF NORTH CAROLINA
DEPARTMENT OF TRANSPORTATION
RALEIGH

SUPERSTRUCTURE
PLAN OF SPAN B

NORTH CAROLINA PROFESSIONAL SEAL 11725 ENGINEER DAVID R. RUGGLES
David Ruggles
1-10-05

NORTH CAROLINA PROFESSIONAL SEAL 25934 ENGINEER CHARLES P. LEWIS
1-10-05

REVISIONS						SHEET NO.
NO.	BY:	DATE:	NO.	BY:	DATE:	S-179
1			3			TOTAL SHEETS
2			4			199

DWG. 8 OF 33

DRAWN BY: A. P. TUAZAMA DATE: 11-04
CHECKED BY: C.P. LEWIS DATE: 11-04

$$$$$$SYSTIME$$$$$$
$$$$$$USERNAME$$$$$$

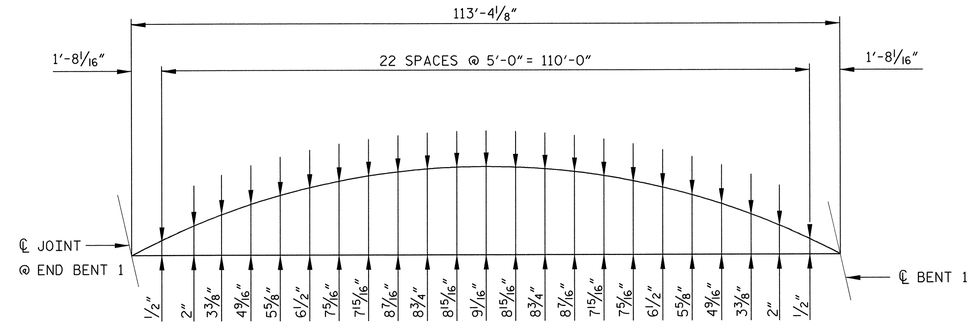

LEFT EDGE OF DECK CURVE OFFSET SPAN A

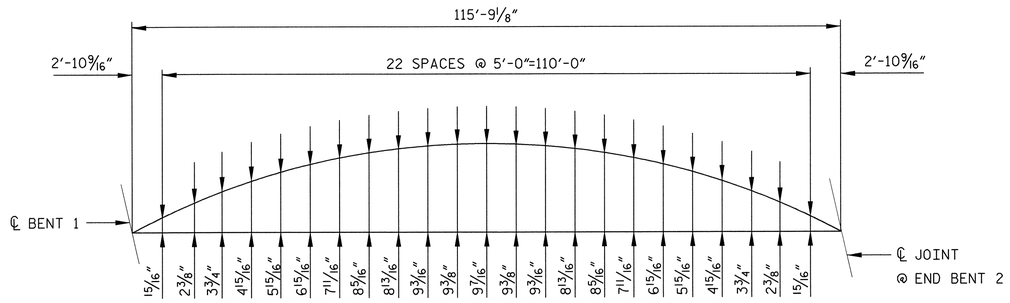

LEFT EDGE OF DECK CURVE OFFSET SPAN B

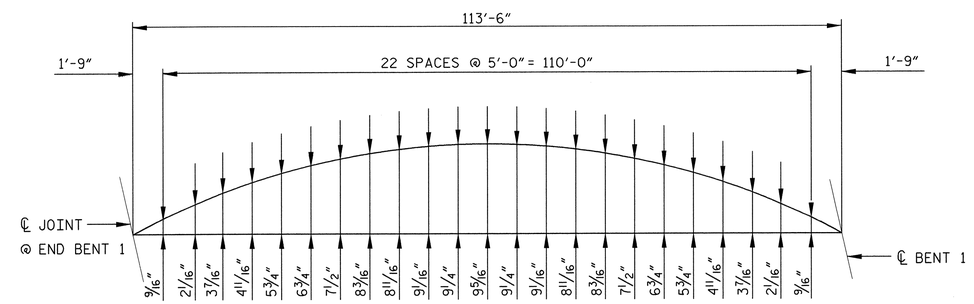

RIGHT EDGE OF DECK CURVE OFFSET SPAN A

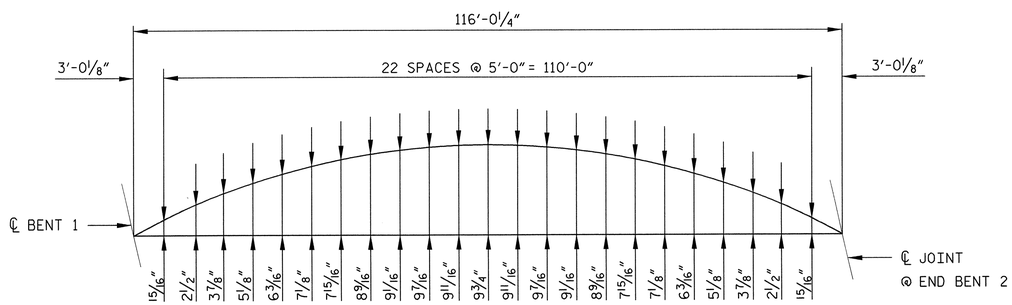

RIGHT EDGE OF DECK CURVE OFFSET SPAN B

PROJECT NO. R-2606A
RANDOLPH COUNTY
STATION: 108+24.11 -L- POT

STATE OF NORTH CAROLINA
DEPARTMENT OF TRANSPORTATION
RALEIGH

SUPERSTRUCTURE
CURVE OFFSETS

NORTH CAROLINA PROFESSIONAL SEAL 11725 ENGINEER DAVID R. RUGGLES
David Ruggles
1-10-05

NORTH CAROLINA PROFESSIONAL SEAL 25934 ENGINEER CHARLES P. LEWIS
C P Lewis
1-10-05

DRAWN BY: A.P. TUAZAMA DATE : 11-04
CHECKED BY: C.P. LEWIS DATE : 11-04

DWG. 9 OF 33

REVISIONS						SHEET NO.
NO.	BY:	DATE:	NO.	BY:	DATE:	S-175
1			3			TOTAL SHEETS
2			4			199

FRAMING PLAN

NOTES:
ALL END CROSSFRAMES (D2) ARE PARALLEL TO FILL FACE AT END BENTS.

BENT CROSSFRAMES (D1) ARE PARALLEL TO ℄ BENT 1.

ALL INTERMEDIATE CROSSFRAMES (D1) ARE PLACED RADIALLY.

ALL DIMENSIONS ON THIS SHEET ARE HORIZONTAL.

* ALONG ℄ GIRDER

** MEASURED ALONG FILL FACE TO POINTS WHERE GIRDER EXTENSIONS INTERSECT FILL FACE.

MARK	RADIUS
GIRDER 1	2124'-0"
GIRDER 2	2112'-0"
GIRDER 3	2100'-0"
GIRDER 4	2088'-0"
GIRDER 5	2076'-0"

PROJECT NO. R-2606A
RANDOLPH COUNTY
STATION: 108+24.11 -L- POT

STATE OF NORTH CAROLINA
DEPARTMENT OF TRANSPORTATION
RALEIGH

SUPERSTRUCTURE FRAMING LAYOUT

REVISIONS						SHEET NO.
NO.	BY:	DATE:	NO.	BY:	DATE:	S-176
1			3			TOTAL SHEETS
2			4			199

DWG. 10 OF 33

DRAWN BY: R.C. NELSON DATE : 11-04
CHECKED BY: C.P. LEWIS DATE : 11-04

$$$$SYSTIME$$$$ $$$$DGN$$$$ $$$$USERNAME$$$$

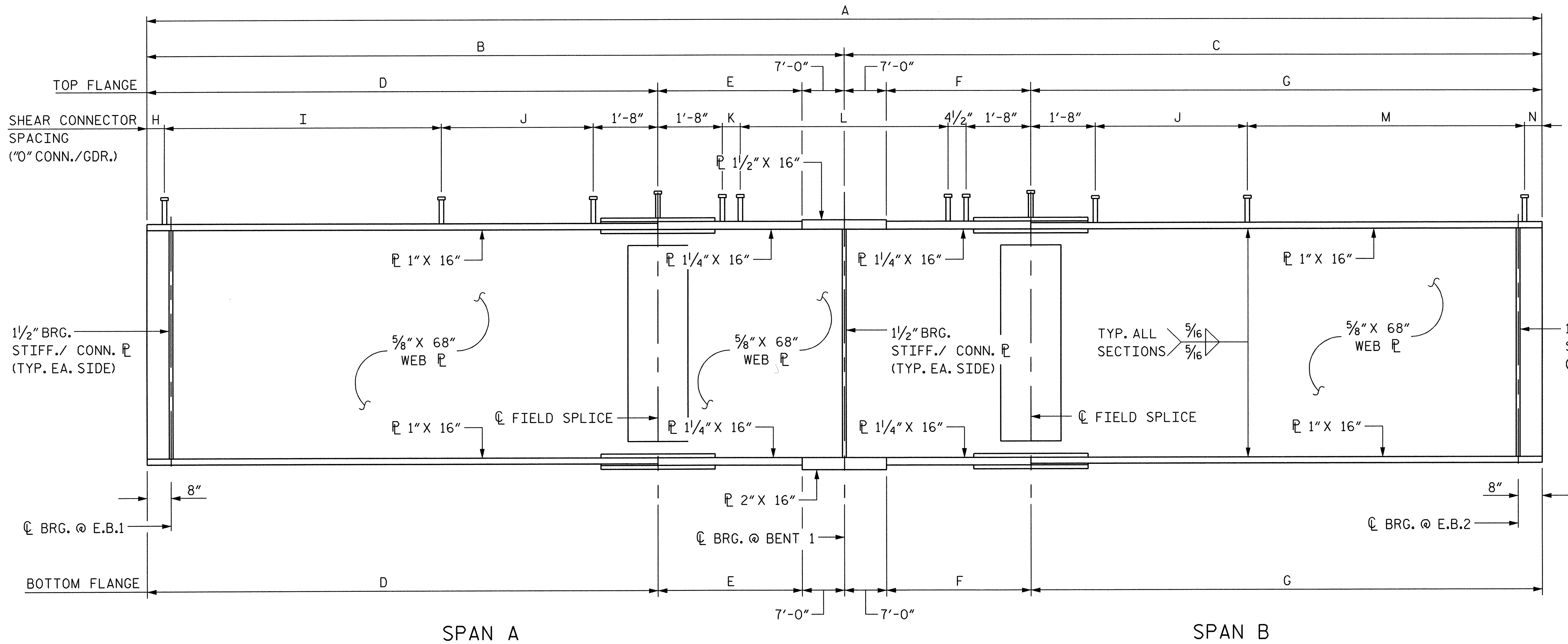

GIRDER ELEVATION

(CONNECTOR PLATES NOT SHOWN FOR CLARITY)

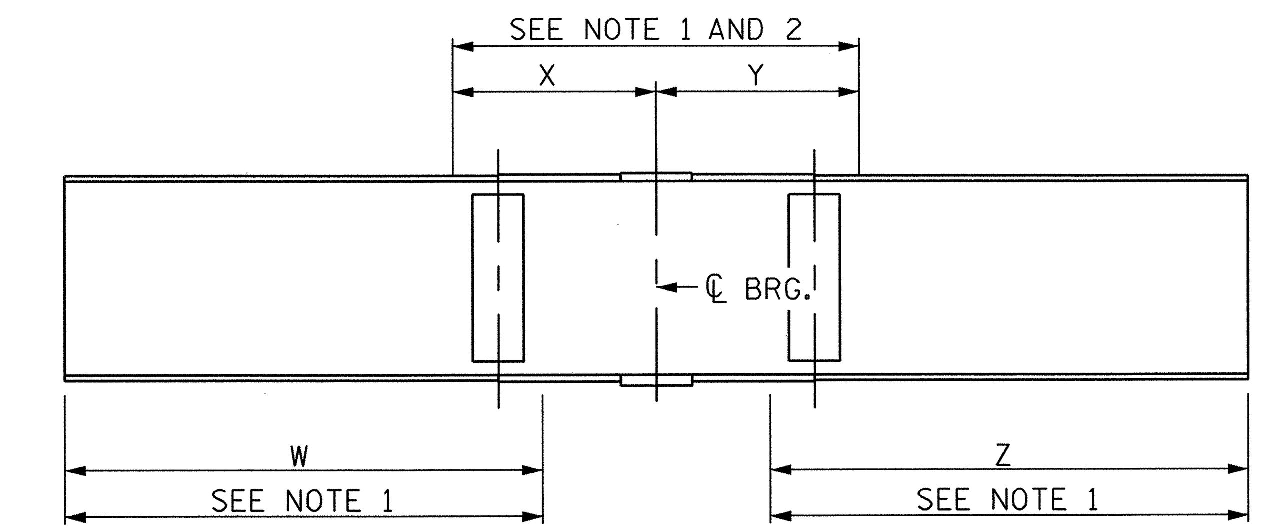

	W	X	Y	Z
GDR. 1	89'-1¾"	38'-9¼"	37'-11¾"	91'-2 13/16"
GDR. 2	89'-5 15/16"	36'-9¾"	36'-1 5/16"	91'-7 3/16"
GDR. 3	89'-2¾"	36'-8"	35'-10 3/16"	91'-8 3/16"
GDR. 4	89'-4¾"	37'-0¾"	35'-11"	92'-2¾"
GDR. 5	89'-1½"	38'-5"	37'-0"	92'-0 3/16"

CHARPY V-NOTCH TESTS FOR CONTINUOUS PLATE GIRDER

NOTE 1: CHARPY V-NOTCH TESTS ARE REQUIRED FOR ALL TOP OR BOTTOM FLANGE PLATES WHICH FALL WITHIN THESE LIMITS, ALL WEB PLATES, AND ALL SPLICE PLATES. IF A PERMITTED SHOP FLANGE SPLICE IS NOT USED, CHARPY V-NOTCH TESTS WILL BE REQUIRED FOR THE ENTIRE FLANGE PLATE. FOR CHARPY V-NOTCH TEST, SEE SPECIAL PROVISIONS.

NOTE 2: NO WELDING OF FORMS OR FALSEWORK TO THE TOP FLANGE WILL BE PERMITTED IN THIS REGION.

GIRDER DIMENSIONS

	A	B	C	D	E	F	G	RADIUS	θ1	θ2	θ3
GDR. 1	228'-2"	112'-10⅝"	115'-3⅜"	80'-1⅝"	25'-9"	23'-9"	84'-6⅜"	2124'-0"	78°-36'-50"	75°-31'-37"	72°-22'-26"
GDR. 2	228'-3 1/16"	112'-11 1/16"	115'-4"	81'-8 1/16"	24'-3"	23'-9"	84'-7"	2112'-0"	78°-32'-54"	75°-26'-35"	72°-16'-14"
GDR. 3	228'-4⅛"	112'-11 7/16"	115'-4 11/16"	81'-8 7/16"	24'-3"	23'-9"	84'-7 11/16"	2100'-0"	78°-28'-55"	75°-21'-29"	72°-09'-57"
GDR. 4	228'-5¼"	112'-11⅞"	115'-5⅜"	81'-8⅞"	24'-3"	23'-9"	84'-8⅜"	2088'-0"	78°-24'-53"	75°-16'-19"	72°-03'-35"
GDR. 5	228'-6⅜"	113'-0 5/16"	115'-6 1/16"	81'-9 5/16"	24'-3"	22'-6"	86'-0 1/16"	2076'-0"	78°-20'-49"	75°-11'-06"	71°-57'-09"

SHEAR CONNECTOR SPACING

	H	I	J	K	L	M	N	O
GDR. 1	11⅝"	24 SPA. @ 8"	82 SPA. @ 9"	5½"	89 SPA. @ 8"	31 SPA. @ 8"	8⅜"	945
GDR. 2	6"	94 SPA. @ 6"	60 SPA. @ 6½"	6 9/16"	99 SPA. @ 7"	100 SPA. @ 6"	5"	1260
GDR. 3	6 7/16"	94 SPA. @ 6"	60 SPA. @ 6½"	6 9/16"	99 SPA. @ 7"	100 SPA. @ 6"	5⅝"	1260
GDR. 4	6⅞"	94 SPA. @ 6"	60 SPA. @ 6½"	6 9/16"	99 SPA. @ 7"	100 SPA. @ 6"	6 5/16"	1260
GDR. 5	5 5/16"	25 SPA. @ 8"	84 SPA. @ 9"	4 9/16"	85 SPA. @ 8"	31 SPA. @ 8"	8"	948

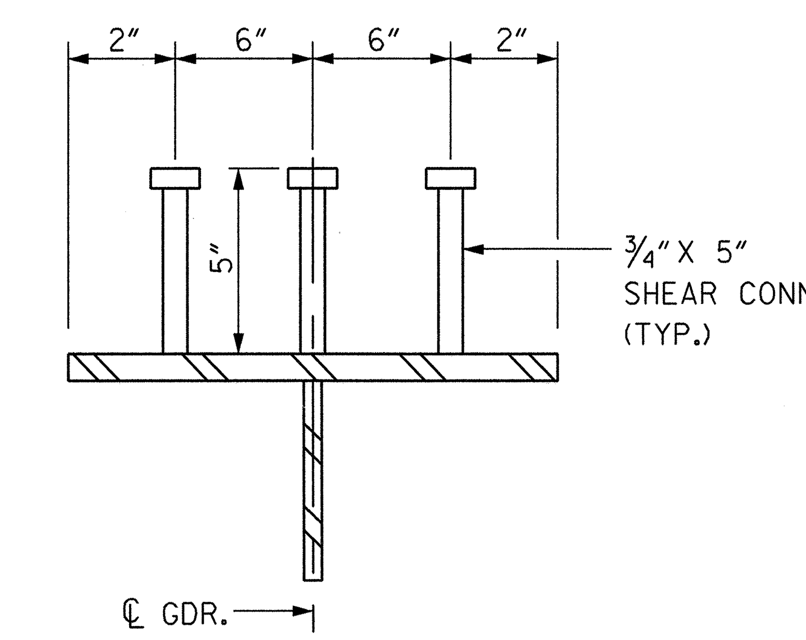

SHEAR CONNECTOR DETAIL

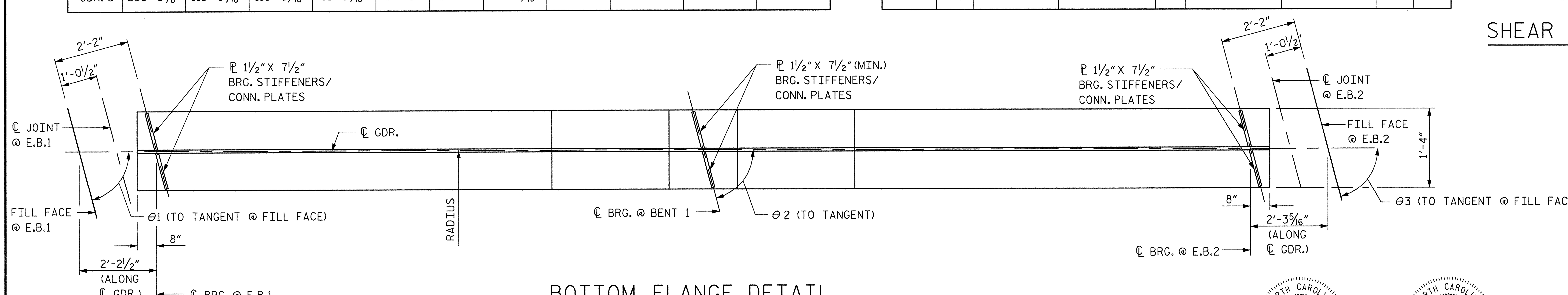

BOTTOM FLANGE DETAIL

(BOTTOM FLANGE CURVATURE NOT SHOWN, SEE FRAMING PLAN.)

PROJECT NO. R-2606A

RANDOLPH COUNTY

STATION: 108+24.11 -L- POT

SHEET 1 OF 3

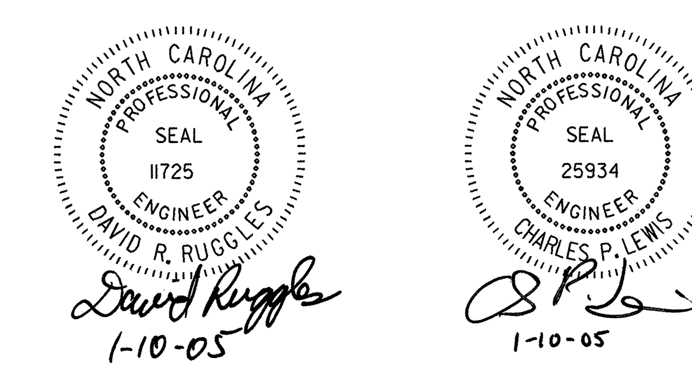

STATE OF NORTH CAROLINA
DEPARTMENT OF TRANSPORTATION
RALEIGH

SUPERSTRUCTURE
STRUCTURAL STEEL DETAILS

REVISIONS					
NO.	BY:	DATE:	NO.	BY:	DATE:
1			3		
2			4		

SHEET NO. S-177
TOTAL SHEETS 199

DWG. 11 OF 33

DRAWN BY: R. C. NELSON DATE : 11-04
CHECKED BY: C. P. LEWIS DATE : 11-04

$$$$$$SYSTIME$$$$ $$$$$$$$$$$DGN$$$$$$$$$$$$$$$$ $$$$$$USERNAME$$$$

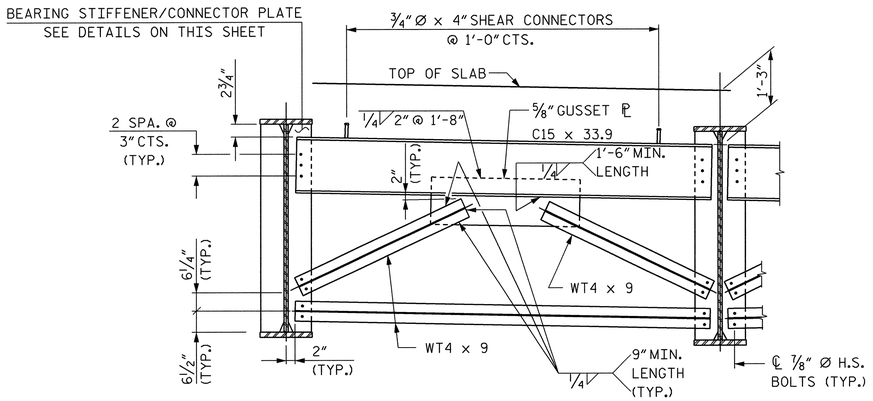

TYPICAL END CROSSFRAME D2

USE AT END BENTS 1 & 2

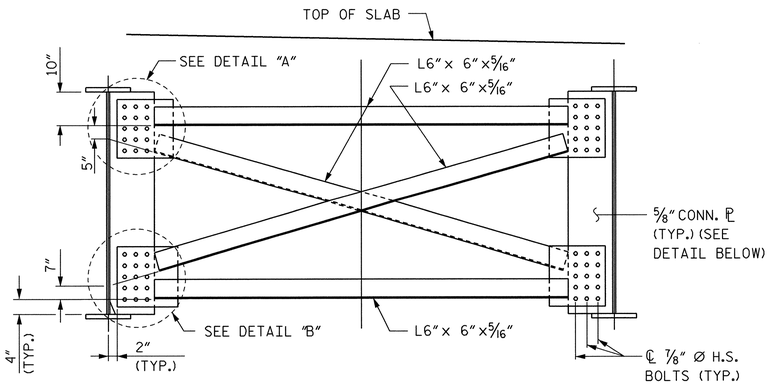

TYPICAL INTERMEDIATE CROSSFRAME D1 & BENT CROSSFRAME

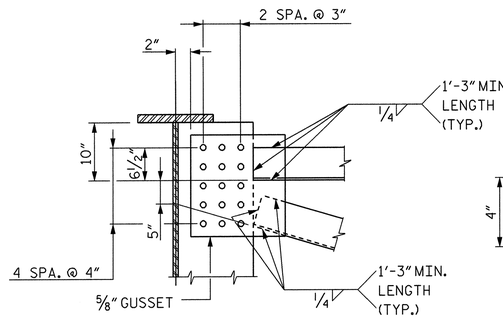

DETAIL "A" TYPICAL GUSSET PLATE CONNECTION

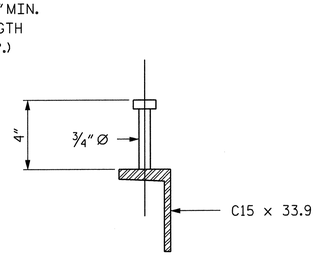

CHANNEL SHEAR CONNECTOR DETAIL

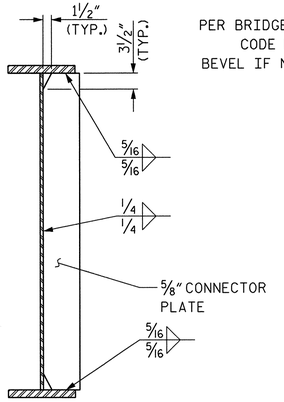

CONNECTOR PLATE DETAIL

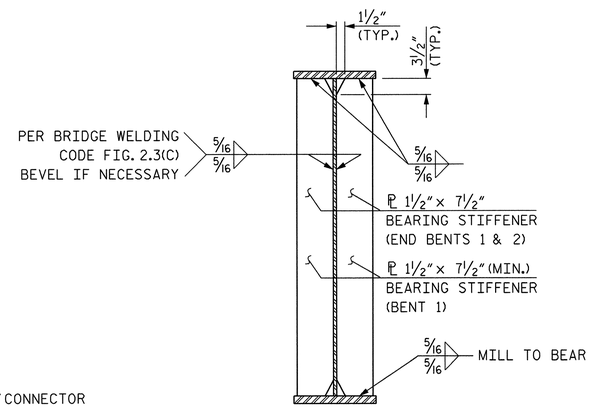

BEARING STIFFENER/CONNECTOR PLATE DETAIL

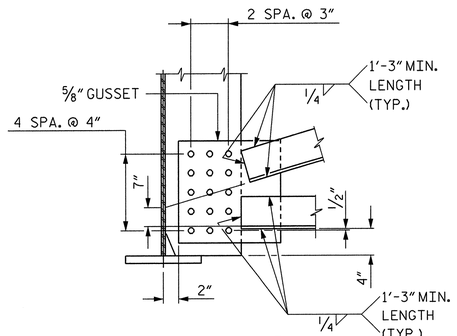

DETAIL "B" TYPICAL GUSSET PLATE CONNECTION

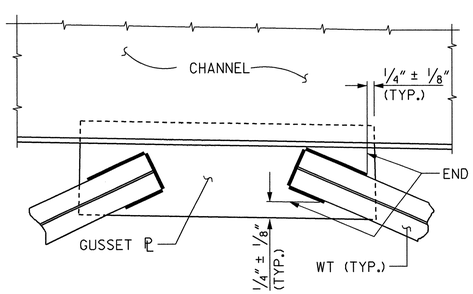

TYPICAL GUSSET PLATE CONNECTION END CROSSFRAME D2

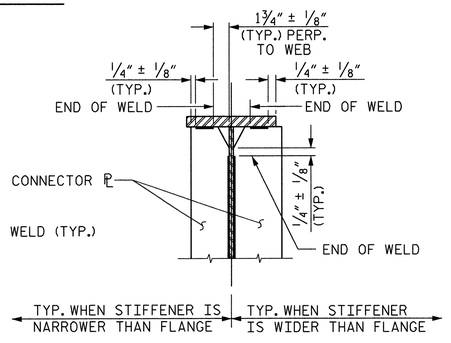

TYPICAL CONNECTOR PLATE CONNECTION

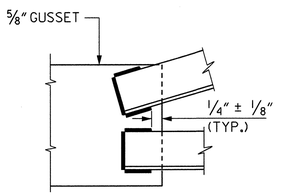

TYPICAL GUSSET PLATE CONNECTION FOR INTERMEDIATE CROSSFRAME D1

WELD TERMINATION DETAILS

NOTES:

ALL STRUCTURAL STEEL SHALL BE AASHTO M270 GRADE 50W AND PAINTED IN ACCORDANCE WITH SYSTEM 4 OF ARTICLE 442-7 OF THE STANDARD SPECIFICATIONS, UNLESS OTHERWISE NOTED ON THE PLANS.

ALL DIMENSIONS SHOWN ARE HORIZONTAL OR VERTICAL, UNLESS OTHERWISE NOTED.

ALL FIELD CONNECTIONS TO BE 7/8" DIAMETER HIGH STRENGTH BOLTS UNLESS OTHERWISE NOTED.

BEARING STIFFENERS ARE TO BE PLACED PARALLEL TO THE CENTERLINE OF BENT OR END BENT AND SHALL BE PLUMB.

ALL CONNECTOR PLATES AT CROSSFRAMES SHALL BE PLACED IN PAIRS EXCEPT AT EXTERIOR GIRDERS WHERE THEY WILL BE PLACED ON THE INSIDE FACE ONLY.

ENDS OF THE PLATE GIRDERS SHALL BE IN A PLUMB POSITION AFTER THE TOTAL DEAD LOAD DEFLECTION HAS OCCURRED.

INTERMEDIATE CROSSFRAME CONNECTOR PLATES SHALL BE PLACED NORMAL TO THE GIRDER FLANGES AND WEB.

SHOP SPLICES ARE PERMITTED TO LIMIT THE MAXIMUM REQUIRED FLANGE SPLICE LENGTHS TO 60'-0" AND WEB PIECE LENGTHS TO 45'-0". PERMITTED FLANGE AND WEB SHOP SPLICES SHALL NOT BE LOCATED WITHIN 15'-0" OF MAXIMUM DEAD LOAD DEFLECTION (NOR WITHIN 15'-0" OF INTERMEDIATE BEARINGS OF CONTINUOUS UNITS). KEEP 2'-0" MINIMUM BETWEEN WEB AND FLANGE SHOP SPLICES. KEEP 6" MINIMUM BETWEEN CONNECTOR PLATE OR TRANSVERSE STIFFENER WELDS AND WEB OR FLANGE SHOP SPLICES.

THE CONTRACTOR SHALL MAINTAIN STABILITY OF THE CURVED GIRDERS UNTIL ALL FIELD SPLICES AND CROSSFRAME CONNECTIONS HAVE BEEN COMPLETED. STRUCTURAL STEEL ERECTION IN A CONTINUOUS UNIT SHALL BE COMPLETE BEFORE FALSEWORK OR FORMS ARE PLACED ON THE UNIT.

STUDS ON GIRDERS MAY BE SHIFTED UP TO 1" IF NECESSARY TO CLEAR FLANGE SPLICE WELDS.

TENSION ON THE AASHTO M164 BOLTS SHALL BE CALIBRATED USING DIRECT TENSION INDICATOR WASHERS IN ACCORDANCE WITH ARTICLE 440-10 OF THE STANDARD SPECIFICATIONS.

MAIN TENSION MEMBERS SHALL BE CHARPY V-NOTCH (CVN) IMPACT TESTED IN ACCORDANCE WITH ARTICLE 1072-9 OF THE STANDARD SPECIFICATIONS. FOR THE PURPOSE OF IMPACT THE FOLLOWING PLATES AND SHAPES SHALL BE CLASSIFIED AS MAIN TENSION MEMBERS:

ALL FLANGE PLATES WHICH FALL WITHIN THE "TENSION ZONE", SEE NOTES 1 AND 2 ON THE SHEET ENTITLED "STRUCTURAL STEEL DETAIL", SHEET 1 OF 3

ALL WEB PLATES
ALL GIRDER SPLICE PLATES
ALL CROSSFRAME COMPONENTS
ALL CROSSFRAME CONNECTOR PLATES

HEAT CURVING IS ALLOWED. SEE SPECIAL PROVISIONS.

CURVATURE OF STEEL GIRDERS MAY BE ACCOMPLISHED BY CUTTING PLATES TO THE REQUIRED CURVATURE OR BY HEAT TREATMENT.

BEARING STIFFENER MAY REQUIRE COPING IF WIDER THAN BOTTOM FLANGE TO AVOID INTERFERENCE WITH THE ANCHOR BOLT.

PROJECT NO. R-2606A

RANDOLPH COUNTY

STATION: 108+24.11 -L- POT

SHEET 2 OF 3

STATE OF NORTH CAROLINA
DEPARTMENT OF TRANSPORTATION
RALEIGH

SUPERSTRUCTURE
STRUCTURAL STEEL
DETAILS

NORTH CAROLINA PROFESSIONAL SEAL 11725 ENGINEER DAVID R. RUGGLES
David Ruggles
1-10-05

NORTH CAROLINA PROFESSIONAL SEAL 25934 ENGINEER CHARLES P. LEWIS
C.P. Lewis
1-10-05

REVISIONS						SHEET NO.
NO.	BY:	DATE:	NO.	BY:	DATE:	S-178
1			3			TOTAL SHEETS
2			4			199

DWG. 12 OF 33

DRAWN BY: R.C. NELSON DATE: 11-04
CHECKED BY: C.P. LEWIS DATE: 11-04

$$$$SYSTIME$$$$
$$$$FILENAME$$$$

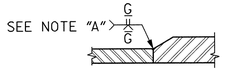

ELEVATION - FLANGE

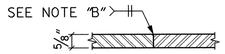

PLAN - WEB

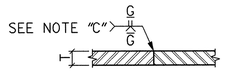

ELEVATION - FLANGE

NOTES:

A: SHOP FLANGE SPLICE - TYP. BOTH TOP AND BOTTOM FLANGES.

B: PERMISSIBLE SHOP WEB SPLICE - GRIND SMOOTH AND FLUSH ON OUTSIDE FACE OF EXTERIOR GIRDERS.

C: PERMISSIBLE FLANGE SPLICE FOR "T" OVER 5/8" THRU 2".

TYPICAL FLANGE AND WEB BUTT JOINT

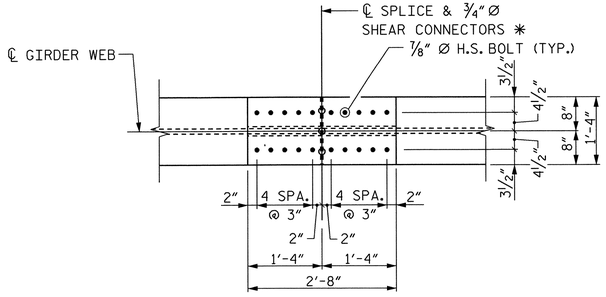

TOP FLANGE

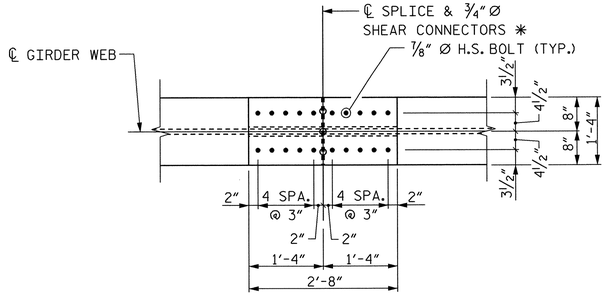

TOP FLANGE

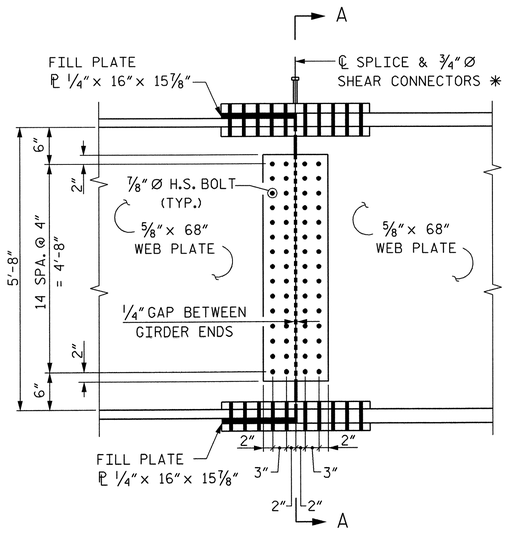

ELEVATION @ SPAN A

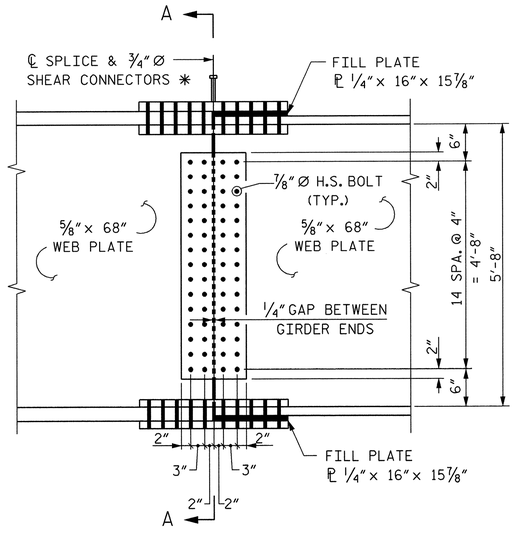

ELEVATION @ SPAN B

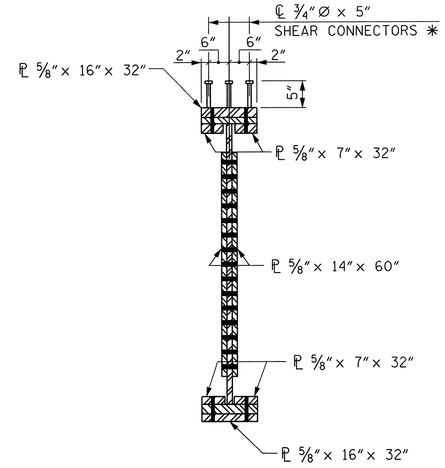

SECTION A-A

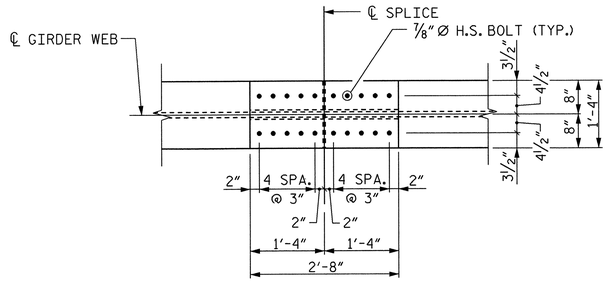

BOTTOM FLANGE

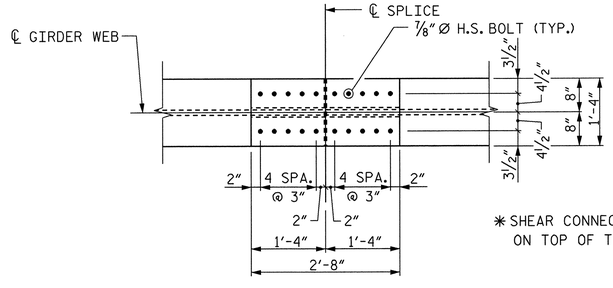

BOTTOM FLANGE

* SHEAR CONNECTORS ARE TO BE SHOP WELDED ON TOP OF THE PLATE BEFORE FIELD ASSEMBLY.

FIELD SPLICE DETAILS

PROJECT NO. R-2606A

RANDOLPH COUNTY

STATION: 108+24.11 -L- POT

SHEET 3 OF 3

STATE OF NORTH CAROLINA
DEPARTMENT OF TRANSPORTATION
RALEIGH

SUPERSTRUCTURE
STRUCTURAL STEEL
SPLICE DETAILS

NORTH CAROLINA PROFESSIONAL SEAL 11725 ENGINEER DAVID R. RUGGLES
David Ruggles
1-10-05

NORTH CAROLINA PROFESSIONAL SEAL 25934 ENGINEER CHARLES P. LEWIS
1-10-05

REVISIONS						SHEET NO.
NO.	BY:	DATE:	NO.	BY:	DATE:	S-179
1			3			TOTAL SHEETS
2			4			199

DWG. 13 OF 33

DRAWN BY: R.C. NELSON DATE: 11-04
CHECKED BY: C.P. LEWIS DATE: 11-04

$$$$$SYSTIME$$$$
$$$$$USERNAME$$$$
$$$$$DGN$$$$

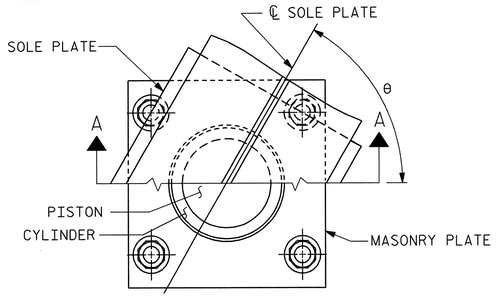

CUT-AWAY PLAN

BEARING DATA		
BENT	GDR.	θ
E. B. 1	1	77°-02′-26″
E. B. 1	2	76°-57′-56″
E. B. 1	3	76°-53′-23″
E. B. 1	4	76°-48′-47″
E. B. 1	5	76°-44′-07″
BT. 1	1	75°-31′-37″
BT. 1	2	75′-26′-35″
BT. 1	3	75°-21′-29″
BT. 1	4	75°-16′-19″
BT. 1	5	75°-11′-06″
E. B. 2	1	73°-58′-52″
E. B. 2	2	73°-53′-15″
E. B. 2	3	73°-47′-35″
E. B. 2	4	73°-41′-50″
E. B. 2	5	73°-36′-01″

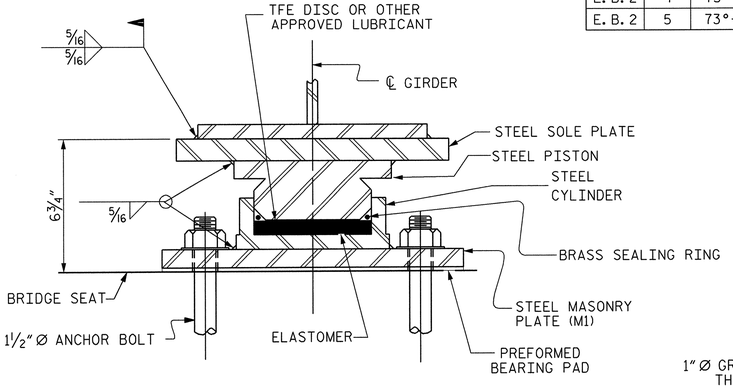

SECTION A-A

PB1, FIXED
(5 REQ'D.)

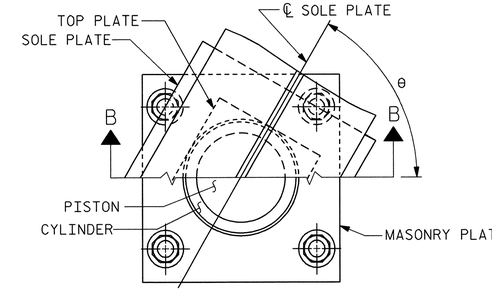

CUT-AWAY PLAN

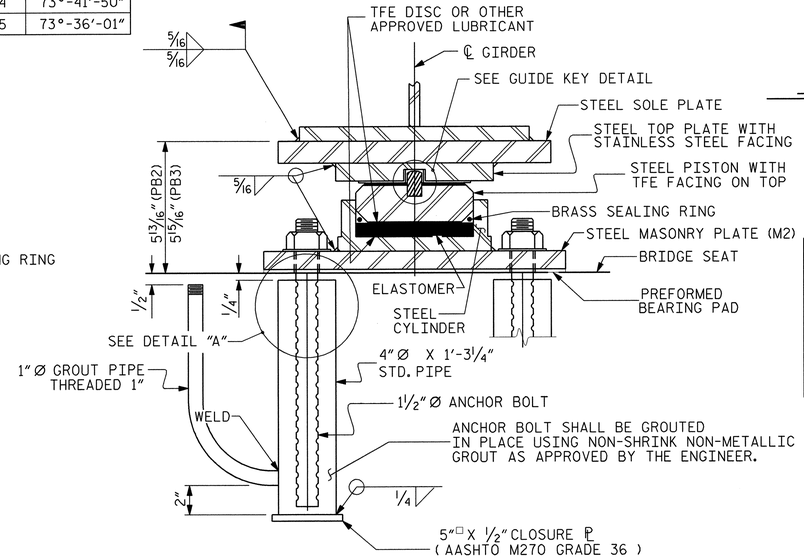

SECTION B-B

POT BEARING DETAILS

PB2, EXP. (5 REQ'D.) PB3, EXP. (5 REQ'D.)

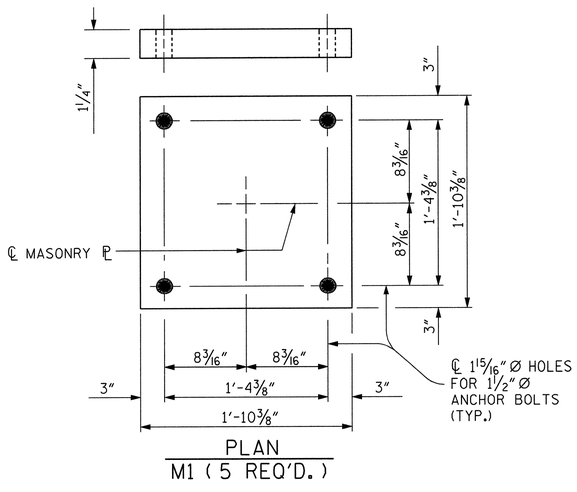

PLAN
M1 (5 REQ'D.)

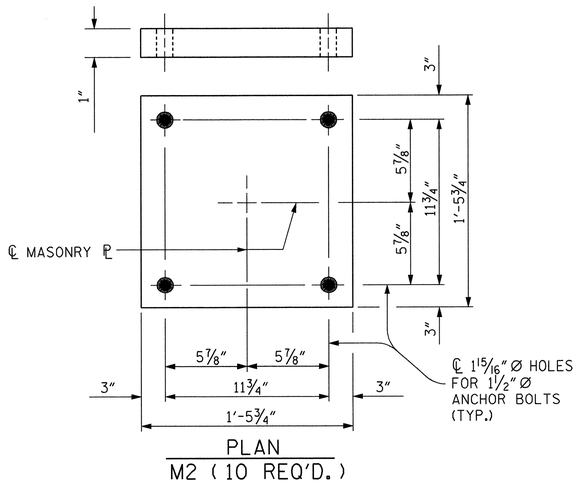

PLAN
M2 (10 REQ'D.)

MASONRY PLATE DETAILS

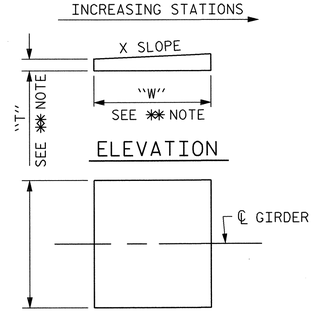

PLAN

✱✱ NOTE:
DIMENSIONS "W" AND "T" ARE TO BE DETERMINED BY THE MANUFACTURER.

SOLE PLATE DETAILS

SOLE ℙ DATA		
"S"	BENT	X
S1	BENT 1	-1.68%
S2	E.B. 1	-0.98%
S3	E.B. 2	-2.40%

ANCHOR BOLT TABLE

BEARING	LOCATION	NUMBER OF ANCHOR BOLTS	LENGTH (IN)	DIAMETER (IN)
PB1	BENT 1	20	18⅝	1½
PB2	END BENT 1	20	18⅜	1½
PB3	END BENT 2	20	18⅜	1½

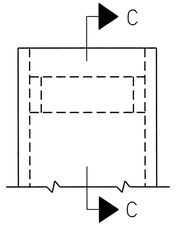

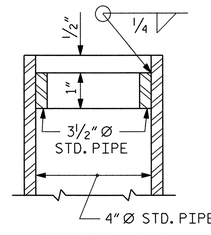

SECTION C-C

DETAIL "A"

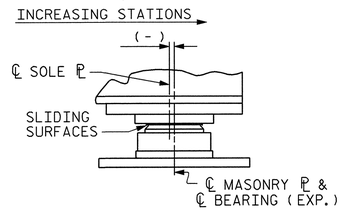

TABLE FOR PLATE SETTING DATA

(EXPANSION POT BEARINGS)

TEMPERATURE AT TIME OF SETTING	30° F	60° F	90° F	✱
PB2	¼"	0"	-¼"	3/16"
PB3	-¼"	0"	¼"	-3/16"

✱ CORRECTION FOR END ROTATION DUE TO WEIGHT OF SLAB AND COMPOSITE DEAD LOAD.

TEMPERATURE SETTING DETAIL

TABLE FOR LOADS AND MOVEMENTS

BEARING	LOCATION	VERTICAL LOAD (KIPS) DEAD	LIVE	TOTAL	LATERAL LOAD (KIPS)	TOTAL MOVEMENT (INCHES)
PB1 (FIXED)	BENT 1	345	117	462	69	-
PB2 (EXP.)	E.B. 1	97	69	166	20	1 7/16
PB3 (EXP.)	E.B. 2	101	70	171	20	1½

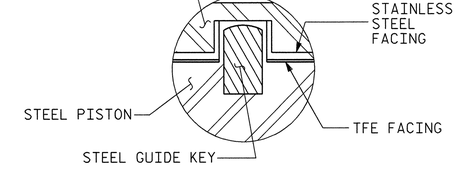

GUIDE KEY DETAIL

NOTES

FOR POT BEARINGS, SEE SPECIAL PROVISIONS.

AT ALL POINTS OF SUPPORT IN SPANS A & B, NUTS FOR ANCHOR BOLTS SHALL BE TIGHTENED FINGER TIGHT AND GIVEN AN ADDITIONAL ¼ TURN. THE THREAD OF THE NUT AND BOLT SHALL THEN BE BURRED WITH A SHARP POINTED TOOL.

WHEN WELDING THE SOLE PLATE TO THE GIRDER, USE TEMPERATURE INDICATING WAX PENS, OR OTHER SUITABLE MEANS, TO ENSURE THAT THE TEMPERATURE OF THE BEARING DOES NOT EXCEED 250°F TEMPERATURES ABOVE THIS MAY DAMAGE THE TFE OR ELASTOMER.

AFTER BEARING ASSEMBLY IS IN PLACE AND ANCHOR BOLTS HAVE BEEN FINALLY POSITIONED, THEY SHALL BE GROUTED IN PLACE AS SHOWN.

THE CLOSURE PLATE, GROUT PIPE AND STANDARD PIPE FOR THIS ASSEMBLY NEED NOT BE GALVANIZED.

SOLE PLATES SHOULD BE WELDED TO BEAM FLANGES AND ANCHOR BOLTS SHOULD BE GROUTED BEFORE FALSEWORK IS PLACED.

ALL SURFACES OF BEARING PLATES SHALL BE SMOOTH AND STRAIGHT.

FOR THERMAL SPRAYED COATINGS (METALLIZATION), SEE SPECIAL PROVISIONS.

THE CONTRACTOR MAY SUBSTITUTE DISC BEARINGS FOR THE POT BEARINGS SHOWN. FOR OPTIONAL DISC BEARINGS, SEE SPECIAL PROVISIONS.

PROJECT NO. R-2606A

RANDOLPH COUNTY

STATION: 108+24.11 -L- POT

STATE OF NORTH CAROLINA
DEPARTMENT OF TRANSPORTATION
RALEIGH

STANDARD POT BEARING DETAILS

NORTH CAROLINA PROFESSIONAL SEAL 11725 ENGINEER DAVID R. RUGGLES
1-10-05

NORTH CAROLINA PROFESSIONAL SEAL 25934 ENGINEER CHARLES P. LEWIS
1-10-05

ASSEMBLED BY : R.C. NELSON	DATE : 11-04
CHECKED BY : C.P. LEWIS	DATE : 11-04
DRAWN BY : RWW 8/99	REV. 10/17/00 RWW/LES
CHECKED BY : LES 8/99	REV. 7/10/01 LES/RDR
	REV. 5/7/03 RWW/JTE

REVISIONS						SHEET NO.
NO.	BY:	DATE:	NO.	BY:	DATE:	S-180
1			3			TOTAL SHEETS
2			4			199

DWG. 14 OF 33

$$STIME$$ $$SDATE$$ $$SCENAME$$

		1.00	1.05	1.10	1.15	1.20	1.25	1.30	1.35	1.40	1.45	1.50	1.55	1.60	1.65	1.70	1.75	1.80	1.85	1.90	1.95	2.00
GIRDER 1	DEFLECTION DUE TO WEIGHT OF STEEL	0.000	0.005	0.009	0.013	0.016	0.019	0.021	0.022	0.023	0.022	0.021	0.020	0.018	0.015	0.012	0.009	0.006	0.004	0.002	0.000	0.000
	DEFLECTION DUE TO WEIGHT OF SLAB, ETC. *	0.000	0.022	0.042	0.061	0.077	0.091	0.100	0.106	0.108	0.107	0.102	0.094	0.084	0.071	0.057	0.043	0.030	0.017	0.007	0.002	0.000
	DEFLECTION DUE TO WEIGHT OF RAIL	0.000	0.003	0.006	0.009	0.012	0.014	0.016	0.017	0.017	0.017	0.017	0.015	0.014	0.012	0.010	0.008	0.005	0.003	0.001	0.000	0.000
	TOTAL DEAD LOAD DEFLECTION	0.000	0.030	0.057	0.083	0.105	0.124	0.137	0.145	0.148	0.146	0.140	0.129	0.116	0.098	0.079	0.060	0.041	0.024	0.010	0.002	0.000
	VERTICAL CURVE ORDINATE	0.000	0.018	0.035	0.049	0.062	0.072	0.081	0.088	0.092	0.095	0.096	0.095	0.092	0.088	0.081	0.072	0.062	0.049	0.035	0.018	0.000
	C **	0.000	0.000	0.000	0.000	0.000	0.000	0.000	0.000	0.000	0.000	0.000	0.000	0.000	0.000	0.000	0.000	0.000	0.000	0.000	0.000	0.000
	REQUIRED CAMBER	0	9/16	1 1/8	1 9/16	2	2 3/8	2 5/8	2 13/16	2 7/8	2 7/8	2 13/16	2 11/16	2 1/2	2 1/4	1 15/16	1 9/16	1 1/4	7/8	9/16	1/4	0

CONTINUOUS SPAN A

		2.00	2.05	2.10	2.15	2.20	2.25	2.30	2.35	2.40	2.45	2.50	2.55	2.60	2.65	2.70	2.75	2.80	2.85	2.90	2.95	3.00
GIRDER 1	DEFLECTION DUE TO WEIGHT OF STEEL	0.000	0.002	0.002	0.005	0.008	0.011	0.015	0.018	0.021	0.024	0.025	0.026	0.027	0.026	0.024	0.022	0.019	0.015	0.010	0.005	0.000
	DEFLECTION DUE TO WEIGHT OF SLAB, ETC. *	0.000	0.002	0.011	0.022	0.038	0.053	0.070	0.086	0.101	0.113	0.121	0.126	0.127	0.124	0.117	0.105	0.089	0.071	0.049	0.025	0.000
	DEFLECTION DUE TO WEIGHT OF RAIL	0.000	0.000	0.002	0.004	0.006	0.009	0.011	0.013	0.016	0.017	0.019	0.019	0.019	0.019	0.017	0.016	0.013	0.010	0.007	0.004	0.000
	TOTAL DEAD LOAD DEFLECTION	0.000	0.004	0.015	0.031	0.052	0.073	0.096	0.0117	0.138	0.154	0.165	0.171	0.173	0.169	0.158	0.143	0.121	0.096	0.066	0.034	0.000
	VERTICAL CURVE ORDINATE	0.000	0.021	0.040	0.057	0.073	0.086	0.097	0.107	0.115	0.120	0.124	0.126	0.126	0.124	0.120	0.114	0.106	0.096	0.085	0.071	0.000
	C **	0.000	0.000	0.000	0.000	0.000	0.000	0.000	0.000	0.000	0.000	0.000	0.000	0.000	0.000	0.000	0.000	0.000	0.000	0.000	0.000	0.000
	REQUIRED CAMBER	0	5/16	11/16	1 1/16	1 1/2	1 15/16	2 5/16	2 11/16	3	3 5/16	3 7/16	3 9/16	3 9/16	3 1/2	3 5/16	3 1/16	2 3/4	2 5/16	1 13/16	1 1/4	0

CONTINUOUS SPAN B

		1.00	1.05	1.10	1.15	1.20	1.25	1.30	1.35	1.40	1.45	1.50	1.55	1.60	1.65	1.70	1.75	1.80	1.85	1.90	1.95	2.00
GIRDER 5	DEFLECTION DUE TO WEIGHT OF STEEL	0.000	0.005	0.009	0.013	0.016	0.019	0.021	0.022	0.022	0.022	0.021	0.019	0.017	0.015	0.012	0.009	0.006	0.003	0.002	0.000	0.000
	DEFLECTION DUE TO WEIGHT OF SLAB, ETC. *	0.000	0.021	0.040	0.058	0.073	0.086	0.096	0.101	0.104	0.102	0.098	0.090	0.080	0.068	0.055	0.040	0.028	0.016	0.007	0.002	0.000
	DEFLECTION DUE TO WEIGHT OF RAIL	0.000	0.003	0.006	0.009	0.011	0.013	0.015	0.016	0.016	0.016	0.015	0.014	0.013	0.011	0.009	0.007	0.005	0.003	0.001	0.000	0.000
	TOTAL DEAD LOAD DEFLECTION	0.000	0.029	0.055	0.080	0.100	0.118	0.132	0.139	0.142	0.140	0.134	0.123	0.110	0.094	0.076	0.056	0.039	0.022	0.010	0.002	0.000
	VERTICAL CURVE ORDINATE	0.000	0.019	0.036	0.051	0.065	0.076	0.085	0.092	0.097	0.100	0.101	0.100	0.097	0.092	0.085	0.076	0.065	0.051	0.036	0.019	0.000
	C **	0.000	0.000	0.000	0.000	0.000	0.000	0.000	0.000	0.000	0.000	0.000	0.000	0.000	0.000	0.000	0.000	0.000	0.000	0.000	0.000	0.000
	REQUIRED CAMBER	0	9/16	1 1/8	1 9/16	2	2 5/16	2 5/8	2 3/4	2 7/8	2 7/8	2 13/16	2 11/16	2 1/2	2 1/4	1 15/16	1 9/16	1 1/4	7/8	9/16	1/4	0

CONTINUOUS SPAN A

		2.00	2.05	2.10	2.15	2.20	2.25	2.30	2.35	2.40	2.45	2.50	2.55	2.60	2.65	2.70	2.75	2.80	2.85	2.90	2.95	3.00
GIRDER 5	DEFLECTION DUE TO WEIGHT OF STEEL	0.000	0.002	0.002	0.005	0.008	0.011	0.014	0.017	0.020	0.022	0.024	0.025	0.025	0.025	0.023	0.021	0.018	0.014	0.010	0.005	0.000
	DEFLECTION DUE TO WEIGHT OF SLAB, ETC. *	0.000	0.002	0.011	0.021	0.035	0.050	0.066	0.080	0.094	0.104	0.113	0.117	0.119	0.115	0.108	0.098	0.083	0.066	0.045	0.024	0.000
	DEFLECTION DUE TO WEIGHT OF RAIL	0.000	0.001	0.002	0.004	0.006	0.090	0.011	0.014	0.016	0.017	0.018	0.019	0.018	0.018	0.017	0.015	0.013	0.010	0.007	0.004	0.000
	TOTAL DEAD LOAD DEFLECTION	0.000	0.005	0.015	0.030	0.049	0.070	0.091	0.111	0.130	0.143	0.155	0.161	0.162	0.158	0.148	0.134	0.114	0.090	0.062	0.033	0.000
	VERTICAL CURVE ORDINATE	0.000	0.022	0.042	0.060	0.076	0.090	0.102	0.112	0.120	0.126	0.130	0.132	0.032	0.130	0.126	0.120	0.112	0.102	0.090	0.076	0.000
	C **	0.000	0.000	0.000	0.000	0.000	0.000	0.000	0.000	0.000	0.000	0.000	0.000	0.000	0.000	0.000	0.000	0.000	0.000	0.000	0.000	0.000
	REQUIRED CAMBER	0	5/16	11/16	1 1/16	1 1/2	1 15/16	2 5/16	2 11/16	3	3 1/4	3 7/16	3 1/2	3 1/2	3 7/16	3 5/16	3 1/16	2 11/16	2 5/16	1 13/16	1 5/16	0

CONTINUOUS SPAN B

GIRDERS 1 AND 5

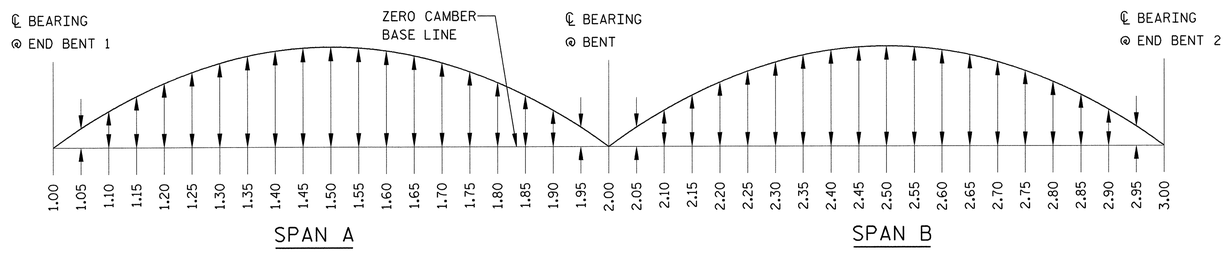

SCHEMATIC CAMBER ORDINATES

NOTES:

VALUES ARE SHOWN IN FEET, EXCEPT "REQUIRED CAMBER" WHICH IS GIVEN IN INCHES.

"*" DENOTES INCLUSION OF SLAB, BUILDUPS AND STAY-IN-PLACE FORMS.

SLOPE FOR THE ZERO CAMBER BASE LINE VARIES.

FOR GIRDER DESIGNATIONS, SEE STRUCTURAL STEEL FRAMING PLAN.

"**" "C" DENOTES CAMBER DUE TO DISSIPATION RESULTING FROM HEAT CURVING. IF HEAT CURVING IS NOT UTILIZED, "C" TO BE DEDUCTED FROM REQUIRED CAMBER.

NORTH CAROLINA PROFESSIONAL SEAL 11725 ENGINEER DAVID R. RUGGLES
David Ruggles 1-10-05

NORTH CAROLINA PROFESSIONAL SEAL 25934 ENGINEER CHARLES P. LEWIS
1-10-05

PROJECT NO. R-2606A

RANDOLPH COUNTY

STATION: 108+24.11 -L- POT

SHEET 1 OF 2

STATE OF NORTH CAROLINA
DEPARTMENT OF TRANSPORTATION
RALEIGH

SUPERSTRUCTURE
DEAD LOAD DEFLECTION
AND CAMBER ORDINATES
GIRDERS 1 & 5

REVISIONS						SHEET NO.
NO.	BY:	DATE:	NO.	BY:	DATE:	S-181
1			3			TOTAL SHEETS
2			4			199

DWG. 15 OF 33

DRAWN BY: A. P. TUAZAMA DATE: 11-04
CHECKED BY: C. P. LEWIS DATE: 11-04

$$$$USERNAME$$$$ $$$$SYSTIME$$$$

		1.00	1.05	1.10	1.15	1.20	1.25	1.30	1.35	1.40	1.45	1.50	1.55	1.60	1.65	1.70	1.75	1.80	1.85	1.90	1.95	2.00
GIRDERS 2 THRU 4	DEFLECTION DUE TO WEIGHT OF STEEL	0.000	0.005	0.009	0.013	0.016	0.019	0.021	0.022	0.023	0.023	0.022	0.020	0.018	0.015	0.012	0.009	0.006	0.004	0.002	0.000	0.000
	DEFLECTION DUE TO WEIGHT OF SLAB, ETC. *	0.000	0.023	0.045	0.066	0.083	0.097	0.108	0.114	0.117	0.116	0.111	0.102	0.091	0.077	0.063	0.047	0.032	0.018	0.008	0.002	0.000
	DEFLECTION DUE TO WEIGHT OF RAIL	0.000	0.003	0.006	0.009	0.011	0.013	0.015	0.016	0.017	0.016	0.016	0.015	0.013	0.011	0.009	0.007	0.005	0.003	0.001	0.000	0.000
	TOTAL DEAD LOAD DEFLECTION	0.000	0.031	0.060	0.088	0.110	0.129	0.144	0.152	0.157	0.155	0.149	0.137	0.122	0.103	0.084	0.063	0.043	0.025	0.011	0.002	0.000
	VERTICAL CURVE ORDINATE	0.000	0.019	0.035	0.050	0.063	0.074	0.083	0.090	0.095	0.098	0.099	0.098	0.095	0.090	0.083	0.074	0.063	0.005	0.035	0.019	0.000
	C **	0.000	0.000	0.000	0.000	0.000	0.000	0.000	0.000	0.000	0.000	0.000	0.000	0.000	0.000	0.000	0.000	0.000	0.000	0.000	0.000	0.000
	REQUIRED CAMBER	0	5/8	1 1/8	1 5/8	2 1/16	2 7/16	2 3/4	2 7/8	3	3 1/16	3	2 13/16	2 5/8	2 5/16	2	1 5/8	1 1/4	7/8	9/16	1/4	0

CONTINUOUS SPAN A

		2.00	2.05	2.10	2.15	2.20	2.25	2.30	2.35	2.40	2.45	2.50	2.55	2.60	2.65	2.70	2.75	2.80	2.85	2.90	2.95	3.00
GIRDERS 2 THRU 4	DEFLECTION DUE TO WEIGHT OF STEEL	0.000	0.002	0.002	0.005	0.008	0.011	0.015	0.018	0.021	0.023	0.025	0.026	0.026	0.026	0.024	0.022	0.018	0.014	0.010	0.005	0.000
	DEFLECTION DUE TO WEIGHT OF SLAB, ETC. *	0.000	0.002	0.012	0.024	0.040	0.057	0.075	0.091	0.106	0.119	0.128	0.133	0.134	0.130	0.122	0.110	0.093	0.074	0.051	0.026	0.000
	DEFLECTION DUE TO WEIGHT OF RAIL	0.000	0.001	0.002	0.004	0.006	0.009	0.011	0.013	0.016	0.017	0.018	0.019	0.019	0.018	0.017	0.015	0.013	0.010	0.007	0.004	0.000
	TOTAL DEAD LOAD DEFLECTION	0.000	0.005	0.016	0.033	0.054	0.077	0.101	0.0122	0.143	0.159	0.171	0.178	0.179	0.174	0.163	0.147	0.124	0.098	0.068	0.035	0.000
	VERTICAL CURVE ORDINATE	0.000	0.022	0.041	0.059	0.075	0.088	0.100	0.011	0.118	0.124	0.128	0.130	0.130	0.128	0.124	0.118	0.110	0.100	0.088	0.074	0.000
	C **	0.000	0.000	0.000	0.000	0.000	0.000	0.000	0.000	0.000	0.000	0.000	0.000	0.000	0.000	0.000	0.000	0.000	0.000	0.000	0.000	0.000
	REQUIRED CAMBER	0	5/16	11/16	1 1/8	1 9/16	2	2 7/16	2 13/16	3 1/8	3 3/8	3 9/16	3 11/16	3 11/16	3 5/8	3 7/16	3 3/16	2 13/16	2 3/8	1 7/8	1 5/16	0

CONTINUOUS SPAN B

GIRDERS 2 THRU 4

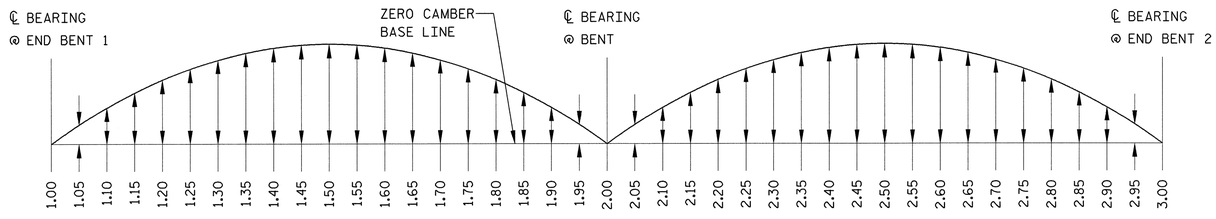

SCHEMATIC CAMBER ORDINATES

NOTES:

VALUES ARE SHOWN IN FEET, EXCEPT "REQUIRED CAMBER" WHICH IS GIVEN IN INCHES.

"*" DENOTES INCLUSION OF SLAB, BUILDUPS AND STAY-IN-PLACE FORMS.

SLOPE FOR THE ZERO CAMBER BASE LINE VARIES.

FOR GIRDER DESIGNATIONS, SEE STRUCTURAL STEEL FRAMING PLAN.

"**" "C" DENOTES CAMBER DUE TO DISSIPATION RESULTING FROM HEAT CURVING. IF HEAT CURVING IS NOT UTILIZED, "C" TO BE DEDUCTED FROM REQUIRED CAMBER.

NORTH CAROLINA PROFESSIONAL SEAL 11725 ENGINEER DAVID R. RUGGLES
David Ruggles
1-10-05

NORTH CAROLINA PROFESSIONAL SEAL 25934 ENGINEER CHARLES P. LEWIS
1-10-05

PROJECT NO. R-2606A

RANDOLPH COUNTY

STATION: 108+24.11 -L- POT

SHEET 2 OF 2

STATE OF NORTH CAROLINA
DEPARTMENT OF TRANSPORTATION
RALEIGH

SUPERSTRUCTURE
DEAD LOAD DEFLECTION
AND CAMBER ORDINATES
GIRDERS 2 THRU 4

REVISIONS						SHEET NO.
NO.	BY:	DATE:	NO.	BY:	DATE:	S-182
1			3			TOTAL SHEETS
2			4			199

DWG. 16 OF 33

DRAWN BY: A. P. TUAZAMA DATE: 11-04
CHECKED BY: C. P. LEWIS DATE: 11-04

$$$$USERNAME$$$$ $$$$DGN$$$$ $$$$SYSTIME$$$$

PLAN OF BARRIER RAIL FOR SPANS A AND B

PROJECT NO. R-2606A

RANDOLPH COUNTY

STATION: 108+24.11 -L- POT

SHEET 1 OF 2

STATE OF NORTH CAROLINA
DEPARTMENT OF TRANSPORTATION
RALEIGH

SUPERSTRUCTURE
PLAN OF BARRIER RAIL
FOR SPANS A AND B

REVISIONS						SHEET NO.
NO.	BY:	DATE:	NO.	BY:	DATE:	S-183
1			3			TOTAL SHEETS
2			4			199

DWG. 17 OF 33

DRAWN BY:	A. P. TUAZAMA	DATE :	11-04
CHECKED BY:	C.P. LEWIS	DATE :	11-04

$$$$SYSTIME$$$$ $$$$DGN$$$$ $$$$USERNAME$$$$

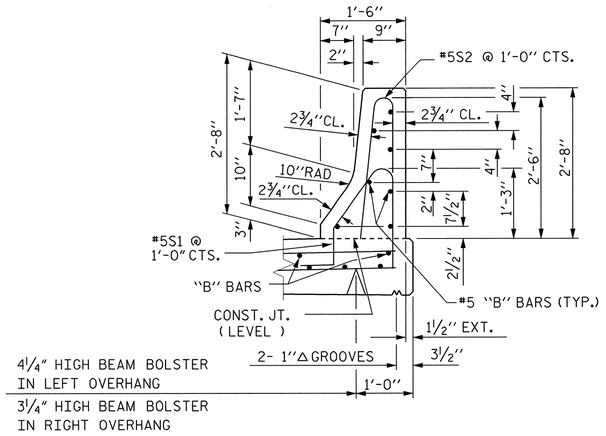

SECTION THRU RAIL

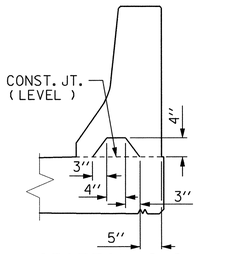

SECTION S-S

AT DAM IN OPEN JOINT
(THIS IS TO BE USED ONLY
WHEN SLIP FORM IS USED)

NOTES

THE BARRIER RAIL IN EACH SPAN SHALL NOT BE CAST UNTIL ALL SLAB CONCRETE IN THAT SPAN HAS BEEN CAST AND HAS REACHED A MINIMUM COMPRESSIVE STRENGTH OF 3,000 PSI.

WHEN COMPRESSION JOINT SEAL OR EVAZOTE JOINT SEAL IS REQUIRED, THE JOINT IN THE DECK SHALL BE SAWED PRIOR TO THE CASTING OF BARRIER RAIL.

ALL REINFORCING STEEL IN BARRIER RAILS SHALL BE EPOXY COATED.

THE #5 S3 AND #5 S4 BARS SHALL BE INSTALLED, USING AN ADHESIVE ANCHORING SYSTEM, AFTER SAWING THE JOINT. FOR ADHESIVELY ANCHORED ANCHOR BOLTS OR DOWELS, SEE SPECIAL PROVISIONS. THE YIELD LOAD FOR THE #5 S3 AND #5 S4 BARS IS 18.6 KIPS. FIELD TESTING FOR THE ADHESIVE BONDING SYSTEM IS NOT REQUIRED.

VERTICAL GROOVED CONTRACTION JOINTS, ½" IN DEPTH, SHALL BE TOOLED IN ALL EXPOSED FACES OF THE BARRIER RAIL AND IN ACCORDANCE WITH ARTICLE 825-10(B) OF THE STANDARD SPECIFICATIONS. THE CONTRACTION JOINT SHALL BE LOCATED AT EACH THIRD POINT BETWEEN BARRIER RAIL EXPANSION JOINTS. ONLY ONE CONTRACTION JOINT IS REQUIRED AT MIDPOINT OF BARRIER RAIL SEGMENTS LESS THAN 20 FEET IN LENGTH AND NO CONTRACTION JOINTS ARE REQUIRED FOR THOSE SEGMENTS LESS THAN 10 FEET IN LENGTH.

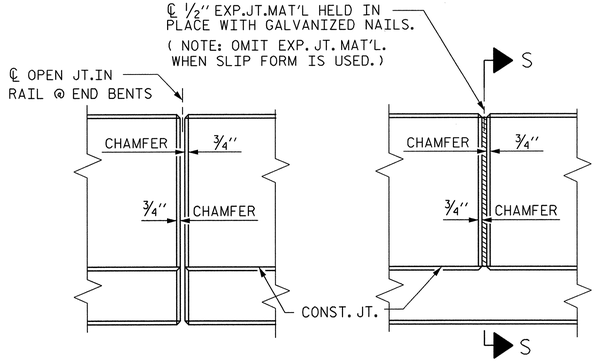

ELEVATION AT EXPANSION JOINTS

BAR TYPES

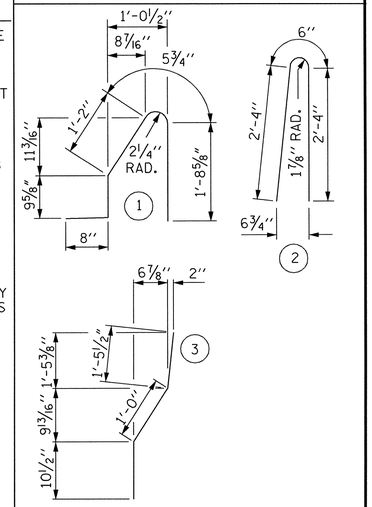

ALL BAR DIMENSIONS ARE OUT TO OUT

BILL OF MATERIAL

FOR CONCRETE BARRIER RAIL ONLY

BAR	NO.	SIZE	TYPE	LENGTH	WEIGHT
* B1	6	#5	STR	25'-10"	162
* B2	1	#5	STR	25'-8"	27
* B3	84	#5	STR	28'-7"	2,504
* B4	6	#5	STR	28'-6"	178
* B5	1	#5	STR	28'-9"	30
* B6	6	#5	STR	26'-2"	164
* B7	1	#5	STR	26'-4"	27
* B8	6	#5	STR	28'-5"	178
* B9	1	#5	STR	28'-2"	29
* S1	448	#5	1	4'-10"	2,258
* S2	448	#5	2	5'-2"	2,414
* S3	12	#5	3	3'-4"	42
* S4	12	#5	STR.	3'-2"	40

* EPOXY COATED
REINFORCING STEEL 8,053 LBS.
CLASS AA CONCRETE 46.0 CU. YDS.
CONCRETE BARRIER RAIL 458.69 LIN. FT.

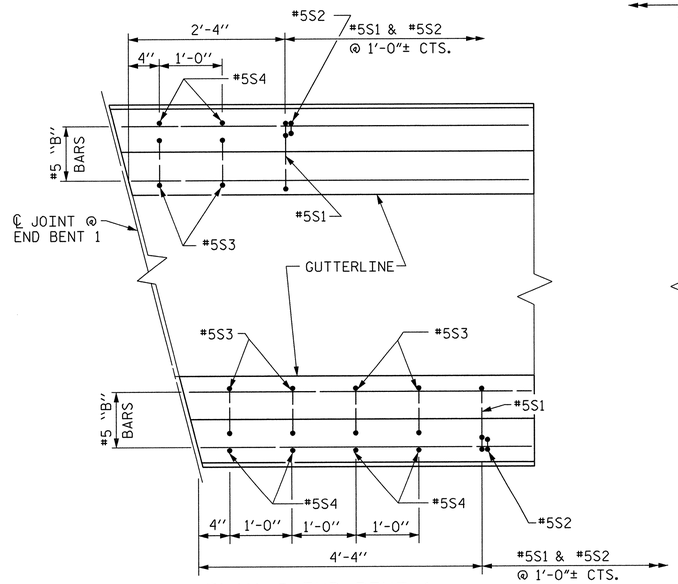

PLAN @ END BENT 1

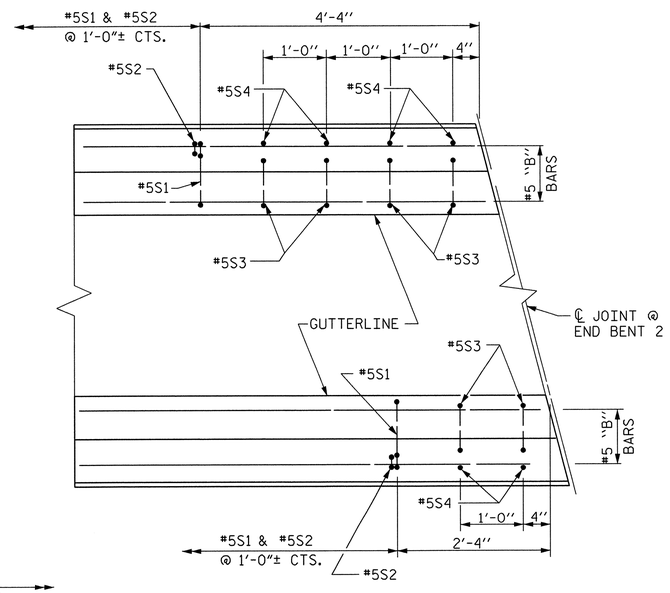

PLAN @ END BENT 2

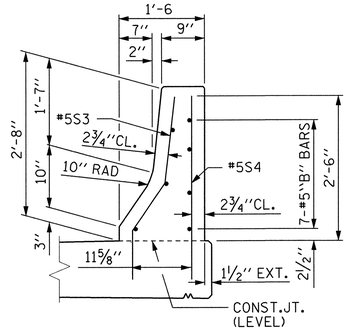

END VIEW

BARRIER RAIL DETAILS

END OF RAIL DETAILS

FOR ADHESIVE ANCHORING AT SAWED JOINTS

PROJECT NO. R-2606A

RANDOLPH COUNTY

STATION: 108+24.11 -L- POT

SHEET 2 OF 2

STATE OF NORTH CAROLINA
DEPARTMENT OF TRANSPORTATION
RALEIGH

STANDARD

CONCRETE
BARRIER RAIL

OCTOBER 1987

ASSEMBLED BY : A. P. TUAZAMA	DATE : 11-04
CHECKED BY : C. P. LEWIS	DATE : 11-04
DRAWN BY : ARB 5/87	REV. 8/16/99 RWW/LES
CHECKED BY : SJD 9/87	REV. 10/17/00 RWW/LES
	REV. 5/7/03R RWW/JTE

REVISIONS

NO.	BY:	DATE:	NO.	BY:	DATE:
1			3		
2			4		

SHEET NO. S-134

TOTAL SHEETS 199

DWG. 18 OF 33

NORTH CAROLINA PROFESSIONAL SEAL 11725 ENGINEER DAVID R. RUGGLES
1-10-05

NORTH CAROLINA PROFESSIONAL SEAL 25934 ENGINEER CHARLES P. LEWIS
1-10-05

$$$$USERNAME$$$ $$$$SYSTIME$$$$ $$$$DGN$$$$

SUPERSTRUCTURE REINFORCING STEEL LENGTHS ARE BASED ON THE FOLLOWING MINIMUM SPLICE LENGTHS					
BAR SIZE	SUPERSTRUCTURE EXCEPT APPROACH SLABS, PARAPET, AND BARRIER RAIL		APPROACH SLABS		PARAPET AND BARRIER RAIL
	EPOXY COATED	UNCOATED	EPOXY COATED	UNCOATED	
#4	2′-0″	1′-9″	2′-0″	1′-9″	2′-9″
#5	2′-6″	2′-2″	2′-6″	2′-2″	3′-5″
#6	3′-0″	2′-7″	3′-10″	2′-7″	4′-4″

GROOVING BRIDGE FLOORS	
BRIDGE DECK	11,217 SQ. FEET
APPROACH SLABS	3,179 SQ. FEET
TOTAL	14,396 SQ. FEET

BAR TYPES

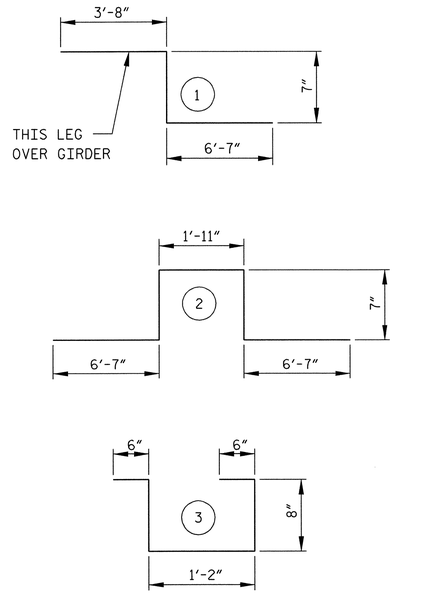

ALL BAR DIMENSIONS ARE OUT TO OUT.

SUPERSTRUCTURE BILL OF MATERIAL

	CLASS AA CONCRETE	REINFORCING STEEL	EPOXY COATED REINFORCING STEEL
	(CU. YARDS)	(LB)	(LB)
SPANS "A" & "B"		47,579	44,340
POUR 1	129.3		
POUR 2	168.5		
POUR 3	134.0		
TOTALS**	431.8	47,579	44,340

** QUANTITIES FOR BARRIER RAIL ARE NOT INCLUDED

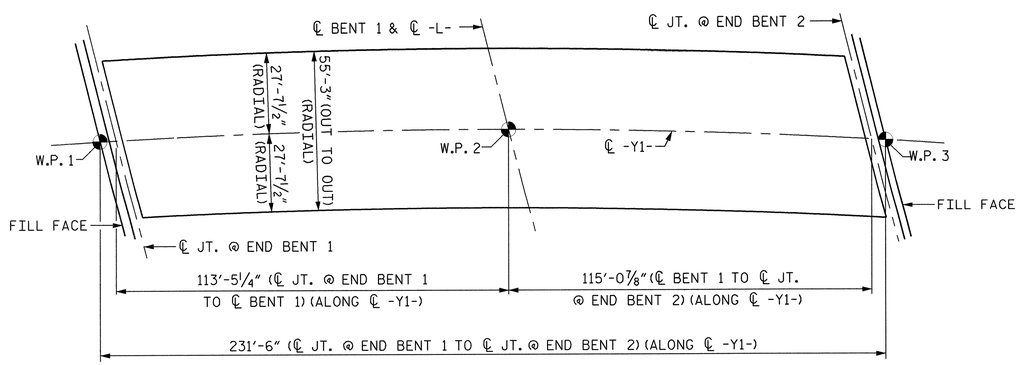

LAYOUT FOR COMPUTING AREA OF REINFORCED CONCRETE DECK SLAB

(SQ. FEET= 12,667)

DRAWN BY: A. P. TUAZAMA DATE : 11-04

CHECKED BY: C.P. LEWIS DATE : 11-04

REINFORCING BAR SCHEDULE

SPANS A & B						SPANS A & B (CONT.)						SPANS A & B (CONT.)					
BAR	NO.	SIZE	TYPE	LENGTH	WEIGHT	BAR	NO.	SIZE	TYPE	LENGTH	WEIGHT	BAR	NO.	SIZE	TYPE	LENGTH	WEIGHT
A1*	475	#5	STR.	54′-10″	27,166	A69	1	#5	STR.	37′-6″	39	G1*	1	#5	STR.	55′-11″	58
A2*	1	#5	STR.	52′-9″	55	A70	1	#5	STR.	35′-4″	37	G2*	1	#5	STR.	57′-7″	60
A3*	1	#5	STR.	50′-7″	53	A71	1	#5	STR.	33′-2″	35						
A4*	1	#5	STR.	48′-5″	50	A72	1	#5	STR.	30′-11″	32	K1*	8	#5	1	10′-10″	90
A5*	1	#5	STR.	46′-3″	48	A73	1	#5	STR.	28′-9″	30	K2*	12	#5	2	16′-3″	203
A6*	1	#5	STR.	44′-1″	46	A74	1	#5	STR.	26′-6″	28						
A7*	1	#5	STR.	41′-11″	44	A75	1	#5	STR.	24′-4″	25	S1*	88	#4	3	3′-6″	206
A8*	1	#5	STR.	39′-9″	41	A76	1	#5	STR.	22′-1″	23						
A9*	1	#5	STR.	37′-6″	39	A77	1	#5	STR.	19′-10″	21						
A10*	1	#5	STR.	35′-4″	37	A78	1	#5	STR.	17′-8″	18						
A11*	1	#5	STR.	33′-2″	35	A79	1	#5	STR.	15′-5″	16						
A12*	1	#5	STR.	30′-11″	32	A80	1	#5	STR.	13′-2″	14						
A13*	1	#5	STR.	28′-9″	30	A81	1	#5	STR.	10′-11″	11						
A14*	1	#5	STR.	26′-6″	28	A82	1	#5	STR.	8′-8″	9						
A15*	1	#5	STR.	24′-4″	25	A83	1	#5	STR.	6′-5″	7						
A16*	1	#5	STR.	22′-1″	23	A84	1	#5	STR.	4′-2″	4						
A17*	1	#5	STR.	19′-10″	21	A85	1	#5	STR.	53′-4″	56						
A18*	1	#5	STR.	17′-8″	18	A86	1	#5	STR.	51′-11″	54						
A19*	1	#5	STR.	15′-5″	16	A87	1	#5	STR.	50′-5″	53						
A20*	1	#5	STR.	13′-2″	14	A88	1	#5	STR.	48′-11″	51						
A21*	1	#5	STR.	10′-11″	11	A89	1	#5	STR.	47′-5″	49						
A22*	1	#5	STR.	8′-8″	9	A90	1	#5	STR.	45′-11″	48						
A23*	1	#5	STR.	6′-5″	7	A91	1	#5	STR.	44′-6″	46						
A24*	1	#5	STR.	4′-2″	4	A92	1	#5	STR.	43′-0″	45						
A25*	1	#5	STR.	53′-4″	56	A93	1	#5	STR.	41′-7″	43						
A26*	1	#5	STR.	51′-11″	54	A94	1	#5	STR.	40′-1″	42						
A27*	1	#5	STR.	50′-5″	53	A95	1	#5	STR.	38′-8″	40						
A28*	1	#5	STR.	48′-11″	51	A96	1	#5	STR.	37′-2″	39						
A29*	1	#5	STR.	47′-5″	49	A97	1	#5	STR.	35′-8″	37						
A30*	1	#5	STR.	45′-11″	48	A98	1	#5	STR.	34′-3″	36						
A31*	1	#5	STR.	44′-6″	46	A99	1	#5	STR.	32′-10″	34						
A32*	1	#5	STR.	43′-0″	45	A100	1	#5	STR.	31′-4″	33						
A33*	1	#5	STR.	41′-7″	43	A101	1	#5	STR.	29′-11″	31						
A34*	1	#5	STR.	40′-1″	42	A102	1	#5	STR.	28′-5″	30						
A35*	1	#5	STR.	38′-8″	40	A103	1	#5	STR.	27′-0″	28						
A36*	1	#5	STR.	37′-2″	39	A104	1	#5	STR.	25′-7″	27						
A37*	1	#5	STR.	35′-8″	37	A105	1	#5	STR.	24′-1″	25						
A38*	1	#5	STR.	34′-3″	36	A106	1	#5	STR.	22′-8″	24						
A39*	1	#5	STR.	32′-10″	34	A107	1	#5	STR.	21′-3″	22						
A40*	1	#5	STR.	31′-4″	33	A108	1	#5	STR.	19′-10″	21						
A41*	1	#5	STR.	29′-11″	31	A109	1	#5	STR.	18′-4″	19						
A42*	1	#5	STR.	28′-5″	30	A110	1	#5	STR.	16′-11″	18						
A43*	1	#5	STR.	27′-0″	28	A111	1	#5	STR.	15′-6″	16						
A44*	1	#5	STR.	25′-7″	27	A112	1	#5	STR.	14′-1″	15						
A45*	1	#5	STR.	24′-1″	25	A113	1	#5	STR.	12′-8″	13						
A46*	1	#5	STR.	22′-8″	24	A114	1	#5	STR.	11′-3″	12						
A47*	1	#5	STR.	21′-3″	22	A115	1	#5	STR.	9′-10″	10						
A48*	1	#5	STR.	19′-10″	21	A116	1	#5	STR.	8′-4″	9						
A49*	1	#5	STR.	18′-4″	19	A117	1	#5	STR.	6′-11″	7						
A50*	1	#5	STR.	16′-11″	18	A118	1	#5	STR.	5′-6″	6						
A51*	1	#5	STR.	15′-6″	16	A119	1	#5	STR.	4′-1″	4						
A52*	1	#5	STR.	14′-1″	15	A120	1	#5	STR.	2′-8″	3						
A53*	1	#5	STR.	12′-8″	13												
A54*	1	#5	STR.	11′-3″	12	B1*	114	#4	STR.	28′-6″	2,170						
A55*	1	#5	STR.	9′-10″	10	B2*	114	#4	STR.	28′-8″	2,183						
A56*	1	#5	STR.	8′-4″	9	B3*	76	#5	STR.	35′-3″	2,794						
A57*	1	#5	STR.	6′-11″	7	B4*	72	#6	STR.	45′-0″	4,866						
A58*	1	#5	STR.	5′-6″	6	B5*	72	#6	STR.	26′-0″	2,812						
A59*	1	#5	STR.	4′-1″	4	B6	304	#5	STR.	58′-11″	18,681						
A60*	1	#5	STR.	2′-8″	3												
A61	475	#5	STR.	54′-10″	27,166												
A62	1	#5	STR.	52′-9″	55												
A63	1	#5	STR.	50′-7″	53												
A64	1	#5	STR.	48′-5″	50												
A65	1	#5	STR.	46′-3″	48												
A66	1	#5	STR.	44′-1″	46												
A67	1	#5	STR.	41′-11″	44												
A68	1	#5	STR.	39′-9″	41												

NOTE: BARS MARKED WITH A "*" SUFFIX SHALL BE EPOXY COATED.

NORTH CAROLINA PROFESSIONAL SEAL 11725 ENGINEER DAVID R. RUGGLES

David Ruggles 1-10-05

NORTH CAROLINA PROFESSIONAL SEAL 25934 ENGINEER CHARLES P. LEWIS

1-10-05

PROJECT NO. R-2606A

RANDOLPH COUNTY

STATION: 108+24.11 -L- POT

STATE OF NORTH CAROLINA
DEPARTMENT OF TRANSPORTATION
RALEIGH

STANDARD SUPERSTRUCTURE BILL OF MATERIAL

REVISIONS						SHEET NO.
NO.	BY:	DATE:	NO.	BY:	DATE:	S-185
1			3			TOTAL SHEETS
2			4			199

DWG. 19 OF 33

$$$$$$SYTIME$$$$$$
$$$$$$SERNAME$$$$$$

SEE SHEET 3 OF 3 FOR NOTES.

TOP OF PILE ELEVATIONS	
PILE NO.	ELEVATION
P1	788.960
P2	788.663
P3	788.366
P4	788.069
P5	787.772
P6	787.475
P7	787.177
P8	786.880
P9	786.583
P10	786.286
P11	785.989

SPLICE CHART
#9B1 = 6'-3"
#9B2 = 8'-9"
#9B3 = 8'-9"
#5B7 = 3'-0"
#4B8 = 2'-5"
#4K1 = 2'-5"

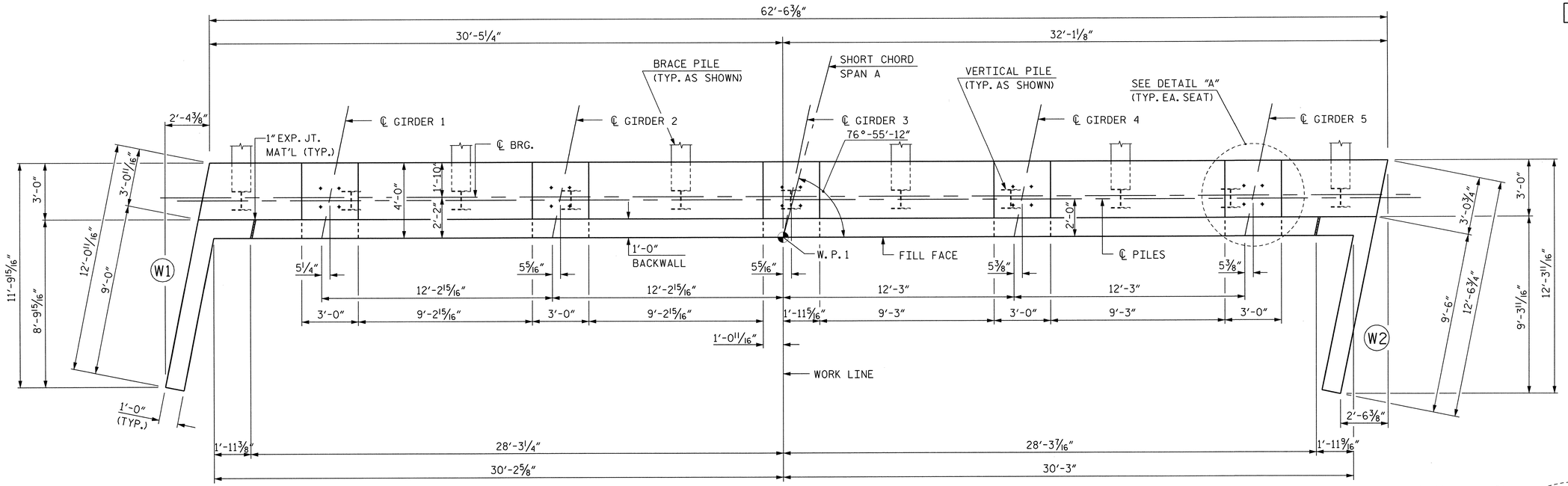

PLAN

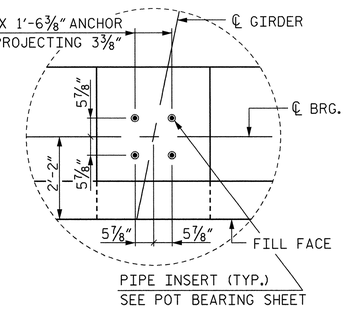

DETAIL "A"

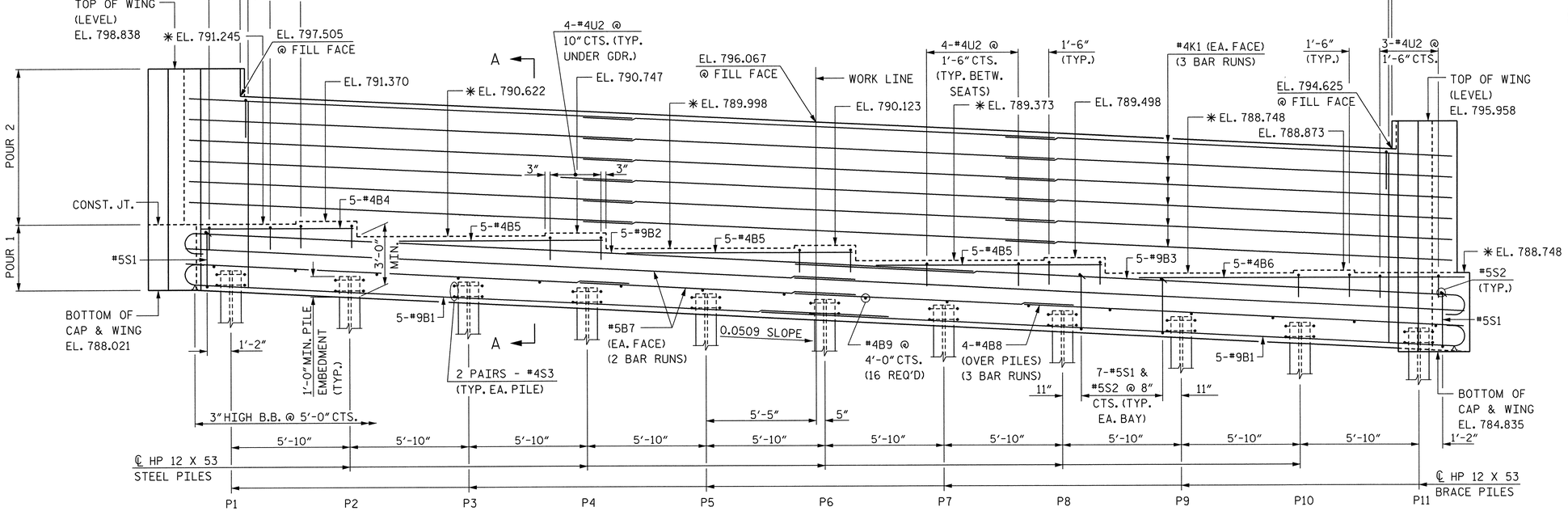

ELEVATION

✱FOR LOCATION OF THESE ELEVATIONS, SEE SECTION A-A.

PROJECT NO. R-2606A
RANDOLPH COUNTY
STATION: 108+24.11 -L- POT

SHEET 1 OF 3

STATE OF NORTH CAROLINA
DEPARTMENT OF TRANSPORTATION
RALEIGH

SUBSTRUCTURE
END BENT 1

REVISIONS						SHEET NO.
NO.	BY:	DATE:	NO.	BY:	DATE:	S-136
1			3			TOTAL SHEETS
2			4			199

DRAWN BY: R.C. NELSON DATE: 11-04
CHECKED BY: C.P. LEWIS DATE: 11-04

DWG. 20 OF 33

NORTH CAROLINA PROFESSIONAL SEAL 11725 ENGINEER DAVID R. RUGGLES
1-10-05

NORTH CAROLINA PROFESSIONAL SEAL 25934 ENGINEER CHARLES P. LEWIS
1-10-05

$$$$USERNAME$$$$ $$$$SYSTIME$$$$

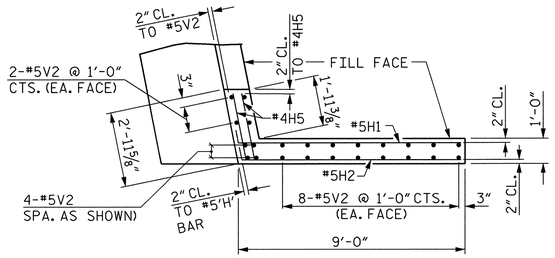

PLAN OF WING W1

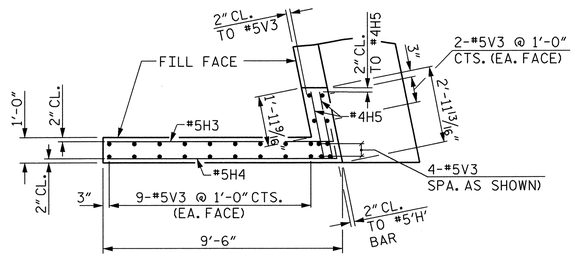

PLAN OF WING W2

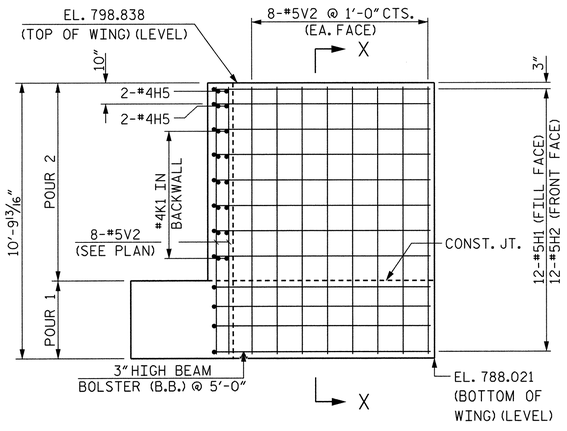

ELEVATION OF WING W1

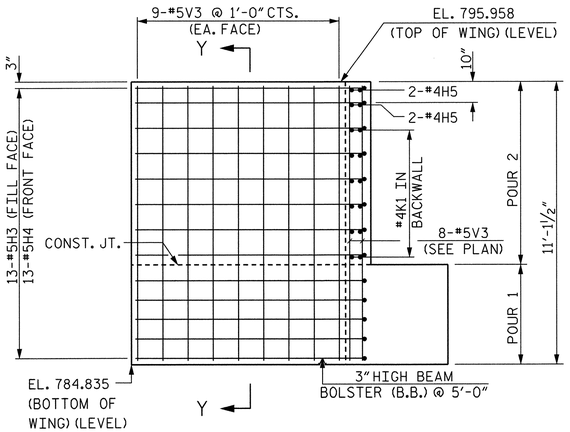

ELEVATION OF WING W2

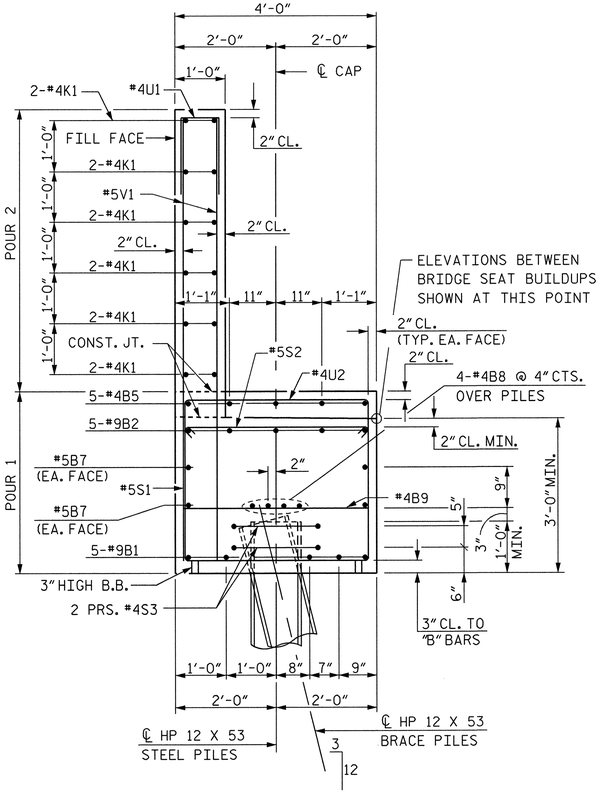

SECTION A-A

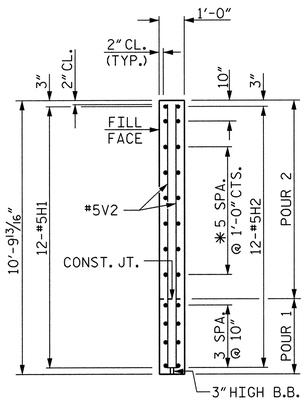

SECTION X-X

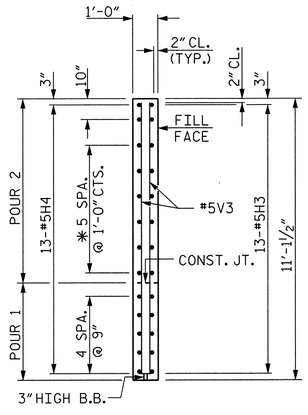

SECTION Y-Y

* THESE 'H' BARS ARE SPACED WITH #4K1 BARS.

FOR PIPE DRAIN DETAILS, PILE SPLICE DETAILS, AND TEMPORARY DRAINAGE AT END BENT 1, SEE END BENT 1 SHEET 3 OF 3.

BAR TYPES

ALL BAR DIMENSIONS ARE OUT TO OUT.

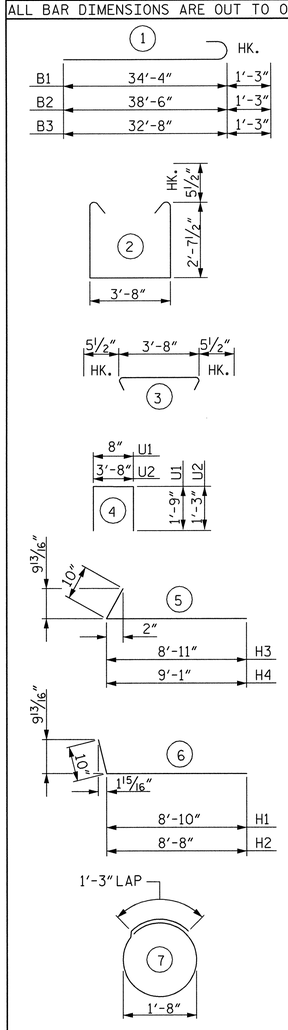

BILL OF MATERIAL

END BENT 1

BAR	NO.	SIZE	TYPE	LENGTH (ft.)	WEIGHT (lb.)
B1	10	9	1	35'-7"	1,210
B2	5	9	1	39'-9"	676
B3	5	9	1	33'-11"	577
B4	5	4	STR.	7'-7"	25
B5	15	4	STR.	11'-1"	111
B6	5	4	STR.	15'-11"	53
B7	8	5	STR.	32'-8"	273
B8	12	4	STR.	22'-5"	180
B9	16	4	STR.	3'-8"	39
H1	12	5	6	9'-8"	121
H2	12	5	6	9'-6"	119
H3	13	5	5	9'-9"	132
H4	13	5	5	9'-11"	134
H5	8	4	STR.	2'-7"	14
K1	36	4	STR.	22'-5"	539
S1	72	5	2	9'-10"	738
S2	72	5	3	4'-7"	344
S3	22	4	7	6'-6"	96
U1	57	4	4	4'-2"	159
U2	42	4	4	6'-2"	173
V1	114	5	STR.	9'-2"	1,090
V2	24	5	STR.	10'-4"	259
V3	26	5	STR.	10'-6"	285

REINFORCING STEEL, lb.:	7,347
CLASS A CONCRETE:	
POUR 1 (CAP & LOWER WINGS) CU. YARDS	33.9
POUR 2 (BACKWALL & UPPER WINGS) CU. YARDS	19.1
TOTAL CU. YARDS	53.0
HP 12 X 53 STEEL PILES:	
NO.	11
LIN. FEET	440.0

PROJECT NO. R-2606A

RANDOLPH COUNTY

STATION: 108+24.11 -L- POT

SHEET 2 OF 3

STATE OF NORTH CAROLINA
DEPARTMENT OF TRANSPORTATION
RALEIGH

SUBSTRUCTURE
END BENT 1

NORTH CAROLINA PROFESSIONAL SEAL 11725 ENGINEER DAVID R. RUGGLES
David Ruggles
1-10-05

NORTH CAROLINA PROFESSIONAL SEAL 25934 ENGINEER CHARLES P. LEWIS
1-10-05

REVISIONS						SHEET NO.
NO.	BY:	DATE:	NO.	BY:	DATE:	S-187
1			3			TOTAL SHEETS
2			4			199

DWG. 21 OF 33

DRAWN BY: R.C. NELSON DATE: 11-04
CHECKED BY: C.P. LEWIS DATE: 11-04

$$$$$$SYSTIME$$$$$$
$$$$$$USERNAME$$$$$$

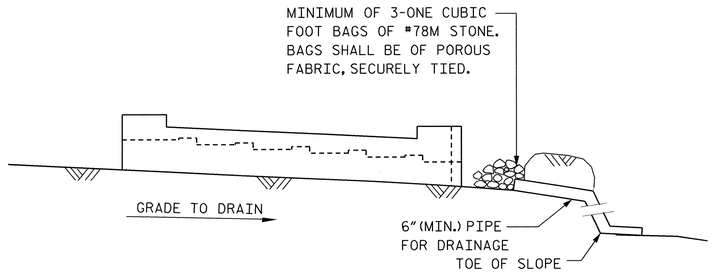

BAGGED STONE AND PIPE SHALL BE PLACED IMMEDIATELY AFTER COMPLETION OF END BENT EXCAVATION. PIPE MAY BE EITHER CONCRETE, CORRUGATED STEEL, CORRUGATED ALUMINUM ALLOY, OR CORRUGATED PLASTIC. PERFORATED PIPE WILL NOT BE ALLOWED.

BAGGED STONE SHALL REMAIN IN PLACE UNTIL THE ENGINEER DIRECTS THAT IT BE REMOVED. THE CONTRACTOR SHALL REMOVE AND DISPOSE OF SILT ACCUMULATIONS AT BAGGED STONE WHEN SO DIRECTED BY THE ENGINEER. BAGS SHALL BE REMOVED AND REPLACED WHENEVER THE ENGINEER DETERMINES THAT THEY HAVE DETERIORATED AND LOST THEIR EFFECTIVENESS.

NO SEPARATE PAYMENT WILL BE MADE FOR THIS WORK AND THE ENTIRE COST OF THIS WORK SHALL BE INCLUDED IN THE UNIT CONTRACT PRICE FOR THE SEVERAL PAY ITEMS.

TEMPORARY DRAINAGE AT END BENT

END BENT 1 SHOWN, END BENT 2 SIMILAR

NOTES:

STIRRUPS IN CAP MAY BE SHIFTED AS NECESSARY TO CLEAR PIPE INSERTS.

FOR EPOXY PROTECTIVE COATING, SEE SPECIAL PROVISIONS.

BACKWALL SHALL BE PLACED BEFORE APPLYING THE EPOXY PROTECTIVE COATING.

THE TOP SURFACE AREAS OF THE END BENT CAP SHALL BE CURED IN ACCORDANCE WITH THE STANDARD SPECIFICATIONS EXCEPT THAT THE MEMBRANE CURING COMPOUND METHOD SHALL NOT BE USED.

THE TOP SURFACE OF THE END BENT CAP EXCEPT THE BRIDGE SEAT BUILDUPS SHALL BE SLOPED TRANSVERSELY FROM THE FILL FACE TO THE BACK FACE AT THE RATE OF 2 %.

FOR PIPE INSERT DETAILS, SEE "POT BEARING DETAILS" SHEET.

THE CONTRACTOR SHALL PROVIDE FOR INSTALLATION OF THE 4" DIAMETER DRAIN PIPE THROUGH THE WING WALL AS REQUIRED FOR REINFORCED BRIDGE APPROACH FILLS, SEE THE ROADWAY PLANS. REINFORCING STEEL IN THE WING WALL MAY BE SHIFTED AS NECESSARY TO CLEAR THE DRAIN PIPE.

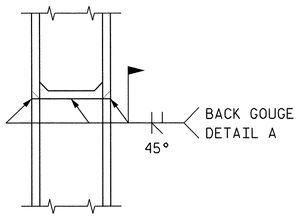

* PILE VERTICAL

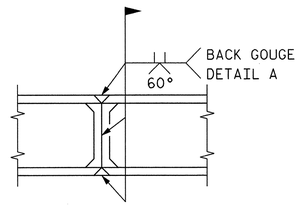

* PILE HORIZONTAL OR VERTICAL

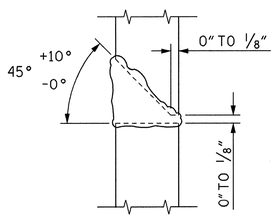

DETAIL A

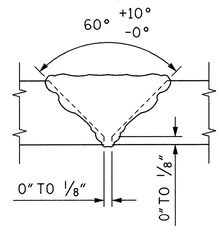

DETAIL B

* POSITION OF PILE DURING WELDING

PILE SPLICE DETAILS

PROJECT NO. R-2606A

RANDOLPH COUNTY

STATION: 108+24.11 -L- POT

SHEET 3 OF 3

STATE OF NORTH CAROLINA
DEPARTMENT OF TRANSPORTATION
RALEIGH

SUBSTRUCTURE
END BENT 1

REVISIONS						SHEET NO.
NO.	BY:	DATE:	NO.	BY:	DATE:	S-188
1			3			TOTAL SHEETS
2			4			199

DWG. 22 OF 33

NORTH CAROLINA PROFESSIONAL SEAL 11725 ENGINEER DAVID R. RUGGLES
David Ruggles
1-10-05

NORTH CAROLINA PROFESSIONAL SEAL 25934 ENGINEER CHARLES P. LEWIS
1-10-05

DRAWN BY: R.C. NELSON DATE : 11-04
CHECKED BY: C.P. LEWIS DATE : 11-04

SYSTEM FILE NAME

PLAN OF CAP

ELEVATION

END ELEVATION

PROJECT NO. R-2606A

RANDOLPH COUNTY

STATION: 108+24.11 -L- POT

SHEET 1 OF 2

STATE OF NORTH CAROLINA
DEPARTMENT OF TRANSPORTATION
RALEIGH

SUBSTRUCTURE
BENT 1

NORTH CAROLINA PROFESSIONAL SEAL 11725 ENGINEER DAVID R. RUGGLES
David Ruggles
1-10-05

NORTH CAROLINA PROFESSIONAL SEAL 25934 ENGINEER CHARLES P. LEWIS
1-10-05

REVISIONS					
NO.	BY:	DATE:	NO.	BY:	DATE:
1			3		
2			4		

SHEET NO. S-189

TOTAL SHEETS 199

DWG. 23 OF 33

DRAWN BY: R.C. NELSON DATE: 11-04

CHECKED BY: C.P. LEWIS DATE: 11-04

$$$$$$SYSTIME$$$$$ $$$$$$DGN$$$$$$$$$$$$$$$$ $$$$USERNAME$$$$

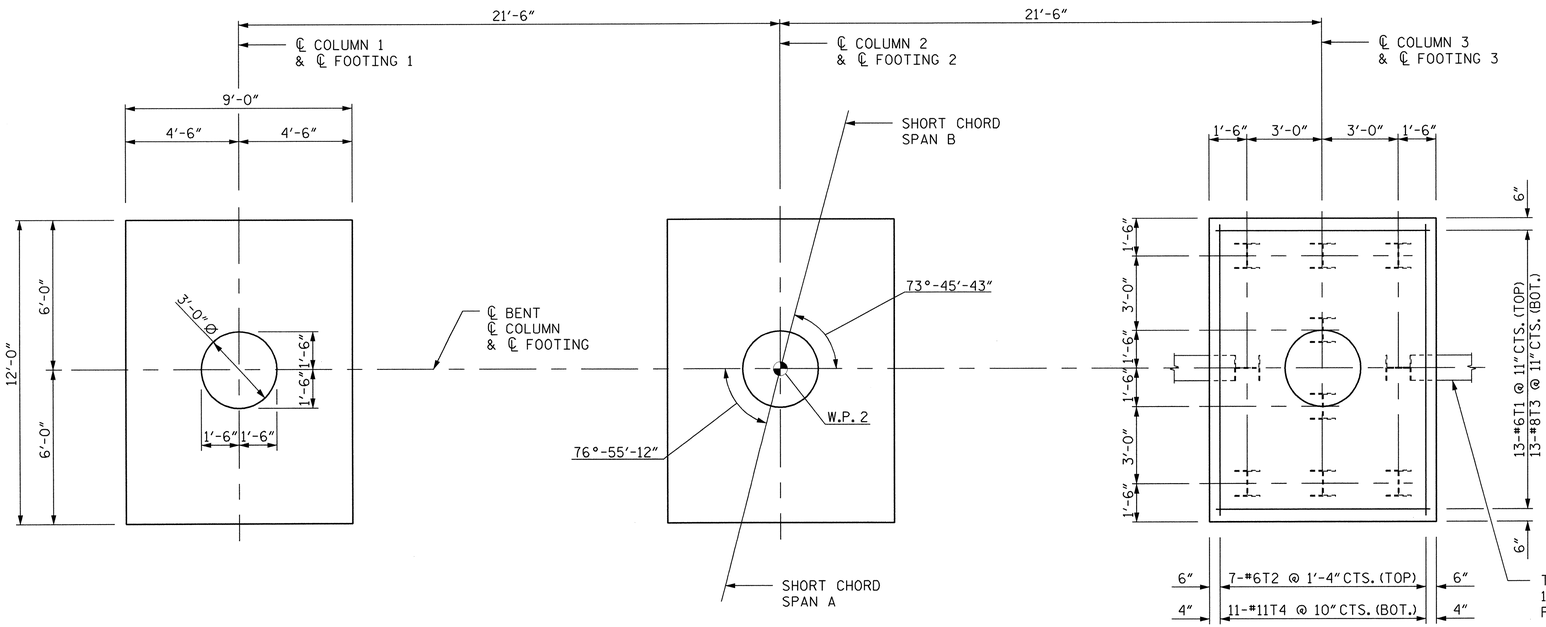

THESE PILES TO BE BATTERED
1½: 12 (TYP. FOOTINGS 1 & 3,
FOOTING 2 PILES SHALL BE VERTICAL)

PLAN OF FOOTINGS

ALL FOOTING DIMENSIONS, REINFORCING STEEL, AND PILES ARE TYPICAL.

BAR TYPES

ALL BAR DIMENSIONS ARE OUT TO OUT

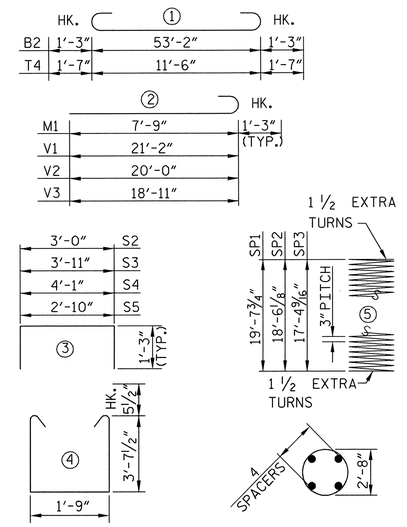

BILL OF MATERIAL

BENT 1

BAR	NO.	SIZE	TYPE	LENGTH	WEIGHT
B1	14	#9	STR.	53'-2"	2,531
B2	14	#9	1	55'-8"	2,650
B3	8	#4	STR.	2'-11"	16
B4	24	#4	STR.	11'-4"	182
B5	8	#4	STR.	11'-11"	64
B6	6	#5	STR.	53'-2"	333
B7	26	#4	STR.	3'-0"	52
M1	36	#9	2	9'-0"	1,102
S1	156	#5	4	9'-11"	1,614
S2	45	#4	3	5'-6"	165
S3	4	#4	3	6'-5"	17
S4	4	#4	3	6'-7"	18
S5	10	#4	3	5'-4"	36
T1	39	#6	STR.	8'-6"	498
T2	21	#6	STR.	11'-6"	363
T3	39	#8	STR.	8'-6"	885
T4	33	#11	1	14'-8"	2,672
V1	12	#9	2	22'-5"	915
V2	12	#9	2	21'-3"	867
V3	12	#9	2	20'-2"	823
SP1	1	✳	5	670'-3"	699
SP2	1	✳	5	633'-1"	660
SP3	1	✳	5	595'-11"	622

QUANTITIES - BENT 1

REINFORCING STEEL:	lbs.	15,803
SPIRAL COLUMN REINFORCING STEEL:	lbs.	1,981
CLASS A CONCRETE:		
POUR 1 CU. YARDS		48.0
POUR 2 CU. YARDS		14.3
POUR 3 CU. YARDS		28.7
TOTAL CU. YARDS		91.0
HP 12 X 53 STEEL PILES	NO.	30
	LIN. FEET	600.0
STEEL PILE POINTS	EA.	30

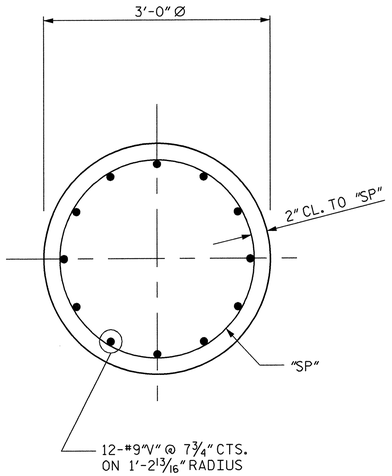

SECTION B-B

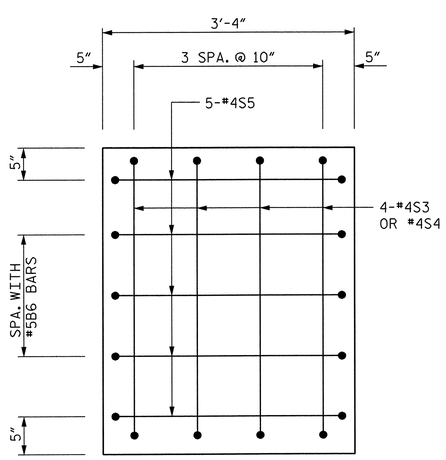

END OF CAP VIEW

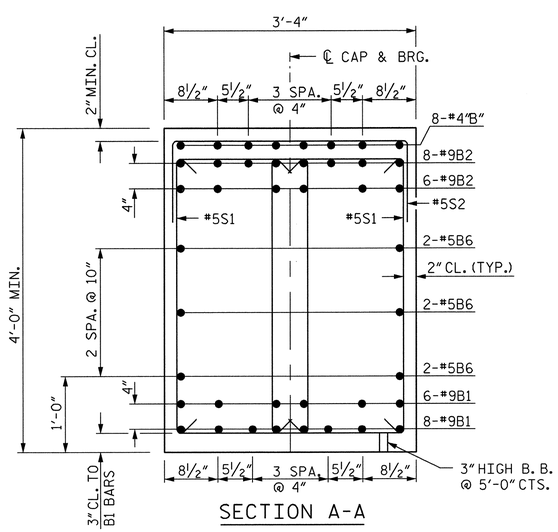

SECTION A-A

NOTES:

STIRRUPS TO BE PLACED VERTICALLY AND INVERTED ALTERNATELY.

STIRRUPS IN CAP MAY BE SHIFTED AS NECESSARY TO CLEAR ANCHOR BOLTS.

HOOKS ON "V" BARS MAY BE TURNED AS NECESSARY FOR PLACING REINFORCING STEEL.

FOR PILE SPLICE DETAILS, SEE END BENT 1 DETAILS.

✳ THE SP1 THRU SP3 SPIRAL REINFORCING STEEL SHALL BE W20 OR D-20 COLD DRAWN WIRE OR #4 PLAIN OR DEFORMED BAR.

PROJECT NO. R-2606A

RANDOLPH COUNTY

STATION: 108+24.11 -L- POT

SHEET 2 OF 2

STATE OF NORTH CAROLINA
DEPARTMENT OF TRANSPORTATION
RALEIGH

SUBSTRUCTURE
BENT 1

NORTH CAROLINA PROFESSIONAL SEAL 11725 ENGINEER DAVID R. RUGGLES
David Ruggles
1-10-05

NORTH CAROLINA PROFESSIONAL SEAL 25934 ENGINEER CHARLES P. LEWIS
1-10-05

REVISIONS						SHEET NO.
NO.	BY:	DATE:	NO.	BY:	DATE:	S-190
1			3			TOTAL SHEETS
2			4			199

DWG. 24 OF 33

DRAWN BY: R.C. NELSON DATE: 11-04
CHECKED BY: C.P. LEWIS DATE: 11-04

$$$$$$$SYSTIME$$$$$$$
$$$$$$$DGN$$$$$$$
$$$$$$$CELNAME$$$$$$$

FOR NOTES, PIPE DRAIN DETAILS, PILE SPLICE DETAILS, AND TEMPORARY DRAINAGE AT END BENT, SEE END BENT 1 SHEET 3 OF 3.

TOP OF PILE EL.	
PILE NO.	ELEVATION
P1	785.206
P2	784.876
P3	784.546
P4	784.216
P5	783.887
P6	783.557
P7	783.227
P8	782.897
P9	782.568
P10	782.238
P11	781.908

SPLICE CHART
*9B1 = 6'-3"
*9B2 = 8'-9"
*9B3 = 8'-9"
*5B7 = 3'-0"
*4B8 = 2'-5"
*4K1 = 2'-5"

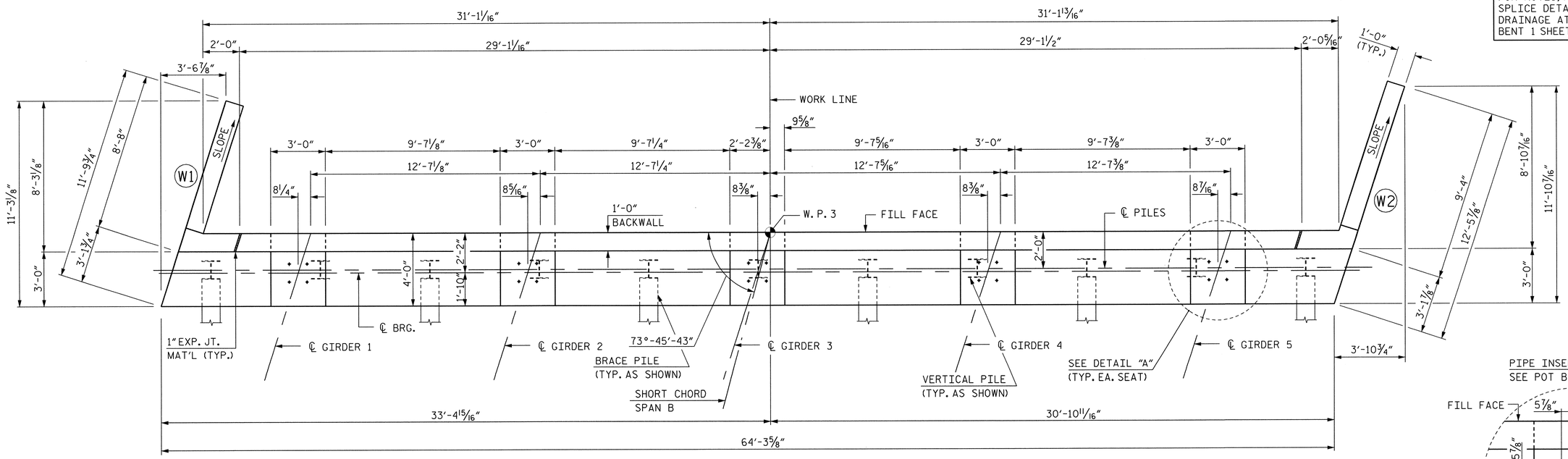

PLAN

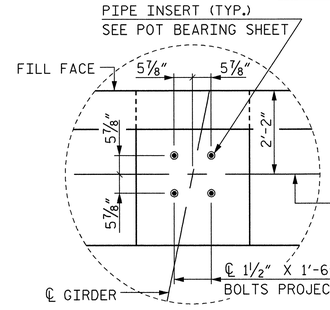

DETAIL "A"

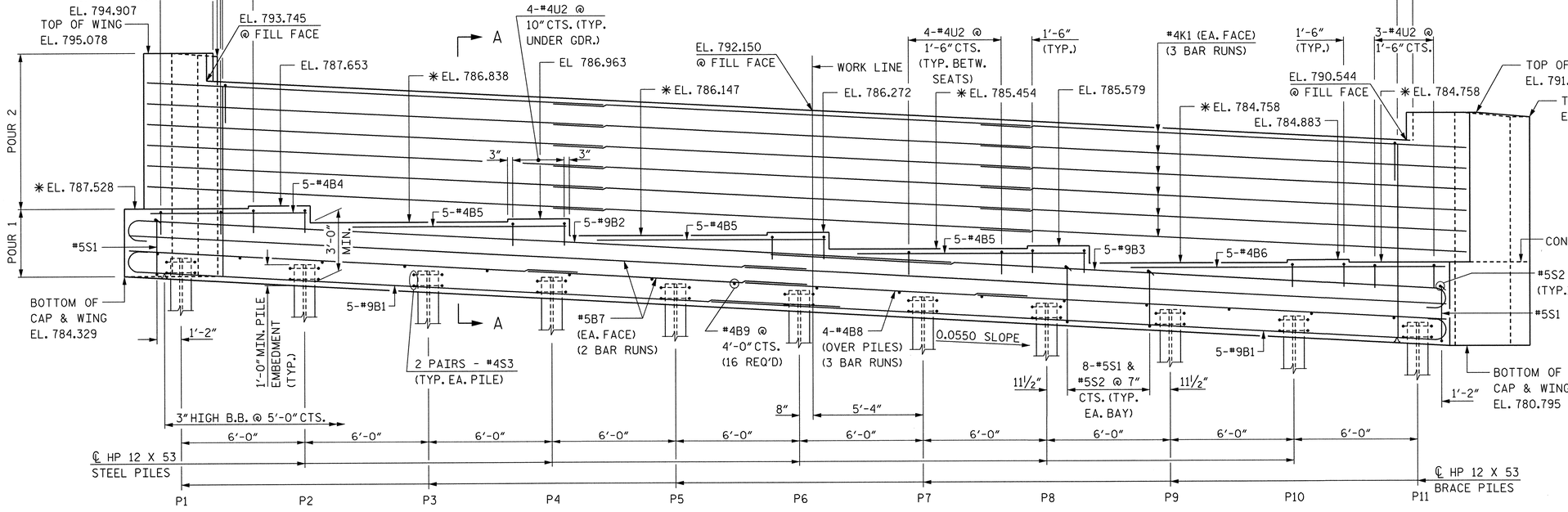

ELEVATION

* FOR LOCATION OF THESE ELEVATIONS, SEE SECTION A-A.

PROJECT NO. R-2606A
RANDOLPH COUNTY
STATION: 108+24.11 -L- POT

SHEET 1 OF 2

STATE OF NORTH CAROLINA
DEPARTMENT OF TRANSPORTATION
RALEIGH

SUBSTRUCTURE
END BENT 2

REVISIONS						SHEET NO.
NO.	BY:	DATE:	NO.	BY:	DATE:	S-191
1			3			TOTAL SHEETS
2			4			199

DWG. 25 OF 33

NORTH CAROLINA PROFESSIONAL SEAL 11725 ENGINEER DAVID R. RUGGLES
David Ruggles 1-10-05

NORTH CAROLINA PROFESSIONAL SEAL 25934 ENGINEER CHARLES P. LEWIS
C.P. Lewis 1-10-05

DRAWN BY: R.C. NELSON DATE: 11-04
CHECKED BY: C.P. LEWIS DATE: 11-04

$$$$USERNAME$$$$ $$$$SYSTIME$$$$ $$$$DGN$$$$

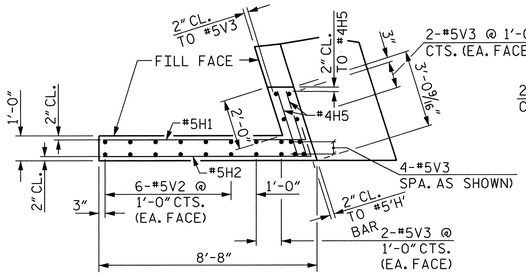

PLAN OF WING W1

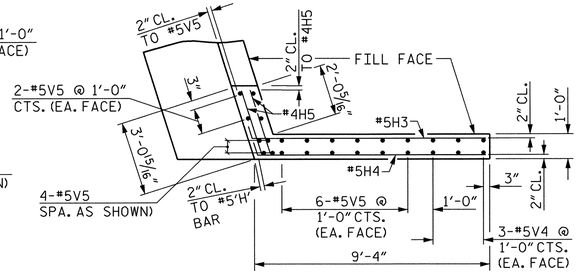

PLAN OF WING W2

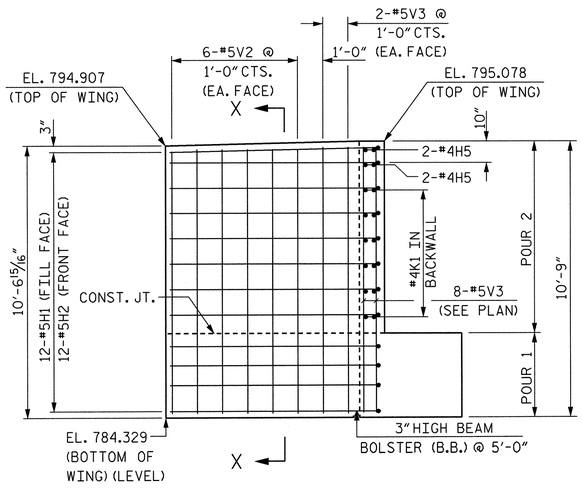

ELEVATION OF WING W1

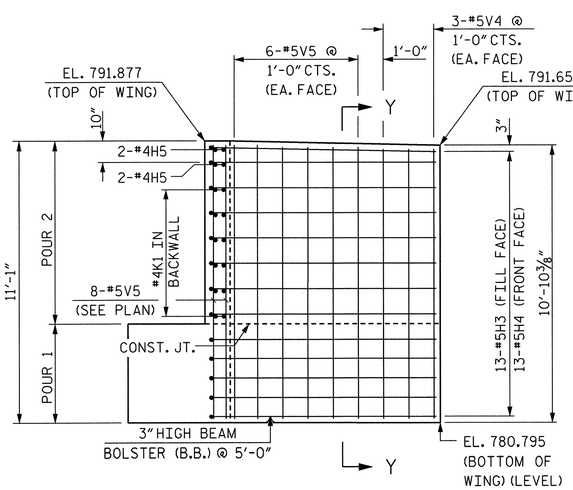

ELEVATION OF WING W2

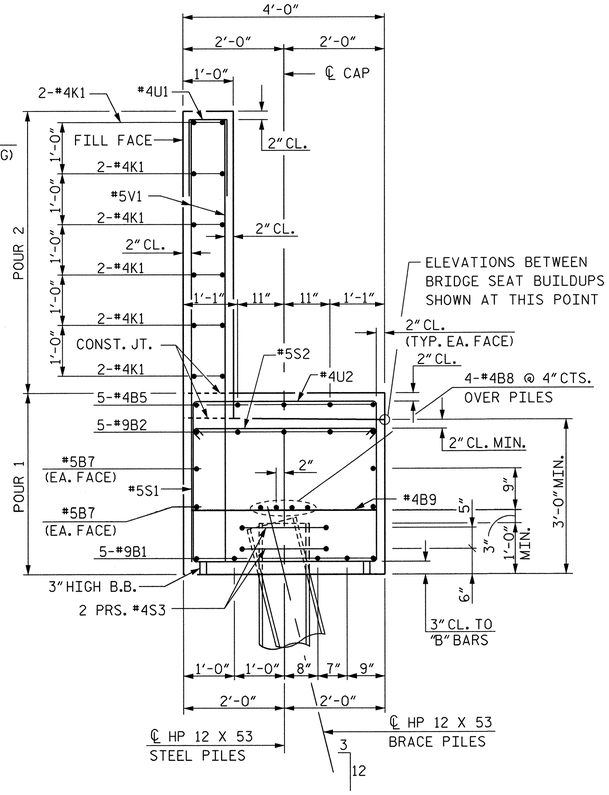

SECTION A-A

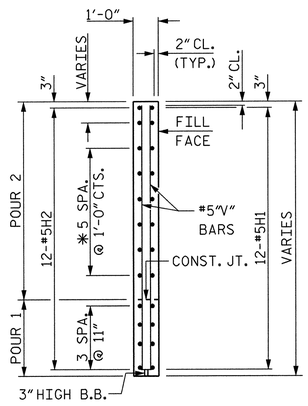

SECTION X-X

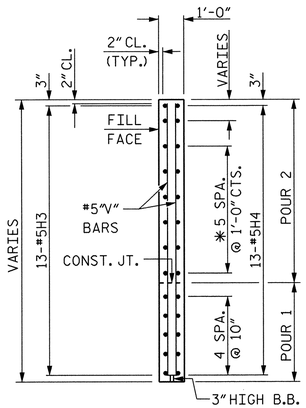

SECTION Y-Y

✱ THESE 'H' BARS ARE SPACED WITH #4K1 BARS.

FOR PIPE DRAIN DETAILS, PILE SPLICE DETAILS, AND TEMPORARY DRAINAGE AT END BENT 1, SEE END BENT 1 SHEET 3 OF 3.

BAR TYPES

ALL BAR DIMENSIONS ARE OUT TO OUT.

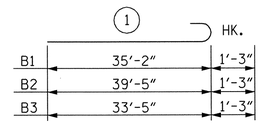

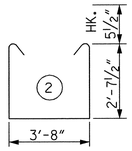

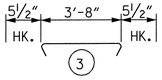

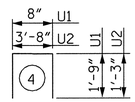

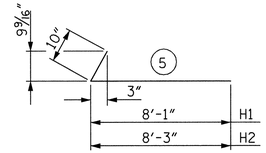

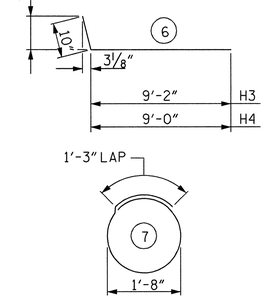

BILL OF MATERIAL

END BENT 2

BAR	NO.	SIZE	TYPE	LENGTH (ft.)	WEIGHT (lb.)
B1	10	9	1	36'-5"	1,238
B2	5	9	1	40'-8"	691
B3	5	9	1	34'-8"	589
B4	5	4	STR.	7'-5"	25
B5	15	4	STR.	11'-6"	115
B6	5	4	STR.	16'-6"	55
B7	8	5	STR.	33'-7"	280
B8	12	4	STR.	23'-0"	184
B9	16	4	STR.	3'-8"	39
H1	12	5	5	8'-11"	112
H2	12	5	5	9'-1"	114
H3	13	5	6	10'-0"	136
H4	13	5	6	9'-10"	133
H5	8	4	STR.	2'-8"	14
K1	36	4	STR.	23'-0"	553
S1	82	5	2	9'-10"	841
S2	82	5	3	4'-7"	392
S3	22	4	7	6'-6"	96
U1	58	4	4	4'-2"	161
U2	42	4	4	6'-2"	173
V1	116	5	STR.	9'-2"	1,109
V2	12	5	STR.	10'-2"	127
V3	12	5	STR.	10'-4"	129
V4	6	5	STR.	10'-6"	66
V5	20	5	STR.	10'-7"	221

REINFORCING STEEL, lb.:	7,593
CLASS A CONCRETE:	
POUR 1 (CAP & LOWER WINGS) CU. YARDS	35.2
POUR 2 (BACKWALL & UPPER WINGS) CU. YARDS	19.1
TOTAL CU. YARDS	54.3
HP 12 X 53 STEEL PILES:	
NO.	11
LIN. FEET	495.0

PROJECT NO. R-2606A

RANDOLPH COUNTY

STATION: 108+24.11 -L- POT

SHEET 2 OF 2

STATE OF NORTH CAROLINA
DEPARTMENT OF TRANSPORTATION
RALEIGH

SUBSTRUCTURE
END BENT 2

NORTH CAROLINA PROFESSIONAL SEAL 11725 ENGINEER DAVID R. RUGGLES
David Ruggles
1-10-05

NORTH CAROLINA PROFESSIONAL SEAL 25934 ENGINEER CHARLES P. LEWIS
C.P. Le
1-10-05

REVISIONS						SHEET NO.
NO.	BY:	DATE:	NO.	BY:	DATE:	S-192
1			3			TOTAL SHEETS
2			4			199

DWG. 26 OF 33

DRAWN BY: R.C. NELSON DATE : 11-04
CHECKED BY: C.P. LEWIS DATE : 11-04

$$$$$SYSTIME$$$$
$$$$$USERNAME$$$$

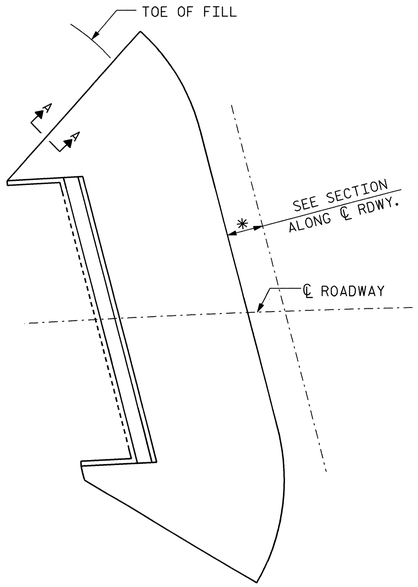

PLAN

END BENT 1 SHOWN, END BENT 2 SIMILAR BY ROTATION

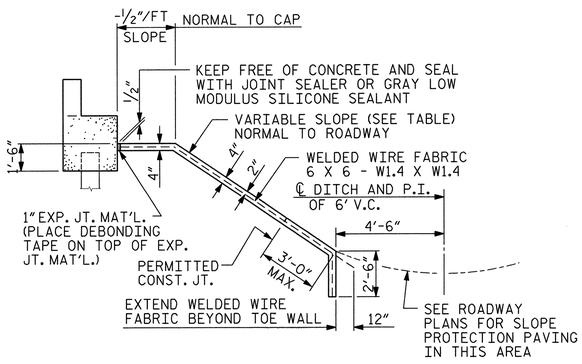

SECTION ALONG ℄ ROADWAY WHEN FILL CATCHES IN DITCH

CALCULATED END SLOPES

SIDE:	LEFT	RIGHT
END BENT 1	1.5:1	1.8:1
END BENT 2	1.5:1	1.8:1

DETAILS FOR ALTERNATE "A"

GENERAL NOTES

SLOPE PROTECTION SHALL BE PLACED UNDER THE ENDS OF THE BRIDGE AS SHOWN IN THE DETAILS. THE CONTRACTOR, AT HIS OPTION, MAY USE ALTERNATE "B" ONLY FOR HIGHWAY OVER HIGHWAY GRADE SEPARATIONS WITH 2:1 END BENT SLOPE IN RURAL, UNPOPULATED AREAS. STRAIGHT EDGING WILL NOT BE REQUIRED UNLESS, IN THE OPINION OF THE ENGINEER, VISUAL INSPECTION INDICATES A NEED FOR IT. METHOD OF MEASUREMENT AND BASIS OF PAYMENT SHALL BE AS PRESCRIBED IN SECTION 462 OF THE STANDARD SPECIFICATIONS. FOR BERM WIDTH, SEE GENERAL DRAWING.

ALTERNATE "A"

ALTERNATE "A" SHALL CONSIST OF 4" POURED-IN-PLACE CONCRETE PAVING AS SHOWN IN THE DETAILS ON THIS SHEET. CONCRETE SHALL BE CLASS "B". THE CONCRETE SURFACE SHALL BE FLOATED WITH A WOODEN FLOAT AND FINISHED. WELDED WIRE FABRIC REINFORCING SHALL BE 6 X 6 - W1.4 X W1.4, 60" WIDE. SLOPE PROTECTION SHALL BE POURED IN 5' STRIPS AS SHOWN IN THE "POURING DETAIL" WITH 2'-0" LONG #4 BARS PLACED ALONG THE SLOPE BETWEEN STRIPS AT 1'-6" MAXIMUM SPACING. SLOPE PROTECTION MAY BE POURED IN ALTERNATE 4' AND 5' STRIPS AS SHOWN IN THE "OPTIONAL POURING DETAIL" WITH ADJACENT RUNS OF WELDED WIRE FABRIC LAPPING AT LEAST 6". THE COST OF THE WELDED WIRE FABRIC AND #4 BARS, IF USED, SHALL BE INCLUDED IN THE CONTRACT UNIT PRICE BID PER SQUARE YARD FOR SLOPE PROTECTION.

BRIDGE @ STA. 108+24.11 -L- POT	4" SLOPE PROTECTION	** WELDED WIRE FABRIC 60" WIDE
	SQUARE YARDS	APPROX. L.F.
END BENT 1	487 SQ. YARDS	877'
END BENT 2	402 SQ. YARDS	724'

** QUANTITY SHOWN IS BASED ON 5'-0" POURS.

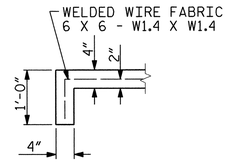

SECTION A-A

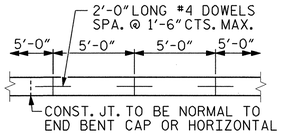

STRIP WIDTHS MAY VARY IN CURVED PORTION.

POURING DETAIL

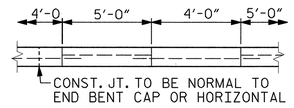

POUR A 4'-0" STRIP FIRST. STRIP WIDTHS MAY VARY IN CURVED PORTION.

OPTIONAL POURING DETAIL

PROJECT NO. R-2606A

RANDOLPH COUNTY

STATION: 108+24.11 -L- POT

SHEET 1 OF 2

STATE OF NORTH CAROLINA
DEPARTMENT OF TRANSPORTATION
RALEIGH

STANDARD
SLOPE PROTECTION
DETAILS

NORTH CAROLINA PROFESSIONAL SEAL 11725 ENGINEER DAVID R. RUGGLES
David Ruggles
1-10-05

NORTH CAROLINA PROFESSIONAL SEAL 25934 ENGINEER CHARLES P. LEWIS
1-10-05

REVISIONS						SHEET NO.
NO.	BY:	DATE:	NO.	BY:	DATE:	S-193
1			3			TOTAL SHEETS
2			4			199

DWG. 27 OF 33

ASSEMBLED BY : R.C. NELSON	DATE : 11-04
CHECKED BY : C.P. LEWIS	DATE : 11-04
DRAWN BY : ELR 5/92	REV. 10/17/00 LES/RDR
CHECKED BY : GRP 6/92	REV. 7/10/01 LES/RDR
	REV. 5/7/03 RWW/JTE

$$$$SYSTIME$$$$
$$$$USERNAME$$$$ DGN:$$$$$$$$$$$$$$$$

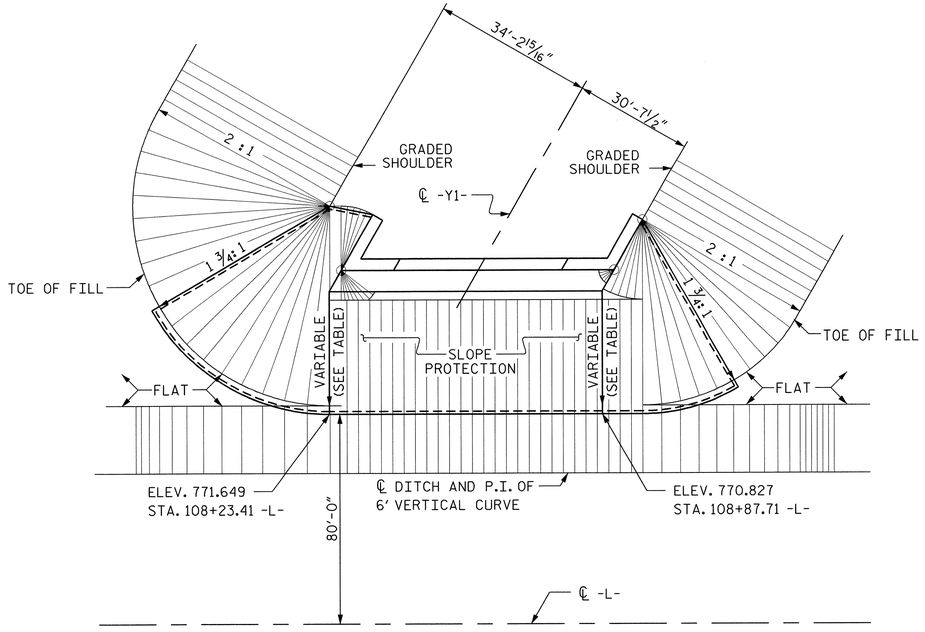

PLAN - END BENT WITH SWEPT BACK WINGS - SKEWED

(@ END BENT 2) (1 1/2:1 MAXIMUM SLOPE)

CALCULATED END SLOPES

SIDE:	LEFT	RIGHT
END BENT 1	1.5:1	1.8:1
END BENT 2	1.5:1	1.8:1

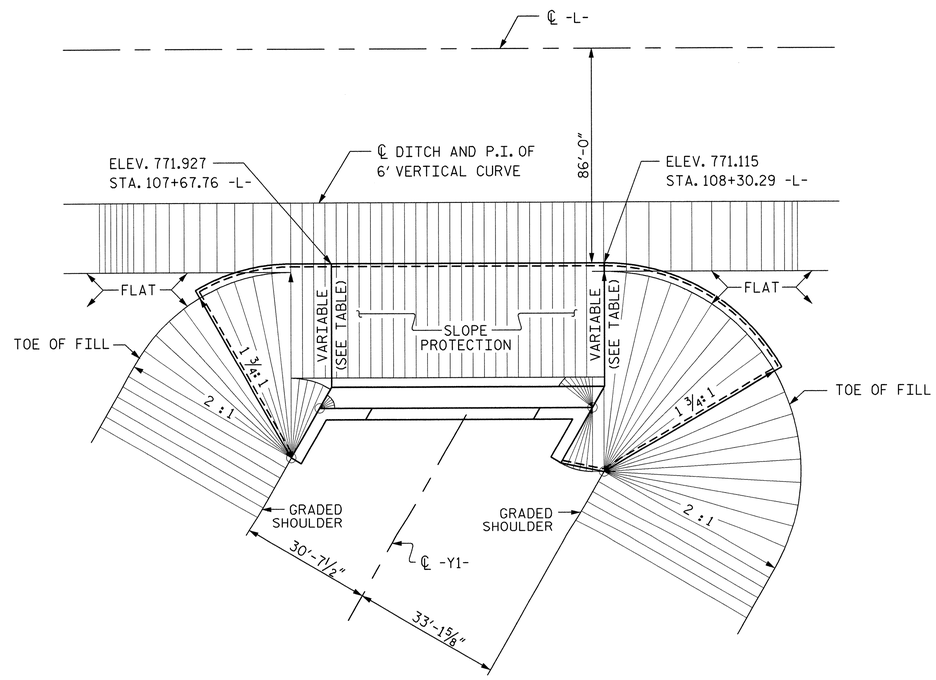

PLAN - END BENT WITH SWEPT BACK WINGS - SKEWED

(@ END BENT 1) (1 1/2:1 MAXIMUM SLOPE)

PROJECT NO. R-2606A

RANDOLPH COUNTY

STATION: 108+24.11 -L- POT

SHEET 2 OF 2

STATE OF NORTH CAROLINA
DEPARTMENT OF TRANSPORTATION
RALEIGH

STANDARD
SLOPE PROTECTION
DETAILS

NORTH CAROLINA PROFESSIONAL SEAL 11725 ENGINEER DAVID R. RUGGLES
David Ruggles
1-10-05

NORTH CAROLINA PROFESSIONAL SEAL 25934 ENGINEER CHARLES P. LEWIS
1-10-05

REVISIONS						SHEET NO.
NO.	BY:	DATE:	NO.	BY:	DATE:	S-194
1			3			TOTAL SHEETS
2			4			199

DWG. 28 OF 33

ASSEMBLED BY : R.C. NELSON DATE : 11-04
CHECKED BY : C.P. LEWIS DATE : 11-04

DRAWN BY : WJH 10/88
CHECKED BY : FCJ 10/88

REV. 8/28/92 ELR/GRP
REV. 2/6/97 EEM/RGW
REV. 7/17/98 REK/RWW

$$$$SYSTIME$$$$
$$$$DGN$$$$
$$$$USERNAME$$$$

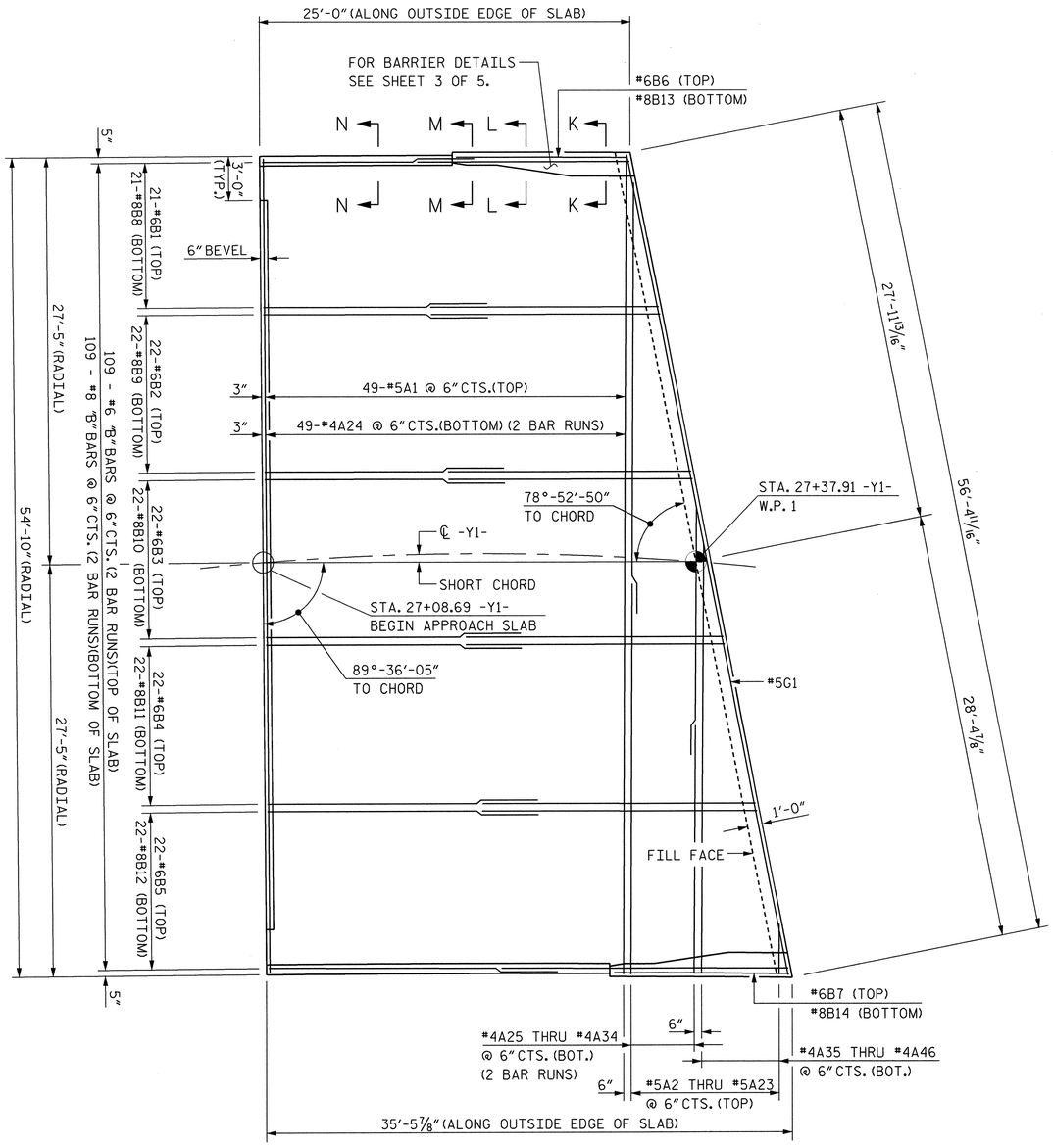

PLAN OF APPROACH SLAB
@ END BENT 1

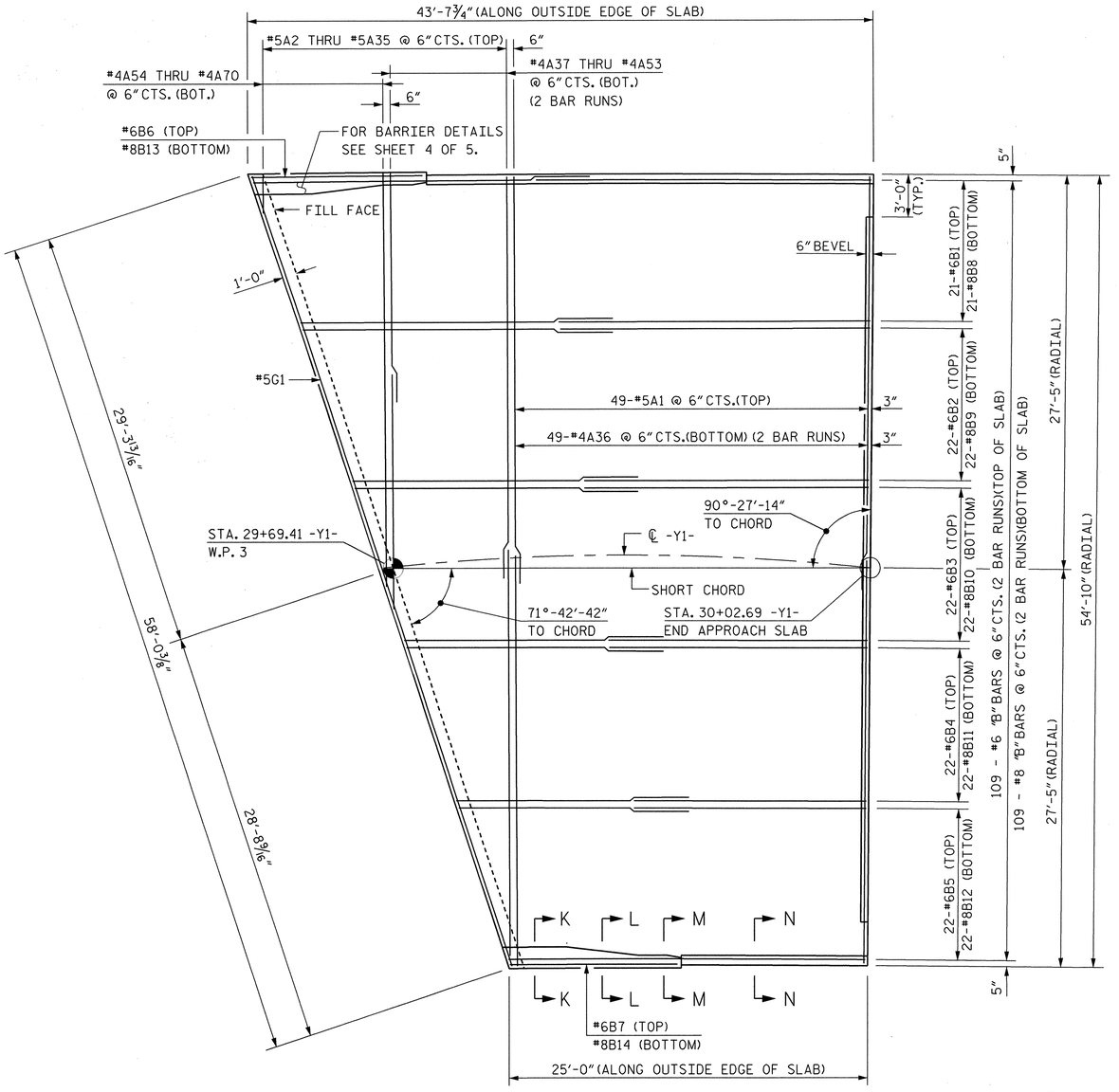

PLAN OF APPROACH SLAB
@ END BENT 2

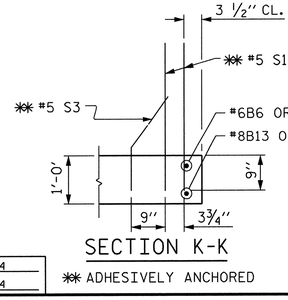

SECTION K-K

✱✱ ADHESIVELY ANCHORED

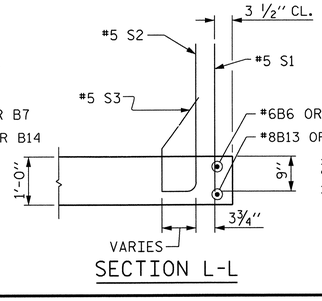

SECTION L-L

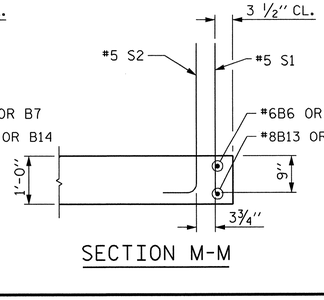

SECTION M-M

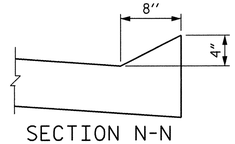

SECTION N-N

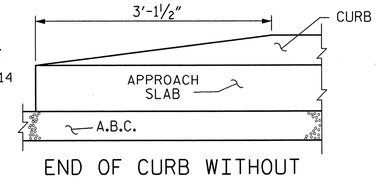

END OF CURB WITHOUT
SHOULDER BERM GUTTER

NOTE:
"A" BARS ARE SPACED RADIALLY ALONG ℄ -L-.

"B" BARS ARE PLACED ALONG THE LONG CHORD OF CONCENTRIC ARCS.

NORTH CAROLINA PROFESSIONAL SEAL 11725 ENGINEER DAVID R. RUGGLES
David Ruggles 1-10-05

NORTH CAROLINA PROFESSIONAL SEAL 25934 ENGINEER CHARLES P. LEWIS
1-10-05

PROJECT NO. R-2606A

RANDOLPH COUNTY

STATION: 108+24.11 -L- POT

SHEET 1 OF 5

STATE OF NORTH CAROLINA
DEPARTMENT OF TRANSPORTATION
RALEIGH

BRIDGE APPROACH SLAB DETAILS

REVISIONS						SHEET NO.
NO.	BY:	DATE:	NO.	BY:	DATE:	S-195
1			3			TOTAL SHEETS
2			4			199

DWG. 29 OF 33

DRAWN BY: C.P. LEWIS DATE: 11-04
CHECKED BY: J.L. BOLDEN, JR. DATE: 11-04

$USER$ $TIME$ DGN $ENGINEER$

BILL OF MATERIAL

APPROACH SLAB @ E.B. 1

BAR	NO.	SIZE	TYPE	LENGTH	WEIGHT
* A1	49	#5	STR.	54'-6"	2,785
* A2	1	#5	STR.	53'-10"	56
* A3	1	#5	STR.	51'-4"	54
* A4	1	#5	STR.	48'-10"	51
* A5	1	#5	STR.	46'-4"	48
* A6	1	#5	STR.	43'-10"	46
* A7	1	#5	STR.	41'-4"	43
* A8	1	#5	STR.	38'-10"	41
* A9	1	#5	STR.	36'-5"	38
* A10	1	#5	STR.	33'-11"	35
* A11	1	#5	STR.	31'-6"	33
* A12	1	#5	STR.	29'-0"	30
* A13	1	#5	STR.	26'-7"	28
* A14	1	#5	STR.	24'-2"	25
* A15	1	#5	STR.	21'-8"	23
* A16	1	#5	STR.	19'-3"	20
* A17	1	#5	STR.	16'-10"	18
* A18	1	#5	STR.	14'-5"	15
* A19	1	#5	STR.	12'-0"	13
* A20	1	#5	STR.	9'-7"	10
* A21	1	#5	STR.	7'-2"	7
* A22	1	#5	STR.	4'-9"	5
* A23	1	#5	STR.	2'-5"	3
A24	98	#4	STR.	28'-2"	1,844
A25	2	#4	STR.	27'-10"	37
A26	2	#4	STR.	26'-7"	36
A27	2	#4	STR.	25'-4"	34
A28	2	#4	STR.	24'-1"	32
A29	2	#4	STR.	22'-10"	31
A30	2	#4	STR.	21'-7"	29
A31	2	#4	STR.	20'-4"	27
A32	2	#4	STR.	19'-2"	26
A33	2	#4	STR.	17'-11"	24
A34	2	#4	STR.	16'-8"	22

APPROACH SLAB @ E.B. 1

BAR	NO.	SIZE	TYPE	LENGTH	WEIGHT
A35	1	#4	STR.	29'-0"	19
A36	1	#4	STR.	26'-7"	18
A37	1	#4	STR.	24'-2"	16
A38	1	#4	STR.	21'-8"	14
A39	1	#4	STR.	19'-3"	13
A40	1	#4	STR.	16'-10"	11
A41	1	#4	STR.	14'-5"	10
A42	1	#4	STR.	12'-0"	8
A43	1	#4	STR.	9'-7"	6
A44	1	#4	STR.	7'-2"	5
A45	1	#4	STR.	4'-9"	3
A46	1	#4	STR.	2'-5"	2
* B1	42	#6	STR.	15'-4"	967
* B2	44	#6	STR.	16'-4"	1,079
* B3	44	#6	STR.	17'-5"	1,151
* B4	44	#6	STR.	18'-5"	1,217
* B5	44	#6	STR.	19'-6"	1,289
* B6	1	#6	STR.	11'-8"	18
* B7	1	#6	STR.	11'-11"	18
B8	42	#8	STR.	16'-10"	1,888
B9	44	#8	STR.	17'-10"	2,096
B10	44	#8	STR.	18'-11"	2,223
B11	44	#8	STR.	19'-11"	2,341
B12	44	#8	STR.	21'-0"	2,468
B13	1	#8	STR.	11'-8"	31
B14	1	#8	STR.	11'-11"	32
* B15	7	#5	STR.	11'-8"	85
* B16	1	#5	3	6'-8"	7
* B17	7	#5	STR.	11'-10"	86
* B18	1	#5	3	6'-5"	7
* G1	1	#5	STR.	55'-11"	58

APPROACH SLAB @ E.B. 1

BAR	NO.	SIZE	TYPE	LENGTH	WEIGHT
* S1	56	#5	STR	3'-3"	190
* S2	40	#5	1	4'-1"	170
* S3	20	#5	2	2'-3"	47

REINFORCING STEEL	LBS.	13,346
* EPOXY COATED REINFORCING STEEL	LBS.	9,816
CLASS AA CONCRETE BREAKDOWN		
POUR 1 SLAB AND CURB	C. Y.	62.5
POUR 2 RAIL	C. Y.	2.3
CLASS AA CONCRETE	C. Y.	64.8

APPROACH SLAB @ E.B. 2

BAR	NO.	SIZE	TYPE	LENGTH	WEIGHT
* A1	49	#5	STR.	54'-6"	2,785
* A2	1	#5	STR.	54'-9"	57
* A3	1	#5	STR.	53'-3"	56
* A4	1	#5	STR.	51'-9"	54
* A5	1	#5	STR.	50'-3"	52
* A6	1	#5	STR.	48'-8"	51
* A7	1	#5	STR.	47'-2"	49
* A8	1	#5	STR.	45'-8"	48
* A9	1	#5	STR.	44'-1"	46
* A10	1	#5	STR.	42'-7"	44
* A11	1	#5	STR.	41'-0"	43
* A12	1	#5	STR.	39'-6"	41
* A13	1	#5	STR.	38'-0"	40
* A14	1	#5	STR.	36'-5"	38
* A15	1	#5	STR.	34'-11"	36
* A16	1	#5	STR.	33'-4"	35

APPROACH SLAB @ E.B. 2

BAR	NO.	SIZE	TYPE	LENGTH	WEIGHT
* A17	1	#5	STR.	31'-9"	33
* A18	1	#5	STR.	30'-3"	32
* A19	1	#5	STR.	28'-8"	30
* A20	1	#5	STR.	27'-2"	28
* A21	1	#5	STR.	25'-7"	27
* A22	1	#5	STR.	24'-0"	25
* A23	1	#5	STR.	22'-5"	23
* A24	1	#5	STR.	20'-11"	22
* A25	1	#5	STR.	19'-4"	20
* A26	1	#5	STR.	17'-9"	19
* A27	1	#5	STR.	16'-2"	17
* A28	1	#5	STR.	14'-7"	15
* A29	1	#5	STR.	13'-0"	14
* A30	1	#5	STR.	11'-5"	12
* A31	1	#5	STR.	9'-10"	10
* A32	1	#5	STR.	8'-3"	9
* A33	1	#5	STR.	6'-8"	7
* A34	1	#5	STR.	5'-1"	5
* A35	1	#5	STR.	3'-6"	4
A36	98	#4	STR.	28'-2"	1,844
A37	2	#4	STR.	28'-4"	38
A38	2	#4	STR.	27'-7"	37
A39	2	#4	STR.	26'-10"	36
A40	2	#4	STR.	26'-0"	35
A41	2	#4	STR.	25'-3"	34
A42	2	#4	STR.	24'-6"	33
A43	2	#4	STR.	23'-9"	32
A44	2	#4	STR.	23'-0"	31
A45	2	#4	STR.	22'-3"	30
A46	2	#4	STR.	21'-5"	29
A47	2	#4	STR.	20'-8"	28
A48	2	#4	STR.	19'-11"	27
A49	2	#4	STR.	19'-2"	26
A50	2	#4	STR.	18'-4"	24

APPROACH SLAB @ E.B. 2

BAR	NO.	SIZE	TYPE	LENGTH	WEIGHT
A51	2	#4	STR.	17'-7"	23
A52	2	#4	STR.	16'-10"	22
A53	2	#4	STR.	16'-1"	21
A54	1	#4	STR.	28'-8"	19
A55	1	#4	STR.	27'-2"	18
A56	1	#4	STR.	25'-7"	17
A57	1	#4	STR.	24'-0"	16
A58	1	#4	STR.	22'-5"	15
A59	1	#4	STR.	20'-11"	14
A60	1	#4	STR.	19'-4"	13
A61	1	#4	STR.	17'-9"	12
A62	1	#4	STR.	16'-2"	11
A63	1	#4	STR.	14'-7"	10
A64	1	#4	STR.	13'-0"	9
A65	1	#4	STR.	11'-5"	8
A66	1	#4	STR.	9'-10"	7
A67	1	#4	STR.	8'-3"	6
A68	1	#4	STR.	6'-8"	4
A69	1	#4	STR.	5'-1"	3
A70	1	#4	STR.	3'-6"	2
B1	42	#6	STR.	23'-6"	1,482
B2	44	#6	STR.	21'-9"	1,437
B3	44	#6	STR.	19'-11"	1,316
B4	44	#6	STR.	18'-0"	1,190
B5	44	#6	STR.	16'-2"	1,068
B6	1	#6	STR.	12'-1"	18
B7	1	#6	STR.	11'-8"	18
B8	42	#8	STR.	25'-0"	2,805
B9	44	#8	STR.	23'-3"	2,732
B10	44	#8	STR.	21'-5"	2,517
B11	44	#8	STR.	19'-6"	2,292
B12	44	#8	STR.	17'-8"	2,076
B13	1	#8	STR.	12'-1"	32

APPROACH SLAB @ E.B. 2

BAR	NO.	SIZE	TYPE	LENGTH	WEIGHT
B14	1	#8	STR.	11'-8"	31
* B15	7	#5	STR.	12'-0"	88
* B16	1	#5	3	7'-7"	8
* B17	7	#5	STR.	11'-9"	86
* B18	1	#5	3	6'-10"	7
* G1	1	#5	STR.	57'-10"	60
* S1	56	#5	STR.	3'-3"	190
* S2	40	#5	1	4'-1"	170
* S3	20	#5	2	2'-3"	47

REINFORCING STEEL	LBS.	15,019
* EPOXY COATED REINFORCING STEEL	LBS.	11,012
CLASS AA CONCRETE BREAKDOWN		
POUR 1 SLAB AND CURB	C. Y.	70.8
POUR 2 RAIL	C. Y.	2.3
CLASS AA CONCRETE	C. Y.	73.1

BAR TYPES

ALL BAR DIMENSIONS ARE OUT TO OUT

† NORMAL TO END BENT

SECTION THRU SLAB

NOTES

THE COST OF THE BARRIER RAIL ON THE APPROACH SLAB SHALL BE INCLUDED IN THE LUMP SUM CONTRACT PRICE BID FOR BRIDGE APPROACH SLABS.

APPROACH SLAB SHALL NOT BE CONSTRUCTED PRIOR TO COMPLETION OF THE BRIDGE DECK.

FOR REINFORCED BRIDGE APPROACH FILL INCLUDING FABRIC, IMPERMEABLE GEOMEMBRANE, 4" Ø DRAINAGE PIPE, #78M STONE, AND SELECT MATERIAL, SEE ROADWAY PLANS.

TEMPORARY DRAINAGE AND TEMPORARY BERM AND SLOPE DRAINS WILL BE PAID FOR UNDER THE LUMP SUM PRICE FOR BRIDGE APPROACH SLAB.

AREA BETWEEN THE WINGWALL AND APPROACH SLAB SHALL BE GRADED TO DRAIN THE WATER AWAY FROM THE FILL FACE OF THE BRIDGE AND SHALL BE PAVED. SEE ROADWAY PLANS.

THE 6" COMP. A.B.C. SHALL EXTEND 10'-0" BEYOND THE END OF THE APPROACH SLAB AND 1'-0" OUTSIDE OF EACH EDGE OF SLAB.

THE CONTRACTOR MAY USE 4" TYPE B-25.0B ASPHALT CONCRETE BASE COURSE IN LIEU OF 6" COMP. A.B.C. IF THIS OPTION IS USED, THE BASE COURSE SHALL EXTEND 1'-0" BEYOND THE END OF THE APPROACH SLAB AND THE WIDTH SHALL BE THE SAME AS THAT OF THE APPROACH SLAB.

THE CONTRACTOR MAY USE 5" CLASS "A" CONCRETE BASE IN LIEU OF 6" COMP. A.B.C. IF THIS OPTION IS USED, THE CONCRETE BASE SHALL EXTEND 1'-0" BEYOND THE END OF THE APPROACH SLAB AND THE WIDTH SHALL BE THE SAME AS THAT OF THE APPROACH SLAB. THE CONCRETE SHALL BE FINISHED TO A SMOOTH SURFACE AND A LAYER OF 30 LB ROOFING FELT SHALL BE PLACED BETWEEN THE CONCRETE BASE AND THE APPROACH SLAB TO PREVENT BOND. THE APPROACH SLAB SHALL NOT BE CAST UNTIL THE CONCRETE BASE HAS REACHED AN AGE OF THREE CURING DAYS.

THE JOINT SHALL BE SAWED PRIOR TO THE CASTING OF THE BARRIER RAIL.

WITH EVAZOTE JOINT SEAL

FOR EVAZOTE JOINT SEALS, SEE SPECIAL PROVISIONS.

THE NOMINAL UNCOMPRESSED SEAL WIDTH OF THE EVAZOTE JOINT SEAL SHALL BE 2 1/2".

PROJECT NO. R-2606A

RANDOLPH COUNTY

STATION: 108+24.11 -L- POT

SHEET 2 OF 5

NORTH CAROLINA PROFESSIONAL SEAL 11725 ENGINEER DAVID R. RUGGLES
David Ruggles 1-10-05

NORTH CAROLINA PROFESSIONAL SEAL 25934 ENGINEER CHARLES P. LEWIS
1-10-05

STATE OF NORTH CAROLINA
DEPARTMENT OF TRANSPORTATION
RALEIGH

STANDARD

BRIDGE APPROACH SLAB FOR FLEXIBLE PAVEMENT WITH BARRIER RAIL

REVISIONS						SHEET NO.
NO.	BY:	DATE:	NO.	BY:	DATE:	S-196
1			3			TOTAL SHEETS
2			4			199

DWG. 30 OF 33

ASSEMBLED BY : C.P. LEWIS DATE : 11-04
CHECKED BY : J.L. BOLDEN, JR. DATE : 11-04
DRAWN BY : LES 8/01
CHECKED BY : RDR 8/01
REV. 5/7/03R RWW/JTE

$$$$$$SYSTIME$$$$ $$$$$$$$DGN$$$$ $$$$USERNAME$$$$

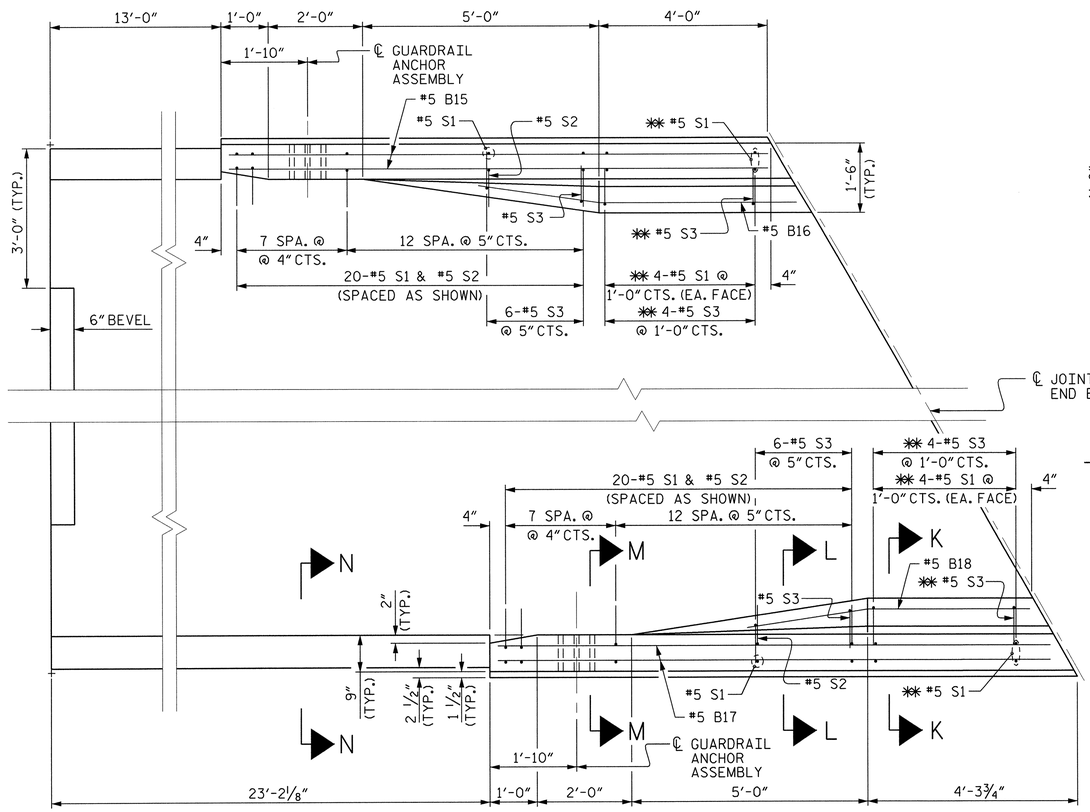

PLAN @ END BENT 1

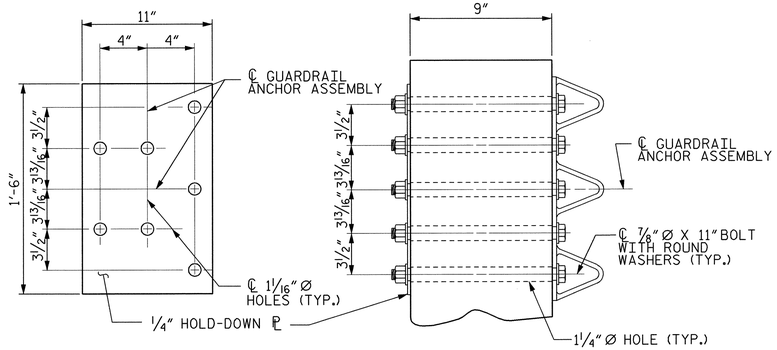

PLAN

SECTION E-E

GUARDRAIL ANCHOR ASSEMBLY DETAILS

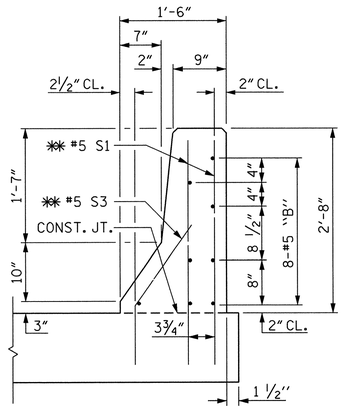

SECTION K-K

✱✱ ADHESIVELY ANCHORED

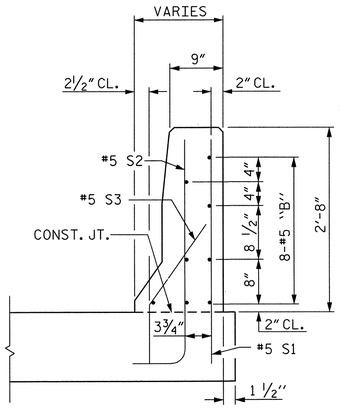

SECTION L-L

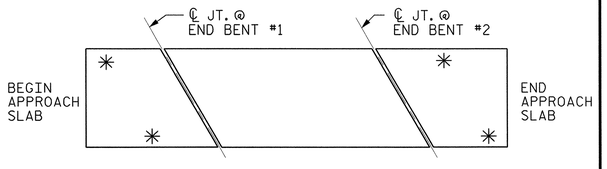

SKETCH SHOWING POINTS OF ATTACHMENT

✱ INDICATES POINTS OF ATTACHMENT

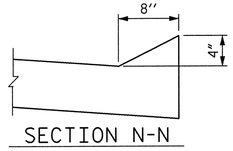

SECTION N-N

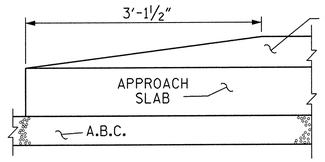

END OF CURB WITHOUT SHOULDER BERM GUTTER

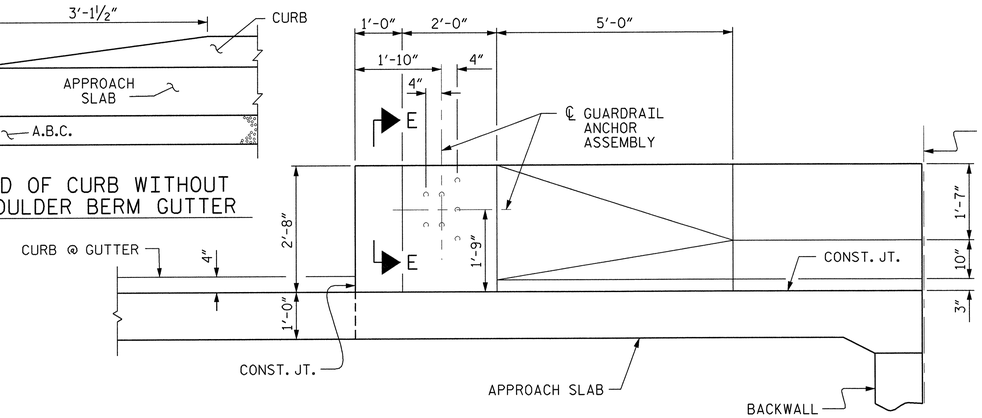

ELEVATION

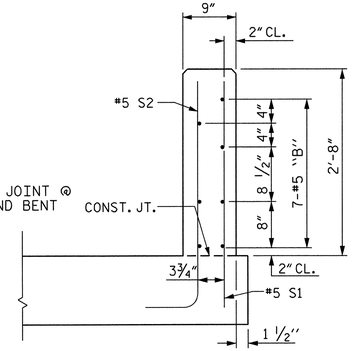

SECTION M-M

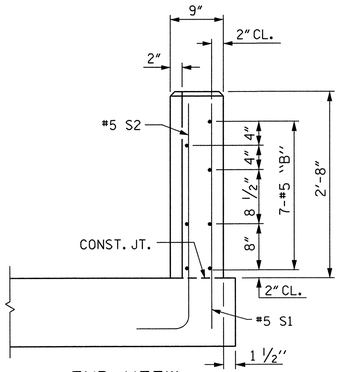

END VIEW

PROJECT NO. R-2606A

RANDOLPH COUNTY

STATION: 108+24.11 -L- POT

SHEET 3 OF 5

STATE OF NORTH CAROLINA
DEPARTMENT OF TRANSPORTATION
RALEIGH

STANDARD

BRIDGE APPROACH SLAB DETAILS FOR FLEXIBLE PAVEMENT WITH BARRIER RAIL

NORTH CAROLINA PROFESSIONAL SEAL 11725 ENGINEER DAVID R. RUGGLES
1-10-05

NORTH CAROLINA PROFESSIONAL SEAL 25934 ENGINEER CHARLES P. LEWIS
1-10-05

REVISIONS						SHEET NO.
NO.	BY:	DATE:	NO.	BY:	DATE:	S-197
1			3			TOTAL SHEETS
2			4			199

DWG. 31 OF 33

ASSEMBLED BY : C.P. LEWIS DATE : 11-04
CHECKED BY : J.L. BOLDEN, JR. DATE : 11-04
DRAWN BY : LES 8/01 REV. 5/7/03R RWW/JTE
CHECKED BY : RDR 8/01

NOTES

THE GUARDRAIL ANCHOR ASSEMBLY SHALL CONSIST OF A 1/4" HOLD DOWN PLATE AND 7 - 7/8" Ø BOLTS WITH NUTS AND WASHERS.

THE HOLD-DOWN PLATE SHALL CONFORM TO AASHTO M270 GRADE 36. AFTER FABRICATION, THE HOLD-DOWN PLATE SHALL BE HOT-DIP GALVANIZED IN ACCORDANCE WITH AASHTO M111.

BOLTS SHALL CONFORM TO THE REQUIREMENTS OF ASTM A307 AND NUTS SHALL CONFORM TO THE REQUIREMENTS OF AASHTO M291. BOLTS, NUTS AND WASHERS SHALL BE GALVANIZED. AT THE CONTRACTOR'S OPTION, STAINLESS STEEL BOLTS, NUTS AND WASHERS MAY BE USED AS AN ALTERNATE FOR THE 7/8" Ø GALVANIZED BOLTS, NUTS AND WASHERS. THEY SHALL CONFORM TO OR EXCEED THE MECHANICAL REQUIREMENTS OF ASTM A307. THE USE OF THIS ALTERNATE SHALL BE APPROVED BY THE ENGINEER.

AFTER INSTALLATION, THE EXPOSED THREAD OF THE BOLT SHALL BE BURRED WITH A SHARP POINTED TOOL.

THE COST OF THE GUARDRAIL ANCHOR ASSEMBLIES WITH BOLTS, NUTS AND WASHERS COMPLETE IN PLACE, SHALL BE INCLUDED IN THE LUMP SUM CONTRACT PRICE BID FOR BRIDGE APPROACH SLABS.

THE 1 1/4" Ø HOLES SHALL BE FORMED OR DRILLED WITH A CORE BIT. IMPACT TOOLS WILL NOT BE PERMITTED. ANY CONCRETE DAMAGED BY THIS WORK SHALL BE REPAIRED TO THE SATISFACTION OF THE ENGINEER.

THE #5 S1 AND #5 S3 BARS SHALL BE INSTALLED, WHERE NOTED ON THE PLANS, USING AN ADHESIVE ANCHORING SYSTEM AFTER SAWING THE JOINT. FOR ADHESIVELY ANCHORED ANCHOR BOLTS OR DOWELS, SEE SPECIAL PROVISIONS. THE YIELD LOAD FOR THE #5 S1 AND #5 S3 BARS IS 18.6 KIPS. FIELD TESTING FOR THE ADHESIVE BONDING SYSTEM IS NOT REQUIRED.

$$$$$$$$SYSTIME$$$$
$$$$$$$$USERNAME$$$$DGN$$$$$$$$

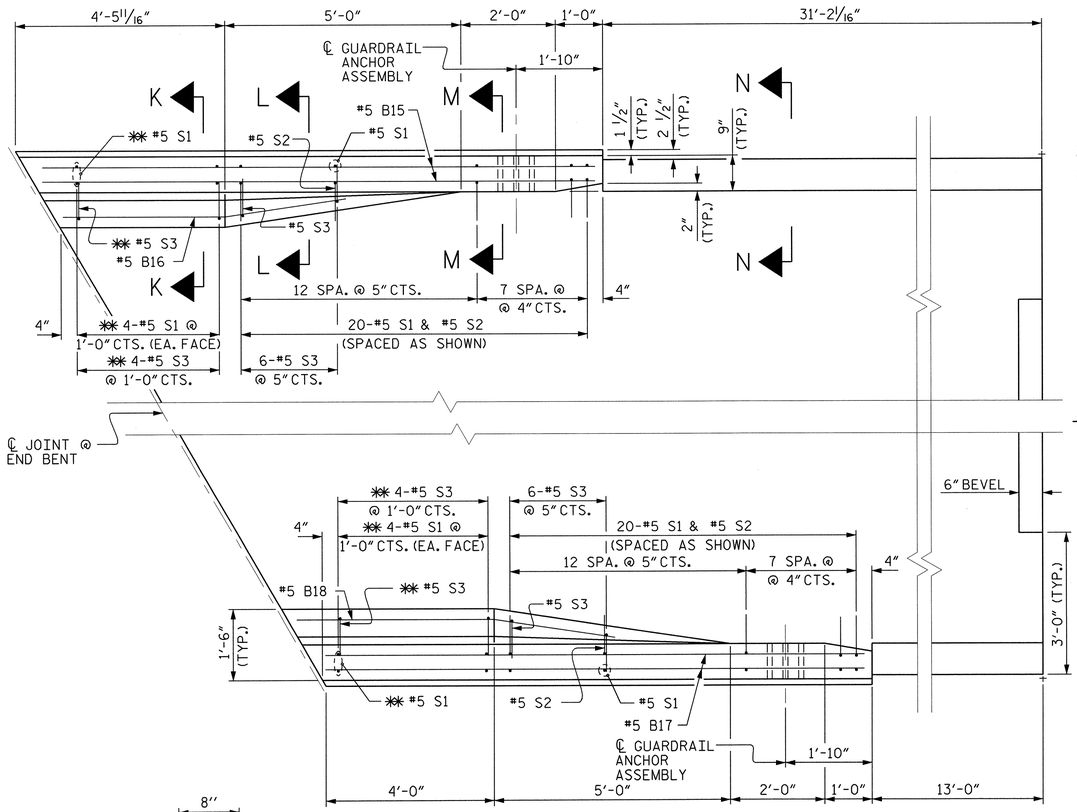

PLAN @ END BENT 2

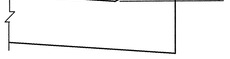

SECTION N-N

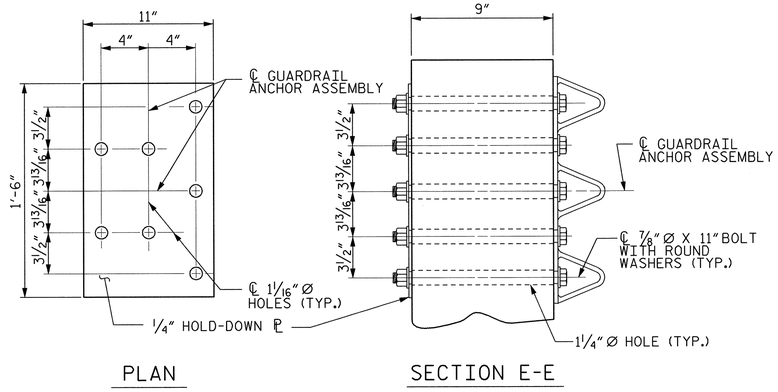

PLAN

SECTION E-E

GUARDRAIL ANCHOR ASSEMBLY DETAILS

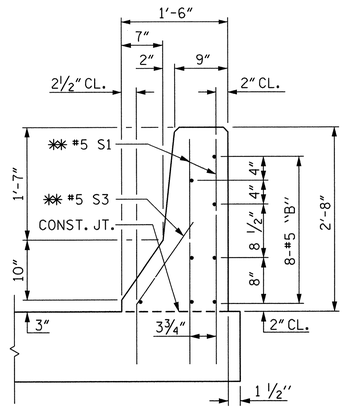

SECTION K-K

✱✱ ADHESIVELY ANCHORED

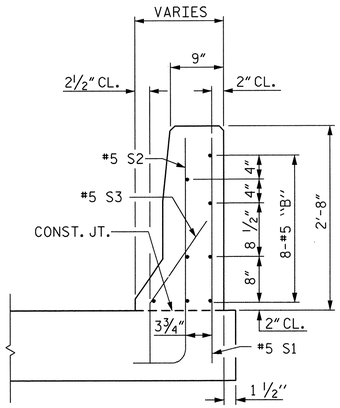

SECTION L-L

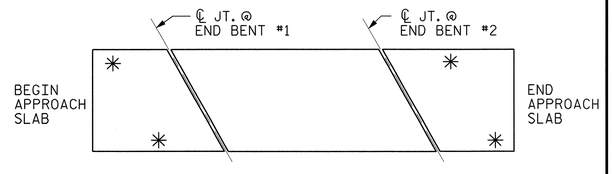

SKETCH SHOWING POINTS OF ATTACHMENT

✱ INDICATES POINTS OF ATTACHMENT

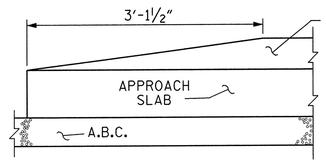

END OF CURB WITHOUT SHOULDER BERM GUTTER

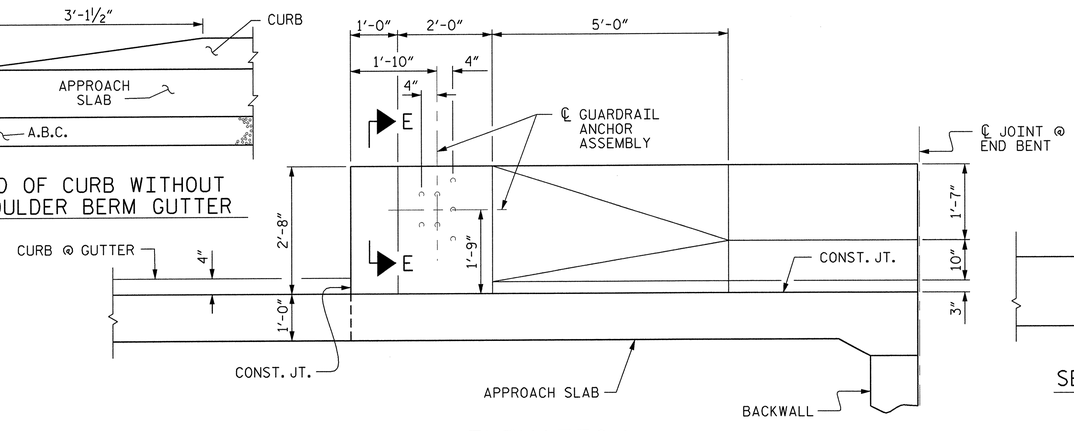

ELEVATION

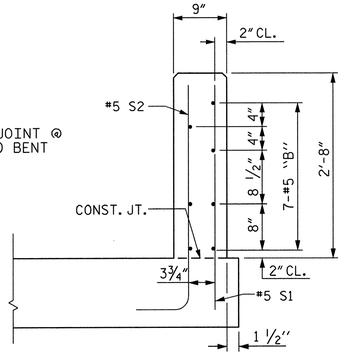

SECTION M-M

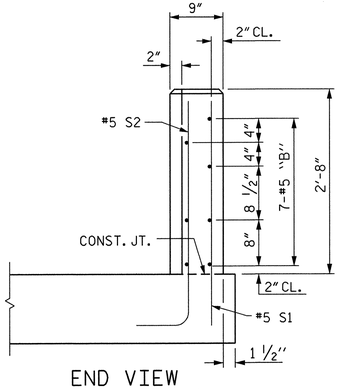

END VIEW

NOTES

THE GUARDRAIL ANCHOR ASSEMBLY SHALL CONSIST OF A 1/4" HOLD DOWN PLATE AND 7 - 7/8" Ø BOLTS WITH NUTS AND WASHERS.

THE HOLD-DOWN PLATE SHALL CONFORM TO AASHTO M270 GRADE 36. AFTER FABRICATION, THE HOLD-DOWN PLATE SHALL BE HOT-DIP GALVANIZED IN ACCORDANCE WITH AASHTO M111.

BOLTS SHALL CONFORM TO THE REQUIREMENTS OF ASTM A307 AND NUTS SHALL CONFORM TO THE REQUIREMENTS OF AASHTO M291. BOLTS, NUTS AND WASHERS SHALL BE GALVANIZED. AT THE CONTRACTOR'S OPTION, STAINLESS STEEL BOLTS, NUTS AND WASHERS MAY BE USED AS AN ALTERNATE FOR THE 7/8" Ø GALVANIZED BOLTS, NUTS AND WASHERS. THEY SHALL CONFORM TO OR EXCEED THE MECHANICAL REQUIREMENTS OF ASTM A307. THE USE OF THIS ALTERNATE SHALL BE APPROVED BY THE ENGINEER.

AFTER INSTALLATION, THE EXPOSED THREAD OF THE BOLT SHALL BE BURRED WITH A SHARP POINTED TOOL.

THE COST OF THE GUARDRAIL ANCHOR ASSEMBLIES WITH BOLTS, NUTS AND WASHERS COMPLETE IN PLACE, SHALL BE INCLUDED IN THE LUMP SUM CONTRACT PRICE BID FOR BRIDGE APPROACH SLABS.

THE 1 1/4" Ø HOLES SHALL BE FORMED OR DRILLED WITH A CORE BIT. IMPACT TOOLS WILL NOT BE PERMITTED. ANY CONCRETE DAMAGED BY THIS WORK SHALL BE REPAIRED TO THE SATISFACTION OF THE ENGINEER.

THE #5 S1 AND #5 S3 BARS SHALL BE INSTALLED, WHERE NOTED ON THE PLANS, USING AN ADHESIVE ANCHORING SYSTEM AFTER SAWING THE JOINT. FOR ADHESIVELY ANCHORED ANCHOR BOLTS OR DOWELS, SEE SPECIAL PROVISIONS. THE YIELD LOAD FOR THE #5 S1 AND #5 S3 BARS IS 18.6 KIPS. FIELD TESTING FOR THE ADHESIVE BONDING SYSTEM IS NOT REQUIRED.

PROJECT NO. R-2606A

RANDOLPH COUNTY

STATION: 108+24.11 -L- POT

SHEET 4 OF 5

STATE OF NORTH CAROLINA
DEPARTMENT OF TRANSPORTATION
RALEIGH

STANDARD

BRIDGE APPROACH SLAB DETAILS FOR FLEXIBLE PAVEMENT WITH BARRIER RAIL

NORTH CAROLINA PROFESSIONAL SEAL 11725 ENGINEER DAVID R. RUGGLES
David Ruggles 1-10-05

NORTH CAROLINA PROFESSIONAL SEAL 25934 ENGINEER CHARLES P. LEWIS
1-10-05

REVISIONS						SHEET NO.
NO.	BY:	DATE:	NO.	BY:	DATE:	S-198
1			3			TOTAL SHEETS
2			4			199

DWG. 32 OF 33

ASSEMBLED BY : C.P. LEWIS	DATE : 11-04
CHECKED BY : J.L. BOLDEN, JR.	DATE : 11-04
DRAWN BY : LES 8/01	REV. 5/7/03R RWW/JTE
CHECKED BY : RDR 8/01	

$$$$USERNAME$$$$ $$$$SYSTIME$$$$

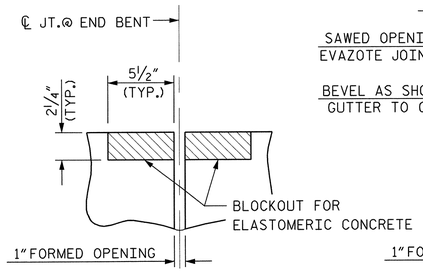

SECTION C-C

PRE-SAWED ELASTOMERIC CONCRETE DIMENSIONS

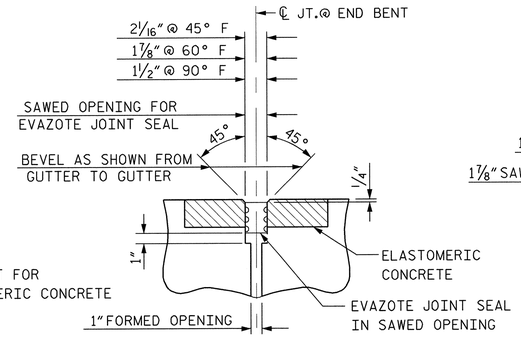

SECTION C-C

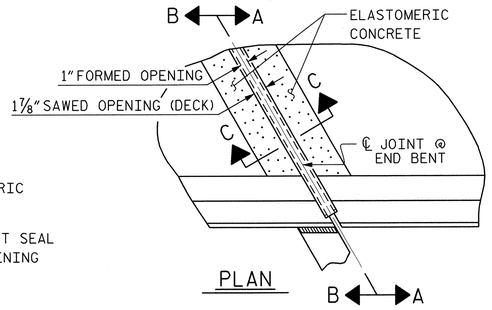

PLAN

JOINT SEAL DETAILS @ END BENT

FOR ELASTOMERIC CONCRETE, SEE SPECIAL PROVISIONS.

BILL OF MATERIAL	
BENT NO.	ELASTOMERIC CONCRETE * (CU. FT.)
E.B. 1	9.1
E.B. 2	9.4

* BASED ON THE MINIMUM BLOCKOUT SHOWN.

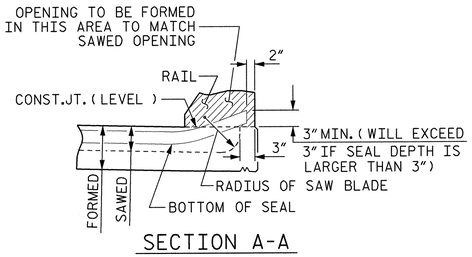

SECTION A-A

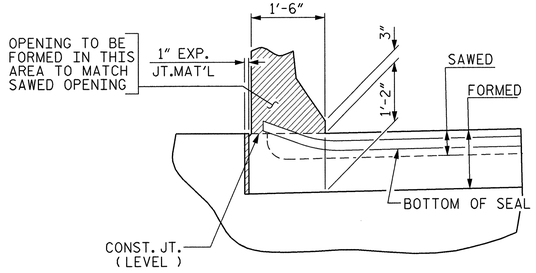

SECTION B-B

JOINT SEAL DETAILS @ END BENT

(FOR BARRIER RAIL)

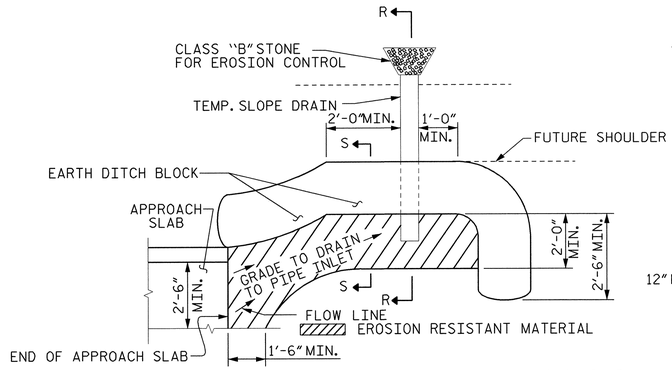

NOTE: IMMEDIATELY AFTER THE CONSTRUCTION OF THE APPROACH SLAB, THE CONTRACTOR SHALL PROVIDE TEMPORARY BERM AND SLOPE DRAIN. CONTRACTOR SHALL GRADE TO PIPE INLET AND PROVIDE EROSION RESISTANT MATERIAL AS SHOWN. THE EROSION RESISTANT MATERIAL SHALL BE EITHER 1) ASPHALT PLANT MIX, TYPE 1 OR TYPE 2, MIN. 2" DEPTH, 2) EROSION CONTROL MAT, OR 3) CONCRETE, AS DIRECTED BY THE ENGINEER. THE SLOPE DRAIN SHALL CONSIST OF A NON-PERFORATED TEMPORARY DRAINAGE PIPE, 12 INCHES IN DIAMETER.

PLAN VIEW

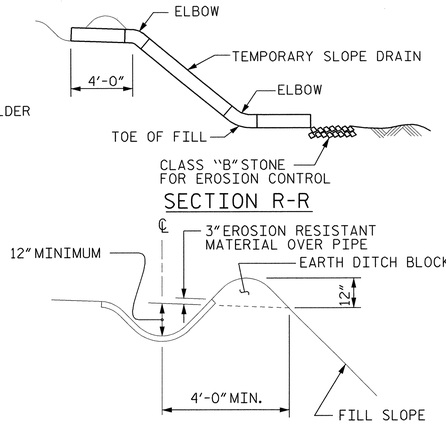

SECTION S-S

TEMPORARY BERM AND SLOPE DRAIN DETAILS

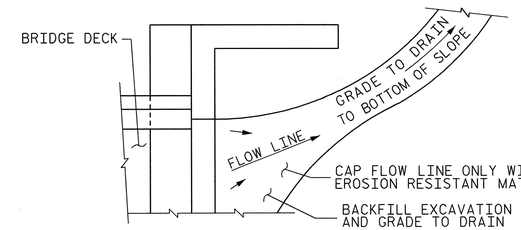

NOTE: IF THE APPROACH SLAB IS NOT CONSTRUCTED IMMEDIATELY AFTER THE BACKFILLING OF THE END BENT EXCAVATION, GRADE TO DRAIN TO THE BOTTOM OF THE SLOPE AND PROVIDE EROSION RESISTANT MATERIAL, SUCH AS FIBERGLASS ROVING OR AS DIRECTED BY THE ENGINEER TO PREVENT SOIL EROSION AND TO PROTECT THE AREA ADJACENT TO THE STRUCTURE. THE CONTRACTOR WILL BE REQUIRED TO REMOVE THESE MATERIALS PRIOR TO CONSTRUCTION OF THE APPROACH SLAB.

TEMPORARY DRAINAGE DETAIL

PROJECT NO. R-2606A

RANDOLPH COUNTY

STATION: 108+24.11 -L- POT

SHEET 5 OF 5

STATE OF NORTH CAROLINA
DEPARTMENT OF TRANSPORTATION
RALEIGH

STANDARD

BRIDGE APPROACH SLAB DETAILS

NORTH CAROLINA PROFESSIONAL SEAL 11725 ENGINEER DAVID R. RUGGLES
David Ruggles 1-10-05

NORTH CAROLINA PROFESSIONAL SEAL 25934 ENGINEER CHARLES P. LEWIS
1-10-05

REVISIONS						SHEET NO.
NO.	BY:	DATE:	NO.	BY:	DATE:	S-199
1			3			TOTAL SHEETS
2			4			199

DWG. 33 OF 33

ASSEMBLED BY : C.P. LEWIS		DATE : 11-04	
CHECKED BY : J.L. BOLDEN, JR.		DATE : 11-04	
DRAWN BY : FCJ	11/88	REV. 8/16/99	MAB/LES
CHECKED BY : ARB	11/88	REV. 10/17/00	RWW/LES
		REV. 5/7/03	RWW/JTE

01/10/2005
z:\dgn\R2606A_SD_ASS_03.dgn
Stewart Engineering, Inc.

R:\RAL 2006 (R26
R:\STRUCT~1\FINALP~1\R2606A~4.DGN
tclelland

B.M. #4 : UPPERMOST POINT ON ANGLE-IRON PROJECTION ON THE NORTHEAST LEG OF A HIGH-TENSION POWERLINE TOWER, EL. 764.33 (SEE -L-)

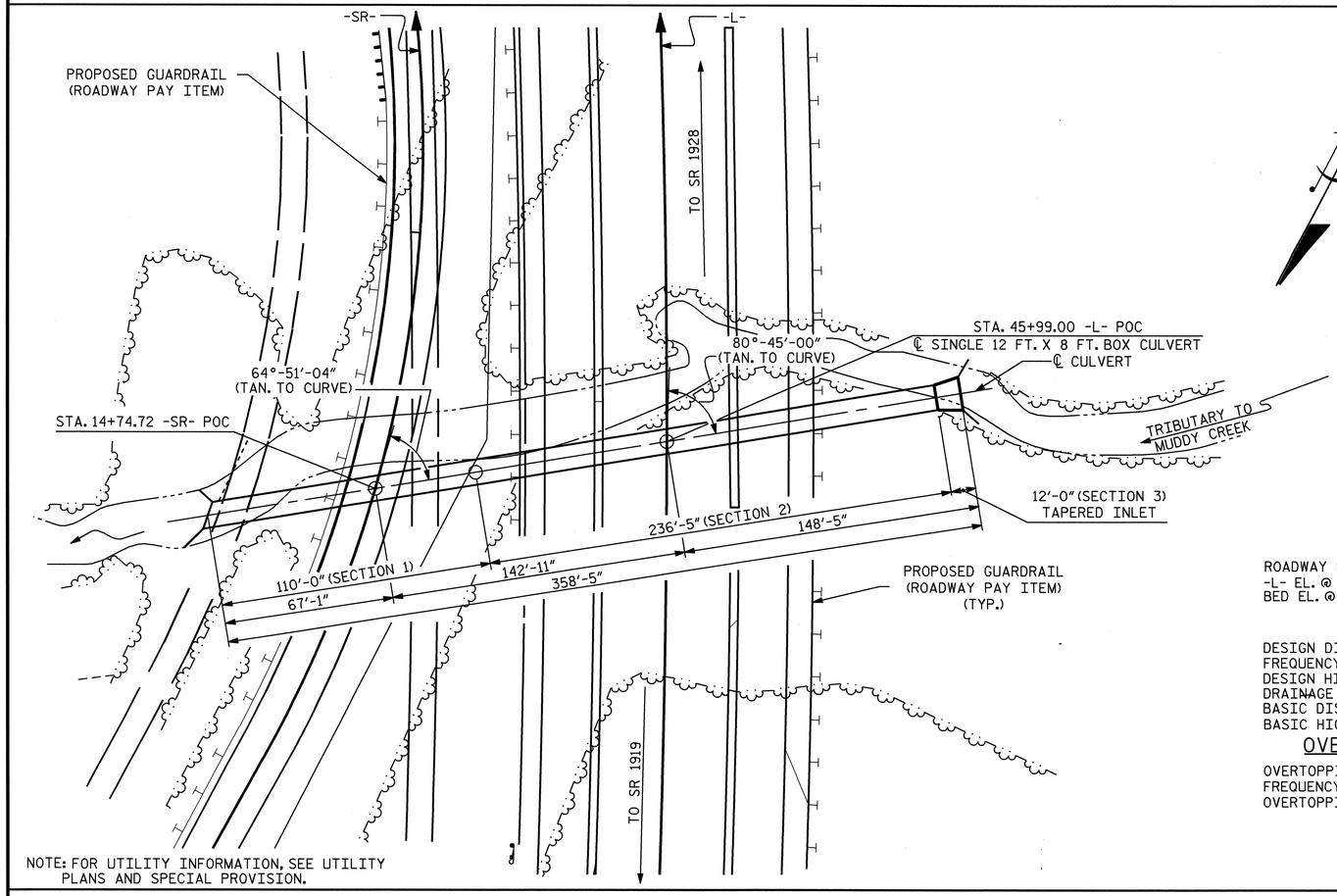

NOTE: FOR UTILITY INFORMATION, SEE UTILITY PLANS AND SPECIAL PROVISION.

GRADE DATA

ROADWAY SLOPE	= 2:1
-L- EL. @ STA. 45+99.00 -L-	= 748.350
BED EL. @ STA. 45+99.00 -L-	= 705.840

HYDRAULIC DATA

DESIGN DISCHARGE	= 560 C.F.S.
FREQUENCY OF DESIGN FLOOD	= 50 YRS.
DESIGN HIGH WATER ELEVATION	= 714.3
DRAINAGE AREA	= 0.73 Sq. MI.
BASIC DISCHARGE (Q100)	= 680 C.F.S.
BASIC HIGH WATER ELEVATION	= 715.1

OVERTOPPING FLOOD DATA

OVERTOPPING DISCHARGE	= 2620 C.F.S.
FREQUENCY OF OVERTOPPING FLOOD	= 500+YRS.
OVERTOPPING FLOOD ELEVATION	= 743.0

LOCATION SKETCH

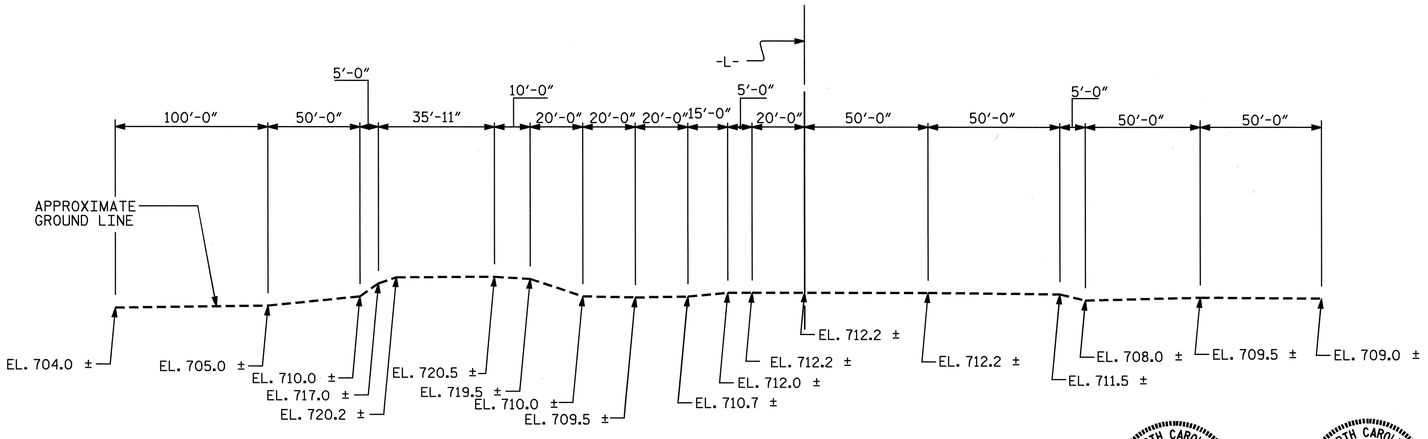

PROFILE ALONG ℄ CULVERT

ASSEMBLED BY : J. G. KHARVA DATE : 12/22/04
CHECKED BY : P. K. NEWTON DATE : 02/15/05

TOTAL STRUCTURE QUANTITIES

CLASS A CONCRETE		
BARREL (SECTION 1) @ 1.675 CY/FT	184.3	C.Y.
BARREL (SECTION 2) @ 2.080 CY/FT	491.7	C.Y.
TAPERED INLET (SECTION 3)	17.7	C.Y.
INLET WINGS, ETC.	12.4	C.Y.
OUTLET WINGS, ETC.	13.7	C.Y.
SILL	8.1	C.Y.
TOTAL	727.9	C.Y.
REINFORCING STEEL		
BARREL (SECTION 1)	32165	LBS.
BARREL (SECTION 2)	78540	LBS.
TAPERED INLET (SECTION 3)	3460	LBS.
INLET WINGS, ETC.	721	LBS.
OUTLET WINGS, ETC.	832	LBS.
SILL	124	LBS.
TOTAL	115842	LBS.
CULVERT EXCAVATION	LUMP SUM	
FOUNDATION COND. MAT'L	340	TONS

F. A. PROJECT NO. NHF-311(18)

NOTES

ASSUMED LIVE LOAD ----------HS20-44 OR ALTERNATE LOADING.

DESIGN FILL MAX 36.1 FT. FOR SECTION II & MIN. 22.310 FT. FOR SECTION I.

FOR OTHER DESIGN DATA AND NOTES SEE STANDARD NOTE SHEET.

3" Ø WEEP HOLES INDICATED TO BE IN ACCORDANCE WITH THE SPECIFICATIONS.

CONCRETE IN CULVERTS TO BE POURED IN THE FOLLOWING ORDER:

1. WING FOOTINGS AND FLOOR SLAB INCLUDING 4" OF ALL VERTICAL WALLS.
2. THE REMAINING PORTIONS OF THE WALLS AND WINGS FULL HEIGHT FOLLOWED BY ROOF SLAB AND HEADWALLS.

THE RESIDENT ENGINEER SHALL CHECK THE LENGTH OF CULVERT BEFORE STAKING IT OUT TO MAKE CERTAIN THAT IT WILL PROPERLY TAKE CARE OF THE FILL.

DIMENSIONS FOR WING LAYOUT AS WELL AS ADDITIONAL REINFORCING STEEL EMBEDDED IN BARREL ARE SHOWN ON WING SHEET.

TRANSVERSE CONSTRUCTION JOINTS SHALL BE USED IN THE BARREL, SPACED TO LIMIT THE POURS TO A MAXIMUM OF 70 FT. LOCATION OF JOINTS SHALL BE SUBJECT TO APPROVAL OF THE ENGINEER.

AT THE CONTRACTOR'S OPTION, HE MAY SPLICE THE VERTICAL REINFORCING STEEL IN THE INTERIOR FACE OF EXTERIOR WALL ABOVE LOWER WALL CONSTRUCTION JOINT. THE SPLICE LENGTH SHALL BE AS PROVIDED IN THE SPLICE LENGTH CHART SHOWN ON THE PLANS. EXTRA WEIGHT OF STEEL DUE TO THE SPLICES SHALL BE PAID FOR BY THE CONTRACTOR.

BED MATERIAL EXCAVATED FROM THE SITE FOR CULVERT CONSTRUCTION IS TO BE STOCKPILED, THEN PLACED BACK INTO CULVERTPAYMENT FOR THIS WORK SHALL BE IN THE LUMP SUM PAY ITEM, CULVERT EXCAVATION THIS MATERIAL SHALL BE PLACED IN THE CULVERT TO THE TOP OF THE SILLS, PROVIDING A CONTINUOUS LOW FLOW CHANNEL BETWEEN THE LOW SILLS. SEE CULVERT SILL DETAILS AND PLAN OF LOW FLOW CHANNEL.

DETAILED DRAWINGS FOR FALSEWORK AND FORMS FOR SECTION II OF THIS CULVERT SHALL BE SUBMITTED. SEE SHEET SN.

THE CONTRACTOR SHALL PROVIDE INDEPENDENT ASSURANCE SAMPLES OF REINFORCING STEEL AS FOLLOWS: FOR PROJECTS REQUIRING UP TO 400 TONS OF REINFORCING STEEL, ONE 30 INCH SAMPLE OF EACH SIZE BAR USED, AND FOR PROJECTS REQUIRING OVER 400 TONS OF REINFORCING STEEL, TWO 30 INCH SAMPLES OF EACH SIZE BAR USED. THE BARS FROM WHICH THE SAMPLES ARE TAKEN MUST THEN BE SPLICED WITH REPLACEMENT BARS OF THE SIZE AND LENGTH OF THE SAMPLE, PLUS A MINIMUM LAP SPLICE OF THIRTY BAR DIAMETERS.

FOR CULVERT DIVERSION DETAILS AND PAY ITEM, SEE EROSION CONTROL PLANS.

A 3 FOOT STRIP OF FILTER FABRIC SHALL BE ATTACHED TO THE FILL FACE OF THE WING COVERING THE ENTIRE LENGTH OF THE EXPANSION JOINT.

FOR CRANE SAFETY, SEE SPECIAL PROVISIONS.

FOR SUBMITTAL OF WORKING DRAWINGS, SEE SPECIAL PROVISIONS.

FOR FALSEWORK AND FORMWORK, SEE SPECIAL PROVISIONS.

NO PRECAST REINFORCED BOX CULVERT OPTION WILL BE ALLOWED.

NORTH CAROLINA PROFESSIONAL SEAL 11905 ENGINEER WILLIAM A. DAVIS 5/10/06

NORTH CAROLINA PROFESSIONAL SEAL 26445 ENGINEER P. KOREY NEWTON 5/18/2006

NORTH CAROLINA PROFESSIONAL SEAL 11915 ENGINEER JOHN C. FRYE, JR. 5/10/06

PROJECT NO. R-2606A
RANDOLPH COUNTY
STATION: 45+99.00 -L- POC

SHEET 1 OF 8

STATE OF NORTH CAROLINA
DEPARTMENT OF TRANSPORTATION
RALEIGH

SINGLE 12 FT. X 8 FT. CONCRETE BOX CULVERT TAPERED INLET END

REVISIONS						SHEET NO.
NO.	BY:	DATE:	NO.	BY:	DATE:	C-8
1			3			TOTAL SHEETS
2			4			21

STR. #9

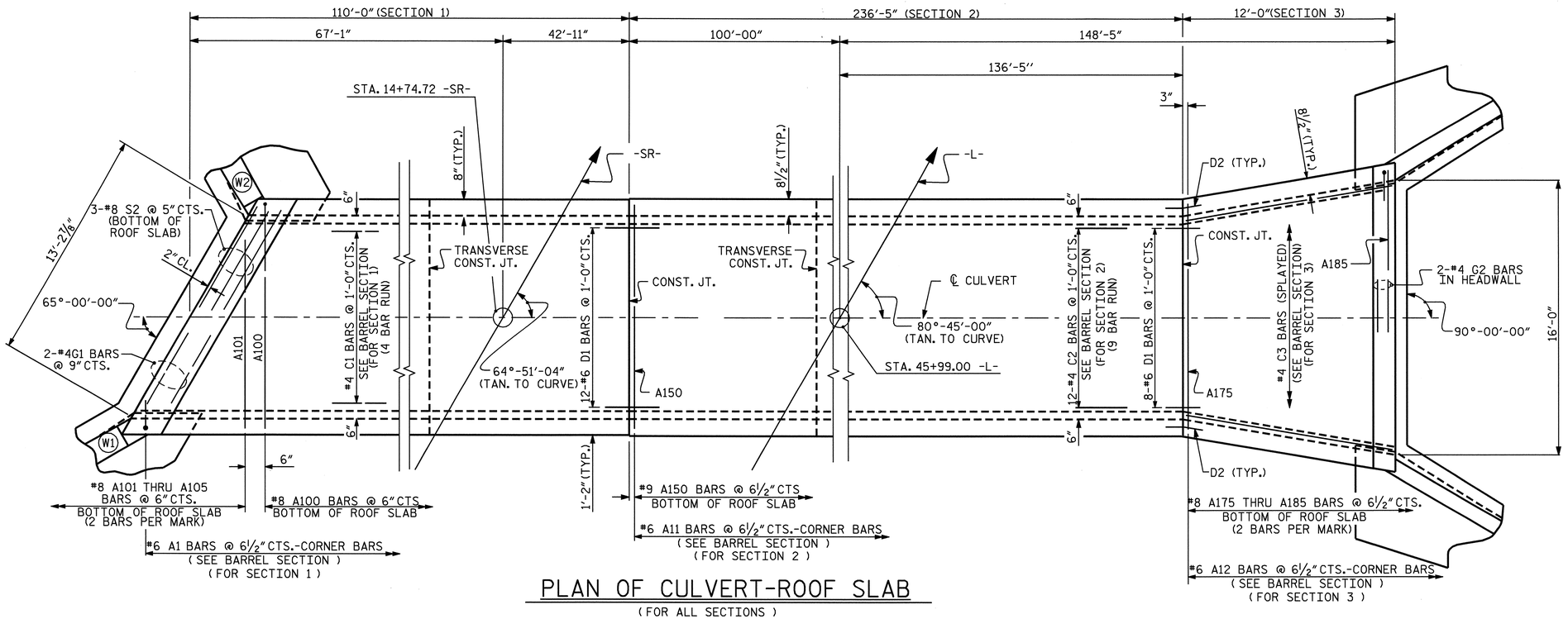

PLAN OF CULVERT-ROOF SLAB

(FOR ALL SECTIONS)

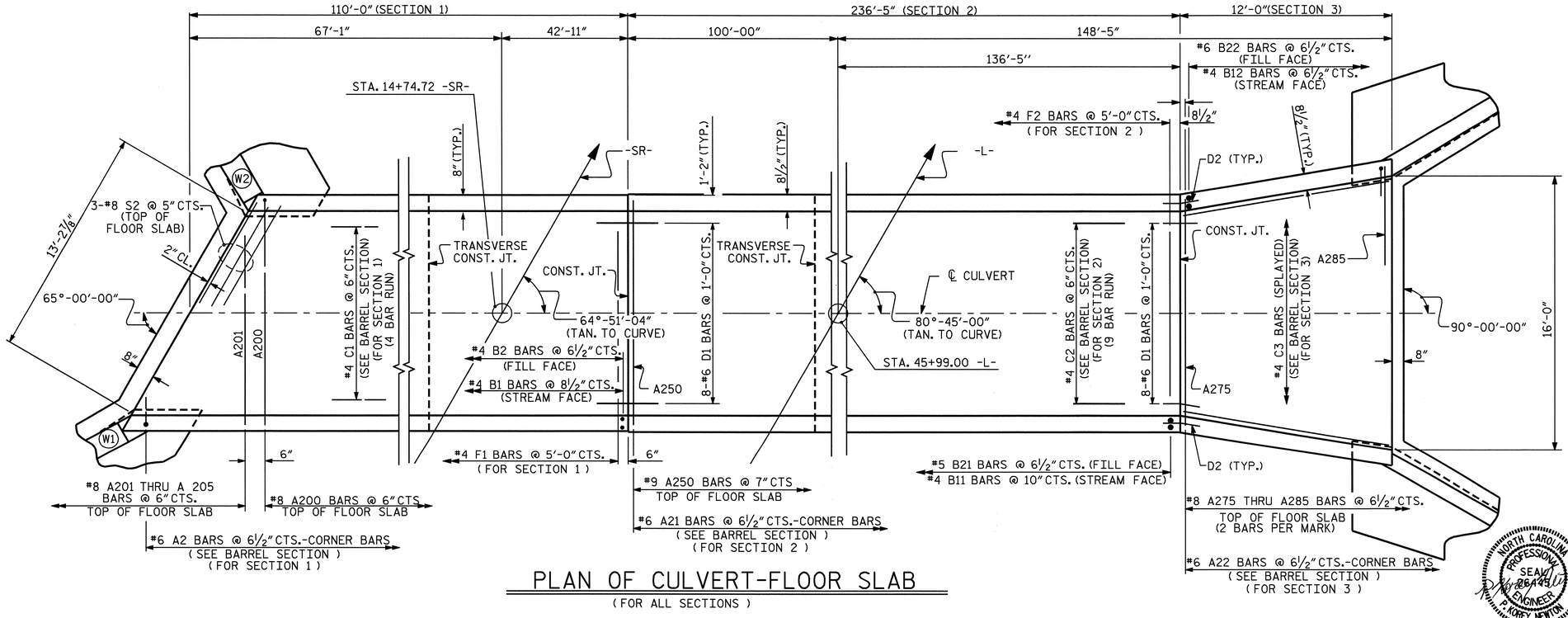

PLAN OF CULVERT-FLOOR SLAB

(FOR ALL SECTIONS)

NORTH CAROLINA PROFESSIONAL SEAL 26445 ENGINEER P. KORKEY NEWTON

5/18/2006

DRAWN BY : J. G. KHARVA DATE : 12/22/04
CHECKED BY : P. K. NEWTON DATE : 02/15/05

18-MAY-2006 12:00
R:\STRUCTØ1\FINALPØ1\R2606AØ4.DGN
tclelland

PROJECT NO. R-2606A
RANDOLPH COUNTY
STATION: 45+99.00 -L- POC

SHEET 2 OF 8

STATE OF NORTH CAROLINA
DEPARTMENT OF TRANSPORTATION
RALEIGH

BARREL STANDARD
SINGLE 12 FT. X 8 FT.
CONCRETE BOX CULVERT

REVISIONS						SHEET NO.
NO.	BY:	DATE:	NO.	BY:	DATE:	C-9
1			3			TOTAL SHEETS
2			4			21

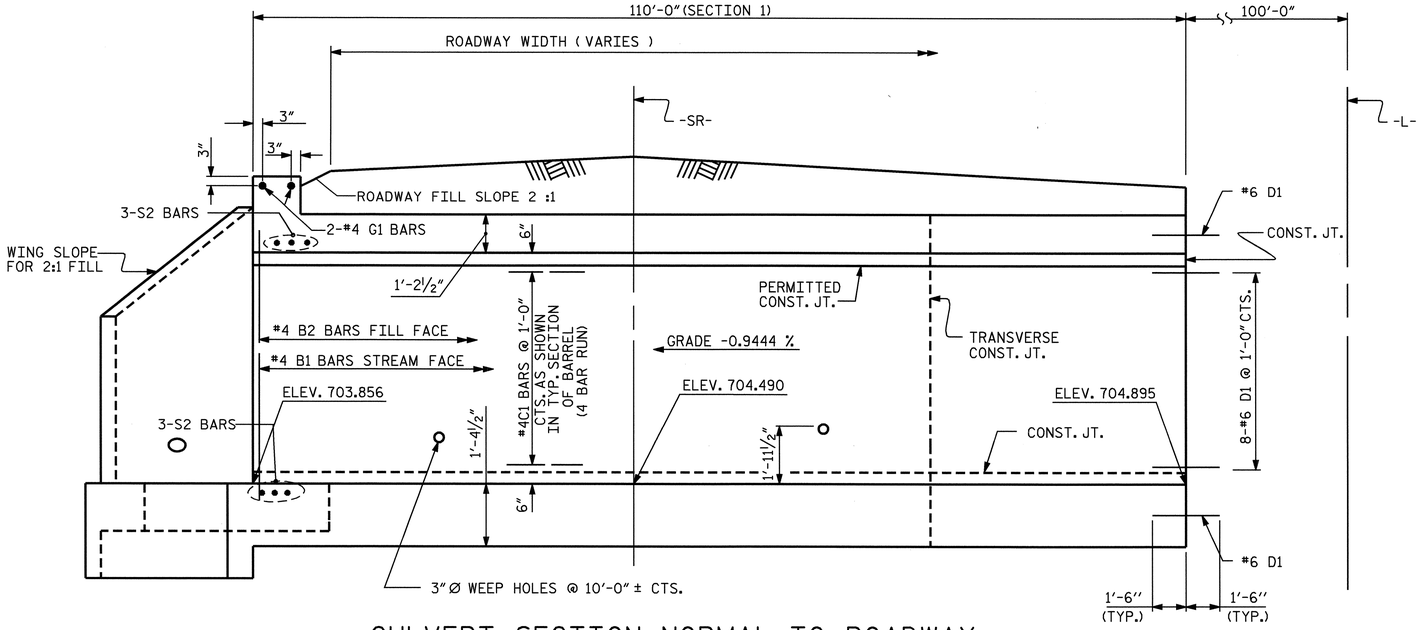

CULVERT SECTION NORMAL TO ROADWAY

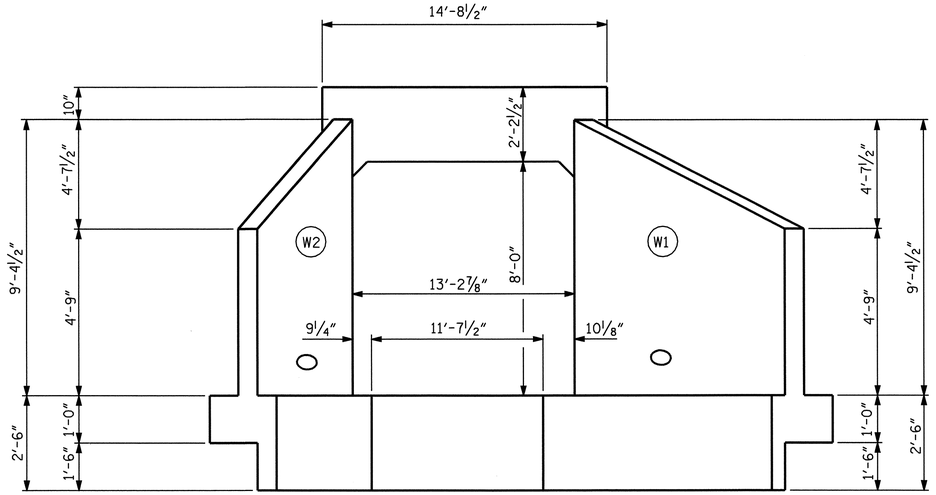

END ELEVATION NORMAL TO SKEW

(OUTLET END ONLY)

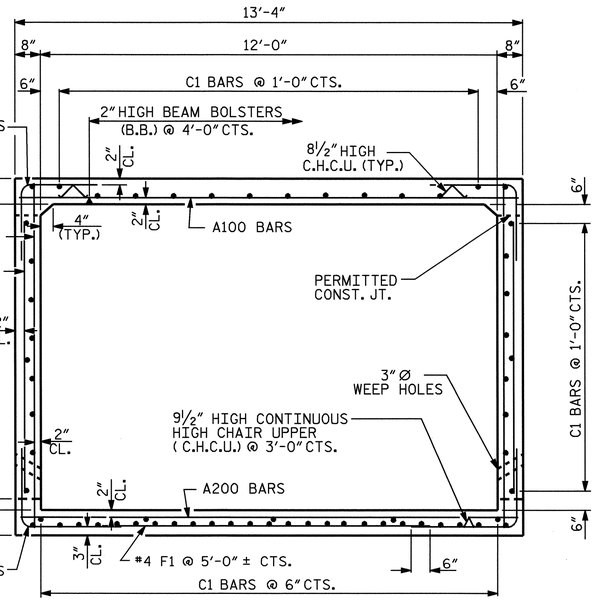

RIGHT ANGLE SECTION OF BARREL

THERE ARE 62 "C" BARS IN SECTION OF BARREL (FOR SECTION 1)

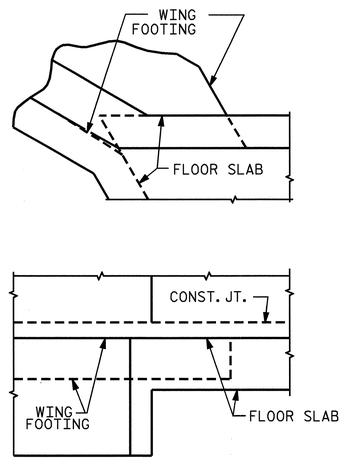

DETAIL

CONNECTION OF WING FOOTING AND FLOOR SLAB WHEN SLAB IS THICKER THAN FOOTING

BILL OF MATERIAL

(FOR SECTION 1)

BAR	NO.	SIZE	TYPE	LENGTH	WEIGHT
A100	214	#8	STR	12′-11″	7380
A101	2	#8	STR	10′-7″	57
A102	2	#8	STR	8′-5″	45
A103	2	#8	STR	6′-3″	33
A104	2	#8	STR	4′-1″	22
A105	2	#8	STR	2′-0″	11
A200	214	#8	STR	12′-11″	7380
A201	2	#8	STR	10′-7″	57
A202	2	#8	STR	8′-5″	45
A203	2	#8	STR	6′-3″	33
A204	2	#8	STR	4′-1″	22
A205	2	#8	STR	2′-0″	11
A1	406	#6	1	6′-1″	3710
A2	406	#6	1	6′-2″	3761
B1	312	#4	STR	10′-1″	2102
B2	406	#4	STR	7′-4″	1989
C1	248	#4	STR	29-10	4942
G1	2	#4	STR	14′-4″	19
S2	6	#8	STR	14′-4″	230
F1	22	#4	STR	9′-3″	136
D1	40	#6	STR	3′-0″	180

REINFORCING STEEL = 32165 LBS

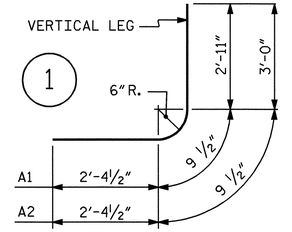

BAR TYPE

DIMENSIONS ARE OUT TO OUT

SPLICE LENGTHS CHART		
BARS	SIZE	SPLICE LENGTH
B1	#4	1′-9″
C1	#4	1′-11″

PROJECT NO. R-2606A

RANDOLPH COUNTY

STATION: 45+99.00-L-POC

SHEET 3 OF 8

STATE OF NORTH CAROLINA
DEPARTMENT OF TRANSPORTATION
RALEIGH

BARREL STANDARD

SINGLE 12 FT. X 8 FT. CONCRETE BOX CULVERT

(FOR SECTION 1)

NORTH CAROLINA PROFESSIONAL SEAL 19645 ENGINEER P. KOREY NEWTON

5/18/2006

REVISIONS						SHEET NO.
NO.	BY:	DATE:	NO.	BY:	DATE:	C-10
1			3			TOTAL SHEETS
2			4			21

ASSEMBLED BY : J. G. KHARVA DATE : 12/22/04
CHECKED BY : P. K. NEWTON DATE : 02/15/05

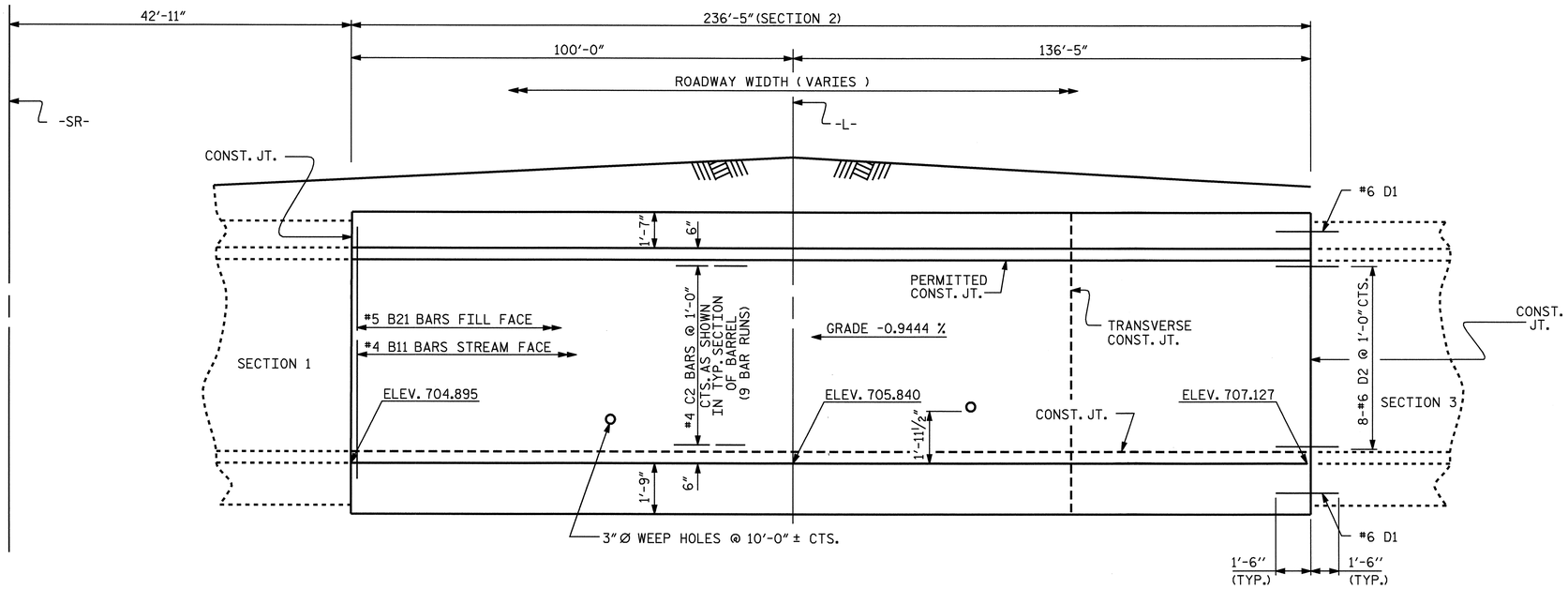

CULVERT SECTION NORMAL TO ROADWAY

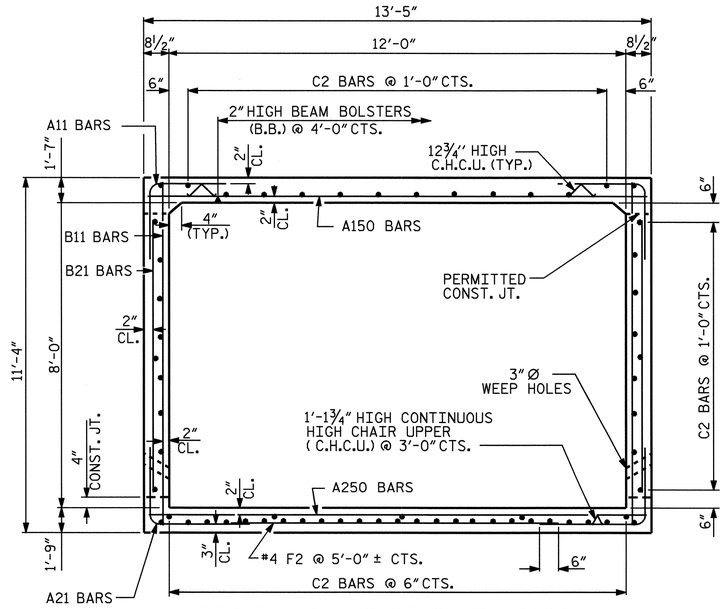

RIGHT ANGLE SECTION OF BARREL

THERE ARE 62 "C" BARS IN SECTION OF BARREL (FOR SECTION 2)

NOTES

D1 BAR BETWEEN SECTION 1 AND SECTION 2 ARE DETAILED IN SECTION 1.

D1 BARS BETWEEN SECTION 2 AND SECTION 3 ARE TO MATCH "C" BARS IN SECTION 3.

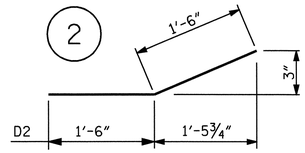

BILL OF MATERIAL
(FOR SECTION 2)

BAR	NO.	SIZE	TYPE	LENGTH	WEIGHT
A150	437	#9	STR	13'-0"	19315
A250	405	#9	STR	13'-0"	17901
A11	874	#6	1	8'-4"	10940
A21	874	#6	1	6'-7"	8642
B11	568	#4	STR	10'-10"	4110
B21	874	#5	STR	7'-4"	6685
C2	558	#4	STR	28'-1"	10468
F2	48	#4	STR	9'-4"	299
D1	24	#6	STR	3'-0"	108
D2	16	#6	2	3'-0"	72
REINFORCING STEEL = 78540 LBS					

SPLICE LENGTHS CHART

BARS	SIZE	SPLICE LENGTH
B11	#4	1'-9"
C2	#4	1'-11"

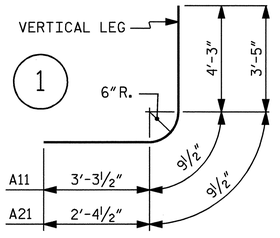

BAR TYPE
DIMENSIONS ARE OUT TO OUT

PROJECT NO. R-2606A

RANDOLPH COUNTY

STATION: 45+99.00-L-POC

SHEET 4 OF 8

STATE OF NORTH CAROLINA
DEPARTMENT OF TRANSPORTATION
RALEIGH

BARREL STANDARD

SINGLE 12 FT. X 8 FT. CONCRETE BOX CULVERT
(FOR SECTION 2)

NORTH CAROLINA PROFESSIONAL SEAL 22648 ENGINEER P. KOREY NEWTON

5/18/2006

REVISIONS						SHEET NO.
NO.	BY:	DATE:	NO.	BY:	DATE:	C-11
1			3			TOTAL SHEETS
2			4			24

DRAWN BY : J. G. KHARVA DATE : 12/22/04
CHECKED BY : P. K. NEWTON DATE : 02/15/05

18-MAY-2006 12:00
R:\STRUCT01\FINALP01\R2606A01.DGN
tclelland

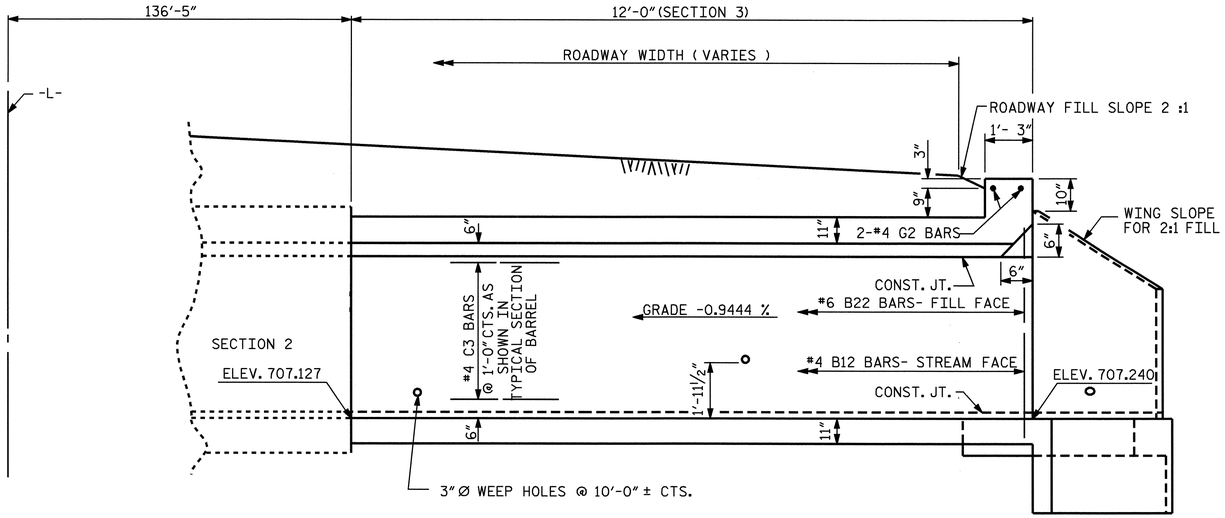

CULVERT SECTION NORMAL TO ROADWAY

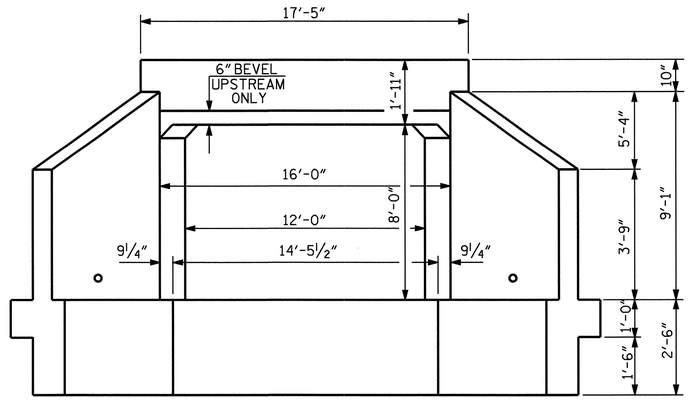

END ELEVATION NORMAL TO SKEW

(INLET END ONLY)

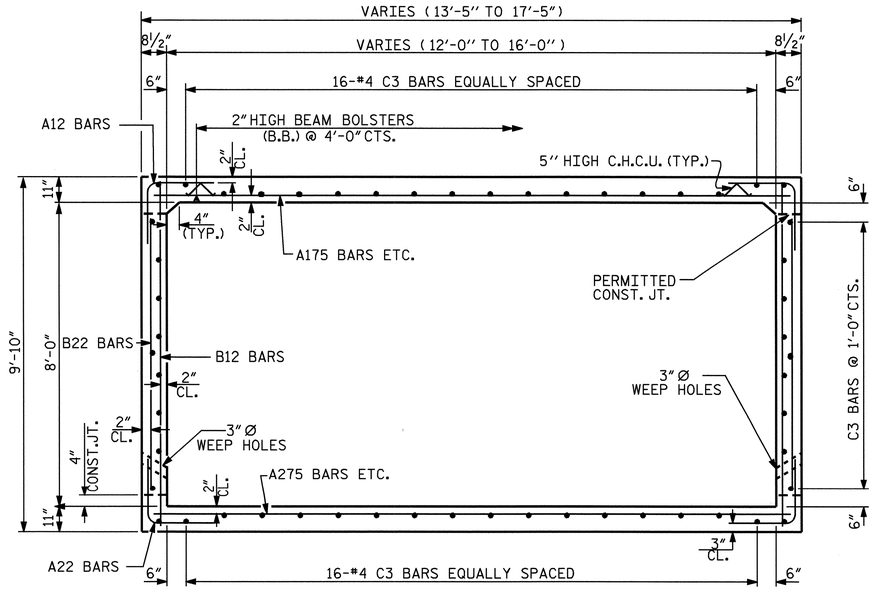

RIGHT ANGLE SECTION OF BARREL

THERE ARE 54 "C" BARS IN SECTION OF BARREL (FOR SECTION 3)

BILL OF MATERIAL

(FOR SECTION 3)

BAR	NO.	SIZE	TYPE	LENGTH	WEIGHT
A175	2	#8	STR	13'-0"	69
A176	2	#8	STR	13'-5"	72
A177	2	#8	STR	13'-10"	74
A178	2	#8	STR	14'-2"	76
A179	2	#8	STR	14'-7"	78
A180	2	#8	STR	14'-11"	80
A181	2	#8	STR	15'-3"	81
A182	2	#8	STR	15'-8"	84
A183	2	#8	STR	16'-0"	85
A184	2	#8	STR	16'-4"	87
A185	2	#8	STR	16'-9"	89
A275	2	#8	STR	13'-0"	69
A276	2	#8	STR	13'-5"	72
A277	2	#8	STR	13'-10"	74
A278	2	#8	STR	14'-2"	76
A279	2	#8	STR	14'-7"	78
A280	2	#8	STR	14'-11"	80
A281	2	#8	STR	15'-3"	81
A282	2	#8	STR	15'-8"	84
A283	2	#8	STR	16'-0"	85
A284	2	#8	STR	16'-4"	87
A285	2	#8	STR	16'-9"	89
A12	44	#6	1	5'-11"	391
A22	44	#6	1	5'-10"	386
B12	44	#4	STR	9'-4"	274
B22	44	#4	STR	7'-4"	216
C3	54	#4	STR	11'-8"	421
G2	2	#4	STR	16'-9"	22
REINFORCING STEEL = 3460 LBS					

SPLICE LENGTHS CHART

BARS	SIZE	SPLICE LENGTH
B12	#4	1'-9"
C3	#4	1'-11"

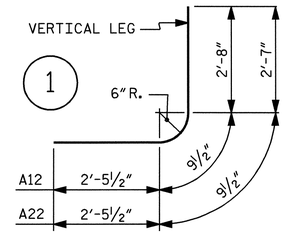

BAR TYPE

DIMENSIONS ARE OUT TO OUT

PROJECT NO. R-2606A

RANDOLPH COUNTY

STATION: 45+99.00 -L- POC

SHEET 5 OF 8

STATE OF NORTH CAROLINA
DEPARTMENT OF TRANSPORTATION
RALEIGH

TAPERED INLET
SINGLE 12 FT. X 8 FT.
CONCRETE BOX CULVERT
(FOR SECTION 3)

NORTH CAROLINA PROFESSIONAL SEAL 26445 ENGINEER P. KOREY NEWTON

5/18/2006

REVISIONS						SHEET NO.
NO.	BY:	DATE:	NO.	BY:	DATE:	C-12
1			3			TOTAL SHEETS
2			4			24

ASSEMBLED BY : J. G. KHARVA DATE : 12/22/04
CHECKED BY : P. K. NEWTON DATE : 02/15/05

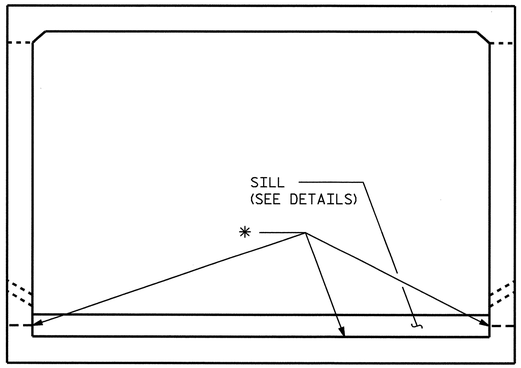

RIGHT ANGLE SECTION THRU BARREL

*2 LAYERS OF 30 LB ROOFING FELT TO PREVENT BOND

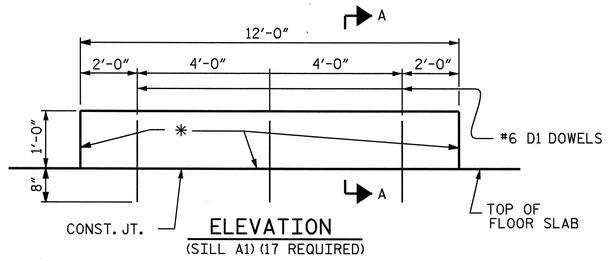

ELEVATION
(SILL A1) (17 REQUIRED)

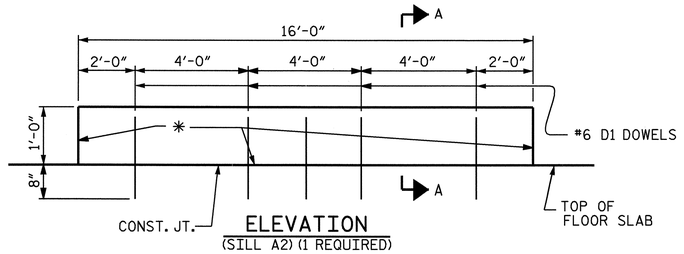

ELEVATION
(SILL A2) (1 REQUIRED)

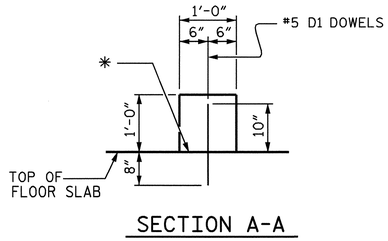

SECTION A-A

SILL DETAILS

NOTES

THE SILLS ARE TO BE CAST SEPARATELY AND ATTACHED TO FLOOR SLAB.

#6 D1 BARS SHALL BE DRILLED AND ADHESIVELY ANCHORED TO THE CULVERT FLOOR SLAB.

PULLOUT TESTS WILL NOT BE REQUIRED FOR #6 D1 BARS.

AT THE CONTRACTOR'S OPTION, THE #6 DOWELS FOR THE SILLS MAY BE PUSHED INTO GREEN CONCRETE AFTER THE SLAB HAS BEEN SCREEDED AND FLOAT FINISHED.

FOR ADHESIVELY ANCHORED ANCHOR BOLTS OR DOWELS, SEE SPECIAL PROVISIONS.

SILL QUANTITIES
(INCLUDED IN TOTAL FOR STRUCTURE)

BAR	NO.	SIZE	TYPE	LENGTH	WEIGHT
D1	55	6	STR	1'-6"	124
TOTAL REINFORCING STEEL				LBS	124
CLASS "A" CONCRETE				C.Y.	8.1

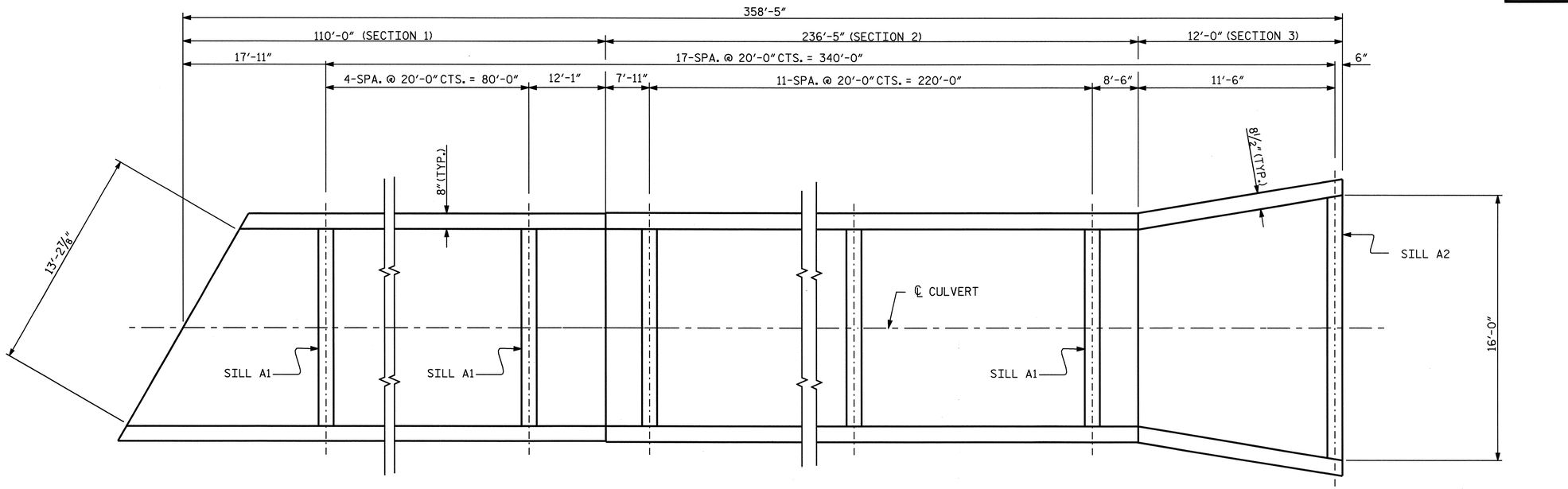

PLAN

NORTH CAROLINA PROFESSIONAL SEAL 25695 ENGINEER P. KOREY NEWTON
5/18/2006

PROJECT NO. R-2606A
RANDOLPH COUNTY
STATION: 45+99.00-L-POC

SHEET 6 OF 8

STATE OF NORTH CAROLINA
DEPARTMENT OF TRANSPORTATION
RALEIGH

DETAILS OF SILLS FOR CONCRETE BOX CULVERT

REVISIONS						SHEET NO.
NO.	BY:	DATE:	NO.	BY:	DATE:	C-13
1			3			TOTAL SHEETS
2			4			21

DRAWN BY : J. G. KHARVA DATE : 05/03/05
CHECKED BY : NEIL RUFFIN DATE : 05/03/05

18-MAY-2006 12:01
R:\STRUCTØ1\FINALPØ1\R2606AØ4.DGN
tclelland

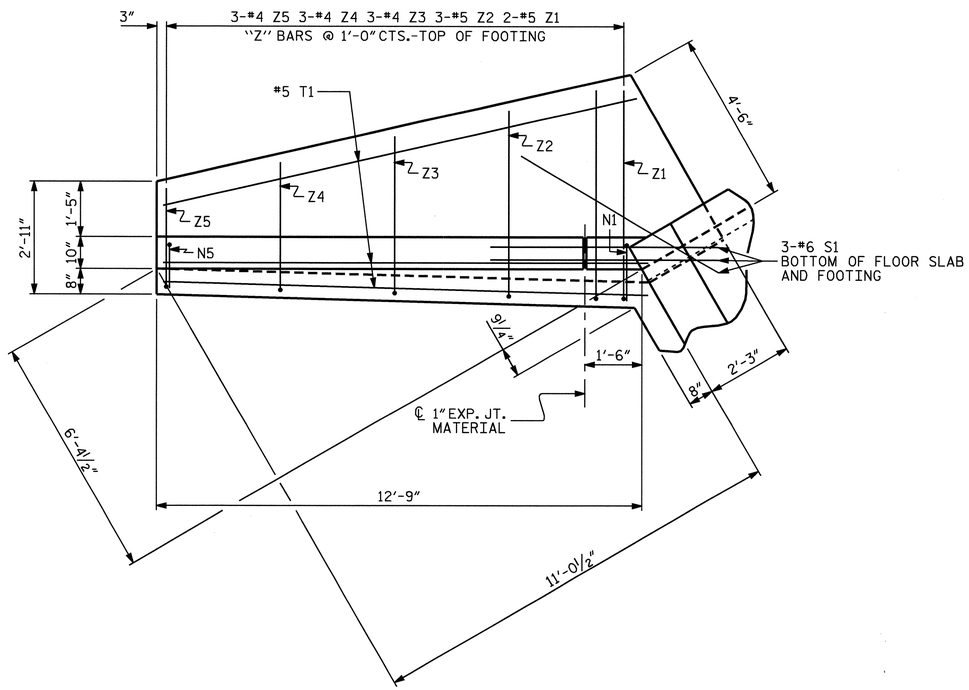

PLAN

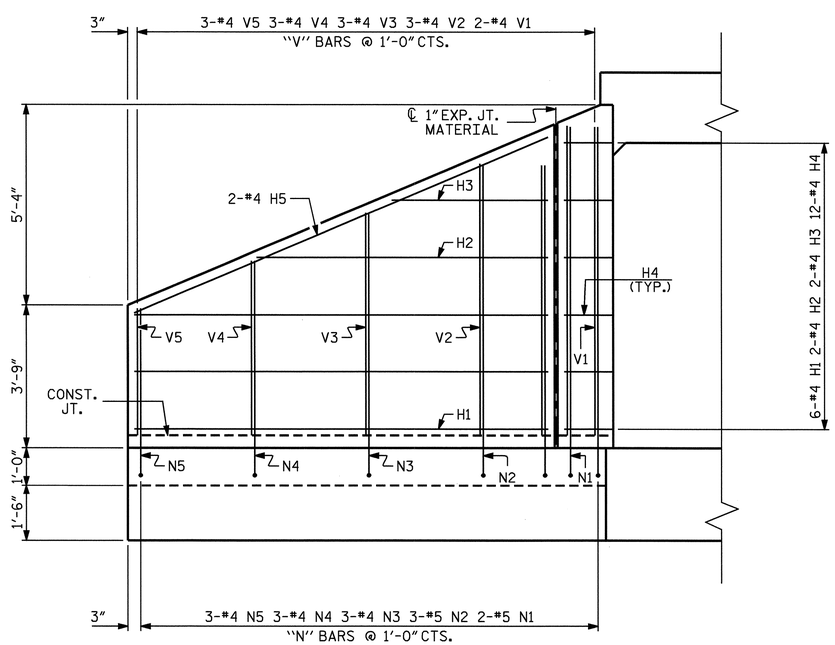

ELEVATION

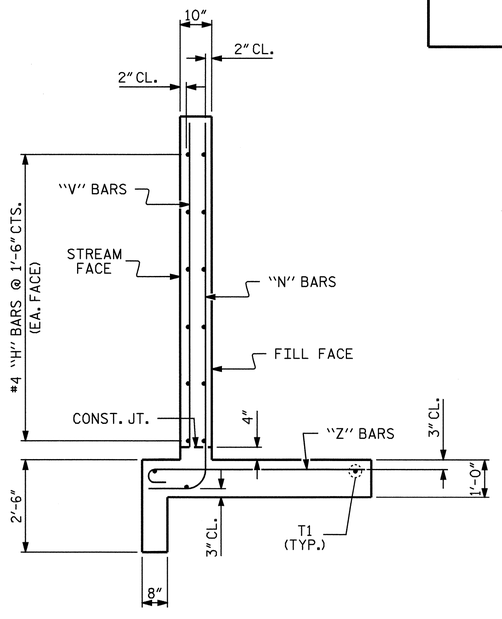

TYPICAL WING SECTION

BAR TYPES

ALL BAR DIMENSIONS ARE OUT TO OUT.

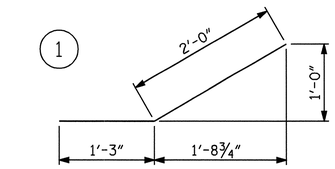

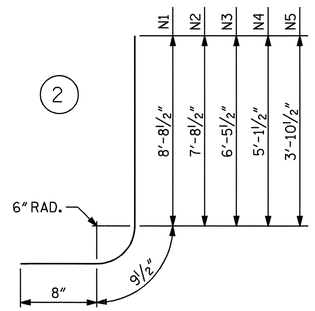

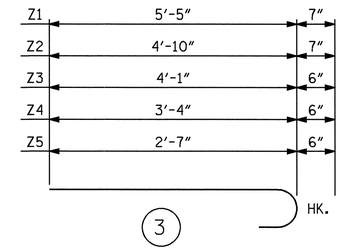

BILL OF MATERIAL

BAR	NO.	SIZE	TYPE	LENGTH	WEIGHT
H1	12	#4	STR	10'-10"	87
H2	4	#4	STR	7'-8"	20
H3	4	#4	STR	4'-1"	11
H4	24	#4	1	3'-3"	52
H5	4	#4	STR	11'-9"	31
N1	4	#5	2	10'-2"	42
N2	6	#5	2	9'-2"	57
N3	6	#4	2	7'-11"	32
N4	6	#4	2	6'-7"	26
N5	6	#4	2	5'-4"	21
S1	6	#6	STR	6'-0"	54
T1	6	#5	STR	12'-9"	80
V1	4	#4	STR	8'-1"	22
V2	6	#4	STR	7'-1"	28
V3	6	#4	STR	5'-10"	23
V4	6	#4	STR	4'-7"	18
V5	6	#4	STR	3'-4"	13
Z1	4	#5	3	6'-0"	25
Z2	6	#5	3	5'-5"	34
Z3	6	#4	3	4'-7"	18
Z4	6	#4	3	3'-10"	15
Z5	6	#4	3	3'-1"	12

REINFORCING STEEL
FOR 2 WINGS 721 LBS

CLASS A CONCRETE
2 WINGS 10.7 CY
1 HEADWALLS 0.8 CY
1 END CURTAIN WALLS 0.9 CY
TOTAL 12.4 CY

ASSEMBLED BY : J. G. KHARVA DATE : 12/22/04
CHECKED BY : P. K. NEWTON DATE : 02/15/05

DRAWN BY : CCJ 10/99
CHECKED BY : RWW 03/00

PROJECT NO. R-2606A
RANDOLPH COUNTY
STATION: 45+99.00-L-POC

SHEET 7 OF 8

STATE OF NORTH CAROLINA
DEPARTMENT OF TRANSPORTATION
RALEIGH

STANDARD WINGS FOR CONCRETE BOX CULVERT

H = 8'-0" SLOPE = 2:1
90° SKEW INLET END

NORTH CAROLINA PROFESSIONAL SEAL 26445 ENGINEER P. KOREY NEWTON
5/18/2006

REVISIONS						SHEET NO.
NO.	BY:	DATE:	NO.	BY:	DATE:	C-14
1			3			TOTAL SHEETS
2			4			24

STD. NO. CW9008

18-MAY-2006 12:01
R:\STRUCT02\FINALP01\R2606A04.DGN
tclelland

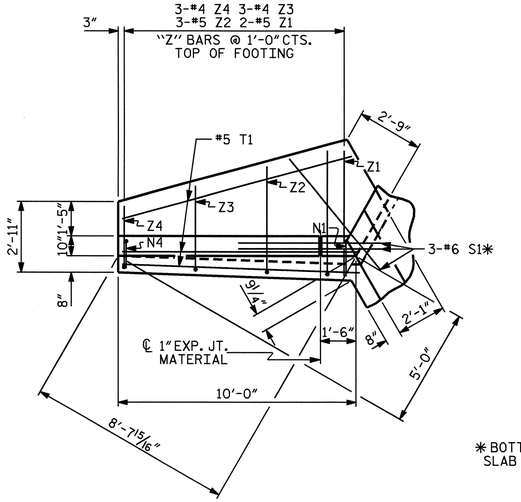

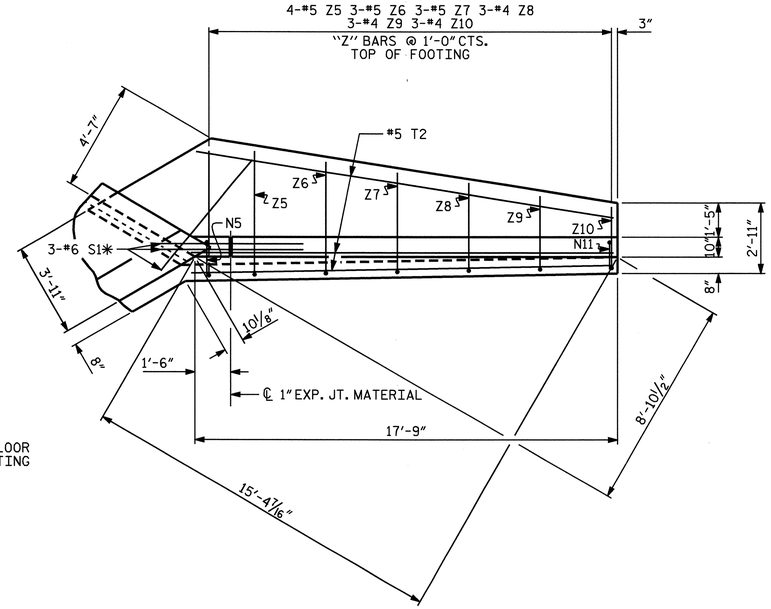

*BOTTOM OF FLOOR SLAB AND FOOTING

PLAN W2

PLAN W1

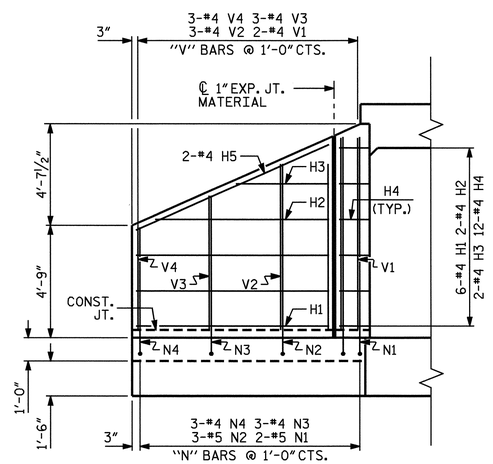

ELEVATION W2

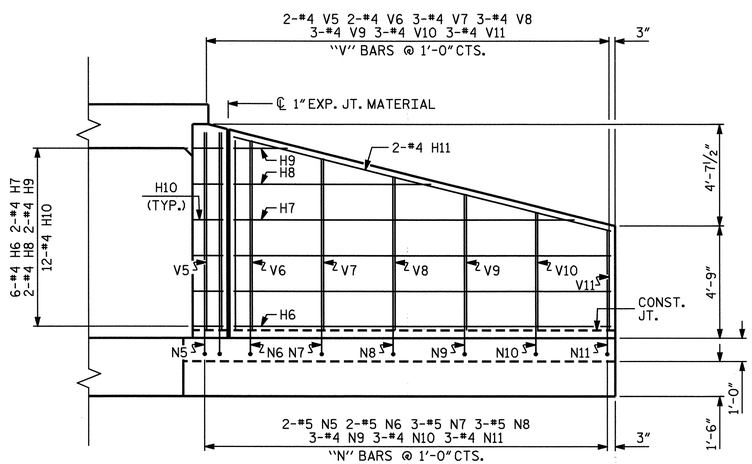

ELEVATION W1

BAR TYPES

ALL BAR DIMENSIONS ARE OUT TO OUT.

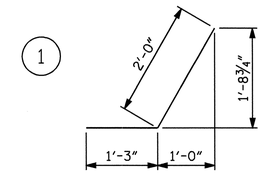

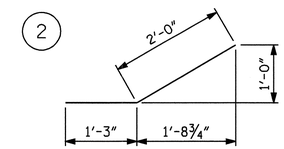

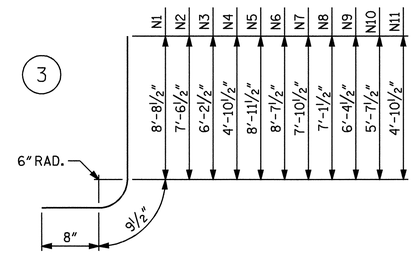

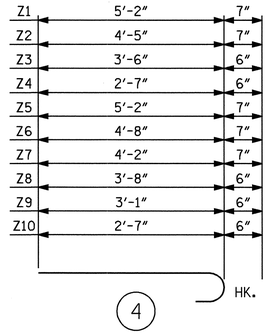

BILL OF MATERIAL

BAR	NO.	SIZE	TYPE	LENGTH	WEIGHT
H1	6	#4	STR	8'-1"	32
H2	2	#4	STR	7'-3"	10
H3	2	#4	STR	3'-11"	5
H4	12	#4	1	3'-3"	26
H5	2	#4	STR	8'-10"	12
H6	6	#4	STR	15'-10"	63
H7	2	#4	STR	14'-4"	19
H8	2	#4	STR	8'-3"	11
H9	2	#4	STR	2'-3"	3
H10	12	#4	2	3'-3"	26
H11	2	#4	STR	16'-4"	22
N1	2	#5	3	10'-2"	21
N2	3	#5	3	9'-0"	28
N3	3	#4	3	7'-8"	15
N4	3	#4	3	6'-4"	13
N5	2	#5	3	10'-5"	22
N6	2	#5	3	10'-1"	21
N7	3	#5	3	9'-4"	29
N8	3	#5	3	8'-7"	27
N9	3	#4	3	7'-10"	16
N10	3	#4	3	7'-1"	14
N11	3	#4	3	6'-4"	13
S1	6	#6	STR	6'-0"	54
T1	3	#5	STR	10'-0"	31
T2	3	#5	STR	17'-9"	55
V1	2	#4	STR	8'-1"	11
V2	3	#4	STR	7'-0"	14
V3	3	#4	STR	5'-8"	11
V4	3	#4	STR	4'-4"	9
V5	2	#4	STR	8'-4"	11
V6	2	#4	STR	8'-0"	11
V7	3	#4	STR	7'-3"	15
V8	3	#4	STR	6'-6"	13
V9	3	#4	STR	5'-9"	12
V10	3	#4	STR	5'-0"	10
V11	3	#4	STR	4'-3"	9
Z1	2	#5	4	5'-9"	12
Z2	3	#5	4	5'-0"	16
Z3	3	#4	4	4'-0"	8
Z4	3	#4	4	3'-1"	6
Z5	4	#5	4	5'-9"	24
Z6	3	#5	4	5'-3"	16
Z7	3	#5	4	4'-9"	15
Z8	3	#4	4	4'-2"	8
Z9	3	#4	4	3'-7"	7
Z10	3	#4	4	3'-1"	6

REINFORCING STEEL FOR 2 WINGS 832 LBS

CLASS A CONCRETE

2 WINGS	12.2 CY
1 HEADWALLS	0.7 CY
1 END CURTAIN WALLS	0.8 CY
TOTAL	13.7 CY

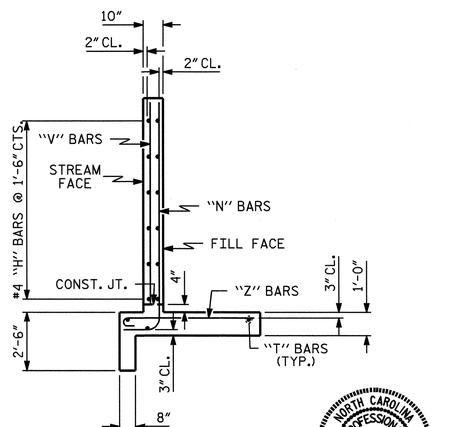

TYPICAL WING SECTION

NORTH CAROLINA PROFESSIONAL SEAL 26445 ENGINEER P. KOREY NEWTON
5/18/2006

PROJECT NO. R-2606A
RANDOLPH COUNTY
STATION: 45+99.00-L-POC

SHEET 8 OF 8

STATE OF NORTH CAROLINA
DEPARTMENT OF TRANSPORTATION
RALEIGH

STANDARD WINGS FOR CONCRETE BOX CULVERT

H = 8'-0" SLOPE = 2:1
65° SKEW OUTLET END

REVISIONS						SHEET NO.
NO.	BY:	DATE:	NO.	BY:	DATE:	C-15
1			3			TOTAL SHEETS
2			4			21

ASSEMBLED BY : J. G. KHARVA DATE : 12/22/04
CHECKED BY : P. K. NEWTON DATE : 02/15/05

BM #5: RR SPIKE IN BASE OF 8" OAK, EL. 746.09 (SEE -L-)

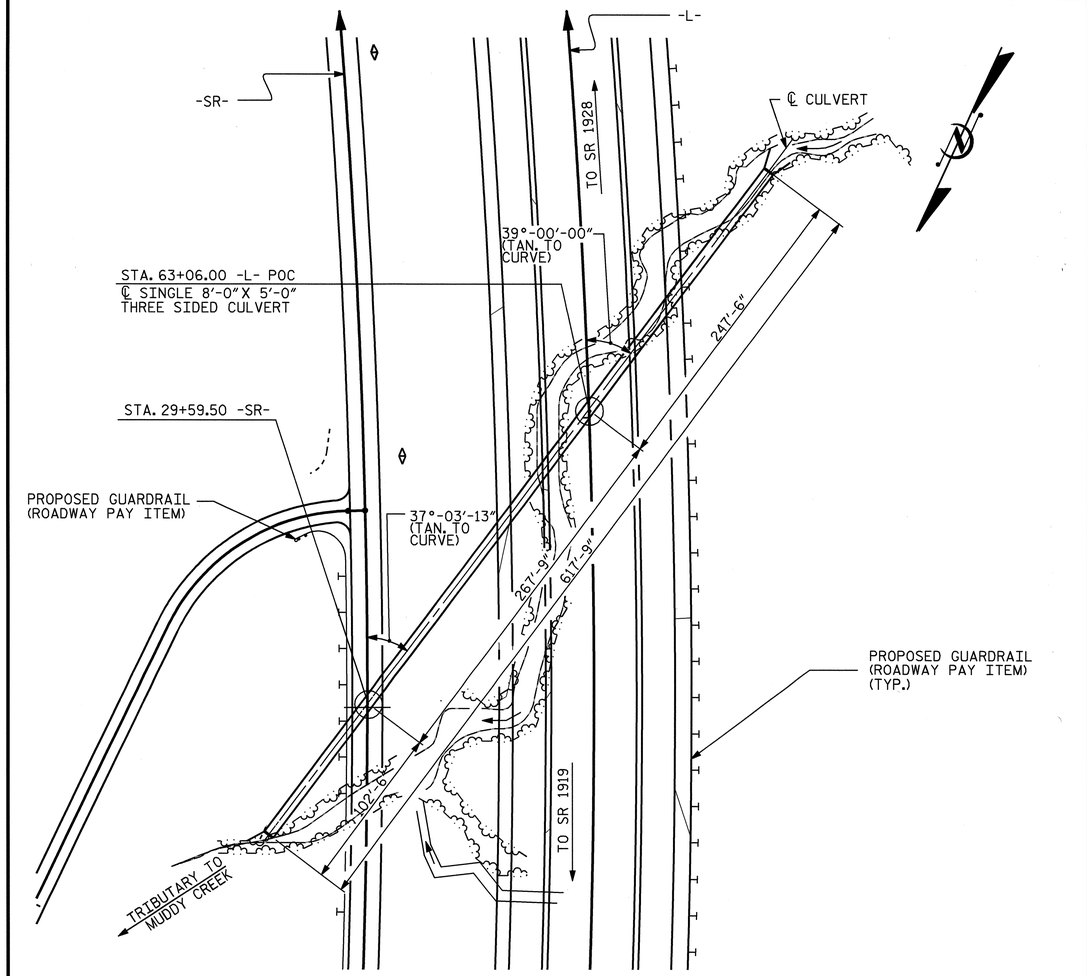

FOR UTILITY INFORMATION, SEE UTILITY PLANS AND SPECIAL PROVISIONS.

LOCATION SKETCH

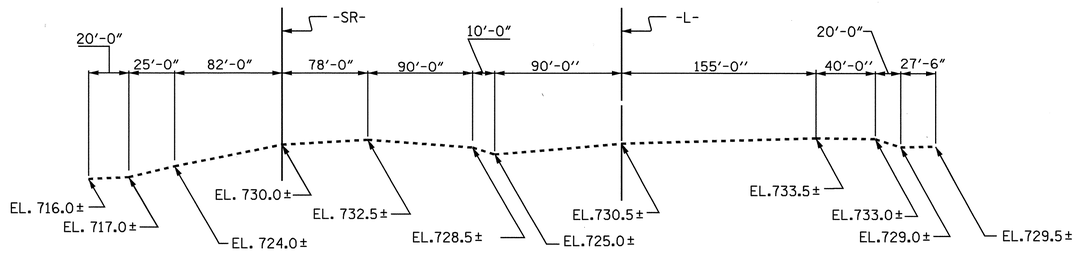

PROFILE ALONG ℄ CULVERT

DRAWN BY : J. G. KHARVA DATE : 11/30/04
CHECKED BY : P. K. NEWTON DATE : 02/15/05

GRADE DATA

-L- EL. @ STA. 63+06.00 -L-	= 764.468
TOP OF FTG. EL. @ STA. 63+06.00 -L-	= 724.636
ROADWAY SLOPES	= 2:1

HYDRAULIC DATA

DESIGN DISCHARGE	= 210 c.f.s.
FREQUENCY OF DESIGN FLOOD	= 50 yr.
DESIGN HIGH WATER ELEVATION	= 733.4
DRAINAGE AREA	= 0.20 sq. mi.
BASIC DISCHARGE (Q100)	= 250 c.f.s.
BASIC HIGH WATER ELEVATION	= 734.0

OVERTOPPING DATA

OVERTOPPING DISCHARGE	= 970 c.f.s.
FREQUENCY OF OVERTOPPING FLOOD	= 500 yr.+
OVERTOPPING FLOOD	= 760.0

TOTAL STRUCTURE QUANTITIES

PRECAST REINFORCED CONCRETE THREE-SIDED CULVERT ..... LUMP SUM	
CLASS A CONCRETE	285 C.Y.

NOTES

ASSUMED LIVE LOAD ----------HS20-44 OR ALTERNATE LOADING.

DESIGN FILL 38.45 FT.

FOR OTHER DESIGN DATA AND NOTES, SEE STANDARD NOTE SHEET.

THE RESIDENT ENGINEER SHALL CHECK THE LENGTH OF CULVERT BEFORE STAKING IT OUT TO MAKE CERTAIN THAT IT WILL PROPERLY TAKE CARE OF THE FILL.

FOR SUBMITTAL OF WORKING DRAWINGS, SEE SPECIAL PROVISIONS.

THE REQUIRED BEARING CAPACITY OF THE SPREAD FOOTINGS IS 4 TSF. THE REQUIRED BEARING CAPACITY SHALL BE VERIFIED.

FOOTINGS SHALL BE KEYED A MINIMUM OF 12" INTO HARD ROCK.

THE BOTTOM OF FOOTING ELEVATION MAY BE LOWERED IN ORDER TO SATISFY BEARING CAPACITY AND MINIMUM ROCK EMBEDMENT REQUIREMENTS.

TO PROVIDE PROTECTION FROM POSSIBLE SCOUR, THE FOOTINGS SHALL NOT BE CONSTRUCTED AT AN ELEVATION HIGHER THAN SHOWN ON THE PLANS.

FOR BLASTING ADJACENT TO HIGHWAY STRUCTURES, SEE STANDARD SPECIFICATIONS ARTICLE 410-12.

FOR PRECAST REINFORCED CONCRETE THREE-SIDED CULVERT, SEE SPECIAL PROVISIONS.

FOR FALSEWORK AND FORMWORK, SEE SPECIAL PROVISIONS.

THE CONTRACTOR SHALL PROVIDE INDEPENDENT ASSURANCE SAMPLES OF REINFORCING STEEL AS FOLLOWS: FOR PROJECTS REQUIRING UP TO 400 TONS OF REINFORCING STEEL, ONE 30 INCH SAMPLE OF EACH SIZE BAR USED, AND FOR PROJECTS REQUIRING OVER 400 TONS OF REINFORCING STEEL, TWO 30 INCH SAMPLES OF EACH SIZE BAR USED. THE BARS FROM WHICH THE SAMPLES ARE TAKEN MUST THEN BE SPLICED WITH REPLACMENT BARS OF THE SIZE AND LENGTH OF THE SAMPLE, PLUS A MINIMUM LAP SPLICE OF THIRTY BAR DIAMETERS.

FOR CULVERT DIVERSION DETAILS AND PAY ITEM, SEE EROSION CONTROL PLANS.

NO PRECAST WING OR HEADWALL OPTION WILL BE ALLOWED.

FOR CRANE SAFETY, SEE SPECIAL PROVISIONS.

AT THE CONTRACTOR'S OPTION, HE MAY SUBMIT TO THE ENGINEER FOR APPROVAL, DESIGN AND DETAIL DRAWINGS FOR A CAST-IN-PLACE REINFORCED BOX CULVERT IN LIEU OF THE PRECAST CULVERT SHOWN ON THE PLANS AT NO ADDITIONAL COST TO THE DEPARTMENT. THE DESIGN SHALL PROVIDE THE SAME SECTION, SIZE AND NUMBER OF BARRELS AS USED ON THE PRECAST DESIGN. THE CONTACT REQUIREMENTS WITH RESPECT TO CONSTRUCTION STAGING AND TIME SHALL BE SATISFIED REGARDLESS OF WHETHER A PRECAST OR CAST-IN-PLACE CULVERT IS CONSTRUCTED.

F.A. PROJECT NO. NHF-311(18)

NORTH CAROLINA PROFESSIONAL SEAL 11915 ENGINEER JOHN G. KHARVA 5/18/06

NORTH CAROLINA PROFESSIONAL SEAL 11905 ENGINEER WILLIAM A. DAVIS 5/18/06

NORTH CAROLINA PROFESSIONAL SEAL 20668 ENGINEER P. KOREY NEWTON 5/18/2006

PROJECT NO. R-2606A
RANDOLPH COUNTY
STATION: 63+06.00-L-POC

SHEET 1 OF 3

STATE OF NORTH CAROLINA
DEPARTMENT OF TRANSPORTATION
RALEIGH

PRECAST REINFORCED CONCRETE THREE-SIDED CULVERT

REVISIONS						SHEET NO.
NO.	BY:	DATE:	NO.	BY:	DATE:	C-16
1			3			TOTAL SHEETS
2			4			21

NCDOT STR. # 10

R:\STRUCT-1\FINALP-1\R2606A~2.DGN
tclelland

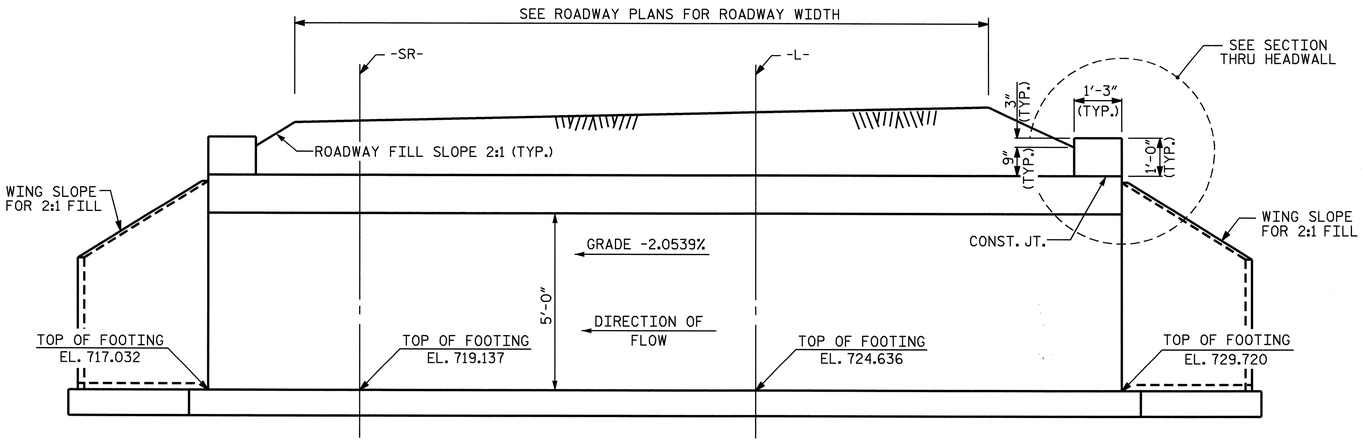

PRECAST CULVERT SECTION NORMAL TO ROADWAY

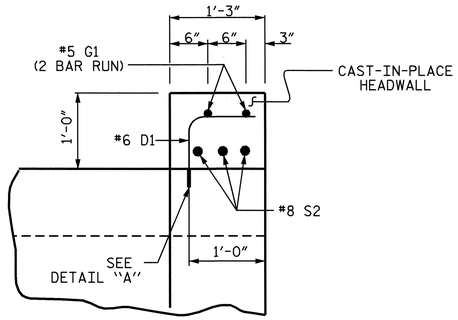

SECTION THRU HEADWALL

BAR SCHEDULE					
BAR	NO.	SIZE	TYPE	LENGTH	WEIGHT
D1	20	6	1	1'-8"	50
G1	4	5	STR	9'-8"	40
S2	6	8	STR	9'-8"	155
TOTAL				LBS.	245

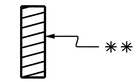

DETAIL A

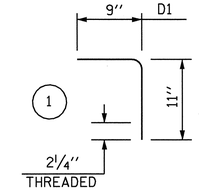

BAR TYPE

** RICHMOND STRUCTURAL CONNECTION INSERTS
¾" TYPE EC-2, 2 STRUT OR EQUAL;
LENGTH = 4 ½", INSERT WIDTH = 2",
DIA. = ¾". NO. REQUIRED 20

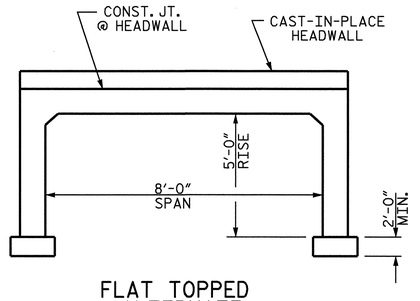

FLAT TOPPED ALTERNATE

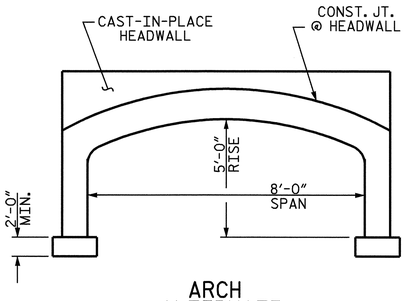

ARCH ALTERNATE

RIGHT ANGLE SECTION OF PRECAST CONCRETE THREE-SIDED CULVERT SECTIONS

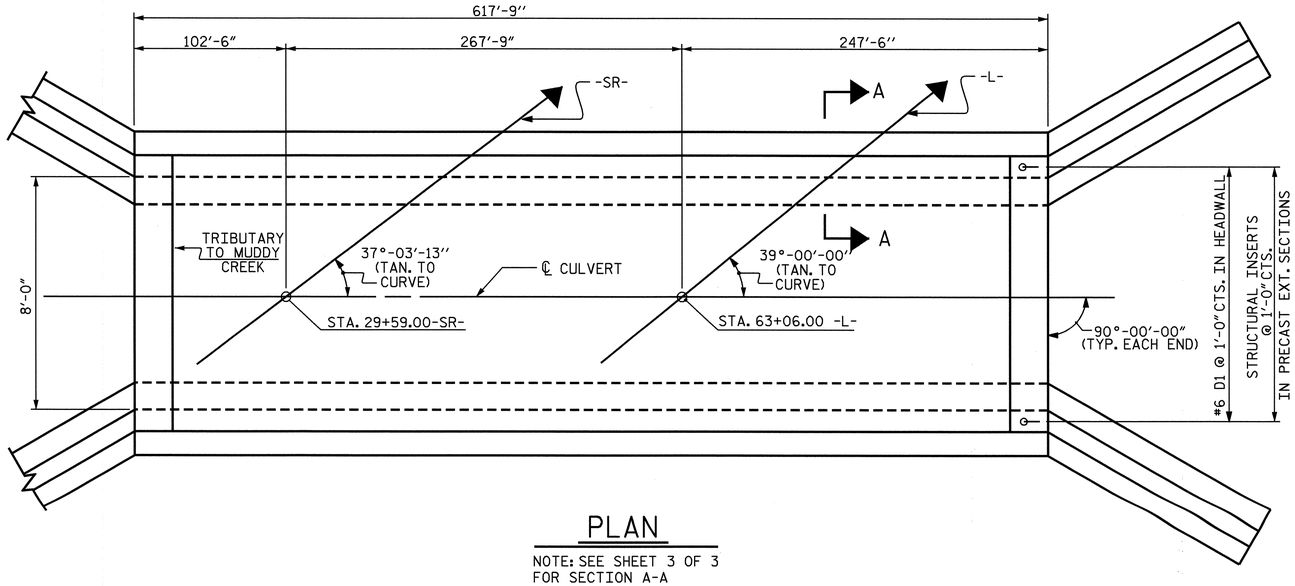

PLAN

NOTE: SEE SHEET 3 OF 3 FOR SECTION A-A

PROJECT NO. R-2606A
RANDOLPH COUNTY
STATION: 63+06.00-L-POC

SHEET 2 OF 3

STATE OF NORTH CAROLINA
DEPARTMENT OF TRANSPORTATION
RALEIGH

PRECAST REINFORCED CONCRETE THREE-SIDED CULVERT

NORTH CAROLINA PROFESSIONAL SEAL 032648 ENGINEER P. KOREY NEWTON
5/18/2006

REVISIONS						SHEET NO.
NO.	BY:	DATE:	NO.	BY:	DATE:	C-17
1			3			TOTAL SHEETS
2			4			21

REVISED 8-28-92 BY E.L.R. CHECKED BY G.R.P.
REVISED 8-22-89 BY A.R.B. CHECKED BY C.R.K.
REDRAWN 8-22-1989
REVISED 11-19-99 BY M.M. CHECKED BY R.W.W.

ASSEMBLED BY : J. G. KHARVA DATE : 11/30/04
CHECKED BY : P. K. NEWTON DATE : 02/15/05

R:\STRUCTØ1\FINALPØ1\R2606AØ2.DGN
tclelland

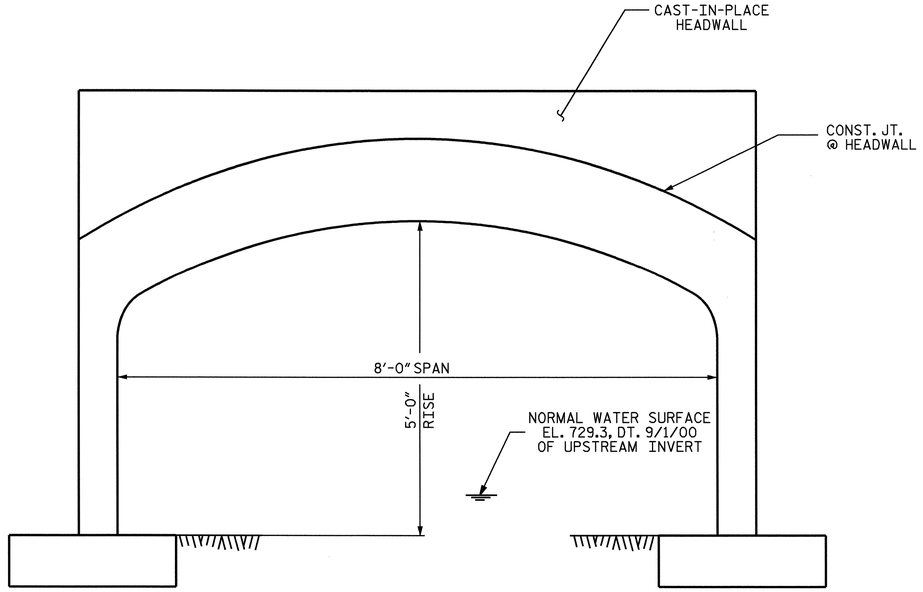

ELEVATION

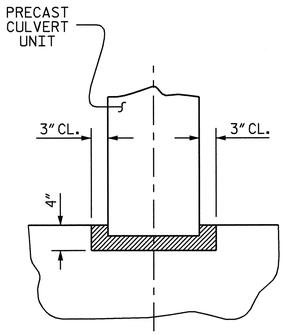

KEYWAY DETAIL

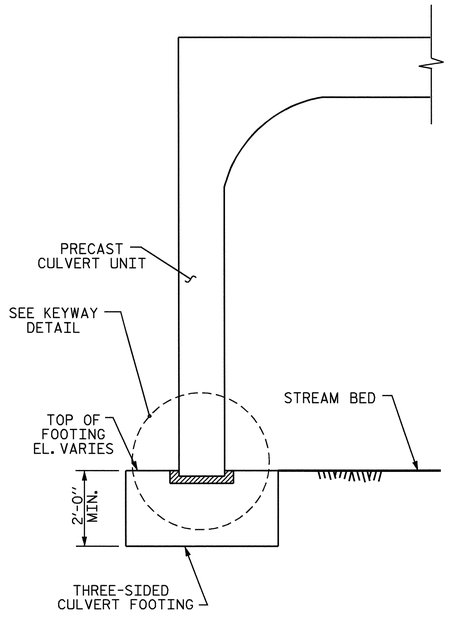

SECTION A-A

FOOTING REINFORCEMENT NOT SHOWN.
CONTRACTOR SHALL PROVIDE REINFORCEMENT DETAIL.

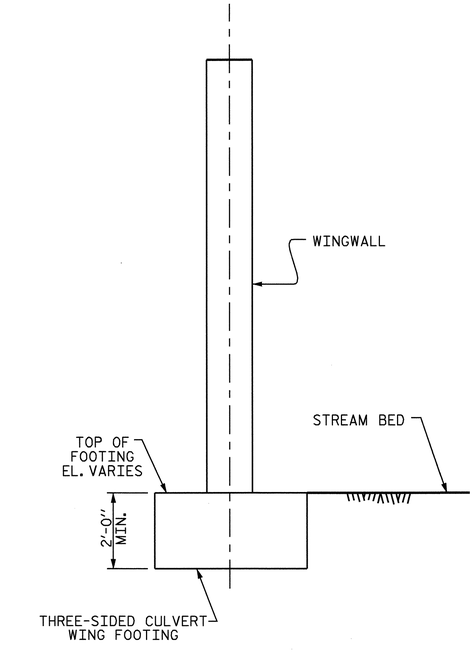

SECTION THRU WING WALL

NORTH CAROLINA PROFESSIONAL SEAL 026448 ENGINEER P. KOREY NEWTON
5/18/2006

DRAWN BY : J. G. KHARVA DATE : 11/30/04
CHECKED BY : P. K. NEWTON DATE : 02/15/05

PROJECT NO. R-2606A
RANDOLPH COUNTY
STATION: 63+06.00-L-POC

SHEET 3 OF 3

STATE OF NORTH CAROLINA
DEPARTMENT OF TRANSPORTATION
RALEIGH

PRECAST REINFORCED CONCRETE THREE-SIDE CULVERT

REVISIONS						SHEET NO.
NO.	BY:	DATE:	NO.	BY:	DATE:	C-18
1			3			TOTAL SHEETS
2			4			24

10 MAY 2006 12:21
R:\STRUCT~1\FINALP~1\R2606A-3.DGN
tclelland

B.M. TEMP. MSE WALL : RR SPIKE IN BASE OF 15" WILLOW OAK, EL. 753.40 (SEE -Y1-)

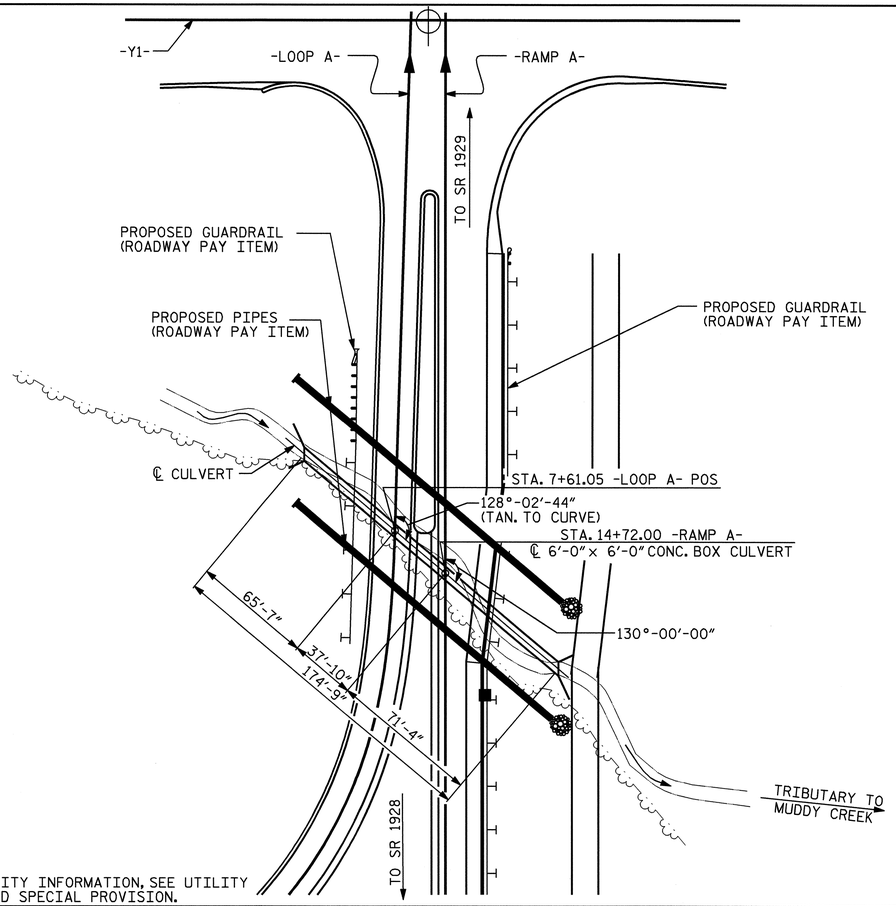

NOTE: FOR UTILITY INFORMATION, SEE UTILITY PLANS AND SPECIAL PROVISION.

GRADE DATA

ROADWAY SLOPE	= 2:1
GRADE PT. EL. @ STA. 14+72.00 -RAMP A-	= 763.540
BED EL. @ STA. 14+72.00 -RAMP A-	= 742.804

HYDRAULIC DATA

DESIGN DISCHARGE	= 280 C.F.S.
FREQUENCY OF DESIGN FLOOD	= 50 YRS.
DESIGN HIGH WATER ELEVATION	= 749.9
DRAINAGE AREA	= 0.181 Sq. Mi.
BASIC DISCHARGE (Q100)	= 330 C.F.S.
BASIC HIGH WATER ELEVATION	= 750.3

OVERTOPPING FLOOD DATA

OVERTOPPING DISCHARGE	= 1400 C.F.S.
FREQUENCY OF OVERTOPPING FLOOD	= 500+YRS.
OVERTOPPING FLOOD ELEVATION	= 764.000

LOCATION SKETCH

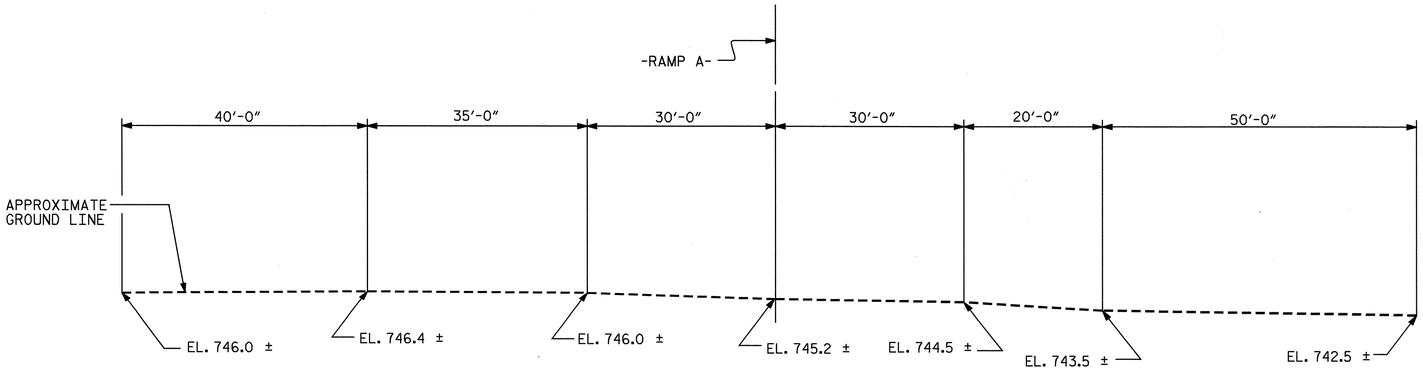

PROFILE ALONG ℄ CULVERT

ASSEMBLED BY : J. G. KHARVA DATE : 11/19/04
CHECKED BY : P. K. NEWTON DATE : 02/15/05

F. A. PROJECT NO. NHF-311(18)

NOTES

ASSUMED LIVE LOAD ----------HS20-44 OR ALTERNATE LOADING.

DESIGN FILL 14.81 FT.

FOR OTHER DESIGN DATA AND NOTES SEE STANDARD NOTE SHEET.

3" Ø WEEP HOLES INDICATED TO BE IN ACCORDANCE WITH THE SPECIFICATIONS.

CONCRETE IN CULVERTS TO BE POURED IN THE FOLLOWING ORDER:

1. WING FOOTINGS AND FLOOR SLAB INCLUDING 4" OF ALL VERTICAL WALLS.
2. THE REMAINING PORTIONS OF THE WALLS AND WINGS FULL HEIGHT FOLLOWED BY ROOF SLAB AND HEADWALLS.

THE RESIDENT ENGINEER SHALL CHECK THE LENGTH OF CULVERT BEFORE STAKING IT OUT TO MAKE CERTAIN THAT IT WILL PROPERLY TAKE CARE OF THE FILL.

DIMENSIONS FOR WING LAYOUT AS WELL AS ADDITIONAL REINFORCING STEEL EMBEDDED IN BARREL ARE SHOWN ON WING SHEET.

TRANSVERSE CONSTRUCTION JOINTS SHALL BE USED IN THE BARREL, SPACED TO LIMIT THE POURS TO A MAXIMUM OF 70 FT. LOCATION OF JOINTS SHALL BE SUBJECT TO APPROVAL OF THE ENGINEER.

AT THE CONTRACTOR'S OPTION, HE MAY SPLICE THE VERTICAL REINFORCING STEEL IN THE INTERIOR FACE OF EXTERIOR WALL ABOVE LOWER WALL CONSTRUCTION JOINT. THE SPLICE LENGTH SHALL BE AS PROVIDED IN THE SPLICE LENGTH CHART SHOWN ON THE PLANS. EXTRA WEIGHT OF STEEL DUE TO THE SPLICES SHALL BE PAID FOR BY THE CONTRACTOR.

THE CONTRACTOR SHALL PROVIDE INDEPENDENT ASSURANCE SAMPLES OF REINFORCING STEEL AS FOLLOWS: FOR PROJECTS REQUIRING UP TO 400 TONS OF REINFORCING STEEL, ONE 30 INCH SAMPLE OF EACH SIZE BAR USED, AND FOR PROJECTS REQUIRING OVER 400 TONS OF REINFORCING STEEL, TWO 30 INCH SAMPLES OF EACH SIZE BAR USED. THE BARS FROM WHICH THE SAMPLES ARE TAKEN MUST THEN BE SPLICED WITH REPLACMENT BARS OF THE SIZE AND LENGTH OF THE SAMPLE, PLUS A MINIMUM LAP SPLICE OF THIRTY BAR DIAMETERS.

THE REINFORCED CONCRETE BOX CULVERT SHALL BE CONSTRUCTED WITH 5" INCHES OF CAMBER TO ACCOUNT FOR ANTICIPATED SETTLEMENT.

FOR CULVERT DIVERSION DETAILS AND PAY ITEM, SEE EROSION CONTROL PLANS.

A 3 FOOT STRIP OF FILTER FABRIC SHALL BE ATTACHED TO THE FILL FACE OF THE WING COVERING THE ENTIRE LENGTH OF THE EXPANSION JOINT.

EXISTING BED MATERIAL WILL BE STOCK PILED ON SITE AND REUSED AS BACK FILL MATERIAL INSIDE THE CULVERT TO BURY THE BOTTOM OF THE CULVERT THE REQUIRED 1'-0".

FOR SUBMITTAL OF WORKING DRAWINGS, SEE SPECIAL PROVISIONS.

FOR FALSEWORK AND FORMWORK, SEE SPECIAL PROVISIONS.

FOR CRANE SAFETY, SEE SPECIAL PROVISIONS.

NO PRECAST REINFORCED BOX CULVERT OPTION WILL BE ALLOWED.

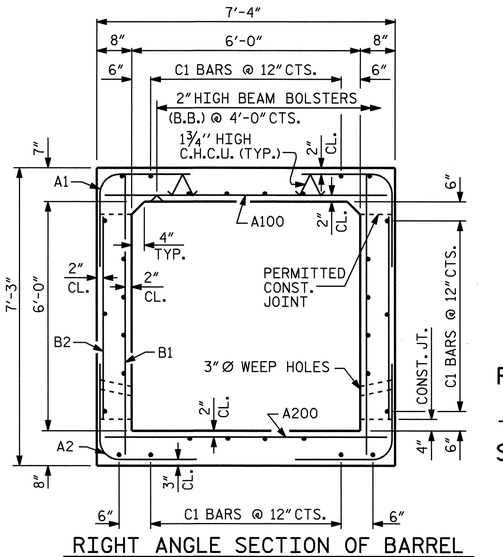

RIGHT ANGLE SECTION OF BARREL
THERE ARE 30 "C" BARS IN SECTION OF BARREL

TOTAL STRUCTURE QUANTITIES	
CLASS A CONCRETE	
BARREL @ 0.640 C.Y./FT.	111.8 C.Y.
WING ETC.	20.4 C.Y.
TOTAL	132.2 C.Y.
REINFORCING STEEL	
BARREL	15391 LBS.
WINGS ETC.	1166 LBS.
TOTAL	16557 LBS.
CULVERT EXCAVATION	LUMP SUM
FOUNDATION COND. MAT'L	90 TONS

PROJECT NO. R-2606A
RANDOLPH COUNTY
STATION: 14+72.00 -RAMP A-

SHEET 1 OF 3

STATE OF NORTH CAROLINA
DEPARTMENT OF TRANSPORTATION
RALEIGH

SINGLE 6 FT. X 6 FT. CONCRETE BOX CULVERT 130° SKEW

REVISIONS						SHEET NO.
NO.	BY:	DATE:	NO.	BY:	DATE:	C-19
1			3			TOTAL SHEETS
2			4			21

STR. # 11

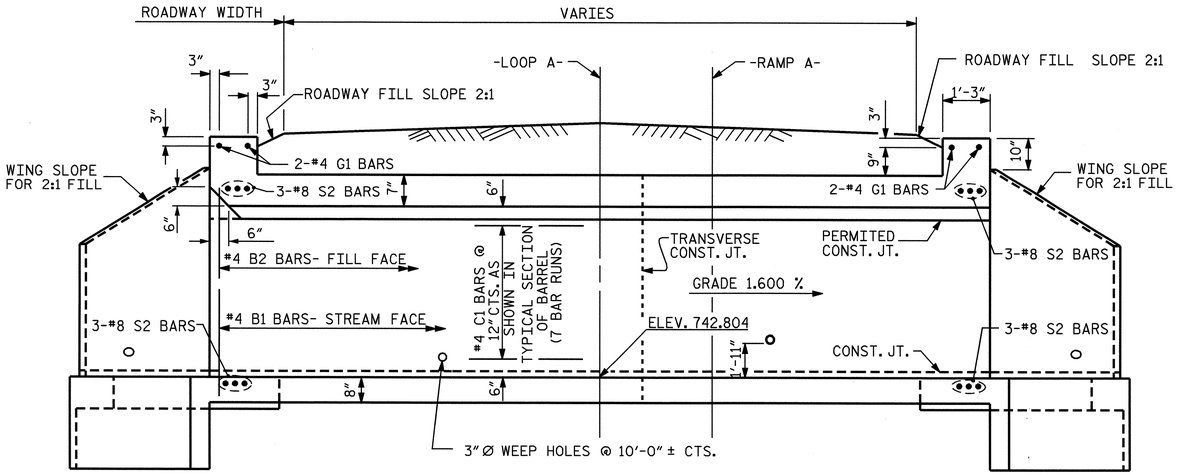

CULVERT SECTION NORMAL TO ROADWAY

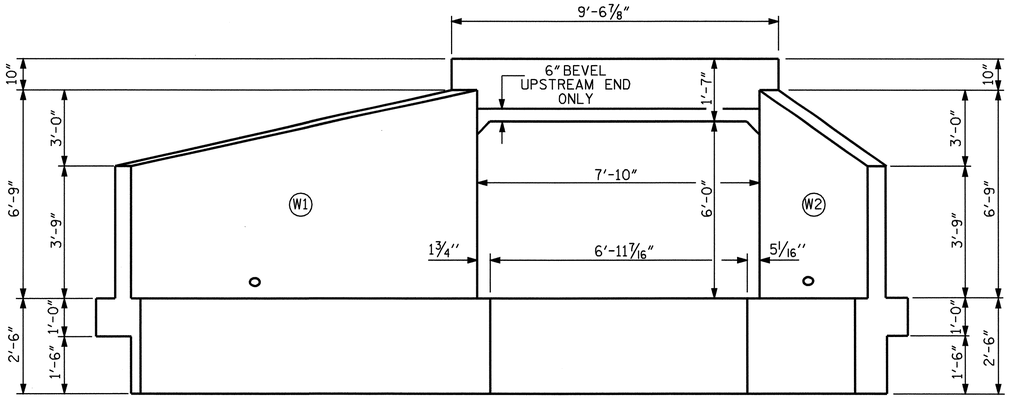

END ELEVATION NORMAL TO SKEW

(LOOKING DOWN STREAM)

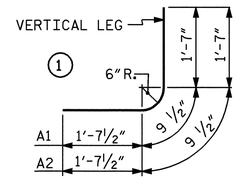

BAR TYPE

DIMENSIONS ARE OUT TO OUT

SPLICE LENGTHS CHART		
BARS	SIZE	SPLICE LENGTH
B1	#4	1'-9"
C1	#4	1'-11"

BILL OF MATERIAL

BAR	NO.	SIZE	TYPE	LENGTH	WEIGHT
A100	270	#5	STR	6'-11"	1948
A101	4	#5	STR	5'- 4"	22
A102	4	#5	STR	3'-10"	16
A103	4	#5	STR	2'- 4"	10
A200	270	#5	STR	6'-11"	1948
A201	4	#5	STR	5'- 4"	22
A202	4	#5	STR	3'-10"	16
A203	4	#5	STR	2'- 4"	10
A1	646	#4	1	4'-0"	1726
A2	646	#4	1	4'-0"	1726
B1	350	#4	STR	6'-9"	1578
B2	646	#4	STR	5'-4"	2301
C1	210	#4	STR	26'-9"	3753
G1	4	#4	STR	9'-1"	24
S2	12	#8	STR	9'-1"	291
REINFORCING STEEL					= 15391 LBS

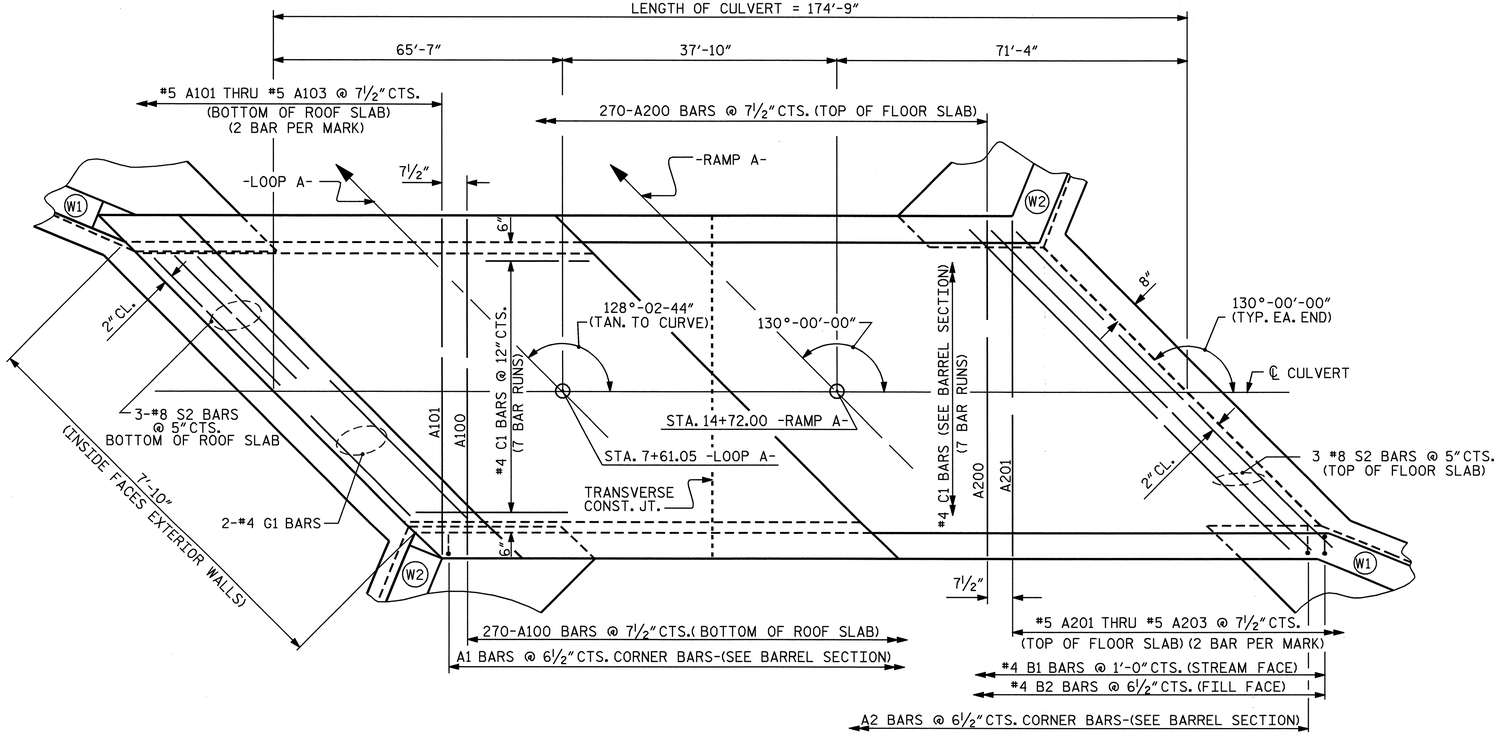

PART PLAN - ROOF SLAB

PART PLAN - FLOOR SLAB

REVISED 8-28-92 BY E.L.R. CHECKED BY G.R.P.
REVISED 8-22-89 BY A.R.B. CHECKED BY C.R.K.
REDRAWN 8-22-89
REVISED 11-19-99 BY M.M. CHECKED BY R.W.W.

ASSEMBLED BY : J. G. KHARVA DATE : 11/19/04
CHECKED BY : P. K. NEWTON DATE : 02/15/05

NORTH CAROLINA PROFESSIONAL SEAL 26448 ENGINEER P. KOREY NEWTON
5/18/2006

PROJECT NO. R-2606A
RANDOLPH COUNTY
STATION: 14+72.00 -RAMP A-

SHEET 2 OF 3

STATE OF NORTH CAROLINA
DEPARTMENT OF TRANSPORTATION
RALEIGH

SINGLE 6 FT. X 6 FT. CONCRETE BOX CULVERT 130° SKEW

REVISIONS						SHEET NO.
NO.	BY:	DATE:	NO.	BY:	DATE:	C-20
1			3			TOTAL SHEETS
2			4			21

STD. NO. CB441

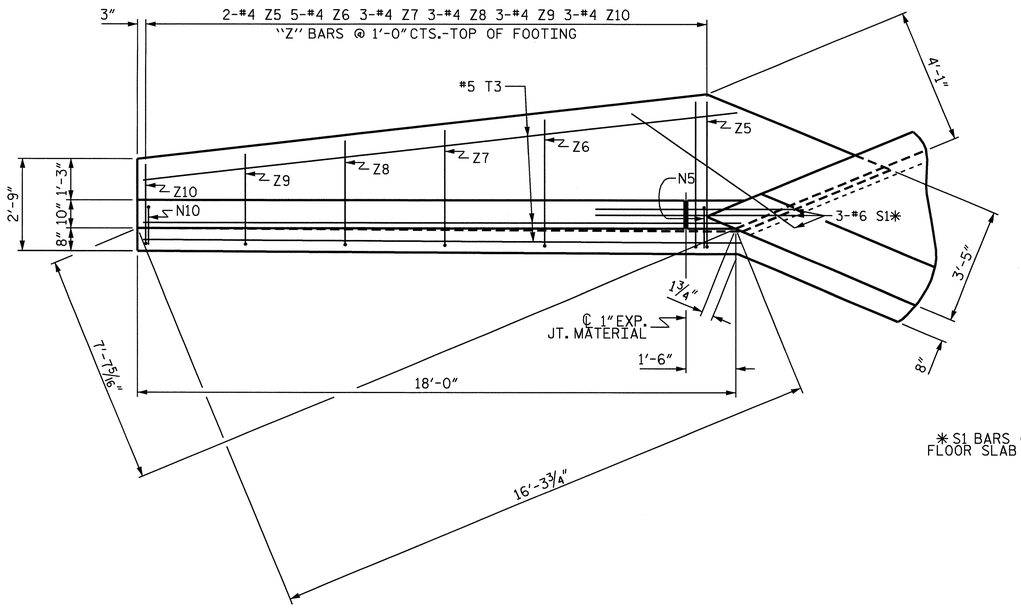

PLAN W1

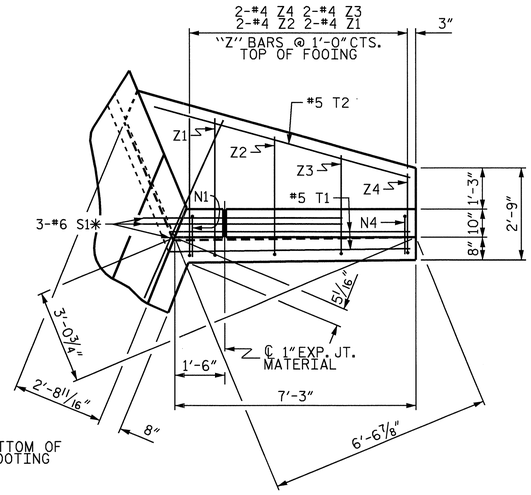

*S1 BARS @ BOTTOM OF FLOOR SLAB & FOOTING

PLAN W2

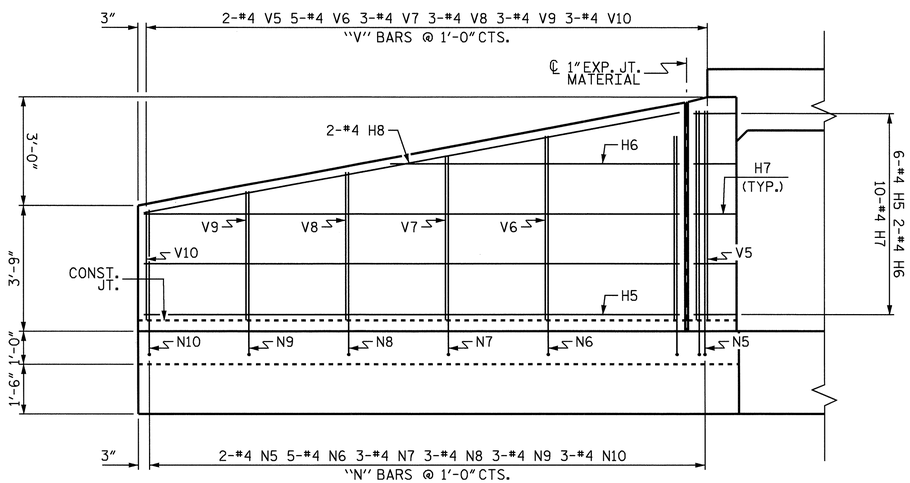

ELEVATION W1

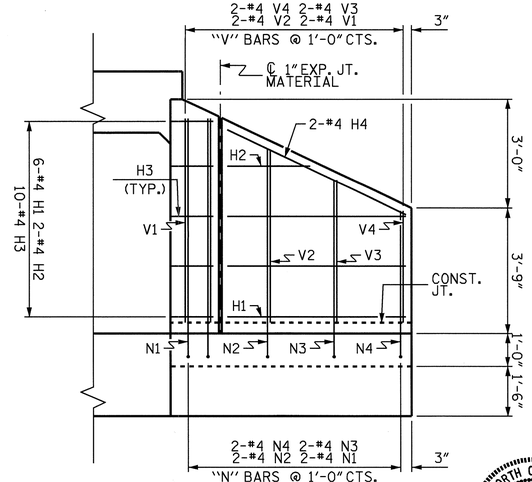

ELEVATION W2

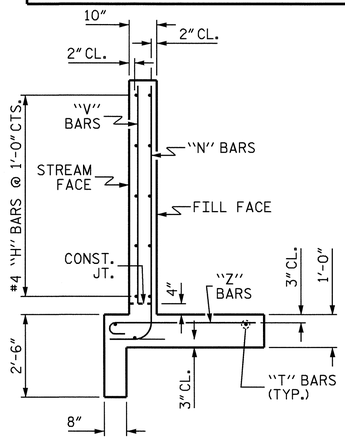

TYPICAL WING SECTION

BAR TYPES

ALL BAR DIMENSIONS ARE OUT TO OUT.

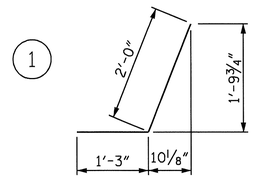

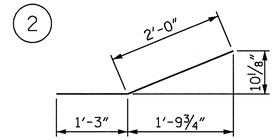

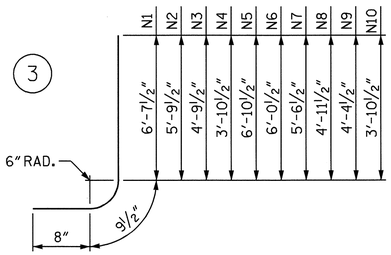

Z1	4'-2"	6"
Z2	3'-7"	6"
Z3	3'-0"	6"
Z4	2'-5"	6"
Z5	4'-5"	6"
Z6	3'-10"	6"
Z7	3'-6"	6"
Z8	3'-2"	6"
Z9	2'-9"	6"
Z10	2'-5"	6"

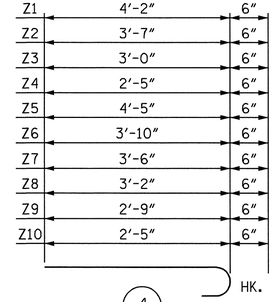

BILL OF MATERIAL

BAR	NO.	SIZE	TYPE	LENGTH	WEIGHT
H1	12	#4	STR	5'-4"	43
H2	4	#4	STR	2'-6"	7
H3	20	#4	1	3'-3"	43
H4	4	#4	STR	5'-11"	16
H5	12	#4	STR	16'-1"	129
H6	4	#4	STR	8'-8"	23
H7	20	#4	2	3'-3"	43
H8	4	#4	STR	16'-4"	44
N1	4	#4	3	8'-1"	22
N2	4	#4	3	7'-3"	19
N3	4	#4	3	6'-3"	17
N4	4	#4	3	5'-4"	14
N5	4	#4	3	8'-4"	22
N6	10	#4	3	7'-6"	50
N7	6	#4	3	7'-0"	28
N8	6	#4	3	6'-5"	26
N9	6	#4	3	5'-10"	23
N10	6	#4	3	5'-4"	21
S1	12	#6	STR	6'-0"	108
T1	4	#5	STR	7'-3"	30
T2	2	#5	STR	8'-0"	17
T3	6	#5	STR	18'-0"	113
V1	4	#4	STR	6'-1"	16
V2	4	#4	STR	5'-2"	14
V3	4	#4	STR	4'-3"	11
V4	4	#4	STR	3'-4"	9
V5	4	#4	STR	6'-3"	17
V6	10	#4	STR	5'-6"	37
V7	6	#4	STR	4'-11"	20
V8	6	#4	STR	4'-5"	18
V9	6	#4	STR	3'-10"	15
V10	6	#4	STR	3'-3"	13
Z1	4	#4	4	4'-8"	12
Z2	4	#4	4	4'-1"	11
Z3	4	#4	4	3'-6"	9
Z4	4	#4	4	2'-11"	8
Z5	4	#4	4	4'-11"	13
Z6	10	#4	4	4'-4"	29
Z7	6	#4	4	4'-0"	16
Z8	6	#4	4	3'-8"	15
Z9	6	#4	4	3'-3"	13
Z10	6	#4	4	2'-11"	12

REINFORCING STEEL FOR 4 WINGS	1166 LBS
CLASS A CONCRETE	
4 WINGS	18.5 CY
2 HEADWALLS	0.9 CY
2 END CURTAIN WALLS	1.0 CY
TOTAL	20.4 CY

PROJECT NO. R-2606A

RANDOLPH COUNTY

STATION: 14+72.00 -RAMP A-

SHEET 3 OF 3

STATE OF NORTH CAROLINA
DEPARTMENT OF TRANSPORTATION
RALEIGH

STANDARD WINGS FOR CONCRETE BOX CULVERT

H = 6'-0" SLOPE = 2:1

130° SKEW

NORTH CAROLINA PROFESSIONAL SEAL 26445 ENGINEER P. KOREY NEWTON
5/18/2006

ASSEMBLED BY : J. G. KHARVA DATE : 11/19/04
CHECKED BY : P. K. NEWTON DATE : 02/15/05

REVISIONS						SHEET NO.
NO.	BY:	DATE:	NO.	BY:	DATE:	C-21
1			3			TOTAL SHEETS
2			4			21

STANDARD NOTES

DESIGN DATA:

SPECIFICATIONS	A.A.S.H.T.O. (CURRENT)
LIVE LOAD	SEE PLANS
IMPACT ALLOWANCE	SEE A.A.S.H.T.O.
STRESS IN EXTREME FIBER OF	
STRUCTURAL STEEL - AASHTO M270 GRADE 250	140 MPa
- AASHTO M270 GRADE 345W	190 MPa
- AASHTO M270 GRADE 345	190 MPa
REINFORCING STEEL IN TENSION	
GRADE 420	165 MPa
CONCRETE IN COMPRESSION	8.3 MPa
CONCRETE IN SHEAR	SEE A.A.S.H.T.O.
STRUCTURAL TIMBER - TREATED OR	
UNTREATED - EXTREME FIBER STRESS	12 MPa
COMPRESSION PERPENDICULAR TO GRAIN OF TIMBER	2.6 MPa
EQUIVALENT FLUID PRESSURE OF EARTH	480 kg/m^3 (MINIMUM)

MATERIAL AND WORKMANSHIP:

EXCEPT AS MAY OTHERWISE BE SPECIFIED ON PLANS OR IN THE SPECIAL PROVISIONS, ALL MATERIAL AND WORKMANSHIP SHALL BE IN ACCORDANCE WITH THE 2002 STANDARD SPECIFICATIONS "FOR ROADS AND STRUCTURES" OF THE N. C. DEPARTMENT OF TRANSPORTATION.

STEEL SHEET PILING FOR PERMANENT OR TEMPORARY APPLICATIONS SHALL BE HOT ROLLED.

CONCRETE:

UNLESS OTHERWISE REQUIRED ON PLANS, CLASS A CONCRETE SHALL BE USED FOR ALL PORTIONS OF ALL STRUCTURES WITH THE EXCEPTION THAT: CLASS AA CONCRETE SHALL BE USED IN BRIDGE SUPERSTRUCTURES, ABUTMENT BACKWALLS, AND APPROACH SLABS; CLASS B CONCRETE SHALL BE USED FOR SLOPE PROTECTION AND RIP RAP; AND CLASS S SHALL BE USED FOR UNDERWATER FOOTING SEALS.

CONCRETE CHAMFERS:

UNLESS OTHERWISE NOTED ON THE PLANS, ALL EXPOSED CORNERS ON STRUCTURES SHALL BE CHAMFERED 19mm WITH THE FOLLOWING EXCEPTIONS: TOP CORNERS OF CURBS MAY BE ROUNDED TO 38mm RADIUS WHICH IS BUILT INTO CURB FORMS; CORNERS OF TRANSVERSE FLOOR EXPANSION JOINTS SHALL BE ROUNDED WITH A 6mm FINISHING TOOL UNLESS OTHERWISE REQUIRED ON PLANS; AND CORNERS OF EXPANSION JOINTS IN THE ROADWAY FACES AND TOPS OF CURBS AND SIDEWALKS SHALL BE ROUNDED TO A 6mm RADIUS WITH A FINISHING STONE OR TOOL UNLESS OTHERWISE REQUIRED ON PLANS.

DOWELS:

DOWELS WHEN INDICATED ON PLANS AS FOR CULVERT EXTENSIONS, SHALL BE EMBEDDED AT LEAST 300mm INTO THE OLD CONCRETE AND GROUTED INTO PLACE WITH 1 :2 CEMENT MORTAR.

ALLOWANCE FOR DEAD LOAD DEFLECTION, SETTLEMENT, ETC. IN CASTING SUPERSTRUCTURES:

BRIDGES SHALL BE BUILT ON THE GRADE OR VERTICAL CURVE SHOWN ON PLANS. SLABS, CURBS AND PARAPETS SHALL CONFORM TO THE GRADE OR CURVE.

ALL DIMENSIONS WHICH ARE GIVEN IN SECTION AND ARE AFFECTED BY DEAD LOAD DEFLECTIONS ARE DIMENSIONS AT CENTER LINE OF BEARING UNLESS OTHERWISE NOTED ON PLANS. IN SETTING FORMS FOR STEEL BEAM BRIDGES AND PRESTRESSED CONCRETE GIRDER BRIDGES, ADJUSTMENTS SHALL BE MADE DUE TO THE DEAD LOAD DEFLECTIONS FOR THE ELEVATIONS SHOWN. WHERE BLOCKS ARE SHOWN OVER BEAMS FOR BUILDING UP TO THE SLAB, THE VERTICAL DIMENSIONS OF THE BLOCKS SHALL BE ADJUSTED BETWEEN BEARINGS TO COMPENSATE FOR DEAD LOAD DEFLECTIONS, VERTICAL CURVE ORDINATE, AND ACTUAL BEAM CAMBER. WHERE BOTTOM OF SLAB IS IN LINE WITH BOTTOM OF TOP FLANGES, DEPTH OF SLAB BETWEEN BEARINGS SHALL BE ADJUSTED TO COMPENSATE FOR DEAD LOAD DEFLECTION, VERTICAL CURVE ORDINATE, AND ACTUAL BEAM CAMBER.

IN SETTING FALSEWORK AND FORMS FOR REINFORCED CONCRETE SPANS, AN ALLOWANCE SHALL BE MADE FOR DEAD LOAD DEFLECTIONS, SETTLEMENT OF FALSEWORK, AND PERMANENT CAMBER WHICH SHALL BE PROVIDED FOR IN ADDITION TO THE ELEVATIONS SHOWN. AFTER REMOVAL OF THE FALSEWORK, THE FINISHED STRUCTURES SHALL CONFORM TO THE PROFILE AND ELEVATIONS SHOWN ON THE PLANS AND CONSTRUCTION ELEVATIONS FURNISHED BY THE ENGINEER.

DETAILED DRAWINGS FOR FALSEWORK OR FORMS FOR BRIDGE SUPERSTRUCTURE AND ANY STRUCTURE OR PARTS OF A STRUCTURE AS NOTED ON THE PLANS SHALL BE SUBMITTED TO THE ENGINEER FOR APPROVAL BEFORE CONSTRUCTION OF THE FALSEWORK OR FORMS IS STARTED.

REINFORCING STEEL:

ALL REINFORCING STEEL SHALL BE DEFORMED. DIMENSIONS RELATIVE TO PLACEMENT OF REINFORCING ARE TO CENTERS OF BARS UNLESS OTHERWISE INDICATED IN THE PLANS. DIMENSIONS ON BAR DETAILS ARE TO CENTERS OF BARS OR ARE OUT TO OUT AS INDICATED ON PLANS.

WIRE BAR SUPPORTS SHALL BE PROVIDED FOR REINFORCING STEEL WHERE INDICATED ON THE PLANS. WHEN BAR SUPPORT PIECES ARE PLACED IN CONTINUOUS LINES, THEY SHALL BE SO PLACED THAT THE ENDS OF THE SUPPORTING WIRES SHALL BE LAPPED TO LOCK LEGS ON ADJOINING PIECES.

STRUCTURAL STEEL:

AT THE CONTRACTOR'S OPTION, HE MAY SUBSTITUTE 22.23mm Ø SHEAR STUDS FOR THE 19.05mm Ø STUDS SPECIFIED ON THE PLANS. THIS SUBSTITUTION SHALL BE MADE AT THE RATE OF 3 -22.23mm Ø STUDS FOR 4 - 19.05mm Ø STUDS, AND STUD SPACING CHANGES SHALL BE MADE AS NECESSARY TO PROVIDE THE SAME EQUIVALENT NUMBER OF 22.23mm Ø STUDS ALONG THE BEAM AS SHOWN FOR 19.05mm Ø STUDS BASED ON THE RATIO OF 3 - 22.23mm Ø STUDS FOR 4 - 19.05mm Ø STUDS. STUDS OF THE LENGTH SPECIFIED ON THE PLANS MUST BE PROVIDED. THE MAXIMUM SPACING SHALL BE 610mm.

EXCEPT AT THE INTERIOR SUPPORTS OF CONTINUOUS BEAMS WHERE THE COVER PLATE IS IN CONTACT WITH BEARING PLATE, THE CONTRACTOR MAY, AT HIS OPTION, SUBSTITUTE FOR THE COVER PLATES DESIGNATED ON THE PLANS COVER PLATES OF THE EQUIVALENT AREA PROVIDED THESE PLATES ARE AT LEAST 8mm IN THICKNESS AND DO NOT EXCEED A WIDTH EQUAL TO THE FLANGE WIDTH LESS 50mm OR A THICKNESS EQUAL TO 2 TIMES THE FLANGE THICKNESS. THE SIZE OF FILLET WELDS SHALL CONFORM TO THE REQUIREMENTS OF THE CURRENT ANSI/AASHTO/AWS "BRIDGE WELDING CODE". ELECTROSLAG WELDING WILL NOT BE PERMITTED.

PLACEMENT OF BEAM OR GIRDER MEMBERS ON TRUCKS FOR HAULING SHALL BE DONE IN COMPLIANCE WITH LIMITS SHOWN ON SKETCHES PROVIDED TO THE MATERIALS AND TEST UNIT APPROVED BY THE STRUCTURE DESIGN UNIT DATED MAY 8, 1991. THESE SKETCHES PRIMARILY LIMIT THE UNSUPPORTED CANTILEVER LENGTH OF MEMBERS. WHEN THE CONTRACTOR WISHES TO PLACE MEMBERS ON TRUCKS NOT IN ACCORDANCE WITH THESE LIMITS, TO SHIP BY RAIL, TO ATTACH SHIPPING RESTRAINTS TO THE MEMBERS OR TO INVERT MEMBERS, HE SHALL SUBMIT A SKETCH FOR APPROVAL PRIOR TO SHIPPING. SEE ALSO ARTICLE 1072-1 1.

WITH THE SOLE EXCEPTION OF EDGES AT SURFACES WHICH BEAR ON OTHER SURFACES, ALL SHARP EDGES AND ENDS OF SHAPES AND PLATES SHALL BE SLIGHTLY ROUNDED BY SUITABLE MEANS TO A RADIUS OF APPROXIMATELY 2mm OR EQUIVALENT FLAT SURFACE AT A SUITABLE ANGLE PRIOR TO PAINTING, GALVANIZING, OR METALLIZING.

HANDRAILS AND POSTS:

METAL STANDARDS AND FACES OF THE CONCRETE END POSTS FOR THE METAL RAIL SHALL BE SET NORMAL TO THE GRADE OF THE CURB, UNLESS OTHERWISE SHOWN ON PLANS. THE METAL RAIL AND TOPS OF CONCRETE POSTS USED WITH THE ALUMINUM RAIL SHALL BE BUILT PARALLEL TO THE GRADE OF THE CURB.

METAL HANDRAILS SHALL BE IN ACCORDANCE WITH THE PLANS. RAILS SHALL BE AS MANUFACTURED FOR BRIDGE RAILING. CASTINGS SHALL BE OF A UNIFORM APPEARANCE. FINS AND OTHER DEFORMATIONS RESULTING FROM CASTING OR OTHERWISE SHALL BE REMOVED IN A MANNER SO THAT A UNIFORM COLORING OF THE COMPLETED CASTING SHALL BE OBTAINED. CASTINGS WITH DISCOLORATIONS OR OF NON-UNIFORM COLORING WILL NOT BE ACCEPTED. CERTIFIED MILL REPORTS ARE REQUIRED FOR METAL RAILS AND POSTS.

SPECIAL NOTES:

GENERALLY, IN CASE OF DISCREPANCY, THIS STANDARD SHEET OF NOTES SHALL GOVERN OVER THE SPECIFICATIONS, BUT THE REMAINDER OF THE PLANS SHALL GOVERN OVER NOTES HEREON, AND SPECIAL PROVISIONS SHALL GOVERN OVER ALL. SEE SPECIFICATIONS ARTICLE 105-4.

METRIC

JANUARY, 1990