TIP PROJECT: R-0609IB / R-2606A

CONTRACT: C201225 / C201296

STATE OF NORTH CAROLINA
DIVISION OF HIGHWAYS

GUILFORD & RANDOLPH

ALL DIMENSIONS IN **R-0609IB** PLANS ARE IN METERS

ALL DIMENSIONS IN **R-2606A** PLANS ARE IN FEET

STATE	STATE PROJECT REFERENCE NO.	SHEET NO.	TOTAL SHEETS
N.C.	R-0609IB / R-2606A		

STATE PROJ. NO.	F.A. PROJ. NO.	DESCRIPTION
34345.1.1	MAF-F-119-(1)	R-0609IB PE
34345.2.8	NHF-119-1(12)	R-0690IB R/W, UTIL.
34345.3.13	NHF-119-1(14)	R-0609IB CONST.
34480.1.1	STP-NHF-311(3)	R-2606A PE
34480.2.2	NHF-311(17)	R-2606A R/W, UTIL.
34480.3.2	NHF-311(18)	R-2606A CONST.

LOCATION: *US-311 HIGH POINT EAST BELT FROM SOUTH OF I-85 TO NORTH OF SR-1929 (SPENCER ROAD)*

TYPE OF WORK: *GRADING, DRAINAGE, PAVING, WIDENING, GUARDRAIL, CABLE GUIDERAIL, STRUCTURES, CULVERTS, SIGNALS AND SIGNING*

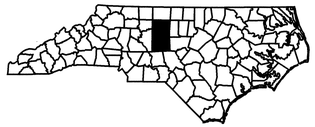

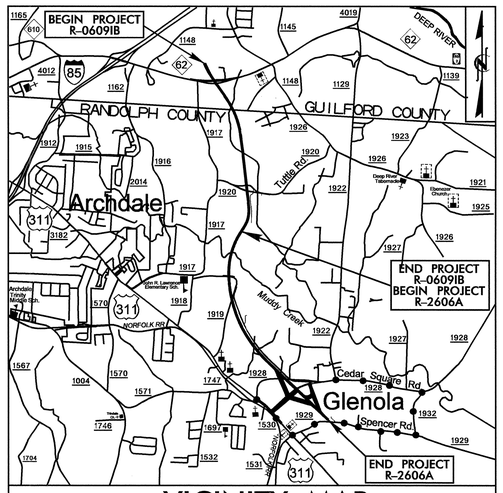

VICINITY MAP

OFF-SITE DETOUR

STRUCTURES

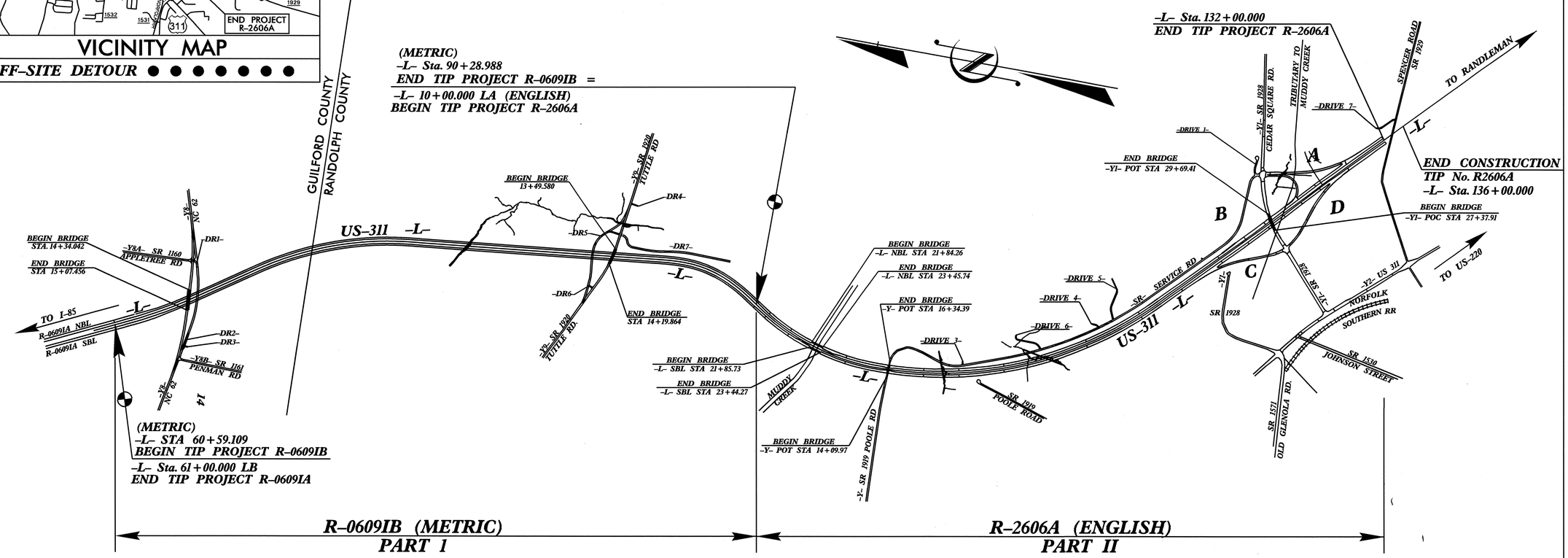

PROJECT LENGTH

LENGTH ROADWAY TIP PROJECT R-0609IB	=	2.970 km
LENGTH ROADWAY TIP PROJECT R-2606A	=	3.669 km
LENGTH STUCTURES TIP PROJECT R-2606A	=	0.050 km
TOTAL LENGTH TIP PROJECT R-0609IB / R-2606A	=	6.689 km

Prepared In the Office of:

DIVISION OF HIGHWAYS
1000 Birch Ridge Dr., Raleigh, NC 27610

2002 STANDARD SPECIFICATIONS

LETTING DATE:

APRIL 17, 2007

STRUCTURE DESIGN UNIT
1000 BIRCH RIDGE DR., RALEIGH, NC 27610

NORTH CAROLINA PROFESSIONAL SEAL 14552 ENGINEER GREGORY R. PERFETTI

11.17.06

DIVISION OF HIGHWAYS
STATE OF NORTH CAROLINA

P.E.
STATE DESIGN ENGINEER

DEPARTMENT OF TRANSPORTATION
FEDERAL HIGHWAY ADMINISTRATION

APPROVED
DIVISION ADMINISTRATOR — DATE

9/09/99

PLOT SCALE: 1:1000
PLOT DATE: 2006.08.33
USER NAME: DGN

PART 1 OF 2

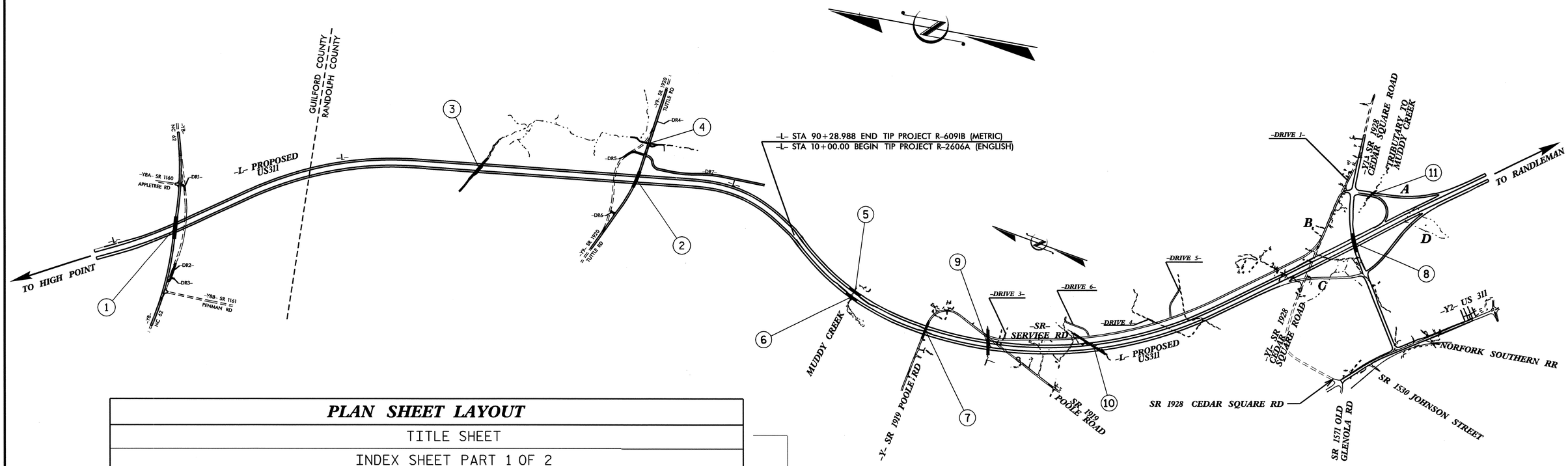

PLAN SHEET LAYOUT

STR.	STATION	DESCRIPTION	SHEETS
TITLE SHEET			
INDEX SHEET PART 1 OF 2			
1	64+02.541 -L-	NC 62 OVER US 311	S-1 THRU S-28
2	83+34.392 -L-	SR 1920 OVER US 311	S-29 THRU S-76
3	76+90.000 -L-	DOUBLE 2.1m X 2.1m RCBC	C-1 THRU C-4
4	12+23.000 -Y9-	DOUBLE 1.8m X 2.4m RCBC	C-5 THRU C-7
INDEX SHEET PART 2 OF 2			
METRIC TOTAL BILLS OF MATERIALS SHEET (R-2606A STRUCTURES)			
STR.	STATION	DESCRIPTION	SHEETS
5	22+65.00 -L-	US 311 (LEFT LANE) OVER MUDDY CREEK	S-77 THRU S-104
6	22+65.00 -L-	US 311 (RIGHT LANE) OVER MUDDY CREEK	S-105 THRU S-132
7	35+60.41 -L-	POOLE ROAD (SR 1919) OVER US 311	S-133 THRU S-166
8	108+24.11 -L-	CEDAR SQUARE ROAD (SR 1928) OVER US 311	S-167 THRU S-199
9	45+99.00 -L-	SINGLE 12'-0" X 8'-0" RCBC	C-8 THRU C-15
10	63+06.00 -L-	SINGLE 8'-0" X 5'-0" RCBC	C-16 THRU C-18
11	14+72.00 -RAMPA-	SINGLE 6'-0" X 6'-0" RCBC	C-19 THRU C-21

PART 1 OF 2
R-609IB (METRIC)

PART 2 OF 2
R-2606A (ENGLISH)

PROJECT NO. R-0609IB/R-2606A
GUILFORD-RANDOLPH COUNTY

STATE OF NORTH CAROLINA
DEPARTMENT OF TRANSPORTATION
RALEIGH

INDEX SHEET
PART 1 OF 2

REVISIONS						SHEET NO.
NO.	BY:	DATE:	NO.	BY:	DATE:	TOTAL SHEETS
1			3			
2			4			

DRAWN BY : R.D. MARTIN/TPG DATE : 4/18/05
CHECKED BY : T.P. GARRETT DATE : 7/28/06

31-JUL-2006 08:33
S:\PG3\PGARRETT\r0609lb_r2606aTPG.dgn
pgarrett

F.A. PROJECT NO. NHF-119-1(14)

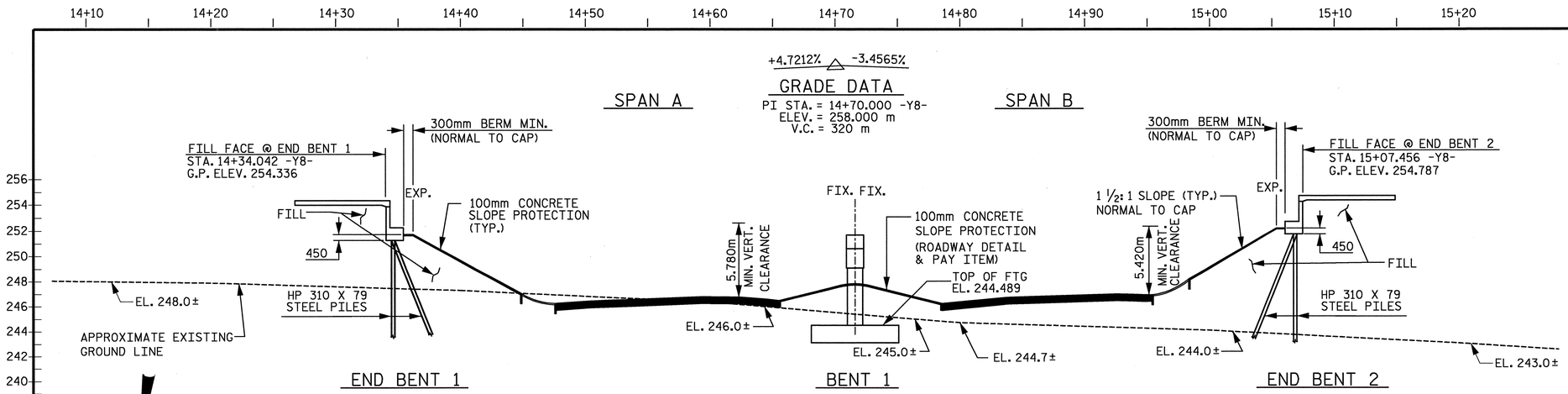

SECTION ALONG ℄ -Y8-

BENTS ON SECTION AT RIGHT ANGLES TO BENTS

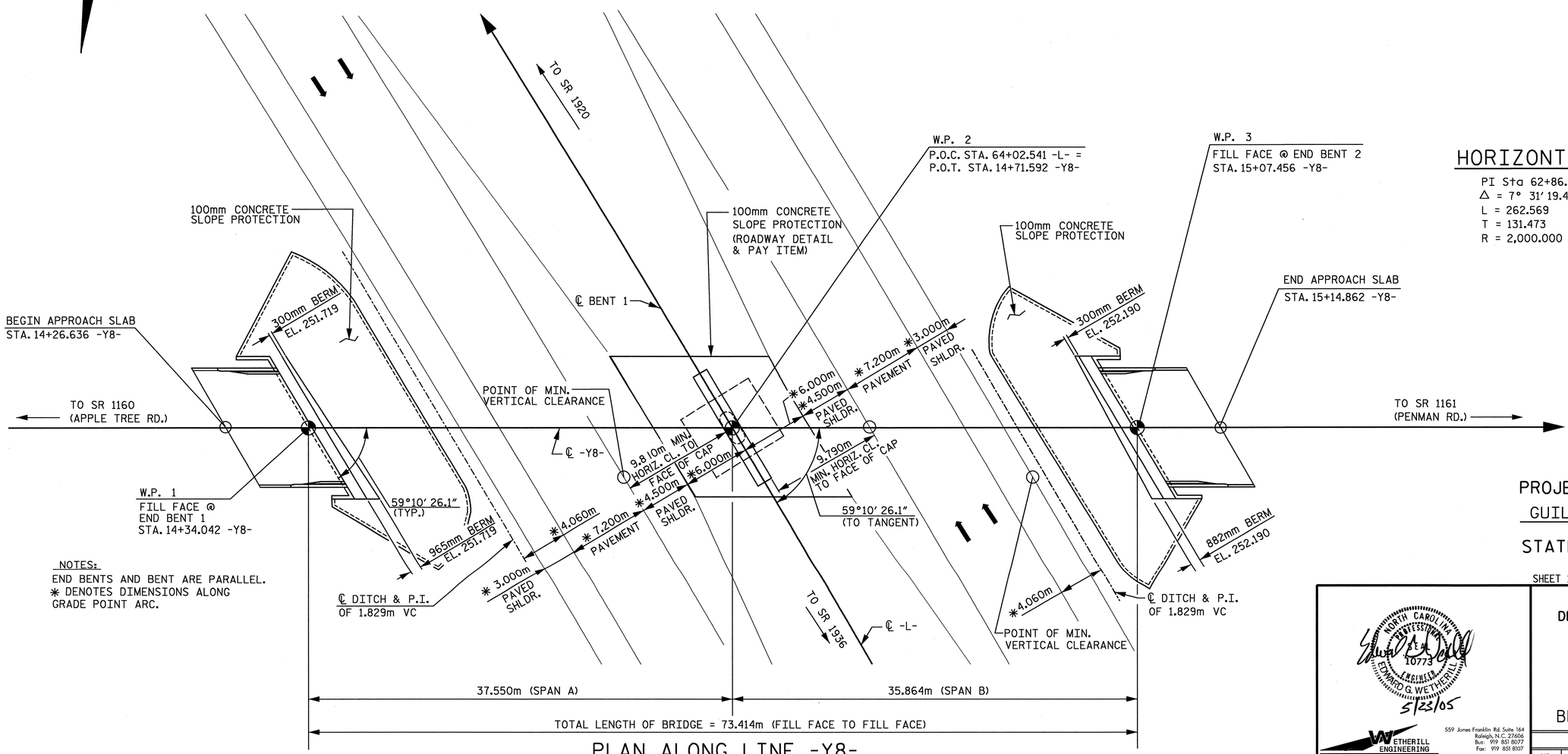

PLAN ALONG LINE -Y8-

PILES NOT SHOWN IN PLAN VIEW FOR CLARITY

NOTES:
END BENTS AND BENT ARE PARALLEL.
✱ DENOTES DIMENSIONS ALONG GRADE POINT ARC.

HORIZONTAL CURVE DATA -L-

PI Sta 62+86.616	PIs Sta 64+35.712
Δ = 7° 31' 19.4" (LT)	Θs = 0° 46' 24.6"
L = 262.569	Ls = 54.000
T = 131.473	LT = 36.000
R = 2,000.000	ST = 18.000

METRIC

PROJECT NO. R-0609IB

GUILFORD-RANDOLPH COUNTY

STATION: 64+02.541 -L-POC
14+71.592 -Y8- POT

SHEET 1 OF 3

BRIDGE No. 892

DRAWN BY: B. JOHNSON DATE: 12-04
CHECKED BY: J.A. DILWORTH DATE: 12-04

DWG. 1 OF 28

NORTH CAROLINA PROFESSIONAL SEAL 10773 ENGINEER EDWARD G. WETHERILL
5/23/05

WETHERILL ENGINEERING
559 Jones Franklin Rd. Suite 164
Raleigh, N.C. 27606
Bus: 919 851 8077
Fax: 919 851 8107

TRANSPORTATION PLANNING/DESIGN - BRIDGE/STRUCTURE DESIGN
CIVIL/SITE DESIGN - GIS/GPS - CONSTRUCTION OBSERVATION

STATE OF NORTH CAROLINA
DEPARTMENT OF TRANSPORTATION
RALEIGH

GENERAL DRAWING
FOR BRIDGE ON NC 62
OVER US 311
(HIGH POINT EAST BELT)
BETWEEN SR 1160 & SR 1161

REVISIONS						SHEET NO.
NO.	BY	DATE	NO.	BY	DATE	S-1
1			1			TOTAL SHEETS
2			2			199

STR#1

p:\R-0609IB\R0609IB_SITE1\Structures\DWG\bulltree\Gen1.dgn
5/19/2005 1:01:54 PM

NOTES:

DIMENSIONS LOCATING THE PILES ARE TO THE CENTERLINE OF THE PILES.

ALL PILES ARE HP 310x79 STEEL PILES.

BENT 1 HAS SPREAD FOOTING.

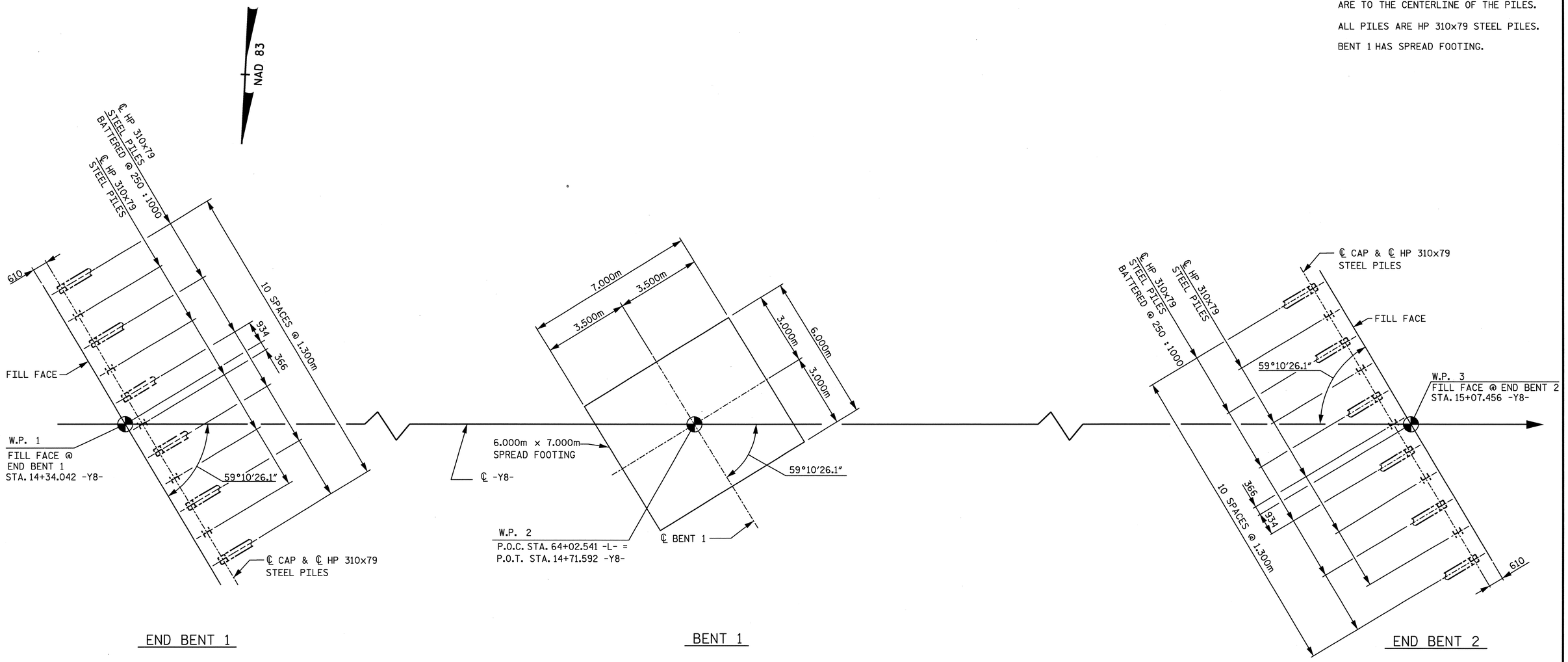

FOUNDATION LAYOUT

PROJECT NO. R-0609IB

GUILFORD-RANDOLPH COUNTY

STATION: 64+02.541 -L- POC
14+71.592 -Y8- POT

SHEET 2 OF 3

NORTH CAROLINA PROFESSIONAL SEAL 10773 ENGINEER EDWARD G. WETHERILL

5/23/05

WETHERILL ENGINEERING

559 Jones Franklin Rd. Suite 164
Raleigh, N.C. 27606
Bus: 919 851 8077
Fax: 919 851 8107

TRANSPORTATION PLANNING/DESIGN - BRIDGE/STRUCTURE DESIGN
CIVIL/SITE DESIGN - GIS/GPS - CONSTRUCTION OBSERVATION

STATE OF NORTH CAROLINA
DEPARTMENT OF TRANSPORTATION
RALEIGH

GENERAL DRAWING
FOR BRIDGE ON NC 62
OVER US 311
(HIGHPOINT EAST BELT)
BETWEEN SR 1160 & SR 1161

REVISIONS						SHEET NO.
NO.	BY	DATE	NO.	BY	DATE	S-2
1			1			TOTAL SHEETS
2			2			199

DRAWN BY: JC PENDERGRAFT DATE: 1/05
CHECKED BY: JA DILWORTH DATE: 1/05

DWG. 2 OF 28

p:\R-0609IB\R0609IB_SITE1\Structures\DNG\bulbtee\FOUN.dgn
5/19/2005 1:06:20 PM

NOTES:

ALL DIMENSIONS ARE IN MILLIMETERS UNLESS OTHERWISE NOTED.

ALL ELEVATIONS ARE IN METERS.

ASSUMED LIVE LOAD = MS 18 OR ALTERNATE LOADING.

FOR OTHER DESIGN DATA AND GENERAL NOTES, SEE SHEET SNSM.

THIS BRIDGE HAS BEEN DESIGNED BY THE STRENGTH DESIGN METHOD AS SPECIFIED IN AASHTO STANDARD SPECIFICATIONS.

THIS BRIDGE HAS BEEN DESIGNED IN ACCORDANCE WITH THE REQUIREMENTS OF THE AASHTO STANDARD SPECIFICATIONS FOR SEISMIC DESIGN OF HIGHWAY BRIDGES FOR SEISMIC PERFORMANCE CATEGORY A.

FOR SUBMITTAL OF WORKING DRAWINGS, SEE SPECIAL PROVISIONS.

THE CONTRACTOR SHALL PROVIDE INDEPENDENT ASSURANCE SAMPLES OF REINFORCING STEEL AS FOLLOWS: FOR PROJECTS REQUIRING UP TO 360,000 KG OF REINFORCING STEEL, ONE 760mm SAMPLE OF EACH SIZE BAR USED, AND FOR PROJECTS REQUIRING OVER 360,000 KG OF REINFORCING STEEL, TWO 760mm SAMPLES OF EACH SIZE BAR USED. THE BARS FROM WHICH THE SAMPLES ARE TAKEN MUST THEN BE SPLICED WITH REPLACEMENT BARS OF THE SIZE AND LENGTH OF THE SAMPLE PLUS A MINIMUM LAP SPLICE OF THIRTY BAR DIAMETERS.

FOR METRIC STRUCTURAL STEEL, SEE SPECIAL PROVISIONS.

THE CLASS AA CONCRETE IN THE BRIDGE DECK SHALL CONTAIN FLY ASH OR GROUND GRANULATED BLAST FURNACE SLAG AT THE SUBSTITUTION RATE SPECIFIED IN ARTICLE 1024-1 AND IN ACCORDANCE WITH ARTICLES 1024-5 AND 1024-6 OF THE STANDARD SPECIFICATIONS. NO PAYMENT WILL BE MADE FOR THIS SUBSTITUTION AS IT IS CONSIDERED INCIDENTAL TO THE COST OF THE REINFORCED CONCRETE DECK SLAB.

FOR FALSEWORK AND FORMWORK, SEE SPECIAL PROVISIONS.

NEEDLE BEAMS WILL NOT BE ALLOWED UNLESS OTHERWISE CALLED FOR ON THE PLANS OR APPROVED BY ENGINEER.

PILES FOR END BENT NO. 1 AND 2 SHALL BE DRIVEN TO A MINIMUM BEARING CAPACITY OF 530 KN EACH.

WHEN DRIVING PILES, THE MAXIMUM BLOW COUNT SHALL NOT BE EXCEEDED.

THE REQUIRED BEARING CAPACITY OF THE SPREAD FOOTING AT BENT NO. 1 IS 380 KPA. THE REQUIRED BEARING CAPACITY SHALL BE VERIFIED.

REMOVABLE FORMS MAY BE USED IN LIEU OF METAL STAY-IN-PLACE FORMS IN ACCORDANCE WITH ARTICLE 420-3 OF THE STANDARD SPECIFICATIONS.

FOR CRANE SAFETY, SEE SPECIAL PROVISIONS.

FOR STEEL H PILES, SEE SPECIAL PROVISIONS.

FOR FABRICATED METAL STAY-IN-PLACE FORMS, SEE SPECIAL PROVISIONS.

BM 7: RR SPIKE IN BASE OF 320 mm HICKORY. 90m LT OF BASELINE STA. 57+97 -L-. ELEV. 247.151

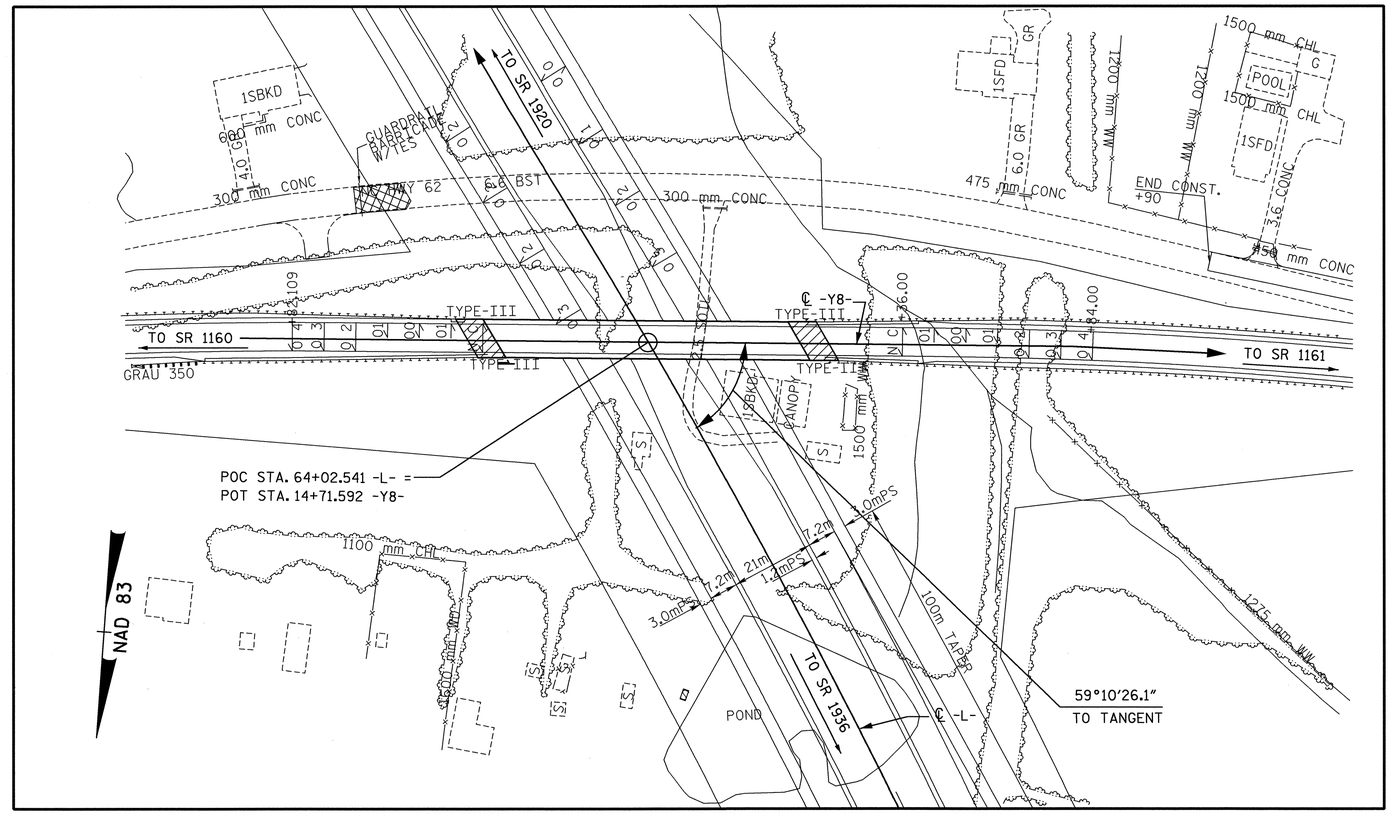

FOR UTILITY INFORMATION, SEE UTILITY PLANS AND SPECIAL PROVISIONS.

LOCATION SKETCH

TOTAL BILL OF MATERIAL

	FOUNDATION EXCAVATION	REINFORCED CONCRETE DECK SLAB	GROOVING BRIDGE FLOORS	CLASS A CONCRETE	BRIDGE APPROACH SLABS	REINFORCING STEEL	1600mm MODIFIED PRESTRESSED CONCRETE GIRDERS		HP 310x79 STEEL PILES		CONCRETE BARRIER RAIL	100mm SLOPE PROTECTION	ELASTOMERIC BEARINGS	EVAZOTE JOINT SEALS
	LUMP SUM	SQ. METERS	SQ. METERS	CU. METERS	LUMP SUM	kg	NO.	METERS	NO.	METERS	METERS	SQ. METERS	LUMP SUM	LUMP SUM
SUPERSTRUCTURE		769.3	757.2		LUMP SUM		8	286.456			145.290		LUMP SUM	LUMP SUM
END BENT 1				29.1		2,476			11	142.5		380		
BENT 1	LUMP SUM			109.8		12,881								
END BENT 2				28.5		2,476			11	115.0		325		
TOTAL	LUMP SUM	769.3	757.2	167.4	LUMP SUM	17,833	8	286.456	22	257.5	145.290	705	LUMP SUM	LUMP SUM

PROJECT NO. R-0609IB

GUILFORD-RANDOLPH COUNTY

STATION: 64+02.541 -L- POC

14+71.592 -Y8- POT

SHEET 3 OF 3

STATE OF NORTH CAROLINA
DEPARTMENT OF TRANSPORTATION
RALEIGH

GENERAL DRAWING
FOR BRIDGE ON NC 62
OVER US 311
(HIGHPOINT EAST BELT)
BETWEEN SR 1160 & SR 1161

NORTH CAROLINA PROFESSIONAL SEAL 10773 ENGINEER EDWARD G. WETHERILL
5/23/05

WETHERILL ENGINEERING
559 Jones Franklin Rd. Suite 164
Raleigh, N.C. 27606
Bus: 919 851 8077
Fax: 919 851 8107
TRANSPORTATION PLANNING/DESIGN - BRIDGE/STRUCTURE DESIGN
CIVIL/SITE DESIGN - GIS/GPS - CONSTRUCTION OBSERVATION

REVISIONS						SHEET NO.
NO.	BY	DATE	NO.	BY	DATE	S-3
1			1			TOTAL SHEETS
2			2			199

DRAWN BY: JC PENDERGRAFT DATE: 1/05
CHECKED BY: JA DILWORTH DATE: 1/05

p:\R-0609IB\R0609IB_SITE1\Structures\DWG\bulbtee\GNLDWG3.dgn
5/19/2005 1:01:14 PM

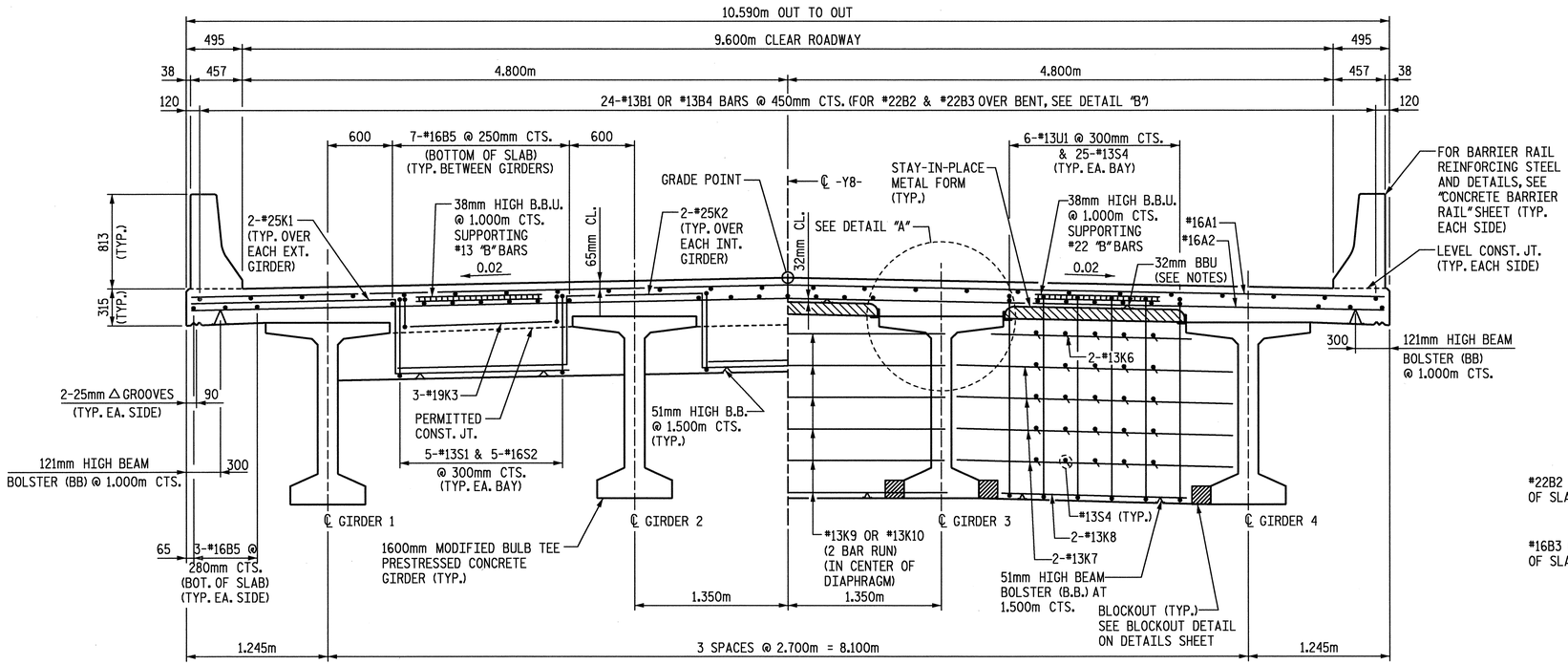

HALF SECTION AT END BENT DIAPHRAGM

HALF SECTION AT BENT DIAPHRAGM

TYPICAL SECTION

NOTES:

PROVIDE 32mm HIGH BEAM BOLSTERS UPPER AT 1.2m CTS. ATOP THE METAL STAY-IN-PLACE FORMS TO SUPPORT THE BOTTOM MAT OF "A" BARS. WHEN USING REMOVABLE FORMS, PROVIDE CONTINUOUS HIGH CHAIRS FOR METAL DECK (C.H.C.M.) AT 1.2m CTS. WITH A HEIGHT TO SUPPORT THE BOTTOM MAT OF "A" BARS A CLEAR DISTANCE OF 65mm ABOVE THE TOP OF THE REMOVABLE FORM.

PREVIOUSLY CAST CONCRETE IN A CONTINUOUS UNIT SHALL HAVE ATTAINED A MINIMUM COMPRESSIVE STRENGTH OF 20.7 MPa BEFORE ADDITIONAL CONCRETE IS CAST IN THE UNIT.

LONGITUDINAL STEEL MAY BE SHIFTED SLIGHTLY, AS NECESSARY, TO AVOID INTERFERENCE WITH STIRRUPS IN PRESTRESSED CONCRETE GIRDERS.

BARRIER RAIL IN A CONTINUOUS UNIT SHALL NOT BE CAST UNTIL ALL SLAB CONCRETE IN THE UNIT HAS BEEN CAST AND HAS REACHED A MINIMUM COMPRESSIVE STRENGTH OF 20.7 MPa.

TEMPORARY STRUTS SHALL BE PLACED BETWEEN PRESTRESSED GIRDERS ADJACENT TO THE DIAPHRAGMS AND THE NUTS ON THE 31.75mm DIA. TIE RODS SHALL BE FULLY TIGHTENED BEFORE THE DIAPHRAGMS ARE CAST. STRUTS SHALL REMAIN IN PLACE 3 DAYS AFTER CONCRETE IS PLACED. THE TIE RODS SHALL BE RE-TIGHTENED AFTER THE STRUTS HAVE BEEN REMOVED.

CONCRETE IN INTERMEDIATE DIAPHRAGMS MAY BE CLASS A IN LIEU OF CLASS AA. PAYMENT SHALL BE MADE UNDER THE UNIT CONTRACT PRICE FOR REINFORCED CONCRETE DECK SLAB.

#16 G1 BAR MAY BE SHIFTED SLIGHTLY, AS NECESSARY, TO CLEAR REINFORCING STEEL AND STIRRUPS.

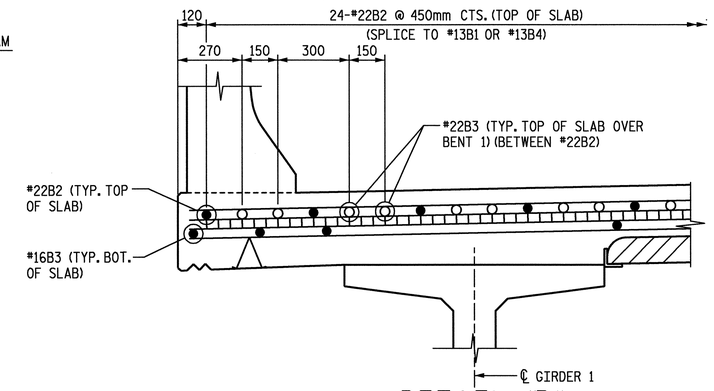

DETAIL "B"

(FOR #22 "B" BARS OVER BENT 1)

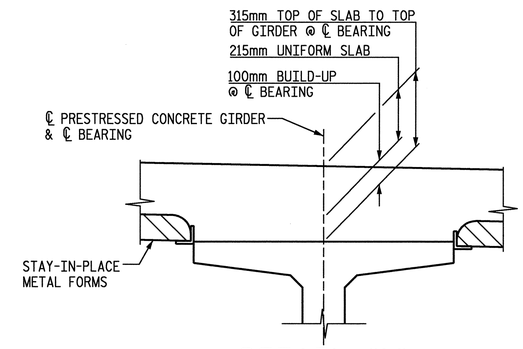

DETAIL "A"

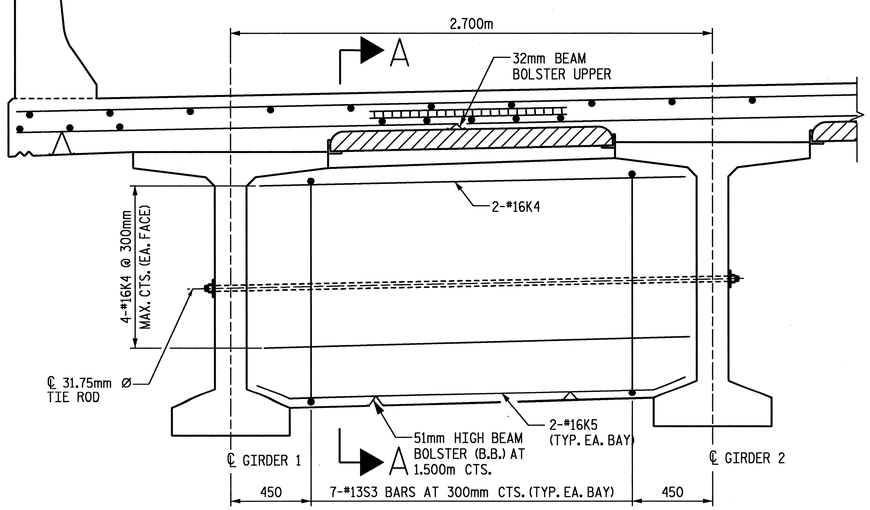

SECTION AT INTERMEDIATE DIAPHRAGM

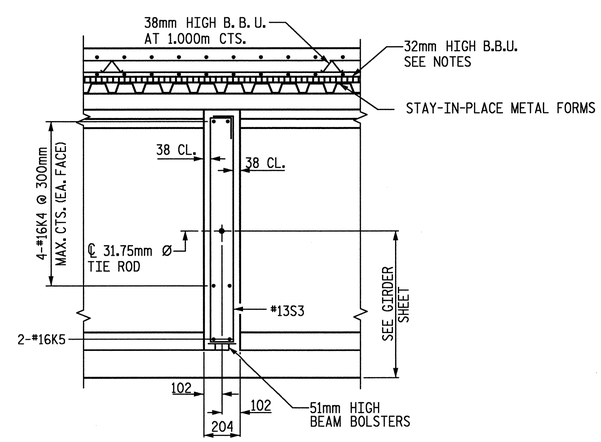

SECTION A-A

PROJECT NO. R-0609IB

GUILFORD-RANDOLPH COUNTY

STATION: 64+02.541 -L-

SHEET 1 OF 2

NORTH CAROLINA PROFESSIONAL ENGINEER SEAL 10773 EDWARD G. WETHERILL

5/23/05

WETHERILL ENGINEERING
559 Jones Franklin Rd. Suite 164
Raleigh, N.C. 27606
Bus: 919 851 8077
Fax: 919 851 8107

TRANSPORTATION PLANNING/DESIGN - BRIDGE/STRUCTURE DESIGN
CIVIL/SITE DESIGN - GIS/GPS - CONSTRUCTION OBSERVATION

STATE OF NORTH CAROLINA
DEPARTMENT OF TRANSPORTATION
RALEIGH

SUPERSTRUCTURE
TYPICAL SECTION
AND DETAILS

REVISIONS						SHEET NO.
NO.	BY	DATE	NO.	BY	DATE	S-4
1			1			TOTAL SHEETS
2			2			199

DRAWN BY: B. JOHNSON DATE: 12-04
CHECKED BY: J.A. DILWORTH DATE: 12-04

DWG. 4 OF 28

p:\R-0609IB\R0609IB_STIE1\Structures\DWG\bulbtee\typsect.dgn
5/19/2005 1:10:23 PM

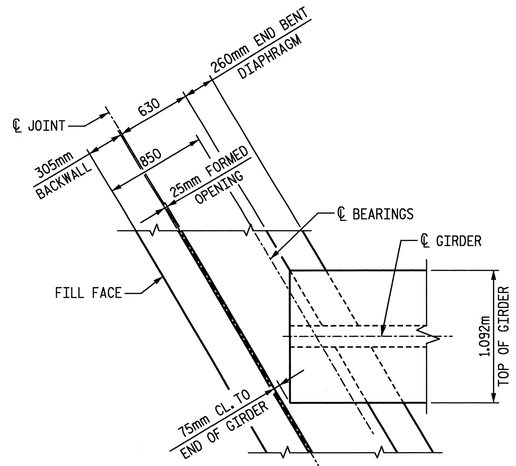

PLAN OF GIRDER AT END BENTS

(END BENT 1 SHOWN, END BENT 2 SIMILAR)

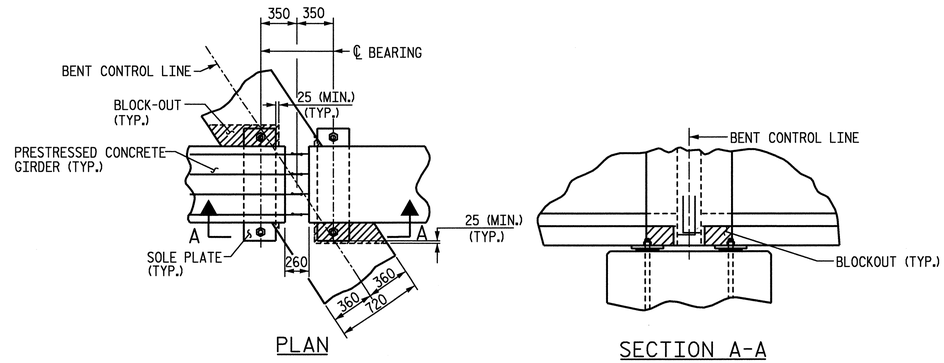

BENT DIAPHRAGM BLOCK-OUT DETAIL

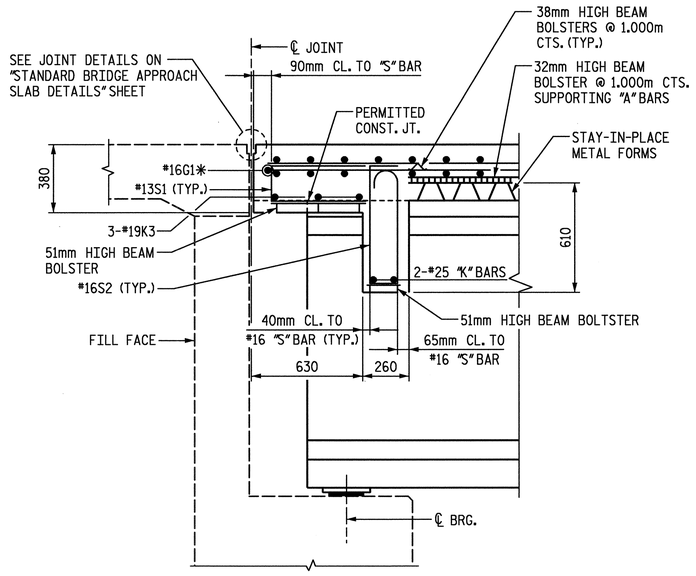

SECTION A-A (THROUGH END BENT DIAPHRAGM)

*#16 "G" BAR MAY BE SHIFTED SLIGHTLY
(SEE "SUPERSTRUCTURE PLAN OF SPAN A & B" SHEETS)

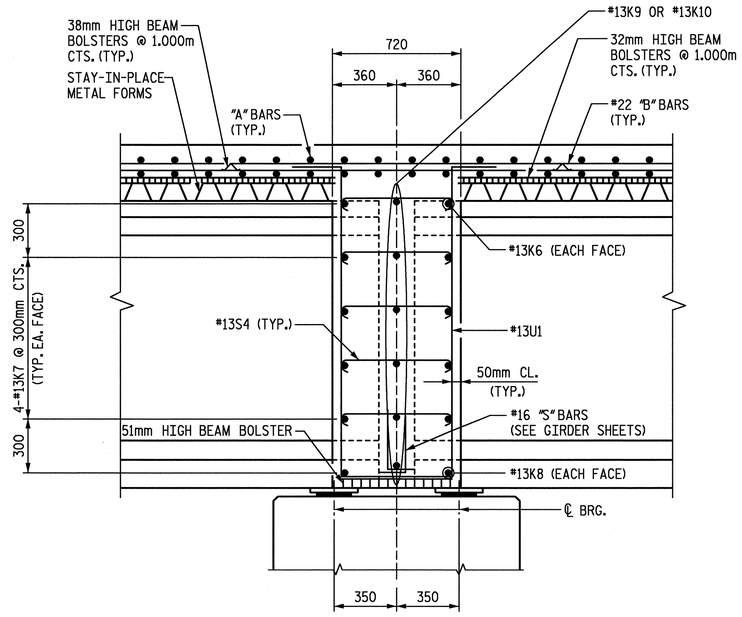

SECTION B-B (THROUGH BENT DIAPHRAGM)

*#16 "G" BAR MAY BE SHIFTED SLIGHTLY
(SEE "SUPERSTRUCTURE PLAN OF SPAN A & B" SHEETS)

PROJECT NO. R-0609IB
GUILFORD-RANDOLPH COUNTY
STATION: 64+02.541 -L-

SHEET 2 OF 2

STATE OF NORTH CAROLINA
DEPARTMENT OF TRANSPORTATION
RALEIGH

SUPERSTRUCTURE TYPICAL SECTION AND DETAILS

NORTH CAROLINA PROFESSIONAL SEAL 10773 ENGINEER EDWARD G. WETHERILL
5/25/05

WETHERILL ENGINEERING
559 Jones Franklin Rd. Suite 164
Raleigh, N.C. 27606
Bus: 919 851 8077
Fax: 919 851 8107
TRANSPORTATION PLANNING/DESIGN - BRIDGE/STRUCTURE DESIGN
CIVIL/SITE DESIGN - GIS/GPS - CONSTRUCTION OBSERVATION

REVISIONS						SHEET NO.
NO.	BY	DATE	NO.	BY	DATE	S-5
1			1			TOTAL SHEETS
2			2			199

DRAWN BY: B. JOHNSON DATE: 12-04
CHECKED BY: J.A. DILWORTH DATE: 12-04

DWG. 5 OF 28

p:\R-0609IB\R0609IB_STE1\Structures\DWG\bulbtee\typsectdet.dgn
5/19/2005 1:15:39 PM

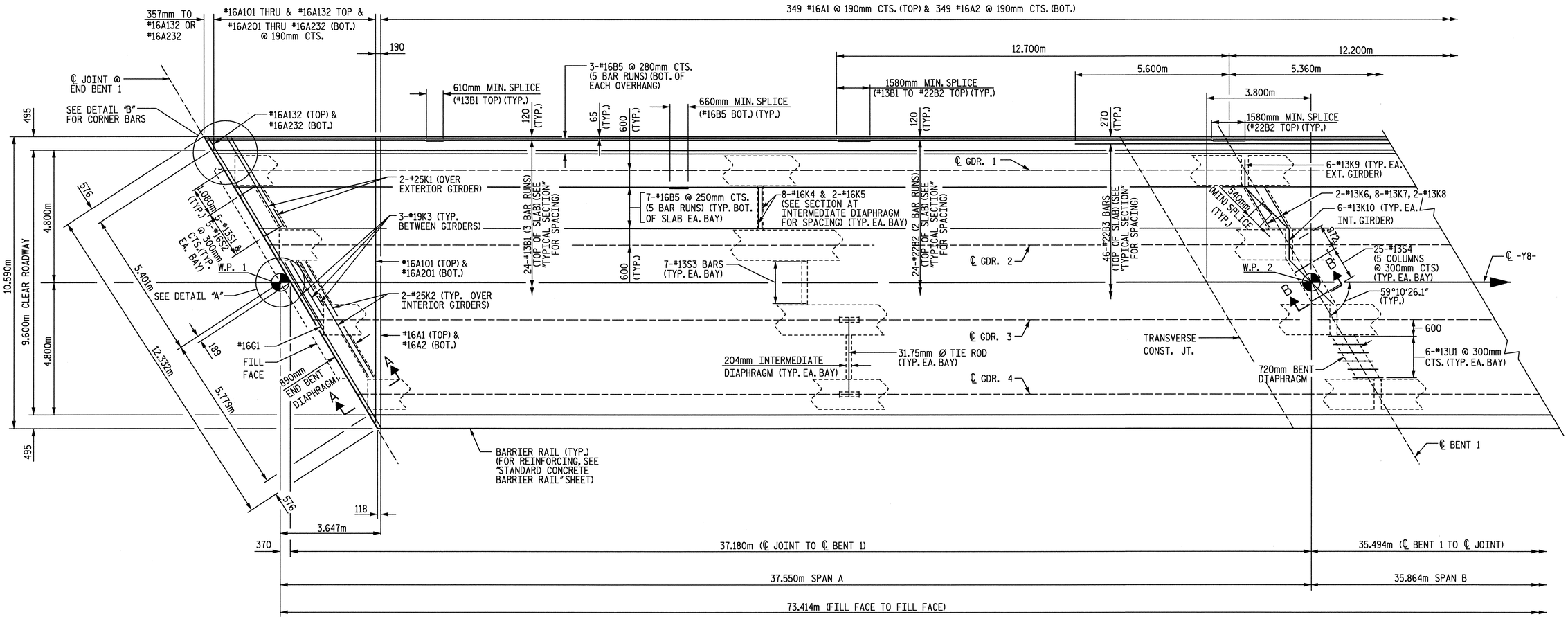

PLAN OF SPAN A

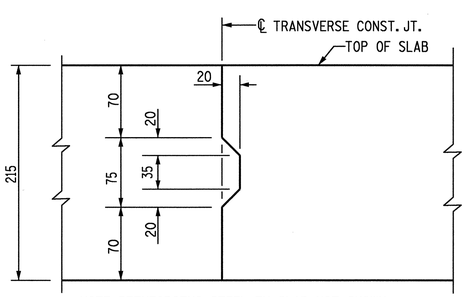

NOTE: REINFORCING STEEL IN SLAB NOT SHOWN. LONGITUDINAL REINFORCING STEEL SHALL BE CONTINUOUS THROUGH JOINT.

TRANSVERSE CONSTRUCTION JOINT IN DECK SLAB

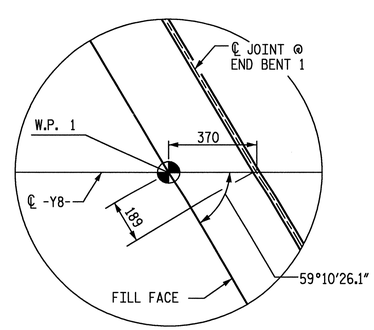

DETAIL "A"

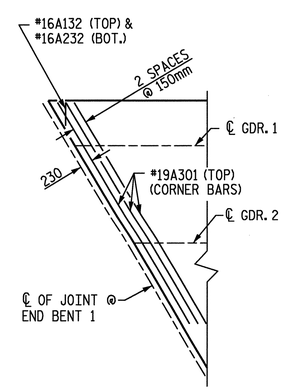

DETAIL "B"

PROJECT NO. R-0609IB

GUILFORD-RANDOLPH COUNTY

STATION: 64+02.541 -L-

SHEET 1 OF 2

STATE OF NORTH CAROLINA
DEPARTMENT OF TRANSPORTATION
RALEIGH

SUPERSTRUCTURE
PLAN OF SPAN A

WETHERILL ENGINEERING
559 Jones Franklin Rd. Suite 164
Raleigh, N.C. 27606
Bus: 919 851 8077
Fax: 919 851 8107
TRANSPORTATION PLANNING/DESIGN - BRIDGE/STRUCTURE DESIGN
CIVIL/SITE DESIGN - GIS/GPS - CONSTRUCTION OBSERVATION

REVISIONS						SHEET NO.
NO.	BY	DATE	NO.	BY	DATE	S-6
1			1			TOTAL SHEETS
2			2			199

DRAWN BY: B.JOHNSON DATE: 1-05
CHECKED BY: J.A. DILWORTH DATE: 1-05

DWG. 6 OF 28

p:\R-0609IB\R0609IB_SITE1\Structures\DWG\bulbtee\spansAB.dgn
5/19/2005 1:17:23 PM

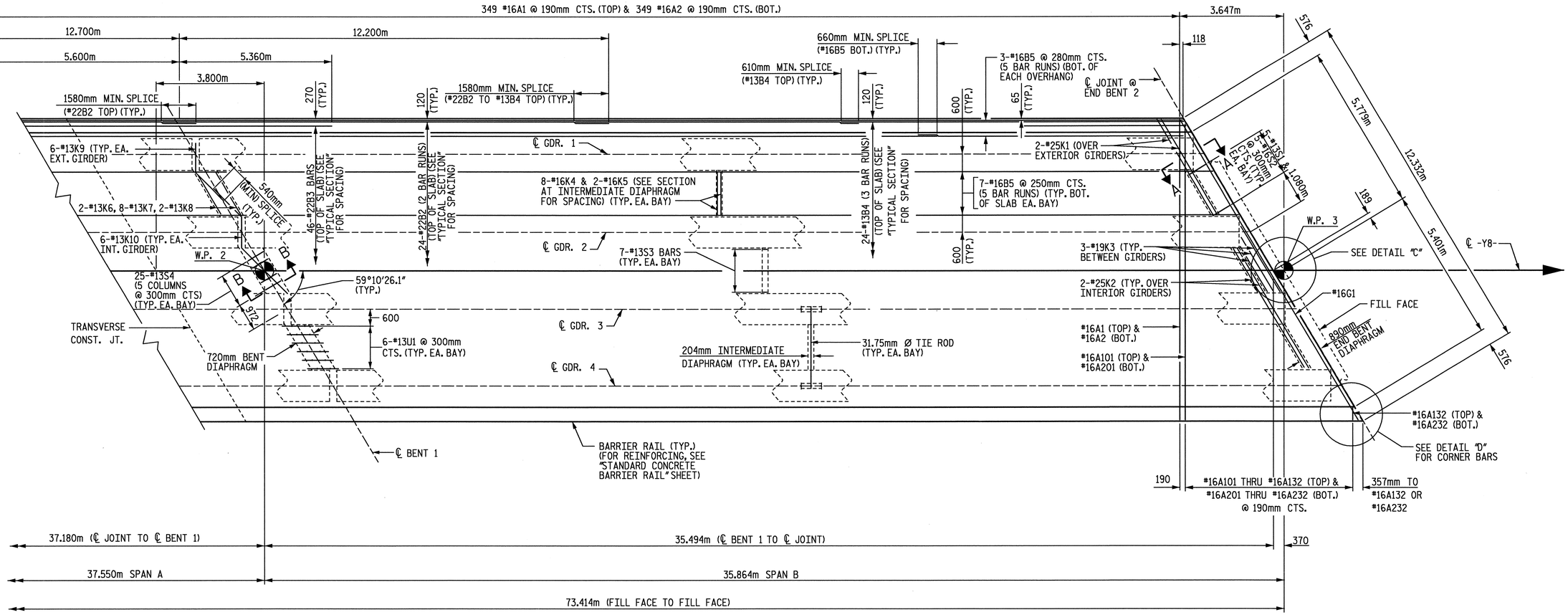

PLAN OF SPAN B

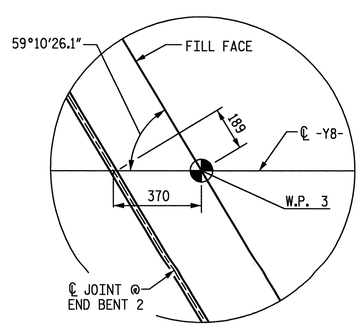

DETAIL "C"

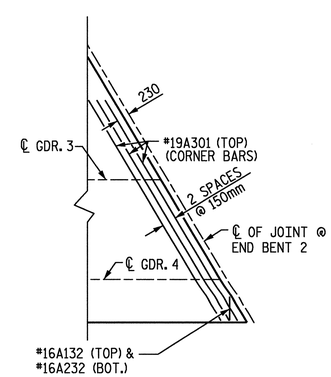

DETAIL "D"

PROJECT NO. R-0609IB

GUILFORD-RANDOLPH COUNTY

STATION: 64+02.541 -L-

SHEET 2 OF 2

STATE OF NORTH CAROLINA
DEPARTMENT OF TRANSPORTATION
RALEIGH

SUPERSTRUCTURE
PLAN OF SPAN B

NORTH CAROLINA PROFESSIONAL SEAL ENGINEER 10773 EDWARD G. WETHERILL
5/23/05

WETHERILL ENGINEERING
559 Jones Franklin Rd. Suite 164
Raleigh, N.C. 27606
Bus: 919 851 8077
Fax: 919 851 8107

TRANSPORTATION PLANNING/DESIGN - BRIDGE/STRUCTURE DESIGN
CIVIL/SITE DESIGN - GIS/GPS - CONSTRUCTION OBSERVATION

REVISIONS						SHEET NO.
NO.	BY	DATE	NO.	BY	DATE	S-7
1			1			TOTAL SHEETS
2			2			199

DRAWN BY: B.JOHNSON DATE: 1-05
CHECKED BY: J.A. DILWORTH DATE: 1-05

DWG. 7 OF 28

p:\R-0609IB\R0609IB_STTE1\Structures\DWG\bulbtee\spansAB.dgn
5/19/2005 1:17:28 PM

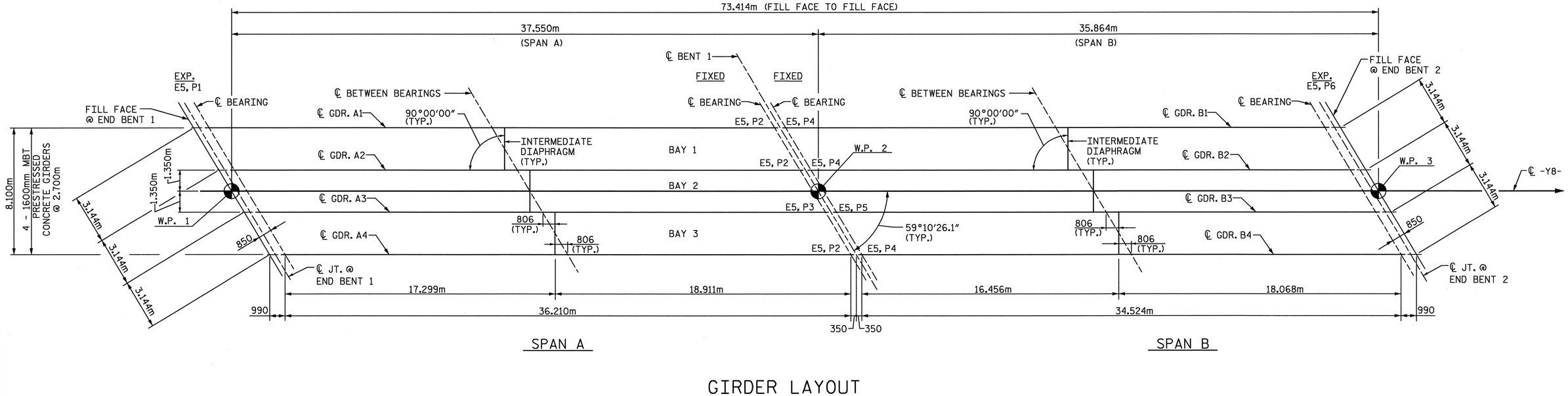

GIRDER LAYOUT

PROJECT NO. R-0609IB

GUILFORD-RANDOLPH COUNTY

STATION: 64+02.541 -L-

STATE OF NORTH CAROLINA
DEPARTMENT OF TRANSPORTATION
RALEIGH

SUPERSTRUCTURE
GIRDER LAYOUT

NORTH CAROLINA PROFESSIONAL SEAL 10773 ENGINEER EDWARD G. WETHERILL
5/23/05

WETHERILL ENGINEERING
559 Jones Franklin Rd. Suite 164
Raleigh, N.C. 27606
Bus: 919 851 8077
Fax: 919 851 8107
TRANSPORTATION PLANNING/DESIGN - BRIDGE/STRUCTURE DESIGN
CIVIL/SITE DESIGN - GIS/GPS - CONSTRUCTION OBSERVATION

REVISIONS						SHEET NO.
NO.	BY	DATE	NO.	BY	DATE	S-8
1			1			TOTAL SHEETS
2			2			199

DRAWN BY: JC PENDERGRAFT DATE: 1/05
CHECKED BY: JA DILWORTH DATE: 1/05

p:\R-0609IB\R0609IB_SITE1\Structures\DWG\bulbtee\FRAMEPLAN.dgn
5/19/2005 1:18:38 PM

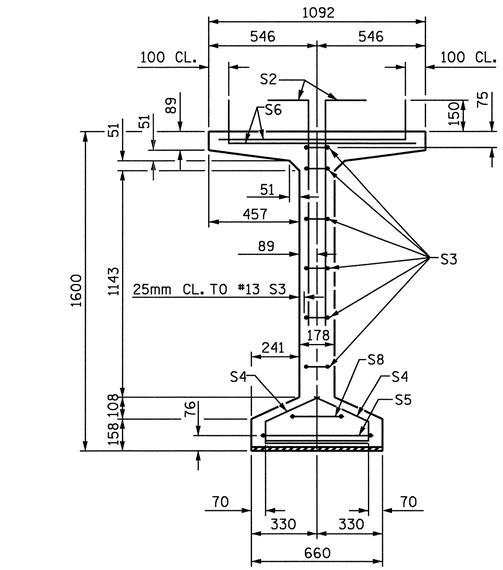

SECTION A-A

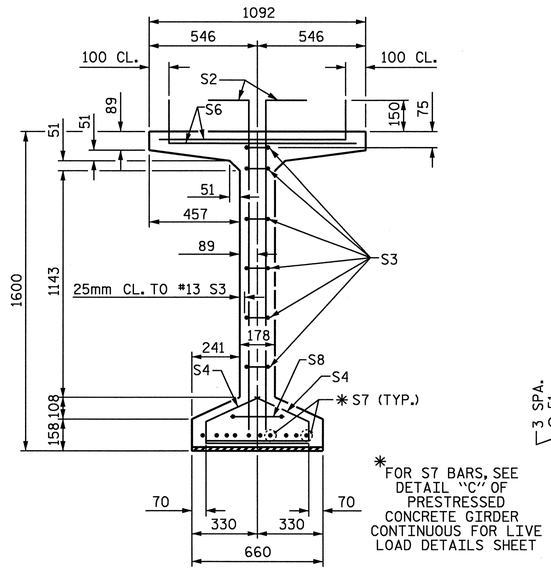

SECTION B-B

✱ FOR S7 BARS, SEE DETAIL "C" OF PRESTRESSED CONCRETE GIRDER CONTINUOUS FOR LIVE LOAD DETAILS SHEET

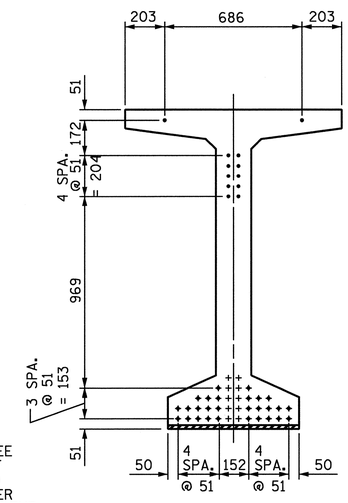

AT END OF GIRDER

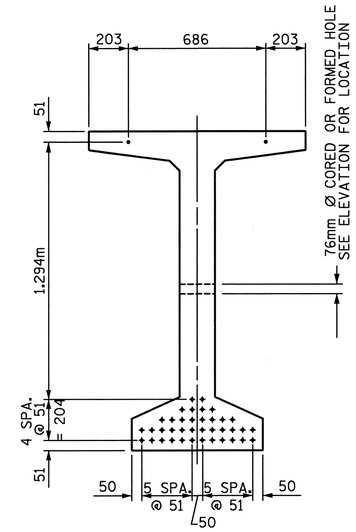

AT ℄ OF GIRDER

15.24mm Ø LOW RELAXATION STRAND LAYOUT

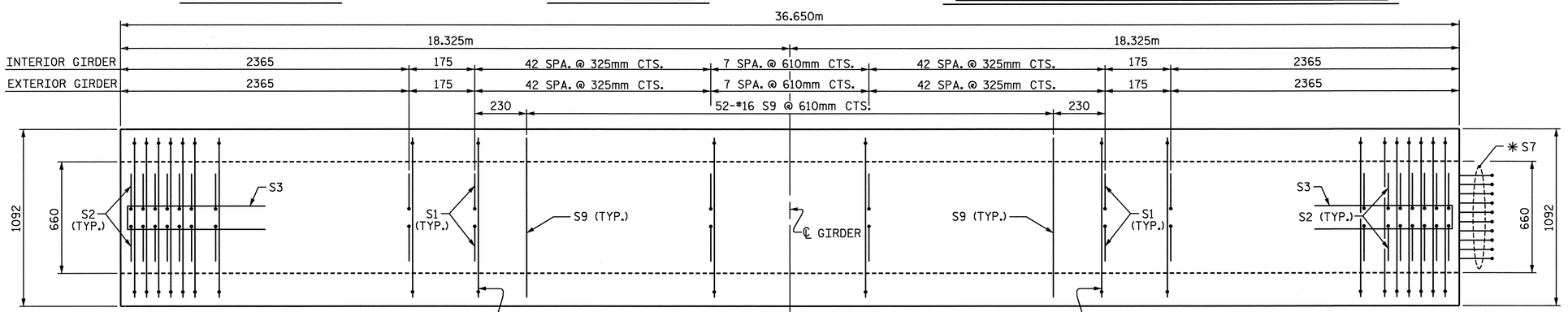

PLAN OF GIRDER

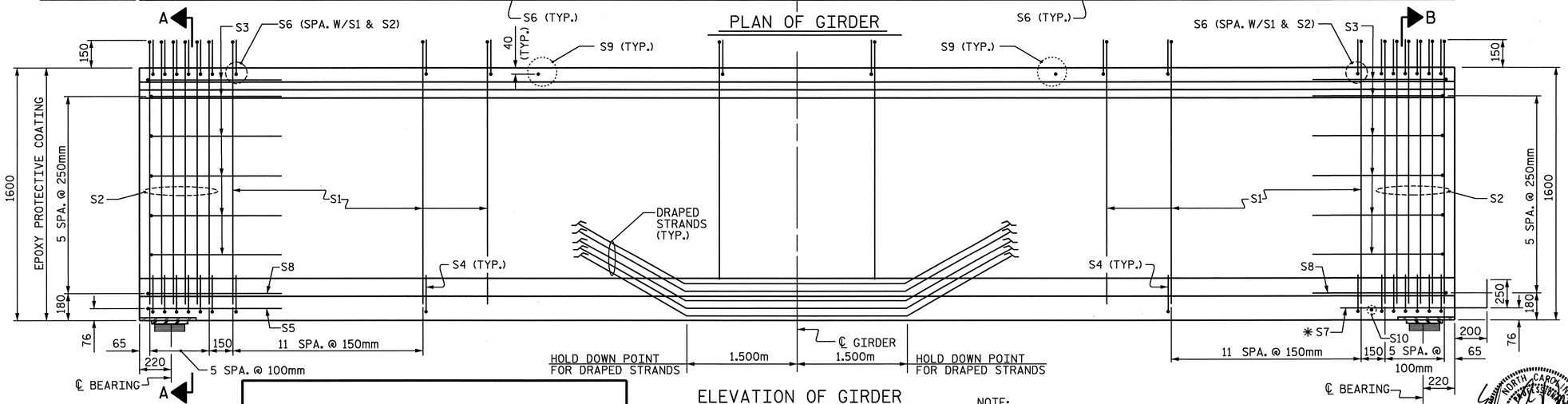

ELEVATION OF GIRDER

NOTE:
THE UPLIFT FORCE DUE TO DRAPED STRANDS IS 130KN.
FOR LOCATION OF 76mm Ø CORED OR FORMED HOLE SEE SHEET 5 OF 5.

15.24mm Ø L. R. GRADE 270 STRANDS

AREA (mm²)	ULTIMATE STRENGTH (kN PER STRAND)	APPLIED PRESTRESS (kN PER STRAND)
140.00	260.4	195.3

REINFORCING STEEL FOR ONE GIRDER

	BAR	NUMBER	SIZE	TYPE	LENGTH	WEIGHT
INTERIOR GDR.	S1	232	#13	1	1860	429
EXTERIOR GDR.	S1	232	#13	1	1860	429
	S2	24	#16	1	1860	69
	S3	12	#13	2	2560	31
	S4	72	#13	3	920	66
	S5	1	#16	2	3000	5
INTERIOR GDR.	S6	256	#16	1	1140	453
EXTERIOR GDR.	S6	256	#16	1	1140	453
	✱ S7	10	#16	STR	1120	17
	S8	2	#16	2	2740	9
	S9	52	#16	STR	980	79
	S10	1	#10	STR	560	1

✱ NOTE: S7 BARS SHALL BE BENT BEFORE SHIPMENT. HEAT BENDING SHALL NOT BE ALLOWED.

BAR TYPES

ALL BAR DIMENSIONS ARE OUT-TO-OUT

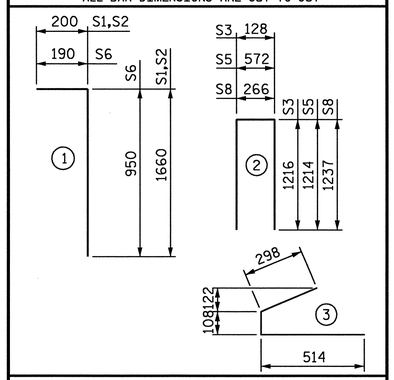

QUANTITIES FOR ONE GIRDER

	REINFORCING STEEL	68.9 MPa CONCRETE	15.24mm Ø L.R. STRANDS
	kg	m³	No.
INTERIOR GIRDER	1159	18.2	40
EXTERIOR GIRDER	1159	18.2	40

GIRDERS REQUIRED

NUMBER	LENGTH	TOTAL LENGTH
4	36.650m	146.600m

PROJECT NO. R-0609IB
GUILFORD-RANDOLPH COUNTY
STATION: 64+02.541 -L- POC

SHEET 1 OF 5

STATE OF NORTH CAROLINA
DEPARTMENT OF TRANSPORTATION
RALEIGH

STANDARD
1600mm PRESTRESSED CONCRETE
MODIFIED BULB TEE
CONTINUOUS FOR LIVE LOAD
SPAN A

REVISIONS							SHEET NO.
NO.	BY:	DATE:	NO.	BY:	DATE:		S-9
1			3				TOTAL SHEETS
2			4				199

ASSEMBLED BY : JC PENDERGRAFT DATE : 1/05
CHECKED BY : JA DILWORTH DATE : 1/05

DRAWN BY : EEM 2/6/97 REV. 7/17/98 RWW/LES
CHECKED BY : VAP 2/6/97 REV. 8/16/99 RWW/LES
REV. 10/17/00 RWW/LES

WETHERILL ENGINEERING
559 Jones Franklin Rd. Suite 164
Raleigh, N.C. 27606
Bus: 919 851 8077
Fax: 919 851 8107
TRANSPORTATION PLANNING/DESIGN - BRIDGE/STRUCTURE DESIGN
CIVIL/SITE DESIGN - GIS/GPS - CONSTRUCTION OBSERVATION

NORTH CAROLINA PROFESSIONAL SEAL 10773 ENGINEER EDWARD G. WETHERILL
5/23/05

DWG. 9 OF 28

STD. NO. PCG9SM

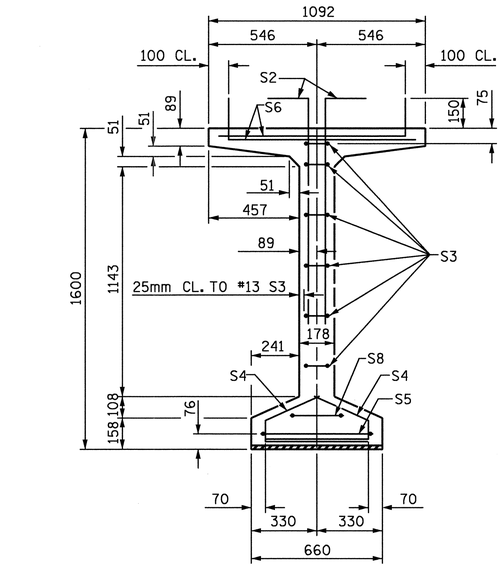

SECTION A-A

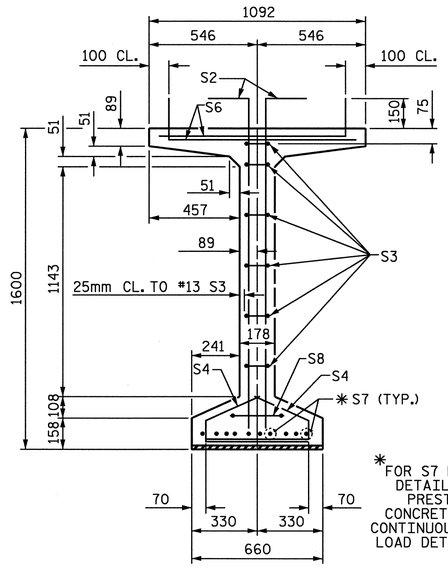

SECTION B-B

*FOR S7 BARS, SEE DETAIL "C" OF PRESTRESSED CONCRETE GIRDER CONTINUOUS FOR LIVE LOAD DETAILS SHEET

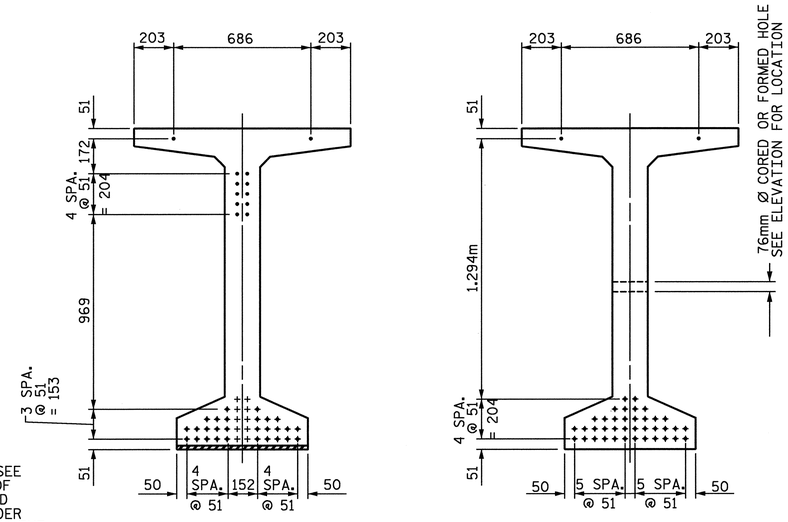

AT END OF GIRDER

AT ℄ OF GIRDER

15.24mm Ø LOW RELAXATION STRAND LAYOUT

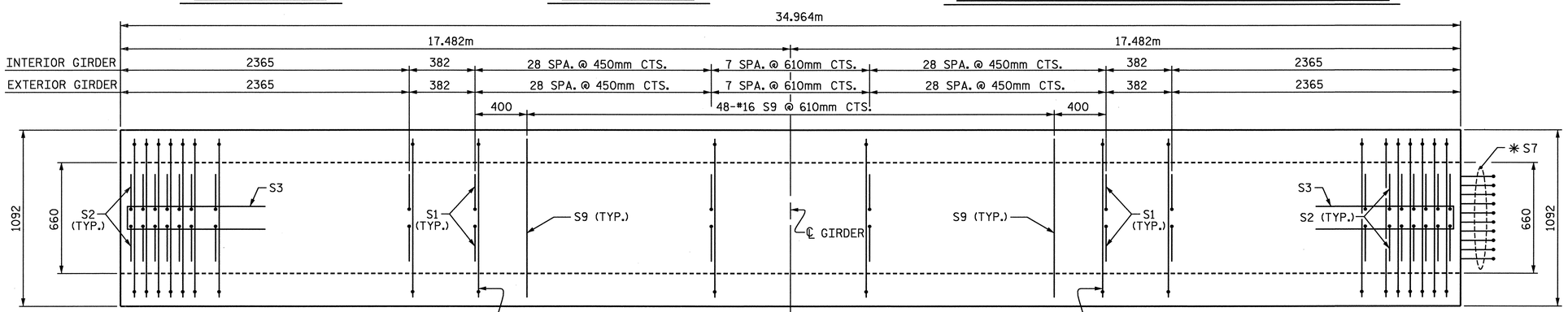

PLAN OF GIRDER

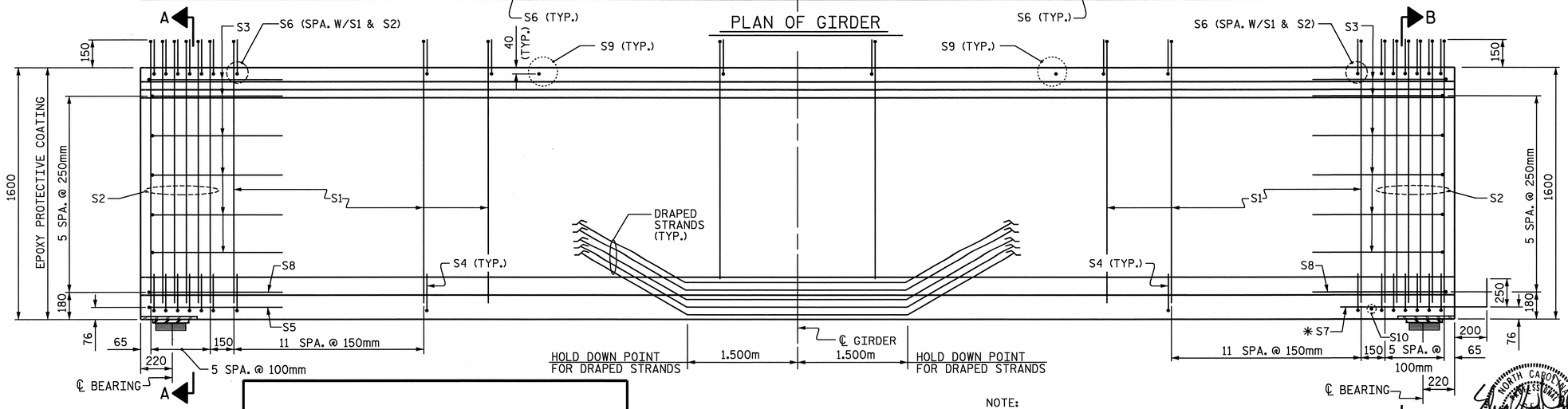

ELEVATION OF GIRDER

NOTE:

THE UPLIFT FORCE DUE TO DRAPED STRANDS IS 136KN.

FOR LOCATION OF 76mm Ø CORED OR FORMED HOLE SEE SHEET 5 OF 5.

DWG. 10 OF 28

15.24mm Ø L. R. GRADE 270 STRANDS		
AREA (mm²)	ULTIMATE STRENGTH (kN PER STRAND)	APPLIED PRESTRESS (kN PER STRAND)
140.00	260.4	195.3

REINFORCING STEEL FOR ONE GIRDER

	BAR	NUMBER	SIZE	TYPE	LENGTH	WEIGHT
INTERIOR GDR.	S1	176	#13	1	1860	325
EXTERIOR GDR.	S1	176	#13	1	1860	325
	S2	24	#16	1	1860	69
	S3	12	#13	2	2560	31
	S4	72	#13	3	920	66
	S5	1	#16	2	3000	5
INTERIOR GDR.	S6	200	#16	1	1140	354
EXTERIOR GDR.	S6	200	#16	1	1140	354
	*S7	10	#16	STR	1120	17
	S8	2	#16	2	2740	9
	S9	48	#16	STR	980	73
	S10	1	#10	STR	560	1

*NOTE: S7 BARS SHALL BE BENT BEFORE SHIPMENT. HEAT BENDING SHALL NOT BE ALLOWED.

BAR TYPES

ALL BAR DIMENSIONS ARE OUT-TO-OUT

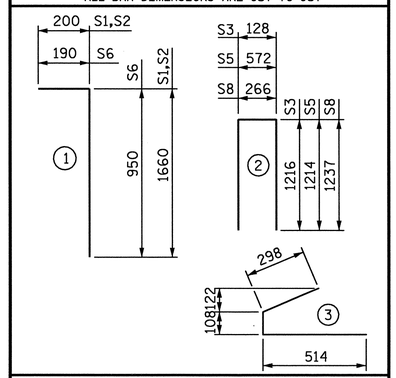

QUANTITIES FOR ONE GIRDER

	REINFORCING STEEL	68.9 MPa CONCRETE	15.24mm Ø L.R. STRANDS
	kg	m³	No.
INTERIOR GIRDER	950	17.4	40
EXTERIOR GIRDER	950	17.4	40

GIRDERS REQUIRED

NUMBER	LENGTH	TOTAL LENGTH
4	34.964m	139.856m

PROJECT NO. R-0609IB

GUILFORD-RANDOLPH COUNTY

STATION: 64+02.541-L- POC

SHEET 2 OF 5

STATE OF NORTH CAROLINA
DEPARTMENT OF TRANSPORTATION
RALEIGH

STANDARD
1600mm PRESTRESSED CONCRETE
MODIFIED BULB TEE
CONTINUOUS FOR LIVE LOAD
SPAN B

ASSEMBLED BY : JC PENDERGRAFT	DATE : 1/05
CHECKED BY : JA DILWORTH	DATE : 1/05

DRAWN BY : EEM 2/6/97	REV. 7/17/98	RWW/LES
CHECKED BY : VAP 2/6/97	REV. 8/16/99	RWW/LES
	REV. 10/17/00	RWW/LES

WETHERILL ENGINEERING
559 Jones Franklin Rd. Suite 164
Raleigh, N.C. 27606
Bus: 919 851 8077
Fax: 919 851 8107
TRANSPORTATION PLANNING/DESIGN - BRIDGE/STRUCTURE DESIGN
CIVIL/SITE DESIGN - GIS/GPS - CONSTRUCTION OBSERVATION

NORTH CAROLINA PROFESSIONAL SEAL 10773 ENGINEER EDWARD G. WETHERILL 5/23/05

REVISIONS								SHEET NO.
NO.	BY:	DATE:	NO.	BY:	DATE:			S-10
1			3					TOTAL SHEETS
2			4					199

STD. NO. PCG9SM

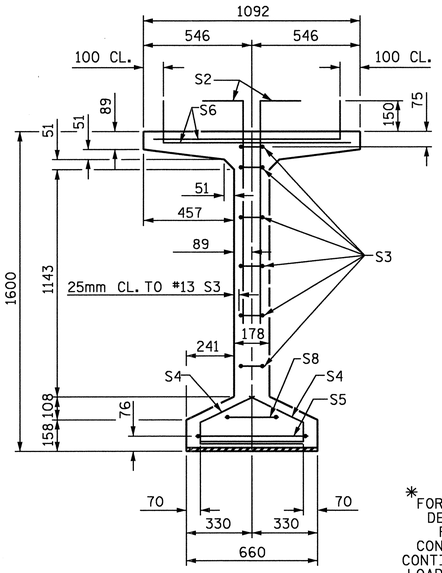

SECTION A-A

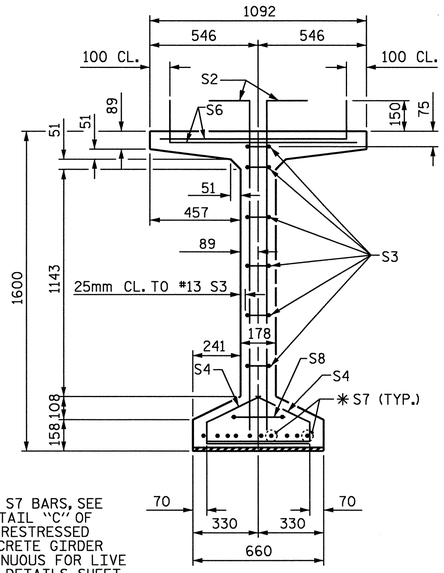

✱FOR S7 BARS, SEE DETAIL "C" OF PRESTRESSED CONCRETE GIRDER CONTINUOUS FOR LIVE LOAD DETAILS SHEET

SECTION B-B

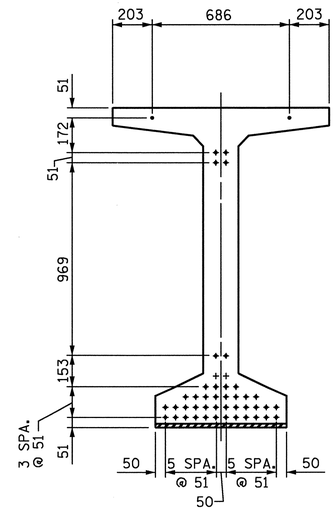

AT END OF GIRDERS

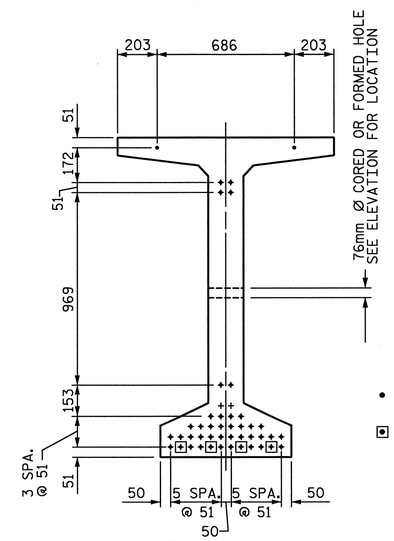

AT ℄ OF GIRDERS

15.24mm Ø LOW RELAXATION STRAND LAYOUT

DEBONDING LEGEND

- • FULLY BONDED STRANDS
- ▣ STRANDS DEBONDED FOR 1.220m FROM END OF GIRDER

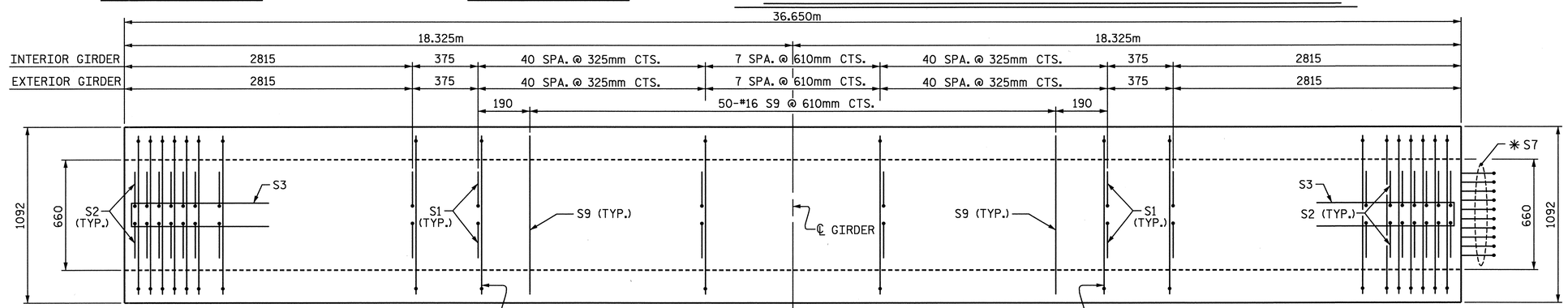

PLAN OF GIRDER

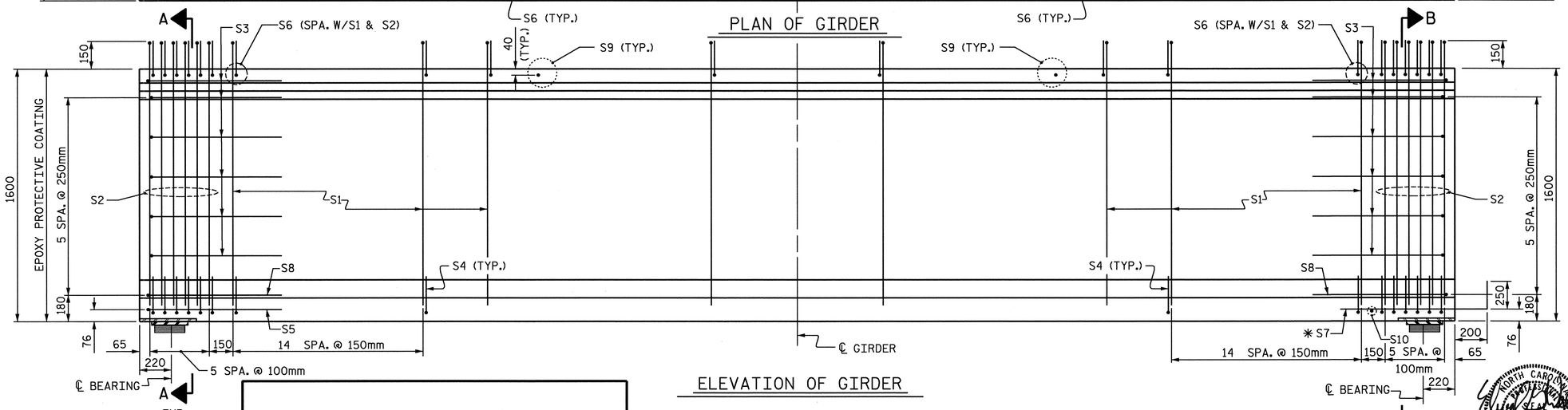

ELEVATION OF GIRDER

NOTE:
FOR LOCATION OF 76mm Ø CORED OR FORMED HOLE SEE SHEET 5 OF 5.

DWG. 11 OF 28

15.24mm Ø L.R. GRADE 270 STRANDS		
AREA (mm^2)	ULTIMATE STRENGTH (kN PER STRAND)	APPLIED PRESTRESS (kN PER STRAND)
140.0	260.4	195.3

REINFORCING STEEL FOR ONE GIRDER

	BAR	NUMBER	SIZE	TYPE	LENGTH	WEIGHT
INTERIOR GDR.	S1	236	#13	1	1860	436
EXTERIOR GDR.	S1	236	#13	1	1860	436
	S2	24	#16	1	1860	69
	S3	12	#13	2	2560	31
	S4	84	#13	3	920	77
	S5	1	#16	2	3000	5
INTERIOR GDR.	S6	260	#16	1	1140	460
EXTERIOR GDR.	S6	260	#16	1	1140	460
	✱S7	10	#16	STR	1120	17
	S8	2	#16	2	2740	9
	S9	50	#16	STR	980	76
	S10	1	#10	STR	560	1

✱NOTE: S7 BARS SHALL BE BENT BEFORE SHIPMENT. HEAT BENDING SHALL NOT BE ALLOWED.

BAR TYPES

ALL BAR DIMENSIONS ARE OUT-TO-OUT

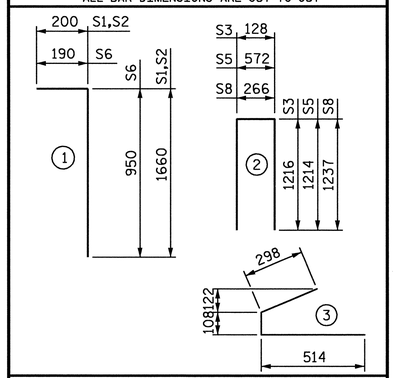

QUANTITIES FOR ONE GIRDER

	REINFORCING STEEL	68.9 MPa CONCRETE	15.24mm Ø L.R. STRANDS
	kg	m^3	No.
INTERIOR GIRDER	1181	18.2	44
EXTERIOR GIRDER	1181	18.2	44

GIRDERS REQUIRED

NUMBER	LENGTH	TOTAL LENGTH
4	36.650m	146.600m

PROJECT NO. R-0609IB
GUILFORD-RANDOLPH COUNTY
STATION: 64+02.541 -L- POC

SHEET 3 OF 5

STATE OF NORTH CAROLINA
DEPARTMENT OF TRANSPORTATION
RALEIGH

OPTIONAL
1600mm PRESTRESSED CONCRETE MODIFIED BULB TEE CONTINUOUS FOR LIVE LOAD (WITH 15.24mm Ø PARTIALLY DEBONDED STRANDS)
SPAN A

REVISIONS							SHEET NO.
NO.	BY:	DATE:	NO.	BY:	DATE:		S-11
1			3				TOTAL SHEETS
2			4				199

ASSEMBLED BY : JC PENDERGRAFT DATE : 1/05
CHECKED BY : JA DILWORTH DATE : 1/05
DRAWN BY : RWW 9/19/02 ADDED 9/19/02
CHECKED BY : GM 9/19/02

WETHERILL ENGINEERING
559 Jones Franklin Rd. Suite 164
Raleigh, N.C. 27606
Bus: 919 851 8077
Fax: 919 851 8107
TRANSPORTATION PLANNING/DESIGN - BRIDGE/STRUCTURE DESIGN
CIVIL/SITE DESIGN - GIS/GPS - CONSTRUCTION OBSERVATION

NORTH CAROLINA PROFESSIONAL SEAL 10773 ENGINEER EDWARD G. WETHERILL
5/23/05

STD. NO. PCGD9SM

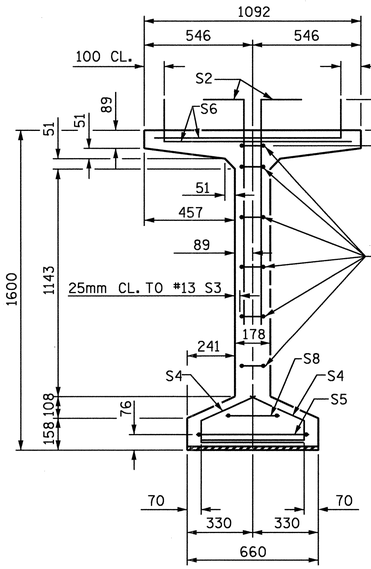

SECTION A-A

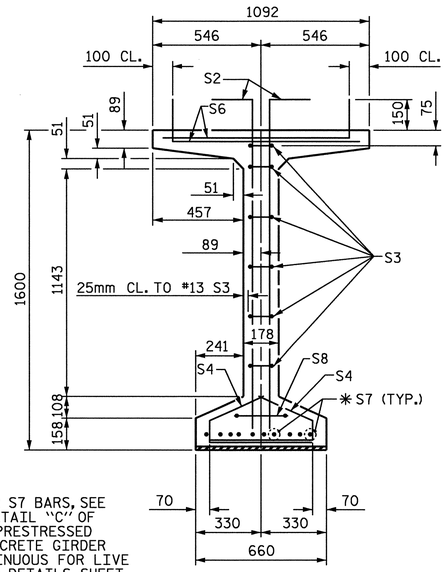

✱ FOR S7 BARS, SEE DETAIL "C" OF PRESTRESSED CONCRETE GIRDER CONTINUOUS FOR LIVE LOAD DETAILS SHEET

SECTION B-B

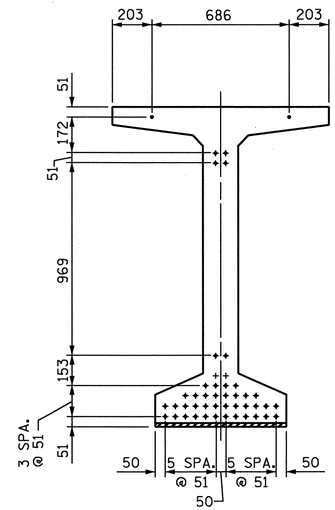

AT END OF GIRDERS

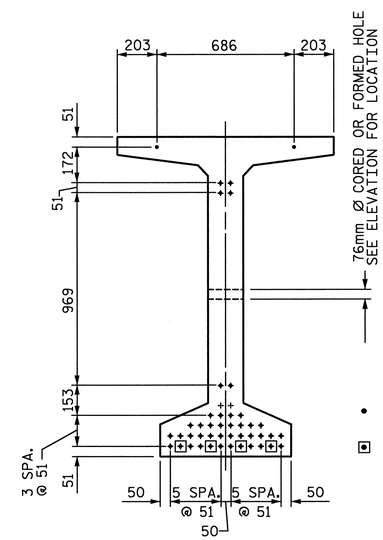

AT ℄ OF GIRDERS

15.24mm Ø LOW RELAXATION STRAND LAYOUT

DEBONDING LEGEND

- • FULLY BONDED STRANDS
- ▣ STRANDS DEBONDED FOR 1.220m FROM END OF GIRDER

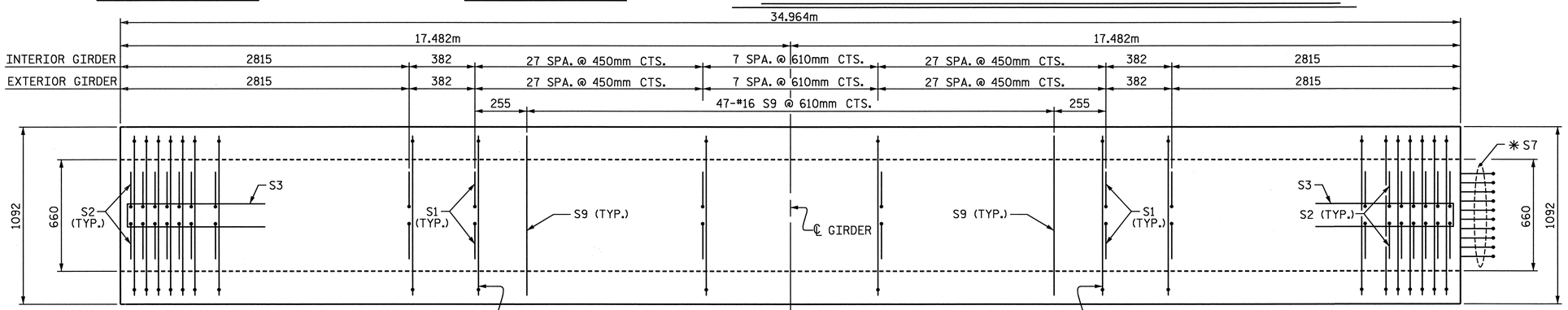

PLAN OF GIRDER

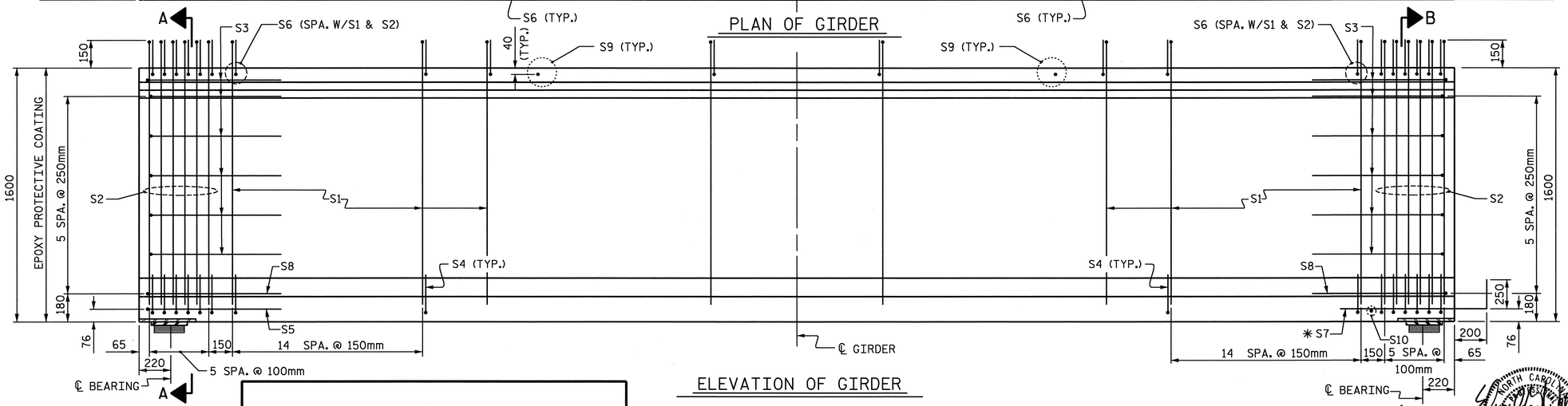

ELEVATION OF GIRDER

NOTE:
FOR LOCATION OF 76mm Ø CORED OR FORMED HOLE SEE SHEET 5 OF 5.

15.24mm Ø L.R. GRADE 270 STRANDS		
AREA (mm²)	ULTIMATE STRENGTH (kN PER STRAND)	APPLIED PRESTRESS (kN PER STRAND)
140.0	260.4	195.3

REINFORCING STEEL FOR ONE GIRDER

	BAR	NUMBER	SIZE	TYPE	LENGTH	WEIGHT
INTERIOR GDR.	S1	184	#13	1	1860	340
EXTERIOR GDR.	S1	184	#13	1	1860	340
	S2	24	#16	1	1860	69
	S3	12	#13	2	2560	31
	S4	84	#13	3	920	77
	S5	1	#16	2	3000	5
INTERIOR GDR.	S6	208	#16	1	1140	368
EXTERIOR GDR.	S6	208	#16	1	1140	368
	✱ S7	10	#16	STR	1120	17
	S8	2	#16	2	2740	9
	S9	47	#16	STR	980	71
	S10	1	#10	STR	560	1

✱ NOTE: S7 BARS SHALL BE BENT BEFORE SHIPMENT. HEAT BENDING SHALL NOT BE ALLOWED.

BAR TYPES

ALL BAR DIMENSIONS ARE OUT-TO-OUT

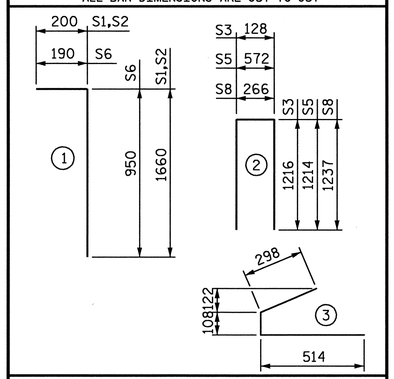

QUANTITIES FOR ONE GIRDER

	REINFORCING STEEL	68.9 MPa CONCRETE	15.24mm Ø L.R. STRANDS
	kg	m³	No.
INTERIOR GIRDER	988	17.4	44
EXTERIOR GIRDER	988	17.4	44

GIRDERS REQUIRED

NUMBER	LENGTH	TOTAL LENGTH
4	34.964m	139.856m

PROJECT NO. R-0609IB
GUILFORD-RANDOLPH COUNTY
STATION: 64+02.54I -L- POC

SHEET 4 OF 5

STATE OF NORTH CAROLINA
DEPARTMENT OF TRANSPORTATION
RALEIGH

OPTIONAL
1600mm PRESTRESSED CONCRETE MODIFIED BULB TEE CONTINUOUS FOR LIVE LOAD (WITH 15.24mm Ø PARTIALLY DEBONDED STRANDS)
SPAN B

REVISIONS								SHEET NO.
NO.	BY:	DATE:	NO.	BY:	DATE:			S-12
1			3					TOTAL SHEETS
2			4					199

ASSEMBLED BY : JC PENDERGRAFT DATE : 1/05
CHECKED BY : JA DILWORTH DATE : 1/05
DRAWN BY : RWW 9/19/02 ADDED 9/19/02
CHECKED BY : GM 9/19/02

WETHERILL ENGINEERING
559 Jones Franklin Rd. Suite 164
Raleigh, N.C. 27606
Bus: 919 851 8077
Fax: 919 851 8107
TRANSPORTATION PLANNING/DESIGN - BRIDGE/STRUCTURE DESIGN
CIVIL/SITE DESIGN - GIS/GPS - CONSTRUCTION OBSERVATION

NORTH CAROLINA PROFESSIONAL ENGINEER SEAL 10773 EDWARD G. WETHERILL 5/23/05

DWG. 12 OF 28

STD. NO. PCGD9SM

15.24mm Ø DRAPED STRAND PATTERN

DEAD LOAD DEFLECTION TABLE FOR GIRDERS 1 & 4

	SPAN A											SPAN B										
TENTH POINTS	0	1	2	3	4	5	6	7	8	9	10	0	1	2	3	4	5	6	7	8	9	10
CAMBER (GIRDER ALONE IN PLACE) ↑	0	0.047	0.084	0.110	0.127	0.133	0.127	0.110	0.084	0.047	0	0	0.045	0.081	0.107	0.123	0.129	0.123	0.107	0.081	0.045	0
DEFLECTION DUE TO SUPERIMPOSED D.L.✱ ↓	0	0.019	0.036	0.050	0.058	0.061	0.058	0.050	0.036	0.019	0	0	0.014	0.029	0.040	0.047	0.050	0.047	0.040	0.029	0.014	0
FINAL CAMBER ↑	0	28	47	61	69	72	69	61	47	28	0	0	31	52	66	76	79	76	66	52	31	0

15.24mm Ø DRAPED STRAND PATTERN

DEAD LOAD DEFLECTION TABLE FOR GIRDERS 2 & 3

	SPAN A											SPAN B										
TENTH POINTS	0	1	2	3	4	5	6	7	8	9	10	0	1	2	3	4	5	6	7	8	9	10
CAMBER (GIRDER ALONE IN PLACE) ↑	0	0.047	0.084	0.110	0.127	0.133	0.127	0.110	0.084	0.047	0	0	0.045	0.081	0.107	0.123	0.129	0.123	0.107	0.081	0.045	0
DEFLECTION DUE TO SUPERIMPOSED D.L.✱ ↓	0	0.019	0.036	0.050	0.058	0.061	0.058	0.050	0.036	0.019	0	0	0.014	0.028	0.040	0.047	0.050	0.047	0.040	0.028	0.014	0
FINAL CAMBER ↑	0	28	48	61	69	72	69	61	48	28	0	0	31	52	67	76	79	76	67	52	31	0

✱ INCLUDES FUTURE WEARING SURFACE.
ALL VALUES SHOWN IN METERS, EXCEPT "FINAL CAMBER" WHICH IS SHOWN IN MILLIMETERS.
DEFLECTIONS ARE TAKEN AT TENTH POINTS BETWEEN BEARINGS.

15.24mm Ø STRAIGHT STRAND PATTERN

DEAD LOAD DEFLECTION TABLE FOR GIRDERS 1 & 4

	SPAN A											SPAN B										
TENTH POINTS	0	1	2	3	4	5	6	7	8	9	10	0	1	2	3	4	5	6	7	8	9	10
CAMBER (GIRDER ALONE IN PLACE) ↑	0	0.056	0.096	0.123	0.138	0.143	0.138	0.123	0.096	0.056	0	0	0.053	0.092	0.118	0.133	0.138	0.133	0.118	0.092	0.053	0
DEFLECTION DUE TO SUPERIMPOSED D.L.✱ ↓	0	0.019	0.036	0.050	0.058	0.061	0.058	0.050	0.036	0.019	0	0	0.014	0.029	0.040	0.047	0.050	0.047	0.040	0.029	0.014	0
FINAL CAMBER ↑	0	37	60	73	80	82	80	73	60	37	0	0	39	63	78	86	88	86	78	63	39	0

15.24mm Ø STRAIGHT STRAND PATTERN

DEAD LOAD DEFLECTION TABLE FOR GIRDERS 2 & 3

	SPAN A											SPAN B										
TENTH POINTS	0	1	2	3	4	5	6	7	8	9	10	0	1	2	3	4	5	6	7	8	9	10
CAMBER (GIRDER ALONE IN PLACE) ↑	0	0.056	0.096	0.123	0.138	0.143	0.138	0.123	0.096	0.056	0	0	0.053	0.092	0.118	0.133	0.138	0.133	0.118	0.092	0.053	0
DEFLECTION DUE TO SUPERIMPOSED D.L.✱ ↓	0	0.019	0.036	0.050	0.058	0.061	0.058	0.050	0.036	0.019	0	0	0.014	0.028	0.040	0.047	0.050	0.047	0.040	0.028	0.014	0
FINAL CAMBER ↑	0	37	60	73	80	82	80	73	60	37	0	0	39	64	78	86	88	86	78	64	39	0

✱ INCLUDES FUTURE WEARING SURFACE.
ALL VALUES SHOWN IN METERS, EXCEPT "FINAL CAMBER" WHICH IS SHOWN IN MILLIMETERS.
DEFLECTIONS ARE TAKEN AT TENTH POINTS BETWEEN BEARINGS.

NOTES

ALL PRESTRESSING STRANDS SHALL BE 7-WIRE LOW-RELAXATION GRADE 270 STRANDS AND SHALL CONFORM TO AASHTO M203M EXCEPT FOR SAMPLING REQUIREMENTS WHICH SHALL BE IN ACCORDANCE WITH THE STANDARD SPECIFICATIONS.

TIE ROD ASSEMBLY SHALL BE AASHTO M270 GRADE 250 STRUCTURAL STEEL.

ALL REINFORCING STEEL SHALL BE GRADE 420.

APPLY EPOXY PROTECTIVE COATING TO END OF GIRDER SURFACES INDICATED IN ELEVATION VIEW. FOR EPOXY PROTECTIVE COATING, SEE SPECIAL PROVISIONS.

EMBEDDED PLATE "B-1" SHALL BE GALVANIZED IN ACCORDANCE WITH THE SPECIFICATIONS. BEVEL EDGES OF PLATE "B-1" TO GIVE CLOSE FIT BUT NOT TIGHT FIT TO STEEL CASTING FORM.

ANCHOR STUDS SHALL CONFORM TO AASHTO M169 GRADES 1010 THROUGH 1020 OR APPROVED EQUAL, AND SHALL MEET THE TYPE "B" REQUIREMENTS OF SUBSECTION 7.3 OF THE ANSI/AASHTO/AWS D1.5 BRIDGE WELDING CODE.

AT ENDS OF GIRDERS TO BE EMBEDDED IN CONCRETE DIAPHRAGMS OR END WALLS, PRESTRESSING STRANDS MAY EXTEND A MAXIMUM OF 50mm BEYOND THE GIRDER ENDS. OTHERWISE, PRESTRESSING STRANDS SHALL BE CUT FLUSH WITH THE GIRDER ENDS.

THE TRANSFER OF LOAD FROM THE ANCHORAGES TO THE GIRDER SHALL BE DONE WHEN CONCRETE HAS REACHED A COMPRESSIVE STRENGTH OF NOT LESS THAN 55.1 MPa.

DEPENDING ON THE TYPE OF SYSTEM USED TO SUPPORT THE DECK SLAB FORMS, PRESET ANCHORS MAY BE NECESSARY IN THE PRESTRESSED CONCRETE GIRDER.

THE TOP SURFACE OF THE GIRDER, EXCLUDING THE OUTSIDE 100mm, SHALL BE RAKED TO A DEPTH OF 6mm.

WHEN DRAPED STRANDS ARE DETAILED, THE LONGITUDINAL LOCATION OF THE HOLD DOWN DEVICES SHALL BE WITHIN 150mm OF THE LOCATION SHOWN AND THE CENTER OF GRAVITY OF THE GROUP OF DRAPED STRANDS SHALL BE LOCATED WITHIN 13mm OF THE THEORETICAL LOCATION SHOWN.

A 50mm x 50mm CHAMFER IS ALLOWED AT THE INTERSECTION OF THE WEB AND THE BOTTOM FLANGE OF THE 1600mm AND 1829mm MODIFIED BULB TEES ONLY.

FOR VERTICAL CRACKS IN PRESTRESSED CONCRETE GIRDERS PRIOR TO DETENSIONING, SEE SPECIAL PROVISIONS.

THE CONTRACTOR HAS THE OPTION TO PROVIDE, AT NO ADDITIONAL COST TO THE DEPARTMENT, 2 ADDITIONAL STRANDS AT THE TOP OF THE GIRDER TO FACILITATE TYING OF THE REINFORCING STEEL. THESE STRANDS SHALL BE PULLED TO A LOAD OF 20 Kn.

FOR PRESTRESSED CONCRETE MEMBERS, SEE SPECIAL PROVISIONS.

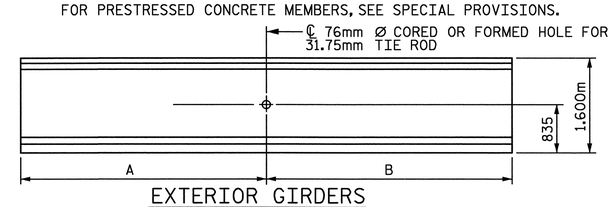

EXTERIOR GIRDERS
ONE HOLE REQUIRED

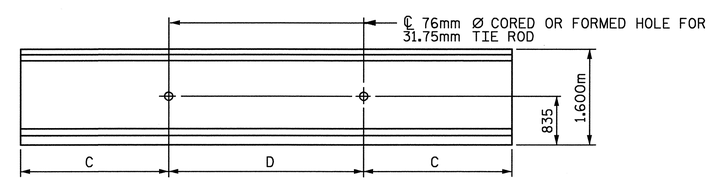

INTERIOR GIRDERS
TWO HOLE REQUIRED

TIE ROD PLACEMENT								
GIRDER	SPAN A				SPAN B			
	A	B	C	D	A	B	C	D
1	17.519	19.131	----	----	16.676	18.288	----	----
2	----	----	17.519	1.612	----	----	16.676	1.612
3	----	----	17.519	1.612	----	----	16.676	1.612
4	17.519	19.131	----	----	16.676	18.288	----	----

NOTE: LENGTH IN METERS

PLACEMENT OF TIE ROD HOLES

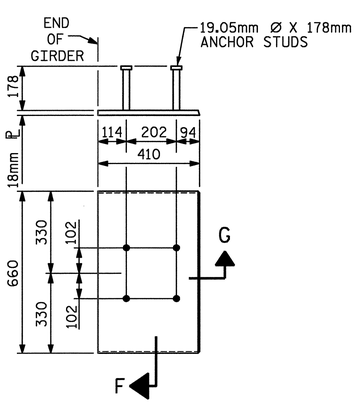

EMBEDDED PLATE "B-1" DETAILS FOR AASHTO TYPE IV GIRDER 1600mm & 1829mm MODIFIED BULB TEES

(2 REQ'D PER GIRDER)

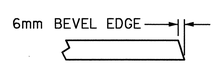

SECTION "G"

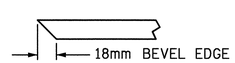

SECTION "F"

(SEE NOTES)

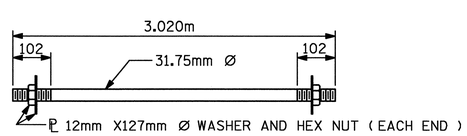

31.75mm Ø TIE ROD ASSEMBLY

(6 COMPLETE ASSEMBLIES REQUIRED)

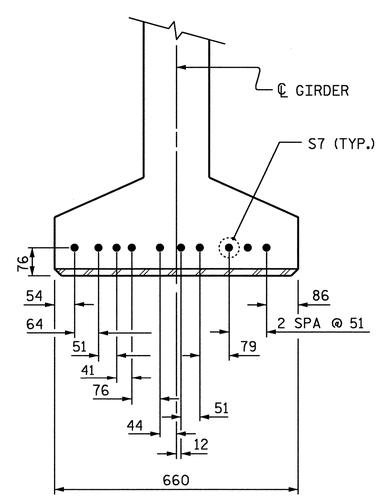

DETAIL "C"

(FOR 1600mm & 1829mm MODIFIED BULB TEES)

PROJECT NO. R-0609IB
GUILFORD-RANDOLPH COUNTY
STATION: 64+02.541 -L-

SHEET 5 OF 5

ASSEMBLED BY : J. C. PENDERGRAFT DATE :12-14-04
CHECKED BY : J. A. DILWORTH DATE :12-14-04

DRAWN BY : ELR 11/91
CHECKED BY : GRP 11/91

REV. 8/16/99 MAB/LES
REV. 10/17/00 RWW/LES
REV. 7/10/01R LES/RDR

NORTH CAROLINA PROFESSIONAL SEAL 10773 ENGINEER EDWARD G. WETHERILL
5/23/05

WETHERILL ENGINEERING
559 Jones Franklin Rd. Suite 164
Raleigh, N.C. 27606
Bus: 919 851 8077
Fax: 919 851 8107

TRANSPORTATION PLANNING/DESIGN - BRIDGE/STRUCTURE DESIGN
CIVIL/SITE DESIGN - GIS/GPS - CONSTRUCTION OBSERVATION

STATE OF NORTH CAROLINA
DEPARTMENT OF TRANSPORTATION
RALEIGH

STANDARD
PRESTRESSED CONCRETE GIRDER
CONTINUOUS FOR LIVE LOAD
DETAILS

REVISIONS						SHEET NO.
NO.	BY:	DATE:	NO.	BY:	DATE:	S-13
1			3			TOTAL SHEETS
2			4			199

STD. NO. PCG11SM

SOLE PLATE THICKNESS TABLE								
SOLE PLATE DIMENSIONS								
SPAN A								
GIRDER	END BENT 1				BENT 1			
	PL NO.	FIX/EXP	T1	T2	PL NO.	FIX/EXP	T1	T2
AG1	P1	EXP.	32	38	P2	FIX.	32	32
AG2	P1	EXP.	32	38	P2	FIX.	32	32
AG3	P1	EXP.	32	38	P3	FIX.	41	41
AG4	P1	EXP.	32	38	P2	FIX.	32	32
SOLE PLATE DIMENSIONS								
SPAN B								
GIRDER	BENT 1				END BENT 2			
	PL NO.	FIX/EXP	T1	T2	PL NO.	FIX/EXP	T1	T2
AG1	P4	FIX.	36	36	P6	EXP.	32	32
AG2	P4	FIX.	36	36	P6	EXP.	32	32
AG3	P5	FIX.	45	45	P6	EXP.	32	32
AG4	P4	FIX.	36	36	P6	EXP.	32	32

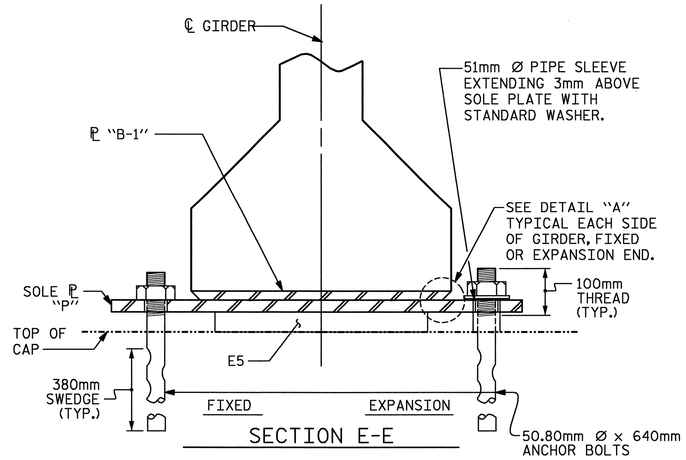

SECTION E-E

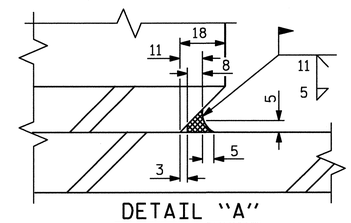

DETAIL "A"

NOTES

FOR ELASTOMERIC BEARINGS, SEE SPECIAL PROVISIONS.

AT ALL FIXED POINTS OF SUPPORT, NUTS FOR ANCHOR BOLTS ARE TO BE TIGHTENED FINGER TIGHT AND THEN BACKED OFF ½ TURN. THE THREAD OF THE NUT AND BOLT SHALL THEN BE BURRED WITH A SHARP POINTED TOOL.

THE 51mm Ø PIPE SLEEVE SHALL BE CUT FROM SCHEDULE 40 PVC PLASTIC PIPE. THE PVC PLASTIC PIPE SHALL MEET THE REQUIREMENTS OF ASTM D1785.

STEEL SOLE PLATES, ANCHOR BOLTS, NUTS, AND WASHERS SHALL BE GALVANIZED IN ACCORDANCE WITH THE STANDARD SPECIFICATIONS.

PRIOR TO WELDING, GRIND THE GALVANIZED SURFACE OF THE PORTION OF THE EMBEDDED PLATE AND SOLE PLATE THAT ARE TO BE WELDED. AFTER WELDING, DAMAGED GALVANIZED SURFACES SHALL BE REPAIRED IN ACCORDANCE WITH THE STANDARD SPECIFICATIONS.

WHEN WELDING THE SOLE PLATE TO THE EMBEDDED PLATE IN THE GIRDER, USE TEMPERATURE INDICATING WAX PENS, OR OTHER SUITABLE MEANS, TO ENSURE THAT THE TEMPERATURE OF THE SOLE PLATE DOES NOT EXCEED 149°C. TEMPERATURES ABOVE THIS MAY DAMAGE THE ELASTOMER.

SOLE PLATE "P", BOLTS, NUTS, WASHERS, AND PIPE SLEEVE SHALL BE INCLUDED IN THE PAY ITEM FOR PRESTRESSED CONCRETE GIRDERS.

ANCHOR BOLTS SHALL MEET THE REQUIREMENTS OF ASTM A449. NUTS SHALL MEET THE REQUIREMENTS OF AASHTO M291M-12 OR AASHTO M292M-2H. WASHERS SHALL MEET THE REQUIREMENTS OF AASHTO M293M. SHOP DRAWINGS ARE NOT REQUIRED FOR ANCHOR BOLTS, NUTS AND WASHERS. SHOP INSPECTION IS REQUIRED.

ALL SURFACES OF BEARING PLATES SHALL BE SMOOTH AND STRAIGHT.

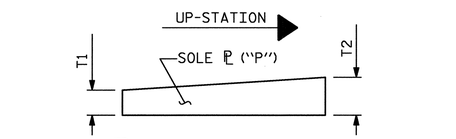

SOLE ℘ PLACEMENT DETAIL

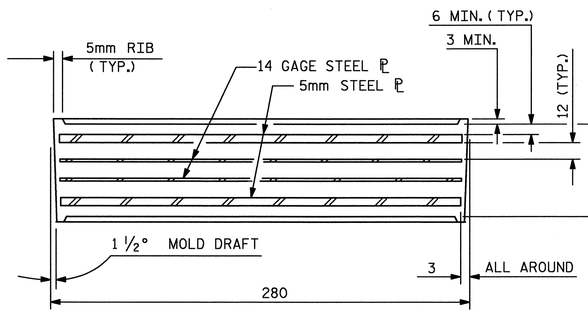

TYPICAL SECTION OF ELASTOMERIC BEARINGS

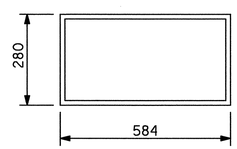

E5 (16 REQ'D)

PLAN VIEW OF ELASTOMERIC BEARING

TYPE VI

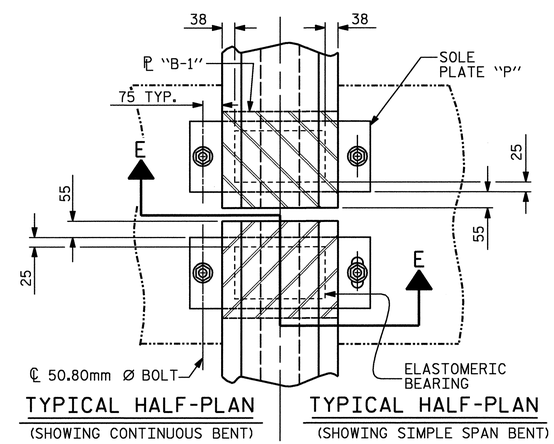

TYPICAL HALF-PLAN (SHOWING CONTINUOUS BENT)

TYPICAL HALF-PLAN (SHOWING SIMPLE SPAN BENT)

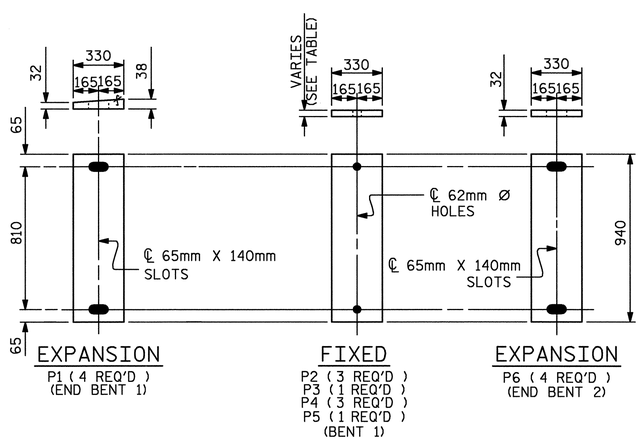

SOLE PLATE DETAILS ("P")

LOAD RATINGS	
	MAX.D.L.+ L.L.
TYPE VI	936 kN

PROJECT NO. R-0609IB

GUILFORD-RANDOLPH COUNTY

STATION: 64+02.541 -L-

ASSEMBLED BY : J. C. PENDERGRAFT	DATE : 12-14-04		
CHECKED BY : J. A. DILWORTH	DATE : 12-14-04		
DRAWN BY : EEM 2/97	REV. 7/17/98	RWW/LES	
CHECKED BY : VAP 2/97	REV. 8/16/99	RWW/LES	
	REV. 10/17/00	RWW/LES	

DWG. 14 OF 28

NORTH CAROLINA PROFESSIONAL ENGINEER SEAL 10773 EDWARD G. WETHERILL
5/23/05

WETHERILL ENGINEERING
559 Jones Franklin Rd. Suite 164
Raleigh, N.C. 27606
Bus: 919 851 8077
Fax: 919 851 8107

TRANSPORTATION PLANNING/DESIGN - BRIDGE/STRUCTURE DESIGN
CIVIL/SITE DESIGN - GIS/GPS - CONSTRUCTION OBSERVATION

STATE OF NORTH CAROLINA
DEPARTMENT OF TRANSPORTATION
RALEIGH

STANDARD
ELASTOMERIC BEARING DETAILS
PRESTRESSED CONCRETE GIRDER SUPERSTRUCTURE

REVISIONS						SHEET NO.
NO.	BY:	DATE:	NO.	BY:	DATE:	S-14
1			3			TOTAL SHEETS
2			4			199

STD. NO. EB4SM

NOTES:

ALL REINFORCING STEEL IN BARRIER RAIL SHALL BE EPOXY COATED.

#16S1 & #16S2 MAY BE SHIFTED AS NECESSARY TO CLEAR EXPANSION JOINTS IN RAILS.

ALL HORIZONTAL DIMENSIONS SHOWN ARE ALONG OUTSIDE EDGE OF SUPERSTRUCTURE.

FOR SECTION A-A, SEE SHEET 2 OF 2.

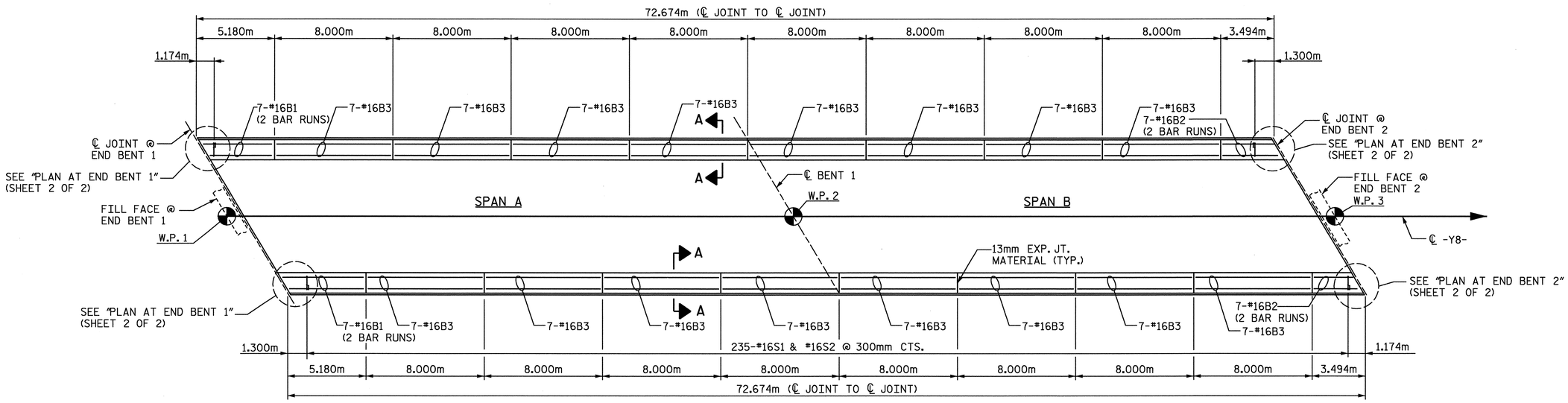

PLAN OF BARRIER RAIL

PROJECT NO. R-0609IB

GUILFORD-RANDOLPH COUNTY

STATION: 64+02.541 -L-

SHEET 1 OF 2

STATE OF NORTH CAROLINA
DEPARTMENT OF TRANSPORTATION
RALEIGH

STANDARD CONCRETE BARRIER RAIL

NORTH CAROLINA PROFESSIONAL SEAL 10773 ENGINEER EDWARD G. WETHERILL

5/23/05

WETHERILL ENGINEERING
559 Jones Franklin Rd. Suite 164
Raleigh, N.C. 27606
Bus: 919 851 8077
Fax: 919 851 8107
TRANSPORTATION PLANNING/DESIGN - BRIDGE/STRUCTURE DESIGN
CIVIL/SITE DESIGN - GIS/GPS - CONSTRUCTION OBSERVATION

REVISIONS						SHEET NO.
NO.	BY	DATE	NO.	BY	DATE	S-15
1			1			TOTAL SHEETS
2			2			199

DRAWN BY: J. C. PENDERGRAFT DATE: 12-21-04
CHECKED BY: J. A. DILWORTH DATE: 12-21-04

p:\R-0609IB\R0609IB_STE1\Structures\DWG\bulbtee\cbr1sm.std
5/19/2005 1:42:41 PM

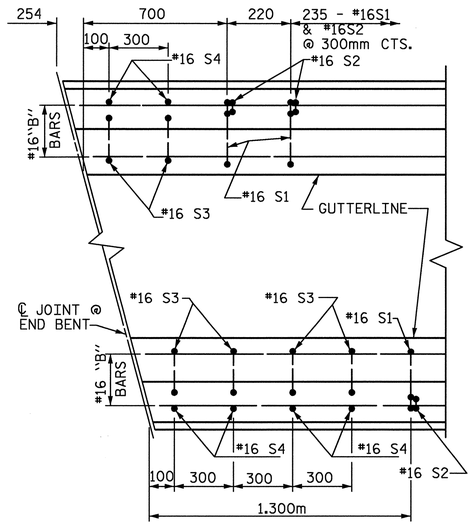

PLAN AT END BENT 1

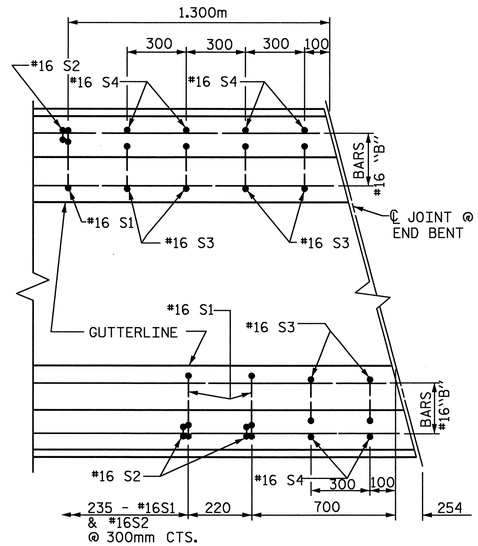

PLAN AT END BENT 2

NOTES

THE BARRIER RAIL IN A CONTINUOUS UNIT SHALL NOT BE CAST UNTIL ALL SLAB CONCRETE IN THAT UNIT HAS BEEN CAST AND HAS REACHED A MINIMUM COMPRESSIVE STRENGTH OF 20.7 MPa.

WHEN COMPRESSION JOINT SEAL OR EVAZOTE JOINT SEAL IS REQUIRED, THE JOINT IN THE DECK SHALL BE SAWED PRIOR TO THE CASTING OF BARRIER RAIL.

ALL REINFORCING STEEL IN BARRIER RAILS SHALL BE EPOXY COATED.

THE #16 S3 AND #16 S4 BARS SHALL BE INSTALLED, USING AN ADHESIVE ANCHORING SYSTEM, AFTER SAWING THE JOINT. FOR ADHESIVELY ANCHORED ANCHOR BOLTS OR DOWELS, SEE SPECIAL PROVISIONS. THE YIELD LOAD FOR THE #16 S3 AND #16 S4 BARS IS 82.7 kN. FIELD TESTING FOR THE ADHESIVE BONDING SYSTEM IS NOT REQUIRED.

VERTICAL GROOVED CONTRACTION JOINTS, 12mm IN DEPTH, SHALL BE TOOLED IN ALL EXPOSED FACES OF THE BARRIER RAIL AND IN ACCORDANCE WITH ARTICLE 825-10(B) OF THE STANDARD SPECIFICATIONS. THE CONTRACTION JOINT SHALL BE LOCATED AT EACH THIRD POINT BETWEEN BARRIER RAIL EXPANSION JOINTS. ONLY ONE CONTRACTION JOINT IS REQUIRED AT MIDPOINT OF BARRIER RAIL SEGMENTS LESS THAN 6.1m IN LENGTH AND NO CONTRACTION JOINTS ARE REQUIRED FOR THOSE SEGMENTS LESS THAN 3.5m IN LENGTH.

BAR TYPES

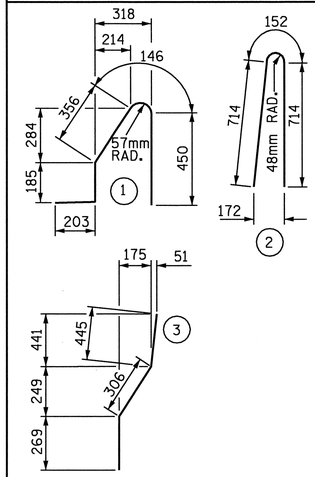

ALL BAR DIMENSIONS ARE OUT TO OUT

BILL OF MATERIAL

FOR CONCRETE BARRIER RAIL ONLY

BAR	NO.	SIZE	TYPE	LENGTH	WEIGHT
* S1	472	#16	1	1340	982
* S2	472	#16	2	1580	1157
* S3	12	#16	3	1020	19
* S4	12	#16	STR	960	18
* B1	28	#16	STR	3220	140
* B2	28	#16	STR	2380	103
* B3	112	#16	STR	7900	1373

* EPOXY COATED REINFORCING STEEL 3792 kg

CLASS AA CONCRETE 37.0 CU. METER

CONCRETE BARRIER RAIL 145.290 METERS

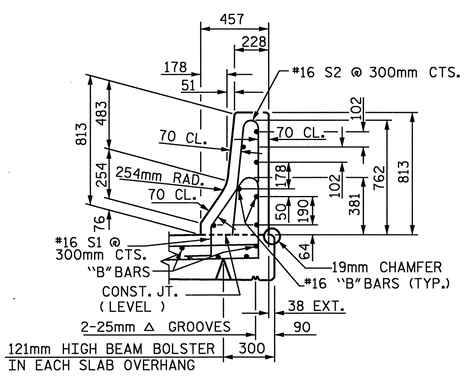

SECTION A-A

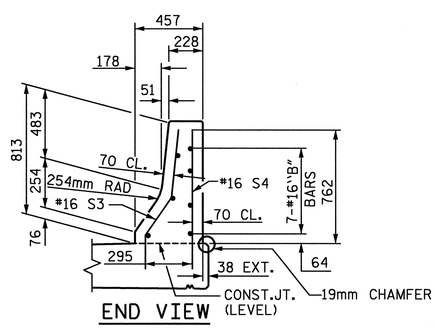

END VIEW

END OF RAIL DETAILS

FOR ADHESIVE ANCHORING AT SAWED JOINTS

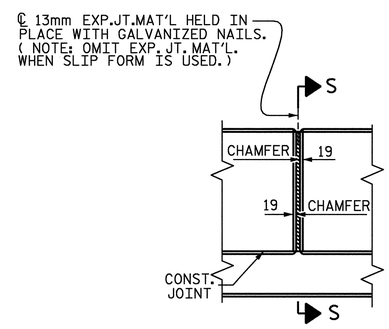

ELEVATION AT EXPANSION JOINTS

BARRIER RAIL DETAILS

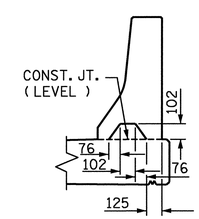

SECTION S-S

AT DAM IN OPEN JOINT
(THIS IS TO BE USED ONLY WHEN SLIP FORM IS USED)

PROJECT NO. R-0609IB

GUILFORD-RANDOLPH COUNTY

STATION: 64+02.541 -L-

SHEET 2 OF 2

STATE OF NORTH CAROLINA
DEPARTMENT OF TRANSPORTATION
RALEIGH

STANDARD
CONCRETE
BARRIER RAIL

NORTH CAROLINA PROFESSIONAL SEAL 10773 ENGINEER EDWARD G. WETHERILL
5/23/05

WETHERILL ENGINEERING
559 Jones Franklin Rd. Suite 164
Raleigh, N.C. 27606
Bus: 919 851 8077
Fax: 919 851 8107
TRANSPORTATION PLANNING/DESIGN - BRIDGE/STRUCTURE DESIGN
CIVIL/SITE DESIGN - GIS/GPS - CONSTRUCTION OBSERVATION

REVISIONS								SHEET NO.
NO.	BY:	DATE:	NO.	BY:	DATE:			S-16
1			3					TOTAL SHEETS
2			4					199

ASSEMBLED BY : B. JOHNSON	DATE : 1/05		
CHECKED BY : J.A. DILWORTH	DATE : 1/05		
DRAWN BY : ARB 5/87	REV. 8/16/99	RWW/LES	
CHECKED BY : SJD 9/87	REV. 10/17/00	RWW/LES	
	REV. 5/7/03R	RWW/JTE	

DWG. 16 OF 28

STD. No. CBR1SM

p:\R-0609IB\R0609IB_SITE\Structures\DWG\bulbtee\cbr1sm.std
5/19/2005 3:45 PM

REINFORCING BAR SCHEDULE

SPANS A & B

BAR	NO.	SIZE	TYPE	LENGTH	WEIGHT	BAR	NO.	SIZE	TYPE	LENGTH	WEIGHT	BAR	NO.	SIZE	TYPE	LENGTH	WEIGHT
✱ A 1	349	#16	STR.	10480	5676	A 201	2	#16	STR.	10280	32	✱ A 301	6	#19	STR.	4840	65
						A 202	2	#16	STR.	9960	31						
A 2	349	#16	STR.	10480	5676	A 203	2	#16	STR.	9640	30	✱ B 1	72	#13	STR.	9080	650
						A 204	2	#16	STR.	9320	29	✱ B 2	48	#22	STR.	13240	1933
✱ A 101	2	#16	STR.	10280	32	A 205	2	#16	STR.	9000	28	✱ B 3	46	#22	STR.	10960	1534
✱ A102	2	#16	STR.	9960	31	A 206	2	#16	STR.	8680	27	B 4	72	#13	STR.	8680	621
✱ A103	2	#16	STR.	9640	30	A 207	2	#16	STR.	8360	26	B 5	135	#16	STR.	15040	3151
✱ A104	2	#16	STR.	9320	29	A 208	2	#16	STR.	8040	25						
✱ A105	2	#16	STR.	9000	28	A 209	2	#16	STR.	7720	24	✱ G 1	2	#16	STR.	12200	38
✱ A106	2	#16	STR.	8680	27	A 210	2	#16	STR.	7400	23						
✱ A107	2	#16	STR.	8360	26	A 211	2	#16	STR.	7080	22	✱ K 1	8	#25	1	4500	143
✱ A108	2	#16	STR.	8040	25	A 212	2	#16	STR.	6760	21	✱ K 2	8	#25	2	6260	199
✱ A109	2	#16	STR.	7720	24	A 213	2	#16	STR.	6460	20	K 3	18	#19	STR.	1740	70
✱ A 110	2	#16	STR.	7400	23	A 214	2	#16	STR.	6140	19	K 4	48	#16	STR.	2420	180
✱ A 111	2	#16	STR.	7080	22	A 215	2	#16	STR.	5820	18	K 5	12	#16	5	2420	45
✱ A 112	2	#16	STR.	6760	21	A 216	2	#16	STR.	5500	17	K 6	6	#13	STR.	1740	10
✱ A 113	2	#16	STR.	6460	20	A 217	2	#16	STR.	5180	16	K 7	24	#13	STR.	2820	67
✱ A 114	2	#16	STR.	6140	19	A 218	2	#16	STR.	4860	15	K 8	6	#13	STR.	1860	11
✱ A 115	2	#16	STR.	5820	18	A 219	2	#16	STR.	4540	14	K 9	12	#13	7	1920	23
✱ A 116	2	#16	STR.	5500	17	A 220	2	#16	STR.	4220	13	K 10	12	#13	10	3840	46
✱ A 117	2	#16	STR.	5180	16	A 221	2	#16	STR.	3900	12						
✱ A 118	2	#16	STR.	4860	15	A 222	2	#16	STR.	3580	11	✱ S 1	30	#13	6	1700	51
✱ A 119	2	#16	STR.	4540	14	A 223	2	#16	STR.	3260	10	✱ S 2	30	#16	3	1780	83
✱ A120	2	#16	STR.	4220	13	A 224	2	#16	STR.	2940	9	S 3	42	#13	4	2980	124
✱ A 121	2	#16	STR.	3900	12	A 225	2	#16	STR.	2640	8	S 4	75	#13	8	840	63
✱ A122	2	#16	STR.	3580	11	A 226	2	#16	STR.	2320	7						
✱ A123	2	#16	STR.	3260	10	A 227	2	#16	STR.	2000	6	✱ U 1	18	#13	9	5240	94
✱ A124	2	#16	STR.	2940	9	A 228	2	#16	STR.	1680	5						
✱ A125	2	#16	STR.	2640	8	A 229	2	#16	STR.	1360	4						
✱ A126	2	#16	STR.	2320	7	A 230	2	#16	STR.	1040	3						
✱ A127	2	#16	STR.	2000	6	A 231	2	#16	STR.	720	2						
✱ A128	2	#16	STR.	1680	5	A 232	2	#16	STR.	400	1						
✱ A129	2	#16	STR.	1360	4												
✱ A130	2	#16	STR.	1040	3												
✱ A131	2	#16	STR.	720	2												
✱ A132	2	#16	STR.	400	1												

✱ DENOTES EPOXY COATED REINFORCING STEEL.

BAR TYPES

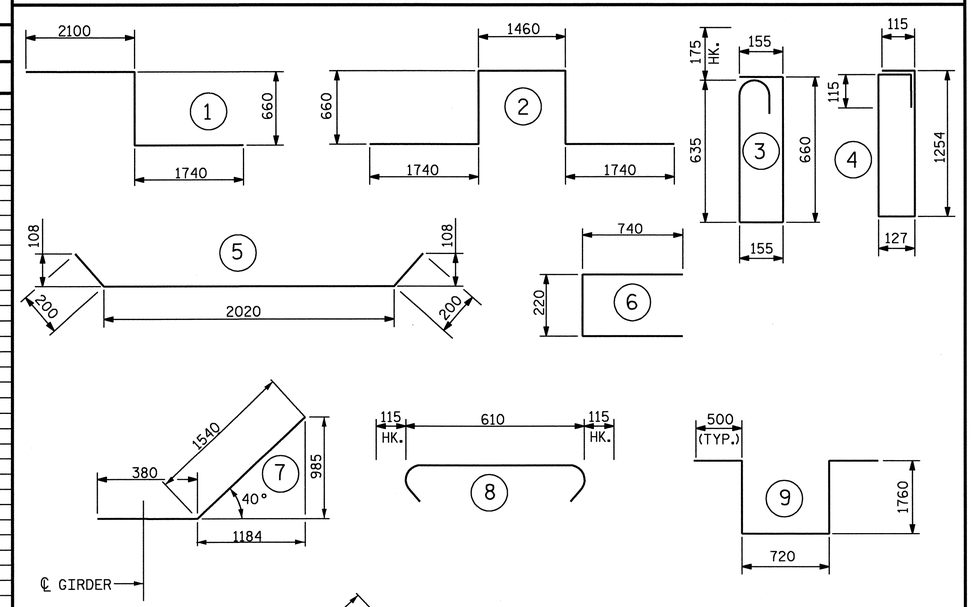

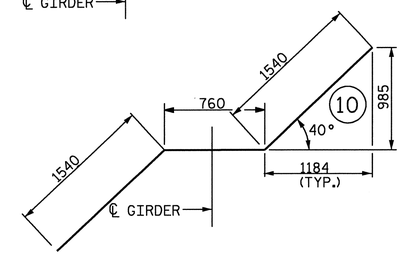

ALL BAR DIMENSIONS ARE OUT TO OUT

SUPERSTRUCTURE BILL OF MATERIAL

	CLASS AA CONCRETE	REINFORCING STEEL	EPOXY COATED REINFORCING STEEL
	(CU. METER)	(kg)	(kg)
SPAN A & B		10,615	10,994
POUR 1	102.8		
POUR 2	131.5		
TOTALS✱✱	234.3	10,615	10,994

✱✱ QUANTITIES FOR BARRIER RAIL ARE NOT INCLUDED

GROOVING BRIDGE FLOORS		
APPROACH SLABS	130.7	SQ.METER
BRIDGE DECK	626.5	SQ.METER
TOTAL	757.2	SQ.METER

SUPERSTRUCTURE REINFORCING STEEL LENGTHS ARE BASED ON THE FOLLOWING MINIMUM SPLICE LENGTHS

BAR SIZE	SUPERSTRUCTURE EXCEPT APPROACH SLABS, PARAPET, AND BARRIER RAIL		APPROACH SLABS		PARAPET AND BARRIER RAIL
	EPOXY COATED	UNCOATED	EPOXY COATED	UNCOATED	
#13	610	540	610	540	840
#16	770	660	770	660	1050
#19	920	790	1190	790	1330
#22	1580	1060			
#25	2080	1390			

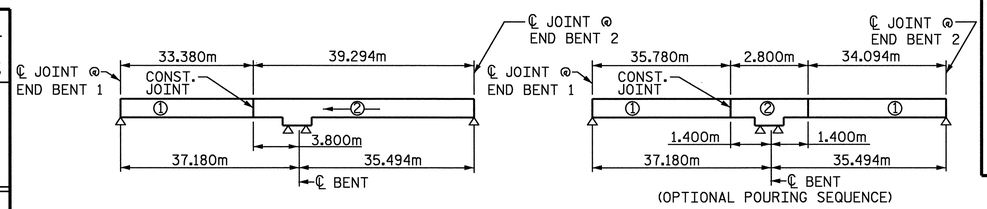

LAYOUT FOR POURING SEQUENCE OF CONCRETE SLAB

KEY:
INDICATES POUR NUMBER AND DIRECTION OF POUR

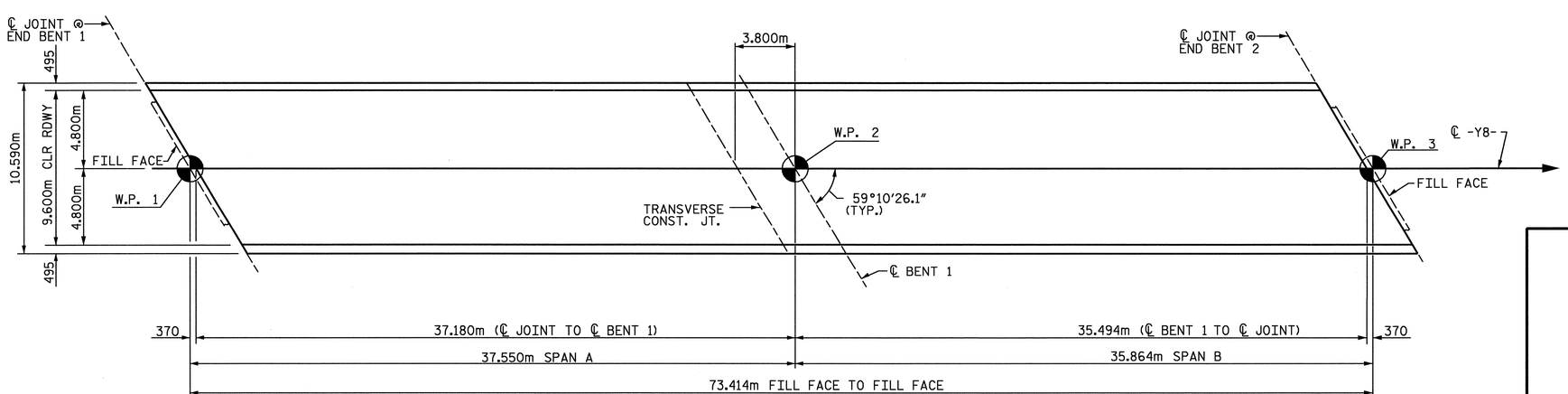

LAYOUT FOR COMPUTING AREA OF REINFORCED CONCRETE DECK SLAB
(SQ. METER = 769.3)

PROJECT NO. R-0609IB
GUILFORD-RANDOLPH COUNTY
STATION: 64+02.541 -L-

NORTH CAROLINA PROFESSIONAL SEAL 10773 ENGINEER EDWARD G. WETHERILL
5/23/05

WETHERILL ENGINEERING
559 Jones Franklin Rd. Suite 164
Raleigh, N.C. 27606
Bus: 919 851 8077
Fax: 919 851 8107

TRANSPORTATION PLANNING/DESIGN - BRIDGE/STRUCTURE DESIGN
CIVIL/SITE DESIGN - GIS/GPS - CONSTRUCTION OBSERVATION

STATE OF NORTH CAROLINA
DEPARTMENT OF TRANSPORTATION
RALEIGH

STANDARD

SUPERSTRUCTURE BILL OF MATERIAL

REVISIONS							
NO.	BY:	DATE:	NO.	BY:	DATE:	SHEET NO.	S-17
1			3			TOTAL SHEETS	199
2			4				

ASSEMBLED BY : JC PENDERGRAFT DATE : 1/05
CHECKED BY : JA DILWORTH DATE : 1/05
DRAWN BY : JMB 5/87
CHECKED BY : SJD 9/87
REV. 5/16/97 EEM/RGW

DWG. 17 OF 28

STD. NO. BOM2SM

NOTES:

STIRRUPS IN CAP MAY BE SHIFTED AS NECESSARY TO CLEAR ANCHOR BOLTS.

FOR EPOXY PROTECTIVE COATING, SEE SPECIAL PROVISIONS.

FOR TEMPORARY DRAINAGE AT END BENTS, SEE END BENT 1 SHEET 2 OF 2.

BACKWALL SHALL BE PLACED BEFORE APPLYING THE EPOXY PROTECTIVE COATING.

THE TOP SURFACE AREAS OF THE END BENT CAP SHALL BE CURED IN ACCORDANCE WITH THE STANDARD SPECIFICATIONS EXCEPT THE MEMBRANE CURING COMPOUND METHOD SHALL NOT BE USED.

THE TOP SURFACE OF THE END BENT CAP EXCEPT THE BRIDGE SEAT BUILDUPS SHALL BE SLOPED TRANSVERSELY FROM THE FILL FACE TO THE BACK FACE AT THE RATE OF 2%.

FOR PILE SPLICE DETAILS, SEE END BENT 2, SHEET 2 OF 2.

THE CONTRACTOR SHALL PROVIDE FOR INSTALLATION OF THE 102mm Ø DRAIN PIPE THROUGH THE WING WALL AS REQUIRED FOR REINFORCED BRIDGE APPROACH FILLS, SEE THE ROADWAY PLANS. REINFORCING STEEL IN THE WING WALL MAY BE SHIFTED AS NECESSARY TO CLEAR THE DRAIN PIPE.

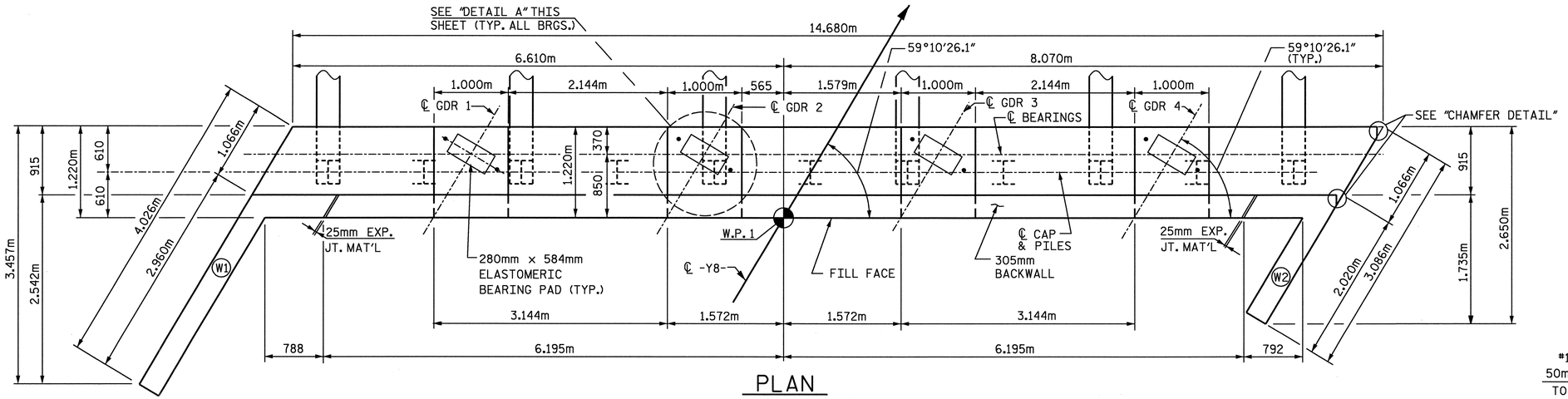

PLAN

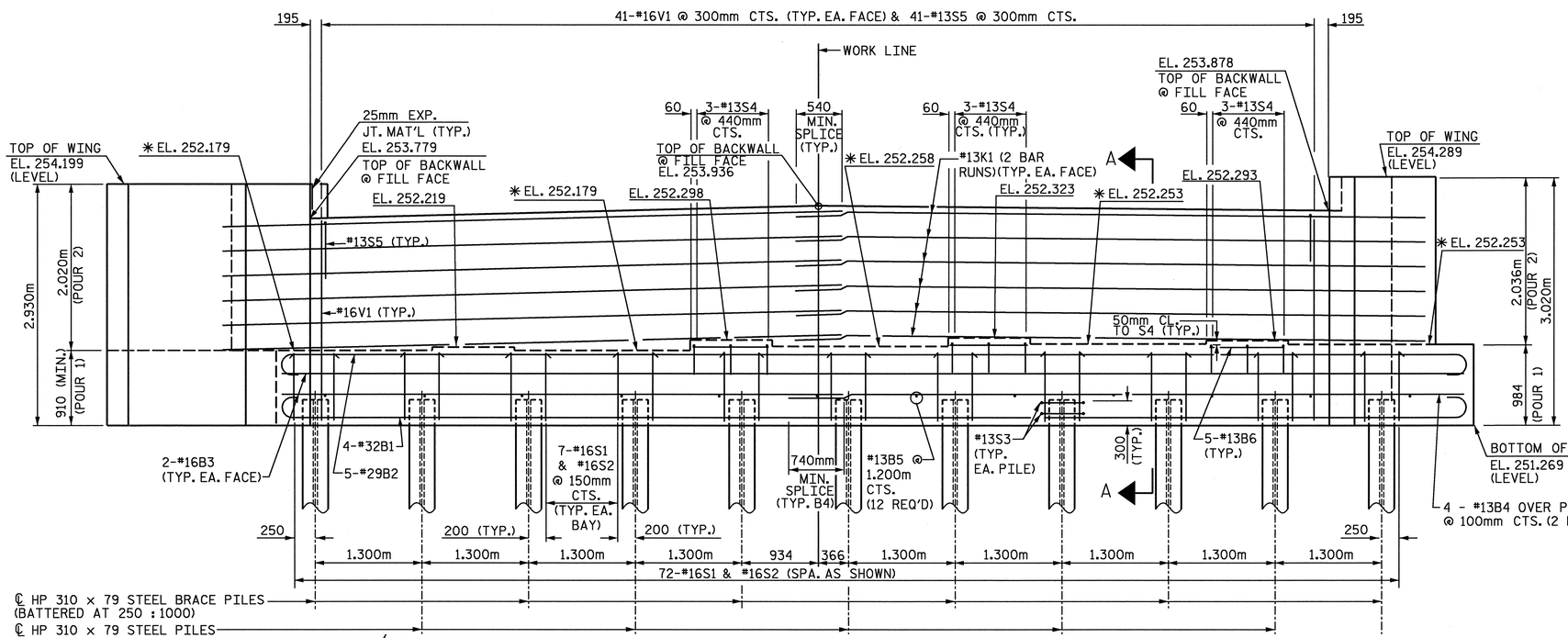

ELEVATION

✱FOR ELEVATION BETWEEN BRIDGE SEAT BUILDUPS SEE "SECTION A-A", THIS SHEET

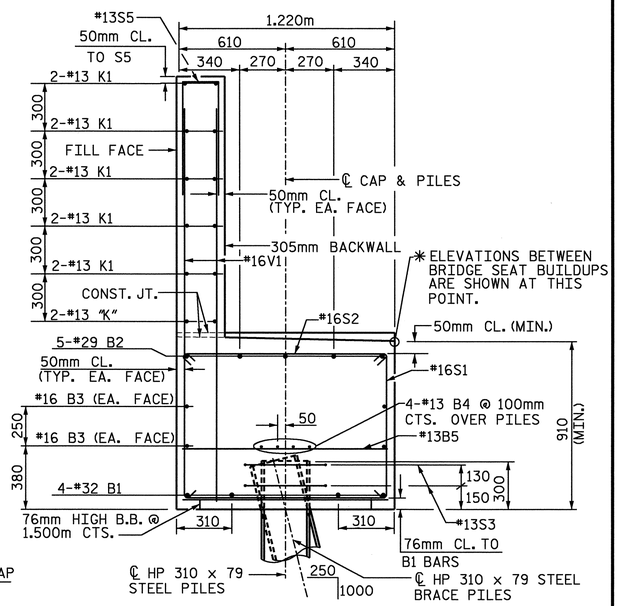

SECTION A-A

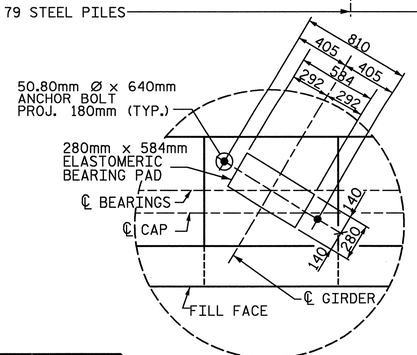

DETAIL A

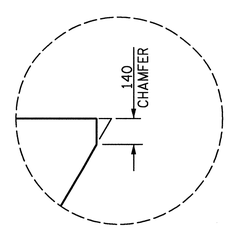

CHAMFER DETAIL

PROJECT NO. R-0609IB

GUILFORD-RANDOLPH COUNTY

STATION: 64+02.541 -L-

SHEET 1 OF 2

STATE OF NORTH CAROLINA
DEPARTMENT OF TRANSPORTATION
RALEIGH

SUBSTRUCTURE
END BENT 1

NORTH CAROLINA PROFESSIONAL SEAL 10773 ENGINEER EDWARD G. WETHERILL
5/23/05

WETHERILL ENGINEERING
559 Jones Franklin Rd. Suite 164
Raleigh, N.C. 27606
Bus: 919 851 8077
Fax: 919 851 8107

TRANSPORTATION PLANNING/DESIGN - BRIDGE/STRUCTURE DESIGN
CIVIL/SITE DESIGN - GIS/GPS - CONSTRUCTION OBSERVATION

REVISIONS						SHEET NO.
NO.	BY	DATE	NO.	BY	DATE	S-18
1			1			TOTAL SHEETS
2			2			199

DRAWN BY: JC PENDERGRAFT DATE: 1-05
CHECKED BY: JA DILWORTH DATE: 1-05

DWG. 18 OF 28

p:\R-0609IB\R0609IB_STTE1\Structures\DWG\bulbtee\EBT1.dgn
5/19/2005 2:01:41 PM

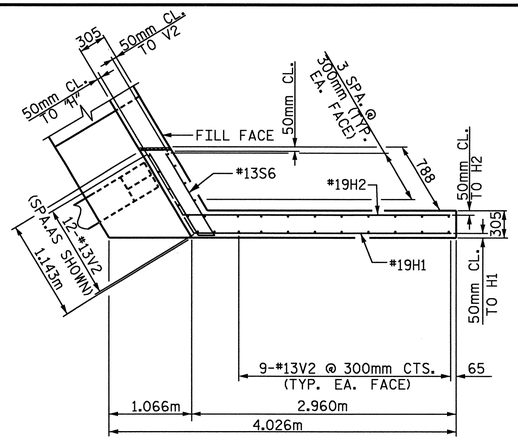

PLAN OF WING W1

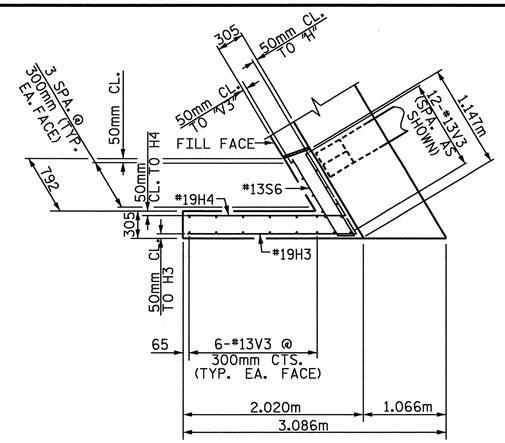

PLAN OF WING W2

BAR TYPES

ALL BAR DIMENSIONS ARE OUT TO OUT.

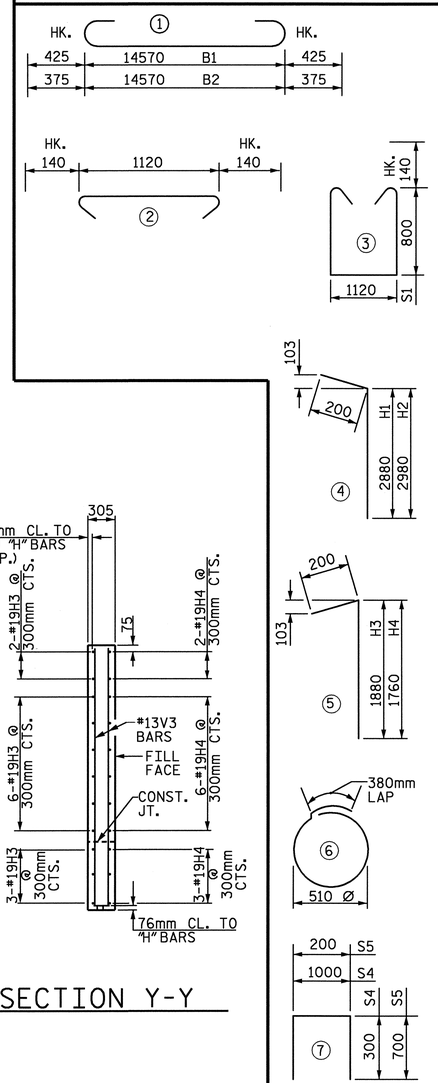

BILL OF MATERIAL

END BENT 1

BAR	NO.	SIZE	TYPE	LENGTH (mm)	WEIGHT (kg)
B1	4	#32	1	15420	395
B2	5	#29	1	15320	388
B3	4	#16	STR.	14580	91
B4	8	#13	STR.	7660	61
B5	12	#13	STR.	1120	13
B6	15	#13	STR.	900	13
H1	11	#19	4	3080	76
H2	11	#19	4	3180	78
H3	11	#19	5	2080	51
H4	11	#19	5	1960	48
K1	24	#13	STR	7560	180
S1	72	#16	3	3000	335
S2	72	#16	2	1400	156
S3	22	#13	6	2000	44
S4	9	#13	7	1600	14
S5	41	#13	7	1600	65
S6	4	#13	8	2220	9
V1	82	#16	STR.	2400	305
V2	30	#13	STR.	2820	84
V3	24	#13	STR.	2920	70

TOTAL REINFORCING STEEL = 2476 Kg

TOTAL CLASS A CONCRETE = 29.1 CU. METERS

CONCRETE BREAKDOWN:

POUR 1

(CAP & LOWER WING) = 18.8 CU. METERS

POUR 2

(BACKWALL & UPPER WING) = 10.3 CU. METERS

HP 310 x 79 STEEL PILES

NO. = 11 LINEAR METERS = 142.5

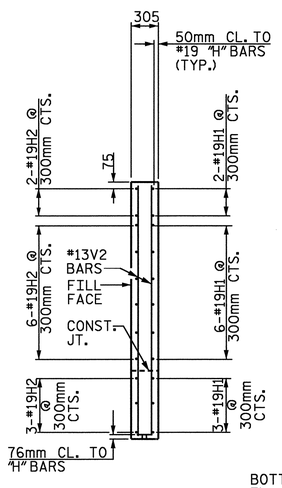

SECTION X-X

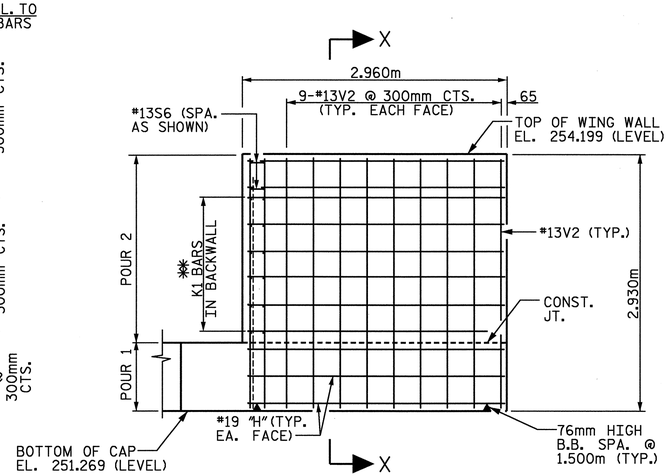

ELEVATION OF WING W1

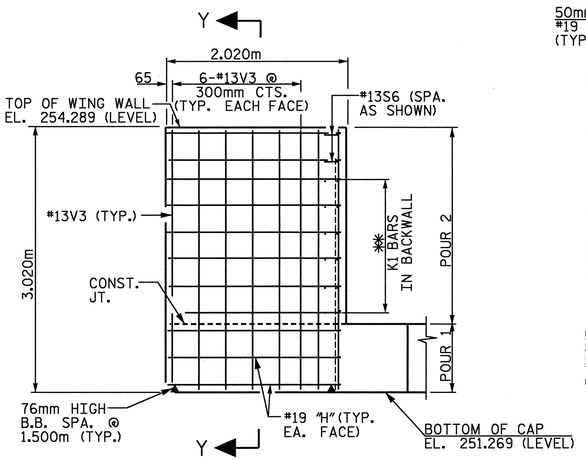

ELEVATION OF WING W2

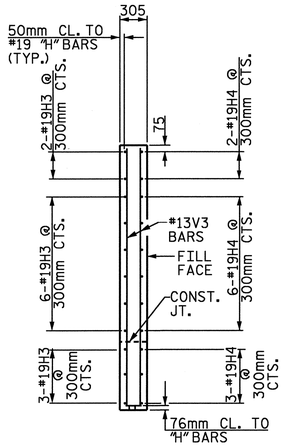

SECTION Y-Y

✱✱ MATCH "H" BARS TO "K" BARS IN BACKWALL AS SHOWN

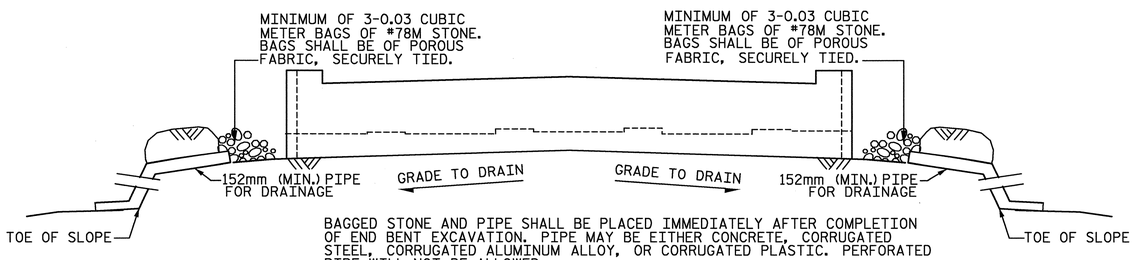

BAGGED STONE AND PIPE SHALL BE PLACED IMMEDIATELY AFTER COMPLETION OF END BENT EXCAVATION. PIPE MAY BE EITHER CONCRETE, CORRUGATED STEEL, CORRUGATED ALUMINUM ALLOY, OR CORRUGATED PLASTIC. PERFORATED PIPE WILL NOT BE ALLOWED.

BAGGED STONE SHALL REMAIN IN PLACE UNTIL THE ENGINEER DIRECTS THAT IT BE REMOVED. THE CONTRACTOR SHALL REMOVE AND DISPOSE OF SILT ACCUMULATIONS AT BAGGED STONE WHEN SO DIRECTED BY THE ENGINEER. BAGS SHALL BE REMOVED AND REPLACED WHENEVER THE ENGINEER DETERMINES THAT THEY HAVE DETERIORATED AND LOST THEIR EFFECTIVENESS.

NO SEPARATE PAYMENT WILL BE MADE FOR THIS WORK AND THE ENTIRE COST OF THIS WORK SHALL BE INCLUDED IN THE UNIT CONTRACT PRICE FOR THE SEVERAL PAY ITEMS.

TEMPORARY DRAINAGE AT END BENT

PROJECT NO. R-0609IB

GUILFORD-RANDOLPH COUNTY

STATION: 64+02.541 -L-

SHEET 2 OF 2

NORTH CAROLINA PROFESSIONAL ENGINEER SEAL 10773 EDWARD G. WETHERILL 5/23/05

WETHERILL ENGINEERING
559 Jones Franklin Rd. Suite 164
Raleigh, N.C. 27606
Bus: 919 851 8077
Fax: 919 851 8107
TRANSPORTATION PLANNING/DESIGN - BRIDGE/STRUCTURE DESIGN
CIVIL/SITE DESIGN - GIS/GPS - CONSTRUCTION OBSERVATION

STATE OF NORTH CAROLINA
DEPARTMENT OF TRANSPORTATION
RALEIGH

SUBSTRUCTURE
END BENT 1

REVISIONS						SHEET NO.
NO.	BY	DATE	NO.	BY	DATE	S-19
1			1			TOTAL SHEETS
2			2			199

DRAWN BY: JC PENDERGRAFT DATE: 1-05
CHECKED BY: JA DILWORTH DATE: 1-05

p:\R-0609IB\R0609IB_SITE 1\Structures\DWG\bulbtree\EBT 1.dgn
5/19/2005 2:02:47 PM

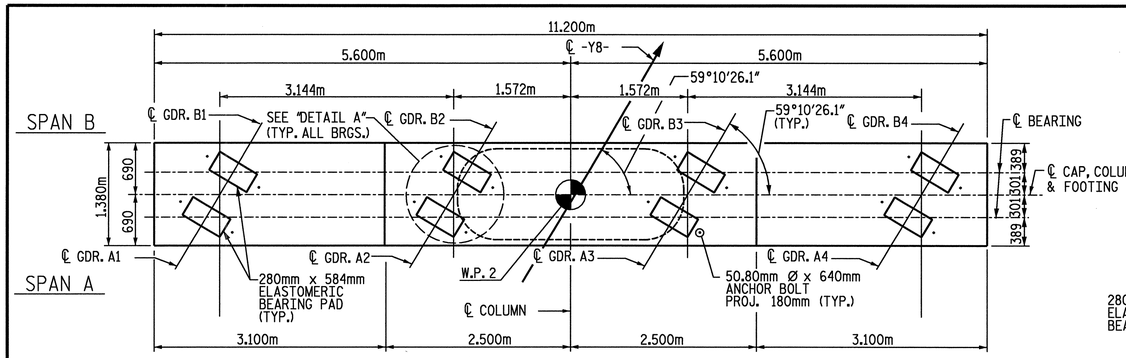

PLAN

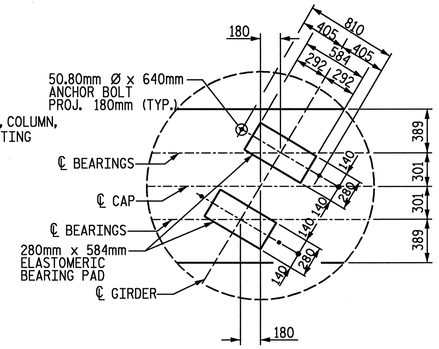

DETAIL A

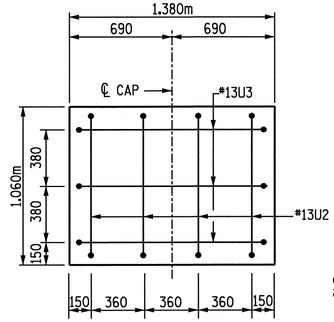

SECTION A-A

NOTES:

STIRRUPS AND "U" BARS MAYBE SHIFTED AS NECESSARY TO CLEAR ANCHOR BOLTS.

DETAILED DRAWINGS FOR FALSEWORK AND FORMS FOR THIS HAMMERHEAD BENT CAP SHALL BE SUBMITTED. SEE SHEET SNSM.

HOOKS ON "M" BARS MAY BE TURNED AS NECESSARY FOR PLACING REINFORCING STEEL AND CONCRETE.

THE CONTRACTOR'S ATTENTION IS CALLED TO THE FACT THAT THE LONGITUDINAL REINFORCEMENT FOR THE COLUMN IS DETAILED WITH ONE METER OF EXTRA LENGTH.

INVERT ALTERNATE STIRRUPS.

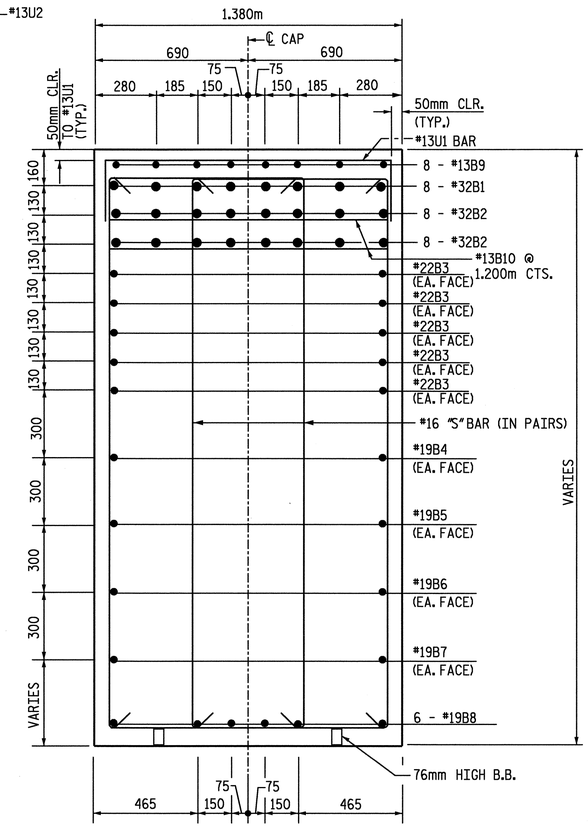

SECTION B-B

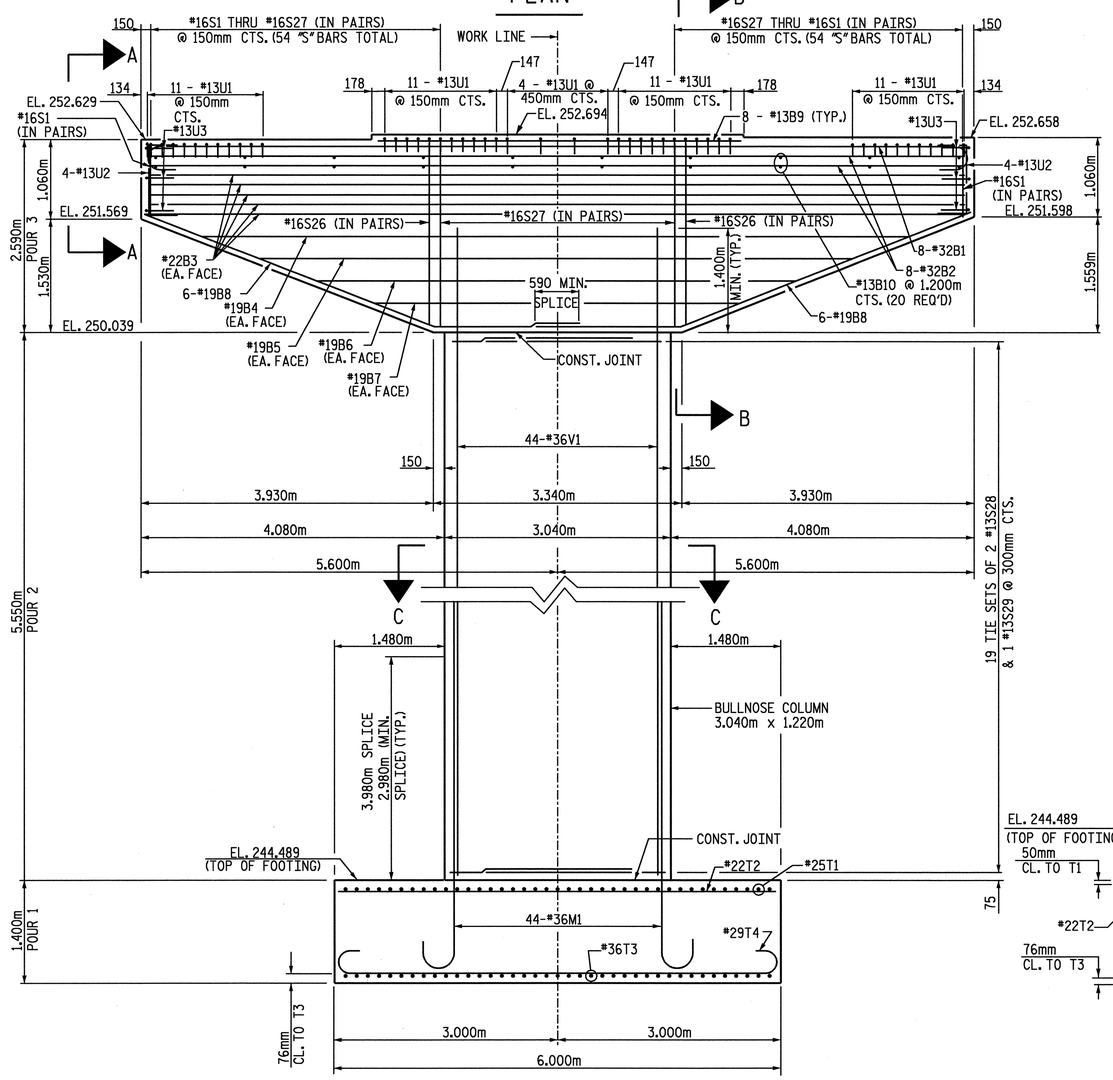

ELEVATION

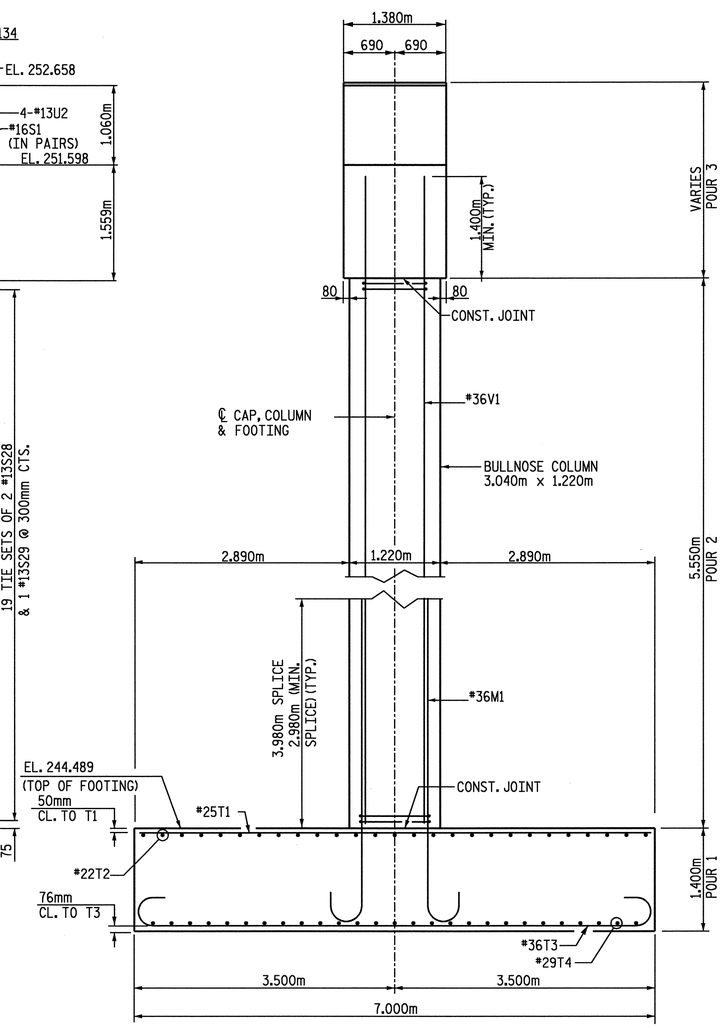

END ELEVATION

PROJECT NO. R-0609IB

GUILFORD-RANDOLPH COUNTY

STATION: 64+02.541 -L-

SHEET 1 OF 2

STATE OF NORTH CAROLINA
DEPARTMENT OF TRANSPORTATION
RALEIGH

SUBSTRUCTURE
BENT 1

EDWARD G. WETHERILL
NORTH CAROLINA PROFESSIONAL ENGINEER SEAL 10773
5/23/05

WETHERILL ENGINEERING
559 Jones Franklin Rd. Suite 164
Raleigh, N.C. 27606
Bus: 919 851 8077
Fax: 919 851 8107

TRANSPORTATION PLANNING/DESIGN - BRIDGE/STRUCTURE DESIGN
CIVIL/SITE DESIGN - GIS/GPS - CONSTRUCTION OBSERVATION

REVISIONS						SHEET NO.
NO.	BY	DATE	NO.	BY	DATE	S-20
1			1			TOTAL SHEETS
2			2			199

DRAWN BY: J.C. PENDERGRAFT DATE: 1/05
CHECKED BY: J. A. DILWORTH DATE: 1/05

DWG. 20 OF 28

p:\R-0609IB\R0609IB_SITE1\Structures\DWG\bulbtee\BENT1.dgn
5/19/2005 2:05:21 PM

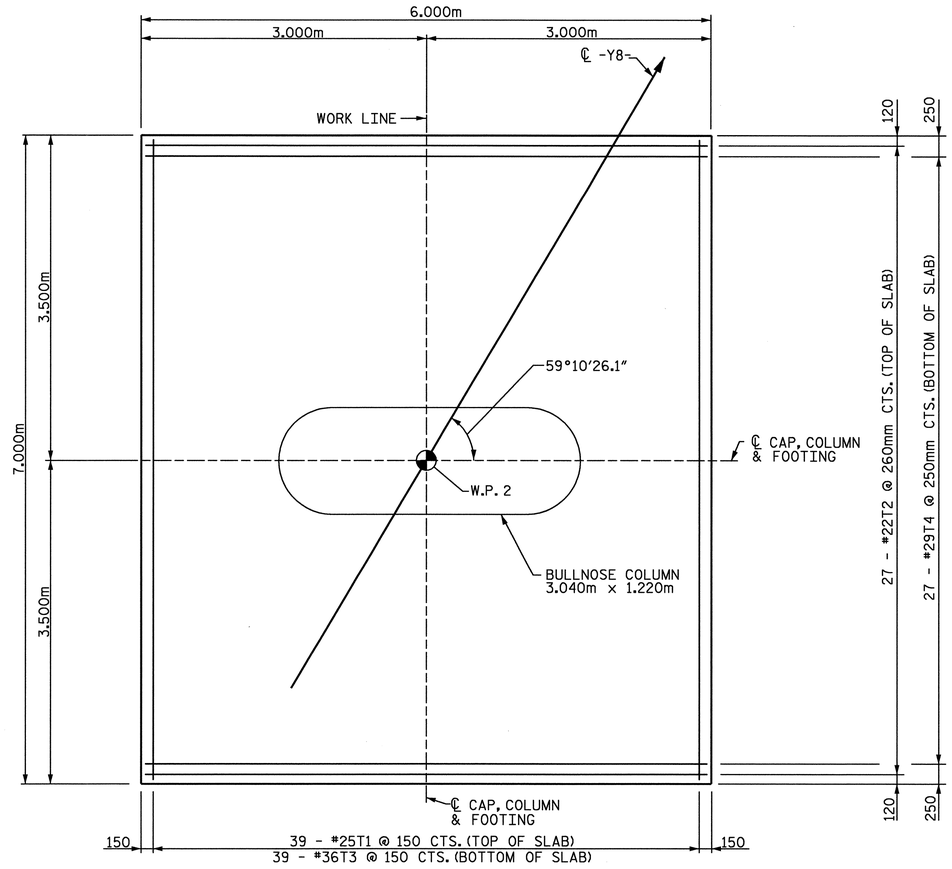

PLAN OF FOOTING

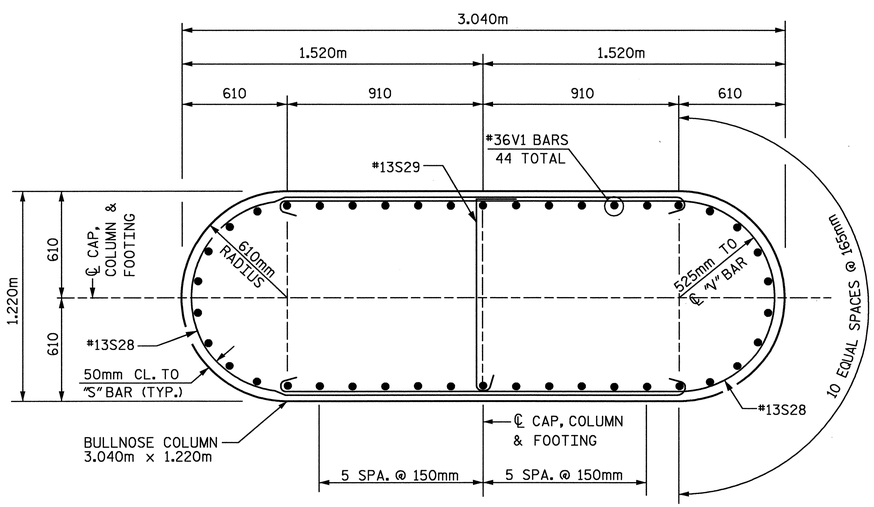

SECTION C-C

BAR TYPES
ALL BAR DIMENSIONS ARE OUT TO OUT.

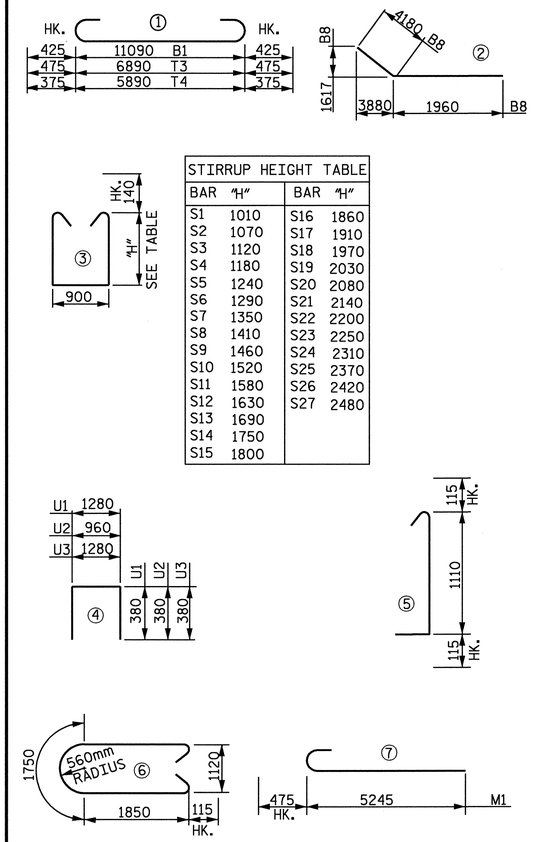

STIRRUP HEIGHT TABLE			
BAR	"H"	BAR	"H"
S1	1010	S16	1860
S2	1070	S17	1910
S3	1120	S18	1970
S4	1180	S19	2030
S5	1240	S20	2080
S6	1290	S21	2140
S7	1350	S22	2200
S8	1410	S23	2250
S9	1460	S24	2310
S10	1520	S25	2370
S11	1580	S26	2420
S12	1630	S27	2480
S13	1690		
S14	1750		
S15	1800		

BILL OF MATERIAL

BENT 1

BAR	NO.	SIZE	TYPE	LENGTH (mm)	WEIGHT (kg)	BAR	NO.	SIZE	TYPE	LENGTH (mm)	WEIGHT (kg)
B1	8	#32	1	11940	612	T1	39	#25	STR.	6900	1069
B2	16	#32	STR.	11100	1137	T2	27	#22	STR.	5900	485
B3	10	#22	STR.	11100	338	T3	39	#36	1	7840	2418
B4	2	#19	STR.	9500	42	T4	27	#29	1	6640	907
B5	2	#19	STR.	7960	36						
B6	2	#19	STR.	6440	29	U1	48	#13	4	2040	97
B7	2	#19	STR.	4900	22	U2	8	#13	4	1720	14
B8	12	#19	2	6140	165	U3	6	#13	4	2040	12
B9	8	#13	STR.	4900	39						
B10	20	#13	STR.	1280	25	V1	44	#36	STR.	6960	2421
M1	44	#36	7	5720	1990						
S1	4	#16	3	3200	20						
S2	4	#16	3	3320	21						
S3	4	#16	3	3420	21						
S4	4	#16	3	3540	22						
S5	4	#16	3	3660	23						
S6	4	#16	3	3760	23						
S7	4	#16	3	3880	24						
S8	4	#16	3	4000	25						
S9	4	#16	3	4100	25						
S10	4	#16	3	4220	26						
S11	4	#16	3	4340	27						
S12	4	#16	3	4440	28						
S13	4	#16	3	4560	28						
S14	4	#16	3	4680	29						
S15	4	#16	3	4780	30						
S16	4	#16	3	4900	30						
S17	4	#16	3	5000	31						
S18	4	#16	3	5120	32						
S19	4	#16	3	5240	33						
S20	4	#16	3	5340	33						
S21	4	#16	3	5460	34						
S22	4	#16	3	5580	35						
S23	4	#16	3	5680	35						
S24	4	#16	3	5800	36						
S25	4	#16	3	5920	37						
S26	4	#16	3	6020	37						
S27	4	#16	3	6140	38						
S28	38	#13	6	5680	215						
S29	19	#13	5	1340	25						

TOTAL REINFORCING STEEL = 12881 Kg

TOTAL CLASS A CONCRETE = 109.8 CU. METERS
CONCRETE CLASS A BREAKDOWN
POUR 1 (FOOTING) 58.8 CU. METERS
POUR 2 (COLUMN) 18.8 CU. METERS
POUR 3 (CAP) 32.2 CU. METERS

FOUNDATION EXCAVATION LUMP SUM

PROJECT NO. R-0609IB
GUILFORD-RANDOLPH COUNTY
STATION: 64+02.541 -L-

SHEET 2 OF 2

NORTH CAROLINA PROFESSIONAL ENGINEER SEAL 10773 EDWARD G. WETHERILL
5/23/05

WETHERILL ENGINEERING
559 Jones Franklin Rd. Suite 164
Raleigh, N.C. 27606
Bus: 919 851 8077
Fax: 919 851 8107
TRANSPORTATION PLANNING/DESIGN - BRIDGE/STRUCTURE DESIGN
CIVIL/SITE DESIGN - GIS/GPS - CONSTRUCTION OBSERVATION

STATE OF NORTH CAROLINA
DEPARTMENT OF TRANSPORTATION
RALEIGH

SUBSTRUCTURE
BENT 1

REVISIONS						SHEET NO.
NO.	BY	DATE	NO.	BY	DATE	S-21
1			1			TOTAL SHEETS
2			2			199

DRAWN BY: JC PENDERGRAFT DATE: 1-05
CHECKED BY: JA DILWORTH DATE: 1-05

DWG. 21 OF 28

p:\R-0609IB\R0609IB_SITE 1\Structures\DWG\bulltree\BENT 1.dgn
5/19/2005 2:06:16 PM

NOTES:

STIRRUPS IN CAP MAY BE SHIFTED AS NECESSARY TO CLEAR ANCHOR BOLTS.

FOR EPOXY PROTECTIVE COATING, SEE SPECIAL PROVISIONS.

FOR TEMPORARY DRAINAGE AT END BENTS, SEE END BENT 1 SHEET 2 OF 2.

BACKWALL SHALL BE PLACED BEFORE APPLYING THE EPOXY PROTECTIVE COATING.

THE TOP SURFACE AREAS OF THE END BENT CAP SHALL BE CURED IN ACCORDANCE WITH THE STANDARD SPECIFICATIONS EXCEPT THE MEMBRANE CURING COMPOUND METHOD SHALL NOT BE USED.

THE TOP SURFACE OF THE END BENT CAP EXCEPT THE BRIDGE SEAT BUILDUPS SHALL BE SLOPED TRANSVERSELY FROM THE FILL FACE TO THE BACK FACE AT THE RATE OF 2%.

FOR PILE SPLICE DETAILS, SEE END BENT 2, SHEET 2 OF 2.

THE CONTRACTOR SHALL PROVIDE FOR INSTALLATION OF THE 102mm Ø DRAIN PIPE THROUGH THE WING WALL AS REQUIRED FOR REINFORCED BRIDGE APPROACH FILLS. SEE THE ROADWAY PLANS. REINFORCING STEEL IN THE WING WALL MAY BE SHIFTED AS NECESSARY TO CLEAR THE DRAIN PIPE.

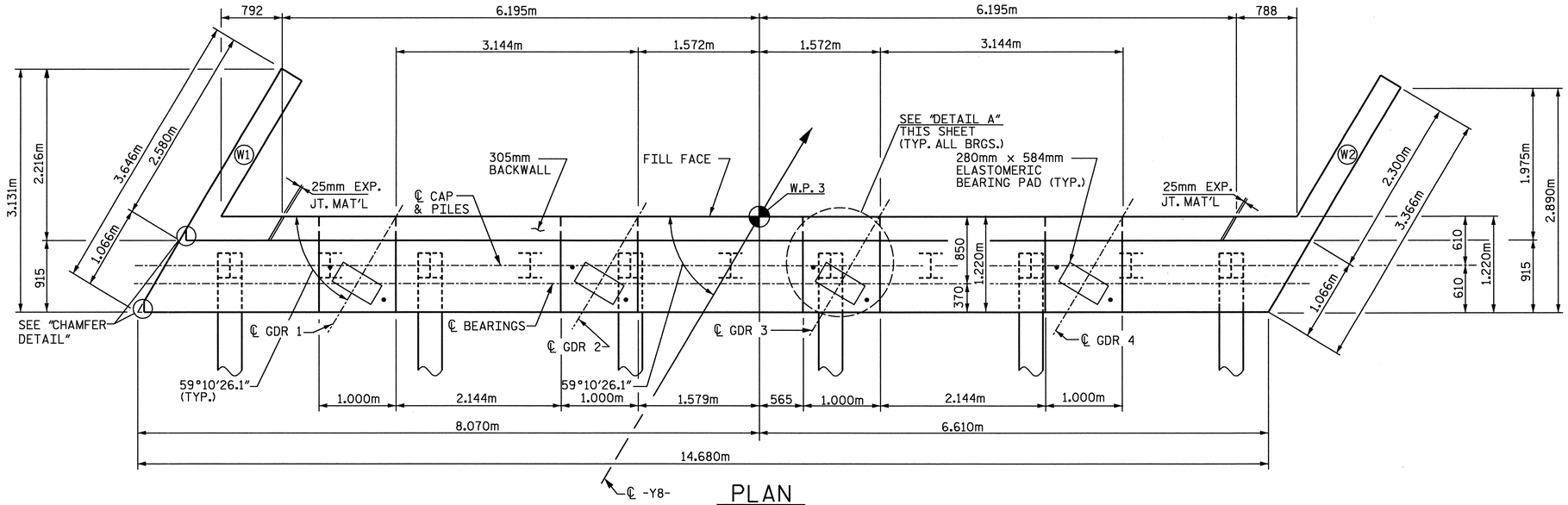

PLAN

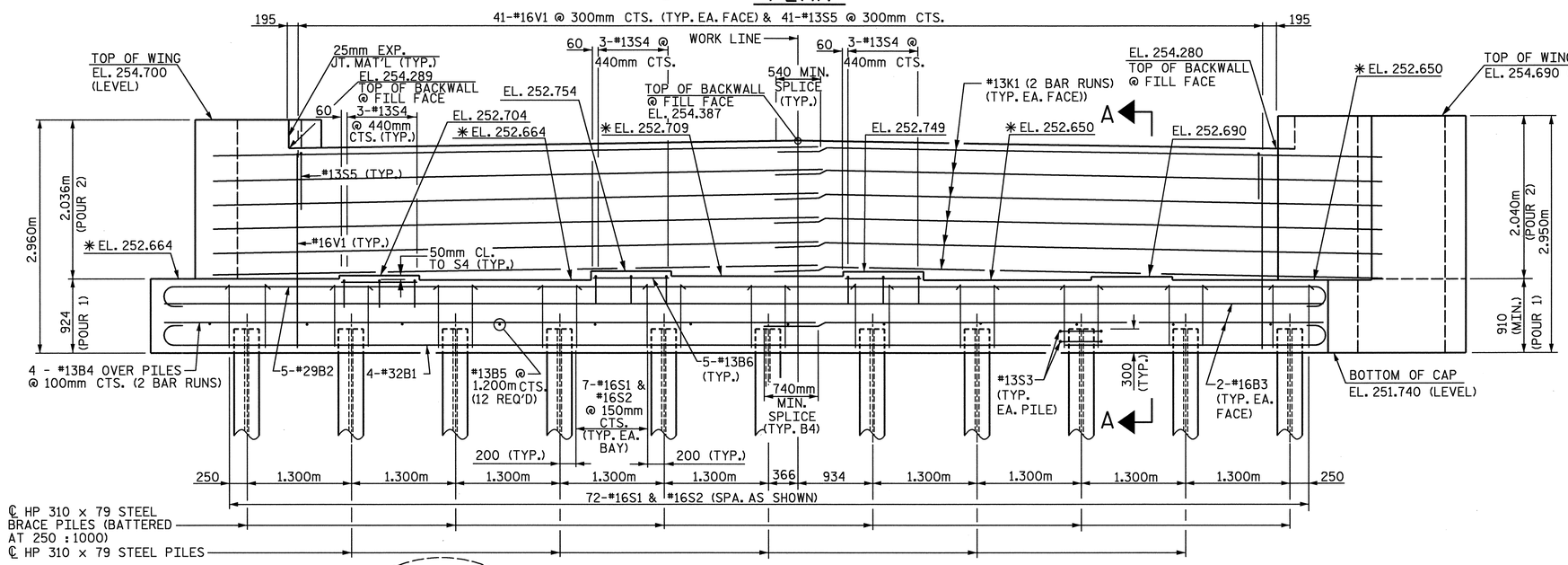

ELEVATION

✱FOR ELEVATION BETWEEN BRIDGE SEAT BUILDUPS SEE "SECTION A-A", THIS SHEET

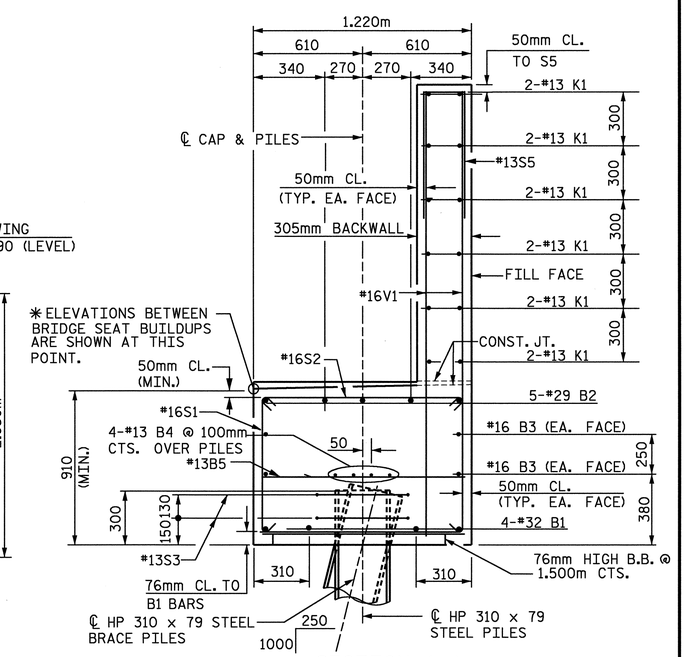

SECTION A-A

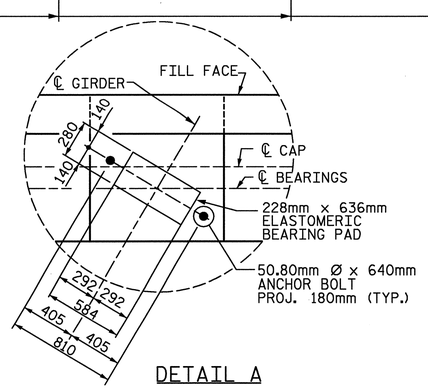

DETAIL A

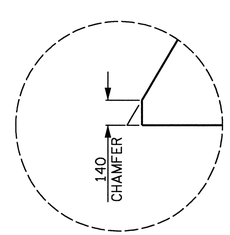

CHAMFER DETAIL

PROJECT NO. R-0609IB

GUILFORD-RANDOLPH COUNTY

STATION: 64+02.541 -L-

SHEET 1 OF 2

STATE OF NORTH CAROLINA
DEPARTMENT OF TRANSPORTATION
RALEIGH

SUBSTRUCTURE
END BENT 2

NORTH CAROLINA PROFESSIONAL SEAL 10773 ENGINEER EDWARD G. WETHERILL
5/22/05

WETHERILL ENGINEERING
559 Jones Franklin Rd. Suite 164
Raleigh, N.C. 27606
Bus: 919 851 8077
Fax: 919 851 8107

TRANSPORTATION PLANNING/DESIGN - BRIDGE/STRUCTURE DESIGN
CIVIL/SITE DESIGN - GIS/GPS - CONSTRUCTION OBSERVATION

REVISIONS						SHEET NO.
NO.	BY	DATE	NO.	BY	DATE	S-22
1			1			TOTAL SHEETS
2			2			199

DRAWN BY: JC PENDERGRAFT DATE: 1-05
CHECKED BY: JA DILWORTH DATE: 1-05

DWG. 22 OF 28

p:\R-0609IB\R0609IB_STTE1\Structures\DWG\bulltee\EBT2.dgn
5/19/2005 2:08:37 PM

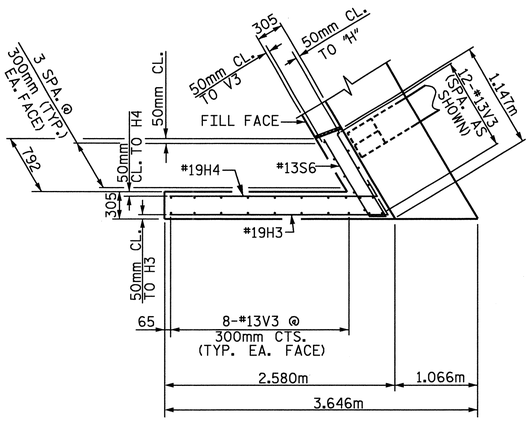

PLAN OF WING W1

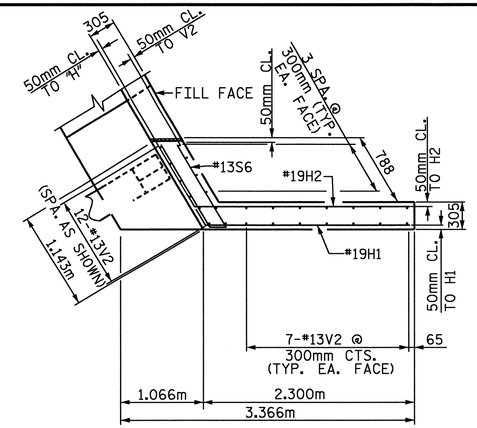

PLAN OF WING W2

BAR TYPES

ALL BAR DIMENSIONS ARE OUT TO OUT.

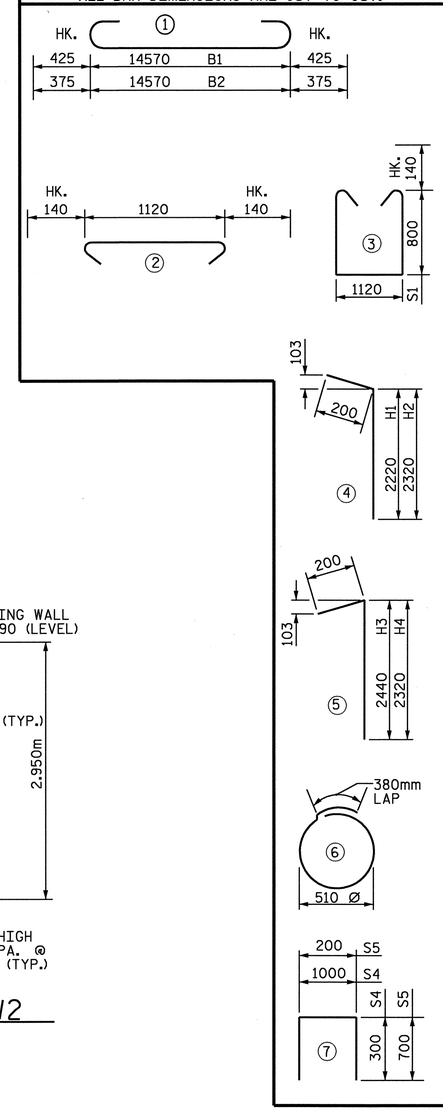

BILL OF MATERIAL

END BENT 2

BAR	NO.	SIZE	TYPE	LENGTH (mm)	WEIGHT (kg)
B1	4	#32	1	15420	395
B2	5	#29	1	15320	388
B3	4	#16	STR.	14580	91
B4	8	#13	STR.	7660	61
B5	12	#13	STR.	1120	13
B6	15	#13	STR.	900	13
H1	11	#19	4	2420	59
H2	11	#19	4	2520	62
H3	11	#19	5	2640	65
H4	11	#19	5	2520	62
K1	24	#13	STR	7560	180
S1	72	#16	3	3000	335
S2	72	#16	2	1400	156
S3	22	#13	6	2000	44
S4	9	#13	7	1600	14
S5	41	#13	7	1600	65
S6	4	#13	8	2220	9
V1	82	#16	STR.	2440	311
V2	26	#13	STR.	2840	73
V3	28	#13	STR.	2860	80

TOTAL REINFORCING STEEL = 2476 Kg

TOTAL CLASS A CONCRETE = 28.5 CU. METERS

CONCRETE BREAKDOWN:

POUR 1

(CAP & LOWER WING) = 18.2 CU. METERS

POUR 2

(BACKWALL & UPPER WING) = 10.3 CU. METERS

HP 310 x 79 STEEL PILES

NO. = 11 LINEAR METERS = 115.0

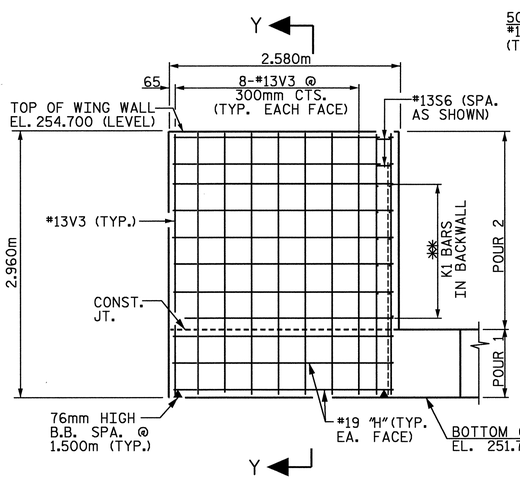

ELEVATION OF WING W1

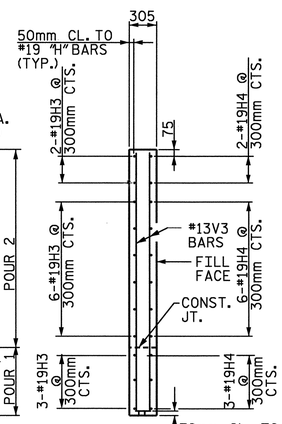

SECTION Y-Y

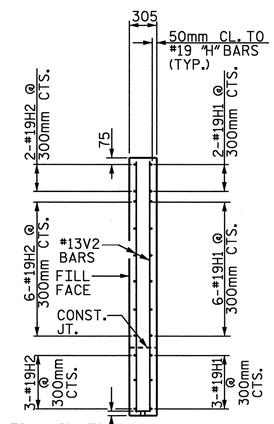

SECTION X-X

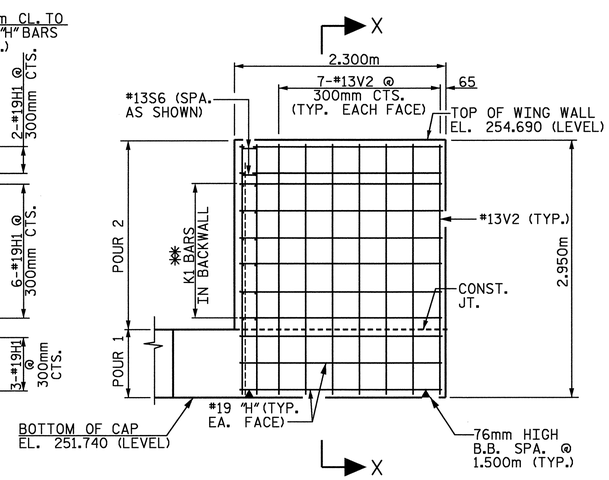

ELEVATION OF WING W2

✱✱ MATCH "H" BARS TO "K" BARS IN BACKWALL AS SHOWN

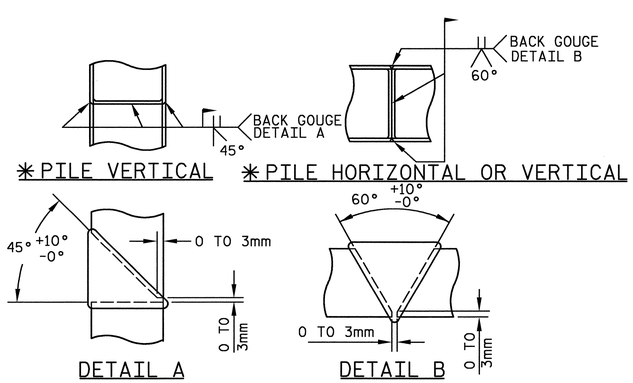

✱ POSITION OF PILE DURING WELDING

PILE SPLICE DETAILS

PROJECT NO. R-0609IB

GUILFORD-RANDOLPH COUNTY

STATION: 64+02.541 -L-

SHEET 2 OF 2

NORTH CAROLINA PROFESSIONAL SEAL 10773 ENGINEER EDWARD G. WETHERILL 5/23/05

WETHERILL ENGINEERING
559 Jones Franklin Rd. Suite 164
Raleigh, N.C. 27606
Bus: 919 851 8077
Fax: 919 851 8107

TRANSPORTATION PLANNING/DESIGN - BRIDGE/STRUCTURE DESIGN
CIVIL/SITE DESIGN - GIS/GPS - CONSTRUCTION OBSERVATION

STATE OF NORTH CAROLINA
DEPARTMENT OF TRANSPORTATION
RALEIGH

SUBSTRUCTURE
END BENT 2

REVISIONS						SHEET NO.
NO.	BY	DATE	NO.	BY	DATE	S-23
1			1			TOTAL SHEETS
2			2			199

DRAWN BY: JC PENDERGRAFT DATE: 1-05
CHECKED BY: JA DILWORTH DATE: 1-05

DWG. 23 OF 28

p:\R-0609IB\R0609IB_SITE1\Structures\DWG\bulbtee\EBT2.dgn
5/19/2005 2:08:58 PM

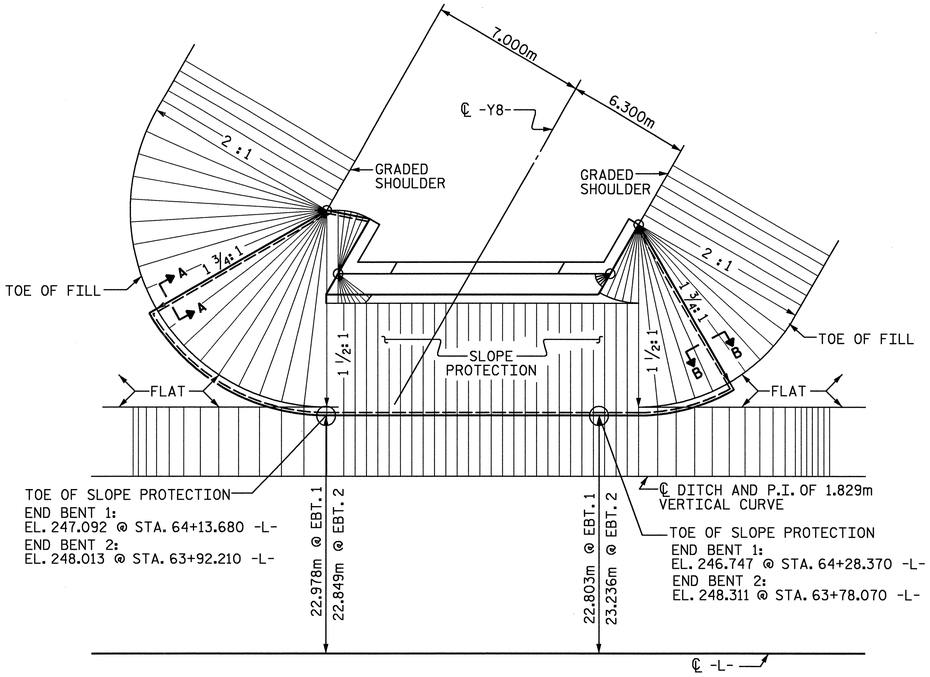

PLAN - END BENT WITH SWEPT BACK WINGS - SKEWED

(1 1/2:1 SLOPE)

(END BENT 1 SHOWN, END BENT 2 SIMILAR)

GENERAL NOTES

SLOPE PROTECTION SHALL BE PLACED UNDER THE ENDS OF THE BRIDGE AS SHOWN IN THE DETAILS. THE CONTRACTOR, AT HIS OPTION, MAY USE ALTERNATE "B" ONLY FOR HIGHWAY OVER HIGHWAY GRADE SEPARATIONS WITH 2:1 END BENT SLOPE IN RURAL, UNPOPULATED AREAS. STRAIGHT EDGING WILL NOT BE REQUIRED UNLESS, IN THE OPINION OF THE ENGINEER, VISUAL INSPECTION INDICATES A NEED FOR IT. METHOD OF MEASUREMENT AND BASIS OF PAYMENT SHALL BE AS PRESCRIBED IN SECTION 462 OF THE STANDARD SPECIFICATIONS. FOR BERM WIDTH, SEE GENERAL DRAWING.

ALTERNATE "A"

ALTERNATE "A" SHALL CONSIST OF 100mm POURED-IN-PLACE CONCRETE PAVING AS SHOWN IN THE DETAILS ON THIS SHEET. CONCRETE SHALL BE CLASS "B". THE CONCRETE SURFACE SHALL BE FLOATED WITH A WOODEN FLOAT AND FINISHED. WELDED WIRE FABRIC REINFORCING SHALL BE 152 X 152 - W9.1 X W9.1, 1520mm WIDE. SLOPE PROTECTION SHALL BE POURED IN 1520mm STRIPS AS SHOWN IN THE "POURING DETAIL" WITH 600mm LONG #13 BARS PLACED ALONG THE SLOPE BETWEEN STRIPS AT 450mm MAXIMUM SPACING. SLOPE PROTECTION MAY BE POURED IN ALTERNATE 1220mm AND 1520mm STRIPS AS SHOWN IN THE "OPTIONAL POURING DETAIL" WITH ADJACENT RUNS OF WELDED WIRE FABRIC LAPPING AT LEAST 152mm. THE COST OF THE WELDED WIRE FABRIC AND #13 BARS, IF USED, SHALL BE INCLUDED IN THE CONTRACT UNIT PRICE BID PER SQUARE METER FOR SLOPE PROTECTION.

BRIDGE @ STA. 64+02.541 -L-	100mm SLOPE PROTECTION	* WELDED WIRE FABRIC 1520mm WIDE
	SQUARE METERS	APPROX. METERS
END BENT 1	380	220
END BENT 2	325	190

* QUANTITY SHOWN IS BASED ON 1520mm POURS.

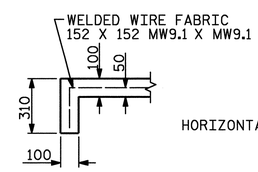

SECTION A-A

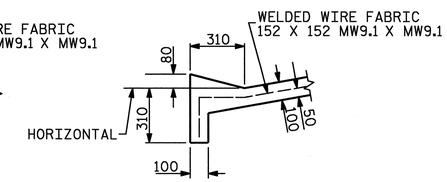

SECTION B-B

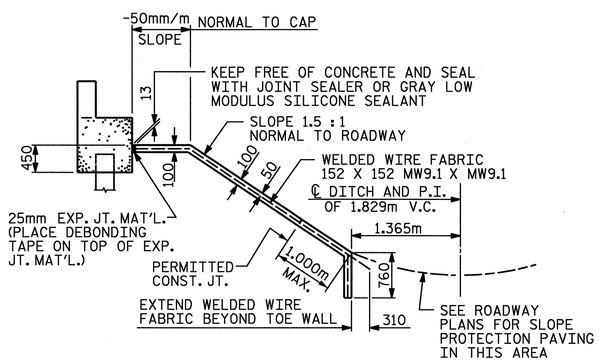

SECTION ALONG ℄ ROADWAY WHEN FILL CATCHES IN DITCH

DETAILS FOR ALTERNATE "A"

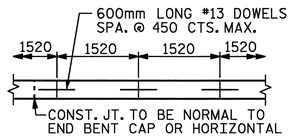

STRIP WIDTHS MAY VARY IN CURVED PORTION.

POURING DETAIL

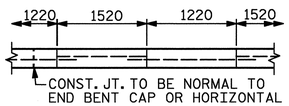

POUR A 1220mm STRIP FIRST. STRIP WIDTHS MAY VARY IN CURVED PORTION.

OPTIONAL POURING DETAIL

PROJECT NO. R-0609IB

GUILFORD-RANDOLPH COUNTY

STATION: 64+02.541 -L-

NORTH CAROLINA PROFESSIONAL SEAL 10773 ENGINEER EDWARD G. WETHERILL

5/23/05

WETHERILL ENGINEERING

559 Jones Franklin Rd. Suite 164
Raleigh, N.C. 27606
Bus: 919 851 8077
Fax: 919 851 8107

TRANSPORTATION PLANNING/DESIGN - BRIDGE/STRUCTURE DESIGN
CIVIL/SITE DESIGN - GIS/GPS - CONSTRUCTION OBSERVATION

STATE OF NORTH CAROLINA
DEPARTMENT OF TRANSPORTATION
RALEIGH

SLOPE PROTECTION DETAILS

REVISIONS						SHEET NO.
NO.	BY	DATE	NO.	BY	DATE	S-24
1			1			TOTAL SHEETS
2			2			199

DRAWN BY: J. C. PENDERGRAFT DATE: 12-20-04
CHECKED BY: J. A. DILWORTH DATE: 12-20-04

DWG. 24 OF 28

STD. NO. SP1SM

p:\R-0609IB\R0609IB_SITE1\Structures\DWG\bulbtee\SLOPEPROTECTION.dgn
5/19/2005 2:12:24 PM

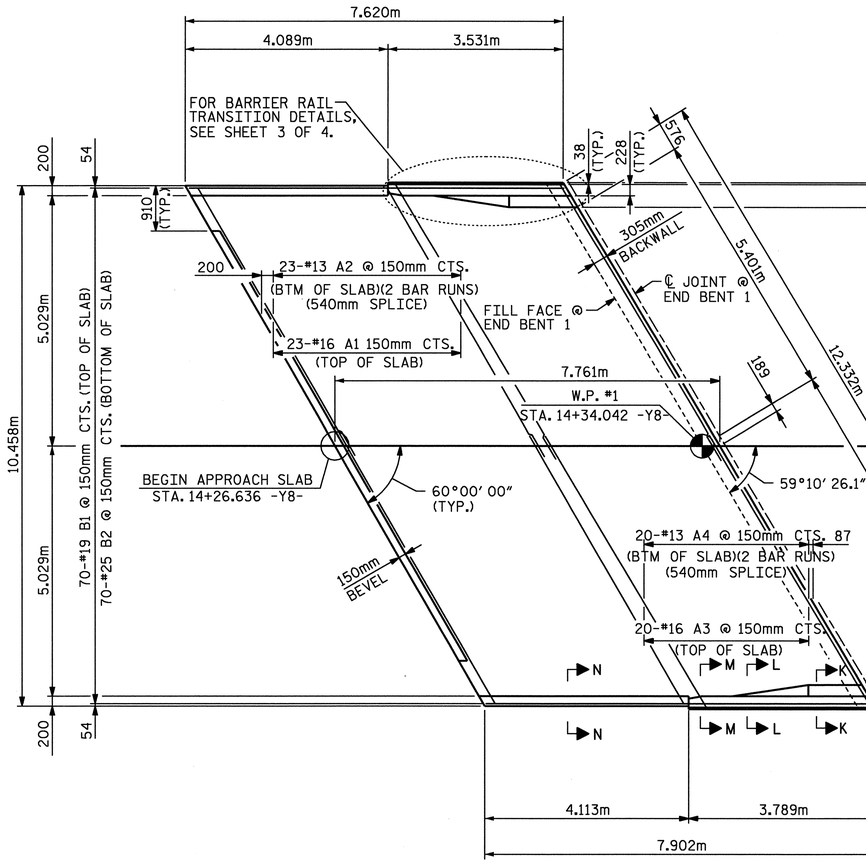

PLAN @ END BENT 1

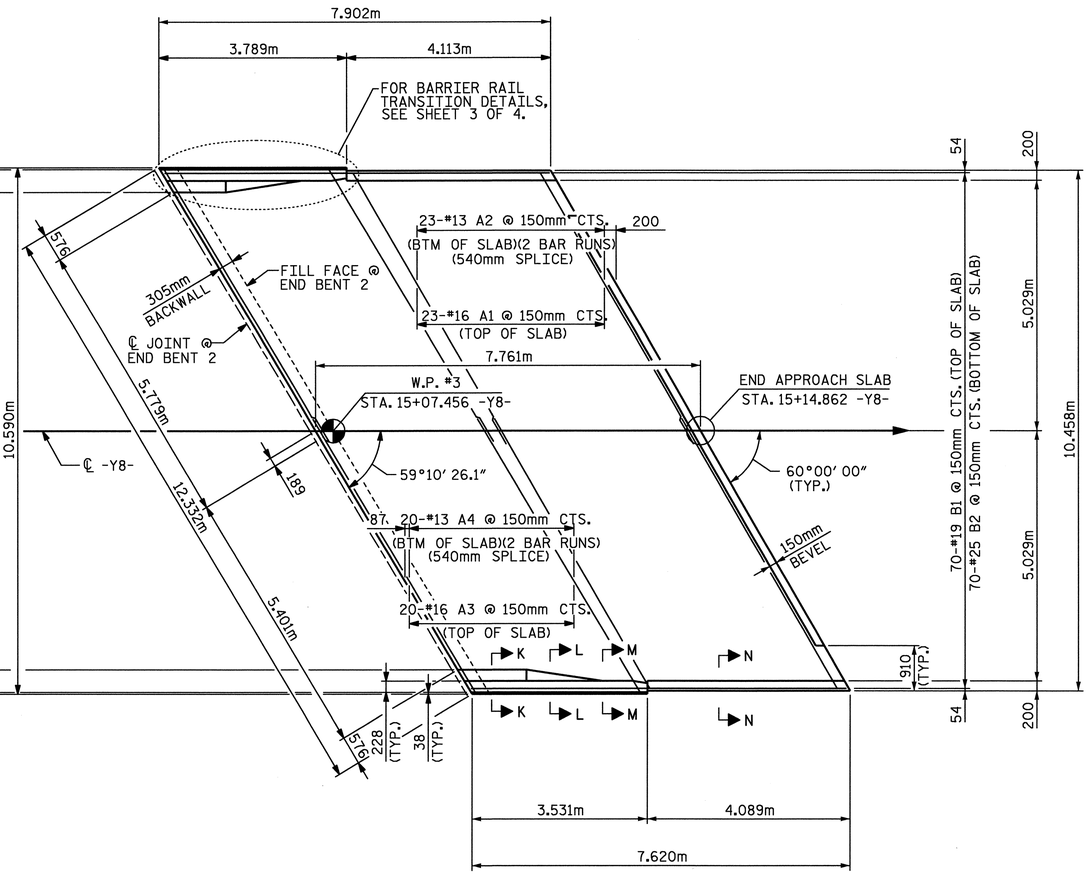

PLAN @ END BENT 2

PROJECT NO. R-0609IB

GUILFORD-RANDOLPH COUNTY

STATION: 64+02.541 -L-

SHEET 1 OF 4

STATE OF NORTH CAROLINA
DEPARTMENT OF TRANSPORTATION
RALEIGH

BRIDGE APPROACH SLAB FOR FLEXIBLE PAVEMENT WITH BARRIER RAIL

NORTH CAROLINA PROFESSIONAL SEAL 10773 ENGINEER EDWARD G. WETHERILL
5/23/05

WETHERILL ENGINEERING
559 Jones Franklin Rd. Suite 164
Raleigh, N.C. 27606
Bus: 919 851 8077
Fax: 919 851 8107
TRANSPORTATION PLANNING/DESIGN - BRIDGE/STRUCTURE DESIGN
CIVIL/SITE DESIGN - GIS/GPS - CONSTRUCTION OBSERVATION

REVISIONS						SHEET NO.
NO.	BY	DATE	NO.	BY	DATE	S-25
1			1			TOTAL SHEETS
2			2			111

DRAWN BY: JC PENDERGRAFT DATE: 1/05
CHECKED BY: JA DILWORTH DATE: 1/05

DWG. 25 OF 28

P:\R-0609IB\R0609IB_SITE1\Structures\DWG\bulltree\appslab.dgn
5/19/2005 2:20:34 PM

NOTE: FOR PLAN OF APPROACH SLABS, SEE SHEET 1 OF 4

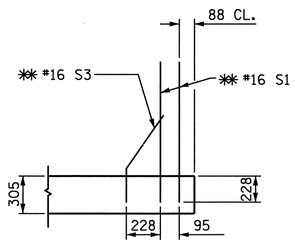

SECTION K-K

✱✱ ADHESIVLEY ANCHORED

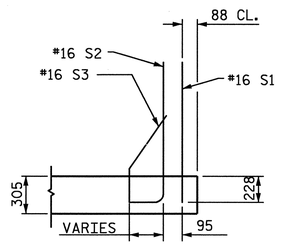

SECTION L-L

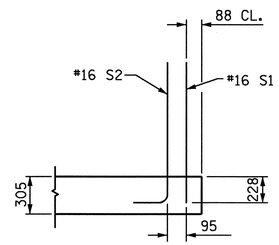

SECTION M-M

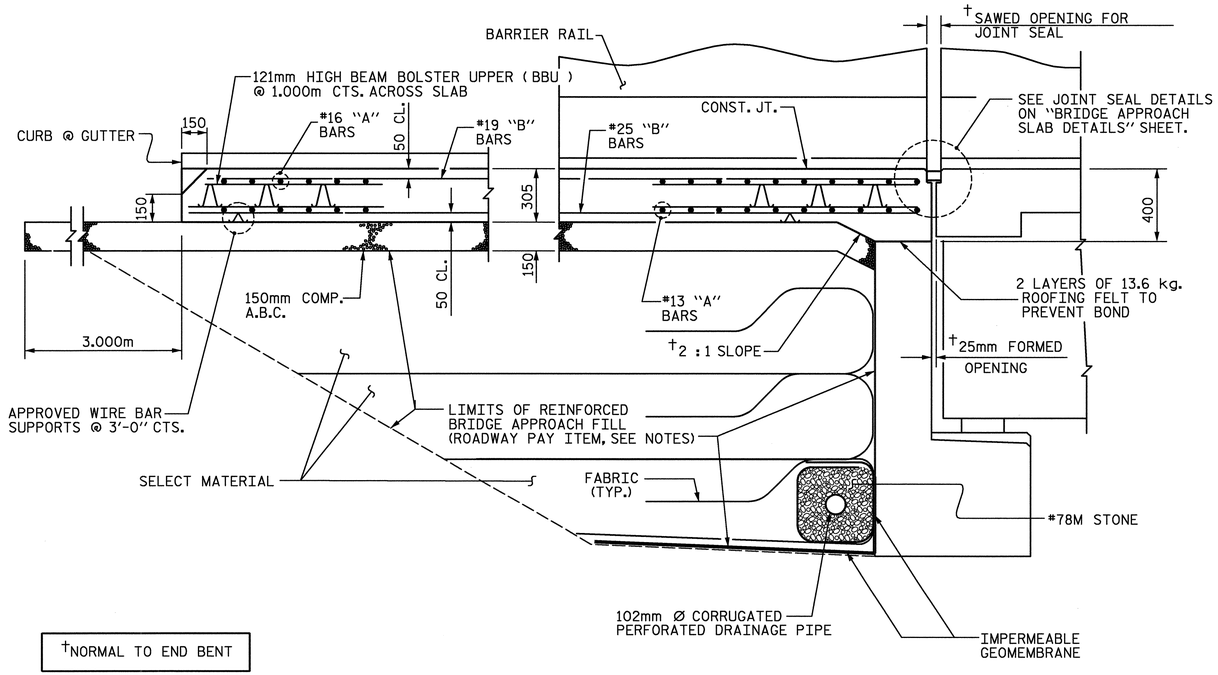

†NORMAL TO END BENT

SECTION THRU SLAB

NOTES

THE COST OF THE BARRIER RAIL ON THE APPROACH SLAB SHALL BE INCLUDED IN THE LUMP SUM CONTRACT PRICE BID FOR BRIDGE APPROACH SLABS.

APPROACH SLAB SHALL NOT BE CONSTRUCTED PRIOR TO COMPLETION OF THE BRIDGE DECK.

FOR REINFORCED BRIDGE APPROACH FILL INCLUDING FABRIC, IMPERMEABLE GEOMEMBRANE, 102mm Ø DRAINAGE PIPE, #78M STONE, AND SELECT MATERIAL, SEE ROADWAY PLANS.

TEMPORARY DRAINAGE AND TEMPORARY BERM AND SLOPE DRAINS WILL BE PAID FOR UNDER THE LUMP SUM PRICE FOR BRIDGE APPROACH SLAB.

AREA BETWEEN THE WINGWALL AND APPROACH SLAB SHALL BE GRADED TO DRAIN THE WATER AWAY FROM THE FILL FACE OF THE BRIDGE.

THE 150mm COMP. A.B.C. SHALL EXTEND 3m BEYOND THE END OF THE APPROACH SLAB AND 300mm OUTSIDE OF EACH EDGE OF THE SLAB.

THE CONTRACTOR MAY USE 100mm TYPE B-25.0B ASPHALT CONCRETE COURSE IN LIEU OF 150mm COMP. A.B.C. IF THIS OPTION IS USED, THE BASE COURSE SHALL EXTEND 300mm BEYOND THE END OF THE APPROACH SLAB AND THE WIDTH SHALL BE THE SAME AS THAT OF THE APPROACH SLAB.

THE CONTRACTOR MAY USE 125mm CLASS "A" CONCRETE BASE IN LIEU OF 150mm COMP. A.B.C. IF THIS OPTION IS USED, THE CONCRETE BASE SHALL EXTEND 300mm BEYOND THE END OF THE APPROACH SLAB AND THE WIDTH SHALL BE THE SAME AS THAT OF THE APPROACH SLAB. THE CONCRETE SHALL BE FINISHED TO A SMOOTH SURFACE AND A LAYER OF 13.6 kg. ROOFING FELT SHALL BE PLACED BETWEEN THE CONCRETE BASE AND THE APPROACH SLAB TO PREVENT BOND. THE APPROACH SLAB SHALL NOT BE CAST UNTIL THE CONCRETE BASE HAS REACHED AN AGE OF THREE CURING DAYS.

THE JOINT SHALL BE SAWED PRIOR TO THE CASTING OF THE BARRIER RAIL.

WITH EVAZOTE JOINT SEAL

FOR EVAZOTE JOINT SEALS, SEE SPECIAL PROVISIONS.

THE NOMINAL UNCOMPRESSED SEAL WIDTH OF THE EVAZOTE JOINT SEAL SHALL BE 64mm.

SEE SPECIAL PROVISIONS FOR ELASTOMERIC CONCRETE.

THE COST OF THE ELASTOMERIC CONCRETE SHALL BE INCLUDED IN THE LUMP SUM CONTRACT PRICE BID FOR "EVAZOTE JOINT SEALS."

BILL OF MATERIAL

BENT NO.	ELASTOMERIC CONCRETE ✱ (CU. m)
EB1	0.2
EB2	0.2

✱ BASED ON THE MINIMUM BLOCKOUT SHOWN. SEE SHEET 4 OF 4.

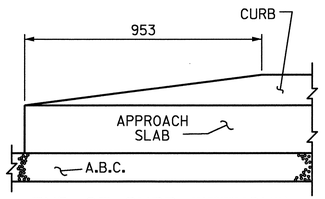

END OF CURB WITHOUT SHOULDER BERM GUTTER

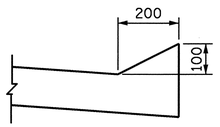

SECTION N-N

CURB DETAILS

BILL OF MATERIAL
FOR ONE APPROACH SLAB (2 REQ'D)

BAR	NO.	SIZE	TYPE	LENGTH	WEIGHT
✱ A1	23	#16	STR	11960	427
A2	46	#13	STR	6260	286
✱ A3	20	#16	STR	12200	379
A4	40	#13	STR	6380	254
✱ B1	70	#19	STR	7500	1173
B2	70	#25	STR	7500	2086
✱ B3	1	#16	3	1760	3
✱ B4	7	#16	STR	3560	39
✱ B5	7	#16	STR	3440	37
✱ B6	1	#16	3	2020	3
✱ S1	58	#16	STR	980	88
✱ S2	42	#16	1	1220	80
✱ S3	20	#16	2	680	21

REINFORCING STEEL	kg.	2626
✱ EPOXY COATED REINFORCING STEEL	kg.	2250
CLASS AA CONCRETE BREAKDOWN		
POUR 1 SLAB AND CURB	C. M.	25.3
POUR 2 RAIL	C. M.	1.6
CLASS AA CONCRETE	C. M.	26.9

BAR TYPES

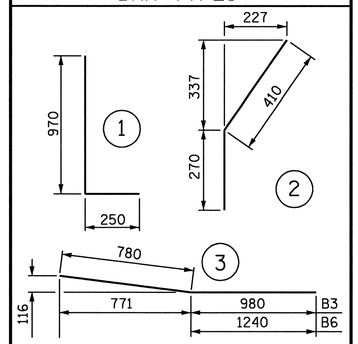

ALL BAR DIMENSIONS ARE OUT TO OUT

PROJECT NO. R-0609IB

GUILFORD-RANDOLPH COUNTY

STATION: 64+02.541 -L-

SHEET 2 OF 4

STATE OF NORTH CAROLINA
DEPARTMENT OF TRANSPORTATION
RALEIGH

STANDARD

BRIDGE APPROACH SLAB FOR FLEXIBLE PAVEMENT WITH BARRIER RAIL

NORTH CAROLINA PROFESSIONAL SEAL 10773 ENGINEER EDWARD G. WETHERILL
5/23/05

WETHERILL ENGINEERING
559 Jones Franklin Rd. Suite 164
Raleigh, N.C. 27606
Bus: 919 851 8077
Fax: 919 851 8107
TRANSPORTATION PLANNING/DESIGN - BRIDGE/STRUCTURE DESIGN
CIVIL/SITE DESIGN - GIS/GPS - CONSTRUCTION OBSERVATION

REVISIONS						SHEET NO.
NO.	BY:	DATE:	NO.	BY:	DATE:	S-26
1			3			TOTAL SHEETS
2			4			199

ASSEMBLED BY : B. JOHNSON	DATE : 10-25-04		
CHECKED BY : J. ADILWORTH	DATE : 10-25-04		
DRAWN BY : RWW 8/01		ADDED 12/01	
CHECKED BY : LES 8/01		REV. 5/7/03R	RWW/JTE

DWG. 26 OF 28

STD. NO. BAS5SM

p:\R-0609IB\R0609IB_SITE1\Structures\DWG\bulbtee\bas5sm.std
5/19/2005 2:15:45 PM

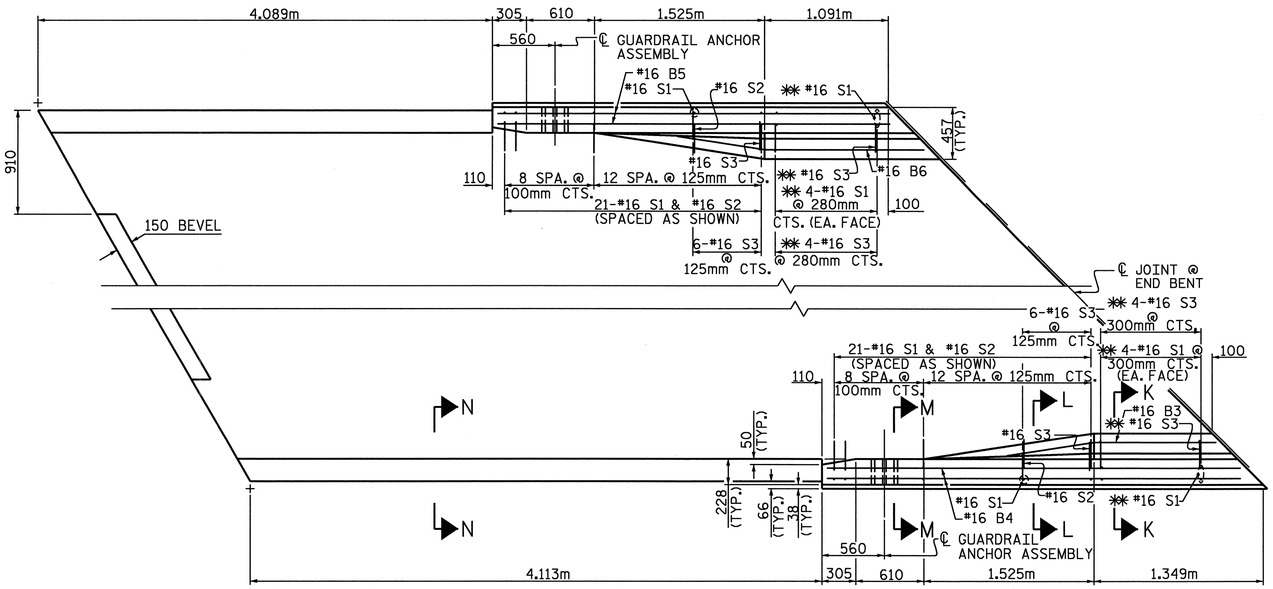

PLAN

BEGIN APPROACH SLAB SHOWN, END APPROACH SLAB SIMILAR

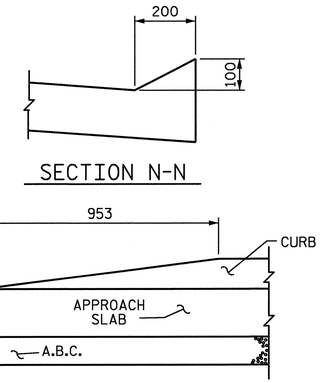

SECTION N-N

END OF CURB WITHOUT SHOULDER BERM GUTTER

CURB DETAILS

NOTES

THE GUARDRAIL ANCHOR ASSEMBLY SHALL CONSIST OF A 6mm HOLD DOWN PLATE AND 7 - 22.23mm Ø BOLTS WITH NUTS AND WASHERS.

THE HOLD-DOWN PLATE SHALL CONFORM TO AASHTO M270 GRADE 250. AFTER FABRICATION, THE HOLD-DOWN PLATE SHALL BE GALVANIZED IN ACCORDANCE WITH AASHTO M111.

BOLTS SHALL CONFORM TO THE REQUIREMENTS OF ASTM A307 AND NUTS SHALL CONFORM TO THE REQUIREMENTS OF AASHTO M291M. BOLTS, NUTS AND WASHERS SHALL BE GALVANIZED. AT THE CONTRACTOR'S OPTION, STAINLESS STEEL BOLTS, NUTS AND WASHERS MAY BE USED AS AN ALTERNATE FOR THE 22.23mm Ø GALVANIZED BOLTS, NUTS AND WASHERS. THEY SHALL CONFORM TO OR EXCEED THE MECHANICAL REQUIREMENTS OF ASTM A307. THE USE OF THIS ALTERNATE SHALL BE APPROVED BY THE ENGINEER.

AFTER INSTALLATION, THE EXPOSED THREAD OF THE BOLT SHALL BE BURRED WITH A SHARP POINTED TOOL.

THE COST OF THE GUARDRAIL ANCHOR ASSEMBLIES WITH BOLTS, NUTS AND WASHERS COMPLETE IN PLACE, SHALL BE INCLUDED IN THE LUMP SUM CONTRACT PRICE BID FOR BRIDGE APPROACH SLABS.

THE 32mm Ø HOLES SHALL BE FORMED OR DRILLED WITH A CORE BIT. IMPACT TOOLS WILL NOT BE PERMITTED. ANY CONCRETE DAMAGED BY THIS WORK SHALL BE REPAIRED TO THE SATISFACTION OF THE ENGINEER.

THE #16 S1 AND #16 S3 BARS SHALL BE INSTALLED, WHERE NOTED ON THE PLANS, USING AN ADHESIVE ANCHORING SYSTEM AFTER SAWING THE JOINT. FOR ADHESIVELY ANCHORED ANCHOR BOLTS OR DOWELS, SEE SPECIAL PROVISIONS. THE YIELD LOAD FOR THE #16 S1 AND #16 S3 BARS IS 82.7 kN. FIELD TESTING FOR THE ADHESIVE BONDING SYSTEM IS NOT REQUIRED.

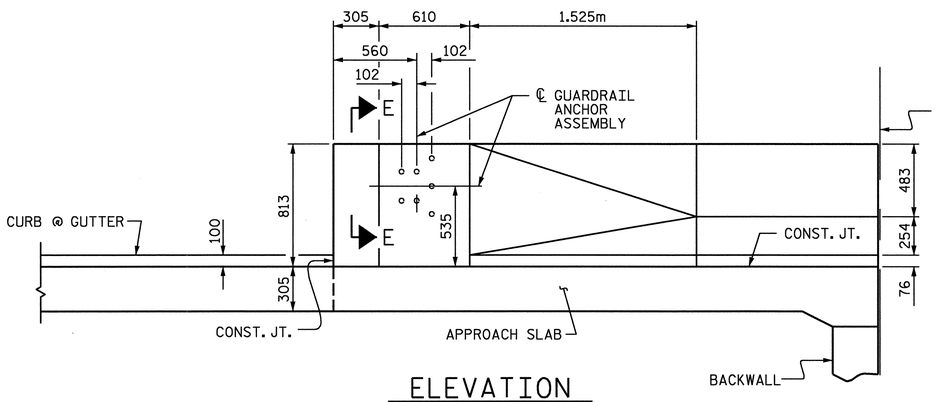

ELEVATION

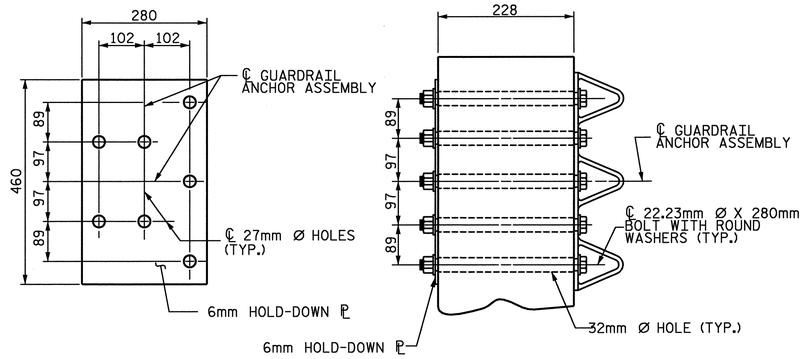

PLAN

SECTION E-E

GUARDRAIL ANCHOR ASSEMBLY DETAILS

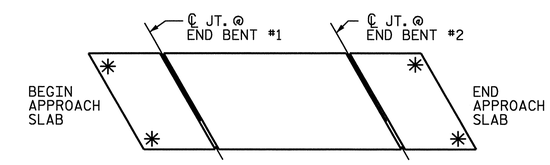

SKETCH SHOWING POINTS OF ATTACHMENT

✱ INDICATES POINTS OF ATTACHMENT

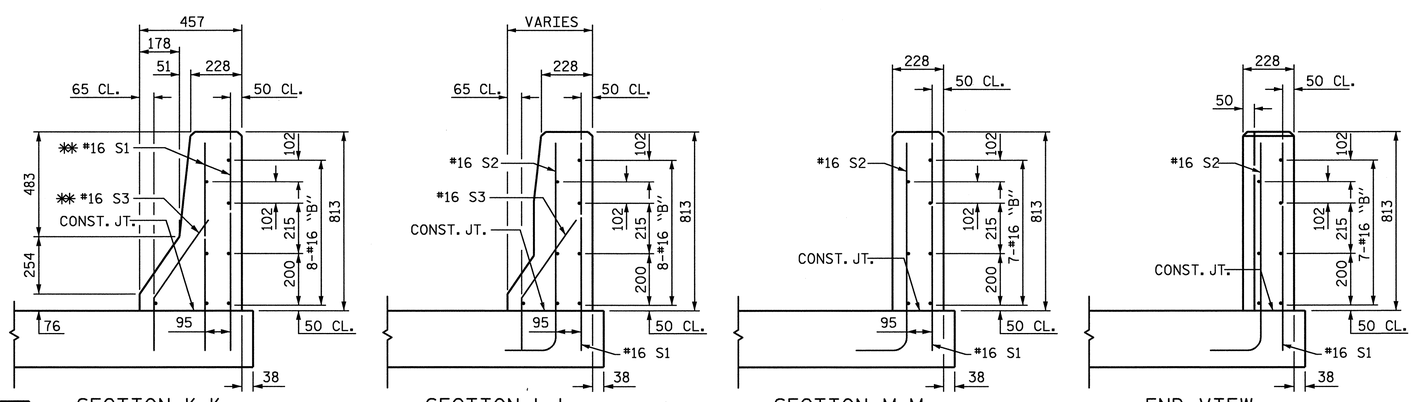

SECTION K-K

✱✱ ADHESIVELY ANCHORED

SECTION L-L

SECTION M-M

END VIEW

PROJECT NO. R-0609IB

GUILFORD-RANDOLPH COUNTY

STATION: 64+02.541 -L-

SHEET 3 OF 4

STATE OF NORTH CAROLINA
DEPARTMENT OF TRANSPORTATION
RALEIGH

STANDARD

BRIDGE APPROACH SLAB DETAILS FOR FLEXIBLE PAVEMENT WITH BARRIER RAIL

NORTH CAROLINA PROFESSIONAL SEAL 10773 ENGINEER EDWARD G. WETHERILL
5/23/05

WETHERILL ENGINEERING
559 Jones Franklin Rd. Suite 164
Raleigh, N.C. 27606
Bus: 919 851 8077
Fax: 919 851 8107

TRANSPORTATION PLANNING/DESIGN - BRIDGE/STRUCTURE DESIGN
CIVIL/SITE DESIGN - GIS/GPS - CONSTRUCTION OBSERVATION

REVISIONS								SHEET NO.
NO.	BY:	DATE:	NO.	BY:	DATE:			S-27
1			3					TOTAL SHEETS
2			4					149

ASSEMBLED BY : B.JOHNSON DATE : 10-25-04
CHECKED BY : J.ADTLWORTH DATE : 10-25-04
DRAWN BY : RWW 8/01
CHECKED BY : LES 8/01
REV. 5/7/03R RWW/JTE

DWG. 27 OF 28

STD. NO. BAS6SM

p:\R-0609IB\R0609IB_SITE 1\Structures\DWG\bulbfee\bas6sm.std
5/19/2005 2:19:52 PM

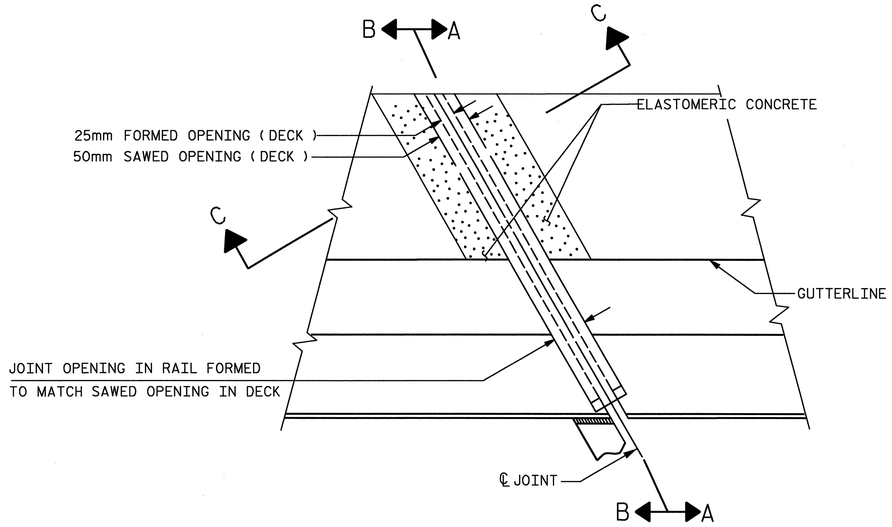

PLAN

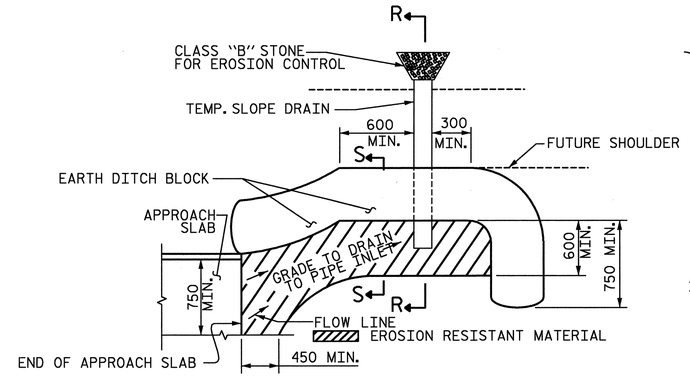

NOTE: IMMEDIATELY AFTER THE CONSTRUCTION OF THE APPROACH SLAB, THE CONTRACTOR SHALL PROVIDE TEMPORARY BERM AND SLOPE DRAIN. CONTRACTOR SHALL GRADE TO PIPE INLET AND PROVIDE EROSION RESISTANT MATERIAL AS SHOWN. THE EROSION RESISTANT MATERIAL SHALL BE EITHER 1) ASPHALT PLANT MIX, TYPE 1 OR TYPE 2, MIN. 50mm DEPTH, 2) EROSION CONTROL MAT, OR 3) CONCRETE, AS DIRECTED BY THE ENGINEER. THE SLOPE DRAIN SHALL CONSIST OF A NON-PERFORATED TEMPORARY DRAINAGE PIPE, 305mm IN DIAMETER.

PLAN VIEW

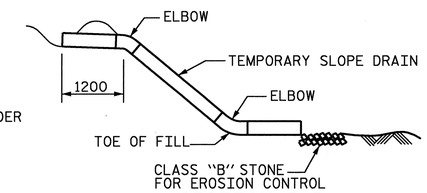

SECTION R-R

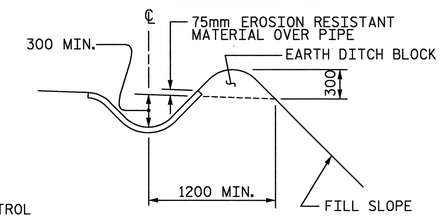

SECTION S-S

TEMPORARY BERM AND SLOPE DRAIN DETAILS

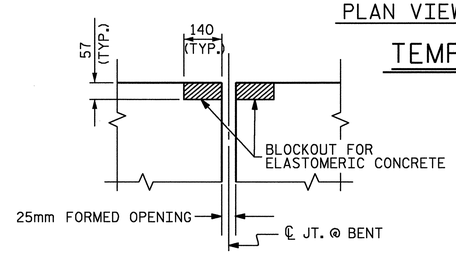

SECTION C-C

EVAZOTE JOINT SEAL
(PRE-SAWED ELASTOMERIC
CONCRETE DIMENSIONS)

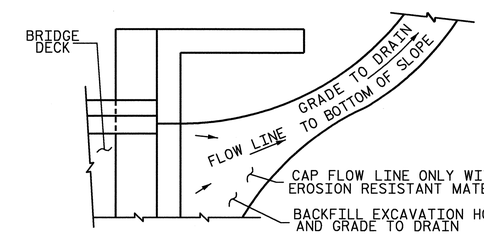

NOTE: IF THE APPROACH SLAB IS NOT CONSTRUCTED IMMEDIATELY AFTER THE BACKFILLING OF THE END BENT EXCAVATION, GRADE TO DRAIN TO THE BOTTOM OF THE SLOPE AND PROVIDE EROSION RESISTANT MATERIAL, SUCH AS FIBERGLASS ROVING OR AS DIRECTED BY THE ENGINEER TO PREVENT SOIL EROSION AND TO PROTECT THE AREA ADJACENT TO THE STRUCTURE. THE CONTRACTOR WILL BE REQUIRED TO REMOVE THESE MATERIALS PRIOR TO CONSTRUCTION OF THE APPROACH SLAB.

TEMPORARY DRAINAGE DETAIL

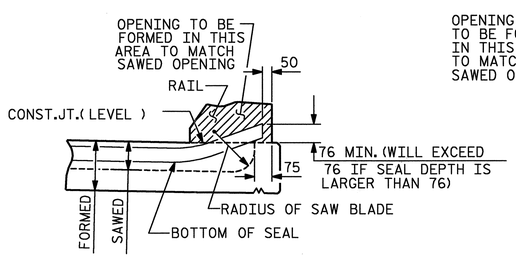

SECTION A-A

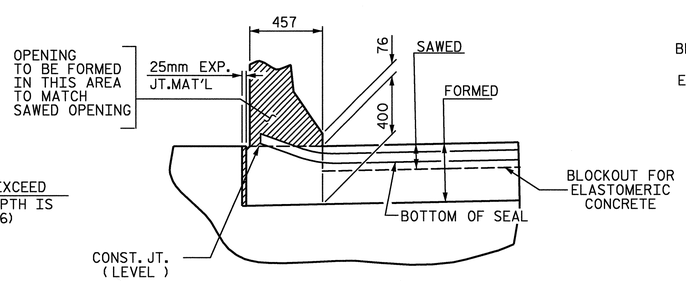

SECTION B-B

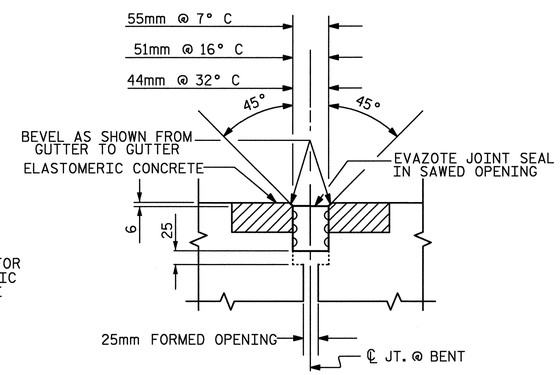

SECTION C-C

EVAZOTE JOINT SEAL
(FOR EVAZOTE JOINT SEAL,
SEE SPECIAL PROVISIONS)

JOINT SEAL DETAILS @ END BENT

(FOR BARRIER RAIL)

PROJECT NO. R-0609IB

GUILFORD-RANDOLPH COUNTY

STATION: 64+02.541 -L-

SHEET 4 OF 4

NORTH CAROLINA PROFESSIONAL SEAL 10773 ENGINEER EDWARD G. WETHERILL

5/23/05

WETHERILL ENGINEERING

559 Jones Franklin Rd. Suite 164
Raleigh, N.C. 27606
Bus: 919 851 8077
Fax: 919 851 8107

TRANSPORTATION PLANNING/DESIGN - BRIDGE/STRUCTURE DESIGN
CIVIL/SITE DESIGN - GIS/GPS - CONSTRUCTION OBSERVATION

STATE OF NORTH CAROLINA
DEPARTMENT OF TRANSPORTATION
RALEIGH

STANDARD

BRIDGE APPROACH
SLAB DETAILS

REVISIONS						SHEET NO.
NO.	BY:	DATE:	NO.	BY:	DATE:	5-28
1			3			TOTAL SHEETS
2			4			199

ASSEMBLED BY : B.JOHNSON		DATE : 10-25-04	
CHECKED BY : J.ADILWORTH		DATE : 10-25-04	
DRAWN BY : FCJ 11/88	REV. 8/16/99	RAL/LES	
CHECKED BY : ARB 11/88	REV. 10/17/00	RWW/LES	
	REV. 5/1/03	RWW/JTE	

DWG. 28 OF 28

STD. NO. BAS10SM

p:\R-0609IB\R0609IB_SITE1\Structures\DWG\bulbtee\bas10sm.std
5/19/2005 2:24:01 PM

F.A. PROJECT NO. NHF-119-1(14)

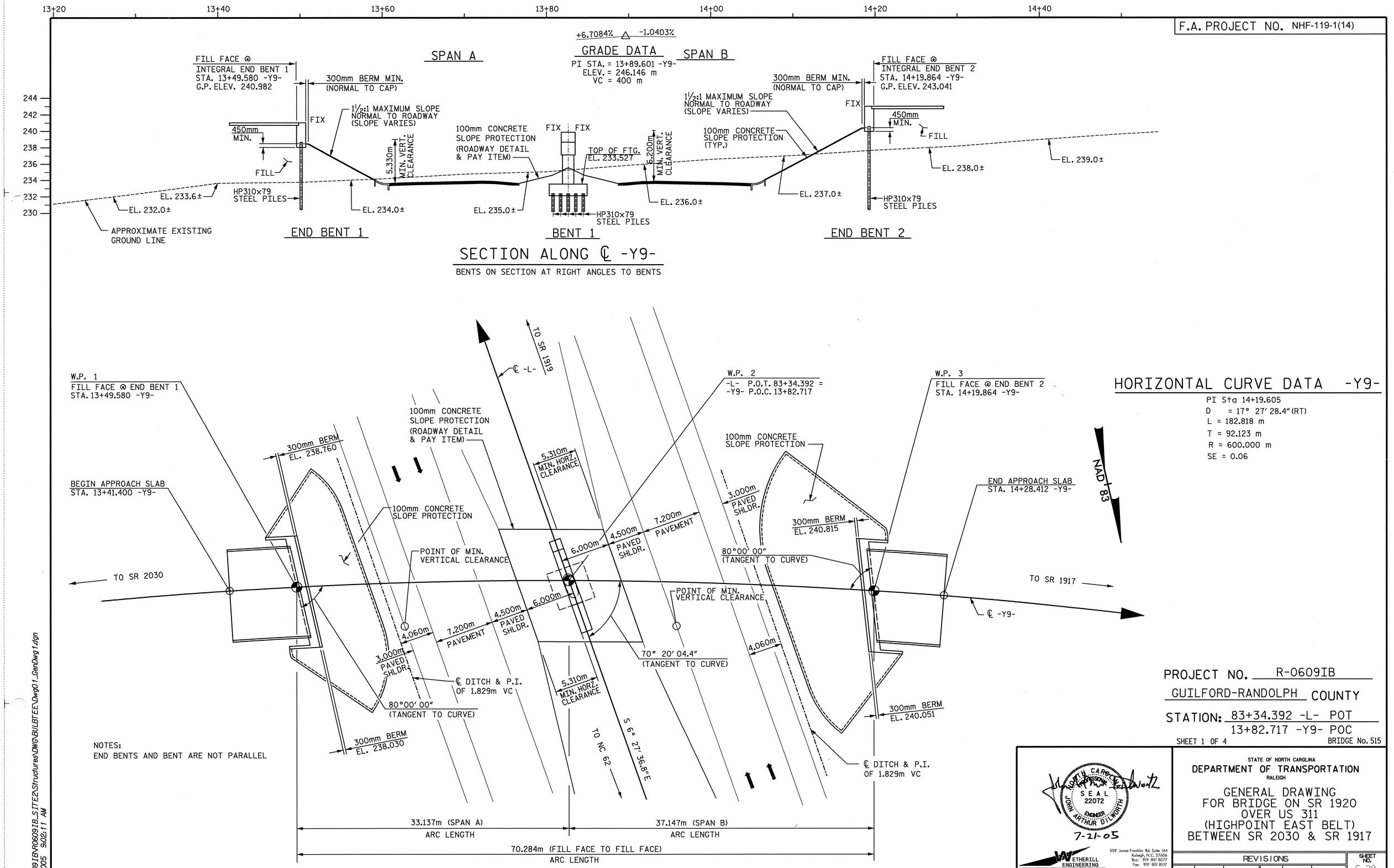

HORIZONTAL CURVE DATA -Y9-

PI Sta 14+19.605
D = 17° 27' 28.4" (RT)
L = 182.818 m
T = 92.123 m
R = 600.000 m
SE = 0.06

NOTES:
END BENTS AND BENT ARE NOT PARALLEL

PROJECT NO. R-0609IB
GUILFORD-RANDOLPH COUNTY
STATION: 83+34.392 -L- POT
13+82.717 -Y9- POC

SHEET 1 OF 4 BRIDGE No. 515

NORTH CAROLINA PROFESSIONAL SEAL 22072 ENGINEER JOHN ARTHUR DILWORTH
7-21-05

WETHERILL ENGINEERING
559 Jones Franklin Rd. Suite 164
Raleigh, N.C. 27606
Bus.: 919 851 8077
Fax: 919 851 8107
TRANSPORTATION PLANNING/DESIGN - BRIDGE/STRUCTURE DESIGN
CIVIL/SITE DESIGN - GIS/GPS - CONSTRUCTION OBSERVATION

STATE OF NORTH CAROLINA
DEPARTMENT OF TRANSPORTATION
RALEIGH

GENERAL DRAWING
FOR BRIDGE ON SR 1920
OVER US 311
(HIGHPOINT EAST BELT)
BETWEEN SR 2030 & SR 1917

REVISIONS						SHEET NO.
NO.	BY	DATE	NO.	BY	DATE	S-29
1			1			TOTAL SHEETS
2			2			199

DRAWN BY: J. PENDERGRAFT DATE: 5-05
CHECKED BY: J. DILWORTH DATE: 5-05

DWG. 1 OF 48

P:\R-0609IB\R0609IB_SITE2\Structures\DWG\BULBTEE\Dwg01_GenDwg1.dgn
7/21/2005 9:02:11 AM

STR#2

NOTES:

DIMENSIONS LOCATING THE PILES ARE TO THE CENTERLINE OF THE PILES.

ALL PILES ARE HP 310 x 79 STEEL PILES.

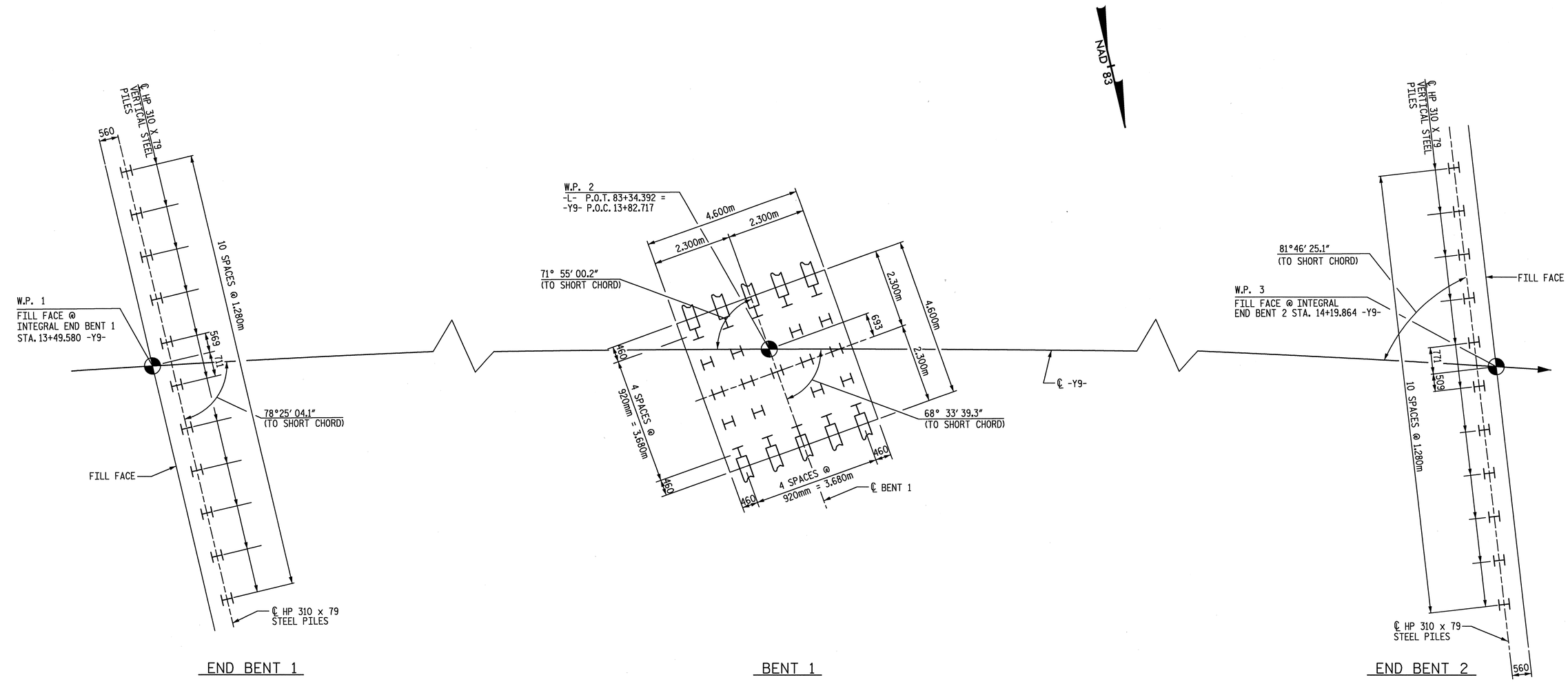

FOUNDATION LAYOUT

PROJECT NO. R-0609IB

GUILFORD-RANDOLPH COUNTY

STATION: 83+34.392 -L- POT
13+82.717 -Y9- POC

SHEET 2 OF 4

NORTH CAROLINA PROFESSIONAL SEAL 22072 ENGINEER JOHN ARTHUR DILWORTH

7-21-05

WETHERILL ENGINEERING

559 Jones Franklin Rd. Suite 164
Raleigh, N.C. 27606
Bus: 919 851 8077
Fac: 919 851 8107

TRANSPORTATION PLANNING/DESIGN - BRIDGE/STRUCTURE DESIGN
CIVIL/SITE DESIGN - GIS/GPS - CONSTRUCTION OBSERVATION

STATE OF NORTH CAROLINA
DEPARTMENT OF TRANSPORTATION
RALEIGH

GENERAL DRAWING
FOR BRIDGE ON SR 1920
OVER US 311
(HIGHPOINT EAST BELT)
BETWEEN SR 2030 & SR 1917

REVISIONS						SHEET NO.
NO.	BY	DATE	NO.	BY	DATE	S-30
1			1			TOTAL SHEETS
2			2			199

DRAWN BY: J. PENDERGRAFT DATE: 6-05
CHECKED BY: J. DILWORTH DATE: 6-05

DWG. 2 OF 48

P:\R-0609IB\R0609IB_SITE2\Structures\DWG\BULBTEE\Dwg02_Foundation.dgn
7/21/2005 9:05:26 AM

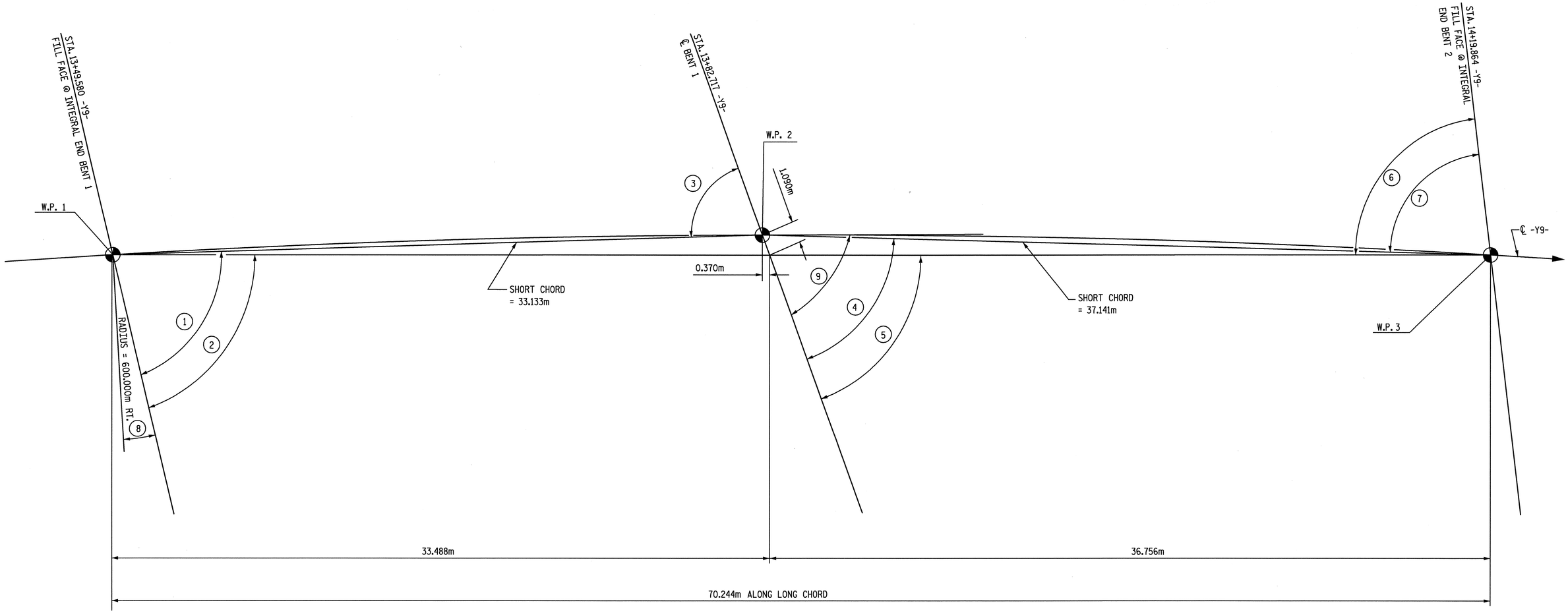

LONG CHORD LAYOUT

(END BENTS AND BENT ARE NOT PARALLEL)

TABLE OF ANGLES	
NO.	ANGLE
1	78° 25′ 04.1″
2	76° 38′ 39.1″
3	71° 55′ 00.2″
4	68° 33′ 39.3″
5	70° 08′ 35.2″
6	83° 21′ 20.9″
7	81° 46′ 25.1″
8	10° 00′ 00.0″
9	70° 20′ 04.4″

PROJECT NO. R-0609IB

GUILFORD-RANDOLPH COUNTY

STATION: 83+34.392 -L- POT

13+82.717 -Y9- POC

SHEET 3 OF 4

NORTH CAROLINA SEAL 22072 ENGINEER JOHN ARTHUR DILWORTH

7-21-05

ETHERILL ENGINEERING

559 Jones Franklin Rd. Suite 164
Raleigh, N.C. 27606
Bus: 919 851 8077
Fax: 919 851 8107

TRANSPORTATION PLANNING/DESIGN - BRIDGE/STRUCTURE DESIGN
CIVIL/SITE DESIGN - GIS/GPS - CONSTRUCTION OBSERVATION

STATE OF NORTH CAROLINA
DEPARTMENT OF TRANSPORTATION
RALEIGH

GENERAL DRAWING
FOR BRIDGE ON SR 1920
OVER US 311
(HIGHPOINT EAST BELT)
BETWEEN SR 2030 & SR 1917

REVISIONS						SHEET NO.
NO.	BY	DATE	NO.	BY	DATE	S-31
1			1			TOTAL SHEETS
2			2			199

DRAWN BY: J. PENDERGRAFT DATE: 5-05
CHECKED BY: J. DILWORTH DATE: 5-05

DWG. 3 OF 48

P:\R-0609IB\R0609IB_STTE2\Structures\DWG\BULBTEE\Dwg03_LongChord.dgn
7/21/2005 9:08:08 AM

NOTES:

ALL DIMENSIONS ARE IN MILLIMETERS UNLESS OTHERWISE NOTED.

ALL ELEVATIONS ARE IN METERS.

ASSUMED LIVE LOAD = MS 18 OR ALTERNATE LOADING.

FOR OTHER DESIGN DATA AND GENERAL NOTES, SEE SHEET SNSM.

THIS BRIDGE HAS BEEN DESIGNED BY THE STRENGTH DESIGN METHOD AS SPECIFIED IN AASHTO STANDARD SPECIFICATIONS.

THIS BRIDGE HAS BEEN DESIGNED IN ACCORDANCE WITH THE REQUIREMENTS OF THE AASHTO STANDARD SPECIFICATIONS FOR SEISMIC DESIGN OF HIGHWAY BRIDGES FOR SEISMIC PERFORMANCE CATEGORY A.

FOR SUBMITTAL OF WORKING DRAWINGS, SEE SPECIAL PROVISIONS.

THE CONTRACTOR SHALL PROVIDE INDEPENDENT ASSURANCE SAMPLES OF REINFORCING STEEL AS FOLLOWS: FOR PROJECTS REQUIRING UP TO 360,000 KG OF REINFORCING STEEL, ONE 760mm SAMPLE OF EACH SIZE BAR USED, AND FOR PROJECTS REQUIRING OVER 360,000 KG OF REINFORCING STEEL, TWO 760mm SAMPLES OF EACH SIZE BAR USED. THE BARS FROM WHICH THE SAMPLES ARE TAKEN MUST THEN BE SPLICED WITH REPLACEMENT BARS OF THE SIZE AND LENGTH OF THE SAMPLE PLUS A MINIMUM LAP SPLICE OF THIRTY BAR DIAMETERS.

FOR METRIC STRUCTURAL STEEL, SEE SPECIAL PROVISIONS.

THE CLASS AA CONCRETE IN THE BRIDGE DECK SHALL CONTAIN FLY ASH OR GROUND GRANULATED BLAST FURNACE SLAG AT THE SUBSTITUTION RATE SPECIFIED IN ARTICLE 1024-1 AND IN ACCORDANCE WITH ARTICLES 1024-5 AND 1024-6 OF THE STANDARD SPECIFICATIONS. NO PAYMENT WILL BE MADE FOR THIS SUBSTITUTION AS IT IS CONSIDERED INCIDENTAL TO THE COST OF THE REINFORCED CONCRETE DECK SLAB.

FOR FALSEWORK AND FORMWORK, SEE SPECIAL PROVISIONS.

NEEDLE BEAMS WILL NOT BE ALLOWED UNLESS OTHERWISE CALLED FOR ON THE PLANS OR APPROVED BY ENGINEER.

PILES FOR END BENT NOS. 1 AND 2 SHALL BE DRIVEN TO A MINIMUM BEARING CAPACITY OF 620 KN EACH.

PILES FOR BENT NO. 1 SHALL BE DRIVEN TO A MINIMUM BEARING CAPACITY OF 620 KN EACH.

WHEN DRIVING PILES, THE MAXIMUM BLOW COUNT SHALL NOT BE EXCEEDED.

REMOVABLE FORMS MAY BE USED IN LIEU OF METAL STAY-IN-PLACE FORMS IN ACCORDANCE WITH ARTICLE 420-3 OF THE STANDARD SPECIFICATIONS.

FOR CRANE SAFETY, SEE SPECIAL PROVISIONS.

FOR STEEL H PILES, SEE SPECIAL PROVISIONS.

WORK SHALL NOT BE STARTED ON THIS BRIDGE UNTIL ROADWAY SECTION HAS BEEN EXCAVATED.

FOR SAND LIGHTWEIGHT CONCRETE, SEE SPECIAL PROVISIONS.

FOR REINFORCED CONCRETE DECK SLAB (SAND LIGHTWEIGHT CONCRETE), SEE SPECIAL PROVISIONS.

FOR FABRICATED METAL STAY-IN-PLACE FORMS, SEE SPECIAL PROVISIONS.

BM 10: RR SPIKE IN BASE OF 300mm GUM 65m LT. OF BASELINE STA. 78+75 -L-, EL. 221.815

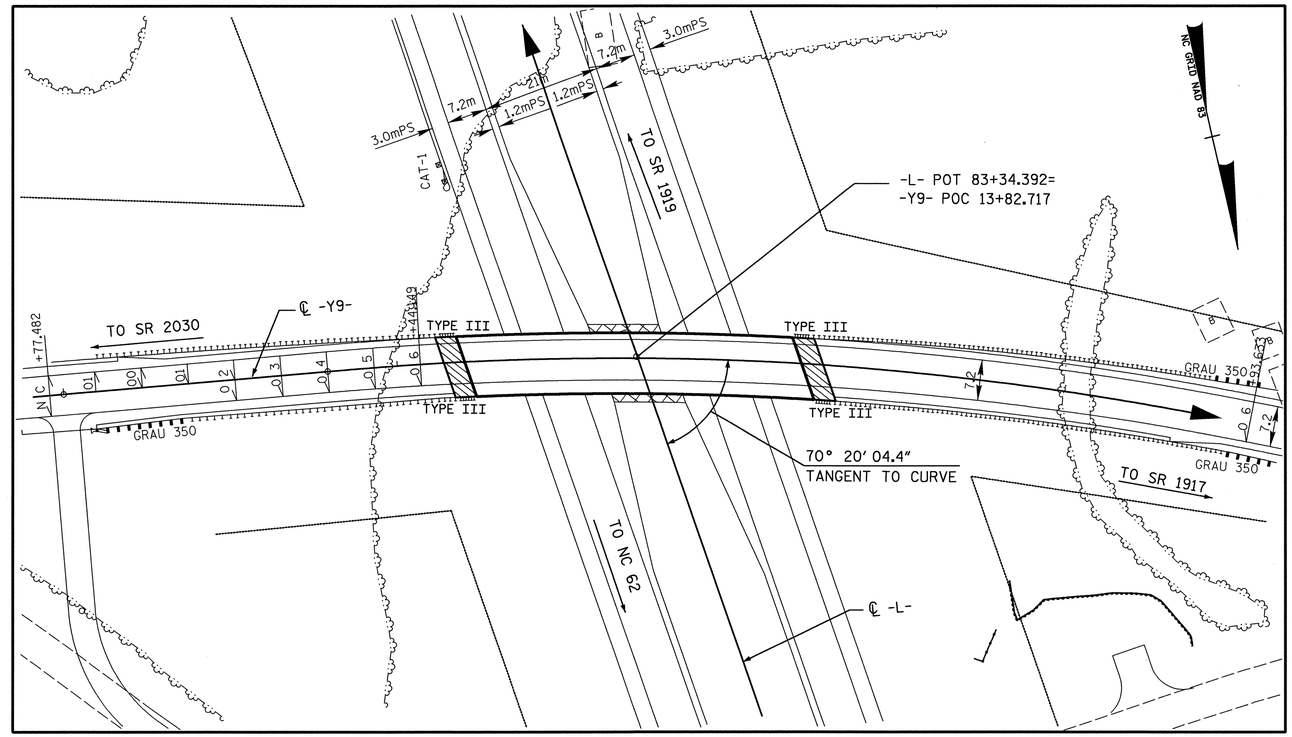

FOR UTILITY INFORMATION, SEE UTILITY PLANS AND SPECIAL PROVISIONS.

LOCATION SKETCH

TOTAL BILL OF MATERIAL

	FOUNDATION EXCAVATION	REINFORCED CONCRETE DECK SLAB (SAND LIGHTWEIGHT CONCRETE)	GROOVING BRIDGE FLOORS	CLASS AA CONCRETE	CLASS A CONCRETE	BRIDGE APPROACH SLABS	REINFORCING STEEL	EPOXY COATED REINFORCING STEEL	1600mm MODIFIED PRESTRESSED CONCRETE GIRDERS		HP 310x79 STEEL PILES		2 BAR METAL RAIL	355mm x 760mm CONCRETE PARAPET	100mm SLOPE PROTECTION	ELASTOMERIC BEARINGS	EVAZOTE JOINT SEALS
	LUMP SUM	SQ. METERS	SQ. METERS	CU. METERS	CU. METERS	LUMP SUM	kg	kg	NO.	METERS	NO.	METERS	METERS	METERS	SQ. METERS	LUMP SUM	LUMP SUM
SUPERSTRUCTURE		771.4	843.2	72.0		LUMP SUM			8	276.962			134.736	139.412		LUMP SUM	LUMP SUM
END BENT 1					15.6		2539	309			11	144.2			470		
BENT 1	LUMP SUM				77.5		7945				23	92.3					
END BENT 2					15.7		2547	309			11	100.2			705		
TOTAL	LUMP SUM	771.4	843.2	72.0	108.8	LUMP SUM	13031	618	8	276.962	45	336.7	134.736	139.412	1175	LUMP SUM	LUMP SUM

PROJECT NO. R-0609IB

GUILFORD-RANDOLPH COUNTY

STATION: 83+34.392 -L- POT
13+82.717 -Y9- POC

SHEET 4 OF 4

NORTH CAROLINA PROFESSIONAL SEAL 22072 ENGINEER JOHN ARTHUR DILWORTH

7-21-05

ETHERILL ENGINEERING
559 Jones Franklin Rd. Suite 164
Raleigh, N.C. 27606
Bus: 919 851 8077
Fax: 919 851 8107
TRANSPORTATION PLANNING/DESIGN - BRIDGE/STRUCTURE DESIGN
CIVIL/SITE DESIGN - GIS/GPS - CONSTRUCTION OBSERVATION

STATE OF NORTH CAROLINA
DEPARTMENT OF TRANSPORTATION
RALEIGH

GENERAL DRAWING
FOR BRIDGE ON SR 1920
OVER US 311
(HIGHPOINT EAST BELT)
BETWEEN SR 2030 & SR 1917

REVISIONS						SHEET NO.
NO.	BY	DATE	NO.	BY	DATE	S-32
1			1			TOTAL SHEETS
2			2			199

DRAWN BY: JC PENDERGRAFT DATE: 6/05
CHECKED BY: JA DILWORTH DATE: 6/05

DWG. 4 OF 48

P:\R-0609IB\R0609IB_SITE2\Structures\DWG\BULBTEE\Dwg04_GenDwg4.dgn
7/21/2005 9:09:15 AM

NOTES:

PROVIDE 32mm HIGH BEAM BOLSTERS UPPER AT 1.2m CTS. ATOP THE METAL STAY-IN-PLACE FORMS TO SUPPORT THE BOTTOM MAT OF "A" BARS. WHEN USING REMOVABLE FORMS, PROVIDE CONTINUOUS HIGH CHAIRS FOR METAL DECK (C.H.C.M.) AT 1.2m CTS. WITH A HEIGHT TO SUPPORT THE BOTTOM MAT OF "A" BARS A CLEAR DISTANCE OF 65mm ABOVE THE TOP OF THE REMOVABLE FORM.

PREVIOUSLY CAST CONCRETE IN A CONTINUOUS UNIT SHALL HAVE ATTAINED A MINIMUM COMPRESSIVE STRENGTH OF 20.7 MPa BEFORE ADDITIONAL CONCRETE IS CAST IN THE UNIT.

LONGITUDINAL STEEL MAY BE SHIFTED SLIGHTLY, AS NECESSARY, TO AVOID INTERFERENCE WITH STIRRUPS IN PRESTRESSED CONCRETE GIRDERS.

TEMPORARY STRUTS SHALL BE PLACED BETWEEN PRESTRESSED GIRDERS ADJACENT TO THE DIAPHRAGMS AND THE NUTS ON THE 31.75mm DIA. TIE RODS SHALL BE FULLY TIGHTENED BEFORE THE DIAPHRAGMS ARE CAST. STRUTS SHALL REMAIN IN PLACE 3 DAYS AFTER CONCRETE IS PLACED. THE TIE RODS SHALL BE RE-TIGHTENED AFTER THE STRUTS HAVE BEEN REMOVED.

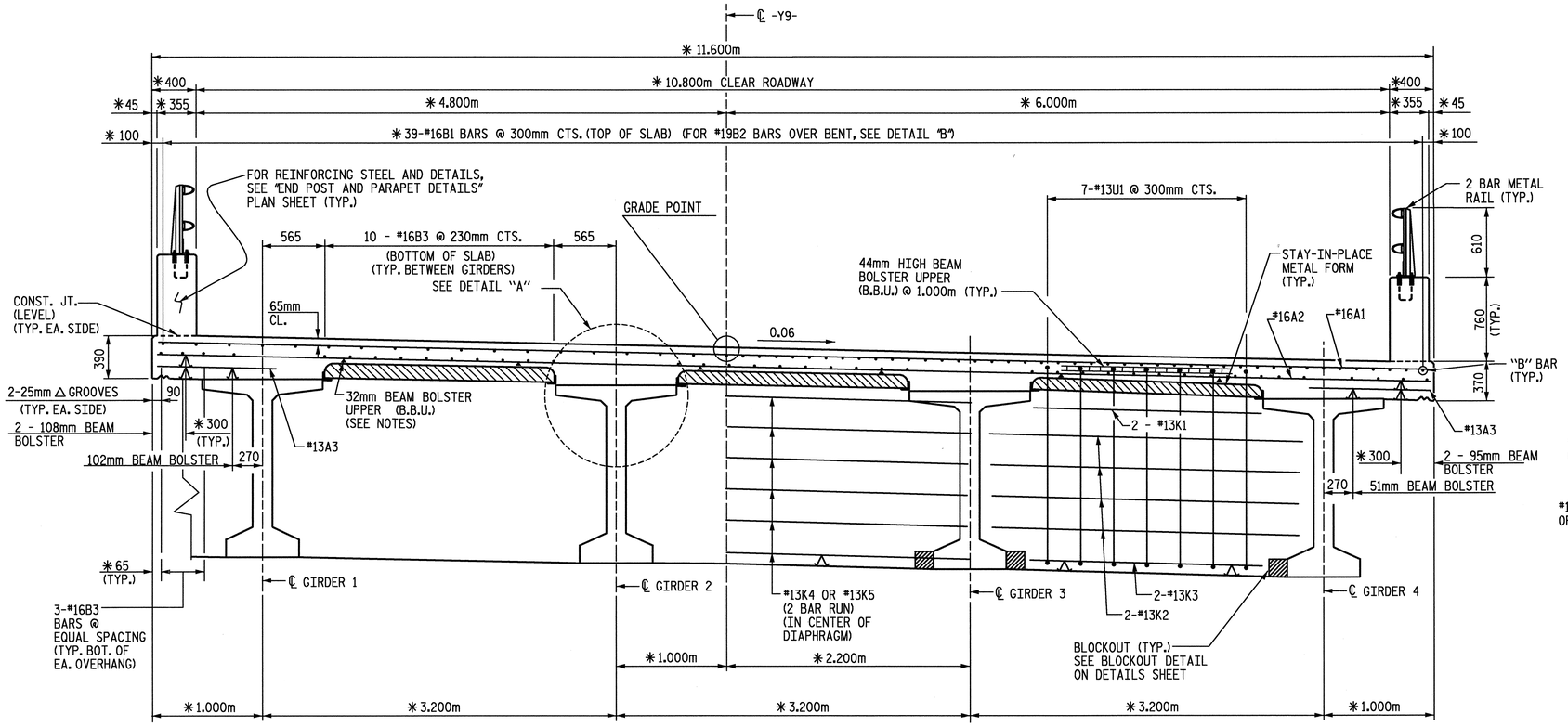

HALF SECTION @ INTEGRAL END BENT

FOR REINFORCING STEEL AND DIMENSIONS SEE INTEGRAL END BENT PLAN SHEETS.

HALF SECTION @ BENT DIAPHRAGM

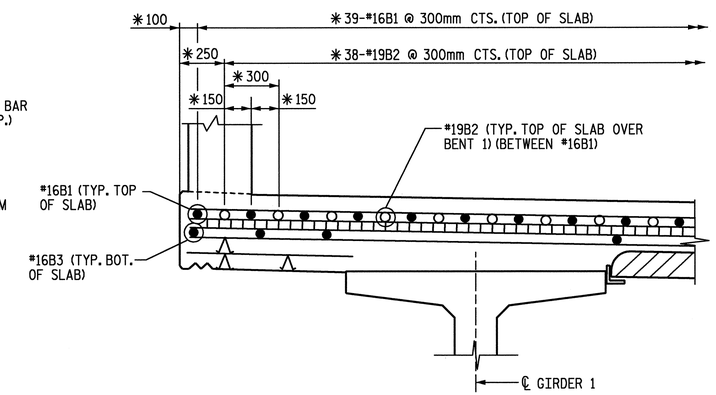

DETAIL "B"

(FOR #19 B2 BARS OVER BENT 1)

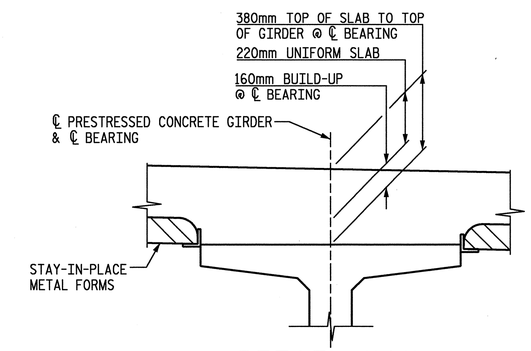

DETAIL "A"

TYPICAL SECTION

✱DENOTES RADIAL DIMENSIONS THROUGH BEARINGS (GIRDERS ARE PARALLEL TO SHORT CHORD)

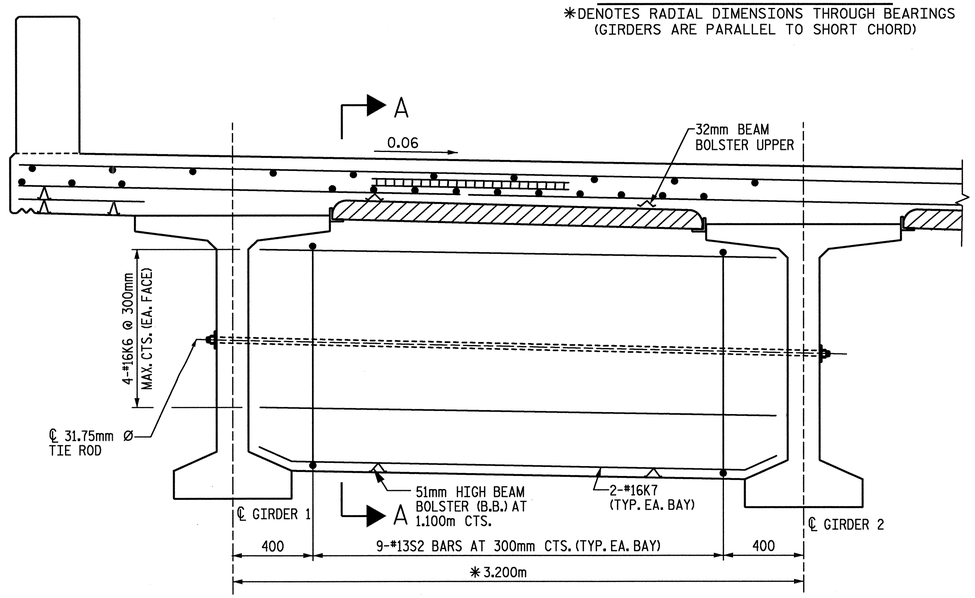

SECTION AT INTERMEDIATE DIAPHRAGM

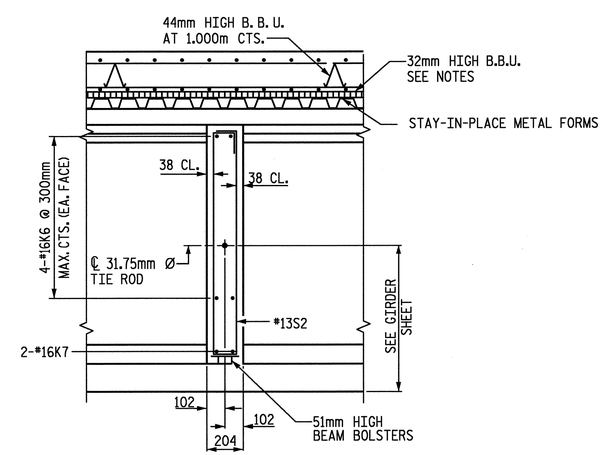

SECTION A-A

PROJECT NO. R-0609IB

GUILFORD-RANDOLPH COUNTY

STATION: 83+34.392 -L-

SHEET 1 OF 2

STATE OF NORTH CAROLINA
DEPARTMENT OF TRANSPORTATION
RALEIGH

SUPERSTRUCTURE TYPICAL SECTION AND DETAILS

NORTH CAROLINA PROFESSIONAL SEAL 22072 ENGINEER JOHN ARTHUR DILWORTH

7-21-05

WETHERILL ENGINEERING
559 Jones Franklin Rd. Suite 164
Raleigh, N.C. 27606
Bus: 919 851 8077
Fax: 919 851 8107

TRANSPORTATION PLANNING/DESIGN - BRIDGE/STRUCTURE DESIGN
CIVIL/SITE DESIGN - GIS/GPS - CONSTRUCTION OBSERVATION

REVISIONS						SHEET NO.
NO.	BY	DATE	NO.	BY	DATE	S-33
1			1			TOTAL SHEETS
2			2			199

DRAWN BY: J. PENDERGRAFT DATE: 6-05
CHECKED BY: J. DILWORTH DATE: 6-05

DWG. 5 OF 48

P:\R-0609IB\R0609IB_STTE2\Structures\DWG\BULBTEE\Dwg05_TypSection.dgn
7/21/2005 9:10:07 AM

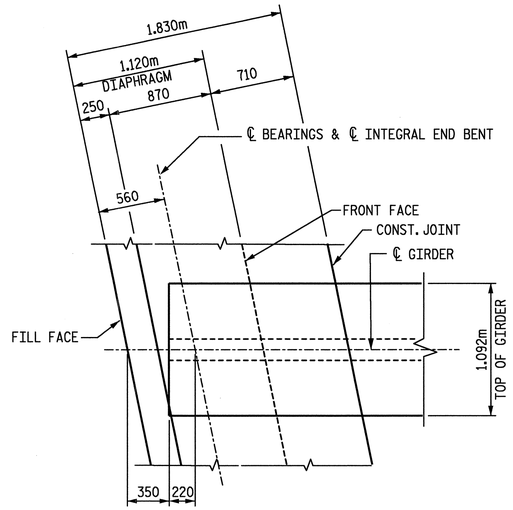

PLAN OF GIRDER AT INTEGRAL END BENT

(INTEGRAL END BENT 1 SHOWN, INTEGRAL END BENT 2 SIMILAR)

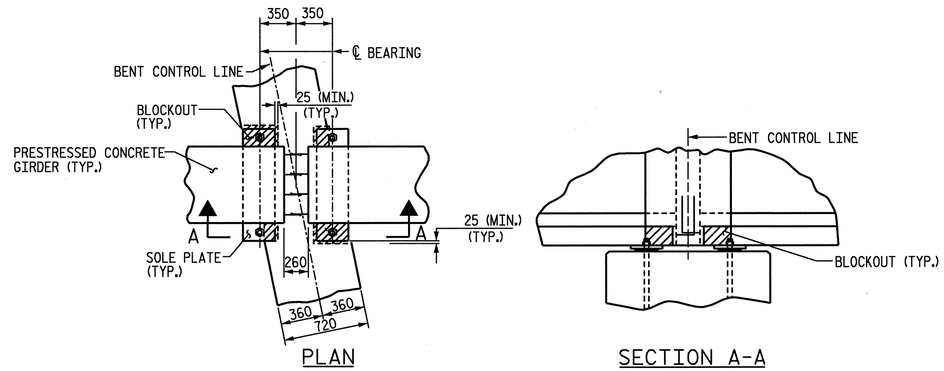

BENT DIAPHRAGM BLOCKOUT DETAIL

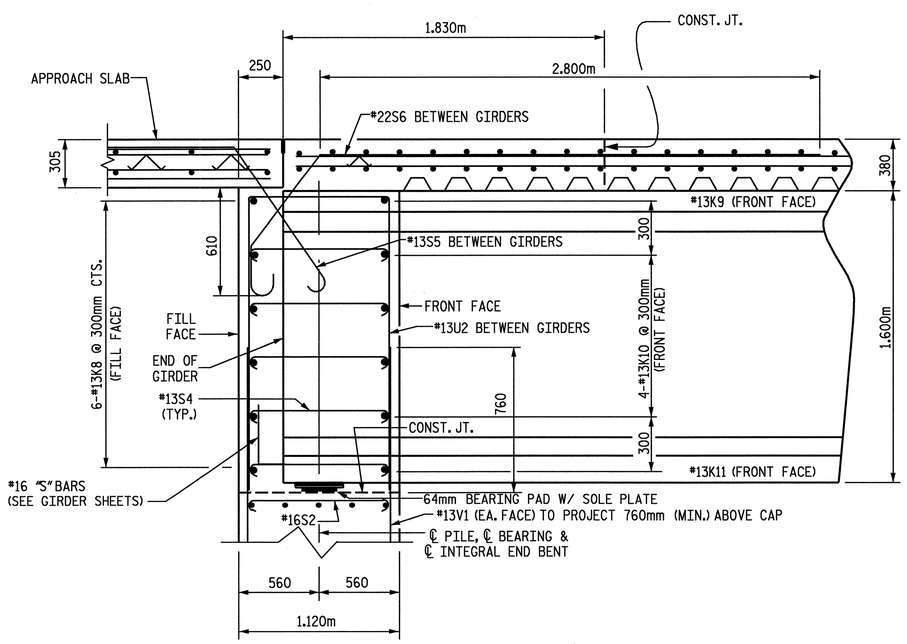

SECTION A-A (THROUGH INTEGRAL END BENT)

(SEE "SUPERSTRUCTURE PLAN OF SPAN A & B" SHEETS)
FOR REINFORCING STEEL AND DIMENSIONS IN SECTION
VIEW SEE INTEGRAL END BENT PLAN SHEETS

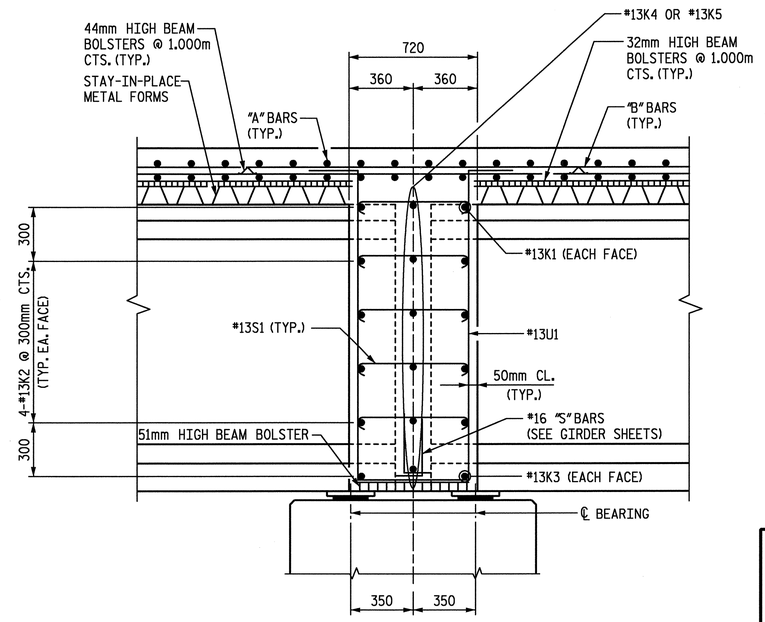

SECTION B-B (THROUGH BENT DIAPHRAGM)

(SEE "SUPERSTRUCTURE
PLAN OF SPAN A & B" SHEETS)

PROJECT NO. R-0609IB
GUILFORD-RANDOLPH COUNTY
STATION: 83+34.392 -L-

SHEET 2 OF 2

NORTH CAROLINA PROFESSIONAL SEAL 22072 ENGINEER JOHN ARTHUR DILWORTH
7-21-05

ETHERILL ENGINEERING
559 Jones Franklin Rd. Suite 164
Raleigh, N.C. 27606
Bus: 919 851 8077
Fax: 919 851 8107

TRANSPORTATION PLANNING/DESIGN - BRIDGE/STRUCTURE DESIGN
CIVIL/SITE DESIGN - GIS/GPS - CONSTRUCTION OBSERVATION

STATE OF NORTH CAROLINA
DEPARTMENT OF TRANSPORTATION
RALEIGH

SUPERSTRUCTURE
TYPICAL SECTION
AND DETAILS

REVISIONS						SHEET NO.
NO.	BY	DATE	NO.	BY	DATE	S-34
1			1			TOTAL SHEETS
2			2			199

DRAWN BY: J. PENDERGRAFT DATE: 6-05
CHECKED BY: J.A. DILWORTH DATE: 6-05

DWG. 6 OF 48

P:\R-0609IB\R0609IB_STE2\Structures\DWG\BUILBTEE\Dwg06_TypSectDetails.dgn
7/21/2005 9:12:42 AM

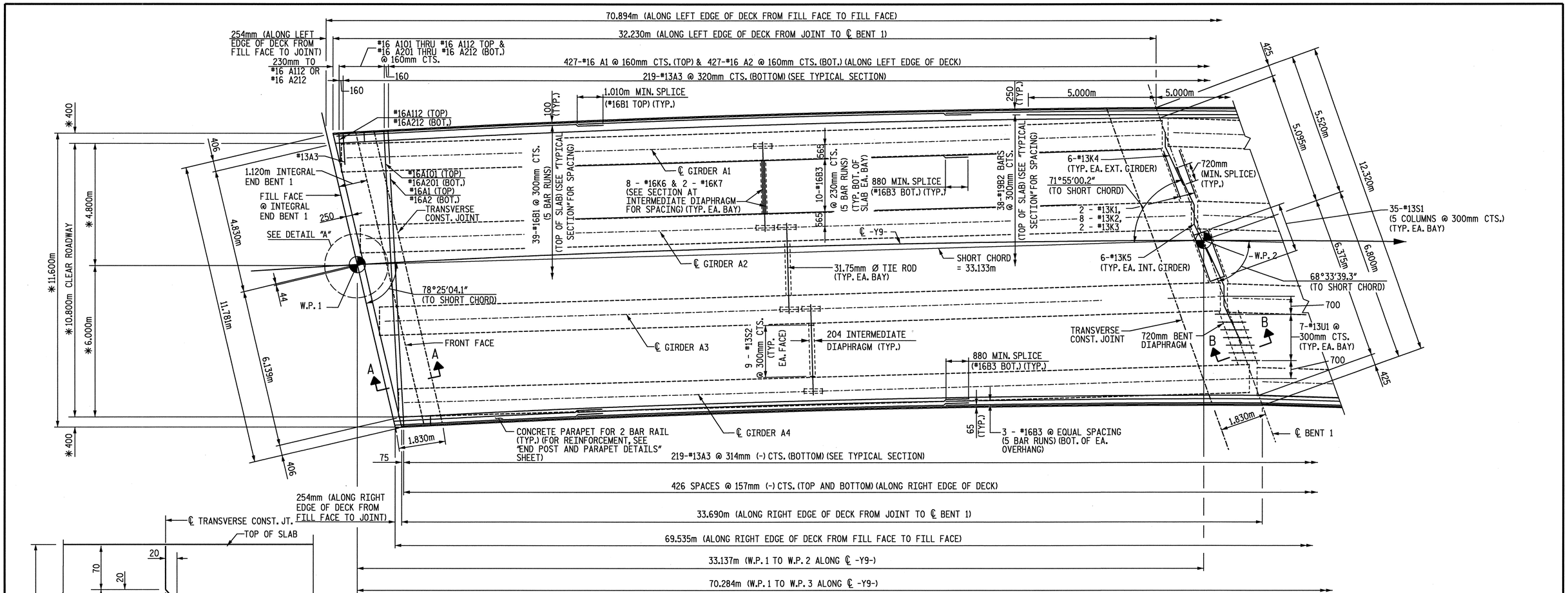

✱ DENOTES RADIAL DIMENSION.

PLAN OF SPAN A

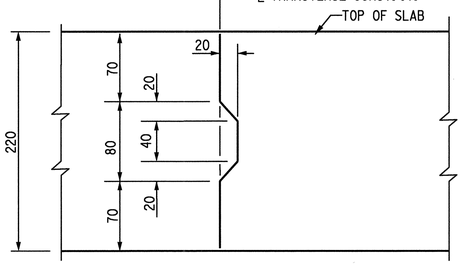

NOTE: REINFORCING STEEL IN SLAB NOT SHOWN. LONGITUDINAL REINFORCING STEEL SHALL BE CONTINUOUS THROUGH JOINT.

TRANSVERSE CONSTRUCTION JOINT IN DECK SLAB

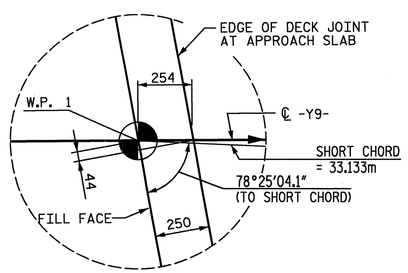

DETAIL "A"

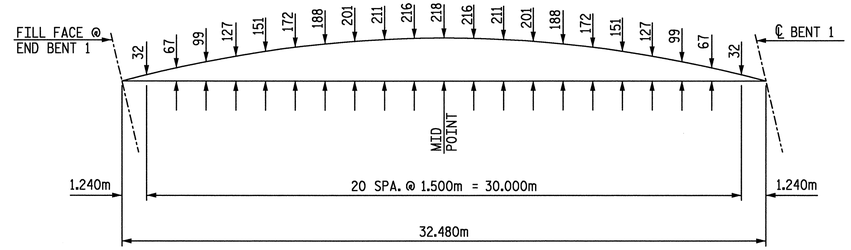

SPAN A ARC OFFSETS - LEFT SIDE

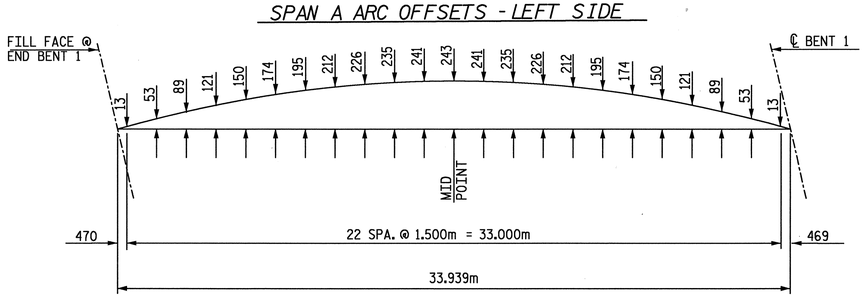

SPAN A ARC OFFSETS - RIGHT SIDE

PROJECT NO. R-0609IB

GUILFORD-RANDOLPH COUNTY

STATION: 83+34.392 -L-

NORTH CAROLINA SEAL 22072 ENGINEER JOHN ARTHUR DILWORTH

7-21-05

ETHERILL ENGINEERING
559 Jones Franklin Rd. Suite 164
Raleigh, N.C. 27606
Bus: 919 851 8077
Fax: 919 851 8107

TRANSPORTATION PLANNING/DESIGN - BRIDGE/STRUCTURE DESIGN
CIVIL/SITE DESIGN - GIS/GPS - CONSTRUCTION OBSERVATION

STATE OF NORTH CAROLINA
DEPARTMENT OF TRANSPORTATION
RALEIGH

SUPERSTRUCTURE
PLAN OF SPAN A

REVISIONS						SHEET NO.
NO.	BY	DATE	NO.	BY	DATE	S-35
1			1			TOTAL SHEETS
2			2			199

DRAWN BY: J. PENDERGRAFT DATE: 6-05
CHECKED BY: J. DILWORTH DATE: 6-05

DWG. 7 OF 48

P:\R-0609IB\R0609IB_STTE2\Structures\DWG\BULBTEE\Dwg07_PlanSpanA.dgn
7/21/2005 9:13:20 AM

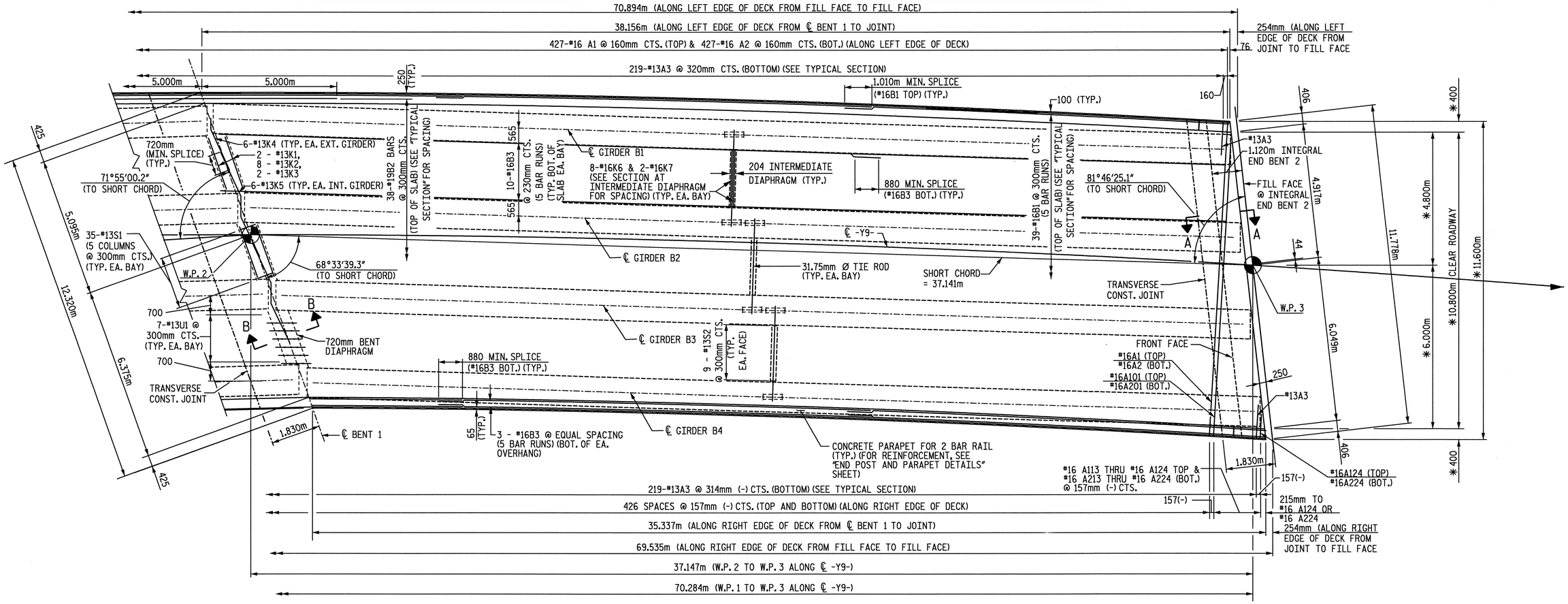

PLAN OF SPAN B

✱DENOTES RADIAL DIMENSION.

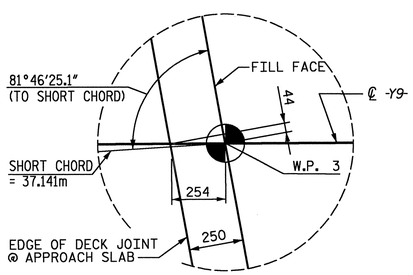

DETAIL "B"

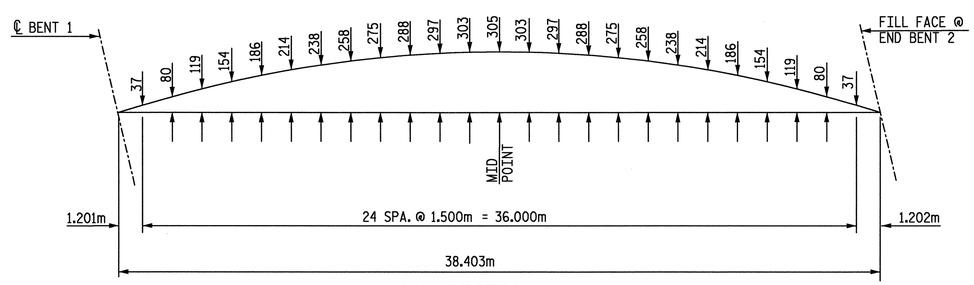

SPAN B ARC OFFSETS - LEFT SIDE

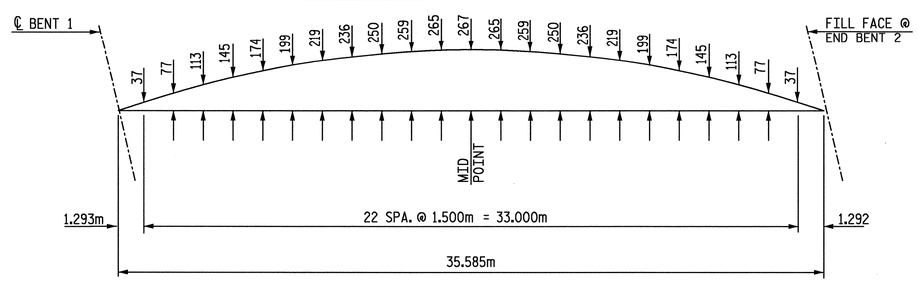

SPAN B ARC OFFSETS - RIGHT SIDE

PROJECT NO. R-0609IB
GUILFORD-RANDOLPH COUNTY
STATION: 83+34.392 -L-

NORTH CAROLINA PROFESSIONAL SEAL 22072 ENGINEER JOHN ARTHUR DILWORTH
7-21-05

WETHERILL ENGINEERING
559 Jones Franklin Rd. Suite 164
Raleigh, N.C. 27606
Bus: 919 851 8077
Fax: 919 851 8107
TRANSPORTATION PLANNING/DESIGN - BRIDGE/STRUCTURE DESIGN
CIVIL/SITE DESIGN - GIS/GPS - CONSTRUCTION OBSERVATION

STATE OF NORTH CAROLINA
DEPARTMENT OF TRANSPORTATION
RALEIGH

SUPERSTRUCTURE
PLAN OF SPAN B

REVISIONS						SHEET NO.
NO.	BY	DATE	NO.	BY	DATE	S-36
1			1			TOTAL SHEETS
2			2			199

DRAWN BY: J. PENDERGRAFT DATE: 6-05
CHECKED BY: J. DILWORTH DATE: 6-05

DWG. 8 OF 48

P:\R-0609IB\R0609IB_STIE2\Structures\DWG\BULBTEE\Dwg08_PlanSpanBdgn
7/21/2005 9:13:42 AM

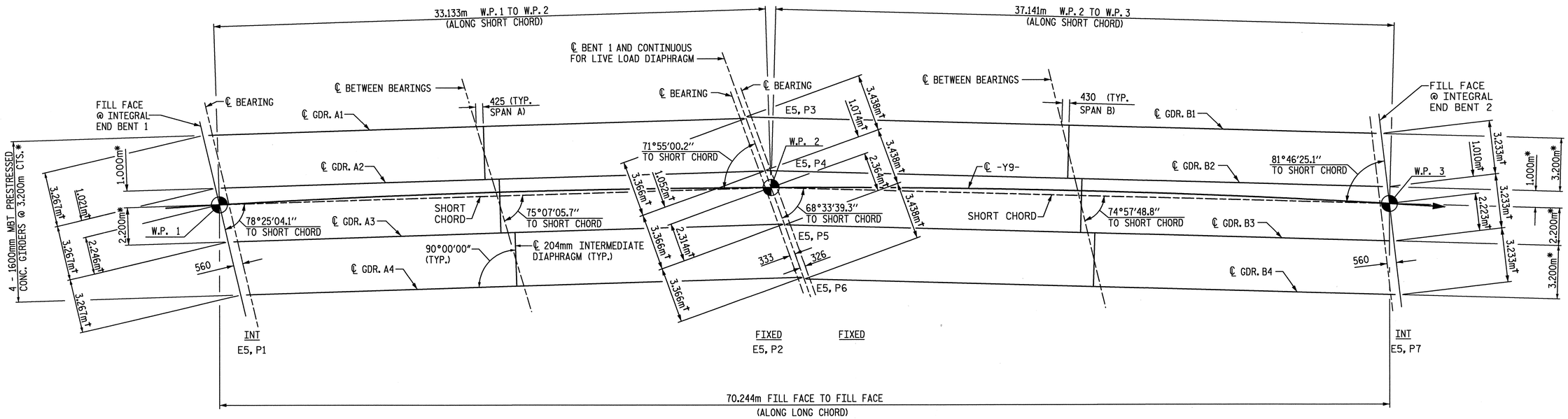

GIRDER LAYOUT

GIRDERS ARE PARALLEL TO SHORT CHORD FOR EACH SPAN

* DENOTES RADIAL DIMENSIONS THROUGH BEARINGS

† DENOTES DIMENSIONS ALONG FILL FACE OF END BENTS OR CENTERLINE OF BENT

PROJECT NO. R-0609IB

GUILFORD-RANDOLPH COUNTY

STATION: 83+34.392 -L-

NORTH CAROLINA PROFESSIONAL SEAL 22072 ENGINEER JOHN ARTHUR DILWORTH

7-21-05

WETHERILL ENGINEERING
559 Jones Franklin Rd. Suite 164
Raleigh, N.C. 27606
Bus: 919 851 8077
Fax: 919 851 8107

TRANSPORTATION PLANNING/DESIGN - BRIDGE/STRUCTURE DESIGN
CIVIL/SITE DESIGN - GIS/GPS - CONSTRUCTION OBSERVATION

STATE OF NORTH CAROLINA
DEPARTMENT OF TRANSPORTATION
RALEIGH

SUPERSTRUCTURE
FRAMING PLAN

REVISIONS						SHEET NO.
NO.	BY	DATE	NO.	BY	DATE	S-37
1			1			TOTAL SHEETS
2			2			199

DRAWN BY: J. T. DIFFEE DATE: 05-26-2005
CHECKED BY: J. A. DILWORTH DATE: 05-26-2005

DWG. 9 OF 48

P:\R-0609IB\R0609IB_SITE2\Structures\DWG\BULBTEE\Dwg09_FramingPlan.dgn
7/21/2005 9:14:03 AM

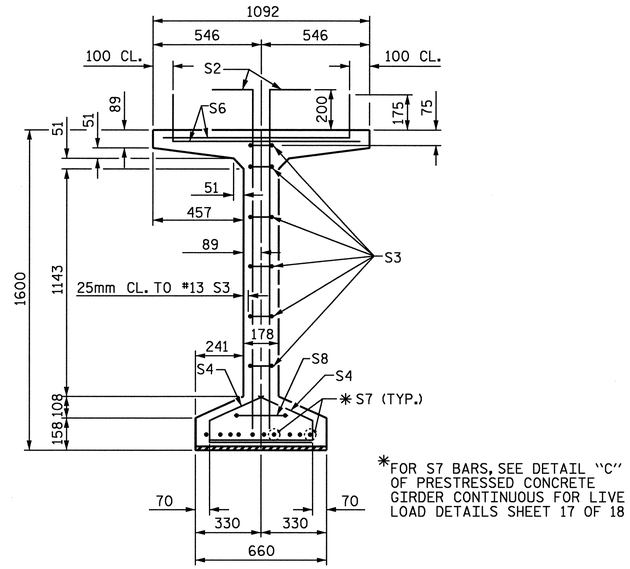

✱FOR S7 BARS, SEE DETAIL "C" OF PRESTRESSED CONCRETE GIRDER CONTINUOUS FOR LIVE LOAD DETAILS SHEET 17 OF 18

SECTION A-A

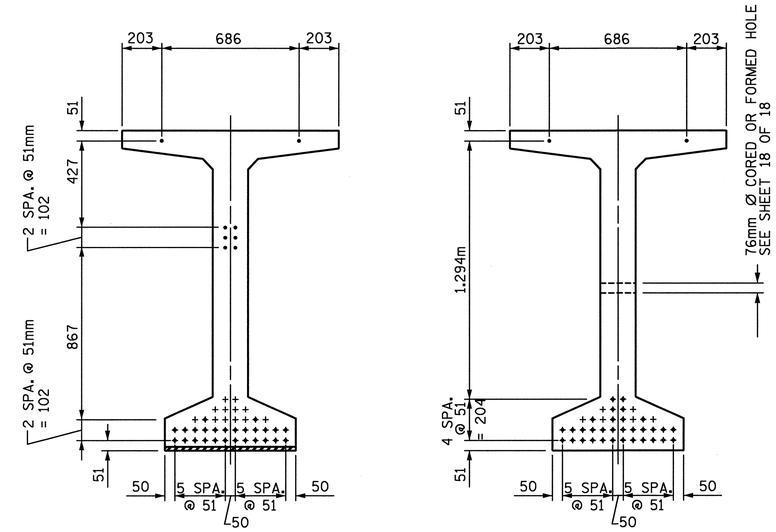

AT END OF GIRDER

AT ℄ OF GIRDER

15.24mm Ø LOW RELAXATION STRAND LAYOUT

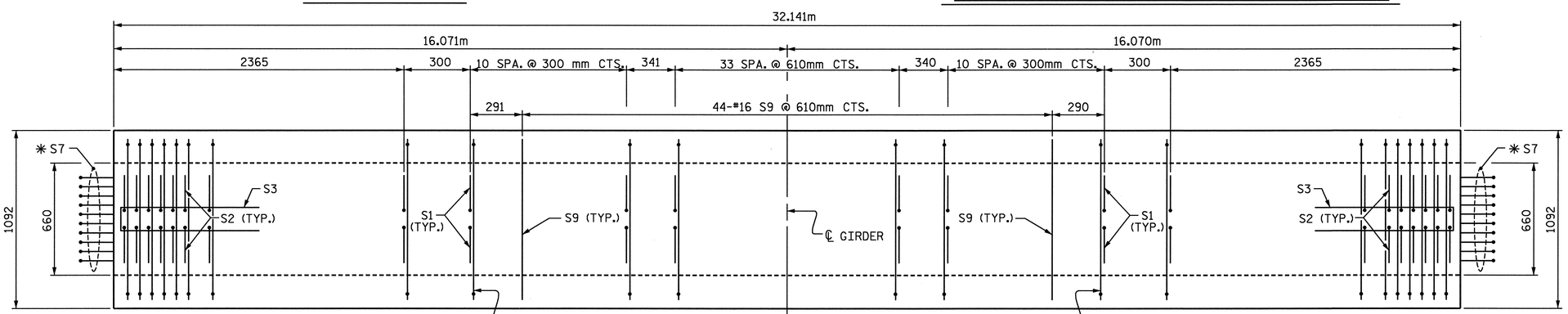

PLAN OF GIRDER

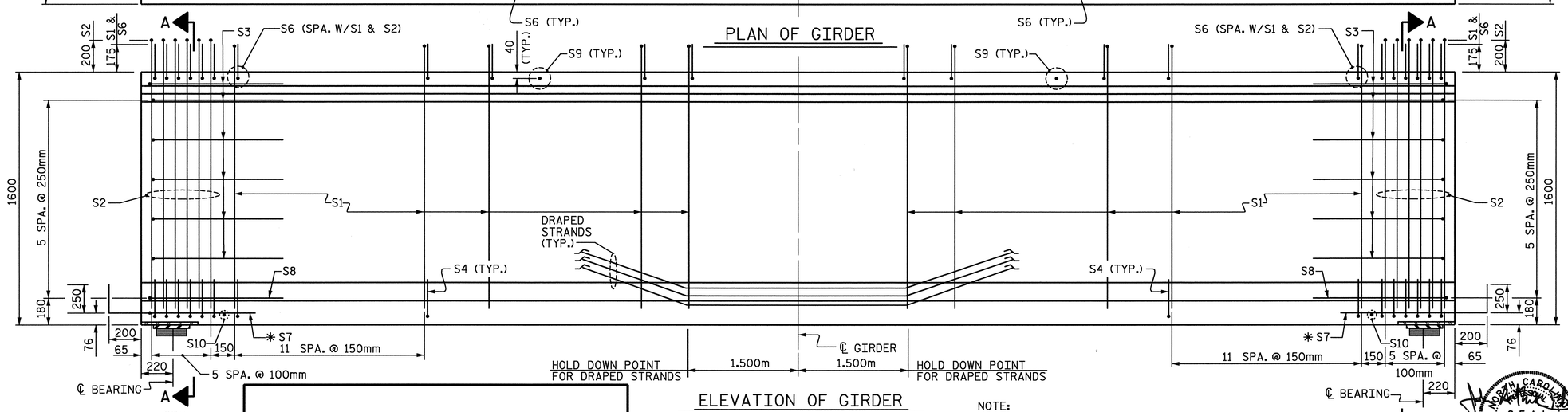

ELEVATION OF GIRDER

NOTE:

THE UPLIFT FORCE DUE TO DRAPED STRANDS IS 70 kN.

FOR LOCATION OF 76mm Ø CORED OR FORMED HOLE SEE SHEET 18 OF 18.

DWG. 10 OF 48

15.24mm Ø L. R. GRADE 270 STRANDS

AREA (mm²)	ULTIMATE STRENGTH (kN PER STRAND)	APPLIED PRESTRESS (kN PER STRAND)
140.00	260.4	195.3

REINFORCING STEEL FOR ONE GIRDER

BAR	NUMBER	SIZE	TYPE	LENGTH	WEIGHT
S1	160	#13	1	1900	302
S2	24	#16	1	1920	72
S3	12	#13	2	2560	31
S4	72	#13	3	920	66
S6	184	#16	1	1160	331
✱S7	20	#16	STR	1120	35
S8	2	#16	2	2740	9
S9	44	#16	STR	980	67
S10	2	#10	STR	560	1

✱NOTE: S7 BARS SHALL BE BENT BEFORE SHIPMENT. HEAT BENDING SHALL NOT BE ALLOWED.

BAR TYPES

ALL BAR DIMENSIONS ARE OUT-TO-OUT

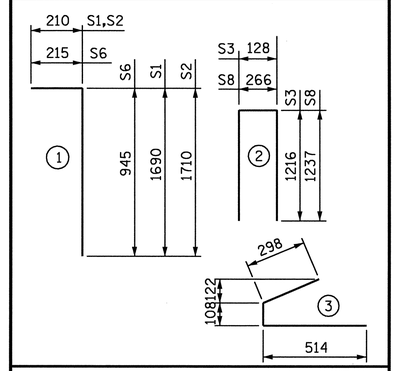

QUANTITIES FOR ONE GIRDER

	REINFORCING STEEL (kg)	55.2 MPa CONCRETE (m³)	15.24mm Ø L.R. STRANDS (No.)
INTERIOR GIRDER			
EXTERIOR GIRDER	914	16.0	34

GIRDERS REQUIRED

NUMBER	LENGTH	TOTAL LENGTH
1	32.141m	32.141m

PROJECT NO. R-0609IB

GUILFORD-RANDOLPH COUNTY

STATION: 83+34.392 -L-

SHEET 1 OF 18

STATE OF NORTH CAROLINA
DEPARTMENT OF TRANSPORTATION
RALEIGH

STANDARD
1600mm PRESTRESSED CONCRETE
MODIFIED BULB TEE
CONTINUOUS FOR LIVE LOAD
SPAN A GIRDER I

NORTH CAROLINA PROFESSIONAL SEAL 22072 ENGINEER JOHN ARTHUR DILLWORTH
7-21-05

REVISIONS							SHEET NO.
NO.	BY:	DATE:	NO.	BY:	DATE:		S-38
1			3				TOTAL SHEETS
2			4				199

ASSEMBLED BY : J. C. PENDERGRAFT DATE : 6/05
CHECKED BY : J. T. DIFFEE DATE : 6/05

DRAWN BY : EEM 2/6/97 REV. 7/17/98 RWW/LES
CHECKED BY : VAP 2/6/97 REV. 8/16/99 RWW/LES
REV. 10/17/00 RWW/LES

WETHERILL ENGINEERING
559 Jones Franklin Rd. Suite 164
Raleigh, N.C. 27606
Bus: 919 851 8077
Fax: 919 851 8107

TRANSPORTATION PLANNING/DESIGN - BRIDGE/STRUCTURE DESIGN
CIVIL/SITE DESIGN - GIS/GPS - CONSTRUCTION OBSERVATION

P:\R-0609IB\R0609IB_STTE2\Structures\DWG\BULBTEE\Dwg 10-18_pcg9sm-draped.dgn
7/21/2005 9:24:52 AM

STD. NO. PCG9SM

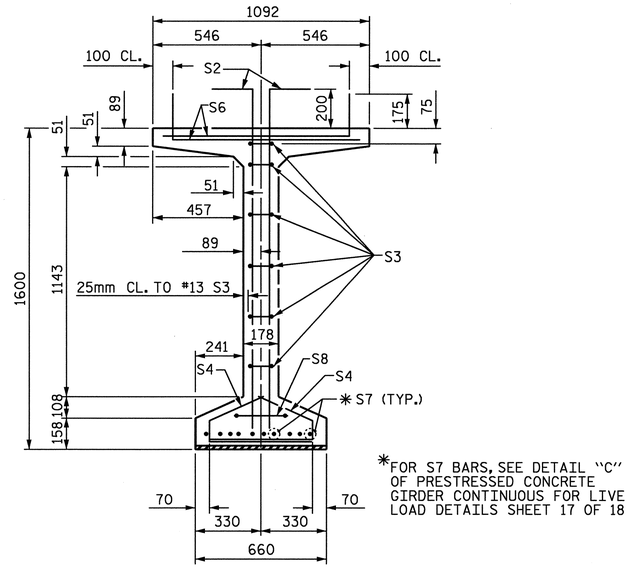

✱FOR S7 BARS, SEE DETAIL "C" OF PRESTRESSED CONCRETE GIRDER CONTINUOUS FOR LIVE LOAD DETAILS SHEET 17 OF 18

SECTION A-A

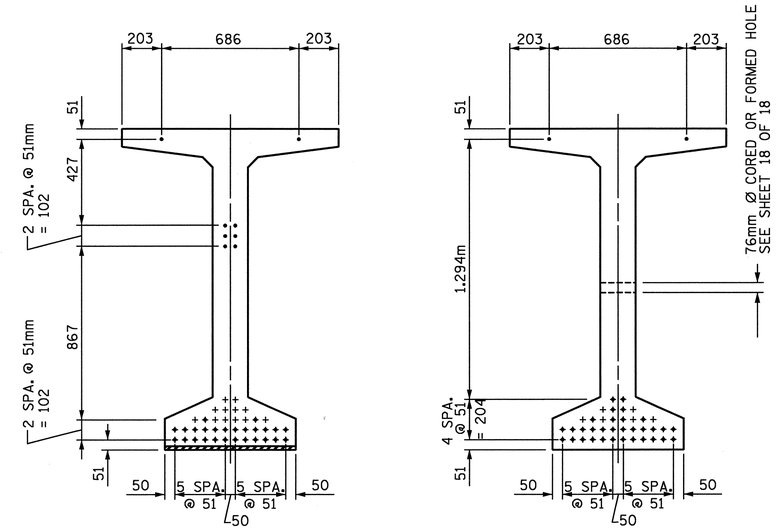

AT END OF GIRDER

AT ℄ OF GIRDER

15.24mm Ø LOW RELAXATION STRAND LAYOUT

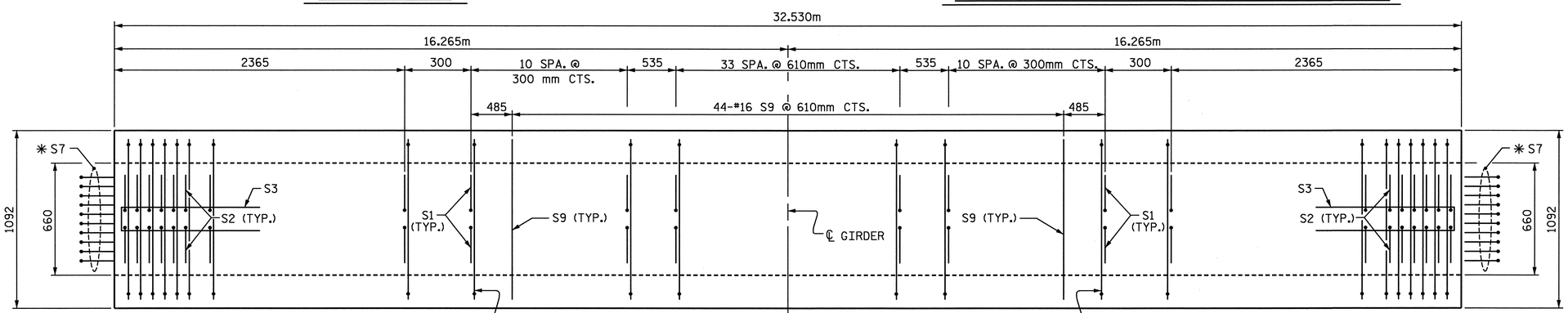

PLAN OF GIRDER

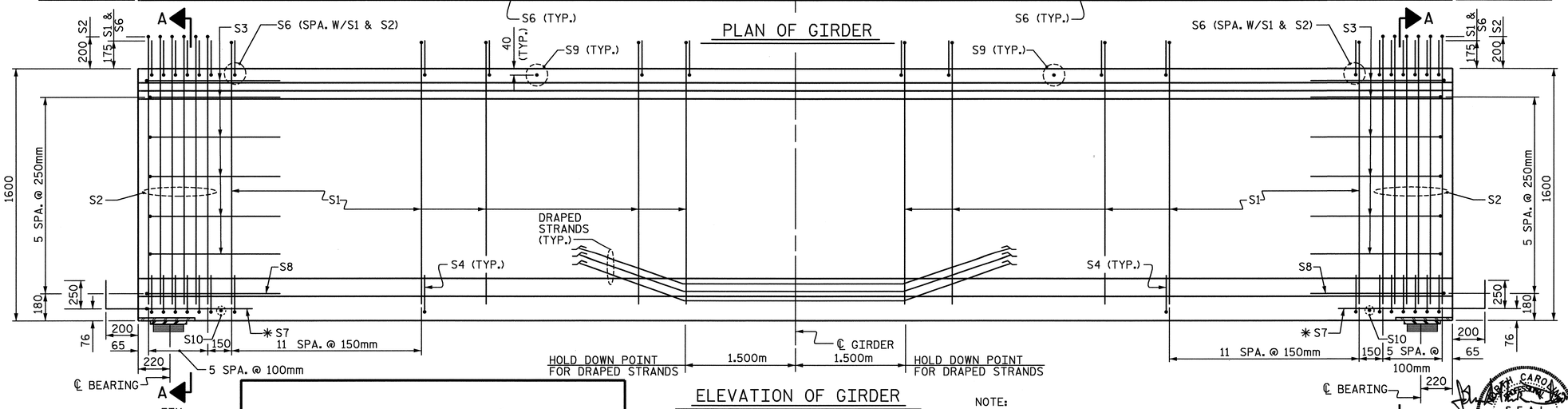

ELEVATION OF GIRDER

NOTE:
THE UPLIFT FORCE DUE TO DRAPED STRANDS IS 69 kN.

FOR LOCATION OF 76mm Ø CORED OR FORMED HOLE SEE SHEET 18 OF 18.

15.24mm Ø L. R. GRADE 270 STRANDS		
AREA (mm²)	ULTIMATE STRENGTH (kN PER STRAND)	APPLIED PRESTRESS (kN PER STRAND)
140.00	260.4	195.3

REINFORCING STEEL FOR ONE GIRDER

BAR	NUMBER	SIZE	TYPE	LENGTH	WEIGHT
S1	160	#13	1	1900	302
S2	24	#16	1	1920	72
S3	12	#13	2	2560	31
S4	72	#13	3	920	66
S6	184	#16	1	1160	331
✱S7	20	#16	STR	1120	35
S8	2	#16	2	2740	9
S9	44	#16	STR	980	67
S10	2	#10	STR	560	1

✱NOTE: S7 BARS SHALL BE BENT BEFORE SHIPMENT. HEAT BENDING SHALL NOT BE ALLOWED.

BAR TYPES

ALL BAR DIMENSIONS ARE OUT-TO-OUT

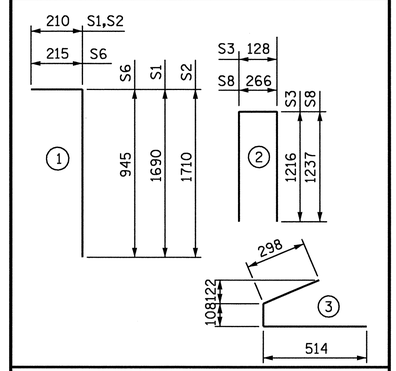

QUANTITIES FOR ONE GIRDER

	REINFORCING STEEL	55.2 MPa CONCRETE	15.24mm Ø L.R. STRANDS
	kg	m³	No.
INTERIOR GIRDER	914	16.2	34
EXTERIOR GIRDER			

GIRDERS REQUIRED

NUMBER	LENGTH	TOTAL LENGTH
1	32.530m	32.530m

PROJECT NO. R-0609IB

GUILFORD-RANDOLPH COUNTY

STATION: 83+34.392 -L-

SHEET 2 OF 18

STATE OF NORTH CAROLINA
DEPARTMENT OF TRANSPORTATION
RALEIGH

STANDARD
1600mm PRESTRESSED CONCRETE
MODIFIED BULB TEE
CONTINUOUS FOR LIVE LOAD
SPAN A GIRDER 2

REVISIONS								SHEET NO.
NO.	BY:	DATE:	NO.	BY:	DATE:			S-39
1			3					TOTAL SHEETS
2			4					199

ASSEMBLED BY : J.C. PENDERGRAFT DATE : 6/05
CHECKED BY : J. T. DIFFEE DATE : 6/05

DRAWN BY : EEM 2/6/97	REV. 7/17/98	RWW/LES
CHECKED BY : VAP 2/6/97	REV. 8/16/99	RWW/LES
	REV. 10/17/00	RWW/LES

WETHERILL ENGINEERING
559 Jones Franklin Rd. Suite 164
Raleigh, N.C. 27606
Bus: 919 851 8077
Fax: 919 851 8107
TRANSPORTATION PLANNING/DESIGN - BRIDGE/STRUCTURE DESIGN
CIVIL/SITE DESIGN - GIS/GPS - CONSTRUCTION OBSERVATION

NORTH CAROLINA PROFESSIONAL SEAL 22072 ENGINEER JOHN ARTHUR DILWORTH
7-21-05

DWG. 11 OF 48

P:\R-0609IB\R0609IB_STTE2\Structures\DWG\BULBTEE\Dwg 10-18_pcg9sm-draped.dgn
7/21/2005 9:25:03 AM

STD. NO. PCG9SM

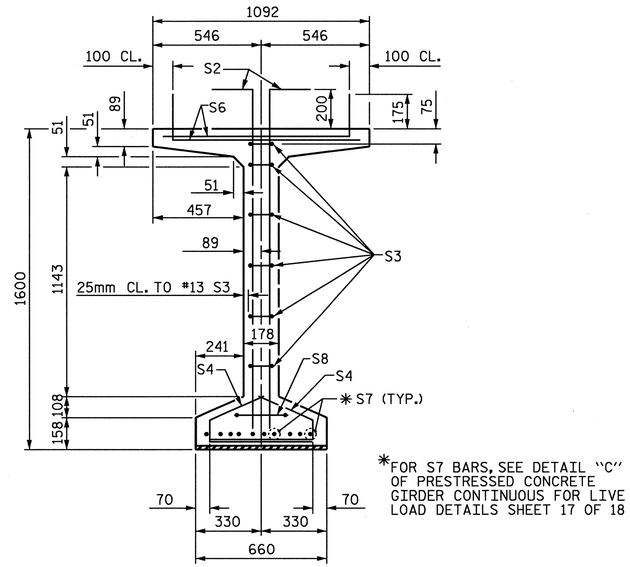

✱FOR S7 BARS, SEE DETAIL "C" OF PRESTRESSED CONCRETE GIRDER CONTINUOUS FOR LIVE LOAD DETAILS SHEET 17 OF 18

SECTION A-A

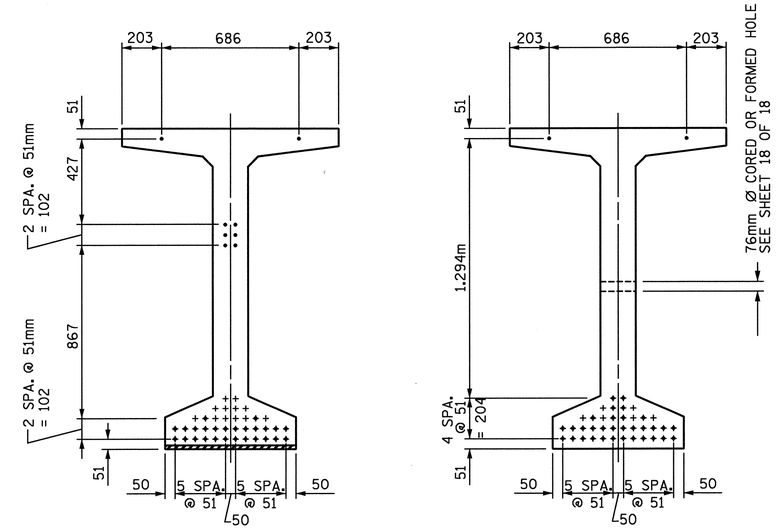

AT END OF GIRDER

AT ℄ OF GIRDER

15.24mm Ø LOW RELAXATION STRAND LAYOUT

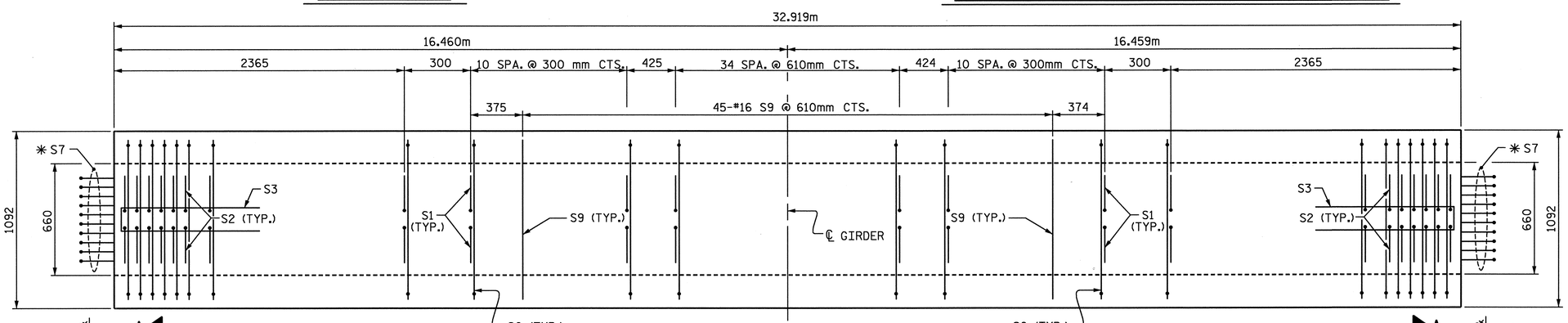

PLAN OF GIRDER

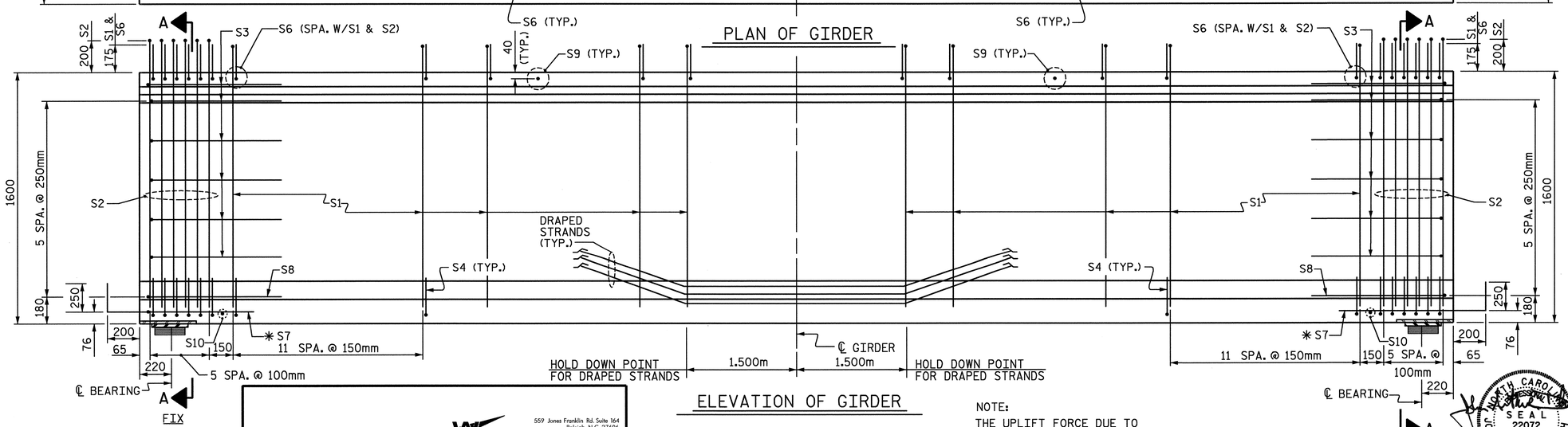

ELEVATION OF GIRDER

NOTE:

THE UPLIFT FORCE DUE TO DRAPED STRANDS IS 68 kN.

FOR LOCATION OF 76mm Ø CORED OR FORMED HOLE SEE SHEET 18 OF 18.

DWG. 12 OF 48

15.24mm Ø L. R. GRADE 270 STRANDS

AREA (mm^2)	ULTIMATE STRENGTH (kN PER STRAND)	APPLIED PRESTRESS (kN PER STRAND)
140.00	260.4	195.3

REINFORCING STEEL FOR ONE GIRDER

BAR	NUMBER	SIZE	TYPE	LENGTH	WEIGHT
S1	162	#13	1	1900	306
S2	24	#16	1	1920	72
S3	12	#13	2	2560	31
S4	72	#13	3	920	66
S6	186	#16	1	1160	335
✱S7	20	#16	STR	1120	35
S8	2	#16	2	2740	9
S9	45	#16	STR	980	68
S10	2	#10	STR	560	1

✱NOTE: S7 BARS SHALL BE BENT BEFORE SHIPMENT. HEAT BENDING SHALL NOT BE ALLOWED.

BAR TYPES

ALL BAR DIMENSIONS ARE OUT-TO-OUT

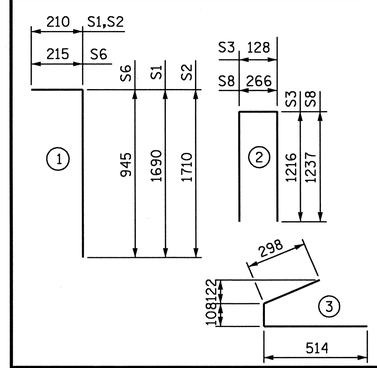

QUANTITIES FOR ONE GIRDER

	REINFORCING STEEL	55.2 MPa CONCRETE	15.24mm Ø L.R. STRANDS
	kg	m^3	No.
INTERIOR GIRDER	923	16.4	34
EXTERIOR GIRDER			

GIRDERS REQUIRED

NUMBER	LENGTH	TOTAL LENGTH
1	32.919m	32.919m

PROJECT NO. R-0609IB

GUILFORD-RANDOLPH COUNTY

STATION: 83+34.392 -L-

SHEET 3 OF 18

STATE OF NORTH CAROLINA
DEPARTMENT OF TRANSPORTATION
RALEIGH

STANDARD
1600mm PRESTRESSED CONCRETE
MODIFIED BULB TEE
CONTINUOUS FOR LIVE LOAD
SPAN A GIRDER 3

ASSEMBLED BY : J. C. PENDERGRAFT DATE : 6/05
CHECKED BY : J. T. DIFFEE DATE : 6/05

DRAWN BY : EEM 2/6/97 REV. 7/17/98 RWW/LES
CHECKED BY : VAP 2/6/97 REV. 8/16/99 RWW/LES
REV. 10/17/00 RWW/LES

WETHERILL ENGINEERING
559 Jones Franklin Rd. Suite 164
Raleigh, N.C. 27606
Bus: 919 851 8077
Fax: 919 851 8107
TRANSPORTATION PLANNING/DESIGN - BRIDGE/STRUCTURE DESIGN
CIVIL/SITE DESIGN - GIS/GPS - CONSTRUCTION OBSERVATION

NORTH CAROLINA SEAL 22072 ENGINEER JOHN ARTHUR DILWORTH
7-21-05

REVISIONS								SHEET NO.
NO.	BY:	DATE:	NO.	BY:	DATE:			S-40
1			3					TOTAL SHEETS
2			4					199

STD. NO. PCG9SM

P:\R-0609IB\R0609IB_STTE2\Structures\DWG\BULBTEE\Dwg 10-18_pcg9sm-draped.dgn
7/21/2005 9:25:14 AM

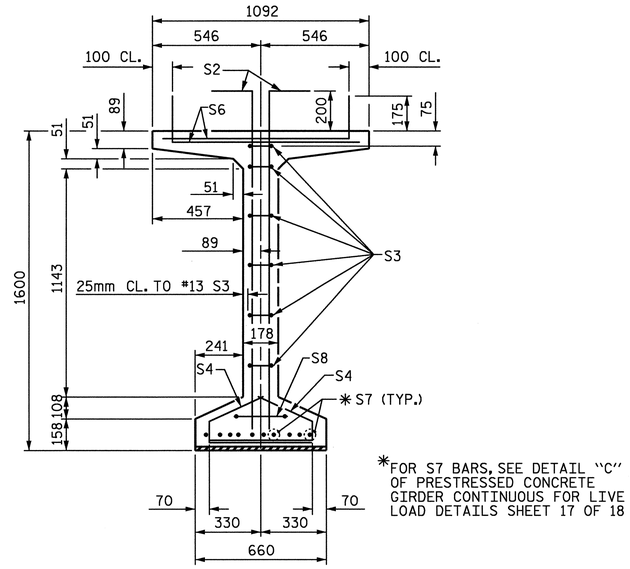

✱FOR S7 BARS, SEE DETAIL "C" OF PRESTRESSED CONCRETE GIRDER CONTINUOUS FOR LIVE LOAD DETAILS SHEET 17 OF 18

SECTION A-A

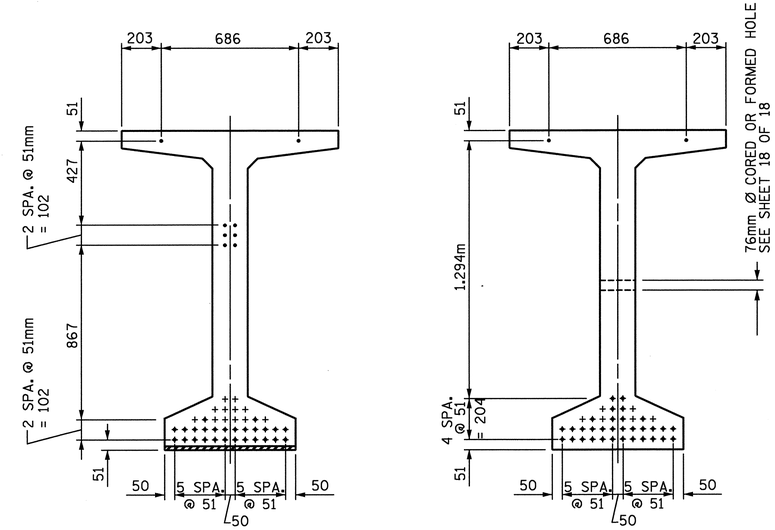

AT END OF GIRDER

AT ℄ OF GIRDER

15.24mm Ø LOW RELAXATION STRAND LAYOUT

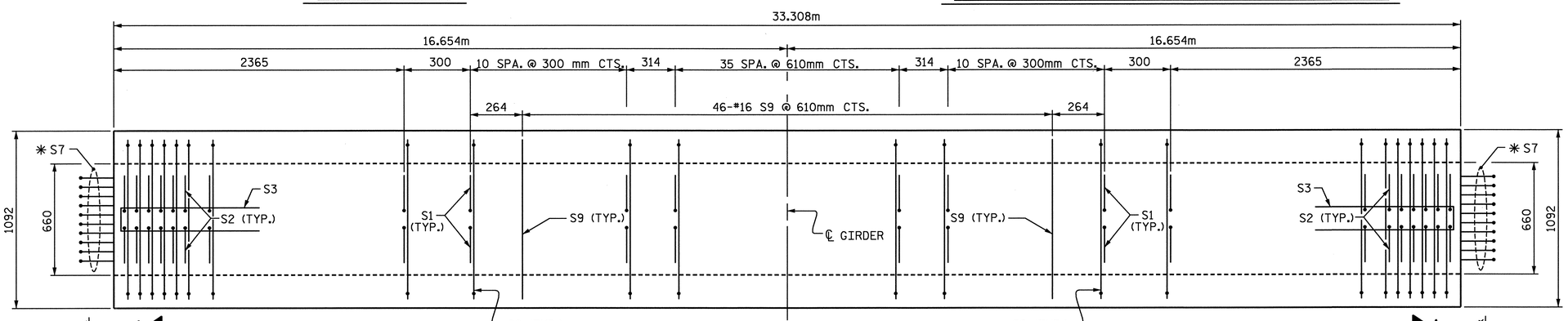

PLAN OF GIRDER

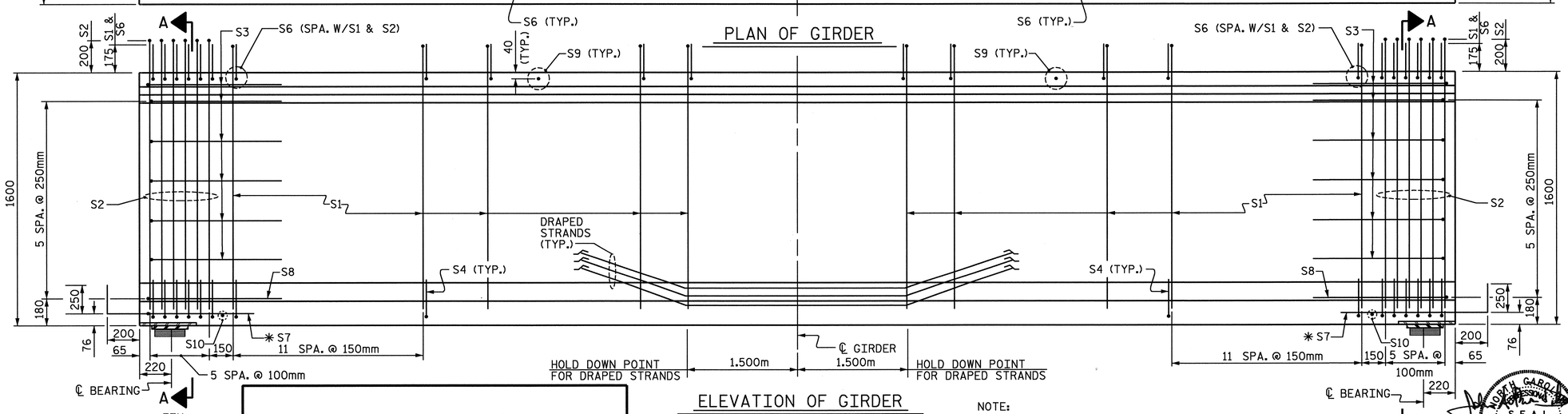

ELEVATION OF GIRDER

NOTE:

THE UPLIFT FORCE DUE TO DRAPED STRANDS IS 67 kN.

FOR LOCATION OF 76mm Ø CORED OR FORMED HOLE SEE SHEET 18 OF 18.

DWG. 13 OF 48

15.24mm Ø L. R. GRADE 270 STRANDS		
AREA (mm²)	ULTIMATE STRENGTH (kN PER STRAND)	APPLIED PRESTRESS (kN PER STRAND)
140.00	260.4	195.3

REINFORCING STEEL FOR ONE GIRDER

BAR	NUMBER	SIZE	TYPE	LENGTH	WEIGHT
S1	164	#13	1	1900	310
S2	24	#16	1	1920	72
S3	12	#13	2	2560	31
S4	72	#13	3	920	66
S6	188	#16	1	1160	338
✱S7	20	#16	STR	1120	35
S8	2	#16	2	2740	9
S9	46	#16	STR	980	70
S10	2	#10	STR	560	1

✱NOTE: S7 BARS SHALL BE BENT BEFORE SHIPMENT. HEAT BENDING SHALL NOT BE ALLOWED.

BAR TYPES

ALL BAR DIMENSIONS ARE OUT-TO-OUT

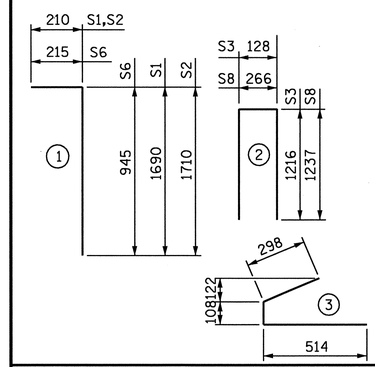

QUANTITIES FOR ONE GIRDER

	REINFORCING STEEL	55.2 MPa CONCRETE	15.24mm Ø L.R. STRANDS
	kg	m³	No.
INTERIOR GIRDER			
EXTERIOR GIRDER	932	16.5	34

GIRDERS REQUIRED

NUMBER	LENGTH	TOTAL LENGTH
1	33.308m	33.308m

PROJECT NO. R-0609IB

GUILFORD-RANDOLPH COUNTY

STATION: 83+34.392 -L-

SHEET 4 OF 18

STATE OF NORTH CAROLINA
DEPARTMENT OF TRANSPORTATION
RALEIGH

STANDARD
1600mm PRESTRESSED CONCRETE
MODIFIED BULB TEE
CONTINUOUS FOR LIVE LOAD
SPAN A GIRDER 4

NORTH CAROLINA PROFESSIONAL SEAL 22072 ENGINEER JOHN ARTHUR DILWORTH

7-21-05

REVISIONS							SHEET NO.
NO.	BY:	DATE:	NO.	BY:	DATE:		S-41
1			3				TOTAL SHEETS
2			4				199

STD. NO. PCG9SM

ASSEMBLED BY : J. C. PENDERGRAFT DATE : 6/05
CHECKED BY : J. T. DIFFEE DATE : 6/05

DRAWN BY : EEM 2/6/97 REV. 7/17/98 RWW/LES
CHECKED BY : VAP 2/6/97 REV. 8/16/99 RWW/LES
REV. 10/17/00 RWW/LES

WETHERILL ENGINEERING
559 Jones Franklin Rd. Suite 164
Raleigh, N.C. 27606
Bus: 919 851 8077
Fax: 919 851 8107
TRANSPORTATION PLANNING/DESIGN - BRIDGE/STRUCTURE DESIGN
CIVIL/SITE DESIGN - GIS/GPS - CONSTRUCTION OBSERVATION

P:\R-0609IB\R0609IB_STTE\Structures\DWG\BULBTEE\Dwg 10-18_pcg9sm-draped.dgn
7/21/2005 9:25:26 AM

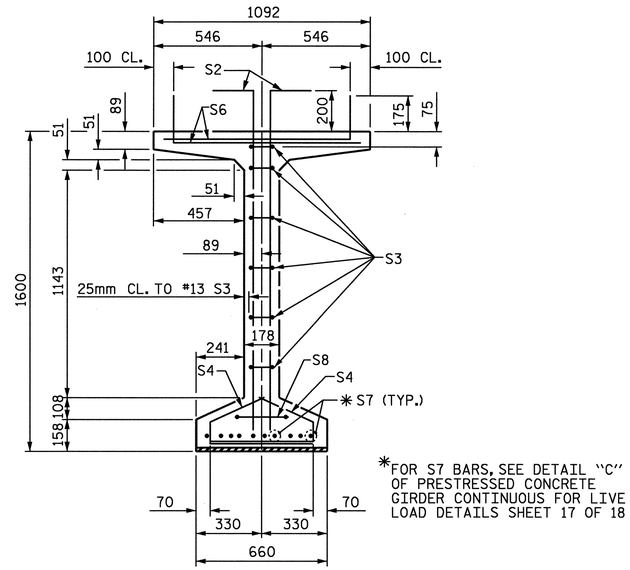

✱FOR S7 BARS, SEE DETAIL "C" OF PRESTRESSED CONCRETE GIRDER CONTINUOUS FOR LIVE LOAD DETAILS SHEET 17 OF 18

SECTION A-A

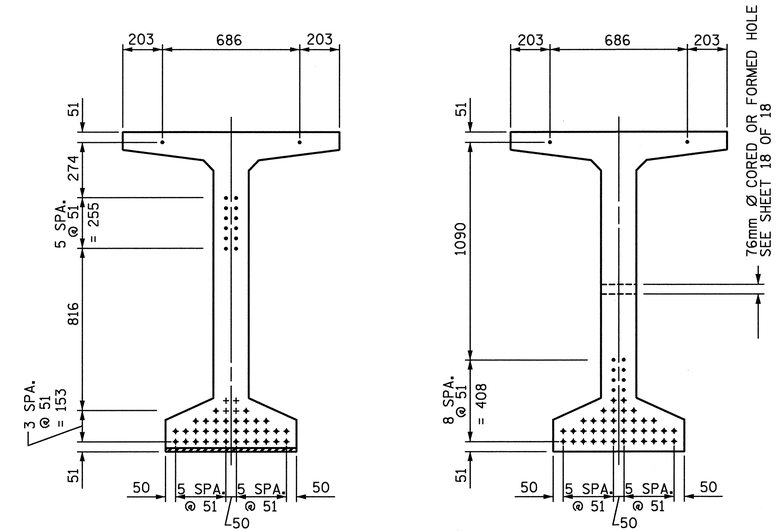

AT END OF GIRDER

AT ℄ OF GIRDER

15.24mm Ø LOW RELAXATION STRAND LAYOUT

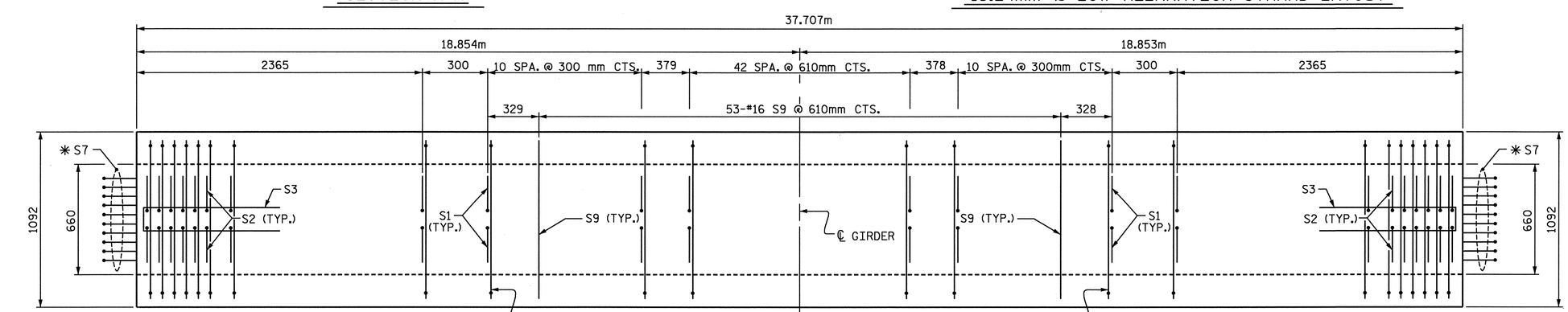

PLAN OF GIRDER

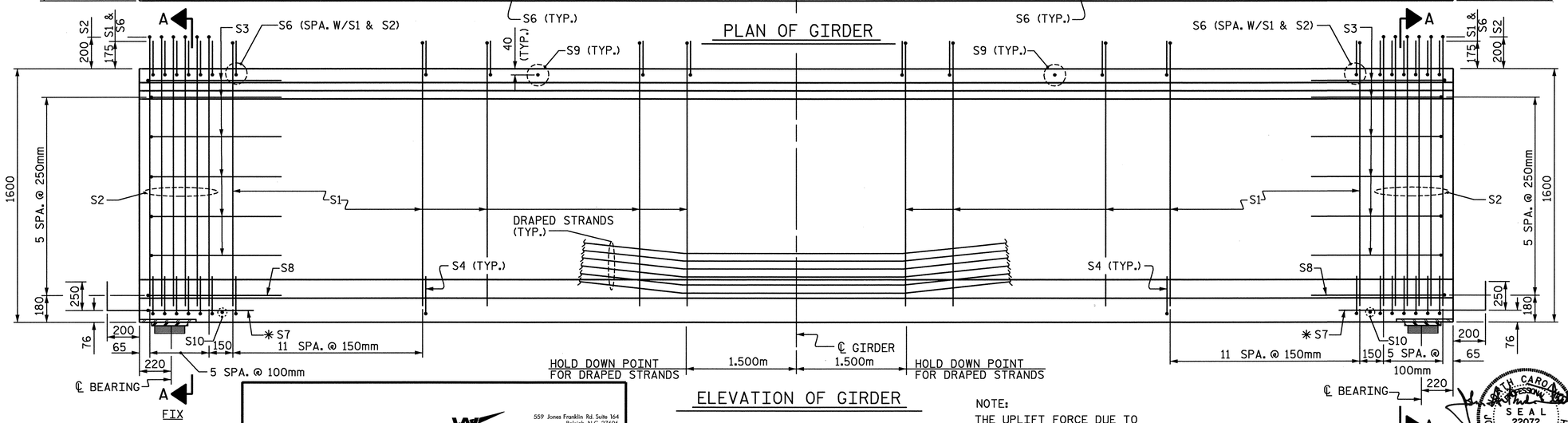

ELEVATION OF GIRDER

NOTE:

THE UPLIFT FORCE DUE TO DRAPED STRANDS IS 110 kN.

FOR LOCATION OF 76mm Ø CORED OR FORMED HOLE SEE SHEET 18 OF 18.

15.24mm Ø L. R. GRADE 270 STRANDS

AREA (mm²)	ULTIMATE STRENGTH (kN PER STRAND)	APPLIED PRESTRESS (kN PER STRAND)
140.00	260.4	195.3

REINFORCING STEEL FOR ONE GIRDER

BAR	NUMBER	SIZE	TYPE	LENGTH	WEIGHT
S1	178	#13	1	1900	336
S2	24	#16	1	1920	72
S3	12	#13	2	2560	31
S4	72	#13	3	920	66
S6	202	#16	1	1160	364
✱S7	20	#16	STR	1120	35
S8	2	#16	2	2740	9
S9	53	#16	STR	980	81
S10	2	#10	STR	560	1

✱NOTE: S7 BARS SHALL BE BENT BEFORE SHIPMENT. HEAT BENDING SHALL NOT BE ALLOWED.

BAR TYPES

ALL BAR DIMENSIONS ARE OUT-TO-OUT

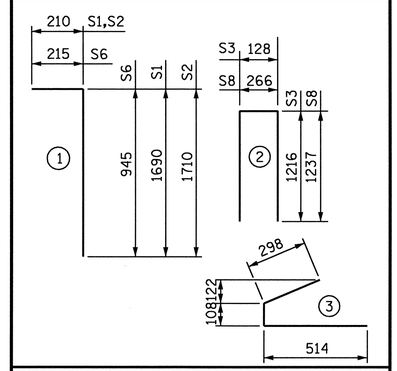

QUANTITIES FOR ONE GIRDER

	REINFORCING STEEL	68.9 MPa CONCRETE	15.24mm Ø L.R. STRANDS
	kg	m³	No.
INTERIOR GIRDER			
EXTERIOR GIRDER	995	18.7	48

GIRDERS REQUIRED

NUMBER	LENGTH	TOTAL LENGTH
1	37.707m	37.707m

PROJECT NO. R-0609IB

GUILFORD-RANDOLPH COUNTY

STATION: 83+34.392 -L-

SHEET 5 OF 18

STATE OF NORTH CAROLINA
DEPARTMENT OF TRANSPORTATION
RALEIGH

STANDARD
1600mm PRESTRESSED CONCRETE
MODIFIED BULB TEE
CONTINUOUS FOR LIVE LOAD
SPAN B GIRDER I

REVISIONS								SHEET NO.
NO.	BY:	DATE:	NO.	BY:	DATE:			S-42
1			3					TOTAL SHEETS
2			4					199

STD. NO. PCG9SM

ASSEMBLED BY : J. C. PENDERGRAFT DATE : 6/05
CHECKED BY : J. T. DIFFEE DATE : 6/05

DRAWN BY : EEM 2/6/97	REV. 7/17/98	RWW/LES
CHECKED BY : VAP 2/6/97	REV. 8/16/99	RWW/LES
	REV. 10/17/00	RWW/LES

WETHERILL ENGINEERING
559 Jones Franklin Rd. Suite 164
Raleigh, N.C. 27606
Bus: 919 851 8077
Fax: 919 851 8107
TRANSPORTATION PLANNING/DESIGN - BRIDGE/STRUCTURE DESIGN
CIVIL/SITE DESIGN - GIS/GPS - CONSTRUCTION OBSERVATION

NORTH CAROLINA PROFESSIONAL SEAL 22072 ENGINEER JOHN ARTHUR DILWORTH

7-21-05

DWG. 14 OF 48

P:\R-0609IB\R0609IB_STIEA\Structures\DWG\BULBTEE\Dwg 10-18_pcg9sm-draped.dgn
7/21/2005 9:27:24 AM

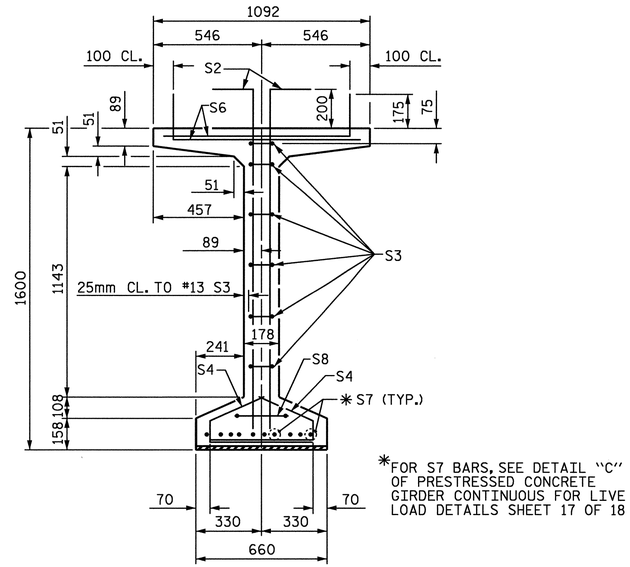

✱FOR S7 BARS, SEE DETAIL "C" OF PRESTRESSED CONCRETE GIRDER CONTINUOUS FOR LIVE LOAD DETAILS SHEET 17 OF 18

SECTION A-A

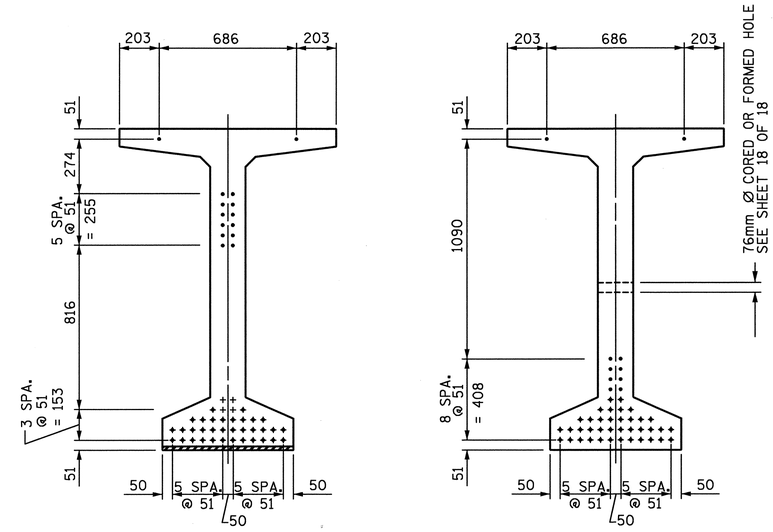

AT END OF GIRDER

AT ℄ OF GIRDER

15.24mm Ø LOW RELAXATION STRAND LAYOUT

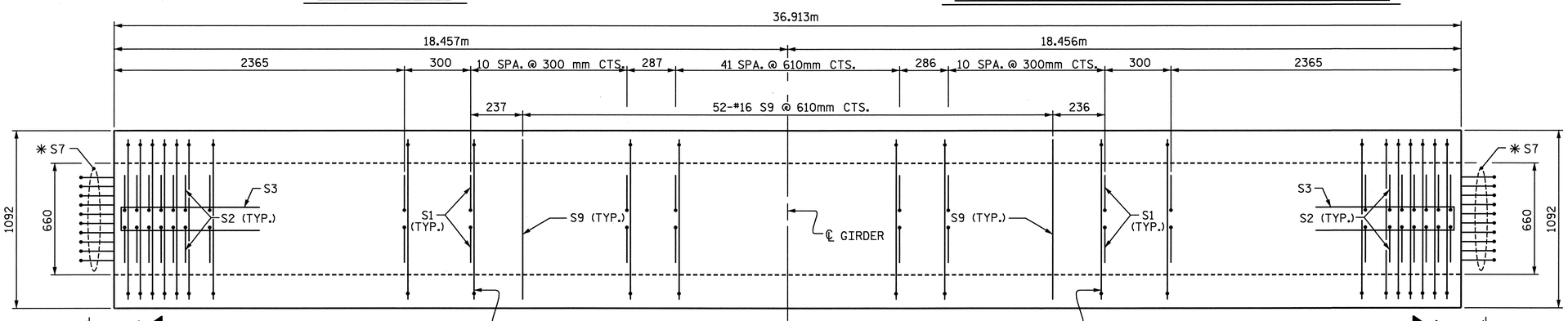

PLAN OF GIRDER

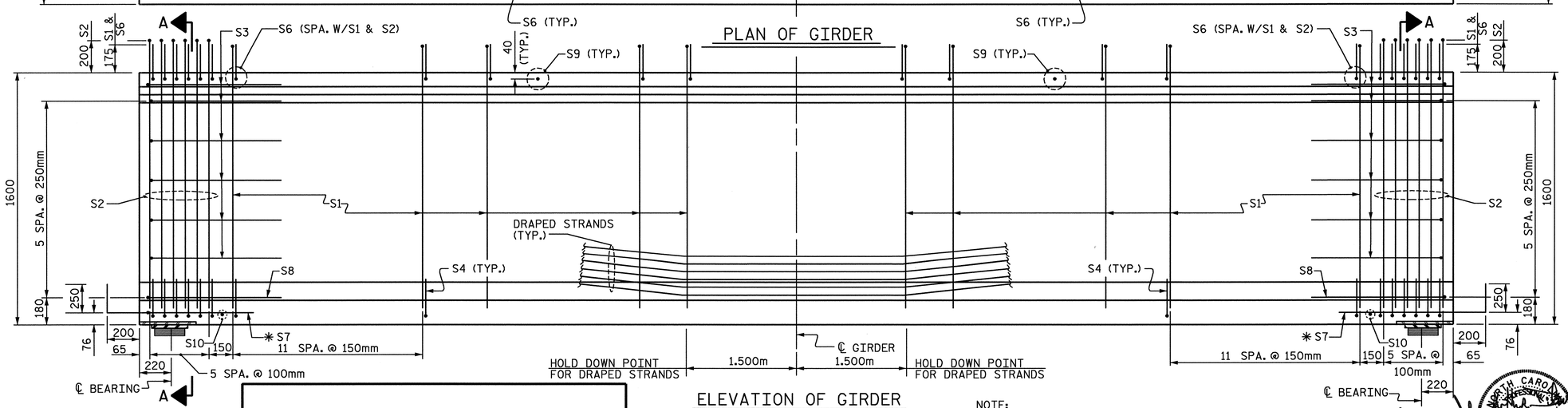

ELEVATION OF GIRDER

NOTE:

THE UPLIFT FORCE DUE TO DRAPED STRANDS IS 113 kN.

FOR LOCATION OF 76mm Ø CORED OR FORMED HOLE SEE SHEET 18 OF 18.

DWG. 15 OF 48

15.24mm Ø L. R. GRADE 270 STRANDS		
AREA (mm²)	ULTIMATE STRENGTH (kN PER STRAND)	APPLIED PRESTRESS (kN PER STRAND)
140.00	260.4	195.3

REINFORCING STEEL FOR ONE GIRDER

BAR	NUMBER	SIZE	TYPE	LENGTH	WEIGHT
S1	176	#13	1	1900	332
S2	24	#16	1	1920	72
S3	12	#13	2	2560	31
S4	72	#13	3	920	66
S6	200	#16	1	1160	360
✱S7	20	#16	STR	1120	35
S8	2	#16	2	2740	9
S9	52	#16	STR	980	79
S10	2	#10	STR	560	1

✱NOTE: S7 BARS SHALL BE BENT BEFORE SHIPMENT. HEAT BENDING SHALL NOT BE ALLOWED.

BAR TYPES

ALL BAR DIMENSIONS ARE OUT-TO-OUT

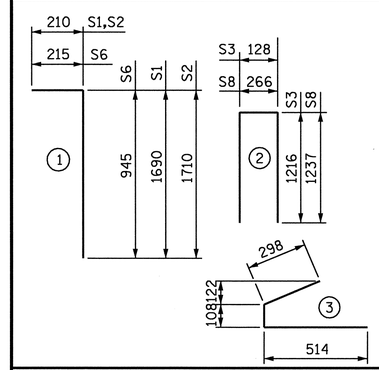

QUANTITIES FOR ONE GIRDER

	REINFORCING STEEL	68.9 MPa CONCRETE	15.24mm Ø L.R. STRANDS
	kg	m³	No.
INTERIOR GIRDER	985	18.3	48
EXTERIOR GIRDER			

GIRDERS REQUIRED

NUMBER	LENGTH	TOTAL LENGTH
1	36.913m	36.913m

PROJECT NO. R-0609IB

GUILFORD-RANDOLPH COUNTY

STATION: 83+34.392 -L-

SHEET 6 OF 18

STATE OF NORTH CAROLINA
DEPARTMENT OF TRANSPORTATION
RALEIGH

STANDARD
1600mm PRESTRESSED CONCRETE
MODIFIED BULB TEE
CONTINUOUS FOR LIVE LOAD
SPAN B GIRDER 2

NORTH CAROLINA PROFESSIONAL SEAL 22072 ENGINEER JOHN ARTHUR DILWORTH

7-21-05

REVISIONS							SHEET NO.
NO.	BY:	DATE:	NO.	BY:	DATE:		S-43
1			3				TOTAL SHEETS
2			4				199

STD. NO. PCG9SM

ASSEMBLED BY : J. C. PENDERGRAFT DATE : 6/05
CHECKED BY : J. T. DIFFEE DATE : 6/05

DRAWN BY : EEM 2/6/97	REV. 7/17/98	RWW/LES
CHECKED BY : VAP 2/6/97	REV. 8/16/99	RWW/LES
	REV. 10/17/00	RWW/LES

WETHERILL ENGINEERING
559 Jones Franklin Rd. Suite 164
Raleigh, N.C. 27606
Bus: 919 851 8077
Fax: 919 851 8107
TRANSPORTATION PLANNING/DESIGN - BRIDGE/STRUCTURE DESIGN
CIVIL/SITE DESIGN - GIS/GPS - CONSTRUCTION OBSERVATION

P:\R-0609IB\R0609IB_STTE2\Structures\DWG\BULBTEE\Dwg 10-18_pcg9sm-draped.dgn
7/21/2005 9:27:35 AM

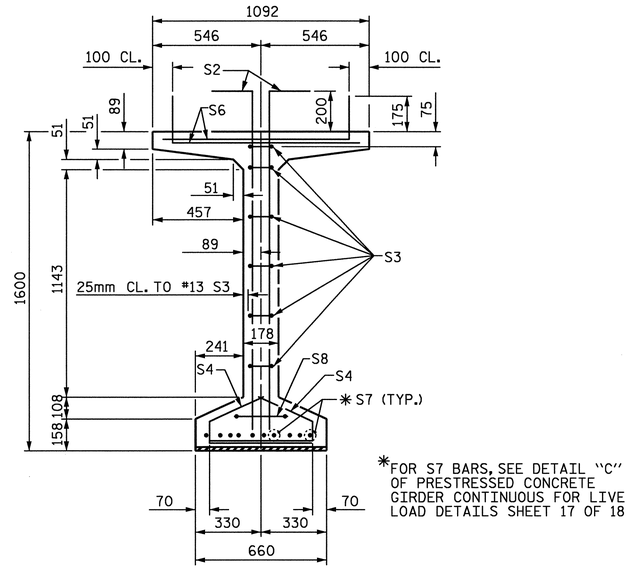

✱FOR S7 BARS, SEE DETAIL "C" OF PRESTRESSED CONCRETE GIRDER CONTINUOUS FOR LIVE LOAD DETAILS SHEET 17 OF 18

SECTION A-A

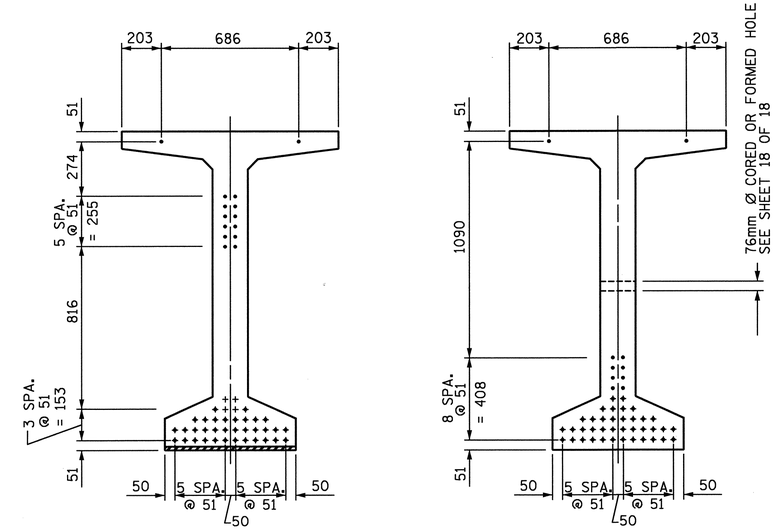

AT END OF GIRDER

AT ℄ OF GIRDER

15.24mm Ø LOW RELAXATION STRAND LAYOUT

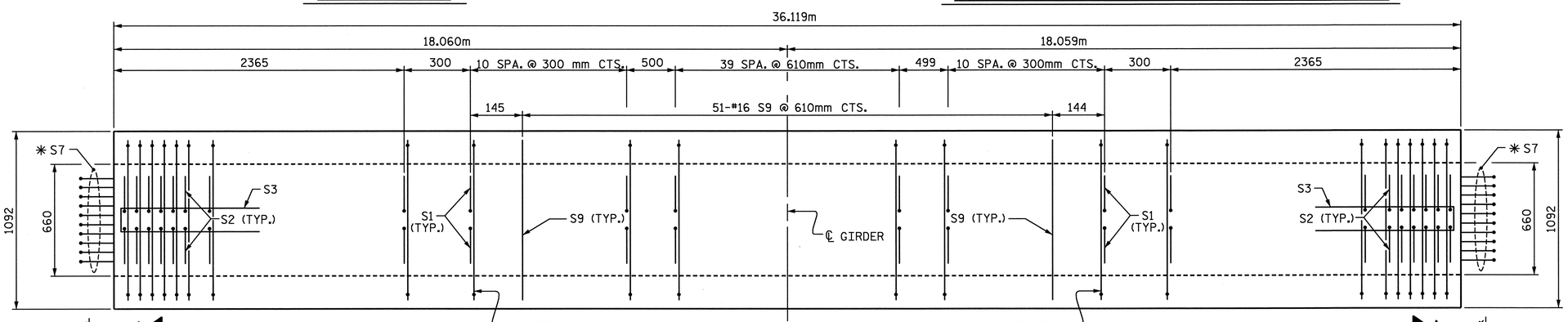

PLAN OF GIRDER

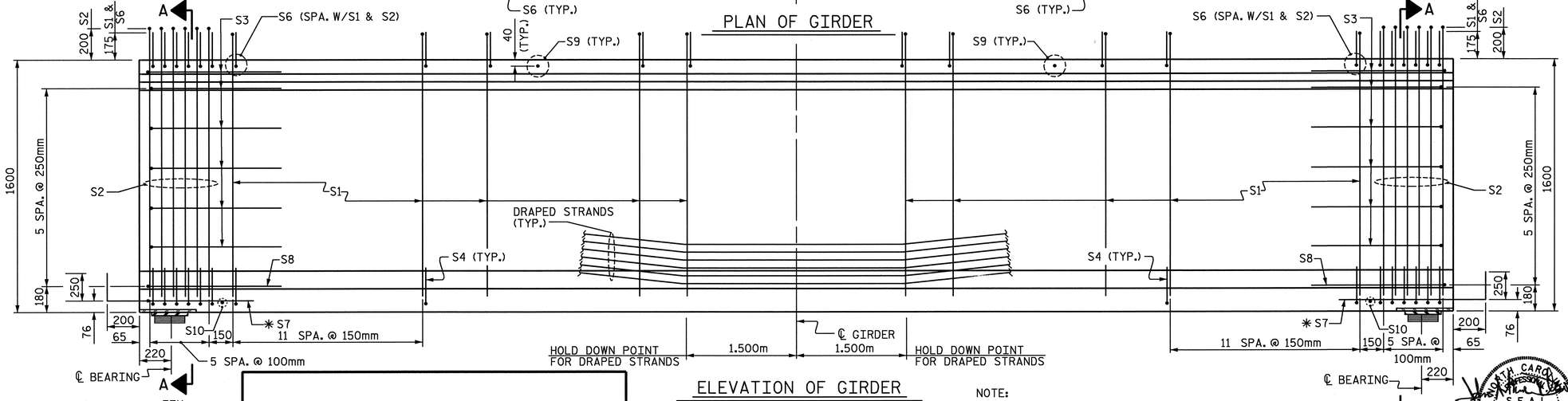

ELEVATION OF GIRDER

NOTE:

THE UPLIFT FORCE DUE TO DRAPED STRANDS IS 115 kN.

FOR LOCATION OF 76mm Ø CORED OR FORMED HOLE SEE SHEET 18 OF 18.

DWG. 16 OF 48

15.24mm Ø L. R. GRADE 270 STRANDS

AREA (mm²)	ULTIMATE STRENGTH (kN PER STRAND)	APPLIED PRESTRESS (kN PER STRAND)
140.00	260.4	195.3

REINFORCING STEEL FOR ONE GIRDER

BAR	NUMBER	SIZE	TYPE	LENGTH	WEIGHT
S1	172	#13	1	1900	325
S2	24	#16	1	1920	72
S3	12	#13	2	2560	31
S4	72	#13	3	920	66
S6	196	#16	1	1160	353
✱S7	20	#16	STR	1120	35
S8	2	#16	2	2740	9
S9	51	#16	STR	980	78
S10	2	#10	STR	560	1

✱NOTE: S7 BARS SHALL BE BENT BEFORE SHIPMENT. HEAT BENDING SHALL NOT BE ALLOWED.

BAR TYPES

ALL BAR DIMENSIONS ARE OUT-TO-OUT

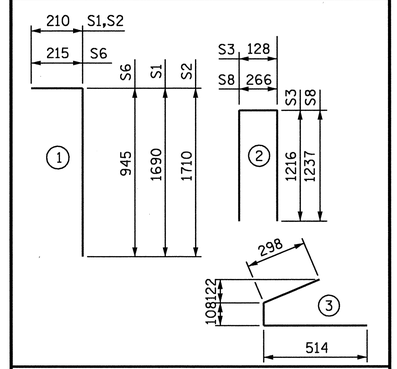

QUANTITIES FOR ONE GIRDER

	REINFORCING STEEL	68.9 MPa CONCRETE	15.24mm Ø L.R. STRANDS
	kg	m³	No.
INTERIOR GIRDER	970	17.9	48
EXTERIOR GIRDER			

GIRDERS REQUIRED

NUMBER	LENGTH	TOTAL LENGTH
1	36.119m	36.119m

PROJECT NO. R-0609IB

GUILFORD-RANDOLPH COUNTY

STATION: 83+34.392 -L-

SHEET 7 OF 18

STATE OF NORTH CAROLINA
DEPARTMENT OF TRANSPORTATION
RALEIGH

STANDARD
1600mm PRESTRESSED CONCRETE
MODIFIED BULB TEE
CONTINUOUS FOR LIVE LOAD
SPAN B GIRDER 3

NORTH CAROLINA PROFESSIONAL SEAL 22072 ENGINEER JOHN ARTHUR DILWORTH

7-21-05

REVISIONS							SHEET NO.
NO.	BY:	DATE:	NO.	BY:	DATE:		S-44
1			3				TOTAL SHEETS
2			4				199

STD. NO. PCG9SM

ASSEMBLED BY : J. C. PENDERGRAFT DATE : 6/05
CHECKED BY : J. T. DIFFEE DATE : 6/05

DRAWN BY : EEM 2/6/97 REV. 7/17/98 RWW/LES
CHECKED BY : VAP 2/6/97 REV. 8/16/99 RWW/LES
REV. 10/17/00 RWW/LES

WETHERILL ENGINEERING
559 Jones Franklin Rd. Suite 164
Raleigh, N.C. 27606
Bus: 919 851 8077
Fax: 919 851 8107

TRANSPORTATION PLANNING/DESIGN - BRIDGE/STRUCTURE DESIGN
CIVIL/SITE DESIGN - GIS/GPS - CONSTRUCTION OBSERVATION

P:\R-0609IB\R0609IB_STTE2\Structures\DWG\BULBTEE\Dwg 10-18_pcg9sm-draped.dgn
7/21/2005 9:27:48 AM

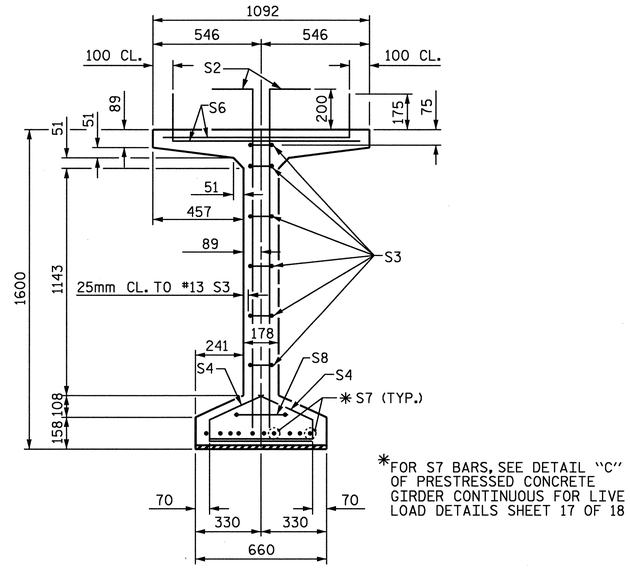

✱FOR S7 BARS, SEE DETAIL "C" OF PRESTRESSED CONCRETE GIRDER CONTINUOUS FOR LIVE LOAD DETAILS SHEET 17 OF 18

SECTION A-A

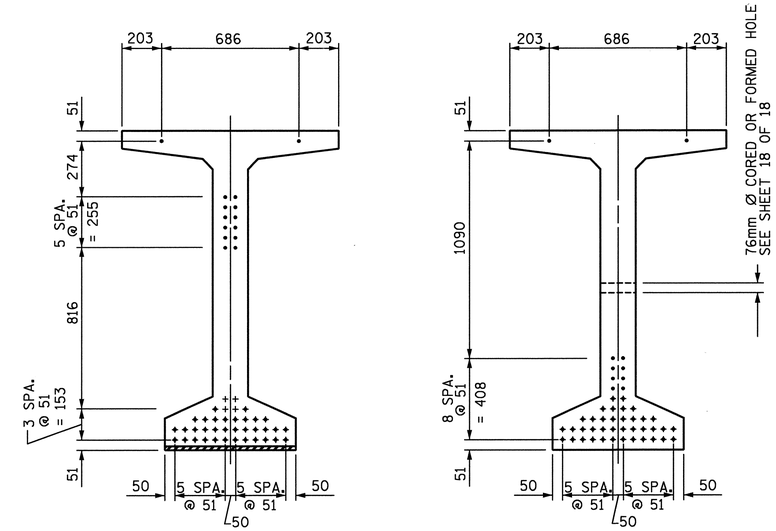

AT END OF GIRDER

AT ℄ OF GIRDER

15.24mm Ø LOW RELAXATION STRAND LAYOUT

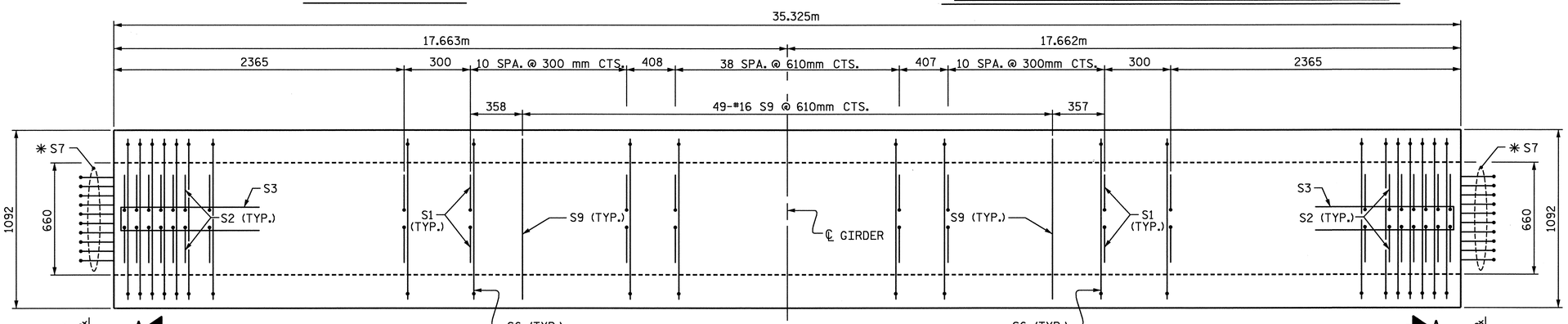

PLAN OF GIRDER

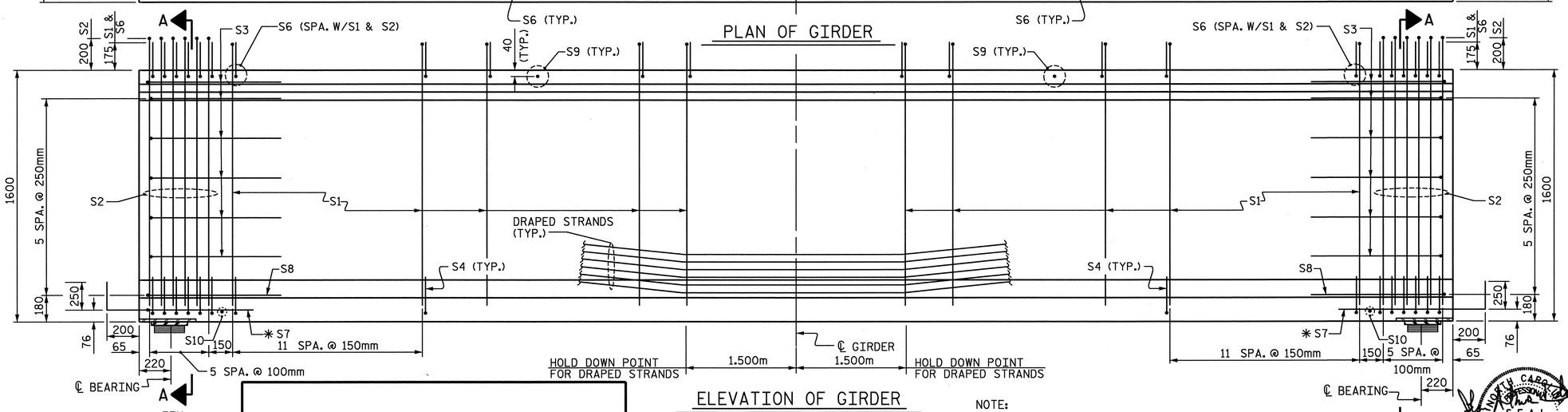

ELEVATION OF GIRDER

NOTE:

THE UPLIFT FORCE DUE TO DRAPED STRANDS IS 118 kN.

FOR LOCATION OF 76mm Ø CORED OR FORMED HOLE SEE SHEET 18 OF 18.

DWG. 17 OF 48

15.24mm Ø L. R. GRADE 270 STRANDS

AREA (mm²)	ULTIMATE STRENGTH (kN PER STRAND)	APPLIED PRESTRESS (kN PER STRAND)
140.00	260.4	195.3

REINFORCING STEEL FOR ONE GIRDER

BAR	NUMBER	SIZE	TYPE	LENGTH	WEIGHT
S1	170	#13	1	1900	321
S2	24	#16	1	1920	72
S3	12	#13	2	2560	31
S4	72	#13	3	920	66
S6	194	#16	1	1160	349
✱S7	20	#16	STR	1120	35
S8	2	#16	2	2740	9
S9	49	#16	STR	980	75
S10	2	#10	STR	560	1

✱NOTE: S7 BARS SHALL BE BENT BEFORE SHIPMENT. HEAT BENDING SHALL NOT BE ALLOWED.

BAR TYPES

ALL BAR DIMENSIONS ARE OUT-TO-OUT

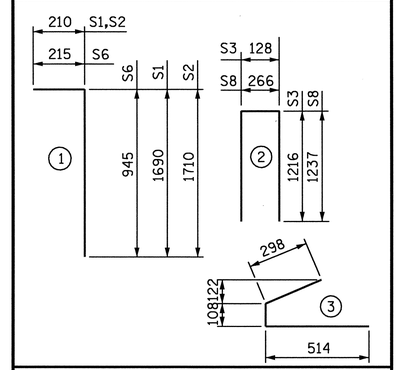

QUANTITIES FOR ONE GIRDER

	REINFORCING STEEL	68.9 MPa CONCRETE	15.24mm Ø L.R. STRANDS
	kg	m³	No.
INTERIOR GIRDER			
EXTERIOR GIRDER	959	17.6	48

GIRDERS REQUIRED

NUMBER	LENGTH	TOTAL LENGTH
1	35.325m	35.325m

PROJECT NO. R-0609IB

GUILFORD-RANDOLPH COUNTY

STATION: 83+34.392 -L-

SHEET 8 OF 18

STATE OF NORTH CAROLINA
DEPARTMENT OF TRANSPORTATION
RALEIGH

STANDARD
1600mm PRESTRESSED CONCRETE
MODIFIED BULB TEE
CONTINUOUS FOR LIVE LOAD
SPAN B GIRDER 4

REVISIONS							SHEET NO.
NO.	BY:	DATE:	NO.	BY:	DATE:		S-45
1			3				TOTAL SHEETS
2			4				199

NORTH CAROLINA PROFESSIONAL SEAL 22072 ENGINEER JOHN ARTHUR DILWORTH

7-21-05

ASSEMBLED BY : J. C. PENDERGRAFT DATE : 6/05
CHECKED BY : J. T. DIFFEE DATE : 6/05

DRAWN BY : EEM 2/6/97	REV. 7/17/98	RWW/LES
CHECKED BY : VAP 2/6/97	REV. 8/16/99	RWW/LES
	REV. 10/17/00	RWW/LES

WETHERILL ENGINEERING
559 Jones Franklin Rd. Suite 164
Raleigh, N.C. 27606
Bus: 919 851 8077
Fax: 919 851 8107
TRANSPORTATION PLANNING/DESIGN - BRIDGE/STRUCTURE DESIGN
CIVIL/SITE DESIGN - GIS/GPS - CONSTRUCTION OBSERVATION

P:\R-0609IB\R0609IB_SITE2\Structures\DWG\BULBTEE\Dwg 10-18_pcg9sm-draped.dgn
7/21/2005 9:28:00 AM

STD. NO. PCG9SM

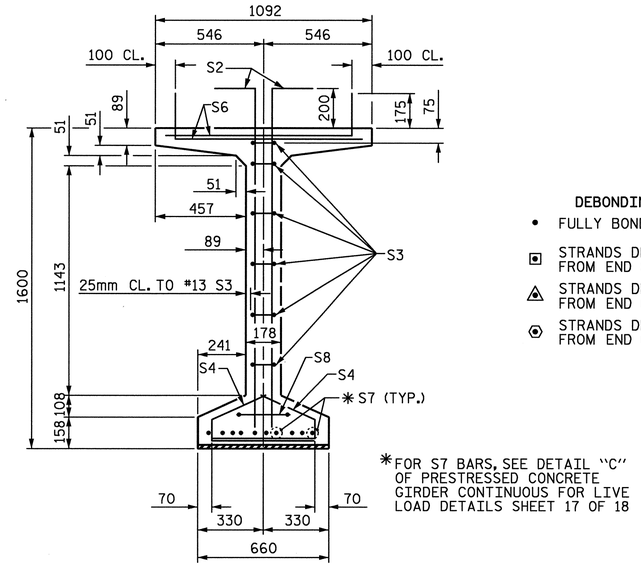

SECTION A-A

✱FOR S7 BARS, SEE DETAIL "C" OF PRESTRESSED CONCRETE GIRDER CONTINUOUS FOR LIVE LOAD DETAILS SHEET 17 OF 18

DEBONDING LEGEND

- • FULLY BONDED STRANDS
- ▣ STRANDS DEBONDED FOR 2.000m FROM END OF GIRDER
- △ STRANDS DEBONDED FOR 4.000m FROM END OF GIRDER
- ⬡ STRANDS DEBONDED FOR 10.000m FROM END OF GIRDER

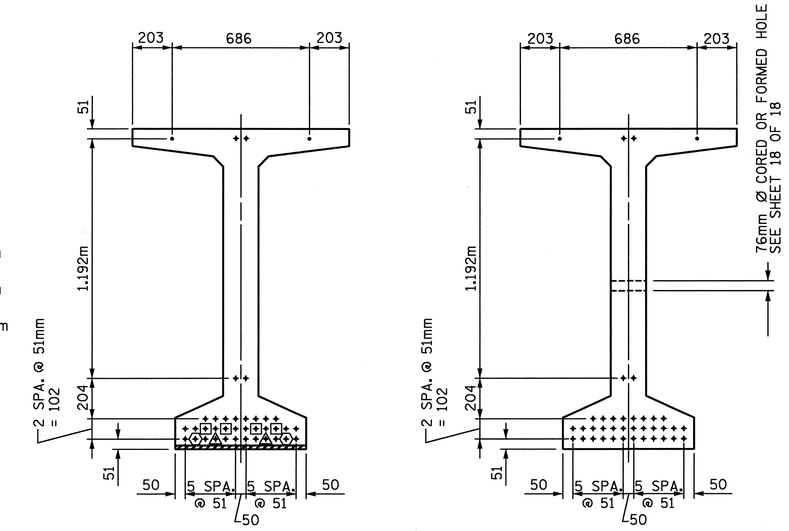

AT END OF GIRDER

AT ℄ OF GIRDER

15.24mm Ø LOW RELAXATION STRAND LAYOUT

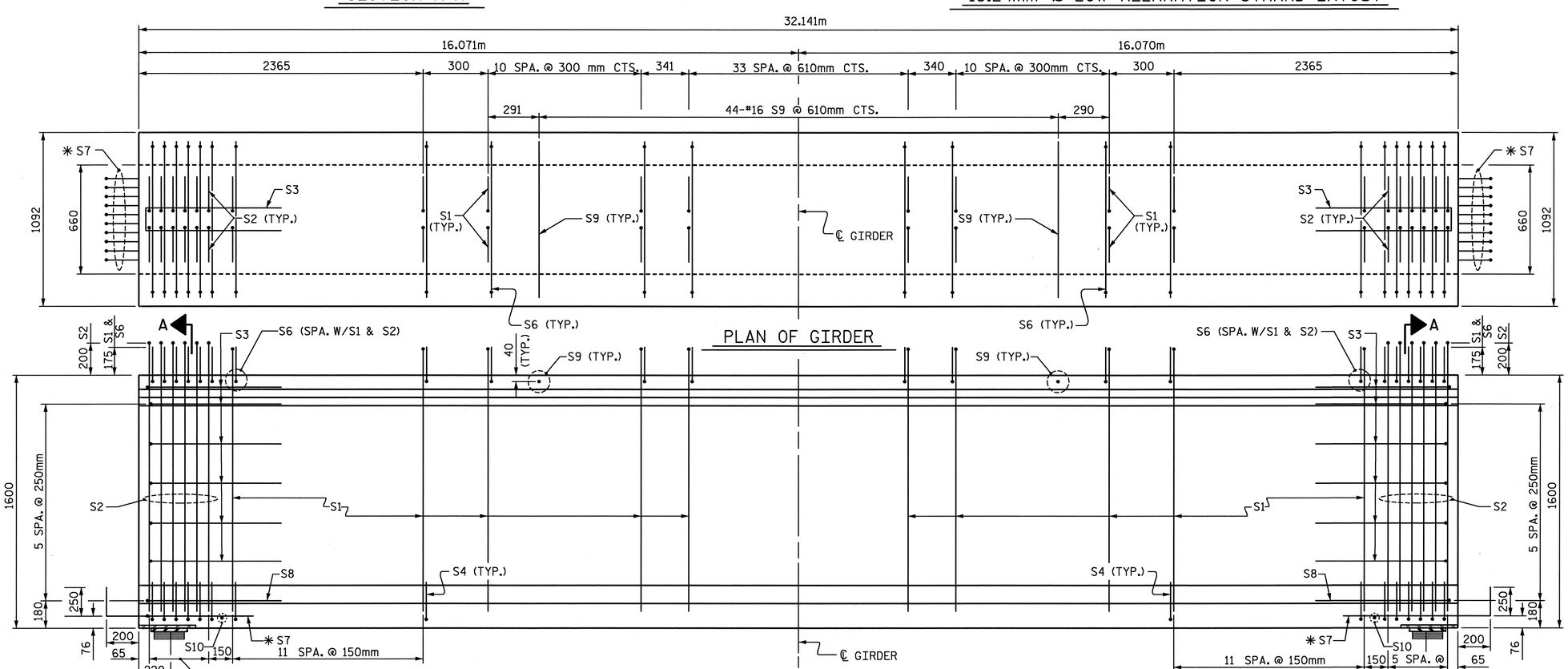

NOTE:

FOR LOCATION OF 76mm Ø CORED OR FORMED HOLE SEE SHEET 18 OF 18.

DWG. 18 OF 48

15.24mm Ø L. R. GRADE 270 STRANDS

AREA (mm²)	ULTIMATE STRENGTH (kN PER STRAND)	APPLIED PRESTRESS (kN PER STRAND)
140.00	260.4	195.3

REINFORCING STEEL FOR ONE GIRDER

BAR	NUMBER	SIZE	TYPE	LENGTH	WEIGHT
S1	160	#13	1	1900	302
S2	24	#16	1	1920	72
S3	12	#13	2	2560	31
S4	72	#13	3	920	66
S6	184	#16	1	1160	331
✱S7	20	#16	STR	1120	35
S8	2	#16	2	2740	9
S9	44	#16	STR	980	67
S10	2	#10	STR	560	1

✱NOTE: S7 BARS SHALL BE BENT BEFORE SHIPMENT. HEAT BENDING SHALL NOT BE ALLOWED.

BAR TYPES

ALL BAR DIMENSIONS ARE OUT-TO-OUT

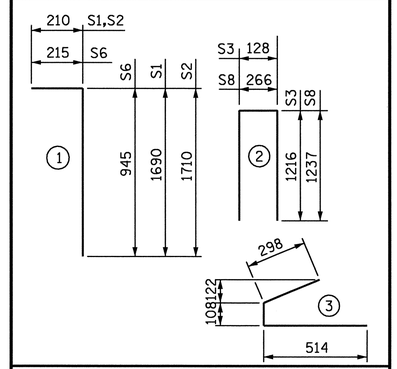

QUANTITIES FOR ONE GIRDER

	REINFORCING STEEL	55.2 MPa CONCRETE	15.24mm Ø L.R. STRANDS
	kg	m³	No.
INTERIOR GIRDER			
EXTERIOR GIRDER	914	16.0	38

GIRDERS REQUIRED

NUMBER	LENGTH	TOTAL LENGTH
1	32.141m	32.141m

PROJECT NO. R-0609IB

GUILFORD-RANDOLPH COUNTY

STATION: 83+34.392 -L-

SHEET 9 OF 18

STATE OF NORTH CAROLINA
DEPARTMENT OF TRANSPORTATION
RALEIGH

OPTIONAL
1600mm PRESTRESSED CONCRETE
MODIFIED BULB TEE
CONTINUOUS FOR LIVE LOAD
(WITH 15.24mm Ø PARTIALLY DEBONDED STRANDS)
SPAN A GIRDER 1

REVISIONS								SHEET NO.
NO.	BY:	DATE:	NO.	BY:	DATE:			S-46
1			3					TOTAL SHEETS
2			4					199

NORTH CAROLINA SEAL 22072 ENGINEER JOHN ARTHUR DILWORTH
7-21-03

ASSEMBLED BY : J C PENDERGRAFT DATE : 6/05
CHECKED BY : J T DIFFEE DATE : 6/05

DRAWN BY : EEM 2/6/97
CHECKED BY : VAP 2/6/97

REV. 7/17/98 RWW/LES
REV. 8/16/99 RWW/LES
REV. 10/17/00 RWW/LES

WETHERILL ENGINEERING
559 Jones Franklin Rd. Suite 164
Raleigh, N.C. 27606
Bus: 919 851 8077
Fax: 919 851 8107
TRANSPORTATION PLANNING/DESIGN - BRIDGE/STRUCTURE DESIGN
CIVIL/SITE DESIGN - GIS/GPS - CONSTRUCTION OBSERVATION

P:\R-0609IB\R0609IB_STTE2\Structures\DWG\BULBTEE\Dwg 19-25_pcg9sm-sfr.dgn
7/21/2005 9:37:33 AM

STD. NO. PCG9SM

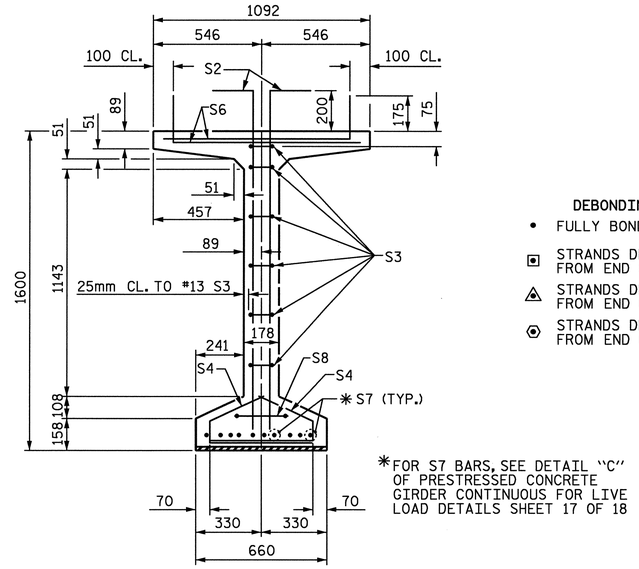

✱FOR S7 BARS, SEE DETAIL "C" OF PRESTRESSED CONCRETE GIRDER CONTINUOUS FOR LIVE LOAD DETAILS SHEET 17 OF 18

SECTION A-A

DEBONDING LEGEND

- • FULLY BONDED STRANDS
- STRANDS DEBONDED FOR 2.000m FROM END OF GIRDER
- STRANDS DEBONDED FOR 4.000m FROM END OF GIRDER
- STRANDS DEBONDED FOR 10.000m FROM END OF GIRDER

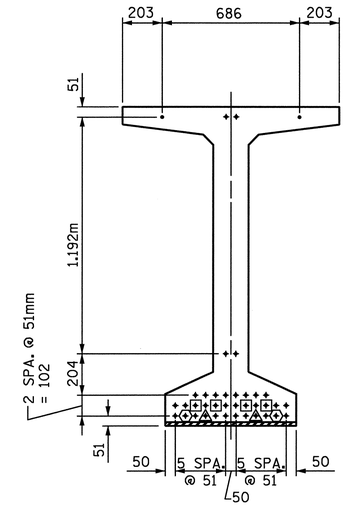

AT END OF GIRDER

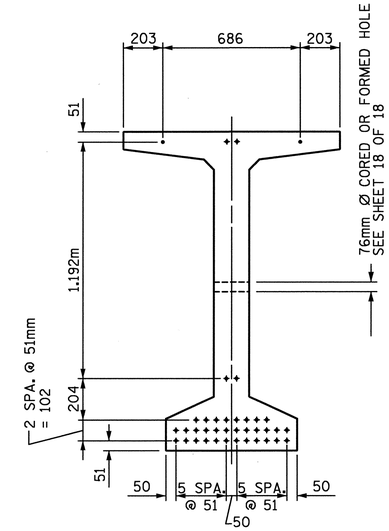

AT ℄ OF GIRDER

15.24mm Ø LOW RELAXATION STRAND LAYOUT

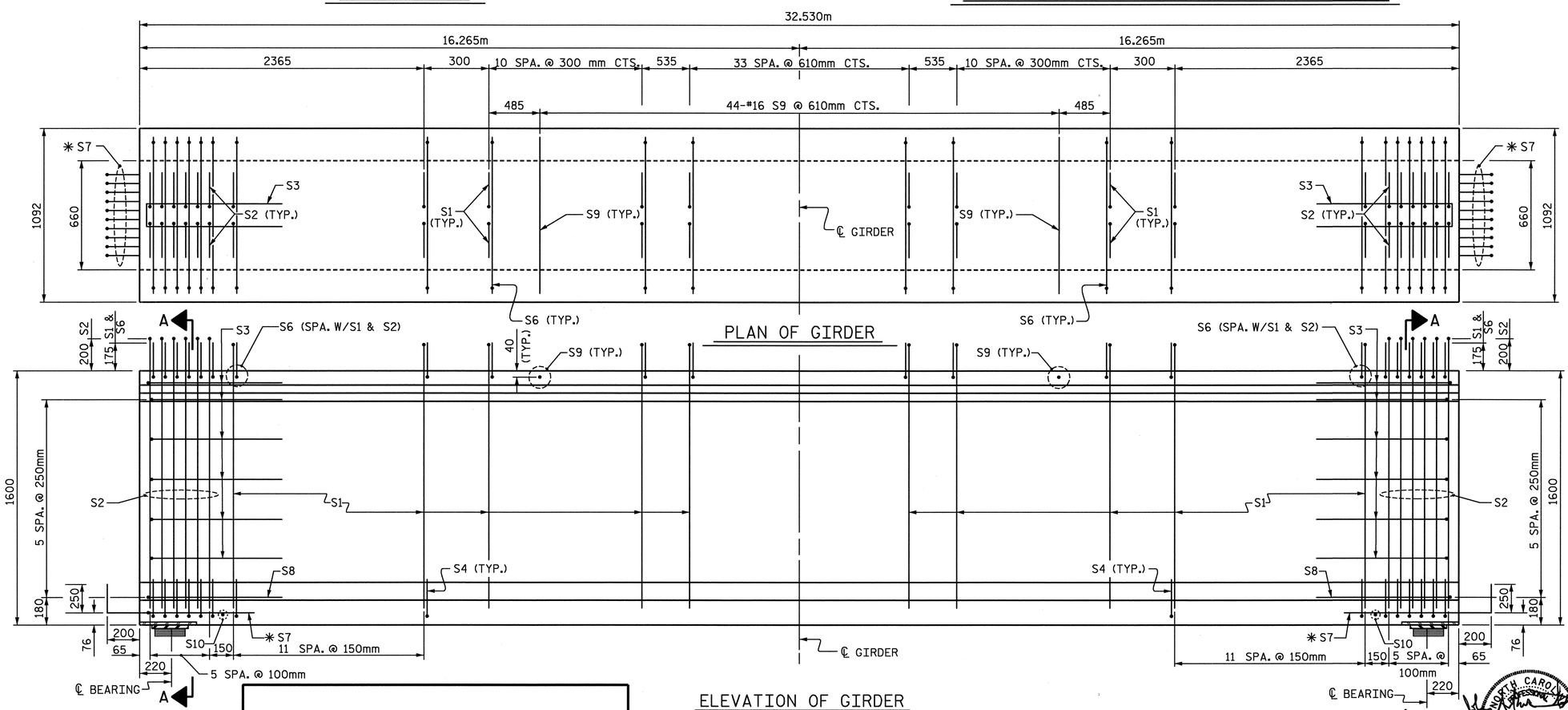

ELEVATION OF GIRDER

NOTE:
FOR LOCATION OF 76mm Ø CORED OR FORMED HOLE SEE SHEET 18 OF 18.

15.24mm Ø L. R. GRADE 270 STRANDS		
AREA (mm²)	ULTIMATE STRENGTH (kN PER STRAND)	APPLIED PRESTRESS (kN PER STRAND)
140.00	260.4	195.3

REINFORCING STEEL FOR ONE GIRDER

BAR	NUMBER	SIZE	TYPE	LENGTH	WEIGHT
S1	160	#13	1	1900	302
S2	24	#16	1	1920	72
S3	12	#13	2	2560	31
S4	72	#13	3	920	66
S6	184	#16	1	1160	331
✱S7	20	#16	STR	1120	35
S8	2	#16	2	2740	9
S9	44	#16	STR	980	67
S10	2	#10	STR	560	1

✱NOTE: S7 BARS SHALL BE BENT BEFORE SHIPMENT. HEAT BENDING SHALL NOT BE ALLOWED.

BAR TYPES

ALL BAR DIMENSIONS ARE OUT-TO-OUT

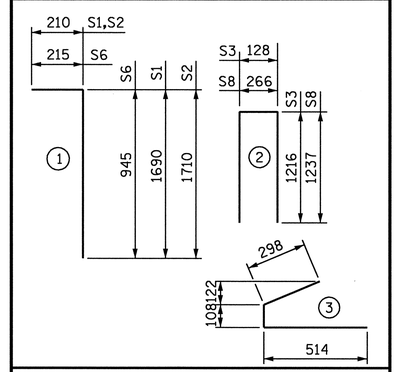

QUANTITIES FOR ONE GIRDER

	REINFORCING STEEL	55.2 MPa CONCRETE	15.24mm Ø L.R. STRANDS
	kg	m³	No.
INTERIOR GIRDER	914	16.2	38
EXTERIOR GIRDER			

GIRDERS REQUIRED

NUMBER	LENGTH	TOTAL LENGTH
1	32.530m	32.530m

PROJECT NO. R-0609IB
GUILFORD-RANDOLPH COUNTY
STATION: 83+34.392 -L-

SHEET 10 OF 18

STATE OF NORTH CAROLINA
DEPARTMENT OF TRANSPORTATION
RALEIGH

OPTIONAL
1600mm PRESTRESSED CONCRETE
MODIFIED BULB TEE
CONTINUOUS FOR LIVE LOAD
(WITH 15.24mm Ø PARTIALLY DEBONDED STRANDS)
SPAN A GIRDER 2

REVISIONS								SHEET NO.
NO.	BY:	DATE:	NO.	BY:	DATE:			S-47
1			3					TOTAL SHEETS
2			4					199

NORTH CAROLINA PROFESSIONAL SEAL 22072 ENGINEER JOHN ARTHUR DILWORTH
7-21-05

ASSEMBLED BY : J C PENDERGRAFT	DATE : 6/05	
CHECKED BY : J T DIFFEE	DATE : 6/05	
DRAWN BY : EEM 2/6/97	REV. 7/17/98	RWW/LES
CHECKED BY : VAP 2/6/97	REV. 8/16/99	RWW/LES
	REV. 10/17/00	RWW/LES

WETHERILL ENGINEERING
559 Jones Franklin Rd. Suite 164
Raleigh, N.C. 27606
Bus: 919 851 8077
Fax: 919 851 8107
TRANSPORTATION PLANNING/DESIGN - BRIDGE/STRUCTURE DESIGN
CIVIL/SITE DESIGN - GIS/GPS - CONSTRUCTION OBSERVATION

DWG. 19 OF 48

STD. NO. PCG9SM

P:\R-0609IBVR0609IB_SITE2\Structures\DWG\BULBTEE\Dwg 19-25_pcg9sm-sfr.dgn
7/21/2005 9:32:33 AM

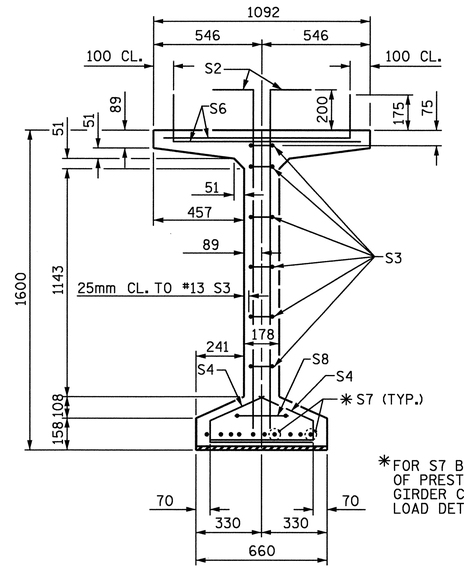

SECTION A-A

✱FOR S7 BARS, SEE DETAIL "C" OF PRESTRESSED CONCRETE GIRDER CONTINUOUS FOR LIVE LOAD DETAILS SHEET 17 OF 18

DEBONDING LEGEND

- • FULLY BONDED STRANDS
- STRANDS DEBONDED FOR 2.000m FROM END OF GIRDER
- STRANDS DEBONDED FOR 4.000m FROM END OF GIRDER
- STRANDS DEBONDED FOR 10.000m FROM END OF GIRDER

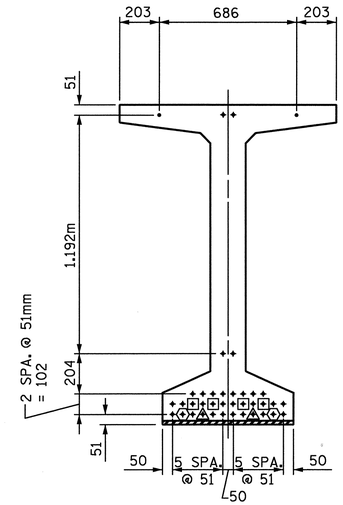

AT END OF GIRDER

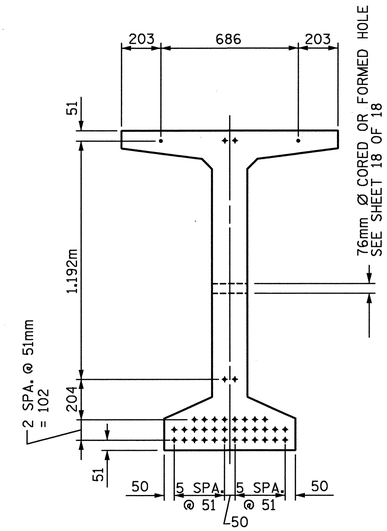

AT ℄ OF GIRDER

15.24mm Ø LOW RELAXATION STRAND LAYOUT

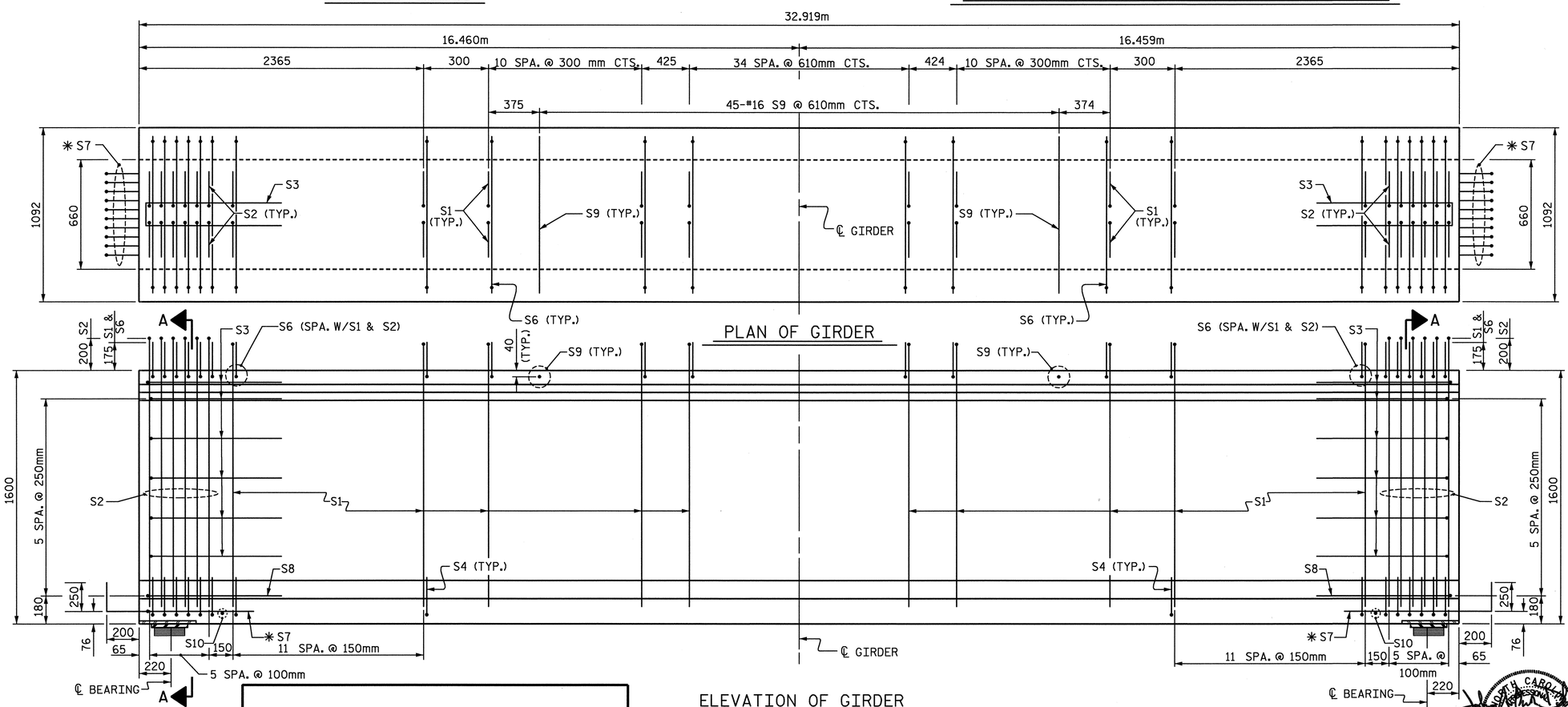

ELEVATION OF GIRDER

NOTE:
FOR LOCATION OF 76mm Ø CORED OR FORMED HOLE SEE SHEET 18 OF 18.

DWG. 20 OF 48

15.24mm Ø L. R. GRADE 270 STRANDS

AREA (mm²)	ULTIMATE STRENGTH (kN PER STRAND)	APPLIED PRESTRESS (kN PER STRAND)
140.00	260.4	195.3

REINFORCING STEEL FOR ONE GIRDER

BAR	NUMBER	SIZE	TYPE	LENGTH	WEIGHT
S1	162	#13	1	1900	306
S2	24	#16	1	1920	72
S3	12	#13	2	2560	31
S4	72	#13	3	920	66
S6	186	#16	1	1160	335
✱S7	20	#16	STR	1120	35
S8	2	#16	2	2740	9
S9	45	#16	STR	980	68
S10	2	#10	STR	560	1

✱NOTE: S7 BARS SHALL BE BENT BEFORE SHIPMENT. HEAT BENDING SHALL NOT BE ALLOWED.

BAR TYPES

ALL BAR DIMENSIONS ARE OUT-TO-OUT

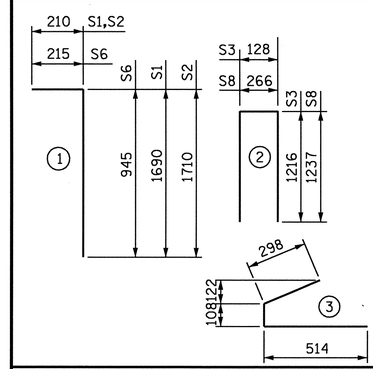

QUANTITIES FOR ONE GIRDER

	REINFORCING STEEL	55.2 MPa CONCRETE	15.24mm Ø L.R. STRANDS
	kg	m³	No.
INTERIOR GIRDER	923	16.4	38
EXTERIOR GIRDER			

GIRDERS REQUIRED

NUMBER	LENGTH	TOTAL LENGTH
1	32.919m	32.919m

PROJECT NO. R-0609IB

GUILFORD-RANDOLPH COUNTY

STATION: 83+34.392 -L-

SHEET 11 OF 18

STATE OF NORTH CAROLINA
DEPARTMENT OF TRANSPORTATION
RALEIGH

OPTIONAL
1600mm PRESTRESSED CONCRETE
MODIFIED BULB TEE
CONTINUOUS FOR LIVE LOAD
(WITH 15.24mm Ø PARTIALLY DEBONDED STRANDS)
SPAN A GIRDER 3

NORTH CAROLINA PROFESSIONAL SEAL 22072 ENGINEER JOHN ARTHUR DILLWORTH
7-21-05

REVISIONS								SHEET NO.
NO.	BY:	DATE:	NO.	BY:	DATE:			S-48
1			3					TOTAL SHEETS
2			4					199

ASSEMBLED BY : J C PENDERGRAFT DATE : 6/05
CHECKED BY : J T DIFFEE DATE : 6/05

DRAWN BY : EEM 2/6/97 REV. 7/17/98 RWW/LES
CHECKED BY : VAP 2/6/97 REV. 8/16/99 RWW/LES
REV. 10/17/00 RWW/LES

WETHERILL ENGINEERING
559 Jones Franklin Rd. Suite 164
Raleigh, N.C. 27606
Bus: 919 851 8077
Fax: 919 851 8107
TRANSPORTATION PLANNING/DESIGN - BRIDGE/STRUCTURE DESIGN
CIVIL/SITE DESIGN - GIS/GPS - CONSTRUCTION OBSERVATION

P:\R-0609IBVR0609IB_SITE2\Structures\DWG\BULBTEE\Dwg 19-25_pcg9sm-sfr.dgn
7/21/2005 9:32:47 AM

STD. NO. PCG9SM

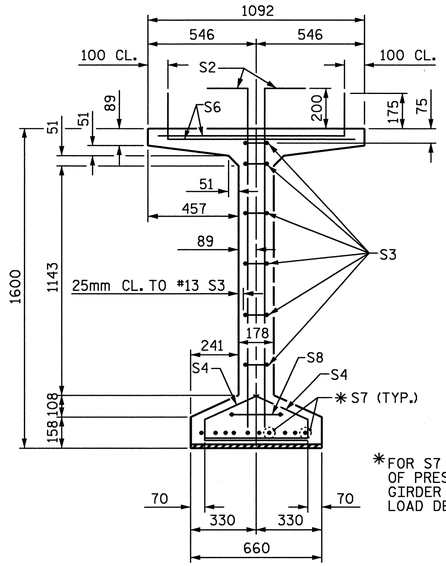

SECTION A-A

DEBONDING LEGEND

- • FULLY BONDED STRANDS
- ▣ STRANDS DEBONDED FOR 2.000m FROM END OF GIRDER
- △ STRANDS DEBONDED FOR 4.000m FROM END OF GIRDER
- ⬡ STRANDS DEBONDED FOR 10.000m FROM END OF GIRDER

✳FOR S7 BARS, SEE DETAIL "C" OF PRESTRESSED CONCRETE GIRDER CONTINUOUS FOR LIVE LOAD DETAILS SHEET 17 OF 18

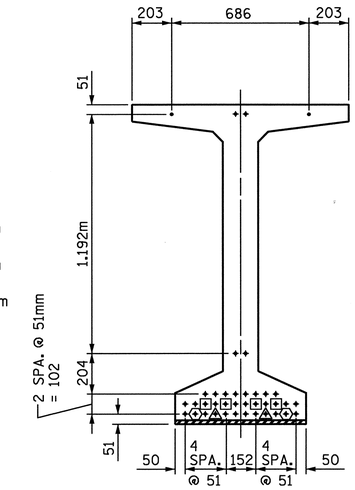

AT END OF GIRDER

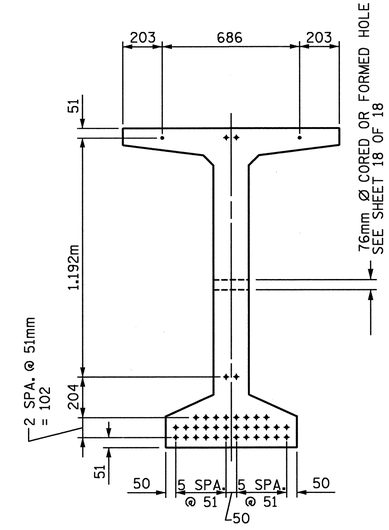

AT ℄ OF GIRDER

15.24mm Ø LOW RELAXATION STRAND LAYOUT

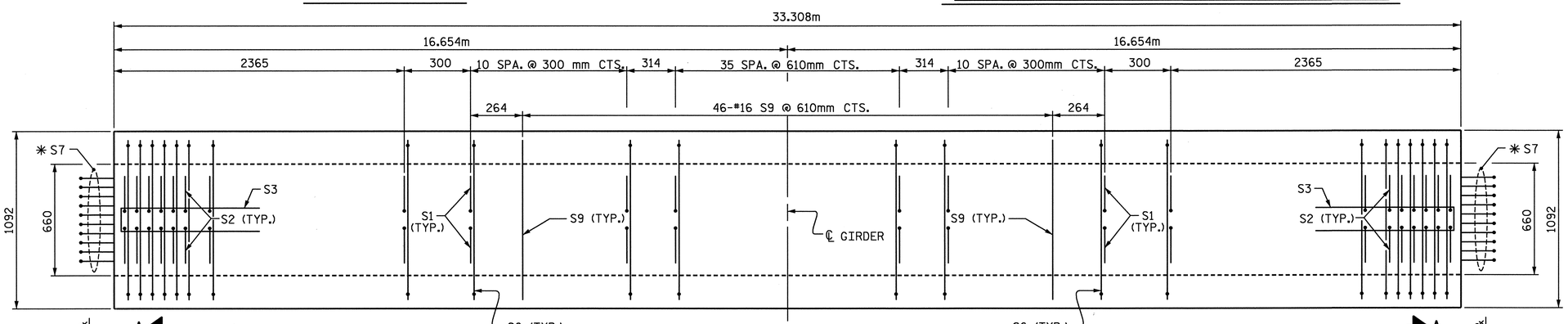

PLAN OF GIRDER

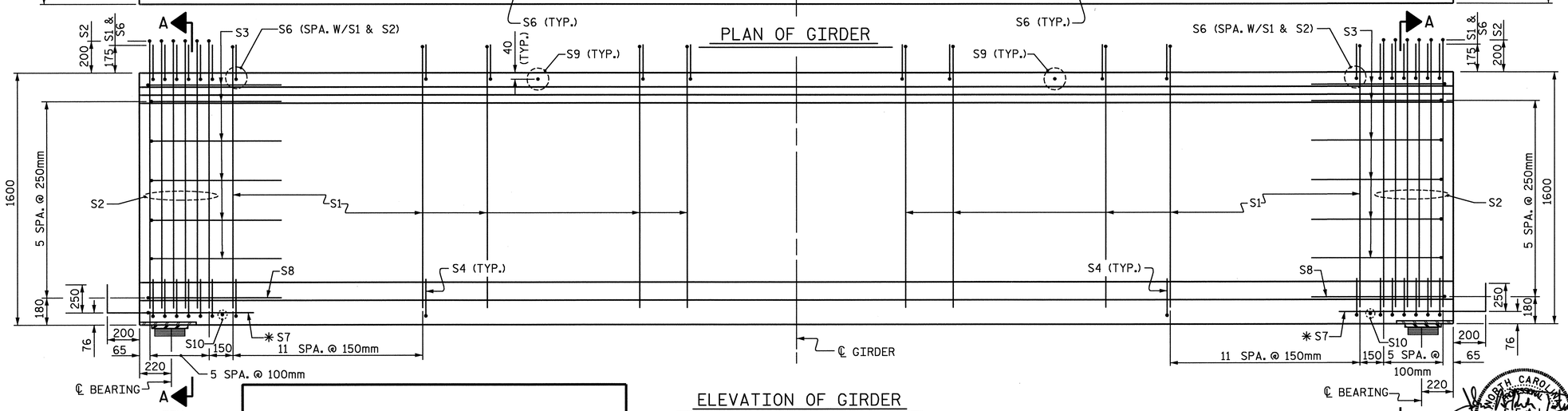

ELEVATION OF GIRDER

NOTE:

FOR LOCATION OF 76mm Ø CORED OR FORMED HOLE SEE SHEET 18 OF 18.

15.24mm Ø L. R. GRADE 270 STRANDS

AREA (mm²)	ULTIMATE STRENGTH (kN PER STRAND)	APPLIED PRESTRESS (kN PER STRAND)
140.00	260.4	195.3

REINFORCING STEEL FOR ONE GIRDER

BAR	NUMBER	SIZE	TYPE	LENGTH	WEIGHT
S1	164	#13	1	1900	310
S2	24	#16	1	1920	72
S3	12	#13	2	2560	31
S4	72	#13	3	920	66
S6	188	#16	1	1160	338
✳S7	20	#16	STR	1120	35
S8	2	#16	2	2740	9
S9	46	#16	STR	980	70
S10	2	#10	STR	560	1

✳NOTE: S7 BARS SHALL BE BENT BEFORE SHIPMENT. HEAT BENDING SHALL NOT BE ALLOWED.

BAR TYPES

ALL BAR DIMENSIONS ARE OUT-TO-OUT

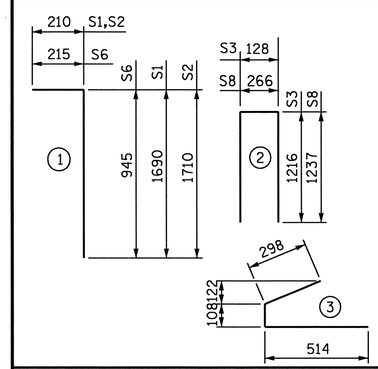

QUANTITIES FOR ONE GIRDER

	REINFORCING STEEL	55.2 MPa CONCRETE	15.24mm Ø L.R. STRANDS
	kg	m³	No.
INTERIOR GIRDER			
EXTERIOR GIRDER	932	16.5	38

GIRDERS REQUIRED

NUMBER	LENGTH	TOTAL LENGTH
1	33.308m	33.308m

PROJECT NO. R-0609IB

GUILFORD-RANDOLPH COUNTY

STATION: 83+34.392 -L-

SHEET 12 OF 18

STATE OF NORTH CAROLINA
DEPARTMENT OF TRANSPORTATION
RALEIGH

OPTIONAL
1600mm PRESTRESSED CONCRETE
MODIFIED BULB TEE
CONTINUOUS FOR LIVE LOAD
(WITH 15.24mm Ø PARTIALLY
DEBONDED STRANDS)
SPAN A GIRDER 4

NORTH CAROLINA PROFESSIONAL SEAL 22072 ENGINEER NORMAN ARTHUR DILWORTH
7-21-05

REVISIONS							SHEET NO.
NO.	BY:	DATE:	NO.	BY:	DATE:		S-49
1			3				TOTAL SHEETS
2			4				199

ASSEMBLED BY : J C PENDERGRAFT DATE : 6/05
CHECKED BY : J T DIFFEE DATE : 6/05

DRAWN BY : EEM 2/6/97 REV. 7/17/98 RWW/LES
CHECKED BY : VAP 2/6/97 REV. 8/16/99 RWW/LES
REV. 10/17/00 RWW/LES

WETHERILL ENGINEERING
559 Jones Franklin Rd. Suite 164
Raleigh, N.C. 27606
Bus: 919 851 8077
Fax: 919 851 8107
TRANSPORTATION PLANNING/DESIGN - BRIDGE/STRUCTURE DESIGN
CIVIL/SITE DESIGN - GIS/GPS - CONSTRUCTION OBSERVATION

DWG. 21 OF 48

STD. NO. PCG9SM

P:\R-0609IB\R0609IB_SITE2\Structures\DWG\BULBTEE\Dwg 19-25_pcg9sm-sfr.dgn
7/21/2005 9:33:05 AM

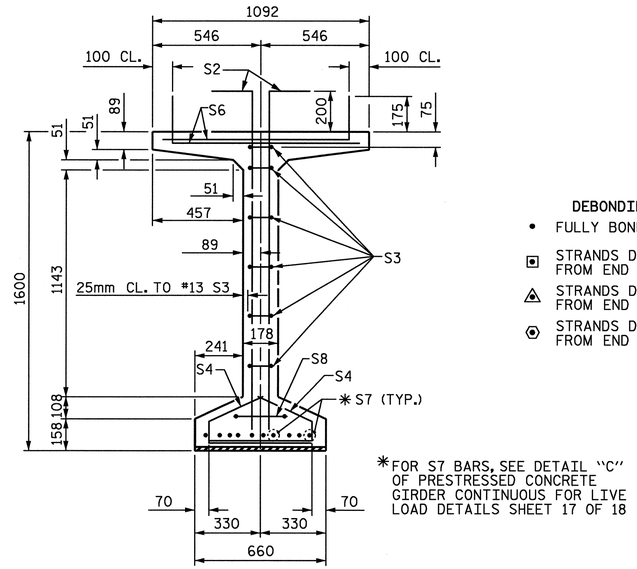

SECTION A-A

DEBONDING LEGEND

- • FULLY BONDED STRANDS
- ▣ STRANDS DEBONDED FOR 2.000m FROM END OF GIRDER
- △ STRANDS DEBONDED FOR 4.000m FROM END OF GIRDER
- ⬡ STRANDS DEBONDED FOR 10.000m FROM END OF GIRDER

✱FOR S7 BARS, SEE DETAIL "C" OF PRESTRESSED CONCRETE GIRDER CONTINUOUS FOR LIVE LOAD DETAILS SHEET 17 OF 18

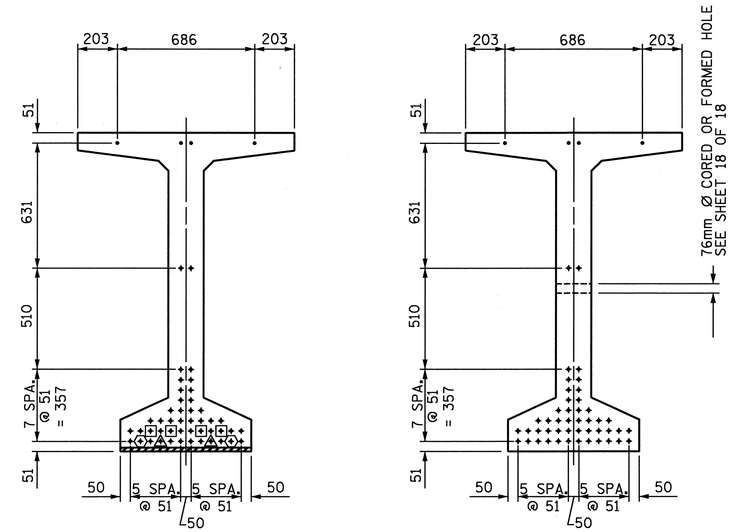

AT END OF GIRDER

AT ℄ OF GIRDER

15.24mm Ø LOW RELAXATION STRAND LAYOUT

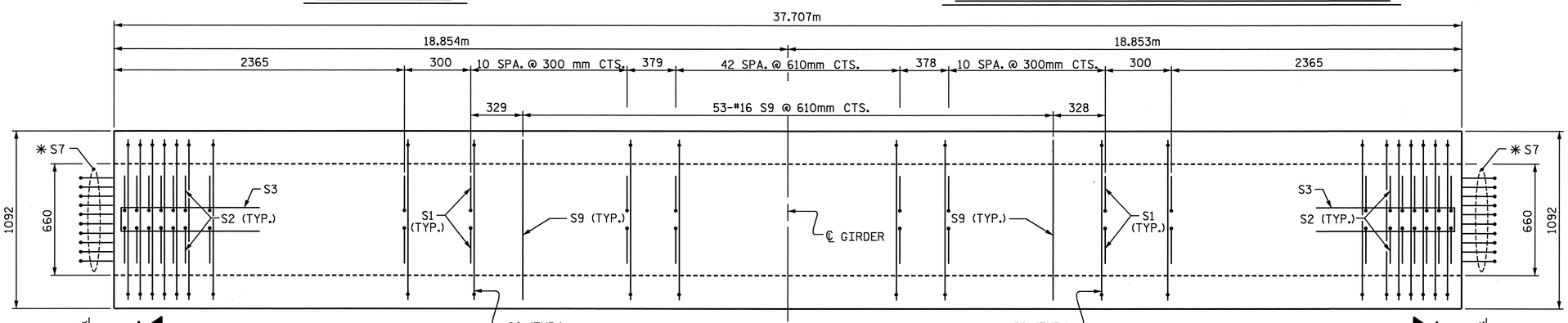

PLAN OF GIRDER

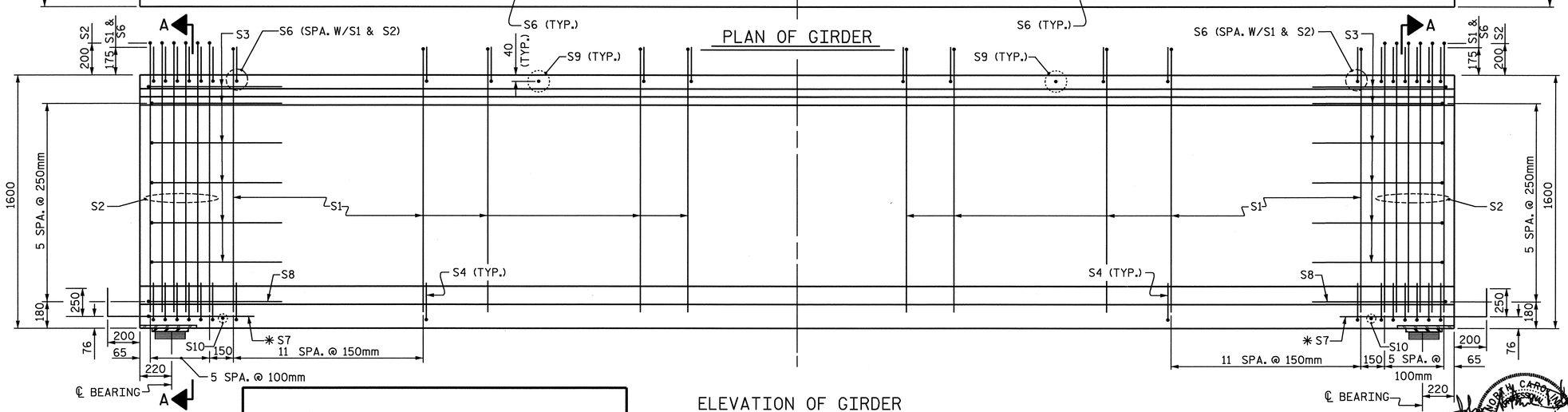

ELEVATION OF GIRDER

NOTE:

FOR LOCATION OF 76mm Ø CORED OR FORMED HOLE SEE SHEET 18 OF 18.

DWG. 22 OF 48

15.24mm Ø L. R. GRADE 270 STRANDS

AREA (mm²)	ULTIMATE STRENGTH (kN PER STRAND)	APPLIED PRESTRESS (kN PER STRAND)
140.00	260.4	195.3

REINFORCING STEEL FOR ONE GIRDER

BAR	NUMBER	SIZE	TYPE	LENGTH	WEIGHT
S1	178	#13	1	1900	336
S2	24	#16	1	1920	72
S3	12	#13	2	2560	31
S4	72	#13	3	920	66
S6	202	#16	1	1160	364
✱S7	20	#16	STR	1120	35
S8	2	#16	2	2740	9
S9	53	#16	STR	980	81
S10	2	#10	STR	560	1

✱NOTE: S7 BARS SHALL BE BENT BEFORE SHIPMENT. HEAT BENDING SHALL NOT BE ALLOWED.

BAR TYPES

ALL BAR DIMENSIONS ARE OUT-TO-OUT

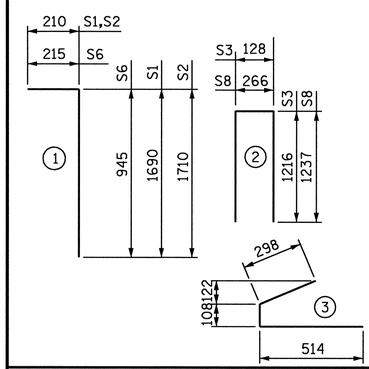

QUANTITIES FOR ONE GIRDER

	REINFORCING STEEL	68.9 MPa CONCRETE	15.24mm Ø L.R. STRANDS
	kg	m³	No.
INTERIOR GIRDER			
EXTERIOR GIRDER	995	18.7	50

GIRDERS REQUIRED

NUMBER	LENGTH	TOTAL LENGTH
1	37.707m	37.707m

PROJECT NO. R-0609IB

GUILFORD-RANDOLPH COUNTY

STATION: 83+34.392 -L-

SHEET 13 OF 18

STATE OF NORTH CAROLINA
DEPARTMENT OF TRANSPORTATION
RALEIGH

OPTIONAL
1600mm PRESTRESSED CONCRETE
MODIFIED BULB TEE
CONTINUOUS FOR LIVE LOAD
(WITH 15.24mm Ø PARTIALLY DEBONDED STRANDS)
SPAN B GIRDER 1

REVISIONS								SHEET NO.
NO.	BY:	DATE:	NO.	BY:	DATE:			S-50
1			3					TOTAL SHEETS
2			4					199

NORTH CAROLINA PROFESSIONAL SEAL 22072 ENGINEER JOHN ARTHUR DILWORTH

7-21-05

ASSEMBLED BY : J C PENDERGRAFT DATE : 6/05
CHECKED BY : J T DIFFEE DATE : 6/05

DRAWN BY : EEM 2/6/97	REV. 7/17/98	RWW/LES
CHECKED BY : VAP 2/6/97	REV. 8/16/99	RWW/LES
	REV. 10/17/00	RWW/LES

WETHERILL ENGINEERING
559 Jones Franklin Rd. Suite 164
Raleigh, N.C. 27606
Bus: 919 851 8077
Fax: 919 851 8107
TRANSPORTATION PLANNING/DESIGN - BRIDGE/STRUCTURE DESIGN
CIVIL/SITE DESIGN - GIS/GPS - CONSTRUCTION OBSERVATION

P:\R-0609IB\R0609IB_SITE2\Structures\DWG\BULBTEE\Dwg 19-25_pcg9sm-str.dgn
7/21/2005 9:42:06 AM

STD. NO. PCG9SM

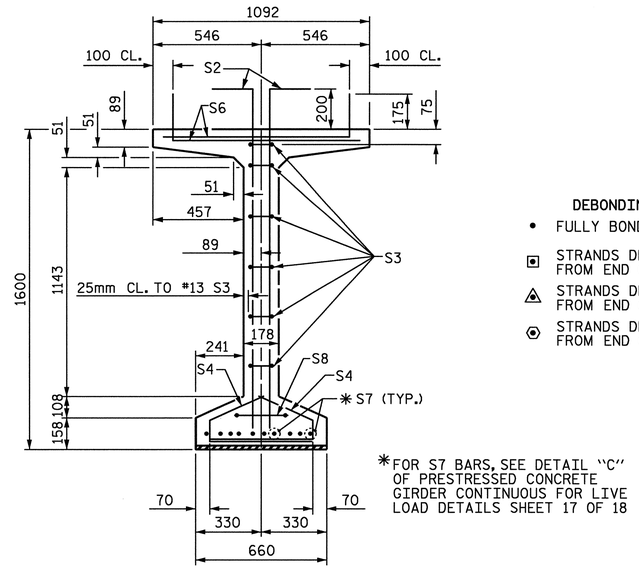

SECTION A-A

✱FOR S7 BARS, SEE DETAIL "C" OF PRESTRESSED CONCRETE GIRDER CONTINUOUS FOR LIVE LOAD DETAILS SHEET 17 OF 18

DEBONDING LEGEND

- • FULLY BONDED STRANDS
- STRANDS DEBONDED FOR 2.000m FROM END OF GIRDER
- STRANDS DEBONDED FOR 4.000m FROM END OF GIRDER
- STRANDS DEBONDED FOR 10.000m FROM END OF GIRDER

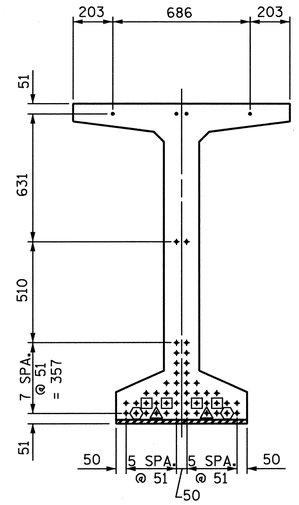

AT END OF GIRDER

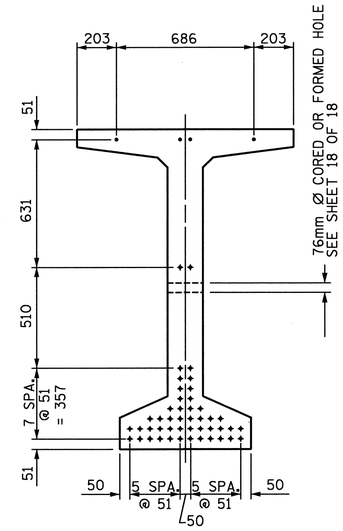

AT ℄ OF GIRDER

15.24mm Ø LOW RELAXATION STRAND LAYOUT

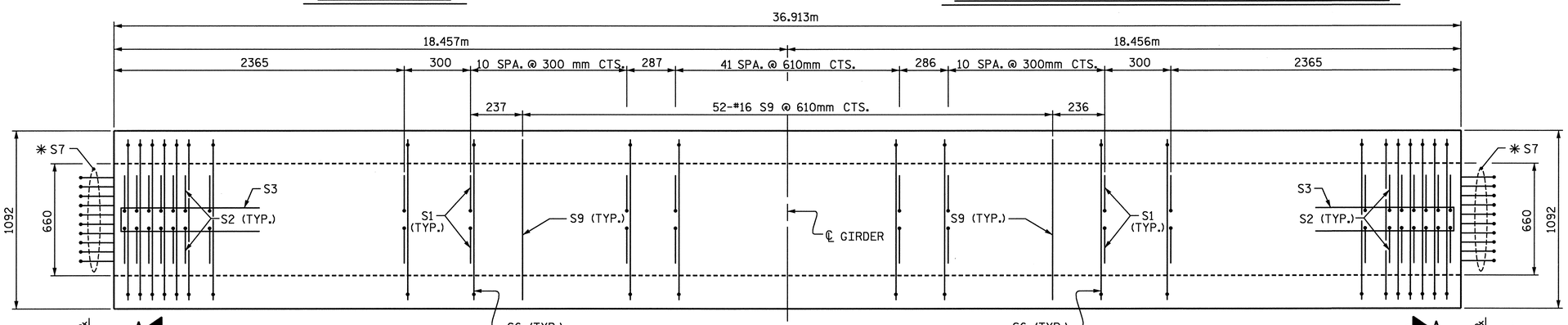

PLAN OF GIRDER

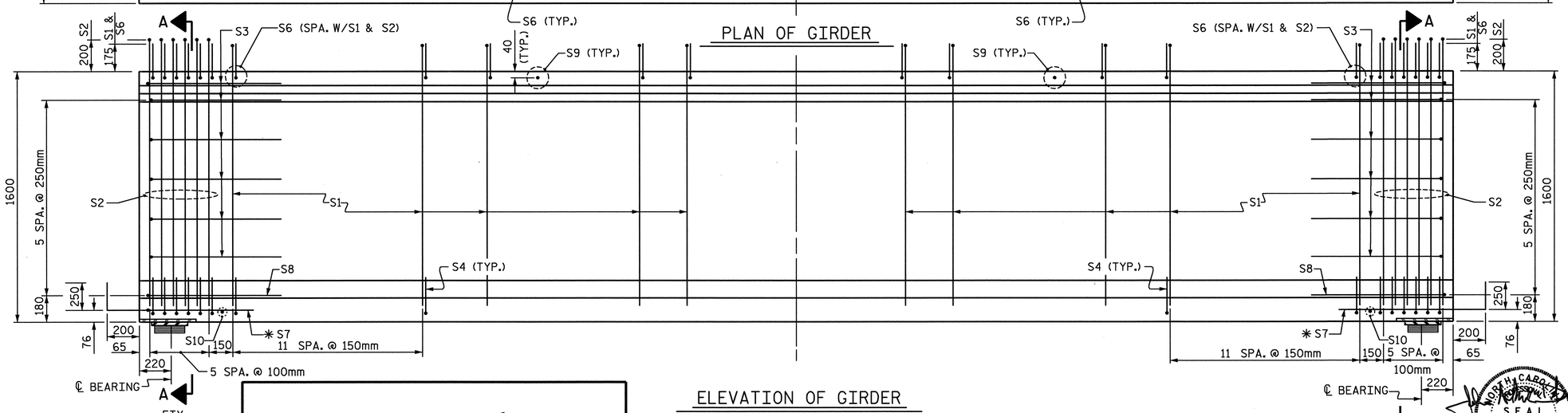

ELEVATION OF GIRDER

NOTE:
FOR LOCATION OF 76mm Ø CORED OR FORMED HOLE SEE SHEET 18 OF 18.

DWG. 23 OF 48

15.24mm Ø L. R. GRADE 270 STRANDS

AREA (mm^2)	ULTIMATE STRENGTH (kN PER STRAND)	APPLIED PRESTRESS (kN PER STRAND)
140.00	260.4	195.3

REINFORCING STEEL FOR ONE GIRDER

BAR	NUMBER	SIZE	TYPE	LENGTH	WEIGHT
S1	176	#13	1	1900	332
S2	24	#16	1	1920	72
S3	12	#13	2	2560	31
S4	72	#13	3	920	66
S6	200	#16	1	1160	360
✱S7	20	#16	STR	1120	35
S8	2	#16	2	2740	9
S9	52	#16	STR	980	79
S10	2	#10	STR	560	1

✱NOTE: S7 BARS SHALL BE BENT BEFORE SHIPMENT. HEAT BENDING SHALL NOT BE ALLOWED.

BAR TYPES

ALL BAR DIMENSIONS ARE OUT-TO-OUT

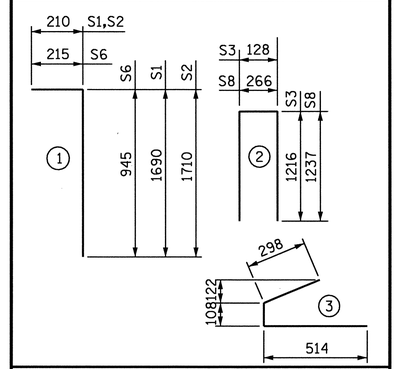

QUANTITIES FOR ONE GIRDER

	REINFORCING STEEL	68.9 MPa CONCRETE	15.24mm Ø L.R. STRANDS
	kg	m^3	No.
INTERIOR GIRDER	985	18.3	50
EXTERIOR GIRDER			

GIRDERS REQUIRED

NUMBER	LENGTH	TOTAL LENGTH
1	36.913m	36.913m

PROJECT NO. R-0609IB
GUILFORD-RANDOLPH COUNTY
STATION: 83+34.392 -L-

SHEET 14 OF 18

STATE OF NORTH CAROLINA
DEPARTMENT OF TRANSPORTATION
RALEIGH

OPTIONAL
1600mm PRESTRESSED CONCRETE
MODIFIED BULB TEE
CONTINUOUS FOR LIVE LOAD
(WITH 15.24mm Ø PARTIALLY DEBONDED STRANDS)
SPAN B GIRDER 2

NORTH CAROLINA PROFESSIONAL SEAL 22072 ENGINEER JOHN ARTHUR DILWORTH
7-21-05

REVISIONS							SHEET NO.
NO.	BY:	DATE:	NO.	BY:	DATE:		S-51
1			3				TOTAL SHEETS
2			4				199

ASSEMBLED BY : J C PENDERGRAFT DATE : 6/05
CHECKED BY : J T DIFFEE DATE : 6/05

DRAWN BY : EEM 2/6/97	REV. 7/17/98	RWW/LES
CHECKED BY : VAP 2/6/97	REV. 8/16/99	RWW/LES
	REV. 10/17/00	RWW/LES

WETHERILL ENGINEERING
559 Jones Franklin Rd. Suite 164
Raleigh, N.C. 27606
Bus: 919 851 8077
Fax: 919 851 8107
TRANSPORTATION PLANNING/DESIGN - BRIDGE/STRUCTURE DESIGN
CIVIL/SITE DESIGN - GIS/GPS - CONSTRUCTION OBSERVATION

P:\R-0609IB\R0609IB_STTE2\Structures\DWG\BULBTEE\Dwg 19-25_pcg9sm-sfr.dgn
7/21/2005 9:42:21 AM

STD. NO. PCG9SM

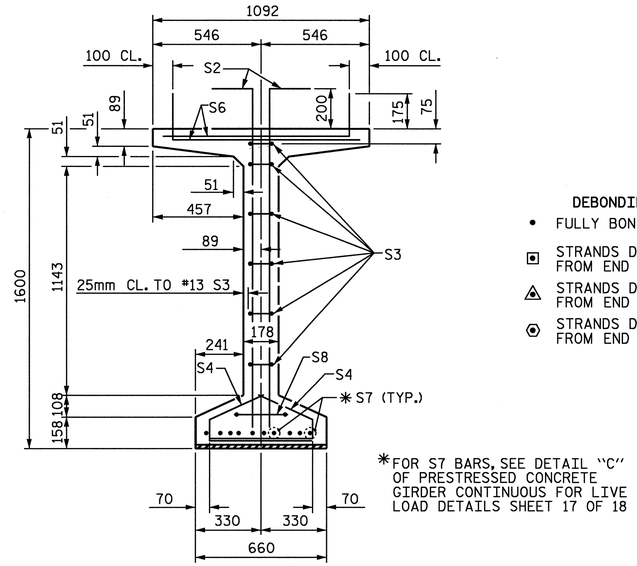

✱FOR S7 BARS, SEE DETAIL "C" OF PRESTRESSED CONCRETE GIRDER CONTINUOUS FOR LIVE LOAD DETAILS SHEET 17 OF 18

SECTION A-A

DEBONDING LEGEND

- • FULLY BONDED STRANDS
- STRANDS DEBONDED FOR 2.000m FROM END OF GIRDER
- STRANDS DEBONDED FOR 4.000m FROM END OF GIRDER
- STRANDS DEBONDED FOR 10.000m FROM END OF GIRDER

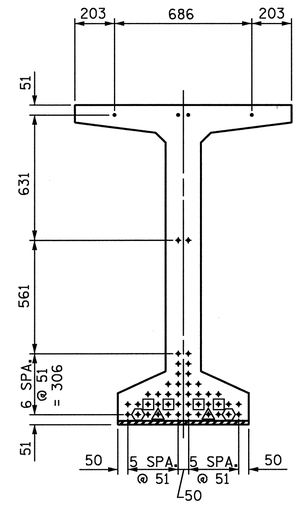

AT END OF GIRDER

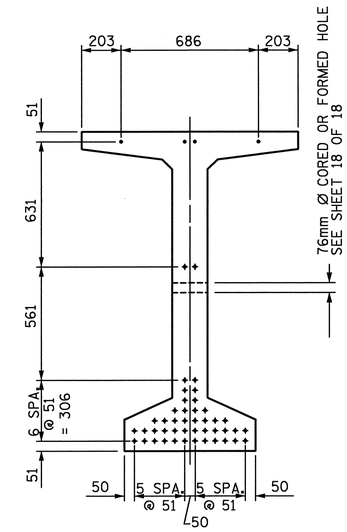

AT ℄ OF GIRDER

15.24mm Ø LOW RELAXATION STRAND LAYOUT

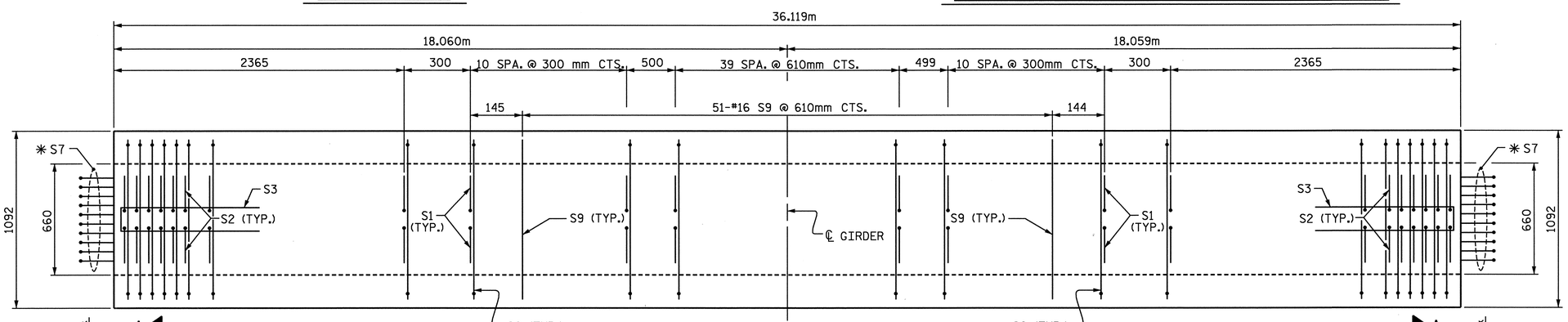

PLAN OF GIRDER

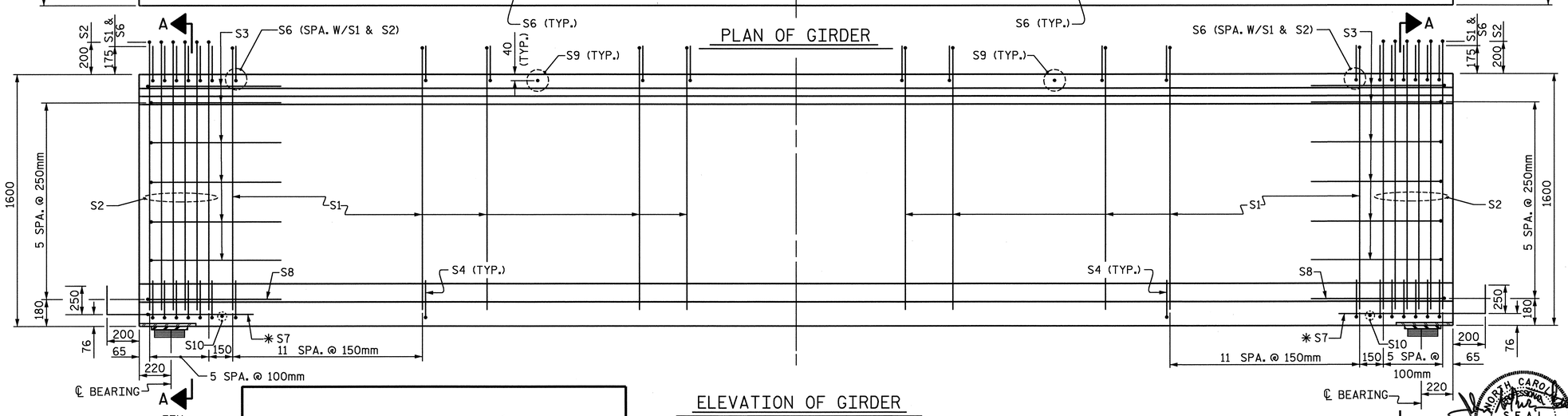

ELEVATION OF GIRDER

NOTE:
FOR LOCATION OF 76mm Ø CORED OR FORMED HOLE SEE SHEET 18 OF 18.

DWG. 24 OF 48

15.24mm Ø L. R. GRADE 270 STRANDS		
AREA (mm²)	ULTIMATE STRENGTH (kN PER STRAND)	APPLIED PRESTRESS (kN PER STRAND)
140.00	260.4	195.3

REINFORCING STEEL FOR ONE GIRDER

BAR	NUMBER	SIZE	TYPE	LENGTH	WEIGHT
S1	172	#13	1	1900	325
S2	24	#16	1	1920	72
S3	12	#13	2	2560	31
S4	72	#13	3	920	66
S6	196	#16	1	1160	353
✱S7	20	#16	STR	1120	35
S8	2	#16	2	2740	9
S9	51	#16	STR	980	78
S10	2	#10	STR	560	1

✱NOTE: S7 BARS SHALL BE BENT BEFORE SHIPMENT. HEAT BENDING SHALL NOT BE ALLOWED.

BAR TYPES

ALL BAR DIMENSIONS ARE OUT-TO-OUT

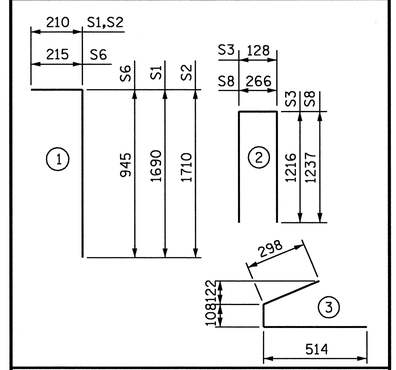

QUANTITIES FOR ONE GIRDER

	REINFORCING STEEL	68.9 MPa CONCRETE	15.24mm Ø L.R. STRANDS
	kg	m³	No.
INTERIOR GIRDER	970	17.9	48
EXTERIOR GIRDER			

GIRDERS REQUIRED

NUMBER	LENGTH	TOTAL LENGTH
1	36.119m	36.119m

PROJECT NO. R-0609IB
GUILFORD-RANDOLPH COUNTY
STATION: 83+34.392 -L-

SHEET 15 OF 18

STATE OF NORTH CAROLINA
DEPARTMENT OF TRANSPORTATION
RALEIGH

OPTIONAL
1600mm PRESTRESSED CONCRETE
MODIFIED BULB TEE
CONTINUOUS FOR LIVE LOAD
(WITH 15.24mm Ø PARTIALLY
DEBONDED STRANDS)
SPAN B GIRDER 3

NORTH CAROLINA PROFESSIONAL SEAL 22072 ENGINEER JOHN ARTHUR DILLWORTH
7-21-05

REVISIONS								SHEET NO.
NO.	BY:	DATE:	NO.	BY:	DATE:			S-52
1			3					TOTAL SHEETS
2			4					199

STD. NO. PCG9SM

ASSEMBLED BY : J C PENDERGRAFT DATE : 6/05
CHECKED BY : J T DIFFEE DATE : 6/05

DRAWN BY : EEM 2/6/97
CHECKED BY : VAP 2/6/97

REV. 7/17/98 RWW/LES
REV. 8/16/99 RWW/LES
REV. 10/17/00 RWW/LES

WETHERILL ENGINEERING
559 Jones Franklin Rd. Suite 164
Raleigh, N.C. 27606
Bus: 919 851 8077
Fax: 919 851 8107
TRANSPORTATION PLANNING/DESIGN - BRIDGE/STRUCTURE DESIGN
CIVIL/SITE DESIGN - GIS/GPS - CONSTRUCTION OBSERVATION

P:\R-0609IB\R0609IB_STTE2\Structures\DWG\BULBTEE\Dwg 19-25_pcg9sm-sfr.dgn
7/21/2005 9:42:33 AM

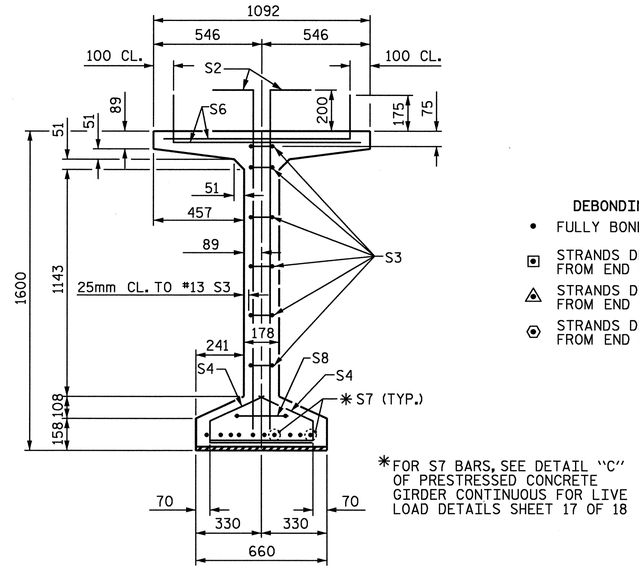

SECTION A-A

✱FOR S7 BARS, SEE DETAIL "C" OF PRESTRESSED CONCRETE GIRDER CONTINUOUS FOR LIVE LOAD DETAILS SHEET 17 OF 18

DEBONDING LEGEND

- • FULLY BONDED STRANDS
- STRANDS DEBONDED FOR 2.000m FROM END OF GIRDER
- STRANDS DEBONDED FOR 4.000m FROM END OF GIRDER
- STRANDS DEBONDED FOR 10.000m FROM END OF GIRDER

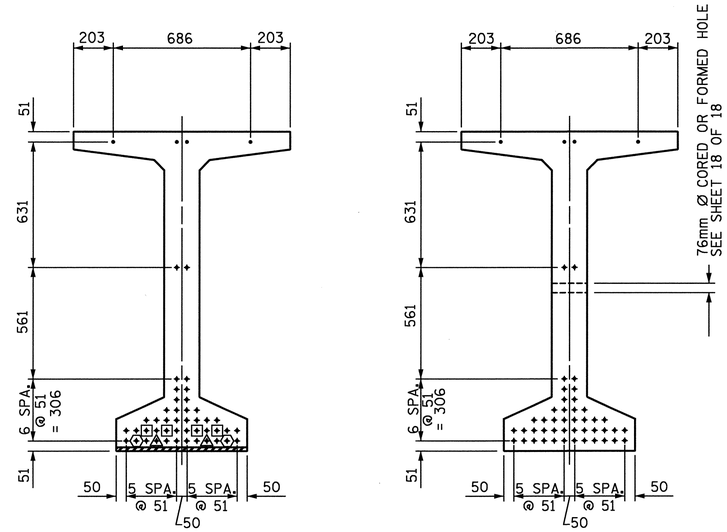

AT END OF GIRDER — AT ℄ OF GIRDER

15.24mm Ø LOW RELAXATION STRAND LAYOUT

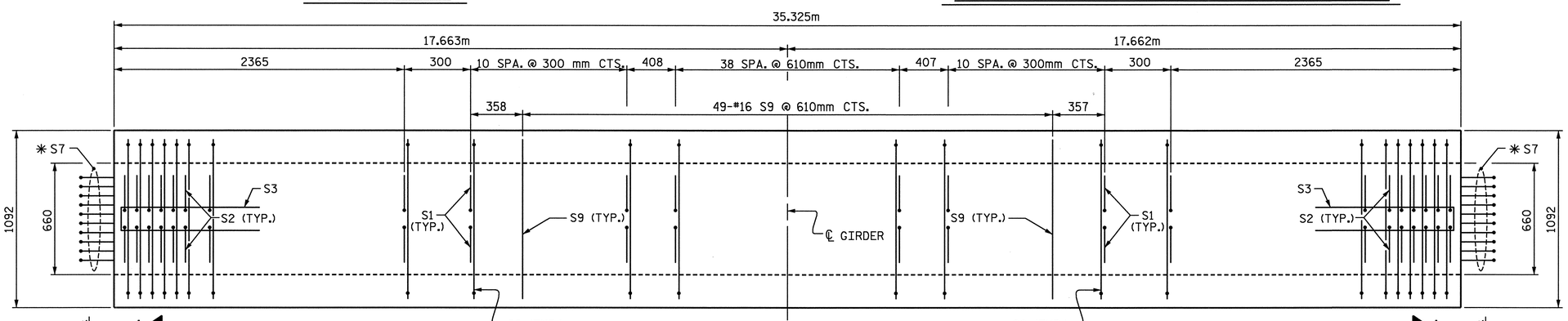

PLAN OF GIRDER

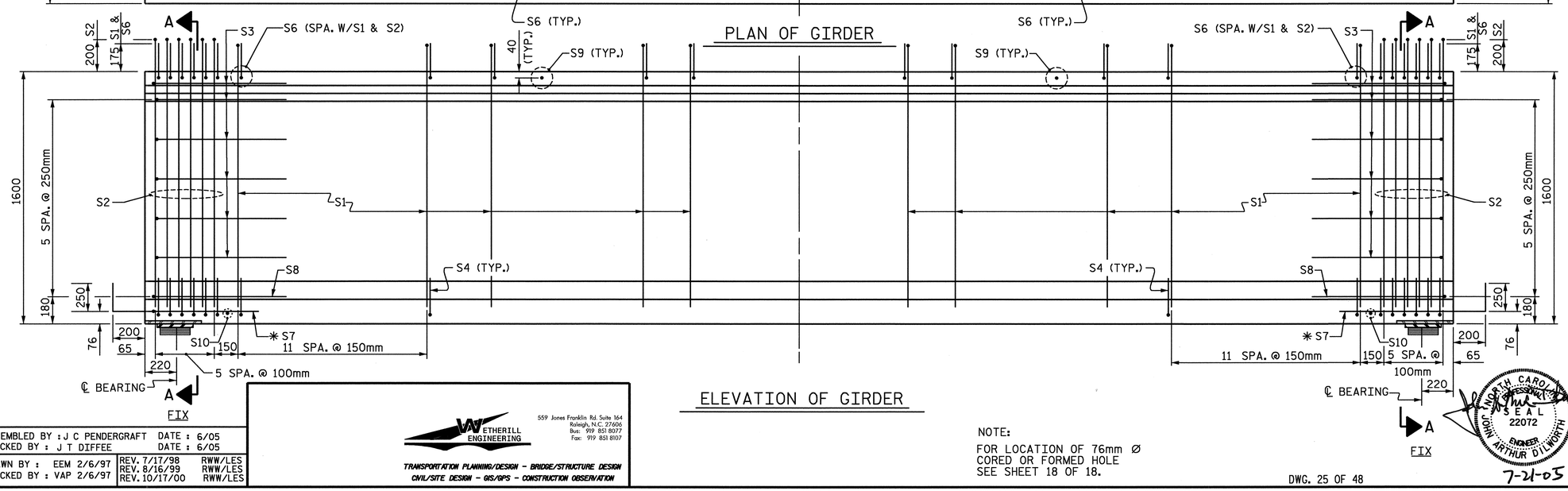

ELEVATION OF GIRDER

NOTE:

FOR LOCATION OF 76mm Ø CORED OR FORMED HOLE SEE SHEET 18 OF 18.

DWG. 25 OF 48

15.24mm Ø L. R. GRADE 270 STRANDS		
AREA (mm^2)	ULTIMATE STRENGTH (kN PER STRAND)	APPLIED PRESTRESS (kN PER STRAND)
140.00	260.4	195.3

REINFORCING STEEL FOR ONE GIRDER

BAR	NUMBER	SIZE	TYPE	LENGTH	WEIGHT
S1	170	#13	1	1900	321
S2	24	#16	1	1920	72
S3	12	#13	2	2560	31
S4	72	#13	3	920	66
S6	194	#16	1	1160	349
✱S7	20	#16	STR	1120	35
S8	2	#16	2	2740	9
S9	49	#16	STR	980	75
S10	2	#10	STR	560	1

✱NOTE: S7 BARS SHALL BE BENT BEFORE SHIPMENT. HEAT BENDING SHALL NOT BE ALLOWED.

BAR TYPES

ALL BAR DIMENSIONS ARE OUT-TO-OUT

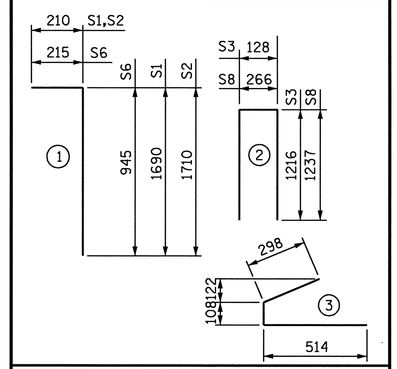

QUANTITIES FOR ONE GIRDER

	REINFORCING STEEL	68.9 MPa CONCRETE	15.24mm Ø L.R. STRANDS
	kg	m^3	No.
INTERIOR GIRDER			
EXTERIOR GIRDER	959	17.6	48

GIRDERS REQUIRED

NUMBER	LENGTH	TOTAL LENGTH
1	35.325m	35.325m

PROJECT NO. R-0609IB

GUILFORD-RANDOLPH COUNTY

STATION: 83+34.392 -L-

SHEET 16 OF 18

STATE OF NORTH CAROLINA
DEPARTMENT OF TRANSPORTATION
RALEIGH

OPTIONAL
1600mm PRESTRESSED CONCRETE
MODIFIED BULB TEE
CONTINUOUS FOR LIVE LOAD
(WITH 15.24mm Ø PARTIALLY DEBONDED STRANDS)
SPAN B GIRDER 4

REVISIONS							
NO.	BY:	DATE:	NO.	BY:	DATE:		
1			3				
2			4				

SHEET NO. S-53

TOTAL SHEETS 199

NORTH CAROLINA PROFESSIONAL SEAL 22072 ENGINEER JOHN ARTHUR DILLWORTH 7-21-05

ASSEMBLED BY : J C PENDERGRAFT DATE : 6/05
CHECKED BY : J T DIFFEE DATE : 6/05

DRAWN BY : EEM 2/6/97 REV. 7/17/98 RWW/LES
CHECKED BY : VAP 2/6/97 REV. 8/16/99 RWW/LES
REV. 10/17/00 RWW/LES

WETHERILL ENGINEERING
559 Jones Franklin Rd. Suite 164
Raleigh, N.C. 27606
Bus: 919 851 8077
Fax: 919 851 8107
TRANSPORTATION PLANNING/DESIGN - BRIDGE/STRUCTURE DESIGN
CIVIL/SITE DESIGN - GIS/GPS - CONSTRUCTION OBSERVATION

P:\R-0609IB\R0609IB_SITE2\Structures\DWG\BULBTEE\Dwg 19-25_pcg9sm-str.dgn
7/21/2005 9:42:48 AM

STD. NO. PCG9SM

15.24mm Ø DRAPED STRAND PATTERN

DEAD LOAD DEFLECTION TABLE FOR GIRDER 1

	SPAN A											SPAN B										
TENTH POINTS	0	1	2	3	4	5	6	7	8	9	10	0	1	2	3	4	5	6	7	8	9	10
CAMBER (GIRDER ALONE IN PLACE) ↑	0	0.042	0.074	0.097	0.110	0.115	0.110	0.097	0.074	0.042	0	0	0.063	0.111	0.145	0.166	0.174	0.166	0.145	0.111	0.063	0
DEFLECTION DUE TO SUPERIMPOSED D.L.✳ ↓	0	0.011	0.022	0.030	0.036	0.037	0.036	0.030	0.022	0.011	0	0	0.019	0.038	0.052	0.061	0.065	0.061	0.052	0.038	0.019	0
FINAL CAMBER ↑	0	31	52	67	74	78	74	67	52	31	0	0	44	73	93	105	109	105	93	73	44	0

15.24mm Ø DRAPED STRAND PATTERN

DEAD LOAD DEFLECTION TABLE FOR GIRDER 2

	SPAN A											SPAN B										
TENTH POINTS	0	1	2	3	4	5	6	7	8	9	10	0	1	2	3	4	5	6	7	8	9	10
CAMBER (GIRDER ALONE IN PLACE) ↑	0	0.043	0.075	0.098	0.112	0.116	0.112	0.098	0.075	0.043	0	0	0.061	0.109	0.143	0.163	0.171	0.163	0.143	0.109	0.061	0
DEFLECTION DUE TO SUPERIMPOSED D.L.✳ ↓	0	0.012	0.024	0.033	0.039	0.041	0.039	0.033	0.024	0.012	0	0	0.018	0.035	0.049	0.058	0.061	0.058	0.049	0.035	0.018	0
FINAL CAMBER ↑	0	31	51	65	73	75	73	65	51	31	0	0	43	74	94	105	110	105	94	74	43	0

15.24mm Ø DRAPED STRAND PATTERN

DEAD LOAD DEFLECTION TABLE FOR GIRDER 3

	SPAN A											SPAN B										
TENTH POINTS	0	1	2	3	4	5	6	7	8	9	10	0	1	2	3	4	5	6	7	8	9	10
CAMBER (GIRDER ALONE IN PLACE) ↑	0	0.043	0.076	0.099	0.113	0.117	0.113	0.099	0.076	0.043	0	0	0.060	0.106	0.140	0.160	0.167	0.160	0.140	0.106	0.060	0
DEFLECTION DUE TO SUPERIMPOSED D.L.✳ ↓	0	0.013	0.025	0.035	0.041	0.043	0.041	0.035	0.025	0.013	0	0	0.017	0.032	0.045	0.053	0.056	0.053	0.045	0.032	0.017	0
FINAL CAMBER ↑	0	30	51	64	72	74	72	64	51	30	0	0	43	74	95	107	111	107	95	74	43	0

15.24mm Ø DRAPED STRAND PATTERN

DEAD LOAD DEFLECTION TABLE FOR GIRDER 4

	SPAN A											SPAN B										
TENTH POINTS	0	1	2	3	4	5	6	7	8	9	10	0	1	2	3	4	5	6	7	8	9	10
CAMBER (GIRDER ALONE IN PLACE) ↑	0	0.044	0.077	0.100	0.114	0.118	0.114	0.100	0.077	0.044	0	0	0.059	0.104	0.137	0.157	0.164	0.157	0.137	0.104	0.059	0
DEFLECTION DUE TO SUPERIMPOSED D.L.✳ ↓	0	0.011	0.022	0.030	0.035	0.037	0.035	0.030	0.022	0.011	0	0	0.012	0.024	0.034	0.039	0.041	0.039	0.034	0.024	0.012	0
FINAL CAMBER ↑	0	33	55	70	79	81	79	70	55	33	0	0	47	80	103	118	123	118	103	80	47	0

✳ INCLUDES FUTURE WEARING SURFACE.
ALL VALUES SHOWN IN METERS, EXCEPT "FINAL CAMBER" WHICH IS SHOWN IN MILLIMETERS.
DEFLECTIONS ARE TAKEN AT TENTH POINTS BETWEEN BEARINGS.

NOTES

ALL PRESTRESSING STRANDS SHALL BE 7-WIRE LOW-RELAXATION GRADE 270 STRANDS AND SHALL CONFORM TO AASHTO M203M EXCEPT FOR SAMPLING REQUIREMENTS WHICH SHALL BE IN ACCORDANCE WITH THE STANDARD SPECIFICATIONS.

TIE ROD ASSEMBLY SHALL BE AASHTO M270 GRADE 250 STRUCTURAL STEEL.

ALL REINFORCING STEEL SHALL BE GRADE 420.

APPLY EPOXY PROTECTIVE COATING TO END OF GIRDER SURFACES INDICATED IN ELEVATION VIEW. FOR EPOXY PROTECTIVE COATING, SEE SPECIAL PROVISIONS.

EMBEDDED PLATE "B-1" SHALL BE GALVANIZED IN ACCORDANCE WITH THE SPECIFICATIONS. BEVEL EDGES OF PLATE "B-1" TO GIVE CLOSE FIT BUT NOT TIGHT FIT TO STEEL CASTING FORM.

ANCHOR STUDS SHALL CONFORM TO AASHTO M169 GRADES 1010 THROUGH 1020 OR APPROVED EQUAL, AND SHALL MEET THE TYPE "B" REQUIREMENTS OF SUBSECTION 7.3 OF THE ANSI/AASHTO/AWS D1.5 BRIDGE WELDING CODE.

AT ENDS OF GIRDERS TO BE EMBEDDED IN CONCRETE DIAPHRAGMS OR END WALLS, PRESTRESSING STRANDS MAY EXTEND A MAXIMUM OF 50mm BEYOND THE GIRDER ENDS. OTHERWISE, PRESTRESSING STRANDS SHALL BE CUT FLUSH WITH THE GIRDER ENDS.

DEPENDING ON THE TYPE OF SYSTEM USED TO SUPPORT THE DECK SLAB FORMS, PRESET ANCHORS MAY BE NECESSARY IN THE PRESTRESSED CONCRETE GIRDER.

THE TOP SURFACE OF THE GIRDER, EXCLUDING THE OUTSIDE 100mm, SHALL BE RAKED TO A DEPTH OF 6mm.

WHEN DRAPED STRANDS ARE DETAILED, THE LONGITUDINAL LOCATION OF THE HOLD DOWN DEVICES SHALL BE WITHIN 150mm OF THE LOCATION SHOWN AND THE CENTER OF GRAVITY OF THE GROUP OF DRAPED STRANDS SHALL BE LOCATED WITHIN 13mm OF THE THEORETICAL LOCATION SHOWN.

A 50mm x 50mm CHAMFER IS ALLOWED AT THE INTERSECTION OF THE WEB AND THE BOTTOM FLANGE OF THE 1600mm AND 1829mm MODIFIED BULB TEES ONLY.

FOR VERTICAL CRACKS IN PRESTRESSED CONCRETE GIRDERS PRIOR TO DETENSIONING, SEE SPECIAL PROVISIONS.

THE CONTRACTOR HAS THE OPTION TO PROVIDE, AT NO ADDITIONAL COST TO THE DEPARTMENT, 2 ADDITIONAL STRANDS AT THE TOP OF THE GIRDER TO FACILITATE TYING OF THE REINFORCING STEEL. THESE STRANDS SHALL BE PULLED TO A LOAD OF 20 Kn.

FOR PRESTRESSED CONCRETE MEMBERS, SEE SPECIAL PROVISIONS.

THE TRANSFER OF LOAD FROM THE ANCHORAGES TO THE GIRDER SHALL BE DONE WHEN CONCRETE HAS REACHED A COMPRESSIVE STRENGTH OF NOT LESS THAN THE FOLLOWING:

SPAN 'A'	44.1 MPa
SPAN 'B'	55.1 MPa

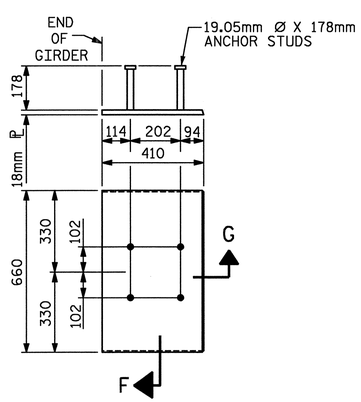

EMBEDDED PLATE "B-1" DETAILS FOR AASHTO TYPE IV GIRDER 1600mm & 1829mm MODIFIED BULB TEES

(2 REQ'D PER GIRDER)

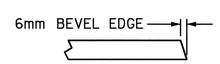

SECTION "G"

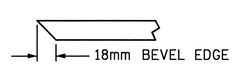

SECTION "F"

(SEE NOTES)

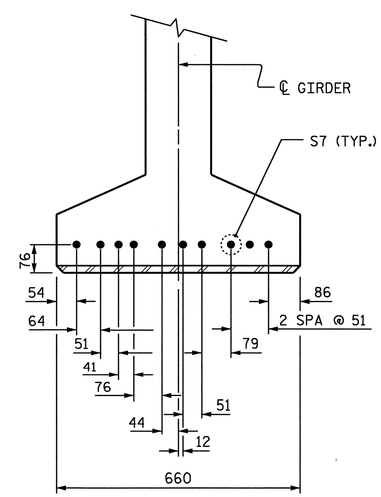

DETAIL "C"

(FOR 1600mm & 1829mm MODIFIED BULB TEES)

ASSEMBLED BY : J. T. DIFFEE	DATE : 5-23-05		
CHECKED BY : J. A. DILWORTH	DATE : 5-24-05		
DRAWN BY : ELR 11/91	REV. 8/16/99	MAB/LES	
CHECKED BY : GRP 11/91	REV. 10/17/00	RWW/LES	
	REV. 7/10/01R	LES/RDR	

P:\R-0609IB\R0609IB_SITE2\Structures\DWG\BULBTEE\Dwg26_Camber01.dgn
7/21/2005 9:48:01 AM

PROJECT NO. R-0609IB
GUILFORD-RANDOLPH COUNTY
STATION: 83+34.392 -L-

SHEET 17 OF 18

NORTH CAROLINA PROFESSIONAL SEAL 22072 ENGINEER JOHN ARTHUR DILWORTH
7-21-05

WETHERILL ENGINEERING
559 Jones Franklin Rd. Suite 164
Raleigh, N.C. 27606
Bus: 919 851 8077
Fax: 919 851 8107

TRANSPORTATION PLANNING/DESIGN - BRIDGE/STRUCTURE DESIGN
CIVIL/SITE DESIGN - GIS/GPS - CONSTRUCTION OBSERVATION

STATE OF NORTH CAROLINA
DEPARTMENT OF TRANSPORTATION
RALEIGH

STANDARD
PRESTRESSED CONCRETE GIRDER
CONTINUOUS FOR LIVE LOAD
DETAILS

REVISIONS								SHEET NO.
NO.	BY:	DATE:	NO.	BY:	DATE:			S-54
1			3					TOTAL SHEETS
2			4					199

DWG. 26 OF 48

STD. NO. PCG11SM

15.24mm Ø STRAIGHT STRAND PATTERN

DEAD LOAD DEFLECTION TABLE FOR GIRDER 1

	SPAN A											SPAN B										
TENTH POINTS	0	1	2	3	4	5	6	7	8	9	10	0	1	2	3	4	5	6	7	8	9	10
CAMBER (GIRDER ALONE IN PLACE) ↑	0	0.044	0.077	0.100	0.114	0.118	0.114	0.100	0.077	0.044	0	0	0.065	0.114	0.147	0.167	0.173	0.167	0.147	0.114	0.065	0
DEFLECTION DUE TO SUPERIMPOSED D.L.✳ ↓	0	0.011	0.022	0.030	0.036	0.037	0.036	0.030	0.022	0.011	0	0	0.019	0.038	0.052	0.061	0.065	0.061	0.052	0.038	0.019	0
FINAL CAMBER ↑	0	33	55	70	78	81	78	70	55	33	0	0	46	76	95	106	108	106	95	76	46	0

15.24mm Ø STRAIGHT STRAND PATTERN

DEAD LOAD DEFLECTION TABLE FOR GIRDER 2

	SPAN A											SPAN B										
TENTH POINTS	0	1	2	3	4	5	6	7	8	9	10	0	1	2	3	4	5	6	7	8	9	10
CAMBER (GIRDER ALONE IN PLACE) ↑	0	0.044	0.078	0.101	0.115	0.120	0.115	0.101	0.078	0.044	0	0	0.064	0.112	0.144	0.164	0.170	0.164	0.144	0.112	0.064	0
DEFLECTION DUE TO SUPERIMPOSED D.L.✳ ↓	0	0.012	0.024	0.033	0.039	0.041	0.039	0.033	0.024	0.012	0	0	0.018	0.035	0.049	0.058	0.061	0.058	0.049	0.035	0.018	0
FINAL CAMBER ↑	0	32	54	68	76	79	76	68	54	32	0	0	46	77	95	106	109	106	95	77	46	0

15.24mm Ø STRAIGHT STRAND PATTERN

DEAD LOAD DEFLECTION TABLE FOR GIRDER 3

	SPAN A											SPAN B										
TENTH POINTS	0	1	2	3	4	5	6	7	8	9	10	0	1	2	3	4	5	6	7	8	9	10
CAMBER (GIRDER ALONE IN PLACE) ↑	0	0.045	0.079	0.103	0.117	0.121	0.117	0.103	0.079	0.045	0	0	0.060	0.104	0.135	0.153	0.159	0.153	0.135	0.104	0.060	0
DEFLECTION DUE TO SUPERIMPOSED D.L.✳ ↓	0	0.013	0.025	0.035	0.041	0.043	0.041	0.035	0.025	0.013	0	0	0.017	0.032	0.045	0.053	0.056	0.053	0.045	0.032	0.017	0
FINAL CAMBER ↑	0	32	54	68	76	78	76	68	54	32	0	0	43	72	90	100	103	100	90	72	43	0

15.24mm Ø STRAIGHT STRAND PATTERN

DEAD LOAD DEFLECTION TABLE FOR GIRDER 4

	SPAN A											SPAN B										
TENTH POINTS	0	1	2	3	4	5	6	7	8	9	10	0	1	2	3	4	5	6	7	8	9	10
CAMBER (GIRDER ALONE IN PLACE) ↑	0	0.046	0.080	0.104	0.118	0.123	0.118	0.104	0.080	0.046	0	0	0.058	0.102	0.132	0.150	0.156	0.150	0.132	0.102	0.058	0
DEFLECTION DUE TO SUPERIMPOSED D.L.✳ ↓	0	0.011	0.022	0.030	0.035	0.037	0.035	0.030	0.022	0.011	0	0	0.012	0.024	0.033	0.039	0.041	0.039	0.033	0.024	0.012	0
FINAL CAMBER ↑	0	35	58	74	83	86	83	74	58	35	0	0	46	78	99	111	115	111	99	78	46	0

✳ INCLUDES FUTURE WEARING SURFACE.
ALL VALUES SHOWN IN METERS, EXCEPT "FINAL CAMBER" WHICH IS SHOWN IN MILLIMETERS.
DEFLECTIONS ARE TAKEN AT TENTH POINTS BETWEEN BEARINGS.

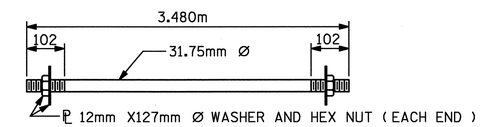

31.75mm Ø TIE ROD ASSEMBLY

(6 COMPLETE ASSEMBLIES REQUIRED)

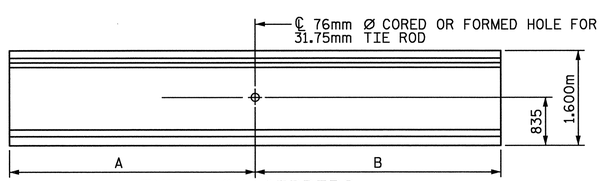

EXTERIOR GIRDERS
ONE HOLE REQUIRED

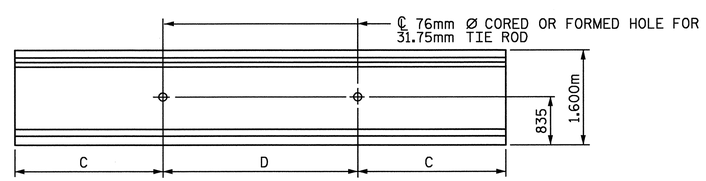

INTERIOR GIRDERS
TWO HOLES REQUIRED

TIE ROD PLACEMENT								
GIRDER	SPAN A				SPAN B			
	A	B	C	D	A	B	C	D
1	16.496	15.645	----	----	19.284	18.423	----	----
2	----	----	15.840	0.850	----	----	18.026	0.861
3	----	----	16.034	0.851	----	----	17.629	0.861
4	16.229	17.079	----	----	17.233	18.092	----	----

NOTE: LENGTH IN METERS

PLACEMENT OF TIE ROD HOLES

PROJECT NO. R-0609IB
GUILFORD-RANDOLPH COUNTY
STATION: 83+34.392 -L-

SHEET 18 OF 18

NORTH CAROLINA PROFESSIONAL SEAL 22072 ENGINEER JOHN ARTHUR DILWORTH
7-21-05

ETHERILL ENGINEERING
559 Jones Franklin Rd. Suite 164
Raleigh, N.C. 27606
Bus: 919 851 8077
Fax: 919 851 8107
TRANSPORTATION PLANNING/DESIGN - BRIDGE/STRUCTURE DESIGN
CIVIL/SITE DESIGN - GIS/GPS - CONSTRUCTION OBSERVATION

STATE OF NORTH CAROLINA
DEPARTMENT OF TRANSPORTATION
RALEIGH

STANDARD
PRESTRESSED CONCRETE GIRDER
CONTINUOUS FOR LIVE LOAD
DETAILS

REVISIONS						SHEET NO.
NO.	BY	DATE	NO.	BY	DATE	S-55
1			1			TOTAL SHEETS
2			2			199

DRAWN BY: J. T. DIFFEE DATE: 5-23-05
CHECKED BY: J. A. DILWORTH DATE: 5-24-05

DWG. 27 OF 48

P:\R-0609IBVR0609IB_STTE2\Structures\DWG\BULBTEE\Dwg27_Camber02.dgn
7/21/2005 9:48:36 AM

SOLE PLATE THICKNESS TABLE								
SOLE PLATE DIMENSIONS								
SPAN A								
GIRDER	END BENT 1				BENT 1			
	PL NO.	INT/FIX	T1	T2	PL NO.	INT/FIX	T1	T2
A1	P1	INT.	32	46	P2	FIX.	32	40
A2	P1	INT.	32	46	P2	FIX.	32	40
A3	P1	INT.	32	46	P2	FIX.	32	40
A4	P1	INT.	32	46	P2	FIX.	32	40
SOLE PLATE DIMENSIONS								
SPAN B								
GIRDER	BENT 1				END BENT 2			
	PL NO.	INT/FIX	T1	T2	PL NO.	INT/FIX	T1	T2
B1	P3	FIX.	55	67	P7	INT.	32	37
B2	P4	FIX.	52	64	P7	INT.	32	37
B3	P5	FIX.	48	61	P7	INT.	32	37
B4	P6	FIX.	45	58	P7	INT.	32	37

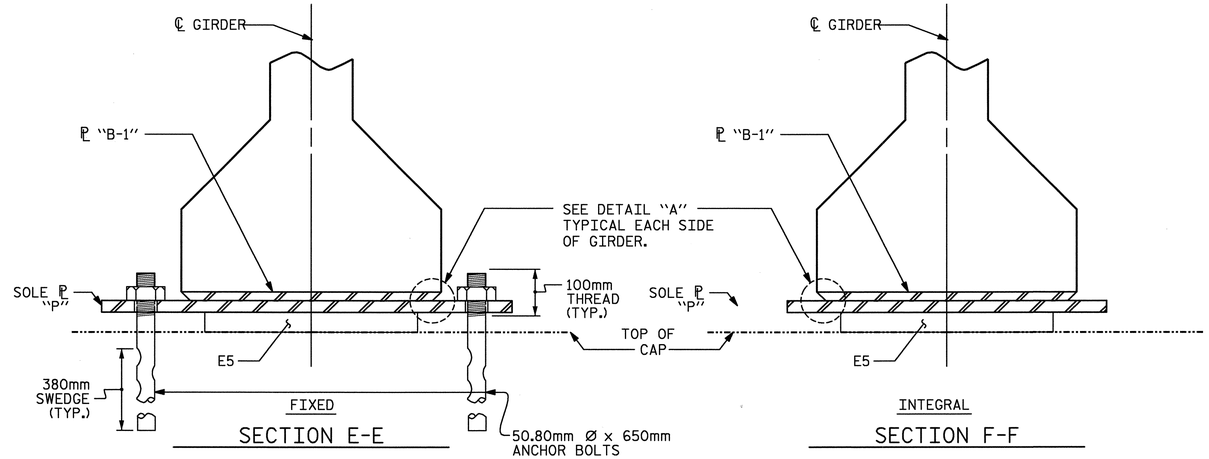

SECTION E-E

SECTION F-F

NOTES

FOR ELASTOMERIC BEARINGS, SEE SPECIAL PROVISIONS.

AT ALL FIXED POINTS OF SUPPORT, NUTS FOR ANCHOR BOLTS ARE TO BE TIGHTENED FINGER TIGHT AND THEN BACKED OFF ½ TURN. THE THREAD OF THE NUT AND BOLT SHALL THEN BE BURRED WITH A SHARP POINTED TOOL.

STEEL SOLE PLATES, ANCHOR BOLTS AND NUTS SHALL BE GALVANIZED IN ACCORDANCE WITH THE STANDARD SPECIFICATIONS.

PRIOR TO WELDING, GRIND THE GALVANIZED SURFACE OF THE PORTION OF THE EMBEDDED PLATE AND SOLE PLATE THAT ARE TO BE WELDED. AFTER WELDING, DAMAGED GALVANIZED SURFACES SHALL BE REPAIRED IN ACCORDANCE WITH THE STANDARD SPECIFICATIONS.

WHEN WELDING THE SOLE PLATE TO THE EMBEDDED PLATE IN THE GIRDER, USE TEMPERATURE INDICATING WAX PENS, OR OTHER SUITABLE MEANS, TO ENSURE THAT THE TEMPERATURE OF THE SOLE PLATE DOES NOT EXCEED 149°C. TEMPERATURES ABOVE THIS MAY DAMAGE THE ELASTOMER.

SOLE PLATE "P", ANCHOR BOLTS AND NUTS, SHALL BE INCLUDED IN THE PAY ITEM FOR PRESTRESSED CONCRETE GIRDERS.

ANCHOR BOLTS SHALL MEET THE REQUIREMENTS OF ASTM A449. NUTS SHALL MEET THE REQUIREMENTS OF AASHTO M291M-12 OR AASHTO M292M-2H. SHOP DRAWINGS ARE NOT REQUIRED FOR ANCHOR BOLTS AND NUTS. SHOP INSPECTION IS REQUIRED.

ALL SURFACES OF BEARING PLATES SHALL BE SMOOTH AND STRAIGHT.

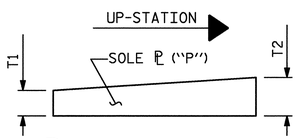

SOLE ℗ PLACEMENT DETAIL

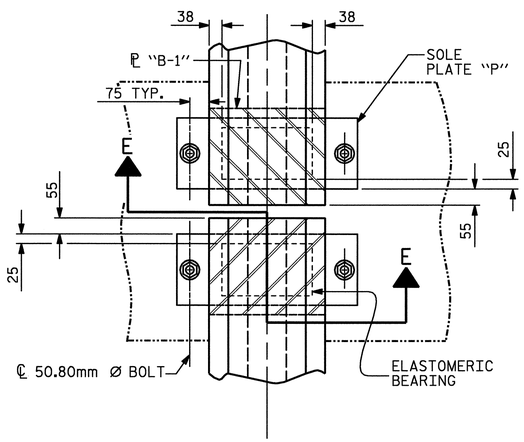

PLAN VIEW AT CONTINUOUS BENT

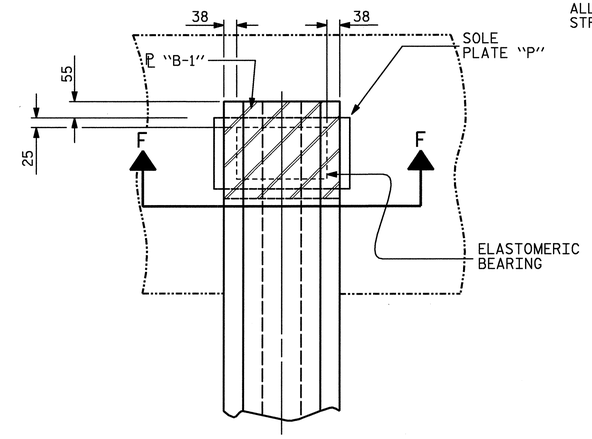

PLAN VIEW AT INTEGRAL END BENT

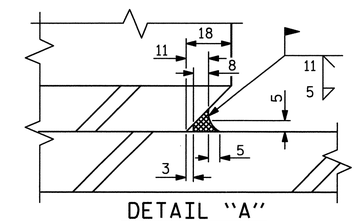

DETAIL "A"

—LOAD RATINGS—	
	MAX.D.L.+ L.L.
TYPE VI	936 kN

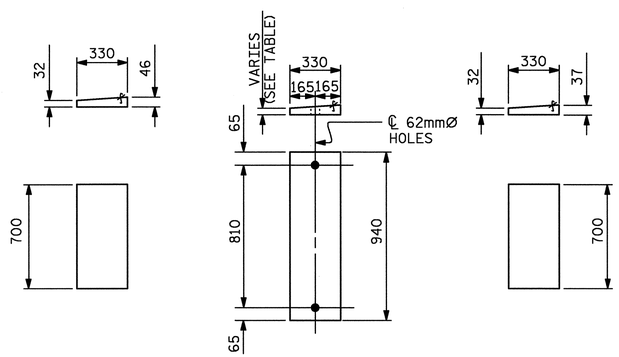

INTEGRAL
P1 (4 REQ'D)
(END BENT 1)

FIXED
P2 (4 REQ'D)
P3 (1 REQ'D)
P4 (1 REQ'D)
P5 (1 REQ'D)
P6 (1 REQ'D)
(BENT 1)

INTEGRAL
P7 (4 REQ'D)
(END BENT 2)

SOLE PLATE DETAILS ("P")

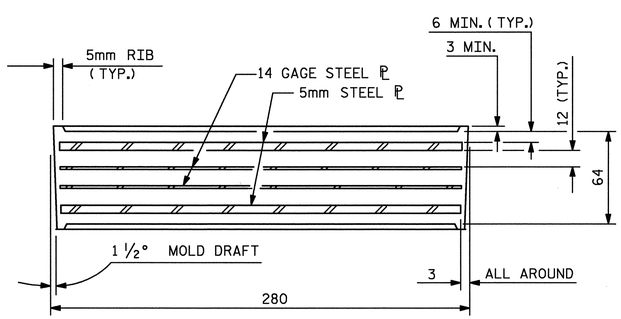

TYPICAL SECTION OF ELASTOMERIC BEARINGS

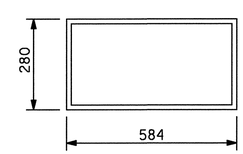

E5 (16 REQ'D)

PLAN VIEW OF ELASTOMERIC BEARING

TYPE VI

PROJECT NO. R-0609IB
GUILFORD-RANDOLPH COUNTY
STATION: 83+34.392 -L-

NORTH CAROLINA PROFESSIONAL SEAL 22072 ENGINEER JOHN ARTHUR DILWORTH
7-21-05

WETHERILL ENGINEERING
559 Jones Franklin Rd. Suite 164
Raleigh, N.C. 27606
Bus: 919 851 8077
Fax: 919 851 8107
TRANSPORTATION PLANNING/DESIGN - BRIDGE/STRUCTURE DESIGN
CIVIL/SITE DESIGN - GIS/GPS - CONSTRUCTION OBSERVATION

STATE OF NORTH CAROLINA
DEPARTMENT OF TRANSPORTATION
RALEIGH

ELASTOMERIC BEARING DETAILS
PRESTRESSED CONCRETE GIRDER SUPERSTRUCTURE

REVISIONS								SHEET NO.
NO.	BY:	DATE:	NO.	BY:	DATE:			S-56
1			3					TOTAL SHEETS
2			4					199

ASSEMBLED BY : Z. PIATEK III DATE : 5-05
CHECKED BY : J. T. DIFFEE DATE : 5-05

DWG. 28 OF 48

P:\R-0609IB\R0609IB_STTE2\Structures\DWG\BUILBTEE\Dwg28_ab4sm.dgn
7/21/2005 9:49:24 AM

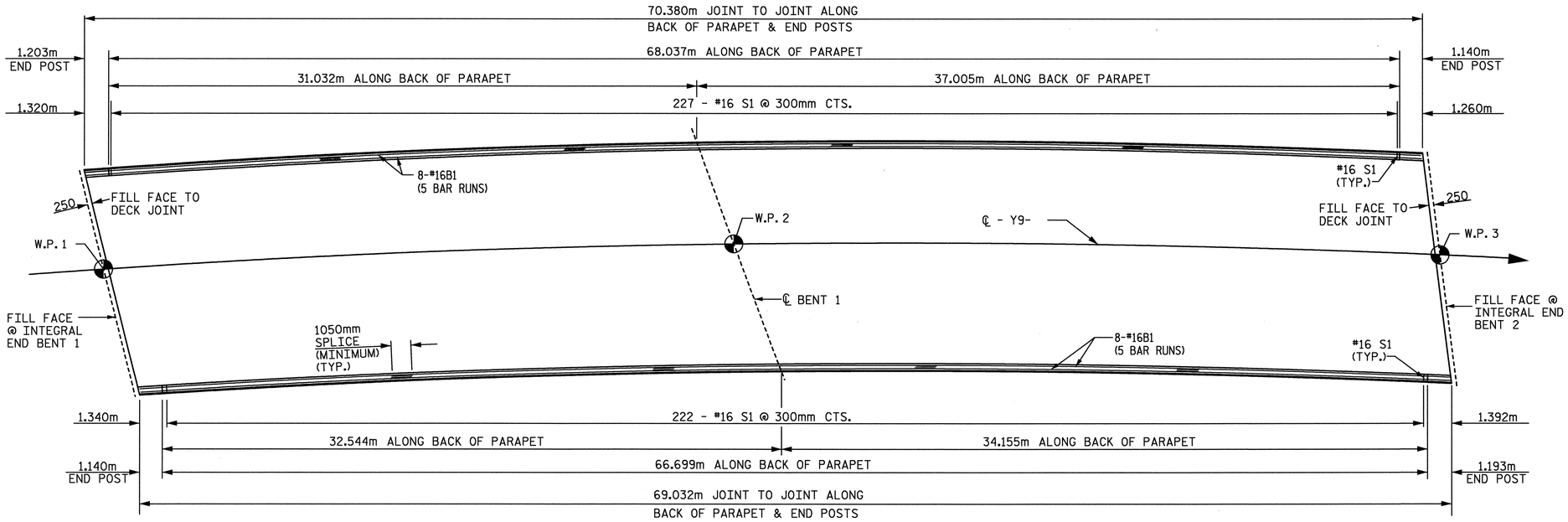

PLAN OF CONCRETE PARAPET

TWO BAR METAL RAIL					
BILL OF MATERIAL FOR CONCRETE PARAPET AND FOUR END POSTS					
BAR	NUMBER	SIZE	TYPE	LENGTH	WEIGHT
✳ B1	80	#16	STR	14900	1850
✳ E1	8	#22	STR	780	19
✳ E2	8	#22	STR	920	22
✳ E3	8	#22	STR	1060	26
✳ E4	8	#22	STR	1220	30
✳ E5	8	#22	STR	1320	32
✳ F1	8	#19	STR	600	11
✳ F2	4	#19	STR	800	7
✳ F3	4	#19	STR	800	7
✳ F4	4	#19	STR	920	8
✳ F5	4	#19	STR	940	8
✳ S1	449	#16	1	2140	1491
✳ S2	32	#16	STR	920	46
✳ EPOXY COATED					
REINFORCING STEEL				= 3557 kg	
TOTAL CLASS AA CONCRETE				= 38.3 CU. METER	
CONCRETE PARAPET AND END POSTS				= 139.412 METERS	

BAR TYPES

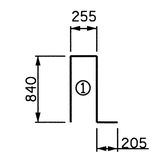

BAR DIMENSION IS OUT TO OUT

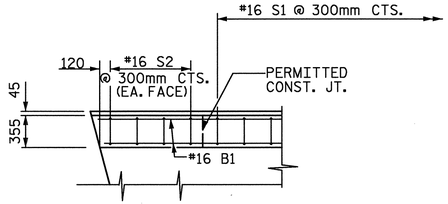

PLAN OF PARAPET

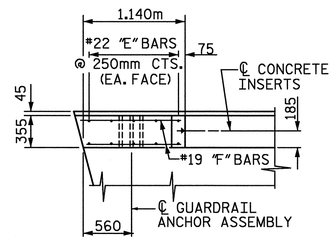

PLAN OF END POST

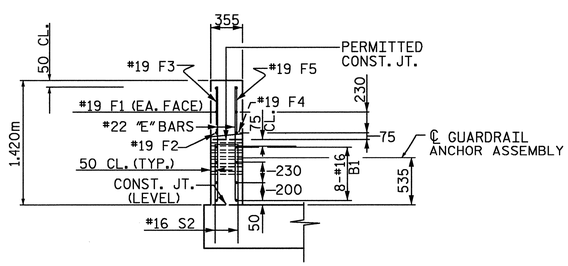

END VIEW

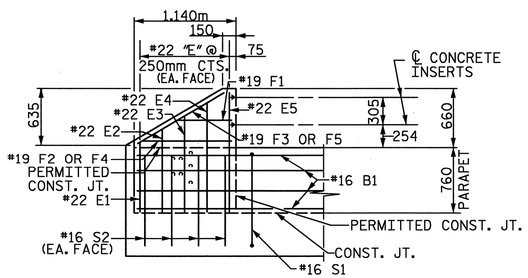

ELEVATION

PARAPET AND END POST DETAILS FOR TWO BAR RAIL

PROJECT NO. R-0609IB
GUILFORD-RANDOLPH COUNTY
STATION: 83+34.392 -L- POT

STATE OF NORTH CAROLINA
DEPARTMENT OF TRANSPORTATION
RALEIGH

END POST AND PARAPET DETAILS

NORTH CAROLINA PROFESSIONAL SEAL 22072 ENGINEER JOHN ARTHUR DILWORTH
7-21-05

WETHERILL ENGINEERING
559 Jones Franklin Rd. Suite 164
Raleigh, N.C. 27606
Bus: 919 851 8077
Fax: 919 851 8107

TRANSPORTATION PLANNING/DESIGN - BRIDGE/STRUCTURE DESIGN
CIVIL/SITE DESIGN - GIS/GPS - CONSTRUCTION OBSERVATION

REVISIONS						SHEET NO.
NO.	BY	DATE	NO.	BY	DATE	S-57
1			1			TOTAL SHEETS
2			2			199

DRAWN BY: G. WILSON DATE: 5-05
CHECKED BY: J. DILWORTH DATE: 5-05

DWG. 29 OF 48

P:\R-0609IB\R0609IB_SITE2\Structures\DWG\BUILDTEE\Dwg29_Parapet.dgn
7/21/2005 9:49:47 AM

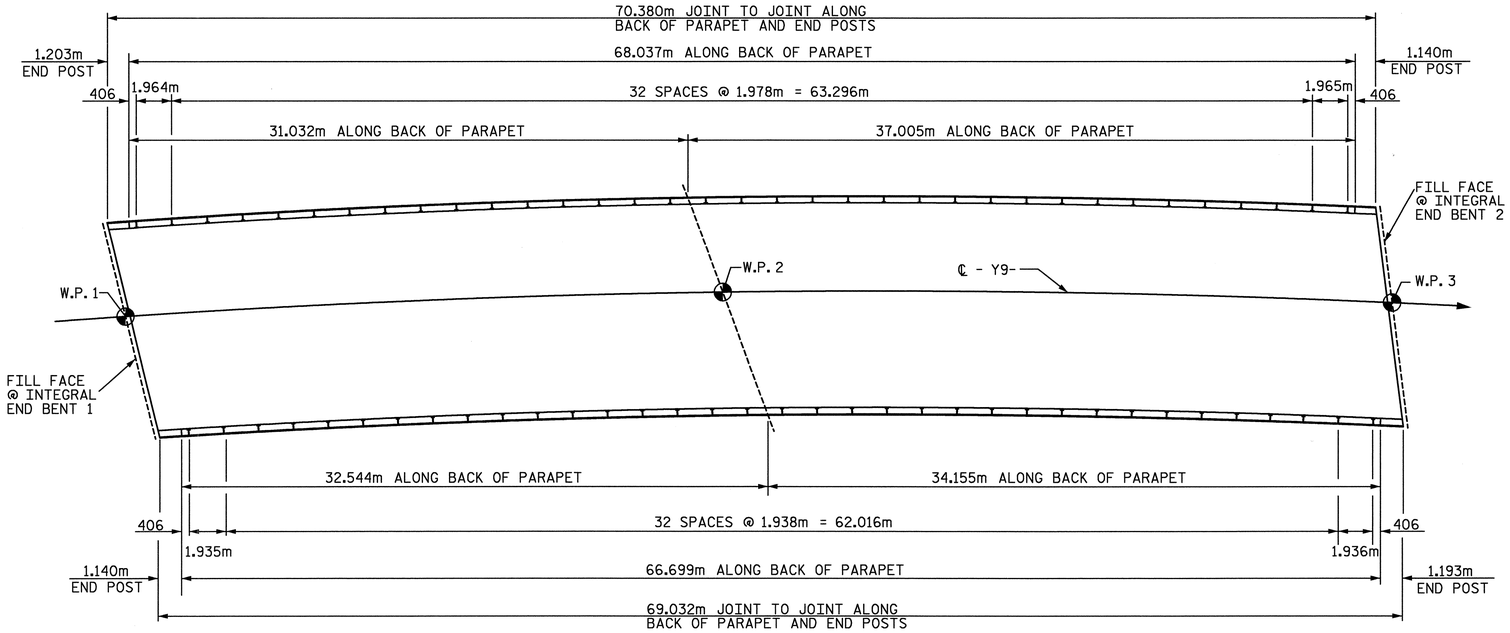

PLAN OF RAIL POST SPACINGS

NOTES

STRUCTURAL CONCRETE INSERT

THE STRUCTURAL CONCRETE INSERT ASSEMBLY SHALL CONSIST OF THE FOLLOWING COMPONENTS:

A. FERRULES SHALL BE MADE FROM STEEL MEETING THE REQUIREMENTS OF AASHTO M169, GRADE 12L14 AND SHALL HAVE A MINIMUM LENGTH OF THREADS OF 38mm.

B. 1 - 19.05mm Ø X 41mm BOLT WITH WASHER. BOLT SHALL CONFORM TO THE REQUIREMENTS OF ASTM A307. BOLT AND WASHER SHALL BE GALVANIZED. (AT THE CONTRACTOR'S OPTION, STAINLESS STEEL BOLT AND WASHER MAY BE USED AS AN ALTERNATE FOR THE 19.05mm Ø X 41mm GALVANIZED BOLT AND WASHER. THEY SHALL CONFORM TO OR EXCEED THE MECHANICAL REQUIREMENTS OF ASTM A307. THE USE OF THIS ALTERNATE SHALL BE APPROVED BY THE ENGINEER.)

C. WIRE STRUT SHOWN IN THE CONCRETE INSERT ASSEMBLY DETAIL IS THE MINIMUM ALLOWABLE SIZE AND SHALL HAVE A MINIMUM TENSILE STRENGTH OF 689 MPa. AS AN OPTION, A 11mm Ø WIRE STRUT WITH A MINIMUM TENSILE STRENGTH OF 620 MPa. IS ACCEPTABLE.

NOTES

METAL RAIL TO END POST CONNECTION

THE METAL RAIL TO END POST CONNECTION SHALL CONSIST OF THE FOLLOWING COMPONENTS :

A. 12mm PLATES SHALL CONFORM TO AASHTO M270 GRADE 250 AND SHALL BE GALVANIZED AFTER FABRICATION.

B. 19.05mm STRUCTURAL CONCRETE INSERT SHALL HAVE A WORKING LOAD SHEAR CAPACITY OF 21.4 kN. THE FERRULES SHALL ENGAGE A 19.05mm Ø X 41mm BOLT WITH 51mm O.D. WASHER IN PLACE. THE 19.05mm Ø X 41mm BOLT SHALL HAVE N. C. THREADS.

C. CAP SCREWS FOR RAIL ATTACHMENT TO ANGLE SHALL CONFORM TO THE REQUIREMENTS OF ASTM F593 ALLOY 305 STAINLESS STEEL. CAP SCREWS TO BE CENTERED IN SLOTS AT 16°C.

D. STANDARD CLAMP BARS (SEE METAL RAIL SHEET).

E. 13mm Ø PIPE SLEEVES (IF REQUIRED) TO BE GALVANIZED.

THE COST OF THE STANDARD CLAMP BARS AND CAP SCREWS USED IN THE METAL RAIL TO END POST CONNECTION SHALL BE INCLUDED IN THE UNIT CONTRACT PRICE BID FOR METERS OF 1 OR 2 BAR METAL RAILS.

THE 19.05mm STRUCTURAL CONCRETE INSERT WITH BOLT SHALL BE ASSEMBLED IN THE SHOP.

THE COST OF THE 19.05mm STRUCTURAL CONCRETE INSERT ASSEMBLY, AND THE 12mm PLATES COMPLETE IN PLACE SHALL BE INCLUDED IN THE VARIOUS PAY ITEMS.

THE CONTRACTOR, AT HIS OPTION, MAY USE AN ADHESIVE BONDING SYSTEM IN LIEU OF THE STRUCTURAL CONCRETE INSERT EMBEDDED IN THE END POST. IF THE ADHESIVE BONDING SYSTEM IS USED, THE 19.05mm Ø X 41mm BOLT WITH WASHER SHALL BE REPLACED WITH A 19.05mm Ø X 165mm BOLT AND 51mm O.D. WASHER. ALL SPECIFICATIONS THAT APPLY TO THE 19.05mm Ø X 41mm BOLT SHALL APPLY TO THE 19.05mm Ø X 165mm BOLT. SEE SPECIAL PROVISIONS FOR "ADHESIVELY ANCHORED ANCHOR BOLTS AND DOWELS". FIELD TESTING OF THE ADHESIVE BONDING SYSTEM IS NOT REQUIRED.

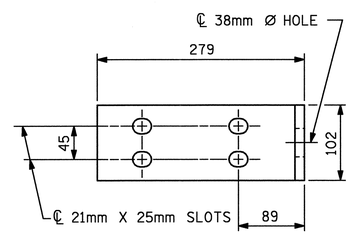

ELEVATION

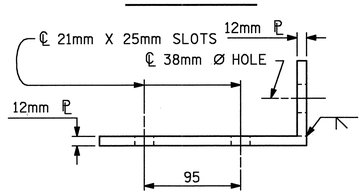

TOP VIEW

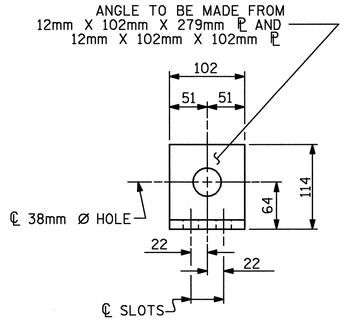

END VIEW

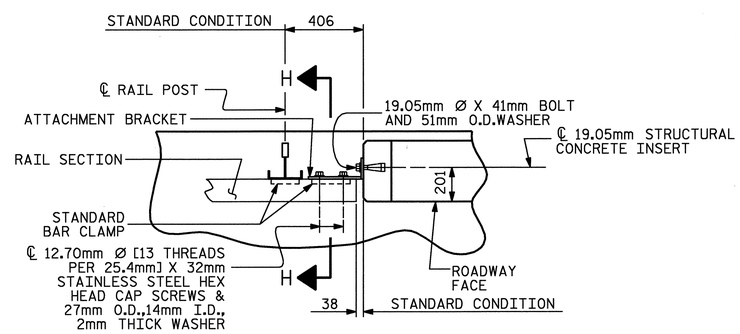

PLAN - RAIL AND END POST

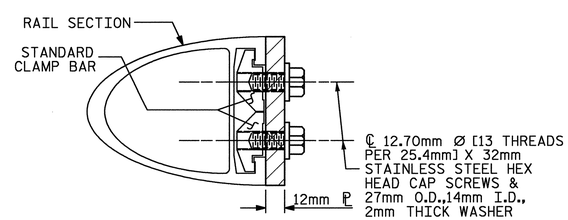

SECTION H-H

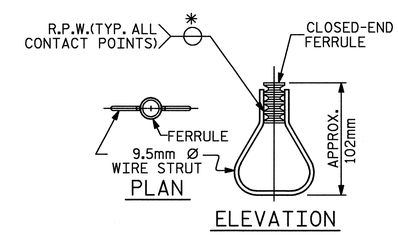

PLAN

ELEVATION

STRUCTURAL CONCRETE INSERT

* EACH WELDED ATTACHMENT OF WIRE TO FERRULE SHALL DEVELOP THE TENSILE STRENGTH OF THE WIRE.

PROJECT NO. R-0609IB

GUILFORD-RANDOLPH COUNTY

STATION: 83+34.392 -L-

DETAILS FOR ATTACHING METAL RAIL TO END POST

ASSEMBLED BY : G. WILSON	DATE : 5-05		
CHECKED BY : J. DILWORTH	DATE : 5-05		
DRAWN BY : WJH 3/89	REV. 8/16/99	RWW/LES	
CHECKED BY : CRK 3/89	REV. 10/17/00	LES/RDR	
	REV. 5/7/03	RWW/JTE	

NORTH CAROLINA PROFESSIONAL SEAL 22072 ENGINEER JOHN ARTHUR DILWORTH

7-21-05

WETHERILL ENGINEERING
559 Jones Franklin Rd. Suite 164
Raleigh, N.C. 27606
Bus: 919 851 8077
Fax: 919 851 8107

TRANSPORTATION PLANNING/DESIGN - BRIDGE/STRUCTURE DESIGN
CIVIL/SITE DESIGN - GIS/GPS - CONSTRUCTION OBSERVATION

STATE OF NORTH CAROLINA
DEPARTMENT OF TRANSPORTATION
RALEIGH

STANDARD
RAIL POST SPACINGS
AND
END OF RAIL DETAILS

REVISIONS								SHEET NO.
NO.	BY:	DATE:	NO.	BY:	DATE:			S-58
1			3					TOTAL SHEETS
2			4					199

DWG. 30 OF 48

STD. NO.BMR2SM

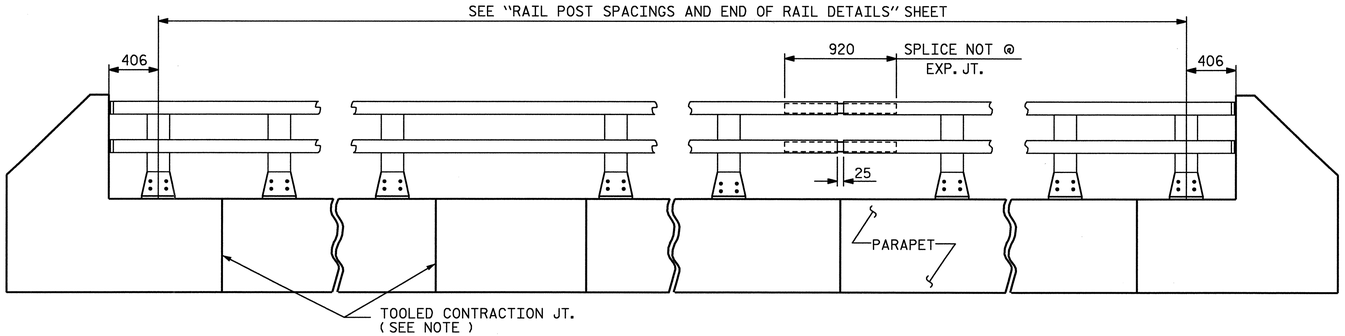

ELEVATION

NOTE: FOR ATTACHMENT OF METAL RAIL TO END POST, SEE STANDARD No. BMR2SM

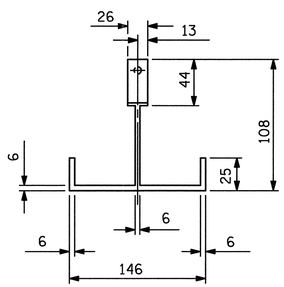

PLAN

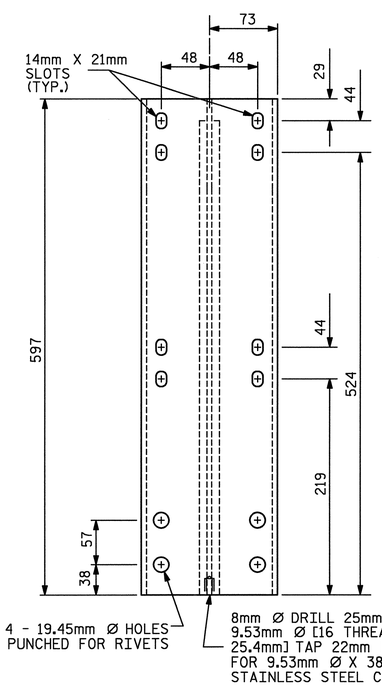

FRONT ELEVATION

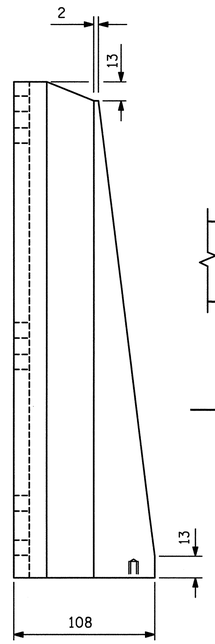

SIDE ELEVATION

DETAILS OF POST

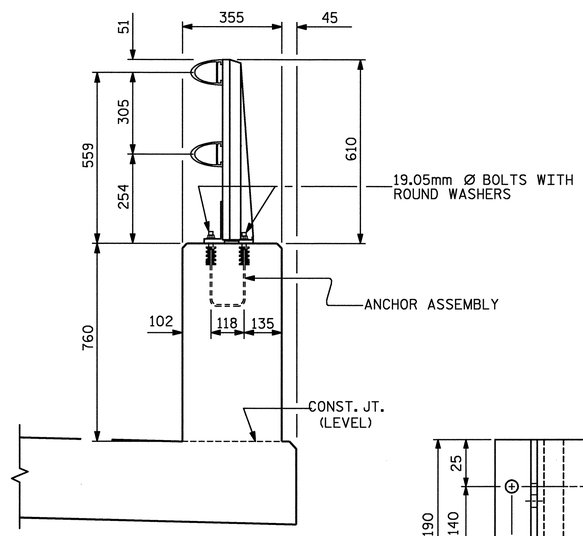

SECTION THRU PARAPET AND RAIL

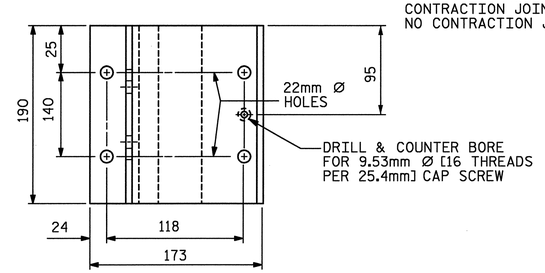

PLAN

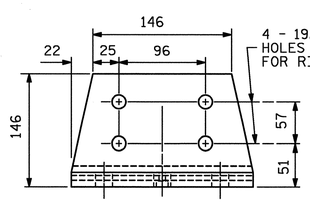

FRONT ELEVATION

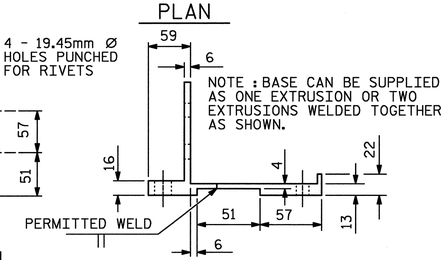

SIDE ELEVATION

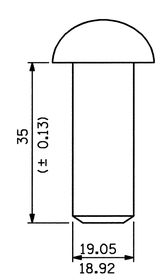

RIVET DETAIL

POST BASE DETAILS

NOTES

AT THE CONTRACTOR'S OPTION, METAL RAIL MAY BE EITHER ALUMINUM OR GALVANIZED STEEL IN ACCORDANCE WITH THE REQUIREMENTS OF THE GENERAL NOTES AND THE FOLLOWING SPECIFICATIONS FOR THE ALTERNATE MATERIALS; HOWEVER, THE CONTRACTOR WILL BE REQUIRED TO USE THE SAME RAIL MATERIAL ON ALL STRUCTURES ON THE PROJECT FOR WHICH METAL RAIL IS DESIGNATED.

ALUMINUM RAILS

MATERIAL FOR POSTS, BASES AND RAILS, EXPANSION BARS AND CLAMP BARS SHALL BE ASTM B221 ALLOY 6061-T6.

MATERIAL FOR RIVETS SHALL BE ASTM B316 ALLOY 6061-T6. RIVETS SHALL BE STANDARD BUTTON HEAD AND CONE POINT COLD DRIVEN AS PER DRAWING.

THE BASE OF RAIL POSTS, OR ANY OTHER ALUMINUM SURFACE IN CONTACT WITH CONCRETE SHALL BE THOROUGHLY COATED WITH AN ALUMINUM IMPREGNATED CAULKING COMPOUND OF APPROVED QUALITY.

MATERIAL FOR SHIMS TO BE ASTM B209 ALLOY 6061-T6.

GALVANIZED STEEL RAILS

MATERIAL AND GALVANIZING ARE TO CONFORM TO THE FOLLOWING SPECIFICATIONS:

POST, POST BASES, RAILS, EXPANSION BARS AND CLAMP BARS: AASHTO M270 GRADE 250 STRUCTURAL STEEL - GALVANIZED TO AASHTO M111.

RIVETS: RIVETS SHALL MEET THE REQUIREMENTS OF ASTM A502 FOR GRADE 1 RIVETS.

THE CUT ENDS OF GALVANIZED STEEL RAILING, AFTER GRINDING SMOOTH SHALL BE GIVEN TWO COATS OF ZINC RICH PAINT MEETING THE REQUIREMENTS OF FEDERAL SPECIFICATION MIL-P-26915 USAF TYPE 1, OR OF FEDERAL SPECIFICATIONS TT-P-641.

SHIMS: SHIMS SHALL MEET THE REQUIREMENTS OF ASTM A570M FOR GRADE 230 OR A611 FOR GRADE C AND SHALL BE GALVANIZED IN ACCORDANCE WITH AASHTO M111.

RAIL CAPS: RAIL CAPS SHALL MEET THE REQUIREMENTS OF ASTM A570M FOR GRADE 230 OR A611 FOR GRADE C AND SHALL BE GALVANIZED IN ACCORDANCE WITH AASHTO M111.

GENERAL NOTES

RAILING SHALL BE CONTINUOUS FROM END POST TO END POST OF BRIDGE. EACH JOINT IN RAIL LENGTH SHALL BE SPLICED AS DETAILED. PANEL LENGTHS OF RAIL SHALL BE ATTACHED TO A MINIMUM OF THREE POSTS.

FOR END OF RAIL TO CLEAR FACE OF CONCRETE END POST DIMENSION, SEE STANDARD NO. BMR2SM.

CAP SCREWS SHALL BE ASTM F593 ALLOY 305 STAINLESS STEEL. WASHERS SHALL MEET THE REQUIREMENTS OF ASTM F844 EXCEPT THEY SHALL BE MADE FROM ALLOY 304 STAINLESS STEEL.

CERTIFIED MILL REPORTS ARE REQUIRED FOR RAILS AND POSTS. SHOP INSPECTION IS NOT REQUIRED.

METAL RAIL POSTS SHALL BE SET NORMAL TO CURB GRADE.

METHOD OF MEASUREMENT FOR METAL RAILS: FOR LENGTH OF METAL RAILS TO BE PAID FOR, SEE THE STANDARD SPECIFICATIONS.

CURVED RAIL USAGE: WHERE RAILS ARE TO BE USED ON BRIDGES ON HORIZONTAL AND/OR VERTICAL CURVATURE THE CONTRACTOR MAY, AT HIS OPTION, HAVE THE REQUIRED CURVATURE IN THE RAIL FORMED IN THE SHOP OR IN THE FIELD. IN EITHER EVENT, THE RAIL SHALL CONFORM WITHOUT BUCKLING OR KINKING TO THE REQUIRED CURVATURE IN A UNIFORM MANNER ACCEPTABLE TO THE ENGINEER.

TO INSURE FUTURE IDENTIFICATION OF THE FABRICATOR, A PERMANENT IDENTIFYING MARK SHALL BE PLACED ON EACH POST. THE METHOD OF MARKING AND LOCATION SHALL BE SUCH THAT IT DOES NOT DETRACT FROM THE APPEARANCE OF THE POST, BUT REMAINS VISIBLE AFTER RAIL PLACEMENT.

SHIMS SHALL BE USED AS NECESSARY FOR POST ALIGNMENT.

ALLOY 6351-T5 MAY BE SUBSTITUTED FOR ALLOY 6061-T6 WHERE APPLICABLE.

MINOR VARIATIONS IN DETAILS OF METAL RAIL WILL BE CONSIDERED. DETAILS OF SUCH VARIATIONS, IF DESIRED, SHALL BE SUBMITTED FOR APPROVAL.

GROOVED CONTRACTION JOINTS, 12mm IN DEPTH, SHALL BE TOOLED IN ALL EXPOSED FACES OF THE PARAPET IN ACCORDANCE WITH ARTICLE 825-10(B) OF THE STANDARD SPECIFICATIONS. THE CONTRACTION JOINT SHALL BE LOCATED AT A SPACING OF 2.4m TO 3.5m BETWEEN EXPANSION JOINTS. NO CONTRACTION JOINTS WILL BE REQUIRED FOR SEGMENTS LESS THAN 3.5m IN LENGTH.

PAY LENGTH = 134.736 METERS

PROJECT NO. R-0609IB

GUILFORD-RANDOLPH COUNTY

STATION: 83+34.392

SHEET 1 OF 2

ASSEMBLED BY : G. WILSON	DATE : 5-05		
CHECKED BY : J. DILWORTH	DATE : 5-05		
DRAWN BY : EEM 6/94	REV. 8/16/99	RWW/LES	
CHECKED BY : RGW 6/94	REV. 10/17/00	LES/RDR	
	REV. 5/7/03R	RWW/JTE	

NORTH CAROLINA PROFESSIONAL SEAL 22072 ENGINEER JOHN ARTHUR DILWORTH

7-21-05

WETHERILL ENGINEERING

559 Jones Franklin Rd. Suite 164
Raleigh, N.C. 27606
Bus: 919 851 8077
Fax: 919 851 8107

TRANSPORTATION PLANNING/DESIGN - BRIDGE/STRUCTURE DESIGN
CIVIL/SITE DESIGN - GIS/GPS - CONSTRUCTION OBSERVATION

STATE OF NORTH CAROLINA
DEPARTMENT OF TRANSPORTATION
RALEIGH

STANDARD

2 BAR METAL RAIL

REVISIONS								SHEET NO.
NO.	BY:	DATE:	NO.	BY:	DATE:			S-59
1			3					TOTAL SHEETS
2			4					199

DWG. 31 OF 48

STD. NO. BMR3SM

P:\R-0609IB\R0609IB_SITE2\Structures\DWG\BULBTEE\Dwg31_bmr3sm.dgn
7/21/2005 9:58:22 AM

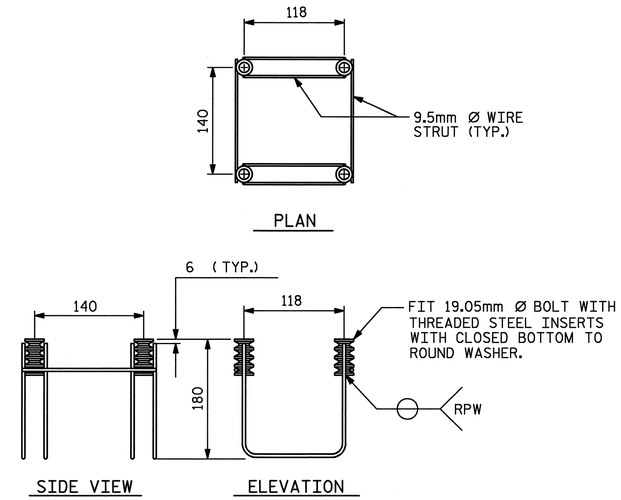

MINIMUM LENGTH OF THREADS IN INSERT (FERRULE) : 44mm

4-BOLT METAL RAIL ANCHOR ASSEMBLY

(70 ASSEMBLIES REQUIRED)

NOTES

STRUCTURAL CONCRETE ANCHOR ASSEMBLY

THE STRUCTURAL CONCRETE ANCHOR ASSEMBLY SHALL CONSIST OF THE FOLLOWING COMPONENTS:

A. FERRULES SHALL BE MADE FROM STEEL MEETING THE REQUIREMENTS OF AASHTO M169, GRADE 12L14 AND SHALL HAVE A MINIMUM LENGTH OF THREADS OF 51mm FOR 19mm FERRULES.

B. 4 - 19.05mm Ø X 64mm BOLTS WITH WASHERS. BOLTS SHALL CONFORM TO THE REQUIREMENTS OF ASTM A307. BOLTS AND WASHERS SHALL BE GALVANIZED. AT THE CONTRACTOR'S OPTION, STAINLESS STEEL BOLTS AND WASHERS MAY BE USED AS AN ALTERNATE FOR THE 19.05mm Ø X 64mm GALVANIZED BOLTS AND WASHERS. THEY SHALL CONFORM TO OR EXCEED THE MECHANICAL REQUIREMENTS OF ASTM A307. THE USE OF THIS ALTERNATE SHALL BE APPROVED BY THE ENGINEER.

C. WIRE STRUT SHOWN IN THE CONCRETE ANCHOR ASSEMBLY DETAIL IS THE MINIMUM ALLOWABLE SIZE AND SHALL HAVE A MINIMUM TENSILE STRENGTH OF 689 MPa. AS AN OPTION, A 11mm Ø WIRE STRUT WITH A TENSILE STRENGTH OF 620 MPa. IS ACCEPTABLE.

D. THE METAL RAIL ANCHOR ASSEMBLIES TO BE HOT DIPPED GALVANIZED TO CONFORM TO REQUIREMENTS OF AASHTO M111.

E. THE COST OF THE METAL RAIL ANCHOR ASSEMBLY WITH BOLTS AND WASHERS COMPLETE IN PLACE SHALL BE INCLUDED IN THE PRICE BID FOR METERS OF METAL RAIL.

F. BOLTS TO BE TIGHTENED ONE-HALF TURN WITH A WRENCH FROM A FINGER-TIGHT POSITION.

THE CONTRACTOR, AT HIS OPTION, MAY USE ADHESIVELY ANCHORED ANCHOR BOLTS IN PLACE OF THE METAL ANCHOR ASSEMBLY. THE YIELD LOAD OF THE 19.05mm Ø BOLT IS 44.5 kN. FIELD TESTING OF THE ADHESIVE BONDING SYSTEM IS REQUIRED. SEE SPECIAL PROVISIONS FOR "ADHESIVELY ANCHORED ANCHOR BOLTS OR DOWELS".

WHEN ADHESIVELY ANCHORED ANCHOR BOLTS ARE USED, BOLTS SHALL MEET THE REQUIREMENTS OF ASTM F593 ALLOY 304 STAINLESS STEEL WITH MINIMUM 517 MPa ULTIMATE STRENGTH. NUTS SHALL MEET THE REQUIREMENTS OF ASTM F594 ALLOY 304 STAINLESS STEEL AND WASHERS SHALL MEET THE REQUIREMENTS OF ASTM F844 EXCEPT THEY SHALL BE MADE FROM ALLOY 304 STAINLESS STEEL.

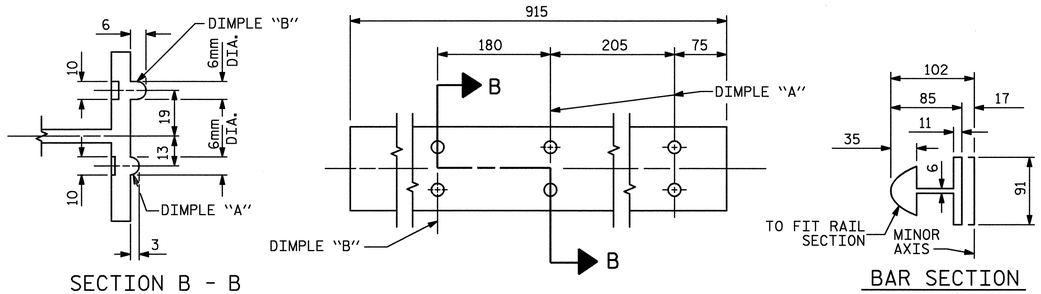

SECTION B - B

BAR SECTION

EXPANSION BAR DETAILS

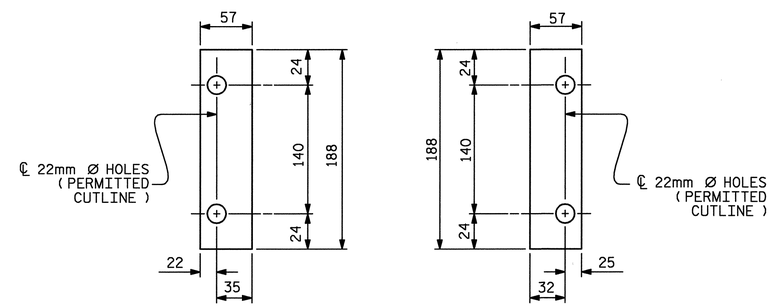

FRONT PLATE

REAR PLATE

SHIM DETAILS

NOTE :
SHIMS MAY BE CUT ALONG PERMITTED CUTLINE OR SLOTTED TO EDGE OF PLATE TO FACILITATE PLACEMENT.

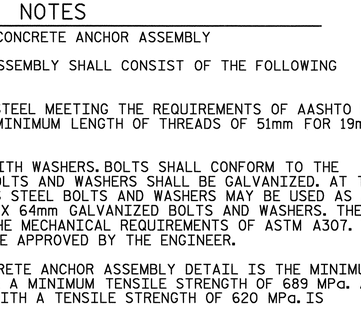

RAIL SECTION

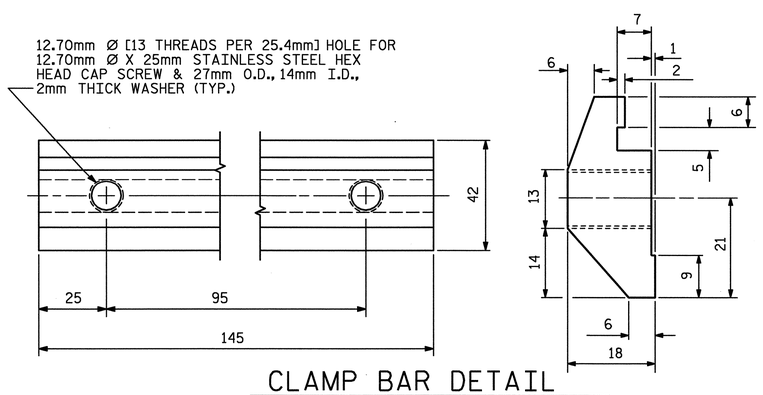

CLAMP BAR DETAIL

(4 REQUIRED PER POST)

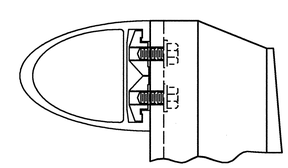

CLAMP ASSEMBLY

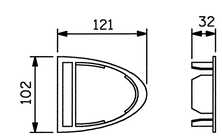

RAIL CAP

PROJECT NO. R-0609IB

GUILFORD-RANDOLPH COUNTY

STATION: 83+34.392 -L-

SHEET 2 OF 2

NORTH CAROLINA PROFESSIONAL SEAL 22072 ENGINEER JOHN ARTHUR DILWORTH

7-21-05

WETHERILL ENGINEERING
559 Jones Franklin Rd. Suite 164
Raleigh, N.C. 27606
Bus: 919 851 8077
Fax: 919 851 8107

TRANSPORTATION PLANNING/DESIGN - BRIDGE/STRUCTURE DESIGN
CIVIL/SITE DESIGN - GIS/GPS - CONSTRUCTION OBSERVATION

STATE OF NORTH CAROLINA
DEPARTMENT OF TRANSPORTATION
RALEIGH

STANDARD

2 BAR METAL RAIL

REVISIONS								SHEET NO.
NO.	BY:	DATE:	NO.	BY:	DATE:			S-60
1			3					TOTAL SHEETS
2			4					199

DWG. 32 OF 48

STD. NO. BMR4SM

ASSEMBLED BY : J. PENDERGRAFT	DATE : 5-05		
CHECKED BY : J. DILWORTH	DATE : 5-05		
DRAWN BY : EEM 6/94	REV. 8/16/99	RAL/LES	
CHECKED BY : RGW 6/94	REV. 10/17/00	LES/RDR	
	REV. 5/7/03	RWW/JTE	

P:\R-0609IB\R0609IB_SITE2\Structures\DWG\BULBTEE\Dwg32_bmr4smdgn
7/21/2005 9:59:04 AM

NOTES

THE GUARDRAIL ANCHOR ASSEMBLY SHALL CONSIST OF A 6mm HOLD DOWN PLATE AND 7 - 22.23mm Ø BOLTS WITH NUTS AND WASHERS.

THE HOLD-DOWN PLATE SHALL CONFORM TO AASHTO M270 GRADE 250. AFTER FABRICATION, THE HOLD-DOWN PLATE SHALL BE HOT-DIP GALVANIZED IN ACCORDANCE WITH AASHTO M111.

BOLTS SHALL CONFORM TO THE REQUIREMENTS OF ASTM A307 AND NUTS SHALL CONFORM TO THE REQUIREMENTS OF AASHTO M291M. BOLTS, NUTS AND WASHERS SHALL BE GALVANIZED. AT THE CONTRACTOR'S OPTION, STAINLESS STEEL BOLTS, NUTS AND WASHERS MAY BE USED AS AN ALTERNATE FOR THE 22.23mm Ø GALVANIZED BOLTS, NUTS AND WASHERS. THEY SHALL CONFORM TO OR EXCEED THE MECHANICAL REQUIREMENTS OF ASTM A307. THE USE OF THIS ALTERNATE SHALL BE APPROVED BY THE ENGINEER.

AFTER INSTALLATION, THE EXPOSED THREAD OF THE BOLT SHALL BE BURRED WITH A SHARP POINTED TOOL.

THE COST OF THE GUARDRAIL ANCHOR ASSEMBLIES WITH BOLTS, NUTS AND WASHERS COMPLETE IN PLACE, SHALL BE INCLUDED IN THE VARIOUS PAY ITEMS.

THE VERTICAL REINFORCING BARS MAY BE SHIFTED SLIGHTLY IN THE END POST TO CLEAR ASSEMBLY BOLTS.

THE 32mm Ø HOLES SHALL BE FORMED OR DRILLED WITH A CORE BIT. IMPACT TOOLS WILL NOT BE PERMITTED. ANY CONCRETE DAMAGED BY THIS WORK SHALL BE REPAIRED TO THE SATISFACTION OF THE ENGINEER.

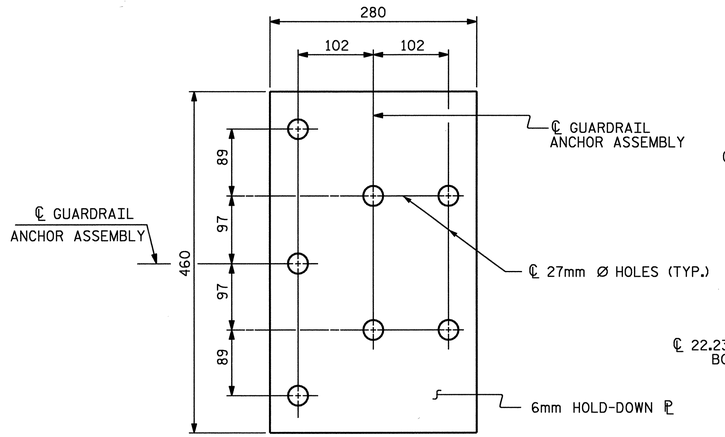

PLAN

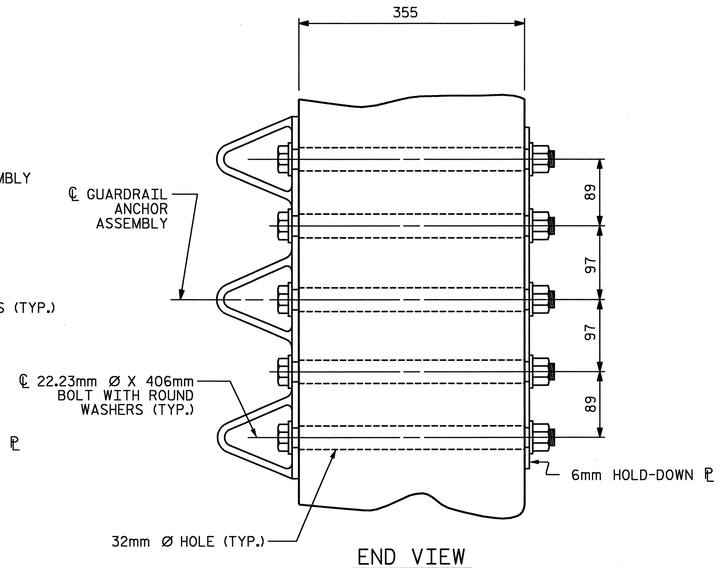

END VIEW

GUARDRAIL ANCHOR ASSEMBLY DETAILS

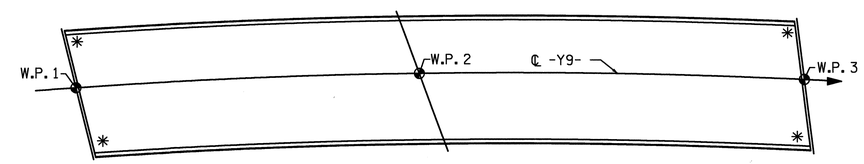

SKETCH SHOWING POINTS OF ATTACHMENT

✳ LOCATION OF GUARDRAIL ATTACHMENT

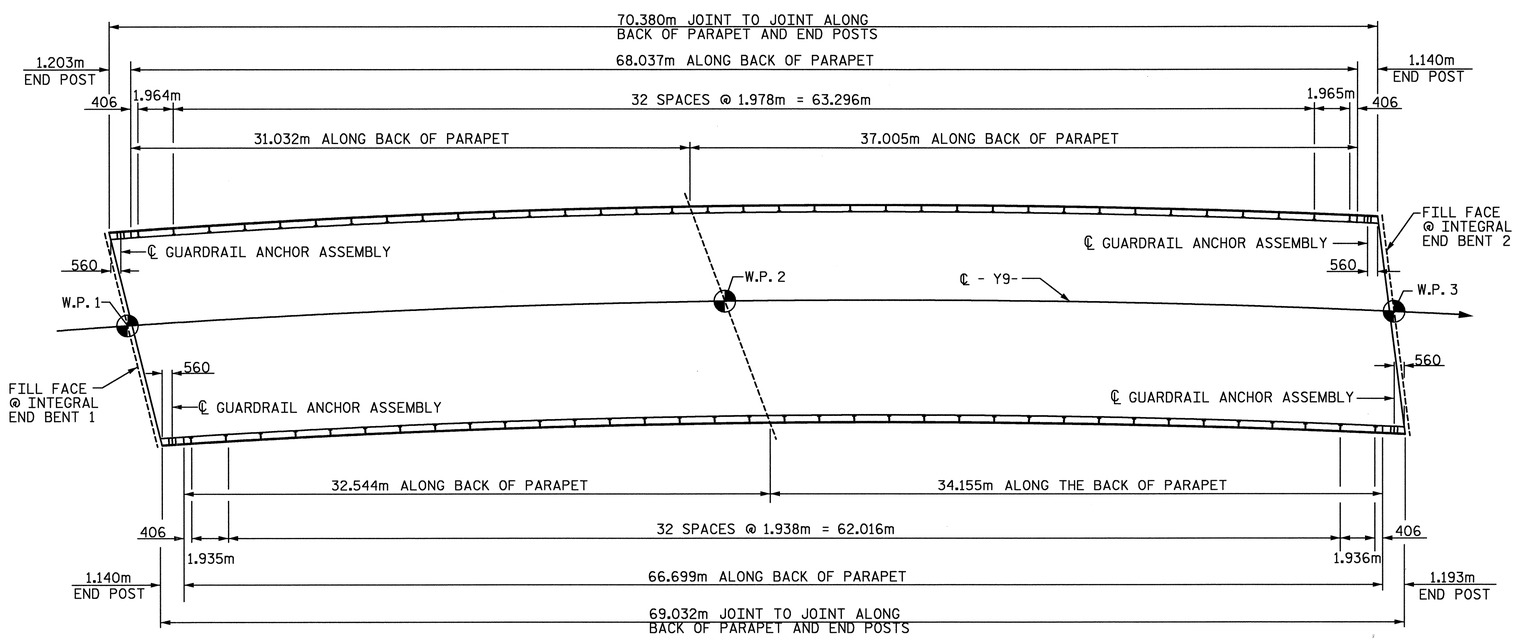

LOCATION OF GUARDRAIL ANCHOR AT END POST

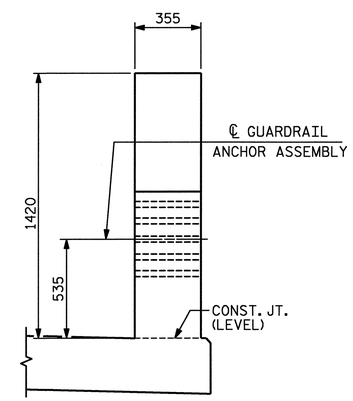

END VIEW

(TWO BAR METAL RAIL)

PROJECT NO. R-0609IB

GUILFORD-RANDOLPH COUNTY

STATION: 83+34.392 -L-

ASSEMBLED BY : G. WILSON		DATE : 5-05	
CHECKED BY : J. DILWORTH		DATE : 5-05	
DRAWN BY : EEM 6/94	REV. 8/16/99	RWW/LES	
CHECKED BY : RGW 6/94	REV. 10/17/00	RWW/LES	
	REV. 5/7/03	RWW/JTE	

NORTH CAROLINA PROFESSIONAL SEAL 22072 ENGINEER JOHN ARTHUR DILWORTH

7-21-05

ETHERILL ENGINEERING
559 Jones Franklin Rd. Suite 164
Raleigh, N.C. 27606
Bus: 919 851 8077
Fax: 919 851 8107

TRANSPORTATION PLANNING/DESIGN - BRIDGE/STRUCTURE DESIGN
CIVIL/SITE DESIGN - GIS/GPS - CONSTRUCTION OBSERVATION

STATE OF NORTH CAROLINA
DEPARTMENT OF TRANSPORTATION
RALEIGH

STANDARD

GUARDRAIL ANCHORAGE DETAILS FOR METAL RAILS

REVISIONS								SHEET NO.
NO.	BY:	DATE:	NO.	BY:	DATE:			S-61
1			3					TOTAL SHEETS
2			4					199

DWG. 33 OF 48

STD. NO. BMR8SM

P:\R-0609IB\R0609IB_STTE2\Structures\DWG\BULBTEE\Dwg33_bmr8sm.dgn
7/21/2005 9:59:48 AM

REINFORCING BAR SCHEDULE

SPANS A & B

BAR	NO.	SIZE	TYPE	LENGTH	WEIGHT	BAR	NO.	SIZE	TYPE	LENGTH	WEIGHT	BAR	NO.	SIZE	TYPE	LENGTH	WEIGHT
✱A 1	427	#16	STR.	11500	7621	A 201	1	#16	STR.	10740	17						
						A 202	1	#16	STR.	9860	15						
A 2	427	#16	STR.	11500	7621	A 203	1	#16	STR.	8980	14	✱B 1	195	#16	STR.	14880	4503
						A 204	1	#16	STR.	8100	13	✱B 2	38	#19	STR.	10000	849
A 3	438	#13	STR.	1200	522	A 205	1	#16	STR.	7200	11	B 3	180	#16	STR.	14760	4123
						A 206	1	#16	STR.	6320	10						
✱A 101	1	#16	STR.	10740	17	A 207	1	#16	STR.	5420	8						
✱A 102	1	#16	STR.	9860	15	A 208	1	#16	STR.	4520	7						
✱A 103	1	#16	STR.	8980	14	A 209	1	#16	STR.	3620	6						
✱A 104	1	#16	STR.	8100	13	A 210	1	#16	STR.	2720	4						
✱A 105	1	#16	STR.	7200	11	A 211	1	#16	STR.	1820	3	K 1	6	#13	STR.	2120	13
✱A 106	1	#16	STR.	6320	10	A 212	1	#16	STR.	900	1	K 2	24	#13	STR.	3100	74
✱A 107	1	#16	STR.	5420	8	A 213	1	#16	STR.	10720	17	K 3	6	#13	STR.	2240	13
✱A 108	1	#16	STR.	4520	7	A 214	1	#16	STR.	9800	15	K 4	12	#13	1	2080	25
✱A 109	1	#16	STR.	3620	6	A 215	1	#16	STR.	8880	14	K 5	12	#13	2	4160	50
✱A 110	1	#16	STR.	2720	4	A 216	1	#16	STR.	7980	12	K 6	48	#16	STR.	2020	150
✱A 111	1	#16	STR.	1820	3	A 217	1	#16	STR.	7080	11	K 7	12	#16	3	2920	54
✱A 112	1	#16	STR.	900	1	A 218	1	#16	STR.	6160	10						
✱A 113	1	#16	STR.	10720	17	A 219	1	#16	STR.	5260	8						
✱A 114	1	#16	STR.	9800	15	A 220	1	#16	STR.	4380	7						
✱A 115	1	#16	STR.	8880	14	A 221	1	#16	STR.	3480	5						
✱A 116	1	#16	STR.	7980	12	A 222	1	#16	STR.	2580	4	S 1	105	#13	4	840	88
✱A 117	1	#16	STR.	7080	11	A 223	1	#16	STR.	1700	3	S 2	54	#13	5	2980	160
✱A 118	1	#16	STR.	6160	10	A 224	1	#16	STR.	800	1						
✱A 119	1	#16	STR.	5260	8												
✱A 120	1	#16	STR.	4380	7												
✱A 121	1	#16	STR.	3480	5							✱U 1	21	#13	6	5320	111
✱A 122	1	#16	STR.	2580	4												
✱A 123	1	#16	STR.	1700	3												
✱A 124	1	#16	STR.	800	1												

✱DENOTES EPOXY COATED REINFORCING STEEL.

BAR TYPES

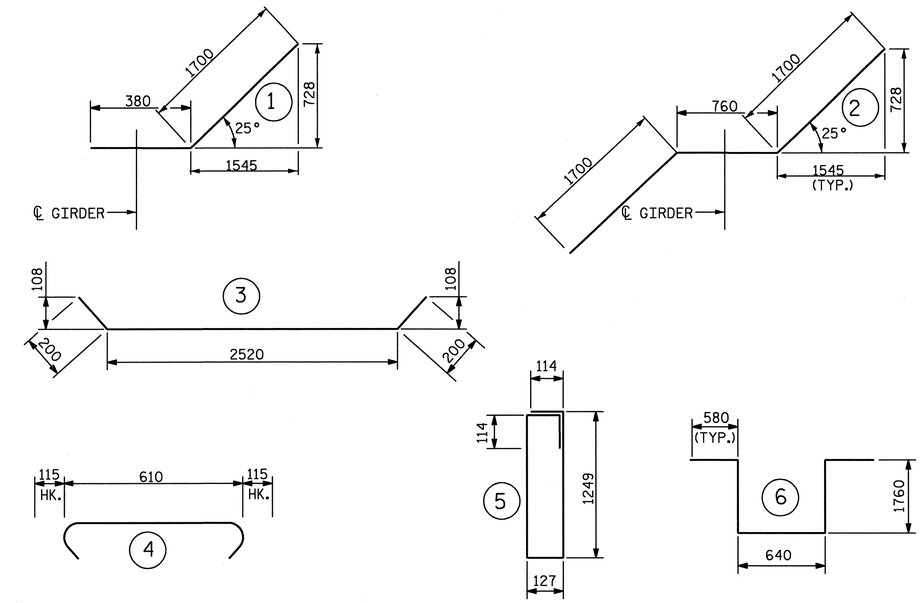

ALL BAR DIMENSIONS ARE OUT TO OUT

SUPERSTRUCTURE BILL OF MATERIAL

	REINFORCED CONCRETE DECK SLAB	CLASS AA CONCRETE		REINFORCING STEEL	EPOXY COATED REINFORCING STEEL
		LIGHTWEIGHT	NORMAL WEIGHT		
	(SQ. METER)	(CU. METER)	(CU. METER)	(kg)	(kg)
SPAN A & B				13,109	13,300
POUR 1	341.2	104.5			
POUR 2	430.2	129.1			
POUR 3 ◊			72.0		
TOTALS ✱✱	771.4	233.6	72.0	13,109	13,300

✱✱QUANTITIES FOR BARRIER RAIL ARE NOT INCLUDED

◊ CONCRETE QUANTITY FOR POUR 3 INCLUDES THE INTEGRAL END BENT DIAPHRAGM QUANTITY AND IS PAID FOR AS CLASS AA CONCRETE. THERE IS NO HORIZONTAL CONSTRUCTION JOINT PERMITTED BETWEEN THE END BENT DIAPHRAGM AND THE SLAB.

SUPERSTRUCTURE REINFORCING STEEL LENGTHS ARE BASED ON THE FOLLOWING MINIMUM SPLICE LENGTHS

BAR SIZE	SUPERSTRUCTURE EXCEPT APPROACH SLABS, PARAPET, AND BARRIER RAIL		APPROACH SLABS		PARAPET AND BARRIER RAIL
	✱EPOXY COATED	✱UNCOATED	EPOXY COATED	UNCOATED	
#13	830	720	610	540	840
#16	1010	880	770	660	1050
#19	1210	1050	1190	790	1330

✱SPLICE LENGTHS HAVE BEEN ADJUSTED FOR LIGHTWEIGHT CONCRETE

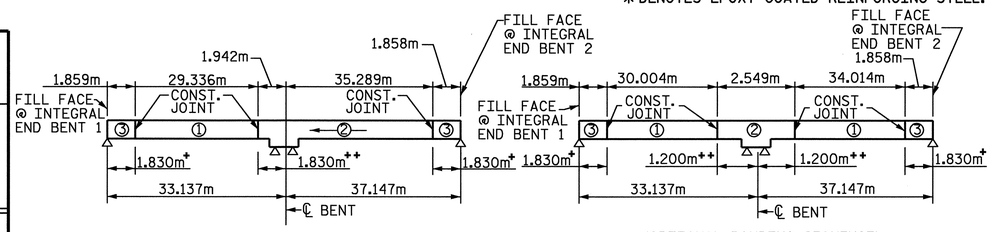

LAYOUT FOR POURING SEQUENCE OF CONCRETE SLAB

KEY:
INDICATES POUR NUMBER AND DIRECTION OF POUR

ALL DIMENSIONS SHOWN FOR POURING SEQUENCE ARE ALONG THE ARC UNLESS OTHERWISE NOTED.

+MEASUREMENT IS NORMAL TO END BENT

++MEASUREMENT IS NORMAL TO BENT

GROOVING BRIDGE FLOORS

APPROACH SLABS	155.1	SQ.METER
BRIDGE DECK	688.1	SQ.METER
TOTAL	843.2	SQ.METER

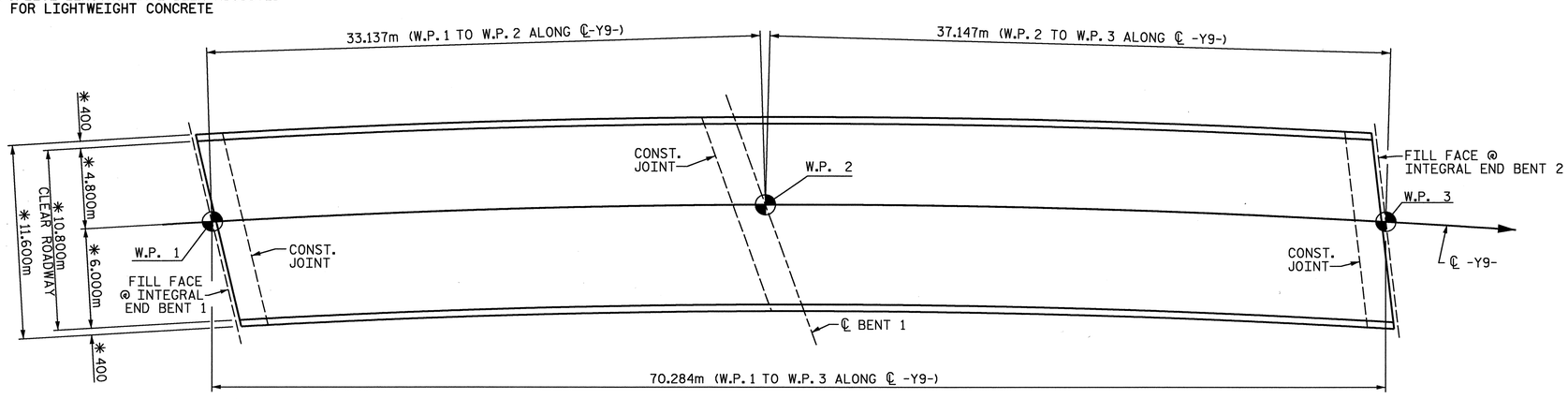

✱DENOTES RADIAL DIMENSIONS

LAYOUT FOR COMPUTING AREA OF REINFORCED CONCRETE DECK SLAB
(SQ. METER = 771.4 POURS 1 AND 2 ONLY)

PROJECT NO. R-0609IB
GUILFORD-RANDOLPH COUNTY
STATION: 83+34.392 -L-

STATE OF NORTH CAROLINA
DEPARTMENT OF TRANSPORTATION
RALEIGH

STANDARD

SUPERSTRUCTURE BILL OF MATERIAL

NORTH CAROLINA PROFESSIONAL SEAL 22072 ENGINEER JOHN ARTHUR DILWORTH

WETHERILL ENGINEERING
559 Jones Franklin Rd. Suite 164
Raleigh, N.C. 27606
Bus: 919 851 8077
Fax: 919 851 8107
TRANSPORTATION PLANNING/DESIGN - BRIDGE/STRUCTURE DESIGN
CIVIL/SITE DESIGN - GIS/GPS - CONSTRUCTION OBSERVATION

REVISIONS						SHEET NO.
NO.	BY:	DATE:	NO.	BY:	DATE:	S-62
1			3			TOTAL SHEETS
2			4			199

ASSEMBLED BY : JC PENDERGRAFT DATE : 6/05
CHECKED BY : JA DILWORTH DATE : 6/05
DRAWN BY : JMB 5/87
CHECKED BY : SJD 9/87
REV. 5/16/97 EEM/RGW

DWG. 34 OF 48

STD. NO. BOM2SM

P:\R-0609IB\R0609IB_SITE2\Structures\DWG\BULBTEE\Dwg34_BOM2SM.dgn
7/21/2005 10:05:11 AM

NOTES:

FOR TEMPORARY DRAINAGE AT END BENTS, SEE SHEET 4 OF 4.

FOR PILE SPLICE DETAILS, SEE SHEET 4 OF 4.

THE CONTRACTOR SHALL PROVIDE FOR INSTALLATION OF THE 102mm Ø DRAIN PIPE THROUGH THE WING WALL AS REQUIRED FOR REINFORCED BRIDGE APPROACH FILLS, SEE THE ROADWAY PLANS. REINFORCING STEEL IN THE WING WALL MAY BE SHIFTED AS NECESSARY TO CLEAR THE DRAIN PIPE.

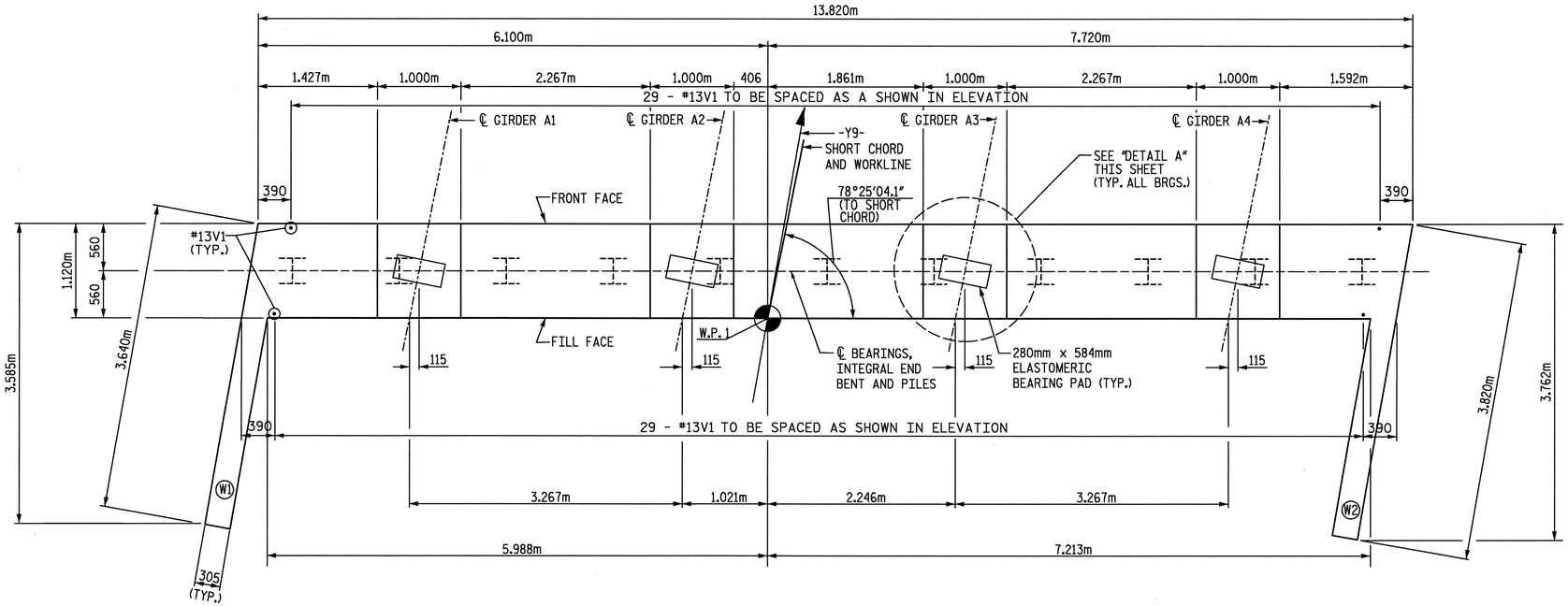

PLAN

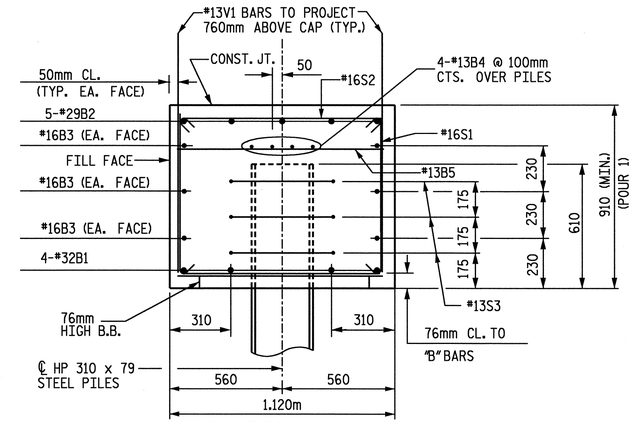

SECTION A-A

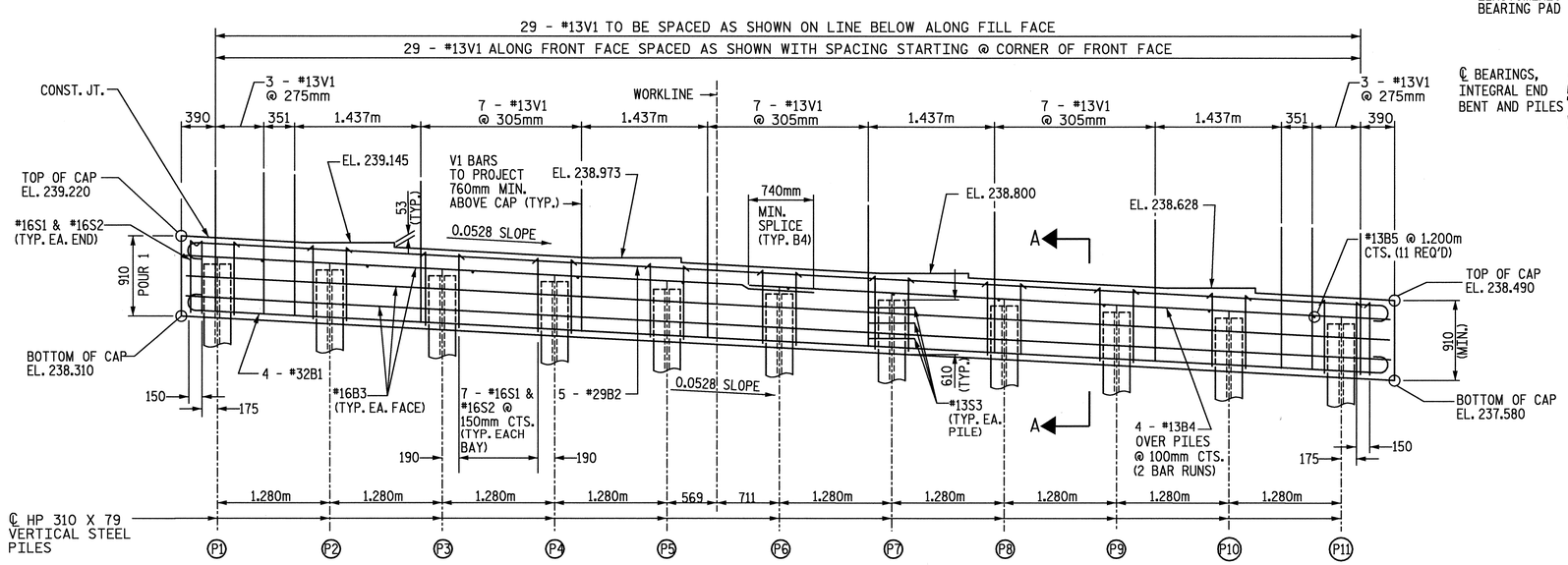

PART ELEVATION

TO SHOW STEEL AND CONCRETE FOR POUR 1 ONLY.
WINGS NOT SHOWN FOR CLARITY, SEE SHEET 3 OF 4 FOR DETAILS.

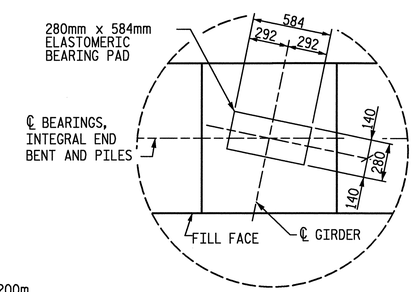

DETAIL A

TOP OF PILE ELEVATION	
PILE LOCATION	ELEVATION
P1	238.898
P2	238.830
P3	238.763
P4	238.695
P5	238.628
P6	238.560
P7	238.492
P8	238.425
P9	238.357
P10	238.290
P11	238.222

PROJECT NO. R-0609IB

GUILFORD-RANDOLPH COUNTY

STATION: 83+34.392 -L-

SHEET 1 OF 4

STATE OF NORTH CAROLINA
DEPARTMENT OF TRANSPORTATION
RALEIGH

SUBSTRUCTURE
INTEGRAL END BENT 1

NORTH CAROLINA PROFESSIONAL SEAL 22072 ENGINEER JOHN ARTHUR DILWORTH

7-21-05

ETHERILL ENGINEERING
559 Jones Franklin Rd. Suite 164
Raleigh, N.C. 27606
Bus: 919 851 8077
Fax: 919 851 8107
TRANSPORTATION PLANNING/DESIGN - BRIDGE/STRUCTURE DESIGN
CIVIL/SITE DESIGN - GIS/GPS - CONSTRUCTION OBSERVATION

REVISIONS						SHEET NO.
NO.	BY	DATE	NO.	BY	DATE	S-03
1			1			TOTAL SHEETS
2			2			199

DRAWN BY: J. C. PENDERGRAFT DATE: 5-25-05
CHECKED BY: J. A. DILWORTH DATE: 6-05

DWG. 35 OF 48

P:\R-0609IB\R0609IB_SITE2\Structures\DWG\BULBTEE\Dwg35_ab101.dgn
7/21/2005 10:07:50 AM

NOTES:

THE CONCRETE IN THE SHADED AREA OF THE WING SHALL BE POURED AFTER THE PARAPET AND END POST ARE CAST IF SLIP FORMING IS USED. FOR BLOCKOUT DETAIL, SEE SHEET 4 OF 4.

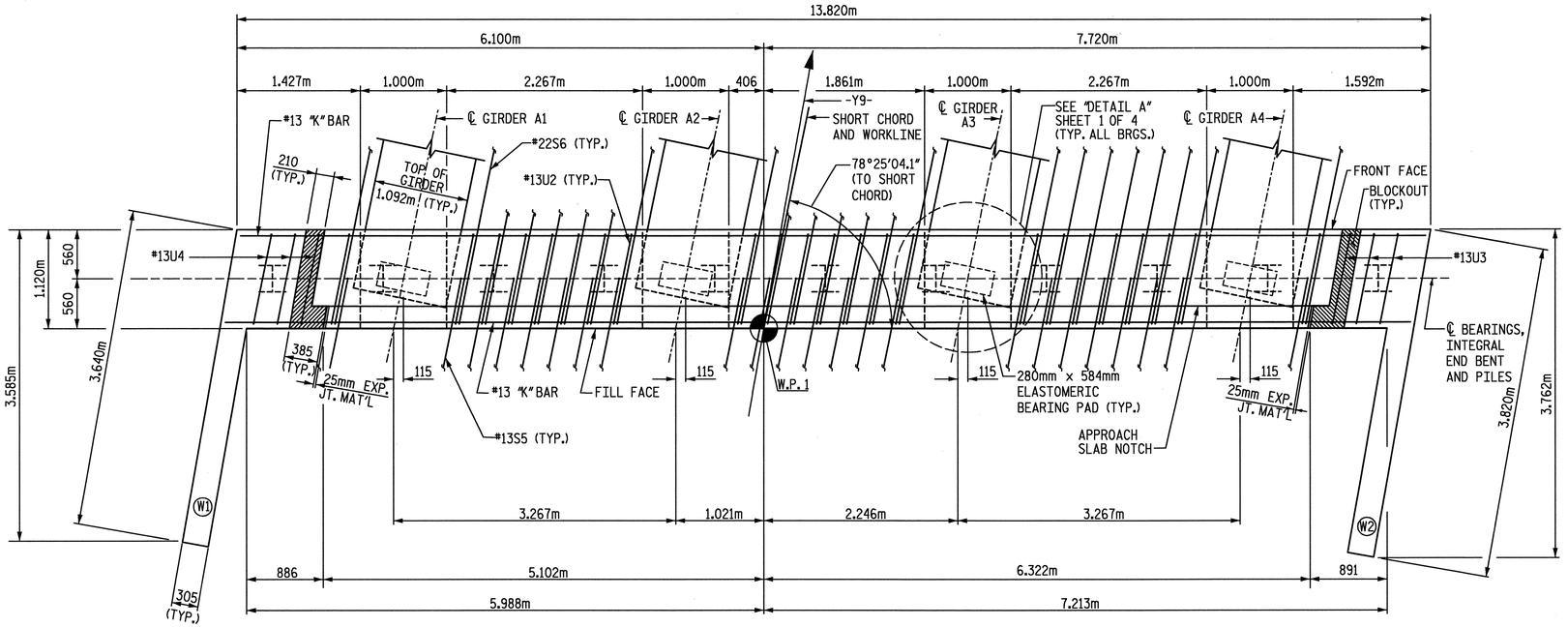

PLAN

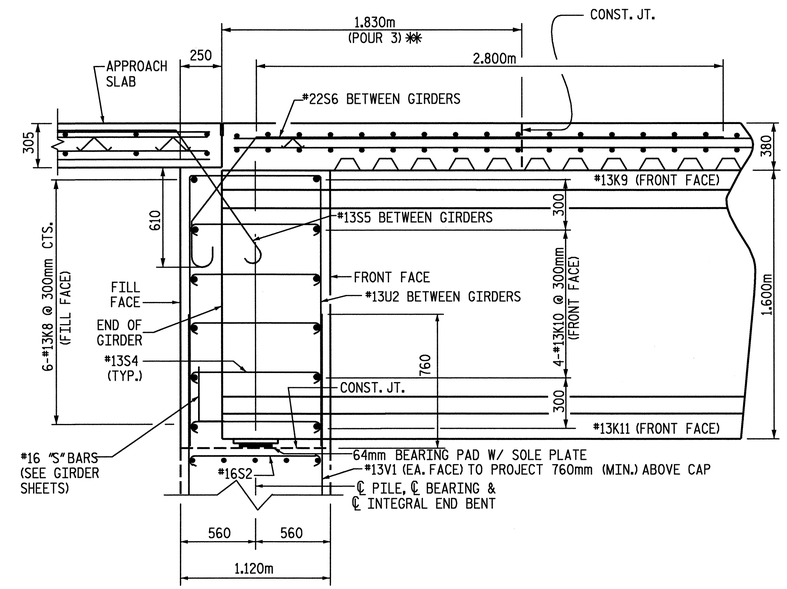

SECTION A-A (THROUGH INTEGRAL END BENT)

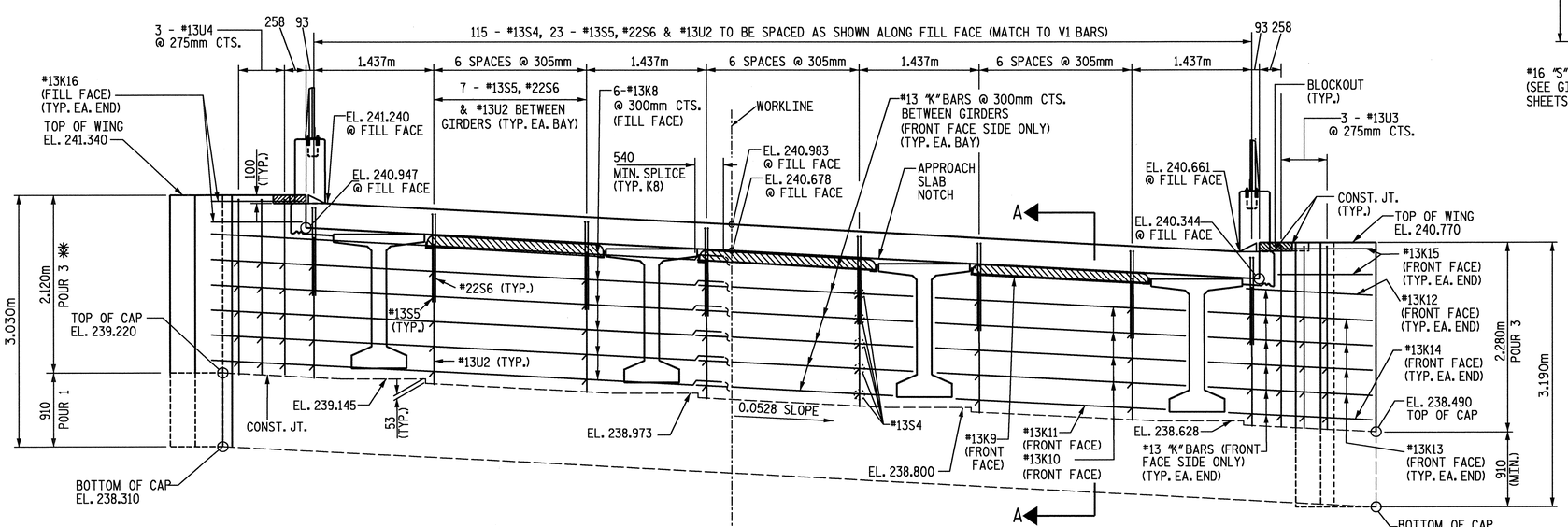

HALF SECTION AT FILL FACE

HALF SECTION AT FRONT FACE

PART ELEVATION

TO SHOW STEEL AND CONCRETE FOR POUR 3

✱✱ CONCRETE QUANTITY FOR POUR 3 INCLUDES THE INTEGRAL END BENT DIAPHRAGM QUANTITY AND IS LISTED UNDER CLASS AA SUPERSTRUCTURE POUR 3 QUANTITIES. THERE IS NO HORIZONTAL CONSTRUCTION JOINT PERMITTED BETWEEN THE END BENT DIAPHRAGM AND THE SLAB.

PROJECT NO. R-0609IB
GUILFORD-RANDOLPH COUNTY
STATION: 83+34.392 -L-

SHEET 2 OF 4

NORTH CAROLINA PROFESSIONAL SEAL 22072 ENGINEER JOHN ARTHUR DILWORTH
7-21-05

ETHERILL ENGINEERING
559 Jones Franklin Rd. Suite 164
Raleigh, N.C. 27606
Bus: 919 851 8077
Fax: 919 851 8107
TRANSPORTATION PLANNING/DESIGN - BRIDGE/STRUCTURE DESIGN
CIVIL/SITE DESIGN - GIS/GPS - CONSTRUCTION OBSERVATION

STATE OF NORTH CAROLINA
DEPARTMENT OF TRANSPORTATION
RALEIGH

SUBSTRUCTURE
INTEGRAL END BENT 1

REVISIONS						SHEET NO.
NO.	BY	DATE	NO.	BY	DATE	S-69
1			1			TOTAL SHEETS
2			2			199

DRAWN BY: Z. PIATEK DATE: 6-05
CHECKED BY: J. A. DILWORTH DATE: 6-05

DWG. 36 OF 48

P:\R-0609IB\R0609IB_SITE2\Structures\DWG\BULBTEE\Dwg36_ab102.dgn
7/21/2005 10:08:09 AM

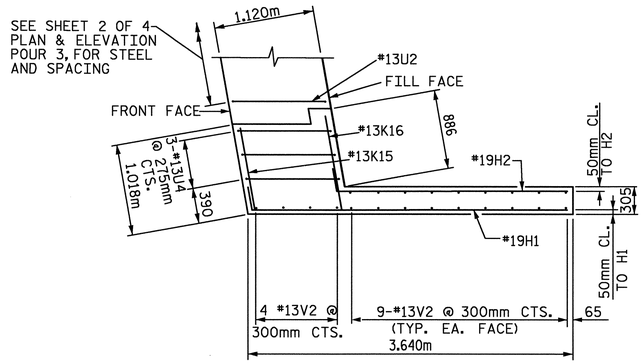

PLAN OF WING W1

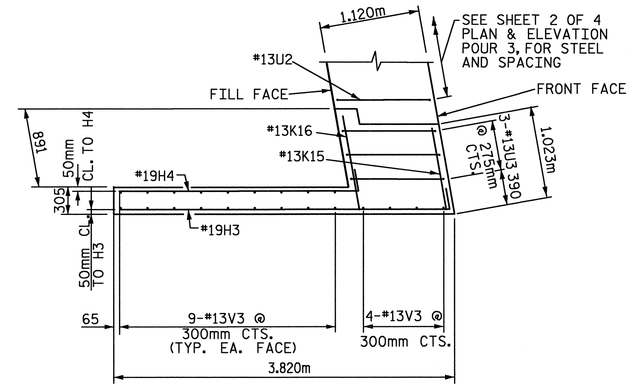

PLAN OF WING W2

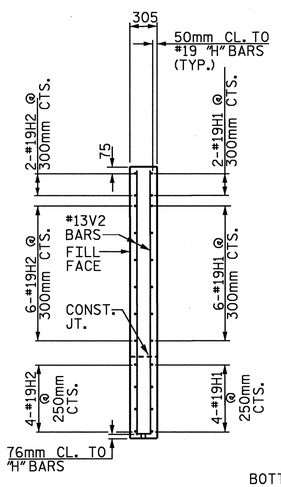

SECTION X-X

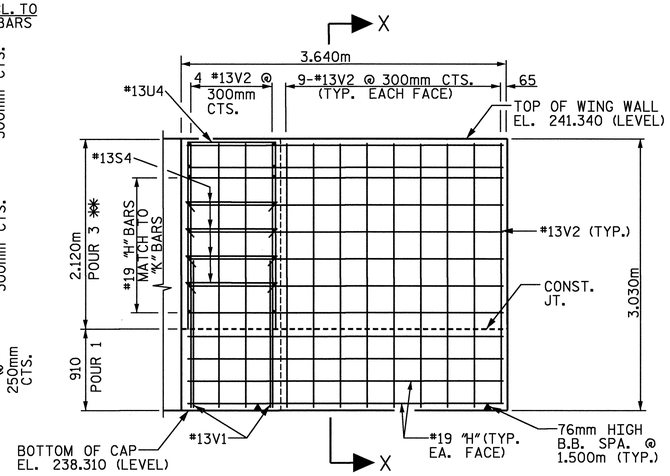

ELEVATION OF WING W1

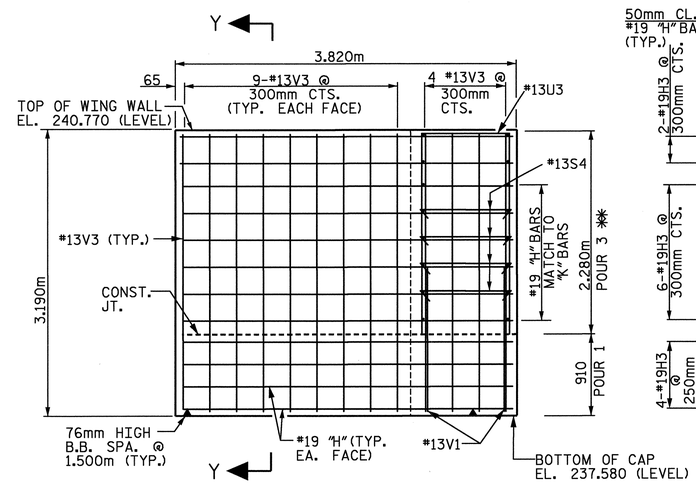

ELEVATION OF WING W2

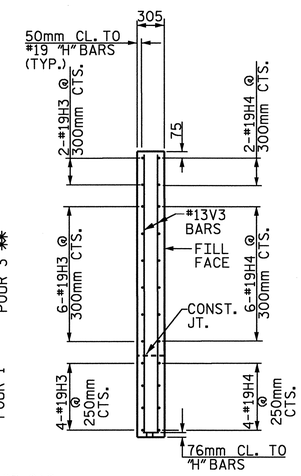

SECTION Y-Y

✱✱ CONCRETE QUANTITY FOR POUR 3 INCLUDES THE INTEGRAL END BENT DIAPHRAGM QUANTITY AND IS LISTED UNDER CLASS AA SUPERSTRUCTURE POUR 3 QUANTITIES. THERE IS NO HORIZONTAL CONSTRUCTION JOINT PERMITTED BETWEEN THE END BENT DIAPHRAGM AND THE SLAB.

PROJECT NO. R-0609IB
GUILFORD-RANDOLPH COUNTY
STATION: 83+34.392 -L-

SHEET 3 OF 4

NORTH CAROLINA PROFESSIONAL SEAL 22072 ENGINEER JOHN ARTHUR DILWORTH
7-21-05

ETHERILL ENGINEERING
559 Jones Franklin Rd. Suite 164
Raleigh, N.C. 27606
Bus: 919 851 8077
Fax: 919 851 8107
TRANSPORTATION PLANNING/DESIGN - BRIDGE/STRUCTURE DESIGN
CIVIL/SITE DESIGN - GIS/GPS - CONSTRUCTION OBSERVATION

STATE OF NORTH CAROLINA
DEPARTMENT OF TRANSPORTATION
RALEIGH

SUBSTRUCTURE
INTEGRAL END BENT 1

REVISIONS						SHEET NO.
NO.	BY	DATE	NO.	BY	DATE	S-65
1			1			TOTAL SHEETS
2			2			199

DRAWN BY: J PENDERGRAFT DATE: 6-05
CHECKED BY: J DILWORTH DATE: 6-05

DWG. 37 OF 48

P:\R-0609IB\R0609IB_SITE2\Structures\DMG\BULBTEE\Dwg37_ab 1103.dgn
7/21/2005 10:08:32 AM

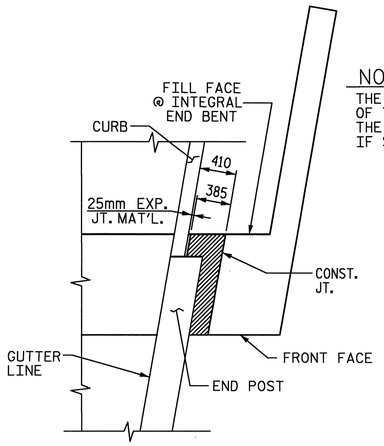

PLAN

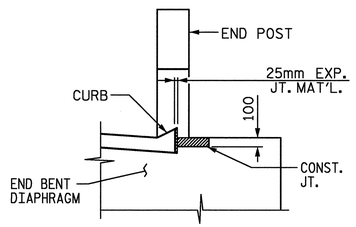

ELEVATION

BLOCKOUT IN WING WALL

(INTEGRAL END BENT 2 SHOWN, INTEGRAL END BENT 1 SIMILAR)

NOTE

THE CONCRETE IN THE SHADED AREA OF THE WING SHALL BE POURED AFTER THE PARAPET AND END POST ARE CAST IF SLIP FORMING IS USED.

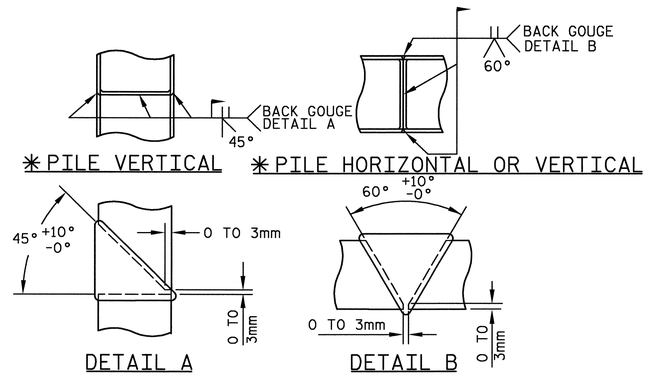

✳POSITION OF PILE DURING WELDING

PILE SPLICE DETAILS

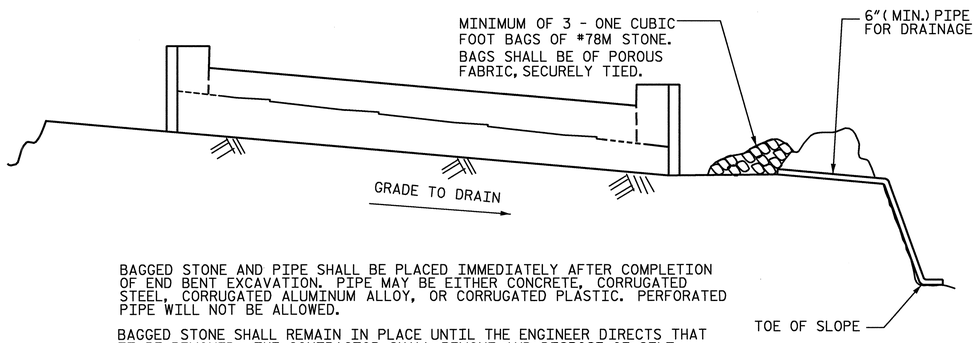

BAGGED STONE AND PIPE SHALL BE PLACED IMMEDIATELY AFTER COMPLETION OF END BENT EXCAVATION. PIPE MAY BE EITHER CONCRETE, CORRUGATED STEEL, CORRUGATED ALUMINUM ALLOY, OR CORRUGATED PLASTIC. PERFORATED PIPE WILL NOT BE ALLOWED.

BAGGED STONE SHALL REMAIN IN PLACE UNTIL THE ENGINEER DIRECTS THAT IT BE REMOVED. THE CONTRACTOR SHALL REMOVE AND DISPOSE OF SILT ACCUMULATIONS AT BAGGED STONE WHEN SO DIRECTED BY THE ENGINEER. BAGS SHALL BE REMOVED AND REPLACED WHENEVER THE ENGINEER DETERMINES THAT THEY HAVE DETERIORATED AND LOST THEIR EFFECTIVENESS.

NO SEPARATE PAYMENT WILL BE MADE FOR THIS WORK AND THE ENTIRE COST OF THIS WORK SHALL BE INCLUDED IN THE UNIT CONTRACT PRICE FOR THE SEVERAL PAY ITEMS.

TEMPORARY DRAINAGE AT END BENT

BAR TYPES

ALL BAR DIMENSIONS ARE OUT TO OUT.

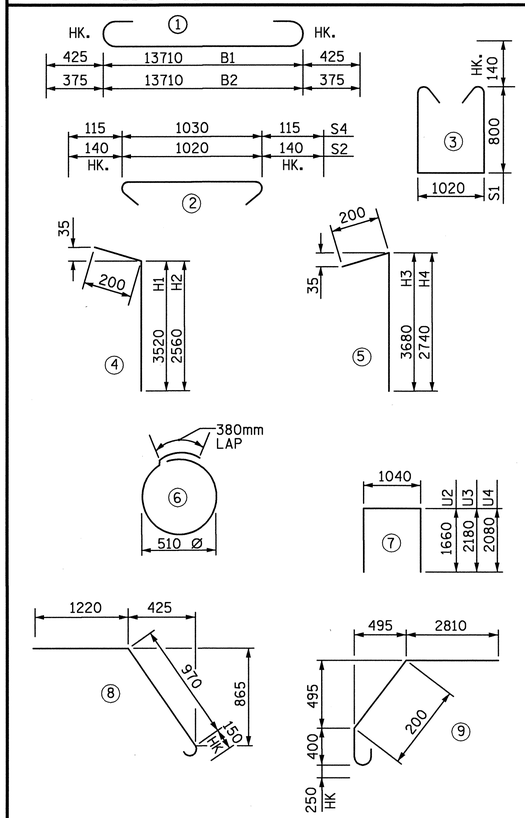

BILL OF MATERIAL

END BENT 1

BAR	NO.	SIZE	TYPE	LENGTH (mm)	WEIGHT (kg)
B1	4	#32	1	14560	373
B2	5	#29	1	14460	366
B3	6	#16	STR.	13720	128
B4	8	#13	STR.	7240	58
B5	11	#13	STR.	1020	11
H1	12	#19	4	3720	100
H2	12	#19	4	2760	74
H3	12	#19	5	3880	104
H4	12	#19	5	2940	79
K8	12	#13	STR	7140	85
K9	3	#13	STR	2040	6
K10	12	#13	STR	2980	36
K11	3	#13	STR	2480	7
K12	2	#13	STR	1320	3
K13	8	#13	STR	1780	14
K14	2	#13	STR	1520	3
K15	4	#13	STR	900	4
K16	4	#13	STR	1080	4
S1	74	#16	3	2900	333
S2	74	#16	2	1300	149
S3	33	#13	6	2000	66
S4	145	#13	2	1260	182
✳S5	23	#13	8	2340	53
✳S6	23	#22	9	3660	256
U2	23	#13	7	4360	100
U3	3	#13	7	5400	16
U4	3	#13	7	5200	16
V1	58	#13	STR.	1600	92
V2	22	#13	STR.	2900	63
V3	22	#13	STR.	3060	67

REINFORCING STEEL = 2539 Kg

✳EPOXY COATED REINFORCING STEEL = 309 Kg

✳✳TOTAL CLASS A CONCRETE = 15.6 CU. METERS

CONCRETE BREAKDOWN:

POUR 1

(CAP & LOWER WING) = 15.6 CU. METERS

HP 310 x 79 STEEL PILES

NO. = 11 LINEAR METERS = 144.2

✳✳CONCRETE QUANTITY FOR POUR 3 INCLUDES THE INTEGRAL END BENT DIAPHRAGM QUANTITY AND IS LISTED UNDER CLASS AA SUPERSTRUCTURE POUR 3 QUANTITIES. THERE IS NO HORIZONTAL CONSTRUCTION JOINT PERMITTED BETWEEN THE END BENT DIAPHRAGM AND THE SLAB.

PROJECT NO. R-0609IB

GUILFORD-RANDOLPH COUNTY

STATION: 83+34.392 -L-

SHEET 4 OF 4

NORTH CAROLINA PROFESSIONAL SEAL 22072 ENGINEER JOHN ARTHUR DILWORTH

7-21-05

ETHERILL ENGINEERING
559 Jones Franklin Rd. Suite 164
Raleigh, N.C. 27606
Bus: 919 851 8077
Fax: 919 851 8107

TRANSPORTATION PLANNING/DESIGN - BRIDGE/STRUCTURE DESIGN
CIVIL/SITE DESIGN - GIS/GPS - CONSTRUCTION OBSERVATION

STATE OF NORTH CAROLINA
DEPARTMENT OF TRANSPORTATION
RALEIGH

SUBSTRUCTURE
INTEGRAL END BENT 1

REVISIONS						SHEET NO.
NO.	BY	DATE	NO.	BY	DATE	S-66
1			1			TOTAL SHEETS
2			2			199

DRAWN BY: J. PENDERGRAFT DATE: 6-05
CHECKED BY: J. DILWORTH DATE: 6-05

DWG. 38 OF 48

P:\R-0609IB\R0609IB_SITE2\Structures\DWG\BULBTEE\Dwg38_ab1004.dgn
7/21/2005 10:08:53 AM

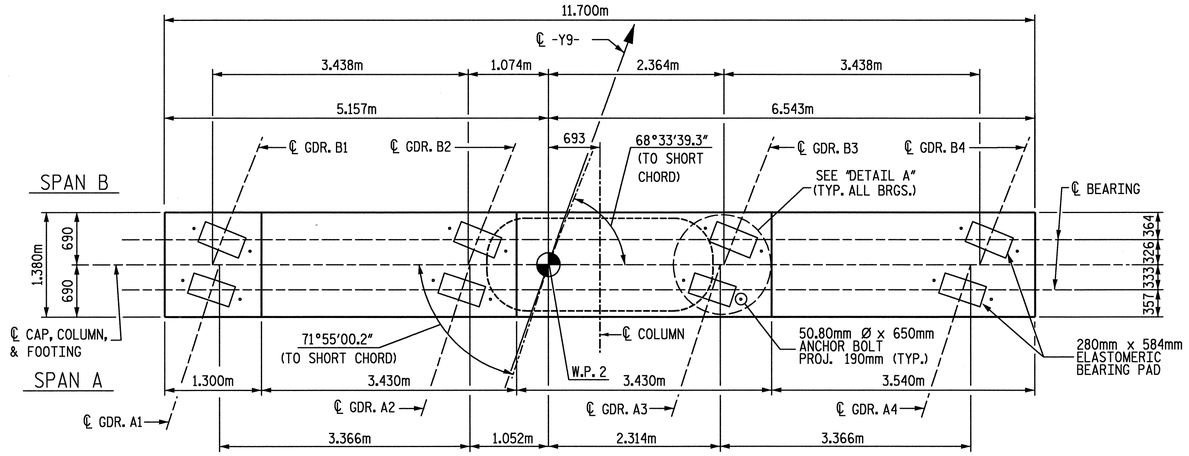

PLAN

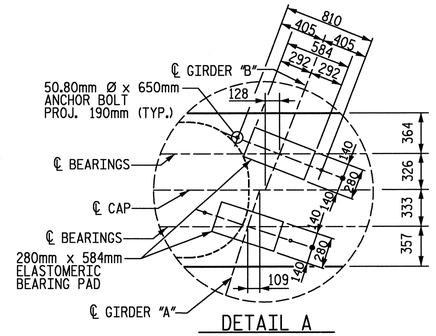

DETAIL A

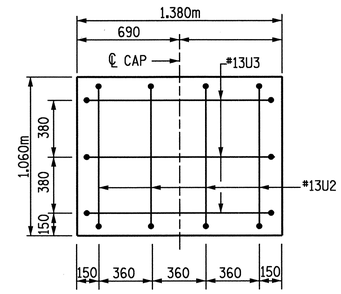

SECTION A-A

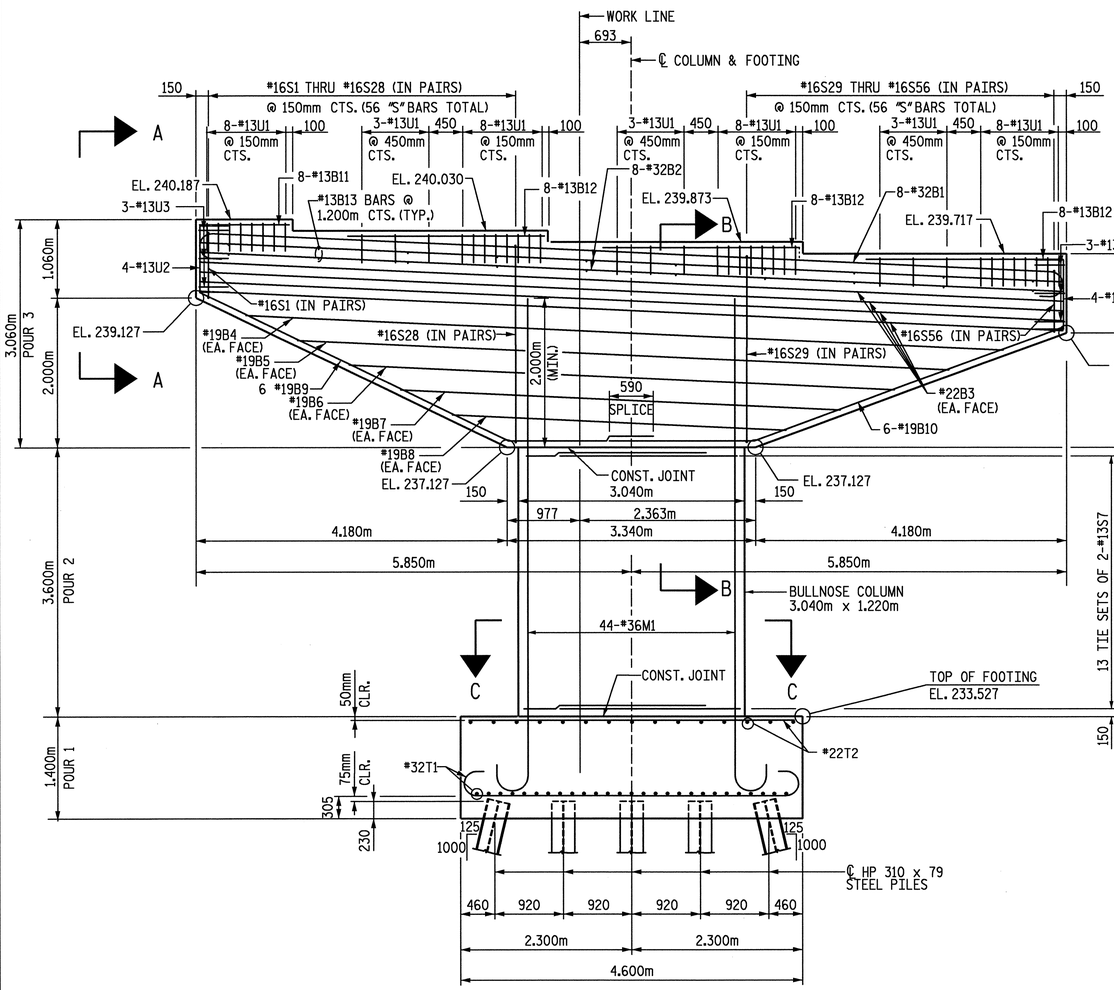

ELEVATION

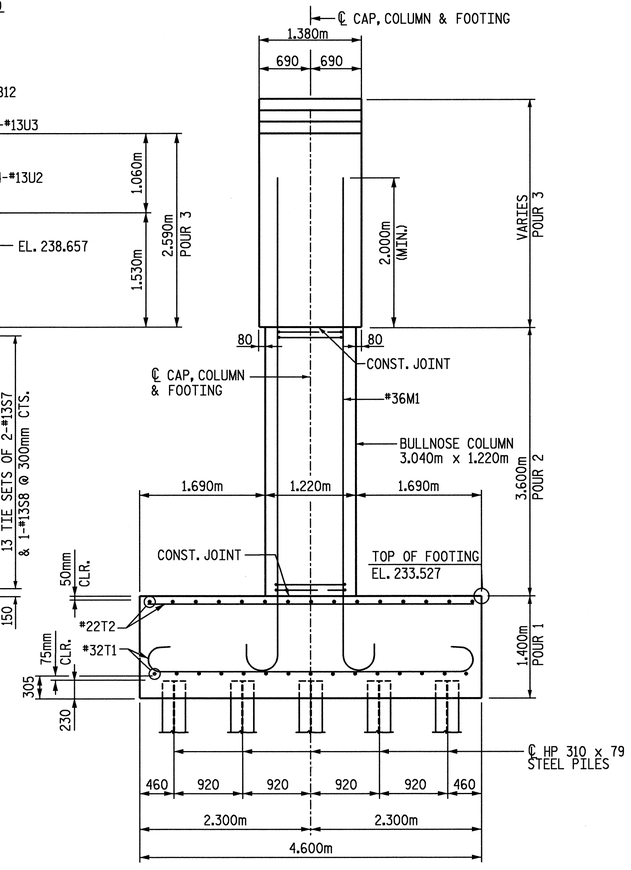

END VIEW

NOTES:

STIRRUPS AND "U" BARS MAYBE SHIFTED AS NECESSARY TO CLEAR ANCHOR BOLTS.

DETAILED DRAWINGS FOR FALSEWORK AND FORMS FOR THIS HAMMERHEAD BENT CAP SHALL BE SUBMITTED. SEE SHEET SNSM.

HOOKS ON "M" BARS MAY BE TURNED AS NECESSARY FOR PLACING REINFORCING STEEL AND CONCRETE.

INVERT ALTERNATE STIRRUPS.

GIRDERS ARE PARALLEL TO SHORT CHORD FOR EACH SPAN.

FOR PILE SPLICE DETAILS SEE INTEGRAL END BENT 1, SHEET 4 OF 4.

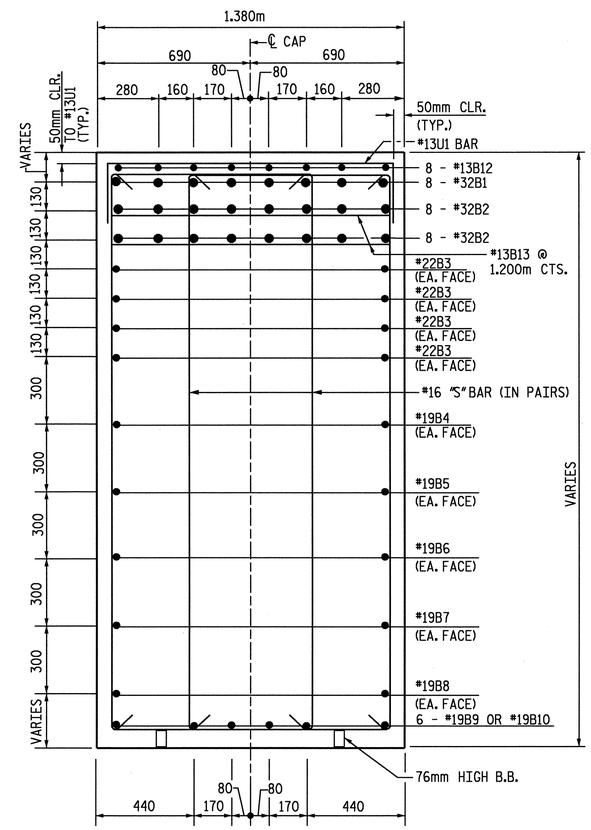

SECTION B-B

PROJECT NO. R-0609IB

GUILFORD-RANDOLPH COUNTY

STATION: 83+34.392 -L-

SHEET 1 OF 2

DRAWN BY: J. C. PENDERGRAFT DATE: 6-05
CHECKED BY: J. T. DIFFEE DATE: 6-05

NORTH CAROLINA PROFESSIONAL SEAL 22072 ENGINEER ARTHUR DILWORTH

7-21-05

ETHERILL ENGINEERING
559 Jones Franklin Rd. Suite 164
Raleigh, N.C. 27606
Bus: 919 851 8077
Fax: 919 851 8107

TRANSPORTATION PLANNING/DESIGN - BRIDGE/STRUCTURE DESIGN
CIVIL/SITE DESIGN - GIS/GPS - CONSTRUCTION OBSERVATION

STATE OF NORTH CAROLINA
DEPARTMENT OF TRANSPORTATION
RALEIGH

SUBSTRUCTURE
BENT 1

REVISIONS						SHEET NO.
NO.	BY	DATE	NO.	BY	DATE	S-67
1			1			TOTAL SHEETS
2			2			199

DWG. 39 OF 48

P:\R-0609IB\R0609IB_STTE2\Structures\DWG\BULBTEE\Dwg39_Bent1@1.dgn
7/21/2005 10:11:11 AM

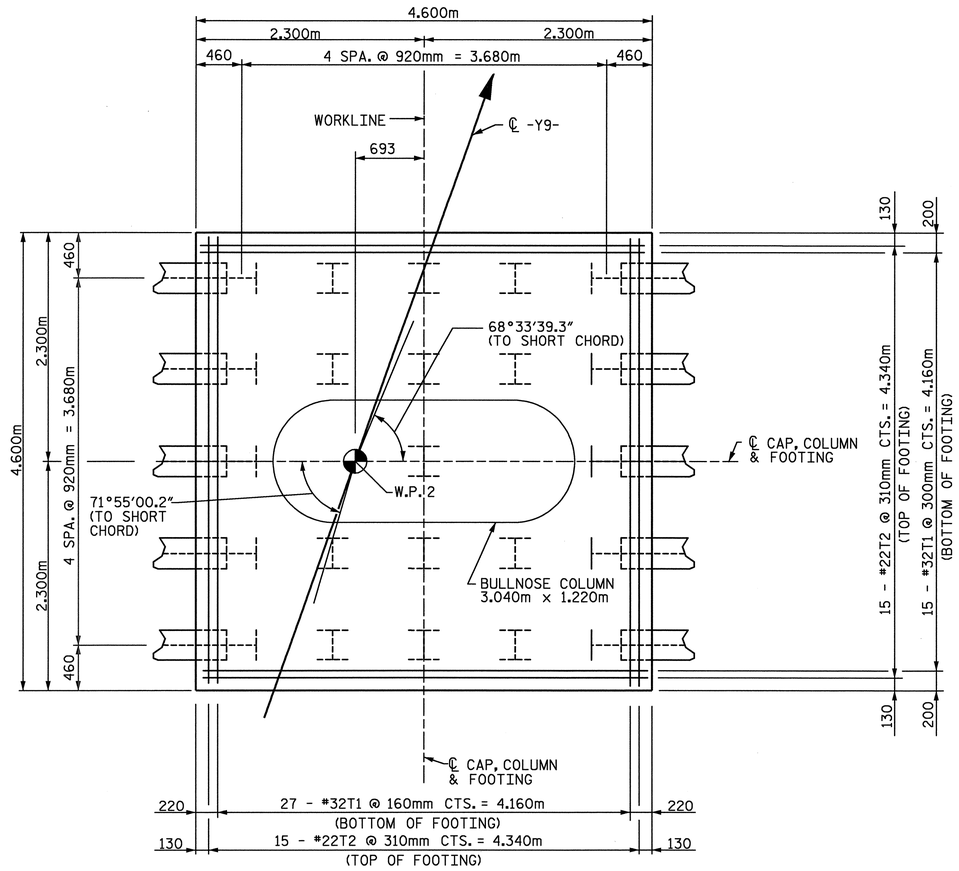

PLAN OF FOOTING

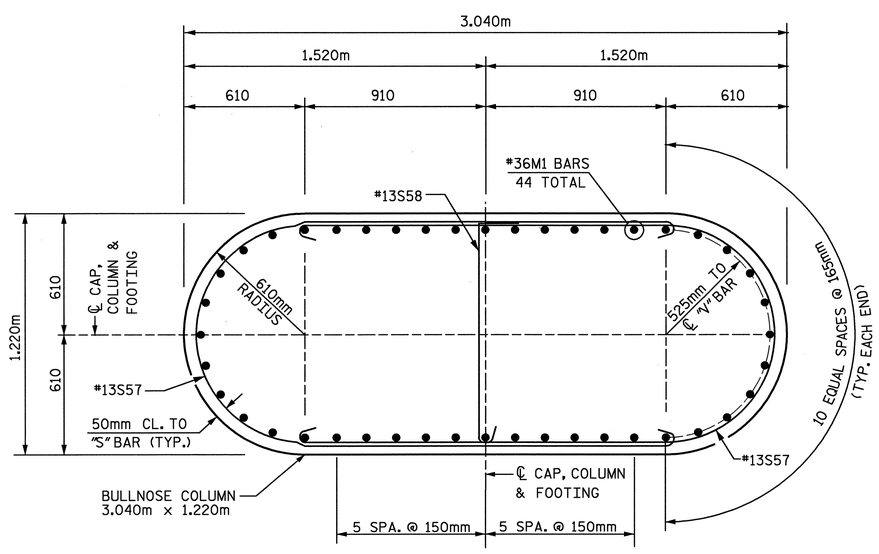

SECTION C-C

BAR TYPES
ALL BAR DIMENSIONS ARE OUT TO OUT.

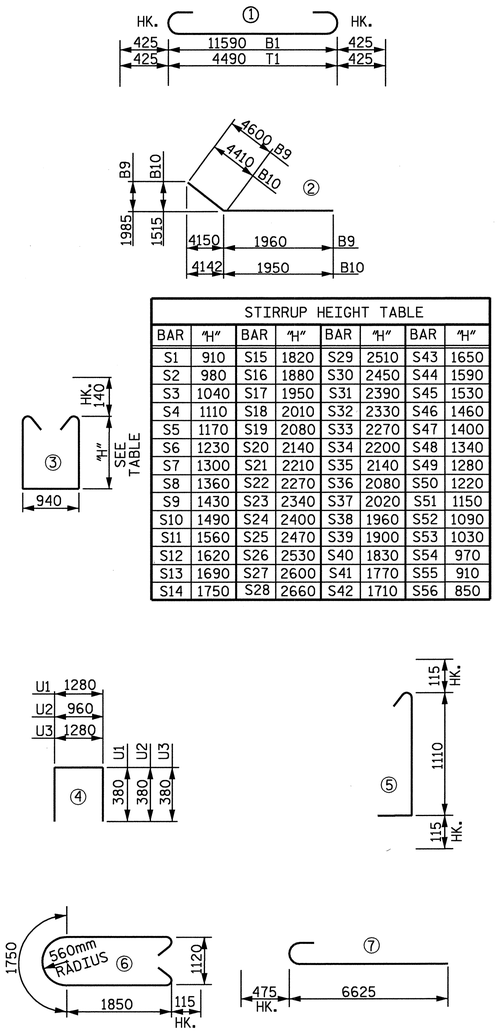

STIRRUP HEIGHT TABLE

BAR	"H"	BAR	"H"	BAR	"H"	BAR	"H"
S1	910	S15	1820	S29	2510	S43	1650
S2	980	S16	1880	S30	2450	S44	1590
S3	1040	S17	1950	S31	2390	S45	1530
S4	1110	S18	2010	S32	2330	S46	1460
S5	1170	S19	2080	S33	2270	S47	1400
S6	1230	S20	2140	S34	2200	S48	1340
S7	1300	S21	2210	S35	2140	S49	1280
S8	1360	S22	2270	S36	2080	S50	1220
S9	1430	S23	2340	S37	2020	S51	1150
S10	1490	S24	2400	S38	1960	S52	1090
S11	1560	S25	2470	S39	1900	S53	1030
S12	1620	S26	2530	S40	1830	S54	970
S13	1690	S27	2600	S41	1770	S55	910
S14	1750	S28	2660	S42	1710	S56	850

BILL OF MATERIAL

BENT 1

BAR	NO.	SIZE	TYPE	LENGTH (mm)	WEIGHT (kg)	BAR	NO.	SIZE	TYPE	LENGTH (mm)	WEIGHT (kg)
B1	8	#32	1	12440	637	S35	2	#16	3	5500	17
B2	16	#32	STR.	11600	1189	S36	2	#16	3	5380	17
B3	8	#22	STR.	11600	282	S37	2	#16	3	5260	16
B4	2	#19	STR.	10180	46	S38	2	#16	3	5140	16
B5	2	#19	STR.	8760	39	S39	2	#16	3	5020	16
B6	2	#19	STR.	7320	33	S40	2	#16	3	4880	15
B7	2	#19	STR.	5900	26	S41	2	#16	3	4760	15
B8	2	#19	STR.	4480	20	S42	2	#16	3	4640	14
B9	6	#19	2	6560	88	S43	2	#16	3	4520	14
B10	6	#19	2	6360	85	S44	2	#16	3	4400	14
B11	8	#13	STR.	1200	10	S45	2	#16	3	4280	13
B12	24	#13	STR.	2640	63	S46	2	#16	3	4140	13
B13	20	#13	STR.	1280	25	S47	2	#16	3	4020	12
						S48	2	#16	3	3900	12
M1	44	#36	7	7100	2470	S49	2	#16	3	3780	12
						S50	2	#16	3	3660	11
S1	2	#16	3	3040	9	S51	2	#16	3	3520	11
S2	2	#16	3	3180	10	S52	2	#16	3	3400	11
S3	2	#16	3	3300	10	S53	2	#16	3	3280	10
S4	2	#16	3	3440	11	S54	2	#16	3	3160	10
S5	2	#16	3	3560	11	S55	2	#16	3	3040	9
S6	2	#16	3	3680	11	S56	2	#16	3	2920	9
S7	2	#16	3	3820	12	S57	26	#13	6	5680	147
S8	2	#16	3	3940	12	S58	13	#13	5	1340	17
S9	2	#16	3	4080	13						
S10	2	#16	3	4200	13	T1	42	#32	1	5340	1436
S11	2	#16	3	4340	13	T2	30	#22	STR.	4500	411
S12	2	#16	3	4460	14						
S13	2	#16	3	4600	14	U1	41	#13	4	2040	83
S14	2	#16	3	4720	15	U2	8	#13	4	1720	14
S15	2	#16	3	4860	15	U3	6	#13	4	2040	12
S16	2	#16	3	4980	15						
S17	2	#16	3	5120	16						
S18	2	#16	3	5240	16						
S19	2	#16	3	5380	17						
S20	2	#16	3	5500	17						
S21	2	#16	3	5640	18						
S22	2	#16	3	5760	18						
S23	2	#16	3	5900	18						
S24	2	#16	3	6020	19						
S25	2	#16	3	6160	19						
S26	2	#16	3	6280	19						
S27	2	#16	3	6420	20						
S28	2	#16	3	6540	20						
S29	2	#16	3	6240	19						
S30	2	#16	3	6120	19						
S31	2	#16	3	6000	19						
S32	2	#16	3	5880	18						
S33	2	#16	3	5760	18						
S34	2	#16	3	5620	17						

TOTAL REINFORCING STEEL = 7945 Kg

TOTAL CLASS A CONCRETE = 77.5 CU. METERS
CONCRETE CLASS A BREAKDOWN
POUR 1 (FOOTING) 29.6 CU. METERS
POUR 2 (COLUMN) 12.2 CU. METERS
POUR 3 (CAP) 35.7 CU. METERS

FOUNDATION EXCAVATION LUMP SUM

HP 310 x 79 STEEL PILES
NO. = 23 LINEAR METERS = 92.3

PROJECT NO. R-0609IB
GUILFORD-RANDOLPH COUNTY
STATION: 83+34.392 -L-

SHEET 2 OF 2

NORTH CAROLINA PROFESSIONAL SEAL 22072 ENGINEER JOHN ARTHUR DILWORTH
7-21-05

ETHERILL ENGINEERING
559 Jones Franklin Rd. Suite 164
Raleigh, N.C. 27606
Bus: 919 851 8077
Fax: 919 851 8107
TRANSPORTATION PLANNING/DESIGN - BRIDGE/STRUCTURE DESIGN
CIVIL/SITE DESIGN - GIS/GPS - CONSTRUCTION OBSERVATION

STATE OF NORTH CAROLINA
DEPARTMENT OF TRANSPORTATION
RALEIGH

SUBSTRUCTURE
BENT 1

REVISIONS						SHEET NO.
NO.	BY	DATE	NO.	BY	DATE	S-68
1			1			TOTAL SHEETS
2			2			199

DWG. 40 OF 48

DRAWN BY: JC PENDERGRAFT DATE: 6-05
CHECKED BY: JT DIFFEE DATE: 6-05

P:\R-0609IB\R0609IB_SITE2\Structures\DWG\BULBTEE\Dwg40_Bent 1082.dgn
7/21/2005 10:11:28 AM

NOTES:

FOR TEMPORARY DRAINAGE AT END BENTS, SEE INTEGRAL END BENT 1 SHEET 4 OF 4.

FOR PILE SPLICE DETAILS, SEE INTEGRAL END BENT 1, SHEET 4 OF 4.

THE CONTRACTOR SHALL PROVIDE FOR INSTALLATION OF THE 102mm Ø DRAIN PIPE THROUGH THE WING WALL AS REQUIRED FOR REINFORCED BRIDGE APPROACH FILLS, SEE THE ROADWAY PLANS. REINFORCING STEEL IN THE WING WALL MAY BE SHIFTED AS NECESSARY TO CLEAR THE DRAIN PIPE.

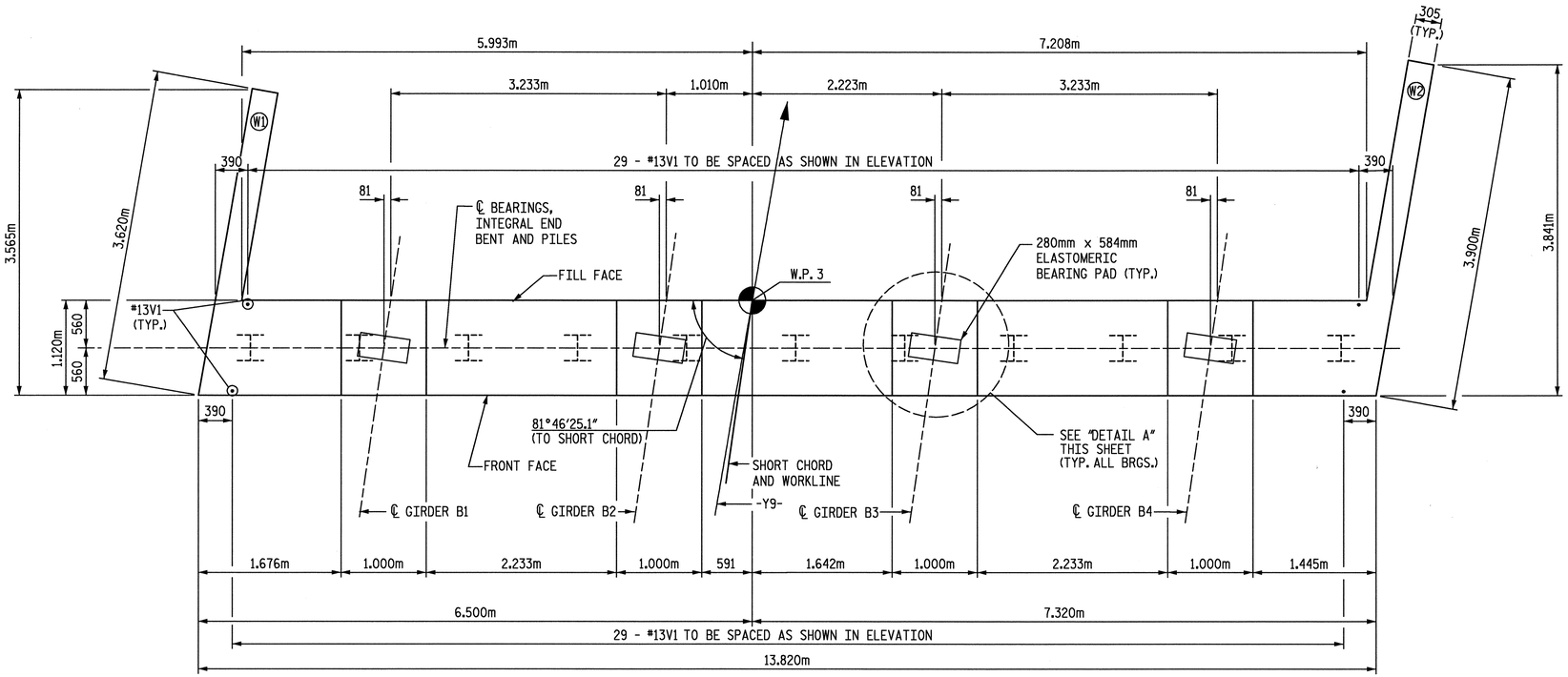

PLAN

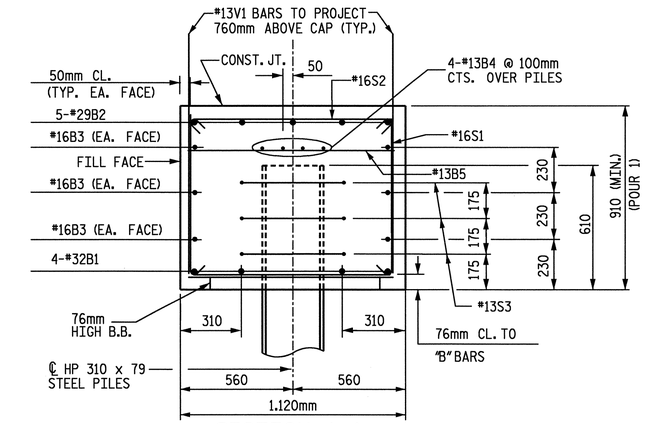

SECTION A-A

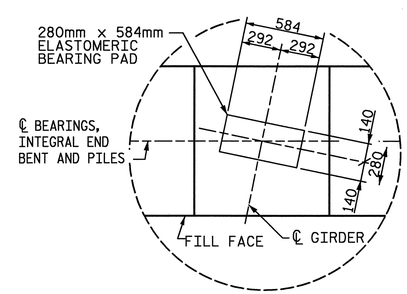

DETAIL A

TOP OF PILE ELEVATION	
PILE LOCATION	ELEVATION
P1	240.941
P2	240.871
P3	240.800
P4	240.729
P5	240.658
P6	240.588
P7	240.517
P8	240.446
P9	240.375
P10	240.304
P11	240.234

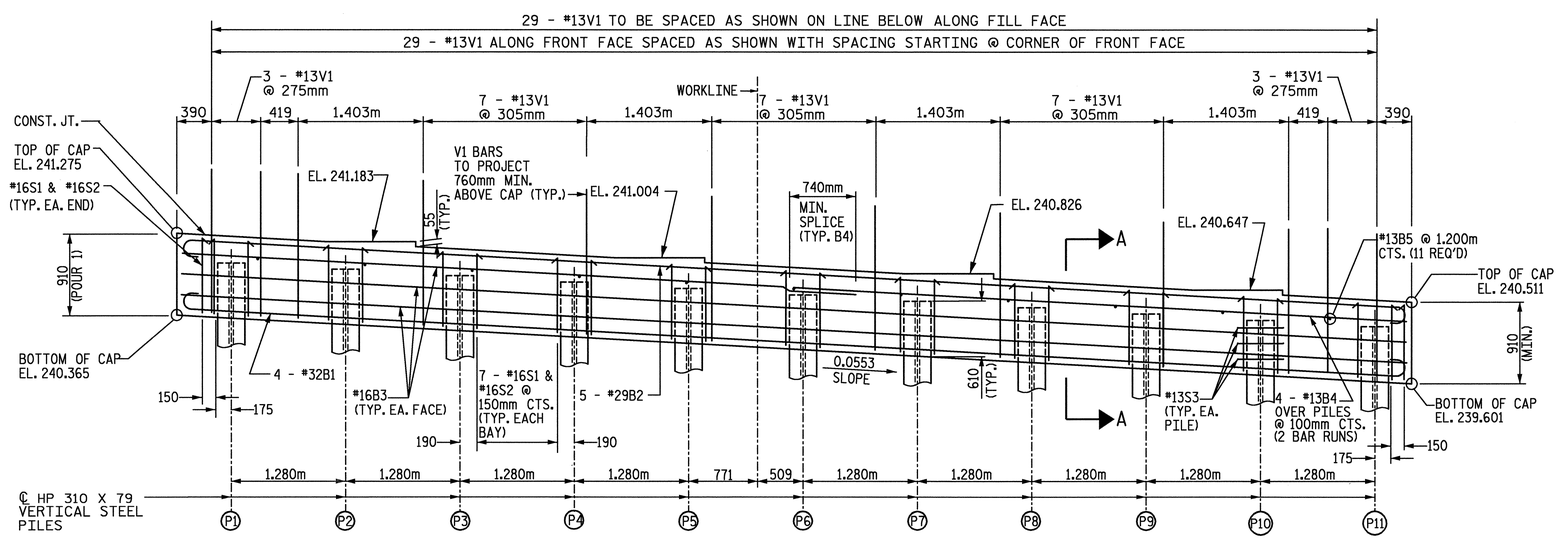

PART ELEVATION

TO SHOW STEEL AND CONCRETE FOR POUR 1 ONLY.
WINGS NOT SHOWN FOR CLARITY, SEE SHEET 3 OF 3 FOR DETAILS.

PROJECT NO. R-0609IB
GUILFORD-RANDOLPH COUNTY
STATION: 83+34.392 -L-

SHEET 1 OF 3

NORTH CAROLINA PROFESSIONAL SEAL 22072 ENGINEER JOHN ARTHUR DILWORTH
7-21-05

WETHERILL ENGINEERING
559 Jones Franklin Rd. Suite 164
Raleigh, N.C. 27606
Bus: 919 851 8077
Fax: 919 851 8107

TRANSPORTATION PLANNING/DESIGN - BRIDGE/STRUCTURE DESIGN
CIVIL/SITE DESIGN - GIS/GPS - CONSTRUCTION OBSERVATION

STATE OF NORTH CAROLINA
DEPARTMENT OF TRANSPORTATION
RALEIGH

SUBSTRUCTURE
INTEGRAL END BENT 2

REVISIONS						SHEET NO.
NO.	BY	DATE	NO.	BY	DATE	S-69
1			1			TOTAL SHEETS
2			2			199

DRAWN BY: J. PENDERGRAFT DATE: 6-05
CHECKED BY: J. DILWORTH DATE: 6-05

DWG. 41 OF 48

P:\R-0609IB\R0609IB_SITE2\Structures\DWG\BULBTEE\Dwg41_EB2001.dgn
7/21/2005 10:13:47 AM

NOTES:

THE CONCRETE IN THE SHADED AREA OF THE WING SHALL BE POURED AFTER THE PARAPET AND END POST ARE CAST IF SLIP FORMING IS USED. FOR BLOCKOUT DETAIL, SEE SHEET 4 OF 4.

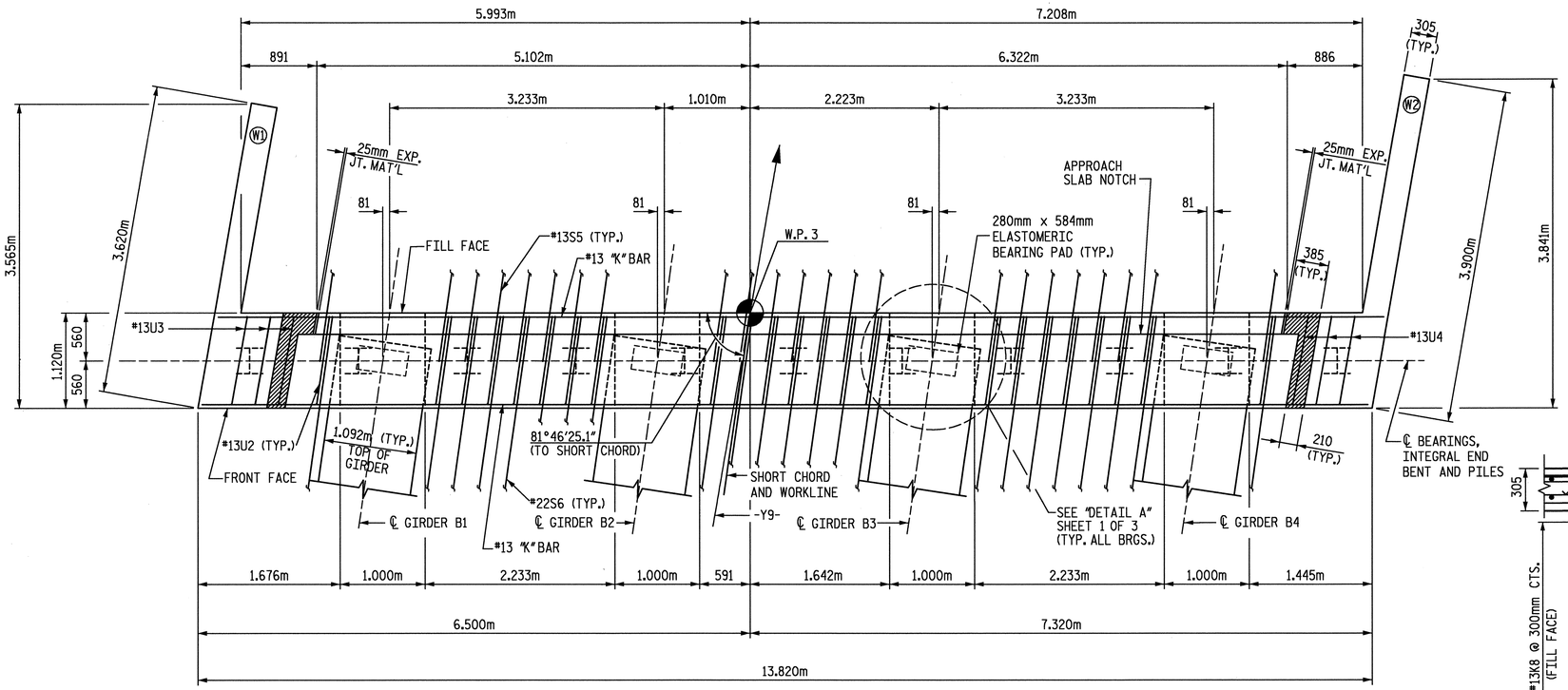

PLAN

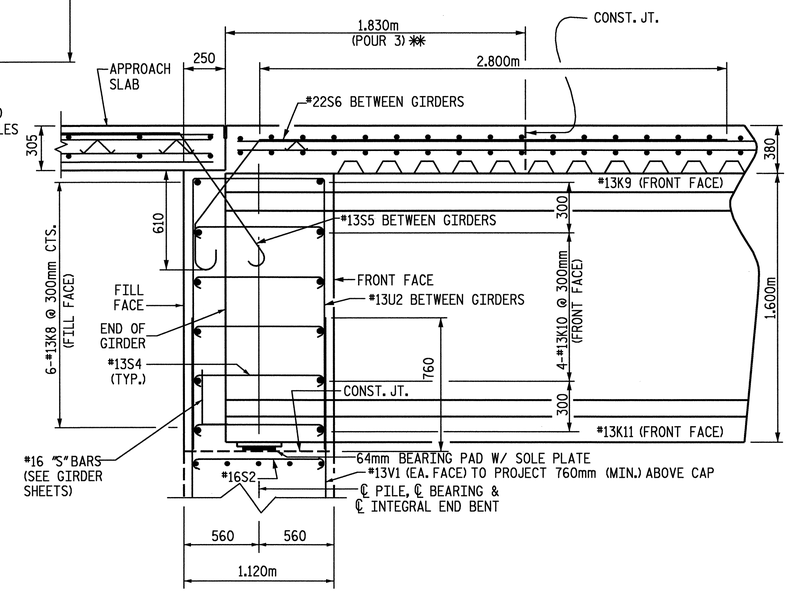

SECTION A-A (THROUGH INTEGRAL END BENT)

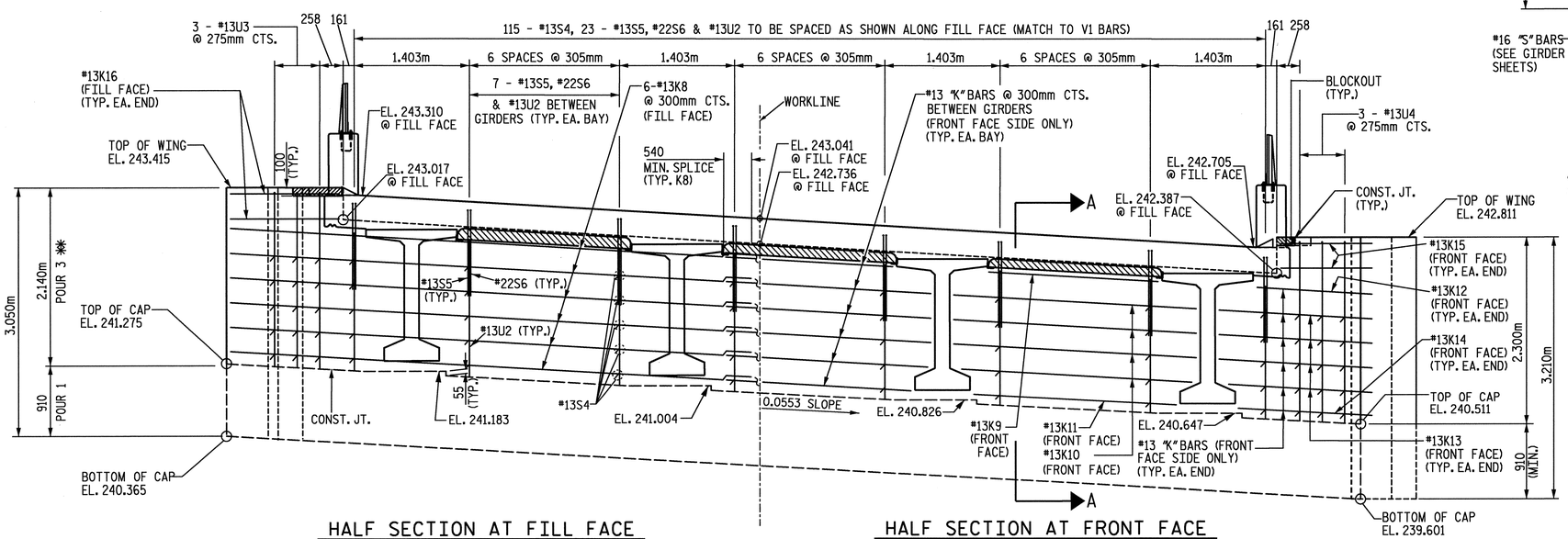

HALF SECTION AT FILL FACE

HALF SECTION AT FRONT FACE

PART ELEVATION

TO SHOW STEEL AND CONCRETE FOR POUR 3

✱✱ CONCRETE QUANTITY FOR POUR 3 INCLUDES THE INTEGRAL END BENT DIAPHRAGM QUANTITY AND IS LISTED UNDER CLASS AA SUPERSTRUCTURE POUR 3 QUANTITIES. THERE IS NO HORIZONTAL CONSTRUCTION JOINT PERMITTED BETWEEN THE END BENT DIAPHRAGM AND THE SLAB.

PROJECT NO. R-0609IB

GUILFORD-RANDOLPH COUNTY

STATION: 83+34.392 -L-

SHEET 2 OF 3

NORTH CAROLINA SEAL 22072 ENGINEER JOHN ARTHUR DILWORTH

7-21-05

ETHERILL ENGINEERING
559 Jones Franklin Rd. Suite 164
Raleigh, N.C. 27606
Bus: 919 851 8077
Fax: 919 851 8107

TRANSPORTATION PLANNING/DESIGN - BRIDGE/STRUCTURE DESIGN
CIVIL/SITE DESIGN - GIS/GPS - CONSTRUCTION OBSERVATION

STATE OF NORTH CAROLINA
DEPARTMENT OF TRANSPORTATION
RALEIGH

SUBSTRUCTURE
INTEGRAL END BENT 2

REVISIONS						SHEET NO.
NO.	BY	DATE	NO.	BY	DATE	S-70
1			1			TOTAL SHEETS
2			2			199

DRAWN BY: Z. PIATEK DATE: 6-05
CHECKED BY: J. A. DILWORTH DATE: 6-05

DWG. 42 OF 48

P:\R-0609IBR0609IB_SITE2\Structures\DWG\BUILBTEE\Dwg42_EB2002.dgn
7/21/2005 10:14:06 AM

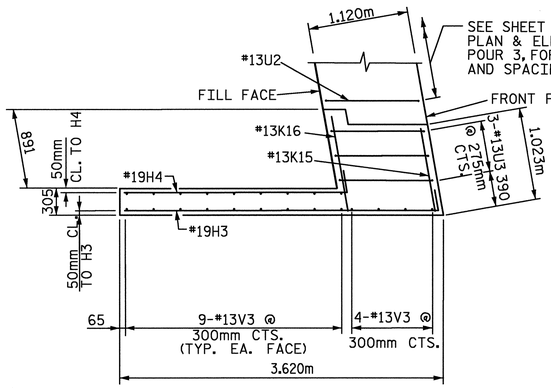

PLAN OF WING W1

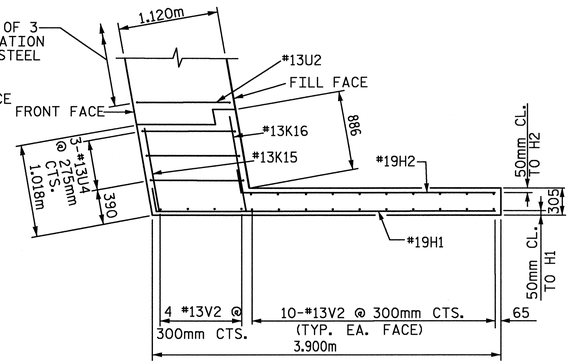

PLAN OF WING W2

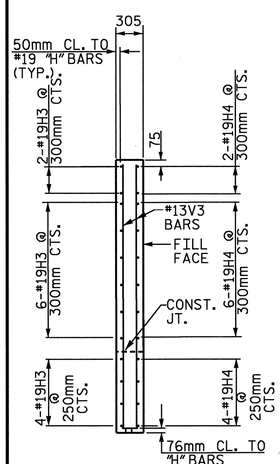

SECTION Y-Y

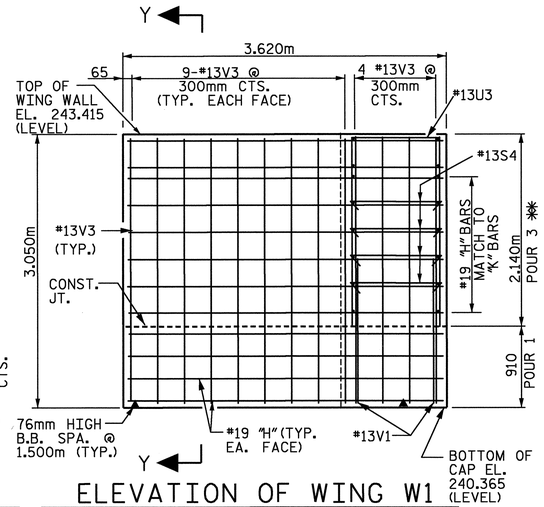

ELEVATION OF WING W1

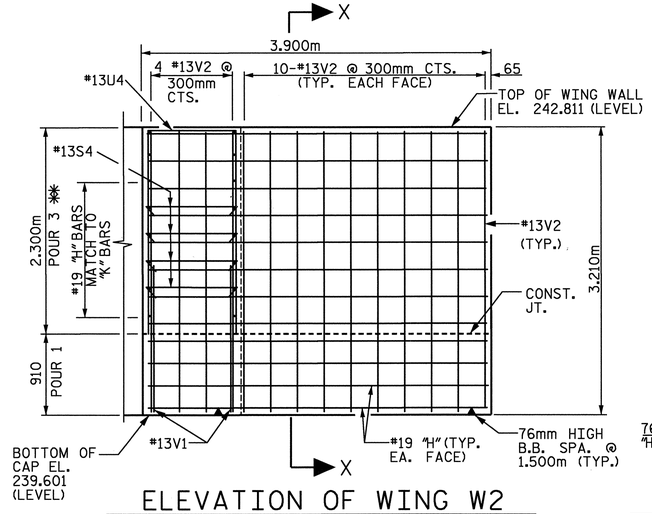

ELEVATION OF WING W2

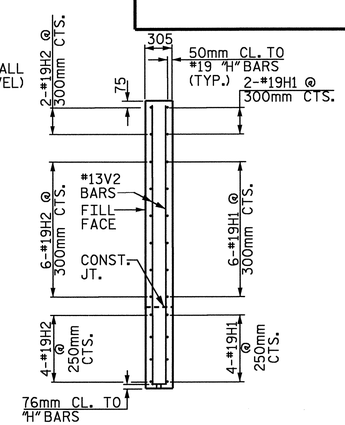

SECTION X-X

BAR TYPES

ALL BAR DIMENSIONS ARE OUT TO OUT.

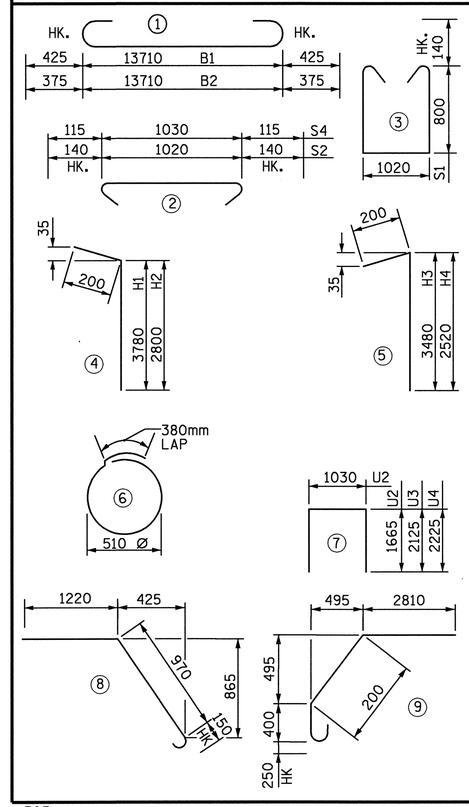

BILL OF MATERIAL

END BENT 2

BAR	NO.	SIZE	TYPE	LENGTH (mm)	WEIGHT (Kg)
B1	4	#32	1	14560	373
B2	5	#29	1	14460	366
B3	6	#16	STR.	13720	128
B4	8	#13	STR.	7240	58
B5	11	#13	STR.	1020	11
H1	12	#19	4	3980	107
H2	12	#19	4	3000	80
H3	12	#19	5	3680	99
H4	12	#19	5	2720	73
K8	12	#13	STR	7140	85
K9	3	#13	STR	2020	6
K10	12	#13	STR	2940	35
K11	3	#13	STR	2460	7
K12	2	#13	STR	1320	3
K13	8	#13	STR	1780	14
K14	2	#13	STR	1520	3
K15	4	#13	STR	900	4
K16	4	#13	STR	1080	4
S1	74	#16	3	2900	333
S2	74	#16	2	1300	149
S3	33	#13	6	2000	66
S4	145	#13	2	1260	182
* S5	23	#13	8	2340	53
* S6	23	#22	9	3660	256
U2	23	#13	7	4360	100
U3	3	#13	7	5280	16
U4	3	#13	7	5480	16
V1	58	#13	STR.	1600	92
V2	24	#13	STR.	3080	73
V3	22	#13	STR.	2920	64

REINFORCING STEEL = 2547 Kg

* EPOXY COATED REINFORCING STEEL = 309 Kg

** TOTAL CLASS A CONCRETE= 15.7 CU. METERS

CONCRETE BREAKDOWN:

POUR 1

(CAP & LOWER WING) = 15.7 CU. METERS

HP 310 x 79 STEEL PILES

NO. = 11 LINEAR METERS = 100.2

** CONCRETE QUANTITY FOR POUR 3 INCLUDES THE INTEGRAL END BENT DIAPHRAGM QUANTITY AND IS LISTED UNDER CLASS AA SUPERSTRUCTURE POUR 3 QUANTITIES. THERE IS NO HORIZONTAL CONSTRUCTION JOINT PERMITTED BETWEEN THE END BENT DIAPHRAGM AND THE SLAB.

PROJECT NO. R-0609IB

GUILFORD-RANDOLPH COUNTY

STATION: 83+34.392 -L-

SHEET 3 OF 3

NORTH CAROLINA PROFESSIONAL SEAL 22072 ENGINEER JOHN ARTHUR DILWORTH

7-21-05

WETHERILL ENGINEERING

559 Jones Franklin Rd. Suite 164
Raleigh, N.C. 27606
Bus: 919 851 8077
Fax: 919 851 8107

TRANSPORTATION PLANNING/DESIGN - BRIDGE/STRUCTURE DESIGN
CIVIL/SITE DESIGN - GIS/GPS - CONSTRUCTION OBSERVATION

STATE OF NORTH CAROLINA
DEPARTMENT OF TRANSPORTATION
RALEIGH

SUBSTRUCTURE
INTEGRAL END BENT 2

REVISIONS						SHEET NO.
NO.	BY	DATE	NO.	BY	DATE	S-71
1			1			TOTAL SHEETS
2			2			199

DRAWN BY: J PENDERGRAFT DATE: 6-05
CHECKED BY: J DILWORTH DATE: 6-05

DWG. 43 OF 48

P:\R-0609IB\R0609IB_SITE2\Structures\DMG\BUILDTEE\Dwg43_EB2D3.dgn
7/21/2005 10:14:25 AM

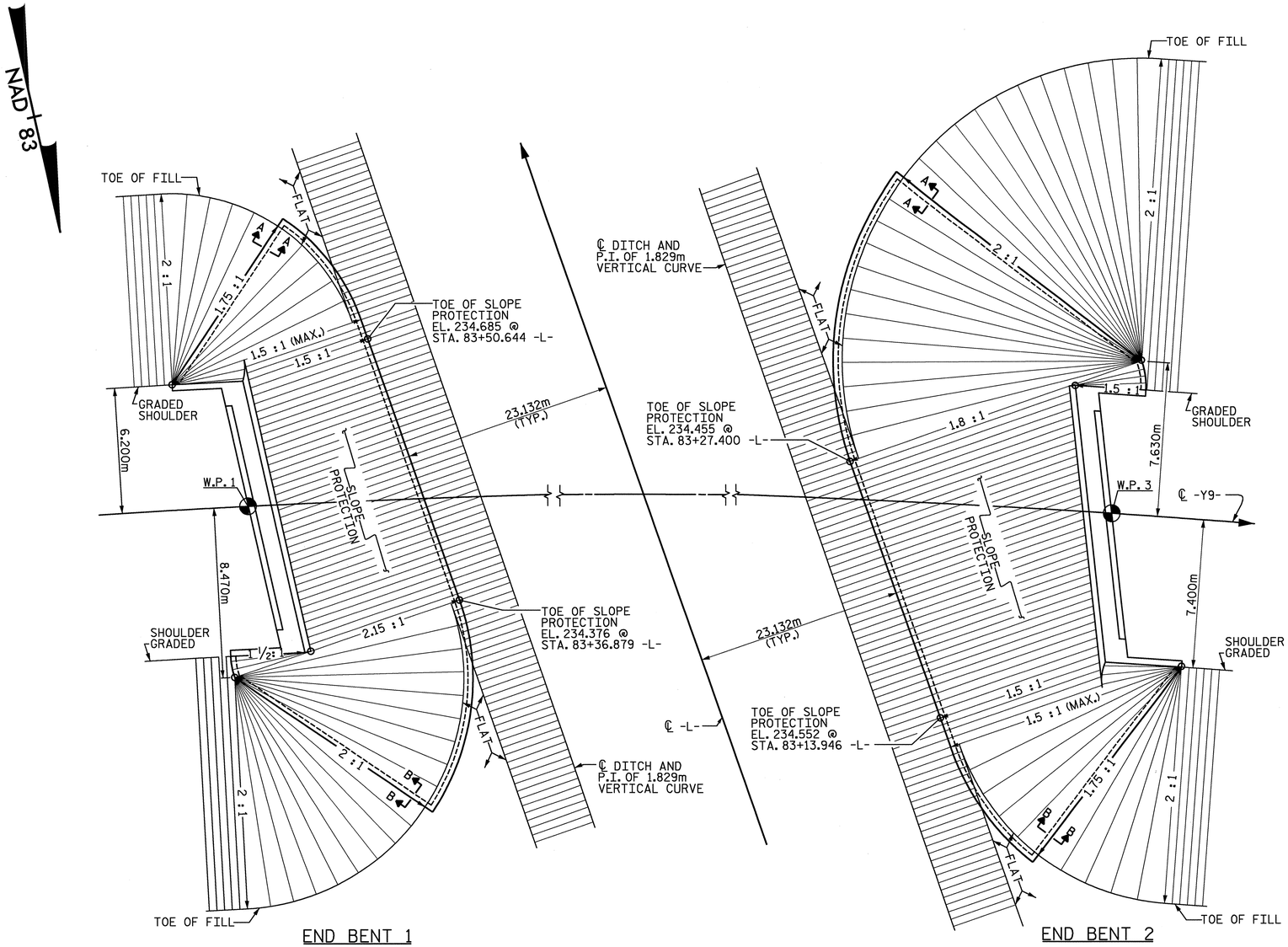

PLAN - END BENT WITH SWEPT BACK WINGS - SKEWED
(1 1/2:1 SLOPE MAX.)

GENERAL NOTES

SLOPE PROTECTION SHALL BE PLACED UNDER THE ENDS OF THE BRIDGE AS SHOWN IN THE DETAILS. STRAIGHT EDGING WILL NOT BE REQUIRED UNLESS, IN THE OPINION OF THE ENGINEER, VISUAL INSPECTION INDICATES A NEED FOR IT. METHOD OF MEASUREMENT AND BASIS OF PAYMENT SHALL BE AS PRESCRIBED IN SECTION 462 OF THE STANDARD SPECIFICATIONS. FOR BERM WIDTH, SEE GENERAL DRAWING.

ALTERNATE "A"

ALTERNATE "A" SHALL CONSIST OF 100mm POURED-IN-PLACE CONCRETE PAVING AS SHOWN IN THE DETAILS ON THIS SHEET. CONCRETE SHALL BE CLASS "B". THE CONCRETE SURFACE SHALL BE FLOATED WITH A WOODEN FLOAT AND FINISHED. WELDED WIRE FABRIC REINFORCING SHALL BE 152 X 152 - W9.1 X W9.1, 1520mm WIDE. SLOPE PROTECTION SHALL BE POURED IN 1520mm STRIPS AS SHOWN IN THE "POURING DETAIL" WITH 600mm LONG #13 BARS PLACED ALONG THE SLOPE BETWEEN STRIPS AT 450mm MAXIMUM SPACING. SLOPE PROTECTION MAY BE POURED IN ALTERNATE 1220mm AND 1520mm STRIPS AS SHOWN IN THE "OPTIONAL POURING DETAIL" WITH ADJACENT RUNS OF WELDED WIRE FABRIC LAPPING AT LEAST 152mm. THE COST OF THE WELDED WIRE FABRIC AND #13 BARS, IF USED, SHALL BE INCLUDED IN THE CONTRACT UNIT PRICE BID PER SQUARE METER FOR SLOPE PROTECTION.

BRIDGE @ STA. 83+34.392 -L-	100mm SLOPE PROTECTION	* WELDED WIRE FABRIC 1520mm WIDE
	SQUARE METERS	APPROX. METERS
END BENT 1	470	310
END BENT 2	705	465

* QUANTITY SHOWN IS BASED ON 1520mm POURS.

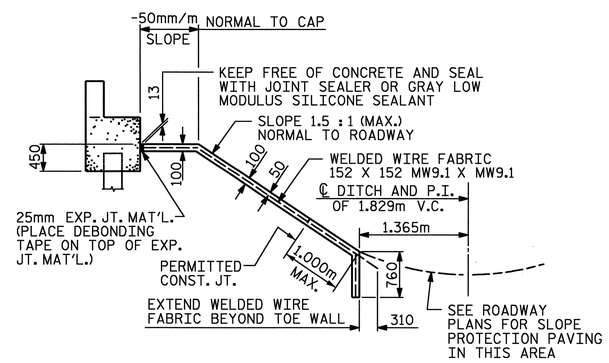

SECTION ALONG ℄ ROADWAY WHEN FILL CATCHES IN DITCH

DETAILS FOR ALTERNATE "A"

PROJECT NO. R-0609IB
GUILFORD-RANDOLPH COUNTY
STATION: 83+34.392 -L-

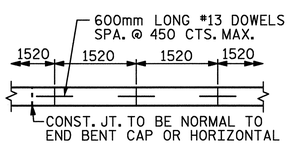

STRIP WIDTHS MAY VARY IN CURVED PORTION.

POURING DETAIL

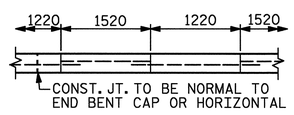

POUR A 1220mm STRIP FIRST. STRIP WIDTHS MAY VARY IN CURVED PORTION.

OPTIONAL POURING DETAIL

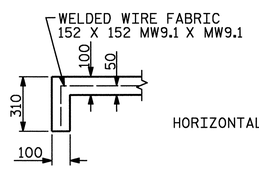

SECTION A-A

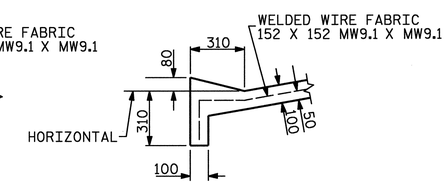

SECTION B-B

DRAWN BY: J. T. DIFFEE DATE: 6-05
CHECKED BY: G. F. WILSON DATE: 6-05

DWG. 44 OF 48

NORTH CAROLINA PROFESSIONAL SEAL 22072 ENGINEER ARTHUR DILWORTH
7-21-05

WETHERILL ENGINEERING
559 Jones Franklin Rd. Suite 164
Raleigh, N.C. 27606
Bus: 919 851 8077
Fax: 919 851 8107

TRANSPORTATION PLANNING/DESIGN - BRIDGE/STRUCTURE DESIGN
CIVIL/SITE DESIGN - GIS/GPS - CONSTRUCTION OBSERVATION

STATE OF NORTH CAROLINA
DEPARTMENT OF TRANSPORTATION
RALEIGH

SLOPE PROTECTION DETAILS

REVISIONS						SHEET NO.
NO.	BY	DATE	NO.	BY	DATE	S-72
1			1			TOTAL SHEETS
2			2			199

P:\R-0609IB\R0609IB_SITE2\Structures\DWG\BULBTEE\Dwg44_SlopeProtection.dgn
7/21/2005 10:14:47 AM

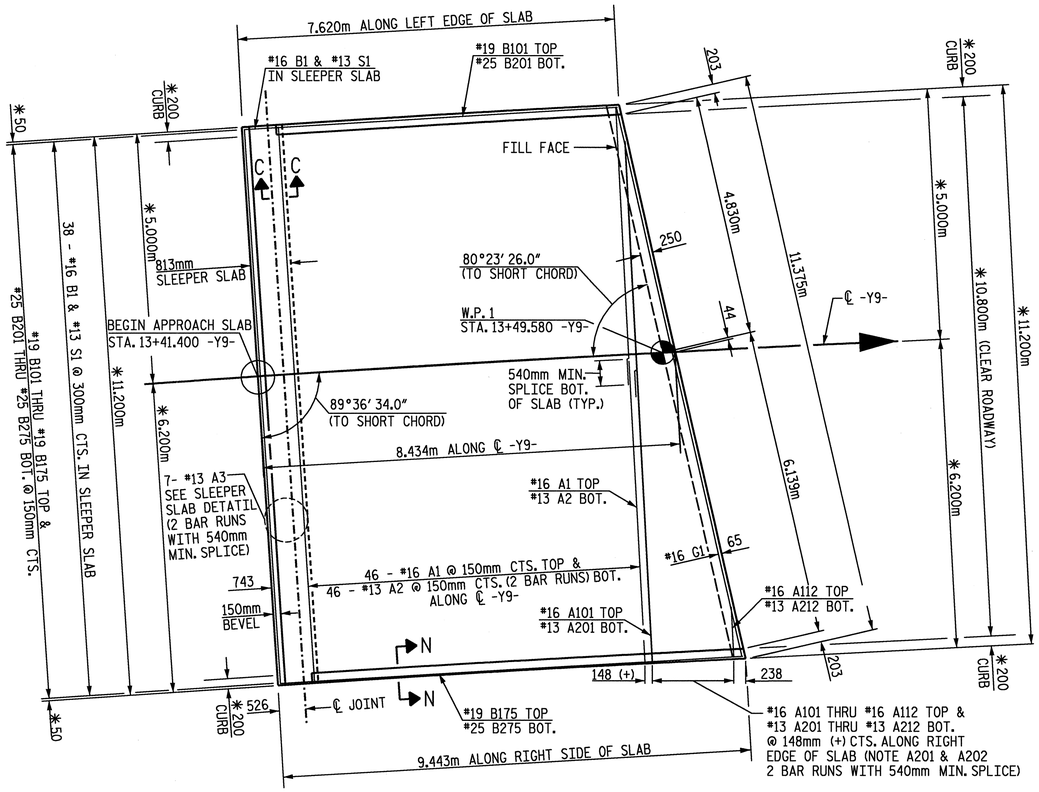

PLAN @ INTEGRAL END BENT 1

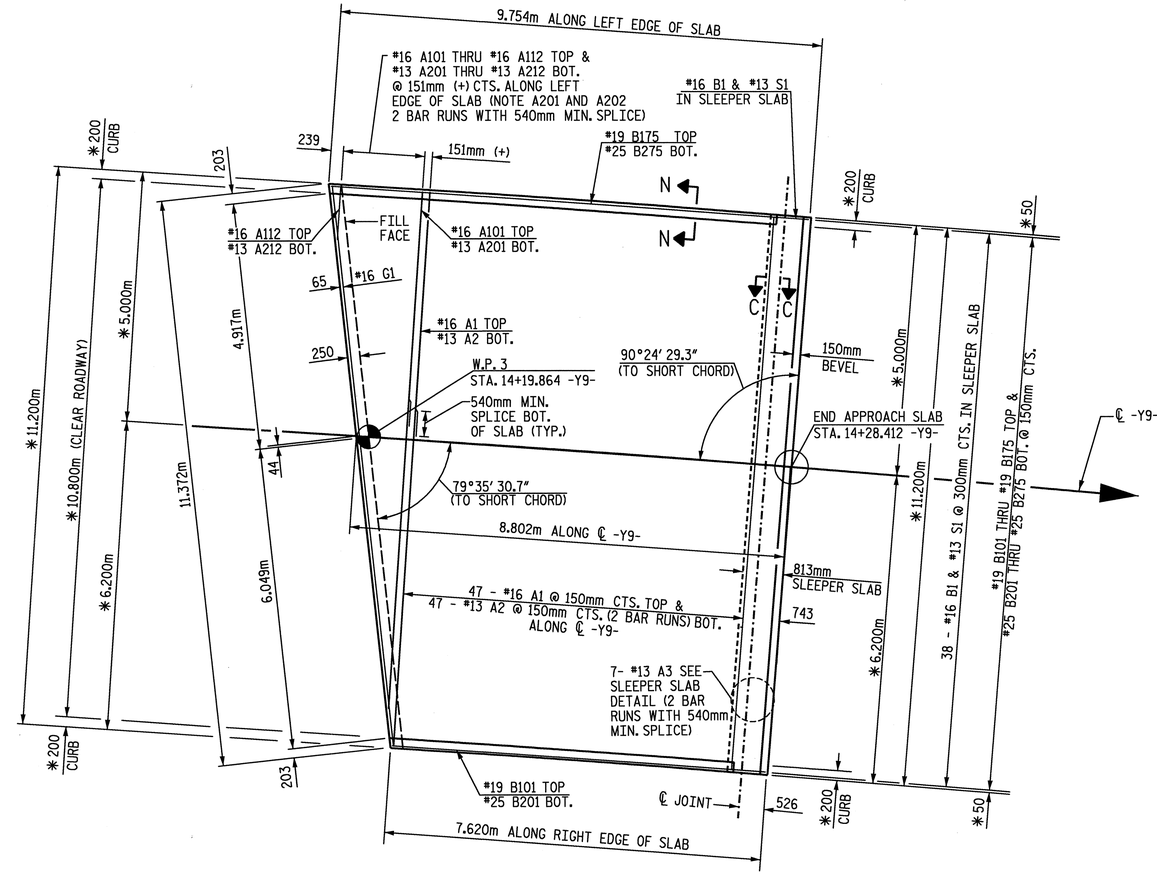

PLAN @ INTEGRAL END BENT 2

✱ DENOTES RADIAL DIMENSION

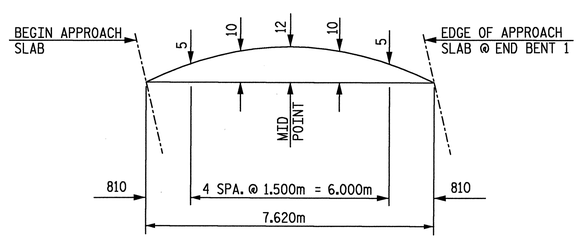

APPROACH SLAB ARC OFFSETS @ END BENT 1 - LEFT SIDE

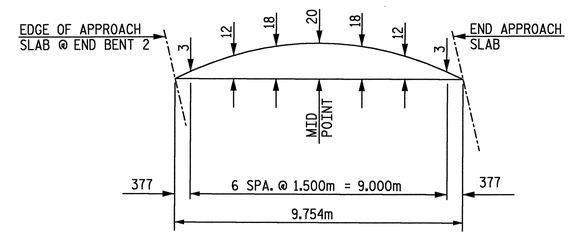

APPROACH SLAB ARC OFFSETS @ END BENT 2 - LEFT SIDE

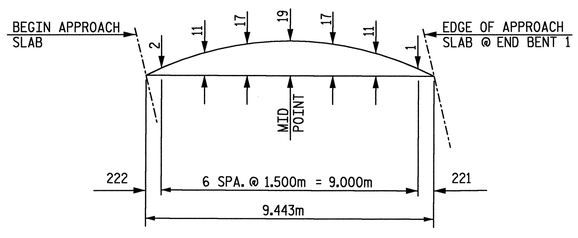

APPROACH SLAB ARC OFFSETS @ END BENT 1 - RIGHT SIDE

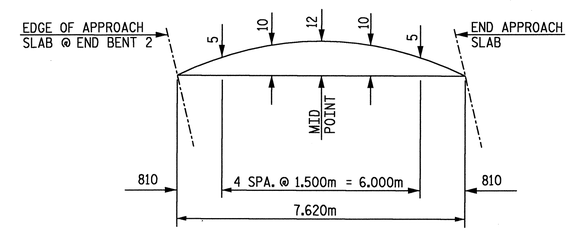

APPROACH SLAB ARC OFFSETS @ END BENT 2 - RIGHT SIDE

PROJECT NO. R-0609IB

GUILFORD-RANDOLPH COUNTY

STATION: 83+34.392 -L-

SHEET 1 OF 4

STATE OF NORTH CAROLINA
DEPARTMENT OF TRANSPORTATION
RALEIGH

BRIDGE APPROACH SLAB FOR INTEGRAL END BENT

NORTH CAROLINA PROFESSIONAL SEAL 22072 ENGINEER JOHN ARTHUR DILWORTH
7-21-05

WETHERILL ENGINEERING
559 Jones Franklin Rd. Suite 164
Raleigh, N.C. 27606
Bus: 919 851 8077
Fax: 919 851 8107

TRANSPORTATION PLANNING/DESIGN - BRIDGE/STRUCTURE DESIGN
CIVIL/SITE DESIGN - GIS/GPS - CONSTRUCTION OBSERVATION

REVISIONS						SHEET NO.
NO.	BY	DATE	NO.	BY	DATE	S-73
1			1			TOTAL SHEETS
2			2			199

DRAWN BY: E. BONNEY DATE: 6-05
CHECKED BY: J.A. DILWORTH DATE: 6-05

DWG. 45 OF 48

P:\R-0609IB\R0609IB_SITE2\Structures\DWG\BULBTEE\Dwg45_ApprSlab01.dgn
7/21/2005 10:17:04 AM

NOTE: FOR PLAN OF APPROACH SLABS, SEE SHEET 1 OF 4.

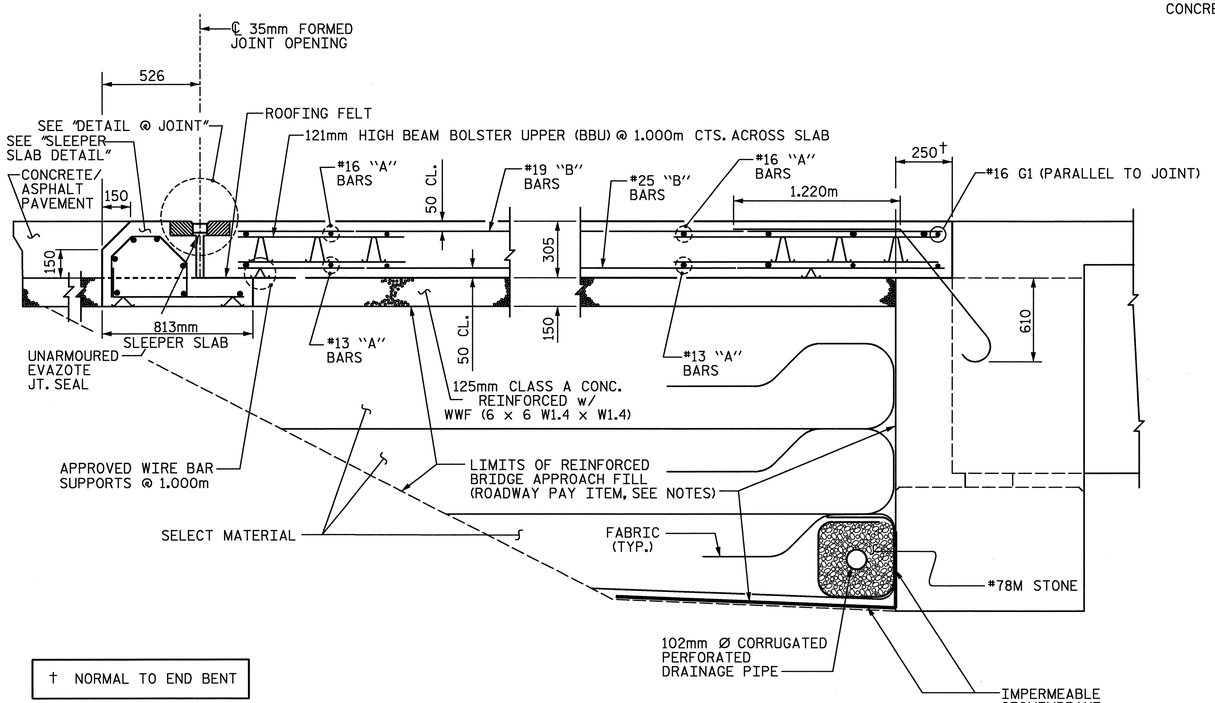

† NORMAL TO END BENT

SECTION THRU SLAB

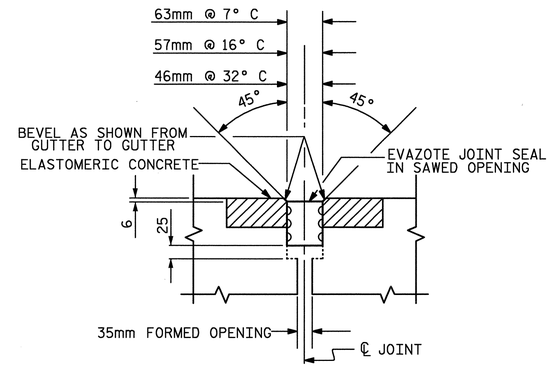

SECTION C-C

EVAZOTE JOINT SEAL
(FOR EVAZOTE JOINT SEAL, SEE SPECIAL PROVISIONS)

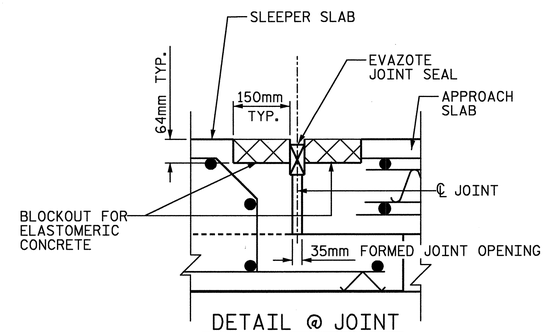

DETAIL @ JOINT
SECTION C-C

EVAZOTE JOINT SEAL
(PRE-SAWED ELASTOMERIC CONCRETE DIMENSIONS)

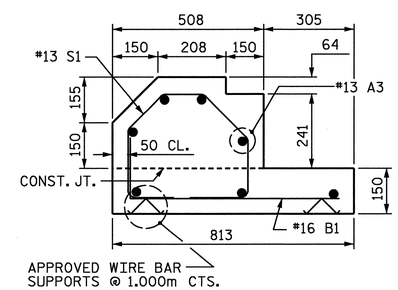

SLEEPER SLAB DETAIL

NOTES

APPROACH SLAB SHALL NOT BE CONSTRUCTED PRIOR TO COMPLETION OF THE BRIDGE DECK.

FOR REINFORCED BRIDGE APPROACH FILL INCLUDING FABRIC, IMPERMEABLE GEOMEMBRANE, 102mm Ø DRAINAGE PIPE, #78M STONE, AND SELECT MATERIAL, SEE ROADWAY PLANS.

TEMPORARY DRAINAGE AND TEMPORARY BERM AND SLOPE DRAINS WILL BE PAID FOR UNDER THE LUMP SUM PRICE FOR BRIDGE APPROACH SLAB.

AREA BETWEEN THE WINGWALL AND APPROACH SLAB SHALL BE GRADED TO DRAIN THE WATER AWAY FROM THE FILL FACE OF THE BRIDGE AND SHALL BE PAVED. SEE ROADWAY PLANS.

THE CONTRACTOR SHALL USE 125mm CLASS "A" CONCRETE BASE REINFORCED WITH WWF (6X6 W1.4XW1.4), THE WIDTH SHALL BE THE SAME AS THAT OF THE APPROACH SLAB. THE CONCRETE SHALL BE FINISHED TO A SMOOTH SURFACE AND A LAYER OF 13.6 kg ROOFING FELT SHALL BE PLACED BETWEEN THE CONCRETE BASE AND THE APPROACH SLAB TO PREVENT BOND. THE APPROACH SLAB SHALL NOT BE CAST UNTIL THE CONCRETE BASE HAS REACHED AN AGE OF THREE CURING DAYS.

WITH EVAZOTE JOINT SEAL

FOR EVAZOTE JOINT SEALS, SEE SPECIAL PROVISIONS.

THE NOMINAL UNCOMPRESSED SEAL WIDTH OF THE EVAZOTE JOINT SEAL SHALL BE 71mm.

SEE SPECIAL PROVISIONS FOR ELASTOMERIC CONCRETE.

THE COST OF THE ELASTOMERIC CONCRETE SHALL BE INCLUDED IN THE LUMP SUM PRICE BID FOR "EVAZOTE JOINT SEALS".

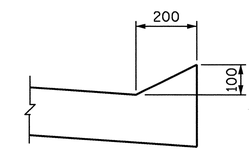

SECTION N-N

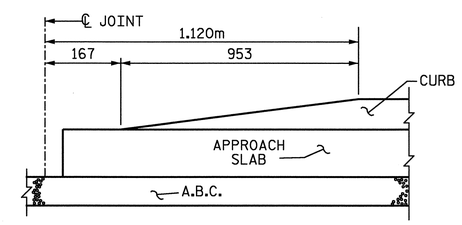

END OF CURB

CURB DETAILS

PROJECT NO. R-0609IB
GUILFORD-RANDOLPH COUNTY
STATION: 83+34.392 -L-

SHEET 2 OF 4

STATE OF NORTH CAROLINA
DEPARTMENT OF TRANSPORTATION
RALEIGH

BRIDGE APPROACH SLAB FOR INTEGRAL END BENT

NORTH CAROLINA SEAL 22072 ENGINEER JOHN ARTHUR DILWORTH
7-21-05

WETHERILL ENGINEERING
559 Jones Franklin Rd. Suite 164
Raleigh, N.C. 27606
Bus: 919 851 8077
Fax: 919 851 8107

TRANSPORTATION PLANNING/DESIGN - BRIDGE/STRUCTURE DESIGN
CIVIL/SITE DESIGN - GIS/GPS - CONSTRUCTION OBSERVATION

REVISIONS								SHEET NO.
NO.	BY:	DATE:	NO.	BY:	DATE:			S-74
1			3					TOTAL SHEETS
2			4					199

ASSEMBLED BY : J PENDERGRAFT DATE : 6-05
CHECKED BY : J DILWORTH DATE : 6-05

DWG. 46 OF 48

P:\R-0609IB\R0609IB_SITE2\Structures\DWG\BULBTEE\Dwg46_ApprSlab02.dgn
7/21/2005 10:18:11 AM

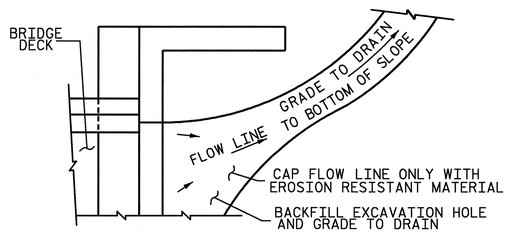

NOTE: IF THE APPROACH SLAB IS NOT CONSTRUCTED IMMEDIATELY AFTER THE BACKFILLING OF THE END BENT EXCAVATION, GRADE TO DRAIN TO THE BOTTOM OF THE SLOPE AND PROVIDE EROSION RESISTANT MATERIAL, SUCH AS FIBERGLASS ROVING OR AS DIRECTED BY THE ENGINEER TO PREVENT SOIL EROSION AND TO PROTECT THE AREA ADJACENT TO THE STRUCTURE. THE CONTRACTOR WILL BE REQUIRED TO REMOVE THESE MATERIALS PRIOR TO CONSTRUCTION OF THE APPROACH SLAB.

TEMPORARY DRAINAGE DETAIL

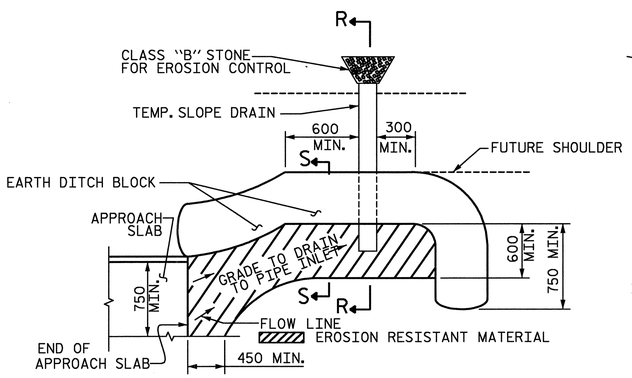

NOTE: IMMEDIATELY AFTER THE CONSTRUCTION OF THE APPROACH SLAB, THE CONTRACTOR SHALL PROVIDE TEMPORARY BERM AND SLOPE DRAIN. CONTRACTOR SHALL GRADE TO PIPE INLET AND PROVIDE EROSION RESISTANT MATERIAL AS SHOWN. THE EROSION RESISTANT MATERIAL SHALL BE EITHER 1) ASPHALT PLANT MIX, TYPE 1 OR TYPE 2, MIN. 50mm DEPTH, 2) EROSION CONTROL MAT, OR 3) CONCRETE, AS DIRECTED BY THE ENGINEER. THE SLOPE DRAIN SHALL CONSIST OF A NON-PERFORATED TEMPORARY DRAINAGE PIPE, 305mm IN DIAMETER.

PLAN VIEW

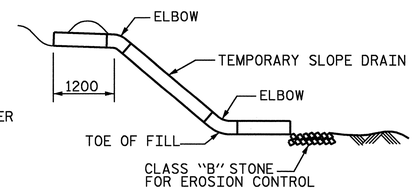

SECTION R-R

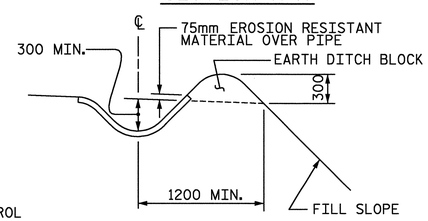

SECTION S-S

TEMPORARY BERM AND SLOPE DRAIN DETAILS

APPROACH SLAB I

REINFORCING BAR SCHEDULE

BAR	NO.	SIZE	TYPE	LENGTH	WEIGHT	BAR	NO.	SIZE	TYPE	LENGTH	WEIGHT	BAR	NO.	SIZE	TYPE	LENGTH	WEIGHT
✳A1	46	#16	STR.	11100	792	✳B134	1	#19	STR.	7640	17	B225	1	#25	STR.	7420	29
						✳B135	1	#19	STR.	7660	17	B226	1	#25	STR.	7440	30
A2	92	#13	STR.	5820	532	✳B136	1	#19	STR.	7680	17	B227	1	#25	STR.	7460	30
						✳B137	1	#19	STR.	7720	17	B228	1	#25	STR.	7500	30
A3	14	#13	STR.	5820	81	✳B138	1	#19	STR.	7740	17	B229	1	#25	STR.	7520	30
						✳B139	1	#19	STR.	7760	17	B230	1	#25	STR.	7540	30
✳A101	1	#16	STR.	10400	16	✳B140	1	#19	STR.	7780	17	B231	1	#25	STR.	7560	30
✳A102	1	#16	STR.	9520	15	✳B141	1	#19	STR.	7800	17	B232	1	#25	STR.	7580	30
✳A103	1	#16	STR.	8660	13	✳B142	1	#19	STR.	7840	18	B233	1	#25	STR.	7620	30
✳A104	1	#16	STR.	7740	12	✳B143	1	#19	STR.	7860	18	B234	1	#25	STR.	7640	30
✳A105	1	#16	STR.	6900	11	✳B144	1	#19	STR.	7880	18	B235	1	#25	STR.	7660	30
✳A106	1	#16	STR.	6040	9	✳B145	1	#19	STR.	7900	18	B236	1	#25	STR.	7680	31
✳A107	1	#16	STR.	5180	8	✳B146	1	#19	STR.	7940	18	B237	1	#25	STR.	7720	31
✳A108	1	#16	STR.	4340	7	✳B147	1	#19	STR.	7960	18	B238	1	#25	STR.	7740	31
✳A109	1	#16	STR.	3500	5	✳B148	1	#19	STR.	7980	18	B239	1	#25	STR.	7760	31
✳A110	1	#16	STR.	2660	4	✳B149	1	#19	STR.	8000	18	B240	1	#25	STR.	7780	31
✳A111	1	#16	STR.	1820	3	✳B150	1	#19	STR.	8020	18	B241	1	#25	STR.	7800	31
✳A112	1	#16	STR.	1000	2	✳B151	1	#19	STR.	8060	18	B242	1	#25	STR.	7840	31
						✳B152	1	#19	STR.	8080	18	B243	1	#25	STR.	7860	31
A201	2	#13	STR.	5480	11	✳B153	1	#19	STR.	8100	18	B244	1	#25	STR.	7880	31
A202	2	#13	STR.	5040	10	✳B154	1	#19	STR.	8120	18	B245	1	#25	STR.	7900	31
A203	1	#13	STR.	8660	9	✳B155	1	#19	STR.	8160	18	B246	1	#25	STR.	7940	32
A204	1	#13	STR.	7740	8	✳B156	1	#19	STR.	8180	18	B247	1	#25	STR.	7960	32
A205	1	#13	STR.	6900	7	✳B157	1	#19	STR.	8200	18	B248	1	#25	STR.	7980	32
A206	1	#13	STR.	6040	6	✳B158	1	#19	STR.	8220	18	B249	1	#25	STR.	8000	32
A207	1	#13	STR.	5180	5	✳B159	1	#19	STR.	8240	18	B250	1	#25	STR.	8020	32
A208	1	#13	STR.	4340	4	✳B160	1	#19	STR.	8280	19	B251	1	#25	STR.	8060	32
A209	1	#13	STR.	3500	3	✳B161	1	#19	STR.	8300	19	B252	1	#25	STR.	8080	32
A210	1	#13	STR.	2660	3	✳B162	1	#19	STR.	8320	19	B253	1	#25	STR.	8100	32
A211	1	#13	STR.	1820	2	✳B163	1	#19	STR.	8340	19	B254	1	#25	STR.	8120	32
A212	1	#13	STR.	1000	1	✳B164	1	#19	STR.	8380	19	B255	1	#25	STR.	8160	32
						✳B165	1	#19	STR.	8400	19	B256	1	#25	STR.	8180	32
B1	38	#16	1	920	54	✳B166	1	#19	STR.	8420	19	B257	1	#25	STR.	8200	33
						✳B167	1	#19	STR.	8440	19	B258	1	#25	STR.	8220	33
✳B101	1	#19	STR.	6840	15	✳B168	1	#19	STR.	8460	19	B259	1	#25	STR.	8240	33
✳B102	1	#19	STR.	6860	15	✳B169	1	#19	STR.	8500	19	B260	1	#25	STR.	8280	33
✳B103	1	#19	STR.	6880	15	✳B170	1	#19	STR.	8520	19	B261	1	#25	STR.	8300	33
✳B104	1	#19	STR.	6900	15	✳B171	1	#19	STR.	8540	19	B262	1	#25	STR.	8320	33
✳B105	1	#19	STR.	6940	16	✳B172	1	#19	STR.	8560	19	B263	1	#25	STR.	8340	33
✳B106	1	#19	STR.	6960	16	✳B173	1	#19	STR.	8580	19	B264	1	#25	STR.	8380	33
✳B107	1	#19	STR.	6980	16	✳B174	1	#19	STR.	8620	19	B265	1	#25	STR.	8400	33
✳B108	1	#19	STR.	7000	16	✳B175	1	#19	STR.	8640	19	B266	1	#25	STR.	8420	33
✳B109	1	#19	STR.	7020	16							B267	1	#25	STR.	8440	34
✳B110	1	#19	STR.	7040	16	B201	1	#25	STR.	6840	27	B268	1	#25	STR.	8460	34
✳B111	1	#19	STR.	7080	16	B202	1	#25	STR.	6860	27	B269	1	#25	STR.	8500	34
✳B112	1	#19	STR.	7100	16	B203	1	#25	STR.	6880	27	B270	1	#25	STR.	8520	34
✳B113	1	#19	STR.	7120	16	B204	1	#25	STR.	6900	27	B271	1	#25	STR.	8540	34
✳B114	1	#19	STR.	7140	16	B205	1	#25	STR.	6940	28	B272	1	#25	STR.	8560	34
✳B115	1	#19	STR.	7160	16	B206	1	#25	STR.	6960	28	B273	1	#25	STR.	8580	34
✳B116	1	#19	STR.	7200	16	B207	1	#25	STR.	6980	28	B274	1	#25	STR.	8620	34
✳B117	1	#19	STR.	7220	16	B208	1	#25	STR.	7000	28	B275	1	#25	STR.	8640	34
✳B118	1	#19	STR.	7240	16	B209	1	#25	STR.	7020	28						
✳B119	1	#19	STR.	7280	16	B210	1	#25	STR.	7040	28	✳G1	1	#16	STR.	11260	17
✳B120	1	#19	STR.	7300	16	B211	1	#25	STR.	7080	28						
✳B121	1	#19	STR.	7320	16	B212	1	#25	STR.	7100	28	S1	38	#13	2	1240	47
✳B122	1	#19	STR.	7340	16	B213	1	#25	STR.	7120	28						
✳B123	1	#19	STR.	7360	16	B214	1	#25	STR.	7140	28						
✳B124	1	#19	STR.	7400	17	B215	1	#25	STR.	7160	28						
✳B125	1	#19	STR.	7420	17	B216	1	#25	STR.	7200	29						
✳B126	1	#19	STR.	7440	17	B217	1	#25	STR.	7220	29						
✳B127	1	#19	STR.	7460	17	B218	1	#25	STR.	7240	29						
✳B128	1	#19	STR.	7500	17	B219	1	#25	STR.	7280	29						
✳B129	1	#19	STR.	7520	17	B220	1	#25	STR.	7300	29						
✳B130	1	#19	STR.	7540	17	B221	1	#25	STR.	7320	29						
✳B131	1	#19	STR.	7560	17	B222	1	#25	STR.	7340	29						
✳B132	1	#19	STR.	7580	17	B223	1	#25	STR.	7360	29						
✳B133	1	#19	STR.	7620	17	B224	1	#25	STR.	7400	29						

BILL OF MATERIAL

REINFORCING STEEL	3105 KG.
✳EPOXY COATED REINFORCING STEEL	2194 KG.
TOTAL CLASS AA CONCRETE	30.2 CU. METER
CONCRETE BREAKDOWN:	
SLEEPER SLAB	2.9 CU. METER
APPROACH SLAB	27.3 CU. METER
ELASTOMERIC CONCRETE	0.2 CU. METER

BAR TYPES

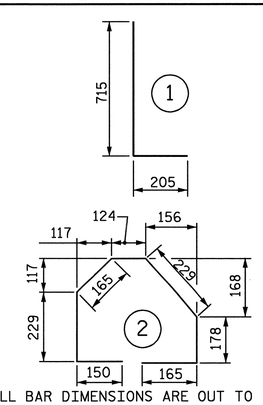

ALL BAR DIMENSIONS ARE OUT TO OUT

✳DENOTES EPOXY COATED REINFORCING STEEL.

PROJECT NO. R-0609IB

GUILFORD-RANDOLPH COUNTY

STATION: 83+34.392 -L-

SHEET 3 OF 4

NORTH CAROLINA SEAL 22072 ENGINEER JOHN ARTHUR DILWORTH

7-21-05

WETHERILL ENGINEERING
559 Jones Franklin Rd. Suite 164
Raleigh, N.C. 27606
Bus: 919 851 8077
Fax: 919 851 8807

TRANSPORTATION PLANNING/DESIGN - BRIDGE/STRUCTURE DESIGN
CIVIL/SITE DESIGN - GIS/GPS - CONSTRUCTION OBSERVATION

STATE OF NORTH CAROLINA
DEPARTMENT OF TRANSPORTATION
RALEIGH

BRIDGE APPROACH SLAB FOR INTEGRAL END BENT

REVISIONS						SHEET NO.
NO.	BY	DATE	NO.	BY	DATE	S-75
1			1			TOTAL SHEETS
2			2			199

DWG. 47 OF 48

DRAWN BY: E. BONNEY DATE: 6-3-05
CHECKED BY: J. DILWORTH DATE: 6-3-05

P:\R-0609IB\R0609IB_SITE2\Structures\DWG\BULBTEE\Dwg47_ApprSlab23.dgn
7/21/2005 10:19:14 AM

APPROACH SLAB 2

REINFORCING BAR SCHEDULE

BAR	NO.	SIZE	TYPE	LENGTH	WEIGHT
✳ A1	47	#16	STR.	11100	810
A2	94	#13	STR.	5820	544
A3	14	#13	STR.	5820	81
✳ A101	1	#16	STR.	10340	16
✳ A102	1	#16	STR.	9520	15
✳ A103	1	#16	STR.	8680	13
✳ A104	1	#16	STR.	7840	12
✳ A105	1	#16	STR.	7000	11
✳ A106	1	#16	STR.	6140	10
✳ A107	1	#16	STR.	5340	8
✳ A108	1	#16	STR.	4500	7
✳ A109	1	#16	STR.	3640	6
✳ A110	1	#16	STR.	2800	4
✳ A111	1	#16	STR.	1920	3
✳ A112	1	#16	STR.	1060	2
A201	2	#13	STR.	5440	11
A202	2	#13	STR.	5040	10
A203	1	#13	STR.	8680	9
A204	1	#13	STR.	7840	8
A205	1	#13	STR.	7000	7
A206	1	#13	STR.	6140	6
A207	1	#13	STR.	5340	5
A208	1	#13	STR.	4500	4
A209	1	#13	STR.	3640	4
A210	1	#13	STR.	2800	3
A211	1	#13	STR.	1920	2
A212	1	#13	STR.	1060	1
B1	38	#16	1	920	54
✳ B101	1	#19	STR.	6820	15
✳ B102	1	#19	STR.	6880	15
✳ B103	1	#19	STR.	6900	15
✳ B104	1	#19	STR.	6920	15
✳ B105	1	#19	STR.	6940	16
✳ B106	1	#19	STR.	6980	16
✳ B107	1	#19	STR.	7000	16
✳ B108	1	#19	STR.	7040	16
✳ B109	1	#19	STR.	7080	16
✳ B110	1	#19	STR.	7100	16
✳ B111	1	#19	STR.	7120	16
✳ B112	1	#19	STR.	7140	16
✳ B113	1	#19	STR.	7180	16
✳ B114	1	#19	STR.	7200	16
✳ B115	1	#19	STR.	7240	16
✳ B116	1	#19	STR.	7280	16
✳ B117	1	#19	STR.	7300	16
✳ B118	1	#19	STR.	7320	16
✳ B119	1	#19	STR.	7340	16
✳ B120	1	#19	STR.	7380	16
✳ B121	1	#19	STR.	7420	17
✳ B122	1	#19	STR.	7440	17
✳ B123	1	#19	STR.	7460	17
✳ B124	1	#19	STR.	7500	17
✳ B125	1	#19	STR.	7520	17
✳ B126	1	#19	STR.	7540	17
✳ B127	1	#19	STR.	7580	17
✳ B128	1	#19	STR.	7600	17
✳ B129	1	#19	STR.	7640	17
✳ B130	1	#19	STR.	7660	17
✳ B131	1	#19	STR.	7680	17
✳ B132	1	#19	STR.	7700	17
✳ B133	1	#19	STR.	7720	17

BAR	NO.	SIZE	TYPE	LENGTH	WEIGHT
✳ B134	1	#19	STR.	7740	17
✳ B135	1	#19	STR.	7780	17
✳ B136	1	#19	STR.	7800	17
✳ B137	1	#19	STR.	7840	18
✳ B138	1	#19	STR.	7860	18
✳ B139	1	#19	STR.	7900	18
✳ B140	1	#19	STR.	7920	18
✳ B141	1	#19	STR.	7940	18
✳ B142	1	#19	STR.	7980	18
✳ B143	1	#19	STR.	8040	18
✳ B144	1	#19	STR.	8100	18
✳ B145	1	#19	STR.	8120	18
✳ B146	1	#19	STR.	8140	18
✳ B147	1	#19	STR.	8140	18
✳ B148	1	#19	STR.	8180	18
✳ B149	1	#19	STR.	8200	18
✳ B150	1	#19	STR.	8240	18
✳ B151	1	#19	STR.	8260	18
✳ B152	1	#19	STR.	8280	19
✳ B153	1	#19	STR.	8320	19
✳ B154	1	#19	STR.	8340	19
✳ B155	1	#19	STR.	8380	19
✳ B156	1	#19	STR.	8400	19
✳ B157	1	#19	STR.	8440	19
✳ B158	1	#19	STR.	8460	19
✳ B159	1	#19	STR.	8500	19
✳ B160	1	#19	STR.	8520	19
✳ B161	1	#19	STR.	8540	19
✳ B162	1	#19	STR.	8580	19
✳ B163	1	#19	STR.	8600	19
✳ B164	1	#19	STR.	8640	19
✳ B165	1	#19	STR.	8660	19
✳ B166	1	#19	STR.	8700	19
✳ B167	1	#19	STR.	8720	19
✳ B168	1	#19	STR.	8740	20
✳ B169	1	#19	STR.	8780	20
✳ B170	1	#19	STR.	8800	20
✳ B171	1	#19	STR.	8840	20
✳ B172	1	#19	STR.	8860	20
✳ B173	1	#19	STR.	8900	20
✳ B174	1	#19	STR.	8920	20
✳ B175	1	#19	STR.	8940	20
B201	1	#25	STR.	6820	27
B202	1	#25	STR.	6880	27
B203	1	#25	STR.	6900	27
B204	1	#25	STR.	6920	27
B205	1	#25	STR.	6940	28
B206	1	#25	STR.	6980	28
B207	1	#25	STR.	7000	28
B208	1	#25	STR.	7040	28
B209	1	#25	STR.	7080	28
B210	1	#25	STR.	7100	28
B211	1	#25	STR.	7120	28
B212	1	#25	STR.	7140	28
B213	1	#25	STR.	7180	29
B214	1	#25	STR.	7200	29
B215	1	#25	STR.	7240	29
B216	1	#25	STR.	7280	29
B217	1	#25	STR.	7300	29
B218	1	#25	STR.	7320	29
B219	1	#25	STR.	7340	29
B220	1	#25	STR.	7380	29
B221	1	#25	STR.	7420	29
B222	1	#25	STR.	7440	30
B223	1	#25	STR.	7460	30
B224	1	#25	STR.	7500	30

BAR	NO.	SIZE	TYPE	LENGTH	WEIGHT
B225	1	#25	STR.	7520	30
B226	1	#25	STR.	7540	30
B227	1	#25	STR.	7580	30
B228	1	#25	STR.	7600	30
B229	1	#25	STR.	7640	30
B230	1	#25	STR.	7660	30
B231	1	#25	STR.	7680	31
B232	1	#25	STR.	7700	31
B233	1	#25	STR.	7720	31
B234	1	#25	STR.	7740	31
B235	1	#25	STR.	7780	31
B236	1	#25	STR.	7800	31
B237	1	#25	STR.	7840	31
B238	1	#25	STR.	7860	31
B239	1	#25	STR.	7900	31
B240	1	#25	STR.	7920	31
B241	1	#25	STR.	7940	32
B242	1	#25	STR.	7980	32
B243	1	#25	STR.	8040	32
B244	1	#25	STR.	8100	32
B245	1	#25	STR.	8120	32
B246	1	#25	STR.	8140	32
B247	1	#25	STR.	8140	32
B248	1	#25	STR.	8180	32
B249	1	#25	STR.	8200	33
B250	1	#25	STR.	8240	33
B251	1	#25	STR.	8260	33
B252	1	#25	STR.	8280	33
B253	1	#25	STR.	8320	33
B254	1	#25	STR.	8340	33
B255	1	#25	STR.	8380	33
B256	1	#25	STR.	8400	33
B257	1	#25	STR.	8440	34
B258	1	#25	STR.	8460	34
B259	1	#25	STR.	8500	34
B260	1	#25	STR.	8520	34
B261	1	#25	STR.	8540	34
B262	1	#25	STR.	8580	34
B263	1	#25	STR.	8600	34
B264	1	#25	STR.	8640	34
B265	1	#25	STR.	8660	34
B266	1	#25	STR.	8700	35
B267	1	#25	STR.	8720	35
B268	1	#25	STR.	8740	35
B269	1	#25	STR.	8780	35
B270	1	#25	STR.	8800	35
B271	1	#25	STR.	8840	35
B272	1	#25	STR.	8860	35
B273	1	#25	STR.	8900	35
B274	1	#25	STR.	8920	35
B275	1	#25	STR.	8940	36
✳ G1	1	#16	STR.	11260	17
S1	38	#13	2	1240	47

BILL OF MATERIAL

REINFORCING STEEL 3163 KG.
✳ EPOXY COATED REINFORCING STEEL 2239 KG.

TOTAL CLASS AA CONCRETE 30.8 CU. METER
CONCRETE BREAKDOWN:
SLEEPER SLAB 2.9 CU. METER
APPROACH SLAB 27.9 CU. METER
ELASTOMERIC CONCRETE 0.2 CU. METER

BAR TYPES

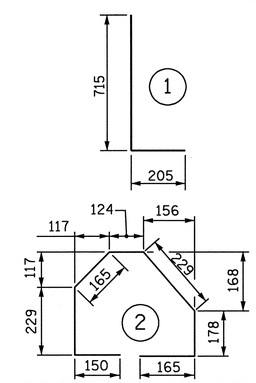

ALL BAR DIMENSIONS ARE OUT TO OUT

✳ DENOTES EPOXY COATED REINFORCING STEEL.

PROJECT NO. R-0609IB
GUILFORD-RANDOLPH COUNTY
STATION: 83+34.392 -L-

SHEET 4 OF 4

NORTH CAROLINA PROFESSIONAL SEAL 22072 ENGINEER JOHN ARTHUR DILWORTH
7-21-05

WETHERILL ENGINEERING
559 Jones Franklin Rd. Suite 164
Raleigh, N.C. 27606
Bus: 919 851 8077
Fax: 919 851 8107
TRANSPORTATION PLANNING/DESIGN - BRIDGE/STRUCTURE DESIGN
CIVIL/SITE DESIGN - GIS/GPS - CONSTRUCTION OBSERVATION

STATE OF NORTH CAROLINA
DEPARTMENT OF TRANSPORTATION
RALEIGH

BRIDGE APPROACH SLAB
FOR INTEGRAL END BENT

REVISIONS						SHEET NO.
NO.	BY	DATE	NO.	BY	DATE	S-76
1			1			TOTAL SHEETS
2			2			199

DWG. 48 OF 48

DRAWN BY: E. BONNEY DATE: 6-3-05
CHECKED BY: J. DILWORTH DATE: 6-3-05

P:\R-0609IB\R0609IB_SITE2\Structures\DWG\BULBTEE\Dwg48_ApprSlab04.dgn
7/21/2005 10:20:14 AM

B. M. #9 = RAILROAD SPIKE IN BASE OF 800mm Ø PEN OAK TREE 77m LEFT OF BASELINE STA. 72+15.000, ELEV. 225.037
DATUM: MSL

F.A. PROJECT NO. NHF-119-1(14)

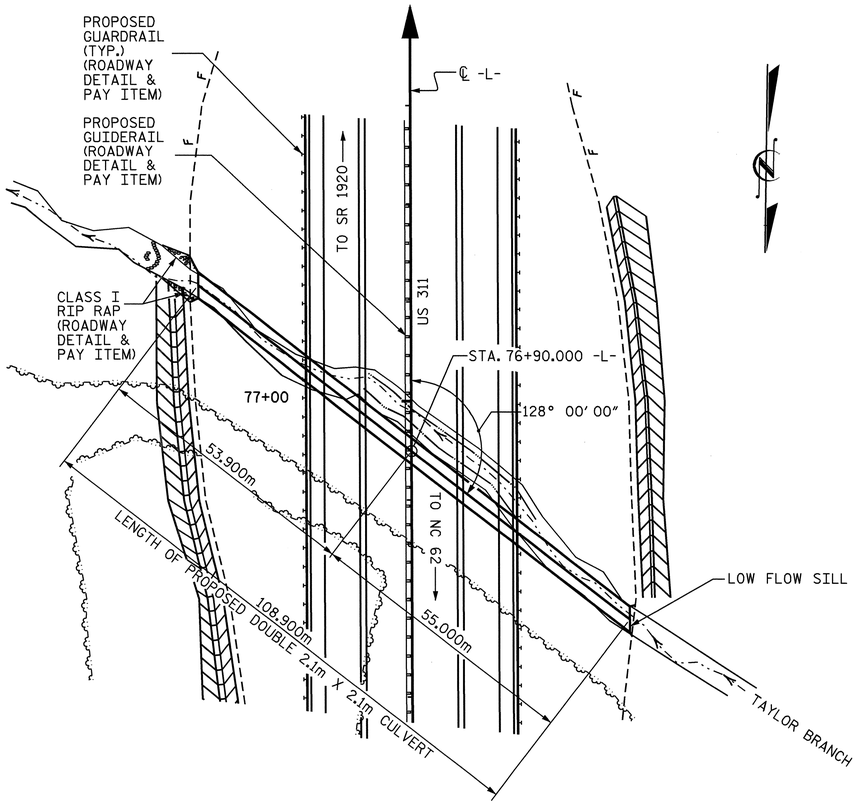

LOCATION SKETCH

ROADWAY DATA:

GRADE POINT ELEV. @ STATION 76+90.000 -L- = 238.147
BED ELEV. = 224.990
ROADWAY SLOPES = 2 : 1

HYDRAULIC DATA

DESIGN DISCHARGE	= 14.86m³/s
FREQUENCY OF DESIGN FLOOD	= 50 YRS.
DESIGN HIGH WATER ELEVATION	= 227.350
DRAINAGE AREA	= 147 Ha
BASIC DISCHARGE (Q100)	= 17.29 m³/s
BASIC HIGH WATER ELEVATION	= 227.580

OVERTOPPING FLOOD DATA

OVERTOPPING DISCHARGE	= N/A
FREQUENCY OF OVERTOPPING FLOOD	= 500 YRS.+
OVERTOPPING FLOOD ELEVATION	= 235.110

TOTAL STRUCTURE QUANTITIES

CLASS A CONCRETE		
BARREL @	5.64 m³/m	614.2 m³
WINGS ETC.		19.5 m³
TOTAL		633.7 m³
REINFORCING STEEL		
BARREL		45791 kg
WINGS ETC.		668 kg
TOTAL		46459 kg
CULVERT EXCAVATION ---------- LUMP SUM		
FOUNDATION COND. MAT'L ---- 357 METRIC TONS		

NOTES

ASSUMED LIVE LOAD ---------- MS18 OR ALTERNATE LOADING.

DESIGN FILL---------- 11.140m

FOR OTHER DESIGN DATA AND NOTES SEE STANDARD NOTE SHEET.

76mm Ø WEEP HOLES INDICATED TO BE IN ACCORDANCE WITH THE SPECIFICATIONS.

CONCRETE IN CULVERTS TO BE POURED IN THE FOLLOWING ORDER:

1. WING FOOTINGS AND FLOOR SLAB INCLUDING 100mm OF ALL VERTICAL WALLS.
2. THE REMAINING PORTIONS OF THE WALLS AND WINGS FULL HEIGHT FOLLOWED BY ROOF SLAB AND HEADWALLS.

THE RESIDENT ENGINEER SHALL CHECK THE LENGTH OF CULVERT BEFORE STAKING IT OUT TO MAKE CERTAIN THAT IT WILL PROPERLY TAKE CARE OF THE FILL.

DIMENSIONS FOR WING LAYOUT AS WELL AS ADDITIONAL REINFORCING STEEL EMBEDDED IN BARREL ARE SHOWN ON WING SHEET.

TRANSVERSE CONSTRUCTION JOINTS SHALL BE USED IN THE BARREL, SPACED TO LIMIT THE POURS TO A MAXIMUM OF 21.0m. LOCATION OF JOINTS SHALL BE SUBJECT TO APPROVAL OF THE ENGINEER.

STEEL IN THE BOTTOM SLAB MAY BE SPLICED AT THE PERMITTED CONSTRUCTION JOINT AT THE CONTRACTOR'S OPTION. EXTRA WEIGHT OF STEEL DUE TO THE SPLICES SHALL BE PAID FOR BY THE CONTRACTOR.

AT THE CONTRACTOR'S OPTION, HE MAY SPLICE THE VERTICAL REINFORCING STEEL IN THE INTERIOR FACE OF EXTERIOR WALL AND BOTH FACES OF INTERIOR WALLS ABOVE LOWER WALL CONSTRUCTION JOINT. THE SPLICE LENGTH SHALL BE AS PROVIDED IN THE SPLICE LENGTH CHART SHOWN ON THE PLANS. EXTRA WEIGHT OF STEEL DUE TO THE SPLICES SHALL BE PAID FOR BY THE CONTRACTOR.

ALL DIMENSIONS ARE IN MILLIMETERS.

ALL ELEVATIONS ARE IN METERS.

NO PRECAST REINFORCED BOX CULVERT OPTION WILL BE ALLOWED.

A 900MM STRIP OF FILTER FABRIC SHALL BE ATTACHED TO THE FILL FACE OF THE WING COVERING THE ENTIRE LENGTH OF THE EXPANSION JOINT.

FOR CULVERT DIVERSION DETAILS AND PAY ITEM, SEE EROSION CONTROL PLANS.

THE CONTRACTOR SHALL PROVIDE INDEPENDENT ASSURANCE SAMPLES OF REINFORCING STEEL AS FOLLOWS: FOR PROJECTS REQUIRING UP TO 360,000KG OF REINFORCING STEEL, ONE 760MM SAMPLE OF EACH SIZE BAR USED, AND FOR PROJECTS REQUIRING OVER 360,000KG OF REINFORCING STEEL, TWO 760MM SAMPLES OF EACH SIZE BAR USED. THE BARS FROM WHICH THE SAMPLES ARE TAKEN MUST THEN BE SPLICED WITH REPLACEMENT BARS OF THE SIZE AND LENGTH OF THE SAMPLE, PLUS A MINIMUM LAP SPLICE OF THIRTY BAR DIAMETERS.

FOR FALSEWORK AND FORMWORK, SEE SPECIAL PROVISIONS.

FOR SUBMITTAL OF WORKING DRAWINGS, SEE SPECIAL PROVISIONS.

FOR CRANE SAFETY, SEE SPECIAL PROVISIONS.

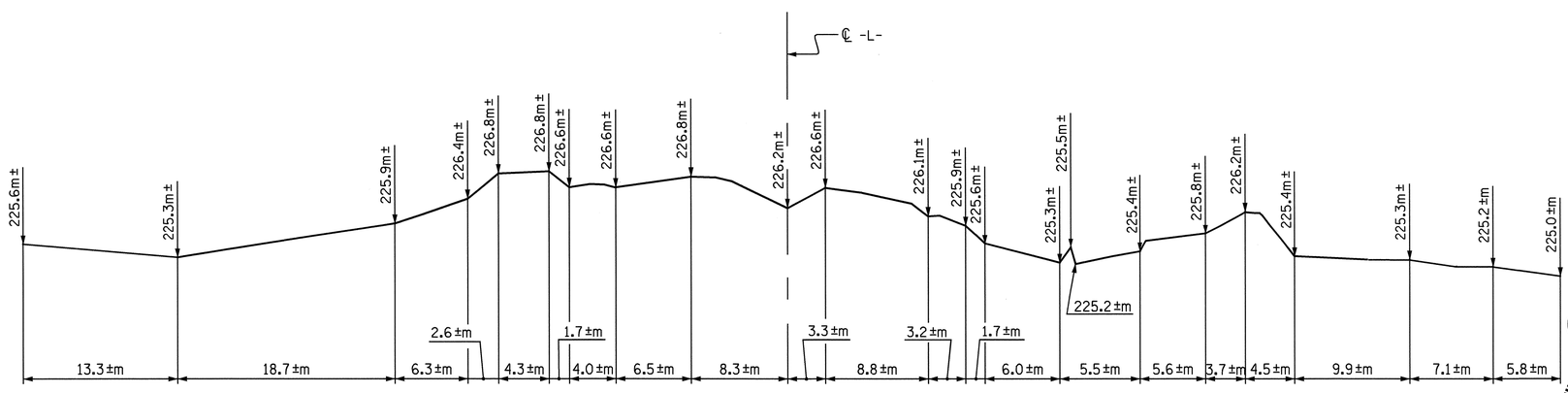

PROFILE ALONG ℄ CULVERT

PROJECT NO. R-0609IB
GUILFORD/RANDOLPH COUNTY
STATION: 76+90.000 -L-

SHEET 1 OF 4

STATE OF NORTH CAROLINA
DEPARTMENT OF TRANSPORTATION
RALEIGH

BARREL STANDARD
DOUBLE 2.100m X 2.100m
CONCRETE BOX CULVERT
128° SKEW

NORTH CAROLINA PROFESSIONAL SEAL 022506 ENGINEER JESSE McARTHUR BAILEY

NORTH CAROLINA PROFESSIONAL SEAL 10730 ENGINEER D. ANDREW DAVENPORT, JR.

REVISIONS						SHEET NO.
NO.	BY:	DATE:	NO.	BY:	DATE:	C-1
1			3			TOTAL SHEETS
2			4			21

ASSEMBLED BY :	S. P. LAM	DATE :	8/13/04
CHECKED BY :	H. T. BARBOUR	DATE :	9/10/04
DRAWN BY :	EEM	6/97	
CHECKED BY :	ARB	7/97	

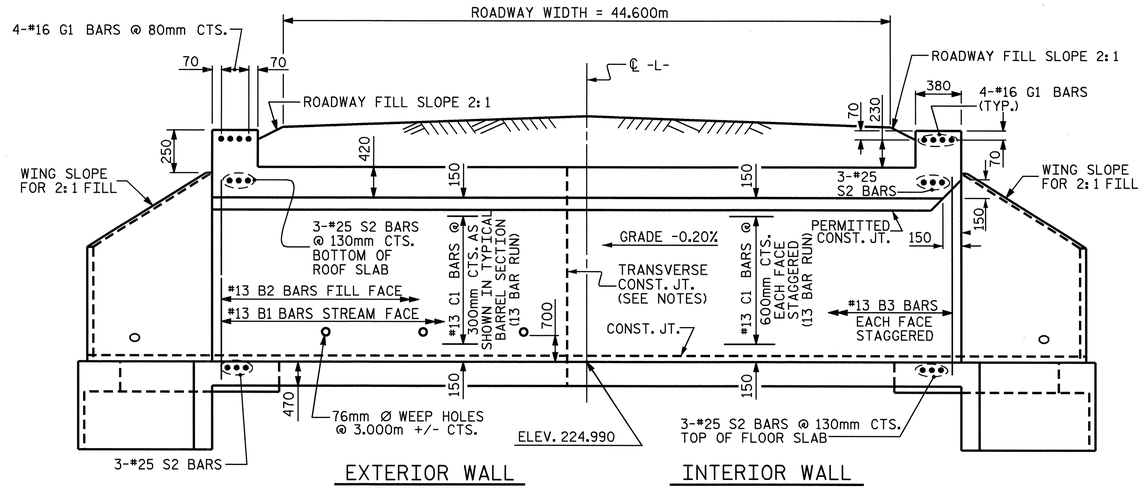

CULVERT SECTION NORMAL TO ROADWAY

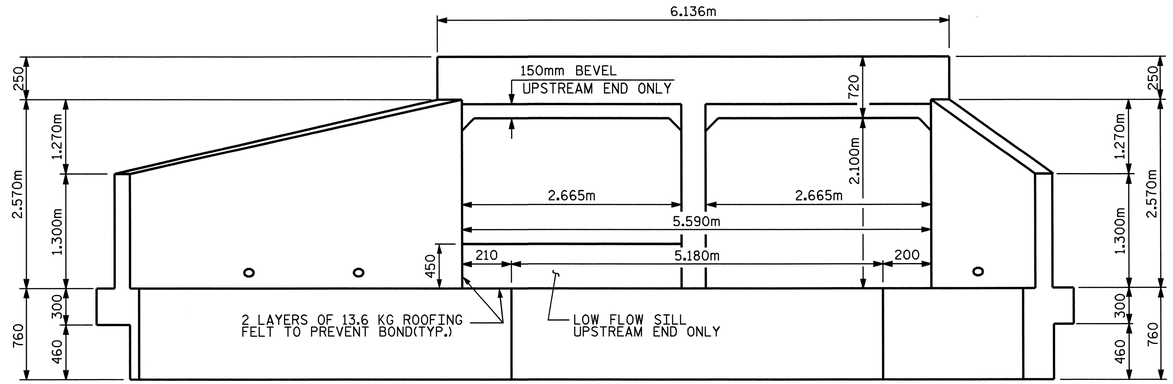

END ELEVATION NORMAL TO SKEW

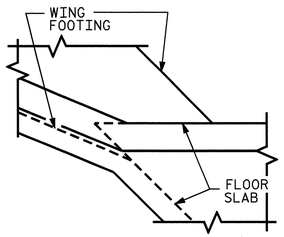

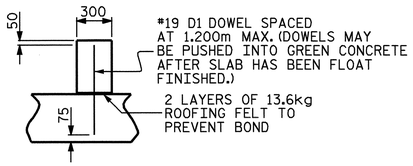

SECTION THROUGH SILL

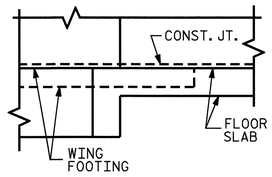

DETAIL
CONNECTION OF WING FOOTING AND FLOOR SLAB WHEN SLAB IS THICKER THAN FOOTING

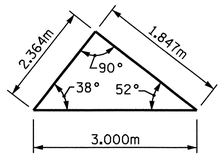

SKEW TRIANGLE

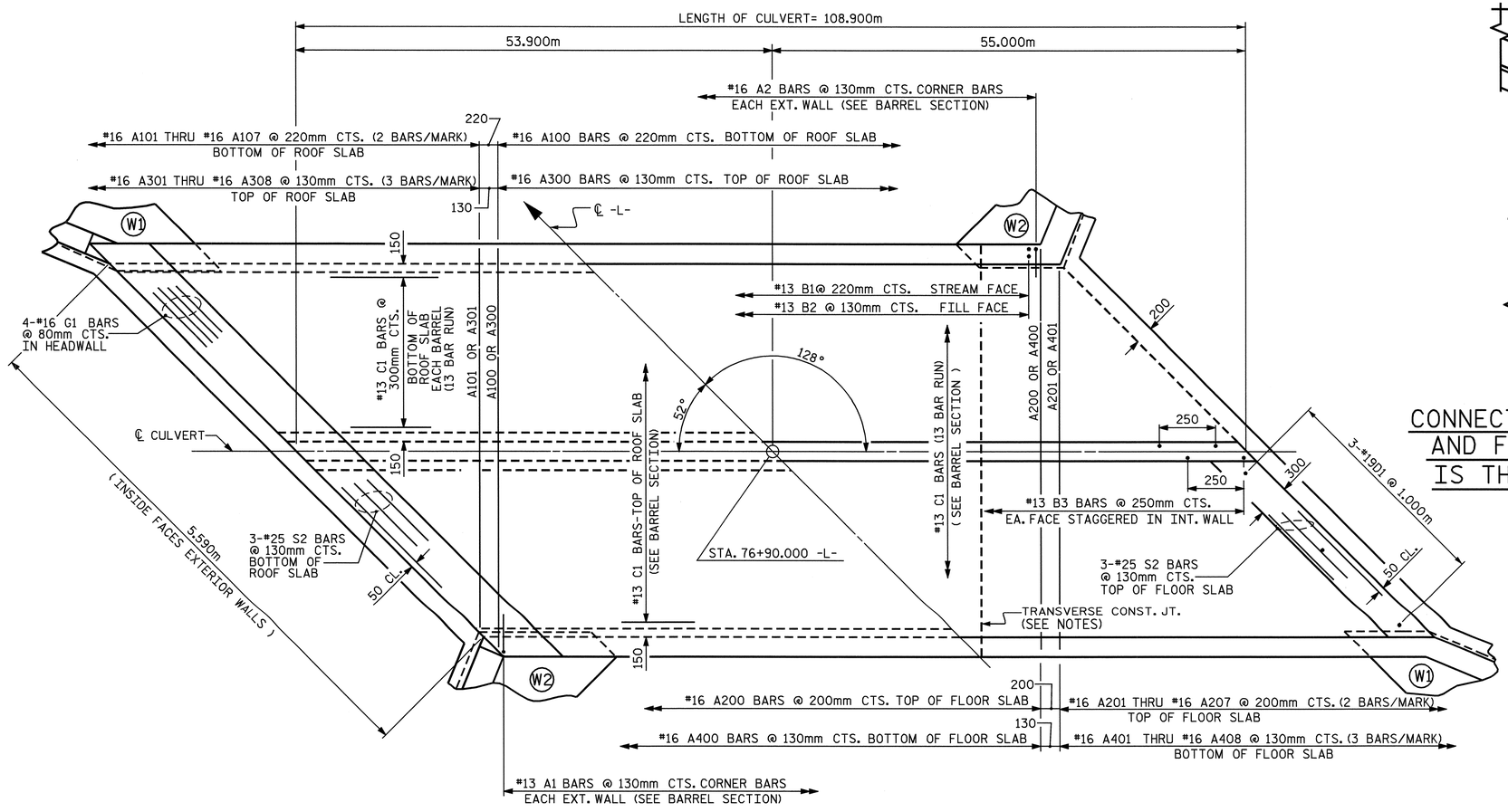

PART PLAN - ROOF SLAB

PART PLAN - FLOOR SLAB

PROJECT NO. R-0609IB
GUILFORD/RANDOLPH COUNTY
STATION: 76+90.000 -L-

SHEET 2 OF 4

STATE OF NORTH CAROLINA
DEPARTMENT OF TRANSPORTATION
RALEIGH

BARREL STANDARD
DOUBLE 2.100m X 2.100m
CONCRETE BOX CULVERT
128° SKEW

REVISIONS								SHEET NO.
NO.	BY:	DATE:	NO.	BY:	DATE:			C-2
1			3					TOTAL SHEETS
2			4					21

NORTH CAROLINA PROFESSIONAL SEAL 10730 ENGINEER D. AUSTIN DAVENPORT, JR.
8-9-06

ASSEMBLED BY :	S. P. LAM	DATE :	8/10/04
CHECKED BY :	H. T. BARBOUR	DATE :	9/10/04
DRAWN BY :	EEM	6/97	
CHECKED BY :	ARB	7/97	

STR_Box_Culvert_Std_Sht_2_of_4.dgn

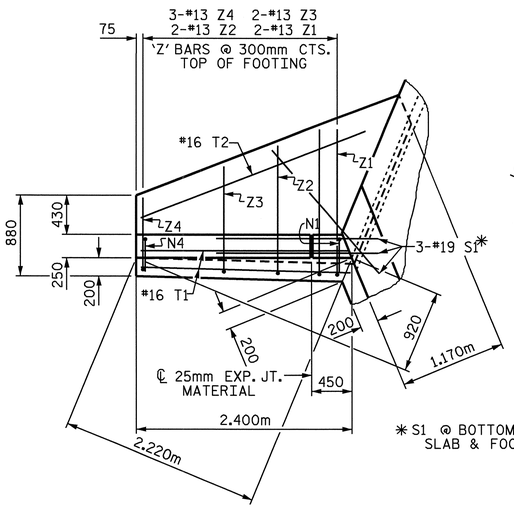

PLAN W2

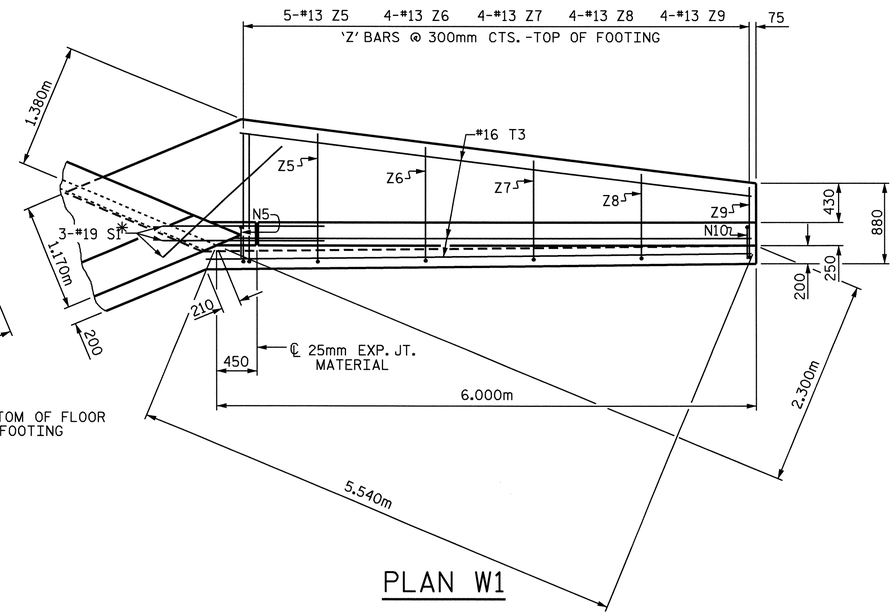

PLAN W1

BAR TYPES

ALL BAR DIMENSIONS ARE OUT TO OUT.

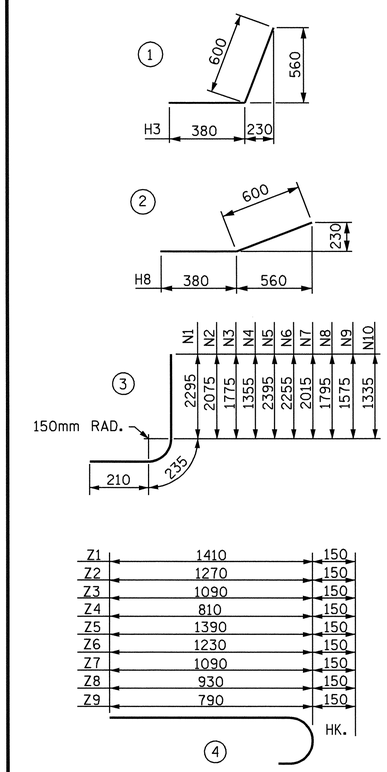

BILL OF MATERIAL

BAR	NO.	SIZE	TYPE	LENGTH	WEIGHT
H1	12	13	STR	1840	22
H2	4	13	STR	1340	5
H3	24	13	1	980	23
H4	4	13	STR	2020	8
H5	12	13	STR	5440	65
H6	4	13	STR	4300	17
H7	4	13	STR	1940	8
H8	24	13	2	980	23
H9	4	13	STR	5520	22
N1	4	16	3	2740	17
N2	4	16	3	2520	16
N3	4	13	3	2220	9
N4	6	13	3	1800	11
N5	4	16	3	2840	18
N6	6	16	3	2700	25
N7	8	16	3	2460	31
N8	8	13	3	2240	18
N9	8	13	3	2020	16
N10	8	13	3	1780	14
S1	12	19	STR	1800	48
T1	4	16	STR	2400	15
T2	2	16	STR	2680	8
T3	6	16	STR	6000	56
V1	4	13	STR	2120	8
V2	4	13	STR	1900	8
V3	4	13	STR	1600	6
V4	6	13	STR	1180	7
V5	4	13	STR	2220	9
V6	6	13	STR	2080	12
V7	8	13	STR	1840	15
V8	8	13	STR	1620	13
V9	8	13	STR	1400	11
V10	8	13	STR	1160	9
Z1	4	13	4	1560	6
Z2	4	13	4	1420	6
Z3	4	13	4	1240	5
Z4	6	13	4	960	6
Z5	10	13	4	1540	15
Z6	8	13	4	1380	11
Z7	8	13	4	1240	10
Z8	8	13	4	1080	9
Z9	8	13	4	940	7

REINFORCING STEEL FOR 4 WINGS 668 kg

CLASS A CONCRETE

4	WINGS	16.5 m^3
2	HEADWALLS	1.4 m^3
2	END CURTAIN WALLS	1.6 m^3
	TOTAL	19.5 m^3

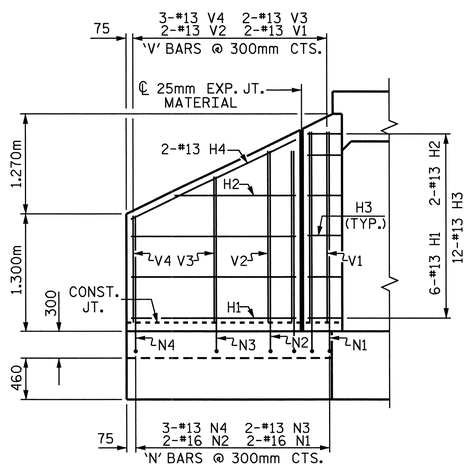

ELEVATION W2

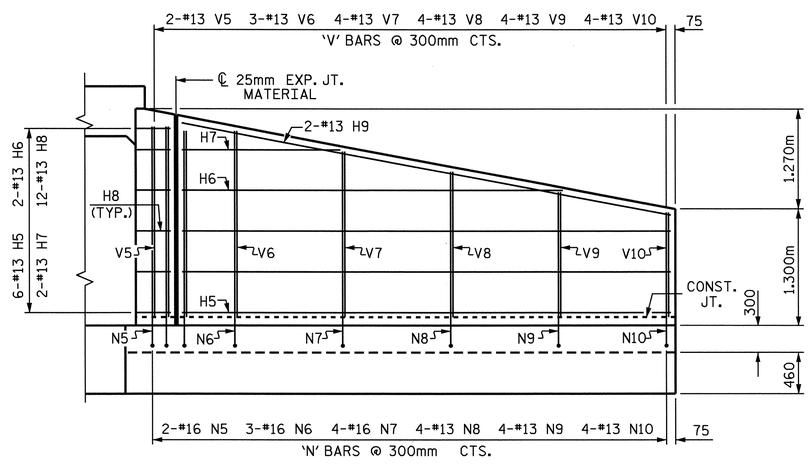

ELEVATION W1

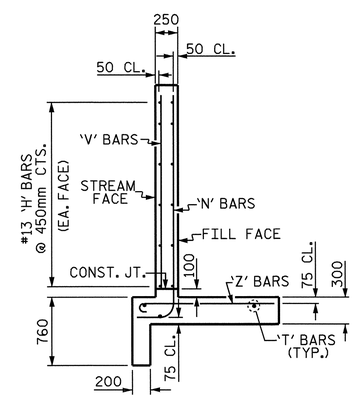

TYPICAL WING SECTION

FOR WING ORIENTATION, SEE BARREL STANDARD SHEET.

PROJECT NO. R-0609IB
GUILFORD/RANDOLPH COUNTY
STATION: 76+90.000 -L-

SHEET 3 OF 4

STATE OF NORTH CAROLINA
DEPARTMENT OF TRANSPORTATION
RALEIGH

STANDARD WINGS
FOR
CONCRETE BOX CULVERT
H = 2.100m SLOPE 2 : 1
135° SKEW

NORTH CAROLINA PROFESSIONAL SEAL 10730 ENGINEER D. ANDRE DAVENPORT, JR.

REVISIONS						SHEET NO.
NO.	BY:	DATE:	NO.	BY:	DATE:	C-3
1			3			TOTAL SHEETS
2			4			21

ASSEMBLED BY :	S. P. LAM	DATE : 8/12/04
CHECKED BY :	H. T. BARBOUR	DATE : 9/10/04
DRAWN BY :	FPP	06/97
CHECKED BY :	VAP	11/97

Culvert Str #3 STD NO. CW4521

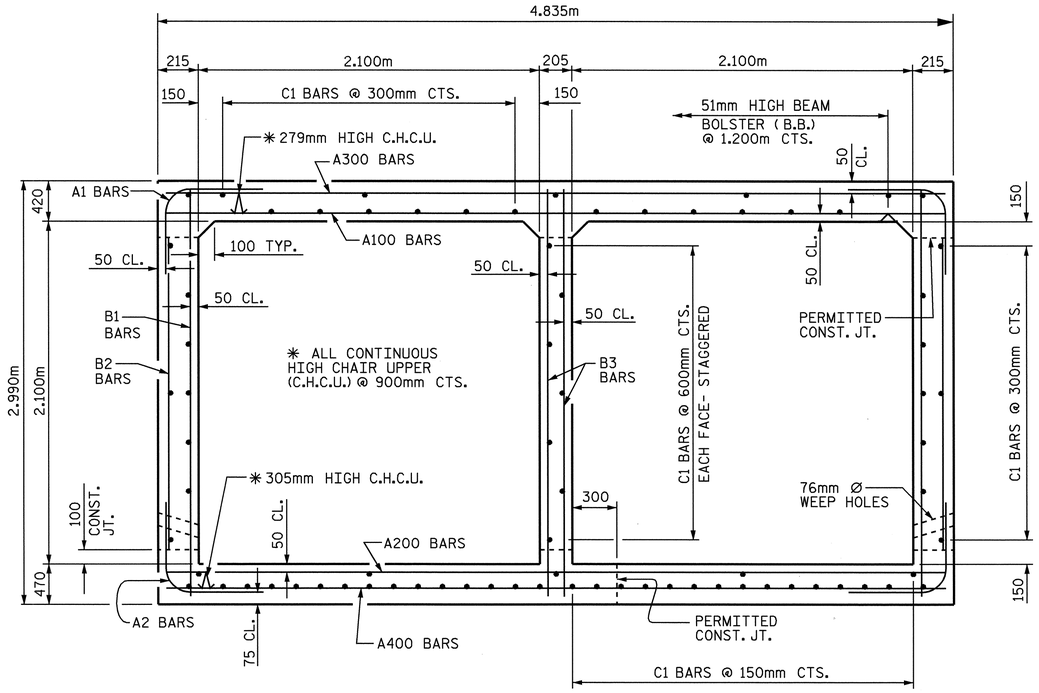

RIGHT ANGLE SECTION OF BARREL

THERE ARE 77 "C" BARS IN SECTION OF BARREL

BILL OF MATERIAL

BAR	NO.	SIZE	TYPE	LENGTH	WEIGHT	BAR	NO.	SIZE	TYPE	LENGTH	WEIGHT
A100	478	#16	STR	4700	3487	A1	1676	#13	1	2100	3498
A101	4	#16	STR	4120	26	A2	1676	#16	1	1920	4994
A102	4	#16	STR	3560	22						
A103	4	#16	STR	2980	18	B1	990	#13	STR	2820	2775
A104	4	#16	STR	2420	15	B2	1676	#13	STR	1880	3132
A105	4	#16	STR	1860	12	B3	872	#13	STR	2820	2444
A106	4	#16	STR	1300	8						
A107	4	#16	STR	740	5	C1	1001	#13	STR	8920	8875
A200	526	#16	STR	4700	3837	D1	3	#19	STR	780	5
A201	4	#16	STR	4160	26						
A202	4	#16	STR	3660	23	G1	8	#16	STR	6000	74
A203	4	#16	STR	3140	19						
A204	4	#16	STR	2620	16	S2	12	#25	STR	6000	286
A205	4	#16	STR	2100	13						
A206	4	#16	STR	1600	10						
A207	4	#16	STR	1100	7						
A300	809	#16	STR	4700	5901						
A301	6	#16	STR	4160	39						
A302	6	#16	STR	3680	34						
A303	6	#16	STR	3180	30						
A304	6	#16	STR	2660	25						
A305	6	#16	STR	2180	20						
A306	6	#16	STR	1680	16						
A307	6	#16	STR	1160	11						
A308	6	#16	STR	680	6						
A400	809	#16	STR	4700	5901						
A401	6	#16	STR	4160	39						
A402	6	#16	STR	3680	34						
A403	6	#16	STR	3180	30						
A404	6	#16	STR	2660	25						
A405	6	#16	STR	2180	20						
A406	6	#16	STR	1680	16						
A407	6	#16	STR	1160	11						
A408	6	#16	STR	680	6						

REINFORCING STEEL = 45791 KG

BAR TYPE

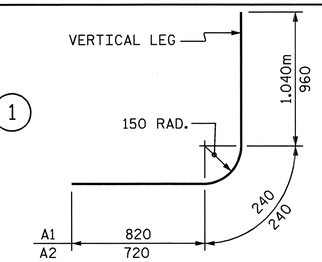

DIMENSIONS ARE OUT TO OUT

SPLICE LENGTHS CHART

BAR	SIZE	SPLICE LENGTH
A200	16	740
A400	16	670
B1	13	540
B3	13	540
C1	13	590

PROJECT NO. R-0609IB
GUILFORD/RANDOLPH COUNTY
STATION: 76+90.000 -L-

SHEET 4 OF 4

STATE OF NORTH CAROLINA
DEPARTMENT OF TRANSPORTATION
RALEIGH

DOUBLE
2.100m X 2.100m
CONCRETE BOX CULVERT
128° SKEW

NORTH CAROLINA PROFESSIONAL SEAL 10730 ENGINEER D. ANDRE DAVENPORT, JR.

REVISIONS						SHEET NO.
NO.	BY:	DATE:	NO.	BY:	DATE:	C-4
1			3			TOTAL SHEETS
2			4			21

DRAWN BY : S. P. LAM DATE : 8/12/04
CHECKED BY : H. T. BARBOUR DATE : 9/10/04

03-AUG-2006 09:20
K:\Structures\R0609Ib\slam\Microstation\R-0609IB_sd_CU_03.dgn
tbarbour

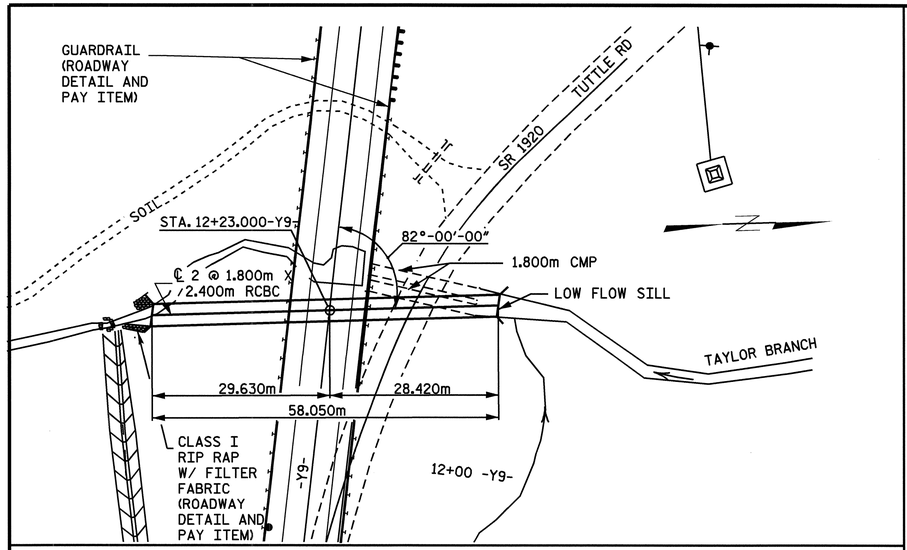

BENCH MARK= RAILROAD SPIKE IN BASE OF 300mm Ø SWEET GUM TREE 65m LEFT STA. 78+75.000-BL- , ELEV. 221.815, DATUM: MSL

LOCATION SKETCH

ROADWAY DATA

GRADE POINT ELEV. @ STA. 12+23.000-Y9- =234.970
BED ELEV. = 221.160
ROADWAY SLOPES =2:1

HYDROGRAPHIC DATA

DESIGN DISCHARGE	20.1m³/s
FREQUENCY OF DESIGN FLOOD	25 YRS.
DESIGN HIGH WATER ELEV.	224.050
DRAINAGE AREA	323 Ha
BASIC DISCHARGE (Q100)	27.5m³/s
BASIC HIGH WATER ELEV.	224.600

OVERTOPPING FLOOD DATA

OVERTOPPING DISCHARGE	N/A
FREQUENCY OF OVERTOPPING FLOOD	500 YRS.+
OVERTOPPING FLOOD ELEV.	229.950

BILL OF MATERIAL

BAR	NO.	SIZE	TYPE	LENGTH	WEIGHT
A1	1548	16	1	1520	3652
A100	230	16	STR	4060	1449
A101	2	16	STR	1980	6
A200	240	16	STR	4060	1512
A201	2	16	STR	2060	6
A300	383	16	STR	4060	2413
A301	4	16	STR	1620	10
A400	383	16	STR	4060	2413
A401	4	16	STR	1620	10
B1	484	16	STR	3000	2254
B2	774	13	STR	2180	1677
B3	466	13	STR	3000	1390
C1	518	13	STR	8780	4521
D1	3	19	STR	720	5
G1	8	16	STR	4140	51
S2	12	25	STR	4140	197
REINFORCING STEEL KG. = 21566					

SPLICE LENGTHS CHART

BAR	SIZE	SPLICE LENGTH
A200	16	540
A400	16	540
B1	16	540
B3	13	540
C1	13	590

TOTAL STRUCTURE QUANTITIES

CLASS A CONCRETE	
BARREL @ 4.74m³/m	275.2 m³
WINGS ETC.	18.7 m³
TOTAL	293.9 m³
REINFORCING STEEL	
BARREL	21566 kg
WINGS ETC.	692 kg
TOTAL	22258 kg
CULVERT EXCAVATION ---------- LUMP SUM	
FOUNDATION COND. MAT'L ---- 166 METRIC TONS	

F.A. PROJECT NO. NHF-119-1(14)

NOTES

ASSUMED LIVE LOAD ----------MS18 OR ALTERNATE LOADING.

DESIGN FILL----------11.550m

FOR OTHER DESIGN DATA AND NOTES SEE STANDARD NOTE SHEET.

76mm Ø WEEP HOLES INDICATED TO BE IN ACCORDANCE WITH THE SPECIFICATIONS.

CONCRETE IN CULVERTS TO BE POURED IN THE FOLLOWING ORDER:

1. WING FOOTINGS AND FLOOR SLAB INCLUDING 100mm OF ALL VERTICAL WALLS.
2. THE REMAINING PORTIONS OF THE WALLS AND WINGS FULL HEIGHT FOLLOWED BY ROOF SLAB AND HEADWALLS.

THE RESIDENT ENGINEER SHALL CHECK THE LENGTH OF CULVERT BEFORE STAKING IT OUT TO MAKE CERTAIN THAT IT WILL PROPERLY TAKE CARE OF THE FILL.

DIMENSIONS FOR WING LAYOUT AS WELL AS ADDITIONAL REINFORCING STEEL EMBEDDED IN BARREL ARE SHOWN ON WING SHEET.

TRANSVERSE CONSTRUCTION JOINTS SHALL BE USED IN THE BARREL, SPACED TO LIMIT THE POURS TO A MAXIMUM OF 21.0m. LOCATION OF JOINTS SHALL BE SUBJECT TO APPROVAL OF THE ENGINEER.

STEEL IN THE BOTTOM SLAB MAY BE SPLICED AT THE PERMITTED CONSTRUCTION JOINT AT THE CONTRACTOR'S OPTION. EXTRA WEIGHT OF STEEL DUE TO THE SPLICES SHALL BE PAID FOR BY THE CONTRACTOR.

AT THE CONTRACTOR'S OPTION, HE MAY SPLICE THE VERTICAL REINFORCING STEEL IN THE INTERIOR FACE OF EXTERIOR WALL AND BOTH FACES OF INTERIOR WALLS ABOVE LOWER WALL CONSTRUCTION JOINT. THE SPLICE LENGTH SHALL BE AS PROVIDED IN THE SPLICE LENGTH CHART SHOWN ON THE PLANS. EXTRA WEIGHT OF STEEL DUE TO THE SPLICES SHALL BE PAID FOR BY THE CONTRACTOR.

ALL DIMENSIONS ARE IN MILLIMETERS UNLESS OTHERWISE NOTED.

ALL ELEVATIONS ARE IN METERS.

NO PRECAST REINFORCED BOX CULVERT OPTION WILL BE ALLOWED.

FOR CULVERT DIVERSION DETAILS AND PAY ITEMS, SEE EROSION CONTROL PLANS.

A 900MM STRIP OF FILTER FABRIC SHALL BE ATTACHED TO THE FILL FACE OF THE WING COVERING THE ENTIRE LENGTH OF THE EXPANSION JOINT.

THE CONTRACTOR SHALL PROVIDE INDEPENDENT ASSURANCE SAMPLES OF REINFORCING STEEL AS FOLLOWS: FOR PROJECTS REQUIRING UP TO 360,000KG OF REINFORCING STEEL, ONE 760MM SAMPLE OF EACH SIZE BAR USED, AND FOR PROJECTS REQUIRING OVER 360,000KG OF REINFORCING STEEL, TWO 760MM SAMPLES OF EACH SIZE BAR USED. THE BARS FROM WHICH THE SAMPLES ARE TAKEN MUST THEN BE SPLICED WITH REPLACEMENT BARS OF THE SIZE AND LENGTH OF THE SAMPLE, PLUS A MINIMUM LAP SPLICE OF THIRTY BAR DIAMETERS.

FOR FALSEWORK AND FORMWORK, SEE SPECIAL PROVISIONS.

FOR SUBMITTAL OF WORKING DRAWINGS, SEE SPECIAL PROVISIONS.

FOR CRANE SAFETY, SEE SPECIAL PROVISIONS.

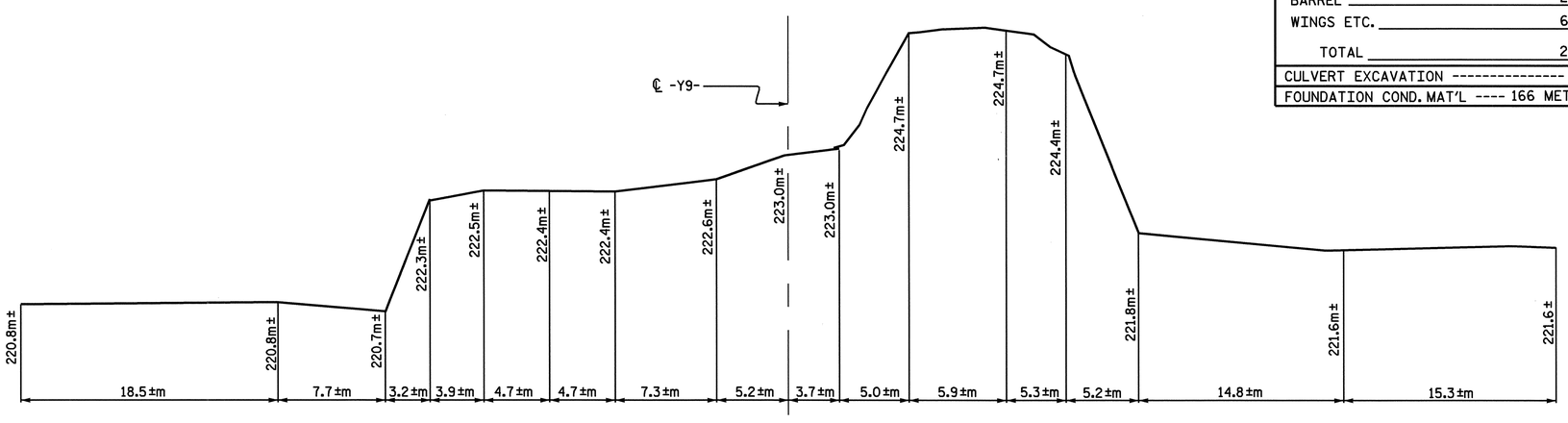

PROFILE ALONG ℄ CULVERT

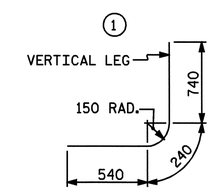

BAR TYPE
DIMENSIONS ARE OUT TO OUT

PROJECT NO. R-0609 IB
GUILFORD/RANDOLPH COUNTY
STATION: 12+23.000-Y9-

SHEET 1 OF 3

STATE OF NORTH CAROLINA
DEPARTMENT OF TRANSPORTATION
RALEIGH

BARREL STANDARD
DOUBLE 1.800m X 2.400m
CONCRETE BOX CULVERT
82° SKEW

REVISIONS						SHEET NO.
NO.	BY:	DATE:	NO.	BY:	DATE:	C-5
1			3			TOTAL SHEETS
2			4			21

ASSEMBLED BY : D.A. DAVENPORT DATE : 6/11/04
CHECKED BY : S. P. LAM DATE : 8/18/04
DRAWN BY : EEM 6/97
CHECKED BY : ARB 7/97

NORTH CAROLINA PROFESSIONAL SEAL 022506 ENGINEER JESSE McARTHUR BAILEY
NORTH CAROLINA PROFESSIONAL SEAL 10730 ENGINEER D. ANDREW DAVENPORT, JR.

STD. No. CB275sm STR.#4

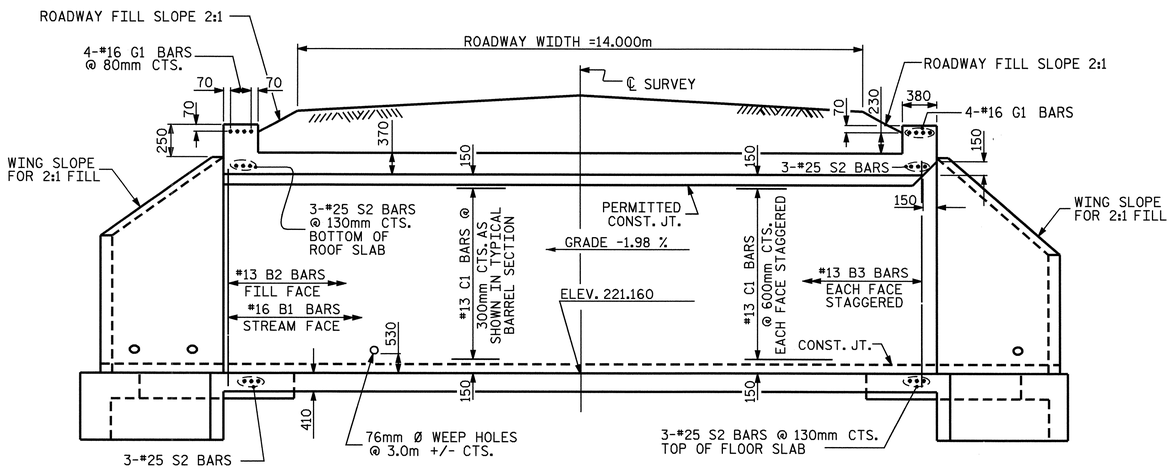

EXTERIOR WALL INTERIOR WALL

CULVERT SECTION NORMAL TO ROADWAY

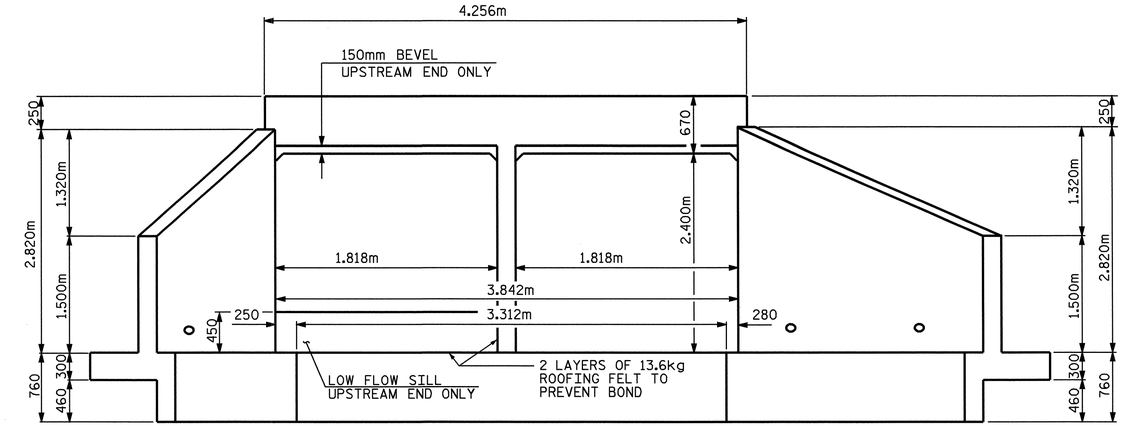

END ELEVATION - NORMAL TO SKEW

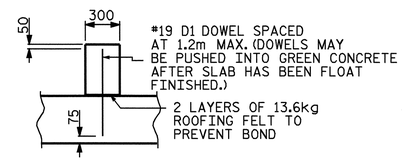

SECTION THROUGH SILL

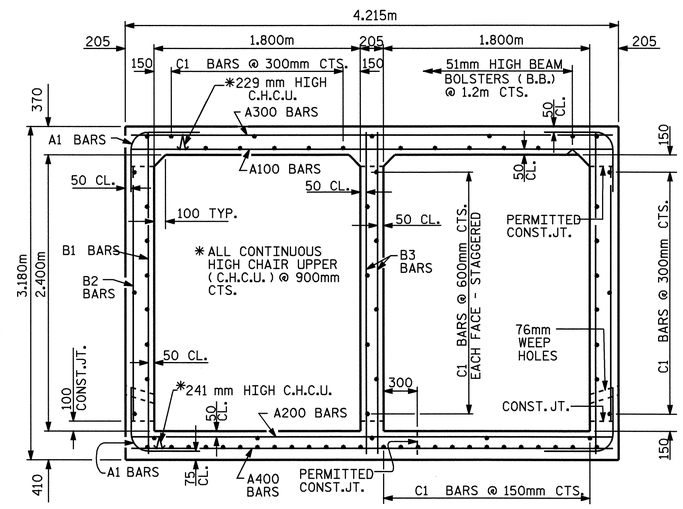

RIGHT ANGLE SECTION OF BARREL

THERE ARE 74 "C" BARS IN SECTION OF BARREL

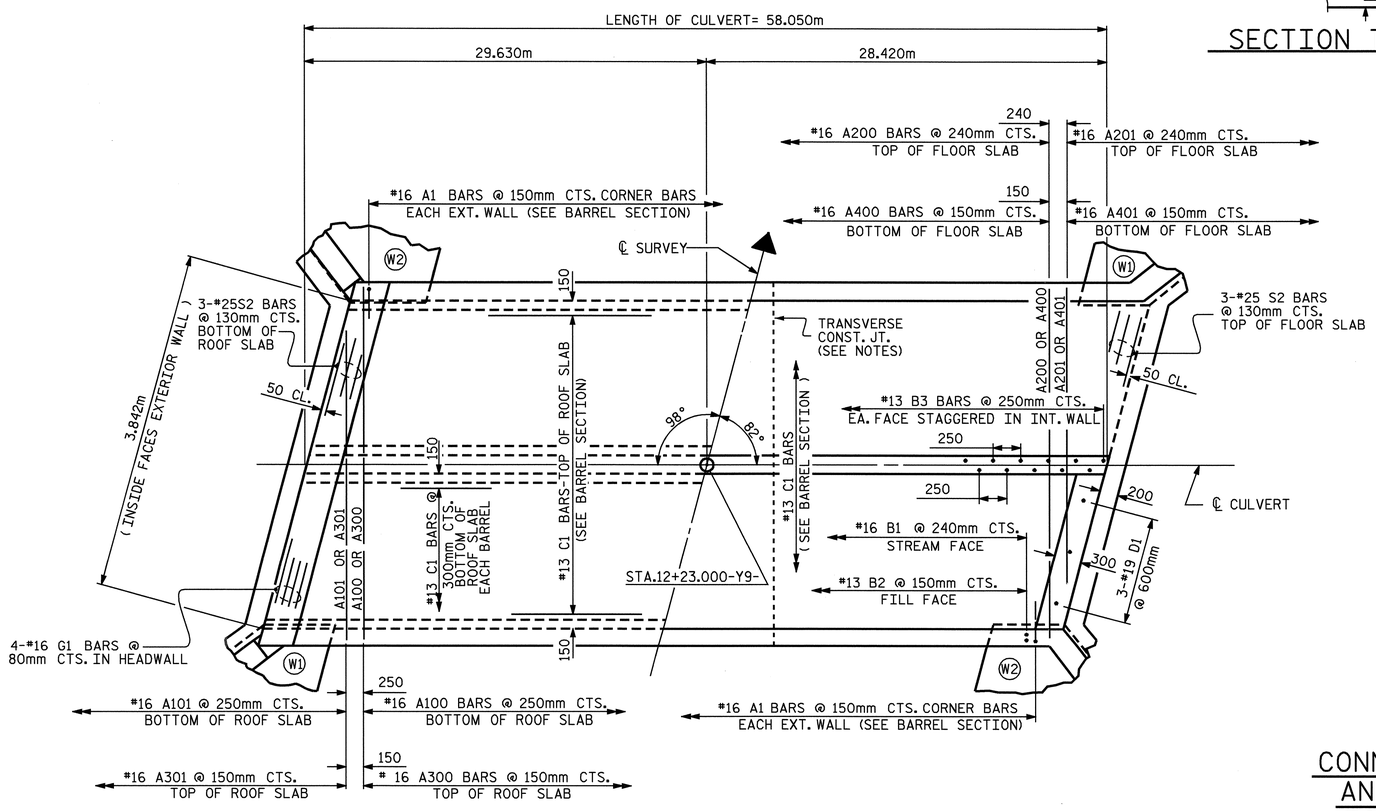

PART PLAN - ROOF SLAB

PART PLAN - FLOOR SLAB

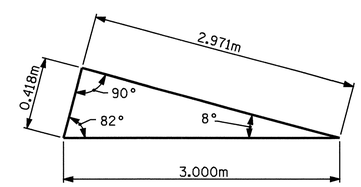

SKEW TRIANGLE

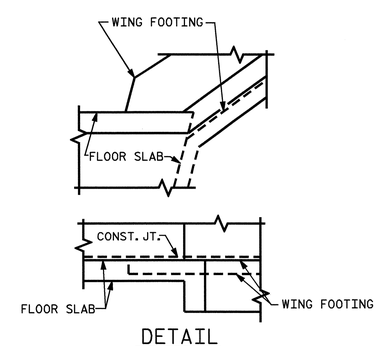

DETAIL

CONNECTION OF WING FOOTING AND FLOOR SLAB WHEN SLAB IS THICKER THAN FOOTING

PROJECT NO. R-0609 IB
GUILFORD/RANDOLPH COUNTY
STATION: 12+23.000-Y9-

SHEET 2 OF 3

STATE OF NORTH CAROLINA
DEPARTMENT OF TRANSPORTATION
RALEIGH

BARREL STANDARD
DOUBLE 1.800m X 2.400m
CONCRETE BOX CULVERT
82° SKEW

NORTH CAROLINA PROFESSIONAL SEAL 10730 ENGINEER D. ANDREW DAVENPORT, JR.
8-4-06

REVISIONS							SHEET NO.
NO.	BY:	DATE:	NO.	BY:	DATE:		C-6
1			3				TOTAL SHEETS
2			4				21

ASSEMBLED BY : D.A. DAVENPORT		DATE : 6/11/04	
CHECKED BY : S. P. LAM		DATE : 8/18/04	
DRAWN BY : EEM	6/97		
CHECKED BY : ARB	7/97		

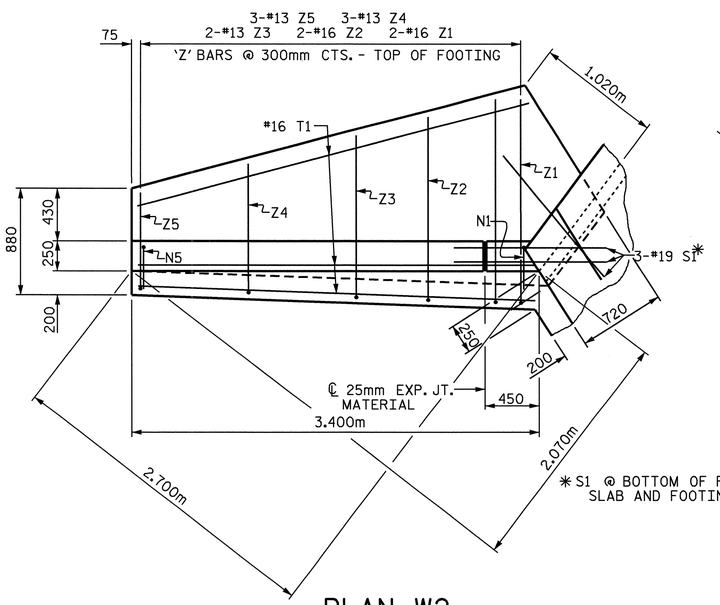

PLAN W2

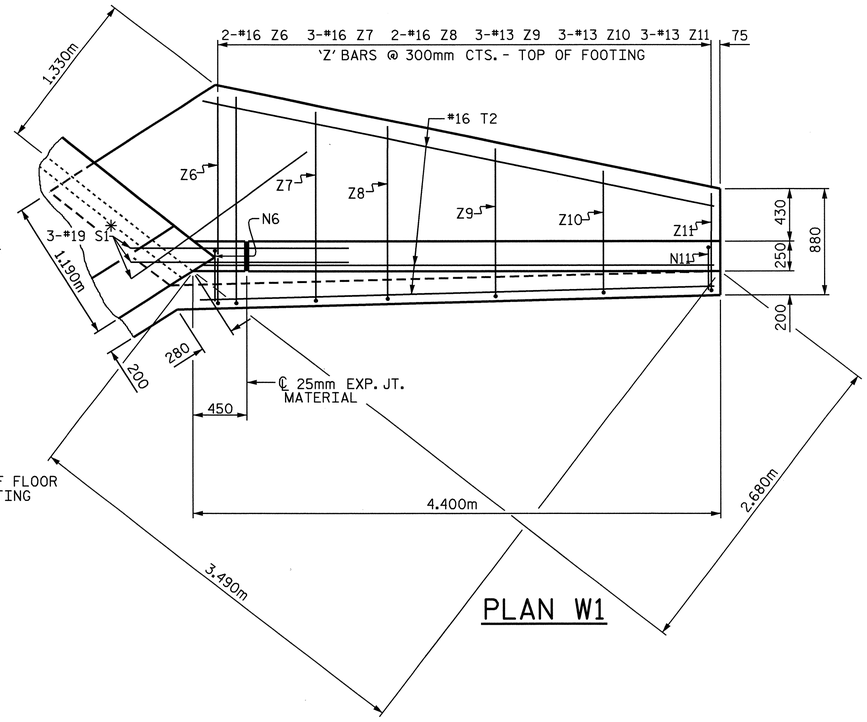

PLAN W1

BAR TYPES

ALL BAR DIMENSIONS ARE OUT TO OUT.

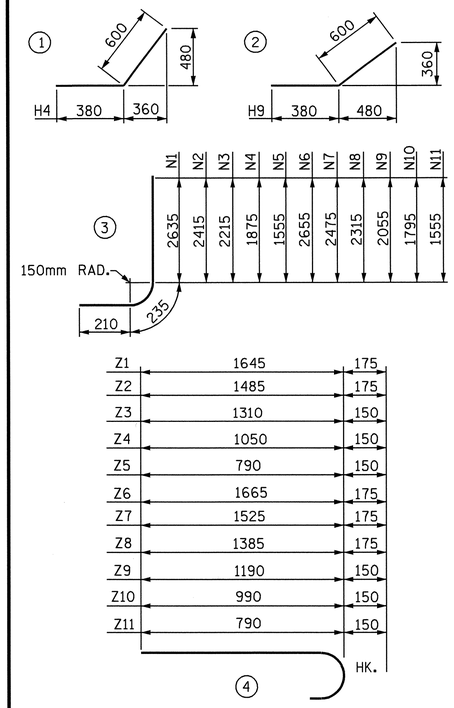

BILL OF MATERIAL

BAR	NO.	SIZE	TYPE	LENGTH	WEIGHT
H1	12	13	STR	2840	34
H2	4	13	STR	2760	11
H3	4	13	STR	1520	6
H4	24	13	1	980	23
H5	4	13	STR	3000	12
H6	12	13	STR	3840	46
H7	4	13	STR	3760	15
H8	4	13	STR	2160	9
H9	24	13	2	980	23
H10	4	13	STR	3980	16
N1	4	16	3	3080	19
N2	4	16	3	2860	18
N3	4	13	3	2660	11
N4	6	13	3	2320	14
N5	6	13	3	2000	12
N6	4	16	3	3100	19
N7	6	16	3	2920	27
N8	4	13	3	2760	11
N9	6	13	3	2500	15
N10	6	13	3	2240	13
N11	6	13	3	2000	12
S1	12	19	STR	1800	48
T1	6	16	STR	3400	32
T2	6	16	STR	4400	41
V1	4	13	STR	2460	10
V2	4	13	STR	2240	9
V3	4	13	STR	2040	8
V4	6	13	STR	1700	10
V5	6	13	STR	1380	8
V6	4	13	STR	2480	10
V7	6	13	STR	2300	14
V8	4	13	STR	2140	9
V9	6	13	STR	1880	11
V10	6	13	STR	1620	10
V11	6	13	STR	1380	8
Z1	4	16	4	1820	11
Z2	4	16	4	1660	10
Z3	4	13	4	1460	6
Z4	6	13	4	1200	7
Z5	6	13	4	940	6
Z6	4	16	4	1840	11
Z7	6	16	4	1700	16
Z8	4	16	4	1560	10
Z9	6	13	4	1340	8
Z10	6	13	4	1140	7
Z11	6	13	4	940	6

REINFORCING STEEL
FOR 4 WINGS 692 kg

CLASS A CONCRETE

4	WINGS	16.6 m^3
2	HEADWALLS	1.0 m^3
2	END CURTAIN WALLS	1.1 m^3
	TOTAL	18.7 m^3

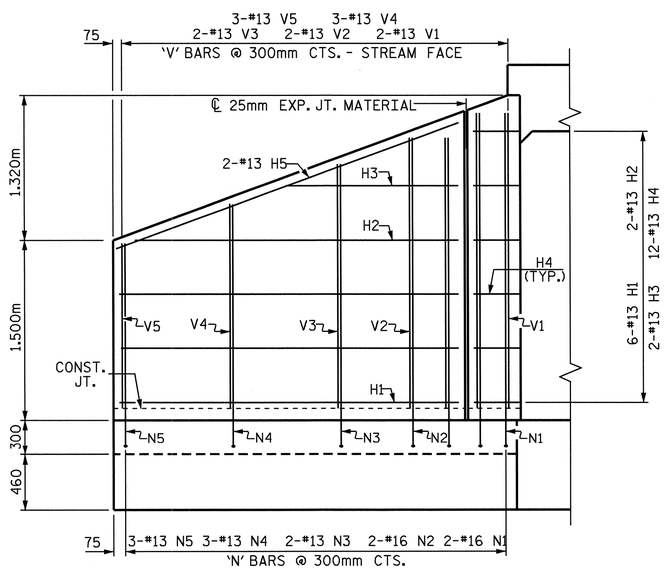

ELEVATION W2

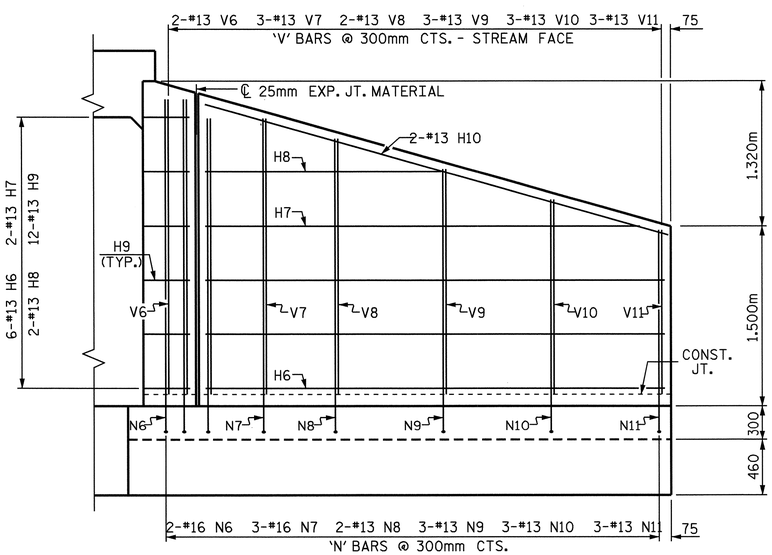

ELEVATION W1

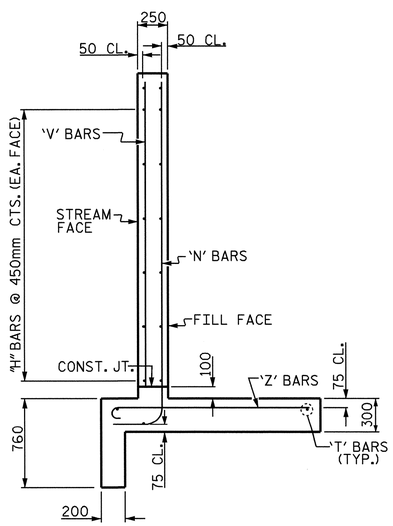

TYPICAL WING SECTION

FOR WING ORIENTATION, SEE BARREL STANDARD SHEET.

PROJECT NO. R-0609 IB
GUILFORD/RANDOLPH COUNTY
STATION: 12+23.000-Y9-

SHEET 3 OF 3

STATE OF NORTH CAROLINA
DEPARTMENT OF TRANSPORTATION
RALEIGH

# STANDARD WINGS FOR CONCRETE BOX CULVERT
H = 2.400m SLOPE = 2 : 1
75° SKEW

NORTH CAROLINA PROFESSIONAL SEAL 10730 ENGINEER D. ANDREW DAVENPORT, JR.

ASSEMBLED BY : D.A. DAVENPORT	DATE : 6/11/04		
CHECKED BY : S.P. LAM	DATE : 8/18/04		
DRAWN BY : FPP 06/97			
CHECKED BY : VAP 08/97			

REVISIONS						SHEET NO.
NO.	BY:	DATE:	NO.	BY:	DATE:	C-7
1			3			TOTAL SHEETS
2			4			21

STD. NO. CW7524 STR.#4