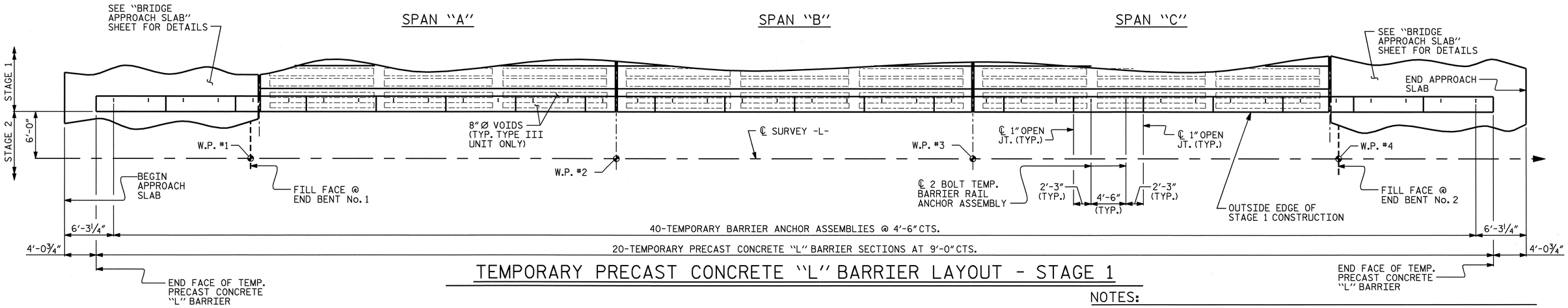

TEMPORARY PRECAST CONCRETE "L" BARRIER LAYOUT - STAGE 1

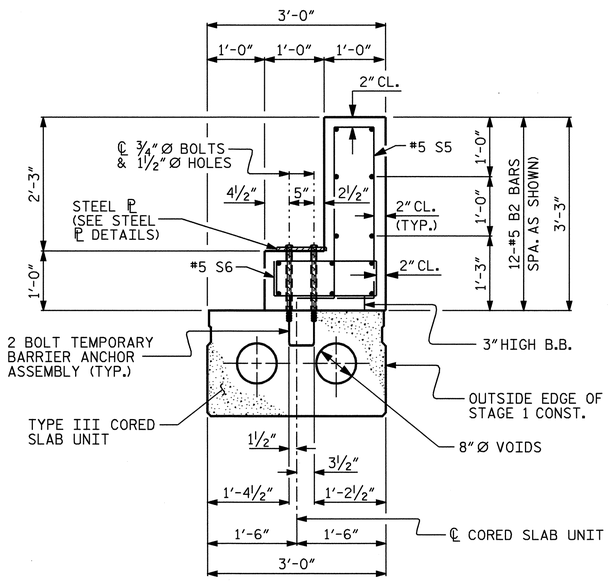

SECTION OF ANCHOR ASSEMBLY LOCATION

(FOR TYPE III CORED SLAB UNIT)

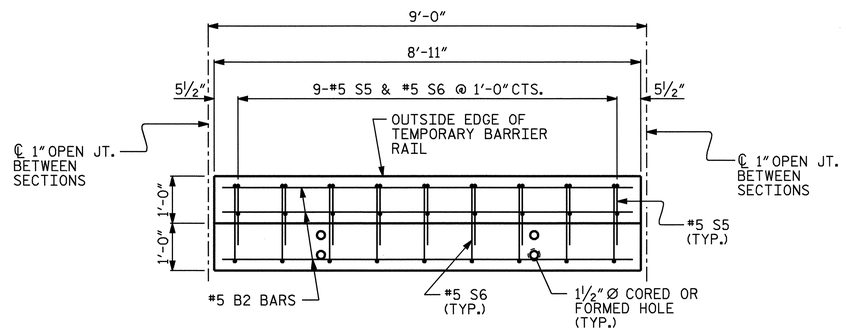

PLAN

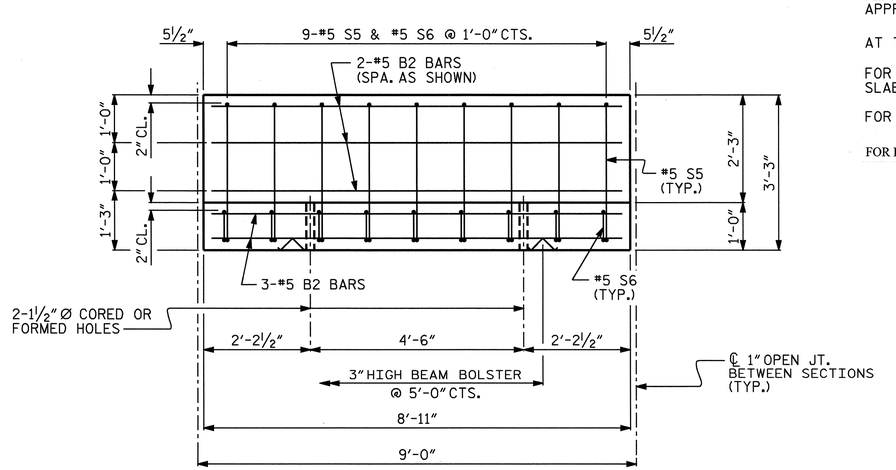

ELEVATION

TEMPORARY PRECAST CONCRETE "L" BARRIER DETAILS

NOTES:

THE TEMPORARY BARRIER ANCHOR ASSEMBLY SHALL CONSIST OF THE FOLLOWING COMPONENTS :

A. FERRULES SHALL BE MADE FROM STEEL MEETING THE REQUIREMENTS OF AASHTO M169, GRADE 12L14 AND SHALL HAVE A MINIMUM LENGTH OF THREADS OF 2½".

B. 2-¾" Ø X 1'-9" BOLTS WITH WASHERS, BOLTS SHALL CONFORM TO THE REQUIREMENTS OF ASTM A307. BOLTS AND WASHERS SHALL BE GALVANIZED. (AT THE CONTRACTOR'S OPTION, STAINLESS STEEL BOLTS AND WASHERS MAY BE USED AS AN ALTERNATE FOR THE ¾" Ø X 1'-9" GALVANIZED BOLTS AND WASHERS. THEY SHALL CONFORM TO OR EXCEED THE MECHANICAL REQUIREMENTS OF ASTM A307. THE USE OF THIS ALTERNATE SHALL BE APPROVED BY THE ENGINEER.)

C. WIRE STRUTS SHOWN IN THE TEMPORARY BARRIER RAIL ANCHOR ASSEMBLY DETAIL ARE MINIMUM ALLOWABLE SIZE AND SHALL HAVE A MINIMUM TENSILE STRENGTH OF 100,000 P.S.I.

D. 6" X 9½" X ¾" STEEL PLATES SHALL CONFORM TO AASHTO M270 GRADE 36 AND SHALL BE GALVANIZED AFTER FABRICATION.

TEMPORARY BARRIER ANCHOR ASSEMBLY WITH BOLTS SHALL BE ASSEMBLED IN THE SHOP. BOLT THREADS MAY BE RECUT AS NECESSARY TO INSURE FIT.

THE COST OF THE TEMPORARY BARRIER ANCHOR ASSEMBLY COMPLETE IN PLACE, SHALL BE INCLUDED, AS APPLICABLE, IN THE UNIT CONTRACT PRICE BID FOR 3'-0" X 1'-9" PRESTRESSED CONCRETE CORED SLAB OR LUMP SUM PRICE BID FOR APPROACH SLABS.

FERRULES TO BE PLUGGED DURING CASTING OF THE CORED SLAB UNITS OR POURING OF APPROACH SLAB AS RECOMMENDED BY THE MANUFACTURER.

AT THE CONTRACTOR'S OPTION, FERRULES WITH OPEN OR CLOSED ENDS MAY BE USED.

FOR TYPE III CORED SLAB UNIT, SEE "3'-0" X 1'-9" PRESTRESSED CONCRETE CORED SLAB UNIT DETAILS" SHEET 2 OF 3.

FOR TEMPORARY PRECAST CONCRETE "L" BARRIER QUANTITIES, SEE SHEET 2 OF 2.

FOR PRECAST CONCRETE "L" BARRIER, SEE SPECIAL PROVISIONS.

PROJECT NO. B-3349
HYDE COUNTY
STATION: 15+69.00 -L-

SHEET 1 OF 2

STATE OF NORTH CAROLINA
DEPARTMENT OF TRANSPORTATION
RALEIGH

TEMPORARY PRECAST CONCRETE "L" BARRIER DETAILS

NORTH CAROLINA PROFESSIONAL SEAL 24390 ENGINEER THEO J. BEACH
3/17/04

REVISIONS						SHEET NO.
NO.	BY:	DATE:	NO.	BY:	DATE:	S-13
1			3			TOTAL SHEETS
2			4			44

DRAWN BY : P.C. BREWER DATE : 10/6/03
CHECKED BY : M. BRITT DATE : 11/6/03

17-MAR-2005 13:56
W:\squadv\b3349\pbrewer\V8\B3349_sd_CS_01.dgn
mbritt