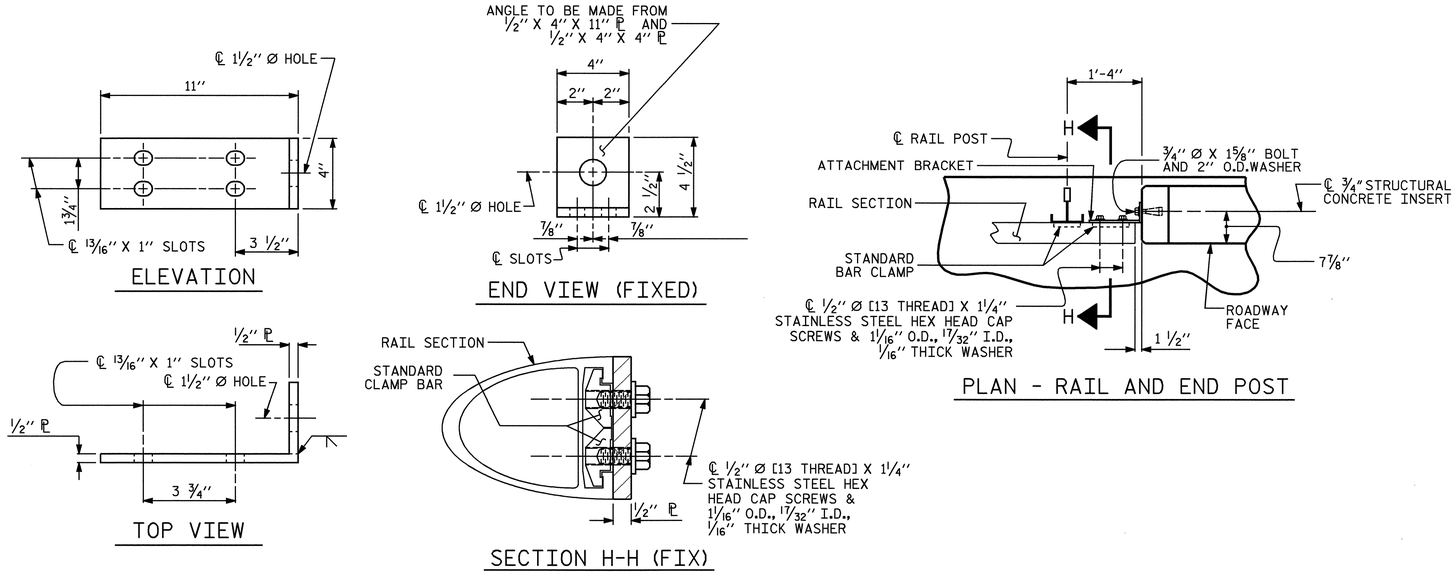

DETAILS FOR ATTACHING METAL RAIL TO END POST

NOTES

STRUCTURAL CONCRETE INSERT

THE STRUCTURAL CONCRETE INSERT ASSEMBLY SHALL CONSIST OF THE FOLLOWING COMPONENTS:

A. FERRULES SHALL BE MADE FROM STEEL MEETING THE REQUIREMENTS OF AASHTO M169, GRADE 12L14 AND SHALL HAVE A MINIMUM LENGTH OF THREADS OF 1½".

B. 1 - ¾" Ø X 1⅝" BOLT WITH WASHER. BOLT SHALL CONFORM TO THE REQUIREMENTS OF ASTM A307. BOLT AND WASHER SHALL BE GALVANIZED. (AT THE CONTRACTOR'S OPTION, STAINLESS STEEL BOLT AND WASHER MAY BE USED AS AN ALTERNATE FOR THE ¾" Ø X 1⅝" GALVANIZED BOLT AND WASHER. THEY SHALL CONFORM TO OR EXCEED THE MECHANICAL REQUIREMENTS OF ASTM A307. THE USE OF THIS ALTERNATE SHALL BE APPROVED BY THE ENGINEER.)

C. WIRE STRUT SHOWN IN THE CONCRETE INSERT ASSEMBLY DETAIL IS THE MINIMUM ALLOWABLE SIZE AND SHALL HAVE A MINIMUM TENSILE STRENGTH OF 100,000 PSI. AS AN OPTION, A 7/16" Ø WIRE STRUT WITH A MINIMUM TENSILE STRENGTH OF 90,000 PSI IS ACCEPTABLE.

NOTES

METAL RAIL TO END POST CONNECTION

THE METAL RAIL TO END POST CONNECTION SHALL CONSIST OF THE FOLLOWING COMPONENTS:

A. ½" PLATES SHALL CONFORM TO AASHTO M270 GRADE 36 AND SHALL BE GALVANIZED AFTER FABRICATION.

B. ¾" STRUCTURAL CONCRETE INSERT SHALL HAVE A WORKING LOAD SHEAR CAPACITY OF 4800 LBS. THE FERRULES SHALL ENGAGE A ¾"Ø X 1⅝" BOLT WITH 2" O.D. WASHER IN PLACE. THE ¾"Ø X 1⅝" BOLT SHALL HAVE N. C. THREADS.

C. CAP SCREWS FOR RAIL ATTACHMENT TO ANGLE SHALL CONFORM TO THE REQUIREMENTS OF ASTM F593 ALLOY 305 STAINLESS STEEL. CAP SCREWS TO BE CENTERED IN SLOTS AT 60°F.

D. STANDARD CLAMP BARS (SEE METAL RAIL SHEET).

E. ½" Ø PIPE SLEEVES (IF REQUIRED) TO BE GALVANIZED.

THE COST OF THE STANDARD CLAMP BARS AND CAP SCREWS USED IN THE METAL RAIL TO END POST CONNECTION SHALL BE INCLUDED IN THE UNIT CONTRACT PRICE BID FOR LINEAR FEET OF 1 OR 2 BAR METAL RAILS.

THE ¾" STRUCTURAL CONCRETE INSERT WITH BOLT SHALL BE ASSEMBLED IN THE SHOP.

THE COST OF THE ¾" STRUCTURAL CONCRETE INSERT ASSEMBLY, AND THE ½" PLATES COMPLETE IN PLACE SHALL BE INCLUDED IN THE VARIOUS PAY ITEMS.

THE CONTRACTOR, AT HIS OPTION, MAY USE AN ADHESIVE BONDING SYSTEM IN LIEU OF THE STRUCTURAL CONCRETE INSERT EMBEDDED IN THE END POST. IF THE ADHESIVE BONDING SYSTEM IS USED, THE ¾" Ø X 1⅝" BOLT WITH WASHER SHALL BE REPLACED WITH A ¾"Ø X 6½" BOLT AND 2" O.D. WASHER. ALL SPECIFICATIONS THAT APPLY TO THE ¾" Ø X 1⅝" BOLT SHALL APPLY TO THE ¾"Ø X 6 ½" BOLT. SEE SPECIAL PROVISIONS FOR ADHESIVELY ANCHORED ANCHOR BOLTS OR DOWELS. FIELD TESTING OF THE ADHESIVE BONDING SYSTEM IS NOT REQUIRED.

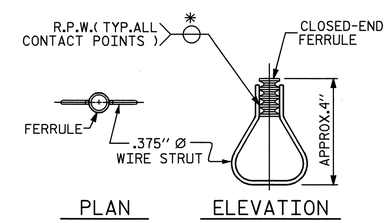

STRUCTURAL CONCRETE INSERT

* EACH WELDED ATTACHMENT OF WIRE TO FERRULE SHALL DEVELOP THE TENSILE STRENGTH OF THE WIRE.

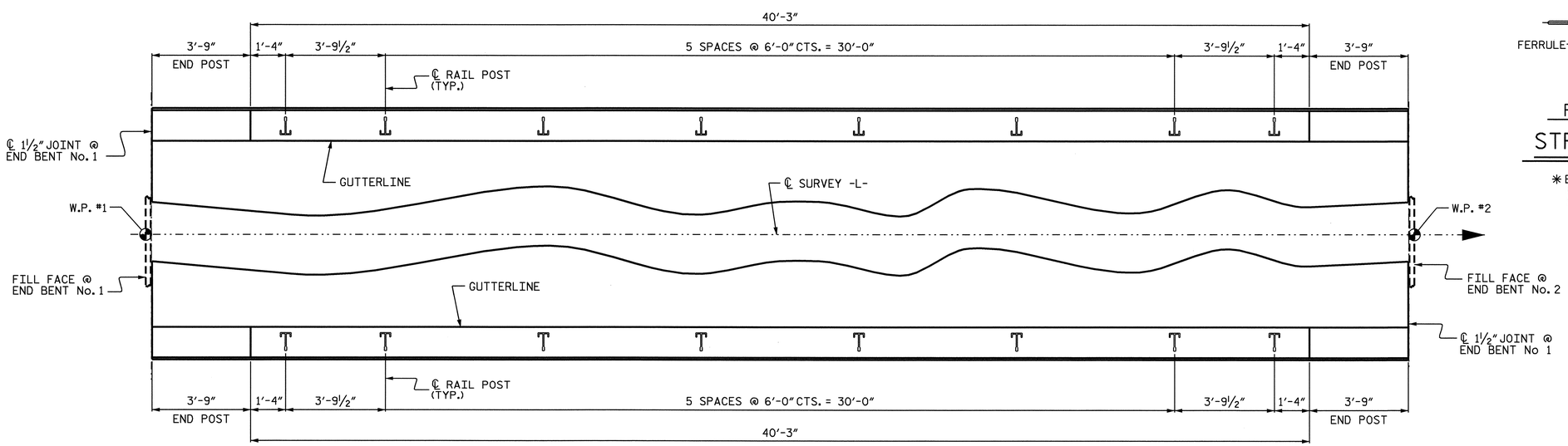

PLAN OF RAIL POST SPACINGS

PROJECT NO. B-3348

HYDE COUNTY

STATION: 18+34.00 -L-

STATE OF NORTH CAROLINA
DEPARTMENT OF TRANSPORTATION
RALEIGH

RAIL POST SPACINGS AND END OF RAIL DETAILS
FOR TWO BAR METAL RAILS

DECEMBER 1988

NORTH CAROLINA PROFESSIONAL SEAL 10757 ENGINEER A. C. OUTLAW
5/26/04

REVISIONS						SHEET NO.
NO.	BY:	DATE:	NO.	BY:	DATE:	S-14
1			3			TOTAL SHEETS
2			4			76

ASSEMBLED BY : P.C. BREWER	DATE : 1/14/04	
CHECKED BY : A.C. OUTLAW	DATE : 1/27/04	
DRAWN BY : FCJ 1/88	REV. 8/16/99	RWW/LES
CHECKED BY : CRK 3/89	REV. 10/17/00	LES/RDR
	REV. 5/7/03	RWW/JTE

26-MAY-2004 07:04
W:\squadv\b3348\str1\pbrewer\Microstation\B3348_sd_2MR_01.dgn
pbrewer

STD. NO. BMR2

STR. #1