NOTES:

STIRRUPS IN CAP MAY BE SHIFTED AS NECESSARY TO CLEAR DOWELS.

PIPE DRAINS MAY BE SHIFTED AS NECESSARY TO CLEAR REINFORCING STEEL.

FOR SECTION A-A, SEE END BENT 1, SHEET 2 OF 3.

FOR MISC. DETAILS, SEE END BENT 1, SHEET 2 OF 3.

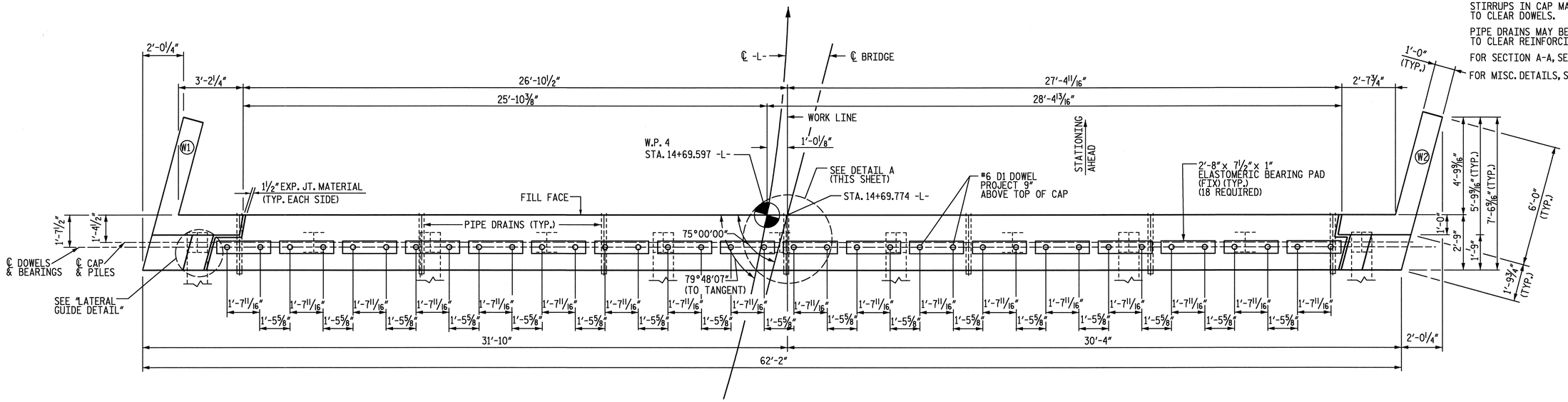

PLAN

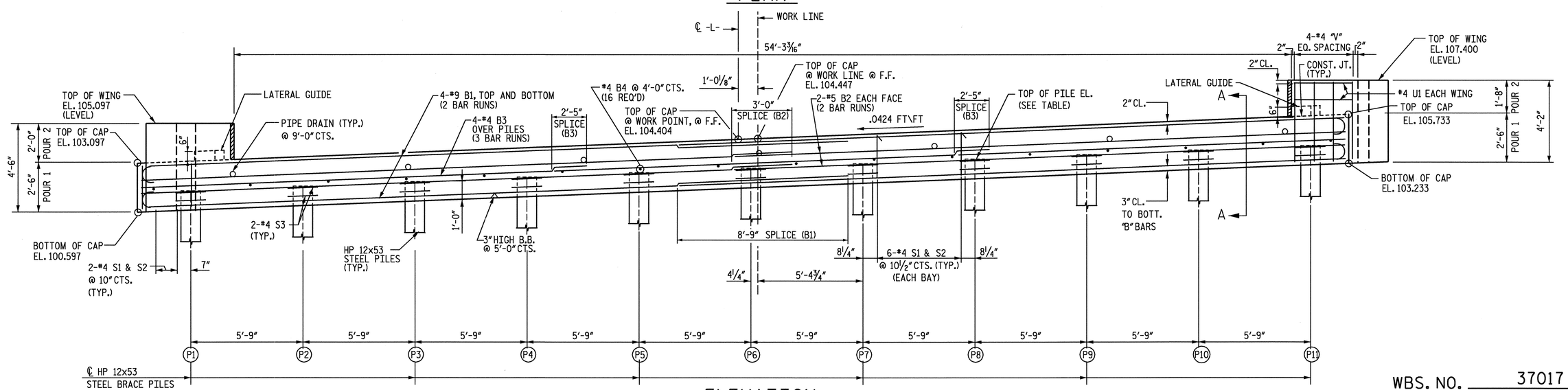

ELEVATION

TOP OF PILE ELEVATION	
PILE LOCATION	ELEVATION
P1	101.712
P2	101.956
P3	102.200
P4	102.444
P5	102.688
P6	102.200
P7	103.176
P8	103.420
P9	103.664
P10	103.908
P11	104.152

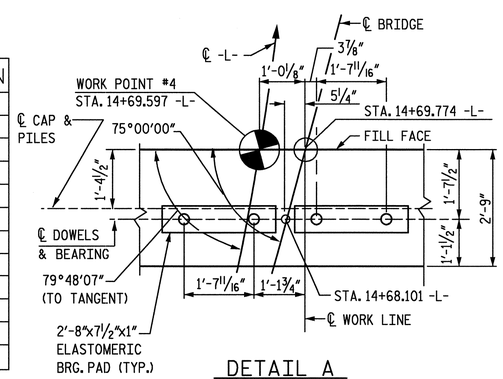

DETAIL A

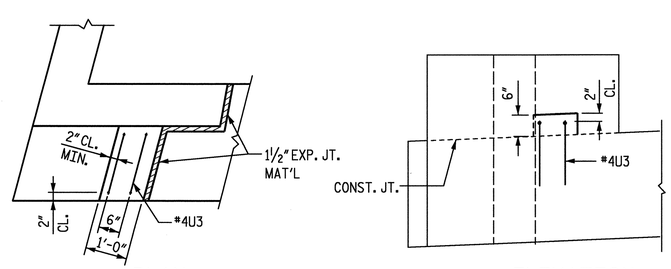

PLAN

ELEVATION

LATERAL GUIDE

WBS. NO. 37017

WAKE COUNTY

STATION: 14+04.00 -L-

REPLACES BRIDGE NO. 133

SHEET 1 OF 2

STATE OF NORTH CAROLINA
DEPARTMENT OF TRANSPORTATION
RALEIGH

SUBSTRUCTURE
END BENT 2

NORTH CAROLINA PROFESSIONAL SEAL 22072 ENGINEER JOHN ARTHUR DILWORTH
12-21-05

ETHERILL ENGINEERING
559 Jones Franklin Rd. Suite 164
Raleigh, N.C. 27606
Bus: 919 851 8077
Fax: 919 851 8107

TRANSPORTATION PLANNING/DESIGN - BRIDGE/STRUCTURE DESIGN
CIVIL/SITE DESIGN - GIS/GPS - CONSTRUCTION OBSERVATION

REVISIONS						SHEET NO.
NO.	BY	DATE	NO.	BY	DATE	S-21
1			1			TOTAL SHEETS
2			2			23

DRAWN BY: J. PENDERGRAFT DATE: 4-05
CHECKED BY: J. DILWORTH DATE: 4-05

p:\4100\MA0500\B\Structures\DN\endbent2.dgn
12/21/2005 12:07:26 PM