CONTRACT: C200840 TIP PROJECT: U-4026 /R-2904

See Sheet 1-A For Index of Sheets
See Sheet 2 For Conventional Symbols

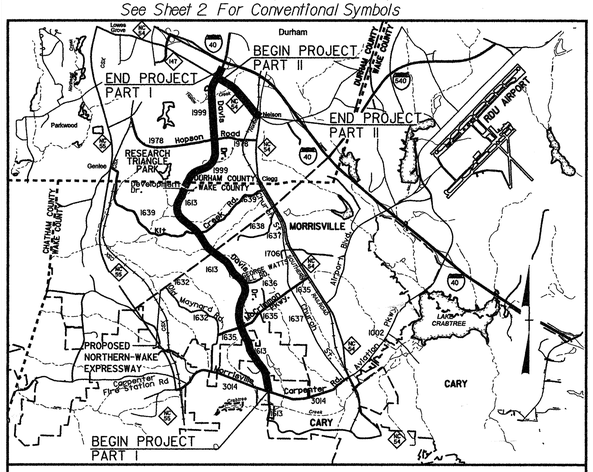

VICINITY MAP

STATE OF NORTH CAROLINA
DIVISION OF HIGHWAYS

WAKE–DURHAM COUNTIES

STATE	STATE PROJECT REFERENCE NO.	SHEET NO.	TOTAL SHEETS
N.C.	U-4026/R-2904	1	

WBS NO.	F.A. PROJ. NO.	DESCRIPTION
35018.1.1		U-4026 (P.E.)
35018.2.1		U-4026 (R/W)
35018.3.1		U-4026 (CONST)
34512.1.1	STP-54(2)	R-2904 (P.E.)
34512.2.2	STP-54(2)	R-2904 (R/W)
34512.3.2	STP-54(5)	R-2904 (CONST)

LOCATION: DAVIS DRIVE (SR 1613/1999) FROM 390' NORTH OF MORRISVILLE-CARPENTER ROAD (SR 3014) TO NORTH OF NC 54 & NC 54 FROM 644' EAST OF DAVIS DRIVE TO MIAMI BOULEVARD

TYPE OF WORK: GRADING, DRAINAGE, PAVING, CULVERTS, SIGNALS AND SIGNING

NC GRID NAD 83

LEGEND
★ SIGNALED INTERSECTION

U-4026 PART I

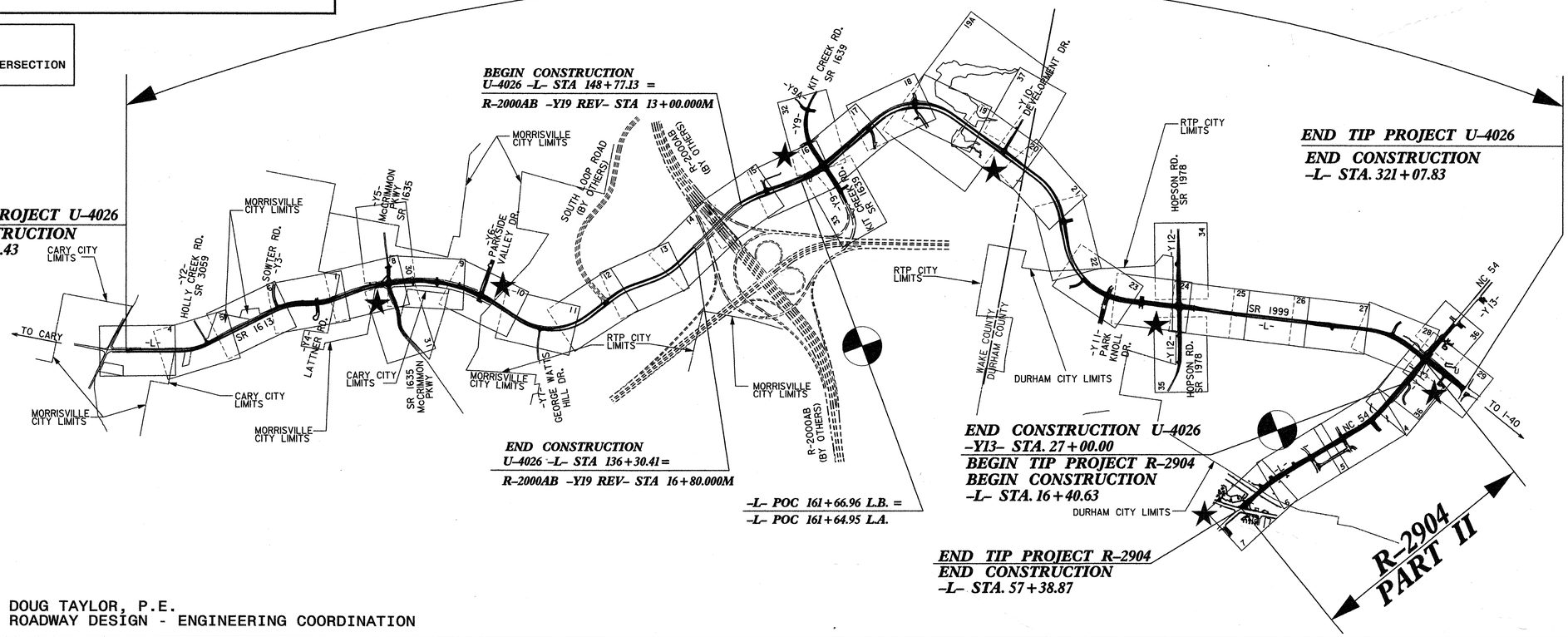

NCDOT CONTACT: DOUG TAYLOR, P.E.
ROADWAY DESIGN - ENGINEERING COORDINATION

PROJECT LENGTH

LENGTH ROADWAY TIP PROJECTS	U-4026/R-2904 =	6.363 MI.
TOTAL LENGTH OF TIP PROJECTS	U-4026/R-2904 =	6.363 MI.

Prepared In the Office of:
KO & ASSOCIATES, P.C.
1011 Schaub Dr. Suite 202 , Raleigh, NC 27606 919-851-6066
for
North Carolina Department of Transportation

Prepared In the Office of:
DIVISION OF HIGHWAYS
1000 Birch Ridge Dr., Raleigh, NC 27610

2006 STANDARD SPECIFICATIONS

RIGHT OF WAY DATE:
U-4026A – APRIL 29, 2003
U-4026B – JUNE 30, 2003
R-2904 – NOVEMBER 21, 2003

LETTING DATE:
DECEMBER 19, 2006

DIVISION OF HIGHWAYS
STATE OF NORTH CAROLINA

art mcmillan P.E.
STATE HIGHWAY DESIGN ENGINEER

5/2/2006
R:\Roadway\Proj\u4026.tsh
KO & Associates, P.C.

PROJECT REFERENCE NO.	SHEET NO.
U-4026/R-2904	1-A
ROADWAY DESIGN ENGINEER	ROADWAY DESIGN ENGINEER

STATE OF NORTH CAROLINA
DIVISION OF HIGHWAYS

INDEX OF SHEETS, GENERAL NOTES AND 2006 ROADWAY STANDARD DRAWINGS

INDEX OF SHEETS

SHEET NUMBER	DESCRIPTION
1	Title Sheet (U-4026/R-2904)
1-A	Index of Sheets, General Notes, List of Standards
2	Conventional Symbols
3	Summary of Quantities

PART I

1	Title Sheet (U-4026)
1-A & 1-B	Survey Control Sheets
2 thru 2-G	Typical Sections and Pavement Schedule
2-H & 2-I	Ditch Details
2-J thru 2-M	Intersection Details
2-N	2'-6" Curb & Gutter Transition Detail
2-O thru 2-X	Multi-Use Trail Alignment
2-Y & 2-Z	Multi-Use Trail Construction Details
2-AA	Superelevation Detail
2-BB thru 2-DD	Channel Relocation Details & Rock Inlet Sill Detail
2-EE	Traffic Bearing Steel Cover Detail
2-FF	Detail For Open Throat Catch Basin
2-GG thru 2-LL	Details of Reinforced Concrete Endwalls
2-MM	Detail For Converting CB to JB
2-NN	Detail For Converting DI to JB
3-A thru 3-W	Drainage Summary Sheets
3-X	Right of Way Area Data Sheet
3-Y	Summary of Pavement Breaking and Removal
3-Z & 3-AA	Summary of Earthwork
3-BB	Guardrail Summary
3-CC	Parcel Index Sheet
4 thru 37	Plan Sheets
38 thru 57	Profile Sheets
TCP-1 thru TCP-71	Traffic Control Plans
PM-1 thru PM-17	Pavement Marking Plans
EC-1 thru EC-77	Erosion Control Plans
RF-1	Detail Sheet of Stream Bank Reforestation
SIGN-1 thru SIGN-21	Signing Plans
SIG-1 thru SIG-78	Signal Plans
UC-1 thru UC-36	Utility Construction Plans
UO-1 thru UO-31	Utilities by Others Plans
X-1 thru X-10	Cross-Section Summary
X-2 thru X-215	Cross-Sections
C-1 thru C-15	Culvert Plans
W-1	Wall Envelope Plan

PART II

1	Title Sheet (R-2904)
1-A	Survey Control Sheet
2	Typical Sections, Pavement Schedule, Milling Detail and Wedging Detail
2-A	Undercut Detail
3-A thru 3-B	Drainage Summary Sheets (For Pipes 48" & Under)
3-C	Summary of Earthwork, Summary of Existing Asphalt Pavement Removal, Summary of Underdrains, Shoulder Berm Gutter, and Guardrail Summary
3-D	Parcel Index Sheet
4 thru 7	Plan Sheets
8 thru 10	Profile Sheets
TCP-1 thru TCP-20	Traffic Control Plans
PM-1 thru PM-3	Pavement Marking Plans
EC-1 thru EC-10	Erosion Control Plans
RF-1	Planting Details
SIGN-1 thru SIGN-12	Signing Plans
SIG-1 thru SIG-35	Signal Plans
UC-1 thru UC-7	Utility Construction Plans
UO-1 thru UO-5	Utilities By Others
X-1A thru X-1B	Cross-Section Summary
X-1 thru X-~~18~~ 21	Cross-Sections

GENERAL NOTES:

2006 SPECIFICATIONS
EFFECTIVE: 07-18-06

GRADE LINE:
GRADING AND SURFACING:

THE GRADE LINES SHOWN DENOTE THE FINISHED ELEVATION OF THE PROPOSED SURFACING AT GRADE POINTS SHOWN ON THE TYPICAL SECTIONS. GRADE LINES MAY BE ADJUSTED AT THEIR BEGINNING AND ENDING AND AT STRUCTURES AS DIRECTED BY THE ENGINEER IN ORDER TO SECURE A PROPER TIE-IN.

GRADING AND SURFACING OR RESURFACING AND WIDENING:

THE GRADE LINES SHOWN DENOTE THE FINISHED ELEVATION OF THE PROPOSED SURFACING AT GRADE POINTS SHOWN ON THE TYPICAL SECTIONS. WHERE NO GRADE LINES ARE SHOWN, THE PROFILES SHOWN DENOTE THE TOP ELEVATION OF THE EXISTING PAVEMENT ALONG THE CENTER LINE OF SURVEY ON WHICH THE PROPOSED RESURFACING WILL BE PLACED. GRADE LINES MAY BE ADJUSTED BY THE ENGINEER IN ORDER TO SECURE A PROPER TIE-IN.

CLEARING:

CLEARING ON THIS PROJECT SHALL BE PERFORMED TO THE LIMITS ESTABLISHED BY METHOD III.

THE CONTRACTOR'S ATTENTION IS DIRECTED TO THE AREAS IN THE PLANS DESIGNATED SAFETY CLEARING. THE LIMITS ARE AS SHOWN AND THE CLEARING AND GRUBBING IS CONSIDERED A PART OF THE LUMP SUM ITEM FOR "CLEARING AND GRUBBING".

SUPERELEVATION:

ALL CURVES ON THIS PROJECT SHALL BE SUPERELEVATED IN ACCORDANCE WITH STD. NO. 225.04 & NO. 225.05 USING THE RATE OF SUPERELEVATION AND RUNOFF SHOWN ON THE PLANS. SUPERELEVATION IS TO BE REVOLVED ABOUT THE GRADE POINTS SHOWN ON THE TYPICAL SECTIONS.

SHOULDER CONSTRUCTION:

ASPHALT AND EARTH SHOULDER CONSTRUCTION ON THE HIGH SIDE OF SUPERELEVATED CURVES SHALL BE IN ACCORDANCE WITH STD. NO. 560.01 & 560.02.

SIDE ROADS:

THE CONTRACTOR WILL BE REQUIRED TO DO ALL NECESSARY WORK TO PROVIDE SUITABLE CONNECTIONS WITH ALL ROADS, STREETS, AND DRIVES ENTERING THIS PROJECT. THIS WORK WILL BE PAID FOR AT THE CONTRACT UNIT PRICE FOR THE PARTICULAR ITEMS INVOLVED.

BERM DITCHES:

BERM DITCHES SHALL BE CONSTRUCTED IN ACCORDANCE WITH STD. NO. 240.01 AT LOCATIONS SHOWN ON THE PLANS OR AS DIRECTED BY THE ENGINEER.

UNDERDRAINS:

UNDERDRAINS SHALL BE CONSTRUCTED IN ACCORDANCE WITH STD. NO. 815.03 AT LOCATIONS DIRECTED BY THE ENGINEER.

DRIVEWAYS:

DRIVEWAYS SHALL BE CONSTRUCTED IN ACCORDANCE WITH STD. 848.02 USING 3' RADII OR RADII AS SHOWN ON THE PLANS. LOCATIONS OF DRIVES WILL BE AS SHOWN ON THE PLANS OR AS DIRECTED BY THE ENGINEER.

STREET RETURNS SHALL BE CONSTRUCTED IN ACCORDANCE WITH STD. NO. 848.04 USING THE RADII NOTED ON PLANS.

GUARDRAIL:

THE GUARDRAIL LOCATIONS SHOWN ON THE PLANS MAY BE ADJUSTED DURING CONSTRUCTION AS DIRECTED BY THE ENGINEER. THE CONTRACTOR SHOULD CONSULT WITH THE ENGINEER PRIOR TO ORDERING GUARDRAIL MATERIAL.

TEMPORARY SHORING:

SHORING REQUIRED FOR THE MAINTENANCE OF TRAFFIC WILL BE PAID FOR AS "EXTRA WORK" IN ACCORDANCE WITH SECTION 104-7.

UTILITIES:

UTILITY OWNERS ON THIS PROJECT ARE MCI , TIME WARNER CABLE , IBM, AT&T, PROGRESS ENERGY, DUKE POWER, PSNC ENERGY, TOWN OF CARY, BELLSOUTH, VERISON, COUNTY OF DURHAM, CITY OF DURHAM (WATER), PROGRESS TELECOM, GEORGIA ELECTRIC VIASYS, BTI & TEL COVE.

ANY RELOCATION OF EXISTING UTILITIES WILL BE ACCOMPLISHED BY OTHERS, EXCEPT AS SHOWN ON THE PLANS.

RIGHT-OF-WAY MARKERS:

ALL RIGHT-OF-WAY MARKERS ON THIS PROJECT SHALL BE PLACED BY CONTRACT.

WHEELCHAIR RAMPS:

WHEELCHAIR RAMPS ARE SHOWN ON THE PLANS AT APPROXIMATE LOCATIONS. THE CONSTRUCTION OF ALL WHEELCHAIR RAMPS SHALL BE IN ACCORDANCE WITH DETAILS IN PLANS.

EFF. 07-18-06

2006 ROADWAY STANDARD DRAWINGS

The following Roadway Standards as appear in "Roadway Standard Drawings" Highway Design Branch - N. C. Department of Transportation - Raleigh, N. C., Dated July 18, 2006 are applicable to this project and by reference hereby are considered a part of these plans:

STD.NO.	TITLE
DIVISION 2 - EARTHWORK	
200.03	Method of Clearing - Method III
225.01	Guide for Grading Subgrade - Interstate and Freeway
225.02	Guide for Grading Subgrade - Secondary and Local
225.04	Method of Obtaining Superelevation - Two Lane Pavement
225.05	Method of Obtaining Superelevation - Divided Highways
225.06	Method of Grading Sight Distance at Intersections
240.01	Guide for Berm Ditch Construction
DIVISION 3 - PIPE CULVERTS	
300.01	Method of Pipe Installation - Method 'A'
310.10	Driveway Pipe Construction
DIVISION 5 - SUBGRADE, BASES AND SHOULDERS	
560.01	Method of Shoulder Construction - High Side of Superelevated Curve - Method I
560.02	Method of Shoulder Construction - High Side of Superelevated Curve - Method II
DIVISION 6 - ASPHALT BASES AND PAVEMENTS	
654.01	Pavement Repairs
DIVISION 8 - INCIDENTALS	
806.01	Concrete Right-of-Way Marker
806.02	Granite Right-of-Way Marker
815.03	Pipe Underdrain and Blind Drain
816.04	Markers for Drainage Structure and Concrete Pad
838.01	Concrete Endwall for Single and Double Pipe Culverts - 15" thru 48" Pipe 90 Skew
838.05	Concrete 'L' Endwall for Single Pipe Culverts - 15" thru 48" Pipe
838.11	Brick Endwall for Single and Double Pipe Culverts - 15" thru 48" Pipe 90 Skew
838.15	Brick 'L' Endwall for Single Pipe Culverts - 15" thru 48" Pipe
838.21	Reinforced Concrete Endwall - for Single 54" Pipe 90 Skew
838.51	Reinforced Brick Endwall - for Single 54" Pipe 90 Skew
838.75	Notes for Reinforced Brick Endwall - Std. Dwg 838.51 thru 838.70
838.80	Precast Endwalls - 12" thru 72" Pipe 90 Skew
840.00	Concrete Base Pad for Drainage Structures
840.01	Brick Catch Basin - 12" thru 54" Pipe
840.02	Concrete Catch Basin - 12" thru 54" Pipe
840.03	Frame, Grates and Hood - for Use on Standard Catch Basin
840.14	Concrete Drop Inlet - 12" thru 30" Pipe
840.15	Brick Drop Inlet - 12" thru 30" Pipe
840.16	Drop Inlet Frame and Grates - for use with Std. Dwg 840.14 and 840.15
840.17	Concrete Grated Drop Inlet Type 'A' - 12" thru 72" Pipe
840.18	Concrete Grated Drop Inlet Type 'B' - 12" thru 36" Pipe
840.19	Concrete Grated Drop Inlet Type 'D' - 12" thru 36" Pipe
840.22	Frames and Wide Slot Sag Grates
840.24	Frames and Narrow Slot Sag Grates
840.25	Anchorage for Frames - Brick or Concrete
840.26	Brick Grated Drop Inlet Type 'A' - 12" thru 72" Pipe
840.27	Brick Grated Drop Inlet Type 'B' - 12" thru 36" Pipe
840.28	Brick Grated Drop Inlet Type 'D' - 12" thru 36" Pipe
840.29	Frames and Narrow Slot Flat Grates
840.31	Concrete Junction Box - 12" thru 66" Pipe
840.32	Brick Junction Box - 12" thru 66" Pipe
840.34	Traffic Bearing Junction Box - for Use with Pipes 42" and Under
840.45	Precast Drainage Structure
840.46	Traffic Bearing Precast Drainage Structure
840.51	Brick Manhole - 12" thru 36" Pipe
840.53	Precast Manhole With Masonry Base - 12" thru 42" Pipe
840.54	Manhole Frame and Cover
840.66	Drainage Structure Steps
840.71	Concrete and Brick Pipe Plug
840.72	Pipe Collar
846.01	Concrete Curb, Gutter and Curb & Gutter
846.02	Drop Inlet Installation in Expressway Gutter
846.04	Drop Inlet Installation in Shoulder Berm Gutter
848.01	Concrete Sidewalk
848.02	Driveway Turnout - Radius Type
848.04	Street Turnout
848.05	Wheelchair Ramp - Curb Cut
850.01	Concrete Paved Ditches
850.10	Guide for Berm Drainage Outlet - 15" and 18" Pipe
850.11	Guide for Berm Drainage Outlet - 24" and 30" Pipe
852.01	Concrete Islands
852.02	Concrete Mountable Median - for Use with Rigid or Flexible Pavement
852.05	Median Curb for Catch Basin - for Use with 1'-6" Curb and Gutter
852.06	Method for Placement of Drop Inlets in Concrete Islands
852.10	Median Construction - with Curb and Gutter
862.01	Guardrail Placement
862.02	Guardrail Installation
876.01	Rip Rap in Channels
876.02	Guide for Rip Rap at Pipe Outlets
876.04	Drainage Ditches with Class 'B' Rip Rap

10/4/2006
Ka & Associates, P:\Proj\u4026.tsh

10/25/05

PROJECT REFERENCE NO.	SHEET NO.
U-4026/R-2904	2

Note: Not to Scale

S.U.E. = Subsurface Utility Engineering

STATE OF NORTH CAROLINA
DIVISION OF HIGHWAYS

CONVENTIONAL PLAN SHEET SYMBOLS

BOUNDARIES AND PROPERTY:

- State Line
- County Line
- Township Line
- City Line
- Reservation Line
- Property Line
- Existing Iron Pin — EIP
- Property Corner
- Property Monument — ECM
- Parcel/Sequence Number — 123
- Existing Fence Line
- Proposed Woven Wire Fence
- Proposed Chain Link Fence
- Proposed Barbed Wire Fence
- Existing Wetland Boundary — WLB
- Proposed Wetland Boundary — WLB
- Existing Endangered Animal Boundary — EAB
- Existing Endangered Plant Boundary — EPB

BUILDINGS AND OTHER CULTURE:

- Gas Pump Vent or U/G Tank Cap
- Sign — S
- Well — W
- Small Mine
- Foundation
- Area Outline
- Cemetery
- Building
- School
- Church
- Dam

HYDROLOGY:

- Stream or Body of Water
- Hydro, Pool or Reservoir
- Jurisdictional Stream — JS
- Buffer Zone 1 — BZ 1
- Buffer Zone 2 — BZ 2
- Flow Arrow
- Disappearing Stream
- Spring
- Swamp Marsh
- Proposed Lateral, Tail, Head Ditch — FLOW
- False Sump

RAILROADS:

- Standard Gauge — CSX TRANSPORTATION
- RR Signal Milepost — MILEPOST 35
- Switch — SWITCH
- RR Abandoned
- RR Dismantled

RIGHT OF WAY:

- Baseline Control Point
- Existing Right of Way Marker
- Existing Right of Way Line
- Proposed Right of Way Line — RW
- Proposed Right of Way Line with Iron Pin and Cap Marker — RW
- Proposed Right of Way Line with Concrete or Granite Marker — RW
- Existing Control of Access — CA
- Proposed Control of Access — CA
- Existing Easement Line — E
- Proposed Temporary Construction Easement — E
- Proposed Temporary Drainage Easement — TDE
- Proposed Permanent Drainage Easement — PDE
- Proposed Permanent Utility Easement — PUE

ROADS AND RELATED FEATURES:

- Existing Edge of Pavement
- Existing Curb
- Proposed Slope Stakes Cut — C
- Proposed Slope Stakes Fill — F
- Proposed Wheel Chair Ramp — WCR
- Curb Cut for Future Wheel Chair Ramp — CCFR
- Existing Metal Guardrail
- Proposed Guardrail
- Existing Cable Guiderail
- Proposed Cable Guiderail
- Equality Symbol
- Pavement Removal

VEGETATION:

- Single Tree
- Single Shrub
- Hedge
- Woods Line
- Orchard
- Vineyard — Vineyard

EXISTING STRUCTURES:

MAJOR:

- Bridge, Tunnel or Box Culvert — CONC
- Bridge Wing Wall, Head Wall and End Wall — CONC WW

MINOR:

- Head and End Wall — CONC HW
- Pipe Culvert
- Footbridge
- Drainage Box: Catch Basin, DI or JB — CB
- Paved Ditch Gutter
- Storm Sewer Manhole — S
- Storm Sewer — S

UTILITIES:

POWER:

- Existing Power Pole
- Proposed Power Pole
- Existing Joint Use Pole
- Proposed Joint Use Pole
- Power Manhole — P
- Power Line Tower
- Power Transformer
- U/G Power Cable Hand Hole — HH
- H-Frame Pole
- Recorded U/G Power Line — P
- Designated U/G Power Line (S.U.E.*) — P

TELEPHONE:

- Existing Telephone Pole
- Proposed Telephone Pole
- Telephone Manhole — T
- Telephone Booth
- Telephone Pedestal — T
- Telephone Cell Tower
- U/G Telephone Cable Hand Hole — HH
- Recorded U/G Telephone Cable — T
- Designated U/G Telephone Cable (S.U.E.*) — T
- Recorded U/G Telephone Conduit — TC
- Designated U/G Telephone Conduit (S.U.E.*) — TC
- Recorded U/G Fiber Optics Cable — T FO
- Designated U/G Fiber Optics Cable (S.U.E.*) — T FO

WATER:

- Water Manhole — W
- Water Meter
- Water Valve
- Water Hydrant
- Recorded U/G Water Line — W
- Designated U/G Water Line (S.U.E.*) — W
- Above Ground Water Line — A/G Water

TV:

- TV Satellite Dish
- TV Pedestal — C
- TV Tower
- U/G TV Cable Hand Hole — HH
- Recorded U/G TV Cable — TV
- Designated U/G TV Cable (S.U.E.*) — TV
- Recorded U/G Fiber Optic Cable — TV FO
- Designated U/G Fiber Optic Cable (S.U.E.*) — TV FO

GAS:

- Gas Valve
- Gas Meter
- Recorded U/G Gas Line — G
- Designated U/G Gas Line (S.U.E.*) — G
- Above Ground Gas Line — A/G Gas

SANITARY SEWER:

- Sanitary Sewer Manhole
- Sanitary Sewer Cleanout
- U/G Sanitary Sewer Line — SS
- Above Ground Sanitary Sewer — A/G Sanitary Sewer
- Recorded SS Forced Main Line — FSS
- Designated SS Forced Main Line (S.U.E.*) — FSS

MISCELLANEOUS:

- Utility Pole
- Utility Pole with Base
- Utility Located Object
- Utility Traffic Signal Box — S
- Utility Unknown U/G Line — ?UTL
- U/G Tank; Water, Gas, Oil
- A/G Tank; Water, Gas, Oil
- U/G Test Hole (S.U.E.*)
- Abandoned According to Utility Records — AATUR
- End of Information — E.O.I.

PROJECT REFERENCE No.	SHEET No.
U-4026 / R-2904	3

1 of 3

STATE OF NORTH CAROLINA
DIVISION OF HIGHWAYS
ROADWAY SUMMARY OF QUANTITIES FOR CONTRACT - C200840

ItemNumber	Sec #	Quantity	Unit	Description
0000100000-N	800	Lump Sum		MOBILIZATION
0000400000-N	801	Lump Sum		CONSTRUCTION SURVEYING
0000900000-N	SP	Lump Sum		GENERIC MISCELLANEOUS ITEM REMOVE & RESET BUS SHELTERS
0001000000-E	200	Lump Sum		CLEARING & GRUBBING .. ACRE(S)
0008000000-E	200	4	ACR	SUPPLEMENTARY CLEARING & GRUB-BING
0015000000-N	205	9	EA	SEALING ABANDONED WELLS
0022000000-E	225	334,300	CY	UNCLASSIFIED EXCAVATION
0036000000-E	225	13,200	CY	UNDERCUT EXCAVATION
0080000000-E	SP	500	TON	CLASS IV SUBGRADE STABILIZA-TION
0106000000-E	230	14,100	CY	BORROW EXCAVATION
0134000000-E	240	10,675	CY	DRAINAGE DITCH EXCAVATION
0141000000-E	240	2,800	LF	BERM DITCH CONSTRUCTION
0156000000-E	250	48,425	SY	REMOVAL OF EXISTING ASPHALT PAVEMENT
0177000000-E	250	1,950	SY	BREAKING OF EXISTING ASPHALT PAVEMENT
0192000000-N	260	49	HR	PROOF ROLLING
0195000000-E	265	600	CY	SELECT GRANULAR MATERIAL
0196000000-E	270	11,900	SY	FABRIC FOR SOIL STABILIZATION
0318000000-E	300	4,137	TON	FOUNDATION CONDITIONING MATE-RIAL, MINOR STRS
0343000000-E	310	252	LF	15" SIDE DRAIN PIPE
0344000000-E	310	64	LF	18" SIDE DRAIN PIPE
0345000000-E	310	40	LF	24" SIDE DRAIN PIPE
0396000000-E	310	320	LF	42" RC PIPE CULVERTS, CLASS III
0402000000-E	310	400	LF	48" RC PIPE CULVERTS, CLASS III
0408000000-E	310	208	LF	54" RC PIPE CULVERTS, CLASS III
0414000000-E	310	68	LF	60" RC PIPE CULVERTS, CLASS III
0420000000-E	310	300	LF	66" RC PIPE CULVERTS, CLASS III
0426000000-E	310	148	LF	72" RC PIPE CULVERTS, CLASS III
0448000000-E	310	108	LF	**** RC PIPE CULVERTS, CLASS IV (54")
0448000000-E	310	104	LF	**** RC PIPE CULVERTS, CLASS IV (66")
0708000000-E	310	1,164	LF	15" BIT COAT CS PIPE CULVERTS, TYPE B 0.064" THICK
0714000000-E	310	412	LF	18" BIT COAT CS PIPE CULVERTS, TYPE B 0.064" THICK
0720000000-E	310	252	LF	24" BIT COAT CS PIPE CULVERTS, TYPE B 0.064" THICK
0726000000-E	310	128	LF	30" BIT COAT CS PIPE CULVERTS, TYPE B 0.079" THICK
0806000000-E	310	46	EA	15" BIT COAT CS PIPE ELBOWS, TYPE B 0.064" THICK
0807000000-E	310	10	EA	18" BIT COAT CS PIPE ELBOWS, T YPE B 0.064" THICK
0808000000-E	310	4	EA	24" BIT COAT CS PIPE ELBOWS, T YPE B 0.064" THICK
0809000000-E	310	4	EA	30" BIT COAT CS PIPE ELBOWS, T YPE B 0.079" THICK
0973100000-E	330	124	LF	**" WELDED STEEL PIPE IN SOIL (24", 0.500")
0973100000-E	330	60	LF	**" WELDED STEEL PIPE IN SOIL (30", 0.500")
0973100000-E	330	260	LF	**" WELDED STEEL PIPE IN SOIL (36", 0.500")
0973100000-E	330	268	LF	**" WELDED STEEL PIPE IN SOIL (42", 0.625")
0973100000-E	330	556	LF	**" WELDED STEEL PIPE IN SOIL (48", 0.625")
0973100000-E	330	128	LF	**" WELDED STEEL PIPE IN SOIL (60", 0.875")
0973100000-E	330	248	LF	**" WELDED STEEL PIPE IN SOIL (66", 0.875")
0973100000-E	330	388	LF	**" WELDED STEEL PIPE IN SOIL (72", 1.000")
0995000000-E	340	10,765	LF	PIPE REMOVAL
1011000000-N	500	Lump Sum		FINE GRADING
1022000000-E	SP	3,350	LB	SEALING EXISTING PAVEMENT CRACKS
1044000000-E	501	79,700	SY	LIME TREATED SOIL (SLURRY METHOD)
1066000000-E	501	800	TON	LIME FOR LIME TREATED SOIL
1077000000-E	SP	40	TON	#57 STONE
1110000000-E	510	1,400	TON	STABILIZER AGGREGATE
1121000000-E	520	4,075	TON	AGGREGATE BASE COURSE
1176000000-E	542	53,100	SY	SOIL CEMENT BASE
1187000000-E	542	1,460	TON	PORTLAND CEMENT FOR SOIL CE-MENT BASE
1198000000-E	SP	800	TON	AGGREGATE FOR SOIL CEMENT BASE
1209000000-E	543	19,910	GAL	ASPHALT CURING SEAL
1220000000-E	545	175	TON	INCIDENTAL STONE BASE
1297000000-E	607	5,100	SY	MILLING ASPHALT PAVEMENT, ***" DEPTH (2")
1297000000-E	607	2,017	SY	MILLING ASPHALT PAVEMENT, ***" DEPTH (2-1/2")
1330000000-E	607	500	SY	INCIDENTAL MILLING
1489000000-E	610	59,100	TON	ASPHALT CONC BASE COURSE, TYPE B25.0B
1491000000-E	610	9,650	TON	ASPHALT CONC BASE COURSE, TYPE B25.0C
1498000000-E	610	48,300	TON	ASPHALT CONC INTERMEDIATE COURSE, TYPE I19.0B
1503000000-E	610	7,400	TON	ASPHALT CONC INTERMEDIATE COURSE, TYPE I19.0C
1519000000-E	610	69,800	TON	ASPHALT CONC SURFACE COURSE, TYPE S9.5B
1523000000-E	610	7,370	TON	ASPHALT CONC SURFACE COURSE, TYPE S9.5C
1525000000-E	610	800	TON	ASPHALT CONC SURFACE COURSE, TYPE SF9.5A
1560000000-E	620	9,802	TON	ASPHALT BINDER FOR PLANT MIX, GRADE PG 64-22
1565000000-E	620	442	TON	ASPHALT BINDER FOR PLANT MIX, GRADE PG 70-22
1693000000-E	654	162	TON	ASPHALT PLANT MIX, PAVEMENT REPAIR
2000000000-N	806	170	EA	RIGHT OF WAY MARKERS
2022000000-E	815	4,222	CY	SUBDRAIN EXCAVATION
2033000000-E	815	2,251	CY	SUBDRAIN FINE AGGREGATE
2044000000-E	815	13,400	LF	6" PERFORATED SUBDRAIN PIPE
2055000000-E	815	402	EA	6" SUBDRAIN PIPE WYES, TEES, & ELBOWS
2066000000-N	815	27	EA	CONCRETE PAD FOR SUBDRAIN PIPE OUTLET
2077000000-E	815	162	LF	6" OUTLET PIPE (SUBDRAINS)
2143000000-E	818	40	TON	BLOTTING SAND
2190000000-N	828	49	EA	TEMPORARY STEEL PLATE COVERS FOR MASONRY DRAINAGE STRUCTURE
2209000000-E	838	58.5	CY	ENDWALLS
2220000000-E	838	86	CY	REINFORCED ENDWALLS
2253000000-E	840	61	CY	PIPE COLLARS
2264000000-E	840	0.792	CY	PIPE PLUGS
2275000000-E	SP	27	CY	FLOWABLE FILL
2286000000-N	840	346	EA	MASONRY DRAINAGE STRUCTURES
2297000000-E	840	7	CY	MASONRY DRAINAGE STRUCTURES
2308000000-E	840	119.24	LF	MASONRY DRAINAGE STRUCTURES
2364000000-N	840	81	EA	FRAME WITH TWO GRATES, STD 840.16
2365000000-N	840	1	EA	FRAME WITH TWO GRATES, STD 840.22
2366000000-N	840	72	EA	FRAME WITH TWO GRATES, STD 840.24
2367000000-N	840	33	EA	FRAME WITH TWO GRATES, STD 840.29
2374000000-N	840	4	EA	FRAME WITH GRATE & HOOD, STD 840.03, TYPE ** (E)
2374000000-N	840	73	EA	FRAME WITH GRATE & HOOD, STD 840.03, TYPE ** (F)
2374000000-N	840	69	EA	FRAME WITH GRATE & HOOD, STD 840.03, TYPE ** (G)
2396000000-N	840	11	EA	FRAME WITH COVER, STD 840.54
2542000000-E	846	17,440	LF	1'-6" CONCRETE CURB & GUTTER
2549000000-E	846	24,850	LF	2'-6" CONCRETE CURB & GUTTER
2556000000-E	846	4,120	LF	SHOULDER BERM GUTTER
2577000000-E	846	442	LF	CONCRETE EXPRESSWAY GUTTER
2591000000-E	848	3,880	SY	4" CONCRETE SIDEWALK
2605000000-N	848	57	EA	CONCRETE WHEELCHAIR RAMPS
2612000000-E	848	240	SY	6" CONCRETE DRIVEWAY
2619000000-E	850	183	SY	4" CONCRETE PAVED DITCH
2647000000-E	852	1,135	SY	5" MONOLITHIC CONCRETE ISLANDS (SURFACE MOUNTED)
2655000000-E	852	9,560	SY	5" MONOLITHIC CONCRETE ISLANDS (KEYED IN)
2815000000-N	858	2	EA	ADJUSTMENT OF DROP INLETS
2830000000-N	858	2	EA	ADJUSTMENT OF MANHOLES
2893000000-N	SP	1	EA	CONVERT EXISTING CATCH BASIN TO JUNCTION BOX WITH MANHOLE COVER
2938000000-N	SP	2	EA	CONVERT EXISTING DROP INLET TO JUNCTION BOX WITH MANHOLE COVER
3030000000-E	862	11,937.5	LF	STEEL BM GUARDRAIL
3045000000-E	862	262.5	LF	STEEL BM GUARDRAIL, SHOP CURVED
3150000000-N	862	15	EA	ADDITIONAL GUARDRAIL POSTS
3195000000-N	862	5	EA	GUARDRAIL ANCHOR UNITS, TYPE AT-1
3210000000-N	862	25	EA	GUARDRAIL ANCHOR UNITS, TYPE CAT-1
3270000000-N	SP	27	EA	GUARDRAIL ANCHOR UNITS, TYPE 350
3285000000-N	SP	1	EA	GUARDRAIL ANCHOR UNITS, TYPE M-350
3360000000-E	863	9,810	LF	REMOVE EXISTING GUARDRAIL
3628000000-E	876	955	TON	RIP RAP, CLASS I
3649000000-E	876	3,602	TON	RIP RAP, CLASS B
3651000000-E	SP	324	TON	BOULDERS
3656000000-E	876	24,783	SY	FILTER FABRIC FOR DRAINAGE
3659000000-N	SP	14	EA	PREFORMED SCOUR HOLES WITH LEVEL SPREADER APRON
3677000000-E	SP	225	SY	GENERIC EROSION CONTROL ITEM ROCK PLATING
4054000000-E	902	1	CY	PLAIN CONCRETE SIGN FOUNDA-TIONS
4060000000-E	903	1,037	LB	SUPPORTS, BREAKAWAY STEEL BEAM
4072000000-E	903	6,180	LF	SUPPORTS, 3-LB STEEL U-CHANNEL
4096000000-N	904	18	EA	SIGN ERECTION, TYPE D
4102000000-N	904	337	EA	SIGN ERECTION, TYPE E
4108000000-N	904	19	EA	SIGN ERECTION, TYPE F
4110000000-N	904	4	EA	SIGN ERECTION, TYPE *** (GROUND MOUNTED) (B)
4116100000-N	904	4	EA	SIGN ERECTION, RELOCATE, TYPE **** (GROUND MOUNTED) (D)
4151000000-N	907	17	EA	STOCKPILE SIGN SYSTEM, STEEL BEAM
4152000000-N	907	10	EA	DISPOSAL OF SIGN SYSTEM, STEEL BEAM
4155000000-N	907	110	EA	DISPOSAL OF SIGN SYSTEM, U-CHANNEL
4192000000-N	907	4	EA	DISPOSAL OF SUPPORT, U-CHANNEL
4238000000-N	907	2	EA	DISPOSAL OF SIGN, D, E OR F
4400000000-E	1110	1,291	SF	WORK ZONE SIGNS (STATIONARY)
4405000000-E	1110	1,368	SF	WORK ZONE SIGNS (PORTABLE)
4410000000-E	1110	316	SF	WORK ZONE SIGNS (BARRICADE MOUNTED)

PROJECT REFERENCE NO.	SHEET NO.
U-4026/R-2904	3

ItemNumber	Sec #	Quantity	Unit	Description
4415000000-N	1115	3	EA	FLASHING ARROW PANELS, TYPE C
4420000000-N	1120	4	EA	CHANGEABLE MESSAGE SIGN
4430000000-N	1130	1,710	EA	DRUMS
4435000000-N	1135	250	EA	CONES
4445000000-E	1145	2,140	LF	BARRICADES (TYPE III)
4450000000-N	1150	13,200	HR	FLAGGER
4465000000-N	1160	2	EA	TEMPORARY CRASH CUSHIONS
4480000000-N	1165	2	EA	TMIA
4485000000-E	1170	800	LF	PORTABLE CONCRETE BARRIER
4495000000-E	1170	250	LF	PORTABLE CONCRETE BARRIER (DRAINAGE)
4507000000-E	SP	900	LF	WATER FILLED BARRIER
4510000000-N	SP	1,216	HR	POLICE
4516000000-N	1180	100	EA	SKINNY DRUM
4520000000-N	1266	50	EA	TUBULAR MARKERS (FIXED)
4650000000-N	1251	4,276	EA	TEMPORARY RAISED PAVEMENT MARKERS
4685000000-E	1205	114,602	LF	THERMOPLASTIC PAVEMENT MARKING LINES (4", 90 MILS)
4686000000-E	1205	56,084	LF	THERMOPLASTIC PAVEMENT MARKING LINES (4", 120 MILS)
4688000000-E	1205	3,100	LF	THERMOPLASTIC PAVEMENT MARKING LINES (6", 90 MILS)
4690000000-E	1205	481	LF	THERMOPLASTIC PAVEMENT MARKING LINES (6", 120 MILS)
4695000000-E	1205	754	LF	THERMOPLASTIC PAVEMENT MARKING LINES (8", 90 MILS)
4697000000-E	1205	2,089	LF	THERMOPLASTIC PAVEMENT MARKING LINES (8", 120 MILS)
4710000000-E	1205	3,490	LF	THERMOPLASTIC PAVEMENT MARKING LINES (24", 120 MILS)
4721000000-E	1205	36	EA	THERMOPLASTIC PAVEMENT MARKING CHARACTER (120 MILS)
4725000000-E	1205	406	EA	THERMOPLASTIC PAVEMENT MARKING SYMBOL (90 MILS)
4770000000-E	1205	1,500	LF	COLD APPLIED PLASTIC PAVEMENT MARKING LINES, TYPE ** (4") (IV)
4810000000-E	1205	972,445	LF	PAINT PAVEMENT MARKING LINES (4")
4820000000-E	1205	17,380	LF	PAINT PAVEMENT MARKING LINES (8")
4835000000-E	1205	9,310	LF	PAINT PAVEMENT MARKING LINES (24")
4840000000-N	1205	232	EA	PAINT PAVEMENT MARKING CHARACTER
4845000000-N	1205	1,228	EA	PAINT PAVEMENT MARKING SYMBOL
4850000000-E	1205	95,021	LF	REMOVAL OF PAVEMENT MARKING LINES (4")
4860000000-E	1205	1,503	LF	REMOVAL OF PAVEMENT MARKING LINES (8")
4870000000-E	1205	1,420	LF	REMOVAL OF PAVEMENT MARKING LINES (24")
4875000000-N	1205	139	EA	REMOVAL OF PAVEMENT MARKING SYMBOLS & CHARACTERS
4900000000-N	1251	288	EA	PERMANENT RAISED PAVEMENT MARKERS
4905000000-N	1253	2,367	EA	SNOWPLOWABLE PAVEMENT MARKERS
4915000000-E	1264	14	EA	7' U-CHANNEL POSTS
4957000000-N	1264	14	EA	OBJECT MARKERS (TYPE **) (END OF ROAD)
5255000000-N	1413	Lump Sum		PORTABLE LIGHTING
5326600000-E	1510	7,191	LF	16" WATER LINE
5558600000-E	1515	4	EA	16" VALVE
5572600000-E	1515	1	EA	16" TAPPING VALVE
5589200000-E	1515	1	EA	2" AIR RELEASE VALVE
5606000000-E	1515	2	EA	2" BLOW OFF
5643100000-E	1515	1	EA	3/4" WATER METER
5648000000-N	1515	4	EA	RELOCATE WATER METER
5672000000-N	1515	31	EA	RELOCATE FIRE HYDRANT
5691300000-E	1520	853	LF	8" SANITARY GRAVITY SEWER
5709200000-E	1520	80	LF	4" FORCE MAIN SEWER
5768000000-N	1520	2	EA	SANITARY SEWER CLEAN-OUT
5775000000-E	1525	3	EA	4' DIA UTILITY MANHOLE
5781000000-E	1525	8	LF	UTILITY MANHOLE WALL, 4' DIA
5810000000-E	1530	7,862	LF	ABANDON 16" UTILITY PIPE
58155000000-N	1530	3	EA	REMOVE FIRE HYDRANT
5882000000-N	SP	3	EA	GENERIC UTILITY ITEM 16" GATE VALVE & 5' DIA MAN-HOLE 200# WP
5882000000-N	SP	1	EA	GENERIC UTILITY ITEM RELOCATE 2" RPZ BACKFLOW PRE-VENTION ASSEMBLY
5882000000-N	SP	1	EA	GENERIC UTILITY ITEM RELOCATE 2" RPZ BACKFLOW PRE-VENTION ASSEMBLY WITH NEW VAULT
5882000000-N	SP	2	EA	GENERIC UTILITY ITEM RELOCATE 2" WATER METER ASSEMBLY WITH NEW VAULT
5888000000-E	SP	220	LF	GENERIC UTILITY ITEM 30" STEEL ENCASEMENT PIPE, 0.500" THICK, BY OPEN CUT
5912000000-N	SP	Lump Sum		GENERIC UTILITY ITEM UTILITY COORDINATOR
6000000000-E	1605	22,015	LF	TEMPORARY SILT FENCE
6006000000-E	1610	3,175	TON	STONE FOR EROSION CONTROL, CLASS A
6009000000-E	1610	11,675	TON	STONE FOR EROSION CONTROL, CLASS B
6012000000-E	1610	10,050	TON	SEDIMENT CONTROL STONE
6015000000-E	1615	58	ACR	TEMPORARY MULCHING
6018000000-E	1620	2,050	LB	SEED FOR TEMPORARY SEEDING
6021000000-E	1620	8.25	TON	FERTILIZER FOR TEMPORARY SEED-ING
6024000000-E	1622	1,150	LF	TEMPORARY SLOPE DRAINS
6027000000-N	1622	48	EA	INLET PROTECTION AT TEMPORARY SLOPE DRAINS
6029000000-E	SP	8,700	LF	SAFETY FENCE
6030000000-E	1630	168,520	CY	SILT EXCAVATION
6036000000-E	1631	41,800	SY	MATTING FOR EROSION CONTROL
6037000000-E	SP	465	SY	COIR FIBER MAT
6038000000-E	SP	2,800	SY	PERMANENT SOIL REINFORCEMENT MAT
6042000000-E	1632	9,825	LF	1/4" HARDWARE CLOTH
6045000000-E	SP	55	LF	**" TEMPORARY PIPE (18")
6045000000-E	SP	115	LF	**" TEMPORARY PIPE (24")
6070000000-N	SP	24	EA	SPECIAL STILLING BASINS
6071030000-E	SP	1,300	LF	COIR FIBER BAFFLES
6071050000-E	SP	68	EA	**" SKIMMER (2")
6071050000-E	SP	8	EA	**" SKIMMER (2-1/2")
6071050000-E	SP	1	EA	**" SKIMMER (3")
6084000000-E	1660	111	ACR	SEEDING & MULCHING
6087000000-E	1660	34.5	ACR	MOWING
6090000000-E	1661	500	LB	SEED FOR REPAIR SEEDING
6093000000-E	1661	1.25	TON	FERTILIZER FOR REPAIR SEEDING
6096000000-E	1662	1,400	LB	SEED FOR SUPPLEMENTAL SEEDING
6108000000-E	1665	45	TON	FERTILIZER TOPDRESSING
6111000000-E	SP	650	LF	IMPERVIOUS DIKE
6114000000-N	SP	24.5	HR	SPECIALIZED HAND MOWING
6117000000-N	SP	60	EA	RESPONSE FOR EROSION CONTROL
6126000000-E	SP	0.44	ACR	STREAMBANK REFORESTATION
7000000000-E	1705	21	EA	PEDESTRIAN SIGNAL HEAD (**", ** SECTION) (16", 1 SECTION W/ COUNTDOWN)
7060000000-E	1705	37,103	LF	SIGNAL CABLE
7120000000-E	1705	168	EA	VEHICLE SIGNAL HEAD (12", 3 SECTION)
7144000000-E	1705	56	EA	VEHICLE SIGNAL HEAD (12", 5 SECTION)
7180000000-N	1706	20	EA	BACKPLATE
7252000000-E	1710	1,625	LF	MESSENGER CABLE (1/4")
7264000000-E	1710	6,035	LF	MESSENGER CABLE (3/8")
7279000000-E	1715	3,470	LF	TRACER WIRE
7300000000-E	1715	14,170	LF	UNPAVED TRENCHING (**********) (1, 2")
7300310000-E	1715	230	LF	PLOWING (**********) (2, 1.25")
7301000000-E	1715	2,620	LF	DIRECTIONAL DRILL (**********) (2, 1.25" & 3, 1.25")
7301000000-E	1715	970	LF	DIRECTIONAL DRILL (**********) (4, 1.25" & 5", 1 OUTER)
7324000000-N	1716	92	EA	JUNCTION BOX (STANDARD SIZE)
7348000000-N	1716	12	EA	JUNCTION BOX (OVER-SIZED, HEA-VY DUTY)
7360000000-N	1720	29	EA	WOOD POLE
7372000000-N	1721	61	EA	GUY ASSEMBLY
7408000000-E	1722	6	EA	1" RISER WITH WEATHERHEAD
7420000000-E	1722	30	EA	2" RISER WITH WEATHERHEAD
7432000000-E	1722	7	EA	2" RISER WITH HEAT SHRINK TUBING
7444000000-E	1725	23,617	LF	INDUCTIVE LOOP SAWCUT
7456000000-E	1726	64,060	LF	LEAD-IN CABLE (**********) (18-4)
7481000000-N	SP	15	EA	SITE SURVEY
7481200000-N	SP	19	EA	LUMINAIRE ARM FOR VIDEO SYSTEM
7481280000-N	SP	15	EA	RELOCATE CAMERA SENSOR UNIT
7484000000-N	SP	2	EA	MICROWAVE VEHICLE DETECTOR
7516000000-E	1730	1,300	LF	COMMUNICATIONS CABLE (**FIBER) (12)
7516000000-E	1730	3,000	LF	COMMUNICATIONS CABLE (**FIBER) (24)
7528000000-E	1730	915	LF	DROP CABLE
7540000000-N	1731	5	EA	SPLICE ENCLOSURE
7552000000-N	1731	2	EA	INTERCONNECT CENTER
7564000000-N	1732	2	EA	FIBER-OPTIC TRANSCEIVER, DROP & REPEAT
7564100000-N	1732	1	EA	FIBER-OPTIC TRANSCEIVER, SELF-HEALING RING
7566000000-N	1733	11	EA	DELINEATOR MARKER
7575160000-E	1734	815	LF	REMOVE EXISTING COMMUNICATIONS CABLE
7575180000-N	1735	1	EA	CABLE TRANSFER
7576000000-N	SP	4	EA	METAL STRAIN SIGNAL POLE
7588000000-N	SP	4	EA	METAL POLE WITH SINGLE MAST ARM
7613000000-N	SP	32	EA	SOIL TEST
7614100000-E	SP	256	CY	DRILLED PIER FOUNDATION
7624000000-N	1743	8	EA	SIGNAL PEDESTAL WITH FOUNDA-TION
7631000000-N	SP	20	EA	MAST ARM WITH METAL POLE DE-SIGN
7636000000-N	1745	29	EA	SIGN FOR SIGNALS
7684000000-N	1750	7	EA	SIGNAL CABINET FOUNDATION
7720000000-N	1751	5	EA	CONTROLLER WITH CABINET (TYPE 170E, BASE MOUNTED)
7744000000-N	1751	61	EA	DETECTOR CARD (TYPE 170)
7756000000-N	1751	2	EA	CONTROLLER WITH CABINET (TYPE 2070L, BASE MOUNTED)
7780000000-N	1751	29	EA	DETECTOR CARD (TYPE 2070L)
7960000000-N	SP	19	EA	METAL POLE FOUNDATION REMOVAL
7972000000-N	SP	19	EA	METAL POLE REMOVAL
7980000000-N	SP	1	EA	GENERIC SIGNAL ITEM 2070L CONTROLLER, CARY COMPAT-IBLE
7980000000-N	SP	2	EA	GENERIC SIGNAL ITEM INSTALL STATE FURNISHED METAL POLE & LUMINAIRE W/ SINGLE MAST ARM

STATE OF NORTH CAROLINA
SUMMARY OF QUANTITIES

PROJECT REFERENCE No.	SHEET No.
R-2904/ U-4026	

ItemNumber	Sec #	Quantity	Unit	Description
7980000000-N	SP	2	EA	GENERIC SIGNAL ITEM INSTALL STATE FURNISHED METAL POLE W/ SINGLE MAST ARM
7980000000-N	SP	4	EA	GENERIC SIGNAL ITEM INSTALL STATE FURNISHED METAL STRAIN SIGNAL POLE
7980000000-N	SP	9	EA	GENERIC SIGNAL ITEM MAST ARM W/ METAL POLE & LUMINAIRE RESEARCH TRIANGLE PARK SPECIFIC
7980000000-N	SP	7	EA	GENERIC SIGNAL ITEM MAST ARM WITH METAL POLE RESEARCH TRIANGLE PARK SPECIFIC
7980000000-N	SP	1	EA	GENERIC SIGNAL ITEM NEMA TS-2 CABINET(BASE MOUNT), CARY COMPATIBLE
7980000000-N	SP	24	EA	GENERIC SIGNAL ITEM NEMA TS-2 DETECTOR CARD, CARY COMPATIBLE
******* BEGIN SCHEDULE AA ******* ******* (3 ALTERNATES) *******				
0366000000-EAA1	310	18,948	LF	15" RC PIPE CULVERTS, CLASS III
0372000000-EAA1	310	5,256	LF	18" RC PIPE CULVERTS, CLASS III
0378000000-EAA1	310	2,540	LF	24" RC PIPE CULVERTS, CLASS III
0384000000-EAA1	310	1,496	LF	30" RC PIPE CULVERTS, CLASS III
0390000000-EAA1	310	1,216	LF	36" RC PIPE CULVERTS, CLASS III
*** OR ***				
0366000000-EAA2	310	15,564	LF	15" RC PIPE CULVERTS, CLASS III
0372000000-EAA2	310	3,440	LF	18" RC PIPE CULVERTS, CLASS III
0378000000-EAA2	310	2,088	LF	24" RC PIPE CULVERTS, CLASS III
0384000000-EAA2	310	1,176	LF	30" RC PIPE CULVERTS, CLASS III
0390000000-EAA2	310	868	LF	36" RC PIPE CULVERTS, CLASS III

ItemNumber	Sec #	Quantity	Unit	Description
0536000000-EAA2	SP	3,384	LF	***" HDPE PIPE CULVERTS (15")
0536000000-EAA2	SP	1,816	LF	***" HDPE PIPE CULVERTS (18")
0536000000-EAA2	SP	452	LF	***" HDPE PIPE CULVERTS (24")
0536000000-EAA2	SP	320	LF	***" HDPE PIPE CULVERTS (30")
0536000000-EAA2	SP	348	LF	***" HDPE PIPE CULVERTS (36")
*** OR ***				
0366000000-EAA3	310	15,564	LF	15" RC PIPE CULVERTS, CLASS III
0372000000-EAA3	310	3,440	LF	18" RC PIPE CULVERTS, CLASS III
0378000000-EAA3	310	2,088	LF	24" RC PIPE CULVERTS, CLASS III
0384000000-EAA3	310	1,176	LF	30" RC PIPE CULVERTS, CLASS III
0390000000-EAA3	310	868	LF	36" RC PIPE CULVERTS, CLASS III
0540000000-EAA3	SP	3,384	LF	***" ALUMINIZED CORRUGATED STEEL PIPE CULVERTS, ****" THICK (15", 0.064")
0540000000-EAA3	SP	1,816	LF	***" ALUMINIZED CORRUGATED STEEL PIPE CULVERTS, ****" THICK (18", 0.064")
0540000000-EAA3	SP	452	LF	***" ALUMINIZED CORRUGATED STEEL PIPE CULVERTS, ****" THICK (24", 0.064")
0540000000-EAA3	SP	320	LF	***" ALUMINIZED CORRUGATED STEEL PIPE CULVERTS, ****" THICK (30", 0.079")
0540000000-EAA3	SP	348	LF	***" ALUMINIZED CORRUGATED STEEL PIPE CULVERTS, ****" THICK (36", 0.079")
******* END SCHEDULE AA *******				

ItemNumber	Sec #	Quantity	Unit	Description
******* BEGIN SCHEDULE HA ******* ******* (2 ALTERNATES) *******				
7481220000-NHA1	SP	3	EA	CAMERA WITH INTERNAL LOOP EMULATOR PROCESSING UNIT
*** OR ***				
7481240000-NHA2	SP	11	EA	CAMERA WITHOUT INTERNAL LOOP EMULATOR PROCESSING UNIT
7481260000-NHA2	SP	5	EA	EXTERNAL LOOP EMULATOR PROCESSING UNIT
******* END SCHEDULE HA *******				

9/09/99

TIP PROJECT: U-4026

CONTRACT: C200840

See Sheet 1-A For Index of Sheets

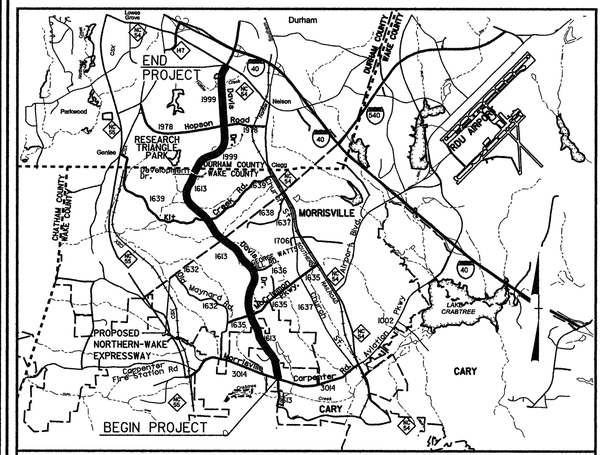

VICINITY MAP

STATE	STATE PROJECT REFERENCE NO.	SHEET NO.	TOTAL SHEETS
N.C.	U-4026	1	

WBS NO.	F.A. PROJ. NO.	DESCRIPTION
35018.1.1		P.E.
35018.2.1		R/W
35018.3.1		CONST

STATE OF NORTH CAROLINA
DIVISION OF HIGHWAYS

WAKE–DURHAM COUNTIES

LOCATION: DAVIS DRIVE (SR 1613/1999) FROM 390' NORTH OF MORRISVILLE–CARPENTER ROAD (SR 3014) TO NORTH OF NC 54

TYPE OF WORK: GRADING, DRAINAGE, PAVING, CULVERTS, SIGNALS AND SIGNING

LEGEND

★ SIGNALED INTERSECTION

NC GRID NAD 83

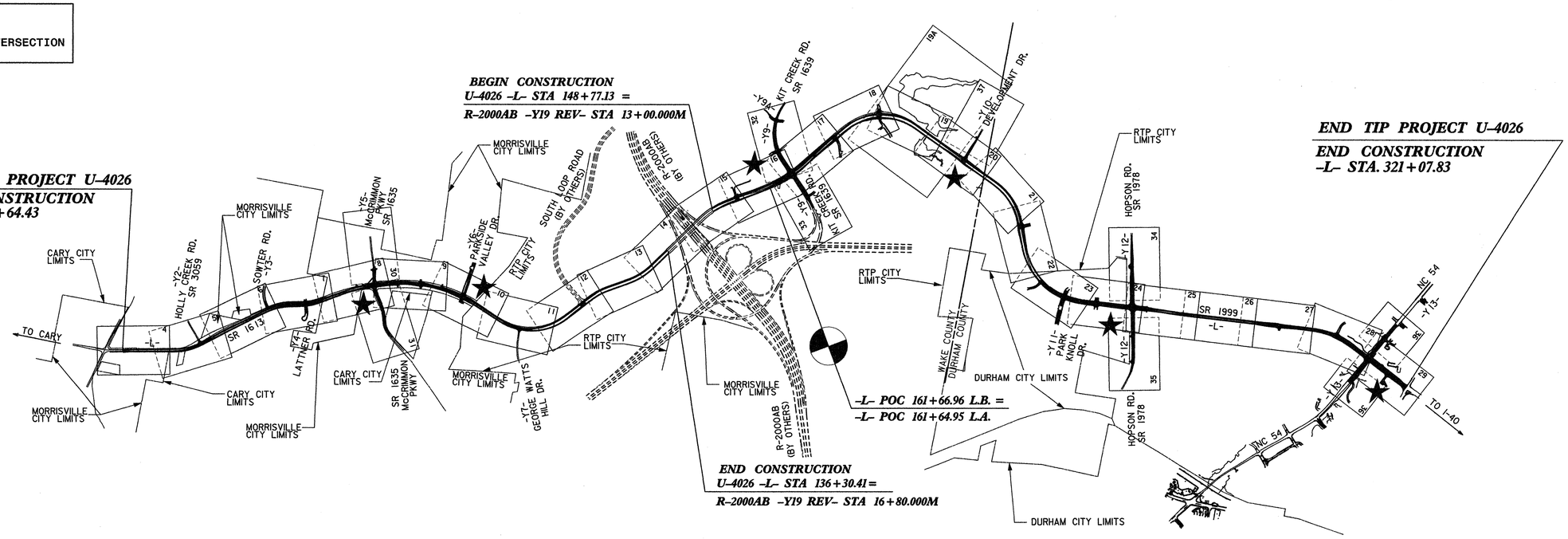

NCDOT CONTACT: DOUG TAYLOR, P.E.
ROADWAY DESIGN - ENGINEERING COORDINATION

GRAPHIC SCALES

50 25 0 50 100
PLANS

50 25 0 50 100
PROFILE (HORIZONTAL)

10 5 0 10 20
PROFILE (VERTICAL)

DESIGN DATA

ADT (2004) = 24155
ADT (2024) = 45055
DHV = 12 %
D = 65 %
T = 4 % *
V = 55 MPH (SHLD)
= 50 MPH (C&G)
* TTST 1 % DUAL 3 %

PROJECT LENGTH

LENGTH ROADWAY TIP PROJECT U-4026	=	5.587 MI.
TOTAL LENGTH OF TIP PROJECT U-4026	=	5.587 MI.

Prepared In the Office of:
KO & ASSOCIATES, P.C.
1011 Schaub Dr. Suite 202, Raleigh, NC 27606 919-851-6066
for
North Carolina Department of Transportation

2006 STANDARD SPECIFICATIONS

RIGHT OF WAY DATE:
U-4026A – APRIL 29, 2003
U-4026B – JUNE 30, 2003

LETTING DATE:

Stephen R. Whitley, P.E.
PROJECT ENGINEER

David C. Waller, P.E.
PROJECT DESIGN ENGINEER

HYDRAULICS ENGINEER
NORTH CAROLINA PROFESSIONAL SEAL 021162 ENGINEER W. HERBERT TURNER, JR.
SIGNATURE: 5-4-2006 P.E.

ROADWAY DESIGN ENGINEER
NORTH CAROLINA PROFESSIONAL SEAL 20774 ENGINEER STEPHEN R. WHITLEY
SIGNATURE: 5-4-2006 P.E.

DIVISION OF HIGHWAYS
STATE OF NORTH CAROLINA

STATE OF NORTH CAROLINA DEPARTMENT OF TRANSPORTATION

P.E.
STATE HIGHWAY DESIGN ENGINEER

5/2/2006
R:\Roadway\Proj\u4026.tsh
KO & Associates, P.C.

PROJECT REFERENCE NO.	SHEET NO.
U-4026	1A
Location and Surveys	

SURVEY CONTROL SHEET U-4026

WAKE-DURHAM COUNTIES

LOCATION: DAVIS DRIVE (SR 1613/1999) FROM 390' NORTH OF MORRISVILLE-CARPENTER ROAD (SR 3014) TO NORTH OF NC 54

NC GRID NAD 83

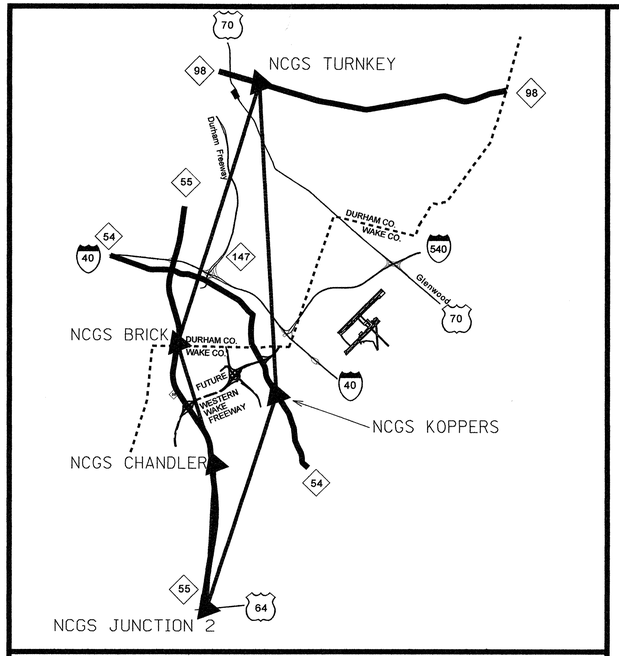

GPS CONTROL NETWORK NOT TO SCALE

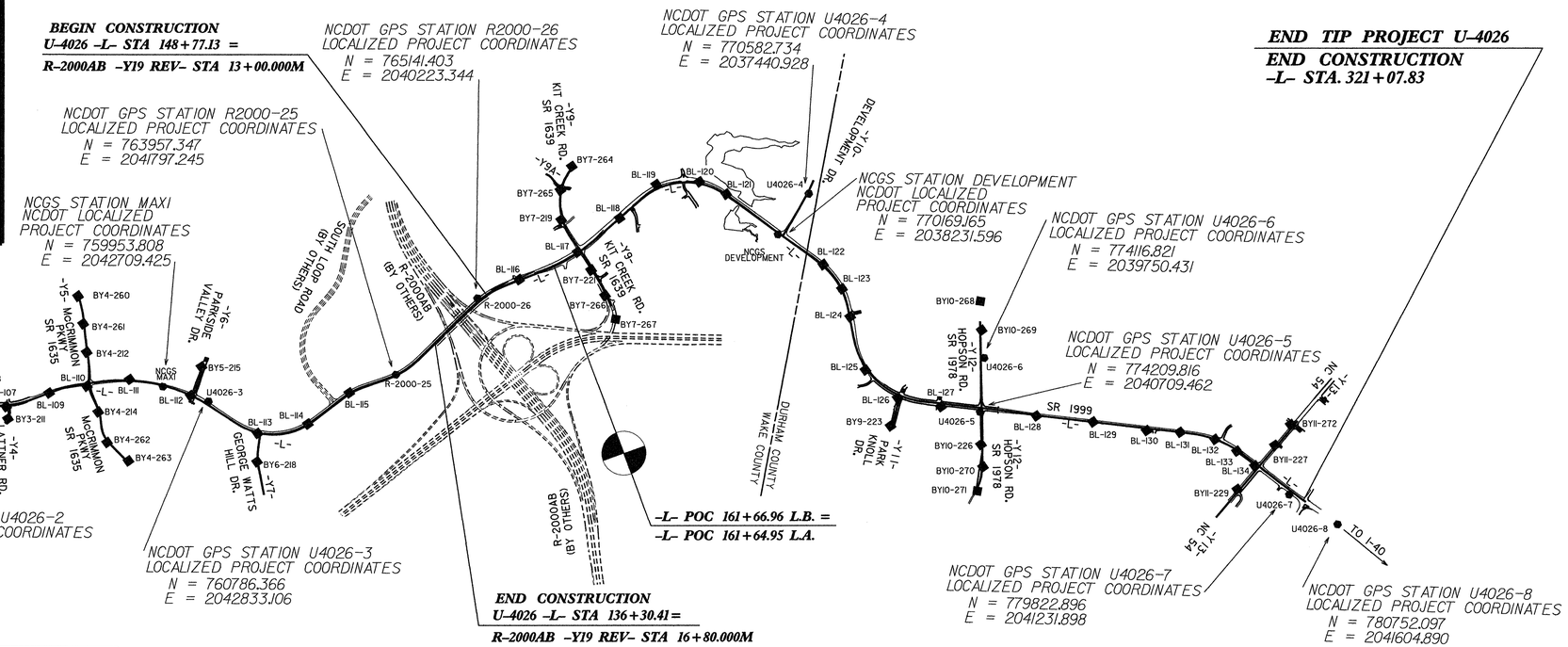

DATUM DESCRIPTION

THE LOCALIZED COORDINATE SYSTEM DEVELOPED FOR THIS PROJECT IS BASED ON THE STATE PLANE COORDINATES ESTABLISHED BY NCDOT FOR MONUMENT "R2000-26"
WITH NAD 1983/95 STATE PLANE GRID COORDINATES OF
NORTHING: 765141.4028(ft) EASTING: 2040223.3441(ft)
THE AVERAGE COMBINED GRID FACTOR USED ON THIS PROJECT (GROUND TO GRID) IS: 0.99991540
THE N.C. LAMBERT GRID BEARING AND LOCALIZED HORIZONTAL GROUND DISTANCE FROM "R2000-26" TO -L- STATION 13+64.43 IS
S 23° 09' 22" E 12,375.43'
ALL LINEAR DIMENSIONS ARE LOCALIZED HORIZONTAL DISTANCES
VERTICAL DATUM USED IS NGVD 29

NOTES:

1. *THE CONTROL DATA FOR THIS PROJECT CAN BE FOUND ELECTRONICALLY BY SELECTING PROJECT CONTROL DATA AT:*
HTTP://WWW.DOH.DOT.STATE.NC.US/PRECONSTRUCT/HIGHWAY/LOCATION/PROJECT/

THE FILE TO BE FOUND ARE AS FOLLOWS:
U4026_LS_CONTROL_060512.TXT

SITE CALIBRATION INFORMATION HAS NOT BEEN PROVIDED FOR THIS PROJECT. IF FURTHER INFORMATION IS NEEDED, PLEASE CONTACT THE LOCATION AND SURVEYS UNIT.

● *INDICATES GEODETIC CONTROL MONUMENTS USED OR SET FOR HORIZONTAL PROJECT CONTROL BY THE NCDOT LOCATION AND SURVEYS UNIT.*
PROJECT CONTROL ESTABLISHED USING GLOBAL POSITIONING SYSTEM.

NOTE: DRAWING NOT TO SCALE

6/2/99

6/12/2006
R:\Roadway\Proj\u4026_ls_la_060512.dgn
Ko & Associates, P.C.

PROJECT REFERENCE NO.	SHEET NO.
U-4026	1B
Location and Surveys	

SURVEY CONTROL SHEET U-4026

BL

POINT	DESC.	NORTH	EAST	ELEVATION	L STATION	OFFSET
101	BL-101	752041.7920	2045235.7820	310.51	OUTSIDE PROJECT LIMITS	
102	BL-102	752708.8890	2045173.9420	311.89	OUTSIDE PROJECT LIMITS	
1	U4026-1	753432.1414	2045189.7679	337.88	10+25.26	53.53 RT
2	U4026-2	754395.9650	2044991.5727	365.51	20+04.74	18.18 RT
103	BL-103	754870.5140	2044984.6500	370.21	24+86.51	20.49 RT
104	BL-104	755322.0610	2044692.9340	374.73	29+84.14	2.21 RT
105	BL-105	756107.3780	2044078.5220	377.51	39+80.93	22.93 LT
106	BL-106	756576.0550	2043759.9960	379.50	45+47.01	1.89 LT
107	BL-107	757299.2080	2043533.0660	389.87	53+10.76	25.65 RT
109	BL-109	758004.0090	2043165.9670	384.85	61+04.03	0.78 LT
110	BL-110	758630.5850	2042932.6180	388.35	67+78.96	47.75 RT
111	BL-111	759355.4740	2042680.7930	386.42	75+44.78	22.64 LT
9	NCGS MAXI	759953.8080	2042709.4250	375.02	81+43.03	17.87 RT
112	BL-112	760458.8100	2042784.4460	360.27	86+56.04	4.04 RT
3	U4026-3	760786.3660	2042833.1060	352.70	89+79.65	53.05 LT
113	BL-113	761734.9840	2043239.1150	328.48	100+13.33	11.16 RT
114	BL-114	762591.0540	2042923.8330	318.80	109+42.42	14.48 LT
115	BL-115	763203.4630	2042259.4780	309.18	118+52.34	22.63 LT
25	R2000-25	763957.3467	2041797.2450	304.16	127+35.29	16.09 LT
26	R2000-26	765141.4027	2040223.3440	291.58	147+12.65	58.05 LT
116	BL-116	765810.2042	2039775.4233	305.91	155+07.02	13.10 LT
117	BL-117	766743.3540	2039136.6850	327.74	166+41.95	15.86 LT
118	BL-118	767370.8210	2038422.8440	306.51	175+94.71	3.45 LT
119	BL-119	767908.5460	2037739.0070	295.62	184+48.08	74.70 LT
120	BL-120	768650.6410	2037562.5970	294.97	191+89.49	30.44 LT
121	BL-121	769151.8770	2037693.4320	291.82	197+01.59	16.17 LT
10	NCGS DEVELOPMEN	770169.1650	2038231.5960	289.80	208+51.24	24.69 RT
122	BL-122	771042.5520	2038614.0330	303.14	218+02.82	18.37 LT
123	BL-123	771441.2750	2038971.6620	307.48	223+36.00	12.33 LT
124	BL-124	771667.5470	2039433.6970	309.43	228+49.47	8.08 LT
125	BL-125	772092.2810	2040311.8100	318.11	238+26.69	27.50 RT
126	BL-126	772734.2110	2040708.2380	331.72	245+68.15	53.43 RT
127	BL-127	773516.9730	2040731.6320	341.96	253+38.72	52.71 RT
5	U4026-5	774209.8160	2040709.4620	348.99	260+31.67	71.13 RT
128	BL-128	775199.3480	2040610.7750	323.69	270+25.86	10.64 RT
129	BL-129	776200.0680	2040546.0440	309.63	280+28.42	2.12 LT
130	BL-130	777153.2450	2040536.4410	292.58	289+80.73	39.67 RT
131	BL-131	777740.9200	2040466.2270	293.45	295+71.34	1.24 RT
132	BL-132	778366.7760	2040487.2470	302.19	301+99.83	2.23 RT
133	BL-133	778783.9030	2040628.2660	309.86	306+42.94	14.86 RT
134	BL-134	779140.0310	2040835.4140	320.06	310+55.76	38.03 RT
7	U4026-7	779822.8960	2041231.8980	321.85	318+44.72	70.42 RT
8	U4026-8	780752.0970	2041604.8900	322.10	OUTSIDE PROJECT LIMITS	

BY1

POINT	DESC.	NORTH	EAST	ELEVATION	Y2 STATION	OFFSET
206	BY1-206	754985.0940	2044277.1730	365.94	OUTSIDE PROJECT LIMITS	
207	BL-104	755322.0610	2044692.9340	374.73	15+18.99	23.17 RT

BY2

POINT	DESC.	NORTH	EAST	ELEVATION	Y3 STATION	OFFSET
208	BY2-208	756415.3940	2043294.8750	364.04	10+10.38	18.95 RT
209	BL-106	756576.0550	2043759.9960	379.50	14+98.59	30.49 RT

BY3

POINT	DESC.	NORTH	EAST	ELEVATION	Y4 STATION	OFFSET
210	BL-107	757299.2080	2043533.0660	389.87	10+26.20	47.44 RT
211	BY3-211	757365.2040	2043739.5840	380.62	12+51.77	20.36 RT

BY4

POINT	DESC.	NORTH	EAST	ELEVATION	Y5 STATION	OFFSET
260	BY4-260	758205.9620	2041387.7980	370.67	OUTSIDE PROJECT LIMITS	
261	BY4-261	758381.7590	2041854.7750	373.01	14+56.01	15.80 RT
212	BY4-212	758524.9920	2042334.1960	385.44	19+55.98	12.93 RT
213	BL-110	758630.5850	2042932.6180	388.35	25+61.57	51.27 RT
214	BY4-214	758909.7620	2043345.1670	374.00	30+49.55	16.00 RT
262	BY4-262	759152.6920	2043851.5720	373.19	36+12.65	24.28 RT
263	BY4-263	759581.9180	2044112.1940	379.92	OUTSIDE PROJECT LIMITS	

BY5

POINT	DESC.	NORTH	EAST	ELEVATION	Y6 STATION	OFFSET
215	BY5-215	760562.5450	2042241.8580	370.16	OUTSIDE PROJECT LIMITS	
216	BL-112	760458.8100	2042784.4460	360.27	15+00.12	47.19 RT

BY6

POINT	DESC.	NORTH	EAST	ELEVATION	Y7 STATION	OFFSET
217	BL-113	761734.9840	2043239.1150	328.48	10+07.04	48.82 RT
218	BY6-218	761813.9760	2043741.8640	337.47	15+10.49	17.20 RT

BY7

POINT	DESC.	NORTH	EAST	ELEVATION	Y9 STATION	OFFSET
264	BY7-264	766384.4110	2037670.1970	347.01	OUTSIDE PROJECT LIMITS	
265	BY7-265	766260.3570	2038119.6850	346.52	14+62.55	17.35 RT
219	BY7-219	766361.7430	2038628.6120	342.54	19+76.49	24.27 RT
220	BL-117	766743.3540	2039136.6850	327.74	26+04.62	54.86 RT
221	BY7-221	767031.6130	2039399.3550	327.78	29+94.48	20.46 RT
266	BY7-266	767347.1720	2039793.0460	312.70	35+01.73	22.72 RT
267	BY7-267	767604.9490	2040172.5480	321.28	OUTSIDE PROJECT LIMITS	

BY8

POINT	DESC.	NORTH	EAST	ELEVATION	Y10 STATION	OFFSET
230	U4026-4	770582.7340	2037440.9280	314.02	6+62.56	22.69 LT
231	NCGS DEVELOPMEN	770169.1650	2038231.5960	289.80	OUTSIDE PROJECT LIMITS	

BY9

POINT	DESC.	NORTH	EAST	ELEVATION	Y11 STATION	OFFSET
222	BL-126	772734.2110	2040708.2380	331.72	10+51.80	43.94 RT
223	BY9-223	772697.1690	2041214.9600	346.54	15+54.81	33.68 RT

BY10

POINT	DESC.	NORTH	EAST	ELEVATION	Y12 STATION	OFFSET
268	BY10-268	773895.1360	2038787.8020	349.63	OUTSIDE PROJECT LIMITS	
269	BY10-269	773991.1470	2039278.5120	352.37	11+52.53	22.77 LT
224	U4026-6	774116.8210	2039750.4310	358.93	16+39.56	58.31 LT
225	U4026-5	774209.8160	2040709.4620	348.99	25+99.18	28.30 RT
226	BY10-226	774322.2280	2041275.8340	359.33	31+76.57	22.94 RT
270	BY10-270	774427.3890	2041664.6400	368.00	35+77.36	14.42 LT
271	BY10-271	774399.5080	2042098.7280	382.15	40+08.07	25.59 LT

BY11

POINT	DESC.	NORTH	EAST	ELEVATION	Y13 STATION	OFFSET
272	BY11-272	779643.1890	2040205.2700	291.01	11+26.32	47.16 RT
227	BY11-227	779423.0170	2040411.5000	309.28	15+88.19	33.86 RT
228	BL-134	779140.0310	2040835.4140	320.06	20+97.18	65.82 RT
229	BY11-229	778903.6490	2041293.1200	316.43	26+11.60	38.09 RT

```
*************************************
BM1       ELEVATION - 314.88
N 751929      E 2045158
L STATION 10+03
 S 0° 44' 59.9" E  DIST   1475.94
RRS IN BASE OF 24 INCH PINE
*************************************
*************************************
BM2       ELEVATION - 329.77
N 753130      E 2045856
L STATION 10+03
S 69° 02' 47.6" E  DIST    768.82
RRS IN BASE OF 24 INCH OAK
*************************************
*************************************
BM3       ELEVATION - 362.12
N 754956      E 2044299
Y2 STATION 10+00
S 19° 38' 46.1" E  DIST     51.38
RRS IN BASE OF 18 INCH PINE
*************************************
*************************************
BM4       ELEVATION - 380.90
N 756605      E 2043650
L STATION 46+27 80 LEFT
RRS IN BASE OF 15 INCH PINE
*************************************
*************************************
BM5       ELEVATION - 388.29
N 758451      E 2042695
Y5 STATION 22+97 184 RIGHT
RRS IN BASE OF 18 INCH PINE
*************************************
*************************************
BM6       ELEVATION - 376.98
N 760460      E 2042199
Y6 STATION 10+00
S 38° 00' 44.8" W  DIST    162.30
RRS IN BASE OF 15 INCH PINE
*************************************
*************************************
BM7       ELEVATION - 310.91
N 762347      E 2043021
L STATION 126+96 90 LEFT
RRS IN BASE OF 12 INCH PINE
*************************************
*************************************
BM8       ELEVATION - 312.94
N 763227      E 2042142
L STATION 119+41 98 LEFT
RRS IN BASE 24 INCH TWIN OAK
*************************************
*************************************
BM9       ELEVATION - 292.25
N 764266      E 2041354
L STATION 132+89 97 LEFT
X  CUT IN COR OF CONC HW
*************************************
*************************************
BM10      ELEVATION - 340.89
N 766406      E 2038812
Y9 STATION 21+47 83 RIGHT
X CUT IN SE COR OF CONC PAD
*************************************
*************************************
BM11      ELEVATION - 300.29
N 768244      E 2037317
L STATION 188+62 325 LEFT
X CUT IN SE COR RETAINING WALL
*************************************
*************************************
BM12      ELEVATION - 318.68
N 770613      E 2037582
Y10 STATION 7+85 98 LEFT
RRS IN BASE OF 18 INCH PINE
*************************************
*************************************
BM13      ELEVATION - 319.27
N 772004      E 2039315
L STATION 228+56 364 LEFT
RRS IN BASE OF 22 INCH PINE
*************************************
*************************************
BM14      ELEVATION - 337.18
N 772699      E 2040812
Y11 STATION 11+57 59 RIGHT
X CUT IN COR OF CONC PAD
*************************************
*************************************
BM15      ELEVATION - 363.53
N 774217      E 2039774
Y12 STATION 16+82 152 LEFT
RRS IN BASE OF 16 INCH PINE
*************************************
*************************************
BM16      ELEVATION - 287.21
N 777141      E 2040401
L STATION 289+76 96 LEFT
RRS IN BASE OF 18 INCH PINE
*************************************
*************************************
BM17      ELEVATION - 330.17
N 779395      E 2040773
L STATION 312+52 136 LEFT
X CUT IN COR OF CONC PAD
*************************************
```

DATUM DESCRIPTION

THE LOCALIZED COORDINATE SYSTEM DEVELOPED FOR THIS PROJECT IS BASED ON THE STATE PLANE COORDINATES ESTABLISHED BY NCDOT FOR MONUMENT "R2000-26"
WITH NAD 1983/95 STATE PLANE GRID COORDINATES OF
NORTHING: 765141.4028(ft) EASTING: 2040223.3441(ft)
THE AVERAGE COMBINED GRID FACTOR USED ON THIS PROJECT (GROUND TO GRID) IS: 0.99991540
THE N.C. LAMBERT GRID BEARING AND LOCALIZED HORIZONTAL GROUND DISTANCE FROM "R2000-26" TO -L- STATION 13+64.43 IS
S 23° 09' 22" E 12,375.43'
ALL LINEAR DIMENSIONS ARE LOCALIZED HORIZONTAL DISTANCES
VERTICAL DATUM USED IS NGVD 29

NOTE: DRAWING NOT TO SCALE

NOTES:

1. *THE CONTROL DATA FOR THIS PROJECT CAN BE FOUND ELECTRONICALLY BY SELECTING PROJECT CONTROL DATA AT:*
   HTTP:/WWW.DOH.DOT.STATE.NC.US/PRECONSTRUCT/HIGHWAY/LOCATION/PROJECT/

   THE FILE TO BE FOUND ARE AS FOLLOWS:
   U4026_LS_CONTROL_060512.TXT

   SITE CALIBRATION INFORMATION HAS NOT BEEN PROVIDED FOR THIS PROJECT. IF FURTHER INFORMATION IS NEEDED, PLEASE CONTACT THE LOCATION AND SURVEYS UNIT.

● *INDICATES GEODETIC CONTROL MONUMENTS USED OR SET FOR HORIZONTAL PROJECT CONTROL BY THE NCDOT LOCATION AND SURVEYS UNIT.*
PROJECT CONTROL ESTABLISHED USING GLOBAL POSITIONING SYSTEM.

6/12/2006
R:\Roadway\Proj\U4026_ls_lb_060512.dgn
Rev. A: Descriptions Dr.

6/2/99

PROJECT REFERENCE NO.	SHEET NO.
U-4026	2
ROADWAY DESIGN ENGINEER	PAVEMENT DESIGN ENGINEER

NORTH CAROLINA PROFESSIONAL SEAL 20174 ENGINEER STEPHEN R. WHITLEY 3-9-06

NORTH CAROLINA PROFESSIONAL SEAL 13368 ENGINEER JIAN-CHI CHEN 3/9/06

PAVEMENT SCHEDULE

C1	PROP. APPROX. 3.0" ASPHALT CONCRETE SURFACE COURSE, TYPE S9.5B, AT AN AVERAGE RATE OF 168 LBS. PER SQ. YD. IN EACH OF TWO LAYERS.
C2	PROP. VAR. DEPTH ASPHALT CONCRETE SURFACE COURSE, TYPE S9.5B, AT AN AVERAGE RATE OF 112 LBS. PER SQ. YD. PER 1" DEPTH. TO BE PLACED IN LAYERS NOT TO EXCEED 2" IN DEPTH.
D1	PROP. APPROX. 2.5" ASPHALT CONCRETE INTERMEDIATE COURSE, TYPE I19.0B, AT AN AVERAGE RATE OF 285 LBS. PER SQ. YD.
D2	PROP. APPROX. 4.0" ASPHALT CONCRETE INTERMEDIATE COURSE, TYPE I19.0B, AT AN AVERAGE RATE OF 456 LBS. PER SQ. YD.
D3	PROP. VAR. DEPTH ASPHALT CONCRETE INTERMEDIATE COURSE, TYPE I19.0B. AT AN AVERAGE RATE OF 114 LBS. PER SQ. YD. PER 1" DEPTH, TO BE PLACED IN LAYERS NOT LESS THAN 2½" IN DEPTH OR GREATER THAN 4" IN DEPTH.
E1	PROP. APPROX. 3.0" ASPHALT CONCRETE BASE COURSE, TYPE B25.0B, AT AN AVERAGE RATE OF 342 LBS. PER SQ. YD.
E2	PROP. APPROX. 4.0" ASPHALT CONCRETE BASE COURSE, TYPE B25.0B, AT AN AVERAGE RATE OF 456 LBS. PER SQ. YD.
E3	PROP. APPROX. 4.5" ASPHALT CONCRETE BASE COURSE, TYPE B25.0B, AT AN AVERAGE RATE OF 513 lbs. PER SQ. YD.
E4	PROP. APPROX. 5.5" ASPHALT CONCRETE BASE COURSE, TYPE B25.0B, AT AN AVERAGE RATE OF 627 LBS. PER SQ. YD.
E5	PROP. APPROX. 6.5" ASPHALT CONCRETE BASE COURSE, TYPE B25.0B, AT AN AVERAGE RATE OF 370.5 LBS. PER SQ. YD. IN EACH OF TWO LAYERS.
E6	PROP. VAR. DEPTH ASPHALT CONCRETE BASE COURSE, TYPE B25.0B, AT AN AVERAGE RATE OF 114 LBS. PER SQ. YD. PER 1" DEPTH. TO BE PLACED IN LAYERS NOT LESS THAN 3" IN DEPTH OR GREATER THAN 5½" IN DEPTH.
K1	LIME STABILIZATION: (METHOD-SLURRY) 60% OF PROJECT: DEPTH OF 8", AT A RATE OF 20 LBS. PER SQ. YD. OR CEMENT STABILIZATION: 40% OF PROJECT:DEPTH OF 7", AT A RATE OF 55 LBS. PER SQ. YD. ALSO 300 LBS. PER SQ. YD. OF ABC FOR 10% OF CEMENT AREA
R1	2'-6" CONCRETE CURB AND GUTTER.
R2	1'-6" CONCRETE CURB AND GUTTER.
R3	5" MONOLITHIC CONCRETE ISLAND. (KEYED IN)
R4	PROP. SHOULDER BERM GUTTER.
R5	CONCRETE EXPRESSWAY GUTTER.
S	4" CONCRETE SIDEWALK.
T	EARTH MATERIAL.
U	EXISTING PAVEMENT.
W	VARIABLE DEPTH ASPHALT PAVEMENT (SEE STANDARD WEDGING DETAIL)

NOTE: ALL PAVEMENT EDGE SLOPES ARE 1:1 UNLESS OTHERWISE NOTED.

SEE DETAIL SHEETS 2-Y & 2-Z FOR TRAIL CONSTRUCTION & TYPICAL SECTION.

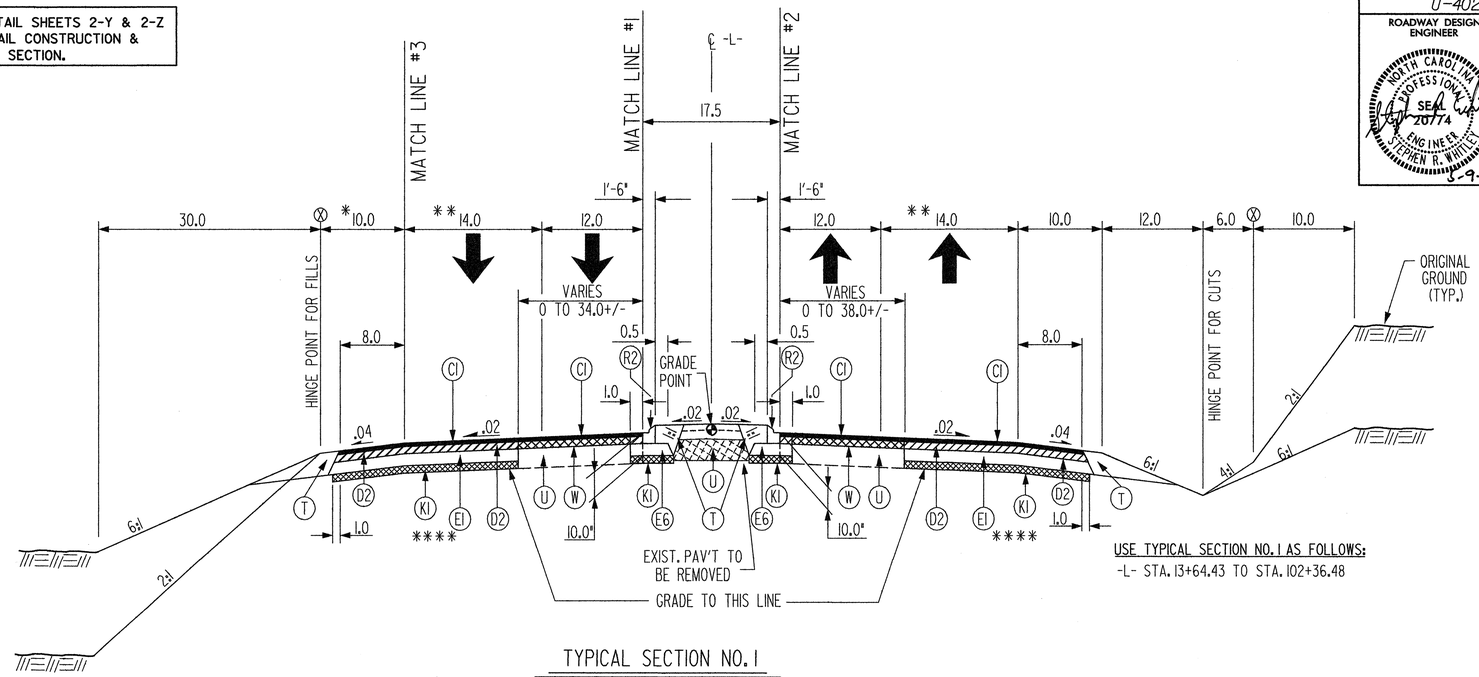

USE TYPICAL SECTION NO. I AS FOLLOWS:
-L- STA. 13+64.43 TO STA. 102+36.48

TYPICAL SECTION NO. I

℄ -L- DAVIS DRIVE

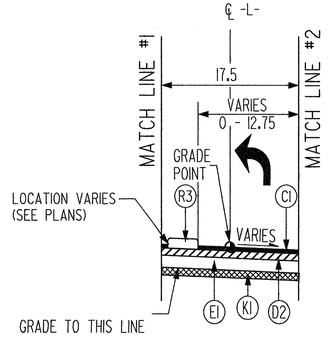

TYPICAL SECTION NO. IA

USE TYPICAL SECTION NO. IA IN CONJUNCTION WITH TYPICAL SECTION NO. I AS FOLLOWS:

-L- STA. 30+73.00 TO STA. 32+20.00
-L- STA. 43+57.06 TO STA. 45+09.06
-L- STA. 46+48.62 TO STA. 47+96.69
-L- STA. 66+86.16 TO STA. 67+86.15
-L- STA. 69+21.95 TO STA. 86+48.57
-L- STA. 87+48.95 TO STA. 88+48.95
-L- STA. 100+76.12 TO STA. 102+36.48

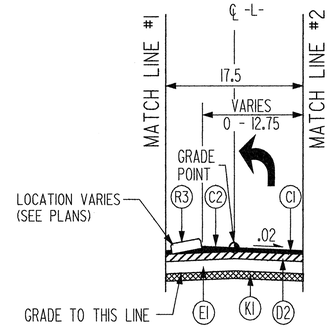

TYPICAL SECTION NO. IB

USE TYPICAL SECTION NO. IB IN CONJUNCTION WITH TYPICAL SECTION NO. I AS FOLLOWS:

-L- STA. 30+73.00 TO STA. 32+20.00

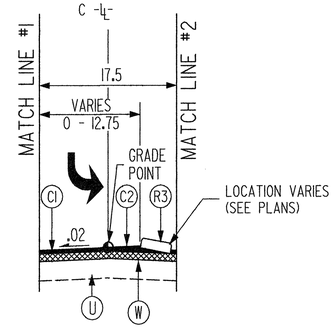

TYPICAL SECTION NO. IC

USE TYPICAL SECTION NO. IC IN CONJUNCTION WITH TYPICAL SECTION NO. I AS FOLLOWS:

-L- STA. 13+64.43 TO STA. 29+38.32

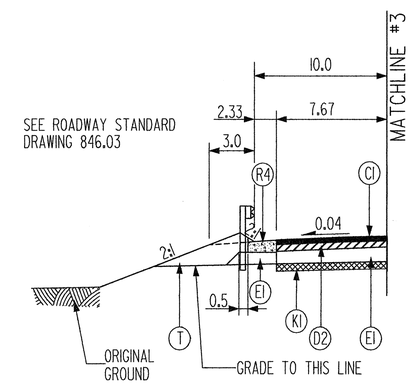

TYPICAL SECTION NO. ID

USE TYPICAL SECTION NO. ID IN CONJUNCTION WITH TYPICAL SECTION NO. I AS FOLLOWS:

-L- STA. 90+00.00 TO STA. 95+00.00 RT.

* ADD 3.0 FT. WHEN USING GUARDRAIL
** ADDITIONAL 2.0 FT. FOR BICYCLE LANE
**** FOR NARROW WIDENING UP TO 6 FT. USE (E4) IN LIEU OF (E1) (NO STABILIZATION REQUIRED)
(X) WHEN THESE DISTANCES INDICATE SLOPES OUTSIDE THE LIMITS 2:1 TO 6:1, THE DISTANCE BECOMES VARIABLE AND THE MAXIMUM OR MINIMUM SLOPE MAINTAINED.

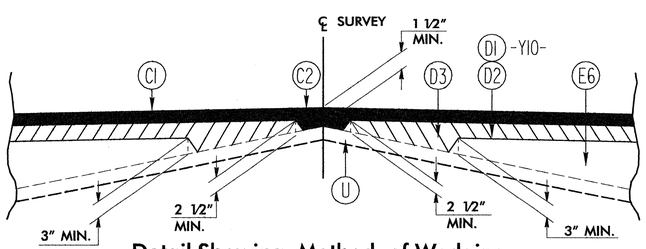

Detail Showing Method of Wedging
-L- DAVIS DRIVE & -Y- LINE TURNOUTS

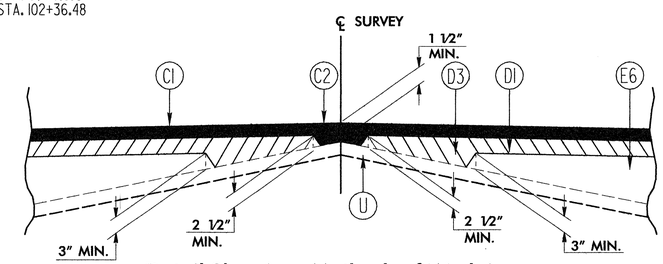

Detail Showing Method of Wedging
-Y5-

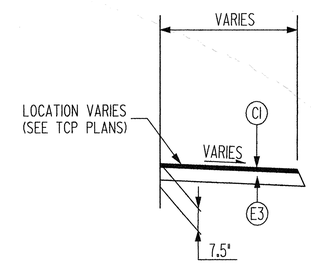

TEMPORARY PAVEMENT TYPICAL SECTION

Plans prepared by:
KO & ASSOCIATES, P.C.
Consulting Engineers
1011 SCHAUB DR., SUITE #202
RALEIGH, N.C. 27606
(919)-851-6066

PROJECT REFERENCE NO.	SHEET NO.
U-4026	2-A
ROADWAY DESIGN ENGINEER	PAVEMENT DESIGN ENGINEER

NORTH CAROLINA PROFESSIONAL SEAL 20774 ENGINEER STEPHEN R. WHITLEY 5-09-06

NORTH CAROLINA PROFESSIONAL SEAL 13368 ENGINEER JOHN-CHI CHEN 5/9/06

PAVEMENT SCHEDULE

C1	PROP. APPROX. 3.0" ASPHALT CONCRETE SURFACE COURSE, TYPE S9.5B, AT AN AVERAGE RATE OF 168 LBS. PER SQ. YD. IN EACH OF TWO LAYERS.
C2	PROP. VAR. DEPTH ASPHALT CONCRETE SURFACE COURSE, TYPE S9.5B, AT AN AVERAGE RATE OF 112 LBS. PER SQ. YD. PER 1" DEPTH. TO BE PLACED IN LAYERS NOT TO EXCEED 2" IN DEPTH.
D1	PROP. APPROX. 2.5" ASPHALT CONCRETE INTERMEDIATE COURSE, TYPE I19.0B, AT AN AVERAGE RATE OF 285 LBS. PER SQ. YD.
D2	PROP. APPROX. 4.0" ASPHALT CONCRETE INTERMEDIATE COURSE, TYPE I19.0B, AT AN AVERAGE RATE OF 456 LBS. PER SQ. YD.
D3	PROP. VAR. DEPTH ASPHALT CONCRETE INTERMEDIATE COURSE, TYPE I19.0B, AT AN AVERAGE RATE OF 114 LBS. PER SQ. YD. PER 1" DEPTH, TO BE PLACED IN LAYERS NOT LESS THAN 2½" IN DEPTH OR GREATER THAN 4" IN DEPTH.
E1	PROP. APPROX. 3.0" ASPHALT CONCRETE BASE COURSE, TYPE B25.0B, AT AN AVERAGE RATE OF 342 LBS. PER SQ. YD.
E2	PROP. APPROX. 4.0" ASPHALT CONCRETE BASE COURSE, TYPE B25.0B, AT AN AVERAGE RATE OF 456 LBS. PER SQ. YD.
E3	PROP. APPROX. 4.5" ASPHALT CONCRETE BASE COURSE, TYPE B25.0B, AT AN AVERAGE RATE OF 513 lbs. PER SQ. YD.
E4	PROP. APPROX. 5.5" ASPHALT CONCRETE BASE COURSE, TYPE B25.0B, AT AN AVERAGE RATE OF 627 LBS. PER SQ. YD.
E5	PROP. APPROX. 6.5" ASPHALT CONCRETE BASE COURSE, TYPE B25.0B, AT AN AVERAGE RATE OF 370.5 LBS. PER SQ. YD. IN EACH OF TWO LAYERS.
E6	PROP. VAR. DEPTH ASPHALT CONCRETE BASE COURSE, TYPE B25.0B, AT AN AVERAGE RATE OF 114 LBS. PER SQ. YD. PER 1" DEPTH. TO BE PLACED IN LAYERS NOT LESS THAN 3" IN DEPTH OR GREATER THAN 5½" IN DEPTH.
K1	LIME STABILIZATION: (METHOD-SLURRY) 60% OF PROJECT: DEPTH OF 8", AT A RATE OF 20 LBS. PER SQ. YD. OR CEMENT STABILIZATION: 40% OF PROJECT:DEPTH OF 7", AT A RATE OF 55 LBS. PER SQ. YD. ALSO 300 LBS. PER SQ. YD. OF ABC FOR 10% OF CEMENT AREA
R1	2'-6" CONCRETE CURB AND GUTTER.
R2	1'-6" CONCRETE CURB AND GUTTER.
R3	5" MONOLITHIC CONCRETE ISLAND. (KEYED IN)
R4	PROP. SHOULDER BERM GUTTER.
R5	CONCRETE EXPRESSWAY GUTTER.
S	4" CONCRETE SIDEWALK.
T	EARTH MATERIAL.
U	EXISTING PAVEMENT.
W	VARIABLE DEPTH ASPHALT PAVEMENT (SEE STANDARD WEDGING DETAIL)

NOTE: ALL PAVEMENT EDGE SLOPES ARE 1:1 UNLESS OTHERWISE NOTED.

* ADD 3.0 FT. WHEN USING GUARDRAIL

** ADDITIONAL 2.0 FT. FOR BICYCLE LANE

**** FOR NARROW WIDENING UP TO 6 FT. USE (E4) IN LIEU OF (E1) (NO STABILIZATION REQUIRED)

(X) WHEN THESE DISTANCES INDICATE SLOPES OUTSIDE THE LIMITS 2:1 TO 6:1, THE DISTANCE BECOMES VARIABLE AND THE MAXIMUM OR MINIMUM SLOPE MAINTAINED.

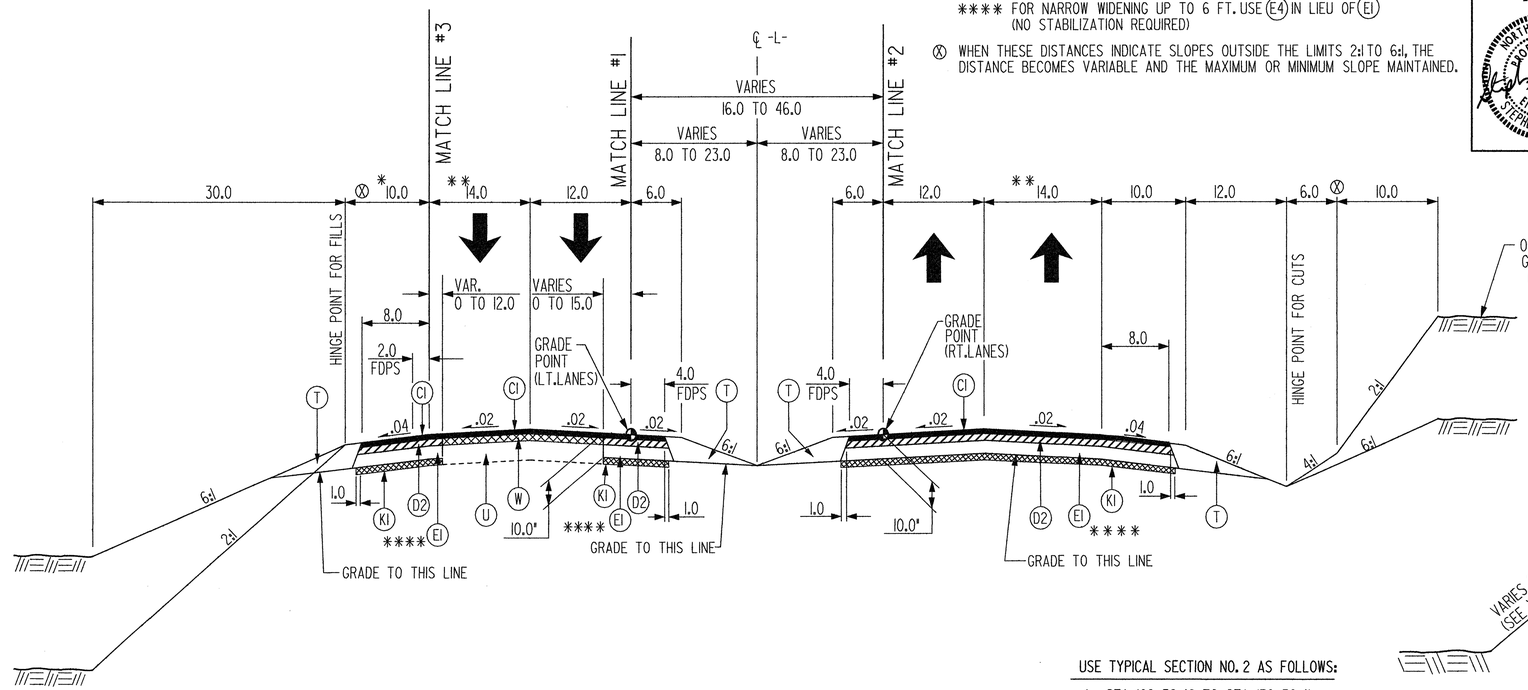

TYPICAL SECTION NO. 2

-L- DAVIS DRIVE

USE TYPICAL SECTION NO. 2 AS FOLLOWS:

-L- STA. 102+36.48 TO STA. 136+30.41
-L- STA. 148+77.13 TO STA. 161+66.96 LB
-L- STA. 161+64.95 LA TO STA. 242+45.00

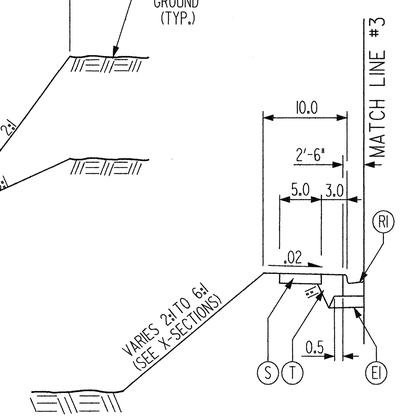

TYPICAL SECTION NO. 2D

USE TYPICAL SECTION NO. 2D IN CONJUNCTION WITH TYPICAL SECTION NO. 2 AS FOLLOWS:

-L- STA. 239+60.00 TO STA. 242+45.00 LT.

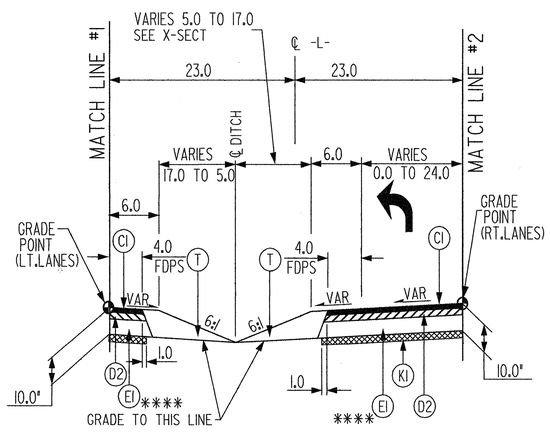

TYPICAL SECTION NO. 2A

USE TYPICAL SECTION NO. 2A IN CONJUNCTION WITH TYPICAL SECTION NO. 2 AS FOLLOWS:

-L- STA. 110+91.81 TO STA. 114+60.81
-L- STA. 115+89.53 TO STA. 119+61.78
-L- STA. 150+40.00 TO STA. 154+02.00
-L- STA. 154+97.50 TO STA. 158+60.00
-L- STA. 159+65.00 TO STA. 162+00.00
-L- STA. 178+92.25 TO STA. 182+60.00
-L- STA. 185+41.09 TO STA. 188+58.09
-L- STA. 189+38.71 TO STA. 192+55.71
-L- STA. 201+60.00 TO STA. 208+78.00
-L- STA. 209+85.00 TO STA. 213+30.00
-L- STA. 222+55.00 TO STA. 227+55.07
-L- STA. 228+45.64 TO STA. 232+00.00

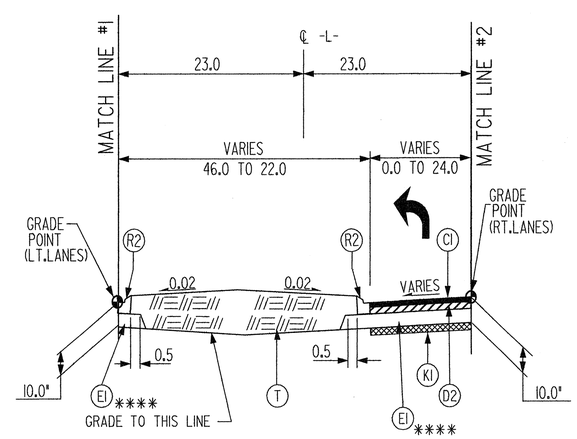

TYPICAL SECTION NO. 2B

USE TYPICAL SECTION NO. 2B IN CONJUNCTION WITH TYPICAL SECTION NO. 2 AS FOLLOWS:

-L- STA. 162+00.00 TO STA. 166+48.00
-L- STA. 167+50.00 TO STA. 178+04.51

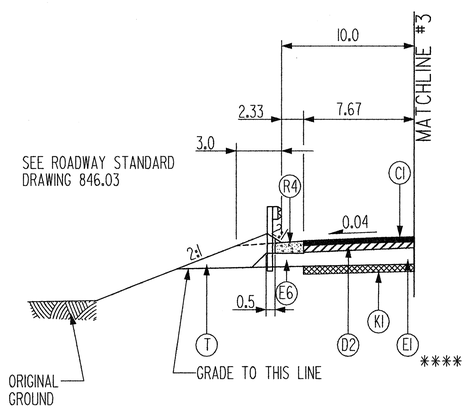

TYPICAL SECTION NO. 2C

USE TYPICAL SECTION NO. 2C IN CONJUNCTION WITH TYPICAL SECTION NO. 2 AS FOLLOWS:

-L- STA. 104+00.00 TO STA. 110+87.00 LT.
-L- STA. 175+00.00 TO STA. 177+98.00 RT.
-L- STA. 208+47.00 TO STA. 212+50.00 RT.
-L- STA. 227+00.00 TO STA. 231+05.00 RT.
-L- STA. 228+85.00 TO STA. 232+50.00 LT.

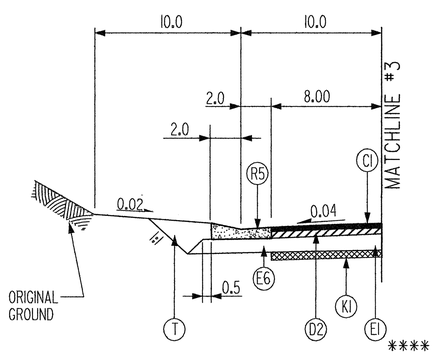

TYPICAL SECTION NO. 2E

USE TYPICAL SECTION NO. 2E IN CONJUNCTION WITH TYPICAL SECTION NO. 2 AS FOLLOWS:

-L- STA. 209+50.00 TO STA. 215+80.00 LT.

Plans prepared by:
KO & ASSOCIATES, P.C.
Consulting Engineers
1011 SCHAUB DR., SUITE #202
RALEIGH, N.C. 27606
(919)-851-6066

PROJECT REFERENCE NO.	SHEET NO.
U-4026	2-B
ROADWAY DESIGN ENGINEER	PAVEMENT DESIGN ENGINEER

NORTH CAROLINA PROFESSIONAL SEAL 20774 ENGINEER STEPHEN R. WHITLEY 5-09-06

NORTH CAROLINA PROFESSIONAL SEAL 13368 ENGINEER CHI CHI CHEN 5/9/06

PAVEMENT SCHEDULE

C1	PROP. APPROX. 3.0" ASPHALT CONCRETE SURFACE COURSE, TYPE S9.5B, AT AN AVERAGE RATE OF 168 LBS. PER SQ. YD. IN EACH OF TWO LAYERS.
C2	PROP. VAR. DEPTH ASPHALT CONCRETE SURFACE COURSE, TYPE S9.5B, AT AN AVERAGE RATE OF 112 LBS. PER SQ. YD. PER 1" DEPTH. TO BE PLACED IN LAYERS NOT TO EXCEED 2" IN DEPTH.
D1	PROP. APPROX. 2.5" ASPHALT CONCRETE INTERMEDIATE COURSE, TYPE I19.0B, AT AN AVERAGE RATE OF 285 LBS. PER SQ. YD.
D2	PROP. APPROX. 4.0" ASPHALT CONCRETE INTERMEDIATE COURSE, TYPE I19.0B, AT AN AVERAGE RATE OF 456 LBS. PER SQ. YD.
D3	PROP. VAR. DEPTH ASPHALT CONCRETE INTERMEDIATE COURSE, TYPE I19.0B, AT AN AVERAGE RATE OF 114 LBS. PER SQ. YD. PER 1" DEPTH, TO BE PLACED IN LAYERS NOT LESS THAN 2½" IN DEPTH OR GREATER THAN 4" IN DEPTH.
E1	PROP. APPROX. 3.0" ASPHALT CONCRETE BASE COURSE, TYPE B25.0B, AT AN AVERAGE RATE OF 342 LBS. PER SQ. YD.
E2	PROP. APPROX. 4.0" ASPHALT CONCRETE BASE COURSE, TYPE B25.0B, AT AN AVERAGE RATE OF 456 LBS. PER SQ. YD.
E3	PROP. APPROX. 4.5" ASPHALT CONCRETE BASE COURSE, TYPE B25.0B, AT AN AVERAGE RATE OF 513 lbs. PER SQ. YD.
E4	PROP. APPROX. 5.5" ASPHALT CONCRETE BASE COURSE, TYPE B25.0B, AT AN AVERAGE RATE OF 627 LBS. PER SQ. YD.
E5	PROP. APPROX. 6.5" ASPHALT CONCRETE BASE COURSE, TYPE B25.0B, AT AN AVERAGE RATE OF 370.5 LBS. PER SQ. YD. IN EACH OF TWO LAYERS.
E6	PROP. VAR. DEPTH ASPHALT CONCRETE BASE COURSE, TYPE B25.0B, AT AN AVERAGE RATE OF 114 LBS. PER SQ. YD. PER 1" DEPTH. TO BE PLACED IN LAYERS NOT LESS THAN 3" IN DEPTH OR GREATER THAN 5½" IN DEPTH.
K1	LIME STABILIZATION: (METHOD-SLURRY) 60% OF PROJECT: DEPTH OF 8", AT A RATE OF 20 LBS. PER SQ. YD. OR CEMENT STABILIZATION: 40% OF PROJECT:DEPTH OF 7", AT A RATE OF 55 LBS. PER SQ. YD. ALSO 300 LBS. PER SQ. YD. OF ABC FOR 10% OF CEMENT AREA
R1	2'-6" CONCRETE CURB AND GUTTER.
R2	1'-6" CONCRETE CURB AND GUTTER.
R3	5" MONOLITHIC CONCRETE ISLAND. (KEYED IN)
R4	PROP. SHOULDER BERM GUTTER.
R5	CONCRETE EXPRESSWAY GUTTER.
S	4" CONCRETE SIDEWALK.
T	EARTH MATERIAL.
U	EXISTING PAVEMENT.
W	VARIABLE DEPTH ASPHALT PAVEMENT (SEE STANDARD WEDGING DETAIL)

NOTE: ALL PAVEMENT EDGE SLOPES ARE 1:1 UNLESS OTHERWISE NOTED.

** ADDITIONAL 2.0 FT. FOR BICYCLE LANE
*** ADD 4.0 FT. WHEN USING GUARDRAIL
**** FOR NARROW WIDENING UP TO 6 FT. USE (E4) IN LIEU OF (E1) (NO STABILIZATION REQUIRED)
(X) WHEN THESE DISTANCES INDICATE SLOPES OUTSIDE THE LIMITS 2:1 TO 6:1, THE DISTANCE BECOMES VARIABLE AND THE MAXIMUM OR MINIMUM SLOPE MAINTAINED.

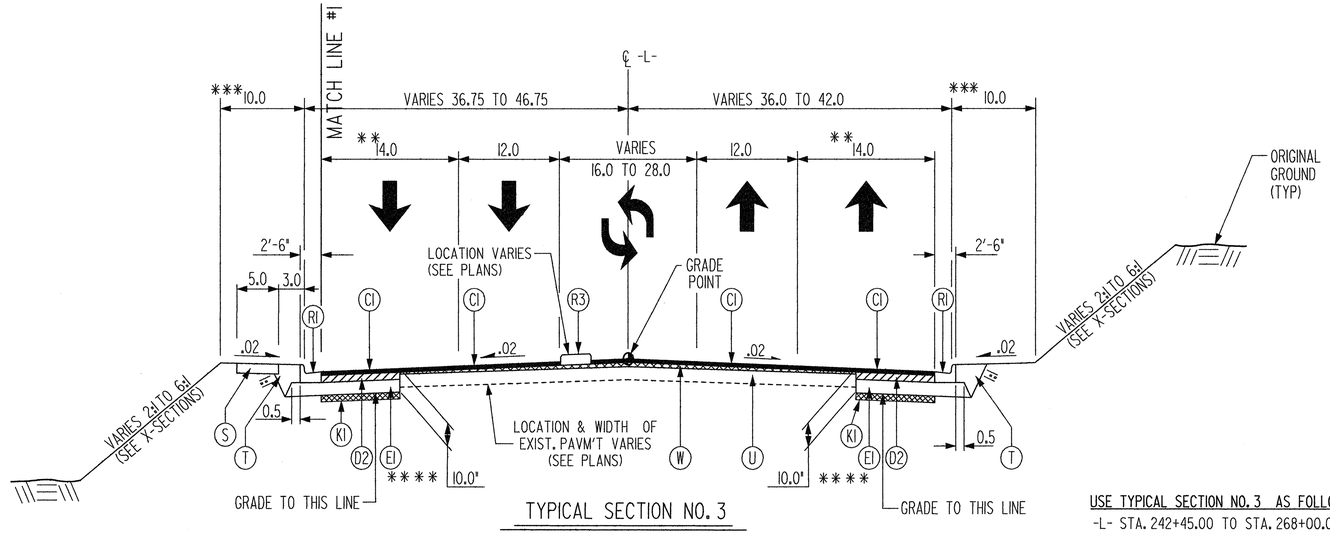

TYPICAL SECTION NO. 3

-L- DAVIS DRIVE

USE TYPICAL SECTION NO. 3 AS FOLLOWS:
-L- STA. 242+45.00 TO STA. 268+00.00
-L- STA. 304+00.00 TO STA. 310+89.28

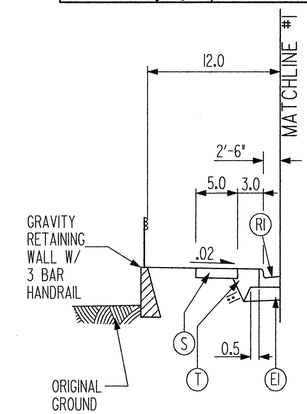

TYPICAL SECTION NO. 3A

USE TYPICAL SECTION NO. 3A IN CONJUNCTION WITH TYPICAL SECTION NO. 3 AS FOLLOWS:
-L- STA. 256+50.00 TO STA. 258+00.00 LT.

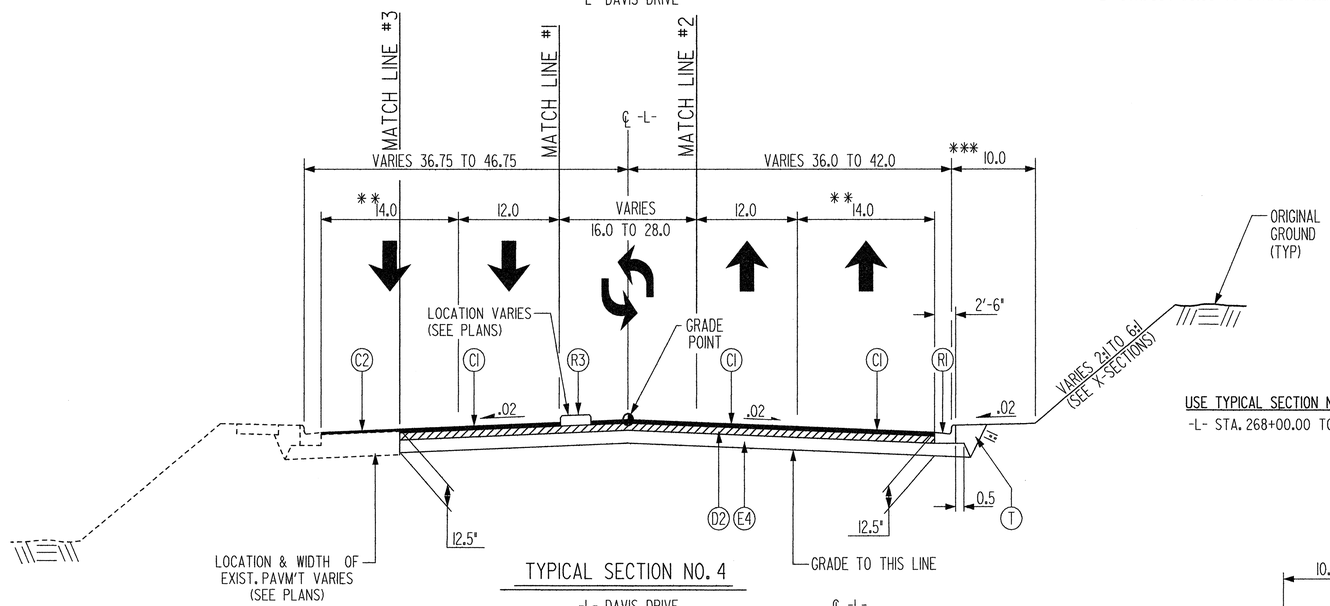

TYPICAL SECTION NO. 4

-L- DAVIS DRIVE

USE TYPICAL SECTION NO. 4 AS FOLLOWS:
-L- STA. 268+00.00 TO STA. 282+25.00

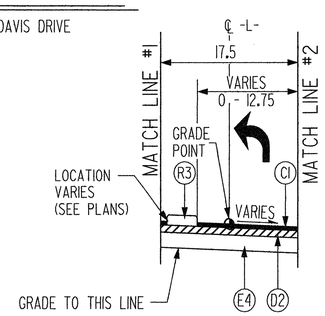

TYPICAL SECTION NO. 4A

USE TYPICAL SECTION NO. 4A IN CONJUNCTION WITH TYPICAL SECTION NO. 4 AS FOLLOWS:
-L- STA. 268+00.00 TO STA. 282+00.00

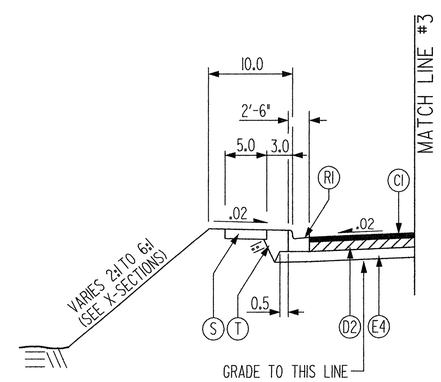

TYPICAL SECTION NO. 4B

USE TYPICAL SECTION NO. 4B IN CONJUNCTION WITH TYPICAL SECTION NO. 4 AS FOLLOWS:
-L- STA. 268+00.00 TO STA. 272+18.00 LT.

Plans prepared by:
KO & ASSOCIATES, P.C.
Consulting Engineers
1011 SCHAUB DR., SUITE #202
RALEIGH, N.C. 27606
(919)-851-6066

PROJECT REFERENCE NO.	SHEET NO.
U-4026	2-C
ROADWAY DESIGN ENGINEER	PAVEMENT DESIGN ENGINEER

NORTH CAROLINA PROFESSIONAL SEAL 20774 ENGINEER STEPHEN R. WHITLEY 8/21/06

NORTH CAROLINA PROFESSIONAL SEAL 22896 ENGINEER CLARK S. MORRISON 8/25/06

PAVEMENT SCHEDULE

C1	PROP. APPROX. 3.0" ASPHALT CONCRETE SURFACE COURSE, TYPE S9.5B, AT AN AVERAGE RATE OF 168 LBS. PER SQ. YD. IN EACH OF TWO LAYERS.
C2	PROP. VAR. DEPTH ASPHALT CONCRETE SURFACE COURSE, TYPE S9.5B, AT AN AVERAGE RATE OF 112 LBS. PER SQ. YD. PER 1" DEPTH. TO BE PLACED IN LAYERS NOT TO EXCEED 2" IN DEPTH.
D1	PROP. APPROX. 2.5" ASPHALT CONCRETE INTERMEDIATE COURSE, TYPE I19.0B, AT AN AVERAGE RATE OF 285 LBS. PER SQ. YD.
D2	PROP. APPROX. 4.0" ASPHALT CONCRETE INTERMEDIATE COURSE, TYPE I19.0B, AT AN AVERAGE RATE OF 456 LBS. PER SQ. YD.
D3	PROP. VAR. DEPTH ASPHALT CONCRETE INTERMEDIATE COURSE, TYPE I19.0B, AT AN AVERAGE RATE OF 114 LBS. PER SQ. YD. PER 1" DEPTH, TO BE PLACED IN LAYERS NOT LESS THAN 2½" IN DEPTH OR GREATER THAN 4" IN DEPTH.
E1	PROP. APPROX. 3.0" ASPHALT CONCRETE BASE COURSE, TYPE B25.0B, AT AN AVERAGE RATE OF 342 LBS. PER SQ. YD.
E2	PROP. APPROX. 4.0" ASPHALT CONCRETE BASE COURSE, TYPE B25.0B, AT AN AVERAGE RATE OF 456 LBS. PER SQ. YD.
E3	PROP. APPROX. 4.5" ASPHALT CONCRETE BASE COURSE, TYPE B25.0B, AT AN AVERAGE RATE OF 513 lbs. PER SQ. YD.
E4	PROP. APPROX. 5.5" ASPHALT CONCRETE BASE COURSE, TYPE B25.0B, AT AN AVERAGE RATE OF 627 LBS. PER SQ. YD.
E5	PROP. APPROX. 6.5" ASPHALT CONCRETE BASE COURSE, TYPE B25.0B, AT AN AVERAGE RATE OF 370.5 LBS. PER SQ. YD. IN EACH OF TWO LAYERS.
E6	PROP. VAR. DEPTH ASPHALT CONCRETE BASE COURSE, TYPE B25.0B, AT AN AVERAGE RATE OF 114 LBS. PER SQ. YD. PER 1" DEPTH. TO BE PLACED IN LAYERS NOT LESS THAN 3" IN DEPTH OR GREATER THAN 5½" IN DEPTH.
K1	LIME STABILIZATION: (METHOD-SLURRY) 60% OF PROJECT: DEPTH OF 8", AT A RATE OF 20 LBS. PER SQ. YD. OR CEMENT STABILIZATION: 40% OF PROJECT:DEPTH OF 7", AT A RATE OF 55 LBS. PER SQ. YD. ALSO 300 LBS. PER SQ. YD. OF ABC FOR 10% OF CEMENT AREA
R1	2'-6" CONCRETE CURB AND GUTTER.
R2	1'-6" CONCRETE CURB AND GUTTER.
R3	5" MONOLITHIC CONCRETE ISLAND. (KEYED IN)
R4	PROP. SHOULDER BERM GUTTER.
R5	CONCRETE EXPRESSWAY GUTTER.
S	4" CONCRETE SIDEWALK.
T	EARTH MATERIAL.
U	EXISTING PAVEMENT.
V	MILLING EXISTING ASPHALT PAVEMENT
W	VARIABLE DEPTH ASPHALT PAVEMENT (SEE STANDARD WEDGING DETAIL)

NOTE: ALL PAVEMENT EDGE SLOPES ARE 1:1 UNLESS OTHERWISE NOTED.

** ADDITIONAL 2.0 FT. FOR BICYCLE LANE

*** ADD 4.0 FT. WHEN USING GUARDRAIL

**** FOR NARROW WIDENING UP TO 6 FT. USE (E4) IN LIEU OF (E1) (NO STABILIZATION REQUIRED)

+ MILL 2" EXISTING PAVEMENT -L- STA 311+75 to STA 320+18

(X) WHEN THESE DISTANCES INDICATE SLOPES OUTSIDE THE LIMITS 2:1 TO 6:1, THE DISTANCE BECOMES VARIABLE AND THE MAXIMUM OR MINIMUM SLOPE MAINTAINED.

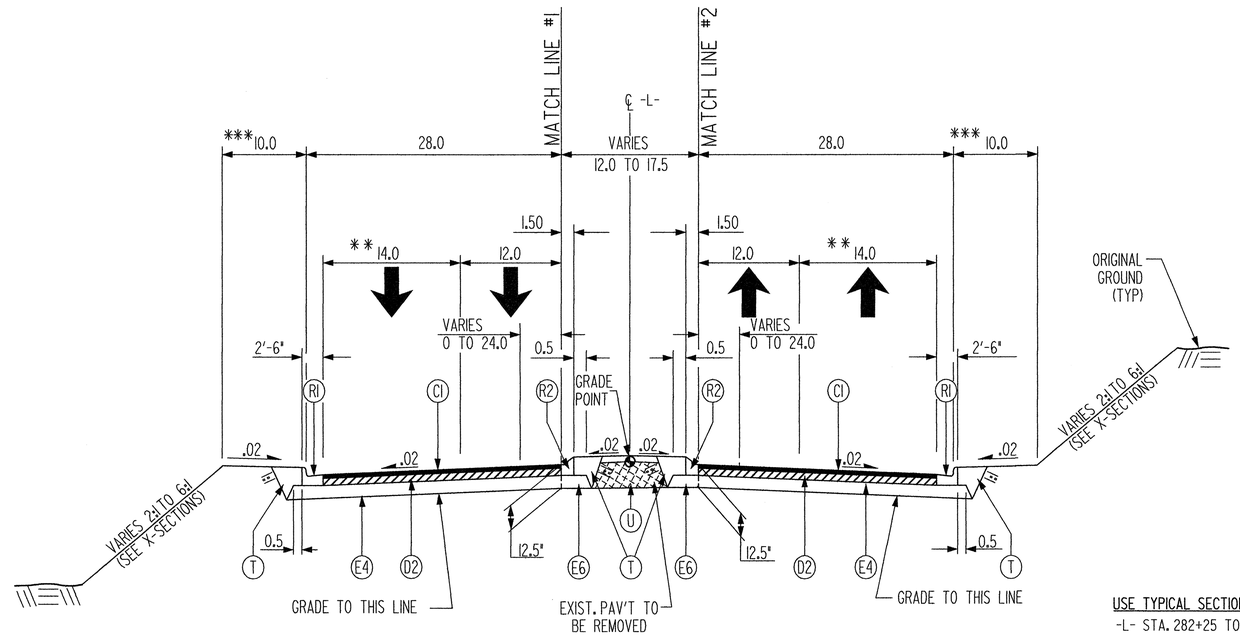

TYPICAL SECTION NO. 5

-L- DAVIS DRIVE

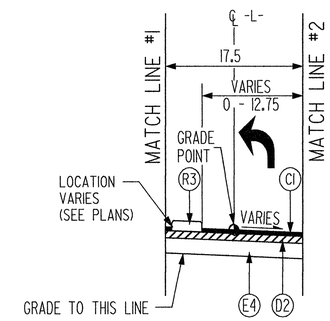

TYPICAL SECTION NO. 5A

USE TYPICAL SECTION NO. 5A IN CONJUNCTION WITH TYPICAL SECTION NO. 5 AS FOLLOWS:

-L- STA. 289+05.00 TO STA. 290+50.16
-L- STA. 291+89.65 TO STA. 294+20.00
-L- STA. 300+15.00 TO STA. 302+46.75
-L- STA. 303+81.66 TO STA. 304+30.00

USE TYPICAL SECTION NO. 5 AS FOLLOWS:

-L- STA. 282+25 TO STA. 304+00.00

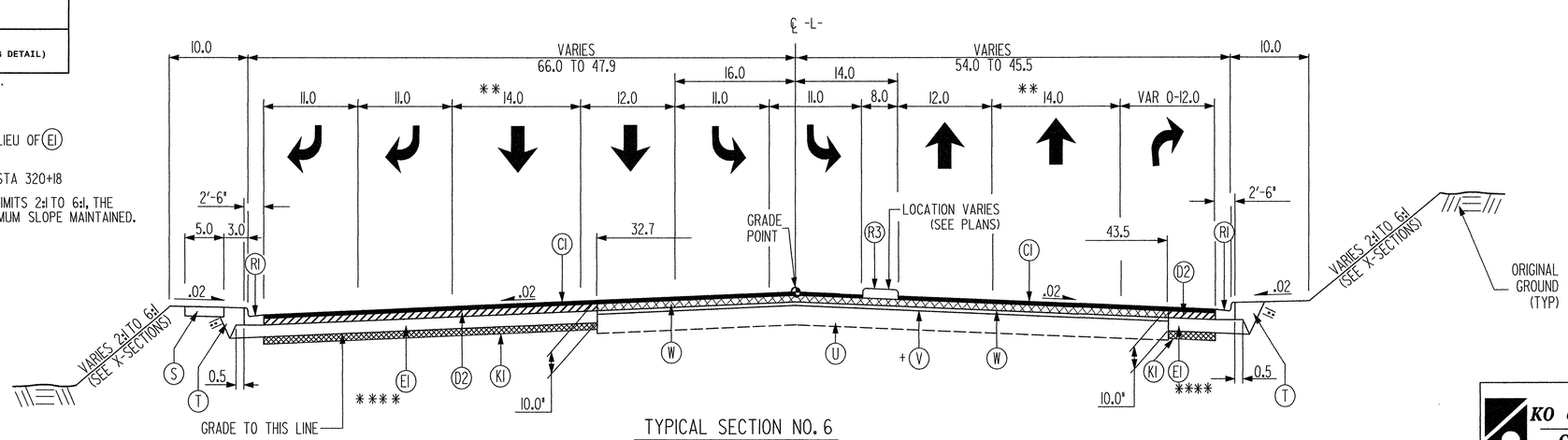

USE TYPICAL SECTION NO. 6 AS FOLLOWS:

-L- STA. 312+16.03 TO STA. 321+07.83

TYPICAL SECTION NO. 6

-L- DAVIS DRIVE

Plans prepared by:
KO & ASSOCIATES, P.C.
Consulting Engineers
1011 SCHAUB DR., SUITE #202
RALEIGH, N.C. 27606
(919)-851-6066

PROJECT REFERENCE NO.	SHEET NO.
U-4026	2-D
ROADWAY DESIGN ENGINEER	PAVEMENT DESIGN ENGINEER

NORTH CAROLINA PROFESSIONAL SEAL 20774 ENGINEER STEPHEN R. WHITLEY 5-09-06

NORTH CAROLINA PROFESSIONAL SEAL 13368 ENGINEER 5/9/06

PAVEMENT SCHEDULE

C1	PROP. APPROX. 3.0" ASPHALT CONCRETE SURFACE COURSE, TYPE S9.5B, AT AN AVERAGE RATE OF 168 LBS. PER SQ. YD. IN EACH OF TWO LAYERS.
C2	PROP. VAR. DEPTH ASPHALT CONCRETE SURFACE COURSE, TYPE S9.5B, AT AN AVERAGE RATE OF 112 LBS. PER SQ. YD. PER 1" DEPTH. TO BE PLACED IN LAYERS NOT TO EXCEED 2" IN DEPTH.
D1	PROP. APPROX. 2.5" ASPHALT CONCRETE INTERMEDIATE COURSE, TYPE I19.0B, AT AN AVERAGE RATE OF 285 LBS. PER SQ. YD.
D2	PROP. APPROX. 4.0" ASPHALT CONCRETE INTERMEDIATE COURSE, TYPE I19.0B, AT AN AVERAGE RATE OF 456 LBS. PER SQ. YD.
D3	PROP. VAR. DEPTH ASPHALT CONCRETE INTERMEDIATE COURSE, TYPE I19.0B, AT AN AVERAGE RATE OF 114 LBS. PER SQ. YD. PER 1" DEPTH, TO BE PLACED IN LAYERS NOT LESS THAN 2½" IN DEPTH OR GREATER THAN 4" IN DEPTH.
E1	PROP. APPROX. 3.0" ASPHALT CONCRETE BASE COURSE, TYPE B25.0B, AT AN AVERAGE RATE OF 342 LBS. PER SQ. YD.
E2	PROP. APPROX. 4.0" ASPHALT CONCRETE BASE COURSE, TYPE B25.0B, AT AN AVERAGE RATE OF 456 LBS. PER SQ. YD.
E3	PROP. APPROX. 4.5" ASPHALT CONCRETE BASE COURSE, TYPE B25.0B, AT AN AVERAGE RATE OF 513 lbs. PER SQ. YD.
E4	PROP. APPROX. 5.5" ASPHALT CONCRETE BASE COURSE, TYPE B25.0B, AT AN AVERAGE RATE OF 627 LBS. PER SQ. YD.
E5	PROP. APPROX. 6.5" ASPHALT CONCRETE BASE COURSE, TYPE B25.0B, AT AN AVERAGE RATE OF 370.5 LBS. PER SQ. YD. IN EACH OF TWO LAYERS.
E6	PROP. VAR. DEPTH ASPHALT CONCRETE BASE COURSE, TYPE B25.0B, AT AN AVERAGE RATE OF 114 LBS. PER SQ. YD. PER 1" DEPTH. TO BE PLACED IN LAYERS NOT LESS THAN 3" IN DEPTH OR GREATER THAN 5½" IN DEPTH.
K1	LIME STABILIZATION: (METHOD-SLURRY) 60% OF PROJECT: DEPTH OF 8", AT A RATE OF 20 LBS. PER SQ. YD. OR CEMENT STABILIZATION: 40% OF PROJECT:DEPTH OF 7", AT A RATE OF 55 LBS. PER SQ. YD. ALSO 300 LBS. PER SQ. YD. OF ABC FOR 10% OF CEMENT AREA
R1	2'-6" CONCRETE CURB AND GUTTER.
R2	1'-6" CONCRETE CURB AND GUTTER.
R3	5" MONOLITHIC CONCRETE ISLAND. (KEYED IN)
R4	PROP. SHOULDER BERM GUTTER.
R5	CONCRETE EXPRESSWAY GUTTER.
S	4" CONCRETE SIDEWALK.
T	EARTH MATERIAL.
U	EXISTING PAVEMENT.
W	VARIABLE DEPTH ASPHALT PAVEMENT (SEE STANDARD WEDGING DETAIL)

NOTE: ALL PAVEMENT EDGE SLOPES ARE 1:1 UNLESS OTHERWISE NOTED.

* ADD 3.0 FT. WHEN USING GUARDRAIL

*** ADD 4.0 FT. WHEN USING GUARDRAIL

Ⓧ WHEN THESE DISTANCES INDICATE SLOPES OUTSIDE THE LIMITS 2:1 TO 6:1, THE DISTANCE BECOMES VARIABLE AND THE MAXIMUM OR MINIMUM SLOPE MAINTAINED.

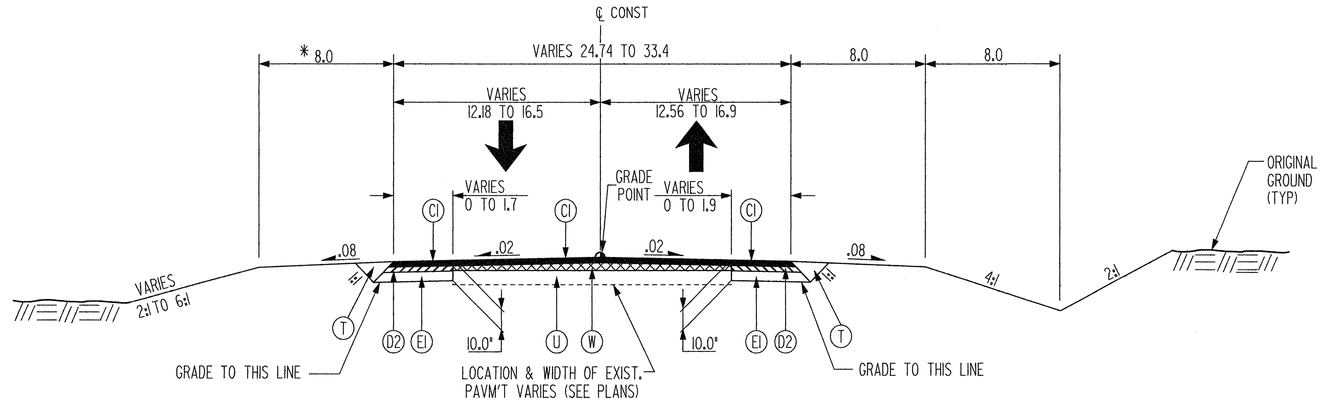

TYPICAL SECTION NO. 7

-Y2- HOLLY CREEK ROAD

USE TYPICAL SECTION NO. 7 AS FOLLOWS:

-Y2- STA. 14+00.00 TO STA. 14+32.73

USE TYPICAL SECTION NO. 8 AS FOLLOWS:

-Y3- STA. 13+00.00 TO STA. 14+10.50

-Y4- STA. 10+96.06 TO STA. 12+00.00

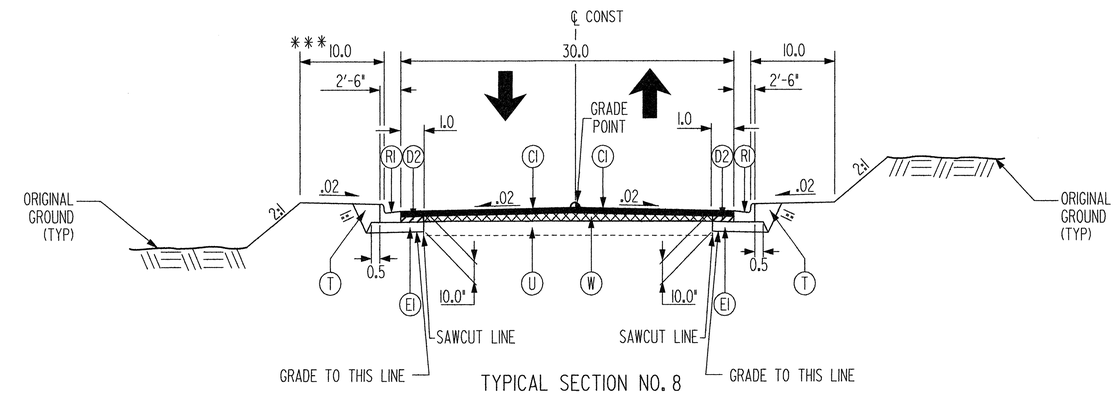

TYPICAL SECTION NO. 8

-Y3- SOWTER ROAD

-Y4- LATTNER ROAD

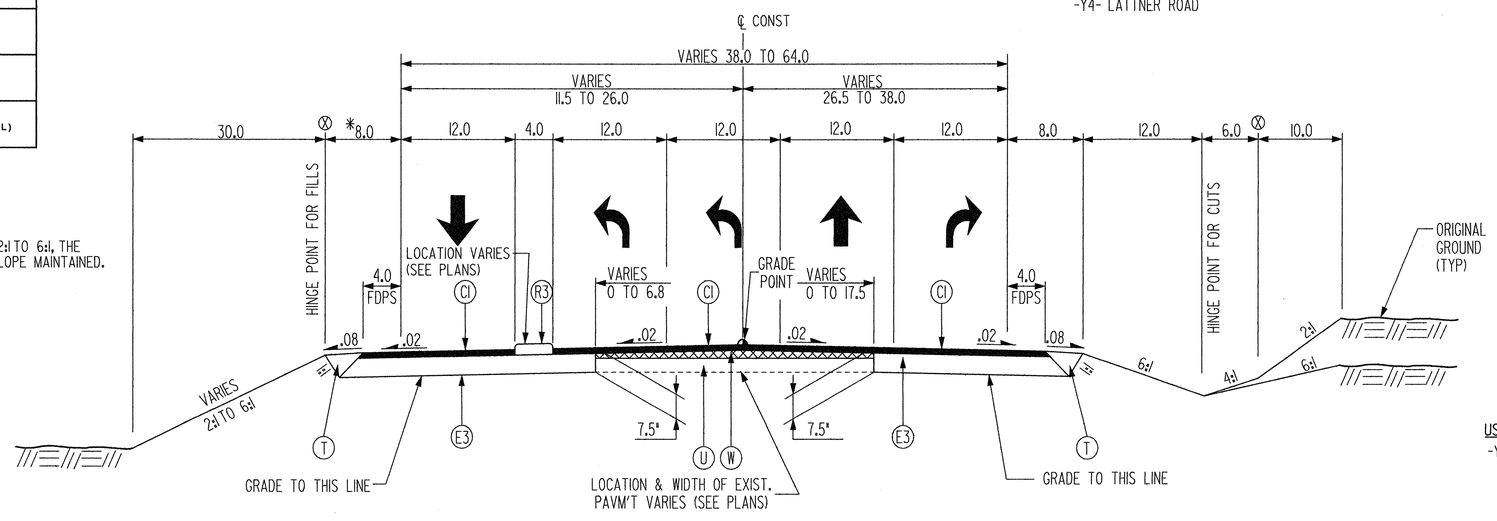

TYPICAL SECTION NO. 9

-Y5- McCRIMMON PKWY

USE TYPICAL SECTION NO. 9 AS FOLLOWS:

-Y5- STA. 19+35.00 TO STA. 23+81.15

Plans prepared by:
KO & ASSOCIATES, P.C.
Consulting Engineers
1011 SCHAUB DR., SUITE #202
RALEIGH, N.C. 27606
(919)-851-6066

PROJECT REFERENCE NO.	SHEET NO.
U-4026	2-E
ROADWAY DESIGN ENGINEER	PAVEMENT DESIGN ENGINEER

NORTH CAROLINA PROFESSIONAL SEAL 20774 ENGINEER STEPHEN R. WHITLEY 5-09-06

NORTH CAROLINA PROFESSIONAL SEAL 13368 ENGINEER CHI ON CHAN 5/9/06

PAVEMENT SCHEDULE

C1	PROP. APPROX. 3.0" ASPHALT CONCRETE SURFACE COURSE, TYPE S9.5B, AT AN AVERAGE RATE OF 168 LBS. PER SQ. YD. IN EACH OF TWO LAYERS.
C2	PROP. VAR. DEPTH ASPHALT CONCRETE SURFACE COURSE, TYPE S9.5B, AT AN AVERAGE RATE OF 112 LBS. PER SQ. YD. PER 1" DEPTH. TO BE PLACED IN LAYERS NOT TO EXCEED 2" IN DEPTH.
D1	PROP. APPROX. 2.5" ASPHALT CONCRETE INTERMEDIATE COURSE, TYPE I19.0B, AT AN AVERAGE RATE OF 285 LBS. PER SQ. YD.
D2	PROP. APPROX. 4.0" ASPHALT CONCRETE INTERMEDIATE COURSE, TYPE I19.0B, AT AN AVERAGE RATE OF 456 LBS. PER SQ. YD.
D3	PROP. VAR. DEPTH ASPHALT CONCRETE INTERMEDIATE COURSE, TYPE I19.0B, AT AN AVERAGE RATE OF 114 LBS. PER SQ. YD. PER 1" DEPTH, TO BE PLACED IN LAYERS NOT LESS THAN 2½" IN DEPTH OR GREATER THAN 4" IN DEPTH.
E1	PROP. APPROX. 3.0" ASPHALT CONCRETE BASE COURSE, TYPE B25.0B, AT AN AVERAGE RATE OF 342 LBS. PER SQ. YD.
E2	PROP. APPROX. 4.0" ASPHALT CONCRETE BASE COURSE, TYPE B25.0B, AT AN AVERAGE RATE OF 456 LBS. PER SQ. YD.
E3	PROP. APPROX. 4.5" ASPHALT CONCRETE BASE COURSE, TYPE B25.0B, AT AN AVERAGE RATE OF 513 lbs. PER SQ. YD.
E4	PROP. APPROX. 5.5" ASPHALT CONCRETE BASE COURSE, TYPE B25.0B, AT AN AVERAGE RATE OF 627 LBS. PER SQ. YD.
E5	PROP. APPROX. 6.5" ASPHALT CONCRETE BASE COURSE, TYPE B25.0B, AT AN AVERAGE RATE OF 370.5 LBS. PER SQ. YD. IN EACH OF TWO LAYERS.
E6	PROP. VAR. DEPTH ASPHALT CONCRETE BASE COURSE, TYPE B25.0B, AT AN AVERAGE RATE OF 114 LBS. PER SQ. YD. PER 1" DEPTH. TO BE PLACED IN LAYERS NOT LESS THAN 3" IN DEPTH OR GREATER THAN 5½" IN DEPTH.
K1	LIME STABILIZATION: (METHOD-SLURRY) 60% OF PROJECT: DEPTH OF 8", AT A RATE OF 20 LBS. PER SQ. YD. OR CEMENT STABILIZATION: 40% OF PROJECT:DEPTH OF 7", AT A RATE OF 55 LBS. PER SQ. YD. ALSO 300 LBS. PER SQ. YD. OF ABC FOR 10% OF CEMENT AREA
R1	2'-6" CONCRETE CURB AND GUTTER.
R2	1'-6" CONCRETE CURB AND GUTTER.
R3	5" MONOLITHIC CONCRETE ISLAND. (KEYED IN)
R4	PROP. SHOULDER BERM GUTTER.
R5	CONCRETE EXPRESSWAY GUTTER.
S	4" CONCRETE SIDEWALK.
T	EARTH MATERIAL.
U	EXISTING PAVEMENT.
W	VARIABLE DEPTH ASPHALT PAVEMENT (SEE STANDARD WEDGING DETAIL)

NOTE: ALL PAVEMENT EDGE SLOPES ARE 1:1 UNLESS OTHERWISE NOTED.

* ADD 3.0 FT. WHEN USING GUARDRAIL

Ⓧ WHEN THESE DISTANCES INDICATE SLOPES OUTSIDE THE LIMITS 2:1 TO 6:1, THE DISTANCE BECOMES VARIABLE AND THE MAXIMUM OR MINIMUM SLOPE MAINTAINED.

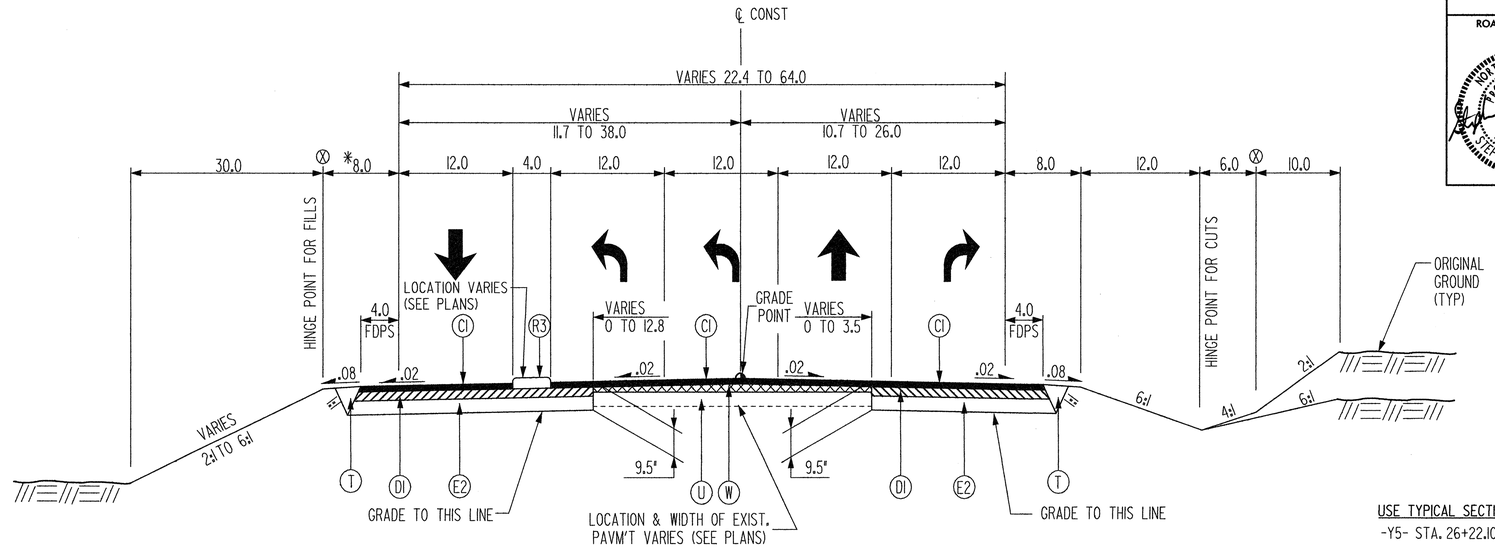

TYPICAL SECTION NO. 10

-Y5- McCRIMMON PKWY

USE TYPICAL SECTION NO. 10 AS FOLLOWS:

-Y5- STA. 26+22.10 TO STA. 36+65.00

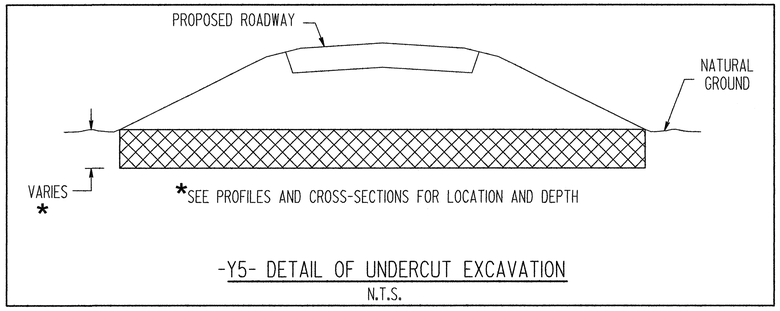

-Y5- DETAIL OF UNDERCUT EXCAVATION

N.T.S.

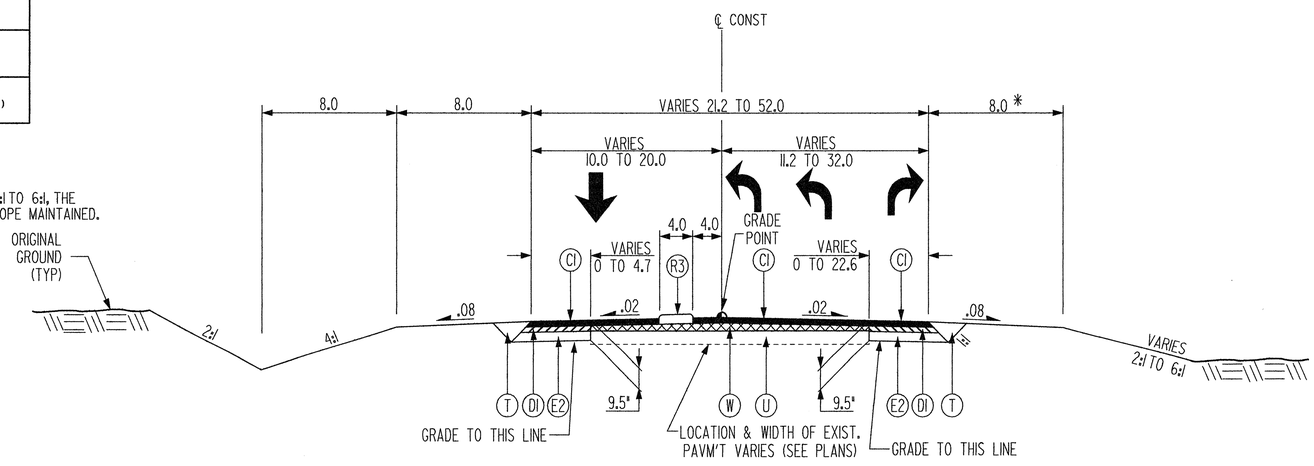

TYPICAL SECTION NO. 11

-Y10- DEVELOPEMENT DRIVE

USE TYPICAL SECTION NO. 11 AS FOLLOWS:

-Y10- STA. 8+00.00 TO STA. 14+33.43

Plans prepared by:
KO & ASSOCIATES, P.C.
Consulting Engineers
1011 SCHAUB DR., SUITE #202
RALEIGH, N.C. 27606
(919)-851-6066

PROJECT REFERENCE NO.	SHEET NO.
U-4026	2-F
ROADWAY DESIGN ENGINEER	PAVEMENT DESIGN ENGINEER

NORTH CAROLINA PROFESSIONAL SEAL 20774 ENGINEER STEPHEN R. WHITLEY 5-09-06

NORTH CAROLINA PROFESSIONAL SEAL 13368 ENGINEER CHI CHEUNG 5/9/06

✱ ADD 3.0 FT. WHEN USING GUARDRAIL
✱✱✱ ADD 4.0 FT. WHEN USING GUARDRAIL
Ⓧ WHEN THESE DISTANCES INDICATE SLOPES OUTSIDE THE LIMITS 2:1 TO 6:1, THE DISTANCE BECOMES VARIABLE AND THE MAXIMUM OR MINIMUM SLOPE MAINTAINED.

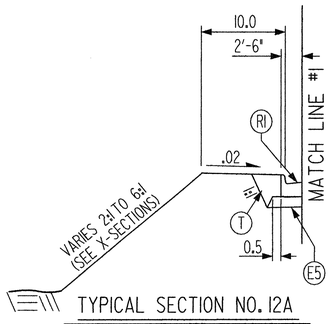

TYPICAL SECTION NO. 12A

USE TYPICAL SECTION NO. 12A IN CONJUNCTION WITH TYPICAL SECTION NO. 12 AS FOLLOWS:

-Y9- STA. 12+00.00 TO STA. 13+50.00 LT.

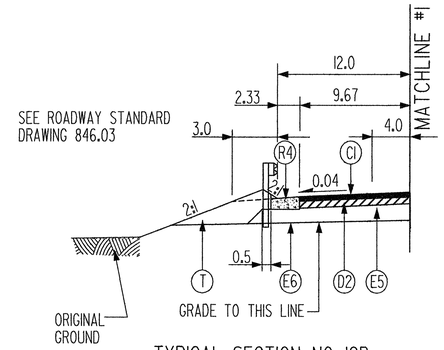

TYPICAL SECTION NO. 12B

USE TYPICAL SECTION NO. 12B IN CONJUNCTION WITH TYPICAL SECTION NO. 12 AS FOLLOWS:

-Y9- STA. 16+32.00 TO STA. 18+25.00 LT.

PAVEMENT SCHEDULE	
C1	PROP. APPROX. 3.0" ASPHALT CONCRETE SURFACE COURSE, TYPE S9.5B, AT AN AVERAGE RATE OF 168 LBS. PER SQ. YD. IN EACH OF TWO LAYERS.
C2	PROP. VAR. DEPTH ASPHALT CONCRETE SURFACE COURSE, TYPE S9.5B, AT AN AVERAGE RATE OF 112 LBS. PER SQ. YD. PER 1" DEPTH. TO BE PLACED IN LAYERS NOT TO EXCEED 2" IN DEPTH.
D1	PROP. APPROX. 2.5" ASPHALT CONCRETE INTERMEDIATE COURSE, TYPE I19.0B, AT AN AVERAGE RATE OF 285 LBS. PER SQ. YD.
D2	PROP. APPROX. 4.0" ASPHALT CONCRETE INTERMEDIATE COURSE, TYPE I19.0B, AT AN AVERAGE RATE OF 456 LBS. PER SQ. YD.
D3	PROP. VAR. DEPTH ASPHALT CONCRETE INTERMEDIATE COURSE, TYPE I19.0B, AT AN AVERAGE RATE OF 114 LBS. PER SQ. YD. PER 1" DEPTH, TO BE PLACED IN LAYERS NOT LESS THAN 2½" IN DEPTH OR GREATER THAN 4" IN DEPTH.
E1	PROP. APPROX. 3.0" ASPHALT CONCRETE BASE COURSE, TYPE B25.0B, AT AN AVERAGE RATE OF 342 LBS. PER SQ. YD.
E2	PROP. APPROX. 4.0" ASPHALT CONCRETE BASE COURSE, TYPE B25.0B, AT AN AVERAGE RATE OF 456 LBS. PER SQ. YD.
E3	PROP. APPROX. 4.5" ASPHALT CONCRETE BASE COURSE, TYPE B25.0B, AT AN AVERAGE RATE OF 513 lbs. PER SQ. YD.
E4	PROP. APPROX. 5.5" ASPHALT CONCRETE BASE COURSE, TYPE B25.0B, AT AN AVERAGE RATE OF 627 LBS. PER SQ. YD.
E5	PROP. APPROX. 6.5" ASPHALT CONCRETE BASE COURSE, TYPE B25.0B, AT AN AVERAGE RATE OF 370.5 LBS. PER SQ. YD. IN EACH OF TWO LAYERS.
E6	PROP. VAR. DEPTH ASPHALT CONCRETE BASE COURSE, TYPE B25.0B, AT AN AVERAGE RATE OF 114 LBS. PER SQ. YD. PER 1" DEPTH. TO BE PLACED IN LAYERS NOT LESS THAN 3" IN DEPTH OR GREATER THAN 5½" IN DEPTH.
K1	LIME STABILIZATION: (METHOD-SLURRY) 60% OF PROJECT: DEPTH OF 8", AT A RATE OF 20 LBS. PER SQ. YD. OR CEMENT STABILIZATION: 40% OF PROJECT:DEPTH OF 7", AT A RATE OF 55 LBS. PER SQ. YD. ALSO 300 LBS. PER SQ. YD. OF ABC FOR 10% OF CEMENT AREA
R1	2'-6" CONCRETE CURB AND GUTTER.
R2	1'-6" CONCRETE CURB AND GUTTER.
R3	5" MONOLITHIC CONCRETE ISLAND. (KEYED IN)
R4	PROP. SHOULDER BERM GUTTER.
R5	CONCRETE EXPRESSWAY GUTTER.
S	4" CONCRETE SIDEWALK.
T	EARTH MATERIAL.
U	EXISTING PAVEMENT.
W	VARIABLE DEPTH ASPHALT PAVEMENT (SEE STANDARD WEDGING DETAIL)

NOTE: ALL PAVEMENT EDGE SLOPES ARE 1:1 UNLESS OTHERWISE NOTED.

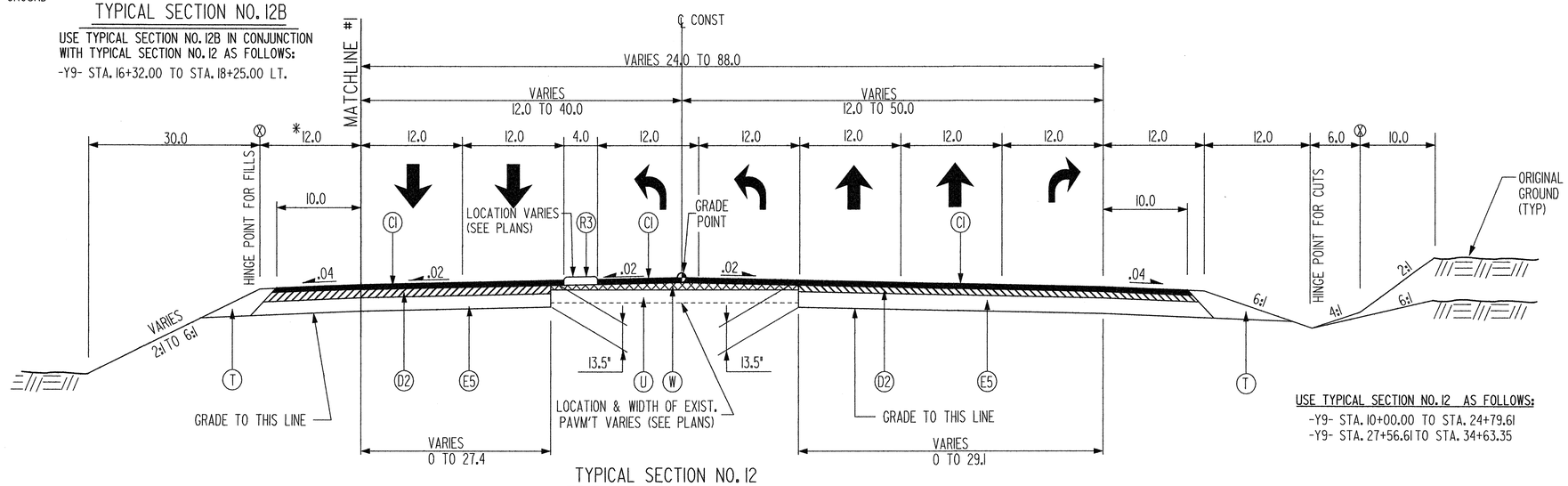

TYPICAL SECTION NO. 12

-Y9- KIT CREEK ROAD

USE TYPICAL SECTION NO. 12 AS FOLLOWS:

-Y9- STA. 10+00.00 TO STA. 24+79.61
-Y9- STA. 27+56.61 TO STA. 34+63.35

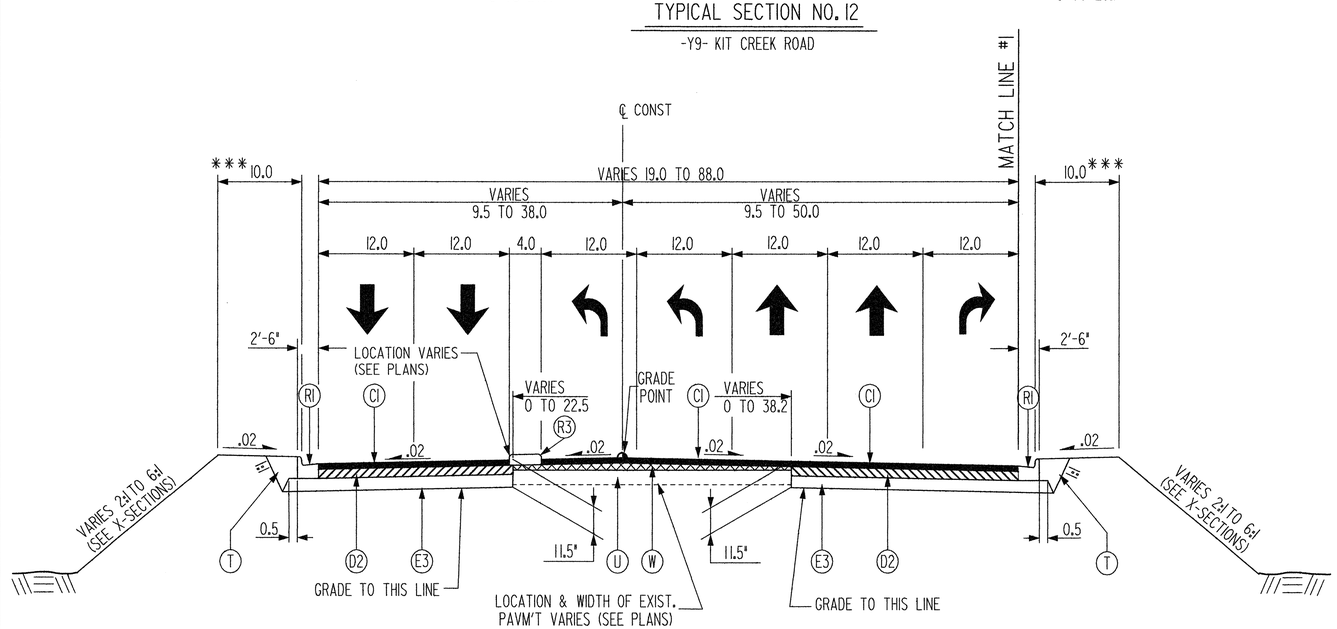

TYPICAL SECTION NO. 13

-Y12- HOPSON ROAD

USE TYPICAL SECTION NO. 13 AS FOLLOWS:

-Y12- STA. 10+30.00 TO STA. 23+89.85
-Y12- STA. 26+72.37 TO STA. 40+60.00

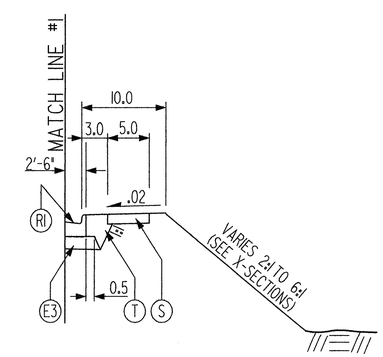

TYPICAL SECTION NO. 13A

USE TYPICAL SECTION NO. 13A IN CONJUNCTION WITH TYPICAL SECTION NO. 13 AS FOLLOWS:

-Y12- STA. 15+30.00 TO STA. 23+89.85 RT.
-Y12- STA. 25+73.00 TO STA. 27+00.00 RT.
-Y12- STA. 29+85.00 TO STA. 36+26.00 RT.

Plans prepared by:
KO & ASSOCIATES, P.C.
Consulting Engineers
1011 SCHAUB DR., SUITE #202
RALEIGH, N.C. 27606
(919)-851-6066

PROJECT REFERENCE NO.	SHEET NO.
U-4026	2-G
ROADWAY DESIGN ENGINEER	PAVEMENT DESIGN ENGINEER

NORTH CAROLINA PROFESSIONAL SEAL 20774 ENGINEER STEPHEN R. WHITLEY 8/21/06

NORTH CAROLINA PROFESSIONAL SEAL 22896 ENGINEER CLARK S. MORRISON 8/25/06

PAVEMENT SCHEDULE

C1	PROP. APPROX. 3.0" ASPHALT CONCRETE SURFACE COURSE, TYPE S9.5B, AT AN AVERAGE RATE OF 168 LBS. PER SQ. YD. IN EACH OF TWO LAYERS.
C2	PROP. VAR. DEPTH ASPHALT CONCRETE SURFACE COURSE, TYPE S9.5B, AT AN AVERAGE RATE OF 112 LBS. PER SQ. YD. PER 1" DEPTH. TO BE PLACED IN LAYERS NOT TO EXCEED 2" IN DEPTH.
D1	PROP. APPROX. 2.5" ASPHALT CONCRETE INTERMEDIATE COURSE, TYPE I19.0B, AT AN AVERAGE RATE OF 285 LBS. PER SQ. YD.
D2	PROP. APPROX. 4.0" ASPHALT CONCRETE INTERMEDIATE COURSE, TYPE I19.0B, AT AN AVERAGE RATE OF 456 LBS. PER SQ. YD.
D3	PROP. VAR. DEPTH ASPHALT CONCRETE INTERMEDIATE COURSE, TYPE I19.0B, AT AN AVERAGE RATE OF 114 LBS. PER SQ. YD. PER 1" DEPTH. TO BE PLACED IN LAYERS NOT LESS THAN 2½" IN DEPTH OR GREATER THAN 4" IN DEPTH.
E1	PROP. APPROX. 3.0" ASPHALT CONCRETE BASE COURSE, TYPE B25.0B, AT AN AVERAGE RATE OF 342 LBS. PER SQ. YD.
E2	PROP. APPROX. 4.0" ASPHALT CONCRETE BASE COURSE, TYPE B25.0B, AT AN AVERAGE RATE OF 456 LBS. PER SQ. YD.
E3	PROP. APPROX. 4.5" ASPHALT CONCRETE BASE COURSE, TYPE B25.0B, AT AN AVERAGE RATE OF 513 lbs. PER SQ. YD.
E4	PROP. APPROX. 5.5" ASPHALT CONCRETE BASE COURSE, TYPE B25.0B, AT AN AVERAGE RATE OF 627 LBS. PER SQ. YD.
E5	PROP. APPROX. 6.5" ASPHALT CONCRETE BASE COURSE, TYPE B25.0B, AT AN AVERAGE RATE OF 370.5 LBS. PER SQ. YD. IN EACH OF TWO LAYERS.
E6	PROP. VAR. DEPTH ASPHALT CONCRETE BASE COURSE, TYPE B25.0B, AT AN AVERAGE RATE OF 114 LBS. PER SQ. YD. PER 1" DEPTH. TO BE PLACED IN LAYERS NOT LESS THAN 3" IN DEPTH OR GREATER THAN 5½" IN DEPTH.
K1	LIME STABILIZATION: (METHOD-SLURRY) 60% OF PROJECT: DEPTH OF 8", AT A RATE OF 20 LBS. PER SQ. YD. OR CEMENT STABILIZATION: 40% OF PROJECT:DEPTH OF 7", AT A RATE OF 55 LBS. PER SQ. YD. ALSO 300 LBS. PER SQ. YD. OF ABC FOR 10% OF CEMENT AREA
R1	2'-6" CONCRETE CURB AND GUTTER.
R2	1'-6" CONCRETE CURB AND GUTTER.
R3	5" MONOLITHIC CONCRETE ISLAND. (KEYED IN)
R4	PROP. SHOULDER BERM GUTTER.
R5	CONCRETE EXPRESSWAY GUTTER.
S	4" CONCRETE SIDEWALK.
T	EARTH MATERIAL.
U	EXISTING PAVEMENT.
W	VARIABLE DEPTH ASPHALT PAVEMENT (SEE STANDARD WEDGING DETAIL)

NOTE: ALL PAVEMENT EDGE SLOPES ARE 1:1 UNLESS OTHERWISE NOTED.

(X) WHEN THESE DISTANCES INDICATE SLOPES OUTSIDE THE LIMITS 2:1 TO 6:1, THE DISTANCE BECOMES VARIABLE AND THE MAXIMUM OR MINIMUM SLOPE MAINTAINED.

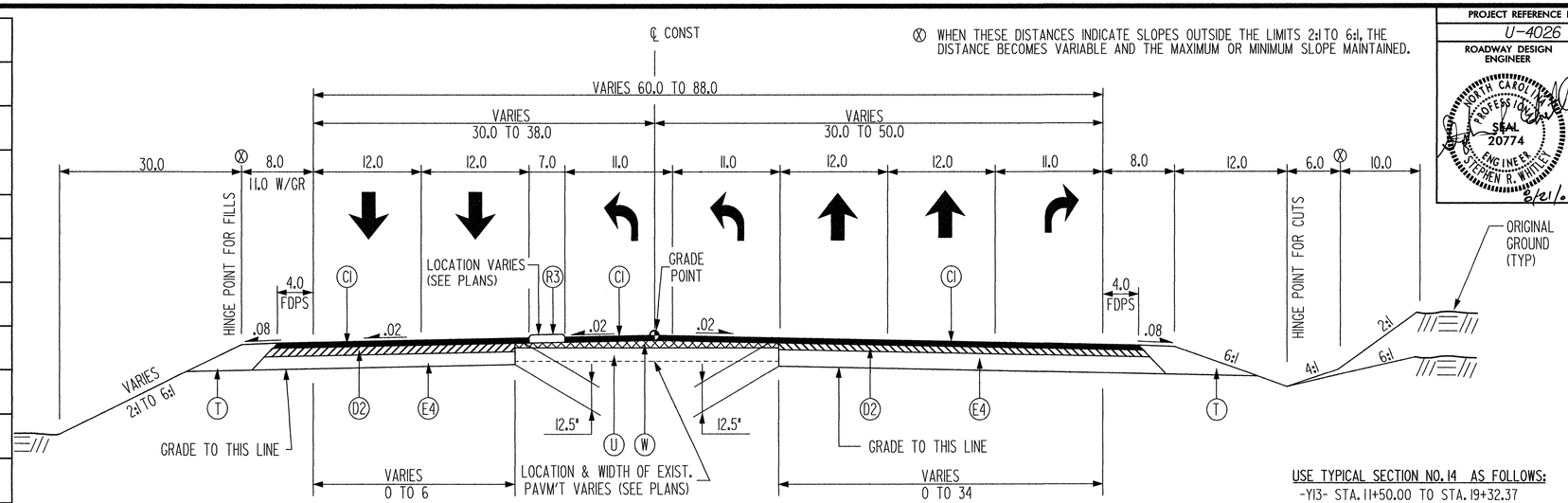

TYPICAL SECTION NO. 14

-Y13- NC 54

USE TYPICAL SECTION NO. 14 AS FOLLOWS:

-Y13- STA. 11+50.00 TO STA. 19+32.37

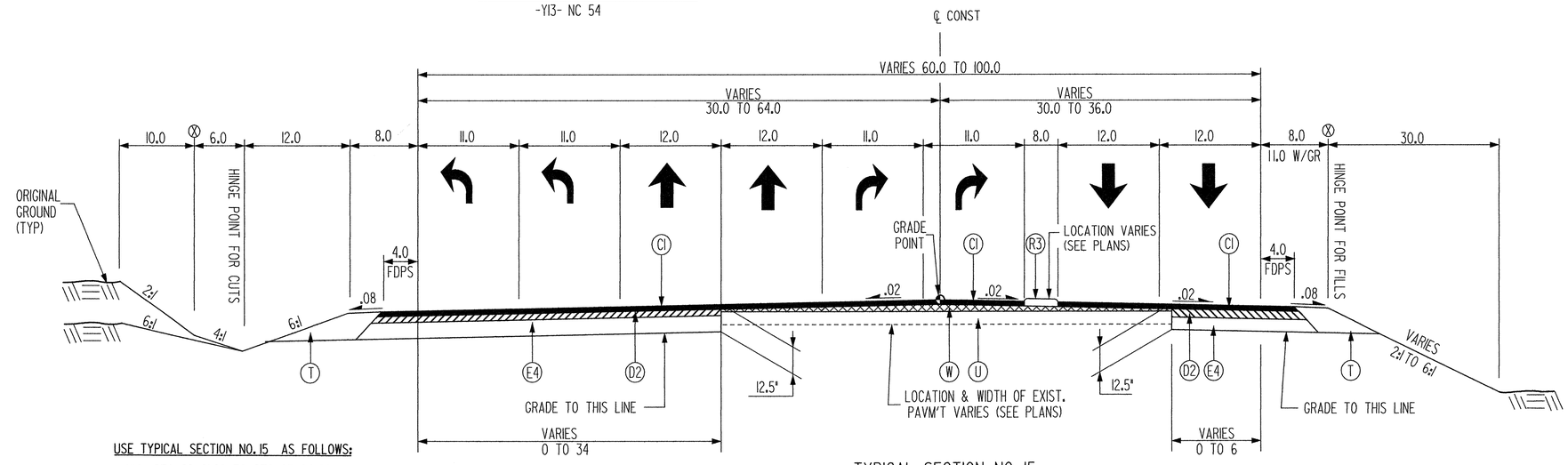

USE TYPICAL SECTION NO. 15 AS FOLLOWS:

-Y13- STA. 22+01.89 TO STA. 27+00.00

TYPICAL SECTION NO. 15

-Y13- NC 54

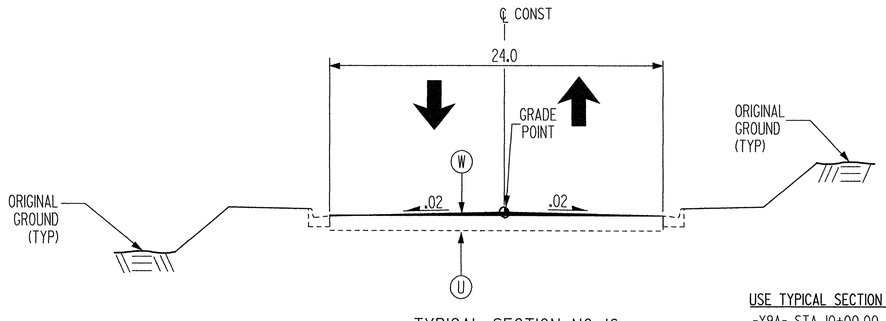

TYPICAL SECTION NO. 16

-Y9A- DRIVE

USE TYPICAL SECTION NO. 16 AS FOLLOWS:

-Y9A- STA. 10+00.00 TO STA. 10+40.00

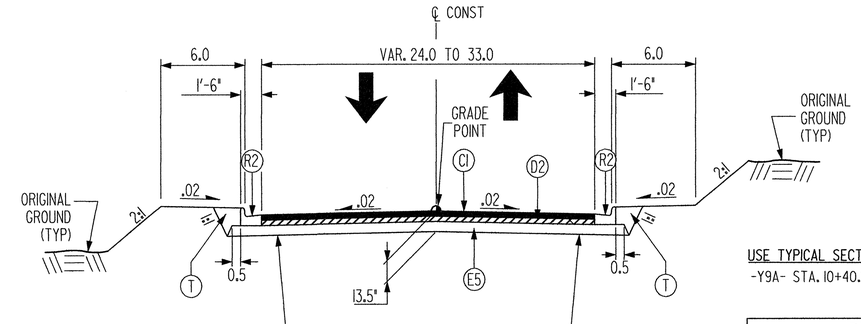

TYPICAL SECTION NO. 17

-Y9A- DRIVE

USE TYPICAL SECTION NO. 17 AS FOLLOWS:

-Y9A- STA. 10+40.00 TO STA. 13+13.80

Plans prepared by:
KO & ASSOCIATES, P.C.
Consulting Engineers
1011 SCHAUB DR., SUITE #202
RALEIGH, N.C. 27606
(919)-851-6066

PROJECT REFERENCE NO.	SHEET NO.
U-4026	2-H
R/W SHEET NO.	
ROADWAY DESIGN ENGINEER	HYDRAULICS ENGINEER

NORTH CAROLINA PROFESSIONAL SEAL 20774 ENGINEER STEPHEN R. WHITLEY 5-4-06

NORTH CAROLINA PROFESSIONAL SEAL 021162 ENGINEER HERBERT TURNER, JR. 5-4-06

DETAIL A
STANDARD BASE DITCH
(Not to Scale)

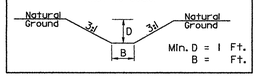

SHEET	ROADWAY	STATION - STATION	SIDE	B
4	-L-	17+30 - 18+40	LT	2'
11	-L-	94+75 - 95+02	LT	4'
11	-L-	103+70	RT	4'-15'
7	-L-	46+50	LT	2'
31	-Y5-	30+07 - 30+30	LT	2'
37	-Y10-	12+00	LT	2'

DETAIL B
STANDARD BASE DITCH
(Not to Scale)

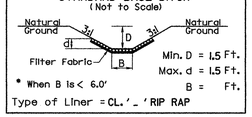

SHEET	ROADWAY	STATION - STATION	SIDE	BASE	RIPRAP
5	-L-	29+50	RT	2'	"B"
6	-L-	36+35	LT	2'	"B"
25	-L-	270+12	RT	3'	"1"

DETAIL C
SPECIAL LATERAL 'V' DITCH
(Not to Scale)

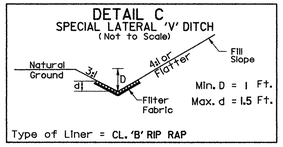

SHEET	ROADWAY	STATION - STATION	SIDE	D
8	-L-	58+12 - 60+50	RT	1.5
8	-L-	58+12 - 60+50	LT	1.5
17	-L-	171+50 - 173+00	RT	1
29 & 36	-Y13-	23+50 - 25+15	LT	1

DETAIL D
SPECIAL LATERAL 'V' DITCH
(Not to Scale)

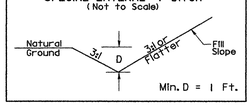

SHEET	ROADWAY	STATION - STATION	SIDE
5	-L-	30+80 - 33+00	RT
7	-L-	55+00 - 58+12	LT
7&8	-L-	56+00 - 58+08	RT
9	-L-	72+50 - 74+50	LT
9	-L-	73+00 - 75+00	RT
17	-L-	170+00 -174+50	LT
25	-L-	265+10 - 266+50	LT
25	-L-	269+63 - 272+00	LT
27	-L-	289+50 - 290+40	RT
30	-Y5-	20+00 - 21+15	LT
36	-Y13-	15+00 - 16+77	RT

DETAIL E
LATERAL BASE DITCH
(Not to Scale)

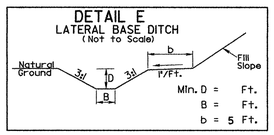

SHEET	ROADWAY	STATION - STATION	SIDE	D	B
9	-L-	80+50 - 81+62	LT	2	3
10	-L-	83+00 - 85+00	LT	2	3
16	-L-	156+00 - 158+00	RT	2	3
19 & 20	-L-	200+20 - 203+00	RT	1	2

DETAIL F
LATERAL BASE DITCH
(Not to Scale)

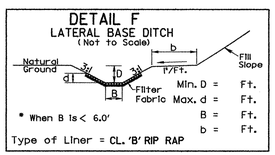

SHEET	ROADWAY	STATION - STATION	SIDE	D	d	B	b
10 & 11	-L-	92+10 - 95+50	RT	1	1.5	2	5
16	-L-	154+52 - 156+00	RT	2	2	3	5
18	-L-	179+20 - 181+55	RT	1	1	2	5
21	-L-	214+60 - 217+25	RT	1	1.5	2	5
22	-L-	229+50 - 230+35	LT	1	1	2	5
22	-L-	230+70 - 233+70	LT	1	1.5	2	5
23	-L-	240+00 - 241+00	LT	1	1	2	5
25	-L-	267+00 - 269+68	LT	1	1.5	2	3
26 & 27	-L-	285+80 - 287+00	RT	1.5	1.5	3	5
27	-L-	293+50 - 294+07	LT	3	1.5	6	3
27	-L-	294+00 - 298+00	LT	1.5	1.5	2	3

DETAIL G
LATERAL 'V' DITCH
(Not to Scale)

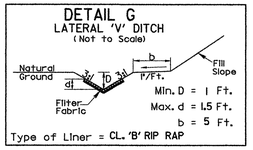

SHEET	ROADWAY	STATION - STATION	SIDE	D	d
5	-L-	29+50 - 31+00	RT	1	1
10	-L-	91+00 - 93+20	LT	1	1.5
11	-L-	103+70 - 105+50	RT	1.5	1
12	-L-	107+50 - 109+00	RT	1	1.5
14	-L-	135+50 - 136+00	RT	1	1.5
19	-L-	199+00 - 199+25	RT	1	1.5
22	-L-	227+00 - 229+50	RT	1	1.5
22	-L-	229+80 - 232+00	RT	1	1.5

DETAIL H
LATERAL 'V' DITCH
(Not to Scale)

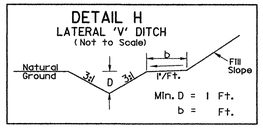

SHEET	ROADWAY	STATION - STATION	SIDE	b
11 & 12	-L-	105+50 - 107+50	RT	5
25	-L-	262+00 - 265+10	LT	3
25	-L-	266+50 - 267+00	RT	5
27	-L-	287+00 - 289+50	RT	5
34	-Y12-	20+84 - 22+05	LT	5

DETAIL I
SPECIAL FALSE CUT
(Not to Scale)

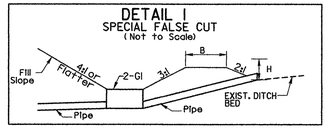

SHEET	ROADWAY	STATION - STATION	SIDE	H	B
13	-L-	120+00 - 121+00	RT	4.5	5
18	-L-	185+50 - 187+00	RT	5	5
31	-Y5-	30+50 - 32+57	RT	1	2

DETAIL J
CHANNEL IMPROVEMENT
(Not to Scale)

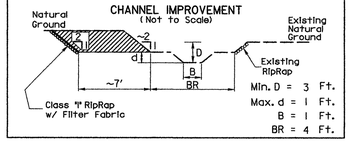

SHEET	ROADWAY	STATION	SIDE
11	-L-	105+50	LT

DETAIL K
STD. BERM DITCH
(Not to Scale)

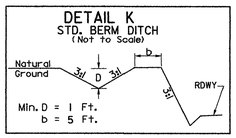

SHEET	ROADWAY	STATION - STATION	SIDE
11	-L-	97+00 - 99+95	RT
12	-L-	109+00 - 110+00	RT
12	-L-	112+00 - 117+00	RT
18	-L-	181+50 - 185+50	RT
18	-L-	187+03 - 188+00	RT
19	-L-	194+00 - 196+50	RT
20	-L-	205+75 - 206+25	LT
20	-L-	211+01- 213+50	LT

DETAIL L
BERM 'V' DITCH
(Not to Scale)

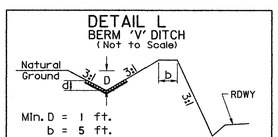

SHEET	ROADWAY	STATION - STATION	SIDE
11	-L-	95+50 - 97+00	RT
12	-L-	110+00 - 112+00	RT
13	-L-	125+00 - 127+02	RT
18	-L-	185+50 - 187+03	RT
18	-L-	188+00 - 189+13	RT

DETAIL M
CHANNEL CHANGE
(Not to Scale)

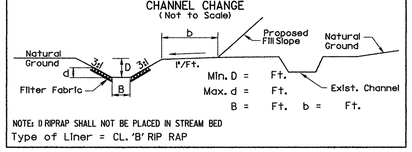

SHEET	ROADWAY	STATION - STATION	SIDE	D	d	B	b
10	-L-	91+30 - 92+07	RT	2	2.5	5	5
20	-L-	209+00 - 212+50	RT	1	1	2	5

DETAIL N
TOE PROTECTION
(Not to Scale)

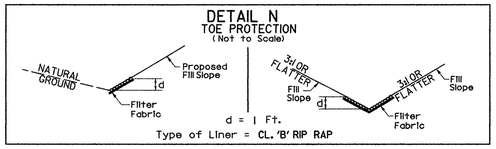

SHEET	ROADWAY	STATION - STATION	SIDE
10	-L-	91+10 - 91+60	RT
27	-L-	286+00 - 287+40	LT
32	-Y9-	16+00 - 18+50	LT
32	-Y9-	16+69.83 - 18+01	LT

DETAIL O
TOE PROTECTION
(Not to Scale)

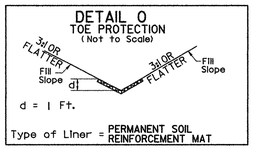

SHEET	ROADWAY	STATION - STATION	SIDE
8	-Y5-	27+50 - 27+60	RT
23	-L-	242+30 - 245+00	RT
23	-L-	247+40 - 249+00	RT
24	-L-	255+00 - 259+20	RT
24 & 25	-L-	261+75 - 266+25	RT
28	-L-	299+48.45 - 302+00	LT
28	-L-	303+65 - 306+50	LT
28	-L-	307+30 - 309+00	LT
36	-Y13-	12+00 - 15+21.82	LT

DETAIL P
ROCK PLATE DETAIL AT POND W/ FABRIC OVERLAP DETAIL
(Not to Scale)

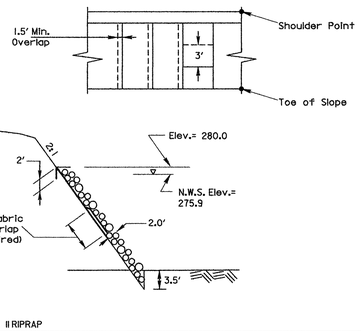

SHEET	ROADWAY	STATION - STATION	SIDE
19	-L-	199+25 - 200+40	RT

DETAIL Q
STANDARD 'V' DITCH
(Not to Scale)

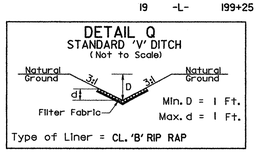

SHEET	ROADWAY	STATION - STATION	SIDE
17	-L-	177+20 - 177+90	RT

DETAIL R
STANDARD 'V' DITCH
(Not to Scale)

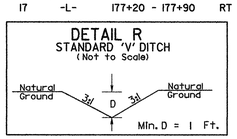

SHEET	ROADWAY	STATION - STATION	SIDE
9	-L-	78+50 - 78+68	LT
24	-L-	261+50 - 261+90	RT

DETAIL S
SPECIAL LATERAL BASE DITCH
(Not to Scale)

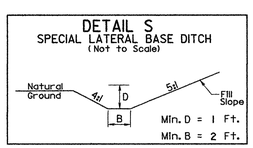

SHEET	ROADWAY	STATION - STATION	SIDE
6	-L-	43+75 - 44+50	RT

DITCH DETAIL U

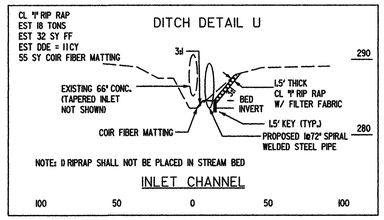

SHEET	ROADWAY	STATION	SIDE
14	-L-	132+85	LT

DITCH DETAIL V

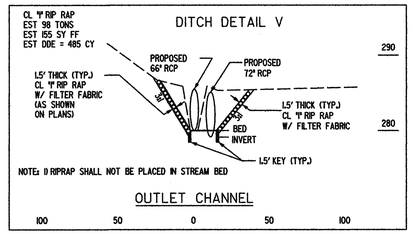

SHEET	ROADWAY	STATION	SIDE
14	-L-	135+30	RT

DITCH DETAIL W

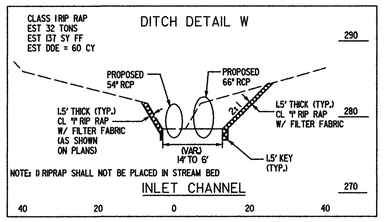

SHEET	ROADWAY	STATION	SIDE
17	-L-	177+12	RT

DITCH DETAIL X

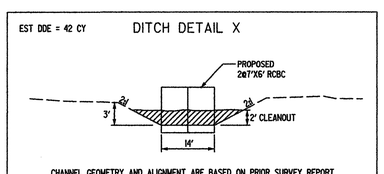

SHEET	ROADWAY	STATION	SIDE
19	-L-	199+96.10	RT

DETAIL I
FALSE SUMP
(Not to Scale)

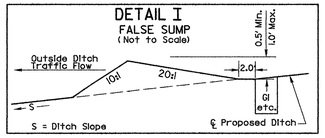

SHEET	ROADWAY	STATION	SIDE
6	-L-	38+40	LT
10	-L-	82+03.31	RT
11	-L-	101+50	RT
12	-L-	110+65	RT
12	-L-	114+15	RT
14	-L-	132+00	RT
16	-L-	158+20	LT
16	-L-	160+00	LT
16	-L-	165+50	LT
19	-L-	194+54	RT
19	-L-	198+53	RT
20	-L-	205+96	LT
21	-L-	218+60	LT
21	-L-	221+03	LT
22	-L-	234+50	LT
35	-Y12-	38+64.65	LT

DETAIL II
FALSE SUMP
(Not to Scale)

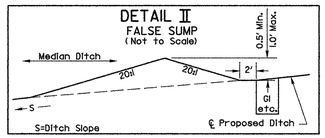

SHEET	ROADWAY	STATION	SIDE
9	-L-	75+00	LT
12	-L-	110+85	MED
13	-L-	120+74	MED
13	-L-	125+98	MED
14	-L-	132+00	MED
15	-L-	150+75	MED
16	-L-	158+50	MED
18	-L-	195+00	MED
19	-L-	201+03	MED
20	-L-	212+50	MED
21	-L-	215+10	MED
21	-L-	218+56	MED
21	-L-	220+99	MED
22	-L-	234+48	MED
34	-Y12-	12+57.72	RT

DETAIL III
FALSE SUMP
(Not to Scale)

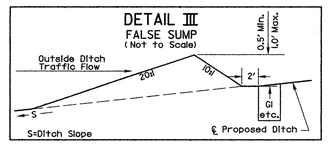

SHEET	ROADWAY	STATION	SIDE
11	-L-	101+85	LT
12	-L-	114+38	LT
13	-L-	119+90	LT
15	-L-	151+05	RT
16	-L-	159+00	RT
17	-L-	169+00	LT
19	-L-	193+66	LT
21	-L-	218+56	RT
22	-L-	232+47	RT

DETAIL IV
FALSE SUMP
(Not to Scale)

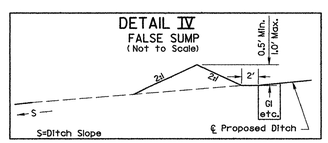

SHEET	ROADWAY	STATION	SIDE
10	-L-	93+20	LT
11	-L-	96+35	RT
17	-L-	172+50	LT
28	-L-	307+21	LT

Plans prepared by:
KO & ASSOCIATES, P.C.
Consulting Engineers
1011 SCHAUB DR., SUITE #202
RALEIGH, N.C. 27606
(919)-851-6066

8/17/99

PROJECT REFERENCE NO.	SHEET NO.
U-4026	2-I
R/W SHEET NO.	

ROADWAY DESIGN ENGINEER: NORTH CAROLINA PROFESSIONAL SEAL 20774 ENGINEER STEPHEN R. WHITLEY 6-12-06

HYDRAULICS ENGINEER: NORTH CAROLINA PROFESSIONAL SEAL 021162 ENGINEER W. HERBERT TURNER JR. 6-12-06

EST DDE = 30 CY
EST 100 TONS CLASS I RIP RAP
EST. 381 SY FF
EST 180 SY COIR FIBER MATTING

DITCH DETAIL Y

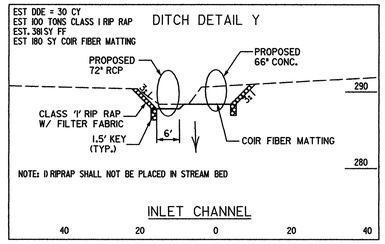

SHEET	ROADWAY	STATION	SIDE
22	-L-	230+40	LT

EST DDE = 315 CY
EST 300 TONS CLASS I RIPRAP
EST 860 SY FF
EST 125 SY COIR FIBER MATTING

DITCH DETAIL Z

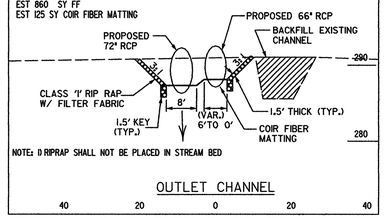

SHEET	ROADWAY	STATION	SIDE
22	-L-	229+70	RT

EST DDE = 65 CY
EST 40 TONS CLASS I RIPRAP
EST 232 SY FF
EST 75 SY COIR FIBER MATTING

DITCH DETAIL AA

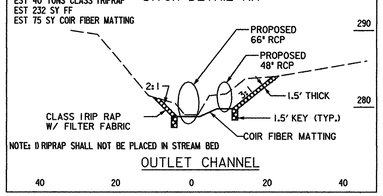

SHEET	ROADWAY	STATION	SIDE
27	-L-	287+60	LT

CL 'I' RIP RAP
EST 60 TONS
EST 256 SY FF
EST DDE = 350 CY
EST 150 SY COIR FIBER MATTING

DITCH DETAIL BB

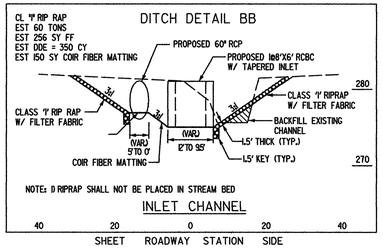

SHEET	ROADWAY	STATION	SIDE
27	-L-	294+11	RT

EST DDE = 140 CY
EST 85 TONS CLASS I RIPRAP
EST 265 SY FF
EST 80 SY COIR FIBER MATTING

DITCH DETAIL CC

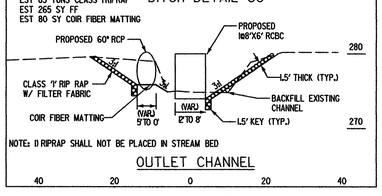

SHEET	ROADWAY	STATION	SIDE
27	-L-	293+40	LT

DETAIL DD
PREFORMED SCOUR HOLE

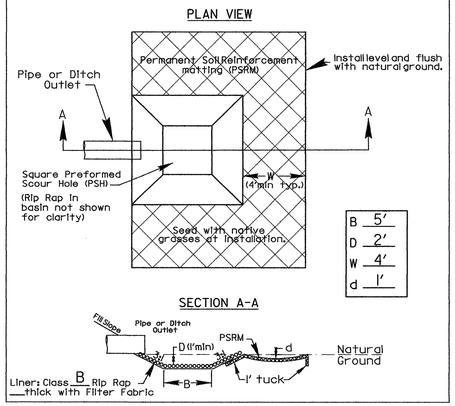

SHEET	ROADWAY	STATION	SIDE
14	-L-	132+00	LT
19	-L-	199+25	RT
25	-L-	267+75	RT
26	-L-	281+00	RT
27	-L-	295+78	RT
29	-L-	320+60	LT

DETAIL HH
PREFORMED SCOUR HOLE

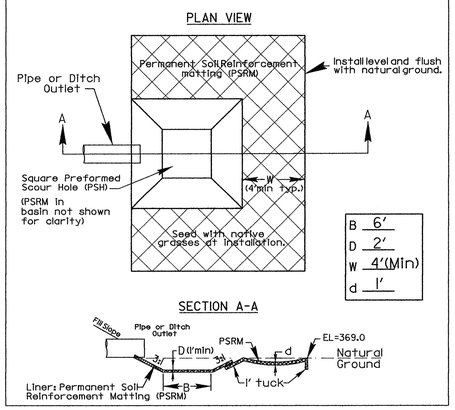

SHEET	ROADWAY	STATION	SIDE
7	-L-	36+35	LT

DETAIL GG
RIP RAP AT EMBANKMENT
(Not to Scale)

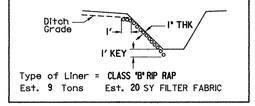

SHEET	ROADWAY	STATION	SIDE
19	-L-	200+10	RT

DETAIL EE
ROCK CROSS VANE DETAIL
NOT TO SCALE

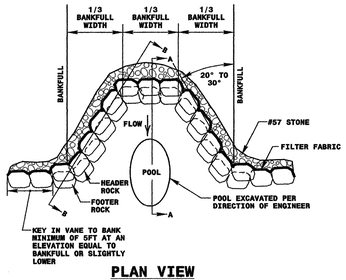

PLAN VIEW

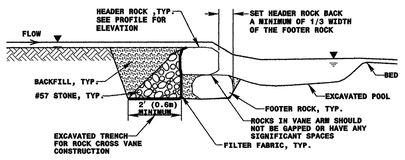

SECTION A-A

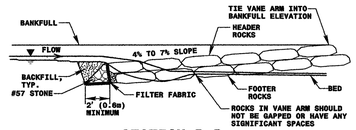

SECTION B-B

NOTES:
1. DEPEST PART OF POOL TO BE IN LINE WITH WHERE VANE ARM TIES INTO BANKFULL.
2. DO NOT EXCAVATE POOL TOO CLOSE TO FOOTER ROCKS.
3. CLASS "A" STONE CAN BE USED TO REDUCE VOIDS BETWEEN HEADERS AND FOOTERS.
4. COMPACT BANKFULL TO EXTENT POSSIBLE OR AT THE DIRECTION OF THE ENGINEER.
5. POOL DEPTH SHOULD BE 2 TO 3 TIMES BANKFULL DEPTH.

HEADER/FOOTER ROCK DIMENSIONS (FT)			
STATION	HEIGHT	LENGTH	WIDTH
94+75	2FT	3FT	3FT

LOCATION

-L- STA. 94+75 LT.

℄ SECTION

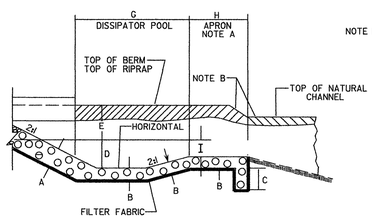

NOTE A IF EXIT VELOCITY OF BASIN IS SPECIFIED, EXTEND BASIN AS REQUIRED TO OBTAIN SUFFICIENT CROSS SECTIONAL AREA AT SECTION A-A SUCH THAT Q des /CROSS SECTION AREA AT SEC. A-A) = SPECIFIED EXIT VELOCITY.

NOTE B WARP BASIN TO CONFORM TO NATURAL STREAM CHANNEL. TOP OF RIPRAP IN FLOOR OF BASIN SHOULD BE AT SAME ELEVATION OR LOWER THAN NATURAL CHANNEL BOTTOM AT SEC. A-A. PROVIDE SMOOTH TRANSITION FROM END OF APRON TO NATURAL CHANNEL WIDTH.

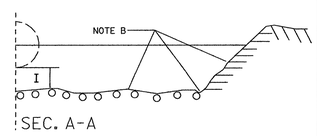

HALF PLAN

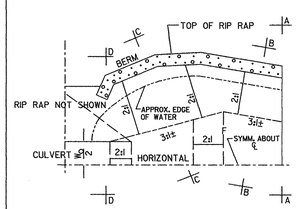

BASIN #	LOCATION (AT OUTLET)
1	94+45 / LT / -L-
2	175+25 / RT / -L-
3	215+12 / RT / -L-
4	
5	
6	
7	
8	

DIM.	RIP RAP BASIN #							
	1	2	3	4	5	6	7	8
A	3	3	3					
B	2	2	2					
C	2	2	2					
D	1.5	3	3					
E	3.8	1	1					
F	10	8	8					
G	15	25	25					
H	7	13	13					
I	1	2	2					

ALL DIMENSIONS APPROXIMATE

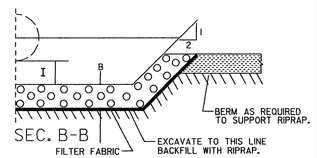

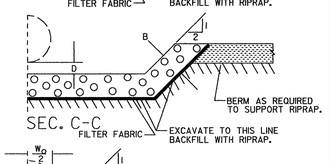

NOTE:
W_O = DIAMETER FOR PIPE CULVERT
W_O = BARREL WIDTH FOR BOX CULVERT
W_O = SPAN OF PIPE-ARCH CULVERT

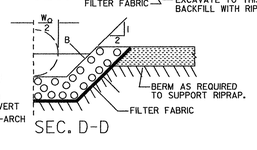

DETAIL FF
DETAIL OF RIP-RAPPED ENERGY DISSIPATOR BASIN

BASIN	SHEET	ROADWAY	SIDE
# 1	11	-L-	LT
# 2	17	-L-	RT
# 3	21	-L-	RT

Plans prepared by:
KO & ASSOCIATES, P.C.
Consulting Engineers
1011 SCHAUB DR., SUITE #202
RALEIGH, N.C. 27606
(919)-851-6066

6/8/2006
R:\Roadway\Proj\u4026e2_h_1.dgn
KO & Associates, P.C.

7/2/99

PROJECT REFERENCE NO.	SHEET NO.
U-4026	2-J
R/W SHEET NO.	
ROADWAY DESIGN ENGINEER	

GRAPHIC SCALE
50 0 50 100
PLANS

NORTH CAROLINA PROFESSIONAL SEAL 20774 ENGINEER STEPHEN R. WHITLEY 5-2-06

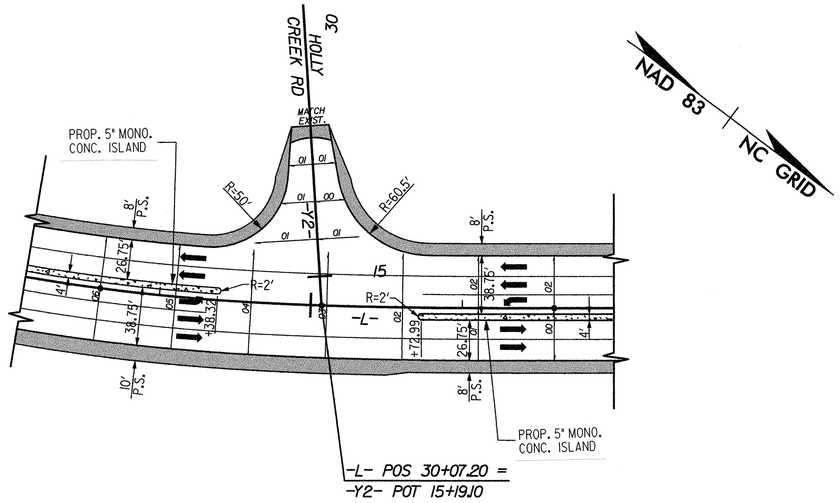

DAVIS DRIVE (-L-)/HOLLY CREEK RD (-Y2-) INTERSECTION DETAIL

INTERSECTION DETAIL SHOWN FROM PLAN SHEET 5

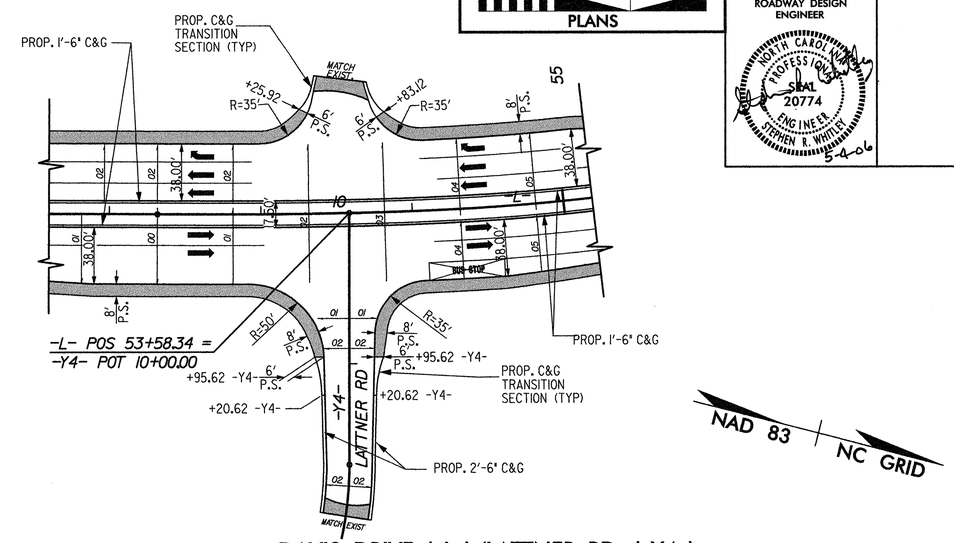

DAVIS DRIVE (-L-)/LATTNER RD (-Y4-) INTERSECTION DETAIL

INTERSECTION DETAIL SHOWN FROM PLAN SHEET 7

FOR C&G TRANSITION DETAIL, SEE SHEET 2-N

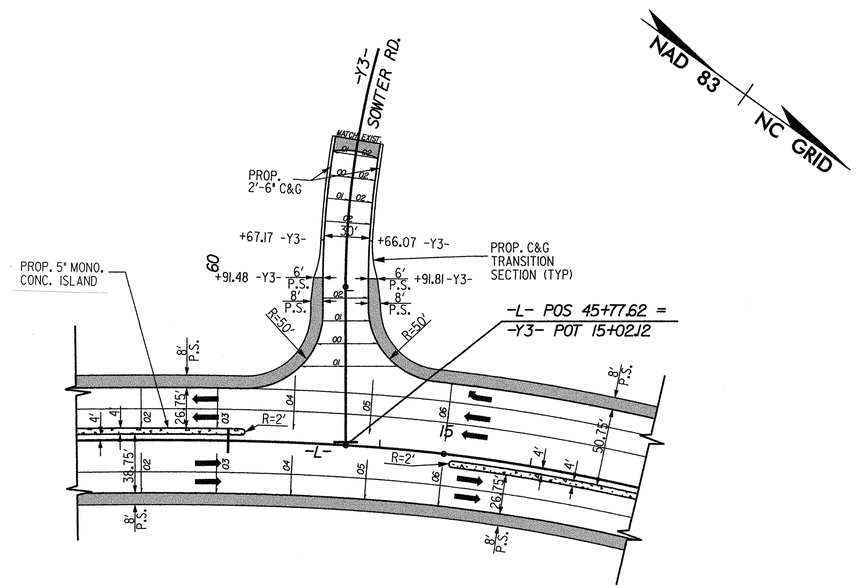

DAVIS DRIVE (-L-)/SOWTER RD (-Y3-) INTERSECTION DETAIL

INTERSECTION DETAIL SHOWN FROM PLAN SHEET 6

FOR C&G TRANSITION DETAIL, SEE SHEET 2-N

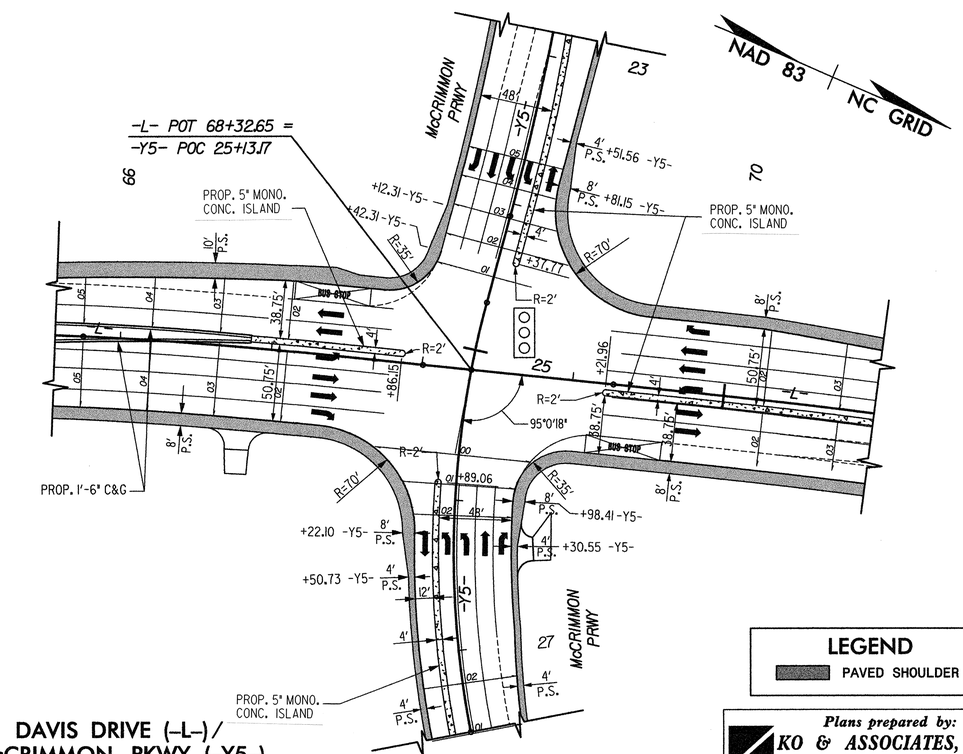

DAVIS DRIVE (-L-)/ McCRIMMON PKWY (-Y5-) INTERSECTION DETAIL

INTERSECTION DETAIL SHOWN FROM PLAN SHEET 8

LEGEND

PAVED SHOULDER

Plans prepared by:
KO & ASSOCIATES, P.C.
Consulting Engineers
1011 SCHAUB DR., SUITE #202
RALEIGH, N.C. 27606
(919)-851-6066

5/2/2006
R:\Roadway\Proj\u4026p2-j.dgn
Ko & Associates, P.C.

PROJECT REFERENCE NO.	SHEET NO.
U-4026	2-K
R/W SHEET NO.	

ROADWAY DESIGN ENGINEER

NORTH CAROLINA PROFESSIONAL SEAL 20774 ENGINEER STEPHEN R. WHITLEY

5-4-06

GRAPHIC SCALE

50 0 50 100

PLANS

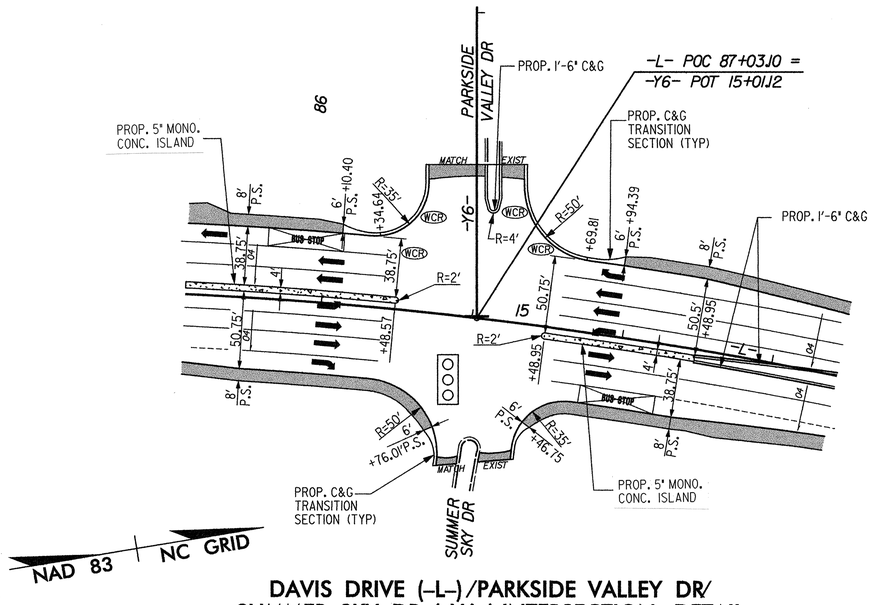

DAVIS DRIVE (-L-)/PARKSIDE VALLEY DR/ SUMMER SKY DR (-Y6-) INTERSECTION DETAIL

INTERSECTION DETAIL SHOWN FROM PLAN SHEET 10

FOR C&G TRANSITION DETAIL, SEE SHEET 2-N

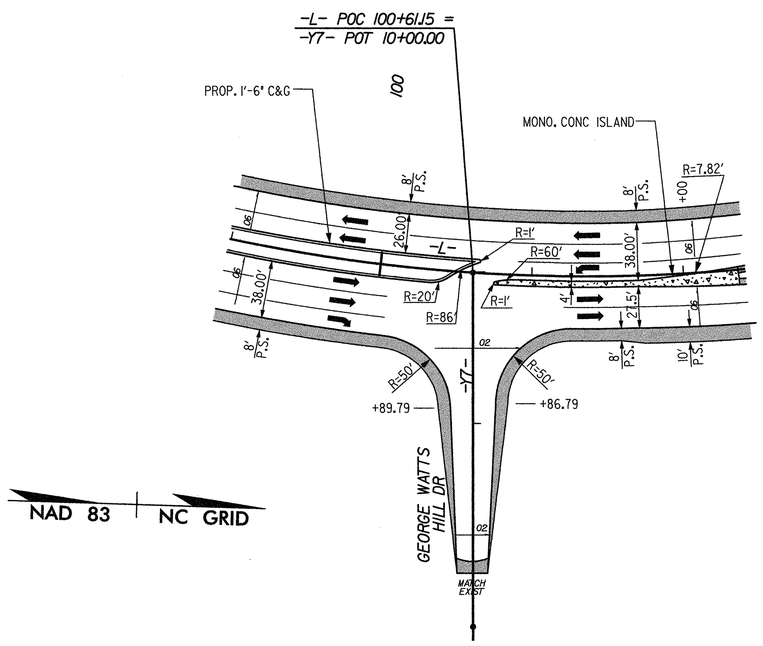

DAVIS DRIVE (-L-)/ GEORGE WATTS HILL DR (-Y7-) INTERSECTION DETAIL

INTERSECTION DETAIL SHOWN FROM PLAN SHEET 11

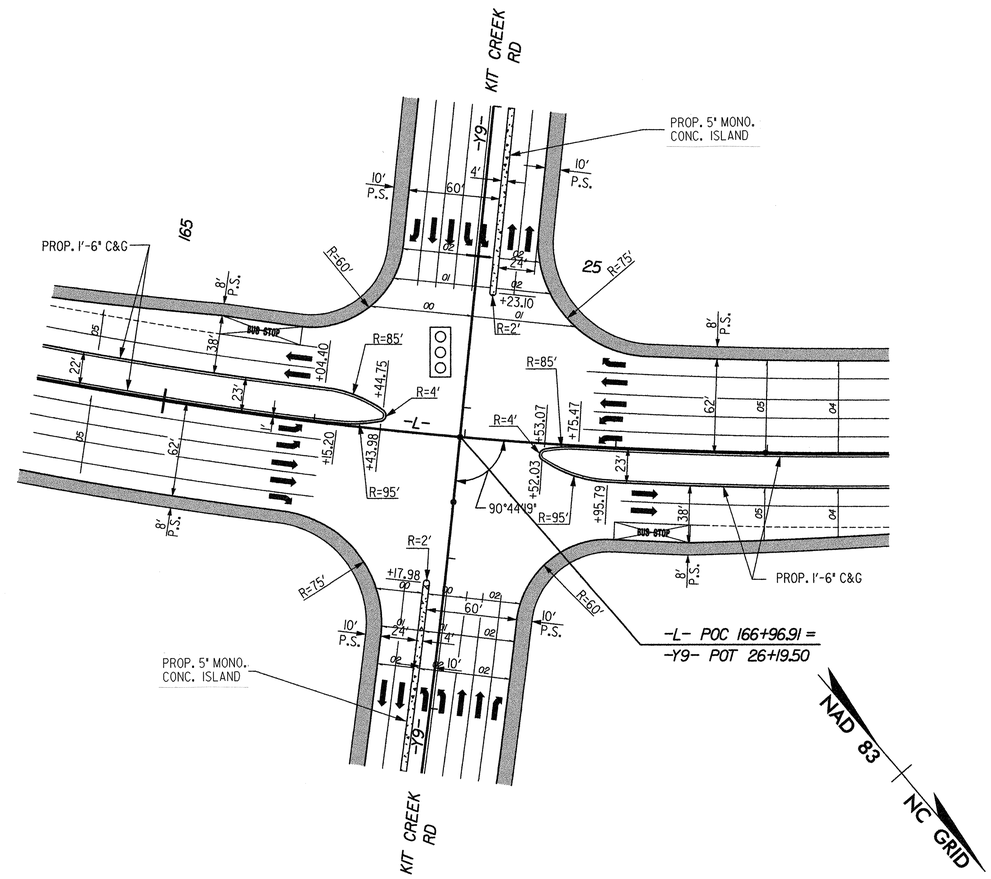

DAVIS DRIVE (-L-)/KIT CREEK RD (-Y9-) INTERSECTION DETAIL

INTERSECTION DETAIL SHOWN FROM PLAN SHEET 17

LEGEND

PAVED SHOULDER

Plans prepared by:
KO & ASSOCIATES, P.C.
Consulting Engineers
1011 SCHAUB DR., SUITE #202
RALEIGH, N.C. 27606
(919)-851-6066

PROJECT REFERENCE NO.	SHEET NO.
U-4026	2-L
R/W SHEET NO.	

ROADWAY DESIGN ENGINEER

NORTH CAROLINA PROFESSIONAL SEAL 20774 ENGINEER STEPHEN R. WHITLEY

5-4-06

GRAPHIC SCALE

50 0 50 100

PLANS

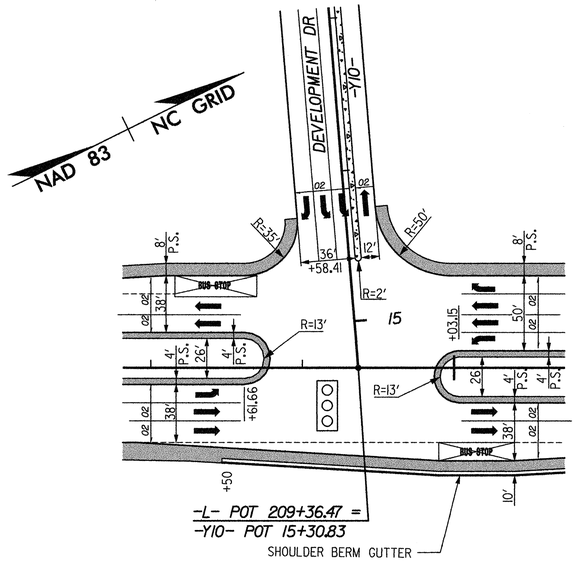

DAVIS DRIVE (-L-)/DEVELOMENT DR (-Y10-) INTERSECTION DETAIL

INTERSECTION DETAIL SHOWN FROM PLAN SHEET 20

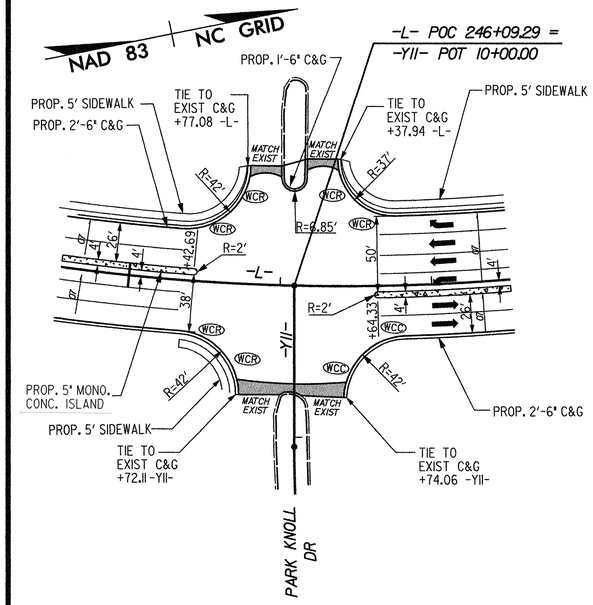

DAVIS DRIVE (-L-)/PARK KNOLL DR (-Y11-) INTERSECTION DETAIL

INTERSECTION DETAIL SHOWN FROM PLAN SHEET 23

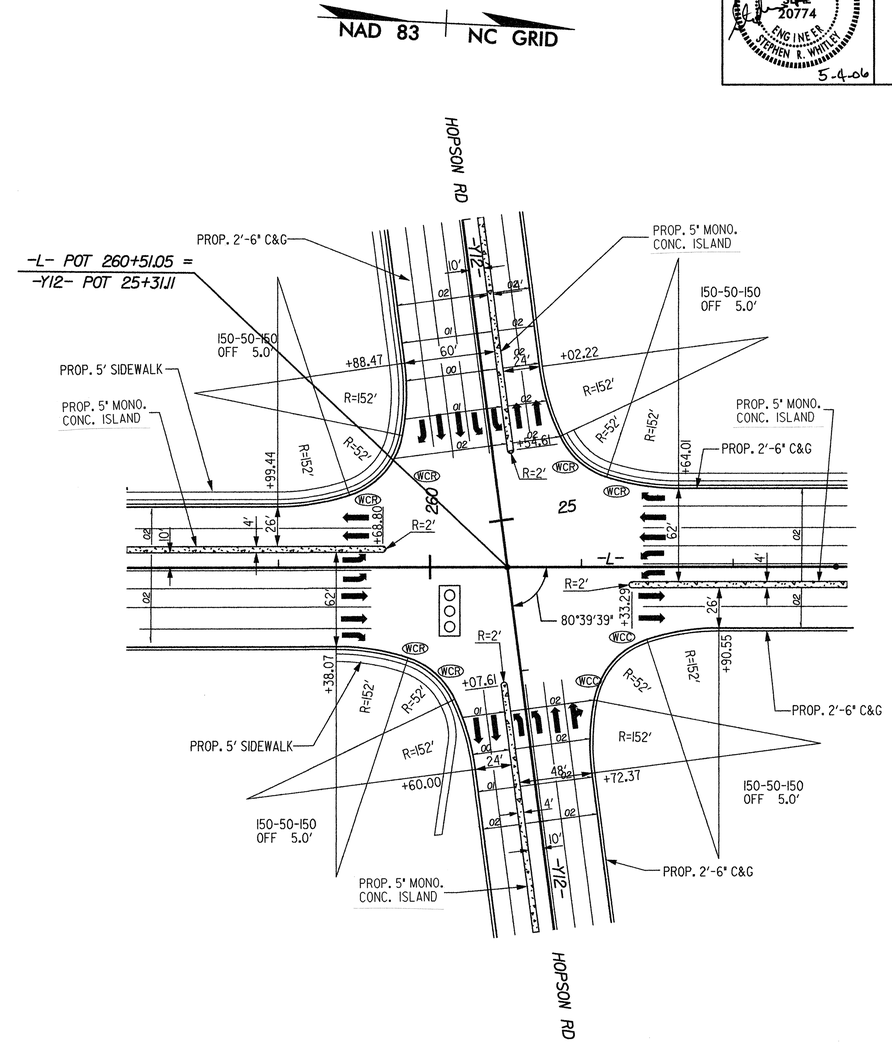

DAVIS DRIVE (-L-)/HOPSON RD (-Y12-) INTERSECTION DETAIL

INTERSECTION DETAIL SHOWN FROM PLAN SHEET 24

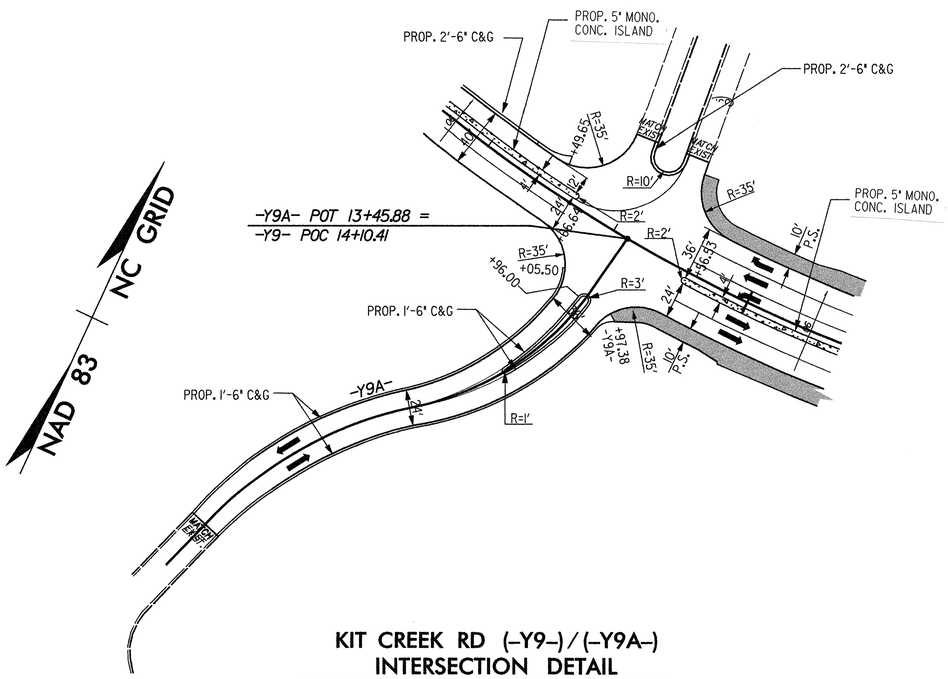

KIT CREEK RD (-Y9-)/(-Y9A-) INTERSECTION DETAIL

INTERSECTION DETAIL SHOWN FROM PLAN SHEET 32

FOR C&G TRANSITION DETAIL, SEE SHEET 2-N

LEGEND

PAVED SHOULDER

Plans prepared by:
KO & ASSOCIATES, P.C.
Consulting Engineers
1011 SCHAUB DR., SUITE #202
RALEIGH, N.C. 27606
(919)-851-6066

GRAPHIC SCALE
50 0 50 100
PLANS

PROJECT REFERENCE NO.	SHEET NO.
U-4026	2-M
R/W SHEET NO.	

ROADWAY DESIGN ENGINEER
NORTH CAROLINA PROFESSIONAL SEAL 20774 ENGINEER STEPHEN R. WHITLEY
8/21/06

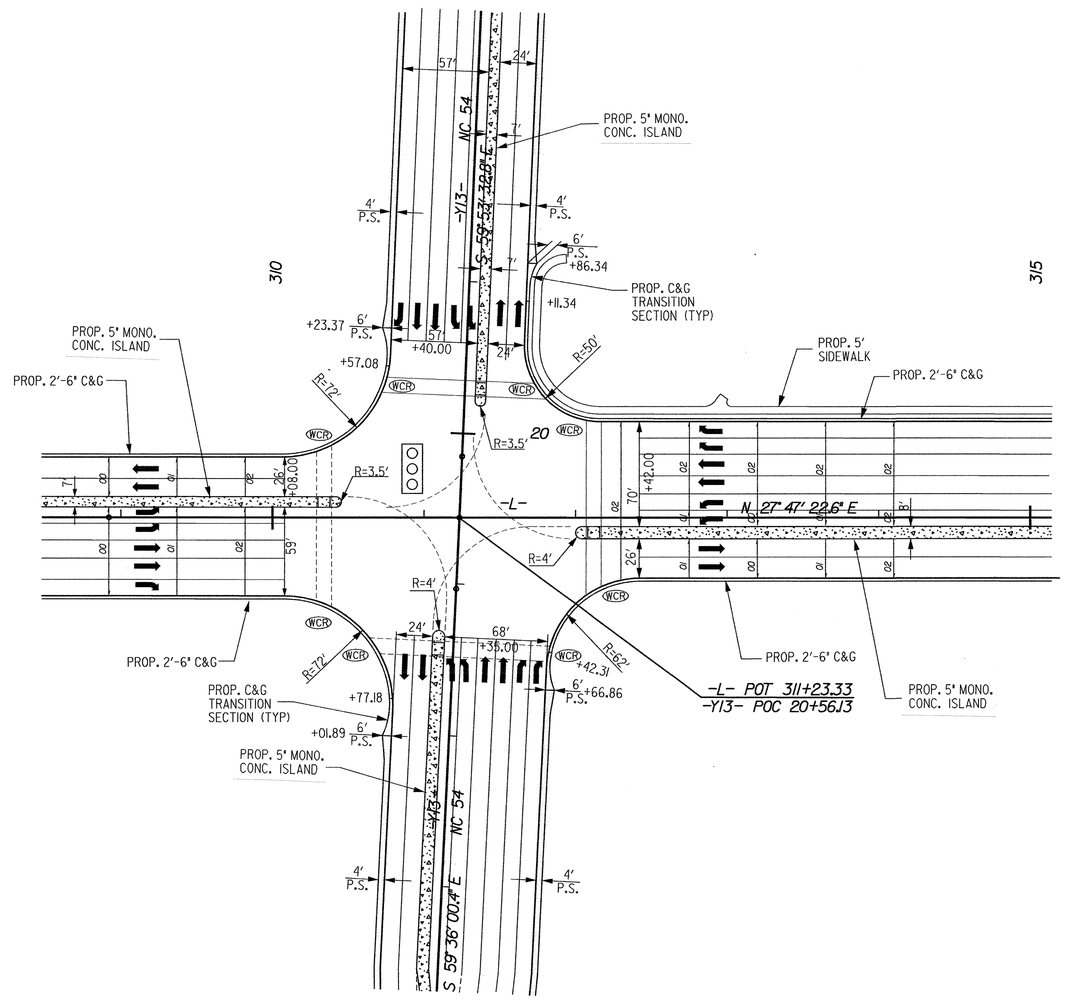

NAD 83 | NC GRID

DAVIS DRIVE (-L-)/NC 54 (-Y13-) INTERSECTION DETAIL

INTERSECTION DETAIL SHOWN FROM PLAN SHEET 29

FOR C&G TRANSITION DETAIL, SEE SHEET 2-N

LEGEND

PAVED SHOULDER

Plans prepared by:
KO & ASSOCIATES, P.C.
Consulting Engineers
1011 SCHAUB DR., SUITE #202
RALEIGH, N.C. 27606
(919)-851-6066

PROJECT REFERENCE NO.	SHEET NO.
U-4026	2-N

GENERAL NOTES:

PROPOSED CONCRETE FLUME SHALL BE CONFIGURED AS DIRECTED BY THE ENGINEER.

THE CONCRETE SHALL BE THE SAME COMPONENTS AND STRENGTH FOR 2'-6" CURB AND GUTTER AND IN ACCORDANCE WITH THE NORTH CAROLINA ROADWAY SPECIFICATIONS.

PAYMENT TO BE MADE AS : **2'-6" CURB AND GUTTER ....LF**

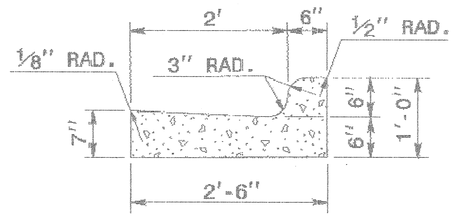

SECTION A-A
2'-6" CURB AND GUTTER

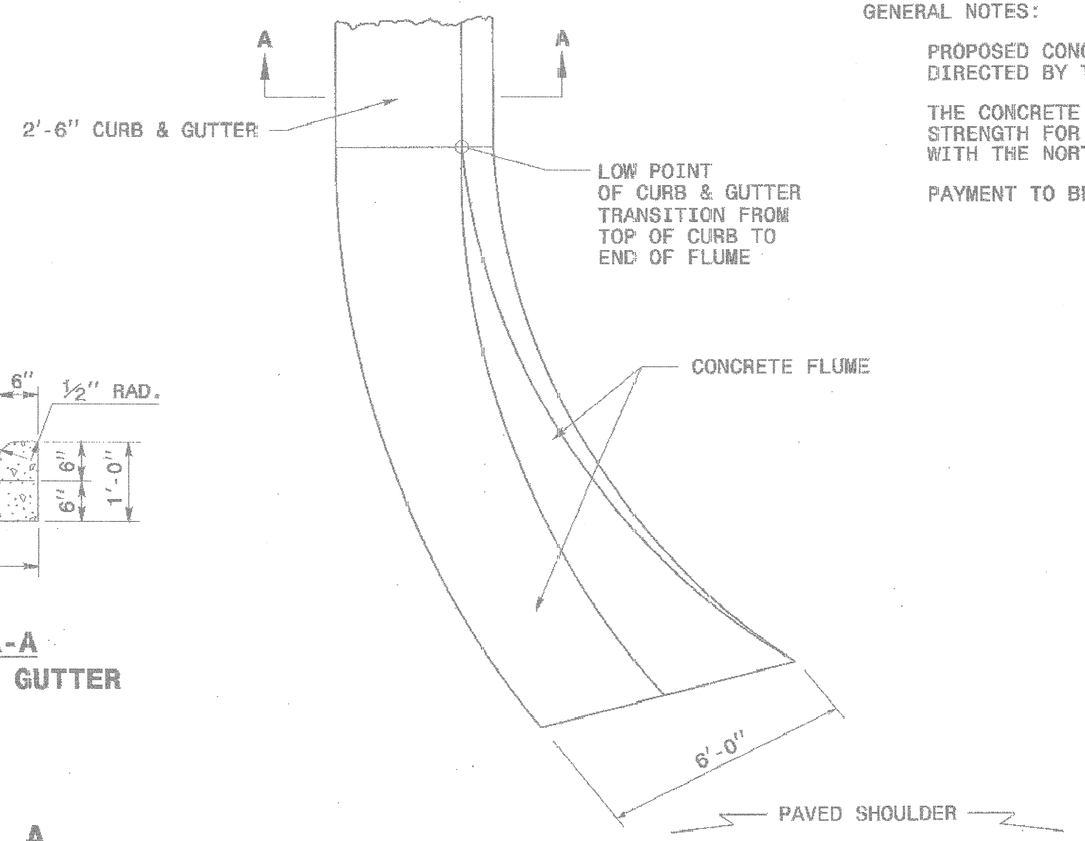

PLAN

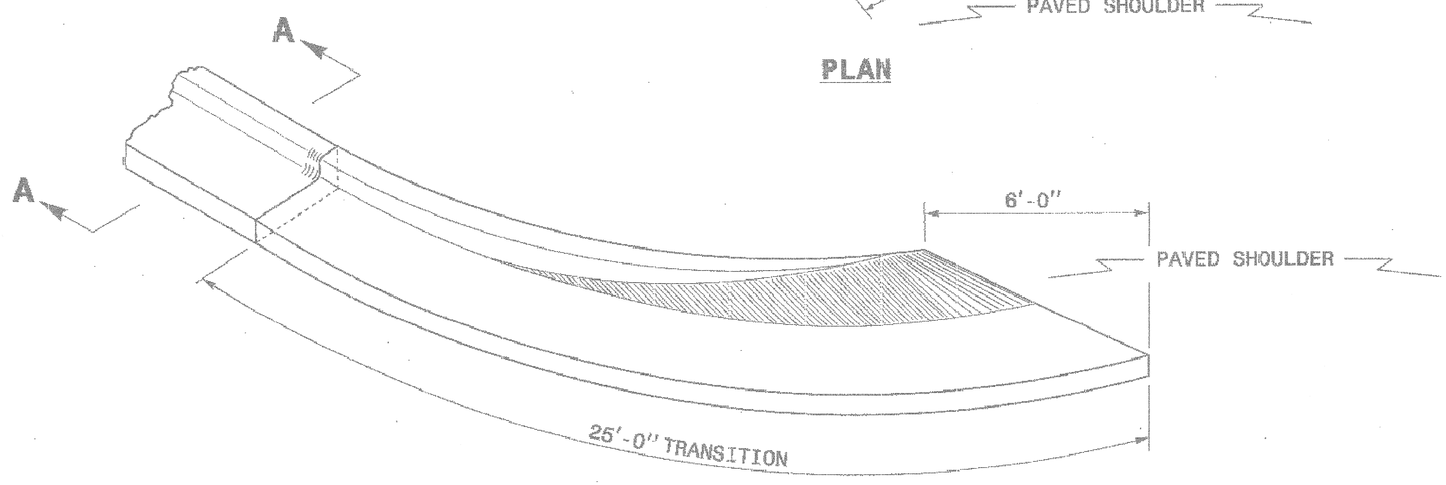

NORTH CAROLINA PROFESSIONAL SEAL 022966 ENGINEER JOEL S. HONEYCUTT
9/22/06

PROJECT SERVICES UNIT
STANDARDS AND SPECIAL DESIGN
Office 919-250-4128 FAX 919-250-4119

2'-6" CURB AND GUTTER TRANSITION TO SHOULDER

ORIGINAL BY:	TSG	DATE:	1/91
MODIFIED BY:	R.E. WARD	DATE:	12/02
CHECKED BY:	[illegible]	DATE:	12-02
FILE SPEC.:	SPECIALDETAIL/SDWG/U2615Cdgtrans		

PROJECT REFERENCE NO.	SHEET NO.
U-4026	2-0
R/W SHEET NO.	
ROADWAY DESIGN ENGINEER	HYDRAULICS ENGINEER
NORTH CAROLINA PROFESSIONAL SEAL 20774 ENGINEER STEPHEN R. WHITLEY 5-4-06	NORTH CAROLINA PROFESSIONAL SEAL 021162 ENGINEER HERBERT TURNER, III 5-4-06

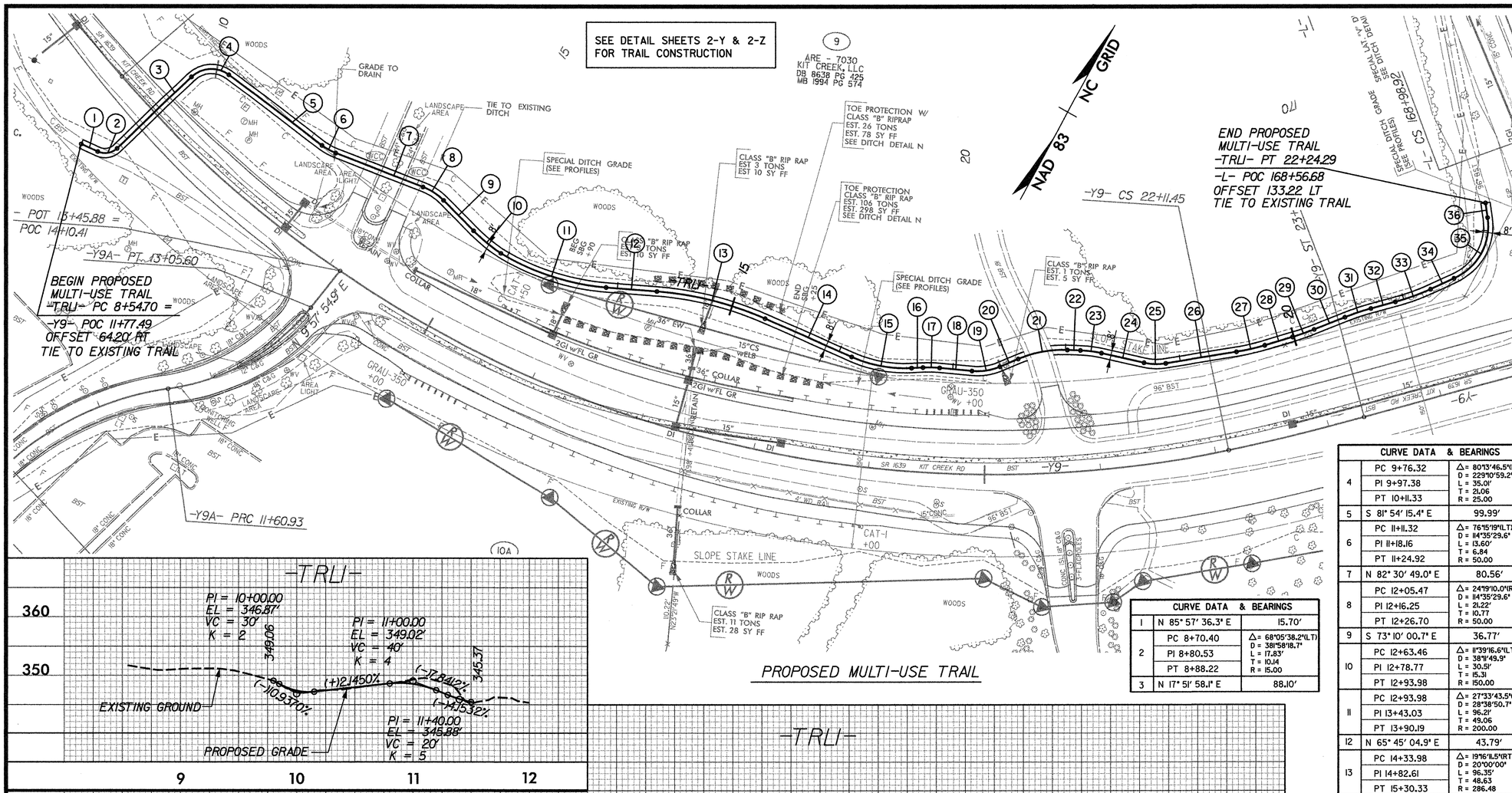

PROPOSED MULTI-USE TRAIL

CURVE DATA & BEARINGS		
1	N 85° 57' 36.3" E	15.70'
2	PC 8+70.40	Δ= 68°05'38.2"(LT) D = 38°58'18.7" L = 17.83' T = 10.14 R = 15.00
	PI 8+80.53	
	PT 8+88.22	
3	N 17° 51' 58.1" E	88.10'

CURVE DATA & BEARINGS		
4	PC 9+76.32	Δ= 80°13'46.5"(RT) D = 229°10'59.2" L = 35.01' T = 21.06 R = 25.00
	PI 9+97.38	
	PT 10+11.33	
5	S 81° 54' 15.4" E	99.99'
6	PC 11+11.32	Δ= 76°15'19"(LT) D = 114°35'29.6" L = 13.60' T = 6.84 R = 50.00
	PI 11+18.16	
	PT 11+24.92	
7	N 82° 30' 49.0" E	80.56'
8	PC 12+05.47	Δ= 24°19'10.0"(RT) D = 114°35'29.6" L = 21.22' T = 10.77 R = 50.00
	PI 12+16.25	
	PT 12+26.70	
9	S 73° 10' 00.7" E	36.77'
10	PC 12+63.46	Δ= 11°39'16.6"(LT) D = 38°11'49.9" L = 30.51' T = 15.31 R = 150.00
	PI 12+78.77	
	PT 12+93.98	
11	PC 12+93.98	Δ= 27°33'43.5"(LT) D = 28°38'50.7" L = 96.21' T = 49.06 R = 200.00
	PI 13+43.03	
	PT 13+90.19	
12	N 65° 45' 04.9" E	43.79'
13	PC 14+33.98	Δ= 19°16'11.5"(RT) D = 20°00'00" L = 96.35' T = 48.63 R = 286.48
	PI 14+82.61	
	PT 15+30.33	
14	N 85° 01' 16.4" E	81.31'
15	PC 16+11.63	Δ= 26°28'33.0"(LT) D = 50°00'00" L = 52.95' T = 26.96 R = 114.59
	PI 16+38.59	
	PT 16+64.59	

CURVE DATA & BEARINGS		
16	N 58° 32' 43.4" E	9.73'
17	PC 16+74.32	Δ= 8°14'28.6"(RT) D = 57°17'44.8" L = 14.38' T = 7.20 R = 100.00
	PI 16+81.52	
	PT 16+88.70	
18	N 66° 47' 12" E	27.97'
19	PC 17+16.67	Δ= 28°04'55.1"(LT) D = 114°35'29.6" L = 24.51' T = 12.50 R = 50.00
	PI 17+29.17	
	PT 17+41.17	
20	N 38° 42' 16.9" E	17.09'
21	PC 17+58.26	Δ= 24°46'12.1"(RT) D = 57°17'44.8" L = 43.23' T = 21.96 R = 100.00
	PI 17+80.22	
	PT 18+01.50	
22	N 63° 28' 29.1" E	11.27'
23	PC 18+12.77	Δ= 10°27'53.1"(RT) D = 57°17'44.8" L = 18.26' T = 9.16 R = 100.00
	PI 18+21.92	
	PT 18+31.03	
24	N 73° 56' 22.2" E	37.56'
25	PC 18+68.59	Δ= 21°39'16.6"(LT) D = 114°35'29.6" L = 18.90' T = 9.56 R = 50.00
	PI 18+78.15	
	PT 18+87.48	
26	N 52° 17' 05.6" E	61.50'
27	PC 19+48.98	Δ= 7°09'29.6"(LT) D = 28°38'52.4" L = 24.99' T = 12.51 R = 200.00
	PI 19+61.49	
	PT 19+73.97	
28	N 45° 07' 36.1" E	24.86'
29	PC 19+98.83	Δ= 5°38'34.3"(LT) D = 28°38'52.4" L = 19.70' T = 9.86 R = 200.00
	PI 20+08.69	
	PT 20+18.53	
30	N 39° 29' 01.8" E	28.46'
31	PC 20+46.99	Δ= 06°46'27.4"(RT) D = 28°38'52.4" L = 23.65' T = 11.84 R = 200.00
	PI 20+58.83	
	PT 20+70.64	
32	N 46° 15' 29.1" E	21.79'
33	PC 20+92.43	Δ= 9°14'09.3"(LT) D = 28°38'52.4" L = 32.24' T = 16.15 R = 200.00
	PI 21+08.58	
	PT 21+24.66	
34	N 37°01'19.9" E	22.09'
35	PC 21+46.75	Δ= 74°03'39.5"(LT) D = 114°35'29.6" L = 64.63' T = 37.72 R = 50.00
	PI 21+84.47	
	PT 22+11.38	
36	N 37°02'19.7" W	12.91'

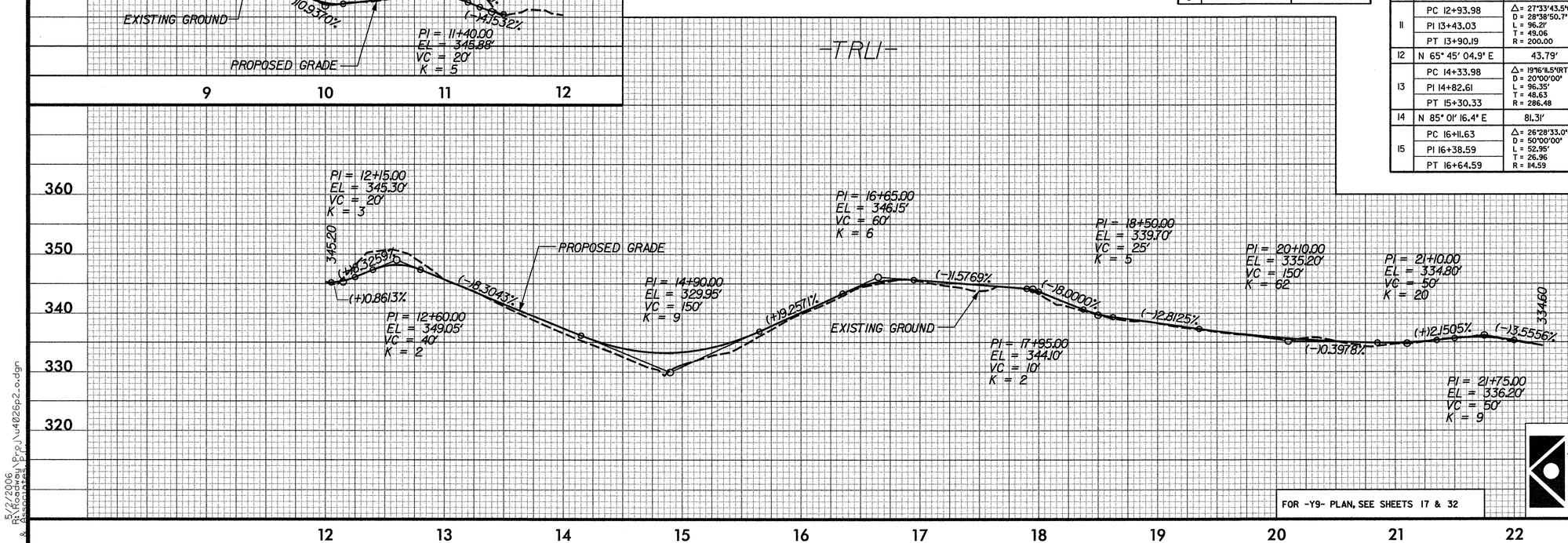

FOR -Y9- PLAN, SEE SHEETS 17 & 32

Plans prepared by:
KO & ASSOCIATES, P.C.
Consulting Engineers
1011 SCHAUB DR., SUITE #202
RALEIGH, N.C. 27606
(919)-851-6066

PROJECT REFERENCE NO.	SHEET NO.
U-4026	2-P
R/W SHEET NO.	
ROADWAY DESIGN ENGINEER	HYDRAULICS ENGINEER

NORTH CAROLINA PROFESSIONAL SEAL 20774 ENGINEER STEPHEN R. WHITLEY 5-4-06

NORTH CAROLINA PROFESSIONAL SEAL 021162 ENGINEER HERBERT TURNER, JR. 5-4-06

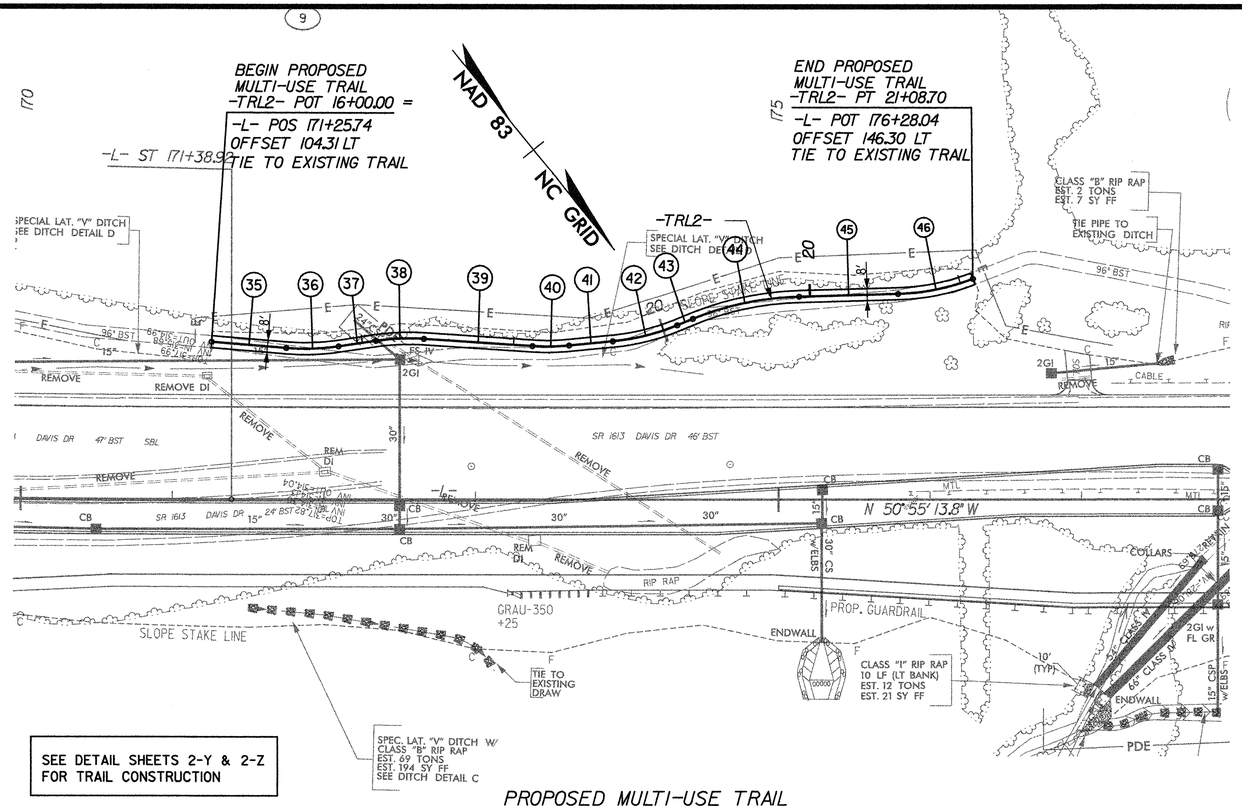

PROPOSED MULTI-USE TRAIL

	CURVE DATA & BEARINGS	
35	N 46° 11' 13" W	49.47'
36	PC 16+49.47	Δ= 131°11'49.1"(LT)
	PI 16+66.82	D = 38°11'49.9"
	PT 16+84.02	L = 34.55'
		T = 17.35
		R = 150.00
37	N 59° 23' 02.0" W	24.94'
38	PC 17+08.97	Δ= 12°10'15.3"(RT)
	PI 17+24.96	D = 38°11'49.9"
	PT 17+40.83	L = 31.86'
		T = 15.99
		R = 150.00
39	N 47° 12' 46.7" W	71.68'
40	PC 18+08.96	Δ= 12°10'16.7"(RT)
	PI 18+24.96	D = 38°11'49.9"
	PT 18+40.83	L = 31.86
		T = 15.99
		R = 150.00
41	N 56° 26' 48.2" W	28.99'
42	PC 18+65.67	Δ= 16°46'26.9"(LT)
	PI 18+87.79	D = 38°11'49.9"
	PT 19+09.59	L = 43.91'
		T = 22.12
		R = 150.00
43	N 73° 13' 15.0" W	11.25'
44	PC 19+20.83	Δ= 20°38'19.3"(RT)
	PI 19+57.25	D = 28°38'52.4"
	PT 19+92.87	L = 72.04'
		T = 36.42
		R = 200.00
45	N 52° 34' 55.7"W	65.28'
46	PC 20+58.16	Δ= 19°18'15.3"(LT)
	PI 20+83.67	D = 38°11'49.9"
	PT 21+08.70	L = 50.54'
		T = 25.51
		R = 150.00

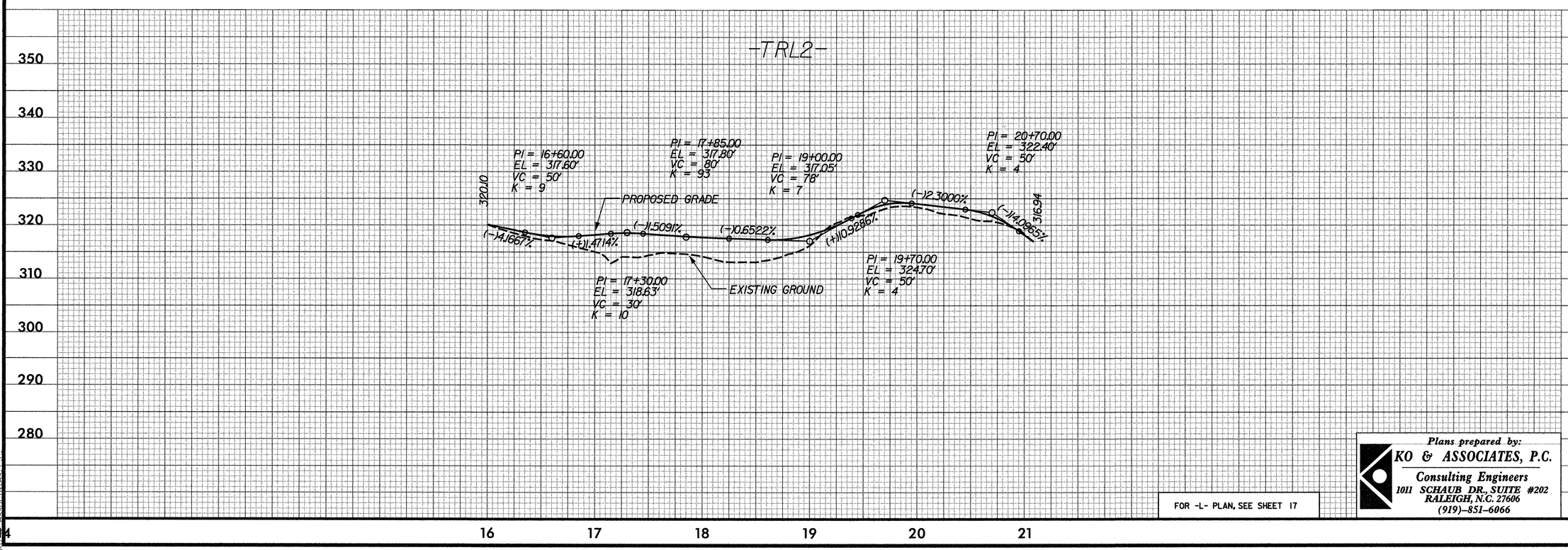

FOR -L- PLAN, SEE SHEET 17

Plans prepared by:
KO & ASSOCIATES, P.C.
Consulting Engineers
1011 SCHAUB DR., SUITE #202
RALEIGH, N.C. 27606
(919)-851-6066

5/2/2006
R:\Roadway\Proj\u4026p2_p.dgn
Ko & Associates, P.C.

PROJECT REFERENCE NO.	SHEET NO.
U-4026	2-Q
R/W SHEET NO.	
ROADWAY DESIGN ENGINEER	HYDRAULICS ENGINEER

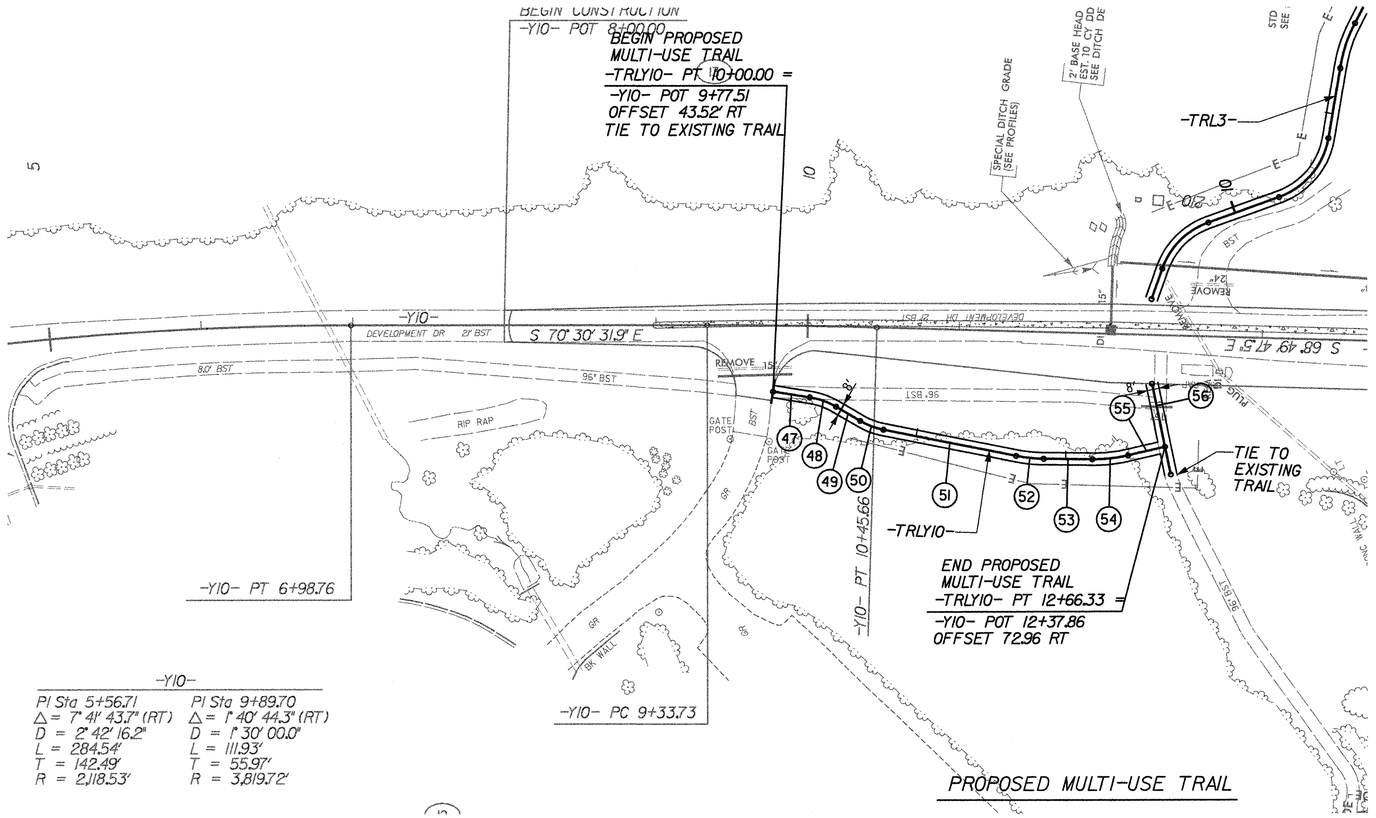

	CURVE DATA & BEARINGS	
47	S 61° 32' 55.3" E	24.59'
48	PC 10+24.59	Δ= 21°07'34.4"(RT) D = 114°35'29.6' L = 18.44' T = 9.32 R = 50.00
	PI 10+33.91	
	PT 10+43.02	
49	S 40° 25' 20.9" E	18.43'
50	PC 12+61.46	Δ= 18°53'02.8"(LT) D = 114°35'29.6' L = 16.48' T = 8.32 R = 50.00
	PI 10+69.77	
	PT 10+77.94	
51	S 59° 18' 23.7" E	89.16'
52	PC 11+67.10	Δ= 10°31'41.6"(LT) D = 57°17'44.8" L = 18.38' T = 9.21 R = 100.00
	PI 11+76.31	
	PT 11+85.47	
53	S 69° 50' 05.3" E	32.03'
54	PC 12+17.50	Δ= 13°36'51.3"(LT) D = 57°17'44.8" L = 23.76' T = 11.94 R = 100.00
	PI 12+29.44	
	PT 12+41.27	
55	S 83° 26' 56.6" E	25.07'
56	N 07° 53' 03.0" E	60.73'

SEE DETAIL SHEETS 2-Y & 2-Z FOR TRAIL CONSTRUCTION

NC GRID NAD 83

-Y10-

PI Sta 5+56.71	PI Sta 9+89.70
Δ = 7° 41' 43.7" (RT)	Δ = 1° 40' 44.3" (RT)
D = 2° 42' 16.2"	D = 1° 30' 00.0"
L = 284.54'	L = 111.93'
T = 142.49'	T = 55.97'
R = 2,118.53'	R = 3,819.72'

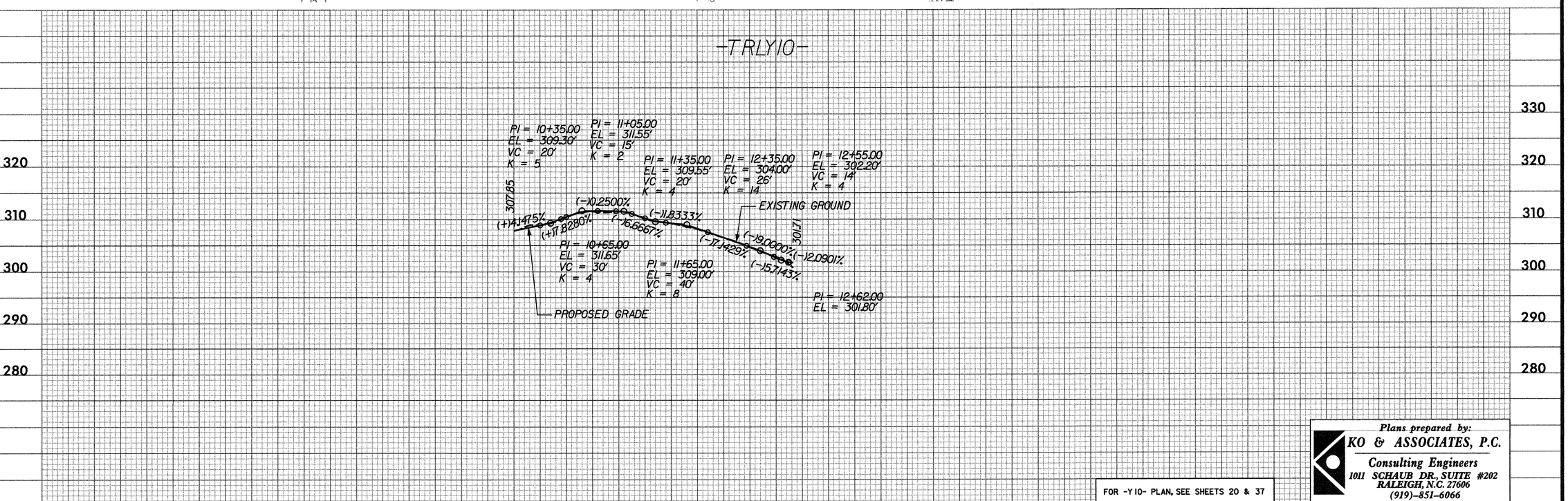

FOR -Y10- PLAN, SEE SHEETS 20 & 37

Plans prepared by:
KO & ASSOCIATES, P.C.
Consulting Engineers
1011 SCHAUB DR., SUITE #202
RALEIGH, N.C. 27606
(919)-851-6066

PROJECT REFERENCE NO.	SHEET NO.
U-4026	2-R
RW SHEET NO.	

ROADWAY DESIGN ENGINEER: NORTH CAROLINA PROFESSIONAL SEAL 20774 ENGINEER STEPHEN R. WHITLEY — 5-4-06

HYDRAULICS ENGINEER: NORTH CAROLINA PROFESSIONAL SEAL 021162 ENGINEER HERBERT TURNER, JR. — 5-4-06

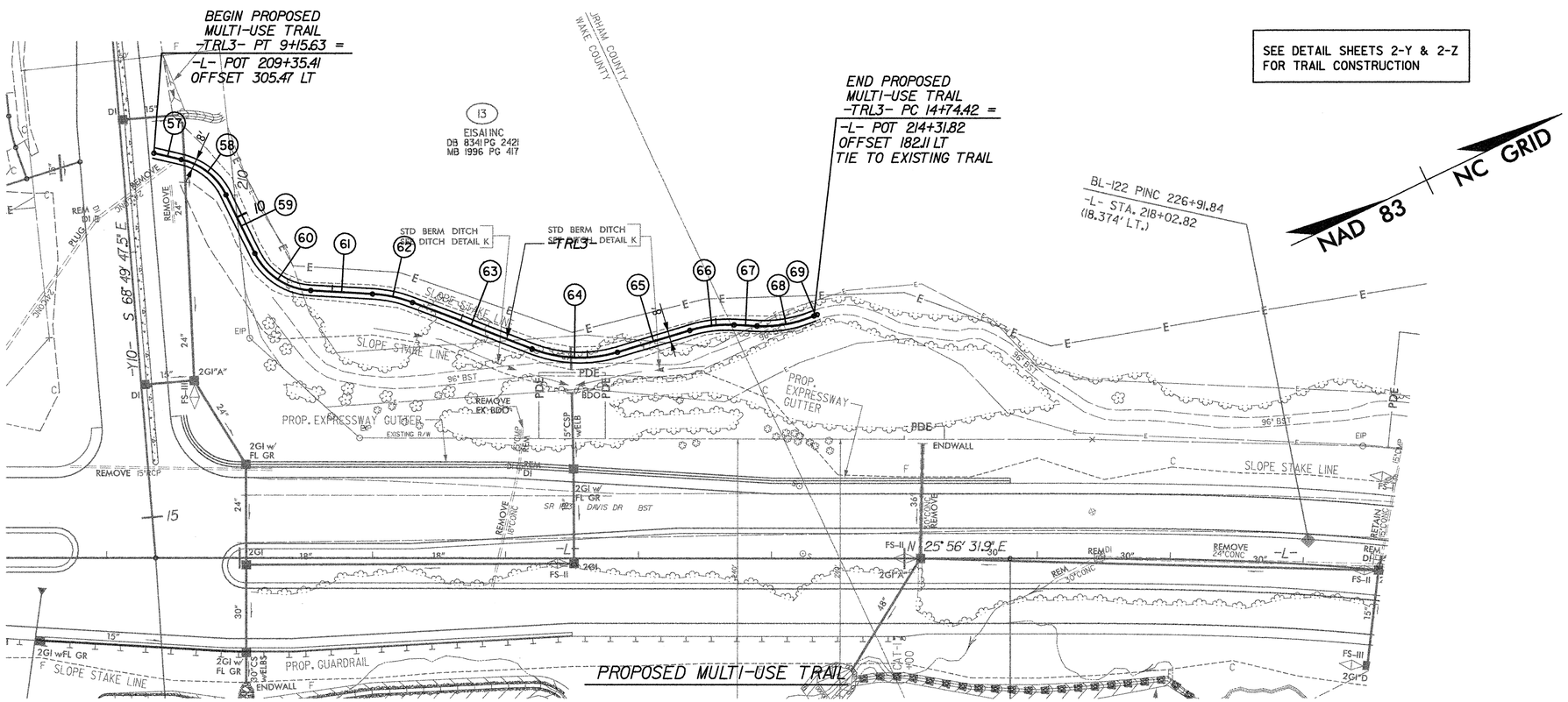

	CURVE DATA & BEARINGS	
57	N 39° 03' 38.6" E	21.14'
58	PC 9+36.77	Δ= 50°56'06.8"(RT)
	PI 9+60.59	D = 114°35'29.6"
	PT 9+81.22	L = 44.45'
		T = 23.81
		R = 50.00
59	N 89° 59' 42.3" E	49.54'
60	PC 10+30.76	Δ= 60°47'51.9"(LT)
	PI 10+60.10	D = 114°35'29.6"
	PT 10+83.82	L = 53.06'
		T = 29.33
		R = 50.00
61	N 29° 11' 50.4" E	46.54'
62	PC 11+60.36	Δ= 17°40'46.4"(RT)
	PI 11+45.91	D = 57°17'44.8"
	PT 11+61.22	L = 30.86'
		T = 15.55
		R = 100.00
63	N 46° 52' 36.8" E	96.25'
64	PC 12+57.46	Δ= 37°29'14.3"(LT)
	PI 12+91.40	D = 57°17'44.8"
	PT 13+22.89	L = 65.43'
		T = 33.93
		R = 100.00
65	N 09° 23' 22.5" E	56.86'
66	PC 13+79.75	Δ= 19°19'23.7"(RT)
	PI 13+96.77	D = 57°17'44.8"
	PT 14+13.47	L = 33.73'
		T = 17.02
		R = 100.00
67	N 28° 42' 46.2"E	17.15'
68	PC 14+30.62	Δ= 25°05'45.2"(LT)
	PI 14+52.88	D = 57°17'44.8"
	PT 14+74.43	L = 43.80'
		T = 22.26
		R = 100.00
69	N 03° 37' 01.1" E	2.68'

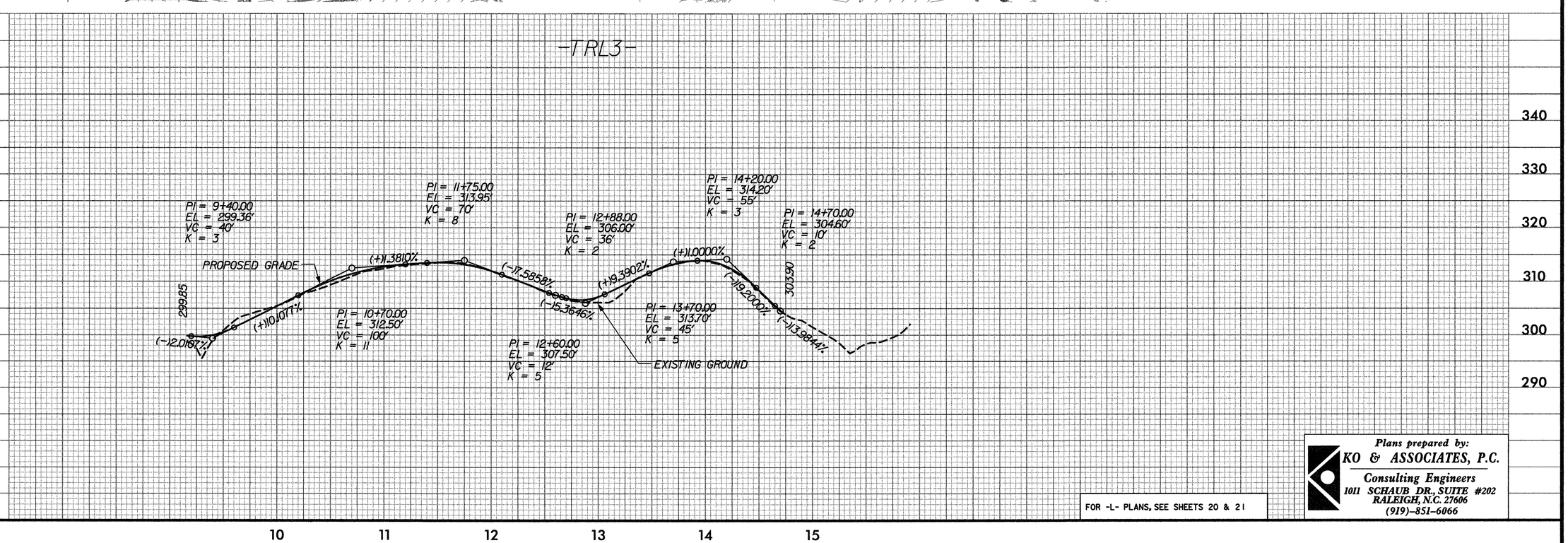

FOR -L- PLANS, SEE SHEETS 20 & 21

Plans prepared by:
KO & ASSOCIATES, P.C.
Consulting Engineers
1011 SCHAUB DR., SUITE #202
RALEIGH, N.C. 27606
(919)-851-6066

REVISIONS

PROJECT REFERENCE NO.	SHEET NO.
U-4026	2-S
R/W SHEET NO.	
ROADWAY DESIGN ENGINEER	HYDRAULICS ENGINEER

NORTH CAROLINA PROFESSIONAL SEAL 20774 ENGINEER STEPHEN R. WHITLEY 5-4-06

NORTH CAROLINA PROFESSIONAL SEAL 021162 ENGINEER HERBERT TURNER, JR. 5-4-06

SEE DETAIL SHEETS 2-Y & 2-Z FOR TRAIL CONSTRUCTION

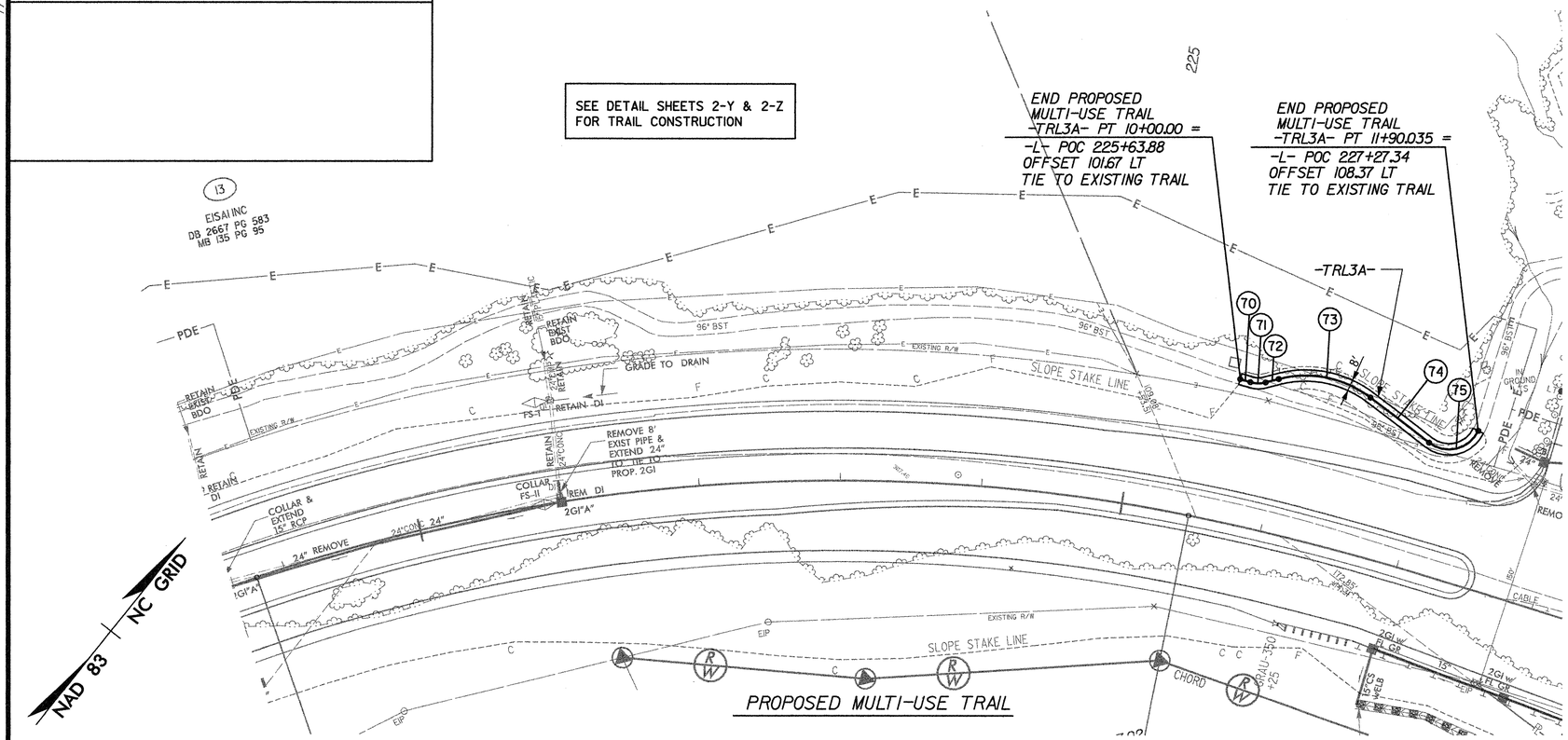

PROPOSED MULTI-USE TRAIL

	CURVE DATA & BEARINGS	
70	N 68° 17′ 43.9″ E	7.46′
71	PC 10+07.46	Δ= 31°20′17.9″(LT)
	PI 10+13.07	D = 286°28′44.0″
	PT 10+18.40	L = 10.94′
		T = 5.61
		R = 20.00
72	N 36° 57′ 26.0″ E	9.65′
73	PC 10+28.05	Δ= 52°21′45.4″(RT)
	PI 10+64.92	D = 76°23′39.7″
	PT 10+96.59	L = 68.54′
		T = 36.87
		R = 75.00
74	N 89° 19′ 11.3″ E	52.48′
75	PC 11+49.07	Δ= 101°27′53.6″(LT)
	PI 11+77.37	D = 247°41′34.3″
	PT 11+90.04	L = 40.96′
		T = 28.29
		R = 23.13

-TRL3A-

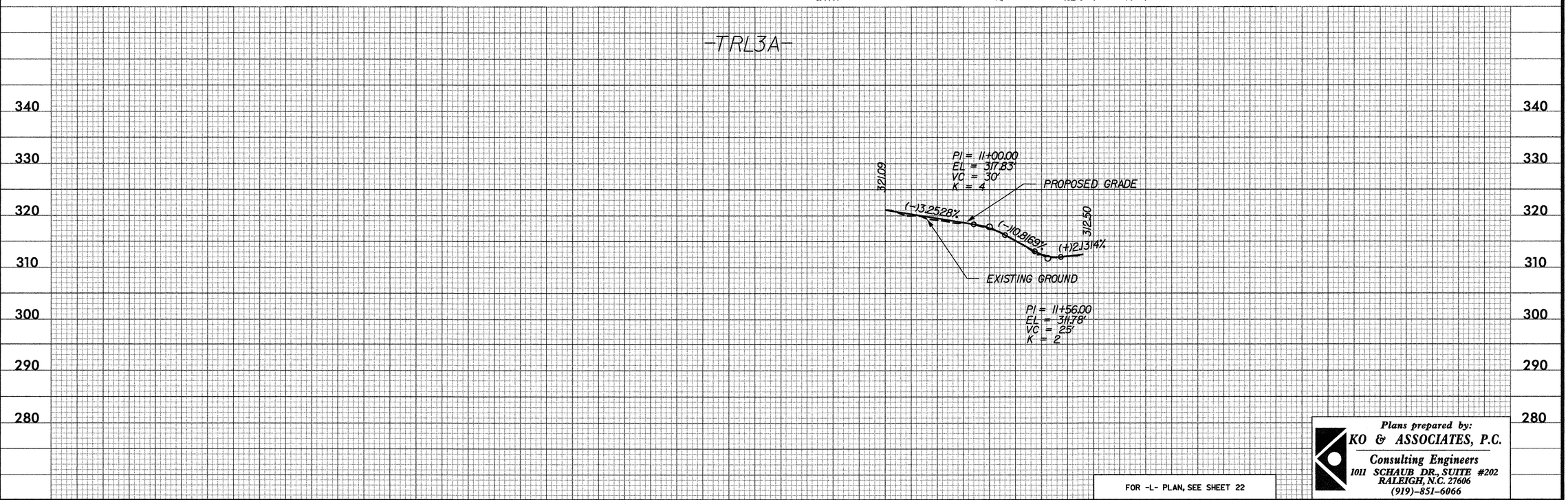

FOR -L- PLAN, SEE SHEET 22

Plans prepared by:
KO & ASSOCIATES, P.C.
Consulting Engineers
1011 SCHAUB DR., SUITE #202
RALEIGH, N.C. 27606
(919)-851-6066

7/2/99

REVISIONS

PROJECT REFERENCE NO.	SHEET NO.
U-4026	2-T
R/W SHEET NO.	
ROADWAY DESIGN ENGINEER	HYDRAULICS ENGINEER

NORTH CAROLINA PROFESSIONAL SEAL 20774 ENGINEER STEPHEN R. WHITLEY 5-4-06

NORTH CAROLINA PROFESSIONAL SEAL 021162 ENGINEER HERBERT TURNER, JR. 5-4-06

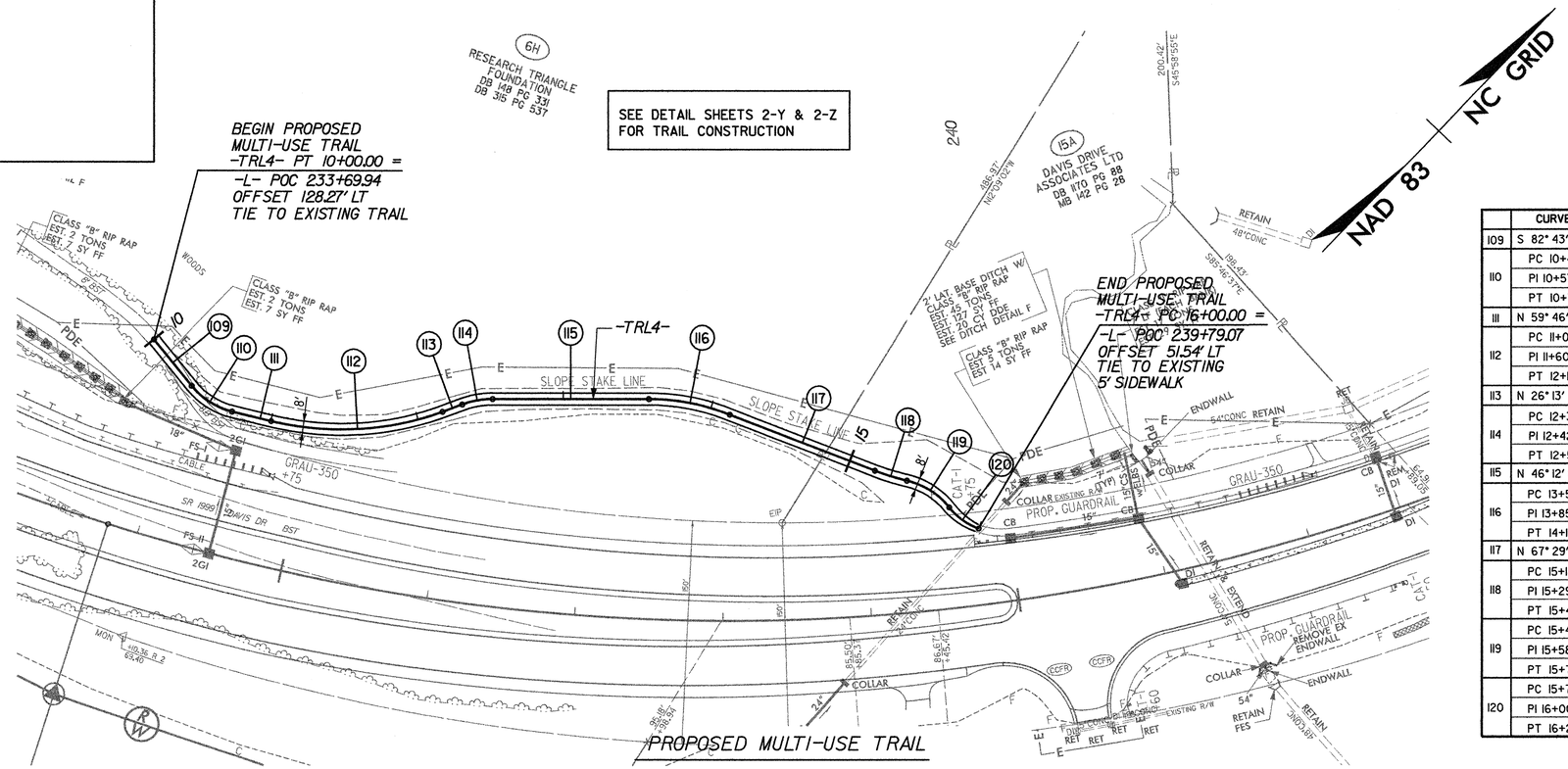

	CURVE DATA & BEARINGS	
109	S 82° 43' 55.6" E	40.42'
110	PC 10+40.42 PI 10+57.39 PT 10+73.14	Δ= 37°29'55.2"(LT) D = 114°35'29.6" L = 32.72' T = 16.97 R = 50.00
111	N 59° 46' 09.2" E	27.10'
112	PC 11+00.24 PI 11+60.52 PT 12+17.34	Δ= 33°32'49.4"(LT) D = 28°38'52.4" L = 117.10 T = 60.28 R = 200.00
113	N 26° 13' 19.8" E	14.14'
114	PC 12+31.48 PI 12+42.05 PT 12+52.41	Δ= 19°58'49.7"(RT) D = 95°29'34.7" L = 20.92' T = 10.57 R = 60.00
115	N 46° 12' 09.2" E	105.15'
116	PC 13+57.56 PI 13+85.75 PT 14+13.30	Δ= 21°17'32.8"(RT) D = 38°11' 49.9" L = 55.74 T = 28.20 R = 150.00
117	N 67° 29' 42.3" E	104.93'
118	PC 15+18.23 PI 15+29.51 PT 15+40.74	Δ= 08°35'43.8"(LT) D = 38°11'49.9" L = 22.50 T = 11.27 R = 150.00
119	PC 15+40.74 PI 15+58.64 PT 15+75.12	Δ= 39°24'23.4"(RT) D = 114°35'34.0" L = 34.39' T = 17.91 R = 50.00
120	PC 15+75.12 PI 16+00.35 PT 16+21.02	Δ= 59°05'24.0"(LT) D = 128°45'12.9" L = 45.89 T = 25.22 R = 44.50

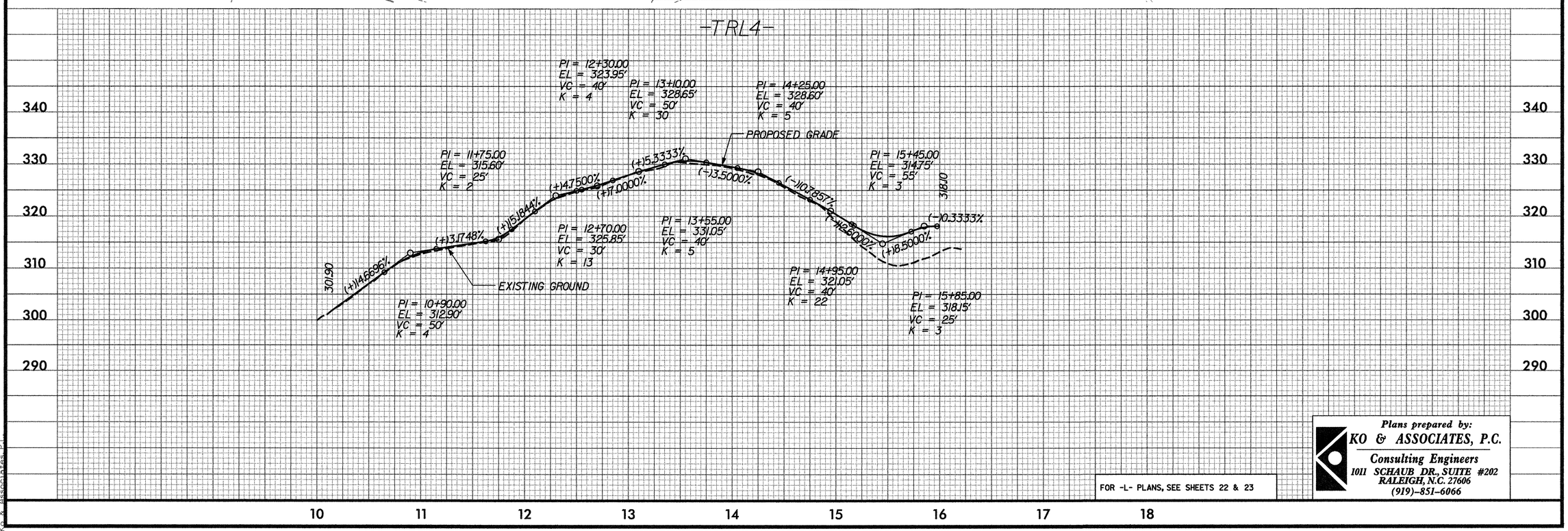

FOR -L- PLANS, SEE SHEETS 22 & 23

Plans prepared by:
KO & ASSOCIATES, P.C.
Consulting Engineers
1011 SCHAUB DR., SUITE #202
RALEIGH, N.C. 27606
(919)-851-6066

7/12/99

REVISIONS

PROJECT REFERENCE NO.	SHEET NO.
U-4026	2-U
R/W SHEET NO.	
ROADWAY DESIGN ENGINEER	HYDRAULICS ENGINEER

NORTH CAROLINA PROFESSIONAL SEAL 20774 ENGINEER STEPHEN R. WHITLEY 5-4-06

NORTH CAROLINA PROFESSIONAL SEAL 021162 ENGINEER HERBERT TURNER, JR. 5-4-06

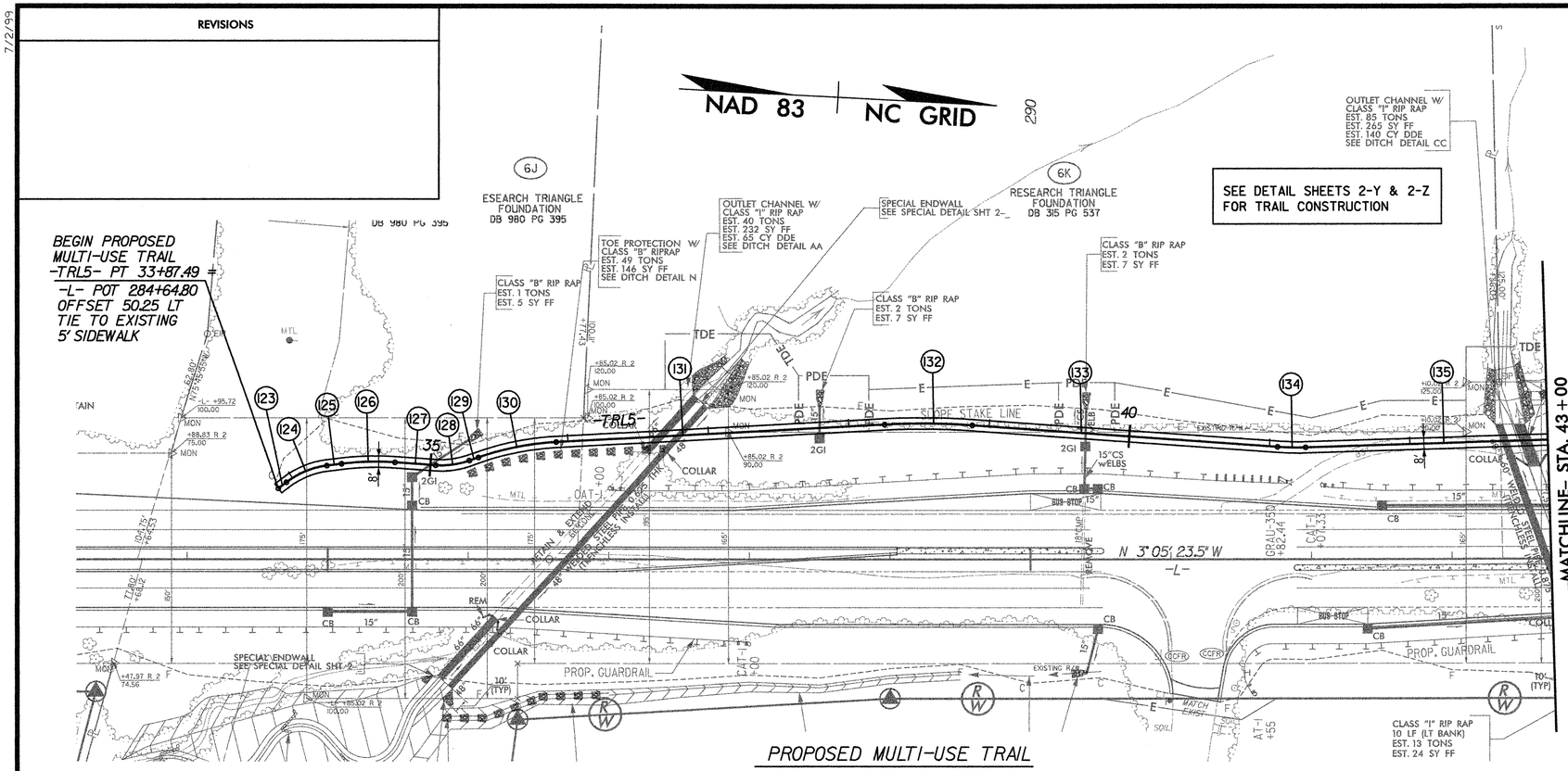

CURVE DATA & BEARINGS		
123	N 39° 58' 08.6" W	7.23'
124	PC 33+94.71	Δ= 29°55'44.9"(RT) D = 95°29'34.7" L = 31.34 T = 16.04 R = 60.00
	PI 34+10.75	
	PT 34+26.06	
125	N 10° 02' 23.7" W	10.55'
126	PC 34+36.61	Δ= 10°54'49.5"(RT) D = 28°38'52.4" L = 38.10 T = 19.11 R = 200.00
	PI 34+55.72	
	PT 34+74.71	
127	N 00° 52' 25.8" E	29.00'
128	PC 35+03.71	Δ= 23°15'26.5"(LT) D = 95°29' 34.7" L = 24.36 T = 12.35 R = 60.00
	PI 35+16.05	
	PT 35+28.06	
129	N 22° 23' 00.7" W	6.91'
130	PC 35+34.96	Δ= 16°12'29.1"(RT) D = 28°38'52.4" L = 56.58 T = 28.48 R = 200.00
	PI 35+63.44	
	PT 35+91.54	
131	N 06° 10' 31.6" W	234.03'
132	PC 38+25.57	Δ= 7°06'32.5"(RT) D = 11°27'33.0" L = 35.86 T = 17.94 R = 500.00
	PI 38+56.81	
	PT 38+87.97	
133	N 0° 58' 33.0" W	217.67'

	CURVE DATA & BEARINGS	
134	PC 41+05.64	Δ= 05°44'38.8"(RT) D = 28°38'52.4" L = 20.05 T = 10.03 R = 200.00
	PI 41+15.68	
	PT 41+25.69	
135	N 04° 46' 05.8" W	213.01'

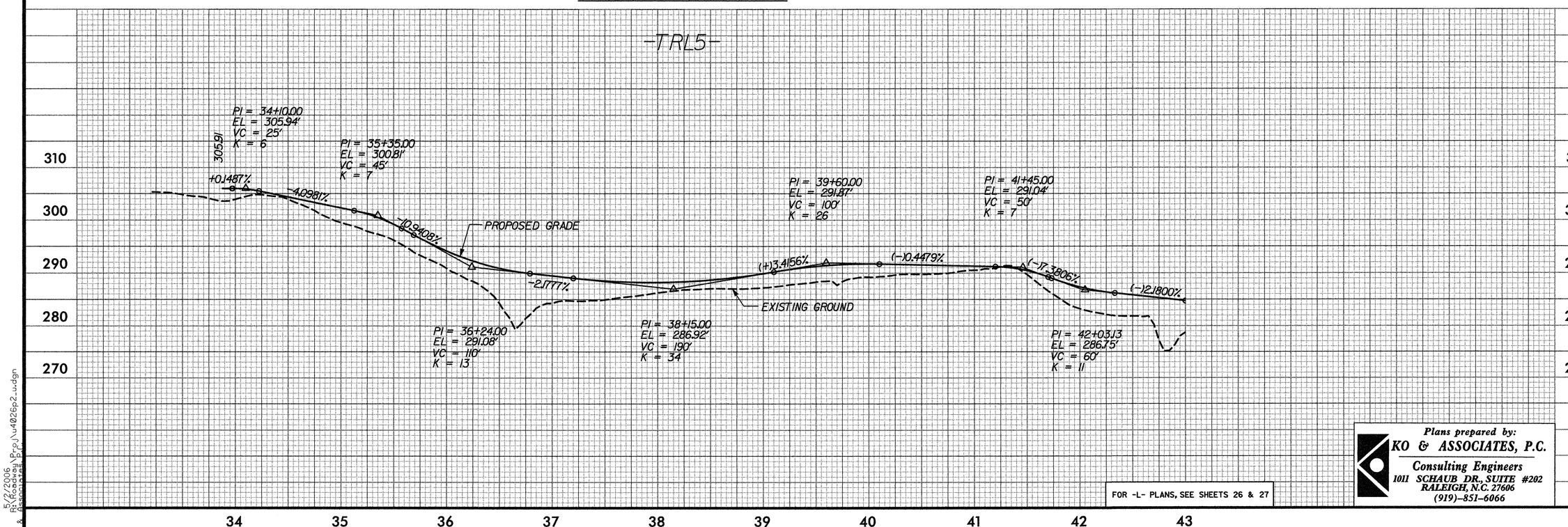

FOR -L- PLANS, SEE SHEETS 26 & 27

Plans prepared by:
KO & ASSOCIATES, P.C.
Consulting Engineers
1011 SCHAUB DR., SUITE #202
RALEIGH, N.C. 27606
(919)-851-6066

5/2/2006
R:\Roadway\Proj\u4026p2_u.dgn

PROJECT REFERENCE NO.	SHEET NO.
U-4026	2-V
R/W SHEET NO.	
ROADWAY DESIGN ENGINEER	HYDRAULICS ENGINEER

NORTH CAROLINA PROFESSIONAL SEAL 20774 ENGINEER STEPHEN R. WHITLEY 5-4-06

NORTH CAROLINA PROFESSIONAL SEAL 021162 ENGINEER HERBERT TURNER, JR. 5-4-06

REVISIONS

7/2/99

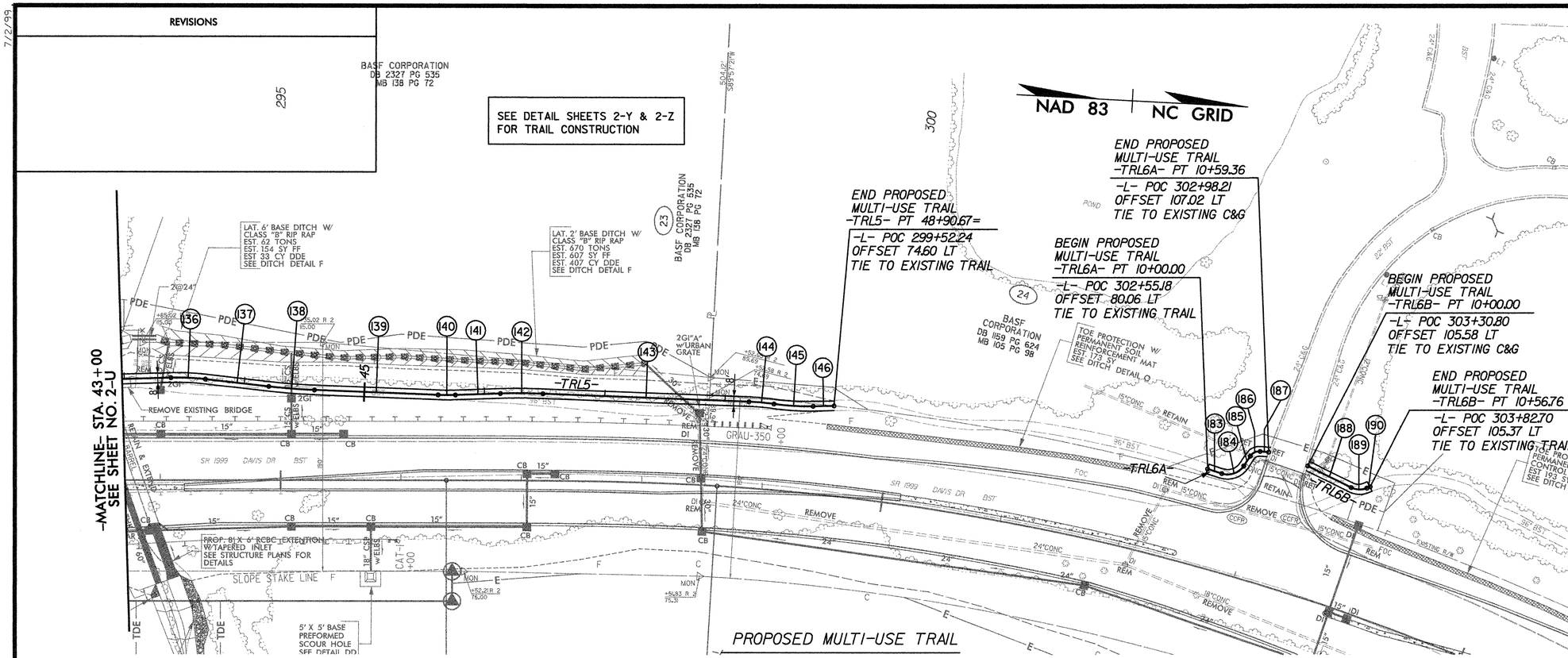

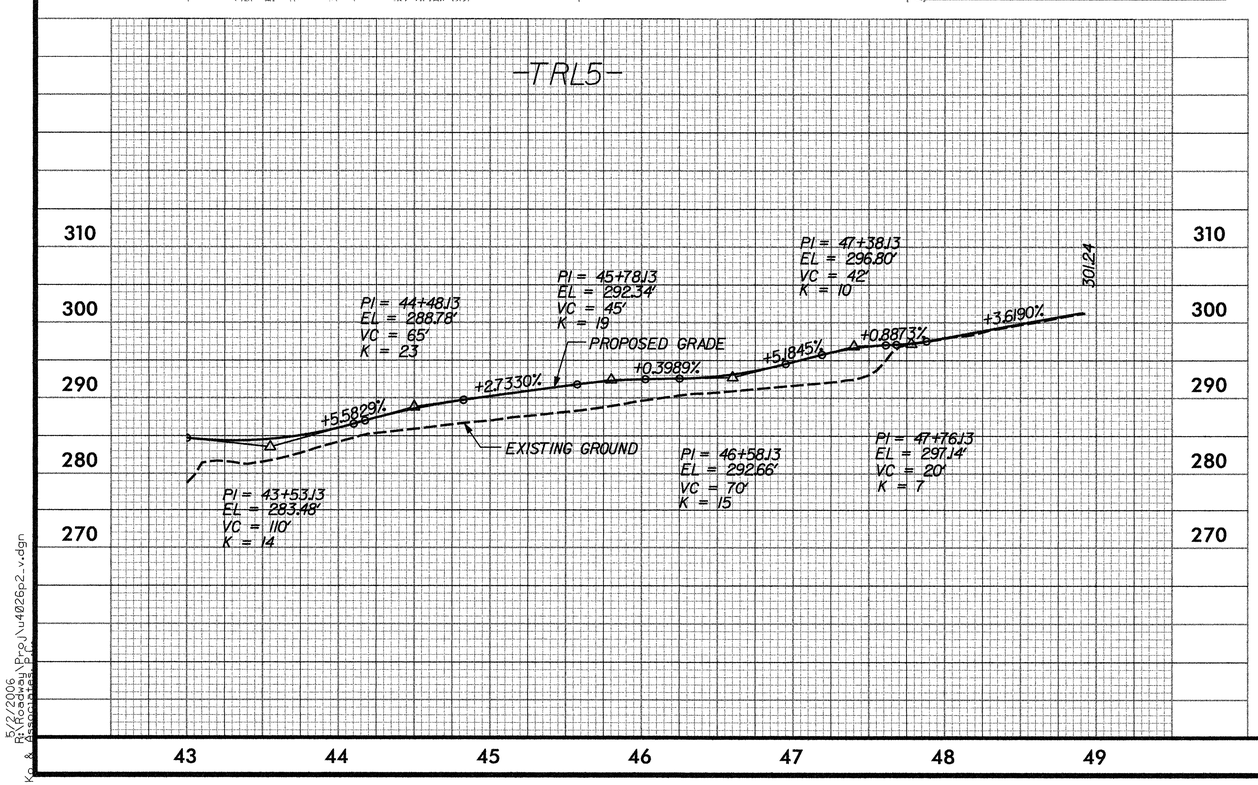

-TRL5-

	CURVE DATA & BEARINGS	
135	N 04° 46' 05.8" W	213.01'
136	PC 43+38.69	Δ= 8°14'33.8"(RT)
	PI 43+53.11	D = 28°38'52.4"
	PT 43+67.47	L = 28.77 T = 14.41 R = 200.00
137	N 03° 28' 27.9" E	53.05'
138	PC 44+20.52	Δ= 04°21'07.5"(LT)
	PI 44+39.52	D = 11°27'33.0"
	PT 44+58.50	L = 37.98 T = 19.00 R = 500.00
139	N 00° 52' 39.6" W	102.90'
140	PC 45+61.40	Δ= 4°07'13.4"(LT)
	PI 45+68.60	D = 28°38'52.4"
	PT 45+75.78	L = 14.38 T = 7.19 R = 200.00
141	N 04° 59' 53.0" W	37.42'
142	PC 46+13.20	Δ= 4°03'16.1"(RT)
	PI 46+30.90	D = 11°27' 33.0"
	PT 46+48.58	L = 35.38 T = 17.70 R = 500.00
143	N 00° 56' 36.5" W	171.25'
144	PC 48+19.84	Δ= 5°59'15.9"(RT)
	PI 48+30.30	D = 28°38'52.4"
	PT 48+40.74	L = 20.90 T = 10.46 R = 200.00
145	PC 48+40.74	Δ= 9°19'21.1"(LT)
	PI 48+57.04	D = 28°38'59.3"
	PT 48+73.28	L = 32.54 T = 16.31 R = 200.00
146	N 04° 16' 41.8" W	17.40'

-TRL6A-

	CURVE DATA & BEARINGS	
183	N 14° 51' 00.0" E	12.49'
184	PC 10+12.49	Δ= 73°34'45.1"(LT)
	PI 10+24.45	D = 358°05'55.0"
	PT 10+33.03	L = 20.55 T = 11.97 R = 16.00
185	N 58° 43' 45.2" W	9.73'
186	PC 10+42.76	Δ= 60°33'10.7"(RT)
	PI 10+48.02	D = 636°37'11.2"
	PT 10+52.28	L = 9.51 T = 5.2542 R = 9.00
187	N 01° 49' 25.5" E	7.09'

-TRL6B-

	CURVE DATA & BEARINGS	
188	N 23° 19' 19.3" E	40.27'
189	PC 10+40.27	Δ= 48°17'55.1"(LT)
	PI 10+47.45	D = 358°05'55.0"
	PT 10+53.76	L = 13.49 T = 7.17 R = 16.00
190	N 24° 58' 35.8" W	3.03'

FOR -L- PLANS, SEE SHEETS 27 & 28

Plans prepared by:
KO & ASSOCIATES, P.C.
Consulting Engineers
1011 SCHAUB DR., SUITE #202
RALEIGH, N.C. 27606
(919)-851-6066

REVISIONS

PROJECT REFERENCE NO.	SHEET NO.
U-4026	2-W
R/W SHEET NO.	
ROADWAY DESIGN ENGINEER	HYDRAULICS ENGINEER

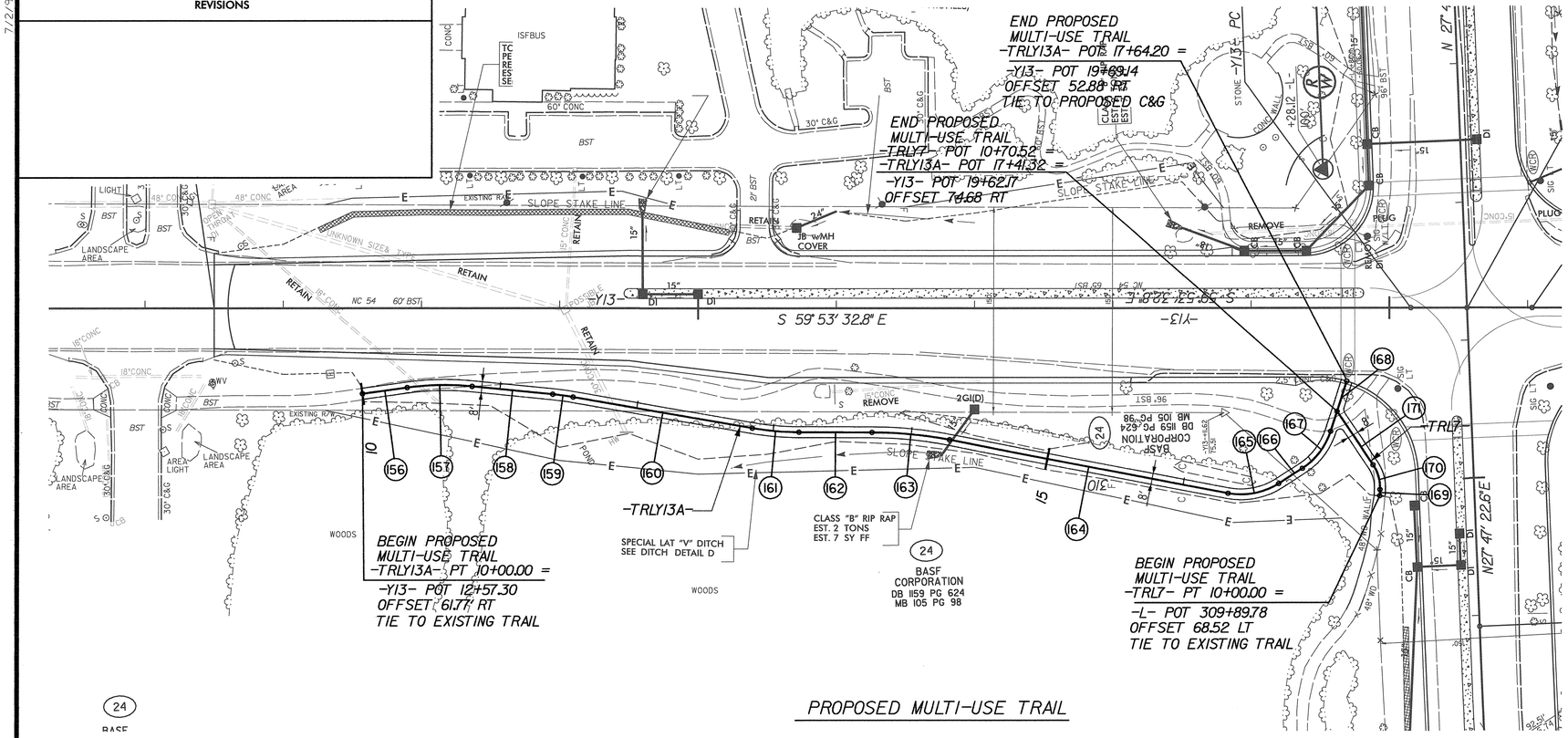

PROPOSED MULTI-USE TRAIL

-TRLY13A-

	CURVE DATA	& BEARINGS
156	S 67° 46' 43.7" W	32.66'
157	PC 10+32.66	Δ= 13°29'53.6"(RT)
	PI 11+56.33	D = 28°38'52.4"
	PT 10+79.78	L = 47.12 T = 23.67 R = 200.00
158	S 54° 16' 50.1" E	58.53'
159	PC 11+38.31	Δ= 04°16'18.3"(RT)
	PI 11+45.77	D = 28°38'52.4"
	PT 11+53.22	L = 14.91 T = 7.46 R = 200.00
160	S 50° 00' 31.8" E	131.48'
161	PC 12+84.70	Δ= 09°43'05.8"(LT)
	PI 13+01.70	D = 28°38'52.4"
	PT 13+18.62	L = 33.92 T = 17.00 R = 200.00
162	S 59° 43' 37.6" E	52.86'
163	PC 13+71.49	Δ= 10°46'20.9"(RT)
	PI 13+99.77	D = 19°05' 54.9"
	PT 14+27.89	L = 56.40' T = 28.29 R = 300.00
164	S 48° 57' 16.7" E	205.19'
165	PC 16+33.08	Δ= 43°52'08.1"(LT)
	PI 16+53.21	D = 114°35'29.6"
	PT 16+71.36	L = 38.28 T = 20.13 R = 50.00
166	N 87° 10' 35.3" E	20.33'
167	PC 16+91.69	Δ= 39°19'45.8"(LT)
	PI 17+09.56	D = 114°35'29.6"
	PT 17+26.02	L = 34.32 T = 17.87 R = 50.00
168	N 47° 50' 49.4" E	38.19'

-TRL7-

	CURVE DATA	& BEARINGS
169	N 32° 39' 53.1" W	4.66'
170	PC 10+04.66	Δ= 36°23'52.44"(LT)
	PI 10+14.53	D = 190°59'09.4"
	PT 10+23.72	L = 19.06 T = 9.86 R = 30.00
171	N 03° 43' 59.3" W	46.80'

SEE DETAIL SHEETS 2-Y & 2-Z FOR TRAIL CONSTRUCTION

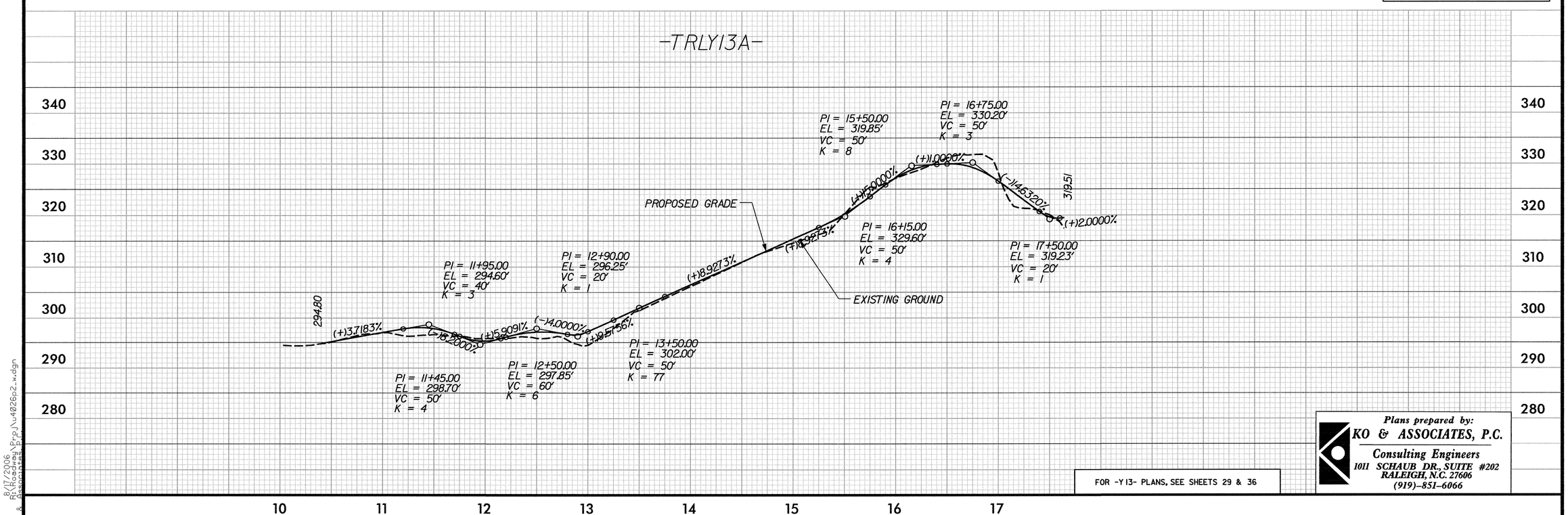

FOR -Y13- PLANS, SEE SHEETS 29 & 36

Plans prepared by:
KO & ASSOCIATES, P.C.
Consulting Engineers
1011 SCHAUB DR., SUITE #202
RALEIGH, N.C. 27606
(919)-851-6066

7/2/99

REVISIONS

PROJECT REFERENCE NO.	SHEET NO.
U-4026	2-X
R/W SHEET NO.	
ROADWAY DESIGN ENGINEER	HYDRAULICS ENGINEER
NORTH CAROLINA PROFESSIONAL SEAL 20774 ENGINEER STEPHEN R. WHITLEY 8/21/06	NORTH CAROLINA PROFESSIONAL SEAL 021162 ENGINEER HERBERT TURNER III 8/22/06

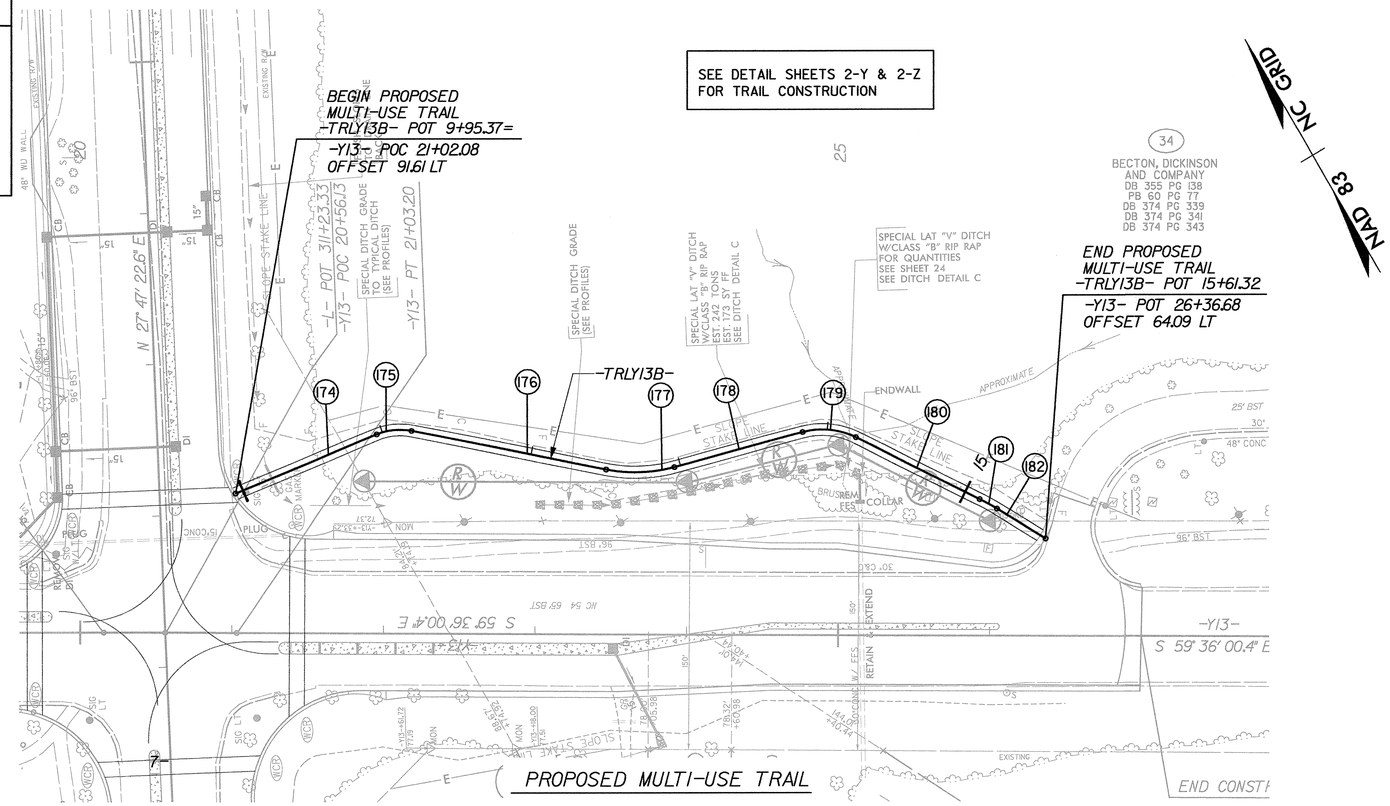

CURVE DATA & BEARINGS		
174	S 82° 19' 17.2" E	100.82'
175	PC 10+96.19	Δ= 41°45'43.1"(RT)
	PI 11+08.24	D = 143°14'18.3"
	PT 11+19.59	L = 29.16'
		T = 15.26
		R = 40.00
176	S 48° 47' 42.7" E	130.81'
177	PC 12+50.39	Δ= 26°03'11.9"(LT)
	PI 12+73.53	D = 57°17'44.8"
	PT 12+95.86	L = 45.47'
		T = 23.14
		R = 100.00
178	S 74° 50' 54.5" E	87.58'
179	PC 13+83.44	Δ= 41°21'41.2"(RT)
	PI 14+02.32	D = 114°35' 29.6"
	PT 14+19.54	L = 36.09'
		T = 18.87
		R = 50.00
180	S 33° 29' 13.3" E	91.16'
181	PC 15+10.70	Δ= 4°59'07.7"(RT)
	PI 15+17.23	D = 38°11'49.9"
	PT 15+23.75	L = 13.05'
		T = 6.53
		R = 150.00
182	S 28° 30' 05.6" E	37.57'

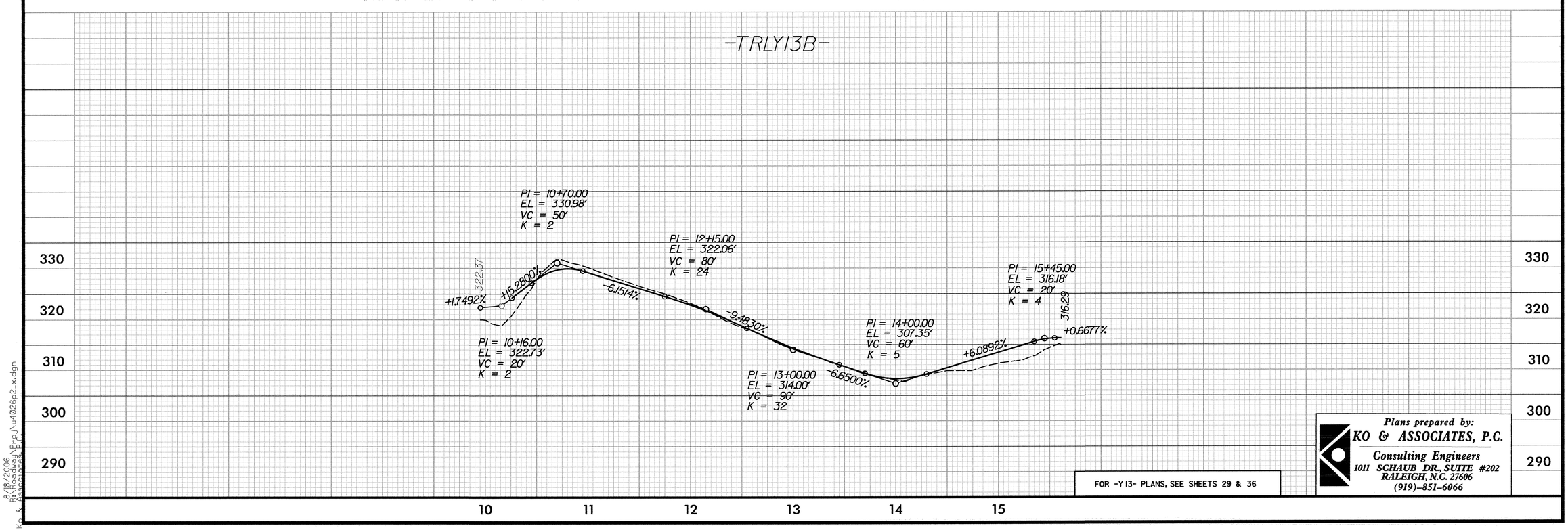

FOR -Y13- PLANS, SEE SHEETS 29 & 36

Plans prepared by:
KO & ASSOCIATES, P.C.
Consulting Engineers
1011 SCHAUB DR., SUITE #202
RALEIGH, N.C. 27606
(919)-851-6066

8/18/2006
8:18:20 AM
Ko & Associates P:\Proj\u4026e2_x.dgn

MULTI-USE TRAIL CONSTRUCTION

Plans prepared by:
KO & ASSOCIATES, P.C.
Consulting Engineers
1011 SCHAUB DR., SUITE #202
RALEIGH, N.C. 27606
(919)-851-6066

PROJECT REFERENCE NO.	SHEET NO.
U-4026	2-Y
R/W SHEET NO.	
ROADWAY DESIGN ENGINEER	HYDRAULICS ENGINEER

NORTH CAROLINA PROFESSIONAL SEAL 20774 ENGINEER STEPHEN K. WHITLEY 5-4-06

NORTH CAROLINA PROFESSIONAL SEAL 021162 ENGINEER HERBERT TURNER III 5-4-06

Construction Sequence

Construction Operations:
1) Obtain all required permits from local, State, and Federal Officials. Contractor to verify that all encroachment agreements and right-of public access easements have been obtained prior to the start of construction activities. Contractor shall have on-site at all times the Certificate of Plan Approval pro-vided by the North Carolina Department of Environment, Health, and NaturalResources.

2) Contact ULOCO (1-800-632-4949) prior to construction for location of all utilities in project area, and follow ULOCO procedures throughout construction activities. Contact Tom Ingram of GTE (919.549.0133) to verify ULOCO's location of GTE underground facilities. Contact Roy C. Bradford of Public Service Company (919.467.4156) before construction near high pressure gas mains. Pipeline patrolman will be provided to assist Contractor with location of gas line in these areas. Under no circumstances shall Contractor conduct excavation near gas mains without the supervision of the pipeline patrolman.

3) Install all temporary erosion control devices as specified in drawings and specifications, in the Erosion Control Guide. Temporary devices include silt fences, rock check dams, and construction entrance pads/access areas.

4) HOLD POINT INSPECTION: Contact Landscape Architect for on-site inspection and verification of temporary erosion control devices. Check erosion control devices after heavyrains throughout the project timeframe. Make necessary repairs to stabilize areas which have been damaged or have failed.

5) Conduct clearing activities. Clear trees that have been flagged by Landscape Architect for removal-do not remove any additional trees without prior consent of Landscape Architect. Clear understory (all vegetation smaller than 6" DBH) for a distance of 20' on both sides of trail centerline. Exception shall be made for dogwood trees (Cornus florida), which shall not be removed unless directed by Landscape Architect.

6) Complete grubbing and rough grading operations in accordance with plans and specifications, and as field determined by Landscape Architect.

7) Install all culverts and drop inlets according to specifications. Verify alignment of all culverts with Landscape Architect prior to next operation.

8) Complete fine grading operations. HOLD POINT INSPECTION: contact Landscape Architect to verify longitudinal and cross slopes, depth of finished grade and fabric placement prior to next operation.

9) Lay geotextile fabric and complete stone and trail surface construction operations, contact Landscape Architect to review final grade of trail surface and to certify that trail surface is constructed in accordance with specifications. "Dress out" trail edges to a uniform grade, free of construction debris, using light weight rubber tire vehicles only. Repair any damage to trail surface caused by construction machinery (See Specifications).

10) Install pavement stripings, signage, safety rail and landscape plantings per plans and specifications.

11) Install all permanent erosion control devices as specified in drawings and specifications, and in the Erosion Control Guide. Permanent erosion control devices include rip-rap aprons and erosion control matting. Permanently seed along the entire length of trail as well as other areas disturbed by trail construction. Stabilization of all disturbed slopes will be completed within 15 working days or 30 calendar days, whichever period is shorter, upon completion of any phase of grading. This is the minimum required at the project site.

12) Remove all silt fences, temporary stream crossings, construction entrance pads, and rock check dams once site is stable and has been approved by Landscape Architect ; permanently seed all resulting bare areas. Replace with clean fill, and seed area per specifications.

13) Contact Landscape Architect for inspection of permanent seeding operations. Should heavy rains wash soil or wheat straw onto trail before grass has stabilized trail edges, such soil and straw shall be swept from the trail, and resulting bare areas seeded. Should rains cause erosion at trail edges before grass is established, these areas shall be re-filled, seeded and covered with erosion control matting per specs.

14) Clean up debris, trash, and unused materials from all construction operations. Sweep and clean all debris and mud from trail and roadway surfaces and leave project area in a neat, orderly, and finished manner.

15) Complete final Punch List, as prepared by Landscape Architect, and call for final inspection.

NOTE: In the event that continuous construction operations are suspended due to weather for more than 30 days, contractor shall immediately seed and stabilize all disturbed areas with a temporary vegetative cover to prevent erosion.

Construction Sequence

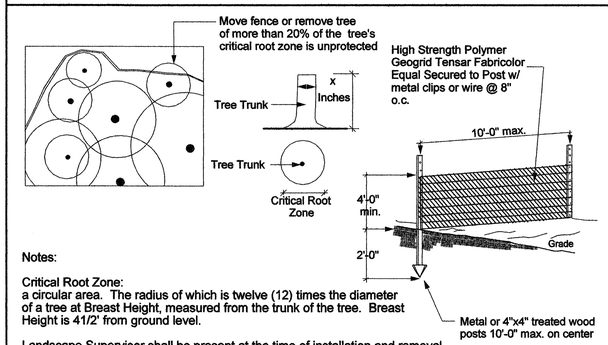

Notes:

Critical Root Zone:
a circular area. The radius of which is twelve (12) times the diameter of a tree at Breast Height, measured from the trunk of the tree. Breast Height is 41/2' from ground level.

Landscape Supervisor shall be present at the time of installation and removal of tree protection fencing

Any tree roots exposed during construction will be severed cleanly with a pruning tool

The soil within the critical root zones of existing trees will not be driven upon or otherwise disturbed during the construction or installation of this project

Tree Protection

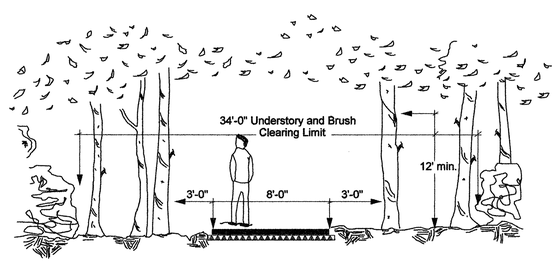

Notes:

1. Contractor shall clear forest understory and brush for a distance of 17' on either side of the centerline of the trail. Trees shall be limbed up to a vertical distance of 12' from the forest floor in the 34' wide zone. Branches shall be cut flush with the trunk with standard tree pruning equipment. Ground covers including grasses, vines, and wildflowers shall remain.

2. Contractor shall use wood chipper to dispose of landscape clearing debris. Wood chips shall be blown into woods adjacent to the trail. Contractor shall use all practical means to reduce amount of waste sent from the job site to the landfill.

3. In areas where the trail is routed adjacent to the woods edge, contractor shall follow understory clearing specifications from the centerline of the trail into the wooded portion.

4. No tree larger than a 6" caliper tree at d.b.h. shall be removed without approval from acting landscape architect.

5. Trees will be protected according to the "tree protection detail" 6/5.

Vegetative Clearing Detail

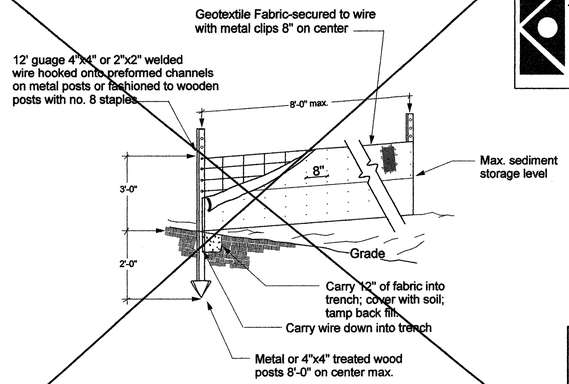

Silt Fence Detail

CONSTRUCTION CRITERIA:
Aggregate size: use 2-3 inch washed stone
DIMENSIONS OF GRAVEL PAD:
Thickness: 6 inches min.
Width: 12' min. or full width at all points of the vehicular entrance and exit area, which ever is greater.
Length: 50' min.
Location: locate construction entrances and exits to limit sediment from leaving the site and to provide for maximum utility at all construction vehicles. Avoid steep grades and entrances at curves in public roads.

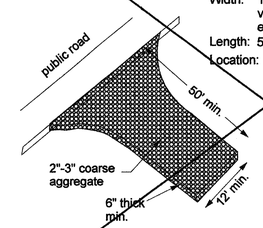

Gravel Construction Entrance Pad

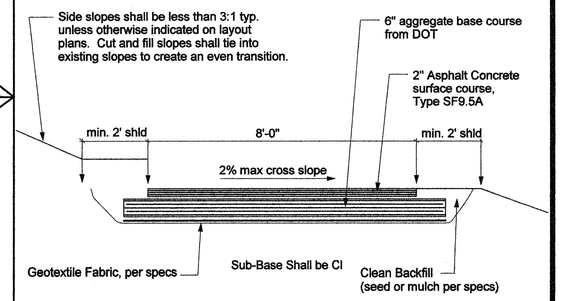

Notes:

1. Cross slope direction and amount varies. See layout plans for direction of slope

2. Contractor is responsible for re-establishing all slopes disturbed by construction to no less than a 3:1, unless otherwise speci fied. (See Typical Grading Section)

Asphalt Pavement Construction

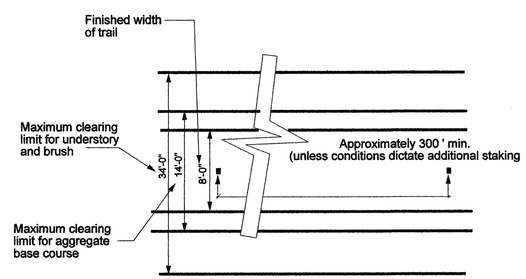

Trail Staking
Plan view

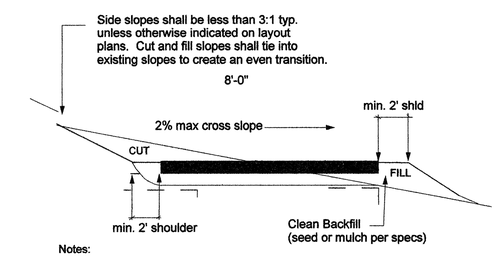

Notes:

Typical Trail Grading

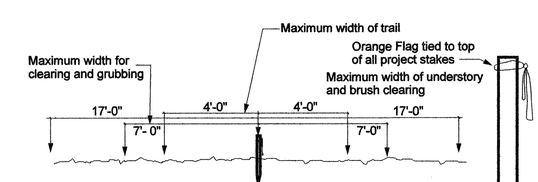

Trail Staking
Section View

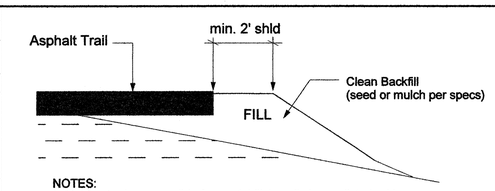

NOTES:
1. Contractor is responsible for re-stabilizing all slopes disturbed by construction activities.
2. Contractor shall install "excelsior" matting where necessary to stabilize steep slopes
3. All erosion adjacent to trail shall be filled to the finish grade

Trail Dress Out

5/2/2006
R:\Roadway\Proj\u4026p2_y_z.dgn
Ko & Associates, P.C.

MULTI-USE TRAIL CONSTRUCTION

Plans prepared by:
KO & ASSOCIATES, P.C.
Consulting Engineers
1011 SCHAUB DR., SUITE #202
RALEIGH, N.C. 27606
(919)-851-6066

PROJECT REFERENCE NO.	SHEET NO.
U-4026	2-Z
R/W SHEET NO.	
ROADWAY DESIGN ENGINEER	HYDRAULICS ENGINEER

NORTH CAROLINA PROFESSIONAL SEAL 20774 ENGINEER STEPHEN R. WHITLEY 6-12-06

NORTH CAROLINA PROFESSIONAL SEAL 021162 ENGINEER HERBERT TURNER, JR. 6-13-06

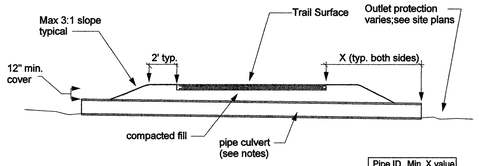

Pipe ID	Min. X value
8"	6.5'
12"	7'
18"	7.5'
24"	8.5'
36"	10'
48"	11.5'

Note:
1. See layout plans for pipe length, diameter, and material specifications
2. Outlet protection varies. See layout plans.
3. Pipes must also meet maximum 3:1 side slope requirements.

Trail Culvert: Section

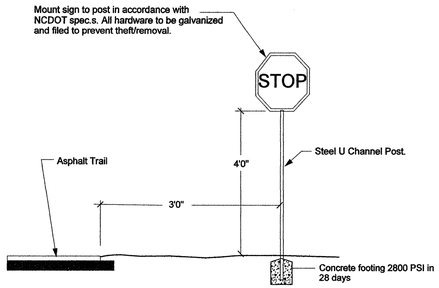

SIGN LOCATION	QUANTITY
TRL1 Sta 9+05+/-	1
TRL1 Sta 9+60+/-	1
TRL1 Sta 11+40+/-	1
TRL1 Sta 17+60+/-	1
TRL1 Sta 18+00+/-	1
TRL3 Sta 9+20+/-	1
TRL6A Sta 10+50+/-	1
TRL6B Sta 10+10+/-	1
TRLY10 Sta 10+10+/-	1
TRLY13A Sta 17+54+/-	1
TRLY13B Sta 10+13+/-	1
TOTAL	11

Trail Signage

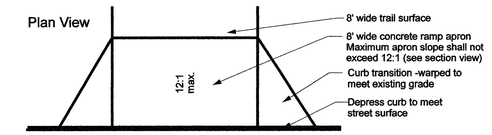

Notes:
1. The walking surface shall be slip resistant, with a rough broom finish. Ramp color shall be yellow or any color with a 70% contrast ratio.
2. Transition from ramp to street shall be smooth and even along entire width of ramp (no raised seams).

Section

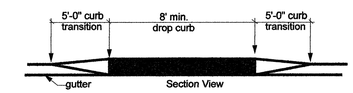

Curb Ramp

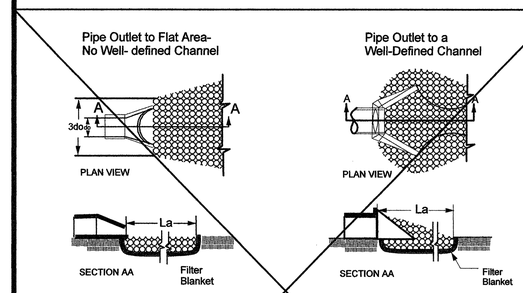

NOTES:
1. L = the length of the riprap apron. L = 5x the diameter of the outlet.

2. d= 1.5 times the maximum stone diameter but not less than 6".

3. In a well-defined channel extend the apron up the channel banks to an elevation of 6" above the maximum tailwater depth or the top of the bank, whichever is less.

4. A filter blanket or filter fabric should be installed between the riprap and soil foundation.

Pipe Outlet Protection

Contractor shall properly re-align stop bars and other pavement markers as neccessary to install crosswalks, per NCDOT representatives.

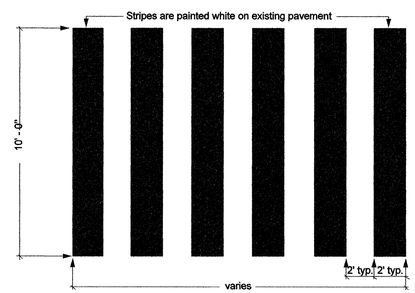

Note: Crosswalk Stripes shall be applied in accordance with NCDOT standards. Contractor shall apply long life marking materials only.

Crosswalk Striping

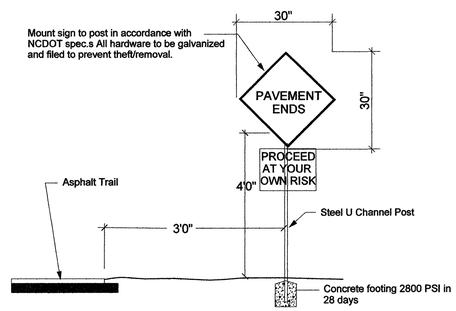

Trail Warning Signage W8-3

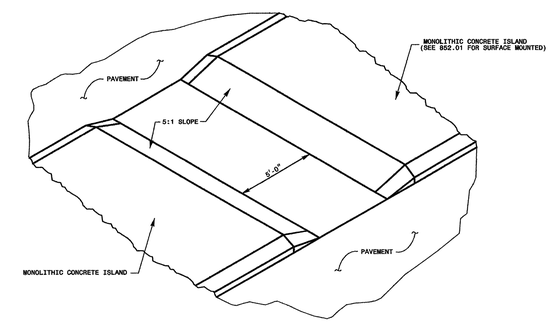

Island Depression Detail

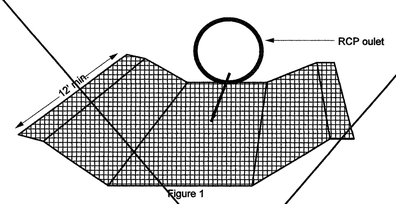

Note:
Contractor shall use excelsior blanket or similar wood fiber matting or biodegradable type.

Installation Instructions:
1. Seed (per spec) before placement of matting. Roll strips out parallel to the direction of water flow (See figure 1).

2. Start laying net from the top of the channel or slope and unroll it down the grade. Allow matting to lay loosely on the soil, but without wrinkles. Do Not Stretch.

3. To secure the net, bury the up-slope end in a trench no less than 6" deep. Cover with soil and tamp firmly. Staple the mat every 12" across the top end and every 3' around the edges and bottom. Where 2 strips of net are laid down side by side the adjacent edges should be overlapped 3" and stapledtogether. Each strip of matting should also be stapled down the center, every 3'. Do not stretch mat when applying staples.

4. To join two strips, cut a trench to anchor the end of the new mat. Overlap the end of the previous roll 18" and staple every 12" just below the anch or slot.

Erosion Control Matting

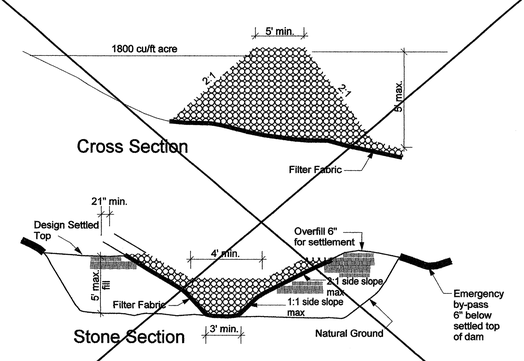

Temporary Rock Check Dam

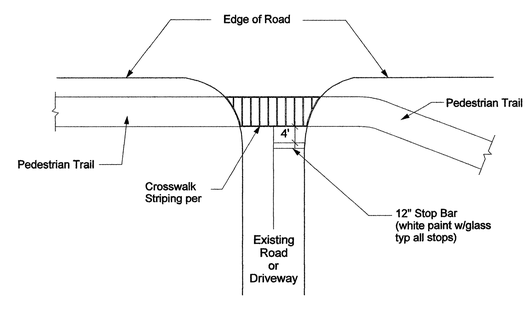

Crosswalk Stop Bar

6/12/2006

PROJECT REFERENCE NO.	SHEET NO.
U-4026	2-AA

ROADWAY DESIGN ENGINEER

NORTH CAROLINA PROFESSIONAL SEAL 20774 ENGINEER STEPHEN R. WHITLEY

5-4-06

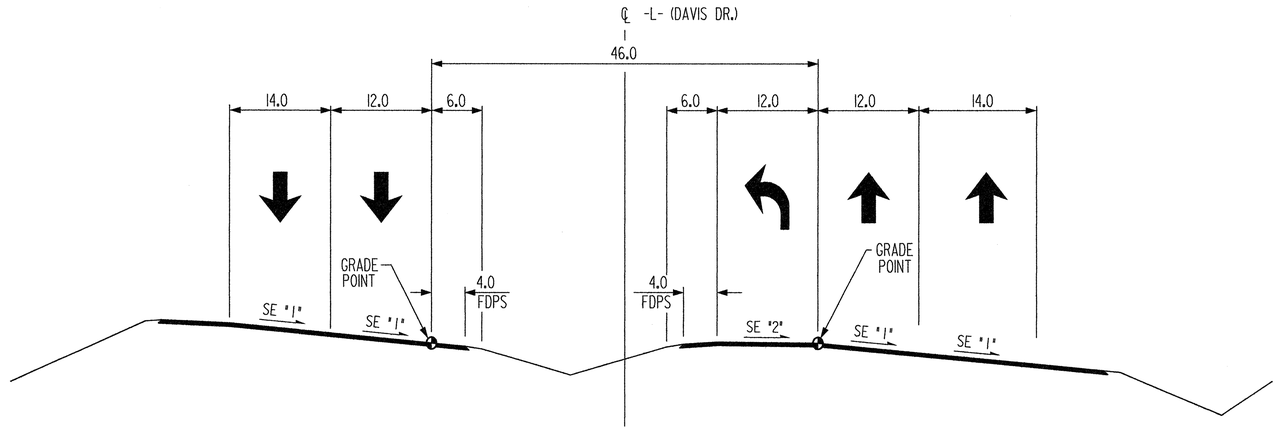

TURN LANE ON HIGH SIDE OF SUPER - SHOULDER SECTION

TABLE OF SE RATES IN SHOULDER SECTION ON HIGH SIDE OF MAINLINE SUPER ELEVATION (0.05 MAX. ROLLOVER)

SE "1"	SE "2"
.08 RT	.03 RT
.07 RT	.02 RT
.06 RT	.01 RT
.05 RT	.00
.04 RT	.01LT
.03 RT	.02 LT
.02 RT	.02 LT
.01 RT	.02 LT
.00	.02 LT

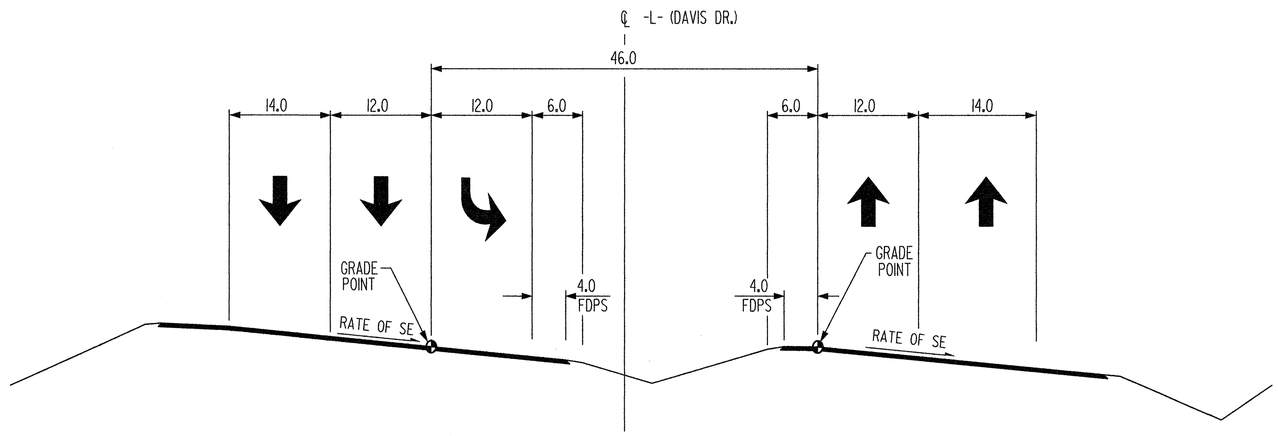

TURN LANE ON LOW SIDE OF SUPER - SHOULDER SECTION

Plans prepared by:
KO & ASSOCIATES, P.C.
Consulting Engineers
1011 SCHAUB DR., SUITE #202
RALEIGH, N.C. 27606
(919)-851-6066

REVISIONS

PROJECT REFERENCE NO.	SHEET NO.
U-4026	2-BB
R/W SHEET NO.	

HYDRAULICS ENGINEER

NORTH CAROLINA PROFESSIONAL SEAL 20253 ENGINEER KEVIN WILLIAMS

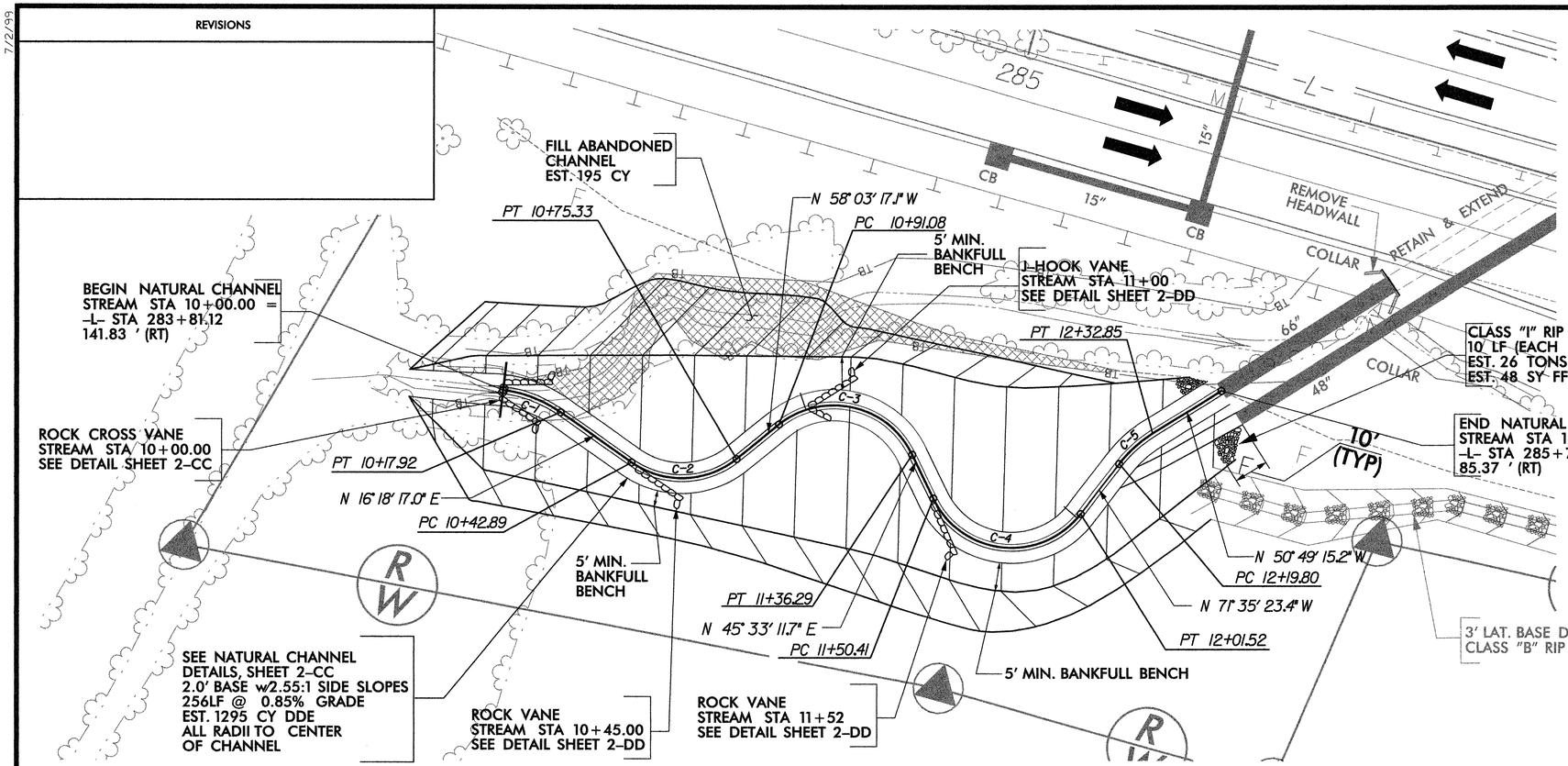

C-1
PI Sta 10+09.15
Δ = 28° 31' 02.1" (RT)
D = 159° 09' 17.8"
L = 17.92'
T = 9.15'
R = 36.00'

C-2
PI Sta 10+61.85
Δ = 74° 21' 34.1" (LT)
D = 229° 10' 59.2"
L = 32.45'
T = 18.96'
R = 25.00'

C-3
PI Sta 11+22.86
Δ = 103° 36' 28.8" (RT)
D = 229° 10' 59.2"
L = 45.21'
T = 31.77'
R = 25.00'

C-4
PI Sta 11+91.32
Δ = 117° 08' 35.1" (LT)
D = 229° 10' 59.2"
L = 51.11'
T = 40.91'
R = 25.00'

C-5
PI Sta 12+26.39
Δ = 20° 46' 08.2" (RT)
D = 159° 09' 17.8"
L = 13.05'
T = 6.60'
R = 36.00'

CHANNEL RELOCATION

(SEE SHEETS 2-CC & 2-DD FOR DETAILS)

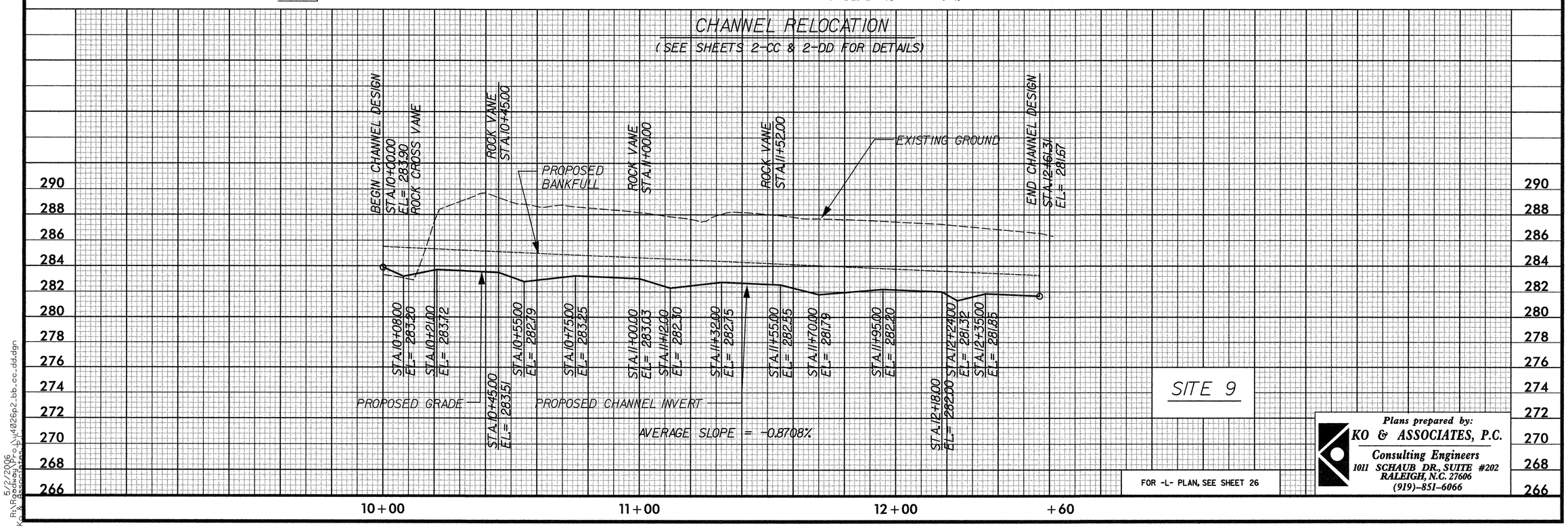

SITE 9

FOR -L- PLAN, SEE SHEET 26

Plans prepared by:
KO & ASSOCIATES, P.C.
Consulting Engineers
1011 SCHAUB DR., SUITE #202
RALEIGH, N.C. 27606
(919)-851-6066

PROJECT REFERENCE NO.	SHEET NO.
U-4026	2-CC
R/W SHEET NO.	

HYDRAULICS ENGINEER

NORTH CAROLINA PROFESSIONAL SEAL 20253 ENGINEER KEVIN WILLIAMS

NOTES:

1. THE CONTRACTOR SHALL LAYOUT THE CHANNEL ALIGNMENT WHICH SHALL CONSIST OF STAKING OUT THE CENTER OF EACH RADIUS, SCRIBING THE CENTER LINE OF THE CHANNEL FOR EACH BEND USING THE INDICATED RADIUS, AND SCRIBING CENTERLINE OF THE TANGENT SECTIONS BY CONNECTING SUCCESSIVE BENDS WITH A STRAIGHT LINE.
2. FIELD ADJUSTMENTS OF THE ALIGNMENT MAY BE REQUIRED TO AVOID CERTAIN OBSTACLES. APPROVAL BY THE ENGINEER OF THE STAKE-OUT ALIGNMENT SHALL BE REQUIRED PRIOR TO INITIATION OF THE CONSTRUCTION OF THE CHANNEL.
3. LOCATE ROCK VANES ACCORDING TO PLAN SHEET.
4. BEGIN AND END STREAM ELEVATIONS SHOULD BE CHECKED PRIOR TO CONSTRUCTION TO ENSURE PROPOSED STREAM GRADE (AND ELEVATIONS) ARE ACCURATE. ELEVATIONS MAY VARY FROM PRIOR SURVEYS.

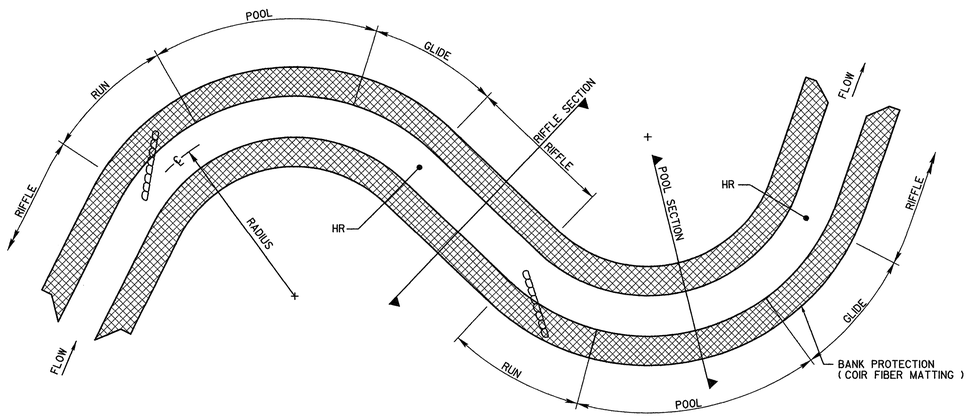

NOT TO SCALE

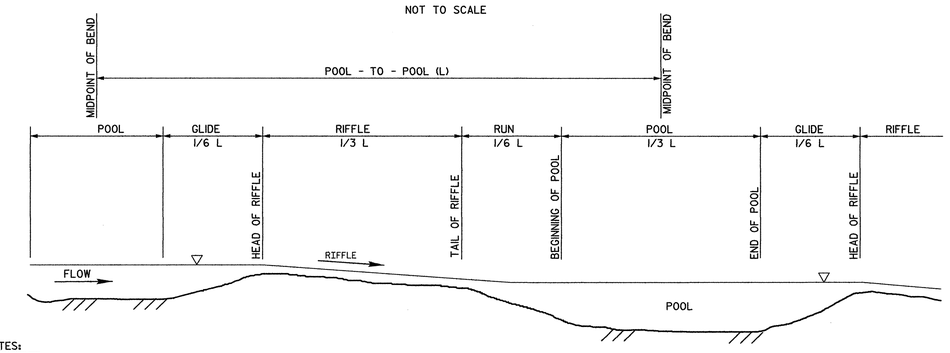

NOTES:

1. THE POOL TO POOL SPACING (L) SHALL BE MEASURED AS THE DISTANCE FROM THE MIDPOINT OF THE UPSTREAM BEND TO THE MIDPOINT OF THE DOWNSTREAM BEND.
2. REFER TO MORPHOLOGICAL MEASUREMENT TABLE AND PLAN SHEET FOR DIMENSIONS. NOTE THAT POOL TO POOL SPACING VARIES.

NOT TO SCALE

VARIABLES	EXISTING CHANNEL	PROPOSED REACH 1	REFERENCE REACH
LOCATION	UT TO HOLLOW CREEK	UT TO HOLLOW CREEK	SOUTH UNNAMED TRIB TO MARKS CREEK
1) STREAM TYPE	G3/4	C4	C5
2) DRAINAGE AREA	140Ac	140Ac	65Ac
3) BANKFULL WIDTH	6.1ft	9.0ft	11.1ft
4) BANKFULL MEAN DEPTH	0.7ft	0.9ft	0.7ft
5) WIDTH/DEPTH RATIO	8	10	15.4
6) BANKFULL CROSS-SECTIONAL AREA	4.5sq.ft	8.1sq.ft	8.0sq.ft
7) BANKFULL MEAN VELOCITY	5.1fps	3.0fps	2.1fps
8) BANKFULL DISCHARGE, cfs	23cfs	23cfs	17cfs
9) BANKFULL MAX. DEPTH	1.2ft	1.6ft	1.8ft
10) WIDTH OF FLOODPRONE AREA	7ft	28ft	59ft
11) ENTRENCHMENT RATIO	1.1	3.1	5.3
12) MEANDER LENGTH	13 - 34ft	63 - 108ft	20 - 42ft
13) RATIO OF MEANDER LENGTH TO BANKFULL WIDTH	2.1- 5.6	7.0 - 12.0	1.8 - 3.8
14) RADIUS OF CURVATURE	5 - 17ft	18 - 36ft	6.6- 16ft
15) RATIO OF RADIUS OF CURVATURE TO BANKFULL WIDTH	0.8 - 2.8	2.0 - 4.0	0.6 - 1.0
16) BELT WIDTH	23ft	27 - 54ft	38ft
17) MEANDER WIDTH RATIO	3.8	3.0 - 6.0	3.4
18) SINUOSITY (STREAM LENGTH/VALLEY LENGTH	1.17	1.25	1.23
19) VALLEY SLOPE	0.0172 ft/ft	0.0105 ft/ft	0.018 ft/ft
20) AVERAGE SLOPE	0.0174 ft/ft	0.0084 ft/ft	0.0164 ft/ft
21) POOL SLOPE	0.0000 ft/ft	0.0000 ft/ft	0.0000 ft/ft-0.0011 ft/ft
22) RATIO OF POOL SLOPE TO AVERAGE SLOPE	0.0 - 0.1	0.00	0.00 - 0.07
23) MAXIMUM POOL DEPTH	1.5ft	2.3ft	2.78ft
24) RATIO OF POOL DEPTH TO AVERAGE BANKFULL DEPTH	2.0	2.5	3.86
25) POOL WIDTH	8.7ft	13.5ft	11.47ft
26) RATIO OF POOL WIDTH TO BANKFULL WIDTH	1.4	1.5	1.03
27) POOL TO POOL SPACING	42 - 53ft	54ft	5 - 47ft
28) RATIO OF POOL TO POOL SPACING TO BANKFULL WIDTH	6.9 - 8.7	6.0	0.4 - 4.3
29) RATIO OF LOWEST BANK HEIGHT TO BANKFULL HEIGHT(or max bankfull depth)	1.1- 5	1.0	-

ROCK CROSS VANE DETAIL

NOT TO SCALE

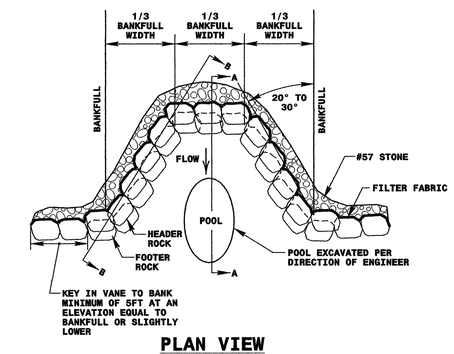

PLAN VIEW

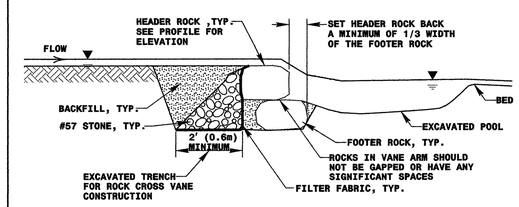

SECTION A-A

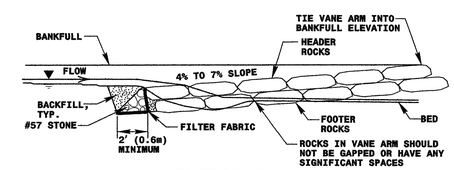

SECTION B-B

NOTES:
1. DEEPEST PART OF POOL TO BE IN LINE WITH WHERE VANE ARM TIES INTO BANKFULL.
2. DO NOT EXCAVATE POOL TOO CLOSE TO FOOTER ROCKS.
3. CLASS "A" STONE CAN BE USED TO REDUCE VOIDS BETWEEN HEADERS AND FOOTERS.
4. COMPACT BANKFULL TO EXTENT POSSIBLE OR AT THE DIRECTION OF THE ENGINEER.
5. POOL DEPTH SHOULD BE 2 TO 3 TIMES BANKFULL DEPTH.

HEADER/FOOTER ROCK DIMENSIONS (FT)			
STATION	HEIGHT	LENGTH	WIDTH
10+00	2FT	3FT	3FT

LOCATIONS

26	-STREAM-	10+00.00	LT/RT	SEE ALSO DETAIL SHT 2-BB

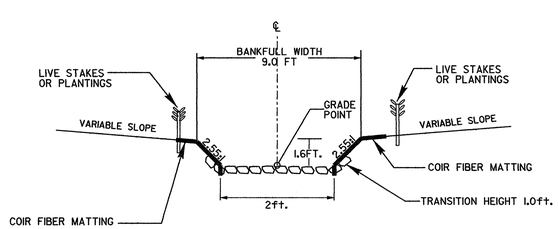

NOT TO SCALE

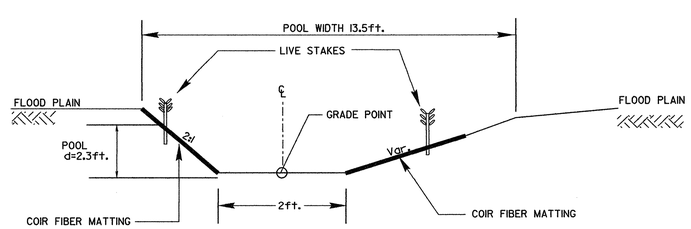

NOT TO SCALE

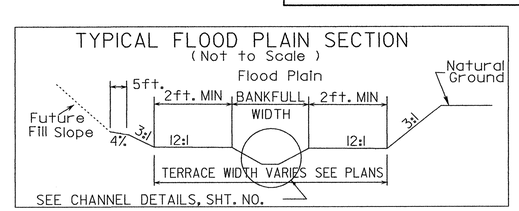

Plans prepared by:
KO & ASSOCIATES, P.C.
Consulting Engineers
1011 SCHAUB DR., SUITE #202
RALEIGH, N.C. 27606
(919)-851-6066

PROJECT REFERENCE NO.	SHEET NO.
U-4026	2-DD
R/W SHEET NO.	

HYDRAULICS ENGINEER

NORTH CAROLINA PROFESSIONAL SEAL 20253 ENGINEER R. KEVIN WILLIAMS

ROCK INLET SILL

SCALE: NTS

NOTES:
1. ALL STONES ARE TO BE STRUCTURE STONE.
2. GAPS BETWEEN ROCKS SHALL BE MINIMIZED BY FITTING ROCKS TOGETHER, PLUGGING WITH STRUCTURE STONE CLASS A AND NO.57 AND LINING WITH FILTER FABRIC.
3. DIMENSIONS AND SLOPES MAY BE ADJUSTED TO FIT BY THE ENGINEER.
4. A DOUBLE FOOTER ROCK SHALL BE UTILIZED IN SAND BED MATERIAL.
5. FOOTER ROCKS AND SILL ROCKS SHALL BE NATIVE STONE OR SHOT ROCK, CUBICAL OR RECTANGULAR IN NATURE.
6. ACCEPTABLE ROCKS SHALL HAVE THE FOLLOWING MINIMUM DIMENSIONS; 3' x 2 'x 1'.

FILTER FABRIC SHALL BE PLACED ON THE UPSTREAM SIDE OF THE STRUCTURE TO PREVENT WASHOUT OF SEDIMENT THROUGH ROCK GAPS. FILTER FABRIC SHALL EXTEND FROM THE BOTTOM OF THE FOOTER ROCK TO THE FINISHED GRADE ELEVATION AND SHALL BE PLACED THE ENTIRE LENGTH OF STRUCTURE.

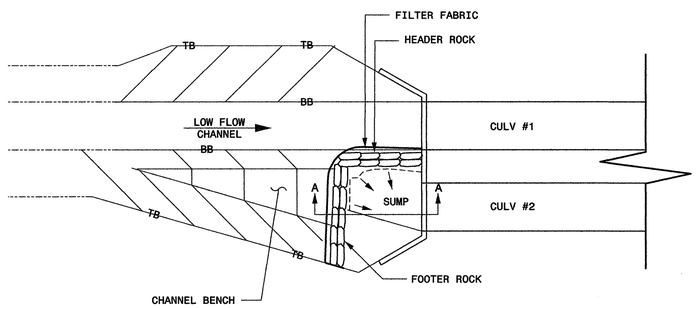

PLAN VIEW

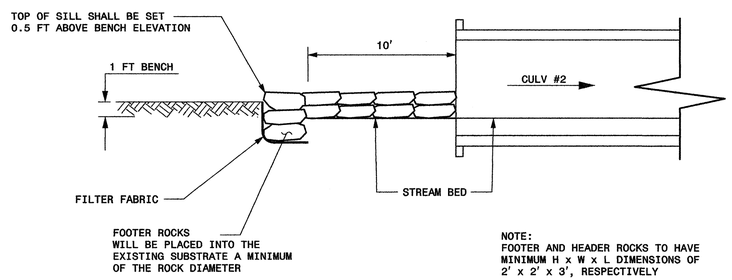

NOTE:
FOOTER AND HEADER ROCKS TO HAVE MINIMUM H x W x L DIMENSIONS OF 2' x 2' x 3', RESPECTIVELY

SECTION A-A

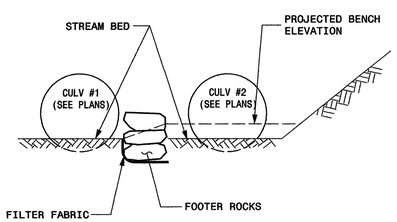

CROSS-SECTION

LOCATIONS

11 -L- 103+80 RT
17 -L- 177+17 RT

ROCK VANE DETAIL

NOT TO SCALE

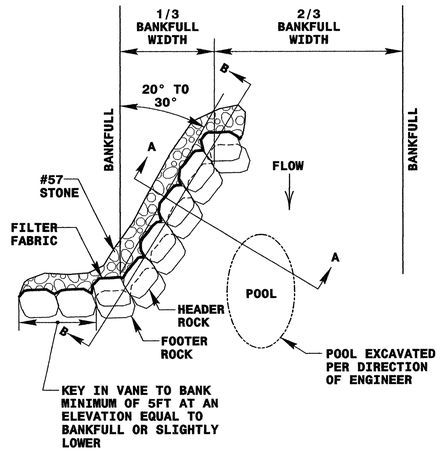

PLAN VIEW

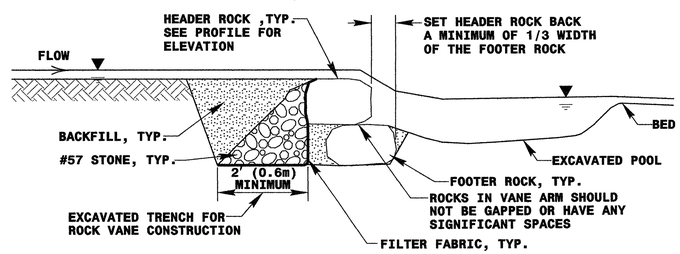

SECTION A-A

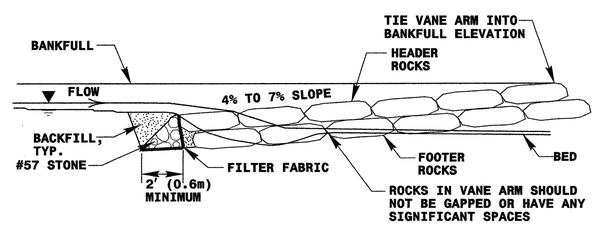

SECTION B-B

NOTES:
1. DEEPEST PART OF POOL TO BE IN LINE WITH WHERE VANE ARM TIES INTO BANKFULL.
2. DO NOT EXCAVATE POOL TOO CLOSE TO FOOTER ROCKS.
3. CLASS "A" STONE CAN BE USED TO REDUCE VOIDS BETWEEN HEADERS AND FOOTERS.
4. COMPACT BACKFULL TO EXTENT POSSIBLE OR AT THE DIRECTION OF THE ENGINEER.
5. POOL DEPTH SHOULD BE 2 TO 3 TIMES BANKFULL DEPTH.

HEADER/FOOTER ROCK DIMENSIONS (FT)			
STATION	HEIGHT	LENGTH	WIDTH
10+45	2FT	3FT	3FT
11+52	2FT	3FT	3FT

J-HOOK VANE DETAIL

NOT TO SCALE

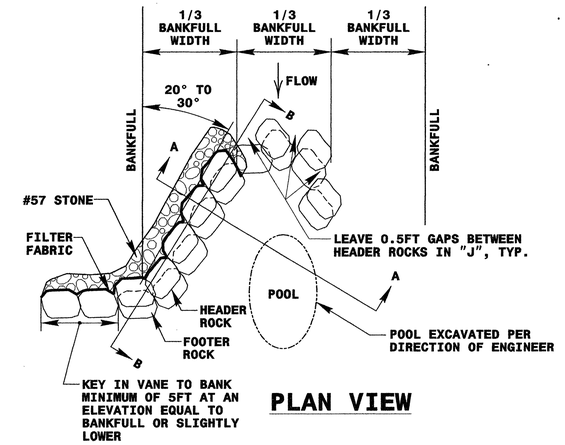

PLAN VIEW

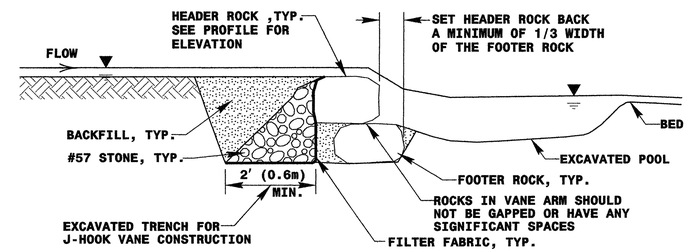

SECTION A-A

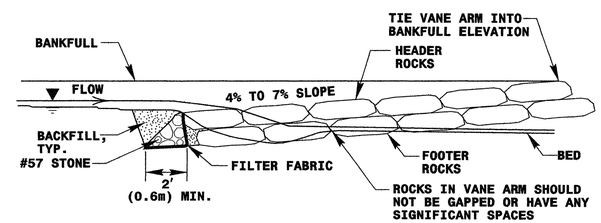

SECTION B-B

NOTES:
1. DEEPEST PART OF POOL TO BE IN LINE WITH WHERE VANE ARM TIES INTO BANKFULL.
2. DO NOT EXCAVATE POOL TOO CLOSE TO FOOTER ROCKS.
3. CLASS "A" STONE CAN BE USED TO REDUCE VOIDS BETWEEN HEADERS AND FOOTERS.
4. COMPACT BACKFULL TO EXTENT POSSIBLE OR AT THE DIRECTION OF THE ENGINEER.
5. POOL DEPTH SHOULD BE 2 TO 3 TIMES BANKFULL DEPTH.

HEADER/FOOTER ROCK DIMENSIONS (FT)			
STATION	HEIGHT	LENGTH	WIDTH
11+00	2FT	3FT	3FT

Plans prepared by:
KO & ASSOCIATES, P.C.
Consulting Engineers
1011 SCHAUB DR., SUITE #202
RALEIGH, N.C. 27606
(919)-851-6066

PROJECT REFERENCE NO.	SHEET NO.
U-4026	2-EE

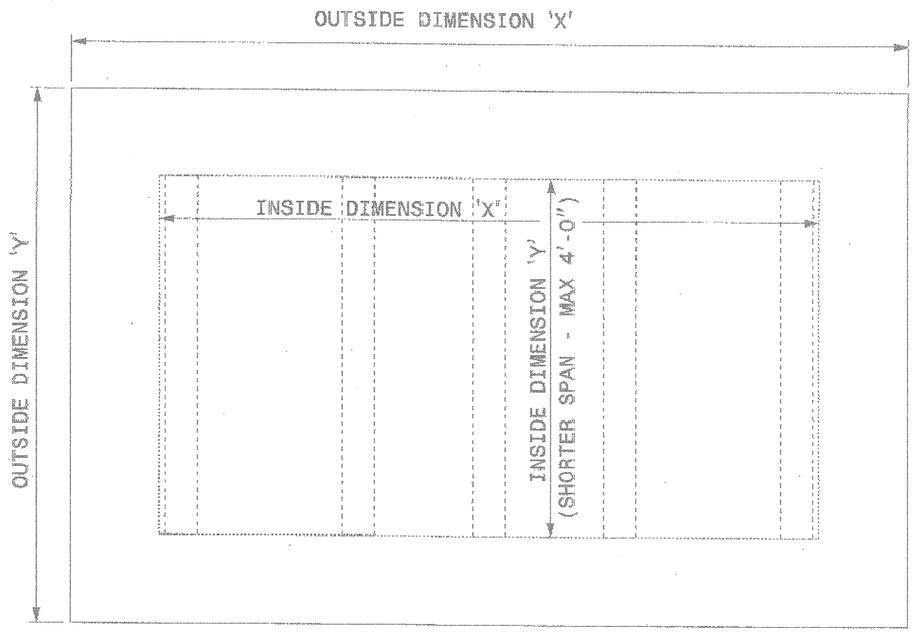

PLAN VIEWS

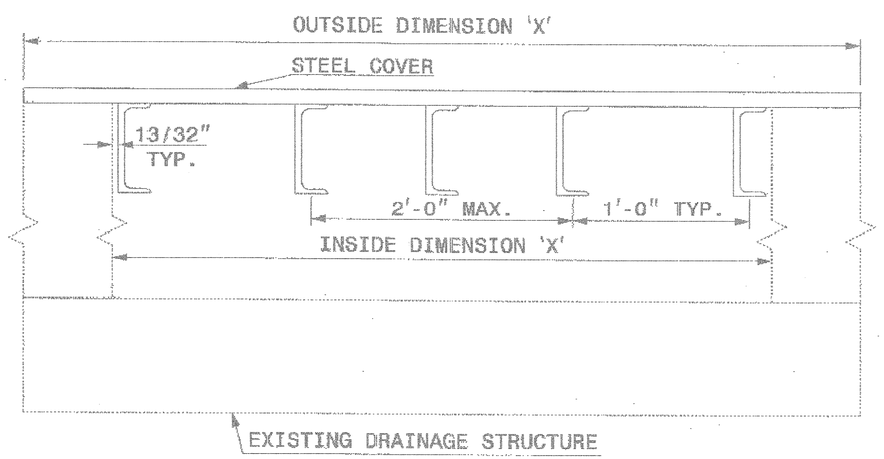

ELEVATION VIEWS

GENERAL NOTES:

- STEEL COVERS ARE FOR TEMPORARY USE FOR TRAFFIC SUPPORT DURING PHASE CONSTRUCTION.
- PAVEMENT OR FILL SHALL BE PLACED DIRECTLY OVER THE STEEL PLATES.
- SEE ROADWAY PLANS AND PROVISIONS FOR LOCATIONS
- QUANTITES TO BE PAID FOR AT THE UNIT PRICE BID PER EACH.

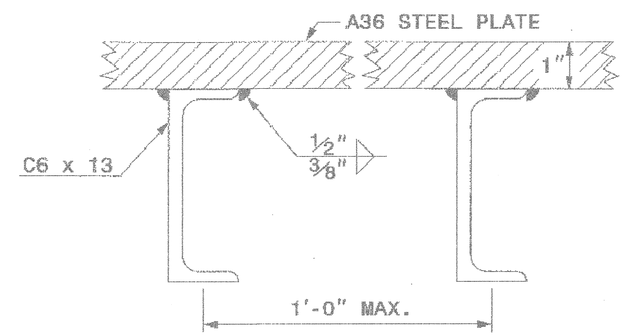

SECTION VIEW OF STEEL TOP PLATE

WELDS SHALL BE AS SPECIFIED BY AWS

NORTH CAROLINA PROFESSIONAL SEAL 022966 ENGINEER JOEL S. HOUPE

9/22/06

DESIGN SERVICES UNIT
STANDARDS AND SPECIAL DESIGN
Office 919-250-4128 FAX 919-250-4119

DETAIL OF TRAFFIC BEARING STEEL COVER

ORIGINAL BY: E.E. WARD DATE: 5-9-98
MODIFIED BY: DATE:
CHECKED BY: [illegible] DATE: 9-01
FILE SPEC.: s37:/usr/details/stand/slicer2.dgn

STATE OF NORTH CAROLINA
DEPT. OF TRANSPORTATION
DIVISION OF HIGHWAYS
RALEIGH, N.C.

1-02

ENGLISH STANDARD DRAWING FOR
CONCRETE OPEN THROAT CATCH BASIN
MULTIPLE PIPES

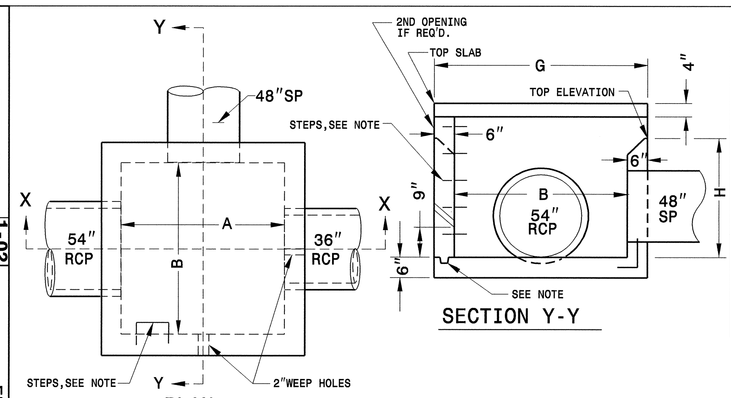

PLAN

SECTION Y-Y

NOTES:

USE CLASS "B" CONCRETE THROUGHOUT.

PROVIDE ALL CATCH BASINS OVER 3'-6" IN DEPTH WITH STEPS 12" ON CENTER. USE STEPS WHICH COMPLY WITH STD. DRAWING 840.66.

OPTIONAL CONSTRUCTION - MONOLITHIC POUR, 2" KEYWAY, OR #4 BAR DOWELS AT 12" CENTERS AS DIRECTED BY THE ENGINEER.

USE FORMS FOR THE CONSTRUCTION OF THE BOTTOM SLAB.

IF REINFORCED CONCRETE PIPE IS SET IN BOTTOM SLAB OF BOX, ADD TO SLAB AS SHOWN ON STD. NO. 840.00.

FOR 8'-0" IN HEIGHT OR LESS USE 6" WALLS AND BOTTOM SLAB. OVER 8'-0" TO 16'-0" IN HEIGHT USE 8" WALLS AND BOTTOM SLAB. ADJUST QUANTITIES ACCORDINGLY.

CONSTRUCT WITH PIPE CROWNS MATCHING.

INSTALL 2" WEEPHOLES AS DIRECTED BY THE ENGINEER.

INSTALL STONE DRAINS, AT A MINIMUM OF 1 CUBIC FOOT OF NO. 78M STONE IN A POROUS FABRIC BAG OR WRAP, AT EACH WEEP HOLE OR AS DIRECTED BY THE ENGINEER.

CHAMFER ALL EXPOSED CORNERS 1".

DRAWING NOT TO SCALE.

* INCREASE THE SIZE OF THE 6" OPENING TO 8" MAX., AS DIRECTED BY THE ENGINEER BY ADDING 2" TO THE WALL HIEGHT ABOVE THE TOP ELEVATION. ADJUST QUANTITIES ACCORDINGLY.

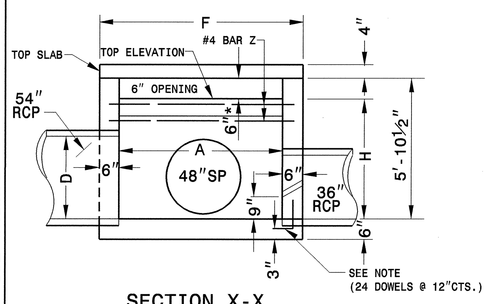

SECTION X-X

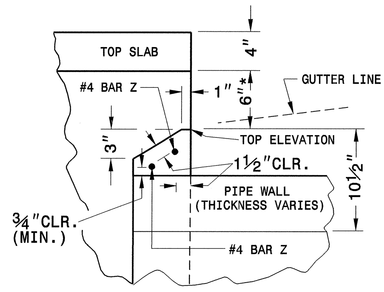

PART SECTION Y-Y
SHOWING DETAILS AT OPENING

MIN. DIMENSIONS AND QUANTITIES FOR CONCRETE CATCH BASIN

DIM'S OF BOX & PIPE				REINFORCING						TOP & BOT. SLAB DIMENSIONS		CU. YDS. CONC. IN BOX			TOTAL QUANTITIES BOX & SLABS		DEDUCTION (YD^3) ONE PIPE			DED. ONE 6" THROAT OPENING
PIPE	SPAN	WIDTH	HEIGHT	#4 "X" BARS		#3 "Y" BARS		#3 "Z" BARS												
D	A	B	H	NO.	LENGTH	NO.	LENGTH	NO.	LENGTH	F	G	TOP SLAB	BOT. SLAB	WALL/FT.HT.	LBS. REINF.	YD^3	36"RC	54"RC	48"SP	YD^3
54"	5'-6"	6'-9"	5'-4½"	11	7'-5"	13	6'-2"	2	6'-2"	6'-6"	7'-9"	0.612	0.934	0.491	90	4.426	0.178	0.401	0.233	0.062
												28 #4 DOWELS (OPTION)			30					

SHEET 1 OF 2
840D04

STATE OF NORTH CAROLINA
DEPT. OF TRANSPORTATION
DIVISION OF HIGHWAYS
RALEIGH, N.C.

1-02

ENGLISH STANDARD DRAWING FOR
CONCRETE OPEN THROAT CATCH BASIN
MULTIPLE PIPES

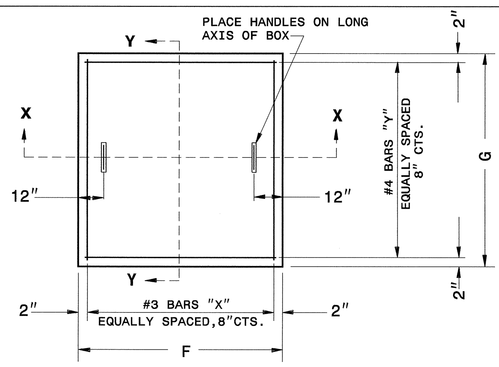

PLAN
PRECAST OR CAST IN PLACE TOP SLAB

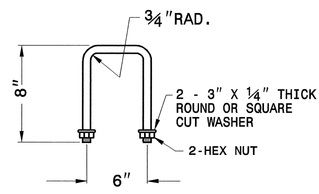

DETAIL OF HANDLE

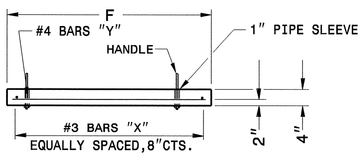

SECTION X-X

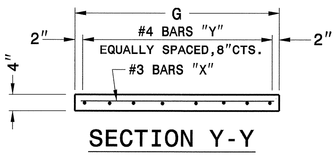

SECTION Y-Y

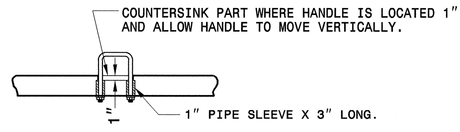

PART SECTION
THRU COVER SHOWING HANDLE

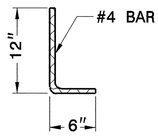

DOWEL

SHEET 2 OF 2
840D04

SEE PLATE FOR TITLE

ORIGINAL BY: rnbritt DATE:
MODIFIED BY: DATE: 03-31-06
CHECKED BY: DATE: 4/10/06
FILE SPEC.: s:\contracts\contracts\special details\nbritt\english\urban\u4026 54 otcb.dgn

PROJECT SERVICES UNIT
STANDARDS AND SPECIAL DESIGN
Office 919-250-4128 FAX 919-250-4119

L. STA. 93+20 LT
STRUCTURE No. 99

NORTH CAROLINA PROFESSIONAL SEAL 022956 ENGINEER JOEL L. STAMPER
9/21/06

PROJECT REFERENCE NO.
U-4026

SHEET NO.
7-FF

PROJECT REFERENCE NO.	SHEET NO.
U-4026	2-6a

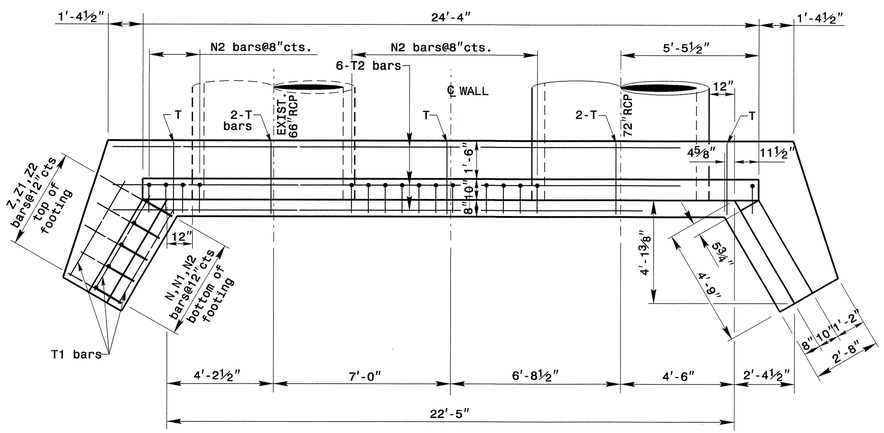

PLAN

NOTE:
ALL BARS NOT SHOWN IN THIS VIEW, WING BAR ARE SYMMETRICAL

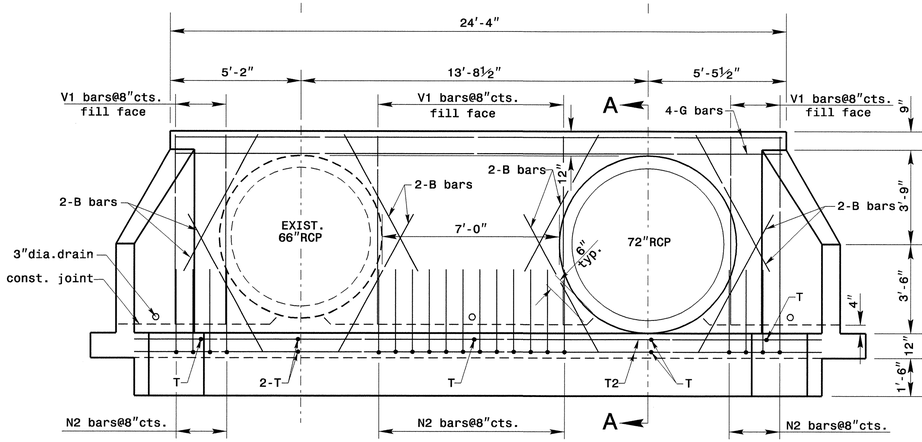

END ELEVATION

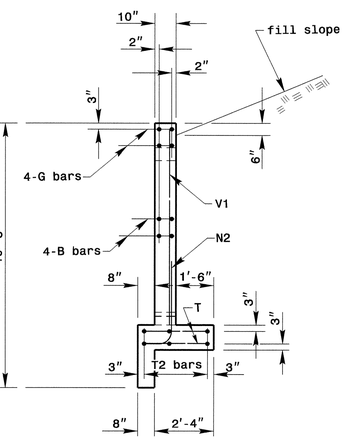

SECTION A-A

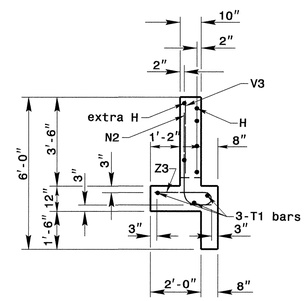

END OF WING

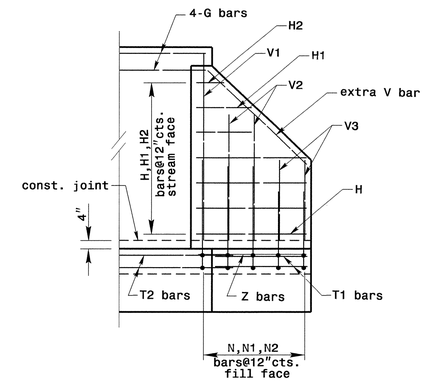

ELEVATION OF WING

SHOWING REINFORCEMENT

BILL OF MATERIAL FOR ENDWALL				
REINF. STEEL			2 PIPES	
BAR	SIZE	LENGTH	NO.	WEIGHT
B	#4	6'-2"	16	66
G	#5	23'-10"	4	100
H	#4	4'-4"	14	41
H1	#4	2'-2"	6	9
H2	#4	1'-1"	4	3
N	#4	6'-3"	4	17
N1	#4	5'-3"	8	29
N2	#4	4'-3"	30	86
T	#4	2'-6"	10	17
T1	#4	4'-4"	10	29
T2	#4	26'-7"	6	107
V1	#4	7'-5"	24	119
V2	#4	5'-0"	6	21
V3	#4	2'-10"	6	12
Z	#5	4'-0"	4	17
Z1	#5	3'-9"	6	24
Z2	#4	3'-5"	6	22
REINF. STEEL LBS.				719
TOTAL CON./R.C. CU. YDS.				13.1
72" PIPE DEDUCTION				-1.2
66" PIPE DEDUCTION				-1.0
CON./R.C. CU. YDS.				10.9

NOTES:

ALL CONCRETE TO BE CLASS "A".

ALL REINFORCING STEEL SHALL BE ASTMA615-GRADE 60.

ALL REINFORCING STEEL SHALL BE DEFORMED BARS. WHERE SPLICING OF REINFORCMENT IS NECESSARY, BARS ARE TO BE LAPPED 45 DIAMETERS. ALL DIMENSIONS RELATIVE TO REINFORCEMENT ARE TO CENTERS OF BARS.

THE FOOTING, CURTAIN WALL AND 4" OF WALL ARE TO BE POURED IN ONE OPERATION ALLOWING NO TIME FOR INITIAL SET TO TAKE PLACE BETWEEN THEM. THE REMAINING WALL SHALL THEN BE POURED IN ONE OPERATION.

ALL EXPOSED CORNERS ARE TO BE CHAMFERED 1".

3" DIAMETER DRAINS SHALL BE PLACED IN WALL AS SHOWN AND BE 6" ABOVE NORMAL FLOW LINE.

ALL MATERIAL AND WORKMANSHIP AS PER N.C.DEPARTMENT OF TRANSPORTATION STANDARD SPECIFICATIONS.

THE EXTRA BARS ARE PROVIDED FOR HOLDING REINFORCING STEEL IN CORRECT POSITION IN WING.

ADJUST STEEL AS DIRECTED BY THE ENGINEER

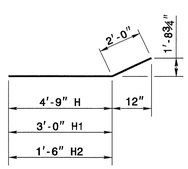

"H" BARS

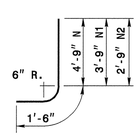

"N" BARS

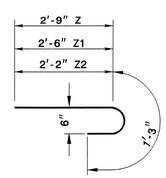

"Z" BARS

"H", "N", & "Z" BAR DIMENSIONS ARE OUT TO OUT.

DESIGN DATA

Specifications	A.A.S.H.T.O. (1946)
Steel in tension	20,000 LBS. PER SQ.IN.
Concrete in compression	1,200 LBS. PER SQ.IN.
Shear Class "A" Concrete	90 LBS. PER SQ. IN.
Equiv. fluid pressure of earth	30 LBS.PER CU. FT.

-L- STA. 132+85 LT.
STRUCTURE No. 148

NORTH CAROLINA PROFESSIONAL SEAL 022966 ENGINEER JOEL S. HUNT
9/27/06

PROJECT SERVICES UNIT
STANDARDS AND SPECIAL DESIGN
Office 919-250-4128 FAX 919-250-4119

DETAIL OF REINFORCED CONCRETE ENDWALL

ORIGINAL BY: _____ DATE: _____
MODIFIED BY: rnbritt DATE: 03/28/06
CHECKED BY: Joel S. Hunt DATE: 4/7/06
FILE SPEC.: details/rnbritt/english/urban/u4026 66 72 endwall90sk.dgn

31-MAR-2006 08:13
s:\contracts\special details\rnbritt\english\urban\u4026 66 72 endwall 90sk.dgn
rnbritt at PS228331

PROJECT REFERENCE NO.	SHEET NO.
U-4026	2-HH

NOTE:
ALL BARS NOT SHOWN IN THIS VIEW, WING BAR ARE SYMMETRICAL

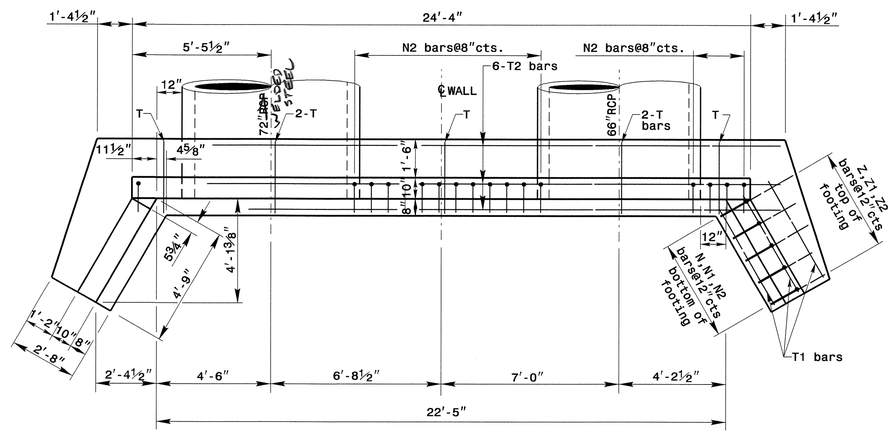

PLAN

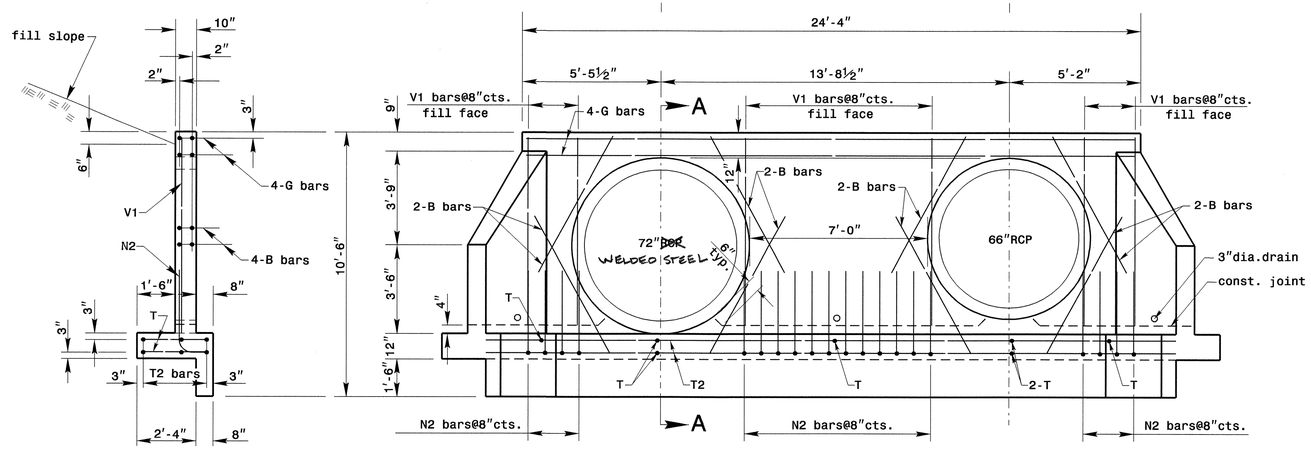

END ELEVATION

SECTION A-A

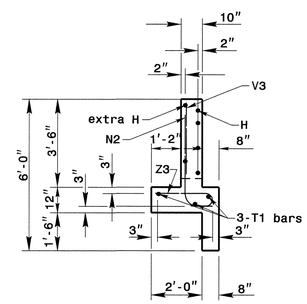

END OF WING

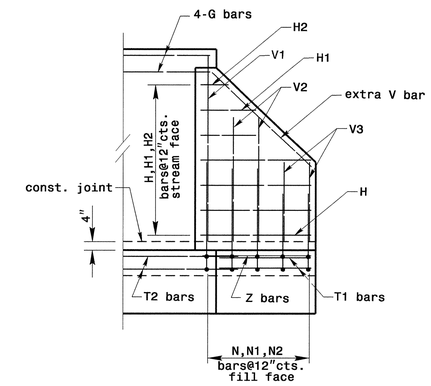

ELEVATION OF WING
SHOWING REINFORCEMENT

BILL OF MATERIAL FOR ENDWALL				
REINF. STEEL			2 PIPES	
BAR	SIZE	LENGTH	NO.	WEIGHT
B	#4	6'-2"	16	66
G	#5	23'-10"	4	100
H	#4	4'-4"	14	41
H1	#4	2'-2"	6	9
H2	#4	1'-1"	4	3
N	#4	6'-3"	4	17
N1	#4	5'-3"	8	29
N2	#4	4'-3"	30	86
T	#4	2'-6"	10	17
T1	#4	4'-4"	10	29
T2	#4	26'-7"	6	107
V1	#4	7'-5"	24	119
V2	#4	5'-0"	6	21
V3	#4	2'-10"	6	12
Z	#5	4'-0"	4	17
Z1	#5	3'-9"	6	24
Z2	#4	3'-5"	6	22
REINF. STEEL LBS.				719
TOTAL CON./R.C. CU. YDS.				13.1
72" PIPE DEDUCTION				-1.2
66" PIPE DEDUCTION				-1.0
CON./R.C. CU. YDS.				10.9

NOTES:

ALL CONCRETE TO BE CLASS "A".

ALL REINFORCING STEEL SHALL BE ASTMA615-GRADE 60.

ALL REINFORCING STEEL SHALL BE DEFORMED BARS. WHERE SPLICING OF REINFORCMENT IS NECESSARY, BARS ARE TO BE LAPPED 45 DIAMETERS. ALL DIMENSIONS RELATIVE TO REINFORCEMENT ARE TO CENTERS OF BARS.

THE FOOTING, CURTAIN WALL AND 4" OF WALL ARE TO BE POURED IN ONE OPERATION ALLOWING NO TIME FOR INITIAL SET TO TAKE PLACE BETWEEN THEM. THE REMAINING WALL SHALL THEN BE POURED IN ONE OPERATION.

ALL EXPOSED CORNERS ARE TO BE CHAMFERED 1".

3" DIAMETER DRAINS SHALL BE PLACED IN WALL AS SHOWN AND BE 6" ABOVE NORMAL FLOW LINE.

ALL MATERIAL AND WORKMANSHIP AS PER N.C.DEPARTMENT OF TRANSPORTATION STANDARD SPECIFICATIONS.

THE EXTRA BARS ARE PROVIDED FOR HOLDING REINFORCING STEEL IN CORRECT POSITION IN WING.

ADJUST STEEL AS DIRECTED BY THE ENGINEER

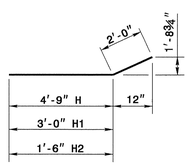

"H" BARS

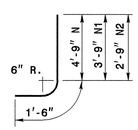

"N" BARS

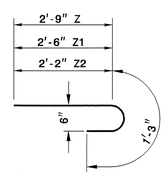

"Z" BARS

"H", "N", & "Z" BAR DIMENSIONS ARE OUT TO OUT.

DESIGN DATA

Specifications	A.A.S.H.T.O. (1946)
Steel in tension	20,000 LBS. PER SQ.IN.
Concrete in compression	1,200 LBS. PER SQ.IN.
Shear Class "A" Concrete	90 LBS. PER SQ. IN.
Equiv. fluid pressure of earth	30 LBS.PER CU. FT.

-L- STA. 135+27 RT
STRUCTURE No. 150

NORTH CAROLINA PROFESSIONAL SEAL 022966 ENGINEER JOEL R. HOLMES
9/22/06

PROJECT SERVICES UNIT
STANDARDS AND SPECIAL DESIGN
Office 919-250-4128 FAX 919-250-4119

DETAIL OF REINFORCED CONCRETE ENDWALL

ORIGINAL BY: DATE:
MODIFIED BY: rnbritt DATE: 03/28/06
CHECKED BY: DATE: 4/7/06
FILE SPEC.: details/rnbritt/english/urban/u4026 66 72 endwall90sk.dgn

31-MAR-2006 08:15
s:\contracts\contracts\special details\rnbritt\english\urban\u4026 66 72 endwall 90sk.dgn
rnbritt AT PS228331

PROJECT REFERENCE NO.	SHEET NO.
U-4026	1-II

NOTE:
ALL BARS NOT SHOWN IN THIS VIEW, WING BAR ARE SYMMETRICAL

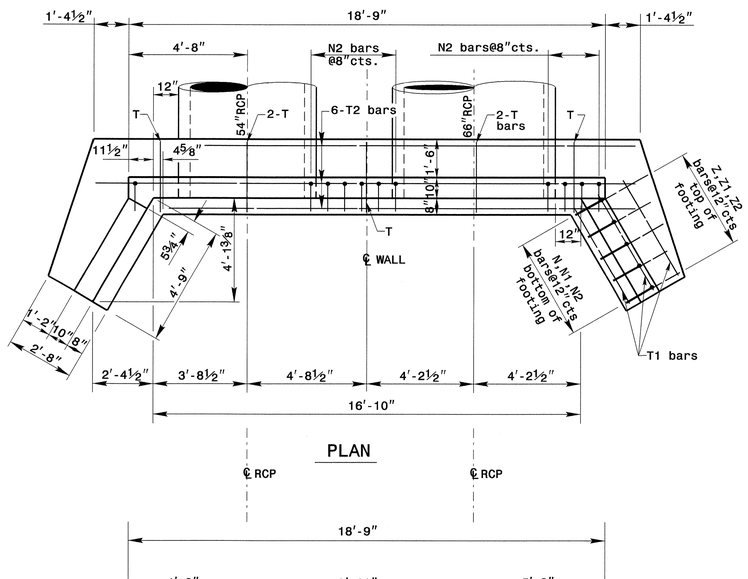

PLAN

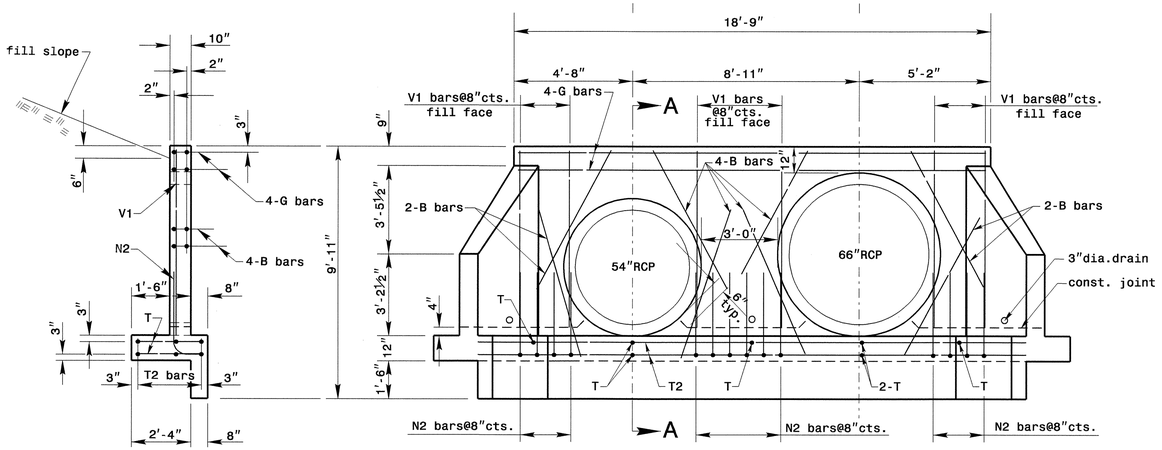

SECTION A-A

END ELEVATION

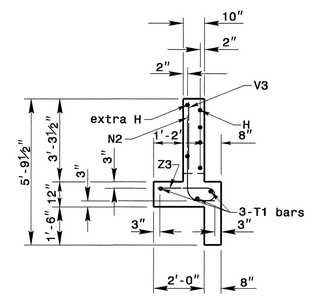

END OF WING

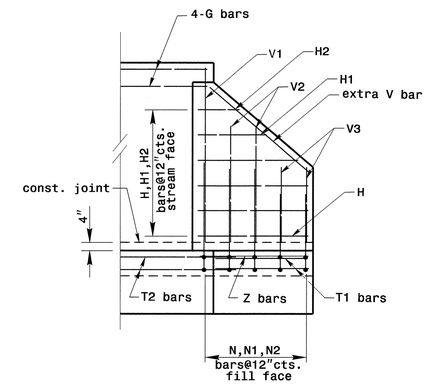

ELEVATION OF WING

SHOWING REINFORCEMENT

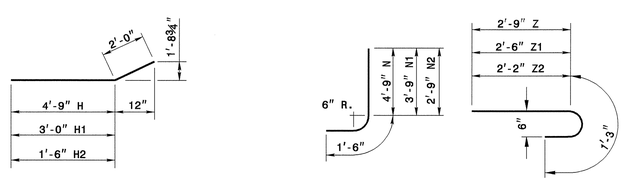

"H" BARS

"N" BARS "Z" BARS

"H", "N", & "Z" BAR DIMENSIONS ARE OUT TO OUT.

DESIGN DATA

Specifications	A.A.S.H.T.O. (1946)
Steel in tension	20,000 LBS. PER SQ.IN.
Concrete in compression	1,200 LBS. PER SQ.IN.
Shear Class "A" Concrete	90 LBS. PER SQ. IN.
Equiv. fluid pressure of earth	30 LBS.PER CU. FT.

BILL OF MATERIAL FOR ENDWALL

REINF. STEEL			2 PIPES	
BAR	SIZE	LENGTH	NO.	WEIGHT
B	#4	6'-2"	16	66
G	#5	18'-3"	4	77
H	#4	4'-4"	14	41
H1	#4	2'-9"	6	12
H2	#4	1'-8"	4	5
N	#4	6'-3"	4	17
N1	#4	5'-3"	8	29
N2	#4	4'-3"	24	69
T	#4	2'-6"	10	17
T1	#4	4'-4"	10	29
T2	#4	21'-0"	6	85
V1	#4	6'-11"	20	93
V2	#4	4'-8"	6	19
V3	#4	3'-0"	6	13
Z	#5	4'-0"	4	17
Z1	#5	3'-9"	6	24
Z2	#4	3'-5"	6	22
REINF. STEEL LBS.				635
TOTAL CON./R.C. CU. YDS.				11.0
54" PIPE DEDUCTION				-0.7
66" PIPE DEDUCTION				-1.0
CON./R.C. CU. YDS.				9.3

NOTES:

ALL CONCRETE TO BE CLASS "A".

ALL REINFORCING STEEL SHALL BE ASTMA615-GRADE 60.

ALL REINFORCING STEEL SHALL BE DEFORMED BARS. WHERE SPLICING OF REINFORCMENT IS NECESSARY, BARS ARE TO BE LAPPED 45 DIAMETERS. ALL DIMENSIONS RELATIVE TO REINFORCEMENT ARE TO CENTERS OF BARS.

THE FOOTING, CURTAIN WALL AND 4" OF WALL ARE TO BE POURED IN ONE OPERATION ALLOWING NO TIME FOR INITIAL SET TO TAKE PLACE BETWEEN THEM. THE REMAINING WALL SHALL THEN BE POURED IN ONE OPERATION.

ALL EXPOSED CORNERS ARE TO BE CHAMFERED 1".

3" DIAMETER DRAINS SHALL BE PLACED IN WALL AS SHOWN AND BE 6" ABOVE NORMAL FLOW LINE.

ALL MATERIAL AND WORKMANSHIP AS PER N.C.DEPARTMENT OF TRANSPORTATION STANDARD SPECIFICATIONS.

THE EXTRA BARS ARE PROVIDED FOR HOLDING REINFORCING STEEL IN CORRECT POSITION IN WING.

ADJUST STEEL AS DIRECTED BY THE ENGINEER

-L- STA. 177+13 RT
STRUCTURE No. 192

NORTH CAROLINA PROFESSIONAL SEAL 022966 ENGINEER
JOEL R. McCLURE
9/22/06

PROJECT SERVICES UNIT
STANDARDS AND SPECIAL DESIGN
Office 919-250-4128 FAX 919-250-4119

DETAIL OF REINFORCED CONCRETE ENDWALL

ORIGINAL BY: DATE:
MODIFIED BY: rnbritt DATE: 03/31/06
CHECKED BY: DATE: 4/7/06
FILE SPEC.: details/nbritt/english/urban/u4026 54 66 endwall90sk.dgn

PROJECT REFERENCE NO.	SHEET NO.
U-4026	1-J.1

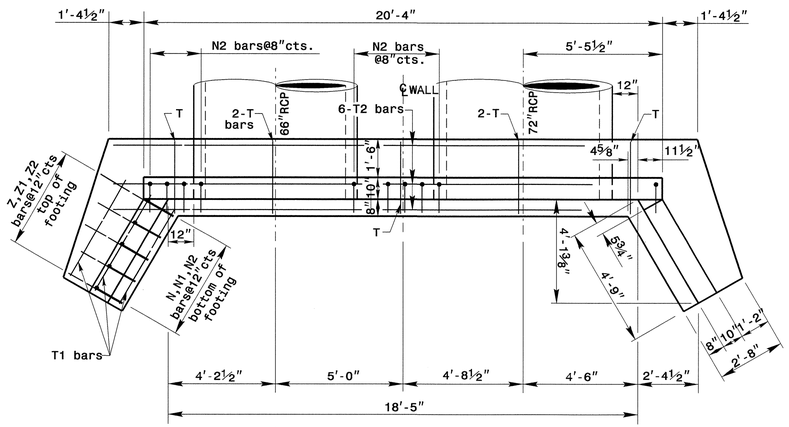

PLAN

NOTE:
ALL BARS NOT SHOWN IN THIS VIEW, WING BAR ARE SYMMETRICAL

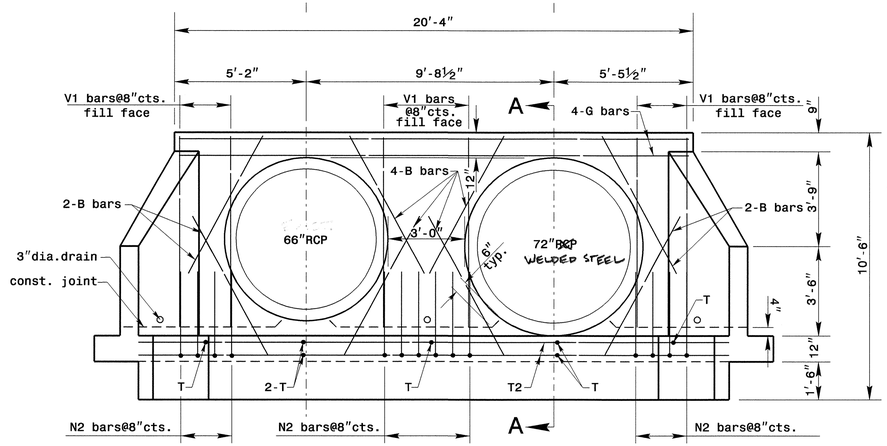

END ELEVATION

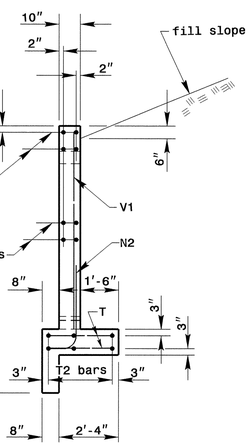

SECTION A-A

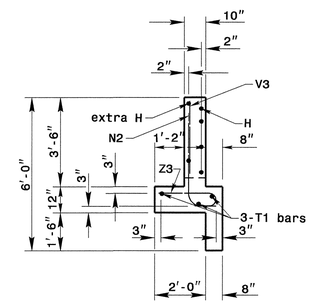

END OF WING

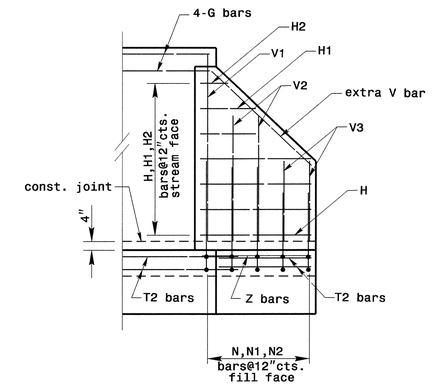

ELEVATION OF WING

SHOWING REINFORCEMENT

BILL OF MATERIAL FOR ENDWALL				
REINF. STEEL			2 PIPES	
BAR	SIZE	LENGTH	NO.	WEIGHT
B	#4	6'-2"	16	66
G	#5	19'-10"	4	83
H	#4	4'-4"	14	41
H1	#4	2'-2"	6	9
H2	#4	1'-1"	4	3
N	#4	6'-3"	4	17
N1	#4	5'-3"	8	29
N2	#4	4'-3"	24	69
T	#4	2'-6"	10	17
T1	#4	4'-4"	10	29
T2	#4	22'-7"	6	91
V1	#4	7'-5"	20	100
V2	#4	5'-0"	6	21
V3	#4	2'-10"	6	12
Z	#5	4'-0"	4	17
Z1	#5	3'-9"	6	24
Z2	#4	3'-5"	6	22
REINF. STEEL LBS.				650
TOTAL CON./R.C. CU. YDS.				11.5
72" PIPE DEDUCTION				-1.2
66" PIPE DEDUCTION				-1.0
CON./R.C. CU. YDS.				9.3

NOTES:

ALL CONCRETE TO BE CLASS "A".

ALL REINFORCING STEEL SHALL BE ASTMA615-GRADE 60.

ALL REINFORCING STEEL SHALL BE DEFORMED BARS. WHERE SPLICING OF REINFORCMENT IS NECESSARY, BARS ARE TO BE LAPPED 45 DIAMETERS. ALL DIMENSIONS RELATIVE TO REINFORCEMENT ARE TO CENTERS OF BARS.

THE FOOTING, CURTAIN WALL AND 4" OF WALL ARE TO BE POURED IN ONE OPERATION ALLOWING NO TIME FOR INITIAL SET TO TAKE PLACE BETWEEN THEM. THE REMAINING WALL SHALL THEN BE POURED IN ONE OPERATION.

ALL EXPOSED CORNERS ARE TO BE CHAMFERED 1".

3" DIAMETER DRAINS SHALL BE PLACED IN WALL AS SHOWN AND BE 6" ABOVE NORMAL FLOW LINE.

ALL MATERIAL AND WORKMANSHIP AS PER N.C.DEPARTMENT OF TRANSPORTATION STANDARD SPECIFICATIONS.

THE EXTRA BARS ARE PROVIDED FOR HOLDING REINFORCING STEEL IN CORRECT POSITION IN WING.

ADJUST STEEL AS DIRECTED BY THE ENGINEER

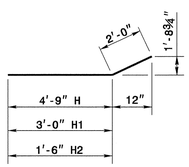

"H" BARS

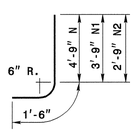

"N" BARS

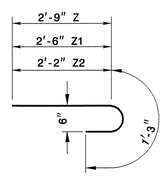

"Z" BARS

"H", "N", & "Z" BAR DIMENSIONS ARE OUT TO OUT.

DESIGN DATA

Specifications	A.A.S.H.T.O. (1946)
Steel in tension	20,000 LBS. PER SQ.IN.
Concrete in compression	1,200 LBS. PER SQ.IN.
Shear Class "A" Concrete	90 LBS. PER SQ. IN.
Equiv. fluid pressure of earth	30 LBS.PER CU. FT.

-L- STA. 229+76 RT.
STRUCTURE NO. 260

NORTH CAROLINA PROFESSIONAL SEAL 022986 ENGINEER JOEL S. HUNT
9/22/06

PROJECT SERVICES UNIT
STANDARDS AND SPECIAL DESIGN
Office 919-250-4128 FAX 919-250-4119

DETAIL OF REINFORCED CONCRETE ENDWALL

ORIGINAL BY: _____ DATE: _____
MODIFIED BY: rnbritt DATE: 03/28/06
CHECKED BY: [signature] DATE: 4/7/06
FILE SPEC.: details/nbritt/english/urban/u4026 66 72 endwall90sk.dgn

PROJECT REFERENCE NO.	SHEET NO.
U-4026	2-KK

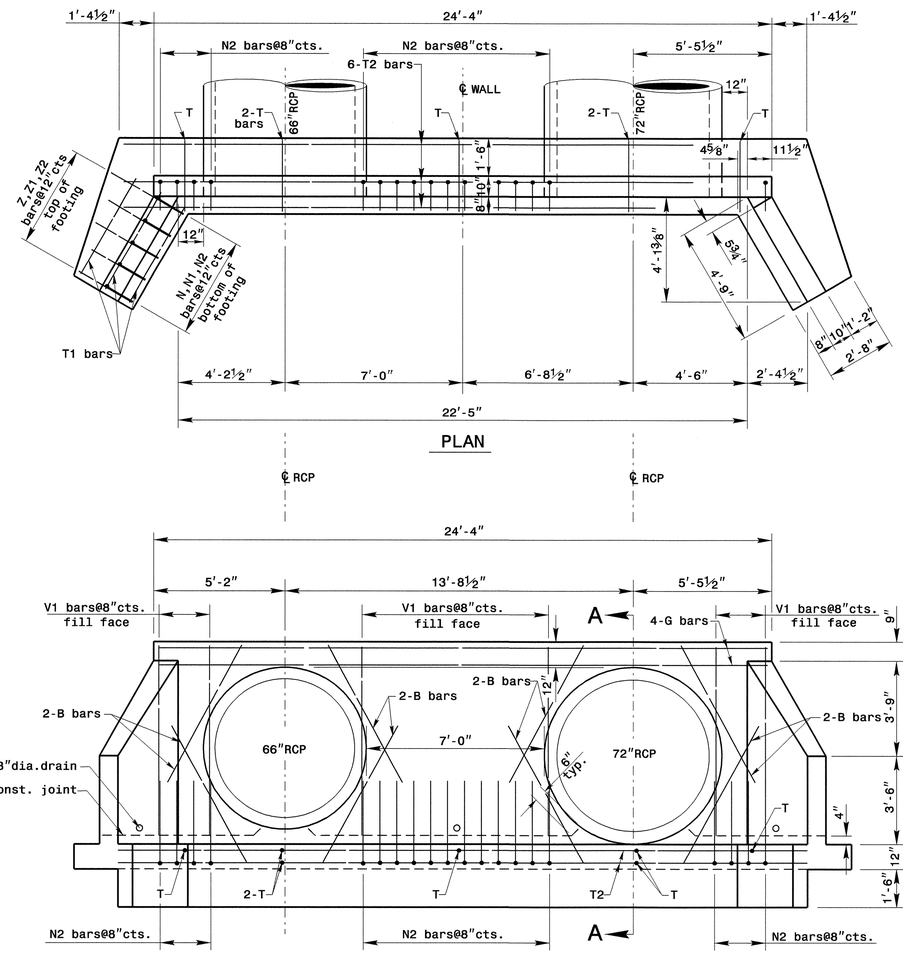

END ELEVATION

NOTE:
ALL BARS NOT SHOWN IN THIS VIEW, WING BAR ARE SYMMETRICAL

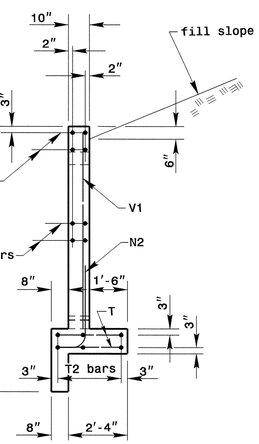

SECTION A-A

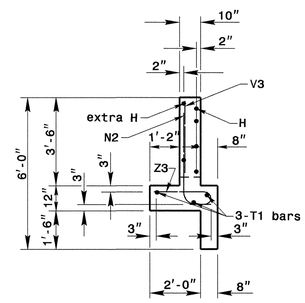

END OF WING

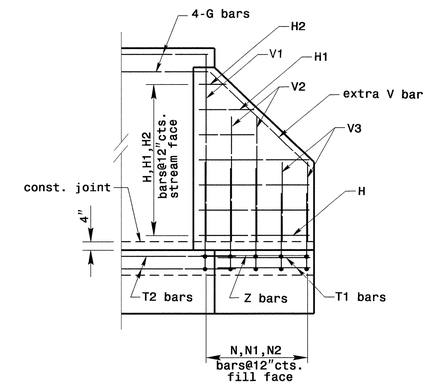

ELEVATION OF WING

SHOWING REINFORCEMENT

BILL OF MATERIAL FOR ENDWALL				
REINF. STEEL			2 PIPES	
BAR	SIZE	LENGTH	NO.	WEIGHT
B	#4	6'-2"	16	66
G	#5	23'-10"	4	100
H	#4	4'-4"	14	41
H1	#4	2'-2"	6	9
H2	#4	1'-1"	4	3
N	#4	6'-3"	4	17
N1	#4	5'-3"	8	29
N2	#4	4'-3"	30	86
T	#4	2'-6"	10	17
T1	#4	4'-4"	10	29
T2	#4	26'-7"	6	107
V1	#4	7'-5"	24	119
V2	#4	5'-0"	6	21
V3	#4	2'-10"	6	12
Z	#5	4'-0"	4	17
Z1	#5	3'-9"	6	24
Z2	#4	3'-5"	6	22
REINF. STEEL LBS.				719
TOTAL CON./R.C. CU. YDS.				13.1
72" PIPE DEDUCTION				-1.2
66" PIPE DEDUCTION				-1.0
CON./R.C. CU. YDS.				10.9

NOTES:

ALL CONCRETE TO BE CLASS "A".

ALL REINFORCING STEEL SHALL BE ASTMA615-GRADE 60.

ALL REINFORCING STEEL SHALL BE DEFORMED BARS. WHERE SPLICING OF REINFORCMENT IS NECESSARY, BARS ARE TO BE LAPPED 45 DIAMETERS. ALL DIMENSIONS RELATIVE TO REINFORCEMENT ARE TO CENTERS OF BARS.

THE FOOTING, CURTAIN WALL AND 4" OF WALL ARE TO BE POURED IN ONE OPERATION ALLOWING NO TIME FOR INITIAL SET TO TAKE PLACE BETWEEN THEM. THE REMAINING WALL SHALL THEN BE POURED IN ONE OPERATION.

ALL EXPOSED CORNERS ARE TO BE CHAMFERED 1".

3" DIAMETER DRAINS SHALL BE PLACED IN WALL AS SHOWN AND BE 6" ABOVE NORMAL FLOW LINE.

ALL MATERIAL AND WORKMANSHIP AS PER N.C.DEPARTMENT OF TRANSPORTATION STANDARD SPECIFICATIONS.

THE EXTRA BARS ARE PROVIDED FOR HOLDING REINFORCING STEEL IN CORRECT POSITION IN WING.

ADJUST STEEL AS DIRECTED BY THE ENGINEER

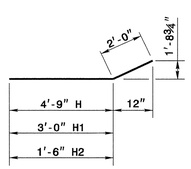

"H" BARS

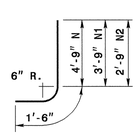

"N" BARS

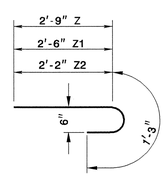

"Z" BARS

"H", "N", & "Z" BAR DIMENSIONS ARE OUT TO OUT.

DESIGN DATA

Specifications	A.A.S.H.T.O. (1946)
Steel in tension	20,000 LBS. PER SQ.IN.
Concrete in compression	1,200 LBS. PER SQ.IN.
Shear Class "A" Concrete	90 LBS. PER SQ. IN.
Equiv. fluid pressure of earth	30 LBS.PER CU. FT.

-L- STA. 230+40 LT.
STRUCTURE NO 2103

NORTH CAROLINA PROFESSIONAL SEAL 022966 ENGINEER JOEL R. HOCUTT
9/27/06

PROJECT SERVICES UNIT
STANDARDS AND SPECIAL DESIGN
Office 919-250-4128 FAX 919-250-4119

DETAIL OF REINFORCED CONCRETE ENDWALL

ORIGINAL BY: DATE:
MODIFIED BY: rnbritt DATE: 04/10/06
CHECKED BY: DATE: 4/10/06
FILE SPEC.: details/nbritt/english/urban/u4026 66 72 endwall90sk.dgn

PROJECT REFERENCE NO.	SHEET NO.
U-4026	2-LL

NOTE:
ALL BARS NOT SHOWN IN THIS VIEW, WING BAR ARE SYMMETRICAL

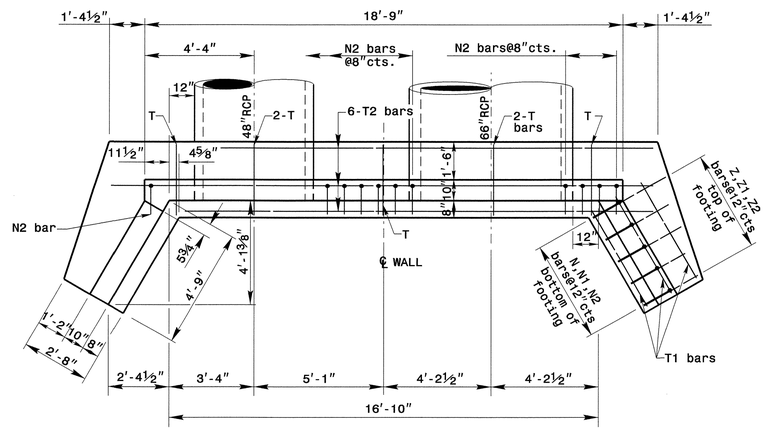

PLAN

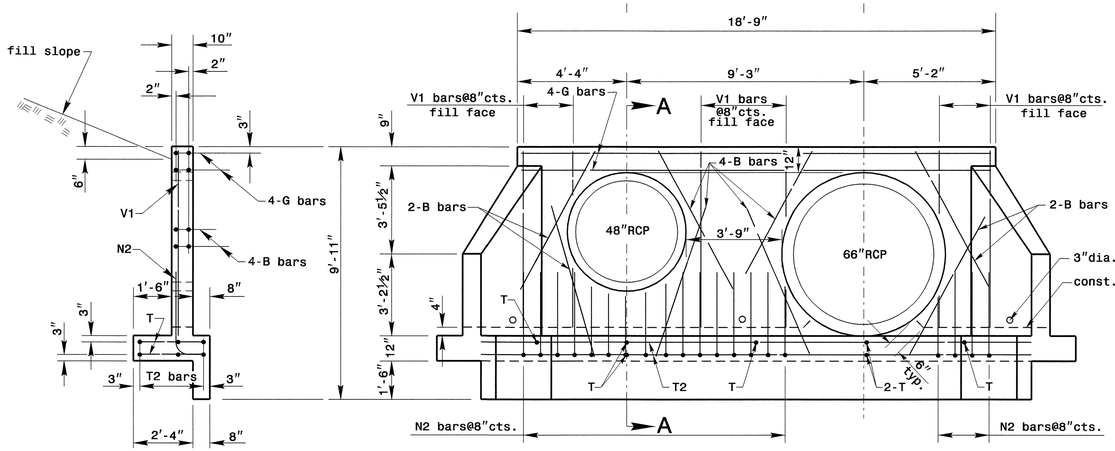

END ELEVATION

SECTION A-A

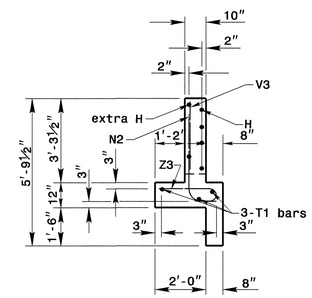

END OF WING

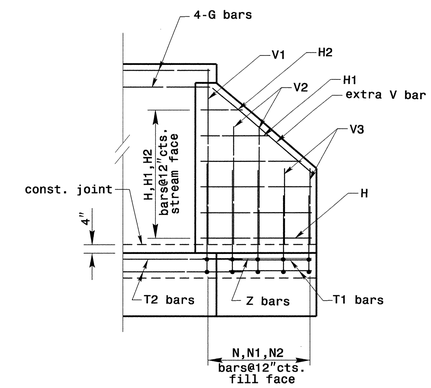

ELEVATION OF WING
SHOWING REINFORCEMENT

BILL OF MATERIAL FOR ENDWALL				
REINF. STEEL			2 PIPES	
BAR	SIZE	LENGTH	NO.	WEIGHT
B	#4	6'-2"	16	66
G	#5	18'-3"	4	77
H	#4	4'-4"	14	41
H1	#4	2'-9"	6	12
H2	#4	1'-8"	4	5
N	#4	6'-3"	4	17
N1	#4	5'-3"	8	29
N2	#4	4'-3"	30	95
T	#4	2'-6"	10	17
T1	#4	4'-4"	10	29
T2	#4	21'-0"	6	85
V1	#4	6'-11"	20	93
V2	#4	4'-8"	6	19
V3	#4	3'-0"	6	13
Z	#5	4'-0"	4	17
Z1	#5	3'-9"	6	24
Z2	#4	3'-5"	6	22
REINF. STEEL LBS.				661
TOTAL CON./R.C. CU. YDS.				11.0
48" PIPE DEDUCTION				-0.6
66" PIPE DEDUCTION				-1.0
CON./R.C. CU. YDS.				9.4

NOTES:

ALL CONCRETE TO BE CLASS "A".

ALL REINFORCING STEEL SHALL BE ASTMA615-GRADE 60.

ALL REINFORCING STEEL SHALL BE DEFORMED BARS. WHERE SPLICING OF REINFORCMENT IS NECESSARY, BARS ARE TO BE LAPPED 45 DIAMETERS. ALL DIMENSIONS RELATIVE TO REINFORCEMENT ARE TO CENTERS OF BARS.

THE FOOTING, CURTAIN WALL AND 4" OF WALL ARE TO BE POURED IN ONE OPERATION ALLOWING NO TIME FOR INITIAL SET TO TAKE PLACE BETWEEN THEM. THE REMAINING WALL SHALL THEN BE POURED IN ONE OPERATION.

ALL EXPOSED CORNERS ARE TO BE CHAMFERED 1".

3" DIAMETER DRAINS SHALL BE PLACED IN WALL AS SHOWN AND BE 6" ABOVE NORMAL FLOW LINE.

ALL MATERIAL AND WORKMANSHIP AS PER N.C.DEPARTMENT OF TRANSPORTATION STANDARD SPECIFICATIONS.

THE EXTRA BARS ARE PROVIDED FOR HOLDING REINFORCING STEEL IN CORRECT POSITION IN WING.

ADJUST STEEL AS DIRECTED BY THE ENGINEER

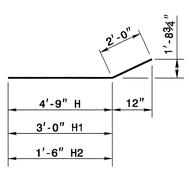

"H" BARS

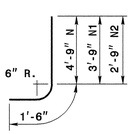

"N" BARS

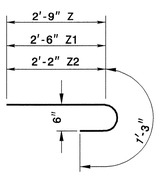

"Z" BARS

"H", "N", & "Z" BAR DIMENSIONS ARE OUT TO OUT.

DESIGN DATA

Specifications	A.A.S.H.T.O. (1946)
Steel in tension	20,000 LBS. PER SQ.IN.
Concrete in compression	1,200 LBS. PER SQ.IN.
Shear Class "A" Concrete	90 LBS. PER SQ. IN.
Equiv. fluid pressure of earth	30 LBS.PER CU. FT.

-L- STA. 285+84 RT & 287+28 LT.
STRUCTURE No.S 355 & 358

PROJECT SERVICES UNIT
STANDARDS AND SPECIAL DESIGN
Office 919-250-4128 FAX 919-250-4119

NORTH CAROLINA PROFESSIONAL SEAL 022966 ENGINEER JOEL S. HAMPTON
9/12/06

DETAIL OF REINFORCED CONCRETE ENDWALL

ORIGINAL BY: DATE:
MODIFIED BY: rnbritt DATE: 03/31/06
CHECKED BY: DATE: 9/7/06
FILE SPEC.: details/nbritt/english/urban/u4026 54 66 endwall90sk.dgn

PROJECT REFERENCE NO.	SHEET NO.
U-4026	2-MM

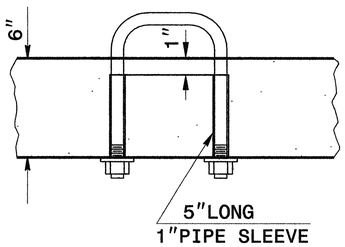

PARTIAL SECTION

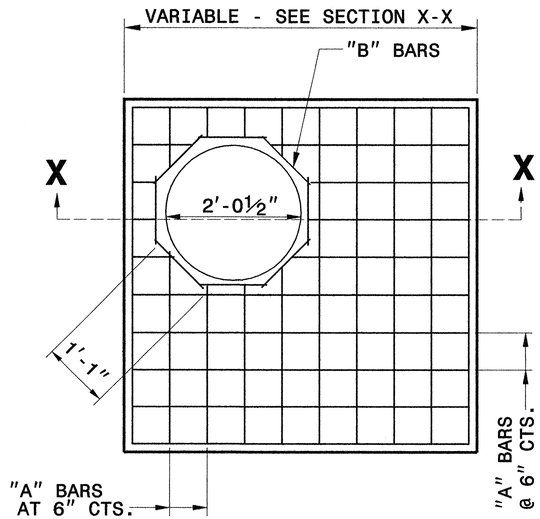

PLAN

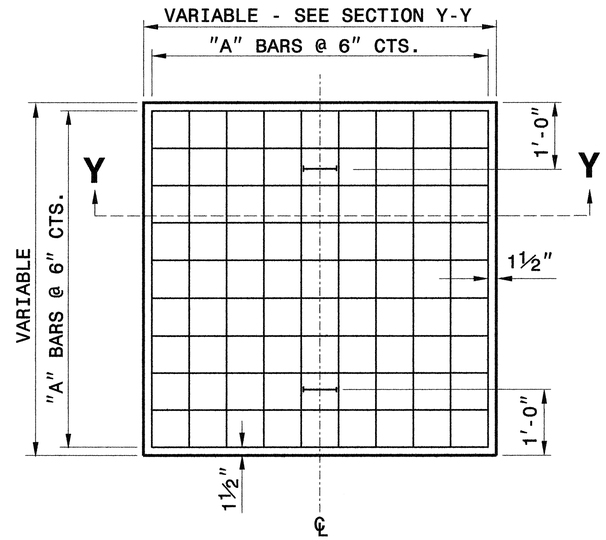

PLAN

GENERAL NOTES:

CONSTRUCT IN ACCORDANCE WITH SECTION 859 OF THE STANDARD SPECIFICATIONS.

THE DIMENSIONS FOR THE EXISTING BOXES ARE APPROXIMATE AND MAY VARY SLIGHTLY.

DETAIL INTENDED FOR NON-TRAFFIC BEARING DRAINAGE STRUCTURES.

BILL OF MATERIALS

REINFORCING STEEL				
CODE	SIZE	QTY.	LENGTH	REINF. STEEL LBS.
A	#4	20	4'-6"	60.12
B	#4	8	1'-1"	5.79
TOTAL				65.91 *
MASONRY				CU YDS
TOP SLAB CONCRETE CLASS "B"				.4326 *
BRICK MASONRY PER FT HT (MIN)				.4111

* NOTE:
QUANTITIES BASED ON 3'-6" X 3'-6" DRAINAGE STRUCTURE. ADJUST QUANTITIES FOR LARGER STRUCTURES AND MANHOLE CONSTRUCTION.

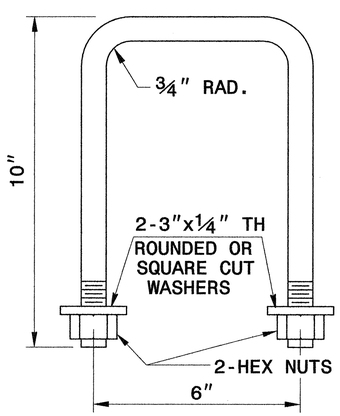

DETAIL OF HANDLE

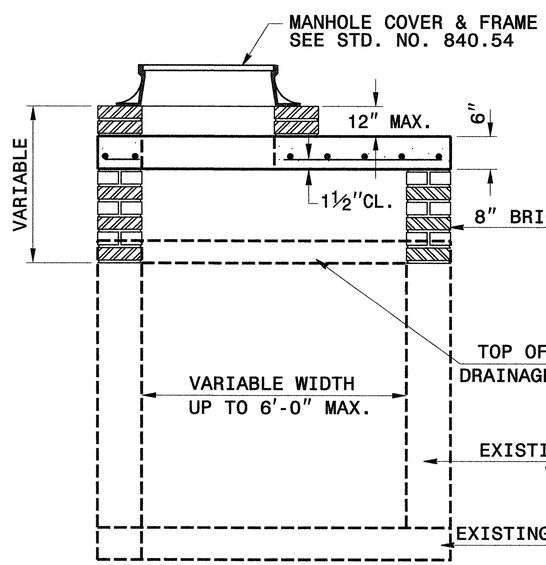

SECTION X-X

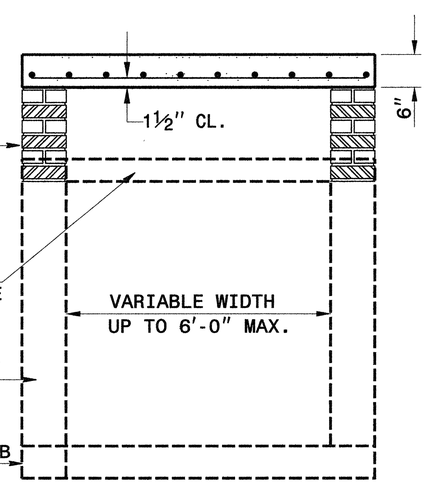

SECTION Y-Y

-L- STA. 247+20 RT
STRUCTURE No. 295

NORTH CAROLINA PROFESSIONAL SEAL 022966 ENGINEER JOEL S. MOYER
7/22/06

PROJECT SERVICES UNIT
STANDARDS AND SPECIAL DESIGN
Office 919-250-4128 FAX 919-250-4119

DETAIL TO CONVERT EXISTING CATCH BASIN TO JUNCTION BOX (MANHOLE OPTIONAL)

ORIGINAL BY: _____ DATE: _____
MODIFIED BY: rnbritt DATE: 11/23/05
CHECKED BY: _____ DATE: _____
FILE SPEC.: details/nbritt/english/hydro/boxconversion

5/14/99

5/5/2006
K:\Pubway\Proj\box conversion detail.dgn
Ko & Associates, P.C.

PROJECT REFERENCE NO.	SHEET NO.
U-4026	2-NN

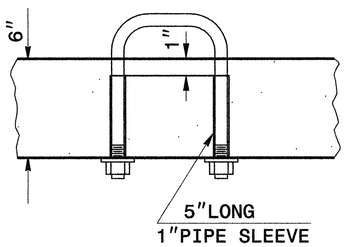

PARTIAL SECTION

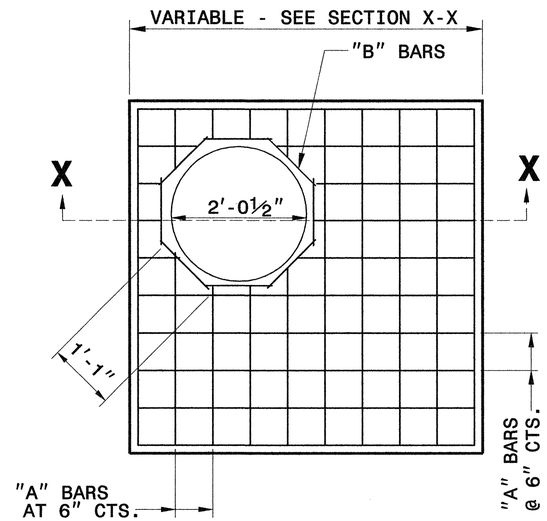

PLAN

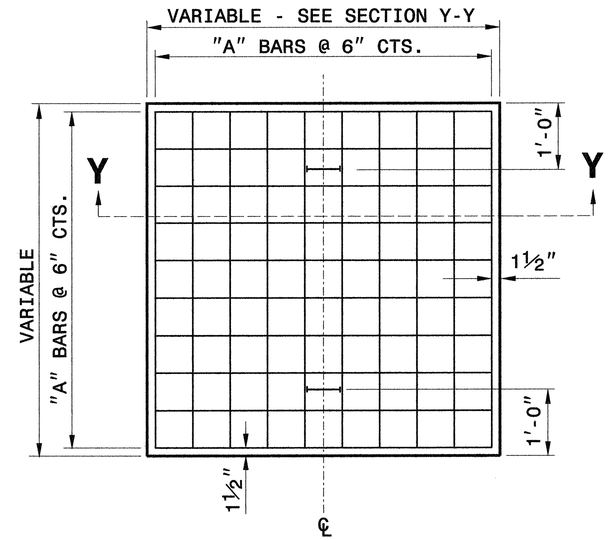

PLAN

GENERAL NOTES:

CONSTRUCT IN ACCORDANCE WITH SECTION 859 OF THE STANDARD SPECIFICATIONS.

THE DIMENSIONS FOR THE EXISTING BOXES ARE APPROXIMATE AND MAY VARY SLIGHTLY.

DETAIL INTENDED FOR NON-TRAFFIC BEARING DRAINAGE STRUCTURES.

BILL OF MATERIALS

REINFORCING STEEL				
CODE	SIZE	QTY.	LENGTH	REINF. STEEL LBS.
A	#4	20	4'-6"	60.12
B	#4	8	1'-1"	5.79
TOTAL				65.91 *

MASONRY	CU YDS
TOP SLAB CONCRETE CLASS "B"	.4326 *
BRICK MASONRY PER FT HT (MIN)	.4111

* NOTE:
QUANTITIES BASED ON 3'-6" X 3'-6" DRAINAGE STRUCTURE. ADJUST QUANTITIES FOR LARGER STRUCTURES AND MANHOLE CONSTRUCTION.

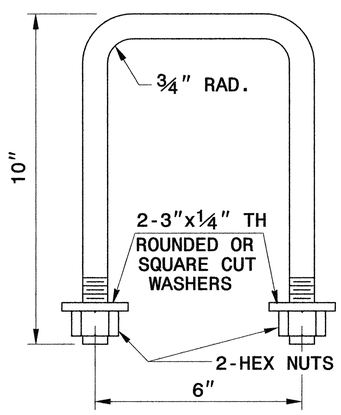

DETAIL OF HANDLE

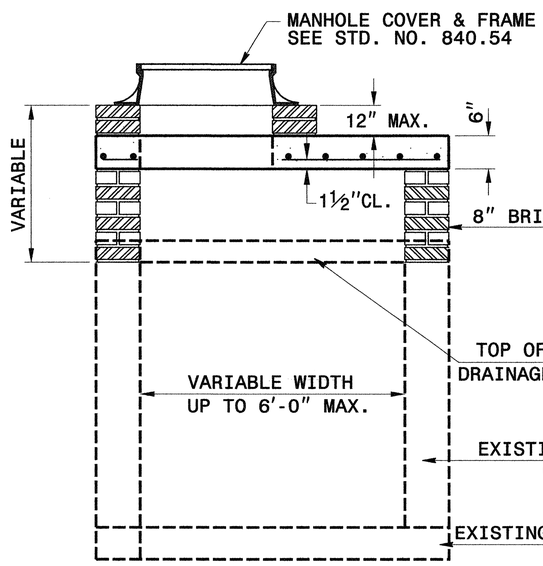

SECTION X-X

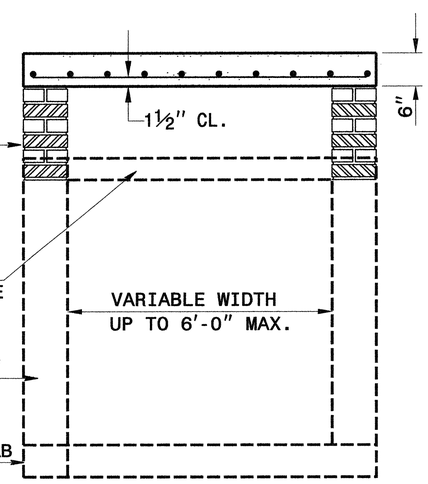

SECTION Y-Y

-L- STA. 154+87 & 158+22 LT
STRUCTURE No's 159 & 164

NORTH CAROLINA PROFESSIONAL SEAL 022966 ENGINEER JOEL S. HOCHSTEDLER
9/22/06

PROJECT SERVICES UNIT
STANDARDS AND SPECIAL DESIGN
Office 919-250-4128 FAX 919-250-4119

DETAIL TO CONVERT EXISTING DROP INLET TO JUNCTION BOX (MANHOLE OPTIONAL)

ORIGINAL BY: _____ DATE: _____
MODIFIED BY: rnbritt DATE: 11/23/05
CHECKED BY: _____ DATE: _____
FILE SPEC.: details/nbritt/english/hydro/boxconversion

5/14/99

5/5/2006
R:\Roadway\Proj\box conversion detail.dgn
Ko & Associates, P.C.

COMPUTED BY:	JEA	DATE:	5/1/2006
CHECKED BY:	MTR	DATE:	5/1/2006

PROJECT NO.	SHEET NO.
U-4026	3-A

STATE OF NORTH CAROLINA
DIVISION OF HIGHWAYS

8400-YVETTE

NOTE: ALL ELEVATIONS ON THIS SHEET ARE FOR COST ESTIMATING ONLY AND SHALL NOT BE USED FOR FIELD STAKING.

LIST OF PIPES, ENDWALLS, ETC. (FOR PIPES 48" & UNDER)

ABBREVIATIONS

C.B.	CATCH BASIN
N.D.I.	NARROW DROP INLET
D.I.	DROP INLET
M.D.I.	MEDIAN DROP INLET
M.D.I.(N.S.)	MEDIAN DROP INLET (NARROW SLOT)
J.B.	JUNCTION BOX
M.H.	MANHOLE
T.B.D.I.	TRAFFIC BEARING DROP INLET
T.B.J.B.	TRAFFIC BEARING JUNCTION BOX

STATION SIZE THICKNESS OR GAUGE	LOCATION (LT, RT, OR CL)	STRUCTURE NO. FROM	STRUCTURE NO. TO	TOP ELEVATION	INVERT ELEVATION	INVERT ELEVATION	SLOPE CRITICAL	CLASS III R.C. PIPE (UNLESS NOTED OTHERWISE) 12"	15"	18"	24"	30"	36"	42"	48"	BITUMINOUS COATED C.S. PIPE TYPE B (UNLESS NOTED OTHERWISE) 12" .064	15" .064	18" .064	24" .064	30" .079	CLASS III R.C. PIPE OR C.S. PIPE IR ALUMINIZED OR HDPE PIPE, TYPE S OR D 12"	15"	18"	24"	30"	36"	42"	48"	15" SIDE DRAIN PIPE	18" SIDE DRAIN PIPE	24" SIDE DRAIN PIPE	ENDWALLS STD. 838.01, STD. 838.11 OR STD. 838.80 (UNLESS NOTED OTHERWISE) CU. YARDS R.C.P.	C.S.P.	QUANITIES FOR DRAINAGE STRUCTURES PER EACH (0' THRU 5.0')	*TOTAL L.F. FOR PAY QUANTITY SHALL BE COL. 'A' + (1.3 X COL.'B') LIN. FT. A 5.0' THRU 10.0'	B 10.0' AND ABOVE	C.B. STD. 840.01 OR STD. 840.02	FRAME, GRATES, AND HOOD STANDARD 840.03 TYPE OF GRATE E	F	G	D.I. STD. 840.14 OR STD. 840.15	D.I. FRAME AND GRATE STD. 840.16	M.D.I. TYPE "A" STD. 840.17 OR 840.26	M.D.I. TYPE "B" STD. 840.18 OR 840.27	M.D.I. TYPE "D" STD. 840.19 OR 840.28	M.D.I. FRAME WITH GRATE STD. 840.20	M.D.I. FRAME WITH TWO GRATES STD. 840.22	M.D.I. (N.S.) FRAME WITH GRATE STD. 840.24	M.D.I. (N.S.) FRAME WITH TWO GRATES STD. 840.24	J.B. STD. 840.31 OR 840.32	M.D.I. (N.S.) FRAME WITH TWO GRATES STD. 840.29	MANHOLE STD. 840.51	M.H. STD. 840.51 OR 840.53	M.H. FRAME AND COVER STD. 840.54	TRAFFIC BEARING J.B. STD. 840.34	24" WELDED STEEL PIPE (0.5" THICK), GRADE B	30" WELDED STEEL PIPE (0.5" THICK), GRADE B	36" WELDED STEEL PIPE (0.5" THICK), GRADE B	42" WELDED STEEL PIPE (0.625" THICK), GRADE B	48" WELDED STEEL PIPE (0.625" THICK), GRADE B	BERM DITCH OUTLET STD. 850.10 OR 850.11	ADJUSTMENT OF DROP INLETS	CONVERT D.I. TO J.B.	CONVERT C.B. TO J.B.	TEMPORARY STEEL PLATE COVERS	FLOWABLE FILL	CORR. STEEL ELBOWS NO. & SIZE	CONC. COLLARS CL. "B" C.Y. STD. 840.72	CONC. & BRICK PIPE PLUG, C.Y. STD. 840.71	PIPE REMOVAL LIN. FT.	REMARKS
		1																																																																				NOT USED
		2																																																																				NOT USED
		3																																																																				NOT USED
18+45 L	LT	4			355.70																																																																	OPEN END PIPE
18+45 L	LT	4	5		355.70	356.85																36																																																
18+80 L	LT	5		359.60	356.85																													1											1					1																									
18+80 L	LT	5	6		356.85	358.85																232																																																
21+10 L	LT	6		361.60	358.85																													1											1					1																									
		7																																																																				NOT USED
18+60 L	LT	8																																																																		28	REMOVE DRIVE PIPE
		9																																																																				NOT USED
21+00 L	LT	10																																																																		20	REMOVE DRIVE PIPE
22+35 L	LT	11																																																																		20	REMOVE DRIVE PIPE
23+10 L	LT	12																																																																		28	REMOVE DRIVE PIPE
		13																																																																			NOT USED
22+90 L	RT	14			359.60																																																																OPEN END PIPE
22+90 L	RT	14	15		359.60	361.08	☒			40																																																									73	REMOVE CROSS PIPE
22+90 L	CL	15		368.72	361.08																													1	2.64						1	1																														
22+90 L	CL	15	16		362.58	362.88				60																																																												
22+90 L	LT	16		365.90	362.88																													1											1					1																									
22+90 L	LT	16	17		362.88	363.10																	44																																															
23+35 L	LT	17		366.10	363.10																													1											1					1																									
22+90 L	CL	15	18		362.58	366.82			92																																																														
23+85 L	CL	18		369.82	366.82																													1							1	1																														
23+85 L	CL	18	19		366.82	367.37			48																																																														
24+35 L	CL	19		370.37	367.37																													1							1	1																														
24+35 L	CL	19	20		367.37	369.77			216																																																														
26+50 L	CL	20		372.77	369.77																													1							1	1																														
26+50 L	CL	20	21		369.77	370.64			152																																																														
28+00 L	CL	21		373.81	370.64																													1							1	1																														
30+80 L	RT	22			366.10																																																																OPEN END PIPE
30+80 L	CL	22	23		366.10	372.73			72																																																														
30+80 L	CL	23		375.90	372.73																													1							1	1																														
34+20 L	LT	24																																																																		24	REMOVE DRIVE PIPE
35+00 L	LT	25																																																																		20	REMOVE DRIVE PIPE
36+35 L	LT	26			369.70																																																																OPEN END PIPE
36+35 L	LT	26	27		369.70	369.44																		36																																														
36+35 L	LT	27		372.94	369.44																													1											1					1																									
36+35 L	CL	27	28		369.44	370.19			120																																																														
36+35 L	RT	28		372.94	370.19																													1											1					1																									
36+35 L	LT	27	29		369.83	371.41																152																																																
34+85 L	LT	29		374.16	371.41																													1											1					1																									
38+50 L	LT	33	27	375.37	372.10	369.44																	216																																															
SHEET TOTALS									700	100												420	260	36										13	2.64						6	6		7					7																						213	

8400-YVETTE,10/2/2006,R:\Roadway\Proj\Drainage_summaries.xls

8400-YVETTE

COMPUTED BY: JEA DATE: 5/1/2006
CHECKED BY: MTR DATE: 5/1/2006

STATE OF NORTH CAROLINA
DIVISION OF HIGHWAYS

PROJECT NO.	SHEET NO.
U-4026	3-B

NOTE: ALL ELEVATIONS ON THIS SHEET ARE FOR COST ESTIMATING ONLY AND SHALL NOT BE USED FOR FIELD STAKING.

LIST OF PIPES, ENDWALLS, ETC. (FOR PIPES 48" & UNDER)

STATION	LOCATION (LT, RT, OR CL)	STRUCTURE NO.		TOP ELEVATION	INVERT ELEVATION	INVERT ELEVATION	SLOPE CRITICAL	CLASS III R.C. PIPE (UNLESS NOTED OTHERWISE)								BITUMINOUS COATED C.S. PIPE TYPE B (UNLESS NOTED OTHERWISE)					CLASS III R.C. PIPE OR C.S. PIPE IR ALUMINIZED OR HDPE PIPE, TYPE S OR D								15" SIDE DRAIN PIPE	18" SIDE DRAIN PIPE	24" SIDE DRAIN PIPE	ENDWALLS STD. 838.01, STD. 838.11 OR STD. 838.80 (UNLESS NOTED OTHERWISE) CU. YARDS		QUANITIES FOR DRAINAGE STRUCTURES	*TOTAL L.F. FOR PAY QUANTITY SHALL BE COL. 'A' + (1.3 X COL.'B') LIN. FT.		C.B. STD. 840.01 OR STD. 840.02	FRAME, GRATES, AND HOOD STANDARD 840.03 TYPE OF GRATE		
SIZE								12"	15"	18"	24"	30"	36"	42"	48"	12"	15"	18"	24"	30"	12"	15"	18"	24"	30"	36"	42"	48"				R.C.P.	C.S.P.	PER EACH (0' THRU 5.0')	A 5.0' THRU 10.0'	B 10.0' AND ABOVE		E	F	G
THICKNESS OR GAUGE		FROM	TO													.064	.064	.064	.064	.079																				
		32																																						
36+40 L	LT	30																																						
37+10 L	LT	31																																						
38+50 L	LT	33		375.37	372.10																													1						
38+50 L	LT	33	34		372.10	376.51																300																		
41+50 L	LT	34		376.51	373.60																													1						
41+50 L	LT	34	35		373.60	373.86																52																		
42+00 L	LT	35		376.61	373.86																													1						
41+25 L	LT	36																																						
41+70 L	LT	37																																						
43+00 L	LT	38																																						
44+28 L	RT	39			371.57																																			
44+28 L	CL	39	40		371.57	376.60			84																															
44+30 L	CL	40		379.78	376.60																													1						
44+30 L	CL	40	41		376.60	376.80			36																															
44+65 L	CL	41		379.80	376.80																													1						
44+65 L	CL	41	42		376.80	376.90			36																															
45+00 L	CL	42		379.90	376.90																													1						
45+00 L	CL	42	43		376.90	377.81			128																															
46+25 L	CL	43		380.81	377.81																													1						
46+25 L	CL	43	44		377.81	379.51			128																															
47+50 L	CL	44		382.51	379.51																													1						
47+50 L	CL	44	45		379.51	384.28			200																															
49+50 L	CL	45		387.28	384.28																													1			1			1
54+00 L	LT	46																																						
53+70 L	LT	47																																						
53+70 L	LT	47	48																			124																		
55+00 L	LT	48																																						
56+00 L	LT	49																																						
57+00 L	LT	50																																						
56+00 L	RT	51		385.24	382.24																													1			1			1
56+00 L	RT	51	52		382.24	380.14			160																															
57+60 L	RT	52		383.14	380.14																													1			1			1
57+60 L	RT	52	53		380.14	377.94			48																															
58+10 L	RT	54			372.80																																			
58+10 L	CL	54	53		372.80	373.49	X						68																											
58+10 L	CL	53		382.94	373.49																													1	4.45		1	1		
58+10 L	CL	53	55		373.49	374.41	X						100																											
58+15 L	LT	55			374.41																											3.4								
		56																																						
60+75 L	LT	57																												24											
61+85 L	LT	58			384.10																																			
61+85 L	LT	58	59		384.10	384.47			68																															
61+85 L	CL	59		387.47	384.47																													1			1			1
61+85 L	CL	59	60		384.47	385.09			44																															
62+30 L	CL	60		388.09	385.09																													1			1			1
SHEET TOTALS									932				168									476							24			3.4		14	4.45		6	1		5

STATION	LOCATION (LT, RT, OR CL)	STRUCTURE NO. FROM	STRUCTURE NO. TO	D.I. STD. 840.14 OR STD. 840.15	D.I. FRAME AND GRATE STD. 840.16	M.D.I. TYPE "A" STD. 840.17 OR 840.26	M.D.I. TYPE "B" STD. 840.18 OR 840.27	M.D.I. TYPE "D" STD. 840.19 OR 840.28	M.D.I. FRAME WITH GRATE STD. 840.20	M.D.I. FRAME WITH TWO GRATES STD. 840.22	M.D.I. (N.S.) FRAME WITH GRATE STD. 840.24	M.D.I. (N.S.) FRAME WITH TWO GRATES STD. 840.24	J.B. STD. 840.31 OR 840.32	M.D.I. (N.S.) FRAME WITH TWO GRATES STD. 840.29	MANHOLE STD. 840.51	M.H. STD. 840.51 OR 840.53	M.H. FRAME AND COVER STD. 840.54	TRAFFIC BEARING J.B. STD. 840.34	24" WELDED STEEL PIPE (0.5" THICK), GRADE B	30" WELDED STEEL PIPE (0.5" THICK), GRADE B	36" WELDED STEEL PIPE (0.5" THICK), GRADE B	42" WELDED STEEL PIPE (0.625" THICK), GRADE B	48" WELDED STEEL PIPE (0.625" THICK), GRADE B		BERM DITCH OUTLET STD. 850.10 OR 850.11			ADJUSTMENT OF DROP INLETS		CONVERT D.I. TO J.B.		CONVERT C.B. TO J.B.	TEMPORARY STEEL PLATE COVERS	FLOWABLE FILL		CORR. STEEL ELBOWS NO. & SIZE	CONC. COLLARS CL. "B" C.Y. STD. 840.72	CONC. & BRICK PIPE PLUG, C.Y. STD. 840.71	PIPE REMOVAL LIN. FT.	REMARKS
		32																																						NOT USED
36+40 L	LT	30																																					66	REMOVE CROSS PIPE
37+10 L	LT	31																																					16	REMOVE DRIVE PIPE
38+50 L	LT	33					1					1																												
38+50 L	LT	33	34																																					
41+50 L	LT	34					1					1																												
41+50 L	LT	34	35																																					
42+00 L	LT	35					1					1																												
41+25 L	LT	36																																					20	REMOVE DIRIVE PIPE
41+70 L	LT	37																																					52	REMOVE PIPE AND DI
43+00 L	LT	38																																					186	REMOVE PIPE AND DI
44+28 L	RT	39																																						OPEN END PIPE
44+28 L	CL	39	40																																					
44+30 L	CL	40		1	1																																			
44+30 L	CL	40	41																																					
44+65 L	CL	41		1	1																																			
44+65 L	CL	41	42																																					
45+00 L	CL	42		1	1																																			
45+00 L	CL	42	43																																					
46+25 L	CL	43		1	1																																			
46+25 L	CL	43	44																																					
47+50 L	CL	44		1	1																																			
47+50 L	CL	44	45																																					
49+50 L	CL	45																																						
54+00 L	LT	46																																					136	REMOVE PIPE AND DI
53+70 L	LT	47																																						TIE TO EXIST DI
53+70 L	LT	47	48																																					
55+00 L	LT	48																																						OPEN END PIPE
56+00 L	LT	49																																					144	REMOVE PIPE AND DI
57+00 L	LT	50																																					80	REMOVE PIPE
56+00 L	RT	51																																						
56+00 L	RT	51	52																																					
57+60 L	RT	52																																						
57+60 L	RT	52	53																																					
58+10 L	RT	54																																						OPEN END PIPE
58+10 L	CL	54	53																																					
58+10 L	CL	53																																						
58+10 L	CL	53	55																																				82	REMOVE CROSS PIPE
58+15 L	LT	55																																						HEADWALL
		56																																						NOT USED
60+75 L	LT	57																																					24	REMOVE DRIVE PIPE
61+85 L	LT	58																																						OPEN END PIPE
61+85 L	LT	58	59																																					
61+85 L	CL	59																														1								
61+85 L	CL	59	60																																					
62+30 L	CL	60																														1								
SHEET TOTALS				5	5		3					3																					2						806	

ABBREVIATIONS

C.B.	CATCH BASIN
N.D.I.	NARROW DROP INLET
D.I.	DROP INLET
M.D.I.	MEDIAN DROP INLET
M.D.I.(N.S.)	MEDIAN DROP INLET (NARROW SLOT)
J.B.	JUNCTION BOX
M.H.	MANHOLE
T.B.D.I.	TRAFFIC BEARING DROP INLET
T.B.J.B.	TRAFFIC BEARING JUNCTION BOX

8400-YVETTE,5/5/2006,R:\Roadway\Proj\Drainage_summaries.xls

COMPUTED BY: MTR DATE: 5/1/2006
CHECKED BY: YTN DATE: 5/1/2006

PROJECT NO.	SHEET NO.
U-4026	3-C

STATE OF NORTH CAROLINA
DIVISION OF HIGHWAYS

8400-YVETTE

NOTE: ALL ELEVATIONS ON THIS SHEET ARE FOR COST ESTIMATING ONLY AND SHALL NOT BE USED FOR FIELD STAKING.

LIST OF PIPES, ENDWALLS, ETC. (FOR PIPES 48" & UNDER)

STATION	LOCATION (LT, RT, OR CL')	STRUCTURE NO.		TOP ELEVATION	INVERT ELEVATION	INVERT ELEVATION	SLOPE CRITICAL	CLASS III R.C. PIPE (UNLESS NOTED OTHERWISE)								BITUMINOUS COATED C.S. PIPE TYPE B (UNLESS NOTED OTHERWISE)					CLASS III R.C. PIPE OR C.S. PIPE IR ALUMINIZED OR HDPE PIPE, TYPE S OR D								15" SIDE DRAIN PIPE	18" SIDE DRAIN PIPE	24" SIDE DRAIN PIPE	ENDWALLS STD. 838.01, STD. 838.11 OR STD. 838.80 (UNLESS NOTED OTHERWISE)		QUANITIES FOR DRAINAGE STRUCTURES	*TOTAL L.F. FOR PAY QUANTITY SHALL BE COL. 'A' + (1.3 X COL.'B') LIN. FT.		C.B. STD. 840.01 OR STD. 840.02	FRAME, GRATES, AND HOOD STANDARD 840.03			D.I. STD. 840.14 OR STD. 840.15	D.I. FRAME AND GRATE STD. 840.16	M.D.I. TYPE "A" STD. 840.17 OR 840.26	M.D.I. TYPE "B" STD. 840.18 OR 840.27	M.D.I. TYPE "D" STD. 840.19 OR 840.28	M.D.I. FRAME WITH GRATE STD. 840.20	M.D.I. FRAME WITH TWO GRATES STD. 840.22	M.D.I. (N.S.) FRAME WITH GRATE STD. 840.24	M.D.I. (N.S.) FRAME WITH TWO GRATES STD. 840.24	J.B. STD. 840.31 OR 840.32	M.D.I. (N.S.) FRAME WITH TWO GRATES STD. 840.29	MANHOLE STD. 840.51	M.H. STD. 840.51 OR 840.53	M.H. FRAME AND COVER STD. 840.54	TRAFFIC BEARING J.B. STD. 840.34	24" WELDED STEEL PIPE (0.5" THICK), GRADE B	30" WELDED STEEL PIPE (0.5" THICK), GRADE B	36" WELDED STEEL PIPE (0.5" THICK), GRADE B	42" WELDED STEEL PIPE (0.625" THICK), GRADE B	48" WELDED STEEL PIPE (0.625" THICK), GRADE B		BERM DITCH OUTLET STD. 850.10 OR 850.11			ADJUSTMENT OF DROP INLETS		CONVERT D.I. TO J.B.		CONVERT C.B. TO J.B.	TEMPORARY STEEL PLATE COVERS	FLOWABLE FILL		CORR. STEEL ELBOWS NO. & SIZE	CONC. COLLARS CL. "B" C.Y. STD. 840.72	CONC. & BRICK PIPE PLUG, C.Y. STD. 840.71	PIPE REMOVAL LIN. FT.	REMARKS
SIZE								12"	15"	18"	24"	30"	36"	42"	48"	12"	15"	18"	24"	30"	12"	15"	18"	24"	30"	36"	42"	48"				CU. YARDS			A	B		TYPE OF GRATE																																									
THICKNESS OR GAUGE		FROM	TO													.064	.064	.064	.064	.079												R.C.P.	C.S.P.	PER EACH (0' THRU 5.0')	5.0' THRU 10.0'	10.0' AND ABOVE		E	F	G																																								
62+30 L	CL	60	61		385.09	386.45			248																																																																				
64+75 L	CL	61		389.76	386.45																													1			1			1																																		1							
64+75 L	CL	61	62		386.45	387.31			176																																																																		
66+50 L	CL	62		390.31	387.31																													1			1			1																																		1							
63+00 L	LT	63																											24																																															18	REMOVE DRIVE PIPE
65+50 L	LT	64																																																																										63	REMOVE PIPE
66+80 L	RT	65																																																																										26	REMOVE DRIVE PIPE
27+50 Y5	RT	66a			379.00																																																																										OPEN END PIPE
27+50 Y5	RT	66a	66		379.00	379.83																	200																																																						
26+00 Y5	RT	66		385.00	379.83																													1	0.17									1					1																																
26+00 Y5	RT	66	67		379.83	380.46			212																																																																		
24+00 Y5	RT	67		386.00	380.46																													1	0.54									1					1																																
24+00 Y5	CL	67	68		383.25	385.25			128																																																																		
24+00 Y5	LT	68		388.00	385.25																													1										1					1																																
67+85 L	CL	69																																																																										112	REMOVE CROSS PIPE
24+30 Y5	CL	70																																																																										74	REMOVE CROSS PIPE
69+10 L	CL	71																																																																										82	REMOVE CROSS PIPE
26+30 Y5	LT	72																																																																										20	REMOVE DRIVE PIPE
21+80 Y5	LT	416							120																																																																	26	REMOVE DRIVE PIPE
21+40 Y5	RT	417																																																																										26	REMOVE DRIVE PIPE
22+00 Y5	ML	417a		390.76	387.59																													1							1	1																													1							
22+00 Y5	ML	417a	417b		387.59	387.35			52																																																																		
22+50 Y5	ML	417b		391.03	387.35																													1							1	1																													1							
22+50 Y5	ML	417b	417c		387.35	385.83			64																																																																		
22+50 Y5	RT	417c			385.83																																																																										OPEN END PIPE
29+00 Y5	RT	418																											24																																															29	REMOVE DRIVE PIPE
30+00 Y5	LT	419			371.00																																																																										OPEN END PIPE
30+00 Y5	LT	419	420		371.00	372.44			76																																																																		
29+94 Y5	RT	420		375.61	372.44																													1							1	1																													1							
29+94 Y5	RT	420	421		372.44	372.55			36																																																																		
29+60 Y5	RT	421		375.72	372.55																													1							1	1																													1							
31+60 Y5	LT	422			370.40																																																																										OPEN END PIPE
31+60 Y5	LT	422	423		370.40	371.37			72																																																																		
31+60 Y5	RT	423		375.38	371.37																													1							1	1																													1							
31+60 Y5	RT	423	424		371.37	372.07			68																																																																		
32+30 Y5	RT	424		375.24	372.07																													1							1	1																													1							
34+25 Y5	LT	425																											24																																																
34+60 Y5	RT	426			370.00																																																																										OPEN END PIPE
34+60 Y5	RT	426	427		370.00					40																																																																24	REMOVE DRIVE PIPE
34+65 Y5	RT	427																																																																							0.5			
34+80 Y5	LT	428																																																																								0.5			
34+80 Y5	LT	428	429			368.00				36																																																																		
34+95 Y5	LT	429			368.00																																																																										OPEN END PIPE
74+65 L	RT	73			382.00																																																																										OPEN END PIPE
74+65 L	RT	73	74		382.00		☒			28																																																																	
74+65 L	RT	74																																																																								0.5			
74+60 L	CL	75		388.14	384.70																													1							1	1																													1							
74+60 L	CL	75	76		384.70	385.99			260																																																																			
72+00 L	CL	76		389.74	385.99																													1							1	1																													1							
SHEET TOTALS									1512	104													200						72					13	0.71		2			2	8	8		3					3																					10				1.5		500	

ABBREVIATIONS

C.B.	CATCH BASIN
N.D.I.	NARROW DROP INLET
D.I.	DROP INLET
M.D.I.	MEDIAN DROP INLET
M.D.I.(N.S.)	MEDIAN DROP INLET (NARROW SLOT)
J.B.	JUNCTION BOX
M.H.	MANHOLE
T.B.D.I.	TRAFFIC BEARING DROP INLET
T.B.J.B.	TRAFFIC BEARING JUNCTION BOX

COMPUTED BY:	MTR	DATE:	5/1/2006
CHECKED BY:	YTN	DATE:	5/1/2006

STATE OF NORTH CAROLINA
DIVISION OF HIGHWAYS

PROJECT NO.	SHEET NO.
U-4026	3-D

8400-YVETTE

NOTE: ALL ELEVATIONS ON THIS SHEET ARE FOR COST ESTIMATING ONLY AND SHALL NOT BE USED FOR FIELD STAKING.

LIST OF PIPES, ENDWALLS, ETC. (FOR PIPES 48" & UNDER)

STATION	LOCATION (LT, RT, OR CL)	STRUCTURE NO.		TOP ELEVATION	INVERT ELEVATION	INVERT ELEVATION	SLOPE CRITICAL	CLASS III R.C. PIPE (UNLESS NOTED OTHERWISE)								BITUMINOUS COATED C.S. PIPE TYPE B (UNLESS NOTED OTHERWISE)					CLASS III R.C. PIPE OR C.S. PIPE IR ALUMINIZED OR HDPE PIPE, TYPE S OR D							
SIZE								12"	15"	18"	24"	30"	36"	42"	48"	12"	15"	18"	24"	30"	12"	15"	18"	24"	30"	36"	42"	48"
THICKNESS OR GAUGE		FROM	TO													.064	.064	.064	.064	.079								
72+00 L	CL	76	77		385.99	386.94			188																			
70+10 L	CL	77		390.11	386.94																							
74+55 L	LT	78																										
74+55 L	LT	78	79			385.38	X			24																		
74+55 L	LT	79			385.38																							
SHEET TOTALS									188	24																		

STATION	15" SIDE DRAIN PIPE	18" SIDE DRAIN PIPE	24" SIDE DRAIN PIPE	ENDWALLS STD. 838.01, STD. 838.11 OR STD. 838.80 (UNLESS NOTED OTHERWISE) CU. YARDS R.C.P.	C.S.P.	QUANITIES FOR DRAINAGE STRUCTURES PER EACH (0' THRU 5.0')	*TOTAL L.F. FOR PAY QUANTITY SHALL BE COL. 'A' + (1.3 X COL.'B') LIN. FT. A 5.0' THRU 10.0'	B 10.0' AND ABOVE	C.B. STD. 840.01 OR STD. 840.02	FRAME, GRATES, AND HOOD STANDARD 840.03 TYPE OF GRATE E	F	G	D.I. STD. 840.14 OR STD. 840.15	D.I. FRAME AND GRATE STD. 840.16	M.D.I. TYPE "A" STD. 840.17 OR 840.26	M.D.I. TYPE "B" STD. 840.18 OR 840.27	M.D.I. TYPE "D" STD. 840.19 OR 840.28	M.D.I. FRAME WITH GRATE STD. 840.20	M.D.I. FRAME WITH TWO GRATES STD. 840.22	M.D.I. (N.S.) FRAME WITH GRATE STD. 840.24	M.D.I. (N.S.) FRAME WITH TWO GRATES STD. 840.24	J.B. STD. 840.31 OR 840.32	M.D.I. (N.S.) FRAME WITH TWO GRATES STD. 840.29	MANHOLE STD. 840.51	M.H. STD. 840.51 OR 840.53	M.H. FRAME AND COVER STD. 840.54	TRAFFIC BEARING J.B. STD. 840.34	24" WELDED STEEL PIPE (0.5" THICK), GRADE B	30" WELDED STEEL PIPE (0.5" THICK), GRADE B	36" WELDED STEEL PIPE (0.5" THICK), GRADE B	42" WELDED STEEL PIPE (0.625" THICK), GRADE B	48" WELDED STEEL PIPE (0.625" THICK), GRADE B		BERM DITCH OUTLET STD. 850.10 OR 850.11			ADJUSTMENT OF DROP INLETS		CONVERT D.I. TO J.B.		CONVERT C.B. TO J.B.	TEMPORARY STEEL PLATE COVERS	FLOWABLE FILL		CORR. STEEL ELBOWS NO. & SIZE	CONC. COLLARS CL. "B" C.Y. STD. 840.72	CONC. & BRICK PIPE PLUG, C.Y. STD. 840.71	PIPE REMOVAL LIN. FT.	REMARKS
72+00 L																																																		
70+10 L						1							1	1																												1							
74+55 L																																														0.5			
74+55 L																																																		
74+55 L																																																		OPEN END PIPE
SHEET TOTALS						1							1	1																												1				0.5			

ABBREVIATIONS

C.B.	CATCH BASIN
N.D.I.	NARROW DROP INLET
D.I.	DROP INLET
M.D.I.	MEDIAN DROP INLET
M.D.I.(N.S.)	MEDIAN DROP INLET (NARROW SLOT)
J.B.	JUNCTION BOX
M.H.	MANHOLE
T.B.D.I.	TRAFFIC BEARING DROP INLET
T.B.J.B.	TRAFFIC BEARING JUNCTION BOX

COMPUTED BY:	MTR	DATE:	5/1/2006
CHECKED BY:	YTN	DATE:	5/1/2006

PROJECT NO.	SHEET NO.
U-4026	3-E

STATE OF NORTH CAROLINA
DIVISION OF HIGHWAYS

8400-YVETTE

NOTE: ALL ELEVATIONS ON THIS SHEET ARE FOR COST ESTIMATING ONLY AND SHALL NOT BE USED FOR FIELD STAKING.

LIST OF PIPES, ENDWALLS, ETC. (FOR PIPES 48" & UNDER)

STATION	LOCATION (LT, RT, OR CL)	STRUCTURE NO.		TOP ELEVATION	INVERT ELEVATION	INVERT ELEVATION	SLOPE CRITICAL	CLASS III R.C. PIPE (UNLESS NOTED OTHERWISE)								BITUMINOUS COATED C.S. PIPE TYPE B (UNLESS NOTED OTHERWISE)					CLASS III R.C. PIPE OR C.S. PIPE IR ALUMINIZED OR HDPE PIPE, TYPE S OR D							
SIZE								12"	15"	18"	24"	30"	36"	42"	48"	12"	15"	18"	24"	30"	12"	15"	18"	24"	30"	36"	42"	48"
THICKNESS OR GAUGE		FROM	TO													.064	.064	.064	.064	.079								
77+18 L	LT	80		384.90	381.73	—																						
77+18 L	LT	80	81		381.73	381.50			48																			
77+18 L	LT	81		384.30	381.50	—																						
77+18 L	LT	81	82		381.50	380.20			132																			
78+45 L	LT	82		—	380.20																							
81+30 L	CL	83																										
81+60 L	LT	84		—	365.10																							
81+60 L	LT	84	85		365.10	363.00					144																	
83+00 L	LT	85		—	363.00																							
82+00 L	RT	86		371.10	368.30																							
82+00 L	RT	86	87		368.30	367.48	X		68																			
82+00 L	RT	87		374.67	367.48																							
82+00 L	CL	87	88		367.48	363.22				300																		
85+00 L	LT	88		366.64	363.22																							
85+00 L	LT	88	89		363.22	354.73				124																		
86+25 L	LT	89		362.70	354.73																							
86+25 L	LT	89	90		354.73	354.45					44																	
86+31 L	LT	90		363.98	352.45																							
86+31 L	LT	90	91		353.95	359.50																			140			
85+00 L	LT	91		—	359.50																							
86+31 L	LT	90	92		356.45	359.03																48						
86+62 L	LT	92		362.03	359.03																							
86+31 L	CL	89	93		354.73	355.10			80																			
86+25 L	RT	93		358.10	355.10																							
86+25 L	LT	90	94		352.45	350.97	X						144															
87+71 L	LT	94		359.55	350.97																							
87+71 L	LT	94	95		354.97	357.64																68						
87+26 L	LT	95		362.64	357.64																							
87+71 L	LT	94	96		350.97	343.02	X						236															
90+00 L	LT	96		349.62	337.62																							
90+00 L	LT	97		350.29	347.29																							
90+25 L	LT	97	98		347.29	344.54			100																			
91+25 L	LT	98		347.54	344.54																							
91+25 L	CL	98	98A		344.54	343.79			48																			
91+25 L	RT	98A		346.54	343.79																							
91+25 L	RT	98A	98B		343.79	327.00	X										48											
90+00 L	LT	96	99		337.62	320.94	X																			324		
93+20 L	CL	99	101		319.94	321.41	X																					
91+95 L	RT	101		—	321.41																							
91+95 L	RT	101	102		321.41	321.80	X								52													
91+62 L	RT	102		—	321.80																							
SHEET TOTALS									476	424	188		380		52		48					116			140	324		

STATION	LOCATION	FROM	TO	15" SIDE DRAIN PIPE	18" SIDE DRAIN PIPE	24" SIDE DRAIN PIPE	ENDWALLS STD. 838.01, STD. 838.11 OR STD. 838.80 (UNLESS NOTED OTHERWISE) CU. YARDS R.C.P.	C.S.P.	QUANITIES FOR DRAINAGE STRUCTURES PER EACH (0' THRU 5.0')	*TOTAL L.F. FOR PAY QUANTITY SHALL BE COL. 'A' + (1.3 X COL.'B') LIN. FT. A 5.0' THRU 10.0'	B 10.0' AND ABOVE	C.B. STD. 840.01 OR STD. 840.02	FRAME, GRATES, AND HOOD STANDARD 840.03 TYPE OF GRATE E	F	G	D.I. STD. 840.14 OR STD. 840.15	D.I. FRAME AND GRATE STD. 840.16	M.D.I. TYPE "A" STD. 840.17 OR 840.26	M.D.I. TYPE "B" STD. 840.18 OR 840.27	M.D.I. TYPE "D" STD. 840.19 OR 840.28	M.D.I. FRAME WITH GRATE STD. 840.20	M.D.I. FRAME WITH TWO GRATES STD. 840.22	M.D.I. (N.S.) FRAME WITH GRATE STD. 840.24	M.D.I. (N.S.) FRAME WITH TWO GRATES STD. 840.24	J.B. STD. 840.31 OR 840.32	M.D.I. (N.S.) FRAME WITH TWO GRATES STD. 840.29	MANHOLE STD. 840.51	M.H. STD. 840.51 OR 840.53	M.H. FRAME AND COVER STD. 840.54	TRAFFIC BEARING J.B. STD. 840.34
77+18 L	LT	80							1							1	1													
77+18 L	LT	80	81																											
77+18 L	LT	81							1										1					1						
77+18 L	LT	81	82																											
78+45 L	LT	82																												
81+30 L	CL	83																												
81+60 L	LT	84																												
81+60 L	LT	84	85																											
83+00 L	LT	85																												
82+00 L	RT	86							1										1					1						
82+00 L	RT	86	87																											
82+00 L	RT	87							1	2.19						1	1													
82+00 L	CL	87	88																											
85+00 L	LT	88							1							1	1													
85+00 L	LT	88	89																											
86+25 L	LT	89							1	2.97						1	1													
86+25 L	LT	89	90																											
86+31 L	LT	90							1	5.00	1.53	1			1															
86+31 L	LT	90	91																											
85+00 L	LT	91					2.3																							
86+31 L	LT	90	92																											
86+62 L	LT	92							1			1		1																
86+31 L	CL	89	93																											
86+25 L	RT	93							1										1					1						
86+25 L	LT	90	94																											
87+71 L	LT	94							1	3.58		1			1															
87+71 L	LT	94	95																											
87+26 L	LT	95							1			1			1															
87+71 L	LT	94	96																											
90+00 L	LT	96							1	5.00	2.00							1						1						
90+00 L	LT	97							1			1		1																
90+25 L	LT	97	98																											
91+25 L	LT	98							1			1		1																
91+25 L	CL	98	98A																											
91+25 L	RT	98A							1										1							1				
91+25 L	RT	98A	98B																											
90+00 L	LT	96	99																											
93+20 L	CL	99	101																											
91+95 L	RT	101																												
91+95 L	RT	101	102																											
91+62 L	RT	102					6.0																							
SHEET TOTALS							8.3		15	18.74	3.53	6		3	3	4	4	1	4					4		1				

STATION	LOCATION	FROM	TO	24" WELDED STEEL PIPE (0.5" THICK), GRADE B	30" WELDED STEEL PIPE (0.5" THICK), GRADE B	36" WELDED STEEL PIPE (0.5" THICK), GRADE B	42" WELDED STEEL PIPE (0.625" THICK), GRADE B	48" WELDED STEEL PIPE (0.625" THICK), GRADE B	BERM DITCH OUTLET STD. 850.10 OR 850.11	ADJUSTMENT OF DROP INLETS	CONVERT D.I. TO J.B.	CONVERT C.B. TO J.B.	TEMPORARY STEEL PLATE COVERS	FLOWABLE FILL	CORR. STEEL ELBOWS NO. & SIZE	CONC. COLLARS CL. "B" C.Y. STD. 840.72	CONC. & BRICK PIPE PLUG, C.Y. STD. 840.71	PIPE REMOVAL LIN. FT.	REMARKS
77+18 L	LT	80											1						
77+18 L	LT	80	81																
77+18 L	LT	81																	
77+18 L	LT	81	82																
78+45 L	LT	82																	OPEN END PIPE
81+30 L	CL	83																45	REMOVE CROSS PIPE
81+60 L	LT	84																	OPEN END PIPE
81+60 L	LT	84	85																
83+00 L	LT	85																	OPEN END PIPIE
82+00 L	RT	86																	
82+00 L	RT	86	87																
82+00 L	RT	87											1						
82+00 L	CL	87	88																
85+00 L	LT	88											1					55	REMOVE CROSS PIPE
85+00 L	LT	88	89																
86+25 L	LT	89											1						
86+25 L	LT	89	90																
86+31 L	LT	90																	
86+31 L	LT	90	91																
85+00 L	LT	91																	ENDWALL
86+31 L	LT	90	92															50	REMOVE PIPE
86+62 L	LT	92																	REMOVE D.I.
86+31 L	CL	89	93																
86+25 L	RT	93																	
86+25 L	LT	90	94															160	REMOVE TWO PIPES
87+71 L	LT	94																	
87+71 L	LT	94	95															48	REMOVE PIPE
87+26 L	LT	95																	REMOVE D.I.
87+71 L	LT	94	96																
90+00 L	LT	96																	
90+00 L	LT	97																	
90+25 L	LT	97	98																
91+25 L	LT	98																	
91+25 L	CL	98	98A																
91+25 L	RT	98A																	
91+25 L	RT	98A	98B												2@15"				OUTLET
90+00 L	LT	96	99																
93+20 L	CL	99	101					196											
91+95 L	RT	101														1.0			COLLAR
91+95 L	RT	101	102																
91+62 L	RT	102																	ENDWALL
SHEET TOTALS								196					4		2@15"	1.0		358	

ABBREVIATIONS

C.B.	CATCH BASIN
N.D.I.	NARROW DROP INLET
D.I.	DROP INLET
M.D.I.	MEDIAN DROP INLET
M.D.I.(N.S.)	MEDIAN DROP INLET (NARROW SLOT)
J.B.	JUNCTION BOX
M.H.	MANHOLE
T.B.D.I.	TRAFFIC BEARING DROP INLET
T.B.J.B.	TRAFFIC BEARING JUNCTION BOX

8400-YVETTE

COMPUTED BY:	MTR	DATE:	5/1/2006
CHECKED BY:	YTN	DATE:	5/1/2006

STATE OF NORTH CAROLINA
DIVISION OF HIGHWAYS

PROJECT NO.	SHEET NO.
U-4026	3-F

NOTE: ALL ELEVATIONS ON THIS SHEET ARE FOR COST ESTIMATING ONLY AND SHALL NOT BE USED FOR FIELD STAKING.

LIST OF PIPES, ENDWALLS, ETC. (FOR PIPES 48" & UNDER)

STATION	LOCATION (LT, RT, OR CL)'	STRUCTURE NO. FROM	STRUCTURE NO. TO	TOP ELEVATION	INVERT ELEVATION	INVERT ELEVATION	SLOPE CRITICAL	CLASS III R.C. PIPE (UNLESS NOTED OTHERWISE) 12"	15"	18"	24"	30"	36"	42"	48"	BITUMINOUS COATED C.S. PIPE TYPE B (UNLESS NOTED OTHERWISE) 12"	15"	18"	24"	30"
SIZE / THICKNESS OR GAUGE																.064	.064	.064	.064	.079
94+00 L	RT	105		338.62	335.87															
94+00 L	RT	105	106		335.87	334.67			100											
95+00 L	RT	106		337.42	334.67															
95+00 L	RT	106	107		334.67	330.75	X										28			
95+00 L	RT	107			330.75															
94+50 L	LT	108																		
94+50 L	LT	109																		
95+00 L	LT	110																		
98+00 L	CL	111		332.77	329.77															
98+00 L	LT	111	112		329.77	326.54			200											
100+00 L	LT	112		329.71	326.54															
100+00 L	CL	112	113		326.54	326.24			52											
100+00 L	RT	113		329.90	326.24															
100+00 L	RT	113	114		326.24	342.50											44			
99+95 L	RT	114			342.50															
100+00 L	RT	113	115		326.24	324.93	X		156											
101+50 L	RT	115		327.68	324.93															
101+50 L	RT	115	116		324.93	320.94	X		68											
101+90 L	RT	116		328.11	320.94															
101+90 L	CL	116	117		320.94	320.59	X		8											
101+90 L	LT	117			320.59															
100+00 L	CL	118																		
103+80 L	RT	119			307.35															
103+80 L	RT	119	120		307.35	306.79									160					
104+30 L	RT	120			306.79															
104+30 L	CL	120	121		306.79	306.21														
105+60 L	LT	121			306.21															
108+32 L	RT	122			311.50															
108+32 L	RT	122	123		311.50	308.73					128									
108+32 L	RT	123			308.73															
108+40 L	CL	123	124		308.73	305.47														
108+58 L	LT	124			305.47															
109+00 L	LT	125		317.46	314.41															
109+00 L	LT	125	126		314.71	310.16			180											
110+85 L	LT	126		316.52	308.91															
110+85 L	LT	126	127		308.91	306.79														
110+85 L	LT	127			306.79															
110+85 L	LT	126	128		308.91	309.18														
110+85 L	CL	128		314.43	309.18															
110+85 L	RT	128	129		309.18	311.21	X				76									
110+65 L	RT	129		315.96	311.21															
110+65 L	RT	129	130		311.21	321.00	X													36
110+65 L	RT	130			321.00															
SHEET TOTALS									764		204				160		72			36

STATION	CLASS III R.C. PIPE OR C.S. PIPE IR ALUMINIZED OR HDPE PIPE, TYPE S OR D 12"	15"	18"	24"	30"	36"	42"	48"	15" SIDE DRAIN PIPE	18" SIDE DRAIN PIPE	24" SIDE DRAIN PIPE	ENDWALLS STD. 838.01, STD. 838.11 OR STD. 838.80 (UNLESS NOTED OTHERWISE) CU. YARDS R.C.P.	C.S.P.	QUANTITIES FOR DRAINAGE STRUCTURES PER EACH (0' THRU 5.0')	5.0' THRU 10.0'	10.0' AND ABOVE	*TOTAL L.F. FOR PAY QUANTITY SHALL BE COL. 'A' + (1.3 X COL. 'B') LIN. FT. A	B	C.B. STD. 840.01 OR STD. 840.02	FRAME, GRATES, AND HOOD STANDARD 840.03 TYPE OF GRATE E	F	G	D.I. STD. 840.14 OR STD. 840.15	D.I. FRAME AND GRATE STD. 840.16	M.D.I. TYPE "A" STD. 840.17 OR 840.26	M.D.I. TYPE "B" STD. 840.18 OR 840.27	M.D.I. TYPE "D" STD. 840.19 OR 840.28	M.D.I. FRAME WITH GRATE STD. 840.20	M.D.I. FRAME WITH TWO GRATES STD. 840.22	M.D.I. (N.S.) FRAME WITH GRATE STD. 840.24	M.D.I. (N.S.) FRAME WITH TWO GRATES STD. 840.24	J.B. STD. 840.31 OR 840.32	M.D.I. (N.S.) FRAME WITH TWO GRATES STD. 840.29	MANHOLE STD. 840.51	M.H. STD. 840.51 OR 840.53	M.H. FRAME AND COVER STD. 840.54	24" WELDED STEEL PIPE (0.5" THICK), GRADE B	30" WELDED STEEL PIPE (0.5" THICK), GRADE B	36" WELDED STEEL PIPE (0.5" THICK), GRADE B	42" WELDED STEEL PIPE (0.625" THICK), GRADE B	48" WELDED STEEL PIPE (0.625" THICK), GRADE B	BERM DITCH OUTLET STD. 850.10 OR 850.11	ADJUSTMENT OF DROP INLETS	CONVERT D.I. TO J.B.	CONVERT C.B. TO J.B.	TEMPORARY STEEL PLATE COVERS	FLOWABLE FILL	CORR. STEEL ELBOWS NO. & SIZE	CONC. COLLARS CL. "B" C.Y. STD. 840.72	CONC. & BRICK PIPE PLUG, C.Y. STD. 840.71	PIPE REMOVAL LIN. FT.	REMARKS
94+00 L														1																1																	
94+00 L																																															
95+00 L														1																1																	
95+00 L																																												1@15"			
95+00 L																																															OPEN END PIPE
94+50 L																																															NOT USED
94+50 L																																															NOT USED
95+00 L																																															NOT USED
98+00 L														1					1			1																									
98+00 L																																															
100+00 L														1					1			1																									
100+00 L																																															
100+00 L														1														1																			
100+00 L																																												1@15"			
99+95 L																																					1										
100+00 L																																															
101+50 L														1														1																			
101+50 L																																															
101+90 L														1	2.17							1	1																								
101+90 L																																															
101+90 L																																													0.4		REMOVE D.I.
100+00 L																																														122	REMOVE PIPE
103+80 L												8.0																																			ENDWALL
103+80 L																																															2-48" PIPES
104+30 L																																													2.0		COLLAR
104+30 L																																				172											
105+60 L																																															OPEN END PIPE
108+32 L												2.0																																			ENDWALL
108+32 L																																															2-24" PIPES
108+32 L																																													1.1		COLLAR
108+40 L																																		124													
108+58 L																																															OPEN END PIPE
109+00 L														1														1																			
109+00 L																																															
110+85 L														1	2.61													1																			
110+85 L											24																																				
110+85 L												2.3																																			ENDWALL
110+85 L																																			60											73	REMOVE PIPE
110+85 L														1	0.25													1																			REMOVE D.I.
110+85 L																																														14	REMOVE PIPE STUB
110+65 L														1														1																			
110+65 L																																												1@24"			
110+65 L																																					1										
SHEET TOTALS					24							12.3		11	5.03		2		2	1	1	8				4	4				124	60		172	2								2@15", 1@24"	3.5		209	

ABBREVIATIONS	
C.B.	CATCH BASIN
N.D.I.	NARROW DROP INLET
D.I.	DROP INLET
M.D.I.	MEDIAN DROP INLET
M.D.I.(N.S.)	MEDIAN DROP INLET (NARROW SLOT)
J.B.	JUNCTION BOX
M.H.	MANHOLE
T.B.D.I.	TRAFFIC BEARING DROP INLET
T.B.J.B.	TRAFFIC BEARING JUNCTION BOX

8400-YVETTE

COMPUTED BY: MTR DATE: 5/1/2006

CHECKED BY: YTN DATE: 5/1/2006

STATE OF NORTH CAROLINA
DIVISION OF HIGHWAYS

PROJECT NO.	SHEET NO.
U-4026	3-G

NOTE: ALL ELEVATIONS ON THIS SHEET ARE FOR COST ESTIMATING ONLY AND SHALL NOT BE USED FOR FIELD STAKING.

LIST OF PIPES, ENDWALLS, ETC. (FOR PIPES 48" & UNDER)

STATION	LOCATION (LT, RT, OR CL)	STRUCTURE NO.		TOP ELEVATION	INVERT ELEVATION	INVERT ELEVATION	SLOPE CRITICAL	CLASS III R.C. PIPE (UNLESS NOTED OTHERWISE)								BITUMINOUS COATED C.S. PIPE TYPE B (UNLESS NOTED OTHERWISE)					CLASS III R.C. PIPE OR C.S. PIPE IR ALUMINIZED OR HDPE PIPE, TYPE S OR D								15" SIDE DRAIN PIPE	18" SIDE DRAIN PIPE	24" SIDE DRAIN PIPE	ENDWALLS STD. 838.01, STD. 838.11 OR STD. 838.80 (UNLESS NOTED OTHERWISE) CU. YARDS		QUANITIES FOR DRAINAGE STRUCTURES	*TOTAL L.F. FOR PAY QUANTITY SHALL BE COL. 'A' + (1.3 X COL.'B') LIN. FT.		C.B. STD. 840.01 OR STD. 840.02	FRAME, GRATES, AND HOOD STANDARD 840.03 TYPE OF GRATE		
SIZE								12"	15"	18"	24"	30"	36"	42"	48"	12"	15"	18"	24"	30"	12"	15"	18"	24"	30"	36"	42"	48"				R.C.P.	C.S.P.	PER EACH (0' THRU 5.0')	A 5.0' THRU 10.0'	B 10.0' AND ABOVE		E	F	G
THICKNESS OR GAUGE		FROM	TO													.064	.064	.064	.064	.079																				
114+15 L	RT	131		311.80	308.80																													1						
114+15 L	RT	131	132		308.80	332.00	X											76																						
114+15 L	RT	132			332.00																																			
114+35 L	CL	133		311.94																																				
114+15 L	RT	131	134		308.80	300.66	X																636																	
120+70 L	RT	134		303.66	299.16																													1						
120+70 L	RT	134	135		299.16	298.78							80																											
120+70 L	CL	135		305.23	298.78																													1	1.45					
120+70 L	LT	135	136		298.78	298.34																																		
120+70 L	LT	136			298.34																																			
120+70 L	RT	134	137		299.16	304.90	X													24																				
120+70 L	RT	137			304.90																												2.0							
119+93 L	LT	138																																						
125+95 L	CL	139		302.80	297.89																													1						
125+95 L	RT	139	140		297.89	300.66	X			92																														
125+46 L	RT	140		303.73	300.66																													1						
125+46 L	RT	140	141		300.66	312.00	X											32																						
125+46 L	RT	141			312.00																																			
125+95 L	LT	139	142		297.89	296.00	X				96																													
125+76 L	LT	142			296.00																																			
125+95 L	RT	139	143		297.89	300.99				92																														
126+47 L	RT	143		303.99	300.99																													1						
126+47 L	RT	143	144		300.99	313.50	X											40																						
126+47 L	RT	144			313.50																																			
132+00 L	LT	145			285.32																																			
132+00 L	LT	145	146		285.32	292.99				104																														
132+00 L	CL	146		297.99	292.99																													1						
132+00 L	RT	146	147		292.99	296.61	X		72																															
132+00 L	RT	147		299.36	296.61																													1						
136+00 L	RT	152		296.57	293.82																													1						
136+00 L	RT	152	153		293.82	289.20											24																							
136+00 L	RT	153			289.20																																			
150+75 L	CL	154		292.84	289.97																																			
150+75 L	RT	154	155		289.97	290.37				76																														
151+05 L	RT	155		292.54	290.37																													1						
152+66 L	LT	156			284.28																																			
152+66 L	LT	156	157		284.28	292.87																																		
153+63 L	CL	157			292.87																																			
153+63 L	RT	157	158		292.87	298.00								128																										
154+52 L	RT	158			298.00																												4.5								
SHEET TOTALS									72	364	96		80	128			24	148		24			636									4.5	2.0	10	1.45					

STATION	LOCATION (LT, RT, OR CL)	STRUCTURE NO. FROM	STRUCTURE NO. TO	D.I. STD. 840.14 OR STD. 840.15	D.I. FRAME AND GRATE STD. 840.16	M.D.I. TYPE "A" STD. 840.17 OR 840.26	M.D.I. TYPE "B" STD. 840.18 OR 840.27	M.D.I. TYPE "D" STD. 840.19 OR 840.28	M.D.I. FRAME WITH GRATE STD. 840.20	M.D.I. FRAME WITH TWO GRATES STD. 840.22	M.D.I. (N.S.) FRAME WITH GRATE STD. 840.24	M.D.I. (N.S.) FRAME WITH TWO GRATES STD. 840.24	J.B. STD. 840.31 OR 840.32	M.D.I. (N.S.) FRAME WITH TWO GRATES STD. 840.29	MANHOLE STD. 840.51	M.H. STD. 840.51 OR 840.53	M.H. FRAME AND COVER STD. 840.54		24" WELDED STEEL PIPE (0.5" THICK), GRADE B	30" WELDED STEEL PIPE (0.5" THICK), GRADE B	36" WELDED STEEL PIPE (0.5" THICK), GRADE B	42" WELDED STEEL PIPE (0.625" THICK), GRADE B	48" WELDED STEEL PIPE (0.625" THICK), GRADE B		BERM DITCH OUTLET STD. 850.10 OR 850.11			ADJUSTMENT OF DROP INLETS		CONVERT D.I. TO J.B.		CONVERT C.B. TO J.B.	TEMPORARY STEEL PLATE COVERS	FLOWABLE FILL		CORR. STEEL ELBOWS NO. & SIZE	CONC. COLLARS CL. "B" C.Y. STD. 840.72	CONC. & BRICK PIPE PLUG, C.Y. STD. 840.71	PIPE REMOVAL LIN. FT.	REMARKS
114+15 L	RT	131					1					1																												
114+15 L	RT	131	132																																	1@18"				
114+15 L	RT	132																							1															
114+35 L	CL	133																										1											69	REMOVE PIPE, ADJUST 2GI
114+15 L	RT	131	134																																					
120+70 L	RT	134					1					1																												
120+70 L	RT	134	135																																					
120+70 L	CL	135					1					1																												
120+70 L	LT	135	136																		88																		102	REMOVE PIPE
120+70 L	LT	136																																						OPEN END PIPE
120+70 L	RT	134	137																																					
120+70 L	RT	137																																						ENDWALL
119+93 L	LT	138																																					65	REMOVE PIPE & D. I.
125+95 L	CL	139					1					1																												
125+95 L	RT	139	140																																					
125+46 L	RT	140					1					1																												
125+46 L	RT	140	141																																	1@18"				
125+46 L	RT	141																							1															
125+95 L	LT	139	142																																				100	REMOVE PIPE
125+76 L	LT	142																																						OPEN END PIPE
125+95 L	RT	139	143																																					
126+47 L	RT	143					1					1																												
126+47 L	RT	143	144																																	1@18"				
126+47 L	RT	144																							1															
132+00 L	LT	145																																						OPEN END PIPE
132+00 L	LT	145	146																																					
132+00 L	CL	146					1					1																												
132+00 L	RT	146	147																																					
132+00 L	RT	147					1					1																												
136+00 L	RT	152					1								1																									
136+00 L	RT	152	153																																	1@15"				
136+00 L	RT	153																																						OPEN END PIPE
150+75 L	CL	154																																						2GI TYPE "D" - CONST. UNDER R-2000AB PROJ.
150+75 L	RT	154	155																																					
151+05 L	RT	155						1				1																												
152+66 L	LT	156																																						OPEN END PIPE
152+66 L	LT	156	157																			144																	191	REMOVE PIPE
153+63 L	CL	157																																			0.9			COLLAR
153+63 L	RT	157	158																																					
154+52 L	RT	158																																						ENDWALL
SHEET TOTALS							9	1				9			1						88	144			3			1								1@15", 3@18"	0.9		527	

ABBREVIATIONS	
C.B.	CATCH BASIN
N.D.I.	NARROW DROP INLET
D.I.	DROP INLET
M.D.I.	MEDIAN DROP INLET
M.D.I.(N.S.)	MEDIAN DROP INLET (NARROW SLOT)
J.B.	JUNCTION BOX
M.H.	MANHOLE
T.B.D.I.	TRAFFIC BEARING DROP INLET
T.B.J.B.	TRAFFIC BEARING JUNCTION BOX

COMPUTED BY: MTR DATE: 5/1/2006

CHECKED BY: YTN DATE: 5/1/2006

PROJECT NO.	SHEET NO.
U-4026	3-H

STATE OF NORTH CAROLINA
DIVISION OF HIGHWAYS

NOTE: ALL ELEVATIONS ON THIS SHEET ARE FOR COST ESTIMATING ONLY AND SHALL NOT BE USED FOR FIELD STAKING.

LIST OF PIPES, ENDWALLS, ETC. (FOR PIPES 48" & UNDER)

ABBREVIATIONS

C.B.	CATCH BASIN
N.D.I.	NARROW DROP INLET
D.I.	DROP INLET
M.D.I.	MEDIAN DROP INLET
M.D.I.(N.S.)	MEDIAN DROP INLET (NARROW SLOT)
J.B.	JUNCTION BOX
M.H.	MANHOLE
T.B.D.I.	TRAFFIC BEARING DROP INLET
T.B.J.B.	TRAFFIC BEARING JUNCTION BOX

STATION	LOCATION (LT, RT, OR CL')	STRUCTURE NO.		TOP ELEVATION	INVERT ELEVATION	INVERT ELEVATION	SLOPE CRITICAL	CLASS III R.C. PIPE (UNLESS NOTED OTHERWISE)								BITUMINOUS COATED C.S. PIPE TYPE B (UNLESS NOTED OTHERWISE)					CLASS III R.C. PIPE OR C.S. PIPE IR ALUMINIZED OR HDPE PIPE, TYPE S OR D								15" SIDE DRAIN PIPE	18" SIDE DRAIN PIPE	24" SIDE DRAIN PIPE	ENDWALLS STD. 838.01, STD. 838.11 OR STD. 838.80 (UNLESS NOTED OTHERWISE)		QUANTITIES FOR DRAINAGE STRUCTURES	*TOTAL L.F. FOR PAY QUANTITY SHALL BE COL. 'A' + (1.3 X COL.'B')		C.B. STD. 840.01 OR STD. 840.02	FRAME, GRATES, AND HOOD STANDARD 840.03			D.I. STD. 840.14 OR STD. 840.15	D.I. FRAME AND GRATE STD. 840.16	M.D.I. TYPE "A" STD. 840.17 OR 840.26	M.D.I. TYPE "B" STD. 840.18 OR 840.27	M.D.I. TYPE "D" STD. 840.19 OR 840.28	M.D.I. FRAME WITH GRATE STD. 840.20	M.D.I. FRAME WITH TWO GRATES STD. 840.22	M.D.I. (N.S.) FRAME WITH GRATE STD. 840.24	M.D.I. (N.S.) FRAME WITH TWO GRATES STD. 840.24	J.B. STD. 840.31 OR 840.32	M.D.I. (N.S.) FRAME WITH TWO GRATES STD. 840.29	MANHOLE STD. 840.51	M.H. STD. 840.51 OR 840.53	M.H. FRAME AND COVER STD. 840.54		24" WELDED STEEL PIPE (0.5" THICK), GRADE B	30" WELDED STEEL PIPE (0.5" THICK), GRADE B	36" WELDED STEEL PIPE (0.5" THICK), GRADE B	42" WELDED STEEL PIPE (0.625" THICK), GRADE B	48" WELDED STEEL PIPE (0.625" THICK), GRADE B		BERM DITCH OUTLET STD. 850.10 OR 850.11			ADJUSTMENT OF DROP INLETS		CONVERT D.I. TO J.B.		CONVERT C.B. TO J.B.	TEMPORARY STEEL PLATE COVERS	FLOWABLE FILL		CORR. STEEL ELBOWS NO. & SIZE	CONC. COLLARS CL. "B" C.Y. STD. 840.72	CONC. & BRICK PIPE PLUG, C.Y. STD. 840.71	PIPE REMOVAL LIN. FT.	REMARKS
SIZE								12"	15"	18"	24"	30"	36"	42"	48"	12"	15"	18"	24"	30"	12"	15"	18"	24"	30"	36"	42"	48"				CU. YARDS			LIN. FT. A	B		TYPE OF GRATE																																										
THICKNESS OR GAUGE		FROM	TO													.064	.064	.064	.064	.079												R.C.P.	C.S.P.	PER EACH (0' THRU 5.0')	5.0' THRU 10.0'	10.0' AND ABOVE		E	F	G																																										
154+87 L	LT	159		306.00	298.73																														2.27																			1													1										SEE SPECIAL DETAIL 2-NN
154+87 L	LT	159	160		301.69	301.75																16																																																							
154+95 L	LT	160		304.50	301.75																													1										1					1																												
155+10 L	RT	161		305.69	302.94																													1										1					1																												
155+10 L	RT	161	162		302.94	300.00			84																																																																				
155+10 L	RT	162			300.00																																																																								OPEN END PIPE
156+15 L	LT	163			—	—																																																																								2	REMOVE D.I. & PIPE
158+22 L	LT	164		314.77	309.06																														0.71																			1													1										SEE SPECIAL DETAIL 2-NN
158+22 L	LT	164	165		309.35	309.41																	8																																																						
158+22 L	LT	165		314.06	309.41																													1										1					1																												
158+22 L	LT	165	166		309.41	317.29	X										20																																																									1@15"			27	REMOVE PIPE
158+22 L	LT	166			317.29																																																									1															REMOVE BDO
158+33 L	CL	167			—	—																																																																								60	REMOVE PIPE & D.I.
165+50 L	LT	170A		324.50	320.50																													1										1					1																												
165+50 L	LT	170A	170		320.50	315.00	X															552																																																							804	REMOVE PIPES & D.I.s
163+00 M	LT	172		328.08	325.08																													1			1			1																																											
163+00 M	LT	172	172A		325.08	323.96			92																																																																		
162+10 M	RT	172A		326.96	323.96																													1			1			1																																											
162+10 M	RT	172A	172B		323.96	323.62			68																																																																		
162+10 R	RT	172B		327.40	323.62																													1										1					1																												
162+10 R	RT	172B	169		323.62	314.60	X															320																																																								
160+00 L	LT	170		318.00	315.00																													1										1					1																												
160+00 L	LT	170	168		315.00	313.52	X			84																																																																			
159+50 M	LT	168		318.27	313.52																													1									1						1																												
159+50 M	LT	168	169		313.52	312.64					92																																																																	
159+00 R	RT	169		318.60	313.85																													1									1						1																												
159+00 R	RT	169	171		313.85	304.30	X																	116																																																						
25+20 Y9	LT	178		327.07	323.90																													1							1	1																														1							
25+20 Y9	LT	178	170A		323.90	320.50			156																																																																		
22+70 Y9	LT	179		338.52	335.35																													1							1	1																														1							
22+70 Y9	LT	179	178		335.35	323.90			252																																																																		
		173																																																																												NOT USED
		174																																																																												NOT USED
		175																																																																												NOT USED
		176																																																																												NOT USED
		177																																																																												NOT USED
SHEET TOTALS									652	84	92						20					888	8	116										12	2.98		2			2	2	2	2	6					8					2								1					2			2			1@15"			893	

COMPUTED BY: MTR DATE: 5/1/2006
CHECKED BY: YTN DATE: 5/1/2006

STATE OF NORTH CAROLINA
DIVISION OF HIGHWAYS

PROJECT NO. U-4026
SHEET NO. 3-I

8400-YVETTE

NOTE: ALL ELEVATIONS ON THIS SHEET ARE FOR COST ESTIMATING ONLY AND SHALL NOT BE USED FOR FIELD STAKING.

LIST OF PIPES, ENDWALLS, ETC. (FOR PIPES 48" & UNDER)

ABBREVIATIONS

C.B.	CATCH BASIN
N.D.I.	NARROW DROP INLET
D.I.	DROP INLET
M.D.I.	MEDIAN DROP INLET
M.D.I.(N.S.)	MEDIAN DROP INLET (NARROW SLOT)
J.B.	JUNCTION BOX
M.H.	MANHOLE
T.B.D.I.	TRAFFIC BEARING DROP INLET
T.B.J.B.	TRAFFIC BEARING JUNCTION BOX

STATION	LOCATION (LT, RT, OR CL)'	STRUCTURE NO.		TOP ELEVATION	INVERT ELEVATION	INVERT ELEVATION	SLOPE CRITICAL	CLASS III R.C. PIPE (UNLESS NOTED OTHERWISE)								BITUMINOUS COATED C.S. PIPE TYPE B (UNLESS NOTED OTHERWISE)					CLASS III R.C. PIPE OR C.S. PIPE IR ALUMINIZED OR HDPE PIPE, TYPE S OR D								15" SIDE DRAIN PIPE	18" SIDE DRAIN PIPE	24" SIDE DRAIN PIPE	ENDWALLS STD. 838.01, STD. 838.11 OR STD. 838.80 (UNLESS NOTED OTHERWISE)	
SIZE								12"	15"	18"	24"	30"	36"	42"	48"	12"	15"	18"	24"	30"	12"	15"	18"	24"	30"	36"	42"	48"				CU. YARDS	
THICKNESS OR GAUGE		FROM	TO													.064	.064	.064	.064	.079												R.C.P.	C.S.P.
169+00 L	LT	180		322.65	319.90																												
169+00 L	CL	180	185		319.90	309.25																352											
169+00 L	RT	181		328.30	325.30																												
169+00 L	RT	181	182		325.30	322.59			152																								
170+50 L	RT	182		325.59	322.59																												
170+50 L	RT	182	183		322.59	307.48			200																								
172+50 L	RT	183		320.27	307.48																												
172+50 L	RT	183	184		307.48	307.53						16																					
172+50 L	RT	184		318.35	307.53																												
172+50 L	CL	184	185		307.53	308.00						96																					
172+50 L	LT	185		313.00	308.00																												
172+50 L	LT	185	186		308.00	312.60													40														
172+20 L	LT	186			312.60																												
172+50 L	RT	183	187		307.48	306.22						280																					
175+28 L	RT	187		310.47	306.23																												
175+28 L	CL	187	188		306.23	307.28			24																								
175+28 L	LT	188		310.28	307.28																												
175+28 L	RT	187	189		306.23	289.60														80													
175+28 L	RT	189			289.60																												2.0
176+80 L	LT	190		303.75	301.00																												
176+80 L	LT	190	191		301.00	300.00																72											
177+50 L	LT	191			300.00																												
179+30 L	LT	195			278.58	278.46				24																							
177+90 L	LT	196		302.88	299.88																												
177+90 L	CL	196	197		299.88	299.60			28																								
177+90 L	RT	197		302.60	299.60																												
177+90 L	RT	197	198		299.60	299.30			64																								
177+90 L	RT	198		302.45	299.30																												
177+90 L	RT	198	199		299.30	298.70											72																
177+90 L	RT	199			298.70																												
178+50 L	CL	200			—	—																											
10+93 DR1	LT	201		300.06	297.06																												
10+93 DR1	LT	201	202		297.06	288.00											36																
10+93 DR1	LT	202			288.00																												
180+76 L	RT	203			279.86																												
180+76 L	RT	203	204		279.86	286.40					68																						
180+70 L	RT	204			286.40																											1.5	
185+52 L	LT	205			276.12																												
185+52 L	LT	205	206		276.12	278.10																											
186+08 L	CL	206		289.98	278.10																												
186+08 L	RT	206	207		278.10	278.90							92																				
186+50 L	RT	207		285.90	278.90																												
SHEET TOTALS									468	24	68	392	92				108		40	80		424										1.5	2.0

STATION	LOCATION (LT, RT, OR CL)'	STRUCTURE NO. FROM	STRUCTURE NO. TO	QUANITIES FOR DRAINAGE STRUCTURES PER EACH (0' THRU 5.0')	*TOTAL L.F. FOR PAY QUANTITY SHALL BE COL. 'A' + (1.3 X COL.'B') LIN. FT. A 5.0' THRU 10.0'	B 10.0' AND ABOVE	C.B. STD. 840.01 OR STD. 840.02	FRAME, GRATES, AND HOOD STANDARD 840.03 TYPE OF GRATE E	F	G	D.I. STD. 840.14 OR STD. 840.15	D.I. FRAME AND GRATE STD. 840.16	M.D.I. TYPE "A" STD. 840.17 OR 840.26	M.D.I. TYPE "B" STD. 840.18 OR 840.27	M.D.I. TYPE "D" STD. 840.19 OR 840.28	M.D.I. FRAME WITH GRATE STD. 840.20	M.D.I. FRAME WITH TWO GRATES STD. 840.22	M.D.I. (N.S.) FRAME WITH GRATE STD. 840.24	M.D.I. (N.S.) FRAME WITH TWO GRATES STD. 840.24	J.B. STD. 840.31 OR 840.32	M.D.I. (N.S.) FRAME WITH TWO GRATES STD. 840.29	MANHOLE STD. 840.51	M.H. STD. 840.51 OR 840.53	M.H. FRAME AND COVER STD. 840.54		24" WELDED STEEL PIPE (0.5" THICK), GRADE B	30" WELDED STEEL PIPE (0.5" THICK), GRADE B	36" WELDED STEEL PIPE (0.5" THICK), GRADE B	42" WELDED STEEL PIPE (0.625" THICK), GRADE B	48" WELDED STEEL PIPE (0.625" THICK), GRADE B		BERM DITCH OUTLET STD. 850.10 OR 850.11			ADJUSTMENT OF DROP INLETS		CONVERT D.I. TO J.B.		CONVERT C.B. TO J.B.	TEMPORARY STEEL PLATE COVERS	FLOWABLE FILL		CORR. STEEL ELBOWS NO. & SIZE	CONC. COLLARS CL. "B" C.Y. STD. 840.72	CONC. & BRICK PIPE PLUG, C.Y. STD. 840.71	PIPE REMOVAL LIN. FT.	REMARKS
169+00 L	LT	180		1										1					1																											260	REMOVE PIPE & D.I.
169+00 L	CL	180	185																																												
169+00 L	RT	181		1			1			1																																					
169+00 L	RT	181	182																																											214	REMOVE PIPE & D.I.'s
170+50 L	RT	182		1			1			1																																					
170+50 L	RT	182	183																																												
172+50 L	RT	183		1	5.00	2.79	1			1																																					
172+50 L	RT	183	184																																												
172+50 L	RT	184		1	5.00	0.82	1		1																																						
172+50 L	CL	184	185																																											99	REMOVE PIPE & D.I.
172+50 L	LT	185		1										1					1																												
172+50 L	LT	185	186																																												
172+20 L	LT	186																																													OPEN END PIPE
172+50 L	RT	183	187																																											448	REMOVE PIPES & D.I.
175+28 L	RT	187		1			1			1																																					
175+28 L	CL	187	188																																												
175+28 L	LT	188		1			1		1																																						
175+28 L	RT	187	189																																							2@30"				
175+28 L	RT	189																																													ENDWALL
176+80 L	LT	190		1										1					1																												
176+80 L	LT	190	191																																											19	REMOVE PIPE
177+50 L	LT	191																																													OPEN END PIPE
179+30 L	LT	195																																													OPEN END PIPE
177+90 L	LT	196		1			1		1																																						
177+90 L	CL	196	197																																												
177+90 L	RT	197		1			1			1																																					
177+90 L	RT	197	198																																												
177+90 L	RT	198		1										1							1																										
177+90 L	RT	198	199																																							2@15"				
177+90 L	RT	199																																													OPEN END PIPE
178+50 L	CL	200																																												245	REMOVE PIPES, J.B. AND D.I.s
10+93 DR1	LT	201		1			1		1																																						
10+93 DR1	LT	201	202																																							2@15"				
10+93 DR1	LT	202																																													OPEN END PIPE
180+76 L	RT	203																																									0.6			COLLAR
180+76 L	RT	203	204																																												
180+70 L	RT	204																																													ENDWALL
185+52 L	LT	205																																													OPEN END PIPE
185+52 L	LT	205	206																										172																	164	REMOVE PIPE
186+08 L	CL	206		1	5.00	1.88								1					1																												
186+08 L	RT	206	207																																												
186+50 L	RT	207		1	2.00									1					1																												
SHEET TOTALS				15	17.00	5.49	9		4	5				6					5		1								172															4@15", 2@30"	0.6		1449	

COMPUTED BY:	MTR	DATE:	5/1/2006
CHECKED BY:	YTN	DATE:	5/1/2006

STATE OF NORTH CAROLINA
DIVISION OF HIGHWAYS

PROJECT NO.	SHEET NO.
U-4026	3-J

NOTE: ALL ELEVATIONS ON THIS SHEET ARE FOR COST ESTIMATING ONLY AND SHALL NOT BE USED FOR FIELD STAKING.

LIST OF PIPES, ENDWALLS, ETC. (FOR PIPES 48" & UNDER)

ABBREVIATIONS

C.B.	CATCH BASIN
N.D.I.	NARROW DROP INLET
D.I.	DROP INLET
M.D.I.	MEDIAN DROP INLET
M.D.I.(N.S.)	MEDIAN DROP INLET (NARROW SLOT)
J.B.	JUNCTION BOX
M.H.	MANHOLE
T.B.D.I.	TRAFFIC BEARING DROP INLET
T.B.J.B.	TRAFFIC BEARING JUNCTION BOX

STATION	LOCATION (LT, RT, OR CL)'	STRUCTURE NO.		TOP ELEVATION	INVERT ELEVATION	INVERT ELEVATION	SLOPE CRITICAL	CLASS III R.C. PIPE (UNLESS NOTED OTHERWISE)								BITUMINOUS COATED C.S. PIPE TYPE B (UNLESS NOTED OTHERWISE)					CLASS III R.C. PIPE OR C.S. PIPE IR ALUMINIZED OR HDPE PIPE, TYPE S OR D								15" SIDE DRAIN PIPE	18" SIDE DRAIN PIPE	24" SIDE DRAIN PIPE	ENDWALLS STD. 838.01, STD. 838.11 OR STD. 838.80 (UNLESS NOTED OTHERWISE)		QUANITIES FOR DRAINAGE STRUCTURES	*TOTAL L.F. FOR PAY QUANTITY SHALL BE COL. 'A' + (1.3 X COL.'B')		C.B. STD. 840.01 OR STD. 840.02	FRAME, GRATES, AND HOOD STANDARD 840.03			D.I. STD. 840.14 OR STD. 840.15	D.I. FRAME AND GRATE STD. 840.16	M.D.I. TYPE "A" STD. 840.17 OR 840.26	M.D.I. TYPE "B" STD. 840.18 OR 840.27	M.D.I. TYPE "D" STD. 840.19 OR 840.28	M.D.I. FRAME WITH GRATE STD. 840.20	M.D.I. FRAME WITH TWO GRATES STD. 840.22	M.D.I. (N.S.) FRAME WITH GRATE STD. 840.24	M.D.I. (N.S.) FRAME WITH TWO GRATES STD. 840.24	J.B. STD. 840.31 OR 840.32	M.D.I. (N.S.) FRAME WITH TWO GRATES STD. 840.29	MANHOLE STD. 840.51	M.H. STD. 840.51 OR 840.53	M.H. FRAME AND COVER STD. 840.54		24" WELDED STEEL PIPE (0.5" THICK), GRADE B	30" WELDED STEEL PIPE (0.5" THICK), GRADE B	36" WELDED STEEL PIPE (0.5" THICK), GRADE B	42" WELDED STEEL PIPE (0.625" THICK), GRADE B	48" WELDED STEEL PIPE (0.625" THICK), GRADE B		BERM DITCH OUTLET STD. 850.10 OR 850.11			ADJUSTMENT OF DROP INLETS		CONVERT D.I. TO J.B.		CONVERT C.B. TO J.B.	TEMPORARY STEEL PLATE COVERS	FLOWABLE FILL		CORR. STEEL ELBOWS NO. & SIZE	CONC. COLLARS CL. "B" C.Y. STD. 840.72	CONC. & BRICK PIPE PLUG, C.Y. STD. 840.71	PIPE REMOVAL LIN. FT.	REMARKS
SIZE								12"	15"	18"	24"	30"	36"	42"	48"	12"	15"	18"	24"	30"	12"	15"	18"	24"	30"	36"	42"	48"				CU. YARDS			LIN. FT. A	B		TYPE OF GRATE																																									
THICKNESS OR GAUGE		FROM	TO													.064	.064	.064	.064	.079												R.C.P.	C.S.P.	PER EACH (0' THRU 5.0')	5.0' THRU 10.0'	10.0' AND ABOVE		E	F	G																																									
186+50 L	RT	207	208		278.90	289.80													44																																																						1@24"				
186+57 L	RT	208			289.80																																																									1															
186+50 L	RT	207	209		278.90	284.17				312																																																																			88	REMOVE PIPES, 2 D.I.s
189+85 L	RT	209		287.17	284.17																													1										1					1																													
189+85 L	RT	209	210		284.17	288.15			80																																																																						
189+85 L	RT	210		290.90	288.15																													1										1					1																													
189+85 L	RT	209	211		284.17	305.00											60																																																										1@15"				
190+00 L	RT	211			305.00																																																									1															
188+25 L	LT	212		302.00	295.24														80															1	1.76																1				1																									
188+25 L	LT	212	213		295.24	296.53																84																																																						56	REMOVE PIPE
188+88 L	LT	213		299.80	296.53																													1			1		1																																							REMOVE D.I.
188+88 L	LT	213	214		296.53	296.80			52																																																																		64	REMOVE PIPE
189+33 L	LT	214		299.80	296.80																													1			1			1																																						REMOVE D.I.
		215																																																																												NOT USED
193+65 L	LT	216		295.19	288.29																																																																							66	REMOVE PIPE AND DI
194+84 L	CL	217			284.98																													1										1					1																													
194+84 L	RT	217	218		384.98	286.41																																																																									
194+50 L	RT	218		289.41	286.41					56																								1										1					1																													
194+50 L	RT	218	219		286.41	296.35												40																																																								1@18"				
194+50 L	RT	219			296.35																																																									1															
198+50 L	RT	220		287.90	285.15																													1										1					1																													
198+50 L	RT	220	221		285.15	282.00																52																																																								
199+00 L	RT	221			282.00																																																																										OPEN END PIPE
201+00 L	CL	222		283.07	280.32																													1										1					1																													
201+00 L	RT	222	223		280.32	275.70			84																																																																						
201+00 L	RT	223			275.70																																																																										OPEN END PIPE
202+97 L	LT	224			277.70																																																																										OPEN END PIPE
202+97 L	LT	224	225		277.70	277.10	☒																60																																																						118	REMOVE PIPES
203+50 L	LT	225		281.51	277.70																													1										1					1																													
203+50 L	LT	225	226		277.70	277.70	☒																252																																																					66	REMOVE PIPE, 2 D.I.s
206+00 L	LT	226		282.11	279.11																													1										1					1																													
206+00 L	LT	226	227		279.11	292.50											52																																																										1@15"				
206+00 L	LT	227			292.50																																																									1															
203+00 L	RT	228			276.60																																																																										OPEN END PIPE
203+00 L	RT	229	228		277.24	276.60																	56																																																							
203+50 L	RT	229		281.21	277.24																													1										1					1																													
203+50 L	RT	230	229		277.84	277.24				100																																																																					
204+21 L	LT	230		280.84	277.84																													1										1					1																													
207+50L	LT	226A																																																																										0.1	178	REMOVE PIPES AND DI's
SHEET TOTALS									216	468							112	40	124			136	368											13	1.76		2		1	1				10					10	1				1								4											2@15" 1@18" 1@24"		0.1	636	

COMPUTED BY:	MTR	DATE:	5/1/2006
CHECKED BY:	YTN	DATE:	5/1/2006

STATE OF NORTH CAROLINA
DIVISION OF HIGHWAYS

PROJECT NO.	SHEET NO.
U-4026	3-K

NOTE: ALL ELEVATIONS ON THIS SHEET ARE FOR COST ESTIMATING ONLY AND SHALL NOT BE USED FOR FIELD STAKING.

LIST OF PIPES, ENDWALLS, ETC. (FOR PIPES 48" & UNDER)

STATION	LOCATION (LT, RT, OR CL)	STRUCTURE NO.		TOP ELEVATION	INVERT ELEVATION	INVERT ELEVATION	SLOPE CRITICAL	CLASS III R.C. PIPE (UNLESS NOTED OTHERWISE)								BITUMINOUS COATED C.S. PIPE TYPE B (UNLESS NOTED OTHERWISE)					CLASS III R.C. PIPE OR C.S. PIPE IR ALUMINIZED OR HDPE PIPE, TYPE S OR D								15" SIDE DRAIN PIPE	18" SIDE DRAIN PIPE	24" SIDE DRAIN PIPE	ENDWALLS STD. 838.01, STD. 838.11 OR STD. 838.80 (UNLESS NOTED OTHERWISE) CU. YARDS		QUANITIES FOR DRAINAGE STRUCTURES	*TOTAL L.F. FOR PAY QUANTITY SHALL BE COL. 'A' + (1.3 X COL.'B') LIN. FT.		C.B. STD. 840.01 OR STD. 840.02	FRAME, GRATES, AND HOOD STANDARD 840.03 TYPE OF GRATE			D.I. STD. 840.14 OR STD. 840.15	D.I. FRAME AND GRATE STD. 840.16	M.D.I. TYPE "A" STD. 840.17 OR 840.26	M.D.I. TYPE "B" STD. 840.18 OR 840.27	M.D.I. TYPE "D" STD. 840.19 OR 840.28	M.D.I. FRAME WITH GRATE STD. 840.20	M.D.I. FRAME WITH TWO GRATES STD. 840.22	M.D.I. (N.S.) FRAME WITH GRATE STD. 840.24	M.D.I. (N.S.) FRAME WITH TWO GRATES STD. 840.24	J.B. STD. 840.31 OR 840.32	M.D.I. (N.S.) FRAME WITH TWO GRATES STD. 840.29	MANHOLE STD. 840.51	M.H. STD. 840.51 OR 840.53	M.H. FRAME AND COVER STD. 840.54	24" WELDED STEEL PIPE (0.5" THICK), GRADE B	30" WELDED STEEL PIPE (0.5" THICK), GRADE B	36" WELDED STEEL PIPE (0.5" THICK), GRADE B	42" WELDED STEEL PIPE (0.625" THICK), GRADE B	48" WELDED STEEL PIPE (0.625" THICK), GRADE B	BERM DITCH OUTLET STD. 850.10 OR 850.11	ADJUSTMENT OF DROP INLETS	CONVERT D.I. TO J.B.	CONVERT C.B. TO J.B.	TEMPORARY STEEL PLATE COVERS	FLOWABLE FILL	CORR. STEEL ELBOWS NO. & SIZE	CONC. COLLARS CL. "B" C.Y. STD. 840.72	CONC. & BRICK PIPE PLUG, C.Y. STD. 840.71	PIPE REMOVAL LIN. FT.	REMARKS
SIZE								12"	15"	18"	24"	30"	36"	42"	48"	12"	15"	18"	24"	30"	12"	15"	18"	24"	30"	36"	42"	48"				R.C.P.	C.S.P.	PER EACH (0' THRU 5.0')	A 5.0' THRU 10.0'	B 10.0' AND ABOVE		E	F	G																															
THICKNESS OR GAUGE		FROM	TO													.064	.064	.064	.064	.079																																																			
208+50 L	RT	231		286.95	284.20																													1										1							1																				
208+50 L	RT	231	232		284.20	283.72			152																																																														
210+05 L	RT	232		290.43	283.72																													1	1.71									1							1																				
210+05 L	RT	232	233		283.72	277.70	X													24																																														2@30"				
210+05 L	RT	233			277.70																												2.0																																							ENDWALL
210+05 M	LT	232	234		283.72	284.03						64																																																											
210+05 L	RT	234		289.03	284.03																													1										1							1																				
210+05 L	CL	234	235		284.55	384.92					76																																																										154	REMOVE PIPE
210+05 L	LT	235		288.45	284.92																													1										1							1																				
212+50 L	LT	236		294.40	288.00												56																	1										1							1																				
212+50 L	LT	237	236		304.00	288.00	X																																																													1@15"			120	REMOVE PIPE, DI AND BDO
212+50 L	LT	237			304.00																																																																	BDO
212+50 M	LT	236A		293.61	287.66																													1										1					1																							
212+50 L	LT	236	236A		288.00	287.66			68																																																														
14+00 Y10	LT	238	235		285.14	284.92																	76																																															
14+00 Y10	LT	238		289.89	285.14																													1									1						1																						
14+00 Y10	LT	238	239		285.14	288.74			36																																																														
14+00 Y10	LT	239		291.91	288.74																													1							1	1																								1						
14+00 Y10	LT	238	240		285.14	296.40																		196																																												0.1	97	REMOVE PIPES & D.I.
12+10 Y10	LT	240			296.40																																																																		OPEN END PIPE
215+12 M	LT	236A	234		287.66	284.55				244																																																												
215+12 L	LT	241			294.64																											3.4																																								ENDWALL
215+12 L	LT	241	242		294.64	290.96	X						88																																																							107	REMOVE PIPE
215+12 L	CL	242		297.71	290.96																													1	1.75								1						1																						
215+12 L	RT	242	243		290.96	289.00									100																																																								
214+60 L	RT	243			289.00																																																																		OPEN END PIPE
218+56 L	CL	242	244		296.45	290.96						344																																																									243	REMOVE PIPES, D.I.
218+56 L	CL	244		301.70	296.45																													1	0.25								1						1																						REMOVE D.I.
		245																																																																					NOT USED
218+62 L	LT	245	244A		301.01	298.06			64																																																														
218+58 L	LT	244A			298.06																																																													0.4			COLLAR
218+58 L	LT	244A	244		298.06	297.68			8																																																														
		246																																																																					NOT USED
218+56 L	RT	244	247		298.23	296.45	X		72																																																													
218+56 L	RT	247		300.15	298.23																													1											1				1																						
221+02 L	CL	244	248		298.80	296.45	X				248																																																									240	REMOVE PIPE
221+02 L	CL	248		303.55	298.80																													1									1						1																						REMOVE D.I.
221+02 L	LT	248	249		300.28	299.30	X				16																																																								8	REMOVE PIPE
221+02 L	LT	249																																																																	0.6			COLLAR
221+05 L	LT	250		306.78	302.20																																																								1									
221+05 L	LT	250	249		302.20	300.28	X																																																																
227+00 L	RT	251		308.87	306.29																													1										1							1																				
227+00 L	RT	251	252		306.29	300.00											44																																																	1@15"				
227+00 L	RT	252			300.00																																																																		OPEN END PIPE
227+00 L	RT	251	253		306.29	306.59			100																																																														
228+00 L	RT	253		309.78	306.59																													1										1							1																				
228+00 L	RT	253	254		306.59	306.89			100																																																															
229+00 L	RT	254		310.14	306.89																													1										1							1																				
229+00 L	RT	254	255		306.89	307.19			100																																																															
230+00 L	RT	255		309.94	307.19						264																							1										1							1																				
SHEET TOTALS									700	244	604	408	88		100		100			24			76	196								3.4	2.0	16	3.71						1	1	4	10	1				6		9										1			1		2@15", 2@30"	1.0	0.1	969	

ABBREVIATIONS

C.B.	CATCH BASIN
N.D.I.	NARROW DROP INLET
D.I.	DROP INLET
M.D.I.	MEDIAN DROP INLET
M.D.I.(N.S.)	MEDIAN DROP INLET (NARROW SLOT)
J.B.	JUNCTION BOX
M.H.	MANHOLE
T.B.D.I.	TRAFFIC BEARING DROP INLET
T.B.J.B.	TRAFFIC BEARING JUNCTION BOX

COMPUTED BY:	MTR	DATE:	5/1/2006
CHECKED BY:	YTN	DATE:	5/1/2006

STATE OF NORTH CAROLINA
DIVISION OF HIGHWAYS

PROJECT NO.	SHEET NO.
U-4026	3-L

8400-YVETTE

NOTE: ALL ELEVATIONS ON THIS SHEET ARE FOR COST ESTIMATING ONLY AND SHALL NOT BE USED FOR FIELD STAKING.

LIST OF PIPES, ENDWALLS, ETC. (FOR PIPES 48" & UNDER)

ABBREVIATIONS

C.B.	CATCH BASIN
N.D.I.	NARROW DROP INLET
D.I.	DROP INLET
M.D.I.	MEDIAN DROP INLET
M.D.I.(N.S.)	MEDIAN DROP INLET (NARROW SLOT)
J.B.	JUNCTION BOX
M.H.	MANHOLE
T.B.D.I.	TRAFFIC BEARING DROP INLET
T.B.J.B.	TRAFFIC BEARING JUNCTION BOX

STATION	LOCATION (LT, RT, OR CL)'	STRUCTURE NO. FROM	STRUCTURE NO. TO	TOP ELEVATION	INVERT ELEVATION	INVERT ELEVATION	SLOPE CRITICAL	CLASS III R.C. PIPE (UNLESS NOTED OTHERWISE) SIZE 12"	15"	18"	24"	30"	36"	42"	48"	BITUMINOUS COATED C.S. PIPE TYPE B (UNLESS NOTED OTHERWISE) 12" .064	15" .064	18" .064	24" .064	30" .079	CLASS III R.C. PIPE OR C.S. PIPE IR ALUMINIZED OR HDPE PIPE, TYPE S OR D 12"	15"	18"	24"	30"	36"	42"	48"	15" SIDE DRAIN PIPE	18" SIDE DRAIN PIPE	24" SIDE DRAIN PIPE
227+55 L	LT	256			306.00																										
227+55 L	LT	256	257		306.00	305.88					24																				
227+77 L	LT	257		309.80	305.88																										
227+77 L	LT	257	258		305.88	305.66					44																				
228+20 L	LT	258		309.80	305.66																										
228+20 L	LT	258	259		305.66	297.58													40												
228+58 L	LT	259			297.58																										
230+00 L	LT	265		309.96	307.21																										
230+00 L	LT	265	266		307.21	306.96			52																						
230+50 L	LT	266		309.75	306.96																										
230+50 L	LT	266	267		306.96	304.86			100																						
231+50 L	LT	267		309.95	304.86																										
231+50 L	LT	267	268		304.86	305.38	X		68																						
231+50 L	CL	268		308.13	305.38																										
231+50 L	LT	267	269		304.86	303.86	X		100																						
232+50 L	LT	269		310.15	303.86																										
232+50 L	LT	269	270		303.86	293.70											36														
232+50 L	LT	270			293.70																										
232+07 L	RT	271			305.00																										
232+07 L	RT	271	272		305.00	307.54																44									
232+50 L	RT	272		310.29	307.54																										
233+72 L	LT	273			302.00																										
233+72 L	LT	273	274		302.00	303.76	X																76								
234+50 L	LT	274		308.76	303.76																										
234+50 L	LT	274	275		303.76	304.84	X		72																						
234+50 L	CL	275		309.59	304.84																										
238+54 L	RT	276			315.30																										
238+54 L	RT	276	277		315.30	313.99					40																				
238+79 L	RT	277			313.99																										
240+02 L	LT	278			307.11																										
240+02 L	LT	278	279		307.11	306.60					16																				
240+15 L	LT	279			306.60																										
240+00 L	LT	280		317.29	314.29																										
240+00 L	LT	280	281		314.29	314.00			88																						
240+90 L	LT	281		318.29	314.00																										
240+90 L	LT	281	282		314.00	306.60											44														
240+90 L	LT	282			306.60																										
241+07 L	CL	281	283		314.00	318.05			52																						
241+10 L	RT	283		321.22	318.05																										
242+60 L	RT	288		323.61	320.61																										
242+60 L	CL	288	289		320.61	317.43			44																						
242+60 L	LT	289		320.57	317.43																										
SHEET TOTALS									576		124						80		40			44	76								

STATION	LOCATION	STRUCTURE NO. FROM	STRUCTURE NO. TO	ENDWALLS STD. 838.01, STD. 838.11 OR STD. 838.80 (UNLESS NOTED OTHERWISE) CU. YARDS R.C.P.	C.S.P.	QUANITIES FOR DRAINAGE STRUCTURES PER EACH (0' THRU 5.0')	*TOTAL L.F. FOR PAY QUANTITY SHALL BE COL. 'A' + (1.3 X COL.'B') LIN. FT. A 5.0' THRU 10.0'	B 10.0' AND ABOVE	C.B. STD. 840.01 OR STD. 840.02	FRAME, GRATES, AND HOOD STANDARD 840.03 TYPE OF GRATE E	F	G	D.I. STD. 840.14 OR STD. 840.15	D.I. FRAME AND GRATE STD. 840.16	M.D.I. TYPE "A" STD. 840.17 OR 840.26	M.D.I. TYPE "B" STD. 840.18 OR 840.27	M.D.I. TYPE "D" STD. 840.19 OR 840.28	M.D.I. FRAME WITH GRATE STD. 840.20	M.D.I. FRAME WITH TWO GRATES STD. 840.22	M.D.I. (N.S.) FRAME WITH GRATE STD. 840.24	M.D.I. (N.S.) FRAME WITH TWO GRATES STD. 840.24	J.B. STD. 840.31 OR 840.32	M.D.I. (N.S.) FRAME WITH TWO GRATES STD. 840.29	MANHOLE STD. 840.51	M.H. STD. 840.51 OR 840.53	M.H. FRAME AND COVER STD. 840.54
227+55 L	LT	256																								
227+55 L	LT	256	257																							
227+77 L	LT	257				1			1		1															
227+77 L	LT	257	258																							
228+20 L	LT	258				1			1			1														
228+20 L	LT	258	259																							
228+58 L	LT	259			1.4																					
230+00 L	LT	265				1										1								1			
230+00 L	LT	265	266																							
230+50 L	LT	266				1										1								1			
230+50 L	LT	266	267																							
231+50 L	LT	267				1	0.09									1								1			
231+50 L	LT	267	268																							
231+50 L	CL	268				1										1						1					
231+50 L	LT	267	269																							
232+50 L	LT	269				1	1.29									1								1			
232+50 L	LT	269	270																							
232+50 L	LT	270																								
232+07 L	RT	271																								
232+07 L	RT	271	272																							
232+50 L	RT	272				1										1						1					
233+72 L	LT	273																								
233+72 L	LT	273	274																							
234+50 L	LT	274				1										1						1					
234+50 L	LT	274	275																							
234+50 L	CL	275				1										1						1					
238+54 L	RT	276																								
238+54 L	RT	276	277																							
238+79 L	RT	277																								
240+02 L	LT	278																								
240+02 L	LT	278	279																							
240+15 L	LT	279																								
240+00 L	LT	280				1			1		1															
240+00 L	LT	280	281																							
240+90 L	LT	281				1			1		1															
240+90 L	LT	281	282																							
240+90 L	LT	282																								
241+07 L	CL	281	283																							
241+10 L	RT	283				1							1	1												
242+60 L	RT	288				1							1	1												
242+60 L	CL	288	289																							
242+60 L	LT	289				1			1		1															
SHEET TOTALS					1.4	15	1.38		5		4	1	2	2		8					4		4			

STATION	LOCATION	STRUCTURE NO. FROM	STRUCTURE NO. TO	24" WELDED STEEL PIPE (0.5" THICK), GRADE B	30" WELDED STEEL PIPE (0.5" THICK), GRADE B	36" WELDED STEEL PIPE (0.5" THICK), GRADE B	42" WELDED STEEL PIPE (0.625" THICK), GRADE B	48" WELDED STEEL PIPE (0.625" THICK), GRADE B	BERM DITCH OUTLET STD. 850.10 OR 850.11	ADJUSTMENT OF DROP INLETS	CONVERT D.I. TO J.B.	CONVERT C.B. TO J.B.	TEMPORARY STEEL PLATE COVERS	FLOWABLE FILL	CORR. STEEL ELBOWS NO. & SIZE	CONC. COLLARS CL. "B" C.Y. STD. 840.72	CONC. & BRICK PIPE PLUG, C.Y. STD. 840.71	PIPE REMOVAL LIN. FT.	REMARKS
227+55 L	LT	256																	OPEN END PIPE
227+55 L	LT	256	257															20	REMOVE PIPE
227+77 L	LT	257																	REMOVE D.I.
227+77 L	LT	257	258															48	REMOVE PIPE
228+20 L	LT	258																	REMOVE D.I.
228+20 L	LT	258	259															33	REMOVE PIPE
228+58 L	LT	259																	ENDWALL
230+00 L	LT	265																	
230+00 L	LT	265	266																
230+50 L	LT	266																	
230+50 L	LT	266	267																
231+50 L	LT	267																	
231+50 L	LT	267	268																
231+50 L	CL	268																	
231+50 L	LT	267	269																
232+50 L	LT	269																	
232+50 L	LT	269	270												1@15"				
232+50 L	LT	270																	OPEN END PIPE
232+07 L	RT	271																	OPEN END PIPE
232+07 L	RT	271	272																
232+50 L	RT	272																	
233+72 L	LT	273																	OPEN END PIPE
233+72 L	LT	273	274																
234+50 L	LT	274																	
234+50 L	LT	274	275																
234+50 L	CL	275																	
238+54 L	RT	276																	OPEN END PIPE
238+54 L	RT	276	277																
238+79 L	RT	277														0.6			COLLAR
240+02 L	LT	278														0.6			COLLAR
240+02 L	LT	278	279																
240+15 L	LT	279																	OPEN END PIPE
240+00 L	LT	280																	
240+00 L	LT	280	281																
240+90 L	LT	281																	
240+90 L	LT	281	282												2@15"				
240+90 L	LT	282																	OPEN END PIPE
241+07 L	CL	281	283																
241+10 L	RT	283												1					
242+60 L	RT	288												1					
242+60 L	CL	288	289																
242+60 L	LT	289																	REMOVE 2 D.I.s
SHEET TOTALS													2		3@15"	1.2		101	

8400-YVETTE

COMPUTED BY: MTR DATE: 5/1/2006
CHECKED BY: YTN DATE: 5/1/2006

STATE OF NORTH CAROLINA
DIVISION OF HIGHWAYS

PROJECT NO.	SHEET NO.
U-4026	3-M

NOTE: ALL ELEVATIONS ON THIS SHEET ARE FOR COST ESTIMATING ONLY AND SHALL NOT BE USED FOR FIELD STAKING.

LIST OF PIPES, ENDWALLS, ETC. (FOR PIPES 48" & UNDER)

STATION	LOCATION (LT, RT, OR CL)	STRUCTURE NO.		TOP ELEVATION	INVERT ELEVATION	INVERT ELEVATION	SLOPE CRITICAL	CLASS III R.C. PIPE (UNLESS NOTED OTHERWISE)								BITUMINOUS COATED C.S. PIPE TYPE B (UNLESS NOTED OTHERWISE)					CLASS III R.C. PIPE OR C.S. PIPE IR ALUMINIZED OR HDPE PIPE, TYPE S OR D								15" SIDE DRAIN PIPE	18" SIDE DRAIN PIPE	24" SIDE DRAIN PIPE	ENDWALLS STD. 838.01, STD. 838.11 OR STD. 838.80 (UNLESS NOTED OTHERWISE)		QUANITIES FOR DRAINAGE STRUCTURES	*TOTAL L.F. FOR PAY QUANTITY SHALL BE COL. 'A' + (1.3 X COL.'B')		C.B. STD. 840.01 OR STD. 840.02	FRAME, GRATES, AND HOOD STANDARD 840.03		
SIZE								12"	15"	18"	24"	30"	36"	42"	48"	12"	15"	18"	24"	30"	12"	15"	18"	24"	30"	36"	42"	48"				CU. YARDS			LIN. FT. A	B		TYPE OF GRATE		
THICKNESS OR GAUGE		FROM	TO													.064	.064	.064	.064	.079												R.C.P.	C.S.P.	PER EACH (0' THRU 5.0')	5.0' THRU 10.0'	10.0' AND ABOVE		E	F	G
10+98 Y11	RT	290		333.90	330.90																													1			1			1
10+98 Y11	RT	290	291		330.90	330.80			8																															
10+90 Y11	RT	291																																						
10+90 Y11	LT	292																																						
10+90 Y11	LT	292	293		330.80	330.90			8																															
10+98 Y11	LT	293		333.90	330.90																													1			1		1	
10+90 Y11	LT	292	294		325.10	324.90																	76																	
247+10 L	RT	294		328.20	324.78																													1						
247+10 L	RT	294	295		324.78	324.66																	12																	
247+20 L	RT	295		328.50	317.14																																			
247+20 L	RT	295	296		324.66	324.90																12																		
247+35 L	RT	296		328.20	324.90																													1						
246+85 L	RT	297		331.09	328.09																													1						
246+85 L	RT	297	298		328.09	330.66			132																															
248+17 L	RT	298		333.66	330.66																													1						
248+82 L	CL	298	299		330.66	332.93			184																															
250+00 L	LT	299		336.10	332.93																													1						
246+85 L	CL	297	300		328.09	323.96			56																															
246+85 L	LT	300		327.06	323.96																													1			1		1	
246+85 L	LT	300	301		323.96	331.51			308																															
250+00 L	LT	301		334.51	331.51																													1			1		1	
250+00 L	LT	301	302		331.51	335.54			168																															
251+66 L	LT	302		338.53	335.54																													1			1		1	
251+66 L	LT	302	303		335.54	335.65			32																															
251+66 L	LT	303		339.46	335.65																													1						
251+66 L	CL	303	304		335.65	335.81			52																															
251+66 L	RT	304		338.81	335.81																													1			1			1
251+66 L	RT	304	305		335.81	335.96			40																															
252+05 L	RT	305		338.96	335.96																													1			1			1
251+66 L	LT	302	306		335.54	338.09			200																															
253+63 L	LT	306		341.09	338.09																													1			1		1	
253+63 L	LT	306	307		338.09	338.94			32																															
253+63 L	LT	307		341.94	338.94																													1						
253+61 L	RT	308		341.07	338.10																													1			1			1
253+61 L	RT	308	309		338.10	335.81			292																															
256+53 L	RT	309		345.35	335.81																													1	4.54		1			1
256+53 L	RT	309	310		335.81	344.46	☒		240																															
258+94 L	RT	310		348.22	344.46																													1			1			1
255+58 L	RT	311		342.00	339.90																													1			1			
255+58 L	RT	311	312		339.90	336.06																100																		
256+55 L	RT	312																																						
SHEET TOTALS									1752													112	88											19	4.54		12		5	6

STATION	LOCATION (LT, RT, OR CL)	STRUCTURE NO. FROM	TO	D.I. STD. 840.14 OR STD. 840.15	D.I. FRAME AND GRATE STD. 840.16	M.D.I. TYPE "A" STD. 840.17 OR 840.26	M.D.I. TYPE "B" STD. 840.18 OR 840.27	M.D.I. TYPE "D" STD. 840.19 OR 840.28	M.D.I. FRAME WITH GRATE STD. 840.20	M.D.I. FRAME WITH TWO GRATES STD. 840.22	M.D.I. (N.S.) FRAME WITH GRATE STD. 840.24	M.D.I. (N.S.) FRAME WITH TWO GRATES STD. 840.24	J.B. STD. 840.31 OR 840.32	M.D.I. (N.S.) FRAME WITH TWO GRATES STD. 840.29	MANHOLE STD. 840.51	M.H. STD. 840.51 OR 840.53	M.H. FRAME AND COVER STD. 840.54		24" WELDED STEEL PIPE (0.5" THICK), GRADE B	30" WELDED STEEL PIPE (0.5" THICK), GRADE B	36" WELDED STEEL PIPE (0.5" THICK), GRADE B	42" WELDED STEEL PIPE (0.625" THICK), GRADE B	48" WELDED STEEL PIPE (0.625" THICK), GRADE B		BERM DITCH OUTLET STD. 850.10 OR 850.11			ADJUSTMENT OF DROP INLETS		CONVERT D.I. TO J.B.		CONVERT C.B. TO J.B.	TEMPORARY STEEL PLATE COVERS	FLOWABLE FILL		CORR. STEEL ELBOWS NO. & SIZE	CONC. COLLARS CL. "B" C.Y. STD. 840.72	CONC. & BRICK PIPE PLUG, C.Y. STD. 840.71	PIPE REMOVAL LIN. FT.	REMARKS
10+98 Y11	RT	290																																						
10+98 Y11	RT	290	291																																					
10+90 Y11	RT	291																																						EXISTING C.B.
10+90 Y11	LT	292																																						EXISTING C.B.
10+90 Y11	LT	292	293																																					
10+98 Y11	LT	293																																						
10+90 Y11	LT	292	294																																				80	REMOVE PIPE
247+10 L	RT	294		1	1																																			
247+10 L	RT	294	295																																					
247+20 L	RT	295															1															1								SEE SPECIAL DETAIL 2-MM
247+20 L	RT	295	296																																					
247+35 L	RT	296		1	1																																			
246+85 L	RT	297		1	1																												1							
246+85 L	RT	297	298																																					
248+17 L	RT	298		1	1																												1							
248+82 L	CL	298	299																																					
250+00 L	LT	299		1	1																												1							
246+85 L	CL	297	300																																					
246+85 L	LT	300																																						REMOVE D.I.
246+85 L	LT	300	301																																				298	REMOVE PIPE, D.I.
250+00 L	LT	301																																						REMOVE D.I.
250+00 L	LT	301	302																																				147	REMOVE PIPE
251+66 L	LT	302																																						REMOVE D.I.
251+66 L	LT	302	303																																					
251+66 L	LT	303		1	1																												1							
251+66 L	CL	303	304																																					
251+66 L	RT	304																																						
251+66 L	RT	304	305																																					
252+05 L	RT	305																																						
251+66 L	LT	302	306																																				216	REMOVE PIPE
253+63 L	LT	306																																						REMOVE C.B.
253+63 L	LT	306	307																																					
253+63 L	LT	307		1	1																												1							
253+61 L	RT	308																																						REMOVE D.I.
253+61 L	RT	308	309																																				294	REMOVE PIPES
256+53 L	RT	309																																					21	REMOVE PIPE, D.I.
256+53 L	RT	309	310																																				238	REMOVE PIPE, D.I.
258+94 L	RT	310																																						
255+58 L	RT	311																																						OPEN THROAT C. B., REMOVE D.I.
255+58 L	RT	311	312																																				80	REMOVE D.I.
256+55 L	RT	312																																					70	EXISTING J.B., REMOVE PIPE & D.I.
SHEET TOTALS				7	7												1															1	5						1444	

ABBREVIATIONS

C.B.	CATCH BASIN
N.D.I.	NARROW DROP INLET
D.I.	DROP INLET
M.D.I.	MEDIAN DROP INLET
M.D.I.(N.S.)	MEDIAN DROP INLET (NARROW SLOT)
J.B.	JUNCTION BOX
M.H.	MANHOLE
T.B.D.I.	TRAFFIC BEARING DROP INLET
T.B.J.B.	TRAFFIC BEARING JUNCTION BOX

8400-YVETTE,5/5/2006,R:\Roadway\Proj\Drainage_summaries.xls

8400-YVETTE

COMPUTED BY:	MTR	DATE:	5/1/2006
CHECKED BY:	YTN	DATE:	5/1/2006

PROJECT NO.	SHEET NO.
U-4026	3-N

STATE OF NORTH CAROLINA
DIVISION OF HIGHWAYS

NOTE: ALL ELEVATIONS ON THIS SHEET ARE FOR COST ESTIMATING ONLY AND SHALL NOT BE USED FOR FIELD STAKING.

LIST OF PIPES, ENDWALLS, ETC. (FOR PIPES 48" & UNDER)

STATION	LOCATION (LT, RT, OR CL)	STRUCTURE NO.		TOP ELEVATION	INVERT ELEVATION	INVERT ELEVATION	SLOPE CRITICAL	CLASS III R.C. PIPE (UNLESS NOTED OTHERWISE)								BITUMINOUS COATED C.S. PIPE TYPE B (UNLESS NOTED OTHERWISE)					CLASS III R.C. PIPE OR C.S. PIPE IR ALUMINIZED OR HDPE PIPE, TYPE S OR D								15" SIDE DRAIN PIPE	18" SIDE DRAIN PIPE	24" SIDE DRAIN PIPE	ENDWALLS STD. 838.01, STD. 838.11 OR STD. 838.80 (UNLESS NOTED OTHERWISE) CU. YARDS		QUANTITIES FOR DRAINAGE STRUCTURES	*TOTAL L.F. FOR PAY QUANTITY SHALL BE COL. "A" + (1.3 X COL."B") LIN. FT.		C.B. STD. 840.01 OR STD. 840.02	FRAME, GRATES, AND HOOD STANDARD 840.03 TYPE OF GRATE			D.I. STD. 840.14 OR STD. 840.15	D.I. FRAME AND GRATE STD. 840.16	M.D.I. TYPE "A" STD. 840.17 OR 840.26	M.D.I. TYPE "B" STD. 840.18 OR 840.27	M.D.I. TYPE "D" STD. 840.19 OR 840.28	M.D.I. FRAME WITH GRATE STD. 840.20	M.D.I. FRAME WITH TWO GRATES STD. 840.22	M.D.I. (N.S.) FRAME WITH GRATE STD. 840.24	M.D.I. (N.S.) FRAME WITH TWO GRATES STD. 840.24	J.B. STD. 840.31 OR 840.32	M.D.I. (N.S.) FRAME WITH TWO GRATES STD. 840.29	MANHOLE STD. 840.51	M.H. STD. 840.51 OR 840.53	M.H. FRAME AND COVER STD. 840.54		24" WELDED STEEL PIPE (0.5" THICK), GRADE B	30" WELDED STEEL PIPE (0.5" THICK), GRADE B	36" WELDED STEEL PIPE (0.5" THICK), GRADE B	42" WELDED STEEL PIPE (0.625" THICK), GRADE B	48" WELDED STEEL PIPE (0.625" THICK), GRADE B		BERM DITCH OUTLET STD. 850.10 OR 850.11			ADJUSTMENT OF DROP INLETS		CONVERT D.I. TO J.B.		CONVERT C.B. TO J.B.	TEMPORARY STEEL PLATE COVERS	FLOWABLE FILL		CORR. STEEL ELBOWS NO. & SIZE	CONC. COLLARS CL. "B" C.Y. STD. 840.72	CONC. & BRICK PIPE PLUG, C.Y. STD. 840.71	PIPE REMOVAL LIN. FT.	REMARKS
SIZE								12"	15"	18"	24"	30"	36"	42"	48"	12"	15"	18"	24"	30"	12"	15"	18"	24"	30"	36"	42"	48"				R.C.P.	C.S.P.	PER EACH (0' THRU 5.0')	A 5.0' THRU 10.0'	B 10.0' AND ABOVE		E	F	G																																				
THICKNESS OR GAUGE		FROM	TO													.064	.064	.064	.064	.079																																																										
255+92 L	LT	313		344.35	338.47																													1	0.88		1		1																																								5	REMOVE PIPE, J.B. & D.I.
257+62 L	LT	314		347.20	342.91																													1			1		1																																								38	REMOVE PIPE, J.B.
263+10 L	LT	315		344.52	341.52																													1			1			1																																								
263+10 L	LT	315	316		341.52	337.60											36																																																									2@15"				
263+10 L	LT	316			337.60																																																																										OPEN END PIPE
265+10 L	LT	317		339.34	336.34																													1			1			1																																								
265+10 L	LT	317	318		336.34	331.70											40																																																								2@15"				
265+10 L	LT	318			331.70																																																																									OPEN END PIPE
265+10 L	RT	319		340.19	337.02																													1							1	1																														1							
265+10 L	RT	319	320		337.02	336.34			32																																																																						
265+10 L	RT	320		339.34	336.34																													1			1		1																																									
265+10 L	RT	320	320A		336.34	333.00											28																																																								2@15"				
267+65L	RT	320B		331.76	328.41																													1			1		1																																									
267+65L	RT	321	320B		328.47	328.41			12																																																																							
267+75L	RT	321		331.47	328.47																													1			1		1																																									
267+65L	RT	320B	336		328.41	327.97																44																																																								
269+50 L	LT	323		326.72	323.72																													1			1			1																																								
269+50 L	LT	323	324		323.72	317.10											44																																																								2@15"				
269+50 L	LT	324			317.10																																																																									OPEN END PIPE
269+60 L	LT	325			315.80																												3.8																																													ENDWALL
269+92 L	CL	325	326		315.80	312.85																																																			124												6.7						
270+00 L	RT	326			312.85																																																																						0.9			COLLAR
270+00 L	RT	326	327		312.85	311.90										40																																																															
270+12 L	RT	327			311.90																																																																										OPEN END PIPE
271+90L	LT	328A		320.71	317.71																													1			1			1																																								
271+90L	LT	328A	328		317.71	317.53			12																																																																								
271+90L	LT	328		320.53	317.53																													1			1			1																																								
272+00 L	LT	328	329		317.53	317.39																24																																																								
272+00 L	LT	329			317.39																																																																										OPEN END PIPE
275+90 L	RT	331		315.44	309.26																													1	1.18		1		1																																									
275+90 L	RT	331	332		309.26	309.00				16																																																																						
276+05 L	RT	332		315.26	309.00																													1	1.26		1		1																																									
276+05 L	RT	332	333		309.00	305.60												48																																																							2@18"				
276+05 L	RT	333			305.60																												1.0																																													ENDWALL
275+90 L	RT	331	334		309.26	309.72			32																																																																				73	REMOVE PIPE & D.I.
275+90 L	RT	334			309.72																																																																						0.4			COLLAR
267+38L	L/R	335		333.40	327.00																													1	1.40															1				1																									
267+38L	L/R	335	336		327.00	325.60										140																																																														
SHEET TOTALS									88	16				180			148	48				68											4.8	14	4.72		12		7	5	1	1								1				1					124											1	6.7		8@15", 2@18"	1.3		116	

ABBREVIATIONS	
C.B.	CATCH BASIN
N.D.I.	NARROW DROP INLET
D.I.	DROP INLET
M.D.I.	MEDIAN DROP INLET
M.D.I.(N.S.)	MEDIAN DROP INLET (NARROW SLOT)
J.B.	JUNCTION BOX
M.H.	MANHOLE
T.B.D.I.	TRAFFIC BEARING DROP INLET
T.B.J.B.	TRAFFIC BEARING JUNCTION BOX

8400-YVETTE,5/5/2006,R:\Roadway\Proj\Drainage_summaries.xls

COMPUTED BY:	MTR	DATE:	5/1/2006
CHECKED BY:	YTN	DATE:	5/1/2006

STATE OF NORTH CAROLINA
DIVISION OF HIGHWAYS

PROJECT NO.	SHEET NO.
U-4026	3-O

8400-YVETTE

NOTE: ALL ELEVATIONS ON THIS SHEET ARE FOR COST ESTIMATING ONLY AND SHALL NOT BE USED FOR FIELD STAKING.

LIST OF PIPES, ENDWALLS, ETC. (FOR PIPES 48" & UNDER)

ABBREVIATIONS

C.B.	CATCH BASIN
N.D.I.	NARROW DROP INLET
D.I.	DROP INLET
M.D.I.	MEDIAN DROP INLET
M.D.I.(N.S.)	MEDIAN DROP INLET (NARROW SLOT)
J.B.	JUNCTION BOX
M.H.	MANHOLE
T.B.D.I.	TRAFFIC BEARING DROP INLET
T.B.J.B.	TRAFFIC BEARING JUNCTION BOX

STATION / SIZE / THICKNESS OR GAUGE	LOCATION (LT, RT, OR CL)	STRUCTURE NO. FROM	STRUCTURE NO. TO	TOP ELEVATION	INVERT ELEVATION	INVERT ELEVATION	SLOPE CRITICAL	CLASS III R.C. PIPE (UNLESS NOTED OTHERWISE) 12"	15"	18"	24"	30"	36"	42"	48"	BITUMINOUS COATED C.S. PIPE TYPE B (UNLESS NOTED OTHERWISE) 12" .064	15" .064	18" .064	24" .064	30" .079	CLASS III R.C. PIPE OR C.S. PIPE IR ALUMINIZED OR HDPE PIPE, TYPE S OR D 12"	15"	18"	24"	30"	36"	42"	48"	15" SIDE DRAIN PIPE	18" SIDE DRAIN PIPE	24" SIDE DRAIN PIPE	ENDWALLS STD. 838.01, STD. 838.11 OR STD. 838.80 (UNLESS NOTED OTHERWISE) CU. YARDS R.C.P.	C.S.P.	QUANITIES FOR DRAINAGE STRUCTURES PER EACH (0' THRU 5.0')	*TOTAL L.F. FOR PAY QUANTITY SHALL BE COL. 'A' + (1.3 X COL.'B') LIN. FT. A 5.0' THRU 10.0'	B 10.0' AND ABOVE	C.B. STD. 840.01 OR STD. 840.02	FRAME, GRATES, AND HOOD STANDARD 840.03 TYPE OF GRATE E	F	G	D.I. STD. 840.14 OR STD. 840.15	D.I. FRAME AND GRATE STD. 840.16	M.D.I. TYPE "A" STD. 840.17 OR 840.26	M.D.I. TYPE "B" STD. 840.18 OR 840.27	M.D.I. TYPE "D" STD. 840.19 OR 840.28	M.D.I. FRAME WITH GRATE STD. 840.20	M.D.I. FRAME WITH TWO GRATES STD. 840.22	M.D.I. (N.S.) FRAME WITH GRATE STD. 840.24	M.D.I. (N.S.) FRAME WITH TWO GRATES STD. 840.24	J.B. STD. 840.31 OR 840.32	M.D.I. (N.S.) FRAME WITH TWO GRATES STD. 840.29	MANHOLE STD. 840.51	M.H. STD. 840.51 OR 840.53	M.H. FRAME AND COVER STD. 840.54	24" WELDED STEEL PIPE (0.5" THICK), GRADE B	30" WELDED STEEL PIPE (0.5" THICK), GRADE B	36" WELDED STEEL PIPE (0.5" THICK), GRADE B	42" WELDED STEEL PIPE (0.625" THICK), GRADE B	48" WELDED STEEL PIPE (0.625" THICK), GRADE B	BERM DITCH OUTLET STD. 850.10 OR 850.11	ADJUSTMENT OF DROP INLETS	CONVERT D.I. TO J.B.	CONVERT C.B. TO J.B.	TEMPORARY STEEL PLATE COVERS	FLOWABLE FILL	CORR. STEEL ELBOWS NO. & SIZE	CONC. COLLARS CL. "B" C.Y. STD. 840.72	CONC. & BRICK PIPE PLUG, C.Y. STD. 840.71	PIPE REMOVAL LIN. FT.	REMARKS
271+55L	RT	337		321.18	317.08																													1			1		1																															
271+55L	RT	337	338		317.08	312.80											32																																																		2@15"				PSH
272+00L	RT	339		320.30	317.30																													1			1		1																															
271+55L	RT	337	339		317.08	317.30			44																																																													
280+75 L	RT	340			295.91																																																															0.6			COLLAR
280+75 L	RT	340	341		295.91	292.80					80																																																											
281+38 L	RT	341			292.80																																																																		OPEN END PIPE
280+25L	RT	342A		310.19	307.19																													1			1		1																															
280+25L	RT	342A	342		307.19	306.29			72																																																													
281+00 L	RT	342		309.29	306.29																													1			1		1																															
281+00 L	RT	342	343		306.29	295.50											44																																																		2@15"				
281+00 L	RT	343			295.50																																																																		OPEN END PIPE
282+24 L	RT	346			293.83																																																															0.7			COLLAR
282+24 L	RT	346	347		293.83	292.70						48																																																									
282+24 L	RT	347			292.70																																																																		OPEN END PIPE
285+00 L	RT	350		304.42	301.42																													1			1		1																															
285+00 L	RT	350	351		301.42	300.74			60																																																													
285+60 L	RT	351		303.74	300.74																													1			1		1																															
285+60 L	CL	351	352		300.74	300.20			76																																																													
285+60 L	LT	352		303.74	300.20																													1			1			1																													
285+60 L	LT	352	353		300.20	298.85																	20																																															
285+60 L	LT	353		301.60	298.85																													1										1					1																					
285+60 L	LT	353	354		298.85	298.60																	48																																															
286+00 L	LT	354			298.60																																																																		OPEN END PIPE
285+86 L	RT	355	359		282.20	281.72									44																																																							
286+15 L	RT	359			281.72																																																															1.0			COLLAR
286+70 L	CL	359	360		281.72	279.60																																																				188											
287+52 L	LT	360			279.60																																																															1.0			COLLAR
287+52 L	LT	360	358		279.60	279.10									44																																																							
290+38 L	LT	361		297.69	294.69																													1			1			1																														
290+38 L	LT	361	362		294.69	289.31											32																																																		2@15"			106	REMOVE PIPE
290+38 L	LT	362		292.06	289.31																													1										1					1																					
290+38 L	LT	362	363		289.31	286.00											28																																																		1@15"				
290+38 L	LT	363			286.00																																																																		OPEN END PIPE
290+38 L	LT	361	364		294.69	294.79			12																																																													
290+48 L	LT	364		297.59	294.79																													1			1			1																														
290+48 L	RT	365		297.61	294.61																													1			1		1																															
290+48 L	RT	365	366		294.61	292.60																	32																																															
SHEET TOTALS									264		80	48			88		136					100												12			10		7	3				2					2											188							7@15"	3.3		106	

COMPUTED BY:	MTR	DATE:	5/1/2006
CHECKED BY:	YTN	DATE:	5/1/2006

STATE OF NORTH CAROLINA
DIVISION OF HIGHWAYS

PROJECT NO.	SHEET NO.
U-4026	3-P

NOTE: ALL ELEVATIONS ON THIS SHEET ARE FOR COST ESTIMATING ONLY AND SHALL NOT BE USED FOR FIELD STAKING.

LIST OF PIPES, ENDWALLS, ETC. (FOR PIPES 48" & UNDER)

STATION	LOCATION (LT, RT, OR CL)'	STRUCTURE NO.		TOP ELEVATION	INVERT ELEVATION	INVERT ELEVATION	SLOPE CRITICAL	CLASS III R.C. PIPE (UNLESS NOTED OTHERWISE)								BITUMINOUS COATED C.S. PIPE TYPE B (UNLESS NOTED OTHERWISE)					CLASS III R.C. PIPE OR C.S. PIPE IR ALUMINIZED OR HDPE PIPE, TYPE S OR D								15" SIDE DRAIN PIPE	18" SIDE DRAIN PIPE	24" SIDE DRAIN PIPE	ENDWALLS STD. 838.01, STD. 838.11 OR STD. 838.80 (UNLESS NOTED OTHERWISE)	
SIZE								12"	15"	18"	24"	30"	36"	42"	48"	12"	15"	18"	24"	30"	12"	15"	18"	24"	30"	36"	42"	48"				CU. YARDS	
THICKNESS OR GAUGE		FROM	TO													.064	.064	.064	.064	.079												R.C.P.	C.S.P.
290+40 L	RT	366			292.60																												
292+40 L	RT	367		295.30	292.30																												
292+40 L	RT	367	368		292.30	291.20			152																								
293+90 L	RT	368		294.20	291.20																												
293+90 L	RT	368	369		291.20	290.00			120																								
295+09 L	RT	369		293.95	290.84																												
295+09 L	RT	369	370		290.84		X		68																								
295+75 L	RT	370		294.04	290.54																												
295+75 L	RT	370	371		290.54	282.60												36															
295+75 L	RT	371			282.60																												
295+75 L	RT	370	372		290.54	291.80			132																								
297+05 L	RT	372		294.80	291.80																												
297+05 L	CL	372	373		291.80	292.71			44																								
297+05 L	LT	373		295.71	292.71																												
297+05 L	LT	373	374		292.71	292.96			24																								
297+28 L	LT	374		295.96	292.96																												
292+50 L	LT	375		295.42	292.42																												
292+50 L	LT	375	376		292.42	291.21			152																								
294+00 L	LT	376		294.21	291.21																												
294+00 L	LT	376	377		291.21	290.85			108																								
295+09 L	LT	377		293.95	290.85																												
295+09 L	LT	377	378		290.85	284.30											32																
295+09 L	LT	378		287.10	284.30																												
295+09 L	LT	378	379		284.30	280.20											40																
295+09 L	LT	379			280.20																												
295+09 L	LT	377	380		290.85	290.99			44																								
295+50 L	LT	380		293.99	290.99																												
293+85 L	LT	381			---	---																									40		
298+00 L	LT	386			290.30																												
298+00 L	LT	386	387		290.30	290.95																				68									
298+45 L	LT	387		296.20	290.95																												
298+45 L	LT	387	388		290.95	291.18	X					56																					
298+50 L	LT	388		297.62	291.18																												
298+50 L	CL	388	389		291.18	291.30	X					44																					
298+52 L	RT	389		295.55	291.30																												
298+52 L	RT	389	390		291.30	297.46					324																						
301+84 L	RT	390		301.21	297.46																												
301+84 L	RT	390	391		297.46	300.55					200																						
303+84 L	RT	391		304.30	300.55																												
303+84 L	RT	391	392		300.55	303.68			48																								
303+84 L	RT	392		306.68	303.68																												
303+84 L	CL	392	393		303.68	305.00			76																								
303+84 L	LT	393		308.00	305.00																												
303+84 L	RT	392	394		303.68	303.97			16																								
304+00 L	RT	394		306.97	303.97																												
SHEET TOTALS									984		524	100					72	36							68						40		

STATION	LOCATION (LT, RT, OR CL)'	STRUCTURE NO. FROM	STRUCTURE NO. TO	QUANITIES FOR DRAINAGE STRUCTURES	*TOTAL L.F. FOR PAY QUANTITY SHALL BE COL. 'A' + (1.3 X COL.'B') LIN. FT.		C.B. STD. 840.01 OR STD. 840.02	FRAME, GRATES, AND HOOD STANDARD 840.03 TYPE OF GRATE			D.I. STD. 840.14 OR STD. 840.15	D.I. FRAME AND GRATE STD. 840.16	M.D.I. TYPE "A" STD. 840.17 OR 840.26	M.D.I. TYPE "B" STD. 840.18 OR 840.27	M.D.I. TYPE "D" STD. 840.19 OR 840.28	M.D.I. FRAME WITH GRATE STD. 840.20	M.D.I. FRAME WITH TWO GRATES STD. 840.22	M.D.I. (N.S.) FRAME WITH GRATE STD. 840.24	M.D.I. (N.S.) FRAME WITH TWO GRATES STD. 840.24	J.B. STD. 840.31 OR 840.32	M.D.I. (N.S.) FRAME WITH TWO GRATES STD. 840.29	MANHOLE STD. 840.51	M.H. STD. 840.51 OR 840.53	M.H. FRAME AND COVER STD. 840.54
				PER EACH (0' THRU 5.0')	A 5.0' THRU 10.0'	B 10.0' AND ABOVE		E	F	G														
290+40 L	RT	366																						
292+40 L	RT	367		1			1		1															
292+40 L	RT	367	368																					
293+90 L	RT	368		1			1		1															
293+90 L	RT	368	369																					
295+09 L	RT	369		1			1	1																
295+09 L	RT	369	370																					
295+75 L	RT	370		1			1			1														
295+75 L	RT	370	371																					
295+75 L	RT	371																						
295+75 L	RT	370	372																					
297+05 L	RT	372		1			1			1														
297+05 L	CL	372	373																					
297+05 L	LT	373		1			1			1														
297+05 L	LT	373	374																					
297+28 L	LT	374		1			1			1														
292+50 L	LT	375		1			1			1														
292+50 L	LT	375	376																					
294+00 L	LT	376		1			1			1														
294+00 L	LT	376	377																					
295+09 L	LT	377		1			1	1																
295+09 L	LT	377	378																					
295+09 L	LT	378		1										1					1					
295+09 L	LT	378	379																					
295+09 L	LT	379																						
295+09 L	LT	377	380																					
295+50 L	LT	380		1			1		1															
293+85 L	LT	381																						
298+00 L	LT	386																						
298+00 L	LT	386	387																					
298+45 L	LT	387		1	0.25								1						1					
298+45 L	LT	387	388																					
298+50 L	LT	388		1	1.44		1			1														
298+50 L	CL	388	389																					
298+52 L	RT	389		1			1			1														
298+52 L	RT	389	390																					
301+84 L	RT	390		1			1			1														
301+84 L	RT	390	391																					
303+84 L	RT	391		1			1			1														
303+84 L	RT	391	392																					
303+84 L	RT	392		1							1	1												
303+84 L	CL	392	393																					
303+84 L	LT	393		1							1	1												
303+84 L	RT	392	394																					
304+00 L	RT	394		1							1	1												
SHEET TOTALS				20	1.69		15	2	3	10	3	3	1	1					2					

STATION	LOCATION (LT, RT, OR CL)'	STRUCTURE NO. FROM	STRUCTURE NO. TO		24" WELDED STEEL PIPE (0.5" THICK), GRADE B	30" WELDED STEEL PIPE (0.5" THICK), GRADE B	36" WELDED STEEL PIPE (0.5" THICK), GRADE B	42" WELDED STEEL PIPE (0.625" THICK), GRADE B	48" WELDED STEEL PIPE (0.625" THICK), GRADE B		BERM DITCH OUTLET STD. 850.10 OR 850.11			ADJUSTMENT OF DROP INLETS		CONVERT D.I. TO J.B.		CONVERT C.B. TO J.B.	TEMPORARY STEEL PLATE COVERS	FLOWABLE FILL		CORR. STEEL ELBOWS NO. & SIZE	CONC. COLLARS CL. "B" C.Y. STD. 840.72	CONC. & BRICK PIPE PLUG, C.Y. STD. 840.71	PIPE REMOVAL LIN. FT.	REMARKS
290+40 L	RT	366																								OPEN END PIPE
292+40 L	RT	367																								
292+40 L	RT	367	368																							
293+90 L	RT	368																								
293+90 L	RT	368	369																							
295+09 L	RT	369																								
295+09 L	RT	369	370																							
295+75 L	RT	370																								
295+75 L	RT	370	371																				2@18"				
295+75 L	RT	371																								OPEN END PIPE
295+75 L	RT	370	372																							
297+05 L	RT	372																								
297+05 L	CL	372	373																							
297+05 L	LT	373																								
297+05 L	LT	373	374																							
297+28 L	LT	374																								
292+50 L	LT	375																								
292+50 L	LT	375	376																							
294+00 L	LT	376																								
294+00 L	LT	376	377																							
295+09 L	LT	377																								
295+09 L	LT	377	378																				2@15"				
295+09 L	LT	378																								
295+09 L	LT	378	379																				2@15"				
295+09 L	LT	379																								OPEN END PIPE
295+09 L	LT	377	380																							
295+50 L	LT	380																								
293+85 L	LT	381																								2-24" PIPES
298+00 L	LT	386																								OPEN END PIPE
298+00 L	LT	386	387																						32	REMOVE PIPE
298+45 L	LT	387																								REMOVE D.I.
298+45 L	LT	387	388																						67	REMOVE PIPE
298+50 L	LT	388																								
298+50 L	CL	388	389																							
298+52 L	RT	389																								REMOVE D.I.
298+52 L	RT	389	390																						351	REMOVE PIPE
301+84 L	RT	390																								REMOVE D.I.s
301+84 L	RT	390	391																						246	REMOVE PIPES
303+84 L	RT	391																								
303+84 L	RT	391	392																							
303+84 L	RT	392																								
303+84 L	CL	392	393																						68	REMOVE PIPE
303+84 L	LT	393																								
303+84 L	RT	392	394																							
304+00 L	RT	394																								
SHEET TOTALS																						4@15", 2@18"			764	

ABBREVIATIONS

C.B.	CATCH BASIN
N.D.I.	NARROW DROP INLET
D.I.	DROP INLET
M.D.I.	MEDIAN DROP INLET
M.D.I.(N.S.)	MEDIAN DROP INLET (NARROW SLOT)
J.B.	JUNCTION BOX
M.H.	MANHOLE
T.B.D.I.	TRAFFIC BEARING DROP INLET
T.B.J.B.	TRAFFIC BEARING JUNCTION BOX

COMPUTED BY: MTR DATE: 5/1/2006
CHECKED BY: YTN DATE: 5/1/2006

STATE OF NORTH CAROLINA
DIVISION OF HIGHWAYS

PROJECT NO.	SHEET NO.
U-4026	3-Q

NOTE: ALL ELEVATIONS ON THIS SHEET ARE FOR COST ESTIMATING ONLY AND SHALL NOT BE USED FOR FIELD STAKING.

LIST OF PIPES, ENDWALLS, ETC. (FOR PIPES 48" & UNDER)

STATION	LOCATION (LT, RT, OR CL)	STRUCTURE NO.		TOP ELEVATION	INVERT ELEVATION	INVERT ELEVATION	SLOPE CRITICAL	CLASS III R.C. PIPE (UNLESS NOTED OTHERWISE)								BITUMINOUS COATED C.S. PIPE TYPE B (UNLESS NOTED OTHERWISE)					CLASS III R.C. PIPE OR C.S. PIPE IR ALUMINIZED OR HDPE PIPE, TYPE S OR D							
SIZE								12"	15"	18"	24"	30"	36"	42"	48"	12"	15"	18"	24"	30"	12"	15"	18"	24"	30"	36"	42"	48"
THICKNESS OR GAUGE		FROM	TO													.064	.064	.064	.064	.079								
303+84 L	RT	391	395		300.55	305.95				296																		
306+86 L	RT	395		309.73	305.46																							
306+86 L	RT	395	396		305.46	306.18				36																		
306+98 L	RT	396			306.18																							
307+07 L	LT	397		313.40	306.99																							
307+21 L	LT	398			307.89																							
307+21 L	LT	398	399		307.89	308.06				12																		
307+24 L	LT	399		314.00	308.06																							
307+24 L	LT	399	400		308.60				216																			
309+37 L	LT	400		316.46	313.46																							
309+37 L	LT	400	401		313.46	314.25			44																			
309+82 L	LT	401		317.25	314.25																							
309+35 L	LT	400	402		313.46	313.84			32																			
309+35 L	LT	402		317.01	313.84																							
309+35 L	LT	402	403		314.36	313.84			24																			
309+60 L	LT	403		317.53	314.36																							
312+44 L	RT	404		321.37	318.20																							
312+44 L	CL	404	405		318.20	317.00			76																			
312+44 L	LT	405		320.00	317.00																							
312+44 L	LT	405	406		317.00	318.52			144																			
313+88 L	LT	406		321.52	318.52																							
313+88 L	CL	406	407		318.52	318.80			72																			
313+88 L	RT	407		322.90	318.80																							
313+88 L	RT	407	408		318.80	318.93			32																			
313+88 L	RT	408		322.03	318.93																							
313+88 L	RT	408	409		318.93	319.00			24																			
314+12 L	RT	409		322.00	319.00																							
312+21 L	RT	410			---	---																						
318+95 L	LT	411		321.96	318.96																							
318+95 L	LT	411	412		318.96	317.35			160																			
320+53 L	LT	412		320.35	317.35																							
320+53 L	LT	412	413		317.35	310.90											56											
320+57 L	LT	413			310.90																							
319+50 L	RT	414		321.68	318.68																							
319+50 L	RT	414	415		318.68	318.50																28						
319+50 L	RT	415			318.50																							
		430																										
		431																										
13+50 Y9	MR	430a		349.40	344.90																							
13+50 Y9	MR	430a	430b		344.90	343.39			24																			
13+50 Y9	LT	430b		346.81	343.39																							
11+00 Y9	MR	430c		350.66	347.49																							
11+00 Y9	MR	430c	430d		347.49	347.31			36																			
11+00 Y9	RT	430d			347.31																							
18+22 Y9	MR	432a		343.16	339.99																							
18+22 Y9	MR	432a	432		339.99	339.39			92																			
14+68 Y9	L	431A			342.40																							
14+68 Y9	L	431A	431B		342.40	339.17				132																		
16+00 Y9	LT	431B		342.17	339.17																							
16+00 Y9	LT	431B	431C		339.17	338.41																	20					
16+00 Y9	LT	431C																										
17+30 Y9	LT	432		343.39	339.39																							
17+30 Y9	LT	432	433		339.39	337.15			40																			
17+30 Y9	LT	433		340.90	337.15																							
17+30 Y9	LT	433	434		337.15	328.00	X										32											
17+30 Y9	LT	434			328.00																							
SHEET TOTALS									1016	476							88					28	20					

STATION	STRUCTURE NO. FROM	TO	15" SIDE DRAIN PIPE	18" SIDE DRAIN PIPE	24" SIDE DRAIN PIPE	ENDWALLS STD. 838.01, STD. 838.11 OR STD. 838.80 (UNLESS NOTED OTHERWISE) CU. YARDS R.C.P.	C.S.P.	QUANITIES FOR DRAINAGE STRUCTURES PER EACH (0' THRU 5.0')	*TOTAL L.F. FOR PAY QUANTITY SHALL BE COL. 'A' + (1.3 X COL.'B') LIN. FT. A 5.0' THRU 10.0'	B 10.0' AND ABOVE	C.B. STD. 840.01 OR STD. 840.02	FRAME, GRATES, AND HOOD STANDARD 840.03 TYPE OF GRATE E	F	G	D.I. STD. 840.14 OR STD. 840.15	D.I. FRAME AND GRATE STD. 840.16	M.D.I. TYPE "A" STD. 840.17 OR 840.26	M.D.I. TYPE "B" STD. 840.18 OR 840.27	M.D.I. TYPE "D" STD. 840.19 OR 840.28	M.D.I. FRAME WITH GRATE STD. 840.20	M.D.I. FRAME WITH TWO GRATES STD. 840.22	M.D.I. (N.S.) FRAME WITH GRATE STD. 840.24	M.D.I. (N.S.) FRAME WITH TWO GRATES STD. 840.24	J.B. STD. 840.31 OR 840.32	M.D.I. (N.S.) FRAME WITH TWO GRATES STD. 840.29	MANHOLE STD. 840.51	M.H. STD. 840.51 OR 840.53	M.H. FRAME AND COVER STD. 840.54
303+84 L	391	395																										
306+86 L	395							1			1			1														
306+86 L	395	396																										
306+98 L	396																											
307+07 L	397							1	1.41						1	1												
307+21 L	398																											
307+21 L	398	399																										
307+24 L	399							1	0.94						1	1												
307+24 L	399	400																										
309+37 L	400							1			1		1															
309+37 L	400	401																										
309+82 L	401							1			1		1															
309+35 L	400	402																										
309+35 L	402							1							1	1												
309+35 L	402	403																										
309+60 L	403							1							1	1												
312+44 L	404							1							1	1												
312+44 L	404	405																										
312+44 L	405							1			1		1															
312+44 L	405	406																										
313+88 L	406							1			1		1															
313+88 L	406	407																										
313+88 L	407							1							1	1												
313+88 L	407	408																										
313+88 L	408							1			1			1														
313+88 L	408	409																										
314+12 L	409							1			1			1														
312+21 L	410		20																									
318+95 L	411							1			1			1														
318+95 L	411	412																										
320+53 L	412							1			1			1														
320+53 L	412	413																										
320+57 L	413																											
319+50 L	414							1			1		1															
319+50 L	414	415																										
319+50 L	415																											
	430																											
	431																											
13+50 Y9	430a							1							1	1												
13+50 Y9	430a	430b																										
13+50 Y9	430b							1							1	1												
11+00 Y9	430c							1							1	1												
11+00 Y9	430c	430d																										
11+00 Y9	430d																											
18+22 Y9	432a							1							1	1												
18+22 Y9	432a	432																										
14+68 Y9	431A																											
14+68 Y9	431A	431B																										
16+00 Y9	431B							1										1								1			
16+00 Y9	431B	431C																										
16+00 Y9	431C																											
17+30 Y9	432							1							1	1												
17+30 Y9	432	433																										
17+30 Y9	433							1										1								1			
17+30 Y9	433	434																										
17+30 Y9	434																											
SHEET TOTALS			20					23	2.35		10		5	5	11	11		2								2			

STATION	STRUCTURE NO. FROM	TO	24" WELDED STEEL PIPE (0.5" THICK), GRADE B	30" WELDED STEEL PIPE (0.5" THICK), GRADE B	36" WELDED STEEL PIPE (0.5" THICK), GRADE B	42" WELDED STEEL PIPE (0.625" THICK), GRADE B	48" WELDED STEEL PIPE (0.625" THICK), GRADE B	BERM DITCH OUTLET STD. 850.10 OR 850.11	ADJUSTMENT OF DROP INLETS	CONVERT D.I. TO J.B.	CONVERT C.B. TO J.B.	TEMPORARY STEEL PLATE COVERS	FLOWABLE FILL	CORR. STEEL ELBOWS NO. & SIZE	CONC. COLLARS CL. "B" C.Y. STD. 840.72	CONC. & BRICK PIPE PLUG, C.Y. STD. 840.71	PIPE REMOVAL LIN. FT.	REMARKS
303+84 L	391	395															477	REMOVE PIPE
306+86 L	395																	REMOVE D.I.
306+86 L	395	396															6	REMOVE PIPE
306+98 L	396														0.5			COLLAR, REMOVE J.B.
307+07 L	397											1						
307+21 L	398														0.5			COLLAR, REMOVE D.I.
307+21 L	398	399																
307+24 L	399																	
307+24 L	399	400																
309+37 L	400																	
309+37 L	400	401																
309+82 L	401																	
309+35 L	400	402																
309+35 L	402											1						
309+35 L	402	403																
309+60 L	403											1						
312+44 L	404											1						
312+44 L	404	405														0.1		PLUG
312+44 L	405																	
312+44 L	405	406																
313+88 L	406																	
313+88 L	406	407																
313+88 L	407											1						
313+88 L	407	408																
313+88 L	408																	
313+88 L	408	409																
314+12 L	409																	
312+21 L	410																	
318+95 L	411																	
318+95 L	411	412																
320+53 L	412																	
320+53 L	412	413												2@15"				
320+57 L	413																	OPEN END PIPE
319+50 L	414																	
319+50 L	414	415																
319+50 L	415																	OPEN END PIPE
	430																	NOT USED
	431																	NOT USED
13+50 Y9	430a											1						
13+50 Y9	430a	430b																
13+50 Y9	430b																	
11+00 Y9	430c											1						
11+00 Y9	430c	430d																
11+00 Y9	430d																	OPEN END PIPE
18+22 Y9	432a											1						
18+22 Y9	432a	432																
14+68 Y9	431A														0.5			COLLAR
14+68 Y9	431A	431B																
16+00 Y9	431B																	
16+00 Y9	431B	431C																
16+00 Y9	431C																	OPEN END PIPE
17+30 Y9	432											1						
17+30 Y9	432	433																
17+30 Y9	433																	
17+30 Y9	433	434												1@15"				
17+30 Y9	434																	OPEN END PIPE
SHEET TOTALS												9		3@15"	1.0	0.1	483	

ABBREVIATIONS

C.B.	CATCH BASIN
N.D.I.	NARROW DROP INLET
D.I.	DROP INLET
M.D.I.	MEDIAN DROP INLET
M.D.I.(N.S.)	MEDIAN DROP INLET (NARROW SLOT)
J.B.	JUNCTION BOX
M.H.	MANHOLE
T.B.D.I.	TRAFFIC BEARING DROP INLET
T.B.J.B.	TRAFFIC BEARING JUNCTION BOX

COMPUTED BY: MTR DATE: 5/1/2006

CHECKED BY: YTN DATE: 5/1/2006

PROJECT NO.	SHEET NO.
U-4026	3-R

STATE OF NORTH CAROLINA
DIVISION OF HIGHWAYS

NOTE: ALL ELEVATIONS ON THIS SHEET ARE FOR COST ESTIMATING ONLY AND SHALL NOT BE USED FOR FIELD STAKING.

LIST OF PIPES, ENDWALLS, ETC. (FOR PIPES 48" & UNDER)

ABBREVIATIONS	
C.B.	CATCH BASIN
N.D.I.	NARROW DROP INLET
D.I.	DROP INLET
M.D.I.	MEDIAN DROP INLET
M.D.I.(N.S.)	MEDIAN DROP INLET (NARROW SLOT)
J.B.	JUNCTION BOX
M.H.	MANHOLE
T.B.D.I.	TRAFFIC BEARING DROP INLET
T.B.J.B.	TRAFFIC BEARING JUNCTION BOX

STATION / SIZE / THICKNESS OR GAUGE	LOCATION (LT, RT, OR CL)'	STRUCTURE NO. FROM	STRUCTURE NO. TO	TOP ELEVATION	INVERT ELEVATION	INVERT ELEVATION	SLOPE CRITICAL	CLASS III R.C. PIPE (UNLESS NOTED OTHERWISE) 12"	15"	18"	24"	30"	36"	42"	48"	BITUMINOUS COATED C.S. PIPE TYPE B (UNLESS NOTED OTHERWISE) 12"	15"	18"	24"	30"	CLASS III R.C. PIPE OR C.S. PIPE IR ALUMINIZED OR HDPE PIPE, TYPE S OR D 12"	15"	18"	24"	30"	36"	42"	48"	15" SIDE DRAIN PIPE	18" SIDE DRAIN PIPE	24" SIDE DRAIN PIPE
THICKNESS OR GAUGE																.064	.064	.064	.064	.079											
17+24 Y9	LT	435			326.87																										
17+24 Y9	LT	435	436		326.87	326.58							16																		
17+27 Y9	LT	436			326.58																										
17+50 Y9	RT	437			319.46																										
17+50 Y9	RT	437	438		319.46	315.54							44																		
17+58 Y9	RT	438			315.54																										
30+00 Y9	RT	439		328.92	325.75																										
30+00 Y9	RT	439	440		325.75	321.71			124																						
31+25 Y9	RT	440		324.88	321.71																										
31+25 Y9	RT	440	441		321.71	318.06			124																						
32+50 Y9	RT	441		321.23	318.06																										
32+50 Y9	RT	441	442		318.06	316.60			60																						
32+50 Y9	RT	442			316.60																										
33+70 Y9	RT	443			309.70																										
34+12 Y9	LT	444			302.60																										
34+12 Y9	LT	444	445		302.60	301.20								12																	
34+22 Y9	LT	445			301.20																										
9+60 Y10	RT	446			---	---																							48		
12+00 Y10	LT	447		300.84	297.67																										
12+00 Y10	LT	447	448		297.67	296.50			44																						
12+00 Y10	LT	448			296.50																										
10+45 Y12	LT	450		349.90	347.10																										
10+45 Y12	CL	450	449		347.10	342.60			104																						
10+45 Y12	RT	449			342.60																										
12+12 Y12	RT	451			346.00																										
12+12 Y12	RT	451	452		346.00	347.00																52									
12+60 Y12	RT	452		349.80	347.00																										
12+65 Y12	CL	452	453		347.00	348.20			100																						
12+70 Y12	LT	453		351.00	348.20																										
18+40 Y12	LT	454		352.30	349.30																										
18+40 Y12	LT	454	455		349.30	349.10																24									
18+63 Y12	LT	455		352.80	349.10																										
18+63 Y12	LT	455	456		349.10	348.90																28									
18+70 Y12	LT	456		354.05	348.90																										
18+70 Y12	LT	456	457		348.90	344.79			216																						
20+84 Y12	LT	457		352.54	344.90																										
20+84 Y12	LT	457	458		344.90	345.00																		28							
20+84 Y12	LT	458			345.00																										
20+84 Y12	LT	457	459		344.90	344.70	X				40																				
20+84 Y12	LT	459		353.59	344.70																										
20+84 Y12	CL	459	460		344.70	344.47	X				68																				
SHEET TOTALS									772		108		60	12								104		28					48		

STATION	LOCATION (LT, RT, OR CL)'	STRUCTURE NO. FROM	STRUCTURE NO. TO	ENDWALLS STD. 838.01, STD. 838.11 OR STD. 838.80 (UNLESS NOTED OTHERWISE) CU. YARDS R.C.P.	C.S.P.	QUANITIES FOR DRAINAGE STRUCTURES PER EACH (0' THRU 5.0')	*TOTAL L.F. FOR PAY QUANTITY SHALL BE COL. 'A' + (1.3 X COL.'B') LIN. FT. A 5.0' THRU 10.0'	B 10.0' AND ABOVE	C.B. STD. 840.01 OR STD. 840.02	FRAME, GRATES, AND HOOD STANDARD 840.03 TYPE OF GRATE E	F	G	D.I. STD. 840.14 OR STD. 840.15	D.I. FRAME AND GRATE STD. 840.16	M.D.I. TYPE "A" STD. 840.17 OR 840.26	M.D.I. TYPE "B" STD. 840.18 OR 840.27	M.D.I. TYPE "D" STD. 840.19 OR 840.28	M.D.I. FRAME WITH GRATE STD. 840.20	M.D.I. FRAME WITH TWO GRATES STD. 840.22	M.D.I. (N.S.) FRAME WITH GRATE STD. 840.24	M.D.I. (N.S.) FRAME WITH TWO GRATES STD. 840.24	J.B. STD. 840.31 OR 840.32	M.D.I. (N.S.) FRAME WITH TWO GRATES STD. 840.29	MANHOLE STD. 840.51	M.H. STD. 840.51 OR 840.53	M.H. FRAME AND COVER STD. 840.54	24" WELDED STEEL PIPE (0.5" THICK), GRADE B	30" WELDED STEEL PIPE (0.5" THICK), GRADE B	36" WELDED STEEL PIPE (0.5" THICK), GRADE B	42" WELDED STEEL PIPE (0.625" THICK), GRADE B	48" WELDED STEEL PIPE (0.625" THICK), GRADE B	BERM DITCH OUTLET STD. 850.10 OR 850.11	ADJUSTMENT OF DROP INLETS	CONVERT D.I. TO J.B.	CONVERT C.B. TO J.B.	TEMPORARY STEEL PLATE COVERS	FLOWABLE FILL	CORR. STEEL ELBOWS NO. & SIZE	CONC. COLLARS CL. "B" C.Y. STD. 840.72	CONC. & BRICK PIPE PLUG, C.Y. STD. 840.71	PIPE REMOVAL LIN. FT.	REMARKS
17+24 Y9	LT	435		3.4																																						ENDWALL
17+24 Y9	LT	435	436																																							
17+27 Y9	LT	436																																				0.8			COLLAR
17+50 Y9	RT	437																																				0.8			COLLAR
17+50 Y9	RT	437	438																																							
17+58 Y9	RT	438																																							OPEN END PIPE
30+00 Y9	RT	439				1							1	1																											
30+00 Y9	RT	439	440																																							
31+25 Y9	RT	440				1							1	1																											
31+25 Y9	RT	440	441																																							
32+50 Y9	RT	441				1							1	1																											
32+50 Y9	RT	441	442																																							
32+50 Y9	RT	442																																							OPEN END PIPE
33+70 Y9	RT	443		4.5																																					ENDWALL
34+12 Y9	LT	444																																							CONNECT TO EXISTING PIPE
34+12 Y9	LT	444	445																																							
34+22 Y9	LT	445																																							OPEN END PIPE
9+60 Y10	RT	446																																						49	REMOVE PIPE
12+00 Y10	LT	447				1							1	1																					1						
12+00 Y10	LT	447	448																																							
12+00 Y10	LT	448																																							OPEN END PIPE
10+45 Y12	LT	450				1										1					1																				REMOVE D.I.
10+45 Y12	CL	450	449																																					102	REMOVE PIPE
10+45 Y12	RT	449																																							OPEN END PIPE
12+12 Y12	RT	451																																							OPEN END PIPE
12+12 Y12	RT	451	452																																					40	REMOVE PIPE
12+60 Y12	RT	452				1										1					1																				REMOVE D.I.
12+65 Y12	CL	452	453																																					106	REMOVE PIPES
12+70 Y12	LT	453				1										1					1																				REMOVE D.I.
18+40 Y12	LT	454				1							1	1																											
18+40 Y12	LT	454	455																																					20	REMOVE PIPE
18+63 Y12	LT	455				1							1	1																											
18+63 Y12	LT	455	456																																							
18+70 Y12	LT	456				1	0.15		1			1																													
18+70 Y12	LT	456	457																																							
20+84 Y12	LT	457				1	2.64		1			1																													
20+84 Y12	LT	457	458																																							
20+84 Y12	LT	458																																							OPEN END PIPE
20+84 Y12	LT	457	459																																							
20+84 Y12	LT	459				1	3.89						1	1																					1						
20+84 Y12	CL	459	460																																					128	REMOVE PIPE & ENDWALL
SHEET TOTALS				7.9		12	6.68		2			2	7	7		3					3																2			1.6		445	

8400-YVETTE,5/5/2006,R:\Roadway\Proj\Drainage_summaries.xls

8400-YVETTE

COMPUTED BY:	MTR	DATE:	5/1/2006
CHECKED BY:	YTN	DATE:	5/1/2006

PROJECT NO.	SHEET NO.
U-4026	3-S

STATE OF NORTH CAROLINA
DIVISION OF HIGHWAYS

NOTE: ALL ELEVATIONS ON THIS SHEET ARE FOR COST ESTIMATING ONLY AND SHALL NOT BE USED FOR FIELD STAKING.

LIST OF PIPES, ENDWALLS, ETC. (FOR PIPES 48" & UNDER)

STATION / SIZE / THICKNESS OR GAUGE	LOCATION (LT, RT, OR CL)	STRUCTURE NO. FROM	STRUCTURE NO. TO	TOP ELEVATION	INVERT ELEVATION	INVERT ELEVATION	SLOPE CRITICAL	CLASS III R.C. PIPE (UNLESS NOTED OTHERWISE) 12"	15"	18"	24"	30"	36"	42"	48"	BITUMINOUS COATED C.S. PIPE TYPE B (UNLESS NOTED OTHERWISE) 12" .064	15" .064	18" .064	24" .064	30" .079	CLASS III R.C. PIPE OR C.S. PIPE IR ALUMINIZED OR HDPE PIPE, TYPE S OR D 12"	15"	18"	24"	30"	36"	42"	48"	15" SIDE DRAIN PIPE	18" SIDE DRAIN PIPE	24" SIDE DRAIN PIPE	ENDWALLS STD. 838.01, STD. 838.11 OR STD. 838.80 (UNLESS NOTED OTHERWISE) CU. YARDS R.C.P.	C.S.P.	QUANITIES FOR DRAINAGE STRUCTURES PER EACH (0' THRU 5.0')	*TOTAL L.F. FOR PAY QUANTITY SHALL BE COL. 'A' + (1.3 X COL.'B') LIN. FT. A 5.0' THRU 10.0'	B 10.0' AND ABOVE	C.B. STD. 840.01 OR STD. 840.02	FRAME, GRATES, AND HOOD STANDARD 840.03 TYPE OF GRATE E	F	G	D.I. STD. 840.14 OR STD. 840.15	D.I. FRAME AND GRATE STD. 840.16	M.D.I. TYPE "A" STD. 840.17 OR 840.26	M.D.I. TYPE "B" STD. 840.18 OR 840.27	M.D.I. TYPE "D" STD. 840.19 OR 840.28	M.D.I. FRAME WITH GRATE STD. 840.20	M.D.I. FRAME WITH TWO GRATES STD. 840.22	M.D.I. (N.S.) FRAME WITH GRATE STD. 840.24	M.D.I. (N.S.) FRAME WITH TWO GRATES STD. 840.24	J.B. STD. 840.31 OR 840.32	M.D.I. (N.S.) FRAME WITH TWO GRATES STD. 840.29	MANHOLE STD. 840.51	M.H. STD. 840.51 OR 840.53	M.H. FRAME AND COVER STD. 840.54	24" WELDED STEEL PIPE (0.5" THICK), GRADE B	30" WELDED STEEL PIPE (0.5" THICK), GRADE B	36" WELDED STEEL PIPE (0.5" THICK), GRADE B	42" WELDED STEEL PIPE (0.625" THICK), GRADE B	48" WELDED STEEL PIPE (0.625" THICK), GRADE B	BERM DITCH OUTLET STD. 850.10 OR 850.11	ADJUSTMENT OF DROP INLETS	CONVERT D.I. TO J.B.	CONVERT C.B. TO J.B.	TEMPORARY STEEL PLATE COVERS	FLOWABLE FILL	CORR. STEEL ELBOWS NO. & SIZE	CONC. COLLARS CL. "B" C.Y. STD. 840.72	CONC. & BRICK PIPE PLUG, C.Y. STD. 840.71	PIPE REMOVAL LIN. FT.	REMARKS
20+84 Y12	RT	460		352.54	344.47																															1	3.07		1		1																																		
20+84 Y12	RT	460	461		344.47	338.28														12																																																		2@24"				
20+84 Y12	RT	461			338.28																																																																			OPEN END PIPE
22+17 Y12	LT	462																																																																		24	REMOVE PIPE
23+50 Y12	LT	463			345.20																																																																			OPEN END PIPE
23+50 Y12	LT	463	464		345.20	345.00				24																																																													
23+50 Y12	LT	464		348.35	345.00																													1			1			1																														
23+50 Y12	LT	464	465		345.00	344.92				28																																																													
23+50 Y12	LT	465		349.16	344.92																													1							1	1																					1							
23+50 Y12	CL	465	466		344.92	344.73				68																																																												108	REMOVE PIPE
23+50 Y12	RT	466		348.11	344.73																													1			1		1																																
23+50 Y12	RT	466	467		344.73	344.63				8																																																													
23+59 Y12	RT	467		348.11	344.63																													1			1		1																																
23+59 Y12	RT	467	468		344.63	339.43				68																																																													
24+24 Y12	RT	468		345.40	339.43																													1	0.97						1	1																														REMOVE C.B.
24+46 Y12	CL	468	469		339.43	344.39			92																																																															32	REMOVE PIPE
24+50 Y12	LT	469		348.45	344.39																													1							1	1																					1							
24+50 Y12	LT	469	470		344.39	344.50			36																																																																
24+50 Y12	LT	470		347.50	344.50																													1			1			1																														
26+10 Y12	RT	471		348.97	345.97																													1							1	1																					1							REMOVE D.I.
26+10 Y12	RT	471	472		345.97	345.14			40																																																														22	REMOVE PIPES
26+05 Y12	RT	472		349.32	345.14																													1			1			1																														REMOVE J.B.
26+05 Y12	RT	472	473		345.14	346.17			68																																																																
26+75 Y12	RT	473		349.17	346.17																													1			1			1																						1							
26+75 Y12	RT	473	474		346.17	346.29			24																																																																
27+00 Y12	RT	474		349.29	346.29																													1			1			1																														
27+00 Y12	RT	474	475		346.29	347.10	X		32																																																																
27+00 Y12	RT	475		350.10	347.10																													1							1	1																												
26+65 Y12	LT	476			345.40																																																																			OPEN END PIPE
26+65 Y12	LT	476	477		345.40	345.64	X														44																																																	
26+70 Y12	LT	477		348.64	345.64																													1			1		1																																
26+70 Y12	LT	477	478		345.64	346.29	X		32																																																																
27+00 Y12	LT	478		349.29	346.29																													1			1		1																																
32+34 Y12	RT	479		359.50	349.84																													1	4.66																		1				1															
32+66 Y12	LT	480		361.12	358.12																													1			1		1																																
32+66 Y12	LT	480	481		358.12	357.86			68																																																														40	REMOVE PIPES
33+31 Y12	LT	481		362.06	357.86																													1			1		1																																
33+31 Y12	LT	481	482		357.86	359.00														16																																																	
33+31 Y12	LT	482		362.00	359.00																													1							1	1																												
33+31 Y12	LT	481	483		357.86	357.32				16																																																													
33+31 Y12	LT	483			357.32																																																																0.5			COLLAR
SHEET TOTALS										392	212										12					60														19	8.70		12		7	5	6	6								1				1												4		2@24"	0.5		226	

ABBREVIATIONS	
C.B.	CATCH BASIN
N.D.I.	NARROW DROP INLET
D.I.	DROP INLET
M.D.I.	MEDIAN DROP INLET
M.D.I.(N.S.)	MEDIAN DROP INLET (NARROW SLOT)
J.B.	JUNCTION BOX
M.H.	MANHOLE
T.B.D.I.	TRAFFIC BEARING DROP INLET
T.B.J.B.	TRAFFIC BEARING JUNCTION BOX

8400-YVETTE,5/5/2006,R:\Roadway\Proj\Drainage_summaries.xls

8400-YVETTE

COMPUTED BY:	MTR	DATE:	5/1/2006
CHECKED BY:	YTN	DATE:	5/1/2006

PROJECT NO.	SHEET NO.
U-4026	3-T

STATE OF NORTH CAROLINA
DIVISION OF HIGHWAYS

NOTE: ALL ELEVATIONS ON THIS SHEET ARE FOR COST ESTIMATING ONLY AND SHALL NOT BE USED FOR FIELD STAKING.

LIST OF PIPES, ENDWALLS, ETC. (FOR PIPES 48" & UNDER)

STATION	LOCATION (LT, RT, OR CL)'	STRUCTURE NO. FROM	STRUCTURE NO. TO	TOP ELEVATION	INVERT ELEVATION	INVERT ELEVATION	SLOPE CRITICAL	CLASS III R.C. PIPE (UNLESS NOTED OTHERWISE)								BITUMINOUS COATED C.S. PIPE TYPE B (UNLESS NOTED OTHERWISE)					CLASS III R.C. PIPE OR C.S. PIPE IR ALUMINIZED OR HDPE PIPE, TYPE S OR D								15" SIDE DRAIN PIPE	18" SIDE DRAIN PIPE	24" SIDE DRAIN PIPE	ENDWALLS STD. 838.01, STD. 838.11 OR STD. 838.80 (UNLESS NOTED OTHERWISE) CU. YARDS R.C.P.	ENDWALLS CU. YARDS C.S.P.
SIZE								12"	15"	18"	24"	30"	36"	42"	48"	12"	15"	18"	24"	30"	12"	15"	18"	24"	30"	36"	42"	48"					
THICKNESS OR GAUGE																.064	.064	.064	.064	.079													
32+94 Y12	RT	484		361.78	358.78																												
32+94 Y12	RT	484	485		358.78	357.97			32																								
32+94 Y12	RT	485		360.97	357.97																												
32+94 Y12	RT	485	486		357.97	353.88			36																								
33+30 Y12	RT	486		361.07	353.88																												
33+30 Y12	RT	486	487		353.88	356.11																	32										
33+30 Y12	M	487																															
33+30 Y12	RT	479		361.90	356.11																												
33+30 Y12	RT	486	488		353.88	350.80				24																							
33+18 Y12	RT	488		358.30	350.64																												
33+30 Y12	RT	486	489		353.88	356.05				92																							
34+22 Y12	RT	489		361.65	356.05																												
34+22 Y12	RT	489	490		356.05	357.95				32																							
34+25 Y12	RT	490		363.26	357.95																												
34+27 Y12	LT	491			359.20																												
34+27 Y12	LT	491	492		359.20	360.80				36																							
34+27 Y12	LT	492		363.50	360.80																												
34+27 Y12	LT	492	493		360.80	362.40																64											
34+90 Y12	LT	493		365.40	362.40																												
34+90 Y12	LT	493	494		362.40	368.00																124											
36+10 Y12	LT	494			368.00																												
37+50 Y12	LT	495			—	—																							36				
38+28 Y12	RT	496			367.60																												
38+28 Y12	RT	496	497		367.60	370.20				44																							
38+46 Y12	RT	497			370.20																												
38+60 Y12	LT	498			371.50																												
38+60 Y12	LT	498	499		371.50	373.00				24																							
38+67 Y12	LT	499		376.00	373.00																												
39+78 Y12	LT	500			—	—																								28			
25+14 Y13	LT	514			305.00																												
25+14 Y13	LT	514	515		305.00	305.30						16																					
25+14 Y13	LT	515			305.30																											2.3	
14+82 TRL1	CL	516			—	—																								36			
17+42 TRL1	CL	517			—	—																							12				
12+32 Y10	RT	518			—	—																							20				
12+87 TRL3	CL	519			—	—																							20				
37+80 TRL5B	RT	521		287.10	284.35																												
37+80 TRL5B	CL	521	522		284.35	283.80																24											
37+80 TRL5B	LT	522			283.80																												
SHEET TOTALS									68	252		16										212	32							88	64		2.3	

STATION	STRUCTURE NO. FROM	STRUCTURE NO. TO	QUANITIES FOR DRAINAGE STRUCTURES PER EACH (0' THRU 5.0')	*TOTAL L.F. FOR PAY QUANTITY SHALL BE COL. 'A' + (1.3 X COL.'B') LIN. FT. A 5.0' THRU 10.0'	LIN. FT. B 10.0' AND ABOVE	C.B. STD. 840.01 OR STD. 840.02	FRAME, GRATES, AND HOOD STANDARD 840.03 TYPE OF GRATE E	F	G	D.I. STD. 840.14 OR STD. 840.15	D.I. FRAME AND GRATE STD. 840.16	M.D.I. TYPE "A" STD. 840.17 OR 840.26	M.D.I. TYPE "B" STD. 840.18 OR 840.27	M.D.I. TYPE "D" STD. 840.19 OR 840.28	M.D.I. FRAME WITH GRATE STD. 840.20	M.D.I. FRAME WITH TWO GRATES STD. 840.22	M.D.I. (N.S.) FRAME WITH GRATE STD. 840.24	M.D.I. (N.S.) FRAME WITH TWO GRATES STD. 840.24	J.B. STD. 840.31 OR 840.32	M.D.I. (N.S.) FRAME WITH TWO GRATES STD. 840.29	MANHOLE STD. 840.51	M.H. STD. 840.51 OR 840.53	M.H. FRAME AND COVER STD. 840.54	24" WELDED STEEL PIPE (0.5" THICK), GRADE B	30" WELDED STEEL PIPE (0.5" THICK), GRADE B	36" WELDED STEEL PIPE (0.5" THICK), GRADE B	42" WELDED STEEL PIPE (0.625" THICK), GRADE B	48" WELDED STEEL PIPE (0.625" THICK), GRADE B	BERM DITCH OUTLET STD. 850.10 OR 850.11	ADJUSTMENT OF DROP INLETS	CONVERT D.I. TO J.B.	CONVERT C.B. TO J.B.	TEMPORARY STEEL PLATE COVERS	FLOWABLE FILL	CORR. STEEL ELBOWS NO. & SIZE	CONC. COLLARS CL. "B" C.Y. STD. 840.72	CONC. & BRICK PIPE PLUG, C.Y. STD. 840.71	PIPE REMOVAL LIN. FT.	REMARKS
32+94 Y12	484		1							1	1																						1						
32+94 Y12	484	485																																					
32+94 Y12	485		1			1	1																																
32+94 Y12	485	486																																					
33+30 Y12	486		1	2.19		1			1																														REMOVE M.H.
33+30 Y12	486	487																																				15	REMOVE PIPE
33+30 Y12	487		1							1	1																						1						
33+30 Y12	479		1	0.79															1				1																
33+30 Y12	486	488																																				32	REMOVE PIPE
33+18 Y12	488		1	2.66															1				1																REMOVE D.I.
33+30 Y12	486	489																																				106	REMOVE PIPE
34+22 Y12	489		1	0.60		1			1																														REMOVE M.H.
34+22 Y12	489	490																																				17	REMOVE PIPE
34+25 Y12	490		1	0.31						1	1																						1						
34+27 Y12	491																																			0.5			COLLAR, REMOVE D.I.
34+27 Y12	491	492																																					
34+27 Y12	492		1							1	1																												
34+27 Y12	492	493																																				45	REMOVE PIPE
34+90 Y12	493		1							1	1																												
34+90 Y12	493	494																																					
36+10 Y12	494																																						OPEN END PIPE
37+50 Y12	495																																						
38+28 Y12	496																																						OPEN END PIPE
38+28 Y12	496	497																																					
38+46 Y12	497																																			0.5			COLLAR
38+60 Y12	498																																			0.5			COLLAR
38+60 Y12	498	499																																					
38+67 Y12	499		1							1	1																												
39+78 Y12	500																																					25	REMOVE PIPE
25+14 Y13	514																																			0.7			COLLAR, REMOVE FES
25+14 Y13	514	515																																					
25+14 Y13	515																																						ENDWALL
14+82 TRL1	516																																						
17+42 TRL1	517																																						
12+32 Y10	518																																						
12+87 TRL3	519																																						
37+80 TRL5B	521		1										1					1																					
37+80 TRL5B	521	522																																					
37+80 TRL5B	522																																						OPEN END PIPE
SHEET TOTALS			12	6.55		3	1		2	6	6		1					1	2				2										3			2.2		240	

ABBREVIATIONS

C.B.	CATCH BASIN
N.D.I.	NARROW DROP INLET
D.I.	DROP INLET
M.D.I.	MEDIAN DROP INLET
M.D.I.(N.S.)	MEDIAN DROP INLET (NARROW SLOT)
J.B.	JUNCTION BOX
M.H.	MANHOLE
T.B.D.I.	TRAFFIC BEARING DROP INLET
T.B.J.B.	TRAFFIC BEARING JUNCTION BOX

8400-YVETTE,10/2/2006,R:\Roadway\Proj\Drainage_summaries.xls

COMPUTED BY: MTR DATE: 5/1/2006
CHECKED BY: YTN DATE: 5/1/2006

STATE OF NORTH CAROLINA
DIVISION OF HIGHWAYS

PROJECT NO.	SHEET NO.
U-4026	3-U

8400-YVETTE

NOTE: ALL ELEVATIONS ON THIS SHEET ARE FOR COST ESTIMATING ONLY AND SHALL NOT BE USED FOR FIELD STAKING.

LIST OF PIPES, ENDWALLS, ETC. (FOR PIPES 48" & UNDER)

STATION	LOCATION (LT, RT, OR CL)	STRUCTURE NO.		TOP ELEVATION	INVERT ELEVATION	INVERT ELEVATION	SLOPE CRITICAL	CLASS III R.C. PIPE (UNLESS NOTED OTHERWISE)								BITUMINOUS COATED C.S. PIPE TYPE B (UNLESS NOTED OTHERWISE)					CLASS III R.C. PIPE OR C.S. PIPE IR ALUMINIZED OR HDPE PIPE, TYPE S OR D							15" SIDE DRAIN PIPE	18" SIDE DRAIN PIPE	24" SIDE DRAIN PIPE	ENDWALLS STD. 838.01, STD. 838.11 OR STD. 838.80 (UNLESS NOTED OTHERWISE) CU. YARDS		QUANITIES FOR DRAINAGE STRUCTURES	*TOTAL L.F. FOR PAY QUANTITY SHALL BE COL. 'A' + (1.3 X COL.'B') LIN. FT.		C.B. STD. 840.01 OR STD. 840.02	FRAME, GRATES, AND HOOD STANDARD 840.03 TYPE OF GRATE			D.I. STD. 840.14 OR STD. 840.15	D.I. FRAME AND GRATE STD. 840.16	M.D.I. TYPE "A" STD. 840.17 OR 840.26	M.D.I. TYPE "B" STD. 840.18 OR 840.27	M.D.I. TYPE "D" STD. 840.19 OR 840.28	M.D.I. FRAME WITH GRATE STD. 840.20	M.D.I. FRAME WITH TWO GRATES STD. 840.22	M.D.I. (N.S.) FRAME WITH GRATE STD. 840.24	M.D.I. (N.S.) FRAME WITH TWO GRATES STD. 840.24	J.B. STD. 840.31 OR 840.32	M.D.I. (N.S.) FRAME WITH TWO GRATES STD. 840.29	MANHOLE STD. 840.51	M.H. STD. 840.51 OR 840.53	M.H. FRAME AND COVER STD. 840.54	TRAFFIC BEARING J.B. STD. 840.34	24" WELDED STEEL PIPE (0.5" THICK), GRADE B	30" WELDED STEEL PIPE (0.5" THICK), GRADE B	36" WELDED STEEL PIPE (0.5" THICK), GRADE B	42" WELDED STEEL PIPE (0.625" THICK), GRADE B	48" WELDED STEEL PIPE (0.625" THICK), GRADE B	T.B.G.D.I.STD. 840.35	BERM DITCH OUTLET STD. 850.10 OR 850.11			ADJUSTMENT OF DROP INLETS		CONVERT D.I. TO J.B.		CONVERT C.B. TO J.B.	TEMPORARY STEEL PLATE COVERS	FLOWABLE FILL		CORR. STEEL ELBOWS NO. & SIZE	CONC. COLLARS CL. "B" C.Y. STD. 840.72	CONC. & BRICK PIPE PLUG, C.Y. STD. 840.71	PIPE REMOVAL LIN. FT.	REMARKS
SIZE		FROM	TO					12"	15"	18"	24"	30"	36"	42"	48"	12"	15"	18"	24"	30"	12"	15"	18"	24"	30"	36"	42"				R.C.P.	C.S.P.	PER EACH (0' THRU 5.0')	A 5.0' THRU 10.0'	B 10.0' AND ABOVE		E	F	G																																					
THICKNESS OR GAUGE																.064	.064	.064	.064	.079																																																								
43+32 TRL5B	RT	523		283.20	280.50																												1										1					1																											
43+34 TRL5B	CL	523	524		280.50	277.40											40																																																						2@15"			29	REMOVE PIPES
43+40 TRL5B	LT	524			277.40																																																																						OPEN END PIPE
14+60 Y13	LT	501			298.00																																																																						OPEN END PIPE
14+60 Y13	LT	501	502		298.00	302.03			60																																																																			
14+60 Y13	LT	502		305.20	302.03																												1							1	1																														1							
14+60 Y13	LT	502	503		302.03	303.65			36																																																																			
15+00 Y13	LT	503		306.82	303.65																												1							1	1																														1							
15+70 Y13	LT	504		305.77	302.00																												1																1				1																									
15+70 Y13	LT	504	505		302.00	304.00																		32																																																				
16+00 Y13	LT	505			304.00																																																																						OPEN END PIPE
17+00 Y13	RT	506		310.35	308.43																												1											1		1																																
17+00 Y13	RT	506	507		308.43	307.00																36																																																				110	REMOVE PIPE
16+77 Y13		507			307.00																																																																						OPEN END PIPE
18+50 Y13	LT	508			314.46																																																																						OPEN END PIPE
18+50 Y13	LT	508	509		314.46	314.95	X																44																																																					
18+95 Y13	LT	509		318.20	314.95																												1			1		1																																							
18+95 Y13	LT	509	510		314.95	316.07	X		40																																																																			
19+40 Y13	LT	510		319.07	316.07																												1			1		1																																							
19+40 Y13	LT	510	511		316.07	316.80	X															60																																																						
312+15 L	LT	511		319.80	316.80																												1			1		1																																							
312+15 L	LT	511	405		316.80	317.00	X		28																																																																			
23+50 Y13	RT	512		321.55	318.38																												1							1	1																														1							
23+50 Y13	RT	512	513		318.38	316.00			60																																																																		15	REMOVE PIPE
23+80 Y13	RT	513			316.00																																																																						OPEN END PIPE
SHEET 3-U TOTAL									224								40					96	44	32									9			3		3		3	3		1	1		1		1	1				1																	3			2@15"			154	
SHEET 3-A TOTAL									700	100												420	260	36									13	2.64						6	6		7					7																												213	
SHEET 3-B TOTAL									932				168									476							24			3.4		14	4.45		6	1		5	5	5		3					3																						2						806	
SHEET 3-C TOTAL									1512	104													200						72					13	0.71		2			2	8	8		3					3																						10				1.5		500	
SHEET 3-D TOTAL									188	24																								1							1	1																														1				0.5			
SHEET 3-E TOTAL									476	424	188		380		52		48					116			140	324						8.3		15	18.74	3.53	6		3	3	4	4	1	4					4		1									196										4			2@15"	1.0		358	
SHEET 3-F TOTAL									764		204				160		72		36						24							12.3		11	5.03		2			2	1	1		8					4		4					124	60			172		2											2@15", 1@24"	3.5		209	
SHEET 3-G TOTAL									72	364	96		80	128			24	148		24			636									4.5	2.0	10	1.45									9	1				9		1							88	144			3			1								1@15", 3@18"	0.9		527	
SHEET 3-H TOTAL									652	84	92						20					888	8	116										12	2.98		2			2	2	2	2	6					8					2								1					2			2			1@15"			893	
SHEET 3-I TOTAL									468	24	68	392	92				108		40	80		424										1.5	2.0	15	17	5.49	9		4	5				6					5		1							172															4@15", 2@30"	0.6		1449	
SHEET 3-J TOTAL									216	468							112	40	124			136	368											13	1.76		2		1	1				10					10	1				1								4											2@15",1@18",1@24"		0.1	636	
SHEET 3-K TOTAL									700	244	604	408	88		100		100			24			76	196								3.4	2.0	16	3.71						1	1	4	10	1				6		9														1					1			2@15", 2@30"	1.0	0.1	969	
SHEET 3-L TOTAL									576		124						80		40			44	76										1.4	15	1.38		5		4	1	2	2		8					4		4																			2			3@15"	1.2		101	
SHEET 3-M TOTAL									1752													112	88											19	4.54		12		5	6	7	7												1															1	5						1444	
SHEET 3-N TOTAL									88	16				180			148	48				68											4.8	14	4.72		12		7	5	1	1								1				1					124											1	6.7		8@15", 2@18"	1.3		116	
SHEET 3-O TOTAL									264		80	48			88		136					100												12			10		7	3				2					2											188													7@15"	3.3		106	
SHEET 3-P TOTAL									984		524	100					72	36							68						40			20	1.69		15	2	3	10	3	3	1	1					2																								4@15", 2@18"			764	
SHEET 3-Q TOTAL									1016	476							88					28	20						20					23	2.35		10		5	5	11	11		2							2																			9			3@15"	1.0	0.1	483	
SHEET 3-R TOTAL									772		108		60	12								104		28					48			7.9		12	6.68		2			2	7	7		3					3																					2				1.6		445	
SHEET 3-S TOTAL									392	212									12			60												19	8.7		12		7	5	6	6								1				1																4			2@24"	0.5		226	
SHEET 3-T TOTAL									68	252		16										212	32						88	64		2.3		12	6.55		3	1		2	6	6		1					1	2				2																3				2.2		240	
SHEET 3-U TOTAL									224								40					96	44	32									9			3		3		3	3		1	1		1		1	1				1																	3			2@15"			154	
PROJECT TOTALS (U-4026)									12816	2792	2088	964	868	320	400		1048	272	252	128		3284	1808	408	232	324		252	64	40	55.8		288	106.81		113	4	49	59	74	74	8	84	3		1		72	6	22			9		124	60	260	268	556		10			2		2		1	49	6.7		38@15", 8@18", 4@24', 4@30"	20.05	0.3	10639	
																															SAY	56.0	SAY	107.00																																			SAY 7.0				SAY 21.0			
PROJECT TOTALS (R-2904)									2748	648		212					116	140				100	8	44	88	24					2.5		58	12.24		34		24	10	7	7		11						3	11			2	3						3										20		8@15", 2@18"	0.89	0.492	126	
																																																																						SAY 20				SAY 1.0			
PROJECT GRAND TOTALS									15564	3440	2088	1176	868	320	400		1164	412	252	128		3384	1816	452	320	348		252	64	40	58.50		346	119.24		147	4	73	69	81	81	8	95	3		1		72	9	33			11	3	124	60	260	268	556	3	10			2		2		1	49	27		46@15", 10@18", 4@24', 4@30"	22	0.792	10765	

ABBREVIATIONS

C.B.	CATCH BASIN
N.D.I.	NARROW DROP INLET
D.I.	DROP INLET
M.D.I.	MEDIAN DROP INLET
M.D.I.(N.S.)	MEDIAN DROP INLET (NARROW SLOT)
J.B.	JUNCTION BOX
M.H.	MANHOLE
T.B.D.I.	TRAFFIC BEARING DROP INLET
T.B.J.B.	TRAFFIC BEARING JUNCTION BOX

COMPUTED BY:	MTR	DATE:	7-03
CHECKED BY:	YTN	DATE:	1-04

STATE OF NORTH CAROLINA
DIVISION OF HIGHWAYS

PROJECT NO.	SHEET NO.
U-4026	3-V

8400-YVETTE

NOTE: ALL ELEVATIONS ON THIS SHEET ARE FOR COST ESTIMATING ONLY AND SHALL NOT BE USED FOR FIELD STAKING.

LIST OF PIPES, ENDWALLS, ETC. (FOR PIPES 54" & OVER)

STATION	LOCATION (LT, RT, OR CL)*	STRUCTURE NO. FROM	STRUCTURE NO. TO	TOP ELEVATION	INVERT ELEVATION	INVERT ELEVATION	SLOPE CRITICAL	CLASS III R.C. PIPE (UNLESS NOTED OTHERWISE) SIZE 54"	60"	66"	72"	78"	84"	BITUMINOUS COATED C.S. PIPE TYPE B (UNLESS NOTED OTHERWISE) SIZE 54" THICKNESS OR GAUGE .109	54" .138	54" .168	54" SHOP ELON-GATED .138	54" SHOP ELON-GATED .168	60" .138	60" .168	66" .138	66" .168	72" .139	72" .168	STRUCTURAL PLATE PIPE 60" 12	60" 10	66" 12	66" 10	72" 12	72" 10	REINFORCED ENDWALLS WITH R.C. - C.Y.	REINFORCED ENDWALLS WITH C.S. - C.Y.	MASONRY DRAINAGE STRUCTURES CUBIC YARDS	C.B. STD. 840.01 OR 840.02	FRAMES, GRATES & HOOD STANDARD 840.03 TYPE OF GRATE E	F	G	J.B. STD. 840.31 OR 840.32		54" CLASS IV RC PIPE	66" CLASS IV RC PIPE		60" SPIRAL WELDED STEEL PIPE (0.875" THICK)	66" SPIRAL WELDED STEEL PIPE (0.875" THICK)	72" SPIRAL WELDED STEEL PIPE (1.0" THICK)							REINF. CONC. FLARED END SECTIONS NO. & SIZE	CORR. STEEL FLARED END SECTIONS NO. & Size	CORR. STEEL ELBOWS NO. & SIZE	CONC. COLLARS CL. "B" C.Y. STD. 840.72		PIPE REMOVAL LIN. FT.	REMARKS
93+20 L	LT	99		326.80	319.94																											3.4																											SPECIAL OTCB SEE DETAIL SHT 2-FF
93+20 L	LT	99	100		319.94	318.86	X	128																																																	
94+45 L	LT	100			318.86																																																			OPEN END PIPE
92+50 L	RT	103		326.20	319.93																											3.5						1																			
92+50 L	RT	103	104		319.93	320.80		64																																																
92+07 L	RT	104			320.80																										5.2																										ENDWALL
132+85 L	LT	148			283.50																										10.9																										SPECIAL ENDWALL SEE DETAIL SHT 2-GG
134+00 L	CL	148	149		283.50	280.40																																					216													
134+50 L	RT	149			280.40																																														3.4				COLLAR
134+50 L	RT	149	150		280.40	279.10					92																																												
134+55 L	RT	151			282.99																																														3.1				COLLAR
134+55 L	RT	151	150		282.99	280.00				96																					10.9																										
135+27 L	RT	150																																																						SPECIAL ENDWALL SEE DETAIL SHT 2-HH
177+13 L	RT	192			277.20																										9.3																										SPECIAL ENDWALL SEE DETAIL SHT 2-II
177+13 L	RT	192	193		277.20	276.62																																	108																	
177+80 L	RT	193			276.62																																														2.6				COLLAR
177+08 L	RT	192	194		277.20	276.93																																		104															
177+88 L	RT	194			276.93																																														3.1				COLLAR
177+88 L	CL	194	195		276.93	276.20																																						248											
179+67 L	LT	195			276.20																																																		SPECIAL ENDWALL SEE STRU. PLANS
229+74 L	RT	260			287.10																										9.3																										SPECIAL ENDWALL SEE DETAIL SHT 2-JJ
229+74 L	RT	260	261		287.10	287.45				72																																													
229+86 L	RT	261			287.45																																														3.1				COLLAR
230+25 L	LT	262			287.40																																														3.1				COLLAR
230+25 L	LT	262	263		287.40	287.40				20																																												
230+40 L	LT	263			287.40																										10.9																										SPECIAL ENDWALL SEE DETAIL SHT 2-KK
229+73 L	RT	260	264		286.30	286.42					56																																												
230+00 L	RT	264			286.42																																														3.4				COLLAR
230+10 L	CL	264	263		286.42	286.80																																					172													
241+00 L	LT	284			303.80																										5.2																										ENDWALL
241+00 L	LT	284	285		303.80	304.11		12																																																
241+04 L	LT	285			304.11																																														2.6				COLLAR
241+50 L	RT	286			305.64																																														2.6				COLLAR, REMOVE ENDWALL
241+50 L	RT	286	287		305.64	305.70		4																																															
241+50 L	RT	287			305.70																										5.2																										ENDWALL
285+84 L	RT	355			280.70																										9.4																										SPECIAL ENDWALL SEE DETAIL SHT 2-LL
285+84 L	RT	355	356		280.70	279.99				60																																												
286+18 L	RT	356			279.99																																														3.1				COLLAR, REMOVE ENDWALL
SHEET TOTALS								208		248	148																				76.3		6.9					1		108	104			248	388										30.1			

ABBREVIATIONS	
C.B.	CATCH BASIN
N.D.I.	NARROW DROP INLET
D.I.	DROP INLET
M.D.I.	MEDIAN DROP INLET
M.D.I.(N.S.)	MEDIAN DROP INLET (NARROW SLOT)
J.B.	JUNCTION BOX
M.H.	MANHOLE
T.B.D.I.	TRAFFIC BEARING DROP INLET
T.B.J.B.	TRAFFIC BEARING JUNCTION BOX

8400-YVETTE

COMPUTED BY:	MTR	DATE:	7-03
CHECKED BY:	YTN	DATE:	1-04

STATE OF NORTH CAROLINA
DIVISION OF HIGHWAYS

PROJECT NO.	SHEET NO.
U-4026	3-W

NOTE: ALL ELEVATIONS ON THIS SHEET ARE FOR COST ESTIMATING ONLY AND SHALL NOT BE USED FOR FIELD STAKING.

LIST OF PIPES, ENDWALLS, ETC. (FOR PIPES 54" & OVER)

STATION	LOCATION (LT, RT, OR CL)	STRUCTURE NO. FROM	STRUCTURE NO. TO	TOP ELEVATION	INVERT ELEVATION	INVERT ELEVATION	SLOPE CRITICAL	CLASS III R.C. PIPE (UNLESS NOTED OTHERWISE) SIZE 54"	60"	66"	72"	78"	84"	BITUMINOUS COATED C.S. PIPE TYPE B (UNLESS NOTED OTHERWISE) SIZE 54" THICKNESS OR GAUGE .109	54" .138	54" .168	54" SHOP ELON-GATED .138	54" SHOP ELON-GATED .168	60" .138	60" .168	66" .138	66" .168	72" .138	72" .168	STRUCTURAL PLATE PIPE 60" 12	60" 10	66" 12	66" 10	72" 12	72" 10	REINFORCED ENDWALLS WITH R.C. - C.Y.	WITH C.S. - C.Y.	MASONRY DRAINAGE STRUCTURES CUBIC YARDS	C.B. STD. 840.01 OR 840.02	FRAMES, GRATES & HOOD STANDARD 840.03 TYPE OF GRATE E	F	G	J.B. STD. 840.31 OR 840.32	54" CLASS IV RC PIPE	66" CLASS IV RC PIPE	60" SPIRAL WELDED STEEL PIPE (0.875" THICK)	66" SPIRAL WELDED STEEL PIPE (0.875" THICK)	72" SPIRAL WELDED STEEL PIPE (1.0" THICK)	REINF. CONC. FLARED END SECTIONS NO. & SIZE	CORR. STEEL FLARED END SECTIONS NO. & Size	CORR. STEEL ELBOWS NO. & SIZE	CONC. COLLARS CL. "B" C.Y. STD. 840.72	PIPE REMOVAL LIN. FT.	REMARKS
287+28 L	LT	357			278.09																																											3.1		COLLAR
287+28 L	LT	357	358		278.09	277.60				52																																							
287+65 L	LT	358			277.60																									9.4																			SPECIAL ENDWALL SEE DETAIL SHT 2-LL
293+32 L	LT	382			275.10																																												SPECIAL ENDWALL SEE STRU. PLANS
293+32 L	LT	382	383		275.10	275.24			28																																								
293+40 L	LT	383			275.24																																									2.9		COLLAR
293+67 L	CL	383	384		275.24	275.86																																		128								
293+82 L	RT	384			275.86																																									2.9		COLLAR
293+82 L	RT	384	385		275.86	276.10			40																																								
293+98 L	RT	385			276.10																																												SPECIAL ENDWALL SEE STRU. PLANS
SHEET 3-W TOTAL									68	52																				9.4										128								8.9		
SHEET 3-V TOTAL								208		248	148																			76.3		6.9					1		108	104		248	388								30.1		
PROJECT TOTALS (U-4026)								208	68	300	148																			85.7		6.9					1		108	104	128	248	388								39.0		
PROJECT GRAND TOTALS								208	68	300	148																			85.7		6.9					1		108	104	128	248	388								39		
SAY																														86		7.0																			

ABBREVIATIONS	
C.B.	CATCH BASIN
N.D.I.	NARROW DROP INLET
D.I.	DROP INLET
M.D.I.	MEDIAN DROP INLET
M.D.I.(N.S.)	MEDIAN DROP INLET (NARROW SLOT)
J.B.	JUNCTION BOX
M.H.	MANHOLE
T.B.D.I.	TRAFFIC BEARING DROP INLET
T.B.J.B.	TRAFFIC BEARING JUNCTION BOX

10/26/98

COMPUTED BY: YTN	DATE: 7/03
CHECKED BY: SRW	DATE: 9/03

RIGHT OF WAY AREA DATA SHEET

PROJECT REFERENCE NO.	SHEET NO.
U-4026	3-X
U-4026A RW SHEET NO.	3-
U-4026B RW SHEET NO.	3-S

U-4026A

Parcels 1-22 in this section to be handled by Town of Cary

PARCEL NO.	PROPERTY OWNERS NAME	TOTAL ACREAGE	AREA TAKEN	AREA REMAINING RIGHT	AREA REMAINING LEFT	CONSTR. EASEMENT	PERMANENT DRAINAGE EASEMENT	TEMPORARY DRAINAGE EASEMENT	
1	Danny E. & Patricia R. Blackburn	2.05 Ac	0.16 Ac		1.89 Ac				
2	KEP Morrisville Realty, LLC	4.46 Ac	0.36 Ac	4.10 Ac		458 SF			
3	Billy H. & Wilma Sauls	3.21 Ac	0.29 Ac		2.92 Ac				
4	Melvin D. & Nancy T. Barnes	5.81 Ac	0.33 Ac		5.48 Ac				
5	William L. & Edith A. Wright	1.71 Ac	214 SF		1.70 Ac				
6	Ferrell Land Company, LCC	12.69 Ac	0.26 Ac	12.43 Ac					
7	Raymond W. & Yuk Mui Wong	35728 SF	7430 SF	28298 SF					
8	William T. Hatch, et al	66.43 Ac	2.20 Ac	64.23 Ac			0.77 Ac		
9	Woody A. Yates & Stephanie S. Yates	3.80 Ac	150 SF		3.80 Ac		770 SF	1808 SF	
10	James Ray Seagroves	1.46 Ac	2645 SF		1.40 Ac				
11	Carpenter Associates	19.27 Ac	1.11 Ac	4.12 Ac	14.04 Ac	0.22 Ac	0.35 Ac		
12	Kat Parthners, LLC	11.32 Ac	0.30 Ac		11.02 Ac	3288 SF			
13	Davis Recreational Facilities LLC	7.81 Ac	0.43 Ac		7.38 Ac	667 SF			
14	Davis Partners, LLC	4.58 Ac	1.21 Ac	3.37 Ac			832 SF		
15	Forrest Development Co., Inc.	1.80 Ac	0.40 Ac	1.40 Ac					
16	DVS Investors, LLC	19.76 Ac	1.33 Ac	18.43 Ac					
17	Daniel O. & Ina P. Rhew	3.45 Ac	0.72 Ac		2.06 Ac	1557 SF			
18	Wexford Investors, LLC	33.97 Ac	0.50 Ac	1.91 Ac	32.06 Ac	0.41 Ac			
18A	Park South Villages, LLC	22.48 Ac	1.58 Ac		20.90 Ac	0.19 Ac	1056 SF		
19	Philip Allen Richard & Susan Austin Richard	2.21 Ac	0.13 Ac	2.08 Ac					
19Z	Philip Allen Richard & Susan Austin Richard	573 SF	573 SF						
20	William H. Richard & Janet M. Richard	1.94 Ac	0.39 Ac	1.55 Ac					
21	Julia R. Dean	4.78 Ac	0.35 Ac	4.43 Ac					
22	John D Nutt	82.28 Ac	0.68 Ac	81.60 Ac					

U-4026B

PARCEL NO.	PROPERTY OWNERS NAME	TOTAL ACREAGE	AREA TAKEN	AREA REMAINING RIGHT	AREA REMAINING LEFT	CONSTR. EASEMENT	PERMANENT DRAINAGE EASEMENT	TEMPORARY DRAINAGE EASEMENT	PERMANENT UTILITY EASEMENT
1	WMCI Raleigh III, LLC	30.50 Ac	0.17 Ac	30.33 Ac		0.23 Ac			
2	Diosynth RTP, Inc.	312.81 Ac	0.72 Ac	312.09 Ac		0.18 Ac			
3	Parkside Development LLP	1.94 Ac	3241 SF		1.87 Ac		690 SF		
4	The Maners at Breckenridge Association, Inc.	20.21 Ac	1158 SF		20.18 Ac	362 SF			
4A	The Maners at Breckenridge Association, Inc.	35.82 Ac	3677 SF		35.74 Ac				0.15 Ac
5	Not Used								
6A	Research Triangle Foundation		0.38 Ac			1468 SF	0.31 Ac		
6B	Research Triangle Foundation					0.57 Ac		3014 SF	
6C	Research Triangle Foundation						3176 SF		
6D	Research Triangle Foundation					0.13 Ac			
6E	Research Triangle Foundation					1100 SF	4123 SF		
6F	Research Triangle Foundation							26.32 Ac	
6G	Research Triangle Foundation	8.86 Ac						7.41 Ac	
6H	Research Triangle Foundation					0.82 Ac	0.17 Ac		
6I	Research Triangle Foundation	3.97 Ac	1.17 Ac	2.80 Ac					

U-4026B

PARCEL NO.	PROPERTY OWNERS NAME	TOTAL ACREAGE	AREA TAKEN	AREA REMAINING RIGHT	AREA REMAINING LEFT	CONSTR. EASEMENT	PERMANENT DRAINAGE EASEMENT	TEMPORARY DRAINAGE EASEMENT	
6J	Research Triangle Foundation		NO TAKE						
6K	Research Triangle Foundation					0.22 Ac	3400 SF	0.13 Ac	
6L	Research Triangle Foundation	21363 SF				5720 SF			
7	Not Used								
8	Biogen Realty LLC	87.65 Ac				0.50 Ac	0.27 Ac		
8A	Biogen Realty LLC			No Claim					
8B	Biogen Realty LLC	78.82 Ac	0.73 Ac	78.09 Ac				0.21 Ac	
9	ARE-7030 Kit Creek, LLC	18.00 Ac	2263 SF		17.95 Ac	1.36 Ac	578 SF		
10	Cisco Systems, INC	32.31 Ac	0.63 Ac		31.68 Ac	0.31 Ac	2015 SF		
10A	Cisco Systems, INC		0.14 Ac			0.58 Ac			
10B	Cisco Systems, INC	53.00 Ac				3062 SF	3508 SF		
11	Delta Products Corporation	10.46 Ac					0.18 Ac		
12	Ericsson Trust	24.52 Ac				0.36 Ac	0.12 Ac		
13	Eisai INC	58.42 Ac				3.29 Ac	0.17 Ac		
13A	Eisai INC	51.69 Ac			51.69 Ac	0.66 Ac	0.44 Ac	2772 SF	
14	Not Used								
15	Technology VII – IX	12.50 Ac	2597 SF	12.44 Ac					
15A	Davis Drive Assoc. Ltd Partnership	1.50 Ac				0.23 Ac	0.10 Ac		
16	Keystone Technology Park Owners Assoc, INC	4.10 Ac				1155 SF			
17	Keystone Office 100 – 200, LLC	6.20 Ac				0.16 Ac			
17A	Keystone Office 100 – 200, LLC	5.09 Ac				3313 SF			
17B	Keystone Office 300, LLC	10.43 Ac				0.12 Ac			
18	Technology I, LLC	7.93 Ac					0.12 Ac		
19	Technology IV, LLC	7.39 Ac	0.13 Ac	7.26 Ac		895 SF			
20	Searls Family Limited Partnership	69.27 Ac	0.50 Ac	40.91 Ac	27.86 Ac	5233 SF	0.19 Ac		
21	Wilkinson Family Partnership	66.0 Ac	0.31 Ac	65.69 Ac			1191 SF		
22	State Street Bank & Trust Co.	108.00 Ac	1.09 Ac	106.91 Ac		0.68 Ac		0.11 Ac	
23	BASF Corporation	25.54 Ac					0.17 Ac	926 SF	
24	BASF Corporation	46.19 Ac				0.86 Ac	430 SF		
25	Technology III, LLC	9.23 Ac	0.49 Ac	8.74 Ac		1620 SF			
26	Raymond M Proctor & wife Faye B. Proctor	3.37 Ac	0.24 Ac	3.13 Ac					
27	Robert H & Nancy C Mallett	43124 SF	7893 SF		35231 SF				
28	Susan S O'Brien & Patricia S O'Brien	43124 SF	7262 SF		35862 SF				
29	Estate of Agatha L Hurst	1.10 Ac	0.13 Ac		0.97 Ac				
30	Charles Kennedy & wife Jane W. Kennedy	1.02 Ac	0.13 Ac		0.89 Ac				
31	Ronald K. Maynor	1.00 Ac	0.11 Ac		0.89 Ac				
32	Gerald E. Searles	32670 SF	3078 SF		29592 SF				
33	Triangle Service Center, INC		0.33 Ac			0.13 Ac			
34	Becton, Dickinson, and Company	38.10 Ac	0.27 Ac	37.83 Ac		0.48 Ac			

5/14/2006
R:\Roadway\Proj\u4026_3_series.dgn
Kimley-Horn & Associates, P.A.

SUMMARY OF PAVEMENT BREAKING & REMOVAL

SURVEY LINE	STATION TO STATION	LOCATION	ASPHALT REMOVAL (SY)	ASPHALT BREAKING (SY)
-L-	32+00 - 34+00	LT	306	
-L-	34+00 - 46+00	LT/MED	2603	
-L-	46+00 - 58+00	LT/RT/MED	2017	
-L-	58+00 - 66+86	LT/MED	951	
-L-	90+50 - 94+00	MED	69	
-L-	94+00 - 96+50	LT	40	
-L-	98+83 - 106+00	LT	367	
-L-	106+00 -107+99	LT	44	
-L-	151+16 - 153+93	MED	58	
-L-	153+15 -154+00	LT	13	
-L-	154+00 - 154+05	LT	1	
-L-	157+07 - 161+90	MED	703	
-L-	159+66 - 164+15	LT	145	
-L-	163+17 - 163+74	LT	85	
-L-	161+90 - 166+00	MED	790	
-L-	166+00 - 166+23	MED	4	
-L-	167+49 - 173+89	MED	1674	
-L-	175+50 - 178+00	MED	183	
-L-	178+00 - 179+25	RT	646	
-L-	188+39 - 189+87	RT	511	
-L-	178+48 - 188+75	LT	963	
-L-	189+46 - 190+00	LT	93	
-L-	190+00 - 195+13	LT	697	
-L-	203+26 - 208+74	MED	311	
-L-	212+77 - 214+00	MED	20	
-L-	214+00 - 214+75	MED	5	
-L-	222+97 - 226+00	MED	82	
-L-	226+00 - 227+49	MED	89	
-L-	230+85 - 238+00	MED	1026	
-L-	238+00 - 239+95	MED	471	
	SUB TOTAL		14,967	

SURVEY LINE	STATION TO STATION	LOCATION	ASPHALT REMOVAL (SY)	ASPHALT BREAKING (SY)
-L-	268+00 - 304+00	LT	12558	
-Y9-	12+00 - 12+25	RT (TRAIL)	27	
-Y10-	12+56 - 13+75	LT (TRAIL)	177	
-L-	211+89 - 214+09	LT (TRAIL)	187	
-L-	234+00 - 234+46	LT (TRAIL)	18	
-L-	302+55 - 302+86	LT (TRAIL)	11	
-L-	303+45 - 303+81	LT (TRAIL)	30	
-Y13-	18+87 - 19+54	LT (TRAIL)	40	
-L-	226+07 - 226+86	LT (TRAIL)	23	
-L-	154+94 - 156+84	RT	134	
-L-	163+41 - 166+47	LT	232	
-L-	167+52 - 171+57	RT	688	
-L-	189+44 - 194+19	RT	618	
-L-	209+88 - 213+95	RT	522	
-L-	232+75 - 239+86	LT	540	
-L-	282+00 - 287+50	MED	489	
-L-	294+20 - 296+74	MED	255	
MISC. AREAS FROM GEOTECH.REQ'S 8-13-03			630	
-L-	311+75 - 320+18	LT/RT	5058	
-Y9-	14+50 - 20+00	RT		545
-Y9-	20+50	RT		352
-Y9A-	10+25 - 13+00	LT/RT		1051
	SUB TOTAL		22,237	1948
	GRAND TOTAL (U-4026)		37,204	1948
	SAY		37,225	1950
	GRAND TOTAL (R-2904)		11193	
	SAY		11200	
	PROJECT GRAND TOTAL		48,425	1950

CONPUTED BY: DCW DATE: 5-02-06
CHECKED BY: SRW DATE: 5-02-06

SUMMARY OF EARTHWORK
IN CUBIC YARDS

LOCATION	UNCLASSIFIED EXCAVATION	UNDERCUT	EMBT+%	BORROW	WASTE
SUMMARY NO. 1 (LEFT)					
-L- 13+64.43 TO 40+00.00 LT	4047	985	2323		2709
-Y2- 14+00.00 TO 14+50.00	17		6		11
TOTAL SUMMARY NO. 1 (LEFT)	4064	985	2339		2720
SUMMARY NO. 2 (LEFT)					
-L- 40+00.00 TO 68+50.00 LT	2899		1744		1155
-Y3- 13+00.00 TO 14+50.00	121		20		101
-Y5- 19+35.00 TO 24+00.00	742	1324	2238	2047	1875
TOTAL SUMMARY NO. 2 (LEFT)	3762	1324	4002	2047	3131
SUMMARY NO. 3 (LEFT)					
-L- 68+50.00 TO 90+00.00 LT	1539	1824	6985	5941	2319
TOTAL SUMMARY NO. 3 (LEFT)	1539	1824	6985	5941	2319
SUMMARY NO. 4 (LEFT)					
-L- 90+00.00 TO 120+00.00	492		110		382
TOTAL SUMMARY NO. 4 (LEFT)	492		110		382
SUMMARY NO. 5 (LEFT)					
-L- 120+00.00 TO 136+30.41	327		397	70	
TOTAL SUMMARY NO. 5 (LEFT)	327		397	70	
SUMMARY NO. 6 (LEFT)					
-L-148+77.13 TO 161+66.96 L.B.	566		280		286
TOTAL SUMMARY NO. 6 (LEFT)	566		280		286
SUMMARY NO. 7 (LEFT)					
-L- 161+64.95 L.A. TO 167+00.00	17		282	265	
-Y9- 10+00.00 TO 25+00.00	5879		13801	8051	129
-Y9A- 10+00.00 TO 13+00.00	14		3054	3040	
TOTAL SUMMARY NO. 7 (LEFT)	5910		17137	11356	129
SUMMARY NO. 8 (LEFT)					
-L- 167+00.00 TO 198+00.00	4036		259		3777
TOTAL SUMMARY NO. 8 (LEFT)	4036		259		3777
SUMMARY NO. 9 (LEFT)					
-L- 198+00.00 TO 229+00.00	15857		214		15643
-Y10- 8+00.00 TO 14+50.00	1226		174		1052
TOTAL SUMMARY NO. 9 (LEFT)	17083		388		16695
SUMMARY NO. 10 (LEFT)					
-L- 229+00.00 TO 260+50.00	7401		2911		4490
-Y12- 10+00.00 TO 24+50.00	3641		2825		816
TOTAL SUMMARY NO. 10 (LEFT)	11042		5736		5306
SUMMARY NO. 11 (LEFT)					
-L- 260+50.00 TO 290+00.00	765		5263	4498	
TOTAL SUMMARY NO.11 (LEFT)	765		5263	4498	
SUMMARY NO. 12 (LEFT)					
-L- 290+00.00 TO 311+23.33	371		3815	3444	
-Y13- 11+50.00 TO 19+50.00	1920		2326	917	511
TOTAL SUMMARY NO. 12 (LEFT)	2291		6141	4361	511
SUMMARY NO. 13 (LEFT)					
-L- 311+23.33 TO 321+07.83	217		2352	2135	
TOTAL SUMMARY NO. 13 (LEFT)	217		2352	2135	
SUB-TOTAL LEFT (SUMMARY 1 THRU 13)	52094	4133	51379	30408	35256

Note: Earthwork quantities are calulated by the Roadway Design Unit. These earthwork quantities are based in part on subsurface data provided by the Geotechnical Engineering Unit.

Plans prepared by:
KO & ASSOCIATES, P.C.
Consulting Engineers
1011 SCHAUB DR. SUITE #202
RALEIGH, N.C. 27606
(919)-851-6066

PROJECT REFERENCE NO. U-4026
SHEET NO. 3-2

COMPUTED BY: DCW DATE: 5-02-06
CHECKED BY: SRW DATE: 5-02-06

SUMMARY OF EARTHWORK
IN CUBIC YARDS

LOCATION	UNCLASSIFIED EXCAVATION	UNDERCUT	EMBT+%	BORROW	WASTE
SUMMARY NO. 1 (RIGHT)					
-L- 13+64.43 TO 40+00.00 RT	2135	1323	12382	11564	2640
TOTAL SUMMARY NO. 1 (RIGHT)	2135	1323	12382	11564	2640
SUMMARY NO. 2 (RIGHT)					
-L- 40+00.00 TO 68+50.00 RT	4704	2945	10396	7754	5007
-Y4- 11+00.00 TO 12+00.00	40		65	25	
-Y5- 26+00.00 TO 36+65.00	1197	1358	5732	5490	2313
TOTAL SUMMARY NO. 2 (RIGHT)	5941	4303	16193	13269	7320
SUMMARY NO. 3 (RIGHT)					
-L- 68+50.00 TO 90+00.00 RT	14093	194	1034		13253
TOTAL SUMMARY NO. 3 (RIGHT)	14093	194	1034		13253
SUMMARY NO. 4 (RIGHT)					
-L- 90+00.00 TO 120+00.00	58373	29	23094		35308
-Y7- 10+50.00 TO 12+00.00	103		91		12
TOTAL SUMMARY NO. 4 (RIGHT)	58476	29	23185		35320
SUMMARY NO. 5 (RIGHT)					
-L- 120+00.00 TO 136+30.41	49630	175	7003		42802
TOTAL SUMMARY NO. 5 (RIGHT)	49630	175	7003		42802
SUMMARY NO. 6 (RIGHT)					
-L-148+77.13 TO 161+66.96 L.B.	10424	118	9149		1393
TOTAL SUMMARY NO. 6 (RIGHT)	10424	118	9149		1393
SUMMARY NO. 7 (RIGHT)					
-L- 161+64.95 L.A. TO 167+00.00	1561		1777	302	86
-Y9- 27+00.00 TO 34+63.35	176		5218	5042	
TOTAL SUMMARY NO. 7 (RIGHT)	1737		6995	5344	86
SUMMARY NO. 8 (RIGHT)					
-L- 167+00.00 TO 198+00.00	64067	186	33070		31183
TOTAL SUMMARY NO. 8 (RIGHT)	64067	186	33070		31183
SUMMARY NO. 9 (RIGHT)					
-L- 198+00.00 TO 229+00.00	24631	438	27462	4315	1922
TOTAL SUMMARY NO. 9 (RIGHT)	24631	438	27462	4315	1922
SUMMARY NO. 10 (RIGHT)					
-L- 229+00.00 TO 260+50.00	17074		20866	4803	1011
-Y12- 26+00.00 TO 40+60.00	2656		2962	356	50
TOTAL SUMMARY NO. 10 (RIGHT)	19730		23828	5159	1061
SUMMARY NO. 11 (RIGHT)					
-L- 260+50.00 TO 290+00.00	518		32893	32375	
TOTAL SUMMARY NO. 11 (RIGHT)	518		32893	32375	
SUMMARY NO. 12 (RIGHT)					
-L- 290+00.00 TO 311+23.33	18874		11368		7506
-Y13- 21+50.00 TO 26+50.00	2026		1674		352
TOTAL SUMMARY NO. 12 (RIGHT)	20900		13042		7858
SUMMARY NO. 13 (RIGHT)					
-L- 311+23.33 TO 321+07.83	766		1199	433	
TOTAL SUMMARY NO. 13 (RIGHT)	766		1199	433	
SUB-TOTAL RIGHT (SUMMARY 1 THRU 13)	273048	6766	207433	72457	144838
SUB-TOTAL LEFT (SUMMARY 1 THRU 13)	52094	4133	51379	30408	35256
SUB-TOTAL RIGHT (SUMMARY 1 THRU 13)	273048	6766	207433	72457	144838
SHOULDER MATERIAL			11520	11520	
ADDITIONAL UNDERCUT		1450	1740	1740	1450
EST. LOSS DUE TO CLEAR. & GRUB.	-9350				-9350
U-4026 PROJECT TOTAL	315792	12349	272072	116126	172194
R-2904 PROJECT TOTAL	18490	779	28837	20233	10665
U-4026 & R-2904 SUB-TOTAL	334282	13128	300909	136359	182859
WASTE IN LIEU OF BORROW				-122946	-122946
U-4026 & R-2904 PROJECT TOTAL	334282	13128	300909	13412	59913
EST. 5% FOR REPLACING TOPSOIL ON BORROW PIT				671	
U-4026 & R-2904 GRAND TOTAL	334282	13128	300909	14083	59913
SAY	334300	13200		14100	

-L-, -Y5-, -Y9-, -Y10-, -Y12- & -Y13- PAVEMENT STRUCTURE VOLUME = 46750 C.Y. (U-4026)

DDE = 10,650 C.Y. (U-4026) + DDE= 25 C.Y. (R-2904) = 10,675 C.Y.

INCLUDED IN THE WASTE QUANTITY IS DEGRADABLE ROCK WHICH MAY BE USED IN LIEU OF BORROW. SEE PROJECT SPECIAL PROVISIONS

Note: Earthwork quantities are calulated by the Roadway Design Unit. These earthwork quantities are based in part on subsurface data provided by the Geotechnical Engineering Unit.

Plans prepared by:
KO & ASSOCIATES, P.C.
Consulting Engineers
1011 SCHAUB DR. SUITE #202
RALEIGH, N.C. 27606
(919)-851-6066

PROJECT REFERENCE NO. U-4026
SHEET NO. 3- AA

COMPUTED BY: SRW DATE: 5/06
CHECKED BY: DCW DATE: 5/06

PROJECT REFERENCE NO.	SHEET NO.
U-4026	3-BB

"N" = DISTANCE FROM EDGE OF LANE TO FACE OF GUARDRAIL.
TOTAL SHOULDER WIDTH = DISTANCE FROM EDGE OF TRAVEL LANE TO SHOULDER BREAK POINT.
FLARE LENGTH = DISTANCE FROM LAST SECTION OF PARALLEL GUARDRAIL TO END OF GUARDRAIL.
W = TOTAL WIDTH OF FLARE FROM BEGINNING OF TAPER TO END OF GUARDRAIL.
G = GATING IMPACT ATTENUATOR TYPE 350
NG = NON-GATING IMPACT ATTENUATOR TYPE 350

GUARDRAIL SUMMARY

SURVEY LINE	BEG. STA.	SURVEY LINE	END STA.	LOCATION	LENGTH			WARRANT POINT		"N" DIST. FROM E.O.L.	TOTAL SHOULDER WIDTH	FLARE LENGTH		W		ANCHORS								IMPACT ATTENUATOR TYPE 350					REMOVE EXISTING GUARDRAIL	REMARKS
					STRAIGHT	SHOP CURVED	DOUBLE FACED	APPROACH END	TRAILING END			APPROACH END	TRAILING END	APPROACH END	TRAILING END	GRAU 350	CAT-1	AT-1	M-350	TYPE III	TERMINAL SECTIONS	TYPE XI MOD		EA	G	NG				
-L-	25+75	-L-	30+50	-RT-	475			27+00	30+50	10	13	50		1		1	1													
-L-	61+90	-L-	62+90	-LT-	100				61+90	10	13	50		1		1	1													OBSTACLE WARRANT
-L-	65+25	-L-	67+50	-LT-	225			65+90		10	13	50		1		1	1													OBSTACLE WARRANT
-L-	79+50	-L-	81+75	LT	225			81+75	79+50	10	13	50		1		1	1												1232.13	
-L-	82+75	-L-	85+25	LT	250			84+00	82+75	10	13	50		1		1	1													
-L-	88+75	-L-	95+25	RT	650			90+00	95+25	10	13	50		1		1	1												1370.70	
-L-	92+50	-L-	96+25	LT	375			95+00	92+50	10	13	50		1		1	1													
-L-	101+75	-L-	104+50	RT	275			103+00	104+50	10	13	50		1		1	1												895.52	
-L-	104+00	-L-	112+75	LT	875			111+50	104+00	10	13	50		1		1	1													
-L-	132+25	-L-	136+30.41	RT	405.41			133+50	136+30.41	10	13	50		1		1														
-L-	148+77.13	-L-	154+25	LT	504.96	68.75			148+77.13	10	13	6.25		4				1											576.39	RADIUS = 40'
-L-	173+25	-L-	178+25	RT	472.80	56.25		174+50		10	13	1	6.25	1	4	1		1											2043.73	RADIUS = 30'
-L-	195+50	-L-	202+75	LT	725			201+50	195+50	10	13	50		1		1	1												1335.14	
-L-	198+75	-L-	201+50	RT	275			200+00	201+50	10	13	50		1		1	1													
-L-	207+75	-L-	215+00	RT	725			209+00	215+00	10	13	50		1		1	1													
-L-	226+25	-L-	232+00	RT	575			227+50	232+00	10	13	50		1		1	1													RADIUS = 40'
-L-	228+25	-L-	234+75	LT	600	56.25		ENTRANCE	233+50	10	13	50	6.25	1	4	1		1											1297.81	
																														RADIUS = 40'
-L-	240+50	-L-	242+50	RT	159.33	56.25		241+50	242+50																					
-L-	239+50	-L-	242+25	LT	275			241+00	239+50	14	14	6.25		4			1	1												
-L-	269+00	-L-	272+00	RT	300			269+50	272+00	10	13	50		1		1	1													
-L-	278+00	-L-	288+00	RT	1000			279+00	288+00	14	14	50		1		1	1													
-L-	287+00	-L-	299+00	LT	1200			298+00	287+00	14	14	50		1		1	1													
-L-	291+55	-L-	296+00	RT	432.55	50		293+00	296+00	14	14	50		1		1	1												1056.09	
-Y9-	15+50	-Y9-	20+00	LT	450			16+50	19+00	14	14	6.25		4			1	1												RADIUS = 20'
-Y9-	15+00	-Y9-	19+00	RT	400			16+00	19+00	12	15	50		1		1	1													
-Y12-	19+00	-Y12-	21+25	RT	225			20+00	21+00	12	15	50		1		1	1													
SUB TOTAL					12175.05	287.50				14	14	50		1		1	1													
																23	22	5											9807.51	
			LESS ANCHOR DEDUCTIONS																											
			GRAU-350	23@50.0	-1150																									
			CAT-1	22@6.25	-137.50																									
			AT-1	5@6.25		-31.25																								
GRAND TOTAL (U-4026)					10887.55	256.25										23	22	5											9807.51	
SAY					10887.50	262.50				(10 ADDITIONAL GUARDRAIL POSTS)																			9810	
GRAND TOTAL (R-2904)					1041.33											4	3		1											
SAY					1050.00					(5 ADDITIONAL GUARDRAIL POSTS)																				
PROJECT GRAND TOTAL					11937.50	262.50				(15 ADDITIONAL GUARDRAIL POSTS)						27	25	5	1										9810	

COMPUTED BY: YTN DATE: 5-02-06
CHECKED BY: SRW DATE: 5-02-06

PROJECT REFERENCE NO.	SHEET NO.
U-4026	3-CC
U-4026A R/W SHEET NO.	3-
U-4026B R/W SHEET NO.	3-T

PARCEL INDEX SHEET

	PARCEL NO.	R/W SHEET NO.	PROPERTY OWNERS NAME
U-4026A	1	4	Danny E. & Patricia R. Blackburn
	2	4 & 5	KEP Morrisville Realty, LLC.
	3	4 & 5	Billy H. & Wilma Sauls
	4	5	Melvin D. & Nancy T. Barnes
	5	5	William L. & Edith A. Wright
	6	5	Ferrell Land Company, LLC
	7	5	Raymond W. & Yuk Mui Wong
	8	5 & 6	William T. Hatch, et al
	9	5 & 6	Woody A Yates & Stephanie S. Yates
	10	6	James Ray Seagroves
	11	6 & 7	Carpenter Associates
	12	6 & 7	Kat Parthners, LLC
	13	7	Davis Recreational Facilities LLC
	14	7, 8 & 12	Davis Partners LLC
	15	7	Forrest Development Co., Inc.
	16	7 & 8	DVS Investors, LLC
	17	7 & 8	Daniel O. & Ina P. Rhew
	18	8, 9 & 11	Wexford Investors, LLC
	18A	8, 9, 10 & 11	Park South Villages, LLC
	19	8 & 12	Philip Allen Richard & Susan Austin Richard
	19Z	8	Philip Allen Richard & Susan Austin Richard
	20	8 & 12	William H. Richard & Janet M. Richard
	21	12	Julia R. Dean
	22	12	John D Nutt
U-4026B	1	4 & 5	WMCI Raleigh III, LLC
	2	5 ,6 & 7	Diosynth RTP, Inc.
	3	5	Parkside Development LLP
	4	5	The Maners at Breckenridge Association, Inc.
	4A	5	The Maners at Breckenridge Association, Inc.
	5	—	Not Used
	6A	5,6,7,8 & 9	Research Triangle Foundation
	6B	6,7,8 & 9	Research Triangle Foundation
	6C	10	Research Triangle Foundation
	6D	10,11 & 12	Research Triangle Foundation
	6E	13	Research Triangle Foundation
	6F	14,14A & 15	Research Triangle Foundation
	6G	14,14A & 15	Research Triangle Foundation
	6H	17 & 18	Research Triangle Foundation
	6I	17	Research Triangle Foundation
	6J	21 & 22	Research Triangle Foundation
	6K	22	Research Triangle Foundation

	PARCEL NO.	R/W SHEET NO.	PROPERTY OWNERS NAME
U-4026B	6L	23 & 24	Research Triangle Foundation
	7	—	Not Used
	8	12,13,14,26	Biogen Realty LLC
	8A	15 & 16	Biogen Realty LLC
	8B	16 & 17	Biogen Realty LLC
	9	12 & 25	ARE-7030 Kit Creek, LLC
	10	10,11 & 12	Cisco Systems, INC
	10A	25	Cisco Systems, INC
	10B	12 & 13	Cisco Systems, INC
	11	13 & 14	Delta Products Corporation
	12	15 & 30	Ericsson Trust
	13	15,16 & 30	Eisai INC
	13A	16 & 17	Eisai INC
	14	—	Not Used
	15	17 & 18	Technology VII-IX
	15A	18	Davis Drive Assoc. Ltd Partnership
	16	18	Keystone Technology Park Owners Assoc, INC
	17	18	Keystone Office 100 – 200, LLC
	17A	18 & 19	Keystone Office 100 – 200, LLC
	17B	19 & 27	Keystone Office 300, LLC
	18	18 & 19	Technology I, LLC
	19	19 & 28	Technology IV, LLC
	20	19,20,21, 27 & 28	Searls Family Limited Partnership
	21	21	Wilkinson Family Partnership
	22	21,22,23, 24 & 29	State Street Bank & Trust Co.
	23	22 & 23	BASF Corporation
	24	23,24 & 29	BASF Corporation
	25	28	Technology III, LLC
	26	28	Raymond M Proctor & wife Faye B. Proctor
	27	28	Robert H & Nancy C Mallett
	28	28	Susan S O'Brien & Patricia S O'Brien
	29	28	Estate of Agatha L Hurst
	30	28	Charles Kennedy & wife Jane W. Kennedy
	31	28	Ronald K. Maynor
	32	28	Gerald E. Searles
	33	24 & 29	Triangle Service Center, INC
	34	24 & 29	Becton, Dickinson and Company

10/26/98

5/4/2006
R:\Roadway\Proj\u4026_3_series.dgn
KS & Associates, P.C.

7/2/99

REVISIONS

PROJECT REFERENCE NO.	SHEET NO.
U-4026	4
U-4026A R/W SHEET NO.	4

ROADWAY DESIGN ENGINEER: NORTH CAROLINA PROFESSIONAL SEAL 20774 ENGINEER STEPHEN R. WHILLEY — 7-12-06

HYDRAULICS ENGINEER: NORTH CAROLINA PROFESSIONAL SEAL 021162 ENGINEER HERBERT TURNER JR. — 7-13-06

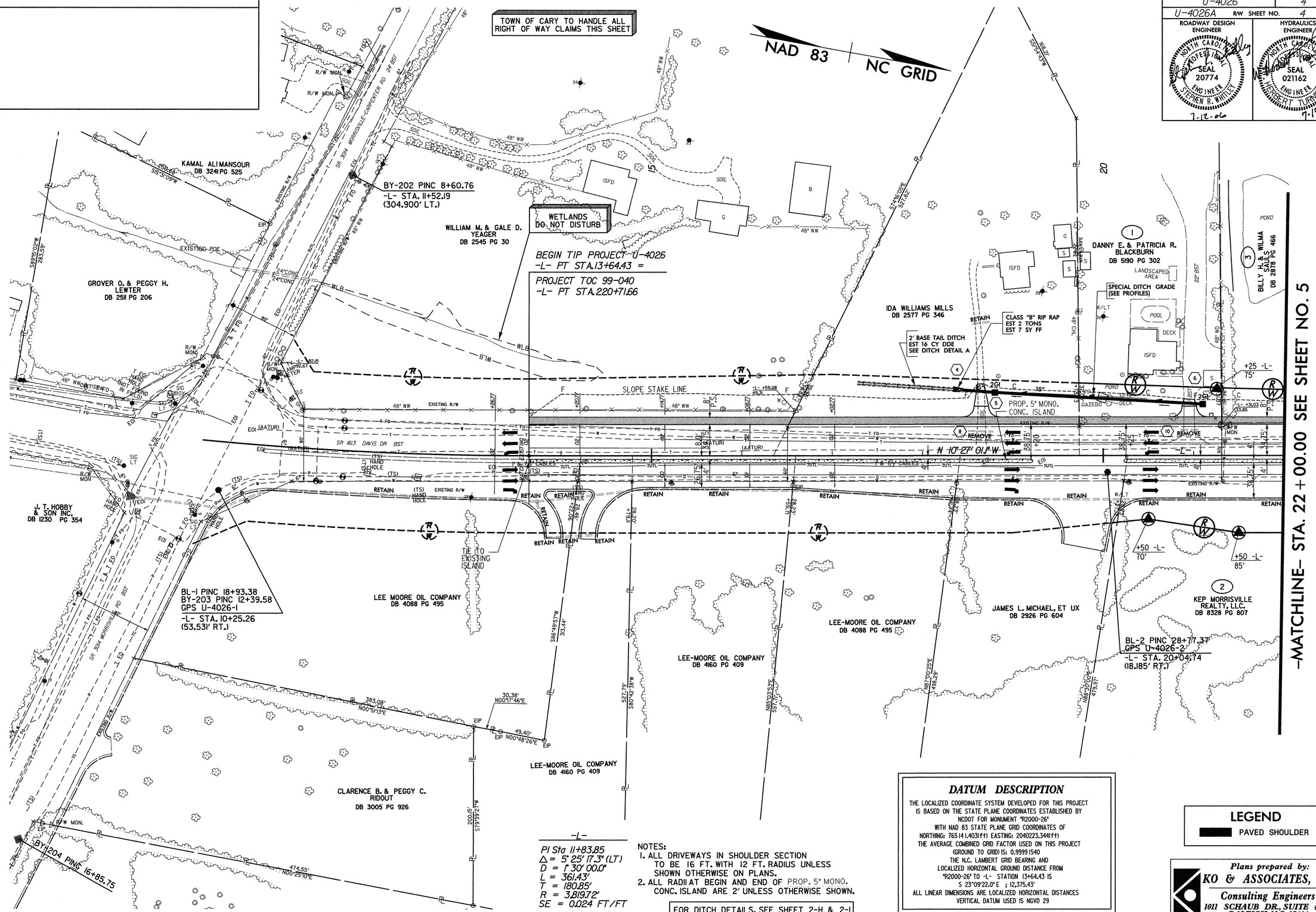

-L-

PI Sta 11+83.85
Δ = 5° 25' (7.3" (LT)
D = 1° 30' 00.0"
L = 361.43'
T = 180.85'
R = 3,819.72'
SE = 0.024 FT/FT

NOTES:
1. ALL DRIVEWAYS IN SHOULDER SECTION TO BE 16 FT. WITH 12 FT. RADIUS UNLESS SHOWN OTHERWISE ON PLANS.
2. ALL RADII AT BEGIN AND END OF PROP. 5" MONO. CONC. ISLAND ARE 2' UNLESS OTHERWISE SHOWN.

FOR DITCH DETAILS, SEE SHEET 2-H & 2-I
FOR -L- PROFILE, SEE SHEET 38

DATUM DESCRIPTION

THE LOCALIZED COORDINATE SYSTEM DEVELOPED FOR THIS PROJECT IS BASED ON THE STATE PLANE COORDINATES ESTABLISHED BY NCDOT FOR MONUMENT "R2000-26" WITH NAD 83 STATE PLANE GRID COORDINATES OF NORTHING: 765141.403(ft) EASTING: 2040223.344(ft) THE AVERAGE COMBINED GRID FACTOR USED ON THIS PROJECT (GROUND TO GRID) IS: 0.9999154 0 THE N.C. LAMBERT GRID BEARING AND LOCALIZED HORIZONTAL GROUND DISTANCE FROM "R2000-26" TO -L- STATION 13+64.43 IS S 23°09'22.0" E ; 12,375.43' ALL LINEAR DIMENSIONS ARE LOCALIZED HORIZONTAL DISTANCES VERTICAL DATUM USED IS NGVD 29

LEGEND
PAVED SHOULDER

Plans prepared by:
KO & ASSOCIATES, P.C.
Consulting Engineers
1011 SCHAUB DR., SUITE #202
RALEIGH, N.C. 27606
(919)-851-6066

7/10/2006
R:\Roadway\Proj\u4026p04.psh
Ko & Associates, P.C.

REVISIONS

PROJECT REFERENCE NO.	SHEET NO.
U-4026	5
U-4026A R/W SHEET NO.	5

ROADWAY DESIGN ENGINEER: NORTH CAROLINA PROFESSIONAL SEAL 20774 ENGINEER STEPHEN R. WHITLEY 7-12-06

HYDRAULICS ENGINEER: NORTH CAROLINA PROFESSIONAL SEAL 021162 ENGINEER HERBERT TURNER, JR. 7-13-06

TOWN OF CARY TO HANDLE ALL RIGHT OF WAY CLAIMS THIS SHEET

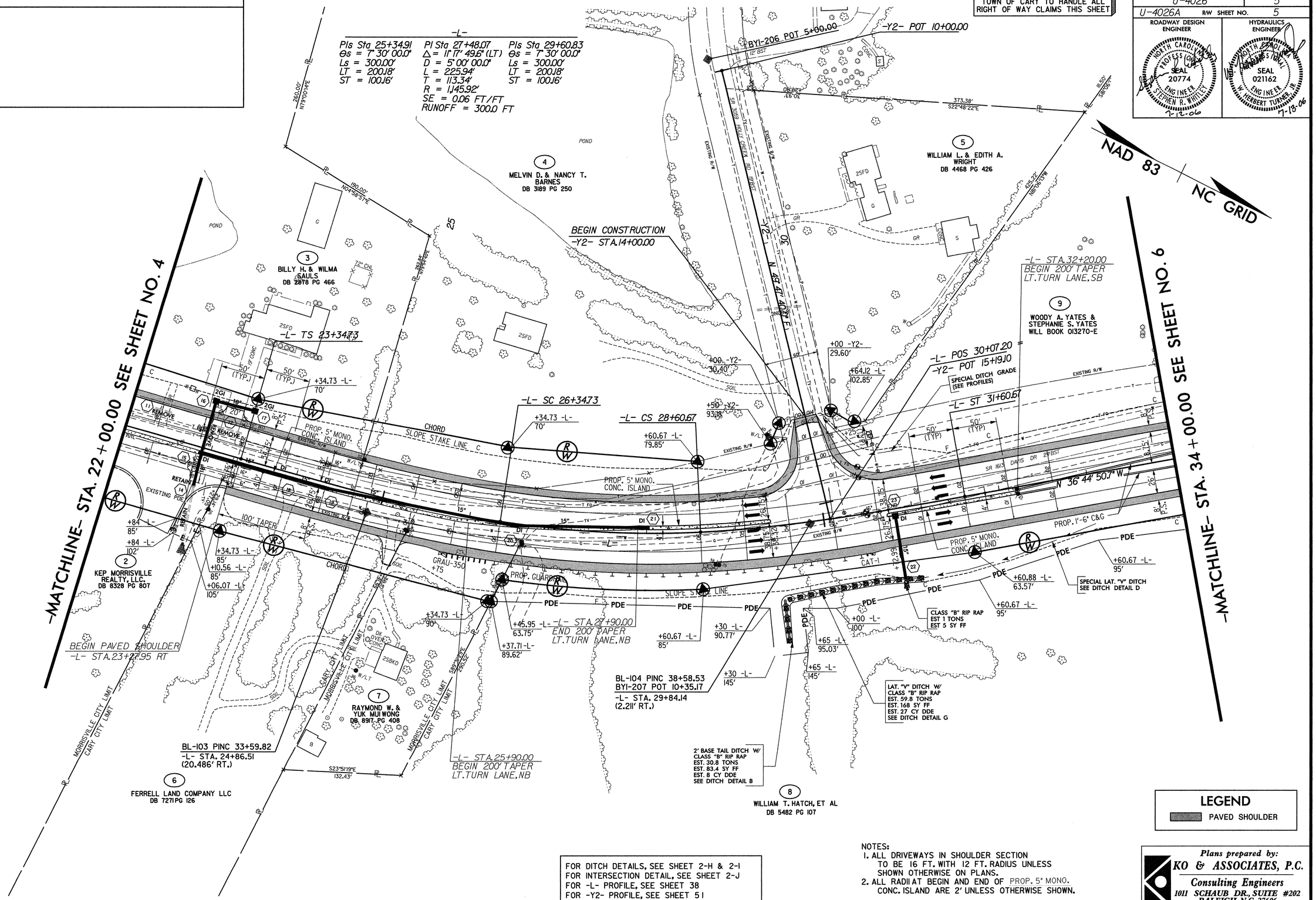

LEGEND

PAVED SHOULDER

FOR DITCH DETAILS, SEE SHEET 2-H & 2-I
FOR INTERSECTION DETAIL, SEE SHEET 2-J
FOR -L- PROFILE, SEE SHEET 38
FOR -Y2- PROFILE, SEE SHEET 51

NOTES:
1. ALL DRIVEWAYS IN SHOULDER SECTION TO BE 16 FT. WITH 12 FT. RADIUS UNLESS SHOWN OTHERWISE ON PLANS.
2. ALL RADII AT BEGIN AND END OF PROP. 5" MONO. CONC. ISLAND ARE 2' UNLESS OTHERWISE SHOWN.

Plans prepared by:
KO & ASSOCIATES, P.C.
Consulting Engineers
1011 SCHAUB DR., SUITE #202
RALEIGH, N.C. 27606
(919)-851-6066

7/2/99

REVISIONS

PROJECT REFERENCE NO.	SHEET NO.
U-4026	6
U-4026A R/W SHEET NO.	6

ROADWAY DESIGN ENGINEER: NORTH CAROLINA PROFESSIONAL ENGINEER SEAL 20774 ENGINEER STEPHEN R. WHITLEY 10-26-06

HYDRAULICS ENGINEER: NORTH CAROLINA PROFESSIONAL ENGINEER SEAL 021162 ENGINEER HERBERT TURNER, JR. 10-26-06

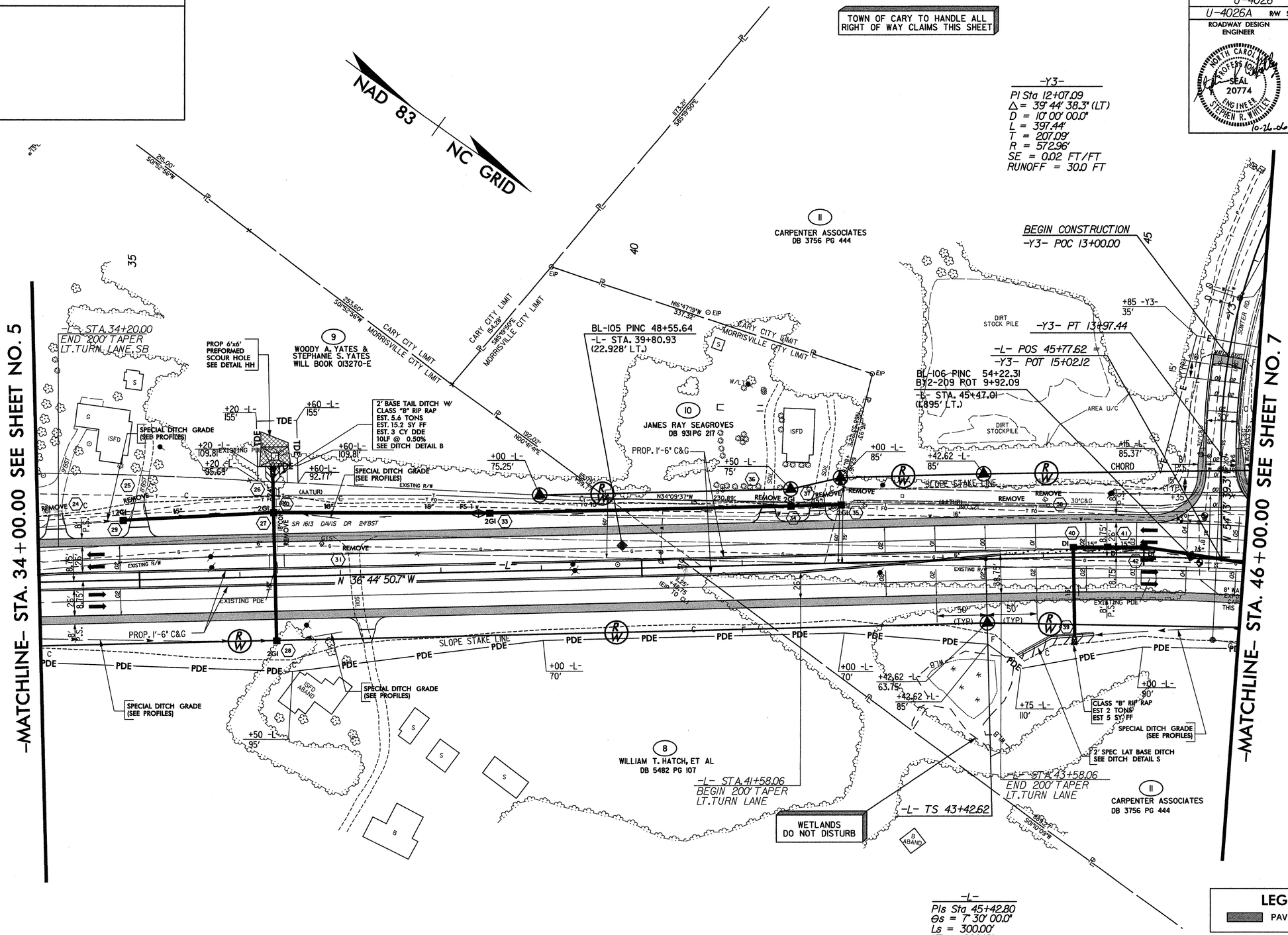

NOTES:
1. ALL DRIVEWAYS IN SHOULDER SECTION TO BE 16 FT. WITH 12 FT. RADIUS UNLESS SHOWN OTHERWISE ON PLANS.
2. ALL RADII AT BEGIN AND END OF PROP. 5' MONO. CONC. ISLAND ARE 2' UNLESS OTHERWISE SHOWN.

FOR DITCH DETAILS, SEE SHEET 2-H & 2-I
FOR INTERSECTION DETAIL, SEE SHEET 2-J
FOR C&G TRANSITION SECTION, SEE SHEET 2-N
FOR -L- PROFILE, SEE SHEET 39
FOR -Y3- PROFILE, SEE SHEET 51

LEGEND
PAVED SHOULDER

Plans prepared by:
KO & ASSOCIATES, P.C.
Consulting Engineers
1011 SCHAUB DR., SUITE #202
RALEIGH, N.C. 27606
(919)-851-6066

10/26/2006
R:\Roadway\Proj\u4026p06.psh
Ko & Associates, P.C.

REVISIONS

PROJECT REFERENCE NO.	SHEET NO.
U-4026	7
U-4026A R/W SHEET NO.	7
ROADWAY DESIGN ENGINEER	HYDRAULICS ENGINEER
NORTH CAROLINA PROFESSIONAL SEAL 20774 ENGINEER STEPHEN R. WHITLEY 10-26-06	NORTH CAROLINA PROFESSIONAL SEAL 021162 ENGINEER W. HERBERT TURNER, JR. 10-26-06

TOWN OF CARY TO HANDLE ALL RIGHT OF WAY CLAIMS THIS SHEET

NAD 83 / NC GRID

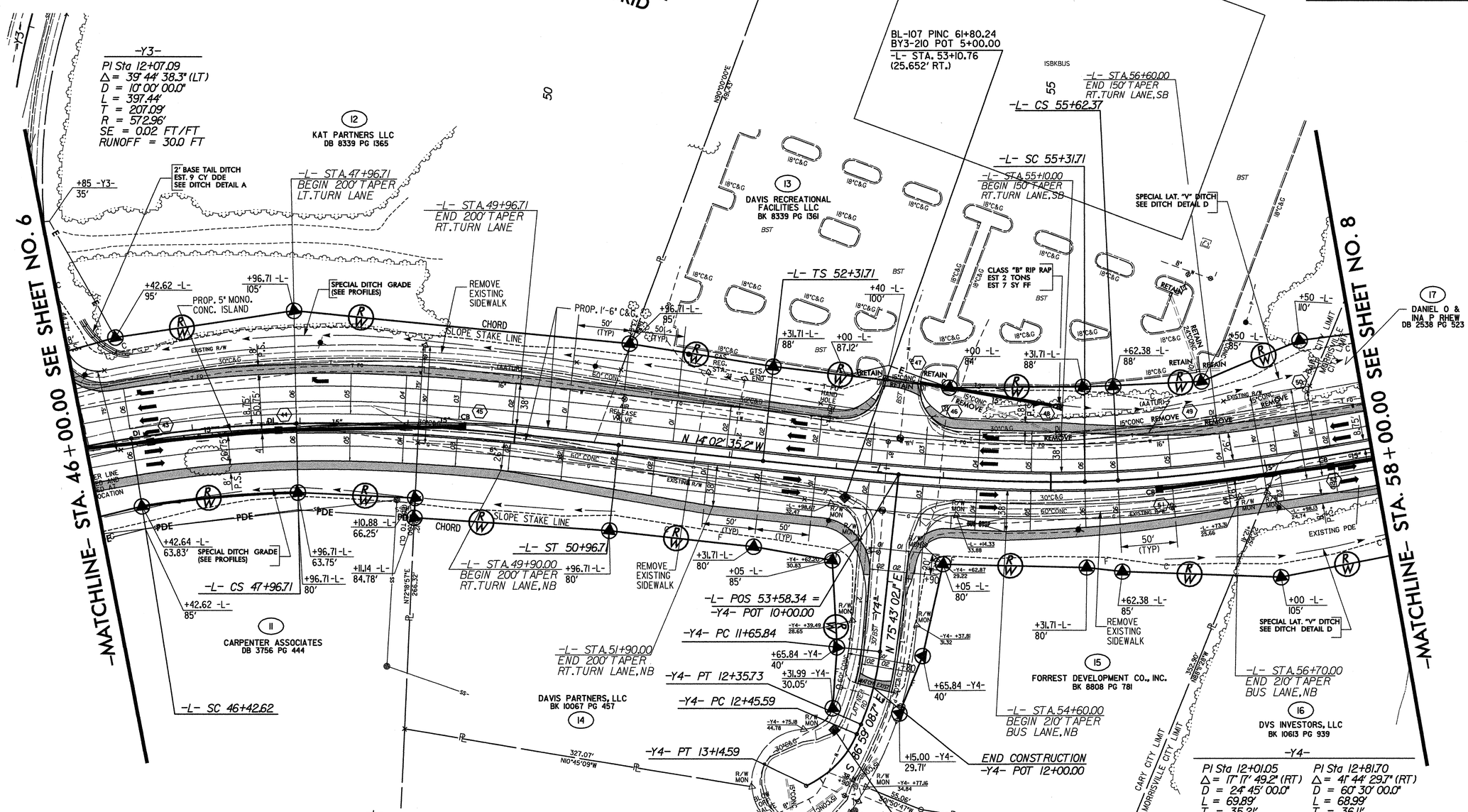

NOTES:
1. ALL DRIVEWAYS IN SHOULDER SECTION TO BE 16 FT. WITH 12 FT. RADIUS UNLESS SHOWN OTHERWISE ON PLANS.
2. ALL RADII AT BEGIN AND END OF PROP. 5' MONO. CONC. ISLAND ARE 2' UNLESS OTHERWISE SHOWN.

FOR DITCH DETAILS, SEE SHEET 2-H & 2-I
FOR INTERSECTION DETAIL, SEE SHEET 2-J
FOR C&G TRANSITION SECTION, SEE SHEET 2-N
FOR -L- PROFILE, SEE SHEET 39
FOR -Y4- PROFILE, SEE SHEET 51

LEGEND
PAVED SHOULDER

Plans prepared by:
KO & ASSOCIATES, P.C.
Consulting Engineers
1011 SCHAUB DR., SUITE #202
RALEIGH, N.C. 27606
(919)-851-6066

PROJECT REFERENCE NO.	SHEET NO.
U-4026	8
U-4026A R/W SHEET NO.	8
ROADWAY DESIGN ENGINEER	HYDRAULICS ENGINEER
NORTH CAROLINA PROFESSIONAL SEAL 20774 ENGINEER STEPHEN R. WHILLEY 10-26-06	NORTH CAROLINA PROFESSIONAL SEAL 021162 ENGINEER W. HERBERT TURNER, JR. 10-26-06

REVISIONS

7/2/99

TOWN OF CARY TO HANDLE ALL RIGHT OF WAY CLAIMS THIS SHEET

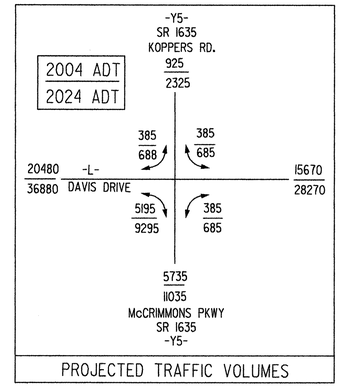

PROJECTED TRAFFIC VOLUMES

NAD 83 / NC GRID

-Y5-
PI Sta 22+49.68
Δ = 9° 31' 59.3" (RT)
D = 3° 00' 00.0"
L = 317.77'
T = 159.25'
R = 1,909.86'
SE = 0.05 FT/FT
RUNOFF = 100.0 FT

DO NOT DISTURB. CONTROLLED ENVIRONMENT VAULT AND FIBER OPTIC. CONTRACTOR TO USE EXTREME CAUTION WHEN WORKING IN THIS AREA.

-MATCHLINE- STA. 22+50.00
SEE SHEET NO. 30

-Y5- STA.23+35.00
END 400' TAPER
LT TURN LANES,EB

-MATCHLINE- STA. 58+00.00 SEE SHEET NO. 7

-MATCHLINE- STA. 70+00.00 SEE SHEET NO. 9

-MATCHLINE- STA. 28+00.00
SEE SHEET NO. 31

-L- ST 58+62.37

SPECIAL LAT. "V" DITCH W/CLASS "B" RIP RAP
EST. 110 TONS
EST. 311 SY FF
SEE DITCH DETAIL C

CLASS "B" RIP RAP
EST. 11 TONS
EST. 28 SY FF

BL-109 PINC 69+74.91
-L- STA. 61+04.03
(0.783' LT.)

DVS INVESTORS, LLC
BK 10613 PG 939

DANIEL O. & INA P. RHEW
DB 2538 PG 523

WEXFORD INVESTORS, LLC.
DB 10613 PG 947

-L- TS 61+38.15

-L- SC 63+63.15

CHORD
-L- STA.63+36.09
BEGIN 200' TAPER
RT.TURN LANE,NB

-L- STA.64+86.16
BEGIN 200' TAPER
LT.TURN LANE,NB

-L- STA.65+36.09
END 200' TAPER
RT.TURN LANE,NB

-L- CS 65+75.47

-L- STA.64+95.00
BEGIN 210' TAPER
BUS LANE,SB

-L- STA.66+86.16
END 200' TAPER
LT.TURN LANE,NB

-L- STA.67+05.00
END 210' TAPER
BUS LANE,SB

-L- ST 68+00.47

BL-110 PINC 76+43.57
BY4-213 PINC 21+07.00
-L- STA. 67+78.96
(47.752' RT.)

-Y5- PT 24+08.20

-Y5- PC 24+67.54

-L- POT 68+32.65 =
-Y5- POC 25+13.17

-Y5- PT 27+54.71

N 55° 48' 33.1" E

-Y5- STA.26+90.00
BEGIN 200' TAPER
RT TURN LANE,WB

PHILIP ALLEN RICHARD & SUSAN AUSTIN RICHARD
DB 3062 PG 347

PARK SOUTH VILLAGE, LLC
DB 10850 PG 619

DAVIS PARTNERS LLC
BK 10067 PG 457

WILLIAM H. RICHARD & JANET M. RICHARD
DB 3045 PG 844
BM 1982 PG 717
BM 1972 PG 174

PHILIP ALLEN RICHARD & SUSAN AUSTIN RICHARD
DB 3062 PG 347
BM 1982 PG 923

TOE PROTECTION W/ PERMANENT SOIL REINFORCEMENT MAT
EST. 12 SY
SEE DITCH DETAIL O

MORRISVILLE CITY LIMIT
CARY CITY LIMIT

-L-

Pls Sta 62+88.18	PI Sta 64+69.42	Pls Sta 66+50.49
Θs = 3° 22' 30.0"	Δ = 6° 22' 10.6" (RT)	Θs = 3° 22' 30.0"
Ls = 225.00'	D = 3° 00' 00.0"	Ls = 225.00'
LT = 150.03'	L = 212.32'	LT = 150.03'
ST = 75.02'	T = 106.27'	ST = 75.02'
	R = 1,909.86'	
	SE = 0.05 FT/FT	
	RUNOFF = 225.0 FT	

-L-
Pls Sta 70+60.27
Θs = 2° 00' 00.0"
Ls = 200.00'
LT = 133.34'
ST = 66.67'

-Y5-
PI Sta 26+13.61
Δ = 25° 50' 43.9" (LT)
D = 9° 00' 00.0"
L = 287.17'
T = 146.07'
R = 636.62'
SE = 0.02 FT/FT
RUNOFF = 68.0 FT

NOTES:
1. ALL DRIVEWAYS IN SHOULDER SECTION TO BE 16 FT. WITH 12 FT. RADIUS UNLESS SHOWN OTHERWISE ON PLANS.
2. ALL RADII AT BEGIN AND END OF PROP. 5' MONO. CONC. ISLAND ARE 2' UNLESS OTHERWISE SHOWN.

FOR DITCH DETAILS, SEE SHEET 2-H & 2-I
FOR INTERSECTION DETAIL, SEE SHEET 2-J
FOR -L- PROFILE, SEE SHEET 40
FOR -Y5- PROFILE, SEE SHEET 52

LEGEND
PAVED SHOULDER

Plans prepared by:
KO & ASSOCIATES, P.C.
Consulting Engineers
1011 SCHAUB DR., SUITE #202
RALEIGH, N.C. 27606
(919)-851-6066

10/26/2006
R:\Roadway\Proj\u4026p08.psh
Ko & Associates, P.C.

REVISIONS

TOWN OF CARY TO HANDLE CLAIMS ON PARCEL NO. 14 & 18 THIS SHEET

PROJECT REFERENCE NO.	SHEET NO.
U-4026	9
U-4026A R/W SHEET NO.	9
U-4026B R/W SHEET NO.	4

ROADWAY DESIGN ENGINEER: NORTH CAROLINA PROFESSIONAL SEAL 20774 ENGINEER STEPHEN R. WHITLEY 5-4-06

HYDRAULICS ENGINEER: NORTH CAROLINA PROFESSIONAL SEAL 021162 ENGINEER HERBERT TURNER, JR. 5-4-06

-L-

Pls Sta 70+60.27	Pl Sta 80+83.70	Pls Sta 90+40.41
Θs = 2° 00' 00.0"	Δ = 36° 56' 10.4" (RT)	Θs = 2° 00' 00.0"
Ls = 200.00'	D = 2° 00' 00.0"	Ls = 200.00'
LT = 133.34'	L = 1,846.81'	LT = 133.34'
ST = 66.67'	T = 956.77'	ST = 66.67'
	R = 2,864.79'	
	SE = 0.04 FT/FT	
	RUNOFF = 200.0 FT	

NAD 83 | NC GRID

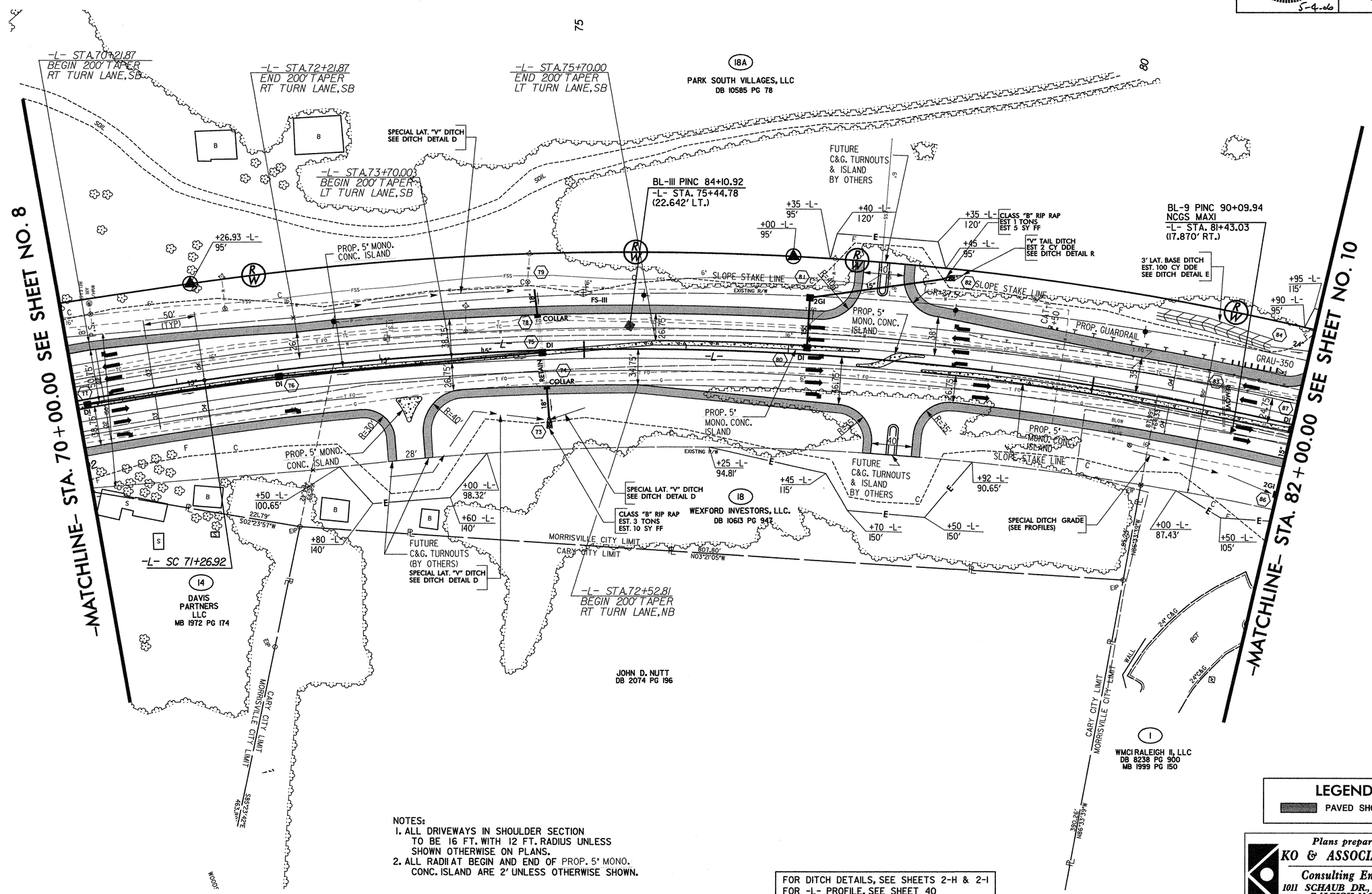

NOTES:
1. ALL DRIVEWAYS IN SHOULDER SECTION TO BE 16 FT. WITH 12 FT. RADIUS UNLESS SHOWN OTHERWISE ON PLANS.
2. ALL RADII AT BEGIN AND END OF PROP. 5' MONO. CONC. ISLAND ARE 2' UNLESS OTHERWISE SHOWN.

FOR DITCH DETAILS, SEE SHEETS 2-H & 2-I
FOR -L- PROFILE, SEE SHEET 40

LEGEND
PAVED SHOULDER

Plans prepared by:
KO & ASSOCIATES, P.C.
Consulting Engineers
1011 SCHAUB DR., SUITE #202
RALEIGH, N.C. 27606
(919)-851-6066

7/2/99

REVISIONS

PROJECT REFERENCE NO.	SHEET NO.
U-4026	10
U-4026A R/W SHEET NO.	10
U-4026B R/W SHEET NO.	5

ROADWAY DESIGN ENGINEER: NORTH CAROLINA PROFESSIONAL SEAL 20774 ENGINEER STEPHEN R. WHITLEY — 5-09-06

HYDRAULICS ENGINEER: NORTH CAROLINA PROFESSIONAL SEAL 021162 ENGINEER HERBERT TURNER, JR. — 5-9-06

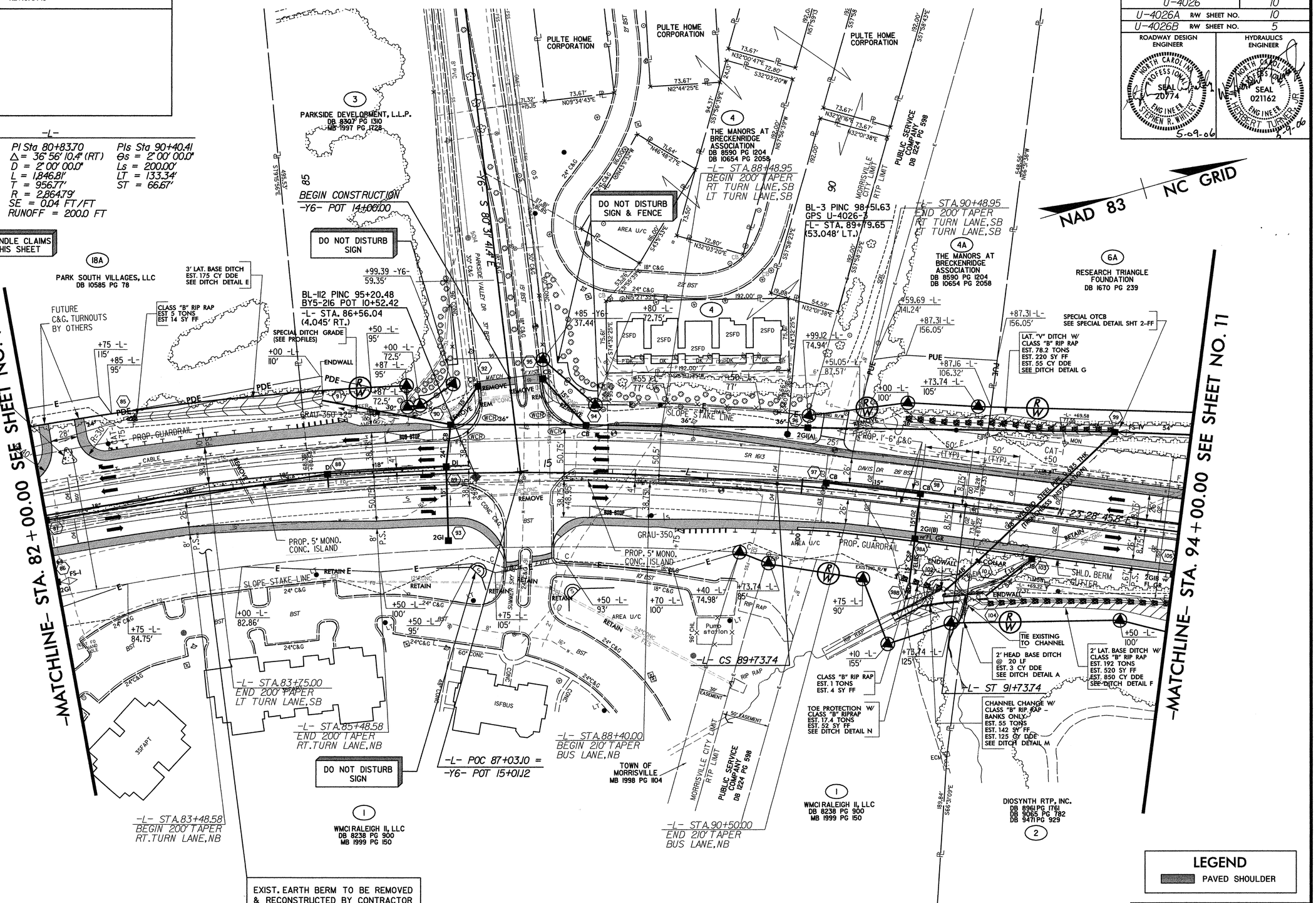

LEGEND

PAVED SHOULDER

FOR DITCH DETAILS, SEE SHEETS 2-H & 2-I
FOR INTERSECTION DETAIL, SEE SHEET 2-K
FOR C&G TRANSITION SECTION, SEE SHEET 2-N
FOR -L- PROFILE, SEE SHEET 41
FOR -Y6- PROFILE, SEE SHEET 53

Plans prepared by:
KO & ASSOCIATES, P.C.
Consulting Engineers
1011 SCHAUB DR., SUITE #202
RALEIGH, N.C. 27606
(919)-851-6066

5/9/2006
R:\Roadway\Proj\u4026pl0.psh
Ko & Associates, P.C.

REVISIONS

PROJECT REFERENCE NO.	SHEET NO.
U-4026	11
U-4026B R/W SHEET NO.	6
ROADWAY DESIGN ENGINEER	HYDRAULICS ENGINEER

NORTH CAROLINA PROFESSIONAL SEAL 20774 ENGINEER STEPHEN R. WHITLEY 10-26-06

NORTH CAROLINA PROFESSIONAL SEAL 021162 ENGINEER HERBERT TURNER, JR. 10-26-06

-L-

PIs Sta 96+79.59
Θs = 7° 30' 00.0"
Ls = 300.00'
LT = 200.18'
ST = 100.16'

PI Sta 103+87.90
Δ = 55° 56' 12.8" (LT)
D = 5° 00' 00.0"
L = 1,118.74'
T = 608.48'
R = 1,145.92'
SE = 0.06 FT/FT
RUNOFF = 300.0 FT

NAD 83 | NC GRID

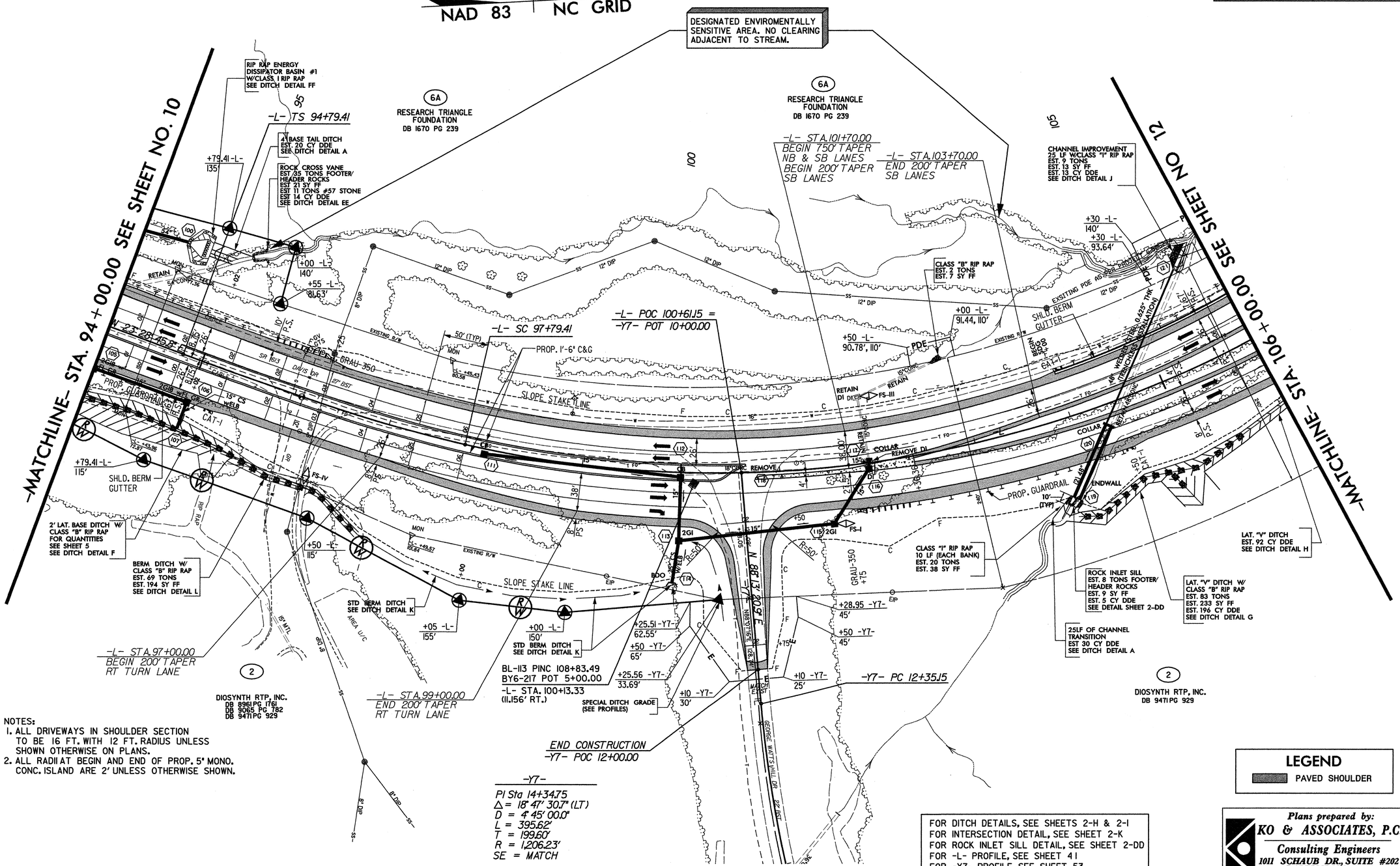

NOTES:
1. ALL DRIVEWAYS IN SHOULDER SECTION TO BE 16 FT. WITH 12 FT. RADIUS UNLESS SHOWN OTHERWISE ON PLANS.
2. ALL RADII AT BEGIN AND END OF PROP. 5" MONO. CONC. ISLAND ARE 2' UNLESS OTHERWISE SHOWN.

FOR DITCH DETAILS, SEE SHEETS 2-H & 2-I
FOR INTERSECTION DETAIL, SEE SHEET 2-K
FOR ROCK INLET SILL DETAIL, SEE SHEET 2-DD
FOR -L- PROFILE, SEE SHEET 41
FOR -Y7- PROFILE, SEE SHEET 53

LEGEND
PAVED SHOULDER

Plans prepared by:
KO & ASSOCIATES, P.C.
Consulting Engineers
1011 SCHAUB DR., SUITE #202
RALEIGH, N.C. 27606
(919)-851-6066

REVISIONS

PROJECT REFERENCE NO.	SHEET NO.
U-4026	12
U-4026B R/W SHEET NO.	7

ROADWAY DESIGN ENGINEER: NORTH CAROLINA PROFESSIONAL SEAL 20774 ENGINEER STEPHEN R. WHITLEY — 5-4-06

HYDRAULICS ENGINEER: NORTH CAROLINA PROFESSIONAL SEAL 021162 ENGINEER HERBERT TURNER JR. — 5-4-06

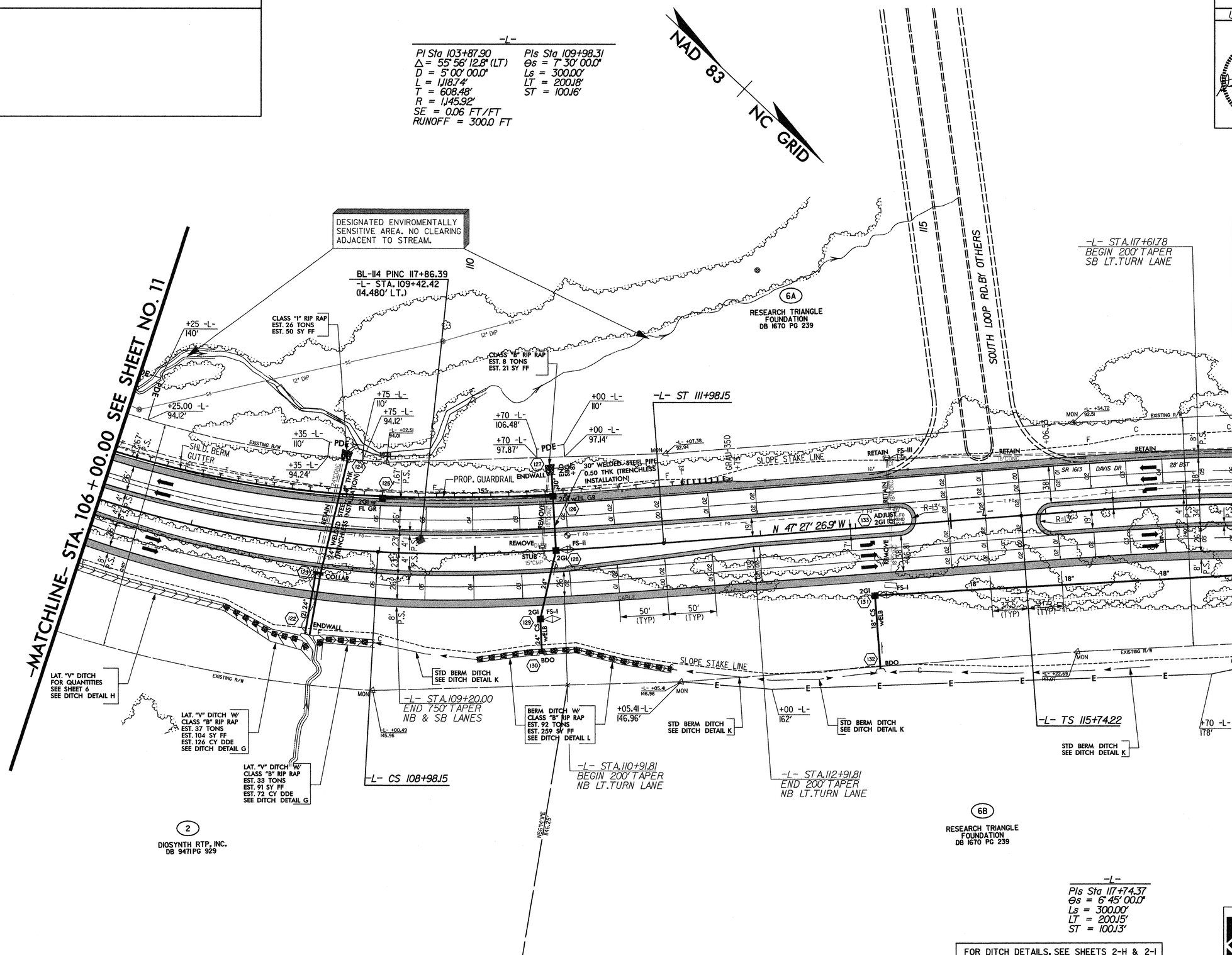

Plans prepared by:
KO & ASSOCIATES, P.C.
Consulting Engineers
1011 SCHAUB DR., SUITE #202
RALEIGH, N.C. 27606
(919)-851-6066

7/2/99

5/3/2006
R:\Roadway\Proj\u4026p12.psh
KO & Associates, P.C.

7/2/99

REVISIONS

PROJECT REFERENCE NO.	SHEET NO.
U-4026	13
U-4026B R/W SHEET NO.	8
ROADWAY DESIGN ENGINEER	HYDRAULICS ENGINEER

NORTH CAROLINA PROFESSIONAL SEAL 26774 ENGINEER STEPHEN R. WHITLEY 5-4-06

NORTH CAROLINA PROFESSIONAL SEAL 021162 ENGINEER HERBERT TURNER JR. 5-4-06

-L-

PIs Sta 126+49.22	PI Sta 128+78.04
Θs = 6° 45' 00.0"	Δ = 11° 34' 03.7" (LT)
Ls = 300.00'	D = 4° 30' 00.0"
LT = 200.15'	L = 257.06'
ST = 100.13'	T = 128.97'
	R = 1,273.24'
	SE = 0.08 FT/FT
	RUNOFF = 300.0 FT

NAD 83 / NC GRID

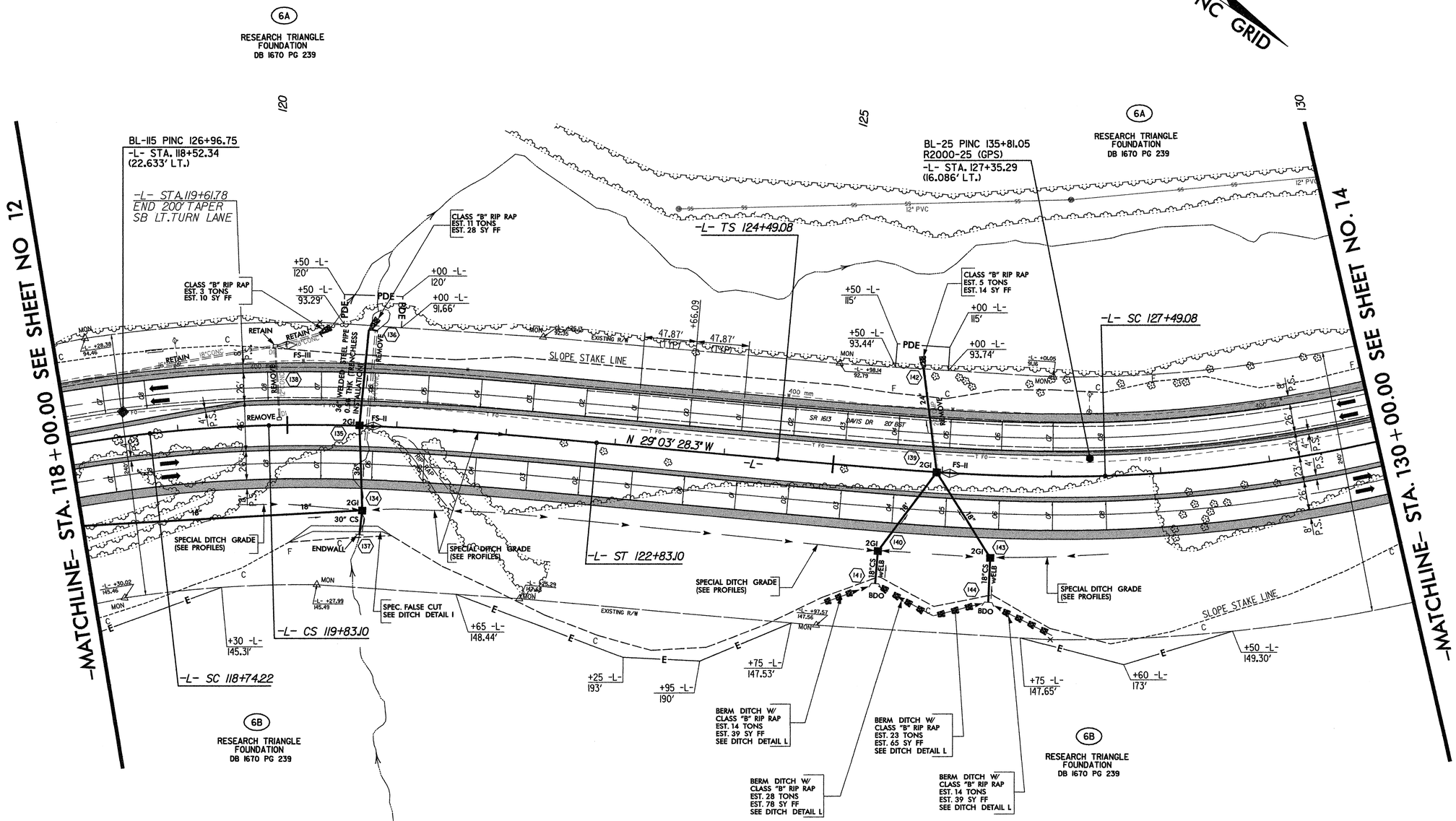

-L-

PIs Sta 117+74.37	PI Sta 119+28.69	PIs Sta 120+83.23
Θs = 6° 45' 00.0"	Δ = 4° 53' 58.6" (RT)	Θs = 6° 45' 00.0"
Ls = 300.00'	D = 4° 30' 00.0"	Ls = 300.00'
LT = 200.15'	L = 108.88'	LT = 200.15'
ST = 100.13'	T = 54.47'	ST = 100.13'
	R = 1,273.24'	
	SE = 0.08 FT/FT	

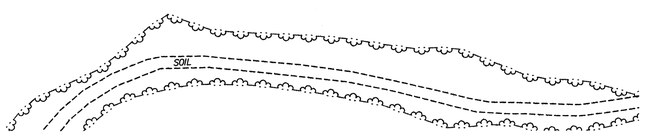

FOR DITCH DETAILS, SEE SHEETS 2-H & 2-I
FOR -L- PROFILE, SEE SHEET 42

LEGEND

PAVED SHOULDER

Plans prepared by:
KO & ASSOCIATES, P.C.
Consulting Engineers
1011 SCHAUB DR., SUITE #202
RALEIGH, N.C. 27606
(919)-851-6066

5/3/2006
R:\Roadway\Proj\u4026pl3.psh
Ko & Associates, P.C.

7/2/99

REVISIONS

PROJECT REFERENCE NO.	SHEET NO.
U-4026	14
U-4026B R/W SHEET NO.	9

ROADWAY DESIGN ENGINEER: NORTH CAROLINA PROFESSIONAL SEAL 20774 ENGINEER STEPHEN K. WHITLEY 5-4-06

HYDRAULICS ENGINEER: NORTH CAROLINA PROFESSIONAL SEAL 021162 ENGINEER HERBERT TURNER, JR. 5-4-06

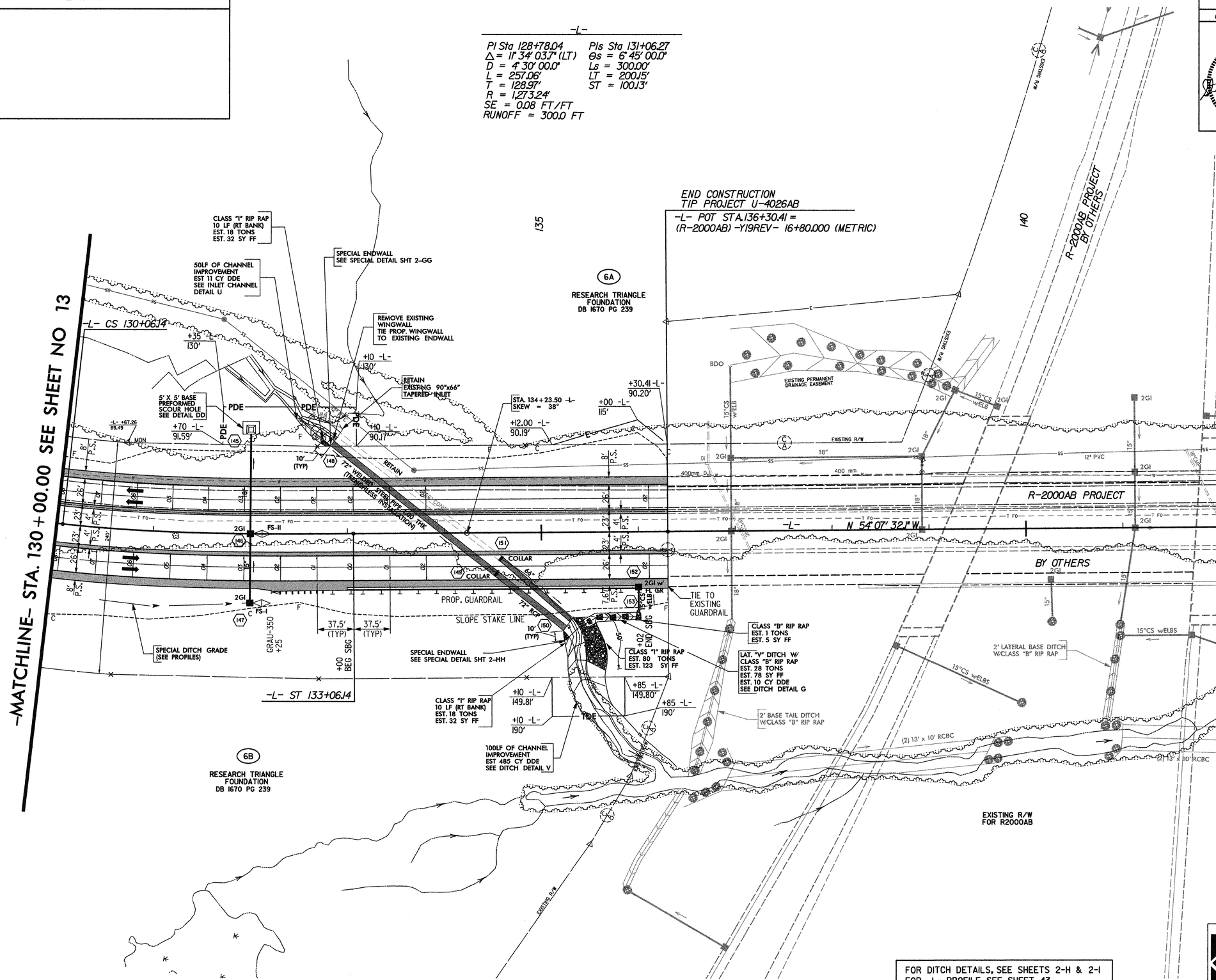

LEGEND

PAVED SHOULDER

FOR DITCH DETAILS, SEE SHEETS 2-H & 2-I
FOR -L- PROFILE, SEE SHEET 43

Plans prepared by:
KO & ASSOCIATES, P.C.
Consulting Engineers
1011 SCHAUB DR., SUITE #202
RALEIGH, N.C. 27606
(919)-851-6066

5/3/2006
R:\Roadway\Proj\u4026b14.psh
Ko & Associates, P.C.

7/2/99

REVISIONS

PROJECT REFERENCE NO.	SHEET NO.
U-4026	15
U-4026B R/W SHEET NO.	10

ROADWAY DESIGN ENGINEER	HYDRAULICS ENGINEER
NORTH CAROLINA PROFESSIONAL SEAL 20774 ENGINEER STEPHEN R. WHITLEY 5-4-06	NORTH CAROLINA PROFESSIONAL SEAL 021162 ENGINEER HERBERT TURNER, JR. 5-4-06

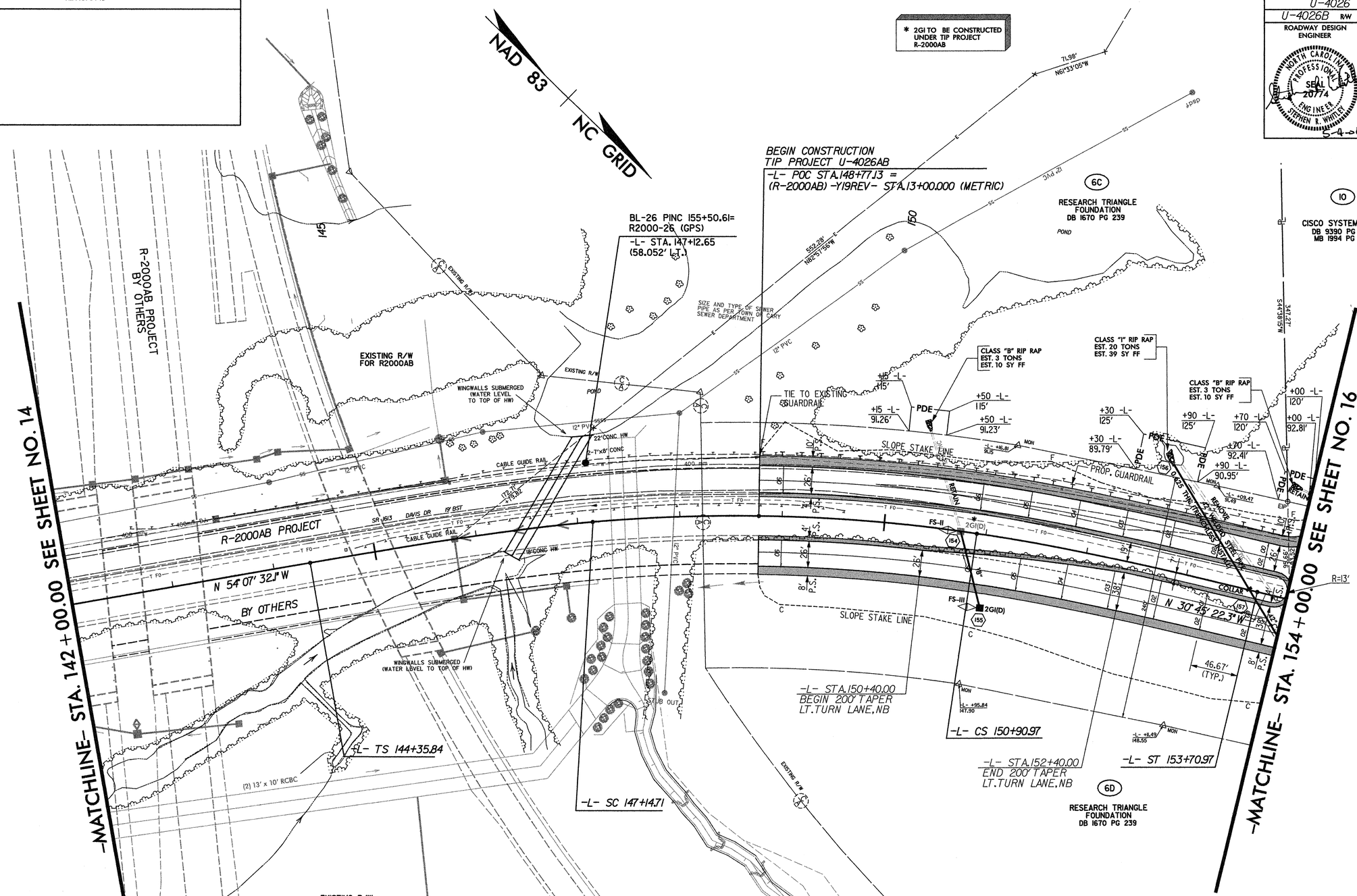

LEGEND

PAVED SHOULDER

Plans prepared by:
KO & ASSOCIATES, P.C.
Consulting Engineers
1011 SCHAUB DR., SUITE #202
RALEIGH, N.C. 27606
(919)-851-6066

5/3/2006
R:\Roadway\Proj\u4026p15.psh
Ko & Associates, P.C.

7/2/99

REVISIONS

PROJECT REFERENCE NO.	SHEET NO.
U-4026	16
U-4026B R/W SHEET NO.	11

ROADWAY DESIGN ENGINEER: NORTH CAROLINA PROFESSIONAL SEAL 20774 ENGINEER STEPHEN R. WHITLEY — 5-4-06

HYDRAULICS ENGINEER: NORTH CAROLINA PROFESSIONAL SEAL 021162 ENGINEER HERBERT TURNER, JR. — 5-4-06

NAD 83 / NC GRID

-L-

PIs Sta 160+52.73	PI Sta 161+49.84	PI Sta 165+33.95
Θs = 2° 24' 00.0"	Δ = 0° 41' 05.9" (LT)	Δ = 14° 40' 45.7" (LT)
Ls = 240.00'	D = 2° 00' 00.0"	D = 2° 00' 00.0"
LT = 160.01'	L = 34.25'	L = 733.97'
ST = 80.01'	T = 17.12'	T = 369.00'
	R = 2,864.79'	R = 2,864.79'

SE = 0.05 FT/FT
RUNOFF = 240.0 FT

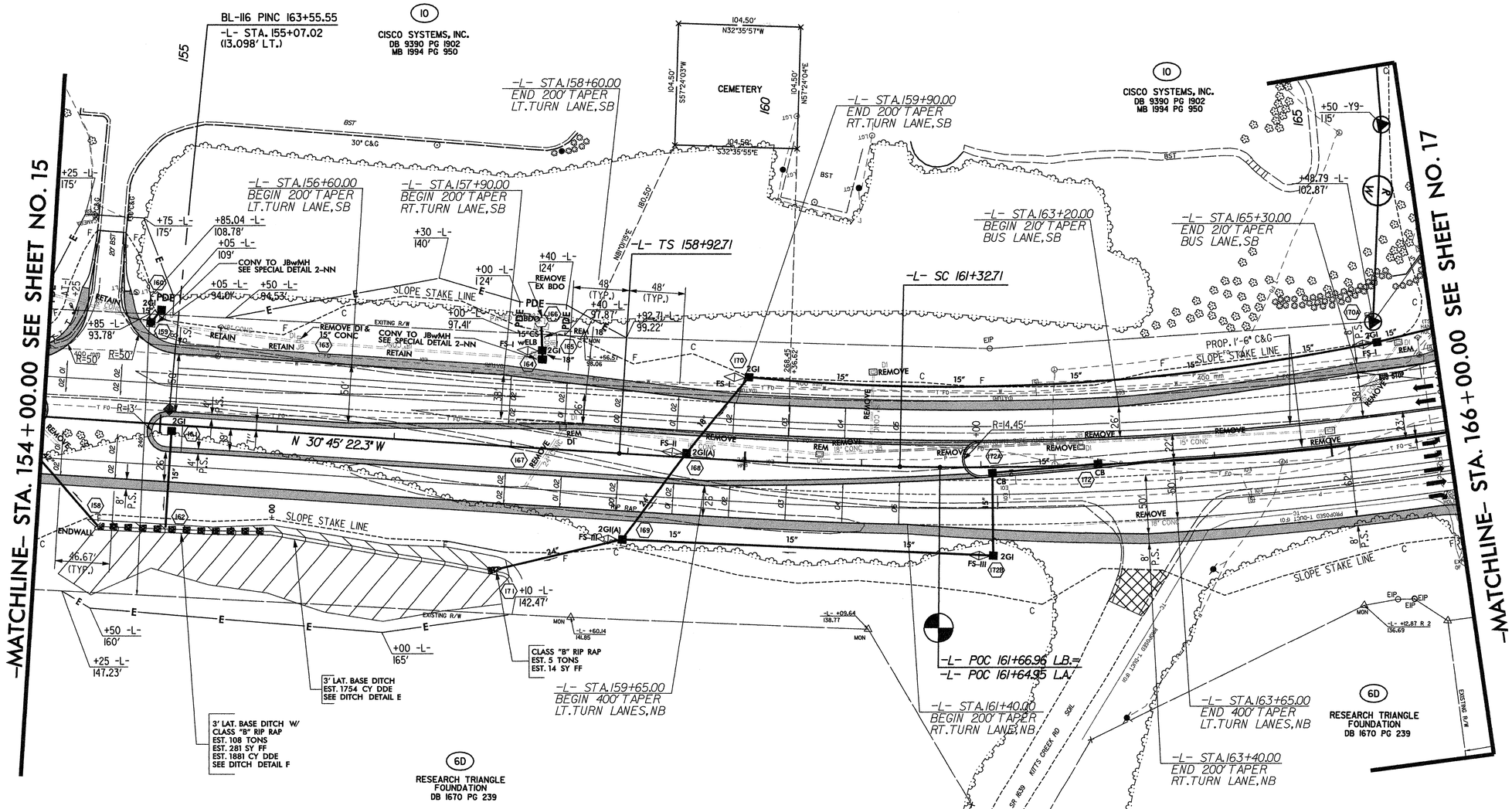

NOTES:
1. ALL DRIVEWAYS IN SHOULDER SECTION TO BE 16 FT. WITH 12 FT. RADIUS UNLESS SHOWN OTHERWISE ON PLANS.
2. ALL RADII AT BEGIN AND END OF PROP. 5" MONO. CONC. ISLAND ARE 2' UNLESS OTHERWISE SHOWN.

FOR DITCH DETAILS, SEE SHEETS 2-H & 2-I
FOR C&G TRANSITION SECTION, SEE SHEET 2-N
FOR -L- PROFILE, SEE SHEET 44

LEGEND
- PAVED SHOULDER
- PAVEMENT REMOVAL

Plans prepared by:
KO & ASSOCIATES, P.C.
Consulting Engineers
1011 SCHAUB DR., SUITE #202
RALEIGH, N.C. 27606
(919)-851-6066

5/5/2006
R:\Roadway\Proj\u4026pl6.psh
Ko & Associates, P.C.

REVISIONS

PROJECT REFERENCE NO.	SHEET NO.
U-4026	17
U-4026B R/W SHEET NO.	12
ROADWAY DESIGN ENGINEER	HYDRAULICS ENGINEER
NORTH CAROLINA PROFESSIONAL SEAL 20774 ENGINEER STEPHEN R. WHITLEY 6-12-06	NORTH CAROLINA PROFESSIONAL SEAL 021162 ENGINEER HERBERT TURNER, JR. 6-12-06

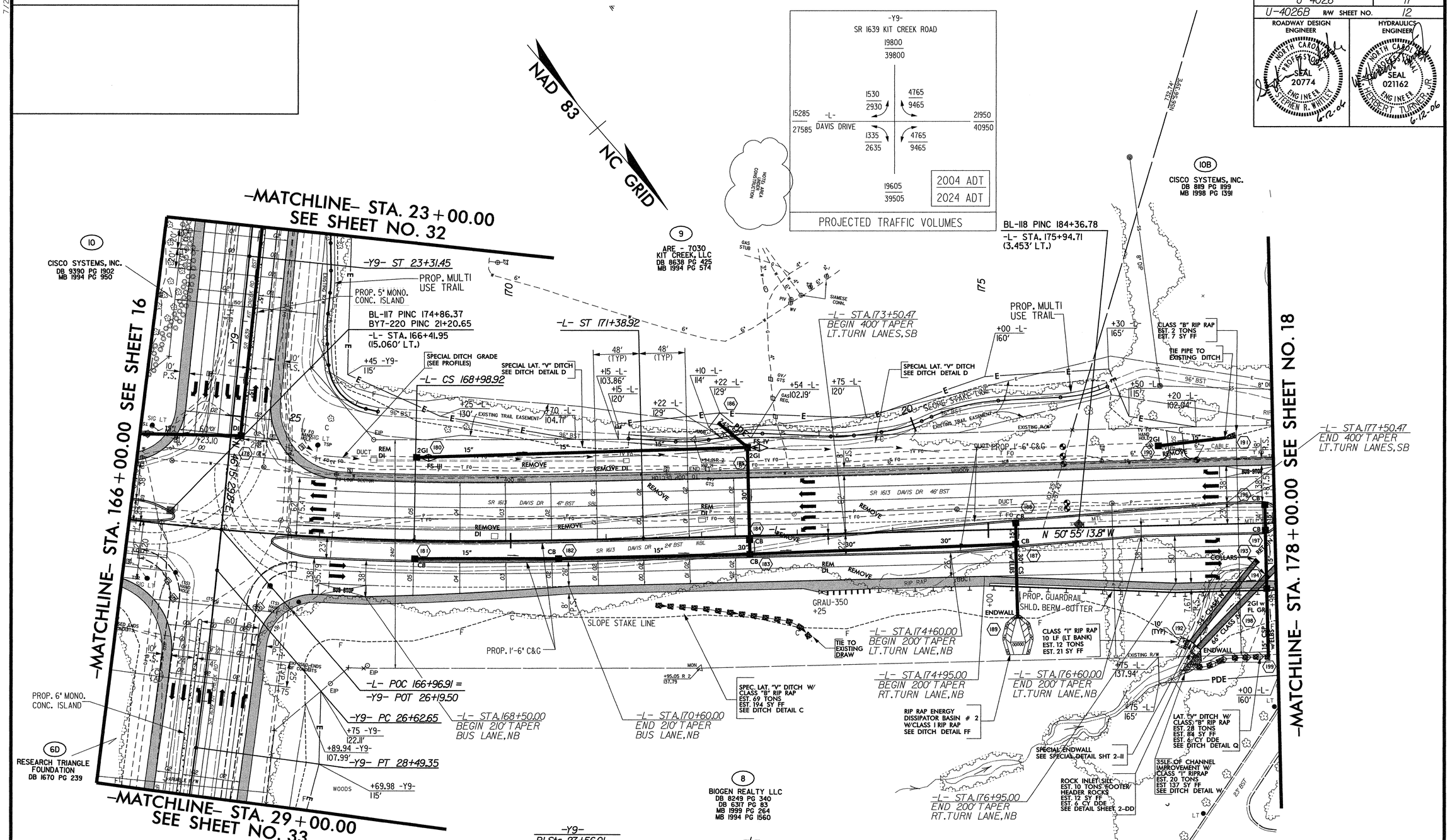

-Y9-

PI Sta 27+56.01
Δ = 1° 52' 01.5" (RT)
D = 1° 00' 00.0"
L = 186.71'
T = 93.36'
R = 5,729.58'
SE = 0.02 FT/FT

-L-

PI Sta 165+33.95
Δ = 14° 40' 45.6" (LT)
D = 2° 00' 00.0"
L = 733.97'
T = 369.00'
R = 2,864.79'
SE = 0.05 FT/FT
RUNOFF = 240.0 FT

PIs Sta 169+78.93
Θs = 2° 24' 00.0"
Ls = 240.00'
LT = 160.01'
ST = 80.01'

NOTES:
1. ALL DRIVEWAYS IN SHOULDER SECTION TO BE 16 FT. WITH 12 FT. RADIUS UNLESS SHOWN OTHERWISE ON PLANS.
2. ALL RADII AT BEGIN AND END OF PROP. 5' MONO. CONC. ISLAND ARE 2' UNLESS OTHERWISE SHOWN.

FOR DITCH DETAILS, SEE SHEETS 2-H& 2-I
FOR INTERSECTION DETAIL, SEE SHEET 2-K
FOR TRAIL PLANS, SEE SHEETS 2-O THRU 2-P
FOR ROCK INLET SILL DETAIL, SEE SHEET 2-DD
FOR -L- PROFILE, SEE SHEET 44
FOR -Y9- PROFILE, SEE SHEET 54

Plans prepared by:
KO & ASSOCIATES, P.C.
Consulting Engineers
1011 SCHAUB DR., SUITE #202
RALEIGH, N.C. 27606
(919)-851-6066

7/2/99
6/8/2006
R:\Roadway\Proj\u4026p17.psh
Ko & Associates, P.C.

7/2/99

REVISIONS

PROJECT REFERENCE NO.	SHEET NO.
U-4026	18
U-4026B R/W SHEET NO.	13
ROADWAY DESIGN ENGINEER	HYDRAULICS ENGINEER
NORTH CAROLINA PROFESSIONAL SEAL 20774 ENGINEER STEPHEN R. WHITLEY 5-4-06	NORTH CAROLINA PROFESSIONAL SEAL 021162 ENGINEER HERBERT TURNER, JR. 5-4-06

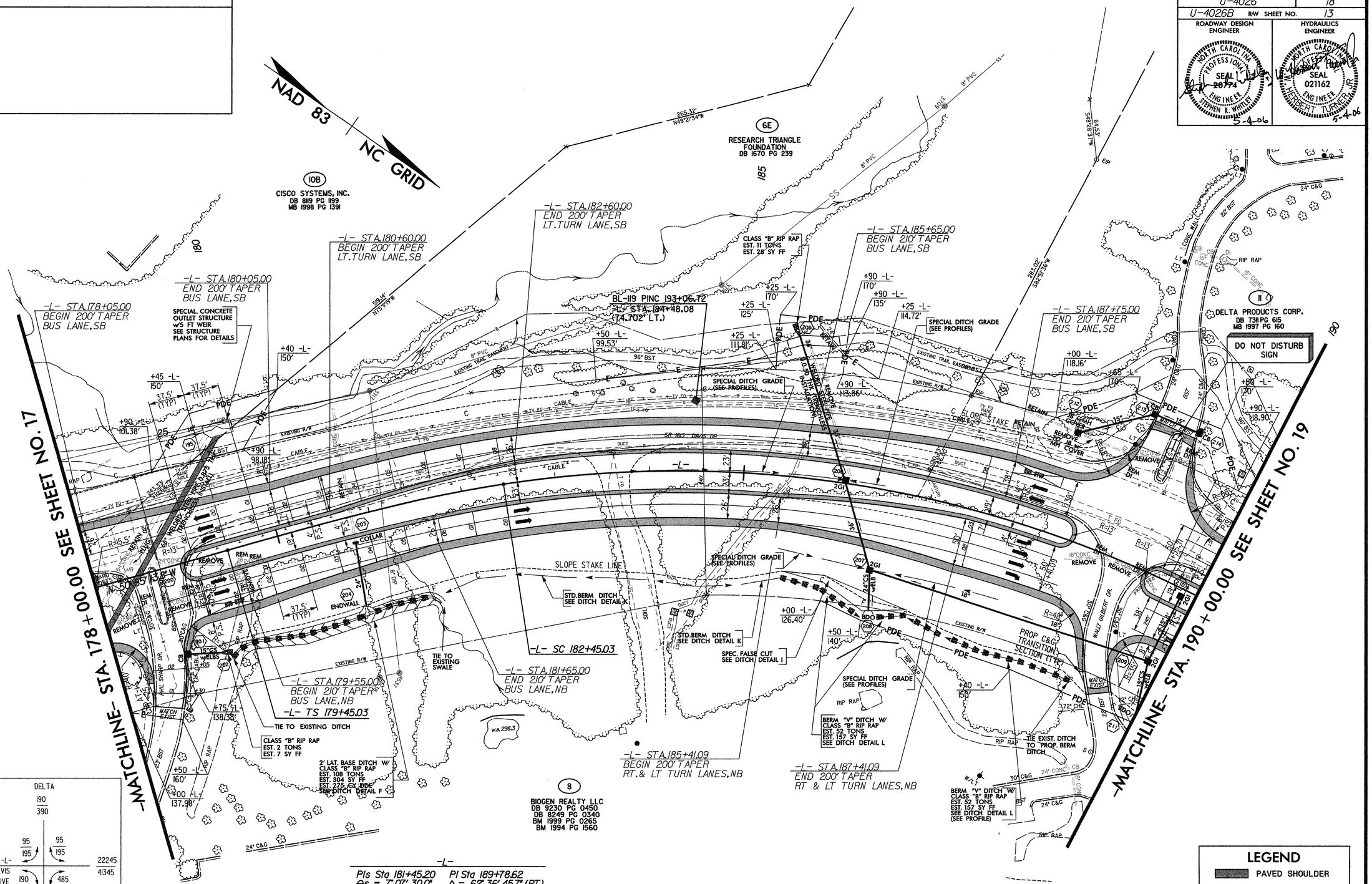

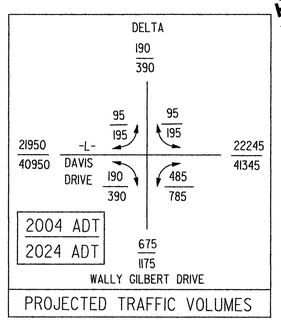

-L-

PIs Sta 181+45.20	PI Sta 189+78.62
Θs = 7° 07' 30.0"	Δ = 62° 36' 45.7" (RT)
Ls = 300.00'	D = 4° 45' 00.0"
LT = 200.16'	L = 1,318.16'
ST = 100.15'	T = 733.58'
	R = 1,206.23'
	SE = 0.08 FT/FT
	RUNOFF = 300.0 FT

NOTES:
1. ALL DRIVEWAYS IN SHOULDER SECTION TO BE 16 FT. WITH 12 FT. RADIUS UNLESS SHOWN OTHERWISE ON PLANS.
2. ALL RADII AT BEGIN AND END OF PROP. 5" MONO. CONC. ISLAND ARE 2' UNLESS OTHERWISE SHOWN.

FOR DITCH DETAILS, SEE SHEETS 2-H & 2-I
FOR C&G TRANSITION SECTION, SEE SHEET 2-N
FOR -L- PROFILE, SEE SHEET 45

LEGEND
PAVED SHOULDER

Plans prepared by:
KO & ASSOCIATES, P.C.
Consulting Engineers
1011 SCHAUB DR., SUITE #202
RALEIGH, N.C. 27606
(919)-851-6066

5/3/2006
R:\Roadway\Proj\u4026p18.psh
Ko & Associates, P.C.

PROJECT REFERENCE NO.	SHEET NO.
U-4026	19
U-4026B R/W SHEET NO.	14

ROADWAY DESIGN ENGINEER — NORTH CAROLINA PROFESSIONAL SEAL 20774 ENGINEER STEPHEN R. WHITLEY — 7-12-06

HYDRAULICS ENGINEER — NORTH CAROLINA PROFESSIONAL SEAL 021162 ENGINEER W. HERBERT TURNER, JR. — 7-13-06

REVISIONS

7/12/99

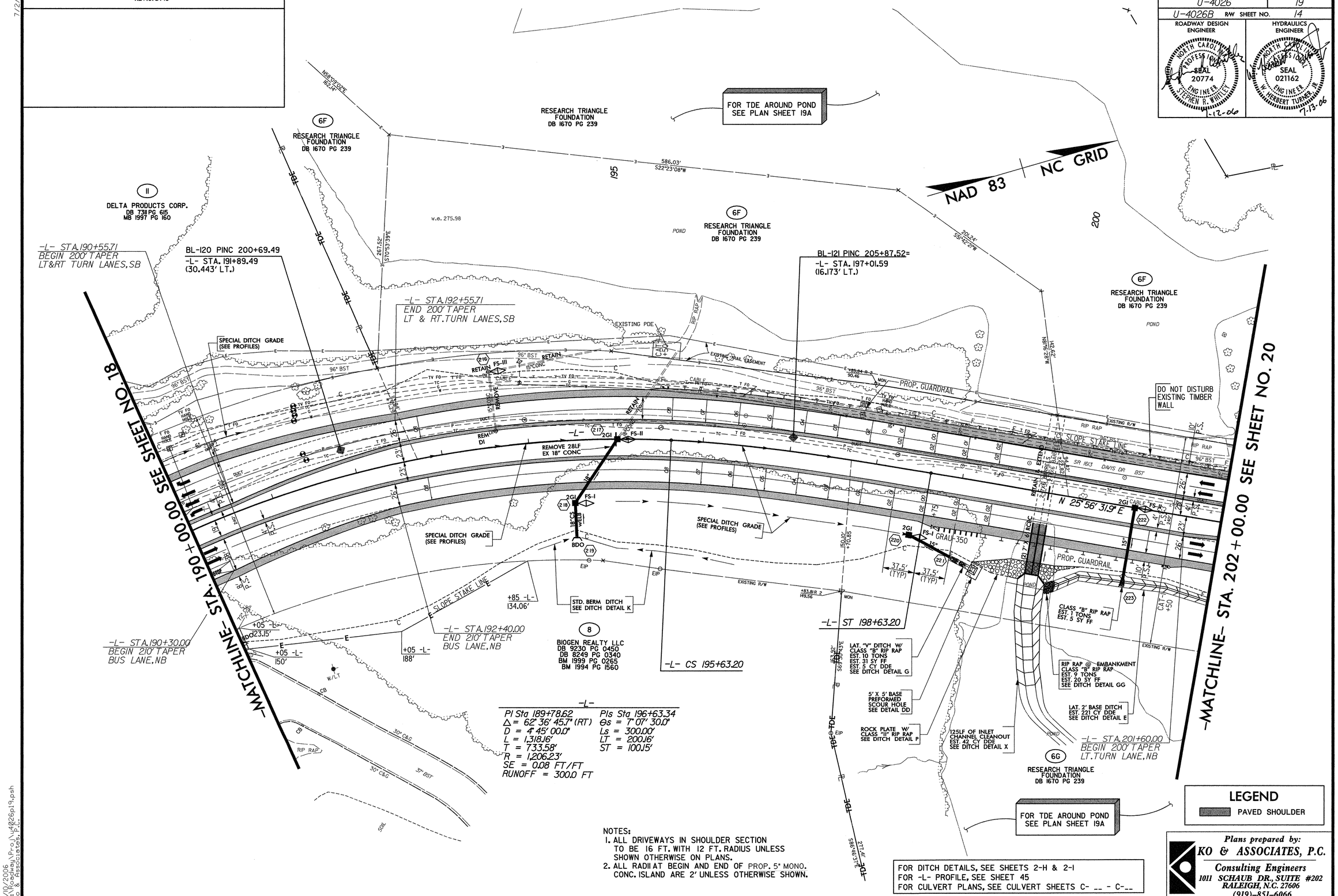

NOTES:
1. ALL DRIVEWAYS IN SHOULDER SECTION TO BE 16 FT. WITH 12 FT. RADIUS UNLESS SHOWN OTHERWISE ON PLANS.
2. ALL RADII AT BEGIN AND END OF PROP. 5" MONO. CONC. ISLAND ARE 2' UNLESS OTHERWISE SHOWN.

FOR DITCH DETAILS, SEE SHEETS 2-H & 2-I
FOR -L- PROFILE, SEE SHEET 45
FOR CULVERT PLANS, SEE CULVERT SHEETS C- __ - C-__

Plans prepared by:
KO & ASSOCIATES, P.C.
Consulting Engineers
1011 SCHAUB DR., SUITE #202
RALEIGH, N.C. 27606
(919)-851-6066

7/10/2006
R:\Roadway\Proj\u4026pl9.psh
Ko & Associates, P.C.

7/2/99

REVISIONS

PROJECT REFERENCE NO.	SHEET NO.
U-4026	19A
U-4026B R/W SHEET NO.	14A

ROADWAY DESIGN ENGINEER

NORTH CAROLINA PROFESSIONAL SEAL 20774 ENGINEER STEPHEN R. WHITLEY 5-4-06

HYDRAULICS ENGINEER

NORTH CAROLINA PROFESSIONAL SEAL 021162 ENGINEER HERBERT TURNER JR. 5-4-06

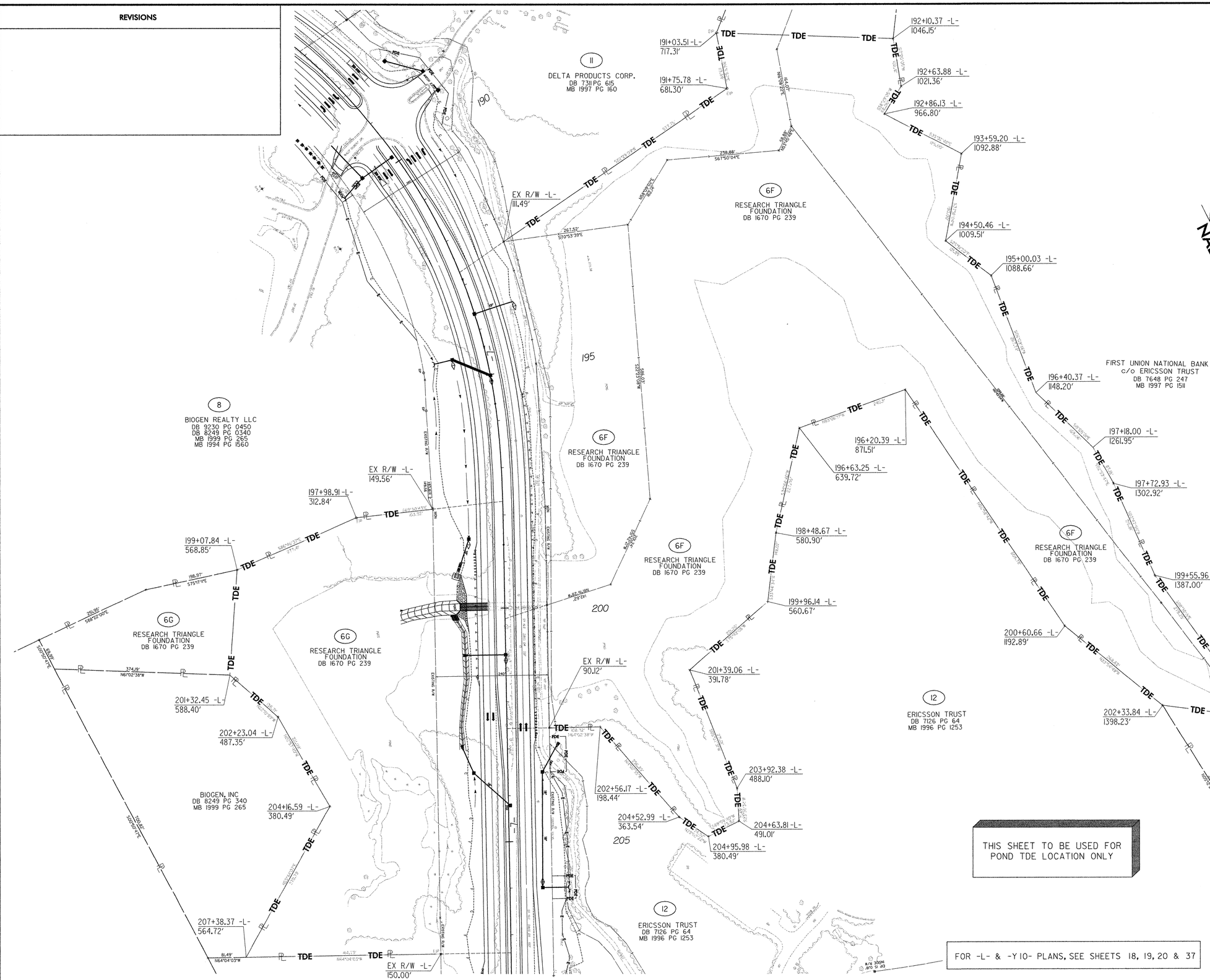

Plans prepared by:
KO & ASSOCIATES, P.C.
Consulting Engineers
1011 SCHAUB DR., SUITE #202
RALEIGH, N.C. 27606
(919)-851-6066

5/3/2006
R:\Roadway\Proj\u4026pl19a.psh
Ko & Associates, P.C.

7/2/99

REVISIONS

PROJECT REFERENCE NO.	SHEET NO.
U-4026	20
U-4026B RW SHEET NO.	15

ROADWAY DESIGN ENGINEER — NORTH CAROLINA PROFESSIONAL SEAL 20774 ENGINEER STEPHEN R. WHITLEY — 5-4-06

HYDRAULICS ENGINEER — NORTH CAROLINA PROFESSIONAL SEAL 021162 ENGINEER HERBERT TURNER JR. — 5-4-06

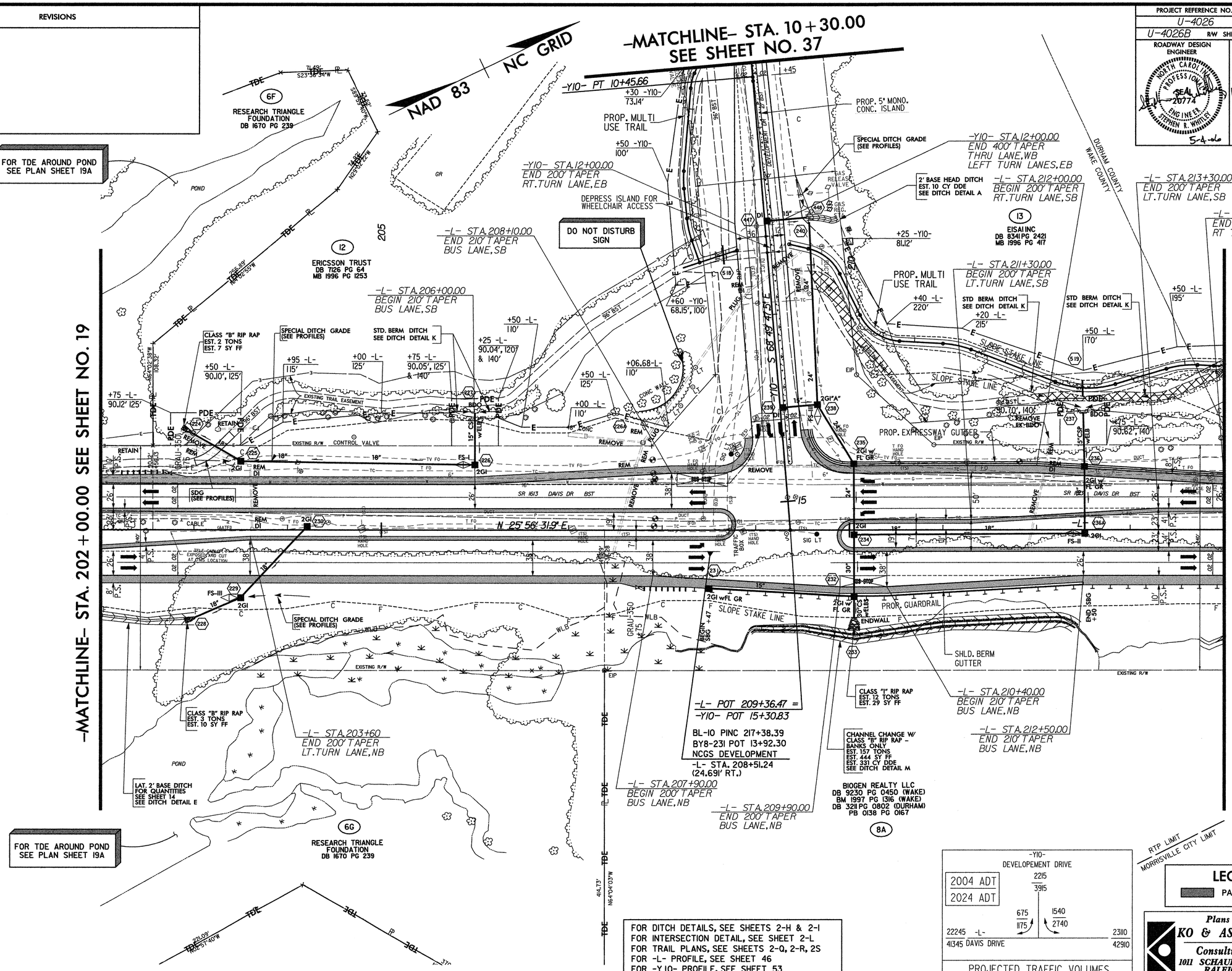

FOR DITCH DETAILS, SEE SHEETS 2-H & 2-I
FOR INTERSECTION DETAIL, SEE SHEET 2-L
FOR TRAIL PLANS, SEE SHEETS 2-Q, 2-R, 2S
FOR -L- PROFILE, SEE SHEET 46
FOR -Y10- PROFILE, SEE SHEET 53

-Y10- DEVELOPEMENT DRIVE

2004 ADT	2215
2024 ADT	3915

22245 -L- 23110
41345 DAVIS DRIVE 42910
675 / 1175 — 1540 / 2740

PROJECTED TRAFFIC VOLUMES

LEGEND

PAVED SHOULDER

Plans prepared by:
KO & ASSOCIATES, P.C.
Consulting Engineers
1011 SCHAUB DR., SUITE #202
RALEIGH, N.C. 27606
(919)-851-6066

5/3/2006
R:\Roadway\Proj\u4026p20.psh
Ko & Associates, P.C.

7/2/99

REVISIONS

PROJECT REFERENCE NO.	SHEET NO.
U-4026	21
U-4026B R/W SHEET NO.	16

ROADWAY DESIGN ENGINEER: NORTH CAROLINA PROFESSIONAL SEAL 20774 ENGINEER STEPHEN R. WHITLEY 5-4-06

HYDRAULICS ENGINEER: NORTH CAROLINA PROFESSIONAL SEAL 021162 ENGINEER HERBERT TURNER, JR. 5-4-06

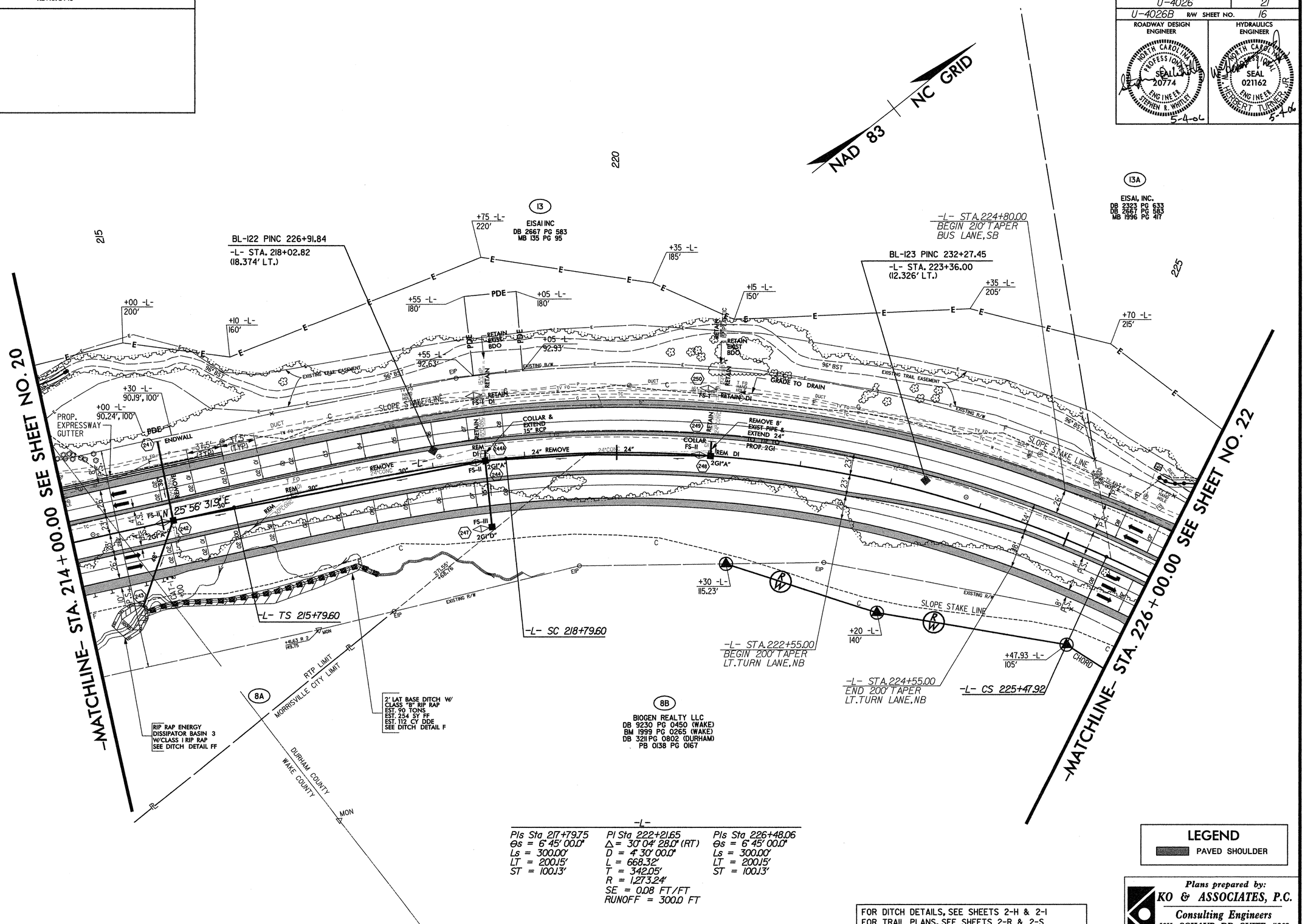

-L-

Pls Sta 217+79.75	Pl Sta 222+21.65	Pls Sta 226+48.06
Θs = 6° 45' 00.0"	Δ = 30° 04' 28.0" (RT)	Θs = 6° 45' 00.0"
Ls = 300.00'	D = 4° 30' 00.0"	Ls = 300.00'
LT = 200.15'	L = 668.32'	LT = 200.15'
ST = 100.13'	T = 342.05'	ST = 100.13'
	R = 1,273.24'	
	SE = 0.08 FT/FT	
	RUNOFF = 300.0 FT	

FOR DITCH DETAILS, SEE SHEETS 2-H & 2-I
FOR TRAIL PLANS, SEE SHEETS 2-R & 2-S
FOR -L- PROFILE, SEE SHEET 46

LEGEND

PAVED SHOULDER

Plans prepared by:
KO & ASSOCIATES, P.C.
Consulting Engineers
1011 SCHAUB DR., SUITE #202
RALEIGH, N.C. 27606
(919)-851-6066

5/3/2006
R:\Roadway\Proj\u4026p21.psh
Ko & Associates, P.C.

7/12/99

REVISIONS

PROJECT REFERENCE NO.	SHEET NO.
U-4026	22
U-4026B R/W SHEET NO.	17

ROADWAY DESIGN ENGINEER
NORTH CAROLINA PROFESSIONAL SEAL 20774 ENGINEER STEPHEN R. WHITLEY
7-12-06

HYDRAULICS ENGINEER
NORTH CAROLINA PROFESSIONAL SEAL 021162 ENGINEER W. HERBERT TURNER, JR.
7-13-06

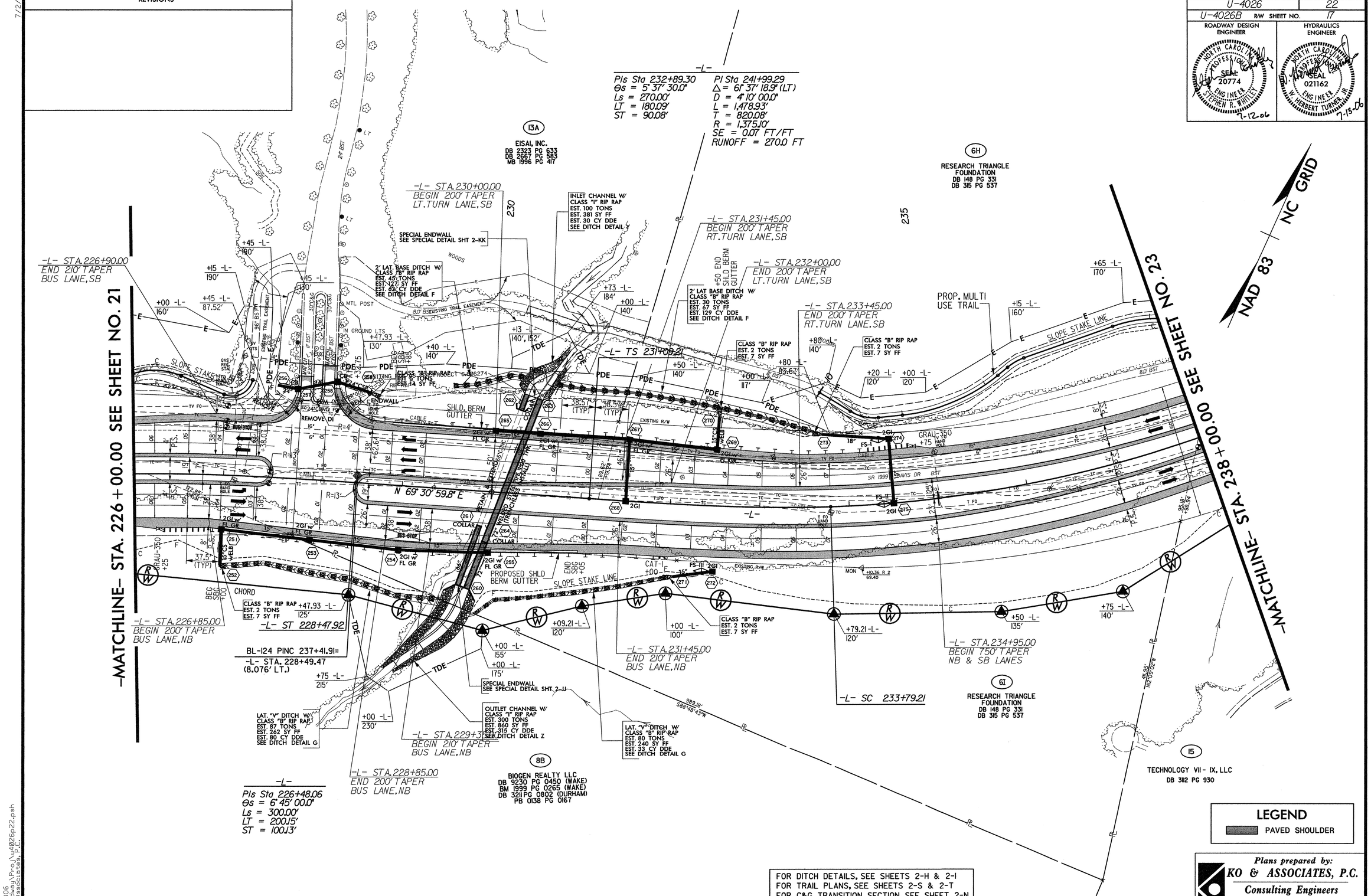

FOR DITCH DETAILS, SEE SHEETS 2-H & 2-I
FOR TRAIL PLANS, SEE SHEETS 2-S & 2-T
FOR C&G TRANSITION SECTION, SEE SHEET 2-N
FOR -L- PROFILE, SEE SHEET 47

Plans prepared by:
KO & ASSOCIATES, P.C.
Consulting Engineers
1011 SCHAUB DR., SUITE #202
RALEIGH, N.C. 27606
(919)-851-6066

7/10/2006
R:\Roadway\Proj\u4026p22.psh
Ko & Associates, P.C.

7/12/99

REVISIONS

PROJECT REFERENCE NO.	SHEET NO.
U-4026	23
U-4026B R/W SHEET NO.	18

ROADWAY DESIGN ENGINEER: NORTH CAROLINA PROFESSIONAL SEAL 20774 ENGINEER STEPHEN R. WHITLEY 7-12-06

HYDRAULICS ENGINEER: NORTH CAROLINA PROFESSIONAL SEAL 021162 ENGINEER HERBERT TURNER, JR. 7-13-06

-L-
PI Sta 241+99.29
Δ = 61° 37' 18.9" (LT)
D = 4° 10' 00.0"
L = 1,478.93'
T = 820.08'
R = 1,375.10'
SE = 0.07 FT/FT
RUNOFF = 270.0 FT

PIs Sta 249+48.21
Θs = 5° 37' 30.0"
Ls = 270.00'
LT = 180.09'
ST = 90.08'

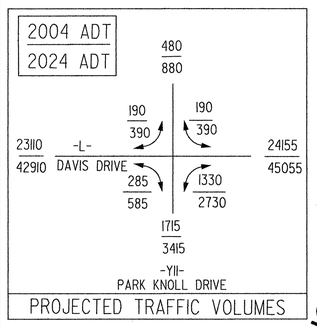

PROJECTED TRAFFIC VOLUMES

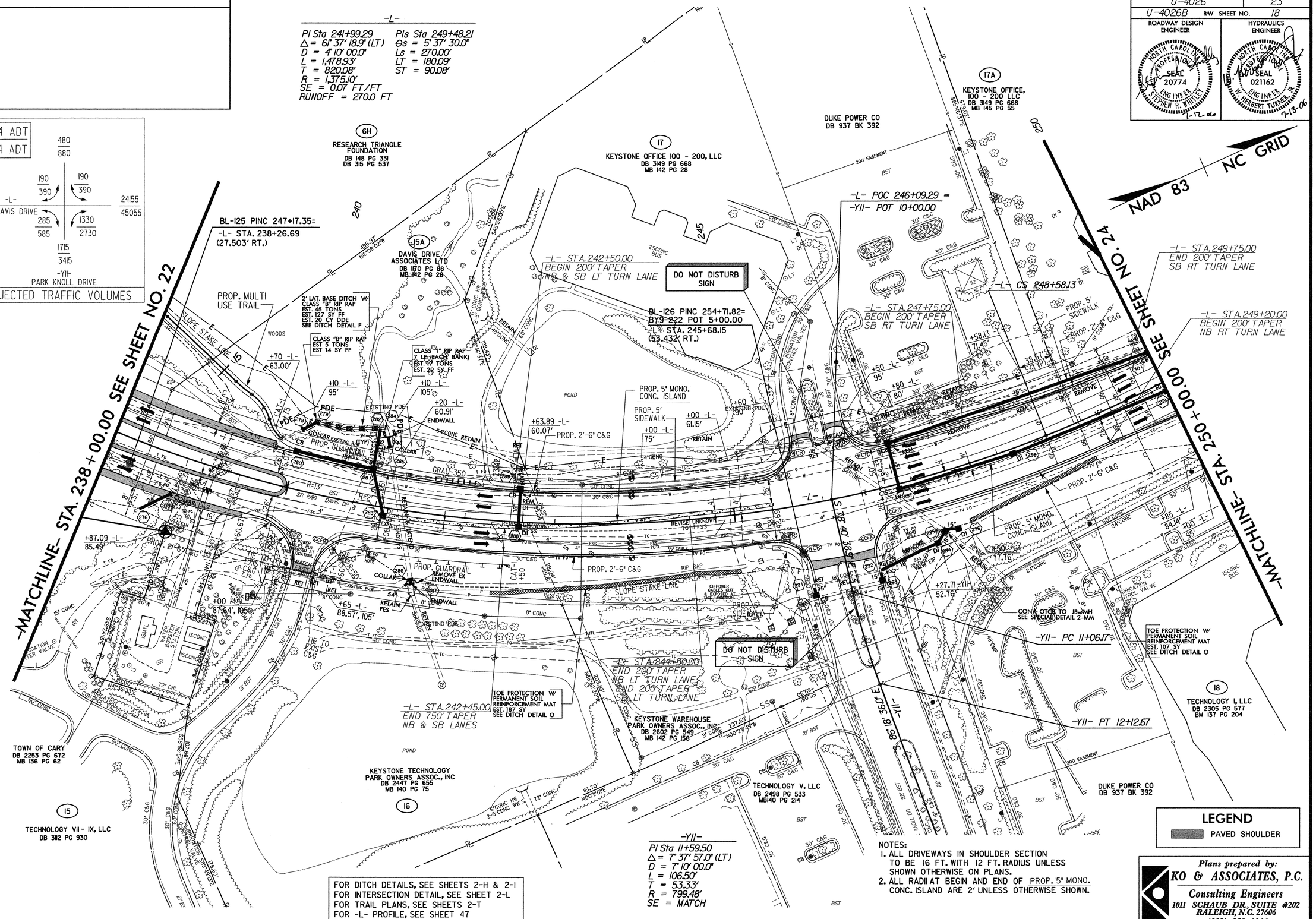

FOR DITCH DETAILS, SEE SHEETS 2-H & 2-I
FOR INTERSECTION DETAIL, SEE SHEET 2-L
FOR TRAIL PLANS, SEE SHEETS 2-T
FOR -L- PROFILE, SEE SHEET 47

NOTES:
1. ALL DRIVEWAYS IN SHOULDER SECTION TO BE 16 FT. WITH 12 FT. RADIUS UNLESS SHOWN OTHERWISE ON PLANS.
2. ALL RADII AT BEGIN AND END OF PROP. 5' MONO. CONC. ISLAND ARE 2' UNLESS OTHERWISE SHOWN.

LEGEND
PAVED SHOULDER

Plans prepared by:
KO & ASSOCIATES, P.C.
Consulting Engineers
1011 SCHAUB DR., SUITE #202
RALEIGH, N.C. 27606
(919)-851-6066

7/10/2006
R:\Projects\Proj\u4026bp23.psh
Ko & Associates, P.C.

PROJECT REFERENCE NO.	SHEET NO.
U-4026	24
U-4026B R/W SHEET NO.	19

ROADWAY DESIGN ENGINEER: NORTH CAROLINA PROFESSIONAL SEAL 20774 ENGINEER STEPHEN R. WHITLEY 7-12-06

HYDRAULICS ENGINEER: NORTH CAROLINA PROFESSIONAL SEAL 021162 ENGINEER W. HERBERT TURNER, III 7-13-06

REVISIONS

7/2/99

-Y12-
SR 1978 (HOPSON RD)

2004 ADT / 2024 ADT	
16465 / 31165	
4300 / 8100	2780 / 5180
24155 -L-	21775
45055 DAVIS DRIVE	40275
2670 / 5270	1620 / 3220
13865 / 26565	

PROJECTED TRAFFIC VOLUMES

NAD 83 | NC GRID

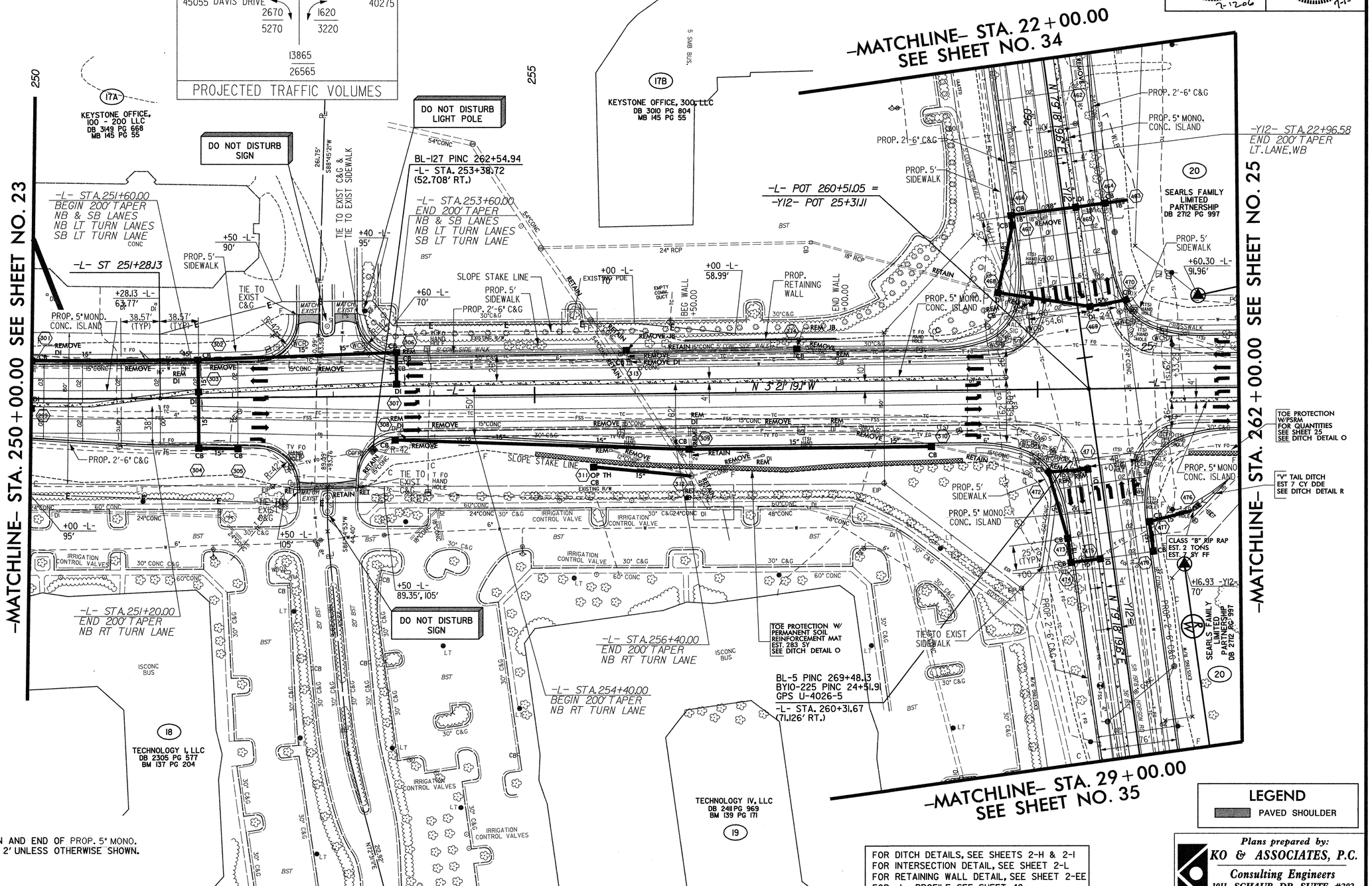

NOTES:
1. ALL RADII AT BEGIN AND END OF PROP. 5' MONO. CONC. ISLAND ARE 2' UNLESS OTHERWISE SHOWN.

FOR DITCH DETAILS, SEE SHEETS 2-H & 2-I
FOR INTERSECTION DETAIL, SEE SHEET 2-L
FOR RETAINING WALL DETAIL, SEE SHEET 2-EE
FOR -L- PROFILE, SEE SHEET 48
FOR -Y12- PROFILE, SEE SHEET 56

LEGEND
PAVED SHOULDER

Plans prepared by:
KO & ASSOCIATES, P.C.
Consulting Engineers
1011 SCHAUB DR., SUITE #202
RALEIGH, N.C. 27606
(919)-851-6066

REVISIONS

PROJECT REFERENCE NO.	SHEET NO.
U-4026	25
U-4026B R/W SHEET NO.	20
ROADWAY DESIGN ENGINEER	HYDRAULICS ENGINEER

NORTH CAROLINA PROFESSIONAL SEAL 20774 ENGINEER STEPHEN R. WHITLEY 9/8/06

NORTH CAROLINA PROFESSIONAL SEAL 021162 ENGINEER W. HERBERT TURNER, JR. 9-8-06

NAD 83 | NC GRID

-L-
PI Sta 270+12.65
Δ = 2° 18' 20.7" (LT)
D = 0° 30' 00.0"
L = 461.15'
T = 230.61'
R = 11,459.16'
SE = 0.02 FT/FT

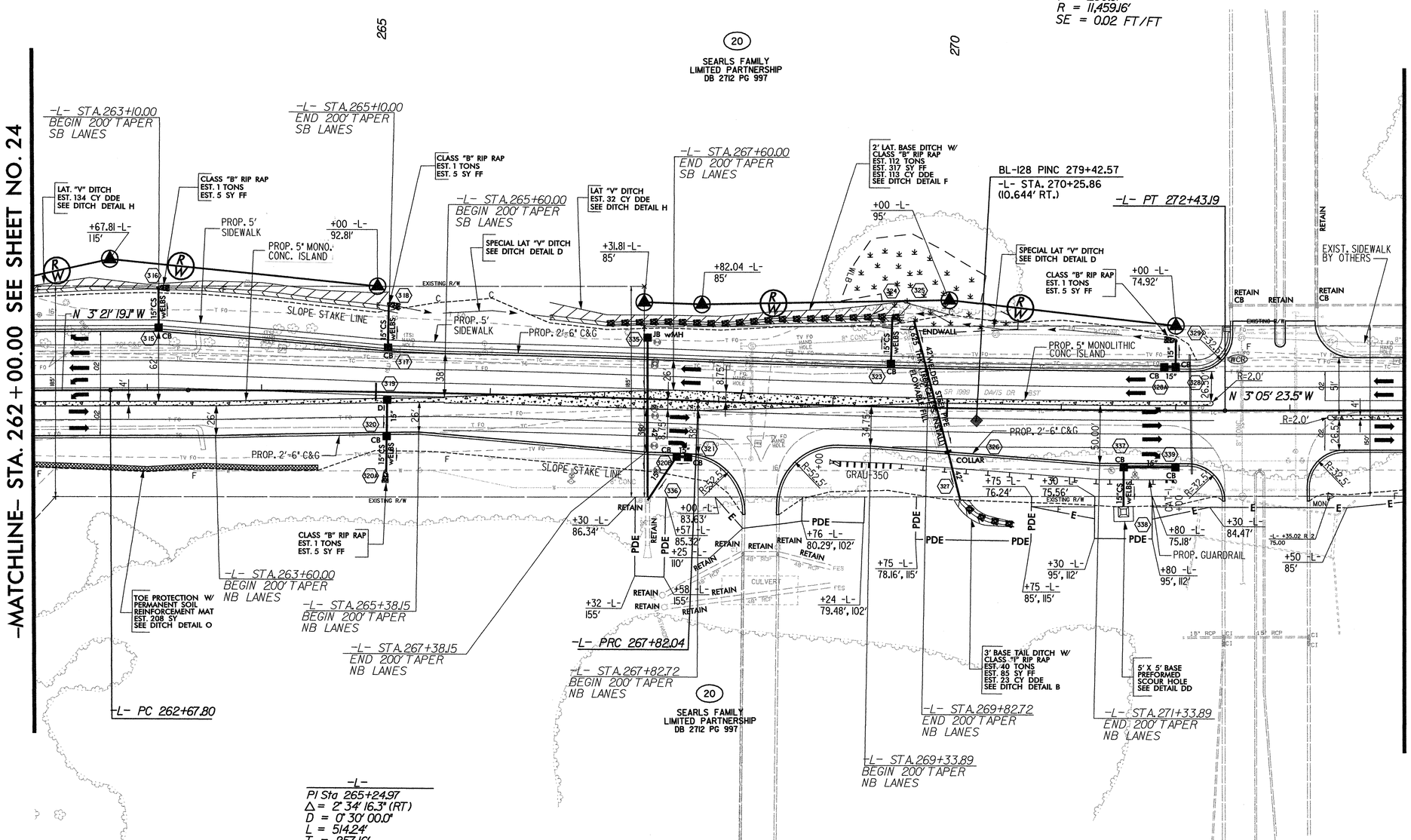

-L-
PI Sta 265+24.97
Δ = 2° 34' 16.3" (RT)
D = 0° 30' 00.0"
L = 514.24'
T = 257.16'
R = 11,459.16'
SE = 0.02 FT/FT

NOTES:
1. ALL RADII AT BEGIN AND END OF PROP. 5' MONO. CONC. ISLAND ARE 2' UNLESS OTHERWISE SHOWN.

FOR DITCH DETAILS, SEE SHEETS 2-H & 2-I
FOR -L- PROFILE, SEE SHEET 48

LEGEND
PAVED SHOULDER

Plans prepared by:
KO & ASSOCIATES, P.C.
Consulting Engineers
1011 SCHAUB DR., SUITE #202
RALEIGH, N.C. 27606
(919)-851-6066

7/2/99

REVISIONS

PROJECT REFERENCE NO.	SHEET NO.
U-4026	26
U-4026B R/W SHEET NO.	21

ROADWAY DESIGN ENGINEER
NORTH CAROLINA PROFESSIONAL SEAL 20774 ENGINEER STEPHEN R. WHITLEY
9/8/06

HYDRAULICS ENGINEER
NORTH CAROLINA PROFESSIONAL SEAL 021162 ENGINEER HERBERT TURNER, JR.
9/8/06

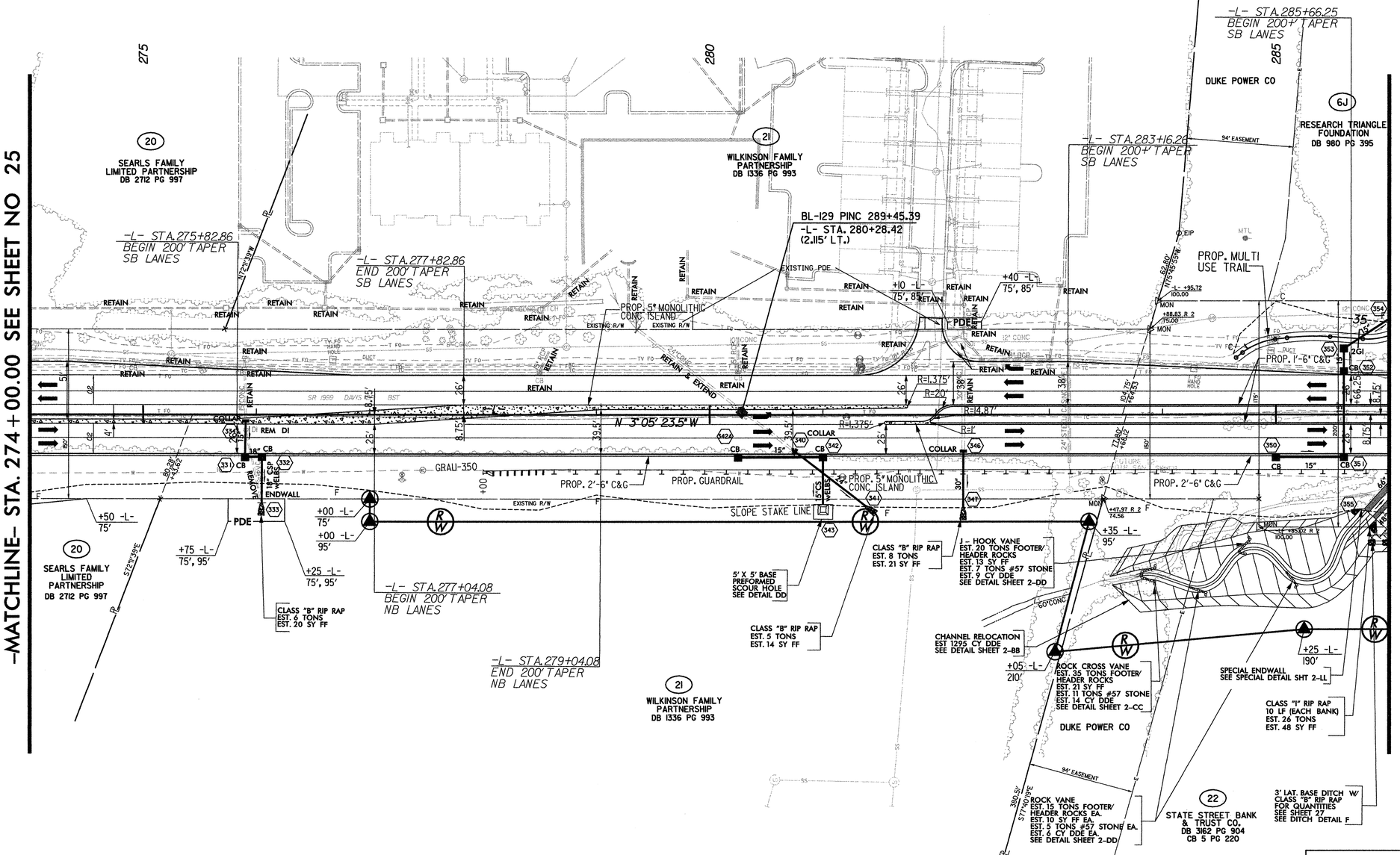

NOTES:
1. ALL RADII AT BEGIN AND END OF PROP. 5" MONO. CONC. ISLAND ARE 2' UNLESS OTHERWISE SHOWN.

FOR DITCH DETAILS, SEE SHEETS 2-H & 2-I
FOR TRAIL PLANS, SEE SHEET 2-U
FOR CHANNEL RELOCATION, SEE SHEET 2-BB
FOR ROCK CROSS VANE DETAIL, SEE SHEET 2-CC
FOR ROCK VANE DETAIL, SEE SHEET 2-DD
FOR -L- PROFILE, SEE SHEET 49

LEGEND
PAVED SHOULDER

Plans prepared by:
KO & ASSOCIATES, P.C.
Consulting Engineers
1011 SCHAUB DR., SUITE #202
RALEIGH, N.C. 27606
(919)-851-6066

8/28/2006
R:\Roadway\Proj\u4026p26.psh
Ko & Associates, P.C.

REVISIONS

PROJECT REFERENCE NO.	SHEET NO.
U-4026	27
U-4026B R/W SHEET NO.	22

ROADWAY DESIGN ENGINEER: NORTH CAROLINA PROFESSIONAL SEAL 20774 ENGINEER STEPHEN R. WHITLEY — 5-4-06

HYDRAULICS ENGINEER: NORTH CAROLINA PROFESSIONAL SEAL 021162 ENGINEER HERBERT TURNER, JR. — 5-4-06

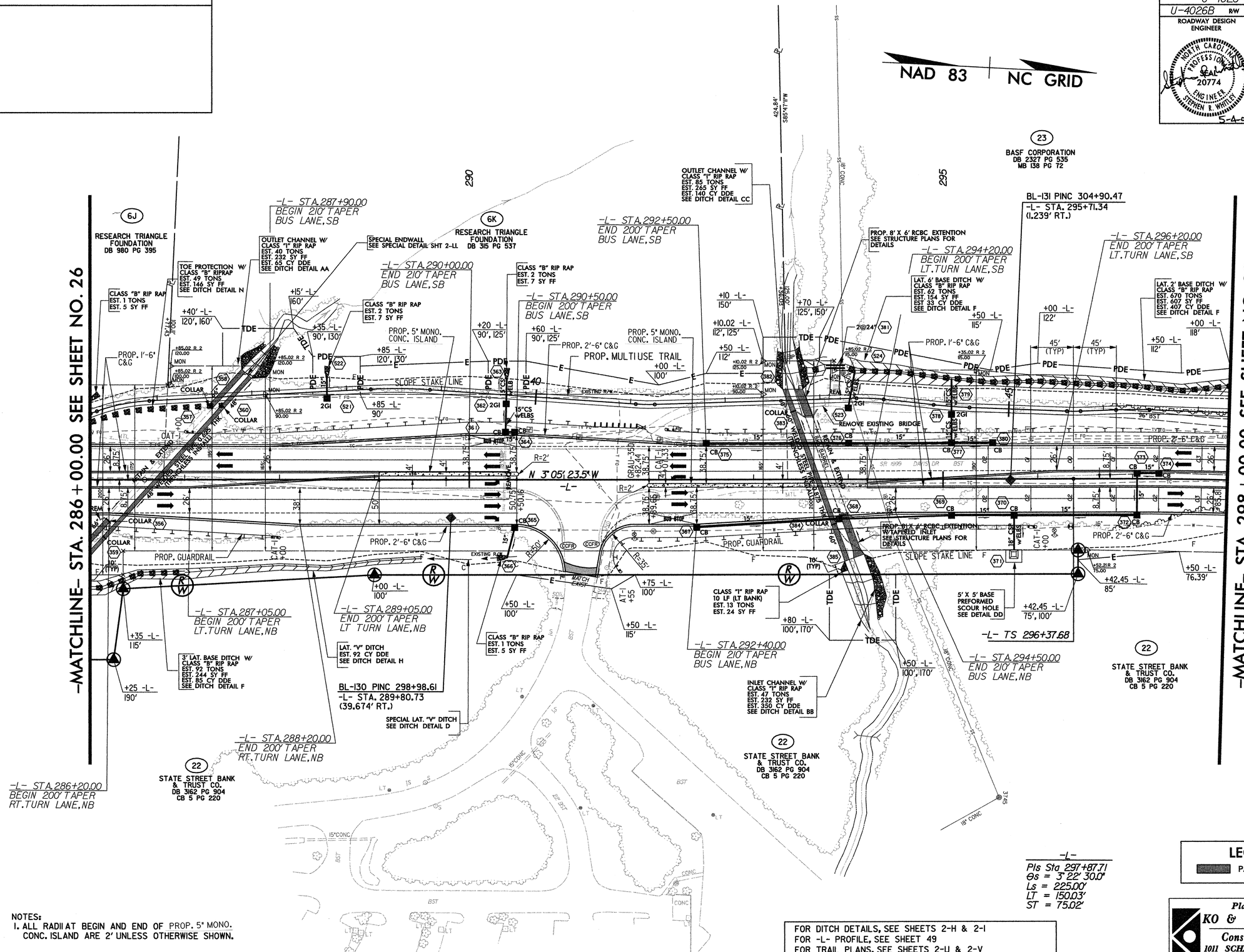

NOTES:
1. ALL RADII AT BEGIN AND END OF PROP. 5' MONO. CONC. ISLAND ARE 2' UNLESS OTHERWISE SHOWN.

FOR DITCH DETAILS, SEE SHEETS 2-H & 2-I
FOR -L- PROFILE, SEE SHEET 49
FOR TRAIL PLANS, SEE SHEETS 2-U & 2-V
FOR CULVERT PLANS, SEE CULVERT SHEETS C- __ - C-__

Plans prepared by:
KO & ASSOCIATES, P.C.
Consulting Engineers
1011 SCHAUB DR., SUITE #202
RALEIGH, N.C. 27606
(919)-851-6066

7/2/99

REVISIONS

PROJECT REFERENCE NO.	SHEET NO.
U-4026	28
U-4026B R/W SHEET NO.	23
ROADWAY DESIGN ENGINEER	HYDRAULICS ENGINEER

NORTH CAROLINA PROFESSIONAL SEAL 20774 ENGINEER STEPHEN R. WHITLEY 8/21/06

NORTH CAROLINA PROFESSIONAL SEAL 021162 ENGINEER W. HERBERT TURNER, JR. 8/21/06

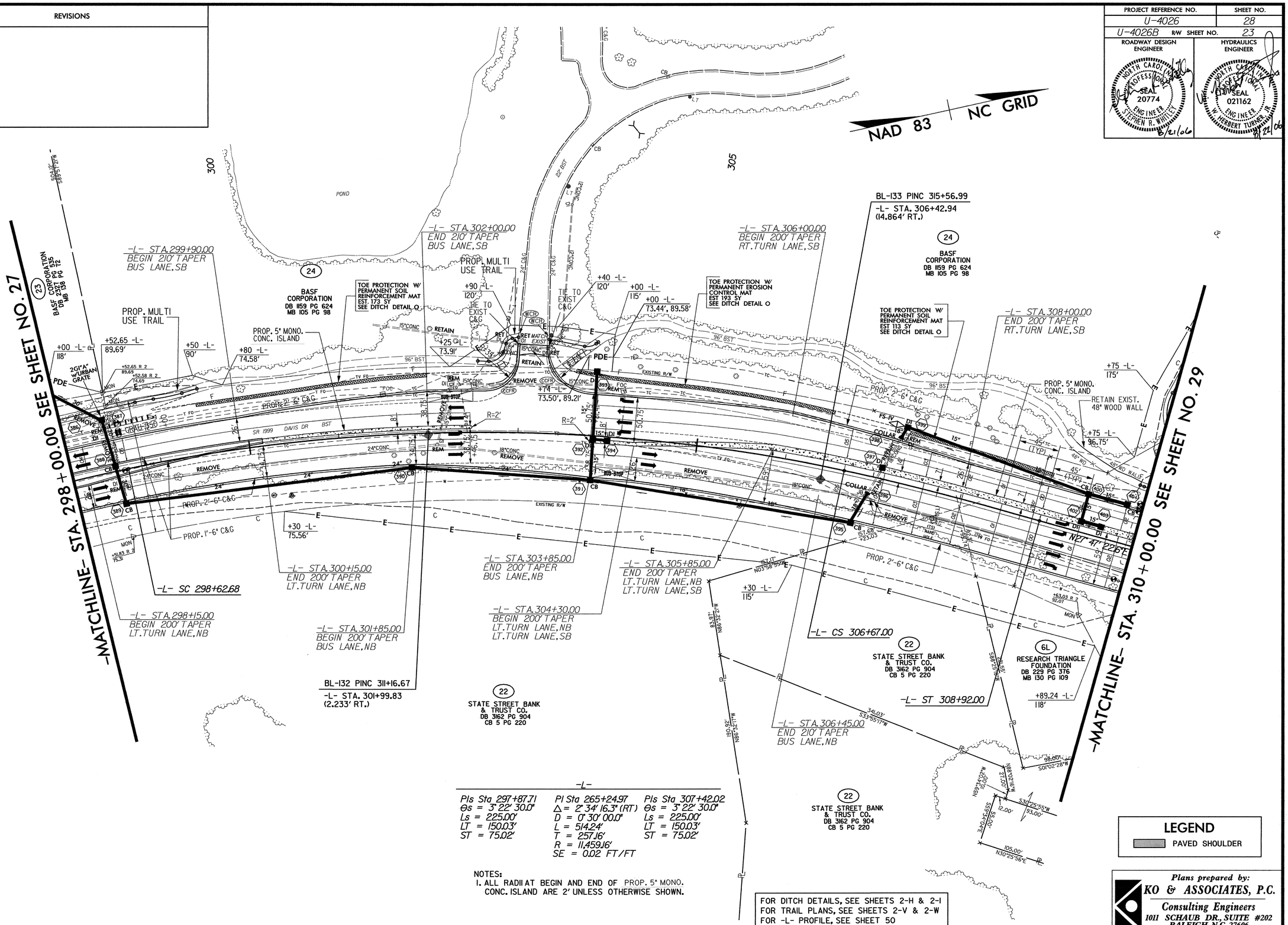

-L-

PIs Sta 297+87.71	PI Sta 265+24.97	PIs Sta 307+42.02
Θs = 3° 22' 30.0"	Δ = 2° 34' 16.3" (RT)	Θs = 3° 22' 30.0"
Ls = 225.00'	D = 0° 30' 00.0"	Ls = 225.00'
LT = 150.03'	L = 514.24'	LT = 150.03'
ST = 75.02'	T = 257.16'	ST = 75.02'
	R = 11,459.16'	
	SE = 0.02 FT/FT	

NOTES:
1. ALL RADII AT BEGIN AND END OF PROP. 5' MONO. CONC. ISLAND ARE 2' UNLESS OTHERWISE SHOWN.

FOR DITCH DETAILS, SEE SHEETS 2-H & 2-I
FOR TRAIL PLANS, SEE SHEETS 2-V & 2-W
FOR -L- PROFILE, SEE SHEET 50

Plans prepared by:
KO & ASSOCIATES, P.C.
Consulting Engineers
1011 SCHAUB DR., SUITE #202
RALEIGH, N.C. 27606
(919)-851-6066

8/17/2006
R:\Roadway\Proj\4026ep28.psh
KO & Associates, P.C.

REVISIONS

PROJECT REFERENCE NO.	SHEET NO.
U-4026	29
U-4026B R/W SHEET NO.	24
ROADWAY DESIGN ENGINEER	HYDRAULICS ENGINEER
NORTH CAROLINA PROFESSIONAL SEAL 20774 ENGINEER STEPHEN R. WHITLEY 8/21/06	NORTH CAROLINA PROFESSIONAL SEAL 021162 ENGINEER HERBERT TURNER JR. 8/22/06

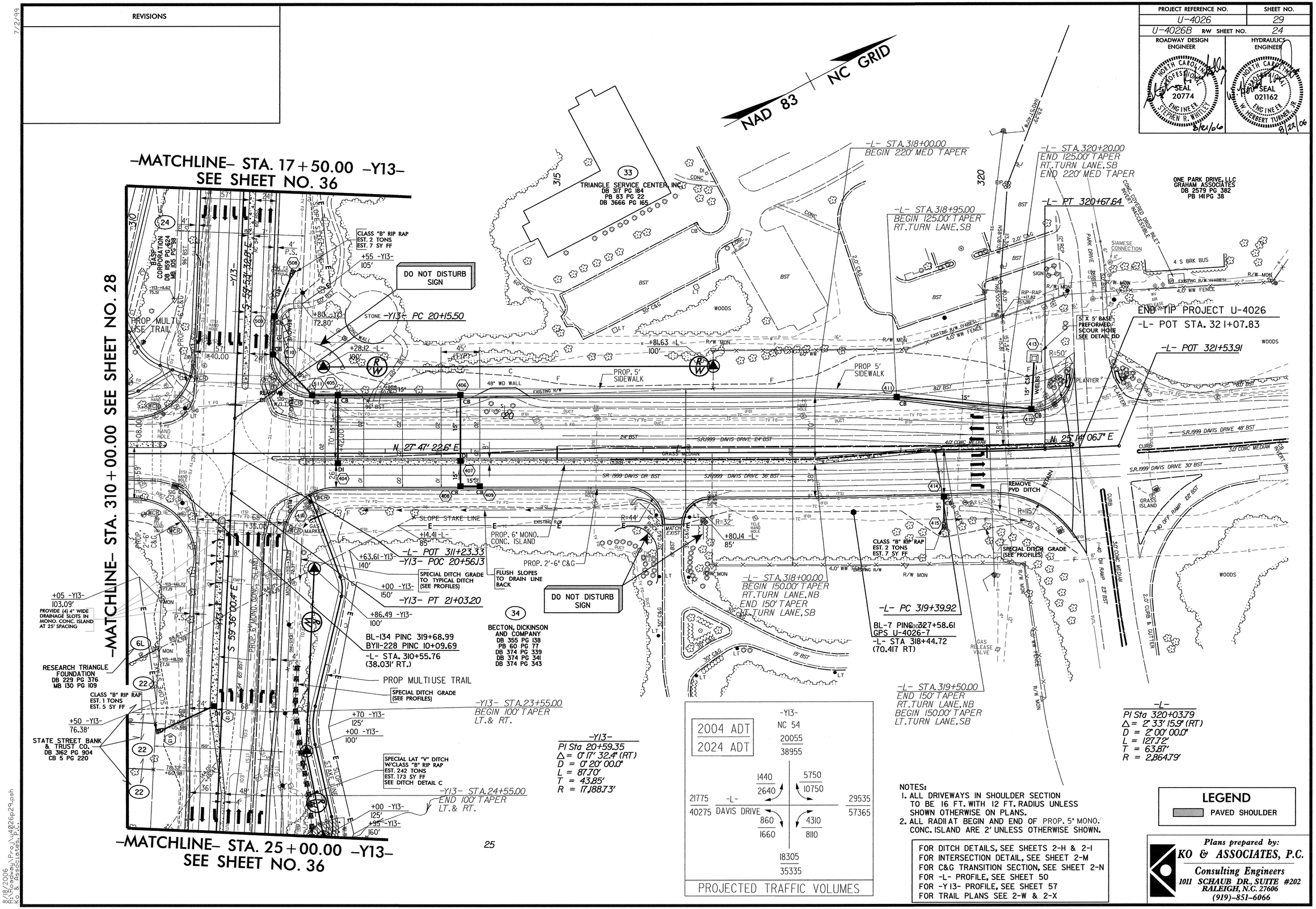

NOTES:
1. ALL DRIVEWAYS IN SHOULDER SECTION TO BE 16 FT. WITH 12 FT. RADIUS UNLESS SHOWN OTHERWISE ON PLANS.
2. ALL RADII AT BEGIN AND END OF PROP. 5" MONO. CONC. ISLAND ARE 2' UNLESS OTHERWISE SHOWN.

FOR DITCH DETAILS, SEE SHEETS 2-H & 2-I
FOR INTERSECTION DETAIL, SEE SHEET 2-M
FOR C&G TRANSITION SECTION, SEE SHEET 2-N
FOR -L- PROFILE, SEE SHEET 50
FOR -Y13- PROFILE, SEE SHEET 57
FOR TRAIL PLANS SEE 2-W & 2-X

7/2/99

REVISIONS

PROJECT REFERENCE NO.	SHEET NO.
U-4026	30
U-4026A R/W SHEET NO.	11
ROADWAY DESIGN ENGINEER	HYDRAULICS ENGINEER

NORTH CAROLINA PROFESSIONAL SEAL 20774 ENGINEER STEPHEN R. WHITLEY 5-4-06

NORTH CAROLINA PROFESSIONAL SEAL 021162 ENGINEER HERBERT TURNER, JR. 5-4-06

TOWN OF CARY TO HANDLE ALL RIGHT OF WAY CLAIMS THIS SHEET

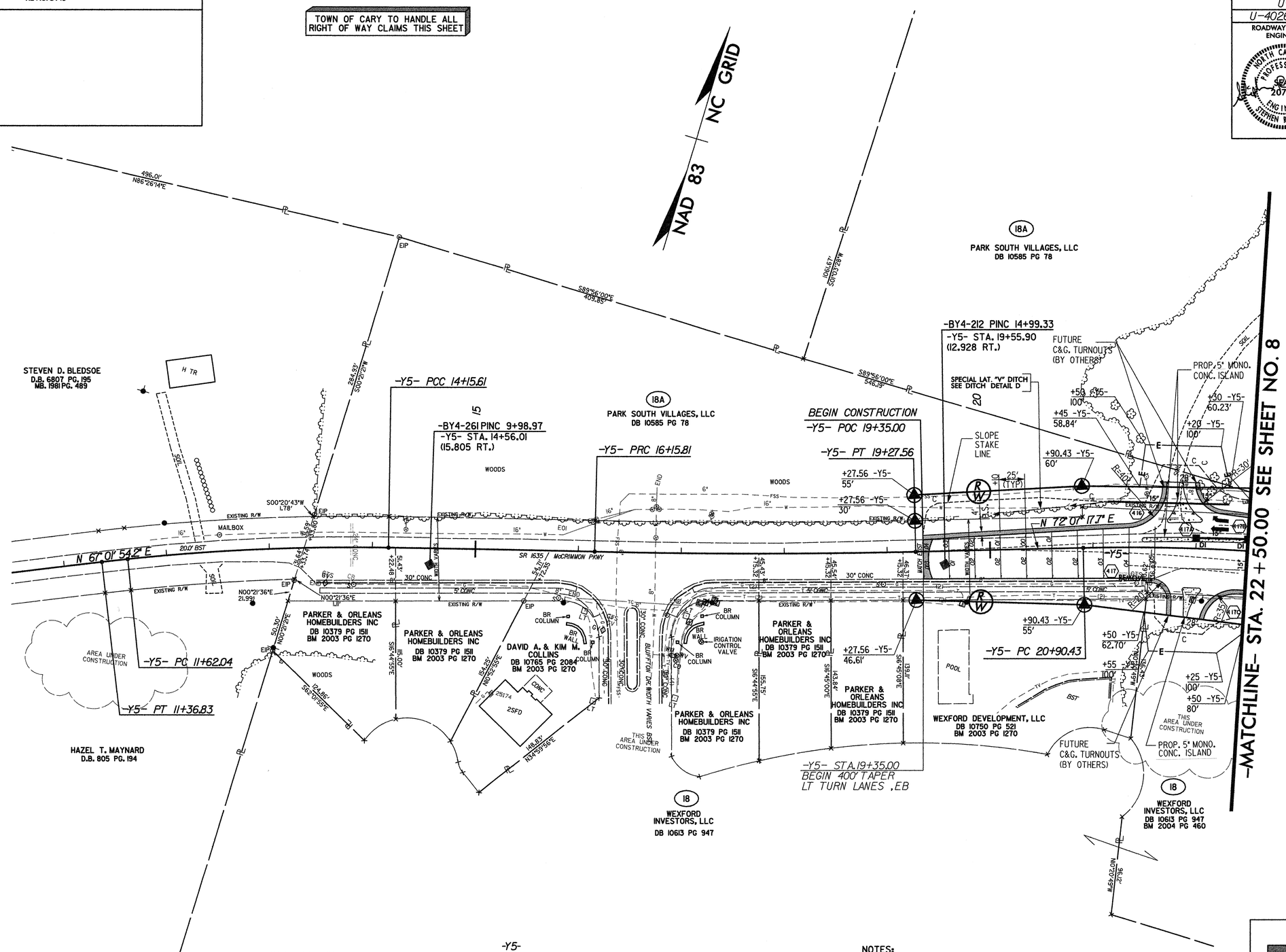

-Y5-

PI Sta 10+68.42	PI Sta 12+88.98	PI Sta 15+15.71	PI Sta 17+71.71	PI Sta 22+49.68
Δ = 0° 45' 05.2" (RT)	Δ = 6° 47' 36.3" (RT)	Δ = 0° 33' 57.3" (RT)	Δ = 2° 36' 25.6" (LT)	Δ = 9° 31' 59.3" (RT)
D = 0° 32' 57.0"	D = 2° 40' 44.6"	D = 0° 16' 57.7"	D = 0° 50' 10.6"	D = 3° 00' 00.0"
L = 136.83'	L = 253.57'	L = 200.19'	L = 311.75'	L = 317.77'
T = 68.42'	T = 126.94'	T = 100.10'	T = 155.90'	T = 159.25'
R = 10,433.18'	R = 2,138.65'	R = 20,268.54'	R = 6,851.31'	R = 1,909.86'
				SE = 0.05 FT/FT
				RUNOFF = 100.0 FT

NOTES:
1. ALL DRIVEWAYS IN SHOULDER SECTION TO BE 16 FT. WITH 12 FT. RADIUS UNLESS SHOWN OTHERWISE ON PLANS.
2. ALL RADII AT BEGIN AND END OF PROP. 5' MONO. CONC. ISLAND ARE 2' UNLESS OTHERWISE SHOWN.

FOR DITCH DETAILS, SEE SHEET 2-H
FOR -Y5- PROFILE, SEE SHEET 52

LEGEND
PAVED SHOULDER

Plans prepared by:
KO & ASSOCIATES, P.C.
Consulting Engineers
1011 SCHAUB DR., SUITE #202
RALEIGH, N.C. 27606
(919)-851-6066

5/3/2006
R:\Roadway\Proj\u4026p30.psh
Ko & Associates, P.C.

7/2/99

REVISIONS

PROJECT REFERENCE NO.	SHEET NO.
U-4026	31
U-4026A R/W SHEET NO.	12

ROADWAY DESIGN ENGINEER: NORTH CAROLINA PROFESSIONAL SEAL 20774 ENGINEER STEPHEN R. WHITLEY — 5-4-06

HYDRAULICS ENGINEER: NORTH CAROLINA PROFESSIONAL SEAL 021162 ENGINEER HERBERT TURNER, JR. — 5-4-06

TOWN OF CARY TO HANDLE ALL RIGHT OF WAY CLAIMS THIS SHEET

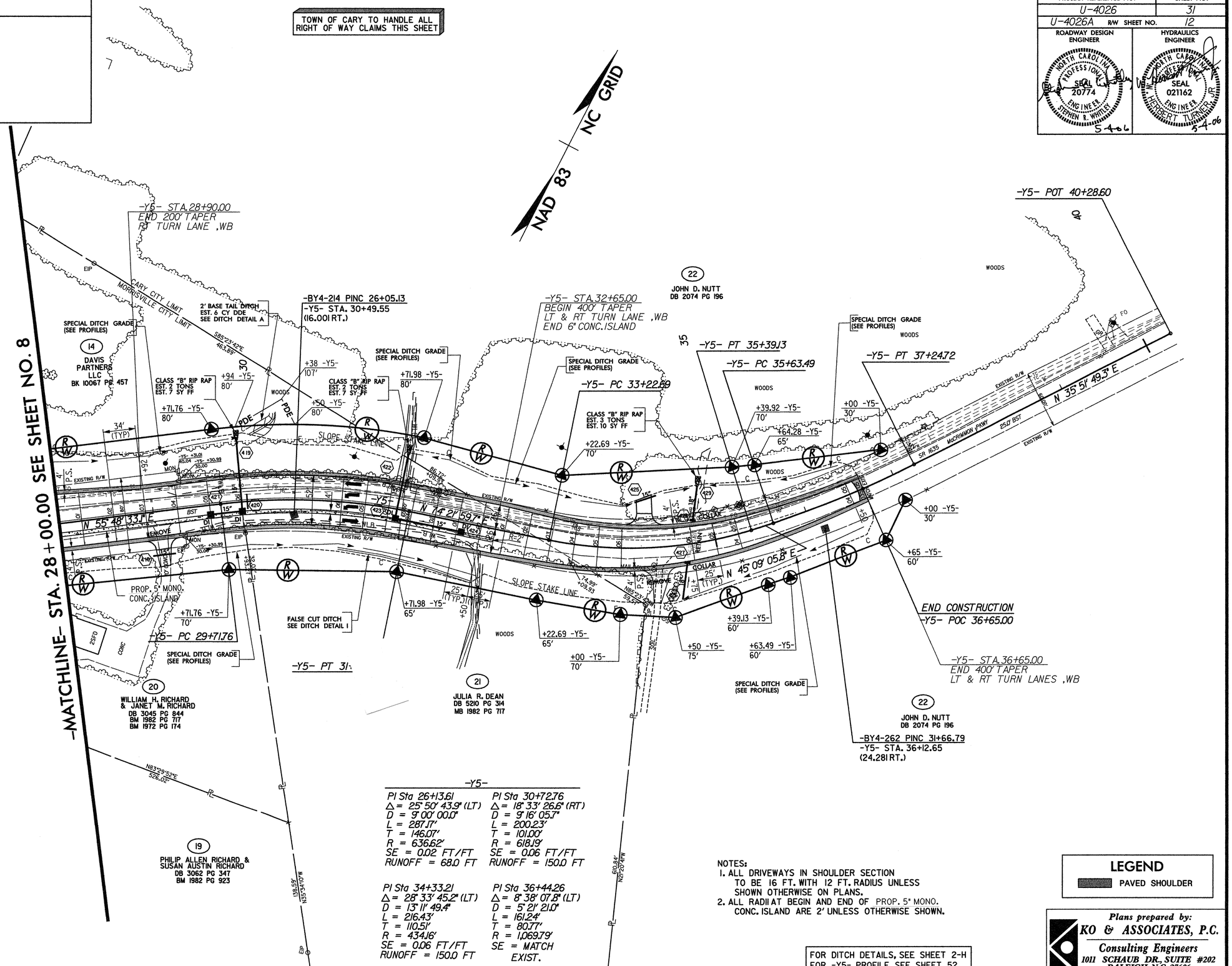

-Y5-

PI Sta 26+13.61	PI Sta 30+72.76
Δ = 25° 50' 43.9" (LT)	Δ = 18° 33' 26.6" (RT)
D = 9° 00' 00.0"	D = 9° 16' 05.7"
L = 287.17'	L = 200.23'
T = 146.07'	T = 101.00'
R = 636.62'	R = 618.19'
SE = 0.02 FT/FT	SE = 0.06 FT/FT
RUNOFF = 68.0 FT	RUNOFF = 150.0 FT
PI Sta 34+33.21	PI Sta 36+44.26
Δ = 28° 33' 45.2" (LT)	Δ = 8° 38' 07.8" (LT)
D = 13° 11' 49.4"	D = 5° 21' 21.0"
L = 216.43'	L = 161.24'
T = 110.51'	T = 80.77'
R = 434.16'	R = 1,069.79'
SE = 0.06 FT/FT	SE = MATCH EXIST.
RUNOFF = 150.0 FT	

NOTES:
1. ALL DRIVEWAYS IN SHOULDER SECTION TO BE 16 FT. WITH 12 FT. RADIUS UNLESS SHOWN OTHERWISE ON PLANS.
2. ALL RADII AT BEGIN AND END OF PROP. 5' MONO. CONC. ISLAND ARE 2' UNLESS OTHERWISE SHOWN.

FOR DITCH DETAILS, SEE SHEET 2-H
FOR -Y5- PROFILE, SEE SHEET 52

LEGEND
PAVED SHOULDER

Plans prepared by:
KO & ASSOCIATES, P.C.
Consulting Engineers
1011 SCHAUB DR., SUITE #202
RALEIGH, N.C. 27606
(919)-851-6066

5/3/2006
R:\Roadway\Proj\u4026p31.psh
Ko & Associates, P.C.

REVISIONS

PROJECT REFERENCE NO.	SHEET NO.
U-4026	32
U-4026B R/W SHEET NO.	25

ROADWAY DESIGN ENGINEER: NORTH CAROLINA PROFESSIONAL SEAL 20774 ENGINEER STEPHEN R. WHITLEY 6-13-06

HYDRAULICS ENGINEER: NORTH CAROLINA PROFESSIONAL SEAL 021162 ENGINEER HERBERT TURNER, JR. 6-15-06

-Y9-

PIs Sta 11+18.69	PI Sta 17+40.19	PIs Sta 22+51.46
θs = 3° 27' 00.0"	Δ = 60° 32' 05.6" (LT)	θs = 3° 27' 00.0"
Ls = 120.00'	D = 5° 45' 00.0"	Ls = 120.00'
LT = 80.02'	L = 1,052.78'	LT = 80.02'
ST = 40.01'	T = 581.52'	ST = 40.01'
	R = 996.45'	
	SE = 0.06 FT/FT	
	RUNOFF = 120.0 FT	

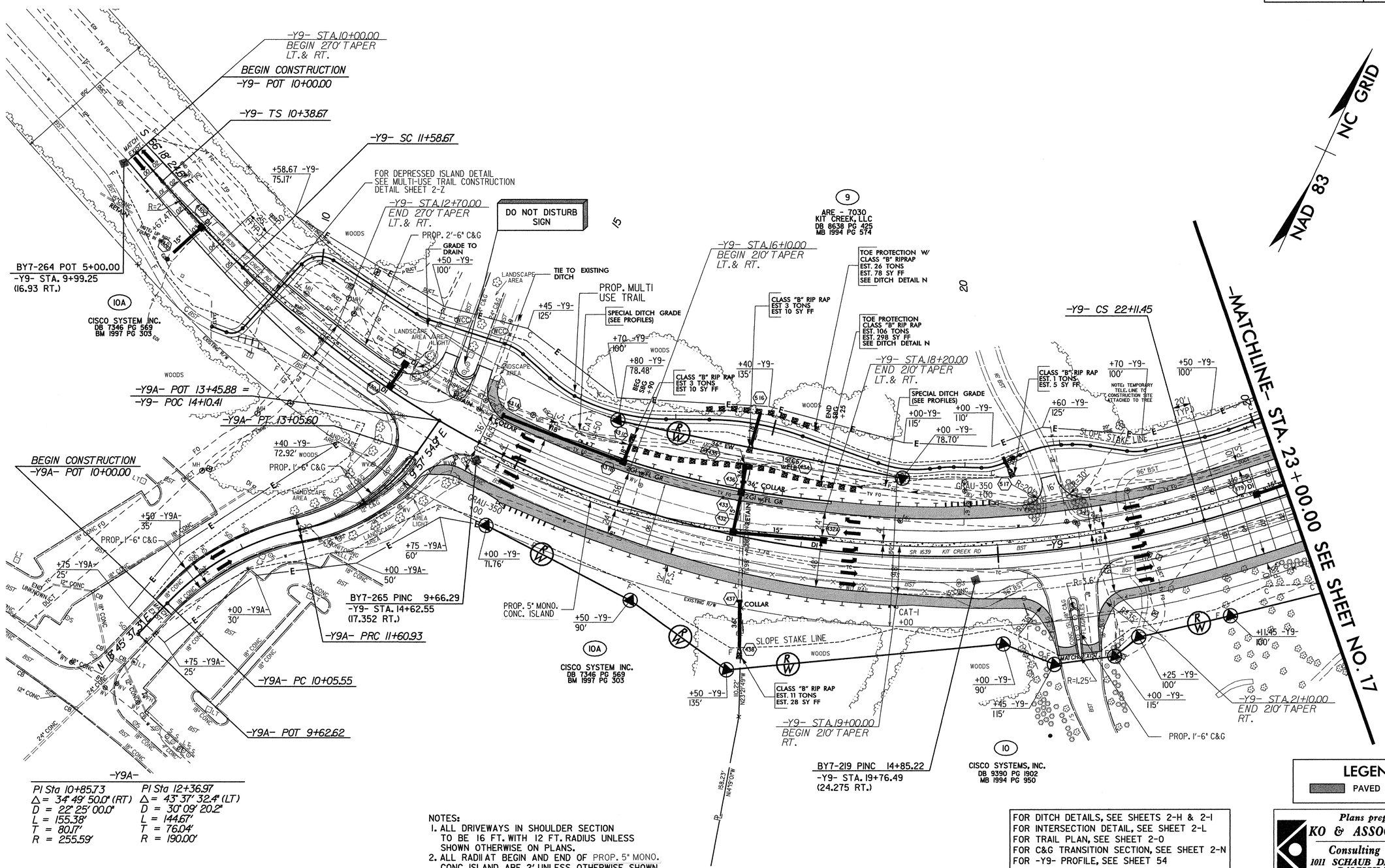

NOTES:
1. ALL DRIVEWAYS IN SHOULDER SECTION TO BE 16 FT. WITH 12 FT. RADIUS UNLESS SHOWN OTHERWISE ON PLANS.
2. ALL RADII AT BEGIN AND END OF PROP. 5" MONO. CONC. ISLAND ARE 2' UNLESS OTHERWISE SHOWN.

FOR DITCH DETAILS, SEE SHEETS 2-H & 2-I
FOR INTERSECTION DETAIL, SEE SHEET 2-L
FOR TRAIL PLAN, SEE SHEET 2-O
FOR C&G TRANSITION SECTION, SEE SHEET 2-N
FOR -Y9- PROFILE, SEE SHEET 54
FOR -Y9A- PROFILE, SEE SHEET 55

LEGEND
PAVED SHOULDER

Plans prepared by:
KO & ASSOCIATES, P.C.
Consulting Engineers
1011 SCHAUB DR., SUITE #202
RALEIGH, N.C. 27606
(919)-851-6066

6/13/2006
R:\Roadway\Proj\u4026p32.psh
Ko & Associates, P.C.

7/2/99

REVISIONS

PROJECT REFERENCE NO.	SHEET NO.
U-4026	33
U-4026B R/W SHEET NO.	26

ROADWAY DESIGN ENGINEER — NORTH CAROLINA PROFESSIONAL SEAL 20774 ENGINEER STEPHEN R. WHITLEY — 5-4-06

HYDRAULICS ENGINEER — NORTH CAROLINA PROFESSIONAL SEAL 021162 ENGINEER HERBERT TURNER, JR. — 5-4-06

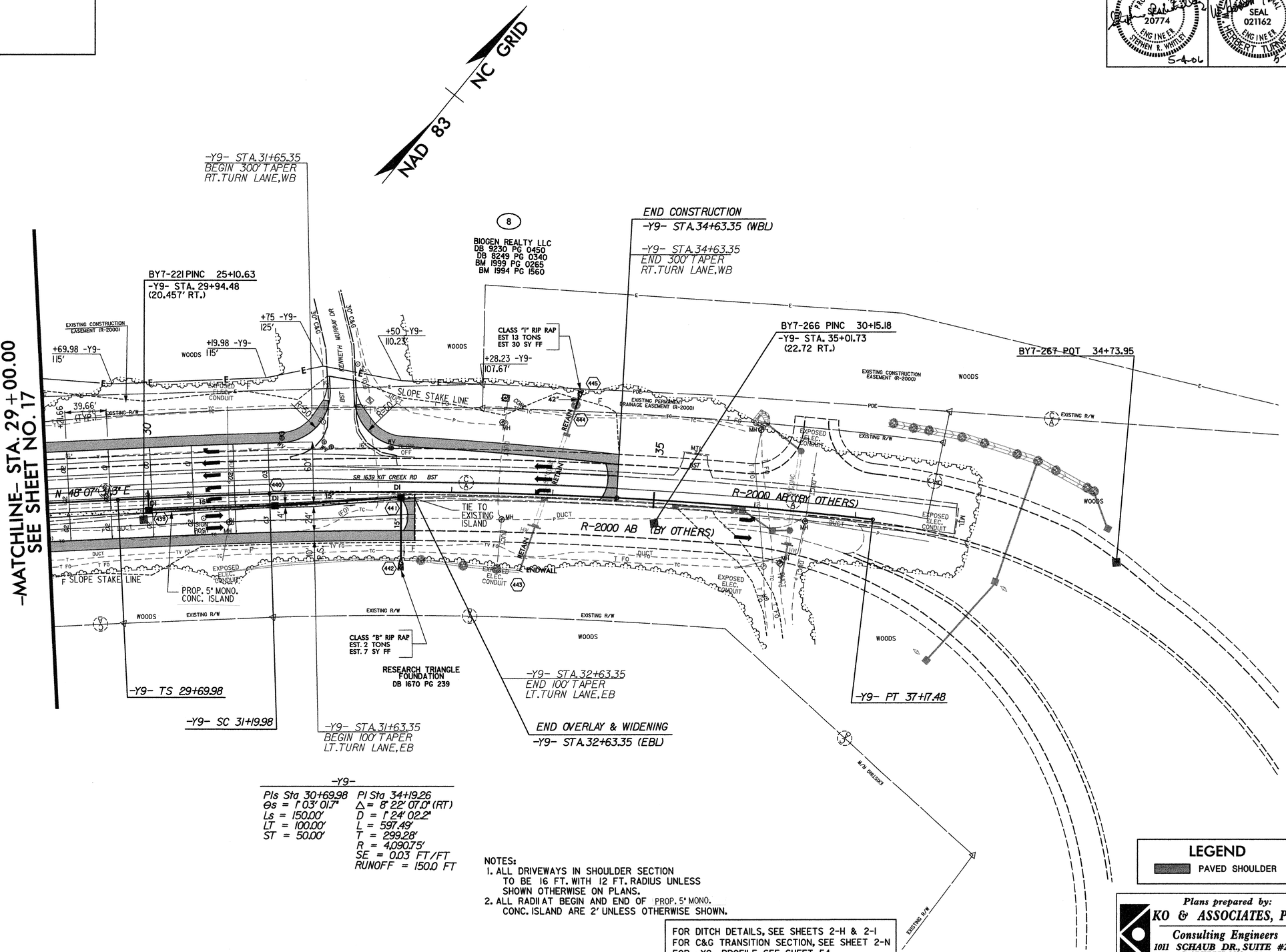

-Y9-

PIs Sta 30+69.98	PI Sta 34+19.26
Θs = 1° 03' 01.7"	Δ = 8° 22' 07.0" (RT)
Ls = 150.00'	D = 1° 24' 02.2"
LT = 100.00'	L = 597.49'
ST = 50.00'	T = 299.28'
	R = 4,090.75'
	SE = 0.03 FT/FT
	RUNOFF = 150.0 FT

NOTES:
1. ALL DRIVEWAYS IN SHOULDER SECTION TO BE 16 FT. WITH 12 FT. RADIUS UNLESS SHOWN OTHERWISE ON PLANS.
2. ALL RADII AT BEGIN AND END OF PROP. 5' MONO. CONC. ISLAND ARE 2' UNLESS OTHERWISE SHOWN.

FOR DITCH DETAILS, SEE SHEETS 2-H & 2-I
FOR C&G TRANSITION SECTION, SEE SHEET 2-N
FOR -Y9- PROFILE, SEE SHEET 54

LEGEND
PAVED SHOULDER

Plans prepared by:
KO & ASSOCIATES, P.C.
Consulting Engineers
1011 SCHAUB DR., SUITE #202
RALEIGH, N.C. 27606
(919)-851-6066

5/3/2006
R:\Roadway\Proj\u4026p33.psh
Ko & Associates, P.C.

7/2/99

REVISIONS

PROJECT REFERENCE NO.	SHEET NO.
U-4026	34
U-4026B R/W SHEET NO.	27

ROADWAY DESIGN ENGINEER: NORTH CAROLINA PROFESSIONAL SEAL 20774 ENGINEER STEPHEN R. WHITLEY — 5-4-06

HYDRAULICS ENGINEER: NORTH CAROLINA PROFESSIONAL SEAL 021162 ENGINEER HERBERT TURNER, JR. — 5-4-06

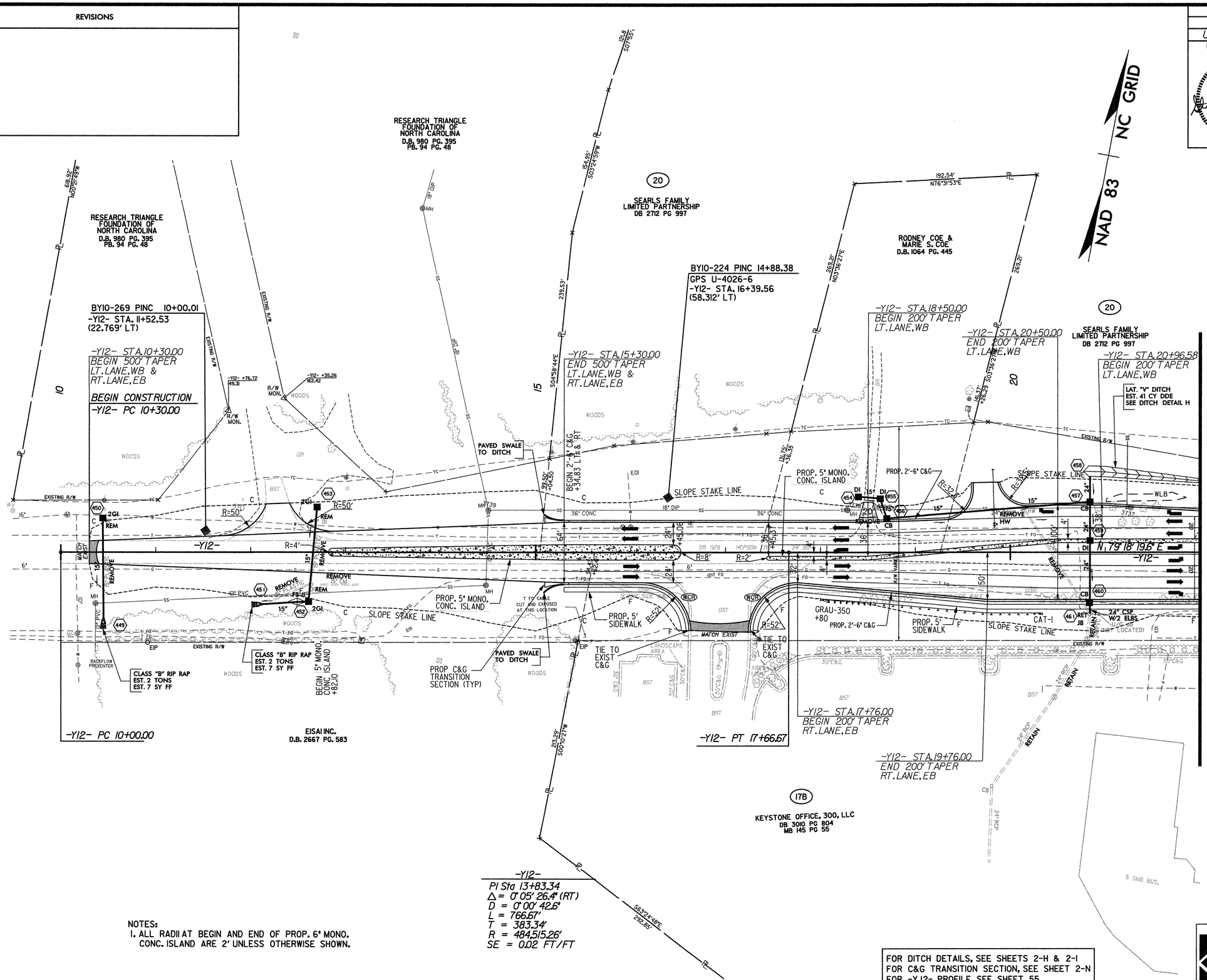

NOTES:
1. ALL RADII AT BEGIN AND END OF PROP. 6' MONO. CONC. ISLAND ARE 2' UNLESS OTHERWISE SHOWN.

FOR DITCH DETAILS, SEE SHEETS 2-H & 2-I
FOR C&G TRANSITION SECTION, SEE SHEET 2-N
FOR -Y12- PROFILE, SEE SHEET 55

LEGEND
PAVED SHOULDER

Plans prepared by:
KO & ASSOCIATES, P.C.
Consulting Engineers
1011 SCHAUB DR., SUITE #202
RALEIGH, N.C. 27606
(919)-851-6066

5/3/2006
R:\Roadway\Proj\u4026p34.psh
Ko & Associates, P.C.

7/2/99

REVISIONS

PROJECT REFERENCE NO.	SHEET NO.
U-4026	35
U-4026B R/W SHEET NO.	28

ROADWAY DESIGN ENGINEER: NORTH CAROLINA PROFESSIONAL SEAL 20774 ENGINEER STEPHEN R. WHITLEY 5-4-06

HYDRAULICS ENGINEER: NORTH CAROLINA PROFESSIONAL SEAL 021162 ENGINEER HERBERT TURNER, JR. 5-3-06

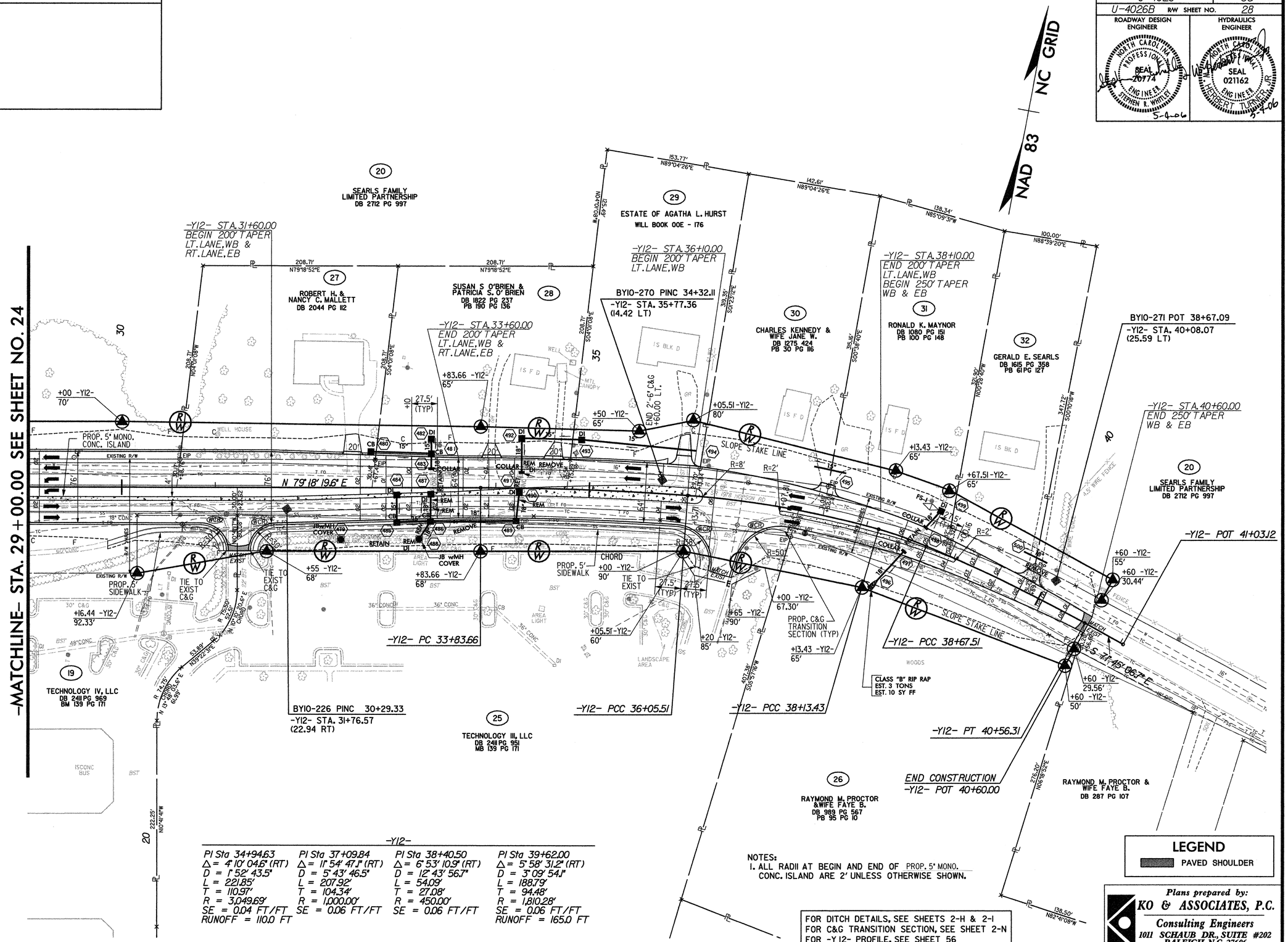

Plans prepared by:
KO & ASSOCIATES, P.C.
Consulting Engineers
1011 SCHAUB DR., SUITE #202
RALEIGH, N.C. 27606
(919)-851-6066

5/3/2006
R:\Roadway\Proj\u4026p35.psh
Ko & Associates, P.C.

7/12/99

REVISIONS

PROJECT REFERENCE NO.	SHEET NO.
U-4026	36
U-4026B R/W SHEET NO.	29
ROADWAY DESIGN ENGINEER	HYDRAULICS ENGINEER
NORTH CAROLINA PROFESSIONAL SEAL 20774 ENGINEER STEPHEN R. WHITLEY 8/21/06	NORTH CAROLINA PROFESSIONAL SEAL 021162 ENGINEER HERBERT TURNER, JR. 8/22/06

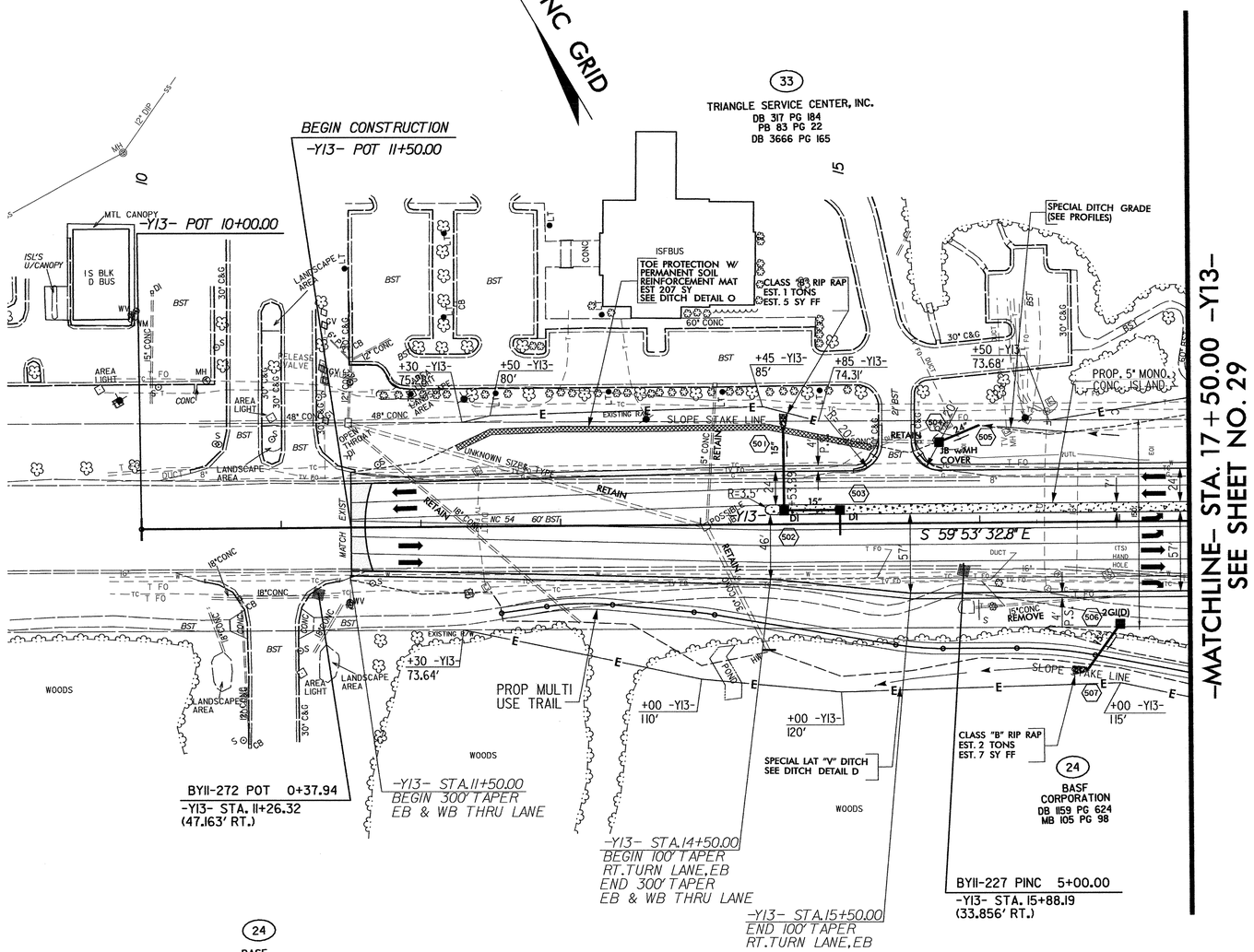

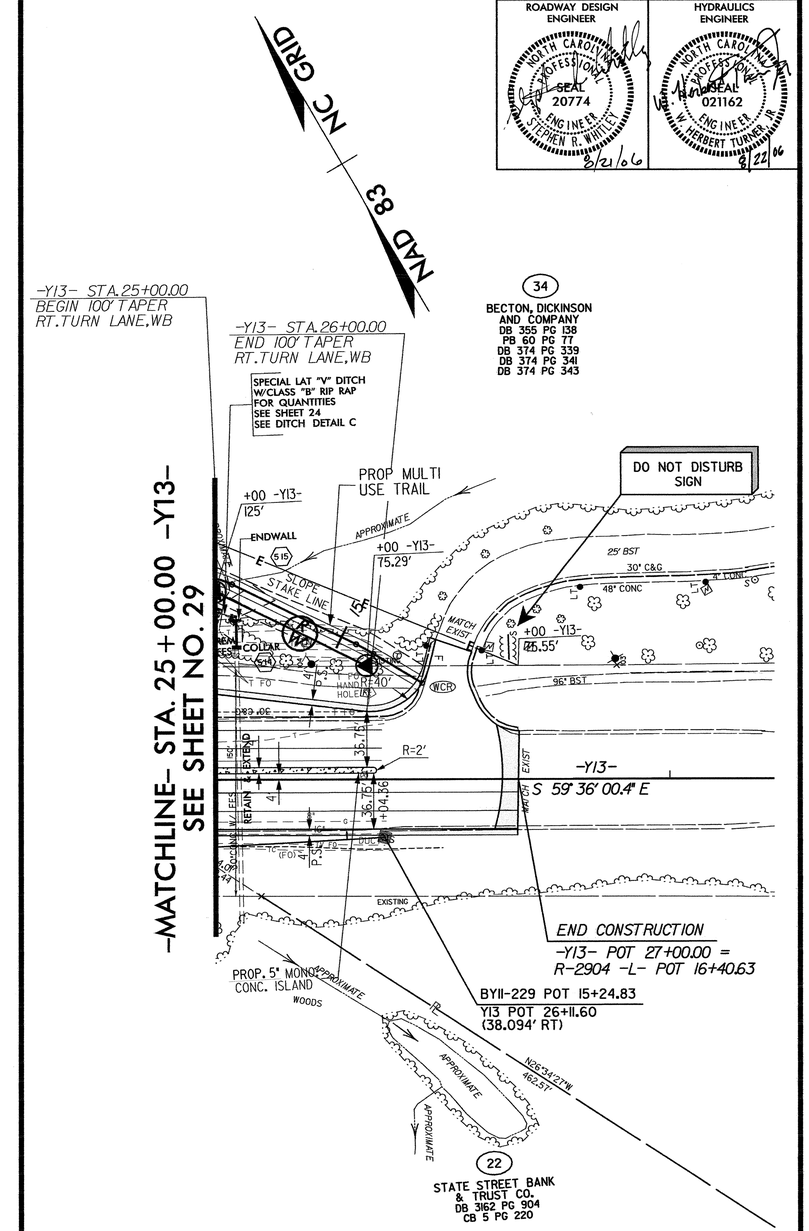

FOR DITCH DETAILS, SEE SHEETS 2-H & 2-I
FOR C&G TRANSITION, SEE SHEET 2-N
FOR TRAIL PLANS, SEE SHEETS 2-W & 2-X
FOR -Y13- PROFILE, SEE SHEET 57

LEGEND

PAVED SHOULDER

Plans prepared by:
KO & ASSOCIATES, P.C.
Consulting Engineers
1011 SCHAUB DR., SUITE #202
RALEIGH, N.C. 27606
(919)-851-6066

8/21/2006
R:\Roadway\Proj\u4026sp36.psh
Ko & Associates, P.C.

REVISIONS

PROJECT REFERENCE NO.	SHEET NO.
U-4026	37
U-4026B R/W SHEET NO.	30
ROADWAY DESIGN ENGINEER	HYDRAULICS ENGINEER
NORTH CAROLINA PROFESSIONAL SEAL 20774 ENGINEER STEPHEN R. WHITLEY 5-9-06	NORTH CAROLINA PROFESSIONAL SEAL 021162 ENGINEER HERBERT TURNER, JR. 5-9-06

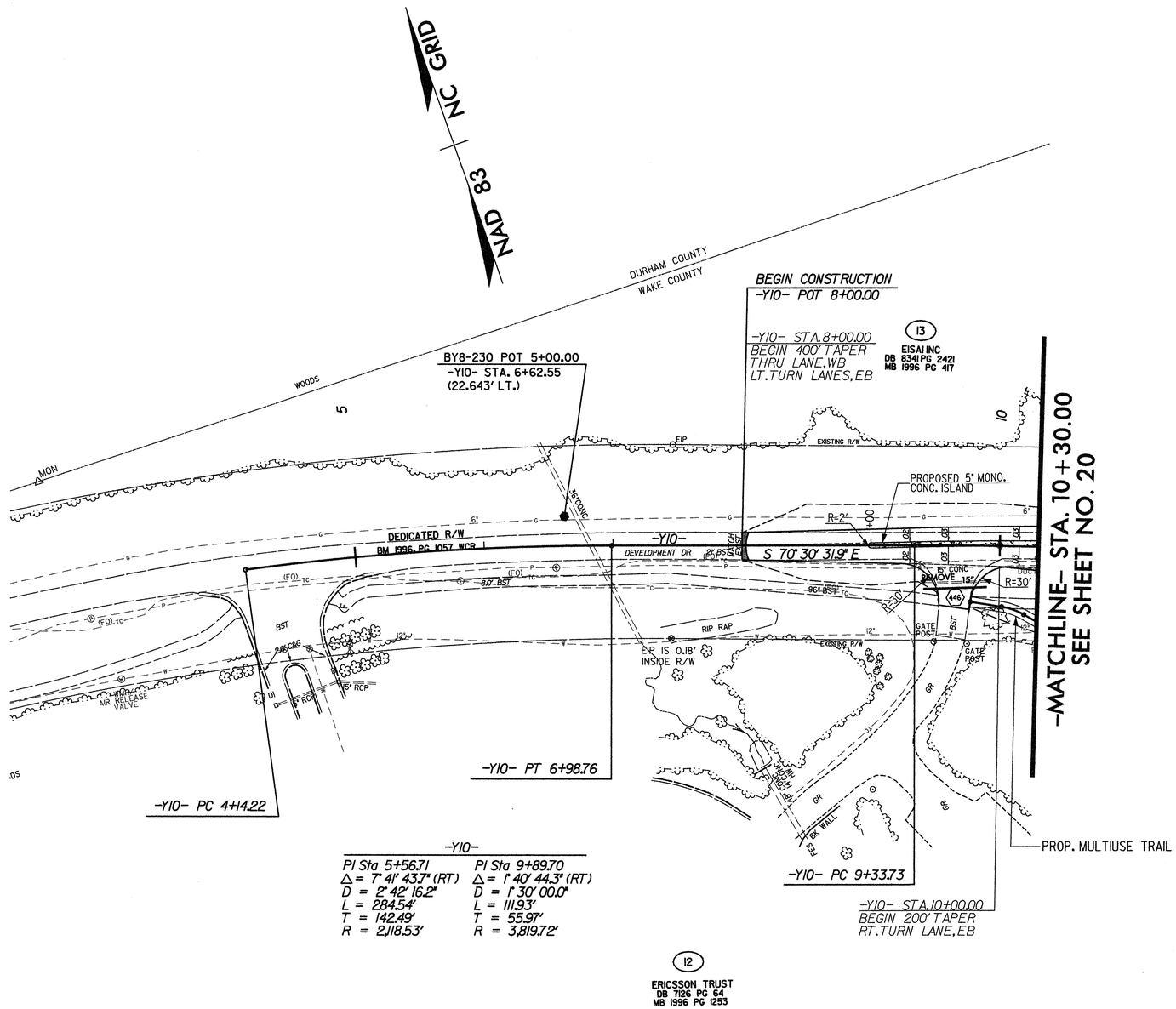

-Y10-

PI Sta 5+56.71	PI Sta 9+89.70
Δ = 7° 41' 43.7" (RT)	Δ = 1° 40' 44.3" (RT)
D = 2° 42' 16.2"	D = 1° 30' 00.0"
L = 284.54'	L = 111.93'
T = 142.49'	T = 55.97'
R = 2,118.53'	R = 3,819.72'

NOTES:
1. ALL DRIVEWAYS IN SHOULDER SECTION TO BE 16 FT. WITH 12 FT. RADIUS UNLESS SHOWN OTHERWISE ON PLANS.
2. ALL RADII AT BEGIN AND END OF PROP. 5' MONO. CONC. ISLAND ARE 2' UNLESS OTHERWISE SHOWN.

FOR TRAIL PLANS SEE SHEET 2-Q
FOR DITCH DETAILS SEE SHEET 2-H & 2-I
FOR -Y10- PROFILE, SEE SHEET 53

LEGEND

PAVED SHOULDER

Plans prepared by:
KO & ASSOCIATES, P.C.
Consulting Engineers
1011 SCHAUB DR., SUITE #202
RALEIGH, N.C. 27606
(919)-851-6066

PROJECT REFERENCE NO.	SHEET NO.
U-4026	38

ROADWAY DESIGN ENGINEER

NORTH CAROLINA PROFESSIONAL SEAL 20774 ENGINEER STEPHEN R. WHITLEY 5-4-06

HYDRAULICS ENGINEER

NORTH CAROLINA PROFESSIONAL SEAL 021162 ENGINEER WILLIAM HERBERT TURNER JR. 5-4-06

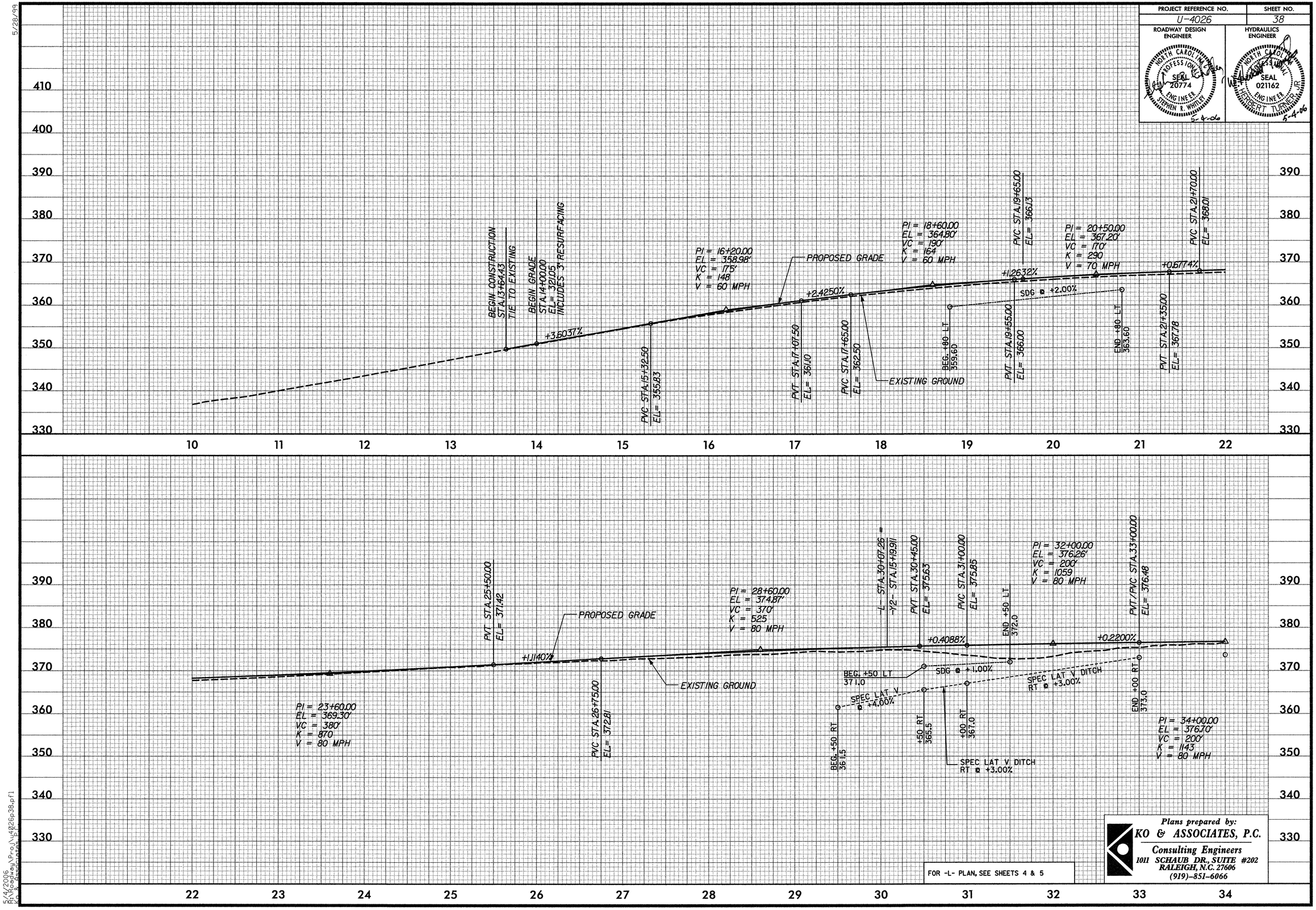

Plans prepared by:
KO & ASSOCIATES, P.C.
Consulting Engineers
1011 SCHAUB DR., SUITE #202
RALEIGH, N.C. 27606
(919)-851-6066

5/28/99

5/4/2006
R:\Roadway\Proj\u4026p38.pf1
Ko & Associates, P.C.

PROJECT REFERENCE NO.	SHEET NO.
U-4026	39

ROADWAY DESIGN ENGINEER

NORTH CAROLINA PROFESSIONAL SEAL 20774 ENGINEER STEPHEN R. WHITLEY

5-4-06

HYDRAULICS ENGINEER

NORTH CAROLINA PROFESSIONAL SEAL 021162 ENGINEER HERBERT TURNER, JR.

5-4-06

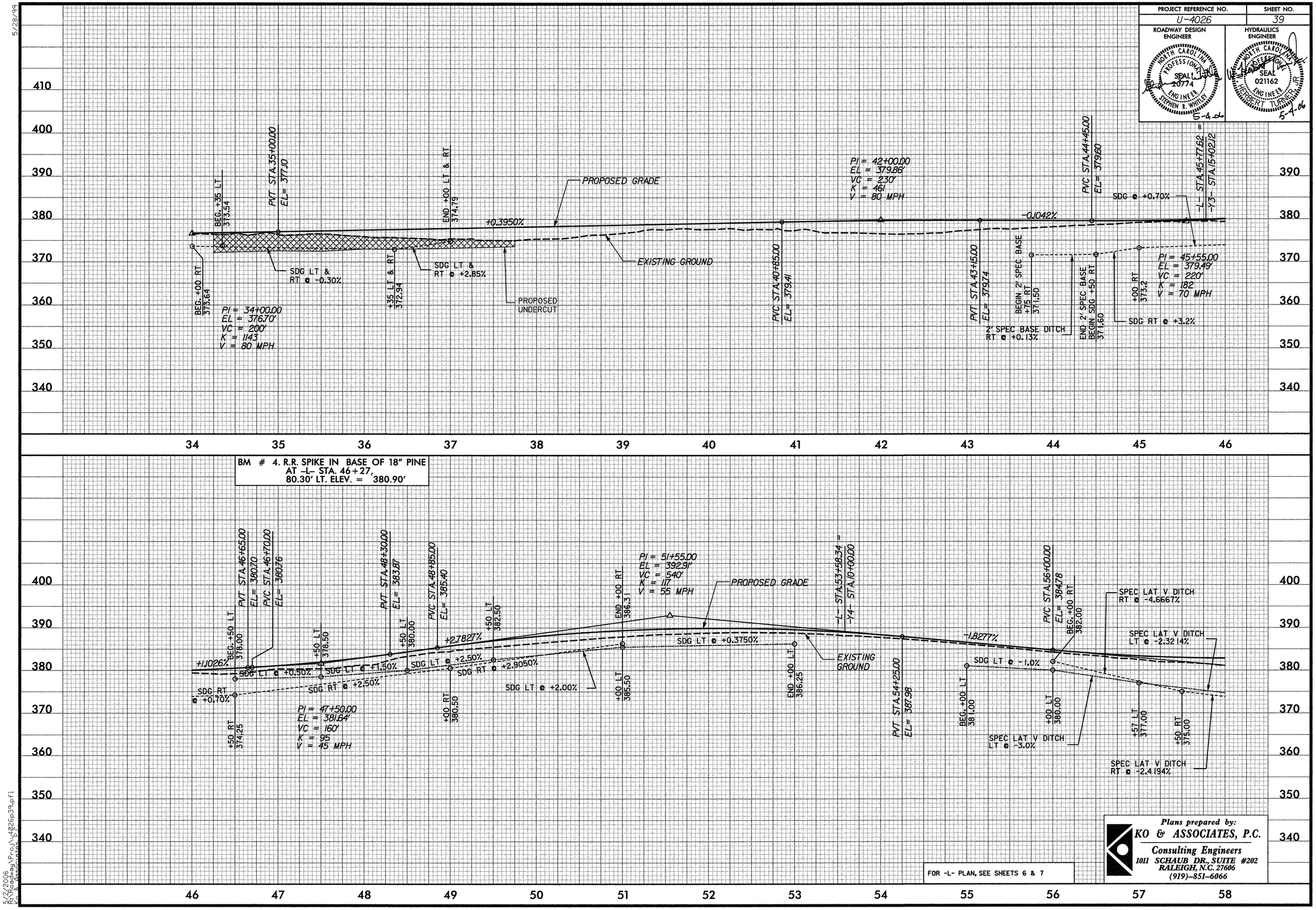

FOR -L- PLAN, SEE SHEETS 6 & 7

Plans prepared by:
KO & ASSOCIATES, P.C.
Consulting Engineers
1011 SCHAUB DR., SUITE #202
RALEIGH, N.C. 27606
(919)-851-6066

PROJECT REFERENCE NO.	SHEET NO.
U-4026	40

ROADWAY DESIGN ENGINEER — NORTH CAROLINA PROFESSIONAL SEAL 20774 ENGINEER STEPHEN R. WHITLEY — 5-4-06

HYDRAULICS ENGINEER — NORTH CAROLINA PROFESSIONAL SEAL 021162 ENGINEER HERBERT TURNER, JR. — 5-4-06

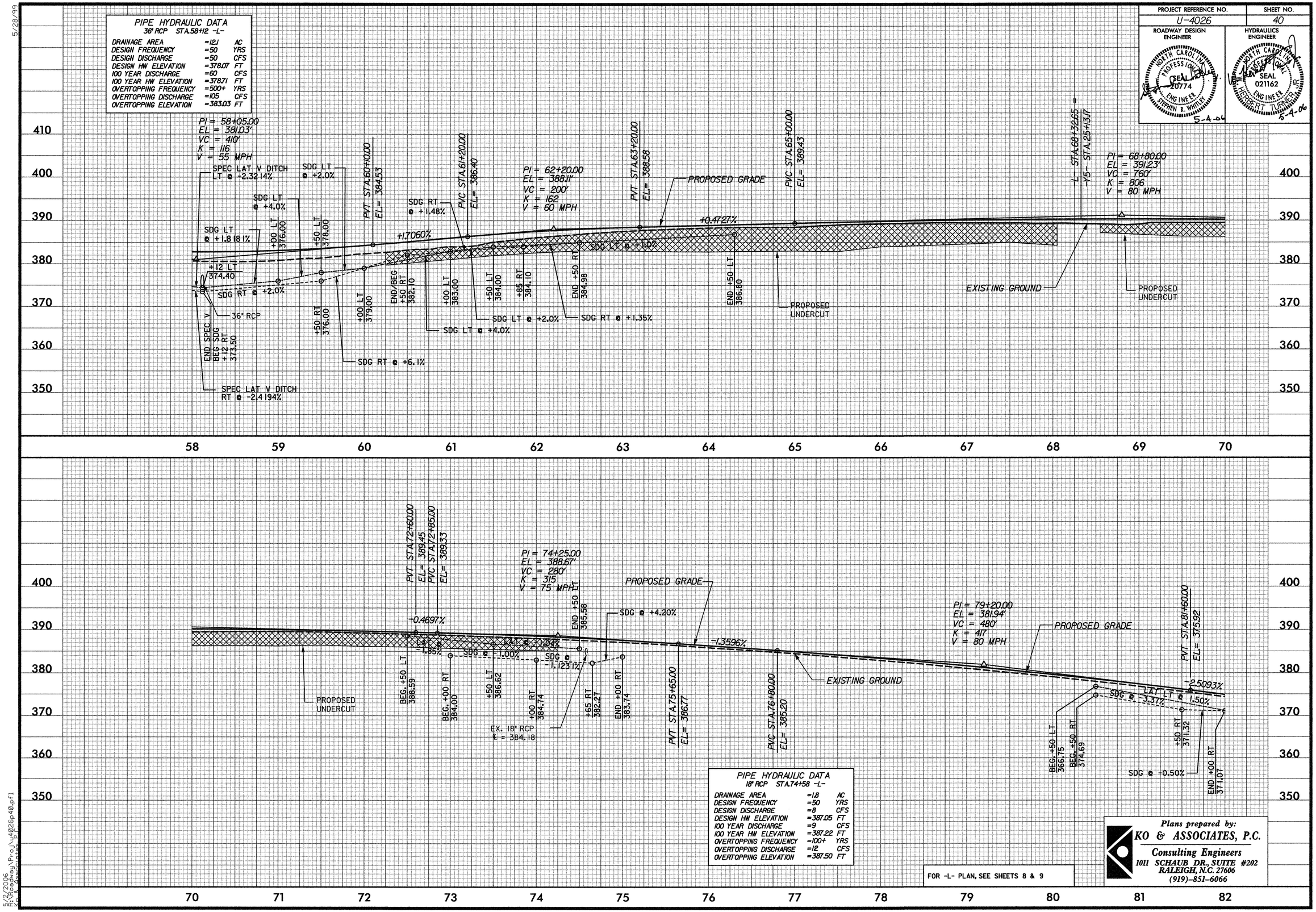

5/28/99

5/2/2006
R:\Roadway\Proj\u4026p40.pfl
ko & Associates, P.C.

5/28/99

PROJECT REFERENCE NO.	SHEET NO.
U-4026	41

ROADWAY DESIGN ENGINEER

HYDRAULICS ENGINEER

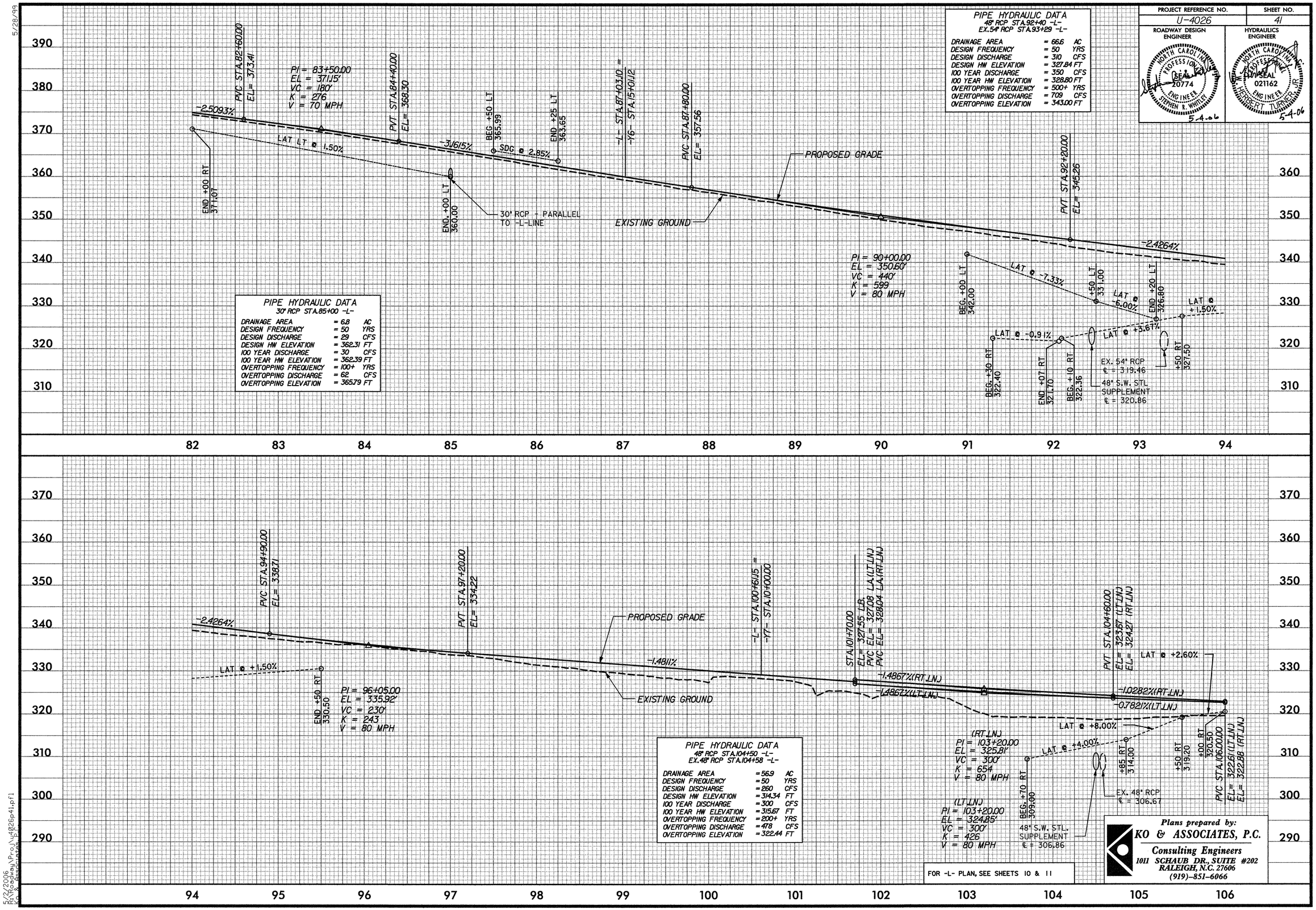

5/2/2006
R:\Roadway\Proj\u4026a41.prfl
Ko & Associates, P.C.

PROJECT REFERENCE NO.	SHEET NO.
U-4026	42

ROADWAY DESIGN ENGINEER: NORTH CAROLINA PROFESSIONAL SEAL 20774 ENGINEER STEPHEN R. WHITLEY 5-4-06

HYDRAULICS ENGINEER: NORTH CAROLINA PROFESSIONAL SEAL 021162 ENGINEER HERBERT L. JENNER, JR. 5-4-06

BM # 7. R.R. SPIKE IN BASE OF 12" PINE
AT -L- STA. 106+96.33,
90.48' LT. ELEV. = 310.91'

PIPE HYDRAULIC DATA
(2) 24" RCP STA.108+49 -L-

DRAINAGE AREA	= 10.2	AC
DESIGN FREQUENCY	= 50	YRS
DESIGN DISCHARGE	= 41	CFS
DESIGN HW ELEVATION	= 314.19	FT
100 YEAR DISCHARGE	= 48	CFS
100 YEAR HW ELEVATION	= 314.65	FT
OVERTOPPING FREQUENCY	= 500+	YRS
OVERTOPPING DISCHARGE	= 92	CFS
OVERTOPPING ELEVATION	= 318.91	FT

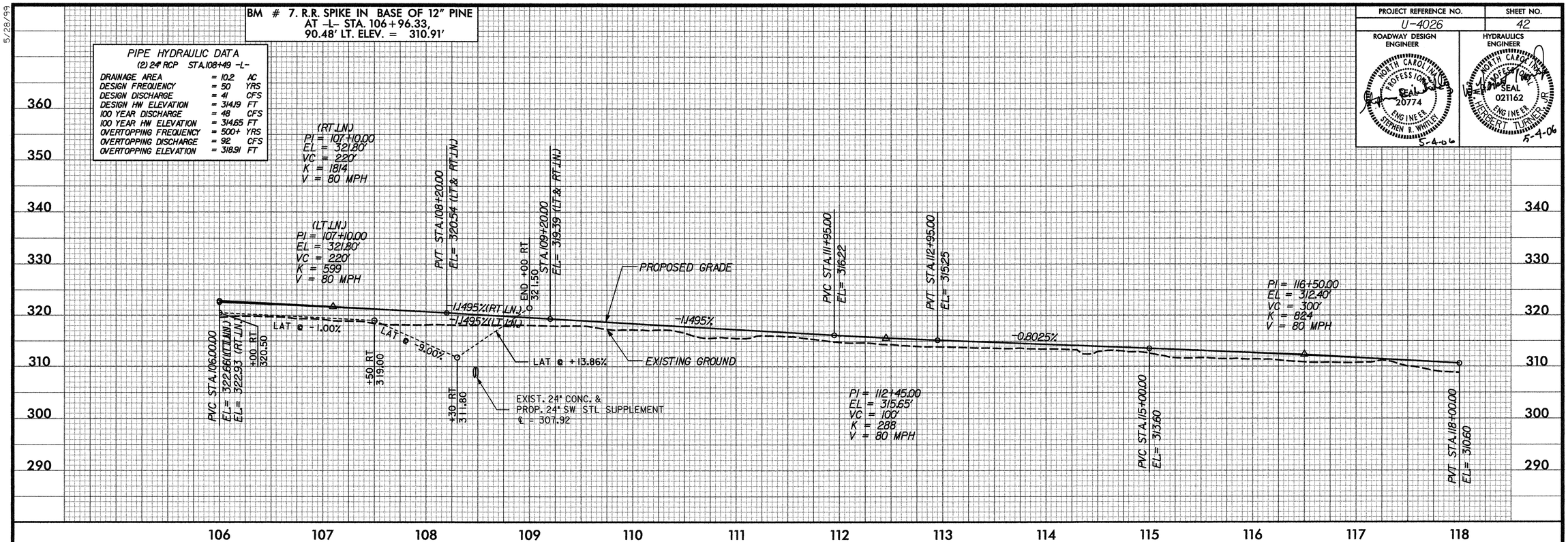

BM # 8. R.R. SPIKE IN BASE OF 24" TWIN OAK
AT -L- STA. 119+41.51,
98.30' LT. ELEV. = 312.94'

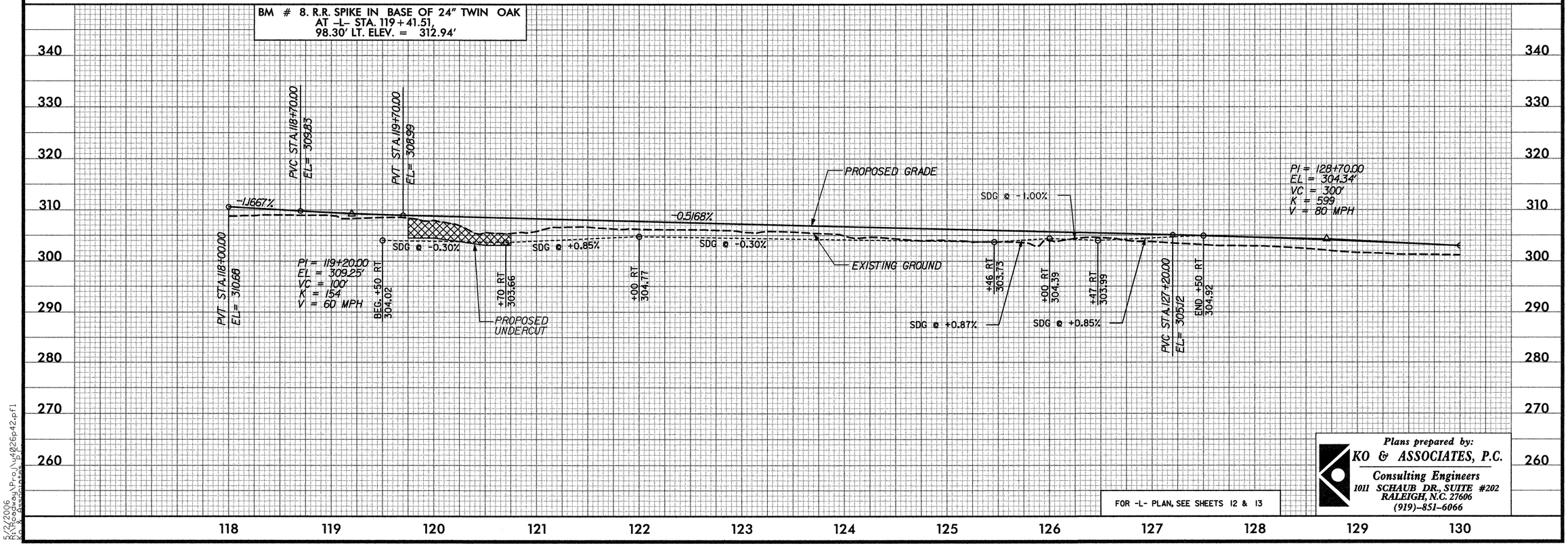

FOR -L- PLAN, SEE SHEETS 12 & 13

Plans prepared by:
KO & ASSOCIATES, P.C.
Consulting Engineers
1011 SCHAUB DR., SUITE #202
RALEIGH, N.C. 27606
(919)-851-6066

5/28/99

5/2/2006
R:\Roadway\Proj\u4026p42.pfl
Ko & Associates, P.C.

PROJECT REFERENCE NO.	SHEET NO.
U-4026	43

ROADWAY DESIGN ENGINEER

NORTH CAROLINA PROFESSIONAL SEAL 20774 ENGINEER STEPHEN R. WHITLEY 5-4-06

HYDRAULICS ENGINEER

NORTH CAROLINA PROFESSIONAL SEAL 021162 ENGINEER HERBERT TURNER, JR. 5-4-06

BM # 9. "X" CUT IN CORNER OF CONC HW
AT -L- STA. 132+89.13,
97.31' LT. ELEV. = 292.25'

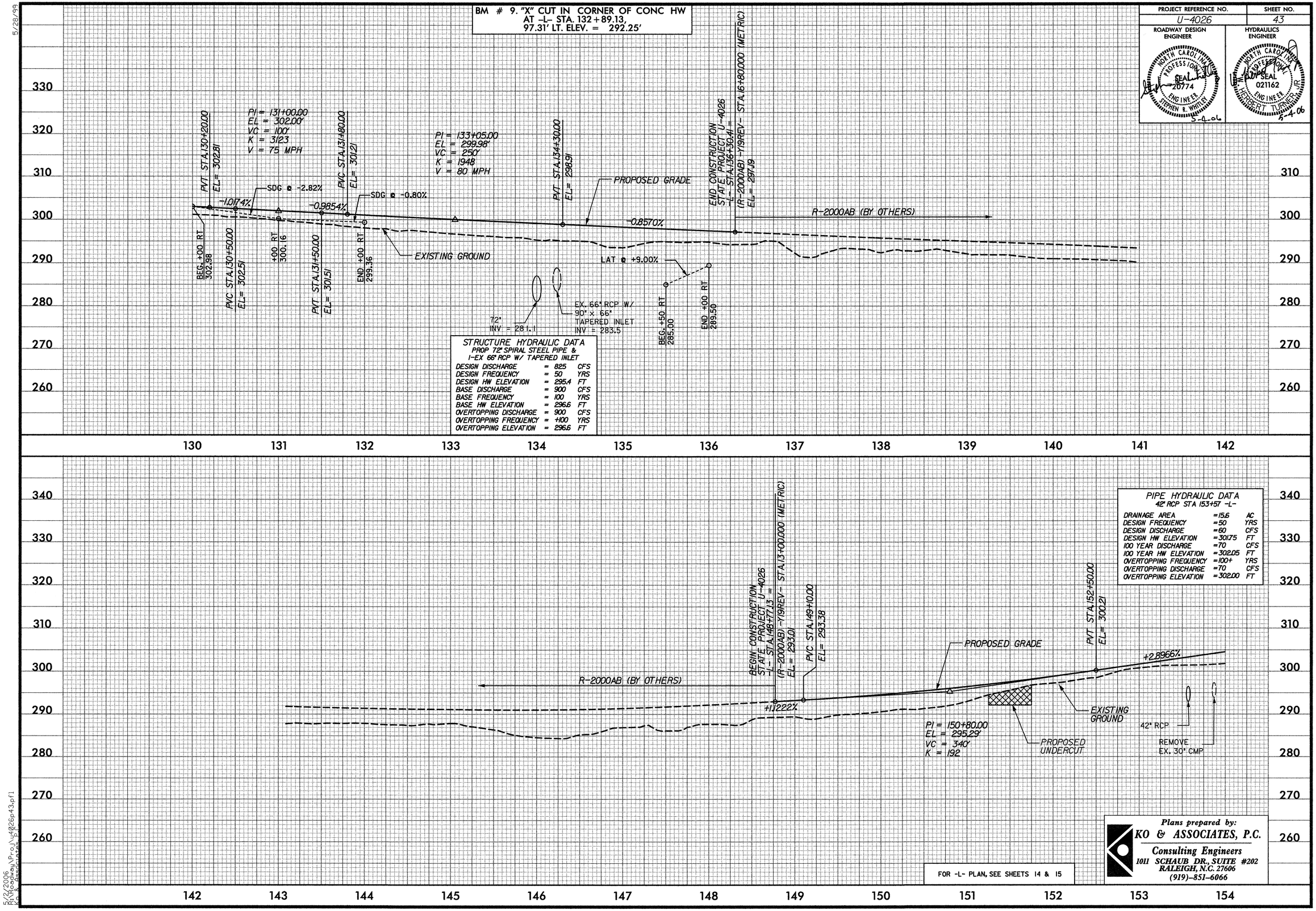

STRUCTURE HYDRAULIC DATA
PROP 72" SPIRAL STEEL PIPE &
1-EX 66" RCP W/ TAPERED INLET

DESIGN DISCHARGE	=	825	CFS
DESIGN FREQUENCY	=	50	YRS
DESIGN HW ELEVATION	=	295.4	FT
BASE DISCHARGE	=	900	CFS
BASE FREQUENCY	=	100	YRS
BASE HW ELEVATION	=	296.6	FT
OVERTOPPING DISCHARGE	=	900	CFS
OVERTOPPING FREQUENCY	=	+100	YRS
OVERTOPPING ELEVATION	=	296.6	FT

PIPE HYDRAULIC DATA
42" RCP STA 153+57 -L-

DRAINAGE AREA	=	15.6	AC
DESIGN FREQUENCY	=	50	YRS
DESIGN DISCHARGE	=	60	CFS
DESIGN HW ELEVATION	=	301.75	FT
100 YEAR DISCHARGE	=	70	CFS
100 YEAR HW ELEVATION	=	302.05	FT
OVERTOPPING FREQUENCY	=	100+	YRS
OVERTOPPING DISCHARGE	=	70	CFS
OVERTOPPING ELEVATION	=	302.00	FT

Plans prepared by:
KO & ASSOCIATES, P.C.
Consulting Engineers
1011 SCHAUB DR., SUITE #202
RALEIGH, N.C. 27606
(919)-851-6066

PROJECT REFERENCE NO.	SHEET NO.
U-4026	44

ROADWAY DESIGN ENGINEER

NORTH CAROLINA PROFESSIONAL SEAL 20774 ENGINEER STEPHEN R. WHITLEY 5-4-06

HYDRAULICS ENGINEER

NORTH CAROLINA PROFESSIONAL SEAL 021162 ENGINEER ROBERT TURNER, JR. 5-4-06

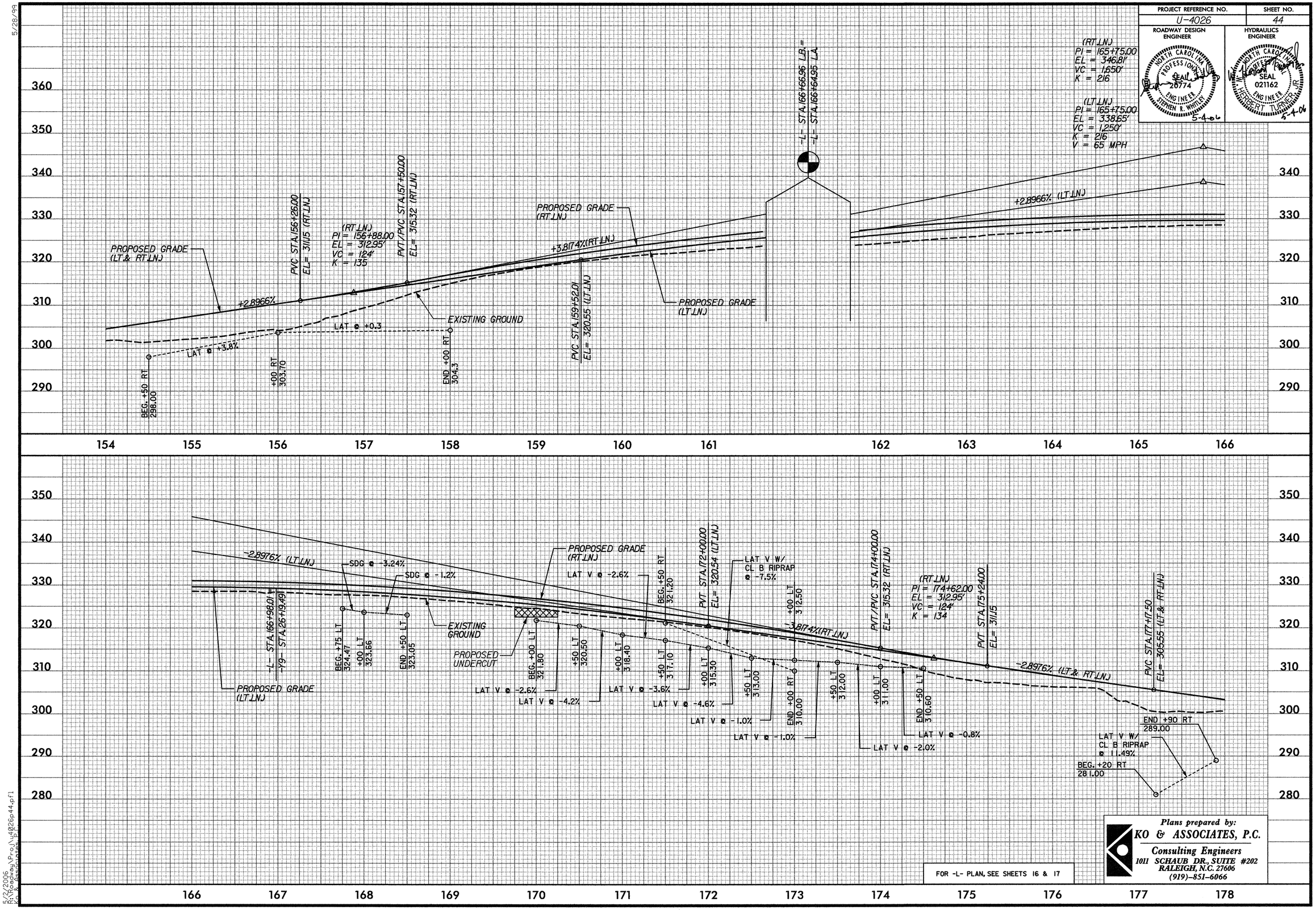

FOR -L- PLAN, SEE SHEETS 16 & 17

Plans prepared by:
KO & ASSOCIATES, P.C.
Consulting Engineers
1011 SCHAUB DR., SUITE #202
RALEIGH, N.C. 27606
(919)-851-6066

5/28/99

PROJECT REFERENCE NO.	SHEET NO.
U-4026	45

ROADWAY DESIGN ENGINEER — NORTH CAROLINA PROFESSIONAL SEAL 20774 ENGINEER STEPHEN R. WHITLEY — 5-4-06

HYDRAULICS ENGINEER — NORTH CAROLINA PROFESSIONAL SEAL 021162 ENGINEER HERBERT TURNER JR. — 5-4-06

BM # 11. "X" CUT IN SE COR OF CONC RET WALL AT -L- STA. 188+61.78, 325.31' LT. ELEV. = 300.29'

PIPE HYDRAULIC DATA
EX.24" RCP STA 180+80 -L-

DRAINAGE AREA	= 7.2	AC
DESIGN FREQUENCY	= 50	YRS
DESIGN DISCHARGE	= 24	CFS
DESIGN HW ELEVATION	= 290.00	FT
100 YEAR DISCHARGE	= 28	CFS
100 YEAR HW ELEVATION	= 290.84	FT
OVERTOPPING FREQUENCY	= 100+	YRS
OVERTOPPING DISCHARGE	= 29	CFS
OVERTOPPING ELEVATION	= 290.68	FT

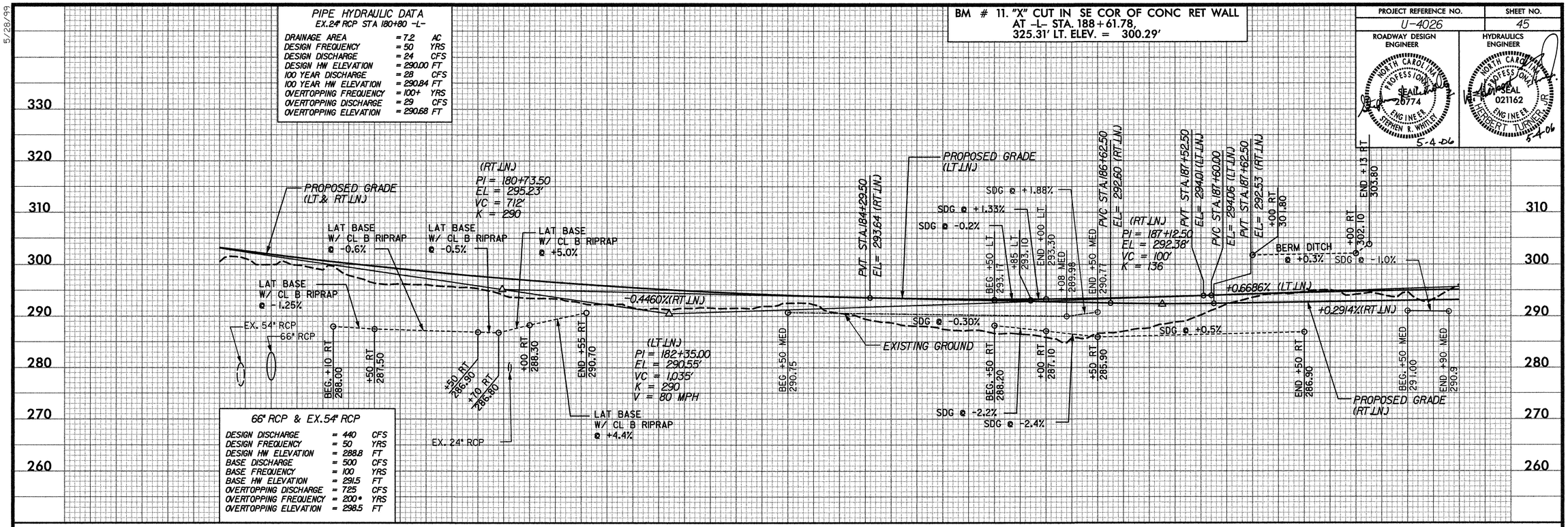

66" RCP & EX.54" RCP

DESIGN DISCHARGE	= 440	CFS
DESIGN FREQUENCY	= 50	YRS
DESIGN HW ELEVATION	= 288.8	FT
BASE DISCHARGE	= 500	CFS
BASE FREQUENCY	= 100	YRS
BASE HW ELEVATION	= 291.5	FT
OVERTOPPING DISCHARGE	= 725	CFS
OVERTOPPING FREQUENCY	= 200*	YRS
OVERTOPPING ELEVATION	= 298.5	FT

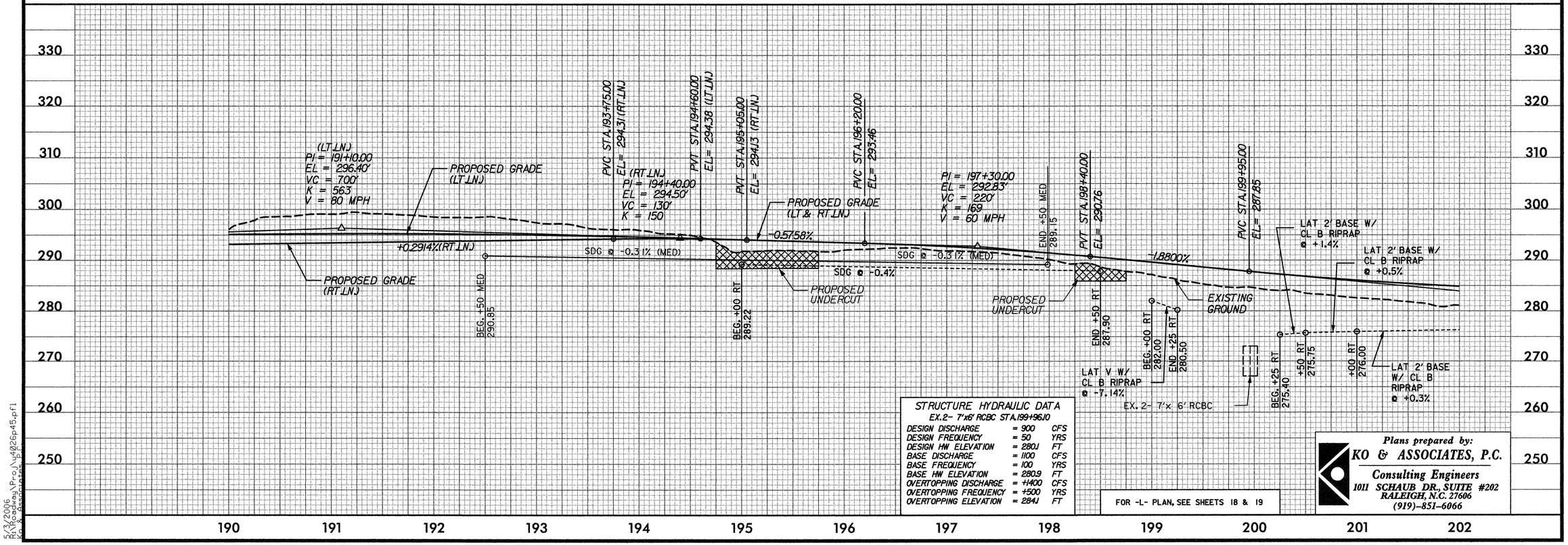

STRUCTURE HYDRAULIC DATA
EX.2- 7'x6' RCBC STA.199+96.10

DESIGN DISCHARGE	= 900	CFS
DESIGN FREQUENCY	= 50	YRS
DESIGN HW ELEVATION	= 280.1	FT
BASE DISCHARGE	= 1100	CFS
BASE FREQUENCY	= 100	YRS
BASE HW ELEVATION	= 280.9	FT
OVERTOPPING DISCHARGE	= +1400	CFS
OVERTOPPING FREQUENCY	= +500	YRS
OVERTOPPING ELEVATION	= 284.1	FT

FOR -L- PLAN, SEE SHEETS 18 & 19

Plans prepared by:
KO & ASSOCIATES, P.C.
Consulting Engineers
1011 SCHAUB DR., SUITE #202
RALEIGH, N.C. 27606
(919)-851-6066

5/3/2006
R:\Roadway\Proj\u4026p45.pfl
Ko & Associates, P.C.

PROJECT REFERENCE NO.	SHEET NO.
U-4026	46

ROADWAY DESIGN ENGINEER

NORTH CAROLINA PROFESSIONAL SEAL 20774 ENGINEER STEPHEN R. WHITLEY

5-4-06

HYDRAULICS ENGINEER

NORTH CAROLINA PROFESSIONAL SEAL 021162 ENGINEER HERBERT TURNER, JR.

5-4-06

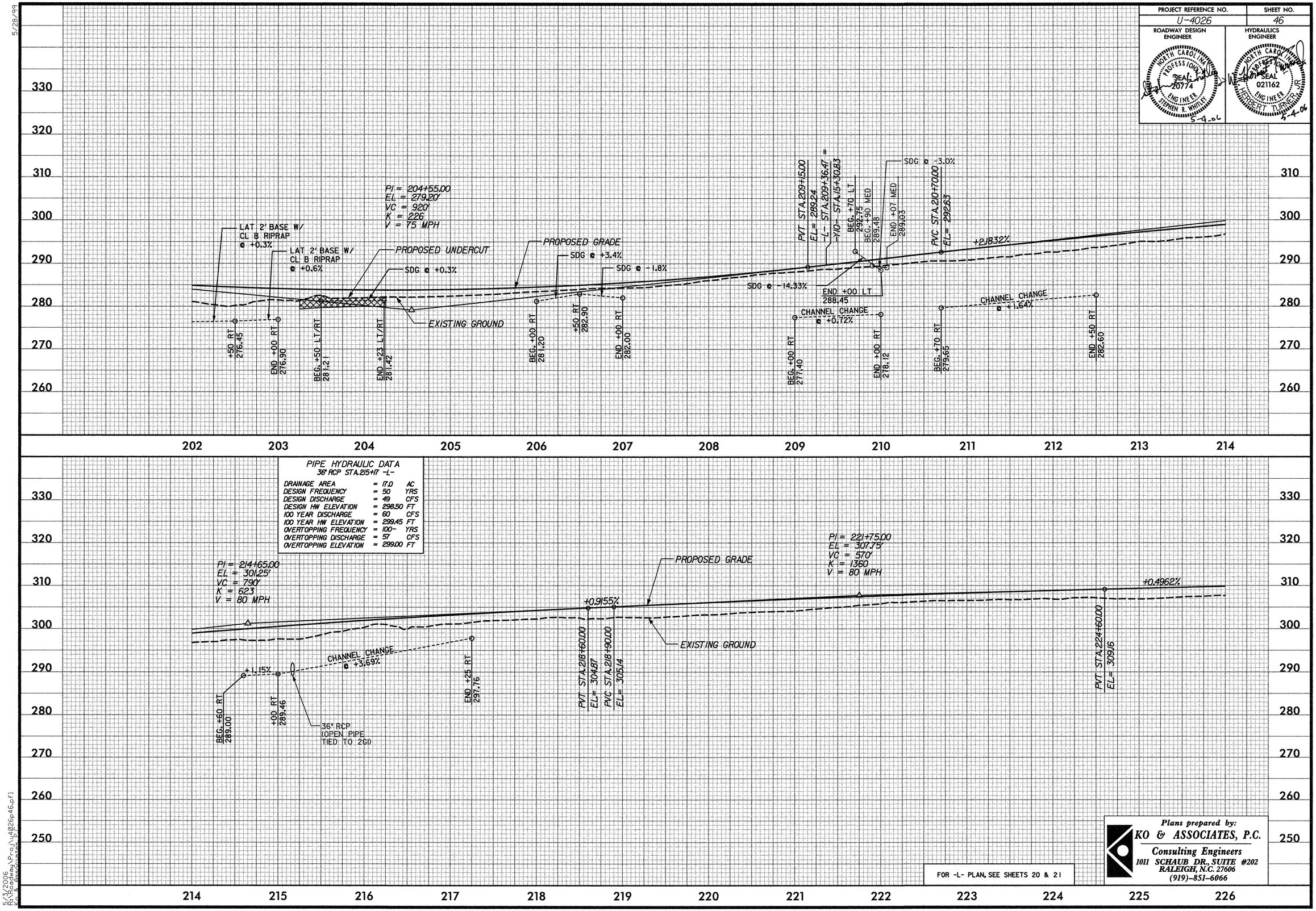

FOR -L- PLAN, SEE SHEETS 20 & 21

Plans prepared by:
KO & ASSOCIATES, P.C.
Consulting Engineers
1011 SCHAUB DR., SUITE #202
RALEIGH, N.C. 27606
(919)-851-6066

5/28/99

5/3/2006
R:\Roadway\Proj\u4026p46.pf1
KO & Associates, P.C.

5/28/99

PROJECT REFERENCE NO.	SHEET NO.
U-4026	47

ROADWAY DESIGN ENGINEER — NORTH CAROLINA PROFESSIONAL SEAL 20774 ENGINEER STEPHEN R. WHITLEY 5-4-06

HYDRAULICS ENGINEER — NORTH CAROLINA PROFESSIONAL SEAL 021162 ENGINEER ROBERT TURNER, JR. 5-4-06

BM # 13. R.R. SPIKE IN BASE OF 22" PINE
AT -L- STA. 228+55.89,
364.59' LT. ELEV. = 319.27'

STRUCTURE HYDRAULIC DATA
EX.66" RCP & PROP.72" RCP

DESIGN DISCHARGE	= 820	CFS
DESIGN FREQUENCY	= 50	YRS
DESIGN HW ELEVATION	= 298.4	FT
BASE DISCHARGE	= 900	CFS
BASE FREQUENCY	= 100	YRS
BASE HW ELEVATION	= 300.0	FT
OVERTOPPING DISCHARGE	= 1345	CFS
OVERTOPPING FREQUENCY	= 200+	YRS
OVERTOPPING ELEVATION	= 310.6	FT

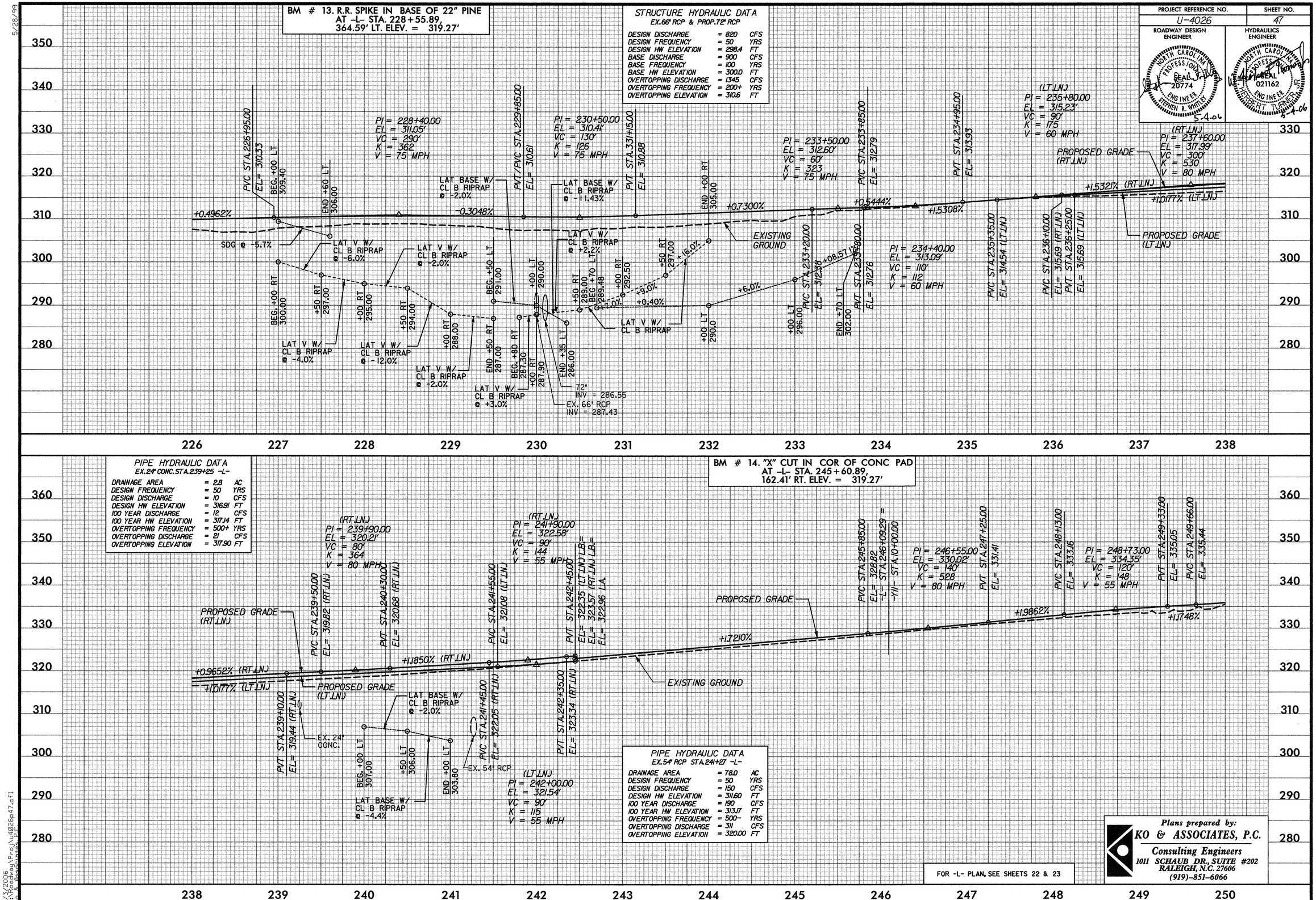

PIPE HYDRAULIC DATA
EX.24" CONC.STA.239+25 -L-

DRAINAGE AREA	= 2.8	AC
DESIGN FREQUENCY	= 50	YRS
DESIGN DISCHARGE	= 10	CFS
DESIGN HW ELEVATION	= 316.91	FT
100 YEAR DISCHARGE	= 12.	CFS
100 YEAR HW ELEVATION	= 317.14	FT
OVERTOPPING FREQUENCY	= 500+	YRS
OVERTOPPING DISCHARGE	= 21	CFS
OVERTOPPING ELEVATION	= 317.90	FT

BM # 14. "X" CUT IN COR OF CONC PAD
AT -L- STA. 245+60.89,
162.41' RT. ELEV. = 319.27'

PIPE HYDRAULIC DATA
EX.54" RCP STA.241+27 -L-

DRAINAGE AREA	= 78.0	AC
DESIGN FREQUENCY	= 50	YRS
DESIGN DISCHARGE	= 150	CFS
DESIGN HW ELEVATION	= 311.60	FT
100 YEAR DISCHARGE	= 190	CFS
100 YEAR HW ELEVATION	= 313.17	FT
OVERTOPPING FREQUENCY	= 500-	YRS
OVERTOPPING DISCHARGE	= 311	CFS
OVERTOPPING ELEVATION	= 320.00	FT

FOR -L- PLAN, SEE SHEETS 22 & 23

Plans prepared by:
KO & ASSOCIATES, P.C.
Consulting Engineers
1011 SCHAUB DR., SUITE #202
RALEIGH, N.C. 27606
(919)-851-6066

5/3/2006
R:\Roadway\Proj\u4026p47.pfl
KO & Associates, P.C.

PROJECT REFERENCE NO.	SHEET NO.
U-4026	48
ROADWAY DESIGN ENGINEER	HYDRAULICS ENGINEER

NORTH CAROLINA PROFESSIONAL SEAL 26774 ENGINEER STEPHEN R. WHITLEY 5-4-06

NORTH CAROLINA PROFESSIONAL SEAL 021162 ENGINEER HERBERT TURNER, JR. 5-4-06

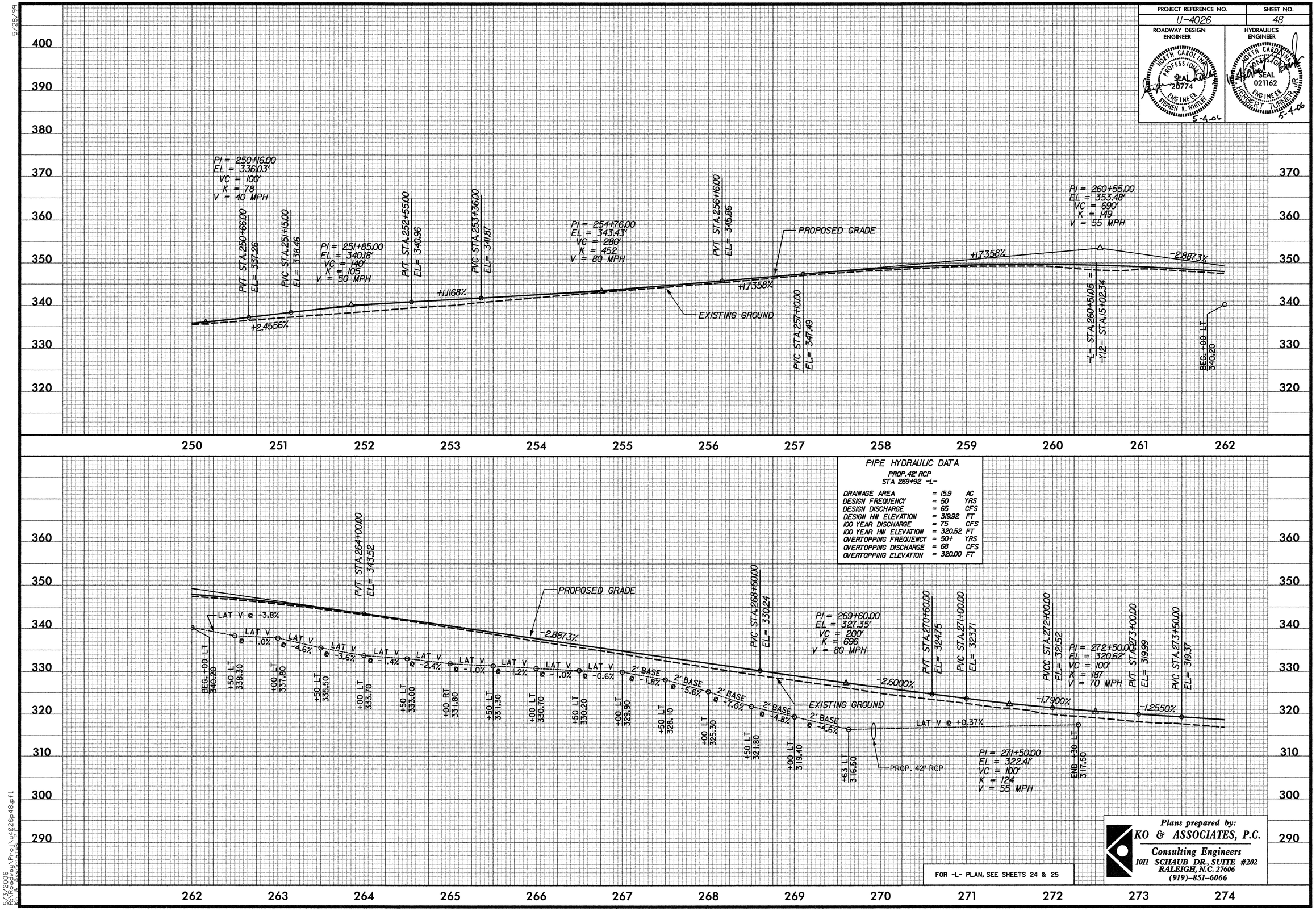

FOR -L- PLAN, SEE SHEETS 24 & 25

Plans prepared by:
KO & ASSOCIATES, P.C.
Consulting Engineers
1011 SCHAUB DR., SUITE #202
RALEIGH, N.C. 27606
(919)-851-6066

5/28/99

5/3/2006
R:\Roadway\Proj\u4026sp48.pfl
KO & Associates, P.C.

5/28/99

PROJECT REFERENCE NO.	SHEET NO.
U-4026	49

ROADWAY DESIGN ENGINEER

NORTH CAROLINA PROFESSIONAL SEAL 20774 ENGINEER STEPHEN R. WHITLEY
5-4-06

HYDRAULICS ENGINEER

NORTH CAROLINA PROFESSIONAL SEAL 021162 ENGINEER HERBERT TURNER III
5-4-06

PIPE HYDRAULIC DATA
EX.24" RCP STA.280+30 -L-

DRAINAGE AREA	= 4.3	AC
DESIGN FREQUENCY	= 50	YRS
DESIGN DISCHARGE	= 23	CFS
DESIGN HW ELEVATION	= 304.01	FT
100 YEAR DISCHARGE	= 25	CFS
100 YEAR HW ELEVATION	= 304.30	FT
OVERTOPPING FREQUENCY	= 100+	YRS
OVERTOPPING DISCHARGE	= 45	CFS
OVERTOPPING ELEVATION	= 308.00	FT

PIPE HYDRAULIC DATA
EX.30" RCP STA.282+24 -L-

DRAINAGE AREA	= 8.8	AC
DESIGN FREQUENCY	= 50	YRS
DESIGN DISCHARGE	= 35	CFS
DESIGN HW ELEVATION	= 300.60	FT
100 YEAR DISCHARGE	= 41	CFS
100 YEAR HW ELEVATION	= 301.15	FT
OVERTOPPING FREQUENCY	= 200+	YRS
OVERTOPPING DISCHARGE	= 65	CFS
OVERTOPPING ELEVATION	= 304.00	FT

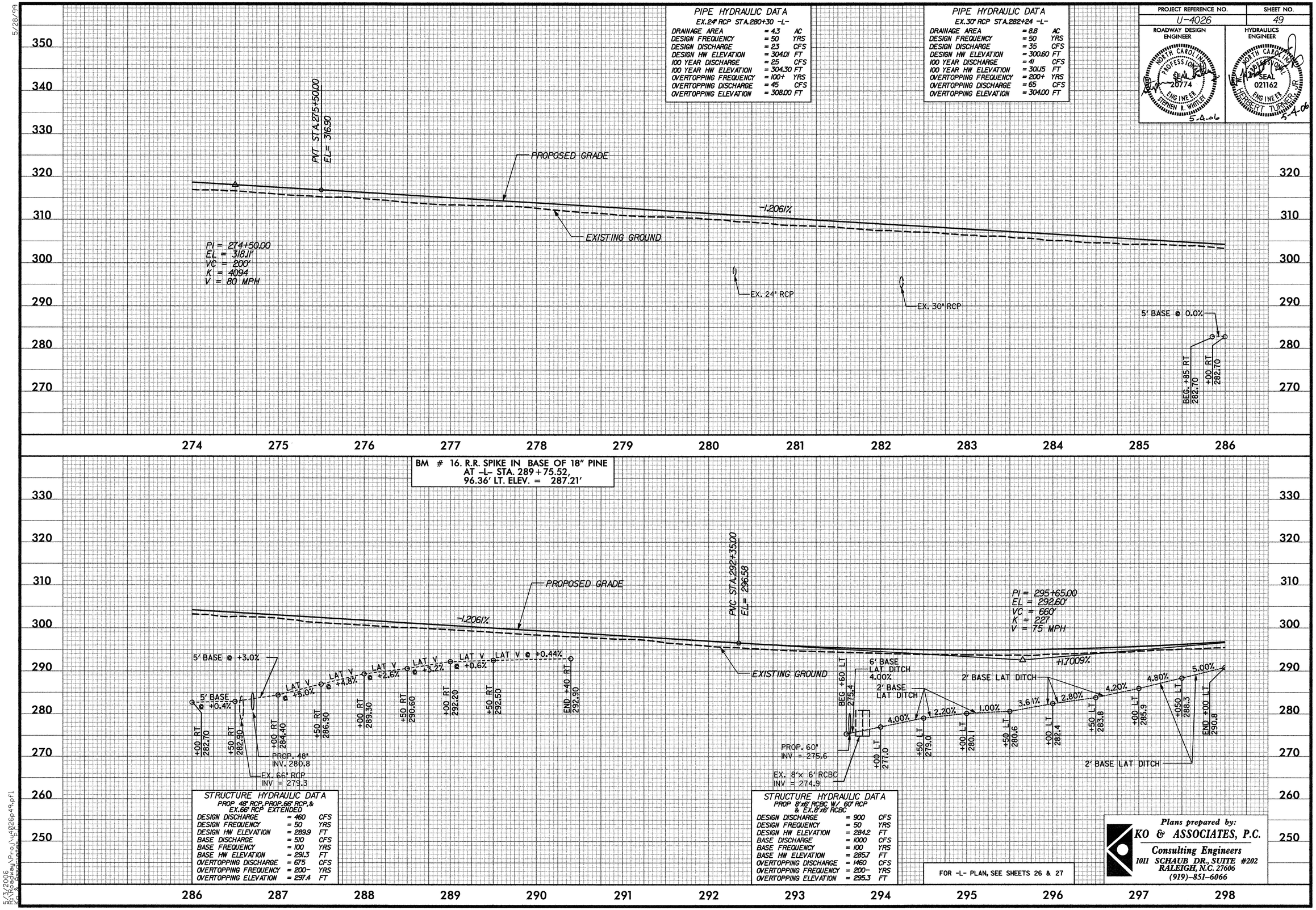

STRUCTURE HYDRAULIC DATA
PROP. 48" RCP, PROP. 66" RCP, & EX. 66" RCP EXTENDED

DESIGN DISCHARGE	= 460	CFS
DESIGN FREQUENCY	= 50	YRS
DESIGN HW ELEVATION	= 289.9	FT
BASE DISCHARGE	= 510	CFS
BASE FREQUENCY	= 100	YRS
BASE HW ELEVATION	= 291.3	FT
OVERTOPPING DISCHARGE	= 675	CFS
OVERTOPPING FREQUENCY	= 200-	YRS
OVERTOPPING ELEVATION	= 297.4	FT

STRUCTURE HYDRAULIC DATA
PROP 8'x6' RCBC W/ 60" RCP & EX. 8'x6' RCBC

DESIGN DISCHARGE	= 900	CFS
DESIGN FREQUENCY	= 50	YRS
DESIGN HW ELEVATION	= 284.2	FT
BASE DISCHARGE	= 1000	CFS
BASE FREQUENCY	= 100	YRS
BASE HW ELEVATION	= 285.7	FT
OVERTOPPING DISCHARGE	= 1460	CFS
OVERTOPPING FREQUENCY	= 200-	YRS
OVERTOPPING ELEVATION	= 295.3	FT

FOR -L- PLAN, SEE SHEETS 26 & 27

Plans prepared by:
KO & ASSOCIATES, P.C.
Consulting Engineers
1011 SCHAUB DR., SUITE #202
RALEIGH, N.C. 27606
(919)-851-6066

5/3/2006
R:\Roadway\Proj\u4026ep49.pf1
Ko & Associates, P.C.

5/28/99

PROJECT REFERENCE NO.	SHEET NO.
U-4026	50

ROADWAY DESIGN ENGINEER

NORTH CAROLINA PROFESSIONAL SEAL 20774 ENGINEER STEPHEN R. WHITLEY

5-4-06

HYDRAULICS ENGINEER

NORTH CAROLINA PROFESSIONAL SEAL 021162 ENGINEER HERBERT TURNER JR.

5-4-06

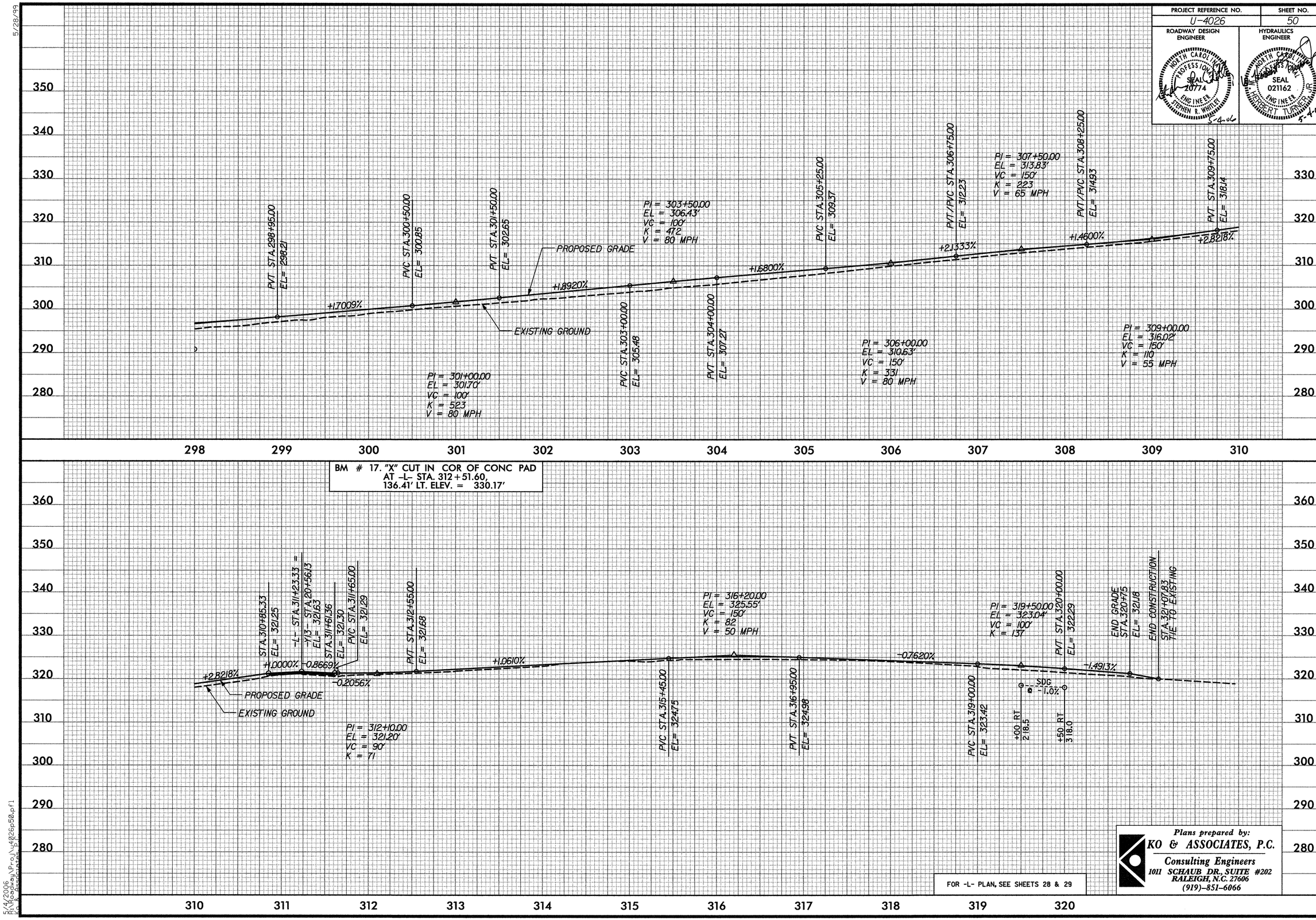

FOR -L- PLAN, SEE SHEETS 28 & 29

Plans prepared by:
KO & ASSOCIATES, P.C.
Consulting Engineers
1011 SCHAUB DR., SUITE #202
RALEIGH, N.C. 27606
(919)-851-6066

5/4/2006
R:\Roadway\Proj\u4026p50.pf1
Ko & Associates, P.C.

5/14/99

BM # 3. R.R. SPIKE IN BASE OF 18" PINE
AT -Y2- STA. 9+81.61,
47.81' RT. ELEV. = 362.12'

PROJECT REFERENCE NO.	SHEET NO.
U-4026	5I

ROADWAY DESIGN ENGINEER

NORTH CAROLINA PROFESSIONAL SEAL 20774 ENGINEER STEPHEN R. WHITLEY

5-4-06

HYDRAULICS ENGINEER

NORTH CAROLINA PROFESSIONAL SEAL 021162 ENGINEER HERBERT TURNER, JR.

5-4-06

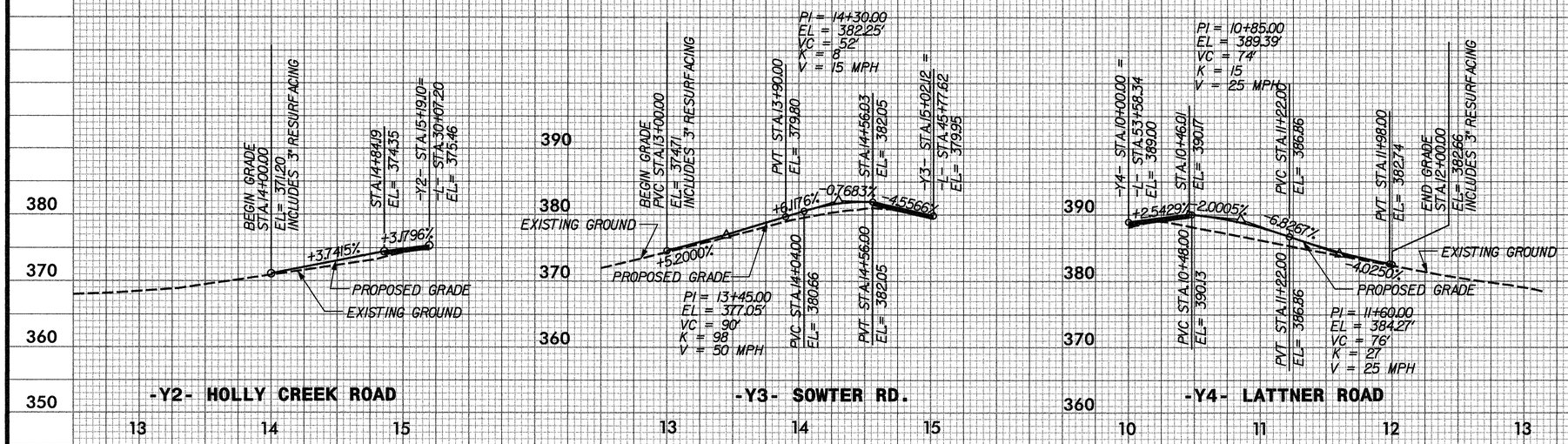

FOR -Y2- PLAN, SEE SHEET 5
FOR -Y3- PLAN, SEE SHEET 6
FOR -Y4- PLAN, SEE SHEET 7

Plans prepared by:
KO & ASSOCIATES, P.C.
Consulting Engineers
1011 SCHAUB DR., SUITE #202
RALEIGH, N.C. 27606
(919)-851-6066

PROJECT REFERENCE NO.	SHEET NO.
U-4026	52

ROADWAY DESIGN ENGINEER: NORTH CAROLINA PROFESSIONAL SEAL 20774 ENGINEER STEPHEN R. WHITLEY 5-4-06

HYDRAULICS ENGINEER: NORTH CAROLINA PROFESSIONAL SEAL 021162 ENGINEER HERBERT TURNER, JR. 5-4-06

BM # 5. R.R. SPIKE IN BASE OF 18" PINE
AT -Y5- STA. 12+75.13,
183.95' RT. ELEV. = 388.29'

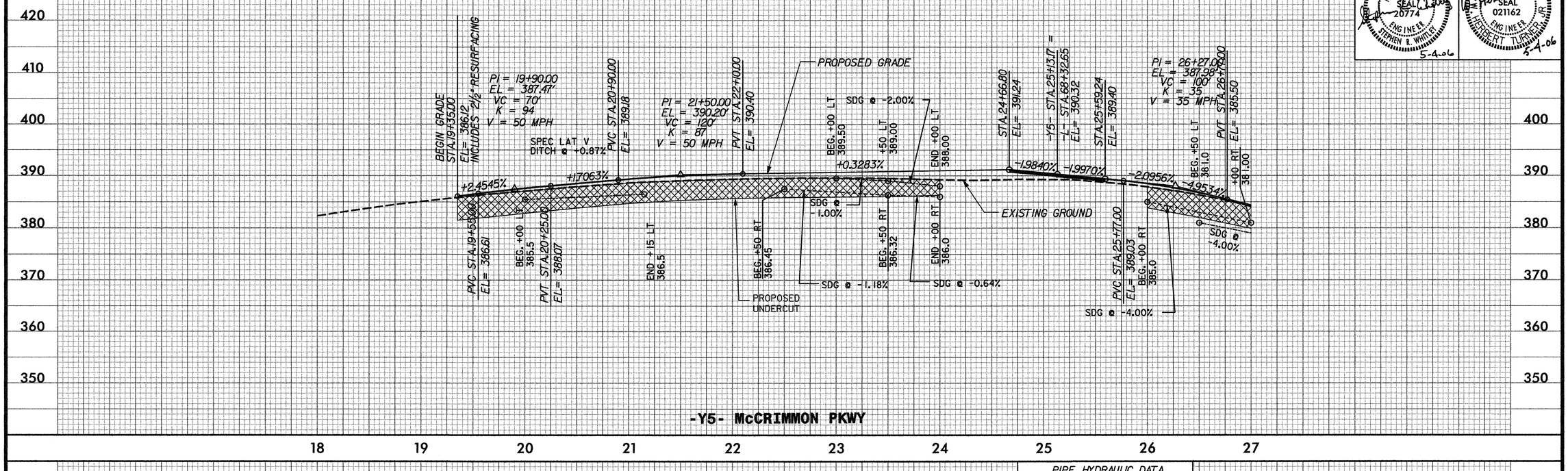

-Y5- McCRIMMON PKWY

PIPE HYDRAULIC DATA
18" RCP STA.34+73 -Y5-

DRAINAGE AREA	= 1.4	AC
DESIGN FREQUENCY	= 50	YRS
DESIGN DISCHARGE	= 8	CFS
DESIGN HW ELEVATION	= 371.67	FT
100 YEAR DISCHARGE	= 8	CFS
100 YEAR HW ELEVATION	= 371.67	FT
OVERTOPPING FREQUENCY	= 200+	YRS
OVERTOPPING DISCHARGE	= 22	CFS
OVERTOPPING ELEVATION	= 375.70	FT

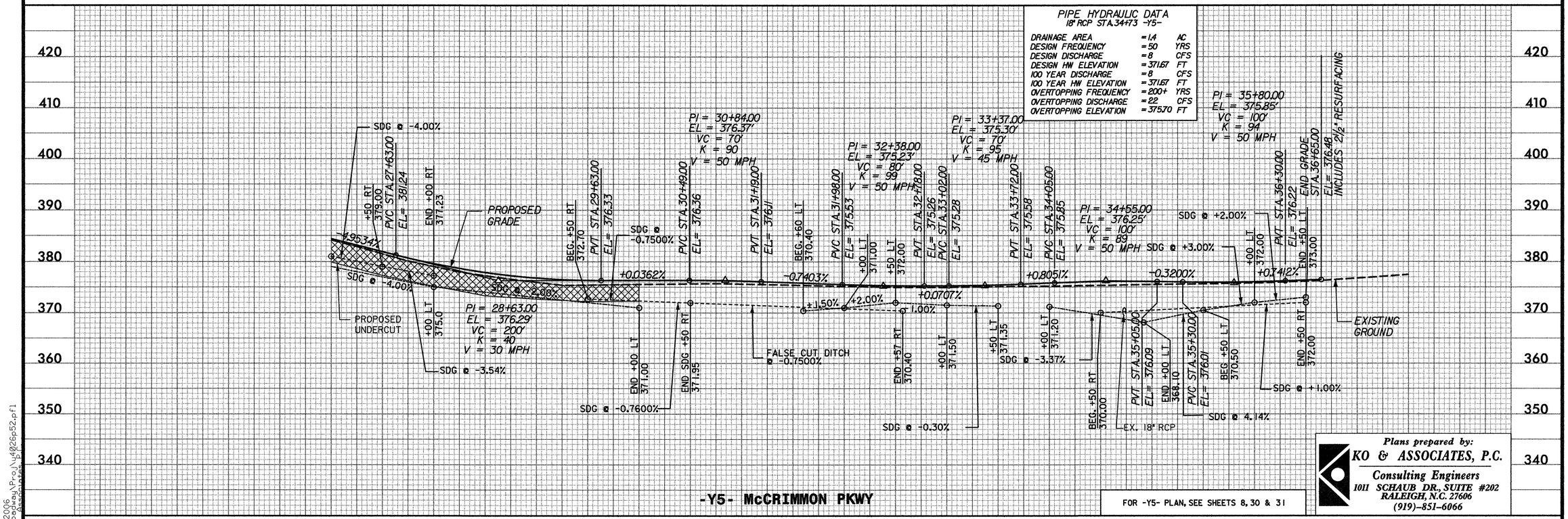

-Y5- McCRIMMON PKWY

FOR -Y5- PLAN, SEE SHEETS 8, 30 & 31

Plans prepared by:
KO & ASSOCIATES, P.C.
Consulting Engineers
1011 SCHAUB DR., SUITE #202
RALEIGH, N.C. 27606
(919)-851-6066

5/28/99

5/3/2006
R:\Roadway\Proj\u4026sp52.pfl
KO & Associates, P.C.

PROJECT REFERENCE NO.	SHEET NO.
U-4026	53

ROADWAY DESIGN ENGINEER

NORTH CAROLINA PROFESSIONAL SEAL 28774 ENGINEER STEPHEN R. WHITLEY

5-4-06

HYDRAULICS ENGINEER

NORTH CAROLINA PROFESSIONAL SEAL 021162 ENGINEER HERBERT TURNER JR.

5-4-06

BM # 6. R.R. SPIKE IN BASE OF 15" PINE
AT -Y6- STA. 9+25.39,
144.24' RT. ELEV. = 376.98'

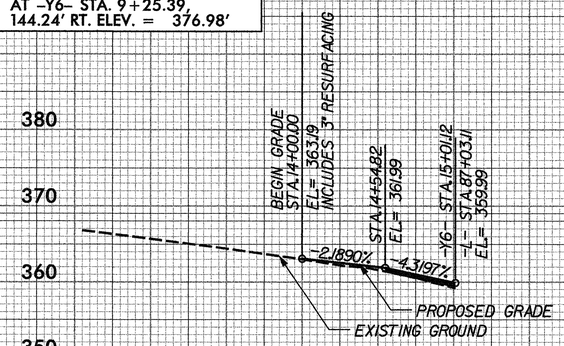

BM # 12. R.R. SPIKE IN BASE OF 15" PINE
AT -Y8- STA. 7+84.15,
97.59' LT. ELEV. = 318.68'

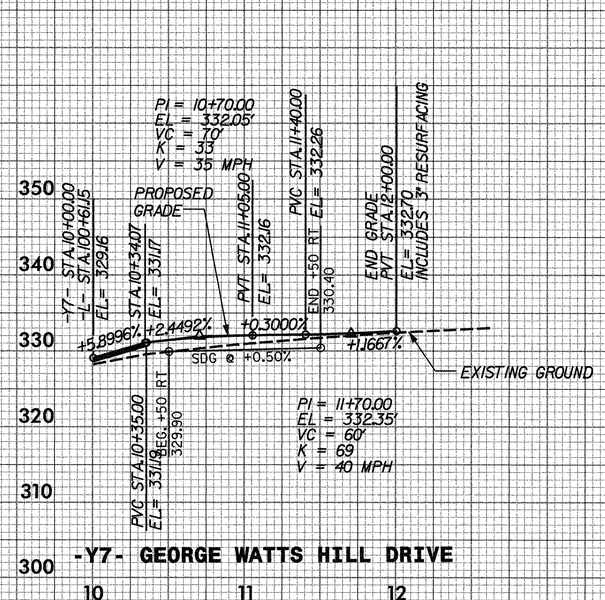

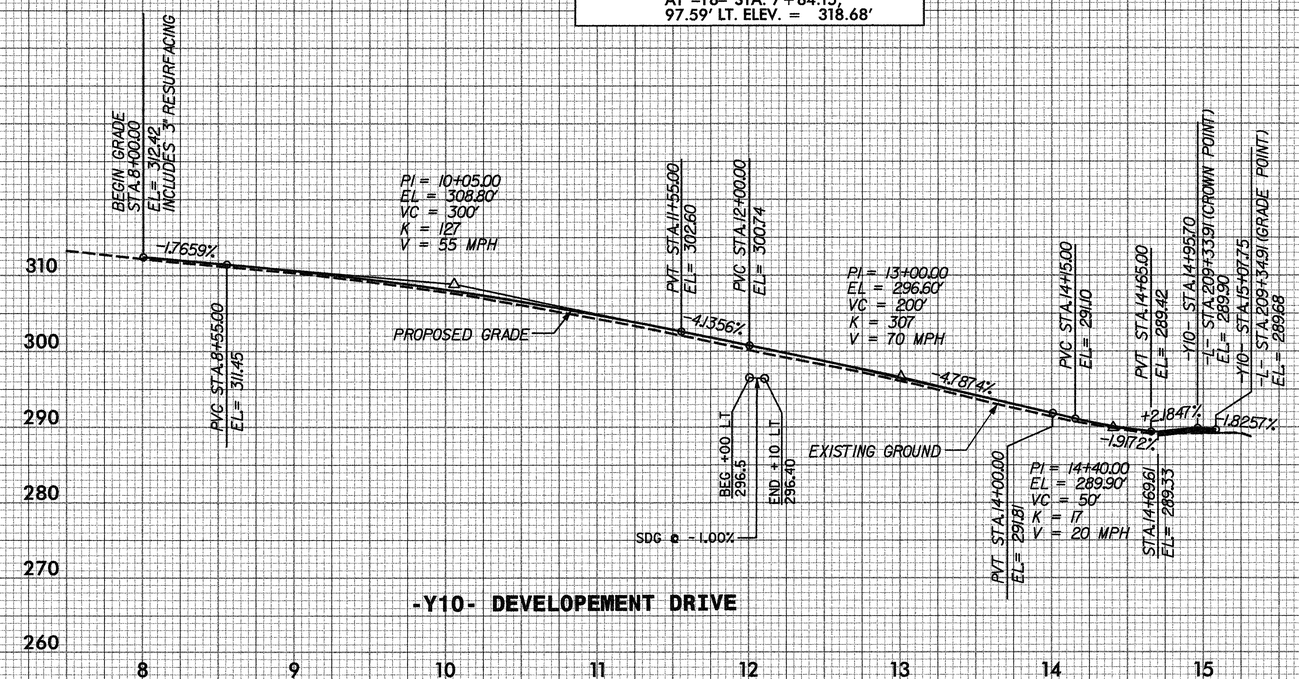

FOR Y-6 PLAN, SEE SHEET 10
FOR -Y7- PLAN, SEE SHEET 11
FOR -Y10- PLAN, SEE SHEET 20 & 37

Plans prepared by:
KO & ASSOCIATES, P.C.
Consulting Engineers
1011 SCHAUB DR., SUITE #202
RALEIGH, N.C. 27606
(919)-851-6066

5/28/99

PROJECT REFERENCE NO.	SHEET NO.
U-4026	54

ROADWAY DESIGN ENGINEER — NORTH CAROLINA PROFESSIONAL SEAL 20774 ENGINEER STEPHEN R. WHITLEY — 5-4-06

HYDRAULICS ENGINEER — NORTH CAROLINA PROFESSIONAL SEAL 021162 ENGINEER HERBERT TURNER III — 5-4-06

BM # 10. "X" CUT IN SE COR OF CONC PAD
AT -Y9- STA. 21+46.49,
82.86' RT. ELEV. = 340.89'

PIPE HYDRAULIC DATA
EX. 36" CONC STA. 17+39 -Y9-

DRAINAGE AREA	= 3.5	AC
DESIGN FREQUENCY	= 50	YRS
DESIGN DISCHARGE	= 12	CFS
DESIGN HW ELEVATION	= 329.46	FT
100 YEAR DISCHARGE	= 12	CFS
100 YEAR HW ELEVATION	= 329.46	FT
OVERTOPPING FREQUENCY	= 500+	YRS
OVERTOPPING DISCHARGE	= 148	CFS
OVERTOPPING ELEVATION	= 343.63	FT

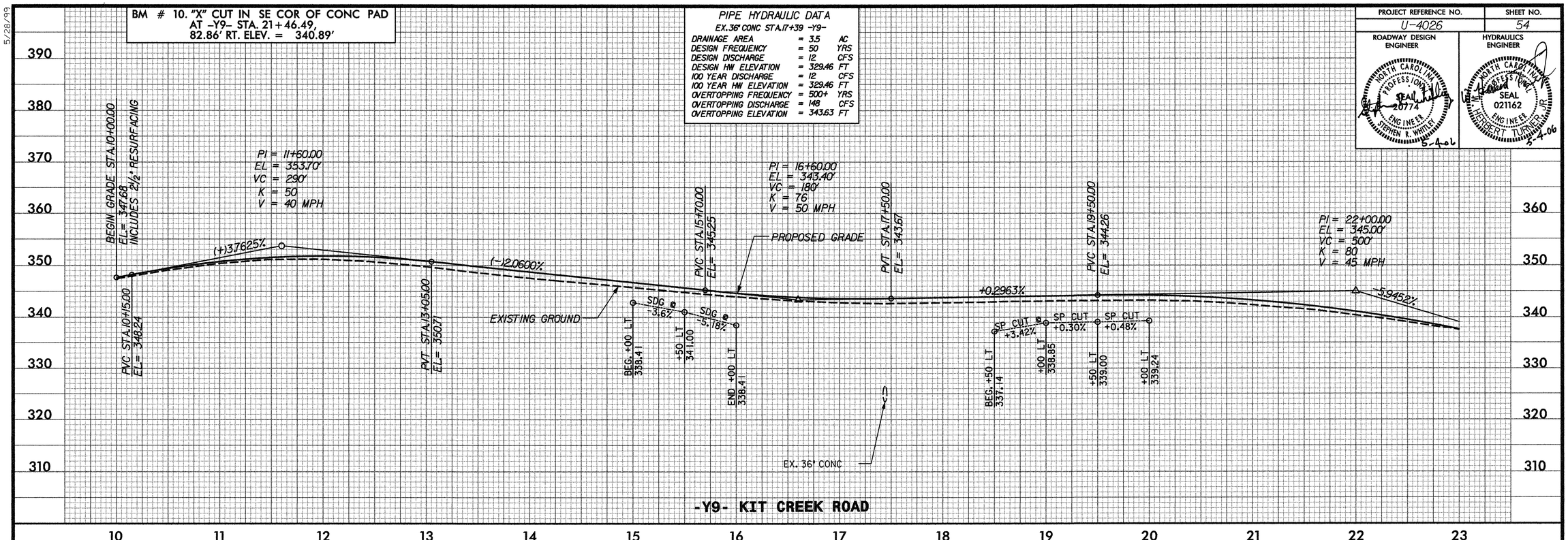

PIPE HYDRAULIC DATA
EX. 42" CONC STA. 33+99 -Y9-

DRAINAGE AREA	= 11.5	AC
DESIGN FREQUENCY	= 50	YRS
DESIGN DISCHARGE	= 49	CFS
DESIGN HW ELEVATION	= 313.07	FT
100 YEAR DISCHARGE	= 60	CFS
100 YEAR HW ELEVATION	= 313.53	FT
OVERTOPPING FREQUENCY	= 10+	YRS
OVERTOPPING DISCHARGE	= 27	CFS
OVERTOPPING ELEVATION	= 312.11	FT

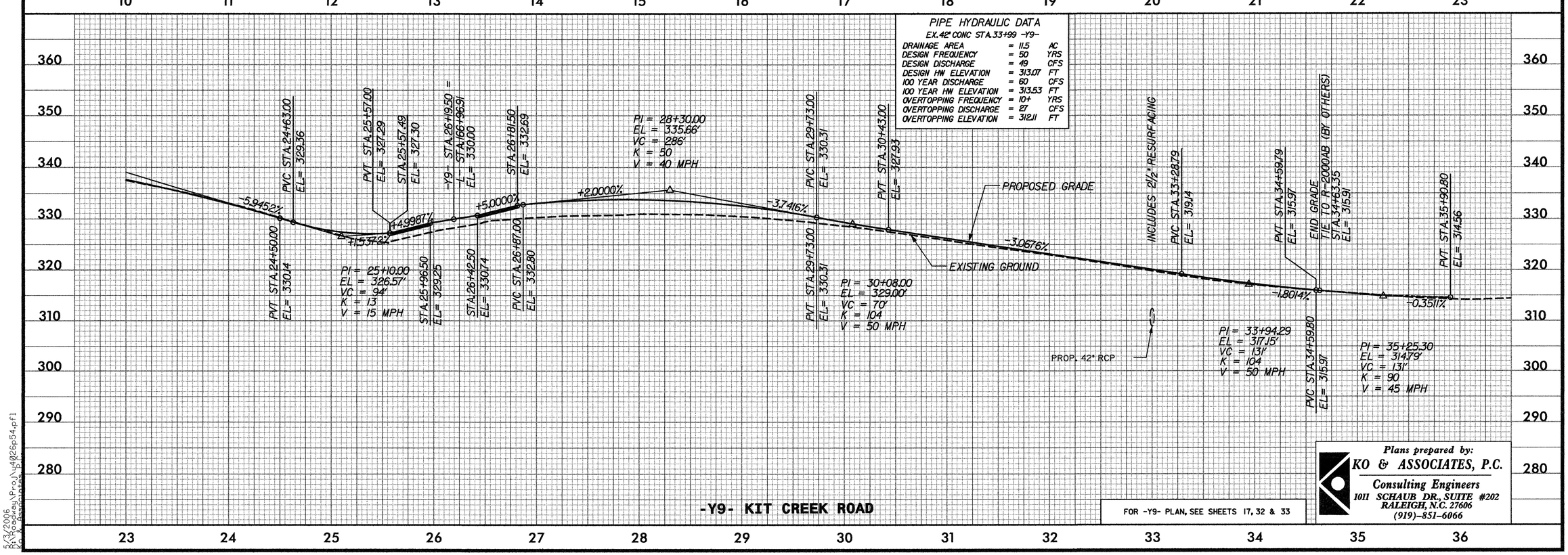

FOR -Y9- PLAN, SEE SHEETS 17, 32 & 33

Plans prepared by:
KO & ASSOCIATES, P.C.
Consulting Engineers
1011 SCHAUB DR., SUITE #202
RALEIGH, N.C. 27606
(919)-851-6066

5/3/2006
R:\Roadway\Proj\u4026p54.pfl
Ko & Associates, P.C.

PROJECT REFERENCE NO.	SHEET NO.
U-4026	55

ROADWAY DESIGN ENGINEER

NORTH CAROLINA PROFESSIONAL SEAL 20774 ENGINEER STEPHEN R. WHITLEY

5-4-06

HYDRAULICS ENGINEER

NORTH CAROLINA PROFESSIONAL SEAL 021162 ENGINEER HERBERT TURNER, III

5-4-06

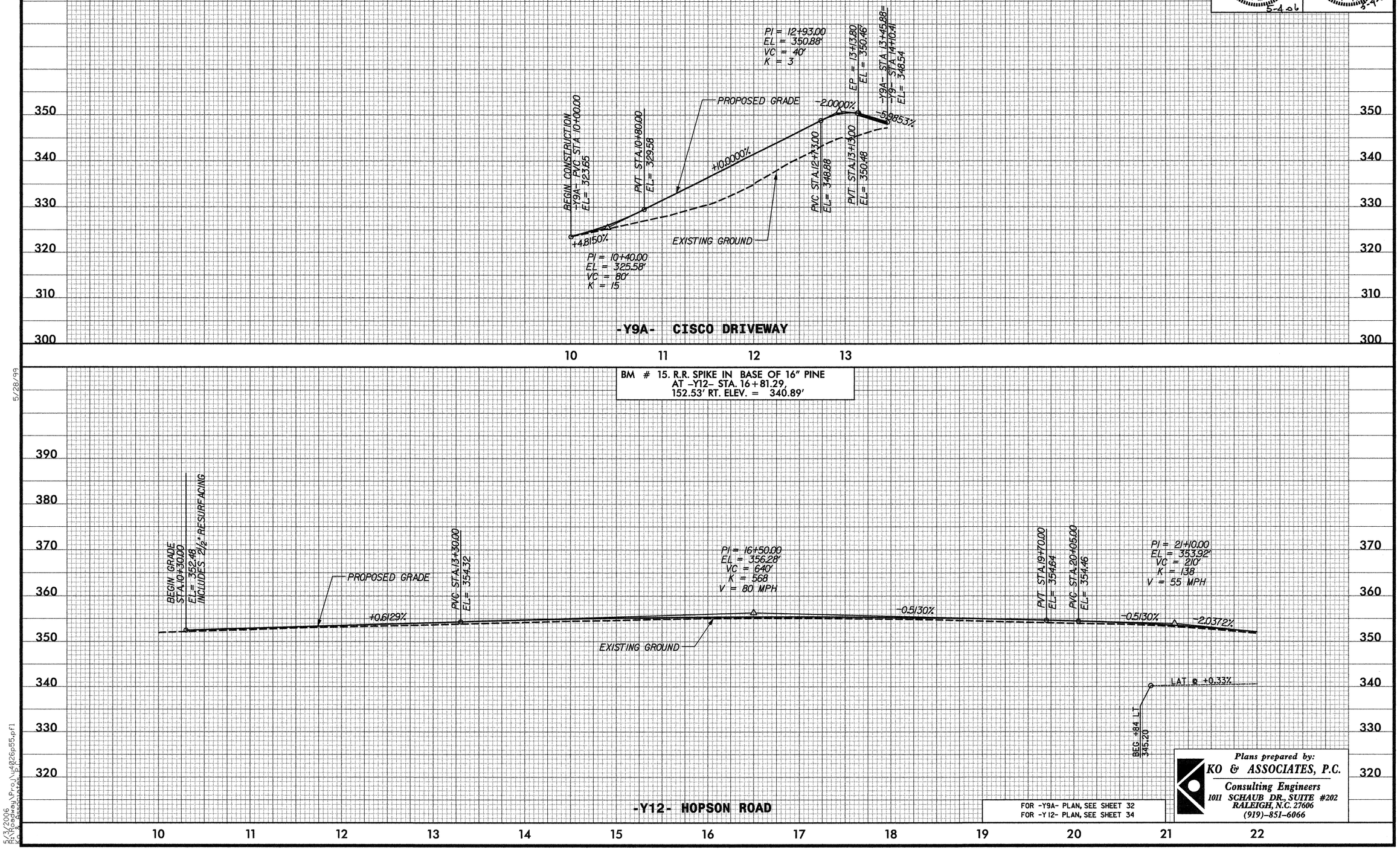

FOR -Y9A- PLAN, SEE SHEET 32
FOR -Y12- PLAN, SEE SHEET 34

Plans prepared by:
KO & ASSOCIATES, P.C.
Consulting Engineers
1011 SCHAUB DR., SUITE #202
RALEIGH, N.C. 27606
(919)-851-6066

5/28/99

5/3/2006
R:\Roadway\Proj\u4026p55.pf1
Ko & Associates, P.C.

PROJECT REFERENCE NO.	SHEET NO.
U-4026	56

ROADWAY DESIGN ENGINEER

NORTH CAROLINA PROFESSIONAL SEAL 28774 ENGINEER STEPHEN R. WHITLEY

5-4-06

HYDRAULICS ENGINEER

NORTH CAROLINA PROFESSIONAL SEAL 021162 ENGINEER HERBERT TURNER, JR.

5-4-06

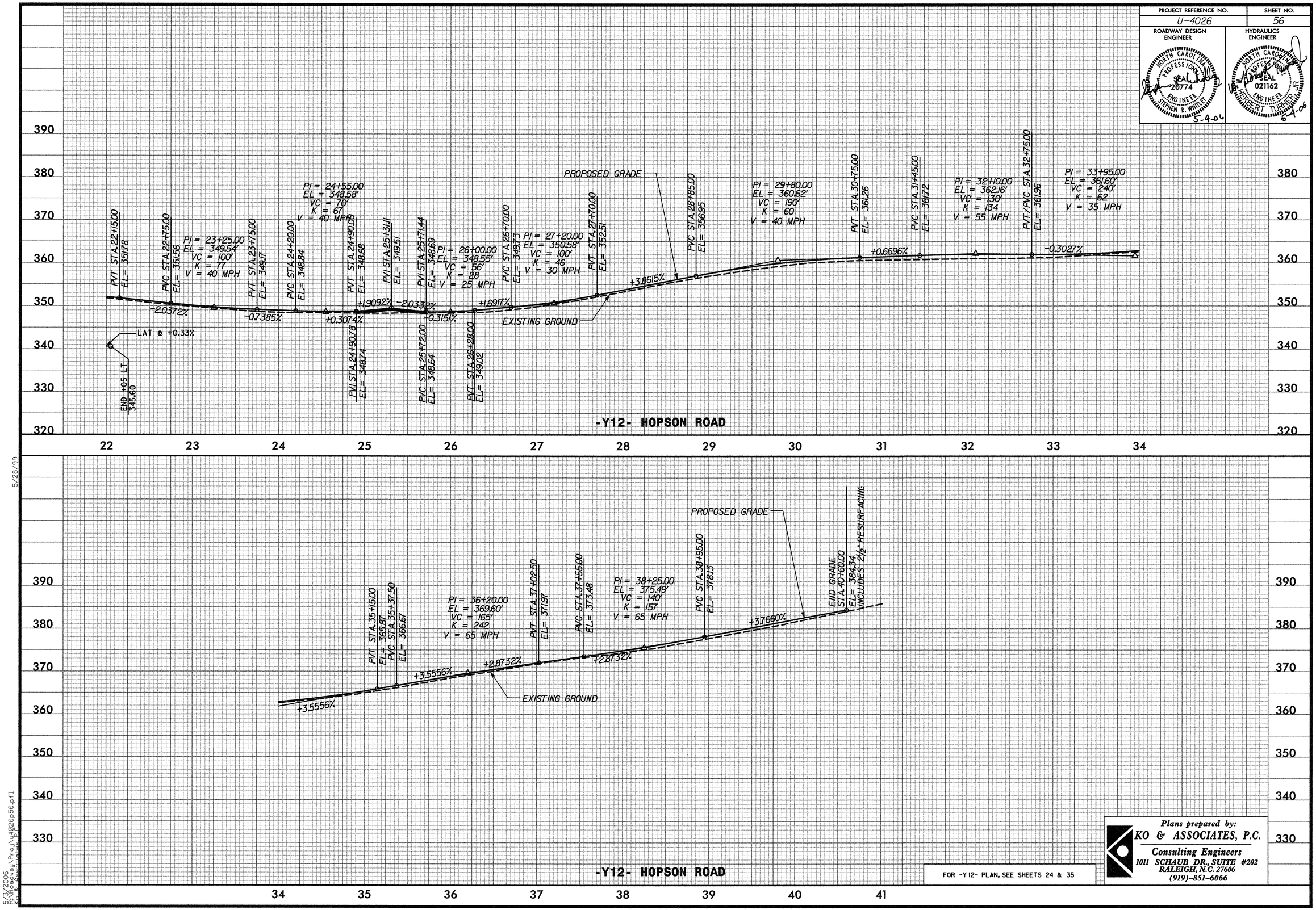

FOR -Y12- PLAN, SEE SHEETS 24 & 35

Plans prepared by:
KO & ASSOCIATES, P.C.
Consulting Engineers
1011 SCHAUB DR., SUITE #202
RALEIGH, N.C. 27606
(919)-851-6066

5/28/99

5/3/2006
R:\Roadway\Proj\u4026p56.pfl
Ko & Associates, P.C.

PROJECT REFERENCE NO.	SHEET NO.
U-4026	57

ROADWAY DESIGN ENGINEER

NORTH CAROLINA PROFESSIONAL SEAL 20774 ENGINEER STEPHEN R. WHITE 5-4-06

HYDRAULICS ENGINEER

NORTH CAROLINA PROFESSIONAL SEAL 021162 ENGINEER HERBERT TURNER, JR. 5-4-06

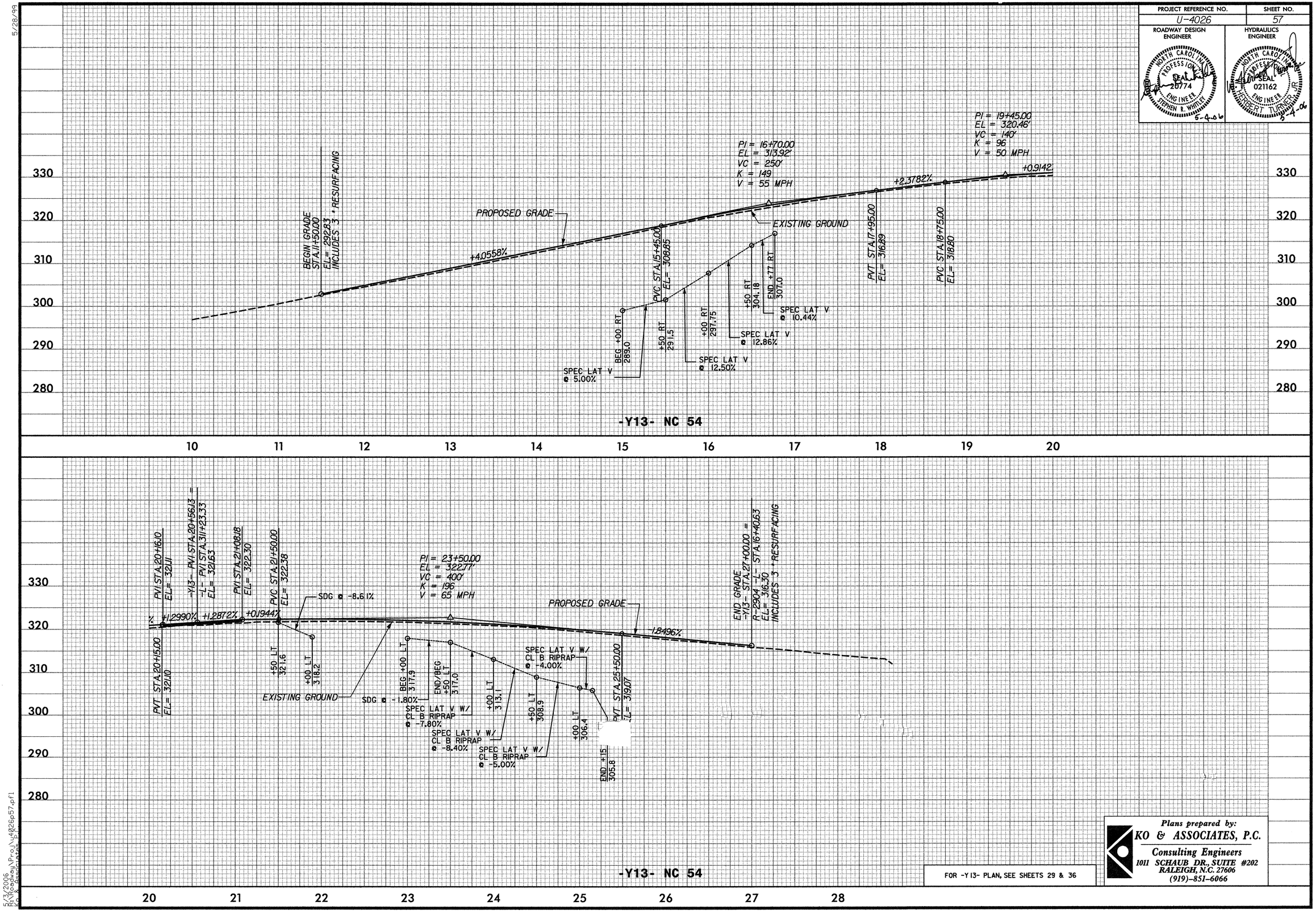

FOR -Y13- PLAN, SEE SHEETS 29 & 36

Plans prepared by:
KO & ASSOCIATES, P.C.
Consulting Engineers
1011 SCHAUB DR., SUITE #202
RALEIGH, N.C. 27606
(919)-851-6066