9/09/99

# CONTRACT: C201700 TIP PROJECT: U-3613B

See Sheet 1-A For Index of Sheets
See Sheet 1-B For Conventional Plan Sheet Symbols
See Sheet 1-C & 1-D For Survey Control Sheet

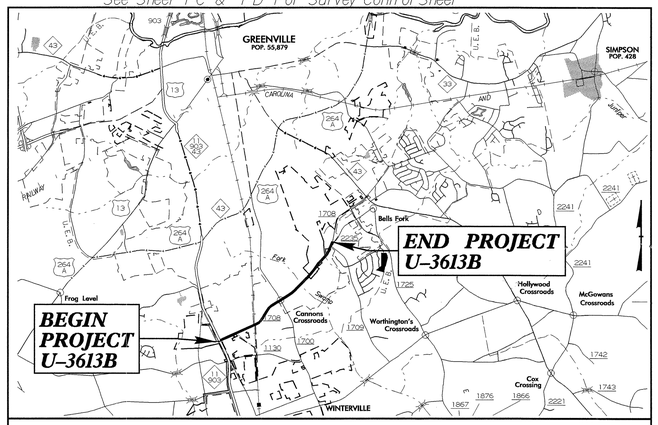


VICINITY MAP

STATE OF NORTH CAROLINA
DIVISION OF HIGHWAYS

# PITT COUNTY

| STATE | STATE PROJECT REFERENCE NO. | SHEET NO. | TOTAL SHEETS |
|---|---|---|---|
| N.C. | U-3613B | 1 | |

| STATE PROJ. NO. | F.A. PROJ. NO. | DESCRIPTION |
|---|---|---|
| 34961.1.2 | MA-STP-1708(1) | PE |
| 34961.2.2 | STP-1708(3) | R/W, UTIL. |
| 34961.3.3 | STP-1708(5) | CONST. |

**LOCATION: GREENVILLE – SR 1708 (FIRE TOWER ROAD) FROM WEST OF NC 11-903 TO EAST OF SR 1709 (COREY RD).**

**TYPE OF WORK: GRADING, DRAINAGE, WIDENING, PAVING, CURB & GUTTER, CULVERT, RETAINING WALLS, GUARDRAIL AND SIGNALS**

NAD 83

STA. 11+98.70 –L– BEGIN TIP PROJECT U-3613B

STA. 151+70.00 –L– END TIP PROJECT U-3613B

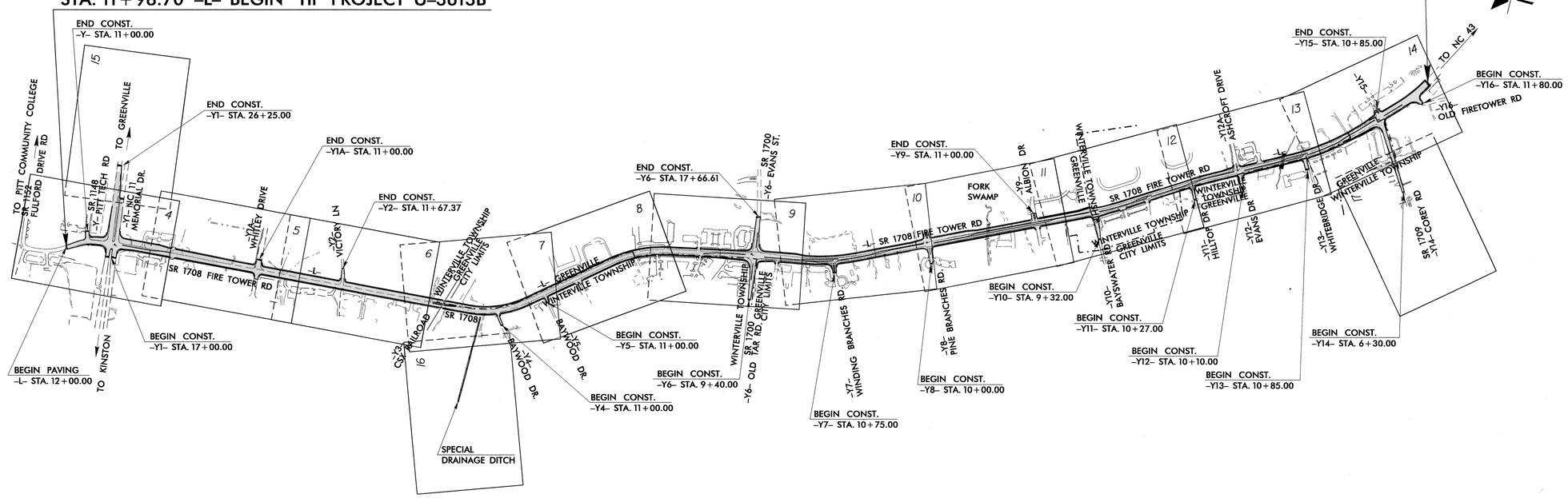


## GRAPHIC SCALES

50 25 0 50 100
PLANS

50 25 0 50 100
PROFILE (HORIZONTAL)

10 5 0 10 20
PROFILE (VERTICAL)

## DESIGN DATA

ADT 2006 = 28,908
ADT 2030 = 42,200
DHV = 10 %
D = 60 %
T = 3 % *
V = 50 MPH

* TTST 1 % DUAL 2 %

## PROJECT LENGTH

LENGTH ROADWAY TIP PROJECT U-3613B = 2.646 mi.
TOTAL LENGTH OF TIP PROJECT U-3613B = 2.646 mi.

Prepared in the Office of:
**DIVISION OF HIGHWAYS**
1000 Birch Ridge Dr., Raleigh, NC 27610

2002 STANDARD SPECIFICATIONS

RIGHT OF WAY DATE:
JUNE 28, 2002

LETTING DATE:
DECEMBER 19, 2006

JAMES A. SPEER, PE
PROJECT ENGINEER

DANNY GARDNER
PROJECT DESIGN ENGINEER

HYDRAULICS ENGINEER
NORTH CAROLINA PROFESSIONAL SEAL 20870 ENGINEER MARC T. SNOW
SIGNATURE: 5-1-06 P.E.

ROADWAY DESIGN ENGINEER
NORTH CAROLINA PROFESSIONAL SEAL 14571 ENGINEER
SIGNATURE: 5/01/06 P.E.

DIVISION OF HIGHWAYS
STATE OF NORTH CAROLINA
P.E.
STATE DESIGN ENGINEER

DEPARTMENT OF TRANSPORTATION
FEDERAL HIGHWAY ADMINISTRATION

APPROVED
DIVISION ADMINISTRATOR DATE

20-APR-2006 08:43
f:\proj\u3613btsh\u3613btsh.dgn
$$$$USERNAME$$$$

RD212399 4/20/2006 u3613btsh dwgardner RD-Oce34

| PROJECT REFERENCE NO. | SHEET NO. |
|---|---|
| U-3613B | 1-A |

ROADWAY DESIGN ENGINEER

NORTH CAROLINA PROFESSIONAL SEAL 14571 ENGINEER JAMES A. SPEER

James A. Speer

5/04/06

INDEX OF SHEETS



GENERAL NOTES:

2002 SPECIFICATIONS
EFFECTIVE: 01-15-02
REVISED: 05-14-03

GRADING AND SURFACING OR RESURFACING AND WIDENING:

THE GRADE LINES SHOWN DENOTE THE FINISHED ELEVATION OF THE PROPOSED SURFACING AT GRADE POINTS SHOWN ON THE TYPICAL SECTIONS. WHERE NO GRADE LINES ARE SHOWN, THE PROFILES SHOWN DENOTE THE TOP ELEVATION OF THE EXISTING PAVEMENT ALONG THE CENTER LINE OF SURVEY ON WHICH THE PROPOSED RESURFACING WILL BE PLACED. GRADE LINES MAY BE ADJUSTED BY THE ENGINEER IN ORDER TO SECURE A PROPER TIE-IN.

CLEARING:

CLEARING ON THIS PROJECT SHALL BE PERFORMED TO THE LIMITS ESTABLISHED BY METHOD III.

THE CONTRACTOR'S ATTENTION IS DIRECTED TO THE AREAS IN THE PLANS DESIGNATED SAFETY CLEARING. THE LIMITS ARE AS SHOWN AND THE CLEARING AND GRUBBING IS CONSIDERED A PART OF THE LUMP SUM ITEM FOR "CLEARING AND GRUBBING".

SUPERELEVATION:

ALL CURVES ON THIS PROJECT SHALL BE SUPERELEVATED IN ACCORDANCE WITH STD. NO. 225.04 USING THE RATE OF SUPERELEVATION AND RUNOFF SHOWN ON THE PLANS. SUPERELEVATION IS TO BE REVOLVED ABOUT THE GRADE POINTS SHOWN ON THE TYPICAL SECTIONS.

SHOULDER CONSTRUCTION:

ASPHALT AND EARTH SHOULDER CONSTRUCTION ON THE HIGH SIDE OF SUPERELEVATED CURVES SHALL BE IN ACCORDANCE WITH STD. NO. 560.01.

SIDE ROADS:

THE CONTRACTOR WILL BE REQUIRED TO DO ALL NECESSARY WORK TO PROVIDE SUITABLE CONNECTIONS WITH ALL ROADS, STREETS, AND DRIVES ENTERING THIS PROJECT. THIS WORK WILL BE PAID FOR AT THE CONTRACT UNIT PRICE FOR THE PARTICULAR ITEMS INVOLVED.

BERM DITCHES:

BERM DITCHES SHALL BE CONSTRUCTED IN ACCORDANCE WITH STD. NO. 240.01 AT LOCATIONS SHOWN ON THE PLANS OR AS DIRECTED BY THE ENGINEER.

UNDERDRAINS:

UNDERDRAINS SHALL BE CONSTRUCTED IN ACCORDANCE WITH STD. NO. 815.03 AT LOCATIONS DIRECTED BY THE ENGINEER.

DRIVEWAYS:

DRIVEWAYS SHALL BE CONSTRUCTED IN ACCORDANCE WITH DETAILS IN PLANS AT LOCATIONS SHOWN ON PLANS OR AS DIRECTED BY THE ENGINEER.

STREET RETURNS SHALL BE CONSTRUCTED IN ACCORDANCE WITH STD. NO. 848.04 USING THE RADII NOTED ON PLANS.

GUARDRAIL:

THE GUARDRAIL LOCATIONS SHOWN ON THE PLANS MAY BE ADJUSTED DURING CONSTRUCTION AS DIRECTED BY THE ENGINEER. THE CONTRACTOR SHOULD CONSULT WITH THE ENGINEER PRIOR TO ORDERING GUARDRAIL MATERIAL.

TEMPORARY SHORING:

SHORING REQUIRED FOR THE MAINTENANCE OF TRAFFIC NOT SHOWN ON THE PLANS WILL BE PAID FOR AT THE CONTRACT PRICE FOR "TEMPORARY SHORING" OR "TEMPORARY SHORING-BARRIER SUPPORTED" DEPENDING UPON THE LOCATION OF THE SHORING.

UTILITIES:

UTILITY OWNERS ON THIS PROJECT ARE SPRINT, AT&T, GREENVILLE UTILITY

COMMISSION (POWER, WATER, SEWER, AND GAS) & TOWN OF WINTERVILLE (WATER AND

SEWER).

ANY RELOCATION OF EXISTING UTILITIES WILL BE ACCOMPLISHED BY OTHERS, EXCEPT AS SHOWN ON THE PLANS.

RIGHT-OF-WAY MARKERS:

ALL RIGHT-OF-WAY MARKERS ON THIS PROJECT SHALL BE PLACED BY OTHERS.

WHEELCHAIR RAMPS:

WHEELCHAIR RAMPS ARE SHOWN ON THE PLANS AT APPROXIMATE LOCATIONS. THE CONSTRUCTION OF ALL WHEELCHAIR RAMPS SHALL BE IN ACCORDANCE WITH DETAILS IN PLANS.

EFF. 01-15-02
REV.11-23-04

2002 ROADWAY ENGLISH STANDARD DRAWINGS

The following Roadway Standards as appear in "Roadway Standard Drawings" Highway Design Branch - N. C. Department of Transportation - Raleigh, N. C., Dated January 15, 2002 are applicable to this project and by reference hereby are considered a part of these plans:

| STD.NO. | TITLE |
|---|---|
| DIVISION 2 - EARTHWORK | |
| 200.03 | Method of Clearing - Method III |
| 225.02 | Guide for Grading Subgrade - Secondary and Local |
| 225.04 | Method of Obtaining Superelevation - Two Lane Pavement |
| 225.06 | Method of Grading Sight Distance at Intersections |
| 240.01 | Guide for Berm Ditch Construction |
| DIVISION 3 - PIPE CULVERTS | |
| 300.01 | Method of Pipe Installation - Method 'A' |
| 300.03 | Method of Structural Plate Pipe and Pipe Arch Installation - Method 'A' |
| 310.10 | Driveway Pipe Construction |
| DIVISION 5 - SUBGRADE, BASES AND SHOULDERS | |
| 560.01 | Method of Shoulder Construction - High Side of Superelevated Curve - Method I |
| DIVISION 6 - ASPHALT BASES AND PAVEMENTS | |
| 654.01 | Pavement Repairs |
| DIVISION 8 - INCIDENTALS | |
| 815.03 | Pipe Underdrain and Blind Drain |
| 816.04 | Markers for Drainage Structure and Concrete Pad |
| 838.01 | Concrete Endwall for Single and Double Pipe Culverts - 15" thru 48" Pipe 90 Skew |
| 838.11 | Brick Endwall for Single and Double Pipe Culverts - 15" thru 48" Pipe 90 Skew |
| 838.80 | Precast Endwalls - 12" thru 72" Pipe 90 Skew |
| 840.00 | Concrete Base Pad for Drainage Structures |
| 840.03 | Frame, Grates and Hood - for Use on Standard Catch Basin |
| 840.04 | Concrete Catch Basin with Single and Multiple Pipes - 12" thru 48" Pipe |
| 840.05 | Brick Catch Basin with Single and Multiple Pipes - 12" thru 48" Pipe |
| 840.14 | Concrete Drop Inlet - 12" thru 30" Pipe |
| 840.15 | Brick Drop Inlet - 12" thru 30" Pipe |
| 840.16 | Drop Inlet Frame and Grates - for use with Std. Dwg 840.14 and 840.15 |
| 840.18 | Concrete Median Drop Inlet Type 'B' - 12" thru 36" Pipe |
| 840.24 | Frames and Narrow Slot Sag Grates |
| 840.27 | Brick Median Drop Inlet Type 'B' - 12" thru 36" Pipe |
| 840.31 | Concrete Junction Box - 12" thru 66" Pipe |
| 840.32 | Brick Junction Box - 12" thru 66" Pipe |
| 840.34 | Traffic Bearing Junction Box - for Use with Pipes 42" and Under |
| 840.45 | Precast Drainage Structure |
| 840.46 | Traffic Bearing Precast Drainage Structure |
| 840.54 | Manhole Frame and Cover |
| 840.66 | Drainage Structure Steps |
| 840.71 | Concrete and Brick Pipe Plug |
| 840.72 | Pipe Collar |
| 846.01 | Concrete Curb, Gutter and Curb & Gutter |
| 848.01 | Concrete Sidewalk |
| 848.04 | Street Turnout |
| 850.01 | Concrete Paved Ditches |
| 852.01 | Concrete Islands |
| 852.05 | Median Curb for Catch Basin - for Use with 1'-6" Curb and Gutter |
| 852.06 | Method for Placement of Drop Inlets in Concrete Islands |
| 852.10 | Median Construction - with Curb and Gutter |
| 862.01 | Guardrail Placement |
| 876.01 | Rip Rap in Channels |
| 876.02 | Guide for Rip Rap at Pipe Outlets |
| 876.04 | Drainage Ditches with Class 'B' Rip Rap |

8/17/99

04-MAY-2006 15:36
r:\proj\u3613bs01a.dgn
$$$$USERNAME$$$$

| PROJECT REFERENCE NO. | SHEET NO. |
|---|---|
| U-3613B | 1-B |

***Note: Not to Scale***

***S.U.E. = Subsurface Utility Engineering***

STATE OF NORTH CAROLINA
DIVISION OF HIGHWAYS

# CONVENTIONAL PLAN SHEET SYMBOLS

## *BOUNDARIES AND PROPERTY:*

- State Line
- County Line
- Township Line
- City Line
- Reservation Line
- Property Line
- Existing Iron Pin — EIP
- Property Corner
- Property Monument — ECM
- Parcel/Sequence Number — 123
- Existing Fence Line
- Proposed Woven Wire Fence
- Proposed Chain Link Fence
- Proposed Barbed Wire Fence
- Existing Wetland Boundary — WLB
- Proposed Wetland Boundary — WLB
- Existing High Quality Wetland Boundary — HQ WLB
- Existing Endangered Animal Boundary — EAB
- Existing Endangered Plant Boundary — EPB

## *BUILDINGS AND OTHER CULTURE:*

- Gas Pump Vent or U/G Tank Cap
- Sign — S
- Well — W
- Small Mine
- Foundation
- Area Outline
- Cemetery
- Building
- School
- Church
- Dam

## *HYDROLOGY:*

- Stream or Body of Water
- Hydro, Pool or Reservoir
- River Basin Buffer — RBB
- Flow Arrow
- Disappearing Stream
- Spring
- Swamp Marsh
- Proposed Lateral, Tail, Head Ditch — FLOW
- False Sump

## *RAILROADS:*

- Standard Gauge — CSX TRANSPORTATION
- RR Signal Milepost — MILEPOST 35
- Switch — SWITCH
- RR Abandoned
- RR Dismantled

## *RIGHT OF WAY:*

- Baseline Control Point
- Existing Right of Way Marker
- Existing Right of Way Line
- Proposed Right of Way Line — RW
- Proposed Right of Way Line with Iron Pin and Cap Marker — RW
- Proposed Right of Way Line with Concrete or Granite Marker — RW
- Existing Control of Access — CA
- Proposed Control of Access — CA
- Existing Easement Line — E
- Proposed Temporary Construction Easement — E
- Proposed Temporary Drainage Easement — TDE
- Proposed Permanent Drainage Easement — PDE
- Proposed Permanent Utility Easement — PUE

## *ROADS AND RELATED FEATURES:*

- Existing Edge of Pavement
- Existing Curb
- Proposed Slope Stakes Cut — C
- Proposed Slope Stakes Fill — F
- Proposed Wheel Chair Ramp — WCR
- Curb Cut for Future Wheel Chair Ramp — CCFR
- Existing Metal Guardrail
- Proposed Guardrail
- Existing Cable Guiderail
- Proposed Cable Guiderail
- Equality Symbol
- Pavement Removal

## *VEGETATION:*

- Single Tree
- Single Shrub
- Hedge
- Woods Line
- Orchard
- Vineyard — Vineyard

## *EXISTING STRUCTURES:*

MAJOR:

- Bridge, Tunnel or Box Culvert — CONC
- Bridge Wing Wall, Head Wall and End Wall — CONC WW

MINOR:

- Head and End Wall — CONC HW
- Pipe Culvert
- Footbridge
- Drainage Box: Catch Basin, DI or JB — CB
- Paved Ditch Gutter
- Storm Sewer Manhole — S
- Storm Sewer — S

## *UTILITIES:*

POWER:

- Existing Power Pole
- Proposed Power Pole
- Existing Joint Use Pole
- Proposed Joint Use Pole
- Power Manhole — P
- Power Line Tower
- Power Transformer
- U/G Power Cable Hand Hole — HH
- H-Frame Pole
- Recorded U/G Power Line — P
- Designated U/G Power Line (S.U.E.*) — P

TELEPHONE:

- Existing Telephone Pole
- Proposed Telephone Pole
- Telephone Manhole — T
- Telephone Booth
- Telephone Pedestal — T
- Telephone Cell Tower
- U/G Telephone Cable Hand Hole — HH
- Recorded U/G Telephone Cable — T
- Designated U/G Telephone Cable (S.U.E.*) — T
- Recorded U/G Telephone Conduit — TC
- Designated U/G Telephone Conduit (S.U.E.*) — TC
- Recorded U/G Fiber Optics Cable — T FO
- Designated U/G Fiber Optics Cable (S.U.E.*) — T FO

WATER:

- Water Manhole — W
- Water Meter
- Water Valve
- Water Hydrant
- Recorded U/G Water Line — W
- Designated U/G Water Line (S.U.E.*) — W
- Above Ground Water Line — A/G Water

TV:

- TV Satellite Dish
- TV Pedestal — C
- TV Tower
- U/G TV Cable Hand Hole — HH
- Recorded U/G TV Cable — TV
- Designated U/G TV Cable (S.U.E.*) — TV
- Recorded U/G Fiber Optic Cable — TV FO
- Designated U/G Fiber Optic Cable (S.U.E.*) — TV FO

GAS:

- Gas Valve
- Gas Meter
- Recorded U/G Gas Line — G
- Designated U/G Gas Line (S.U.E.*) — G
- Above Ground Gas Line — A/G Gas

SANITARY SEWER:

- Sanitary Sewer Manhole
- Sanitary Sewer Cleanout
- U/G Sanitary Sewer Line — SS
- Above Ground Sanitary Sewer — A/G Sanitary Sewer
- Recorded SS Forced Main Line — FSS
- Designated SS Forced Main Line (S.U.E.*) — FSS

MISCELLANEOUS:

- Utility Pole
- Utility Pole with Base
- Utility Located Object
- Utility Traffic Signal Box — S
- Utility Unknown U/G Line — ?UTL
- U/G Tank; Water, Gas, Oil
- A/G Tank; Water, Gas, Oil
- U/G Test Hole (S.U.E.*)
- Abandoned According to Utility Records — AATUR
- End of Information — E.O.I.

6/2/99

| PROJECT REFERENCE NO. | SHEET NO. |
|---|---|
| U-3613B | 1-C |
| Location and Surveys | |

# SURVEY CONTROL SHEET U-3613B

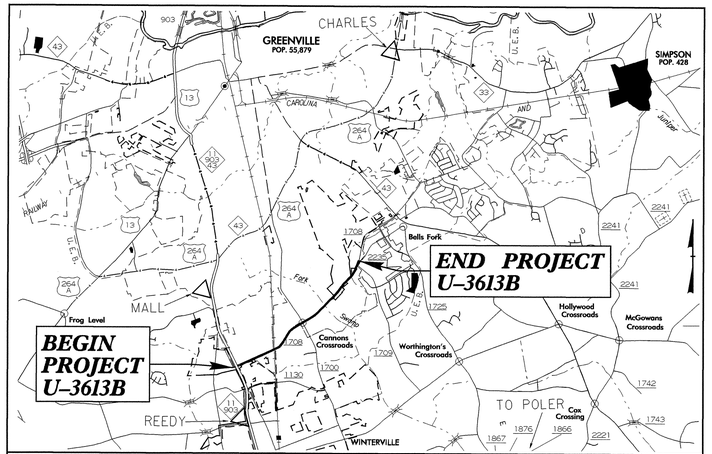


VICINITY MAP

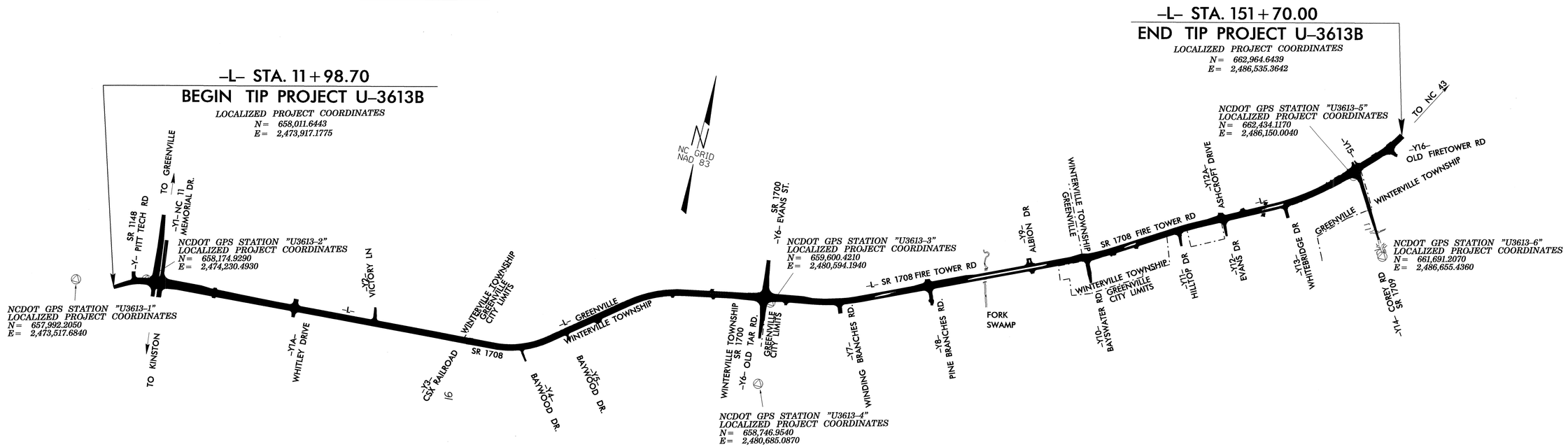


## DATUM DESCRIPTION

THE LOCALIZED COORDINATE SYSTEM DEVELOPED FOR THIS PROJECT IS BASED ON THE STATE PLANE COORDINATES ESTABLISHED BY NCGS FOR MONUMENT "REEDY"
WITH NAD 83 STATE PLANE GRID COORDINATES OF
NORTHING: 656284.853(ft) EASTING: 2474446.722(ft)
THE AVERAGE COMBINED GRID FACTOR USED ON THIS PROJECT (GROUND TO GRID) IS: 0.9998829
THE N.C. LAMBERT GRID BEARING
LOCALIZED HORIZONTAL GROUND DISTANCE FROM "REEDY" TO -L- STATION 11+98.70 IS
N 61°04'35" E 13,811.40'
ALL LINEAR DIMENSIONS ARE LOCALIZED HORIZONTAL DISTANCES
VERTICAL DATUM USED IS NGVD 29

CONTROL NETWORK STATIONS
(STATE PLANE GRID COORDINATES)

| POINT | NORTH | EAST | ELEVATION |
|---|---|---|---|
| NCGS "CHARLES" | 673,606.589 | 2,485,375.357 | 75.66 |
| NCGS "MALL" | 664,445.308 | 2,474,445.684 | 77.33 |
| NCGS "REEDY" | 656,284.853 | 2,474,446.722 | 70.59 |
| NCGS "POLER" | 630,235.859 | 2,495,333.425 | 54.75 |

NOTE: DRAWING NOT TO SCALE

## NOTES:

THE CONTROL DATA FOR THIS PROJECT CAN BE FOUND ELECTRONICALLY BY SELECTING PROJECT CONTROL DATA AT:
HTTP://WWW.DOH.DOT.STATE.NC.US/PRECONSTRUCT/HIGHWAY/LOCATION/PROJECT/

FILE: U3613B_LS_CONTROL_060103.TXT

SITE CALIBRATION INFORMATION HAS NOT BEEN PROVIDED FOR THIS PROJECT. IF FURTHER INFORMATION IS NEEDED, PLEASE CONTACT THE LOCATION AND SURVEYS UNIT.

△ INDICATES GEODETIC CONTROL MONUMENTS USED OR SET FOR HORIZONTAL PROJECT CONTROL BY THE NCDOT LOCATION AND SURVEYS UNIT.
PROJECT CONTROL ESTABLISHED USING GLOBAL POSITIONING SYSTEM.

| PROJECT REFERENCE NO. | SHEET NO. |
|---|---|
| U-3613B | 1-D |
| Location and Surveys | |

CONTROL DATA

# SURVEY CONTROL SHEET U-3613B

BL

| POINT | DESC. | NORTH | EAST | ELEVATION | L STATION | OFFSET |
|---|---|---|---|---|---|---|
| BL1 | BL-1 | 658132.8290 | 2473498.0340 | 68.87 | OUTSIDE PROJECT LIMITS | |
| U36131 | GPS MON U3613B-1 | 657992.2050 | 2473517.6840 | 69.27 | OUTSIDE PROJECT LIMITS | |
| BL2 | BL-2 | 658170.9220 | 2474120.2110 | 69.18 | 14·48.67 | 35.76 LT |
| U36132 | GPS MON U3613B-2 | 658174.9290 | 2474230.4930 | 69.99 | 15·51.96 | 12.42 LT |
| BL3 | BL-3 | 658254.9010 | 2475118.4040 | 72.45 | 24·42.36 | 27.96 LT |
| BL4 | BL-4 | 658298.2820 | 2476037.9230 | 66.24 | 33·62.65 | 6.42 LT |
| BL5 | BL-5 | 658379.5260 | 2476692.0630 | 68.60 | 40·20.89 | 41.36 LT |
| BL6 | BL-6 | 658415.7550 | 2477633.3140 | 72.91 | 49·62.35 | 11.15 LT |
| BL7 | BL-7 | 658438.4660 | 2478187.5410 | 73.04 | 55·08.29 | 43.45 RT |
| BL8 | BL-8 | 658752.3960 | 2478636.6260 | 73.81 | 60·46.38 | 28.23 RT |
| BL9 | BL-9 | 659407.0320 | 2479416.3090 | 75.33 | 70·61.34 | 24.97 LT |
| U36133 | GPS MON U3613B-3 | 659600.4210 | 2480594.1940 | 69.05 | 82·52.29 | 49.98 RT |
| BL10 | BL-10 | 659747.5220 | 2481261.7200 | 71.06 | 89·31.30 | 36.04 RT |
| BL11 | BL-11 | 660149.9690 | 2482140.9720 | 61.61 | 98·94.08 | 26.93 RT |
| BL12 | BL-12 | 660422.1150 | 2482712.8180 | 58.64 | 105·27.38 | 23.84 RT |
| BL13 | BL-13 | 660617.5950 | 2483134.3980 | 61.15 | 109·92.07 | 26.22 RT |
| BL14 | BL-14 | 660885.7440 | 2483710.5570 | 63.78 | 116·27.37 | 28.63 RT |
| BL15 | BL-15 | 661379.6870 | 2484500.1140 | 66.68 | 125·55.93 | 17.99 RT |
| BL16 | BL-16 | 661614.6450 | 2484942.8980 | 62.32 | 130·58.84 | 29.69 RT |
| BL17 | BL-17 | 661828.6130 | 2485312.1800 | 61.12 | 134·85.35 | 14.37 RT |
| BL18 | BL-18 | 661962.2140 | 2485568.4350 | 62.97 | 137·72.94 | 22.27 RT |
| U36135 | GPS MON U3613B-5 | 662434.1170 | 2486150.0040 | 66.31 | 145·16.65 | 43.29 RT |
| BL19 | BL-19 | 662704.4820 | 2486399.1340 | 69.13 | 148·81.82 | 37.53 RT |
| BL20 | BL-20 | 663119.1460 | 2486669.0530 | 69.43 | OUTSIDE PROJECT LIMITS | |

BY

| POINT | DESC. | NORTH | EAST | ELEVATION | Y STATION | OFFSET |
|---|---|---|---|---|---|---|
| BY1 | BY-1 | 658315.9850 | 2474091.0230 | 69.45 | OUTSIDE PROJECT LIMITS | |
| EQBL2 | BL-2 | 658170.9200 | 2474120.2100 | 69.18 | 10·36.72 | 22.45 RT |

BY1

| POINT | DESC. | NORTH | EAST | ELEVATION | Y1 STATION | OFFSET |
|---|---|---|---|---|---|---|
| BY11 | BY1-1 | 658447.6890 | 2474261.1250 | 70.83 | 21·32.94 | 63.86 LT |
| EQU36132 | GPS MON U3613B-2 | 658174.9290 | 2474230.4930 | 69.99 | 18·65.82 | 126.97 LT |
| BY12 | BY1-2 | 657851.8710 | 2474318.1350 | 71.17 | 15·34.58 | 78.69 LT |

BY2

| POINT | DESC. | NORTH | EAST | ELEVATION | Y2 STATION | OFFSET |
|---|---|---|---|---|---|---|
| BY21 | BY2-1 | 658518.4930 | 2476631.5130 | 67.56 | 11·81.98 | 18.88 RT |
| EQBL5 | BL-5 | 658379.5260 | 2476692.0630 | 68.60 | 10·39.28 | 49.20 RT |

BY3

| POINT | DESC. | NORTH | EAST | ELEVATION | Y3 STATION | OFFSET |
|---|---|---|---|---|---|---|
| BY31 | BY3-1 | 658584.8400 | 2477691.4640 | 73.52 | OUTSIDE PROJECT LIMITS | |
| EQBL6 | BL-6 | 658415.7550 | 2477633.3140 | 72.91 | 12·23.34 | 27.33 LT |
| BY33 | BY3-3 | 658194.8270 | 2477618.1200 | 72.54 | 10·07.72 | 23.11 RT |

BY4

| POINT | DESC. | NORTH | EAST | ELEVATION | Y4 STATION | OFFSET |
|---|---|---|---|---|---|---|
| EQBL7 | BL-7 | 658438.4660 | 2478187.5410 | 73.04 | 12·18.38 | 26.34 LT |
| BY42 | BY4-2 | 658283.5580 | 2478350.8400 | 71.93 | 10·00.34 | 12.06 RT |

BY5

| POINT | DESC. | NORTH | EAST | ELEVATION | Y5 STATION | OFFSET |
|---|---|---|---|---|---|---|
| EQBL8 | BL-8 | 658752.3960 | 2478636.6260 | 73.81 | 11·72.29 | 21.55 RT |
| BY52 | BY5-2 | 658613.0100 | 2478739.3180 | 72.70 | OUTSIDE PROJECT LIMITS | |

BY6

| POINT | DESC. | NORTH | EAST | ELEVATION | Y6 STATION | OFFSET |
|---|---|---|---|---|---|---|
| BY61 | BY6-1 | 659939.7720 | 2480504.7540 | 69.24 | 16·75.15 | 27.52 RT |
| EQU36133 | GPS MON U3613B-3 | 659600.4210 | 2480594.1940 | 69.05 | 13·27.60 | 68.19 RT |
| U36134 | GPS MON U3613B-4 | 658746.9540 | 2480685.0870 | 69.58 | OUTSIDE PROJECT LIMITS | |

BY7

| POINT | DESC. | NORTH | EAST | ELEVATION | Y7 STATION | OFFSET |
|---|---|---|---|---|---|---|
| EQBL10 | BL-10 | 659747.5220 | 2481261.7200 | 71.06 | 11·66.10 | 39.26 LT |
| BY72 | BY7-2 | 659614.9970 | 2481387.0690 | 69.63 | OUTSIDE PROJECT LIMITS | |

BY8

| POINT | DESC. | NORTH | EAST | ELEVATION | Y8 STATION | OFFSET |
|---|---|---|---|---|---|---|
| EQBL11 | BL-11 | 660149.9690 | 2482140.9720 | 61.61 | 11·76.19 | 30.89 LT |
| BY82 | BY8-2 | 659999.8150 | 2482254.1000 | 59.50 | OUTSIDE PROJECT LIMITS | |

BY9

| POINT | DESC. | NORTH | EAST | ELEVATION | Y9 STATION | OFFSET |
|---|---|---|---|---|---|---|
| BY92 | BY9-2 | 660876.2460 | 2483060.4500 | 61.15 | OUTSIDE PROJECT LIMITS | |
| EQBL13 | BL-13 | 660617.5950 | 2483134.3980 | 61.13 | OUTSIDE PROJECT LIMITS | |

BY10

| POINT | DESC. | NORTH | EAST | ELEVATION | Y10 STATION | OFFSET |
|---|---|---|---|---|---|---|
| EQBL14 | BL-14 | 660885.7440 | 2483710.5570 | 63.78 | 11·76.78 | 36.91 RT |
| BY102 | BY10-2 | 660717.0400 | 2483768.0280 | 60.88 | 09·99.86 | 15.40 RT |

BY11

| POINT | DESC. | NORTH | EAST | ELEVATION | Y11 STATION | OFFSET |
|---|---|---|---|---|---|---|
| EQBL15 | BL-15 | 661379.6870 | 2484500.1140 | 66.68 | 11·73.92 | 44.03 LT |
| BY112 | BY11-2 | 661231.1670 | 2484603.0950 | 66.88 | OUTSIDE PROJECT LIMITS | |

BY12

| POINT | DESC. | NORTH | EAST | ELEVATION | Y12 STATION | OFFSET |
|---|---|---|---|---|---|---|
| EQBL16 | BL-16 | 661614.6450 | 2484942.8980 | 62.32 | 11·65.97 | 22.53 LT |
| BY122 | BY12-2 | 661465.8060 | 2485020.2640 | 61.45 | OUTSIDE PROJECT LIMITS | |

BY13

| POINT | DESC. | NORTH | EAST | ELEVATION | Y13 STATION | OFFSET |
|---|---|---|---|---|---|---|
| EQBL18 | BL-18 | 661962.2140 | 2485568.4350 | 62.97 | 12·12.31 | 34.62 RT |
| BY132 | BY13-2 | 661780.5000 | 2485664.9390 | 64.06 | 10·06.60 | 30.59 RT |

BY14

| POINT | DESC. | NORTH | EAST | ELEVATION | Y14 STATION | OFFSET |
|---|---|---|---|---|---|---|
| EQU361314 | GPS MON U3613B-5 | 662434.1170 | 2486150.0040 | 66.31 | 13·46.48 | 55.05 LT |
| BY142 | BY14-2 | 661691.2070 | 2486655.4360 | 63.76 | OUTSIDE PROJECT LIMITS | |

BY15

| POINT | DESC. | NORTH | EAST | ELEVATION | Y15 STATION | OFFSET |
|---|---|---|---|---|---|---|
| BY151 | BY15-1 | 662724.9440 | 2486025.9380 | 66.51 | OUTSIDE PROJECT LIMITS | |
| EQU361315 | GPS MON U3613B-5 | 662434.1170 | 2486150.0040 | 66.31 | OUTSIDE PROJECT LIMITS | |

BY16

| POINT | DESC. | NORTH | EAST | ELEVATION | Y16 STATION | OFFSET |
|---|---|---|---|---|---|---|
| EQBL19 | BL-19 | 662704.4820 | 2486399.1340 | 69.13 | 12·81.89 | 98.32 LT |
| BY162 | BY16-2 | 662812.7470 | 2486709.7840 | 68.58 | OUTSIDE PROJECT LIMITS | |

BM1 ELEVATION = 73.80
N 657685 E 2473495
BL STATION 6·42 308 RIGHT
X-CROSS IN TOP FLANGE BOLT

BM2 ELEVATION = 67.93
N 658046 E 2475800
BL STATION 29·43 241 RIGHT
REBAR & CAP

BM3 ELEVATION = 74.96
N 658820 E 2477726
BL STATION 49·03 400 LEFT
REBAR & CAP

BM4 ELEVATION = 72.59
N 659532 E 2479308
BL STATION 69·12 165 LEFT
BOXCUT IN BACK OF CURB

BM5 ELEVATION = 70.25
N 659659 E 2481240
BL STATION 87·52 82 RIGHT
BOXCUT IN BACK OF CURB

BM6 ELEVATION = 59.08
N 659994 E 2482252
BL STATION 97·92 189 RIGHT
REBAR & CAP

BM7 ELEVATION = 68.09
N 661118 E 2484701
BL STATION 124·78 325 RIGHT
X-CROSS IN TOP FLANGE BOLT

BM8 ELEVATION = 64.09
N 661633 E 2485682
BL STATION 135·89 344 RIGHT
X-CROSS IN TOP FLANGE BOLT

BM9 ELEVATION = 70.79
N 663254 E 2486759
BL STATION 6·42 14248 LEFT
X-CROSS IN TOP FLANGE BOLT

## DATUM DESCRIPTION

THE LOCALIZED COORDINATE SYSTEM DEVELOPED FOR THIS PROJECT
IS BASED ON THE STATE PLANE COORDINATES ESTABLISHED BY
NCGS FOR MONUMENT "REEDY"
WITH NAD 83 STATE PLANE GRID COORDINATES OF
NORTHING: 656284.853(ft) EASTING: 2474446.722(ft)
THE AVERAGE COMBINED GRID FACTOR USED ON THIS PROJECT
(GROUND TO GRID) IS: 0.9998829
THE N.C. LAMBERT GRID BEARING
LOCALIZED HORIZONTAL GROUND DISTANCE FROM
"REEDY" TO -L- STATION 11+98.70 IS
N 61°04'35" E 13,811.40'
ALL LINEAR DIMENSIONS ARE LOCALIZED HORIZONTAL DISTANCES
VERTICAL DATUM USED IS NGVD 29

| PROJECT REFERENCE NO. | SHEET NO. |
|---|---|
| U-3613B | 2 |

ROADWAY DESIGN ENGINEER

NORTH CAROLINA PROFESSIONAL SEAL 14571 ENGINEER JAMES A. SPEER

5/01/06

PAVEMENT DESIGN ENGINEER

NORTH CAROLINA PROFESSIONAL SEAL 22696 ENGINEER CLARK S. MORRISON

5/1/06

## PAVEMENT SCHEDULE

| | | | | | |
|---|---|---|---|---|---|
| C1 | PROP. APPROX. 1½" ASPHALT CONCRETE SURFACE COURSE TYPE S9.5B, AT AN AVERAGE RATE OF 168 LBS. PER SQ. YD. | E1 | PROP. APPROX. 4" ASPHALT CONCRETE BASE COURSE, TYPE B25.0B, AT AN AVERAGE RATE OF 456 LBS. PER SQ. YD. | R4 | 5" CONCRETE MONOLITHIC ISLAND (KEYED-IN) |
| C2 | PROP. APPROX. 3" ASPHALT CONCRETE SURFACE COURSE TYPE S9.5B, AT AN AVERAGE RATE OF 168 LBS. PER SQ. YD. IN EACH OF TWO LAYERS. | E2 | PROP. APPROX. 5" ASPHALT CONCRETE BASE COURSE, TYPE B25.0B, AT AN AVERAGE RATE OF 570 LBS. PER SQ. YD. | R5 | 3" CONCRETE ISLAND COVER |
| C3 | PROP. VAR. DEPTH ASPHALT CONCRETE SURFACE COURSE, TYPE S9.5B, AT AN AVERAGE RATE OF 112 LBS. PER SQ. YD. PER 1" DEPTH, TO BE PLACED IN LAYERS NOT TO EXCEED 1½" IN DEPTH. | E3 | PROP. VAR. DEPTH ASPHALT CONCRETE BASE COURSE, TYPE B25.0B, AT AN AVERAGE RATE OF 114 LBS. PER SQ. YD. PER 1" DEPTH. TO BE PLACED IN LAYERS NOT LESS THAN 3" IN DEPTH OR GREATER THAN 5½" IN DEPTH. | S | 4" CONCRETE SIDEWALK. |
| D1 | PROP. APPROX. 2½" ASPHALT CONCRETE INTERMEDIATE COURSE, TYPE I19.0B, AT AN AVERAGE RATE OF 285 LBS. PER SQ. YD. | R1 | 1'-6" CONCRETE CURB AND GUTTER. | T | EARTH MATERIAL. |
| D2 | PROP. APPROX. 4" ASPHALT CONCRETE INTERMEDIATE COURSE, TYPE I19.0B, AT AN AVERAGE RATE OF 456 LBS. PER SQ. YD. | R2 | 2'-6" CONCRETE CURB AND GUTTER. | U | EXISTING PAVEMENT. |
| D3 | PROP. VAR. DEPTH ASPHALT CONCRETE INTERMEDIATE COURSE, TYPE I19.0B, AT AN AVERAGE RATE OF 114 LBS. PER SQ. YD. PER 1" DEPTH, TO BE PLACED IN LAYERS NOT LESS THAN 2½" IN DEPTH OR GREATER THAN 4" IN DEPTH. | R3 | 2'-0" VALLEY GUTTER | W | VARIABLE DEPTH ASPHALT PAVEMENT (SEE STANDARD WEDGING DETAILS) |

NOTE: PAVEMENT EDGE SLOPES ARE 1:1 UNLESS SHOWN OTHERWISE.

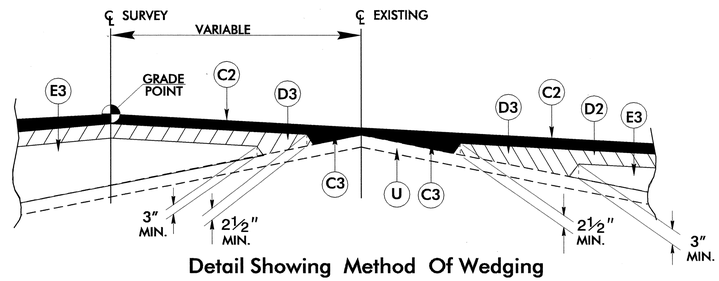


Detail Showing Method Of Wedging

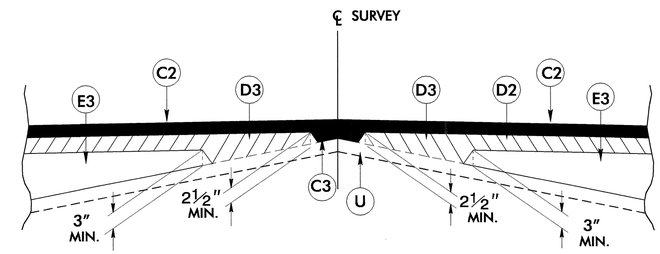


Detail Showing Method of Wedging

℄ –L– SR 1708 (FIRETOWER RD.)

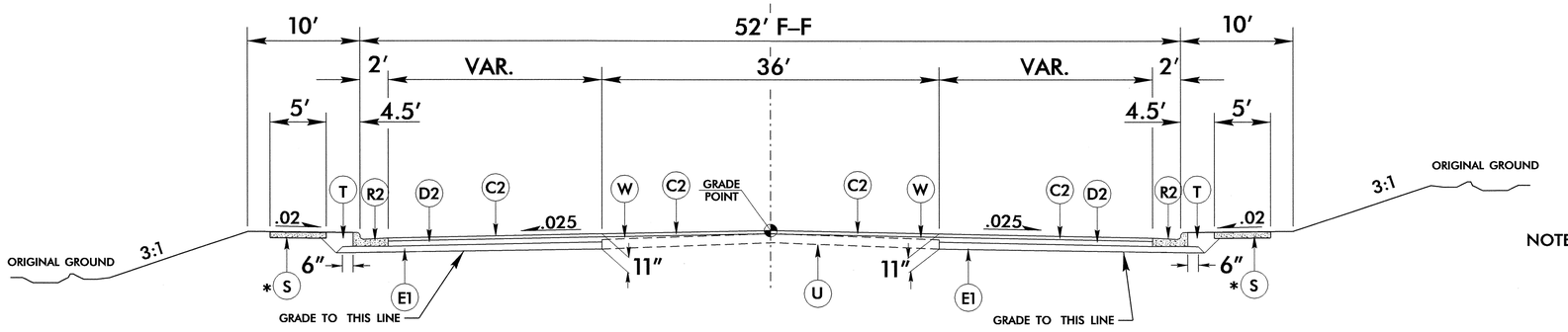


TYPICAL SECTION NO. 1

NOTE: TRANSITION FROM EXISTING TO TYPICAL SECTION NO. 1
–L– STA. 12+00.00 TO STA. 13+10.00

USE TYPICAL SECTION NO. 1

–L– STA. 13+10.00 TO STA. 14+50.00
*–L– STA. 14+50.00 TO STA. 16+20.70

℄ –L– SR 1708 (FIRETOWER RD.)

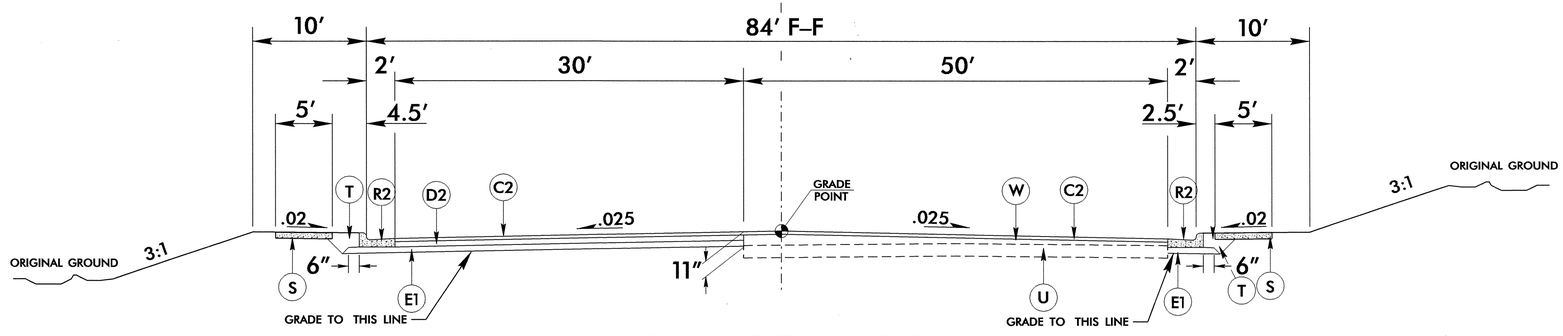


TYPICAL SECTION NO. 2

USE TYPICAL SECTION NO. 2

–L– STA. 17+25.00 TO STA. 19+00.00

6/2/99

20-APR-2006 08:43
$$$$USERNAME$$$$ c:\pwworking\u3613b.typ

| PROJECT REFERENCE NO. | SHEET NO. |
|---|---|
| U-3613B | 2-A |

ROADWAY DESIGN ENGINEER — NORTH CAROLINA PROFESSIONAL SEAL 14577 ENGINEER JAMES A. SPRUILL — 5/01/06

PAVEMENT DESIGN ENGINEER — NORTH CAROLINA PROFESSIONAL SEAL 22896 ENGINEER CLARK S. MORRISON — 5/1/06

| | |
|---|---|
| C1 | 1½" S9.5B |
| C2 | 3" S9.5B |
| C3 | VAR. DEPTH S9.5B |
| D1 | 2½" I19.0B |
| D2 | 4" I19.0B |
| D3 | VAR. DEPTH I19.0B |
| E1 | 4" B25.0B |
| E2 | 5" B25.0B |
| E3 | VAR. DEPTH B25.0B |
| R1 | 1'-6" CONC. CURB & GUTTER |
| R2 | 2'-6" CONC. CURB & GUTTER |
| R3 | 2'-0" VALLEY GUTTER |
| R4 | 5" CONC. MONOLITHIC ISLAND (KEYED-IN) |
| R5 | 3" CONC. ISLAND COVER |
| S | CONC. SIDEWALK |
| T | EARTH MATERIAL |
| U | EXISTING PAVEMENT |
| W | VAR. DEPTH ASPH. PAVM'T (SEE WEDGING DETAIL) |

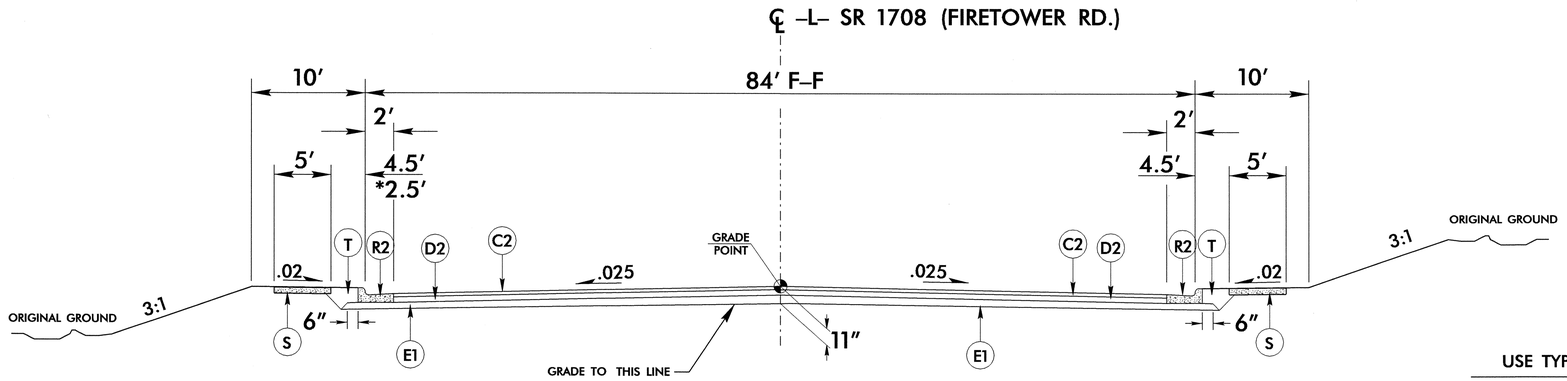


TYPICAL SECTION NO. 3

USE TYPICAL SECTION NO. 3

–L– STA. 19+00.00 TO STA. 23+35.00
*–L– STA. 19+00.00 TO STA. 21+30.00 LT.

NOTE: TRANSITION FROM TYPICAL SECTION NO. 3 TO TYPICAL SECTION NO. 4
–L– STA. 23+35.00 TO STA. 29+35.00

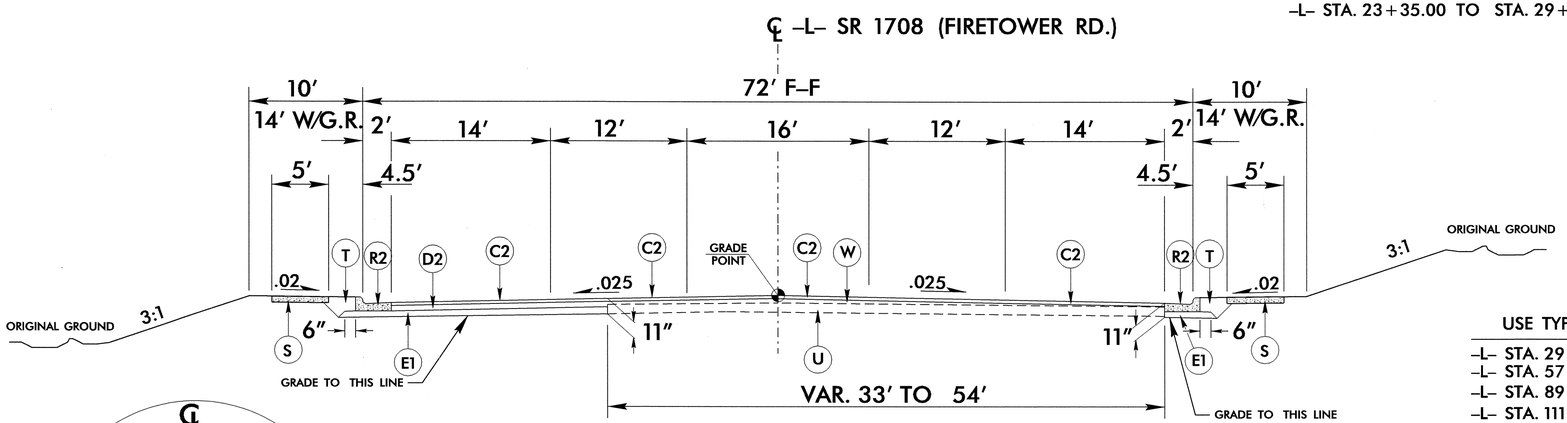


TYPICAL SECTION NO. 4

USE TYPICAL SECTION NO. 4

–L– STA. 29+35.00 TO STA. 45+50.00
–L– STA. 57+00.00 TO STA. 86+65.00
–L– STA. 89+66.92 TO STA. 103+55.00
–L– STA. 111+60.00 TO STA. 120+20.00
–L– STA. 121+33.50 TO STA. 135+12.50
–L– STA. 137+29.75 TO STA. 147+82.55

NOTE: TRANSITION FROM TYPICAL SECTION NO. 4 TO EXISTING
–L– STA. 147+82.55 TO STA. 151+70.00

NOTE: SEE PLAN SHEET 10, 12, AND 13 FOR LEFT–OVER DESIGN

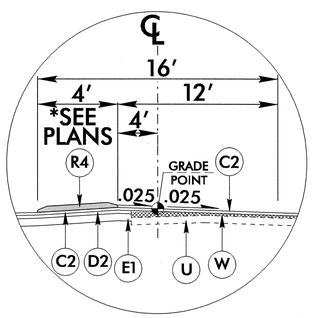


USE WITH TYPICAL SECTION NO. 2, 3, AND 4

MEDIAN DETAIL REVERSE FOR WESTBOUND TURN LANE

–L– STA. 17+70.00 TO STA. 22+50.00
–L– STA. 77+27.33 TO STA. 81+00.00
*–L– STA. 82+85.00 TO STA. 86+65.00
*–L– STA. 89+66.92 TO STA. 90+19.00
–L– STA. 90+09.00 TO STA. 93+39.00
*–L– STA. 93+39.00 TO STA. 95+45.00
–L– STA. 95+45.00 TO STA. 98+75.00
*–L– STA. 99+75.00 TO STA. 103+55.00
*–L– STA. 111+60.00 TO STA. 115+40.00
*–L– STA. 116+40.00 TO STA. 120+20.00
*–L– STA. 121+33.50 TO STA. 121+82.50
–L– STA. 121+72.50 TO STA. 125+02.50
*–L– STA. 125+02.50 TO STA. 127+02.50
–L– STA. 127+02.50 TO STA. 130+32.50
*–L– STA. 131+32.50 TO STA. 135+12.50
*–L– STA. 137+29.75 TO STA. 137+80.00
*–L– STA. 137+70.00 TO STA. 145+25.00
–L– STA. 146+25.00 TO STA. 148+35.00

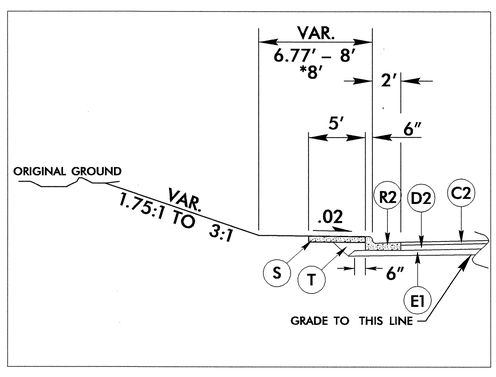


USE WITH TYPICAL SECTION NO. 4

*–L– STA. 97+50.00 TO STA. 98+50.00 RT
*–L– STA. 115+50.00 TO STA. 117+50.00 LT
–L– STA. 123+00.00 TO STA. 126+00.00 LT

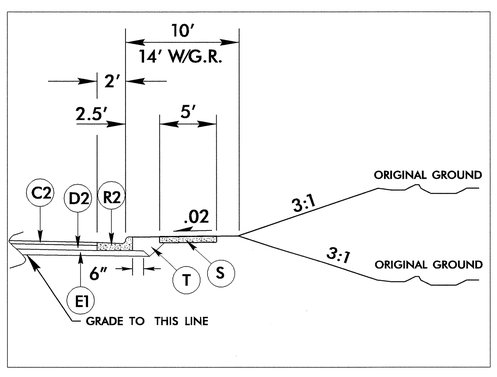


USE WITH TYPICAL SECTION NO. 4

–L– STA. 122+45.00 TO STA. 124+60.00 RT

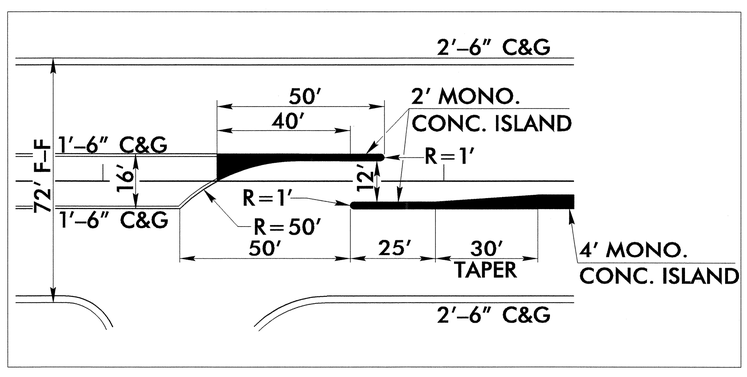


USE WITH TYPICAL SECTION NO. 4

–L– STA. 90+00.00 MEDIAN
–L– STA. 121+65.00 MEDIAN
–L– STA. 137+50.00 MEDIAN

6/2/99

06-MAR-2006 12:02
$$$$USERNAME$$$$ u3613b.tgp

| PROJECT REFERENCE NO. | SHEET NO. |
|---|---|
| U-3613B | 2-B |

ROADWAY DESIGN ENGINEER — NORTH CAROLINA PROFESSIONAL SEAL 14571 ENGINEER JAMES A. SPEER — 5/01/06

PAVEMENT DESIGN ENGINEER — NORTH CAROLINA PROFESSIONAL SEAL 22896 ENGINEER CLARK S. MORRISON — 5/1/06

| | |
|---|---|
| C1 | 1½" S9.5B |
| C2 | 3" S9.5B |
| C3 | VAR. DEPTH S9.5B |
| D1 | 2½" I19.0B |
| D2 | 4" I19.0B |
| D3 | VAR. DEPTH I19.0B |
| E1 | 4" B25.0B |
| E2 | 5" B25.0B |
| E3 | VAR. DEPTH B25.0B |
| R1 | 1'-6" CONC. CURB & GUTTER |
| R2 | 2'-6" CONC. CURB & GUTTER |
| R3 | 2'-0" VALLEY GUTTER |
| R4 | 5" CONC. MONOLITHIC ISLAND (KEYED-IN) |
| R5 | 3" CONC. ISLAND COVER |
| S | CONC. SIDEWALK |
| T | EARTH MATERIAL |
| U | EXISTING PAVEMENT |
| W | VAR. DEPTH ASPH. PAVM'T (SEE WEDGING DETAIL) |

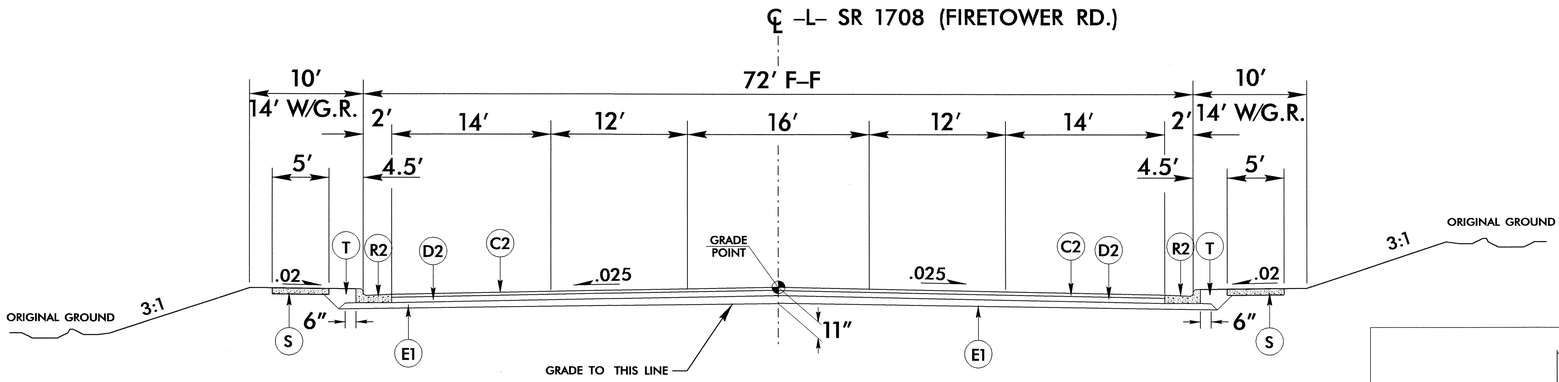


TYPICAL SECTION NO. 5

USE TYPICAL SECTION NO. 5

-L- STA. 45+50.00 TO STA. 49+82.00
-L- STA. 49+92.00 TO STA. 57+00.00

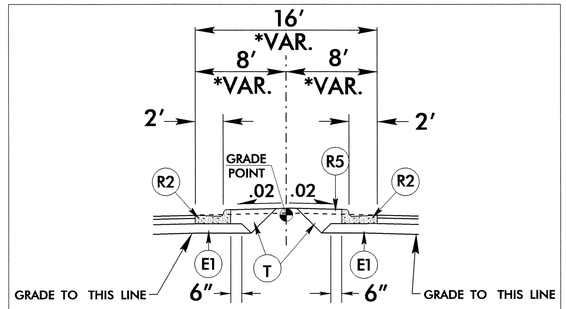


PARTIAL TYPICAL SECTION

-L- STA. 48+90.91 TO STA. 49+75.49
*-L- STA. 49+99.20 TO STA. 51+19.13

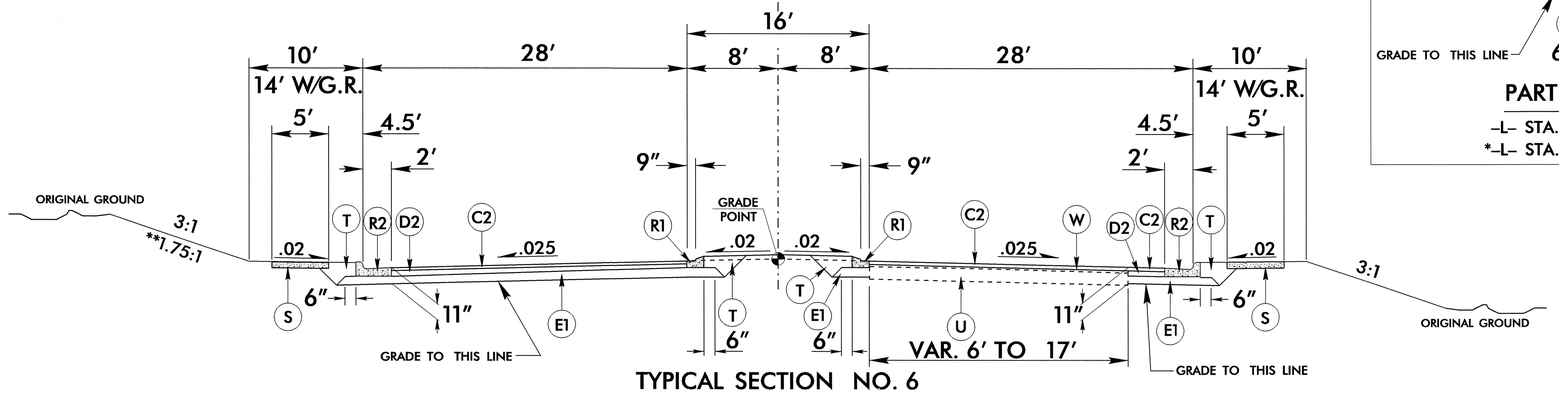


TYPICAL SECTION NO. 6

USE TYPICAL SECTION NO. 6

-L- STA. 86+65.00 TO STA. 89+66.92
-L- STA. 103+55.00 TO STA. 111+60.00
-L- STA. 120+20.00 TO STA. 121+33.50
-L- STA. 135+12.50 TO STA. 137+29.75
**-L- STA. 109+00.00 LT

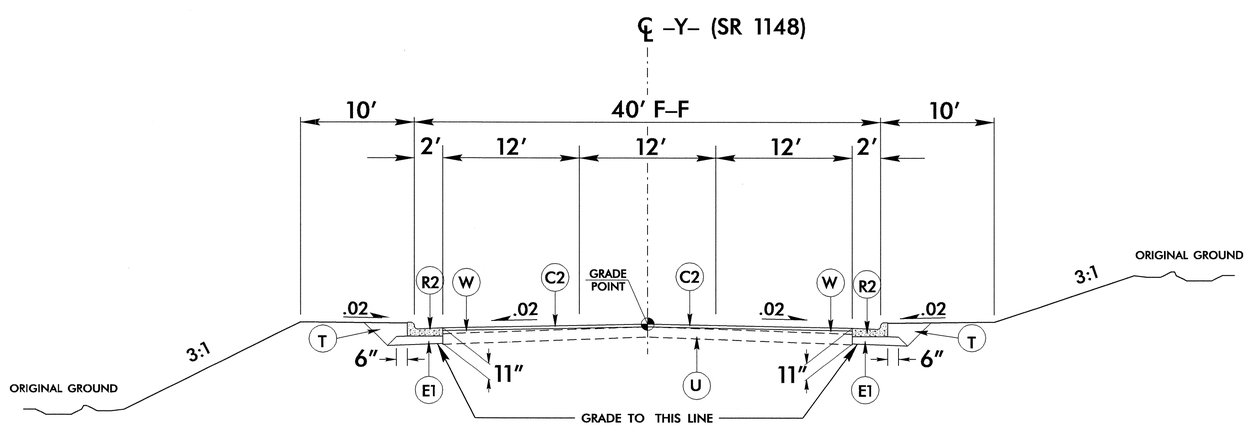


TYPICAL SECTION NO. 7

USE TYPICAL SECTION NO. 7

-Y- STA. 10+61.79 TO STA. 11+00.00

6/2/99
06-MAR-2006 12:02
$$$$USERNAME$$$$ u3613b.typ
RD212399 3/6/2006 u3613btyp2b dwgardner RD-Oce34

| PROJECT REFERENCE NO. | SHEET NO. |
|---|---|
| U-3613B | 2-C |

ROADWAY DESIGN ENGINEER
NORTH CAROLINA PROFESSIONAL SEAL 14371 ENGINEER JAMES A. SPEER
5/01/06

PAVEMENT DESIGN ENGINEER
NORTH CAROLINA PROFESSIONAL SEAL 22896 ENGINEER CLARK S. MORRISON
5/1/06

| | |
|---|---|
| C1 | 1½" S9.5B |
| C2 | 3" S9.5B |
| C3 | VAR. DEPTH S9.5B |
| D1 | 2½" I19.0B |
| D2 | 4" I19.0B |
| D3 | VAR. DEPTH I19.0B |
| E1 | 4" B25.0B |
| E2 | 5" B25.0B |
| E3 | VAR. DEPTH B25.0B |
| R1 | 1'-6" CONC. CURB & GUTTER |
| R2 | 2'-6" CONC. CURB & GUTTER |
| R3 | 2'-0" VALLEY GUTTER |
| R4 | 5" CONC. MONOLITHIC ISLAND (KEYED-IN) |
| R5 | 3" CONC. ISLAND COVER |
| S | CONC. SIDEWALK |
| T | EARTH MATERIAL |
| U | EXISTING PAVEMENT |
| W | VAR. DEPTH ASPH. PAVM'T (SEE WEDGING DETAIL) |

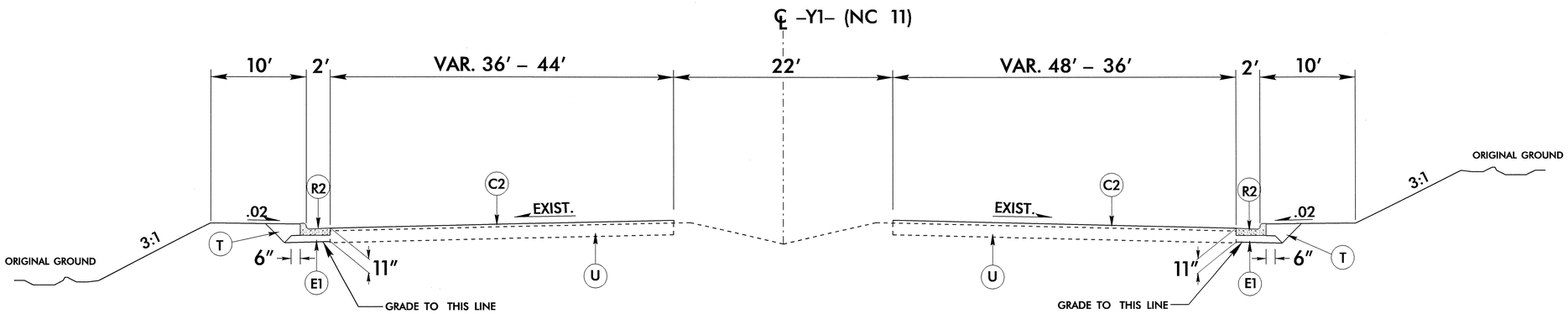


## TYPICAL SECTION NO. 8

USE TYPICAL SECTION NO. 8
-Y1- STA. 17+00.00 TO STA. 17+41.29 LT.
-Y1- STA. 17+00.00 TO STA. 17+49.83 RT.
*-Y1- STA. 19+71.10 TO STA. 20+00.00 RT.

*NOTE: SEE PLANS FOR LOCATION OF CONCRETE ISLAND

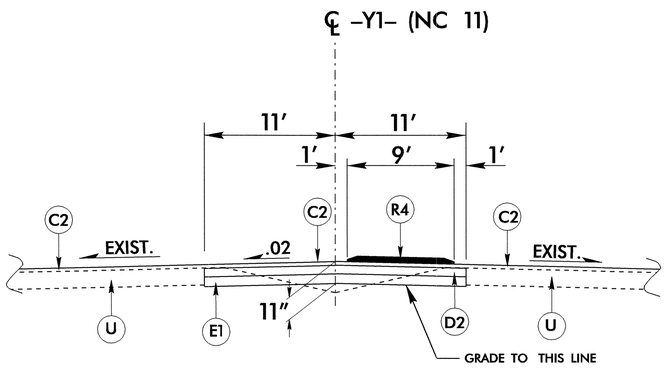


USE WITH TYPICAL SECTION NO. 8
-Y1- STA. 19+10.00 TO STA. 23+00.00 MEDIAN

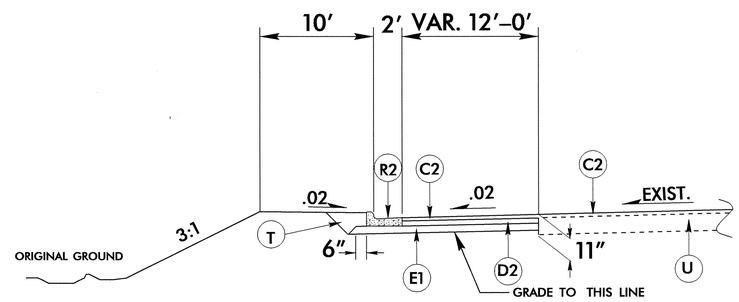


USE WITH TYPICAL SECTION NO. 8
-Y1- STA. 19+43.35 TO STA. 22+08.35 LT.

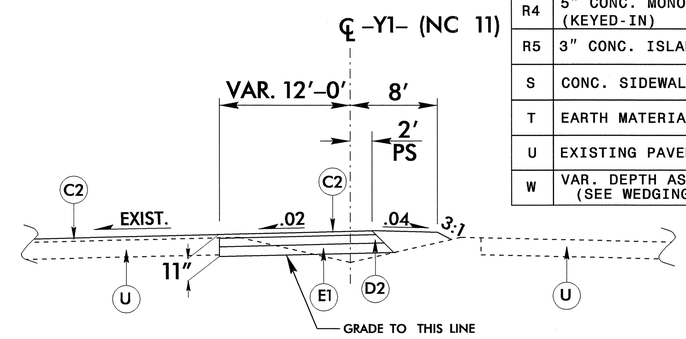


USE WITH TYPICAL SECTION NO. 8
-Y1- STA. 23+00.00 TO STA. 26+25.00 MEDIAN

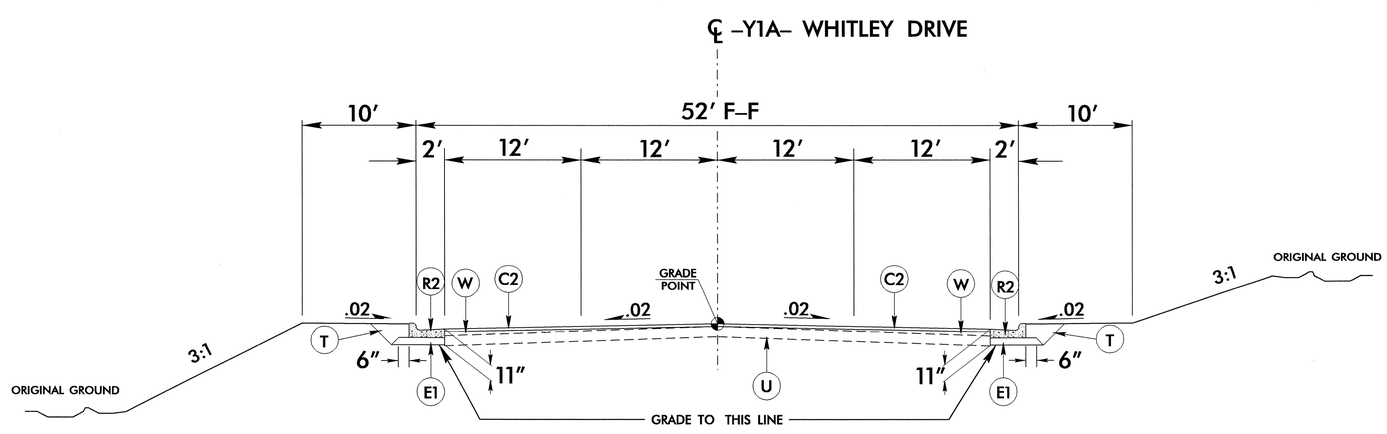


## TYPICAL SECTION NO. 9

USE TYPICAL SECTION NO. 9
-Y1A- STA. 10+73.99 TO STA. 11+00.00


06-MAR-2006 12:02
$$$$USERNAME$$$$ u3613b.typ
6/2/99
RD212399 3/6/2006 u3613btyp2c dwgardner RD-Oce34

| PROJECT REFERENCE NO. | SHEET NO. |
|---|---|
| U-3613B | 2-D |

ROADWAY DESIGN ENGINEER

NORTH CAROLINA PROFESSIONAL SEAL 14574 ENGINEER JAMES A. SPEER

6/22/06

PAVEMENT DESIGN ENGINEER

NORTH CAROLINA PROFESSIONAL SEAL 22896 ENGINEER CLARK S. MORRISON

6/22/06

| | |
|---|---|
| C1 | 1½" S9.5B |
| C2 | 3" S9.5B |
| C3 | VAR. DEPTH S9.5B |
| D1 | 2½" I19.0B |
| D2 | 4" I19.0B |
| D3 | VAR. DEPTH I19.0B |
| E1 | 4" B25.0B |
| E2 | 5" B25.0B |
| E3 | VAR. DEPTH B25.0B |
| R1 | 1'-6" CONC. CURB & GUTTER |
| R2 | 2'-6" CONC. CURB & GUTTER |
| R3 | 2'-0" VALLEY GUTTER |
| R4 | 5" CONC. MONOLITHIC ISLAND (KEYED-IN) |
| R5 | 3" CONC. ISLAND COVER |
| S | CONC. SIDEWALK |
| T | EARTH MATERIAL |
| U | EXISTING PAVEMENT |
| W | VAR. DEPTH ASPH. PAVM'T (SEE WEDGING DETAIL) |

## ℄ -Y2- VICTORY LANE

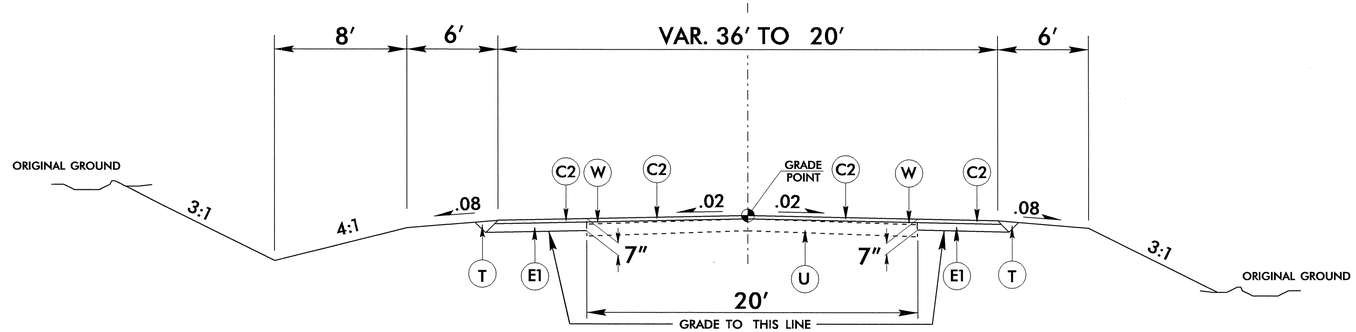


TYPICAL SECTION NO. 10

USE TYPICAL SECTION NO. 10
-Y2- STA. 10+67.37 TO STA. 11+67.37

## ℄ -Y4- BAYWOOD DRIVE
## -Y5- BAYWOOD DRIVE

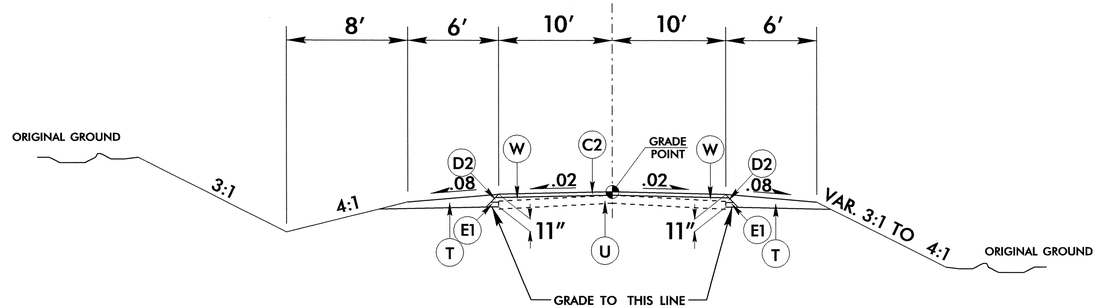


TYPICAL SECTION NO. 11

USE TYPICAL SECTION NO. 11
-Y4- STA. 11+00.00 TO STA. 11+94.04
-Y5- STA. 11+00.00 TO STA. 11+41.53

## ℄ -Y6- SR 1700 (OLD TAR ROAD)

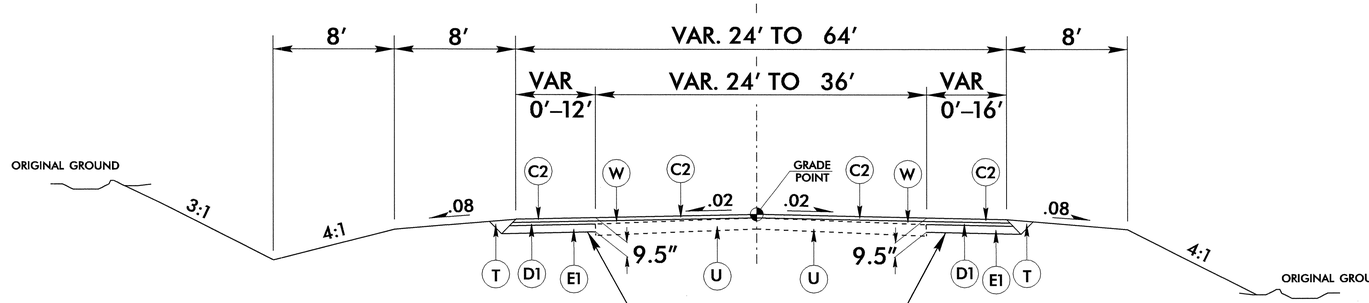


TYPICAL SECTION NO. 12

USE TYPICAL SECTION NO. 12
-Y6- STA. 9+40.00 TO STA. 12+54.26
-Y6- STA. 14+95.08 TO STA. 17+66.61

NOTE: SEE PLANS FOR LOCATION OF CONCRETE ISLAND

6/2/99

21-JUN-2006 15:36
$$$$USERNAME$$$$ C:\PROJ\u3613b.typ

| PROJECT REFERENCE NO. | SHEET NO. |
|---|---|
| U-3613B | 2-E |

ROADWAY DESIGN ENGINEER

NORTH CAROLINA PROFESSIONAL SEAL 14571 ENGINEER JAMES A. SPEER

5/01/06

PAVEMENT DESIGN ENGINEER

NORTH CAROLINA PROFESSIONAL SEAL 22896 ENGINEER CLARK S. MORRISON

5/1/06

| | |
|---|---|
| C1 | 1½" S9.5B |
| C2 | 3" S9.5B |
| C3 | VAR. DEPTH S9.5B |
| D1 | 2½" I19.0B |
| D2 | 4" I19.0B |
| D3 | VAR. DEPTH I19.0B |
| E1 | 4" B25.0B |
| E2 | 5" B25.0B |
| E3 | VAR. DEPTH B25.0B |
| R1 | 1'-6" CONC. CURB & GUTTER |
| R2 | 2'-6" CONC. CURB & GUTTER |
| R3 | 2'-0" VALLEY GUTTER |
| R4 | 5" CONC. MONOLITHIC ISLAND (KEYED-IN) |
| R5 | 3" CONC. ISLAND COVER |
| S | CONC. SIDEWALK |
| T | EARTH MATERIAL |
| U | EXISTING PAVEMENT |
| W | VAR. DEPTH ASPH. PAVM'T (SEE WEDGING DETAIL) |

## ℄ -Y7- WINDING BRANCHES ROAD

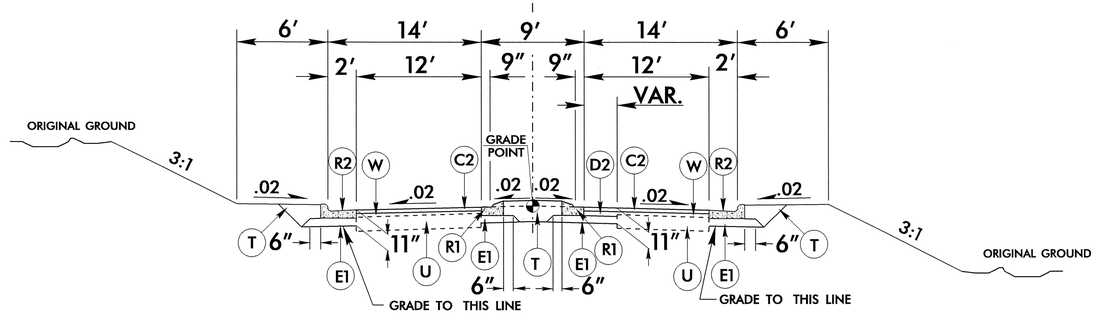


TYPICAL SECTION NO. 13

USE TYPICAL SECTION NO. 13

-Y7- STA. 10+75.00 TO STA. 11+17.51

## ℄ -Y8- PINE BRANCHES CIRCLE

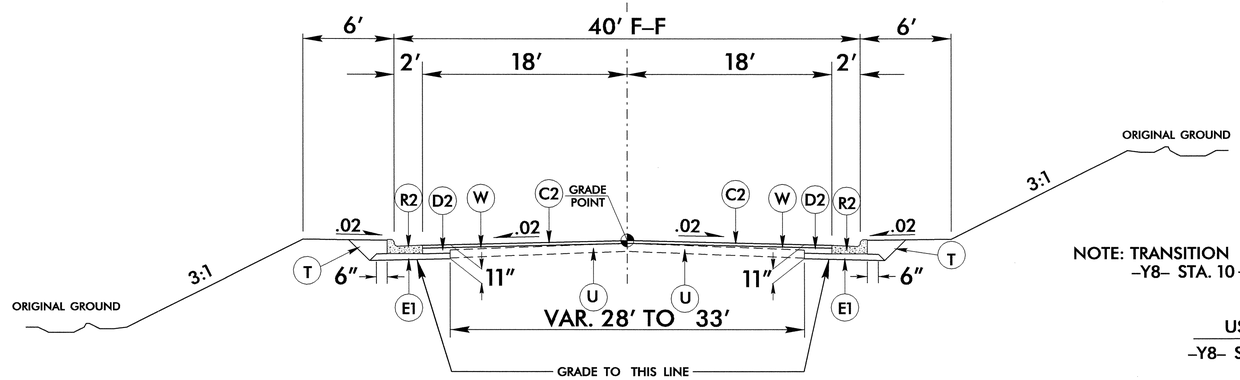


TYPICAL SECTION NO. 14

NOTE: TRANSITION FROM EXISTING TO TYPICAL SECTION NO. 14
-Y8- STA. 10+00.00 TO STA. 10+75.00

USE TYPICAL SECTION NO. 14

-Y8- STA. 10+75.00 TO STA. 11+11.44

## ℄ -Y9- ALBION DRIVE

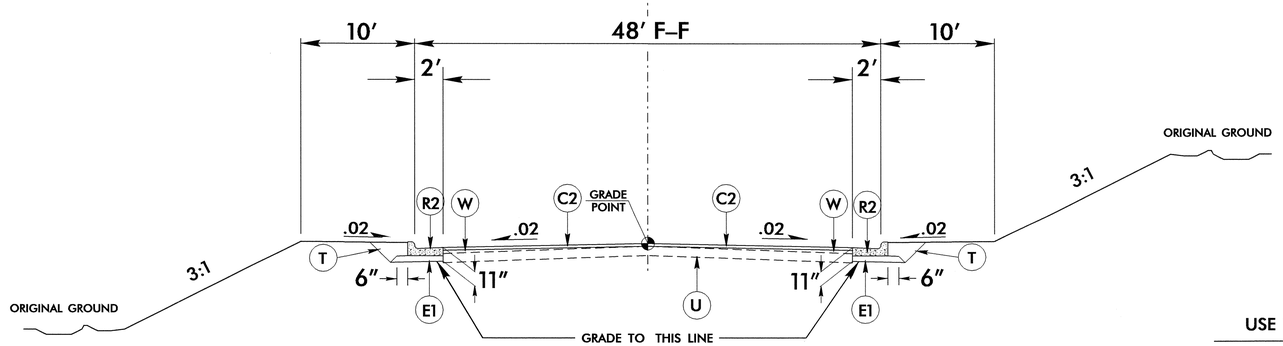


TYPICAL SECTION NO. 15

USE TYPICAL SECTION NO. 15

-Y9- STA. 10+65.00 TO STA. 11+00.00

NOTE: SEE PLANS FOR LOCATION OF 1'-6" CONCRETE C&G WITH GRASS ISLAND

06-MAR-2006 12:02
$$$$USERNAME$$$$ u3613b.typ

6/2/99

| PROJECT REFERENCE NO. | SHEET NO. |
|---|---|
| U-3613B | 2-F |

ROADWAY DESIGN ENGINEER

NORTH CAROLINA PROFESSIONAL SEAL 14571 ENGINEER JAMES A. SPIER

5/01/06

PAVEMENT DESIGN ENGINEER

NORTH CAROLINA PROFESSIONAL SEAL 22896 ENGINEER CLARK S. MORRISON

5/1/06

| | |
|---|---|
| C1 | 1½" S9.5B |
| C2 | 3" S9.5B |
| C3 | VAR. DEPTH S9.5B |
| D1 | 2½" I19.0B |
| D2 | 4" I19.0B |
| D3 | VAR. DEPTH I19.0B |
| E1 | 4" B25.0B |
| E2 | 5" B25.0B |
| E3 | VAR. DEPTH B25.0B |
| R1 | 1'-6" CONC. CURB & GUTTER |
| R2 | 2'-6" CONC. CURB & GUTTER |
| R3 | 2'-0" VALLEY GUTTER |
| R4 | 5" CONC. MONOLITHIC ISLAND (KEYED-IN) |
| R5 | 3" CONC. ISLAND COVER |
| S | CONC. SIDEWALK |
| T | EARTH MATERIAL |
| U | EXISTING PAVEMENT |
| W | VAR. DEPTH ASPH. PAVM'T (SEE WEDGING DETAIL) |

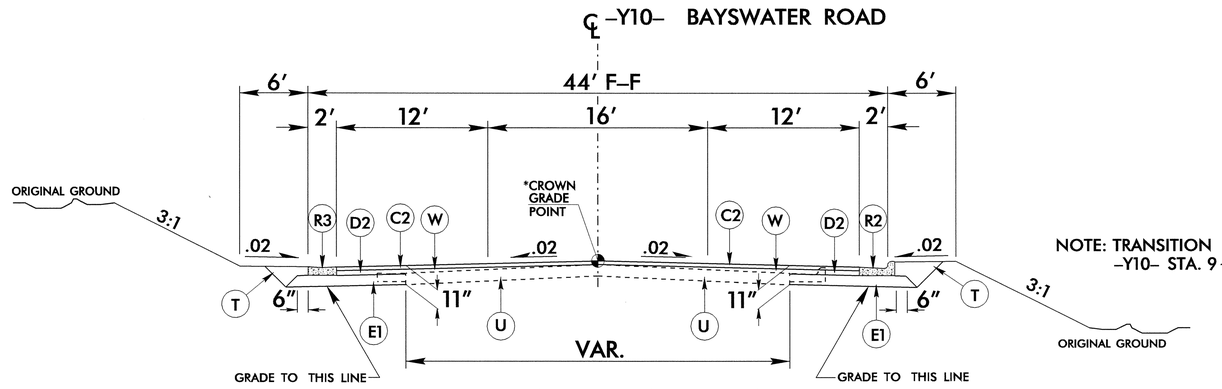


TYPICAL SECTION NO. 16

NOTE: TRANSITION FROM EXISTING TO TYPICAL SECTION NO. 16
-Y10- STA. 9+32.00 TO STA. 10+32.00

USE TYPICAL SECTION NO. 16

*-Y10- STA. 10+32.00.00 TO STA. 10+78.00
-Y10- STA. 10+78.00.00 TO STA. 11+21.45

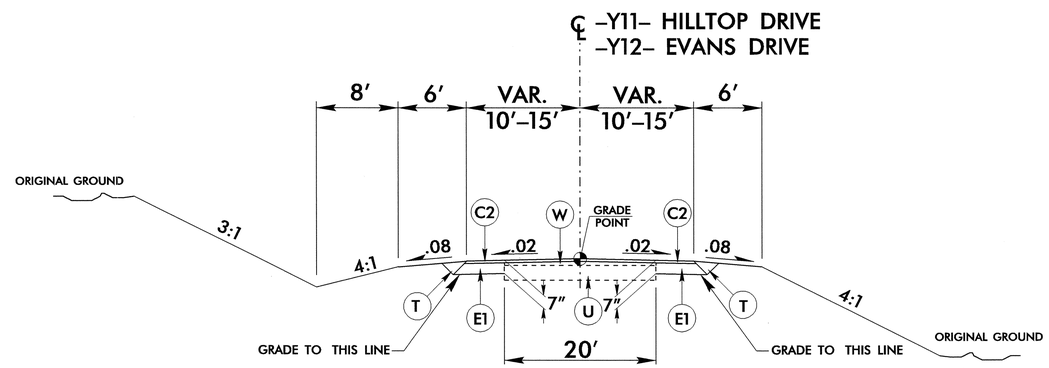


TYPICAL SECTION NO. 17

USE TYPICAL SECTION NO. 17

-Y11- STA. 10+27.00 TO STA. 11+27.07
-Y12- STA. 10+10.00 TO STA. 11+10.33

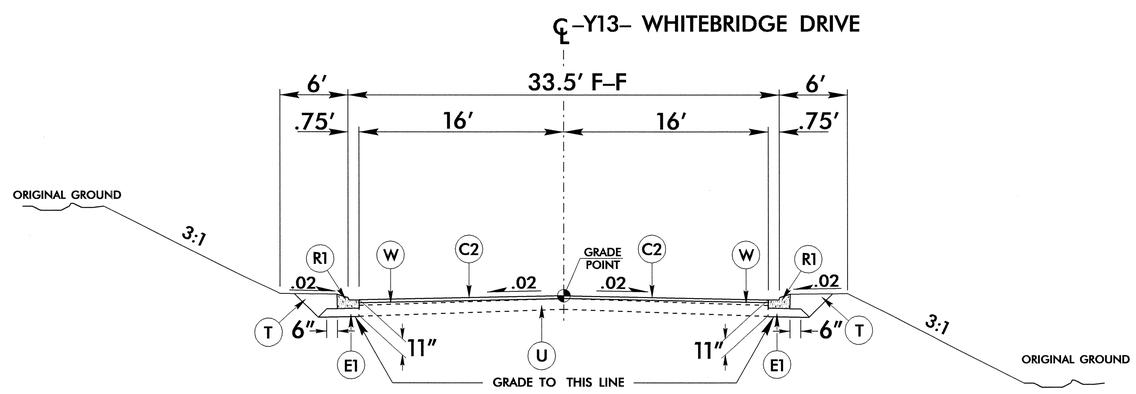


TYPICAL SECTION NO. 18

USE TYPICAL SECTION NO. 18

-Y13- STA. 10+85.00 TO STA. 11+67.95

6/2/99

06-MAR-2006 12:02
$$$$USERNAME$$$$ u3613b.typ

RD212399 3/6/2006 u3613btyp2f dwgardner RD-Oce34

| PROJECT REFERENCE NO. | SHEET NO. |
|---|---|
| U-3613B | 2-G |

ROADWAY DESIGN ENGINEER
NORTH CAROLINA PROFESSIONAL SEAL 14571 ENGINEER JAMES A. SPEER
James A. Speer
5/01/06

PAVEMENT DESIGN ENGINEER
NORTH CAROLINA PROFESSIONAL SEAL 22896 ENGINEER CLARK S. MORRISON
Clark S. Morrison 5/1/06

| | |
|---|---|
| C1 | 1½" S9.5B |
| C2 | 3" S9.5B |
| C3 | VAR. DEPTH S9.5B |
| D1 | 2½" I19.0B |
| D2 | 4" I19.0B |
| D3 | VAR. DEPTH I19.0B |
| E1 | 4" B25.0B |
| E2 | 5" B25.0B |
| E3 | VAR. DEPTH B25.0B |
| R1 | 1'-6" CONC. CURB & GUTTER |
| R2 | 2'-6" CONC. CURB & GUTTER |
| R3 | 2'-0" VALLEY GUTTER |
| R4 | 5" CONC. MONOLITHIC ISLAND (KEYED-IN) |
| R5 | 3" CONC. ISLAND COVER |
| S | CONC. SIDEWALK |
| T | EARTH MATERIAL |
| U | EXISTING PAVEMENT |
| W | VAR. DEPTH ASPH. PAVM'T (SEE WEDGING DETAIL) |

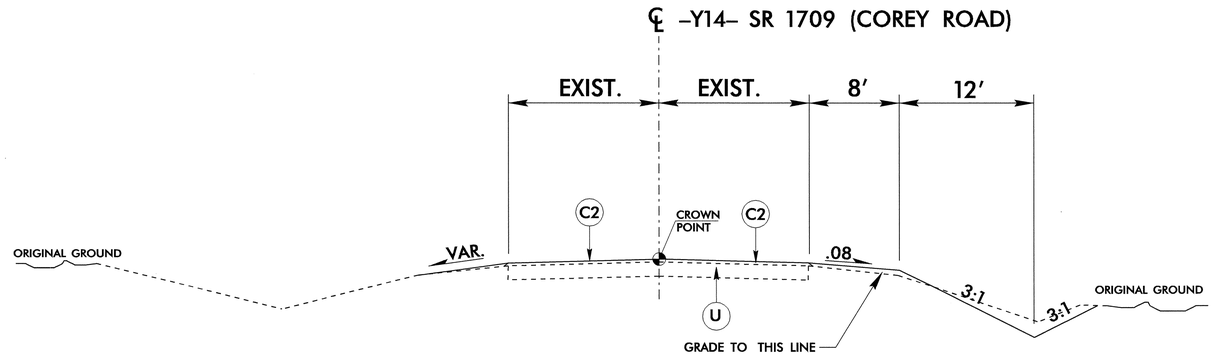


TYPICAL SECTION NO. 19

USE TYPICAL SECTION NO. 19
-Y14- STA. 6+30.00 TO STA. 6+50.00

NOTE: TRANSITION FROM TYPICAL SECTION NO. 19 TO TYPICAL SECTION NO. 20 -Y14- STA. 6+50.00 TO STA. 9+50.00

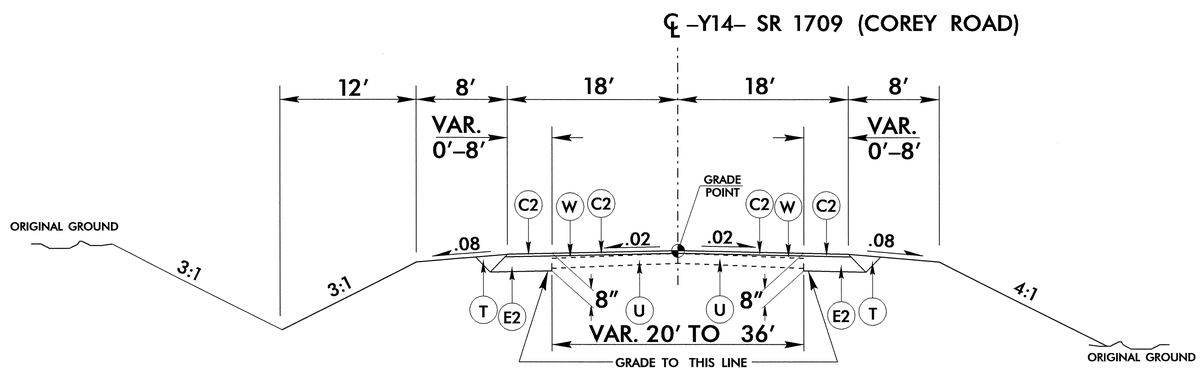


TYPICAL SECTION NO. 20

USE TYPICAL SECTION NO. 20
-Y14- STA. 9+50.00 TO STA. 12+63.06

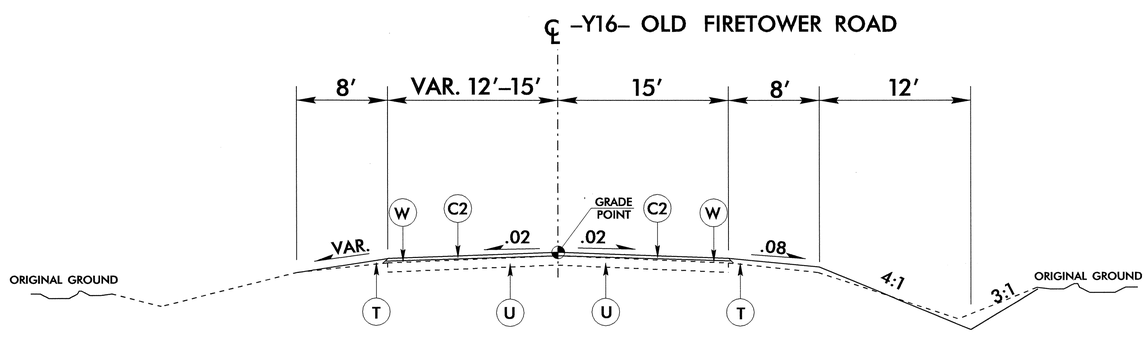


TYPICAL SECTION NO. 21

USE TYPICAL SECTION NO. 21
-Y16- STA. 11+80.00 TO STA. 12+04.87

6/2/99

02-MAY-2006 08:14
$$$$USERNAME$$$$ u3613b.typ

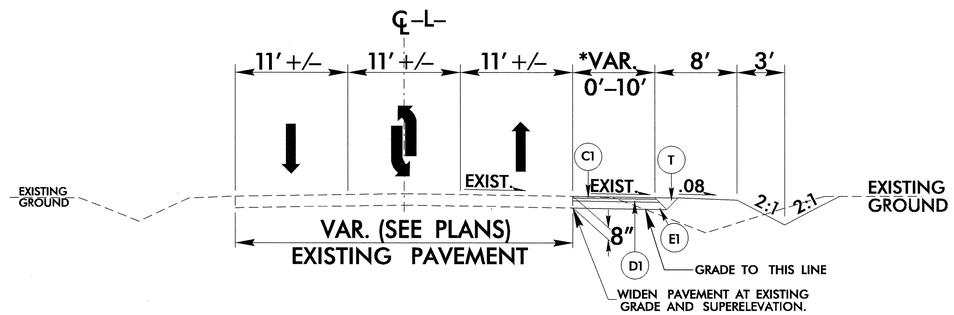


## TYPICAL SECTION NO. 22

*SEE TCP PLANS FOR PHASE 1 EASTBOUND WIDENING

USE TYPICAL SECTION NO. 22

-L- STA. 12+00.00 TO -Y1- STA. 17+44.00
-L- STA. 27+04.00 TO STA. 30+90.00
-L- STA. 31+68.00 TO STA. 33+95.00
-L- STA. 38+00.00 TO STA. 38+90.00
-L- STA. 39+33.00 TO STA. 39+66.00
-L- STA. 46+00.00 TO STA. 46+58.00
-L- STA. 47+20.00 TO STA. 49+68.00
-L- STA. 51+50.00 TO STA. 81+19.00
-L- STA. 82+66.00 TO STA. 88+44.00
-L- STA. 89+97.00 TO STA. 94+29.00
-L- STA. 97+26.00 TO STA. 98+91.00
-L- STA. 116+46.00 TO STA. 138+37.00
-L- STA. 140+90.00 TO STA. 143+25.00

| PROJECT REFERENCE NO. | SHEET NO. |
|---|---|
| U-3613B | 2-H |

ROADWAY DESIGN ENGINEER
NORTH CAROLINA PROFESSIONAL SEAL 14571 ENGINEER JAMES A. SPEER
5/01/06

PAVEMENT DESIGN ENGINEER
NORTH CAROLINA PROFESSIONAL SEAL 22896 ENGINEER CLARK S. MORRISON
5/1/06

| | |
|---|---|
| C1 | 1½" S9.5B |
| C2 | 3" S9.5B |
| C3 | VAR. DEPTH S9.5B |
| D1 | 2½" I19.0B |
| D2 | 4" I19.0B |
| D3 | VAR. DEPTH I19.0B |
| E1 | 4" B25.0B |
| E2 | 5" B25.0B |
| E3 | VAR. DEPTH B25.0B |
| R1 | 1'-6" CONC. CURB & GUTTER |
| R2 | 2'-6" CONC. CURB & GUTTER |
| R3 | 2'-0" VALLEY GUTTER |
| R4 | 5" CONC. MONOLITHIC ISLAND (KEYED-IN) |
| R5 | 3" CONC. ISLAND COVER |
| S | CONC. SIDEWALK |
| T | EARTH MATERIAL |
| U | EXISTING PAVEMENT |
| W | VAR. DEPTH ASPH. PAVM'T (SEE WEDGING DETAIL) |

6/2/99

06-MAR-2006 12:01
$$$$USERNAME$$$$ c:\pro\u3613b.typ

| PROJECT REFERENCE NO. | SHEET NO. |
|---|---|
| U-3613 B | 2-I |

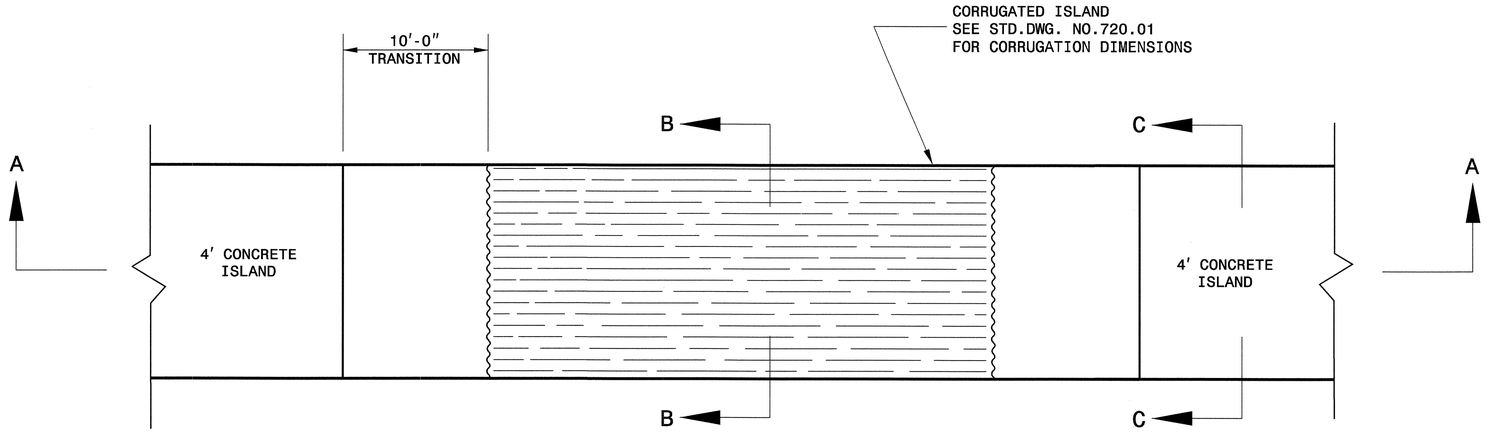


TOP VIEW

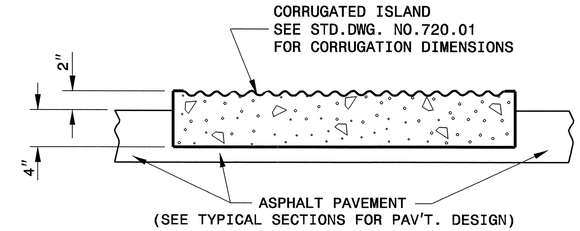


SECTION B-B

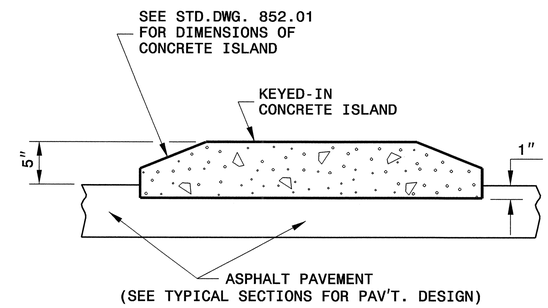


SECTION C-C

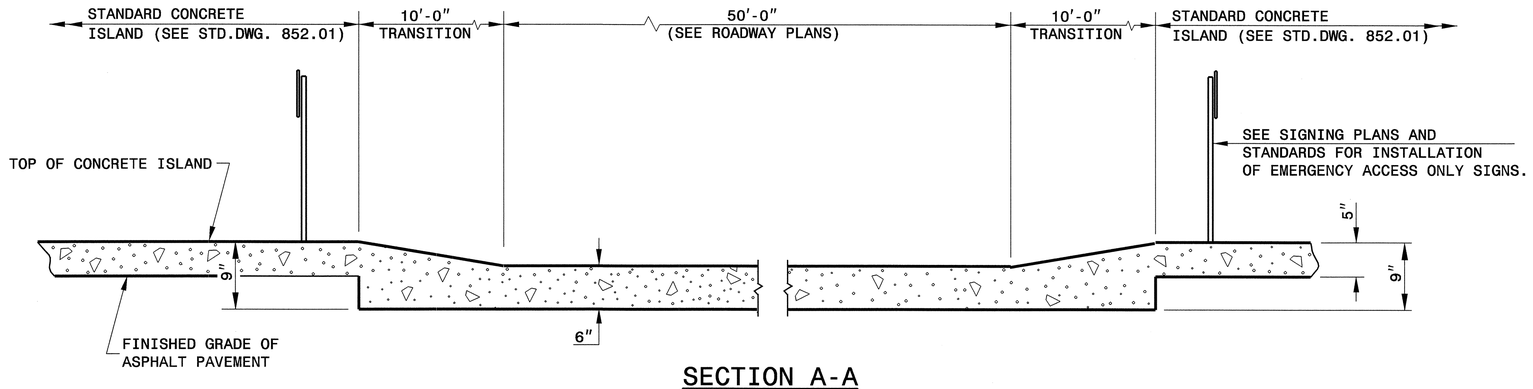


SECTION A-A

# DETAIL OF EMERGENCY VEHICLE ACCESS

NOTES:

REFER TO SECTION 852 OF STANDARD SPECIFICATIONS FOR CONCRETE ISLANDS.

REFER TO STANDARD DRAWING 852.01 FOR CONTRACTION/EXPANSION JOINTS.

NORTH CAROLINA PROFESSIONAL SEAL 022966 ENGINEER JOEL I. SHORT HOWARD

5/4/06

**PROJECT SERVICES UNIT**
**STANDARDS AND SPECIAL DESIGN**
Office 919-250-4128 FAX 919-250-4119

**EMERGENCY VEHICLE ACCESS FOR CONCRETE ISLAND**

ORIGINAL BY: E.E. WARD DATE: 12-99
MODIFIED BY: J.S.SPELL DATE: 12-05
CHECKED BY: DATE: 5/4/06
FILE SPEC.: dgn72:/usr/details/stand/u3613bemergency_access.dgn

04-MAY-2006 10:48
s:\contracts\contracts\special details\nbritt\metric\mrural\u3613b_emergency access.dgn
.\spell -H PS228332

| PROJECT REFERENCE NO. | SHEET NO. |
|---|---|
| U-3613B | 2-J |

STATE OF
NORTH CAROLINA
DEPT. OF TRANSPORTATION
DIVISION OF HIGHWAYS
RALEIGH, N.C.

ENGLISH DETAIL DRAWING FOR

# 18" SADDLE BRANCH CONNECTOR

SHEET 1 OF 1

**SADDLE**

NOTE: (WELDING)
CONTINUOUS WELD FOR SADDLE PATCH SHALL COMPLY WITH CURRENT AWS STRUCTURAL WELDING CODE.

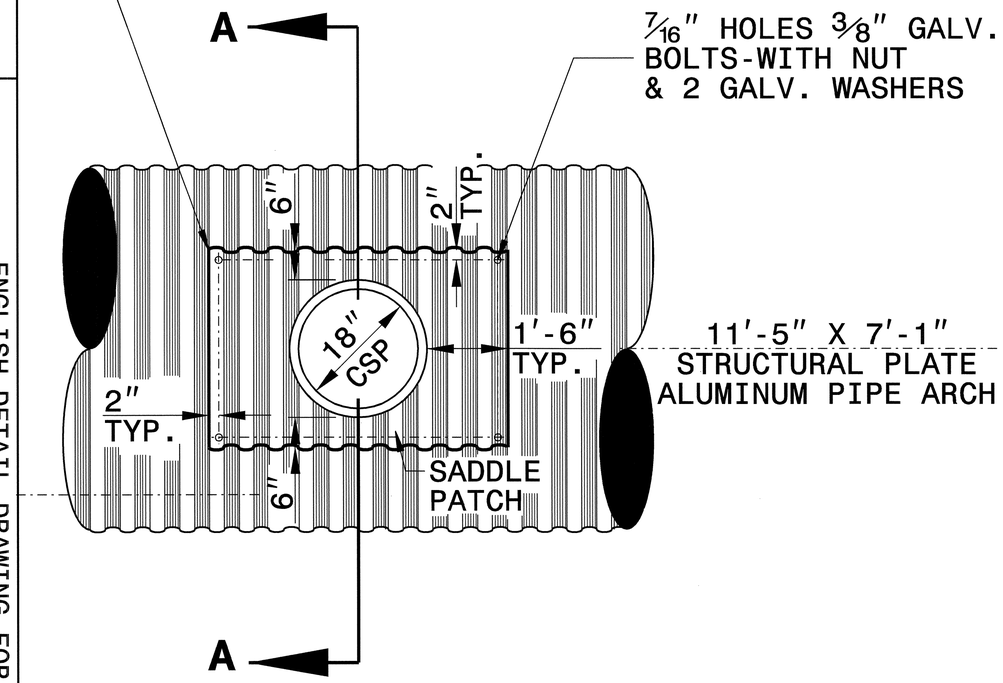


**TOP VIEW**

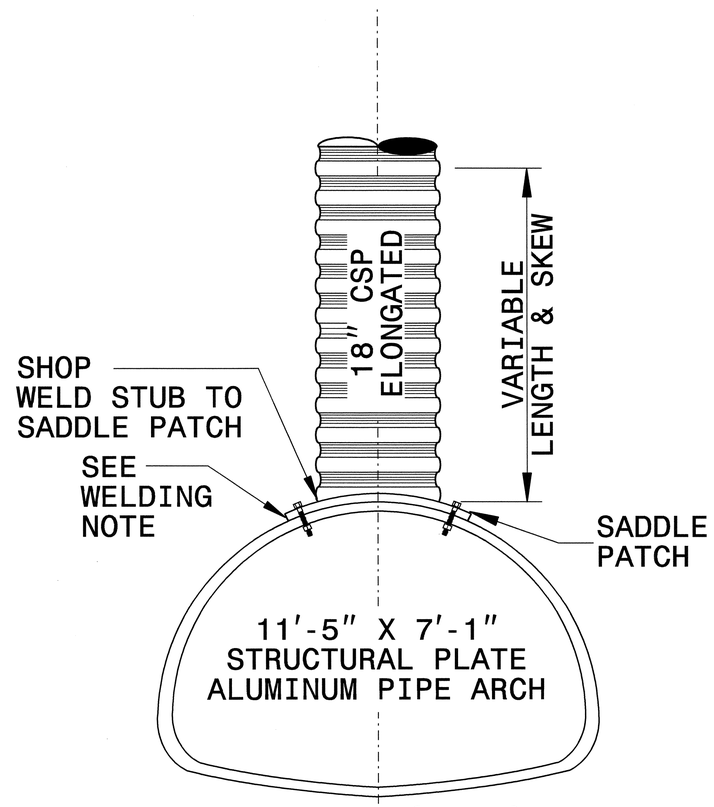


**SECTION 'A-A'**

OTHER CONNECTION METHODS MAY BE USED AS APPROVED BY THE ENGINEER.

STATE OF
NORTH CAROLINA
DEPT. OF TRANSPORTATION
DIVISION OF HIGHWAYS
RALEIGH, N.C.

ENGLISH DETAIL DRAWING FOR

# 18" SADDLE BRANCH CONNECTOR

SHEET 1 OF 1

**SADDLE**

NORTH CAROLINA PROFESSIONAL SEAL 022966 ENGINEER JOEL R. HORSTMAN
5/2/06

**PROJECT SERVICES UNIT**
**STANDARDS AND SPECIAL DESIGN**
Office 919-250-4128 FAX 919-250-4119

**SEE PLATE FOR TITLE**

ORIGINAL BY: _____ DATE: _____
MODIFIED BY: T.S.SPELL DATE: DEC.1.2005
CHECKED BY: [signature] DATE: 12/9/05
FILE SPEC.: details/stand/tspell/terry/saddle2.dgn

09-DEC-2005 10:16
s:\contracts\contracts\special details\tspell\details\stand\terry\saddle2.dgn
tspell AT PS203655

| PROJECT REFERENCE NO. | SHEET NO. |
|---|---|
| U-3613B | 2-K |

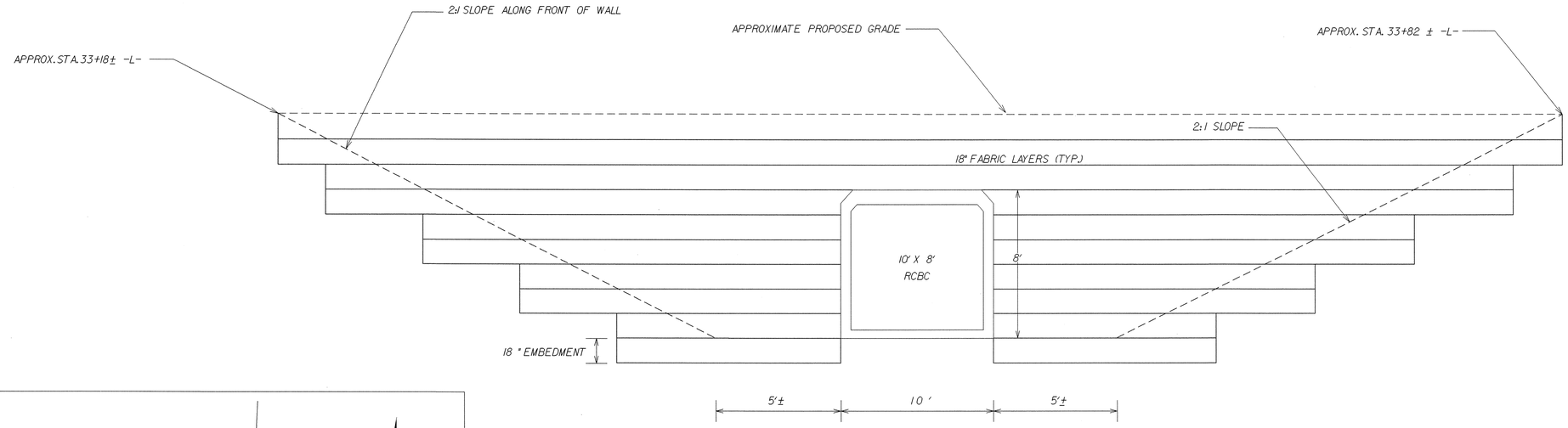


PROFILE ALONG CONSTRUCTION JOINT OF CULVERT AT -L- STA. 33+50±

N.T.S.

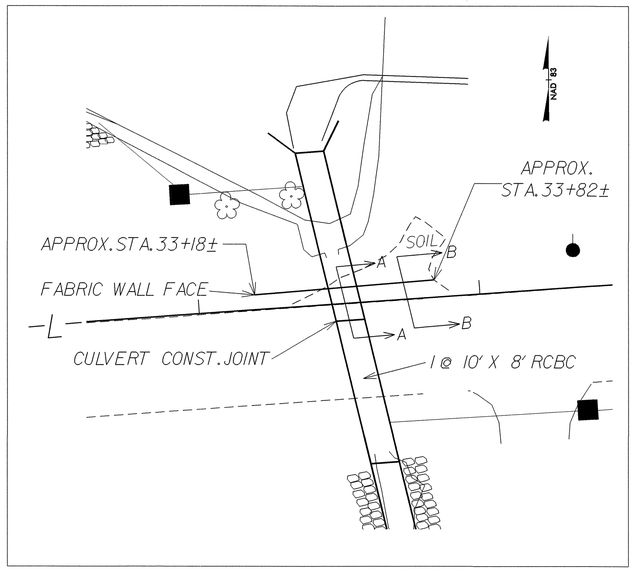


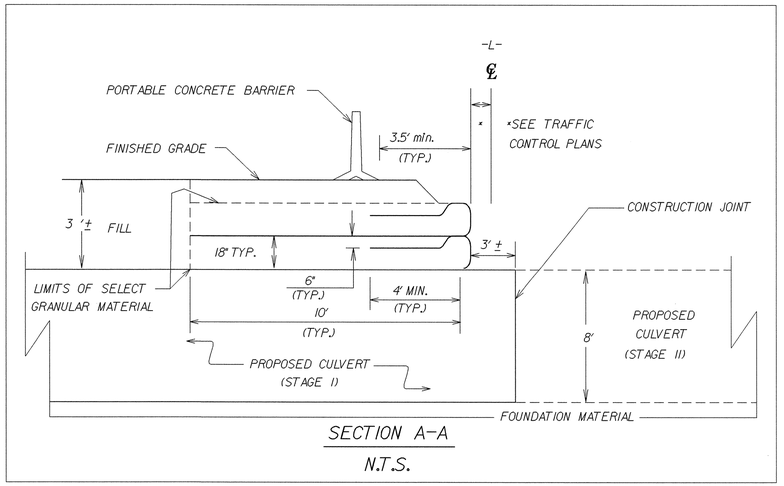


SECTION A-A

N.T.S.

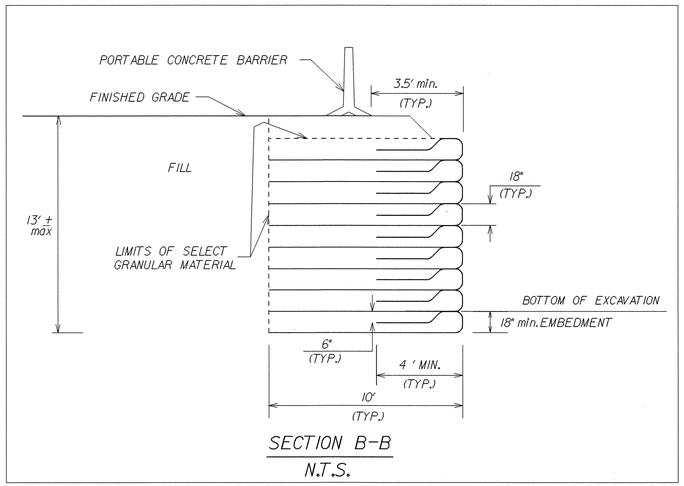


SECTION B-B

N.T.S.

Sheet 1 of 2

NORTH CAROLINA PROFESSIONAL SEAL 18899 ENGINEER JAMES R. BATTS, JR.

James R. Batts Jr.
5/2/06

PROJECT U-3613B

PITT COUNTY

STATION SEE TRAFFIC CONTROL PLANS

STATE OF NORTH CAROLINA
DEPARTMENT OF TRANSPORTATION
RALEIGH

TEMPORARY FABRIC WALL

DESIGNED BY JRB DATE 9/05
DRAWN BY NDM DATE 9/05
CHECKED BY ENW DATE 9/05

6/2/99

14-DEC-2005 09:55
r:\proj\u3613b_geo_shrg_tempfabric1.dgn
USERNAME: gess

| PROJECT REFERENCE NO. | SHEET NO. |
|---|---|
| U-3613B | 2-L |

## FORM OPTION #1

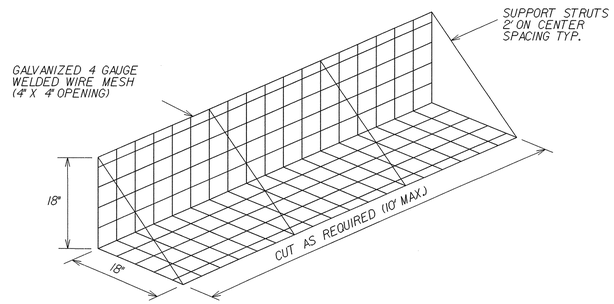


WELDED WIRE MESH FORM
N.T.S.

## FORM OPTION #2

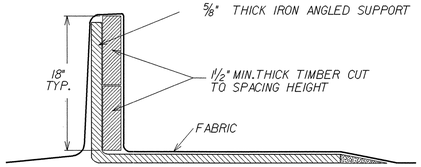


ELEVATION VIEW OF WALL
FACE FALSEWORK
N.T.S.

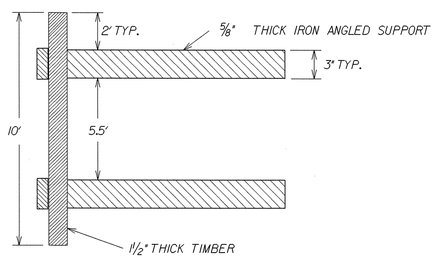


PLAN VIEW OF WALL
FACE FALSEWORK
N.T.S.

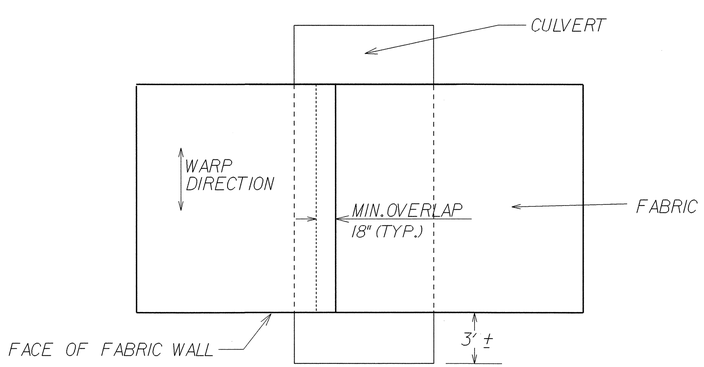


PLAN VIEW OF FABRIC OVERLAP
N.T.S.

NOTES:

1. FABRIC FOR THE TEMPORARY FABRIC WALL MUST HAVE A MINIMUM WIDE WIDTH TENSILE STRENGTH OF 100 lb/in IN THE WARP DIRECTION (BASED ON ASTM-D4595) AT 5% ELONGATION AND A MINIMUM ULTIMATE WIDE WIDTH TENSILE STRENGTH OF 350 lb/in IN THE WARP DIRECTION.
2. FOR TEMPORARY FABRIC WALL, SEE SPECIAL PROVISIONS.
3. LOCATIONS AND QUANTITIES PROVIDED ARE ONLY APPROXIMATE. EXACT LOCATIONS AND QUANTITIES MUST BE DETERMINED BY THE ENGINEER IN THE FIELD.
4. BENCH THE FABRIC WALL INTO THE SIDE OF THE EXCAVATION WHERE APPLICABLE AND AS DIRECTED BY THE ENGINEER.
5. PROVIDE PROPER DRAINAGE AT THE TOP OF THE WALL AS DIRECTED BY THE ENGINEER.
6. USE SELECT GRANULAR MATERIAL IN ACCORDANCE WITH PROJECT SPECIAL PROVISIONS.
7. FABRIC WALL SHOULD BE LEFT IN PLACE PERMANENTLY.
8. WHEN THE FINAL FILL IS PLACED IN FRONT OF THE WALL, UNFOLD THE TOP LAYER OF FABRIC AND INCORPORATE IT INTO THE FILL AS DIRECTED BY THE ENGINEER.
9. THE REQUIRED BEARING PRESSURE FOR THE FABRIC WALLS IS 1tsf. VERIFY THE REQUIRED BEARING PRESSURE IN THE FIELD.
10. THE CONTRACTOR MAY ELECT TO USE A FORMING SYSTEM TO CONSTRUCT THE TEMPORARY FABRIC WALL OTHER THAN THE FALSEWORK OR WIRE MESH FORM OPTIONS SHOWN IN THESE PLANS. HOWEVER; THE ALTERNATE METHOD MUST BE SUBMITTED TO THE ENGINEER FOR REVIEW AND APPROVAL.
11. THE CONTRACTOR MAY ELECT TO USE A SHORING SYSTEM OTHER THAN FABRIC WALLS. THE ALTERNATE METHOD MUST BE SUBMITTED TO THE ENGINEER FOR REVIEW AND APPROVAL.

| ESTIMATED QUANTITY | |
|---|---|
| TEMPORARY FABRIC WALL | 382 SQ. FT. |

NORTH CAROLINA PROFESSIONAL SEAL 18899 ENGINEER JAMES R. BATTS, JR.
James R. Batts Jr.
5/2/06

PROJECT U-3613B
PITT COUNTY
STATION SEE TRAFFIC CONTROL PLANS

STATE OF NORTH CAROLINA
DEPARTMENT OF TRANSPORTATION
RALEIGH

TEMPORARY FABRIC WALL

DESIGNED BY JRB DATE 9/05
DRAWN BY NDM DATE 9/05
CHECKED BY ENW DATE 9/05



14-DEC-2005 09:56
r:\u3613b_geo_shrg_tempfabric1.dgn
$$$$USERNAME$$$$

RD212399 12/14/2005 u3613b_geo_shrg_tempfabric1 dwgardner RD-Oce34

| PROJECT REFERENCE NO. | SHEET NO. |
|---|---|
| U-3613B | 2-M |

STATE OF NORTH CAROLINA DEPT. OF TRANSPORTATION DIVISION OF HIGHWAYS RALEIGH, N.C.

ENGLISH DETAIL DRAWING FOR **GUARDRAIL INSTALLATION**

SHEET 1 OF 7 **862D02**

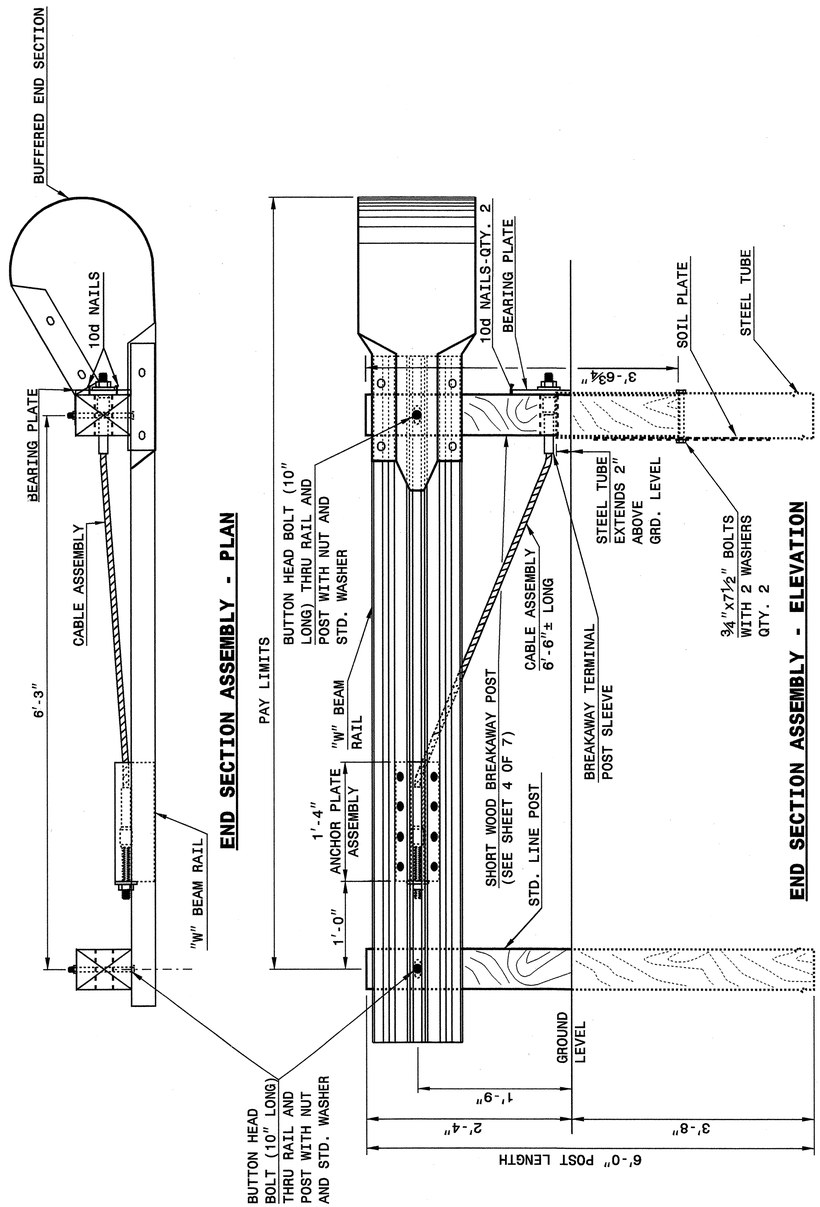


STATE OF NORTH CAROLINA DEPT. OF TRANSPORTATION DIVISION OF HIGHWAYS RALEIGH, N.C.

ENGLISH DETAIL DRAWING FOR **GUARDRAIL INSTALLATION**

SHEET 1 OF 7 **862D02**

STATE OF NORTH CAROLINA DEPT. OF TRANSPORTATION DIVISION OF HIGHWAYS RALEIGH, N.C.

ENGLISH DETAIL DRAWING FOR **GUARDRAIL INSTALLATION**

SHEET 2 OF 7 **862D02**

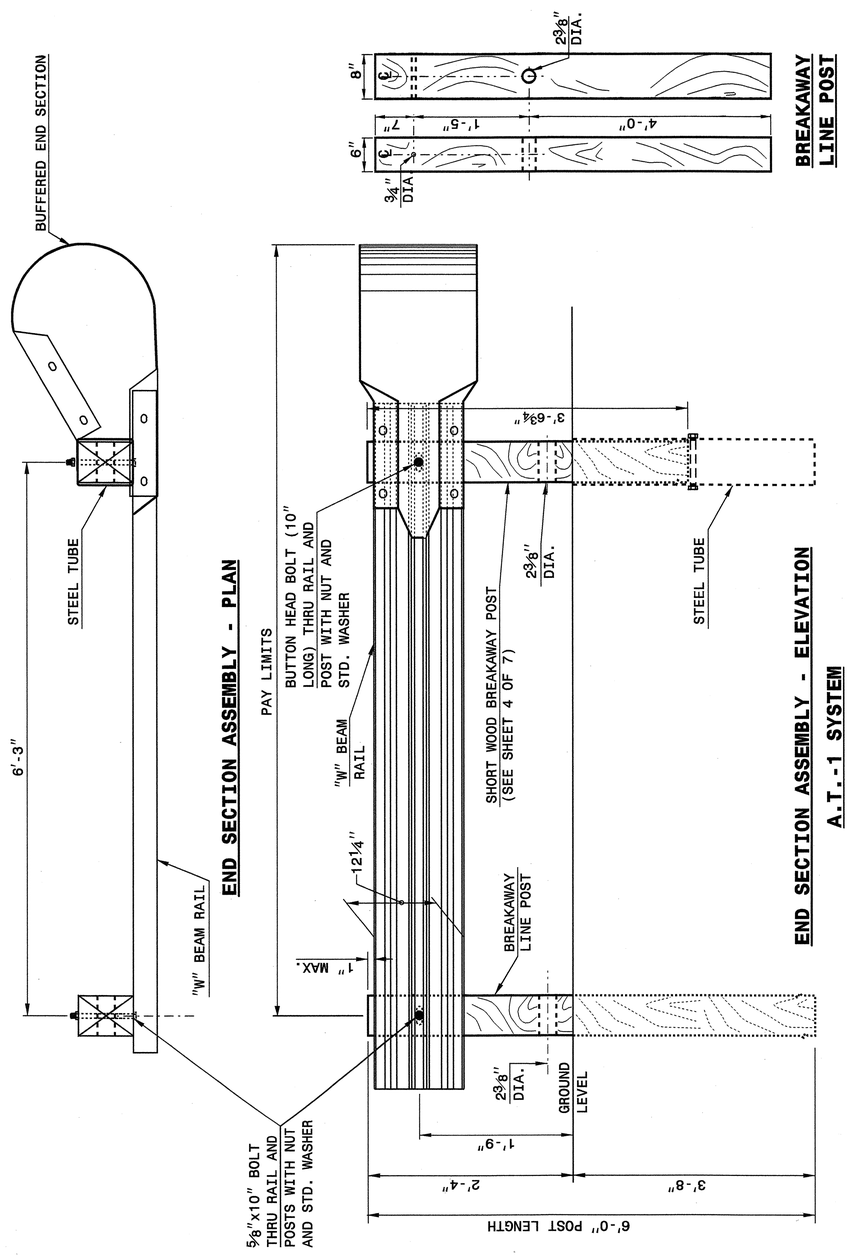


STATE OF NORTH CAROLINA DEPT. OF TRANSPORTATION DIVISION OF HIGHWAYS RALEIGH, N.C.

ENGLISH DETAIL DRAWING FOR **GUARDRAIL INSTALLATION**

SHEET 2 OF 7 **862D02**

NORTH CAROLINA PROFESSIONAL SEAL 022983 ENGINEER JOEL E. WARD
5/2/06

**PROJECT SERVICES UNIT**
**STANDARDS AND SPECIAL DESIGN**
Office 919-250-4128 FAX 919-250-4119

**SEE PLATE FOR TITLE**

ORIGINAL BY: 2002 STD.862.02 DATE:
MODIFIED BY: E.E. WARD DATE: 02-09-03
CHECKED BY: DATE: 10/21/04
FILE SPEC.: /usr/stds/02todetail/english/86202/862d02.dgn

19-OCT-2004 11:38
W:\Special Details\ericward\stds\02 Stds to Special Details\english\86202\0862d02.dgn
ericward AT US212260

STATE OF NORTH CAROLINA
DEPT. OF TRANSPORTATION
DIVISION OF HIGHWAYS
RALEIGH, N.C.

ENGLISH DETAIL DRAWING FOR
**GUARDRAIL INSTALLATION**

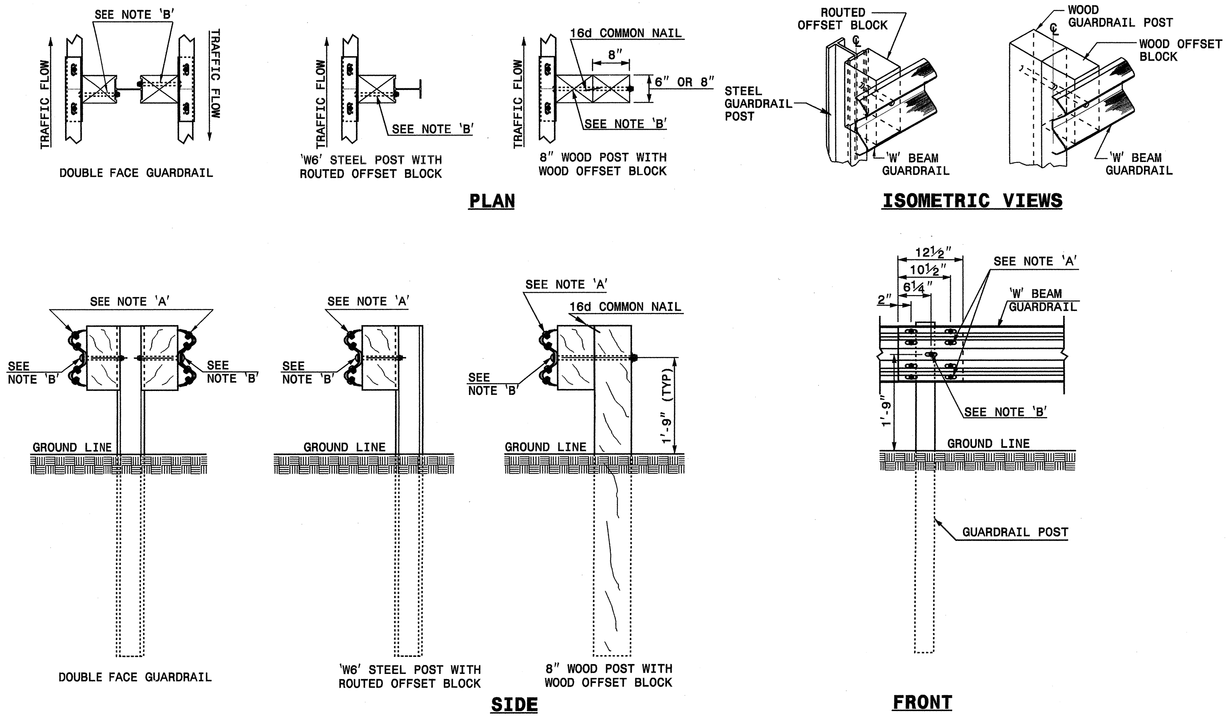


NOTES:
A - ⅝" DIA. BUTTON HEAD SPLICE BOLT 1¼" LONG (8 REQ. PER SPLICE JOINT).
B - ⅝" DIA. BUTTON HEAD BOLT 7½"/9" LONG WITH NUT FOR BOLTING 6"/8" ROUTED OFFSET BLOCK TO STEEL POSTS OR
⅝" DIA. BUTTON HEAD BOLT 18" LONG WITH STD. WASHER UNDER NUT FOR BOLTING TO WOOD POSTS (1 REQ. PER LOCATION)
C - FIELD PUNCHING OF HOLES INTO GUARDRAIL SHALL BE AS DIRECTED BY THE ENGINEER.

**TYPICAL GUARDRAIL AND GUARDRAIL POST ALTERNATIVES**

SHEET 3 OF 7
**862D02**

STATE OF NORTH CAROLINA
DEPT. OF TRANSPORTATION
DIVISION OF HIGHWAYS
RALEIGH, N.C.

ENGLISH DETAIL DRAWING FOR
**GUARDRAIL INSTALLATION**

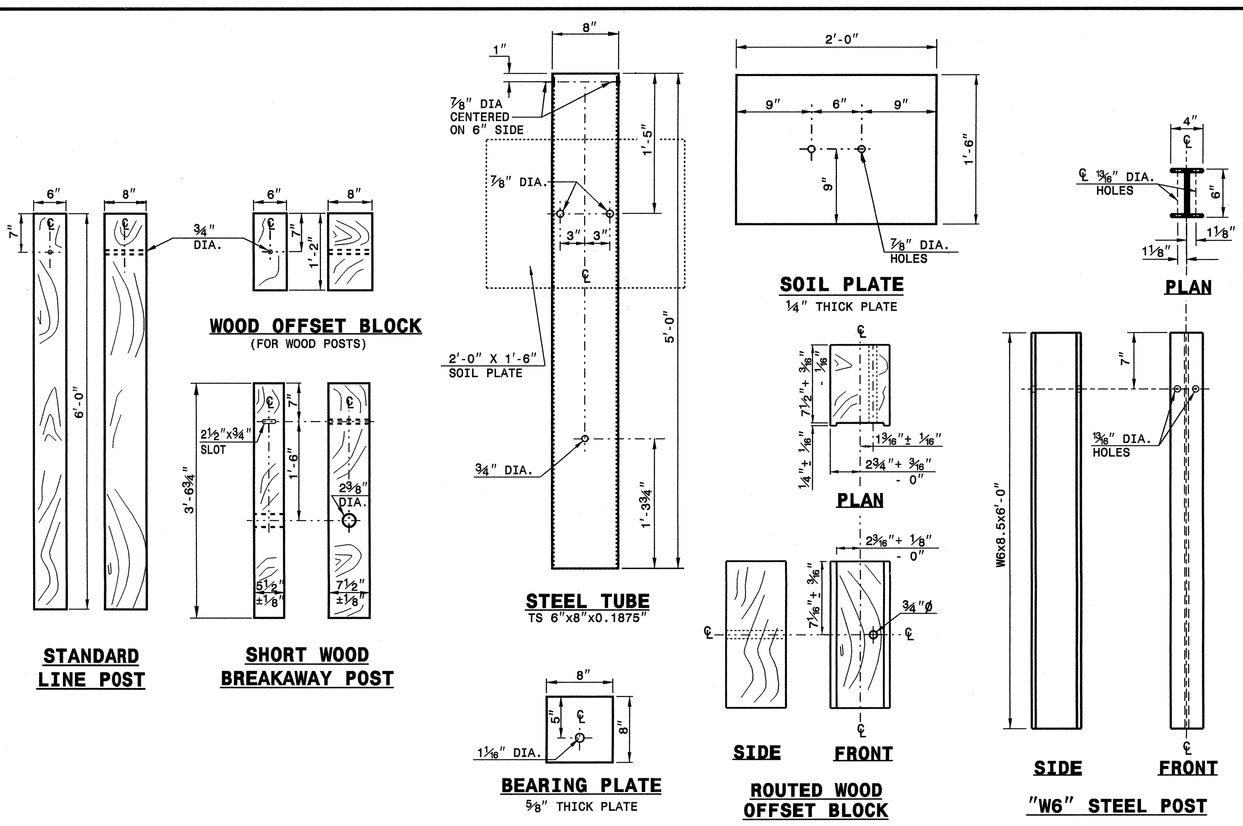


**SYSTEM PARTS**

SHEET 4 OF 7
**862D02**

STATE OF NORTH CAROLINA
DEPT. OF TRANSPORTATION
DIVISION OF HIGHWAYS
RALEIGH, N.C.

ENGLISH DETAIL DRAWING FOR
**GUARDRAIL INSTALLATION**

PROJECT SERVICES UNIT
STANDARDS AND SPECIAL DESIGN
Office 919-250-4128 FAX 919-250-4119

**SEE PLATE FOR TITLE**

ORIGINAL BY: 2002 STD. 862.02 DATE: 02-09-03
MODIFIED BY: E.E. WARD DATE: 10/21/04
CHECKED BY: DATE:
FILE SPEC.: /usr/stds/02'stds/englishdetail/english/86202/862d02.dgn

NORTH CAROLINA PROFESSIONAL SEAL ENGINEER 02286 JOHN
5/2/06

PROJECT REFERENCE NO. U-3613B
SHEET NO. 2-N

STATE OF NORTH CAROLINA
DEPT. OF TRANSPORTATION
DIVISION OF HIGHWAYS
RALEIGH, N.C.

ENGLISH DETAIL DRAWING FOR
**GUARDRAIL INSTALLATION**

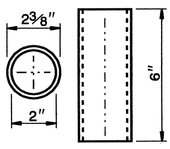


**BREAKAWAY TERMINAL POST SLEEVE**

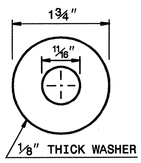


**DETAIL OF STANDARD WASHER**

STANDARD WASHER: TYPICAL USE UNDER NUT WITH WOOD POST

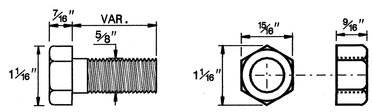


**DETAIL OF STANDARD HEX BOLT AND NUT**

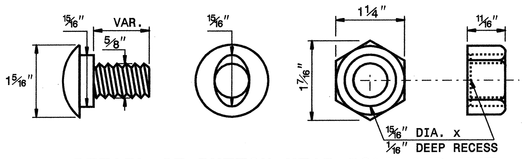


**DETAIL OF BUTTON HEAD BOLT AND NUT**

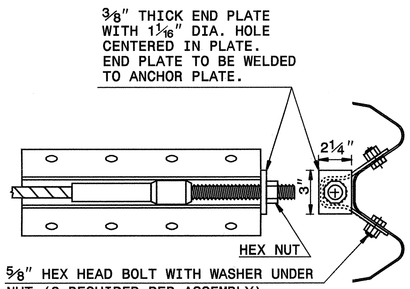


**ANCHOR PLATE ASSEMBLY**

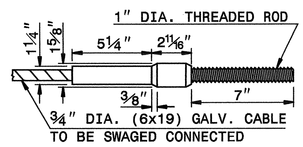


**SWAGED CABLE**

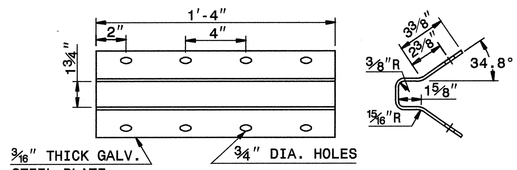


**ANCHOR PLATE**

**CABLE ASSEMBLY**

SHEET 5 OF 7
**862D02**

## SYSTEM PARTS

STATE OF NORTH CAROLINA
DEPT. OF TRANSPORTATION
DIVISION OF HIGHWAYS
RALEIGH, N.C.

ENGLISH DETAIL DRAWING FOR
**GUARDRAIL INSTALLATION**

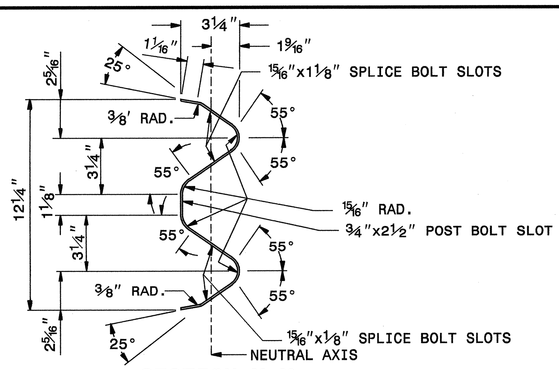


**SECTION X-X**

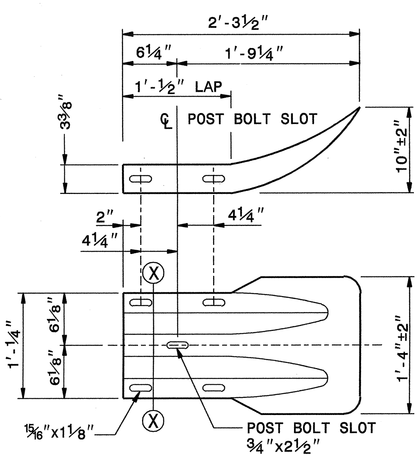


**TERMINAL END SECTION**

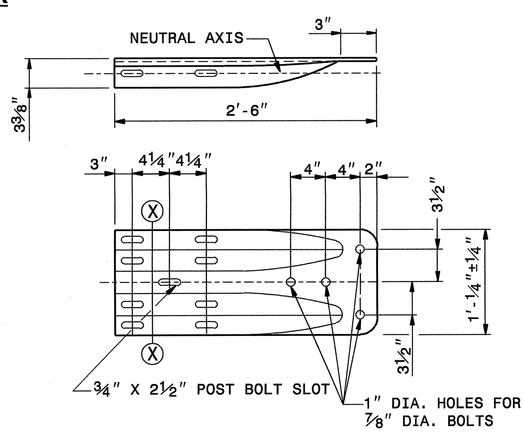


**TYPICAL END SHOE**

SHEET 6 OF 7
**862D02**

## SYSTEM PARTS - GENERAL USE

STATE OF NORTH CAROLINA
DEPT. OF TRANSPORTATION
DIVISION OF HIGHWAYS
RALEIGH, N.C.

ENGLISH DETAIL DRAWING FOR
**GUARDRAIL INSTALLATION**

SHEET 5 OF 7
**862D02**

STATE OF NORTH CAROLINA
DEPT. OF TRANSPORTATION
DIVISION OF HIGHWAYS
RALEIGH, N.C.

ENGLISH DETAIL DRAWING FOR
**GUARDRAIL INSTALLATION**

SHEET 6 OF 7
**862D02**

**PROJECT SERVICES UNIT**
**STANDARDS AND SPECIAL DESIGN**
Office 919-250-4128 FAX 919-250-4119

**SEE PLATE FOR TITLE**

ORIGINAL BY: 2002 STD. 862.02 DATE: 02-08-03
MODIFIED BY: E.E. WARD DATE: 10/8/04
CHECKED BY: DATE:
FILE SPEC.: /usr/stds/02toderail/english/86202/862d02.dgn

NORTH CAROLINA PROFESSIONAL SEAL 022806 ENGINEER

PROJECT REFERENCE NO. U-3613B
SHEET NO. 2-D

| PROJECT REFERENCE NO. | SHEET NO. |
|---|---|
| U-3613B | 2-P |

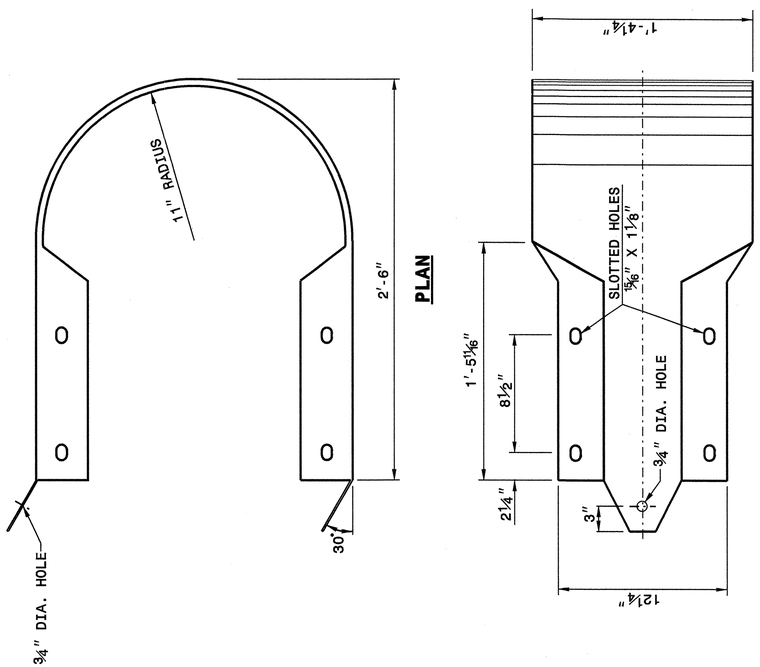


| STATE OF NORTH CAROLINA DEPT. OF TRANSPORTATION DIVISION OF HIGHWAYS RALEIGH, N.C. | ENGLISH DETAIL DRAWING FOR **GUARDRAIL INSTALLATION** | SHEET 7 OF 7 **862D02** |
|---|---|---|


| STATE OF NORTH CAROLINA DEPT. OF TRANSPORTATION DIVISION OF HIGHWAYS RALEIGH, N.C. | ENGLISH DETAIL DRAWING FOR **GUARDRAIL INSTALLATION** | SHEET 7 OF 7 **862D02** |
|---|---|---|


NORTH CAROLINA PROFESSIONAL SEAL 022966 ENGINEER JOHN H. HOUSTON

5/2/06

**PROJECT SERVICES UNIT**
**STANDARDS AND SPECIAL DESIGN**
Office 919-250-4128 FAX 919-250-4119

**SEE PLATE FOR TITLE**

ORIGINAL BY: 2002 STD.862.02 DATE:
MODIFIED BY: E.E. WARD DATE: 02-09-03
CHECKED BY: DATE: 10/21/04
FILE SPEC.: //usr/stds/02todetail/english/86202/862d02.dgn

19-OCT-2004 14:39
W:\Special Details\ericward\stds\02' Stds to Special Details\english\86202\0862d02.dgn
ericward AT DS212260

21-SEP-2005 09:34
S:\Contracts\Contracts\Special Details\ericward\stds\02' Stds to Special Details\english\862D3\0862d03.dgn
ericward AT PS222293

STATE OF NORTH CAROLINA
DEPT. OF TRANSPORTATION
DIVISION OF HIGHWAYS
RALEIGH, N.C.

ENGLISH DETAIL DRAWING FOR
**STRUCTURE ANCHOR UNITS**
GUARDRAIL ANCHOR UNIT, TYPE III FOR ATTACHMENT TO RAIL ON BRIDGE (15' MINIMUM LENGTH APPROACH SLAB)

SHEET 1 OF 6
862D03

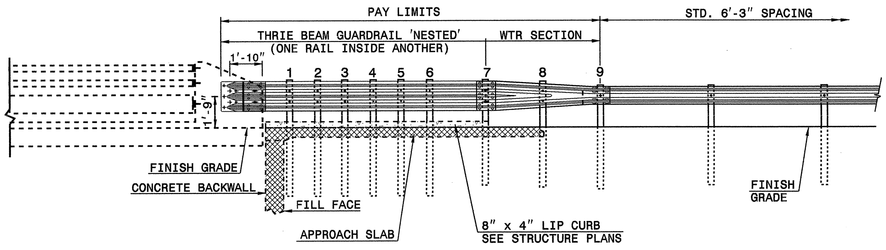


**ELEVATION**

NOTE:
**POST NOT REQUIRED FOR SKEW ANGLES GREATER THAN 150° OR LESS THAN 30° UNLESS OTHERWISE DIRECTED BY THE ENGINEER.
*THE DISTANCE FROM END OF BRIDGE RAIL TO CENTER LINE OF THE FIRST POST SHOULD BE 11½" IF CONCRETE BACKWALL IS NOT PRESENT.
-SHOULDER BERM GUTTER MUST BE INSTALLED TO THE LIMITS 8" x 4" LIP CURB IS SHOWN IF ANCHOR UNIT IS NOT ADJACENT TO AN APPROACH SLAB.
-MEASURE GUARDRAIL HEIGHT FROM THE TOP OF ADJACENT SURFACE (SHOULDER, BERM, OR GUTTER).
-LAP JOINTS IN THE DIRECTION OF TRAFFIC FLOW.
-SEE SHEET 5 FOR POST SECTIONS 1 THRU 9.

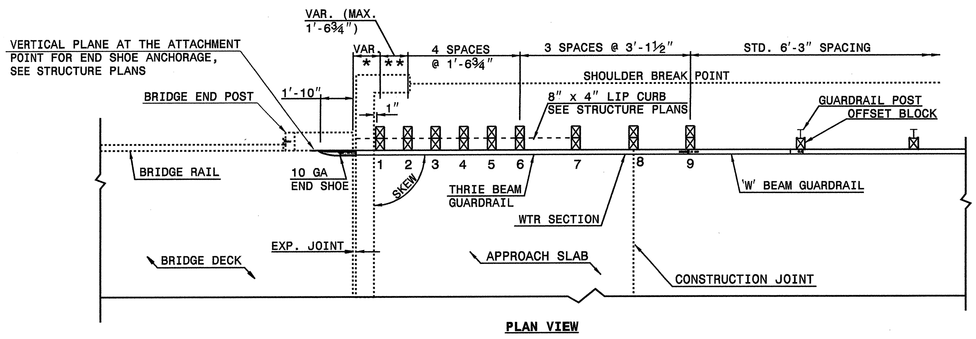


**PLAN VIEW**

## GUARDRAIL ANCHOR UNIT, TYPE III FOR ATTACHMENT TO RAIL ON BRIDGE (15' MINIMUM LENGTH APPROACH SLAB)

STATE OF NORTH CAROLINA
DEPT. OF TRANSPORTATION
DIVISION OF HIGHWAYS
RALEIGH, N.C.

ENGLISH DETAIL DRAWING FOR
**STRUCTURE ANCHOR UNITS**
GUARDRAIL ANCHOR UNIT, TYPE III FOR ATTACHMENT TO RAIL ON BRIDGE (15' MINIMUM LENGTH APPROACH SLAB)

SHEET 1 OF 6
862D03

STATE OF NORTH CAROLINA
DEPT. OF TRANSPORTATION
DIVISION OF HIGHWAYS
RALEIGH, N.C.

ENGLISH DETAIL DRAWING FOR
**STRUCTURE ANCHOR UNITS**
GUARDRAIL ANCHOR UNIT, TYPE III FOR ATTACHMENT TO RAIL ON BRIDGE (25' MINIMUM LENGTH APPROACH SLAB)

SHEET 2 OF 6
862D03

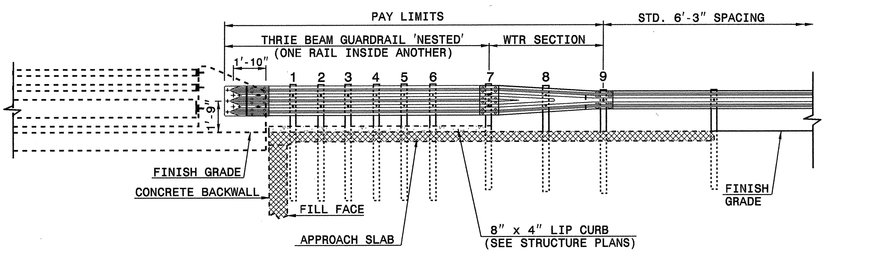


**ELEVATION**

NOTE:
**POST NOT REQUIRED FOR SKEW ANGLES GREATER THAN 150° OR LESS THAN 30° UNLESS OTHERWISE DIRECTED BY THE ENGINEER.
*THE DISTANCE FROM END OF BRIDGE RAIL TO CENTER LINE OF THE FIRST POST SHOULD BE 11½" IF CONCRETE BACKWALL IS NOT PRESENT.
-SHOULDER BERM GUTTER MUST BE INSTALLED TO THE LIMITS 8" x 4" LIP CURB IS SHOWN IF ANCHOR UNIT IS NOT ADJACENT TO AN APPROACH SLAB.
-MEASURE GUARDRAIL HEIGHT FROM THE TOP OF ADJACENT SURFACE (SHOULDER, BERM, OR GUTTER).
-LAP JOINTS IN THE DIRECTION OF TRAFFIC FLOW.
-SEE SHEET 5 FOR POST SECTIONS 1 THRU 9.

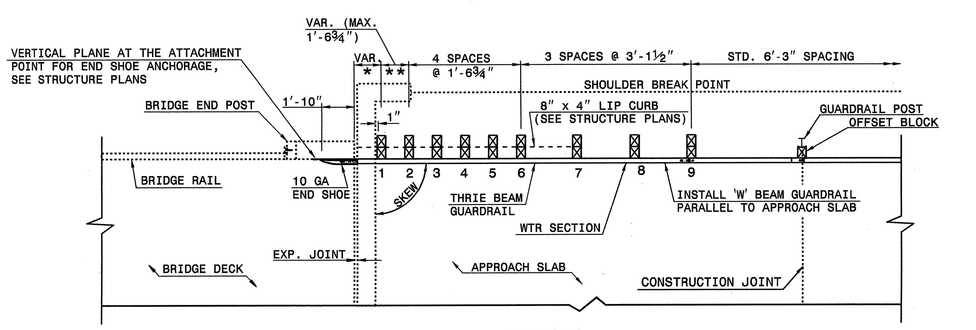


**PLAN VIEW**

## GUARDRAIL ANCHOR UNIT, TYPE III FOR ATTACHMENT TO RAIL ON BRIDGE (25' MINIMUM LENGTH APPROACH SLAB)

STATE OF NORTH CAROLINA
DEPT. OF TRANSPORTATION
DIVISION OF HIGHWAYS
RALEIGH, N.C.

ENGLISH DETAIL DRAWING FOR
**STRUCTURE ANCHOR UNITS**
GUARDRAIL ANCHOR UNIT, TYPE III FOR ATTACHMENT TO RAIL ON BRIDGE (25' MINIMUM LENGTH APPROACH SLAB)

SHEET 2 OF 6
862D03

**PROJECT SERVICES UNIT**
**STANDARDS AND SPECIAL DESIGN**
Office 919-250-4128 FAX 919-250-4119

**SEE PLATE FOR TITLE**

ORIGINAL BY: 2002 STANDARDS DATE: 01-15-02
MODIFIED BY: E.E. WARD DATE: 09-14-05
CHECKED BY: DATE: 9/21/05
FILE SPEC: S:\Contracts\Contracts\Special Details\English\862D03.dgn

NORTH CAROLINA PROFESSIONAL SEAL 21206 ENGINEER
9/21/05

PROJECT REFERENCE NO. U-3613B
SHEET NO. 2-Q

STATE OF NORTH CAROLINA
DEPT. OF TRANSPORTATION
DIVISION OF HIGHWAYS
RALEIGH, N.C.

ENGLISH DETAIL DRAWING FOR
**STRUCTURE ANCHOR UNITS**
GUARDRAIL ANCHOR UNIT, TYPE III FOR ATTACHMENT TO
RAIL ON APPROACH SLAB (15' MINIMUM LENGTH APPROACH SLAB)

SHEET 3 OF 6
**862D03**

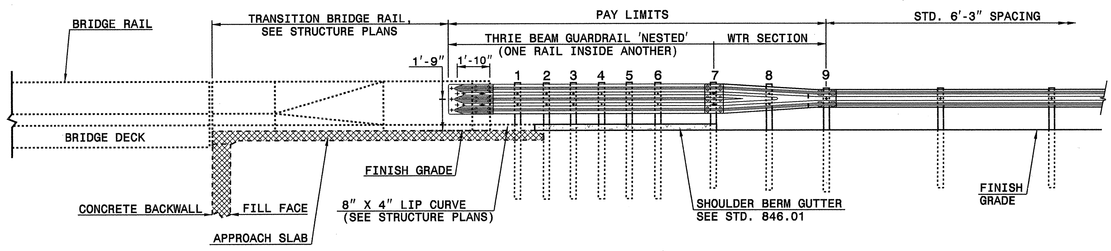


**ELEVATION**

NOTE:
- -SHOULDER BERM GUTTER MUST BE INSTALLED TO THE LIMITS 8" x 4" LIP CURB IS SHOWN IF ANCHOR UNIT IS NOT ADJACENT TO AN APPROACH SLAB.
- -MEASURE GUARDRAIL HEIGHT FROM THE TOP OF ADJACENT SURFACE (SHOULDER, BERM, OR GUTTER).
- -LAP JOINTS IN THE DIRECTION OF TRAFFIC FLOW.
- -SEE SHEET 5 FOR POST SECTIONS 1 THRU 9.

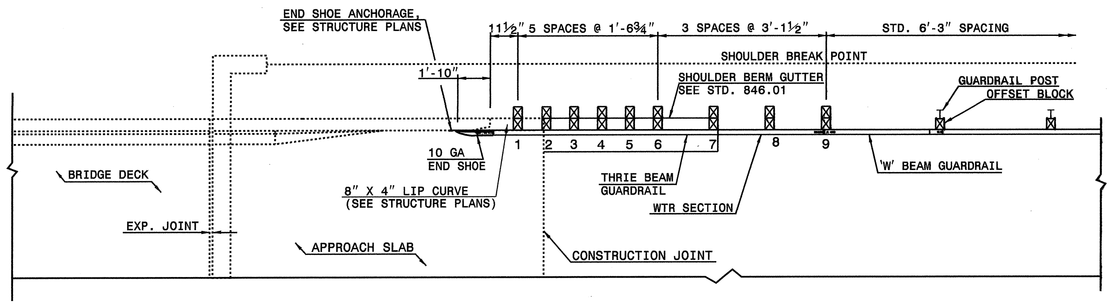


**PLAN VIEW**

## GUARDRAIL ANCHOR UNIT, TYPE III FOR ATTACHMENT TO RAIL ON APPROACH SLAB (15' MINIMUM LENGTH APPROACH SLAB)

STATE OF NORTH CAROLINA
DEPT. OF TRANSPORTATION
DIVISION OF HIGHWAYS
RALEIGH, N.C.

ENGLISH DETAIL DRAWING FOR
**STRUCTURE ANCHOR UNITS**
GUARDRAIL ANCHOR UNIT, TYPE III FOR ATTACHMENT TO
RAIL ON APPROACH SLAB (15' MINIMUM LENGTH APPROACH SLAB)

SHEET 3 OF 6
862D03

STATE OF NORTH CAROLINA
DEPT. OF TRANSPORTATION
DIVISION OF HIGHWAYS
RALEIGH, N.C.

ENGLISH DETAIL DRAWING FOR
**STRUCTURE ANCHOR UNITS**
GUARDRAIL ANCHOR UNIT, TYPE III FOR ATTACHMENT TO
RAIL ON APPROACH SLAB (25' MINIMUM LENGTH APPROACH SLAB)

SHEET 4 OF 6
**862D03**

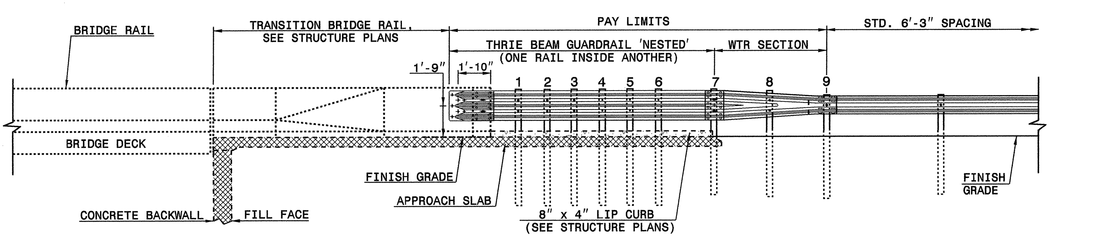


**ELEVATION**

NOTE:
- -SHOULDER BERM GUTTER MUST BE INSTALLED TO THE LIMITS 8" x 4" LIP CURB IS SHOWN IF ANCHOR UNIT IS NOT ADJACENT TO AN APPROACH SLAB.
- -MEASURE GUARDRAIL HEIGHT FROM THE TOP OF ADJACENT SURFACE (SHOULDER, BERM, OR GUTTER).
- -LAP JOINTS IN THE DIRECTION OF TRAFFIC FLOW.
- -SEE SHEET 5 FOR POST SECTIONS 1 THRU 9.

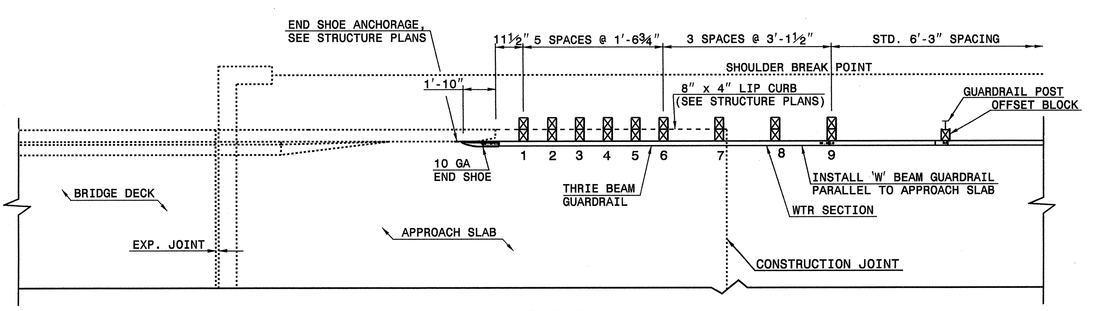


**PLAN VIEW**

## GUARDRAIL ANCHOR UNIT, TYPE III FOR ATTACHMENT TO RAIL ON APPROACH SLAB (25' MINIMUM LENGTH APPROACH SLAB)

STATE OF NORTH CAROLINA
DEPT. OF TRANSPORTATION
DIVISION OF HIGHWAYS
RALEIGH, N.C.

ENGLISH DETAIL DRAWING FOR
**STRUCTURE ANCHOR UNITS**
GUARDRAIL ANCHOR UNIT, TYPE III FOR ATTACHMENT TO
RAIL ON APPROACH SLAB (25' MINIMUM LENGTH APPROACH SLAB)

SHEET 4 OF 6
862D03

**PROJECT SERVICES UNIT**
**STANDARDS AND SPECIAL DESIGN**
Office 919-250-4128 FAX 919-250-4119

**SEE PLATE FOR TITLE**

ORIGINAL BY: 2002 STANDARDS DATE: 01-15-02
MODIFIED BY: E.E. WARD DATE: 09-14-05
CHECKED BY: DATE:
FILE SPEC.: s:\pdx\dxstdcontrols\english\862d03.dgn

NORTH CAROLINA PROFESSIONAL SEAL 02296 ENGINEER
5/1/07

PROJECT REFERENCE NO. U-3613B
SHEET NO. 2-R

STATE OF NORTH CAROLINA
DEPT. OF TRANSPORTATION
DIVISION OF HIGHWAYS
RALEIGH, N.C.

ENGLISH DETAIL DRAWING FOR
**STRUCTURE ANCHOR UNITS**
GUARDRAIL ANCHOR UNIT, TYPE III

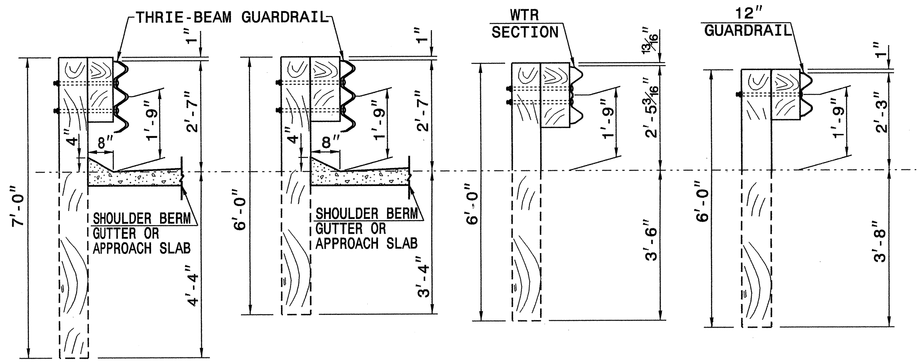


**SECTION OF THRIE BEAM POSTS 1 THRU 6** | **SECTION OF THRIE BEAM POST 7** | **SECTION OF WTR BEAM POST 8** | **SECTION OF 'W' BEAM POST 9**

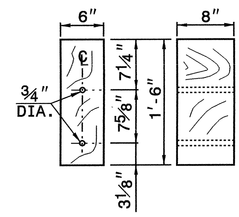


**THRIE BEAM OFFSET BLOCK**

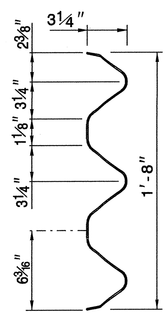


**THRIE-BEAM SECTION**

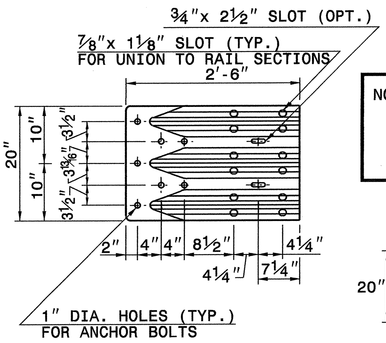


**END SHOE**

NOTE: THE MID POST AND OFFSET BLOCK OF THE WTR SECTION WILL REQUIRE SPECIAL BOLT HOLE DRILLING IN THE THRIE BEAM OFFSET BLOCK AND LINE POST.

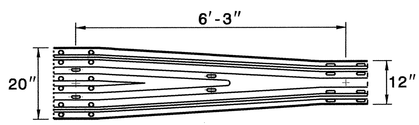


**WTR SECTION**
ELEVATION VIEW

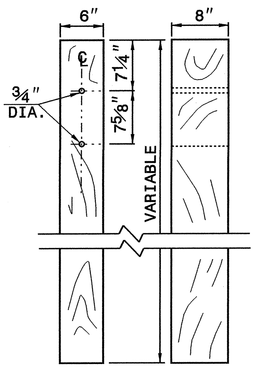


**THRIE BEAM LINE POST**

SHEET 5 OF 6
**862D03**

STATE OF NORTH CAROLINA
DEPT. OF TRANSPORTATION
DIVISION OF HIGHWAYS
RALEIGH, N.C.

ENGLISH DETAIL DRAWING FOR
**STRUCTURE ANCHOR UNITS**
GUARDRAIL ANCHOR UNIT, TYPE III

SHEET 5 OF 6
**862D03**

STATE OF NORTH CAROLINA
DEPT. OF TRANSPORTATION
DIVISION OF HIGHWAYS
RALEIGH, N.C.

ENGLISH DETAIL DRAWING FOR
**STRUCTURE ANCHOR UNITS**
ANCHORAGE FOR GUARDRAIL POST ON BOX CULVERT

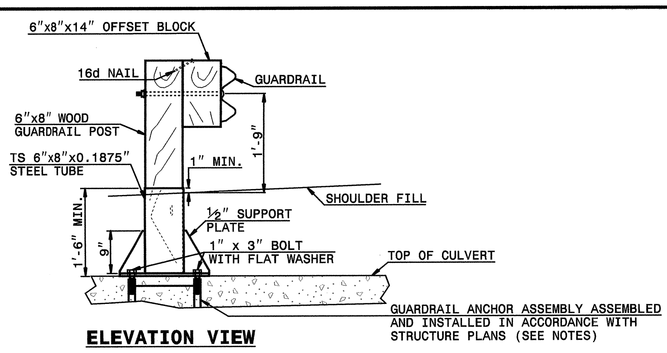


**ELEVATION VIEW**

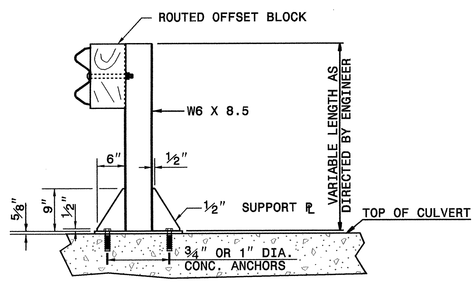


**ELEVATION VIEW**

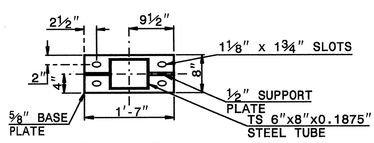


**PLAN VIEW**

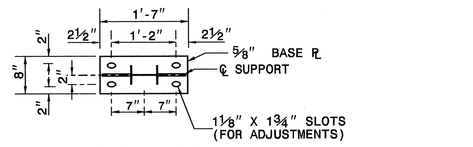


**PLAN VIEW**

NOTES FOR:
GUARDRAIL POST ANCHORED TO STRUCTURE:
-USE FULL LENGTH 1/4" BUTT WELDS AT ALL LOCATIONS OF CONTACT BETWEEN THE BASE PLATE, SUPPORT PLATES AND STEEL POST OR STEEL TUBE.
-USE POST AND POST BASE PLATES CONFORMING TO THE REQUIREMENTS OF A.S.T.M. A-36 AND GALVANIZED AFTER FABRICATION TO CONFORM TO A.S.T.M. A-123.
-USE WOOD POSTS WHICH FIT SNUGLY IN THE STEEL TUBE WITH A MAXIMUM OF 1/8" CLEARANCE BETWEEN TUBE WALL AND POST.

NEW STRUCTURES:
-ATTACH POST TO INSERT ASSEMBLY UNITS (USING ANCHOR BOLTS SUPPLIED WITH INSERTS) WHICH HAVE BEEN CAST INTO THE STRUCTURE DURING CONSTRUCTION.

EXISTING STRUCTURES:
-USE CONCRETE ANCHORS CONSISTING OF A STUD BOLT WITH NUT AND WASHER. USE STUDS THREADED ON ONE END AND HAVING AN EXPANDED WEDGE ASSEMBLY POSITIONED AROUND A TAPERED AREA AT THE OTHER END. USE ANCHORS WHICH PROVIDE A MINIMUM SAFE HOLDING POWER OF 2875 LBS. FOR A 3/4" OR 1" DIAMETER BOLT. CALCULATE HOLDING POWER BASED ON 1/4 THE ACTUAL HOLDING POWER OF THE ANCHOR IN 3500 PSI CONCRETE AS DETERMINED BY AN APPROVED COMMERCIAL TESTING LABORATORY.

-USE ANCHORS GALVANIZED IN ACCORDANCE WITH A.S.T.M. A-153. SIZE HOLES FOR THE CONCRETE ANCHORS IN ACCORDANCE WITH THE ANCHOR MANUFACTURER'S RECOMMENDATIONS. DRILL HOLES WITH A CARBIDE OR DIAMOND TIPPED MASONRY BIT POWERED BY A ROTARY OR ROTARY IMPACT DRILL. NO OTHER IMPACT TOOLS WILL BE PERMITTED. DRILL HOLES VERTICALLY. FURNISH DOCUMENTATION OF HOLE SIZE RECOMMENDED FOR THE SPECIFIED ANCHOR TO THE ENGINEER BEFORE DRILLING HOLES. THOROUGHLY CLEAN HOLES FOR ANCHORS OF ALL CONCRETE CHIPS, DUST, GREASE, OIL, ETC. BEFORE ANCHORS ARE INSTALLED. REPAIR ALL DAMAGE CAUSED BY THIS WORK TO THE SATISFACTION OF THE ENGINEER.

## ANCHORAGE FOR GUARDRAIL POST ON BOX CULVERT

SHEET 6 OF 6
**862D03**

STATE OF NORTH CAROLINA
DEPT. OF TRANSPORTATION
DIVISION OF HIGHWAYS
RALEIGH, N.C.

ENGLISH DETAIL DRAWING FOR
**STRUCTURE ANCHOR UNITS**
ANCHORAGE FOR GUARDRAIL POST ON BOX CULVERT

SHEET 6 OF 6
**862D03**

**PROJECT SERVICES UNIT**
**STANDARDS AND SPECIAL DESIGN**
Office 919-250-4128 FAX 919-250-4119

**SEE PLATE FOR TITLE**

ORIGINAL BY: 2002 STANDARDS DATE: 01-15-02
MODIFIED BY: E.E. WARD DATE: 09-14-05
CHECKED BY: DATE: 9/15/05
FILE SPEC.: stds/02stds to details/english/862D03.dgn

NORTH CAROLINA PROFESSIONAL SEAL 022366 ENGINEER
5/2/06

PROJECT REFERENCE NO. U-3613B
SHEET NO. 2-6

STATE OF NORTH CAROLINA
DEPT. OF TRANSPORTATION
DIVISION OF HIGHWAYS
RALEIGH, N.C.

ENGLISH DETAIL DRAWING FOR
**DRIVEWAY TURNOUT**
DROP CURB TYPE

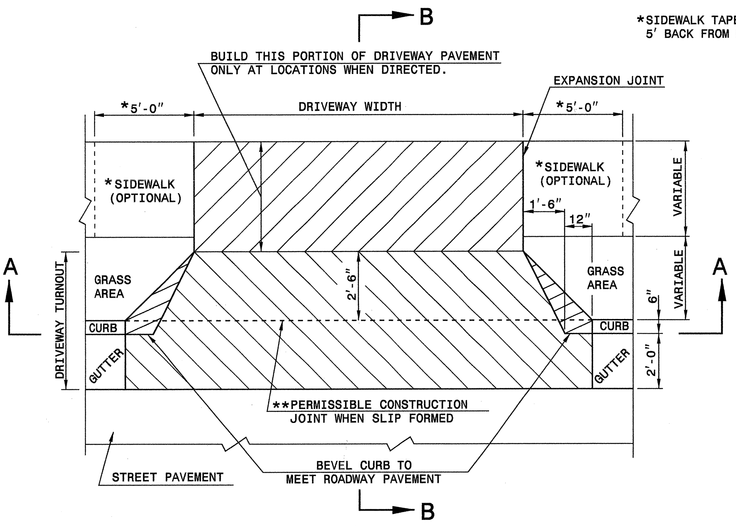


**PLAN**
**DETAIL OF DRIVEWAY**

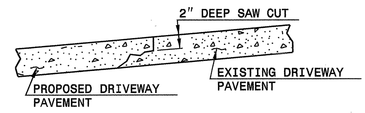


**METHOD OF TIE IN**

WHEN EXISTING DRIVEWAY PAVEMENT IS CONCRETE, SAW CUT 2" DEEP JOINT AT THE POINT OF TIE-IN. SAW JOINT PERPENDICULAR TO EDGE OF EXISTING DRIVEWAY PAVEMENT.

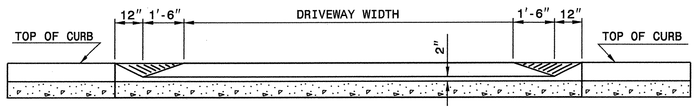


**SECTION A-A**

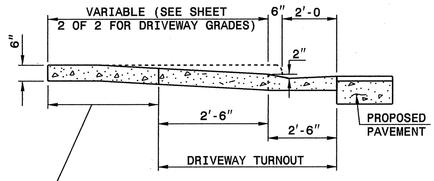


**SECTION B-B**

GENERAL NOTES:

**NO CONSTRUCTION JOINT WILL BE PERMITTED IF FORMS ARE USED TO CAST DRIVEWAY. SLIP FORMING OF CURB AND GUTTER PERMITS THE USE OF CONSTRUCTION JOINT.

SHEET 1 OF 2
**848D03**

STATE OF NORTH CAROLINA
DEPT. OF TRANSPORTATION
DIVISION OF HIGHWAYS
RALEIGH, N.C.

ENGLISH DETAIL DRAWING FOR
**DRIVEWAY TURNOUT**
DROP CURB TYPE

SHEET 1 OF 2
**848D03**

STATE OF NORTH CAROLINA
DEPT. OF TRANSPORTATION
DIVISION OF HIGHWAYS
RALEIGH, N.C.

ENGLISH DETAIL DRAWING FOR
**DRIVEWAY TURNOUT**
DRIVEWAY GRADES

**DESIRABLE DRIVEWAY GRADES**

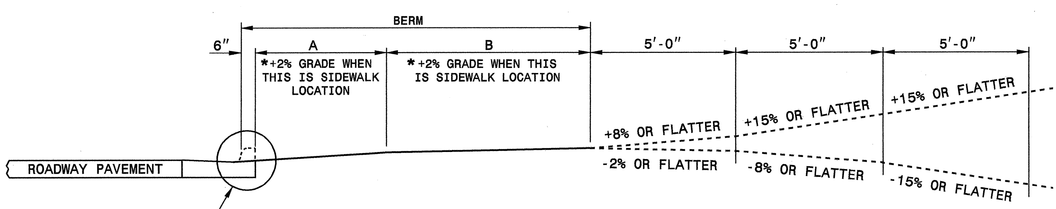


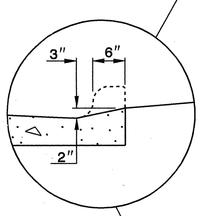


*SIDEWALK LOCATION (DO NOT PLACE SIDEWALK ON BERMS LESS THAN 6' WIDE.)

| DESIRABLE OR MAXIMUM DRIVEWAY GRADES | | | | |
|---|---|---|---|---|
| BERM WIDTH | A | | B | |
| | DIST. | GRADE | DIST. | GRADE |
| 8' OR LESS | 5'-0" | +2%* | 2'-6" | +5% |
| 8' OR LESS | 2'-0" | +6% | 5'-6" | +2%* |
| 10' | 4'-0" | +4% | 5'-6" | +2%* |
| 12' & OVER | 4'-6" | +4% | 7'-0" | +2%* |

**MAXIMUM DRIVEWAY GRADES**

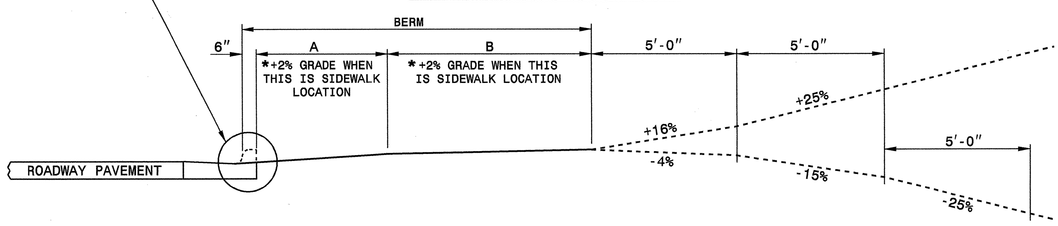


SHEET 2 OF 2
**848D03**

STATE OF NORTH CAROLINA
DEPT. OF TRANSPORTATION
DIVISION OF HIGHWAYS
RALEIGH, N.C.

ENGLISH DETAIL DRAWING FOR
**DRIVEWAY TURNOUT**
DRIVEWAY GRADES

SHEET 2 OF 2
**848D03**

**DESIGN SERVICES UNIT**
**STANDARDS AND SPECIAL DESIGN**
Office 919-250-4128 FAX 919-250-4119

**SEE PLATE FOR TITLE**

ORIGINAL BY: 2002 STD. 848.03 DATE:
MODIFIED BY: E.F. WARD DATE: 03-27-03
CHECKED BY: DATE: 4-4-03
FILE SPEC.: /usr/stdg/02roadway/english/84803/848d03.dgn

NORTH CAROLINA PROFESSIONAL SEAL 022866 ENGINEER JOE

PROJECT REFERENCE NO. U-3613B
SHEET NO. 2-T

| PROJECT REFERENCE NO. | SHEET NO. |
|---|---|
| U-3613B | 2-U |

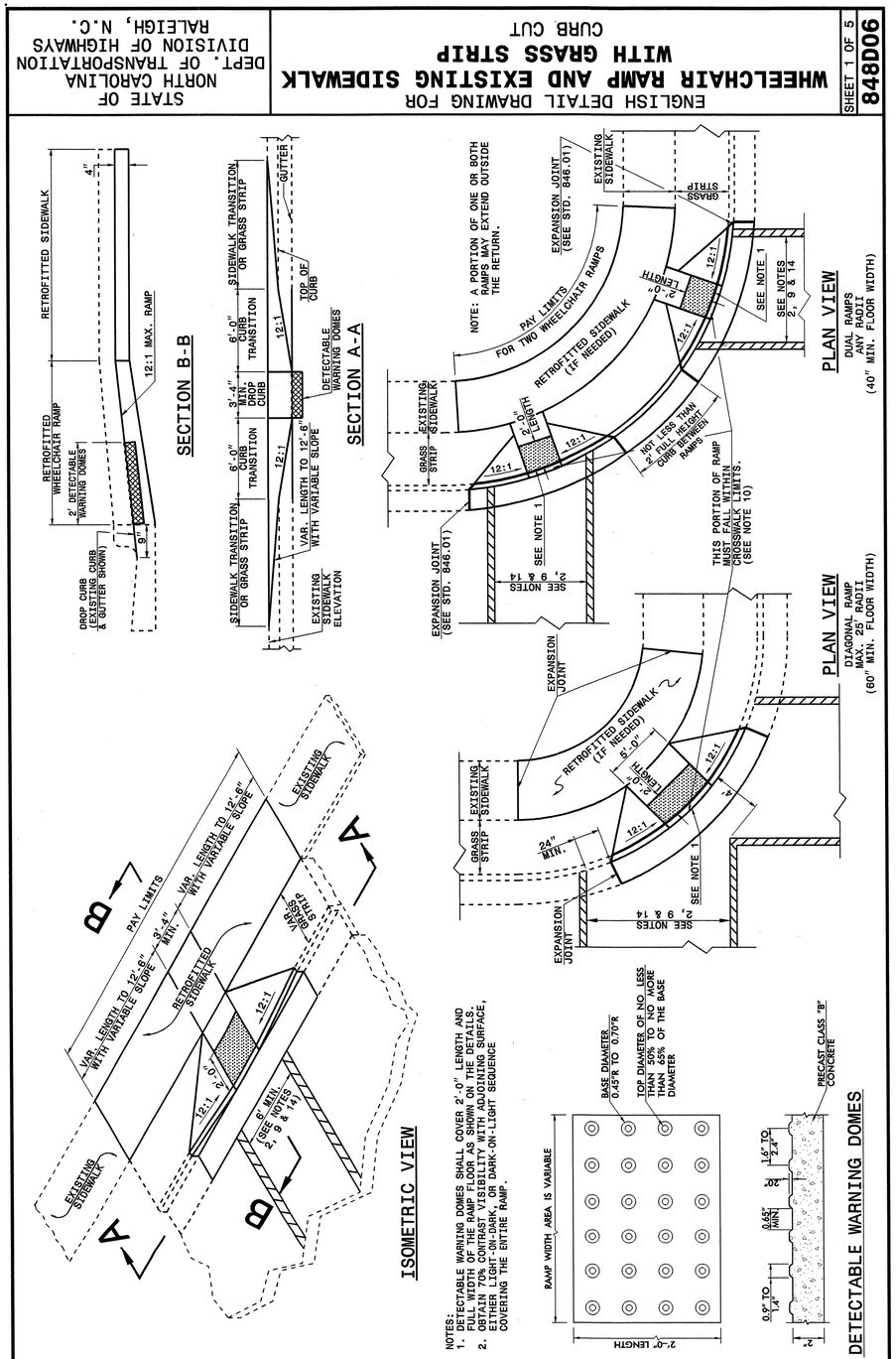


STATE OF NORTH CAROLINA DEPT. OF TRANSPORTATION DIVISION OF HIGHWAYS RALEIGH, N.C.

ENGLISH DETAIL DRAWING FOR
**WHEELCHAIR RAMP AND EXISTING SIDEWALK WITH GRASS STRIP**
CURB CUT

SHEET 1 OF 5 **848D06**

STATE OF NORTH CAROLINA DEPT. OF TRANSPORTATION DIVISION OF HIGHWAYS RALEIGH, N.C.

ENGLISH DETAIL DRAWING FOR
**WHEELCHAIR RAMP AND EXISTING SIDEWALK ADJACENT TO CURB**
CURB CUT

SHEET 2 OF 5 **848D06**

NORTH CAROLINA PROFESSIONAL SEAL 022966 ENGINEER JOEL R. HUNT
5/2/06

**PROJECT SERVICES UNIT**
**STANDARDS AND SPECIAL DESIGN**
Office 919-250-4128 FAX 919-250-4119

**SEE PLATE FOR TITLE**

ORIGINAL BY: DETAIL 848D05 DATE:
MODIFIED BY: E.E. WARD DATE: 09-06-05
CHECKED BY: DATE: 1/9/05
FILE SPEC.: /usr/stds/02todetail/english/848d06/848d06.dgn

08-SEP-2005 12:01
S:\Contracts\Special Details\ericward\stds\02 Stds to Special Details\english\848d6\0848d06.dgn
ericward AT PSC22293

| PROJECT REFERENCE NO. | SHEET NO. |
|---|---|
| U-3613B | 2-V |

STATE OF NORTH CAROLINA DEPT. OF TRANSPORTATION DIVISION OF HIGHWAYS RALEIGH, N.C.

ENGLISH DETAIL DRAWING FOR
**RETROFITTING DETECTABLE WARNING DOMES ONTO EXISTING WHEELCHAIR RAMP**
CURB CUT

SHEET 3 OF 5 **848D06**




STATE OF NORTH CAROLINA DEPT. OF TRANSPORTATION DIVISION OF HIGHWAYS RALEIGH, N.C.

ENGLISH DETAIL DRAWING FOR
**WHEELCHAIR RAMP**
CURB CUT

SHEET 4 OF 5 **848D06**




STATE OF NORTH CAROLINA DEPT. OF TRANSPORTATION DIVISION OF HIGHWAYS RALEIGH, N.C.

ENGLISH DETAIL DRAWING FOR
**RETROFITTING DETECTABLE WARNING DOMES ONTO EXISTING WHEELCHAIR RAMP**
CURB CUT

SHEET 3 OF 5 **848D06**

STATE OF NORTH CAROLINA DEPT. OF TRANSPORTATION DIVISION OF HIGHWAYS RALEIGH, N.C.

ENGLISH DETAIL DRAWING FOR
**WHEELCHAIR RAMP**
CURB CUT

SHEET 4 OF 5 **848D06**

NORTH CAROLINA PROFESSIONAL SEAL 022966 ENGINEER
5/2/06

**PROJECT SERVICES UNIT**
**STANDARDS AND SPECIAL DESIGN**
Office 919-250-4128 FAX 919-250-4119

**SEE PLATE FOR TITLE**

ORIGINAL BY: DETAIL 848D05 DATE:
MODIFIED BY: E.E. WARD DATE: 09-06-05
CHECKED BY: DATE: 1/9/15
FILE SPEC.: /usr/stds/02rodetail/english/848d06/848d06.dgn

08-SEP-2005 15:59
S:\Contracts\Contracts\Special Details\ericward\stds\02' Stds to Special Details\english\848d6\848d06.dgn
ericward AT FS222293

STATE OF
NORTH CAROLINA
DEPT. OF TRANSPORTATION
DIVISION OF HIGHWAYS
RALEIGH, N.C.

ENGLISH DETAIL DRAWING FOR

**WHEELCHAIR RAMP AND EXISTING SIDEWALK**

CURB CUT

SHEET 5 OF 5

**848D06**

NOTES:

1. CONSTRUCT THE WALKING SURFACE WITH SLIP RESISTANCE AND A 70% CONTRASTING COLOR TO THE SIDEWALK.
2. CROSSWALK WIDTHS AND CONFIGURATION VARY, BUT MUST CONFORM TO TRAFFIC DESIGN STANDARDS.
3. NORTH CAROLINA GENERAL STATUTE 136-44.14 REQUIRES THAT ALL STREET CURBS BEING CONSTRUCTED OR RECONSTRUCTED FOR MAINTENANCE PROCEDURES, TRAFFIC OPERATIONS, REPAIRS, CORRECTION OF UTILITIES OR ALTERED FOR ANY REASON AFTER SEPTEMBER 1, 1973 SHALL PROVIDE WHEELCHAIR RAMPS FOR THE PHYSICALLY DISABLED AT ALL INTERSECTIONS WHERE BOTH CURB AND GUTTER AND SIDEWALKS ARE PROVIDED AND AT OTHER POINTS OF PEDESTRIAN FLOW.

   IN ADDITION, SECTION 228 OF THE 1973 FEDERAL AID HIGHWAY SAFETY ACT REQUIRES PROVISION OF CURB RAMPS ON ANY CURB CONSTRUCTION AFTER JULY 1,1976 WHETHER A SIDEWALK IS PROPOSED INITIALLY OR IS PLANNED FOR A FUTURE DATE.

   THE AMERICANS WITH DISABILITIES ACT (ADA) OF 1990 EXTENDS TO INDIVIDUALS WITH DISABILITIES, COMPREHENSIVE CIVIL RIGHTS PROTECTIONS SIMILIAR TO THOSE PROVIDED TO PERSONS ON THE BASIS OF RACE, SEX, NATIONAL ORIGIN AND RELIGION UNDER THE CIVIL RIGHTS ACT OF 1964. THESE CURB RAMPS HAVE BEEN DESIGNED TO COMPLY WITH THE CURRENT ADA STANDARDS.
4. PROVIDE WHEELCHAIR RAMPS AT LOCATIONS AS SHOWN ON THE PLANS OR AS DIRECTED BY THE ENGINEER. LOCATE WHEELCHAIR RAMPS AS DIRECTED BY THE ENGINEER WHERE EXISTING LIGHT POLES, FIRE HYDRANTS, DROP INLETS, ETC. AFFECT PLACEMENT. WHERE TWO RAMPS ARE INSTALLED PLACE NOT LESS THAN 2 FEET OF FULL HEIGHT CURB BETWEEN THE RAMPS. PLACE DUAL RAMPS AS NEAR PERPENDICULAR TO THE TRAVEL LANE BEING CROSSED AS POSSIBLE.
5. DO NOT EXCEED 0.08 (12:1) SLOPE ON THE WHEELCHAIR RAMP IN RELATIONSHIP TO THE GRADE OF THE STREET.
6. CONSTRUCT WHEELCHAIR RAMPS 40" (3'-4") OR GREATER FOR DUAL RAMPS AND 60" (5'-0") OR GREATER FOR DIAGONAL RAMPS.
7. USE CLASS "B" CONCRETE WITH A SIDEWALK FINISH IN ORDER TO OBTAIN A ROUGH NON-SKID TYPE SURFACE.
8. PLACE A ½" EXPANSION JOINT WHERE THE CONCRETE WHEELCHAIR RAMP JOINS THE CURB AND AS SHOWN ON STD. DWG. 848.01.
9. PLACE THE INSIDE PEDESTRIAN CROSSWALK LINES NO CLOSER IN THE INTERSECTION BY BISECTING THE INTERSECTION RADII, WITH ALLOWANCE OF A 4' CLEAR ZONE IN THE VEHICULAR TRAVELWAY WHEN ONE RAMP IS INSTALLED. (SEE NOTE 14)
10. COORDINATE THE CURB CUT AND THE PEDESTRIAN CROSSWALK LINES SO THE FLOOR OF THE WHEELCHAIR RAMP WILL FALL WITHIN THE PEDESTRIAN CROSSWALK LINES. PLACE DIAGONAL RAMPS WITH FLARED SIDES SO 24" OF FULL HEIGHT CURB FALLS WITHIN THE CROSSWALK MARKINGS ON EACH SIDE OF THE FLARES.
11. CONSTRUCT THE PEDESTRIAN CROSSWALK A MINIMUM OF 6 FEET. A CROSSWALK WIDTH OF 10 FEET OR GREATER IS DESIRABLE.
12. USE STOP LINES, NORMALLY PERPENDICULAR TO THE LANE LINES, WHERE IT IS IMPORTANT TO INDICATE THE POINT BEHIND WHICH VEHICLES ARE REQUIRED TO STOP IN COMPLIANCE WITH A TRAFFIC SIGNAL, STOP SIGN OR OTHER LEGAL REQUIREMENT. AN UNUSUAL APPROACH SKEW MAY REQUIRE THE PLACEMENT OF THE STOP LINE TO BE PARALLEL TO THE INTERSECTING ROADWAY.
13. TERMINATE PARKING A MINIMUM OF 20 FEET BACK OF PEDESTRIAN CROSSWALK.
14. PLACE ALL PAVEMENT MARKINGS IN ACCORDANCE WITH THE LATEST EDITION OF THE MANUAL OF UNIFORM TRAFFIC CONTROL DEVICES (MUTCD) PUBLISHED BY THE FEDERAL HIGHWAY ADMINISTRATION AND THE NORTH CAROLINA SUPPLEMENT TO THE MUTCD.

STATE OF
NORTH CAROLINA
DEPT. OF TRANSPORTATION
DIVISION OF HIGHWAYS
RALEIGH, N.C.

ENGLISH DETAIL DRAWING FOR

**WHEELCHAIR RAMP AND EXISTING SIDEWALK**

CURB CUT

SHEET 5 OF 5

**848D06**

**PROJECT SERVICES UNIT**
**STANDARDS AND SPECIAL DESIGN**
Office 919-250-4128 FAX 919-250-4119

**SEE PLATE FOR TITLE**

ORIGINAL BY: DETAIL 848D05 DATE:
MODIFIED BY: E.E. WARD DATE: 09-08-05
CHECKED BY: DATE: 9/9/05
FILE SPEC.: /dsj/stds/02/roadway/english/84806/848d06.dgn

NORTH CAROLINA PROFESSIONAL SEAL 02298 ENGINEER

PROJECT REFERENCE NO. U-3613B

SHEET NO. 2-W

| PROJECT REFERENCE NO. | SHEET NO. |
|---|---|
| U-3613B | 2-X |

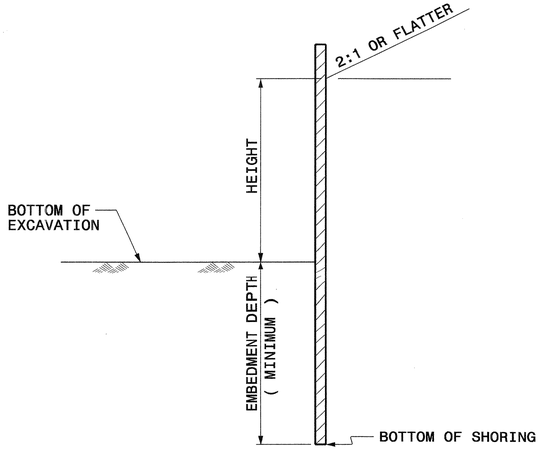


## TEMPORARY SHORING

(SLOPING OR LEVEL WITH TRAFFIC SURCHARGE, NO BARRIER IMPACT)

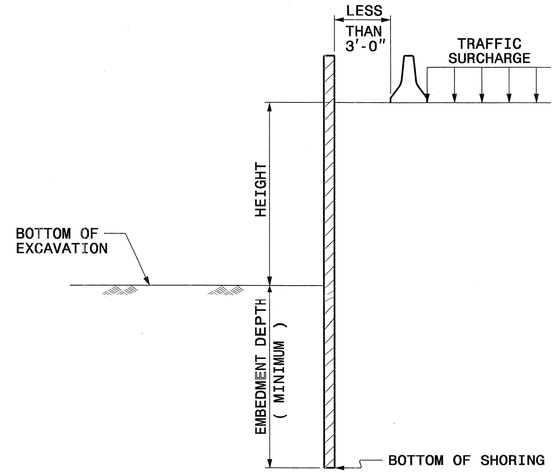


## TEMPORARY SHORING - BARRIER SUPPORTED

(LEVEL WITH TRAFFIC SURCHARGE, WITH BARRIER IMPACT)

## NOTES

FOR TEMPORARY SHORING FOR MAINTENANCE OF TRAFFIC, SEE SPECIAL PROVISIONS.

SELECT THE APPROPRIATE STANDARD SHORING DESIGN FOR TEMPORARY SHORING FOR MAINTENANCE OF TRAFFIC IN LIEU OF SUBMITTING CONTRACTOR SHORING DESIGN. USE STANDARD SHORING DESIGN ONLY WHEN ALL OF THE FOLLOWING CRITERIA ARE MET:

- MAXIMUM HEIGHT OF SHORING EXCAVATION IS 11 FEET
- GROUNDWATER TABLE IS NOT ABOVE BOTTOM OF THE EXCAVATION
- BACKFILL SLOPE IS 2:1 OR FLATTER
- TRAFFIC SURCHARGE EQUAL TO 240 PSF
- SOLDIER PILE SPACING OF 6 FEET
- TIMBER LAGGING SHALL HAVE A MINIMUM THICKNESS OF 3 INCHES

SUBMIT "STANDARD SHORING SELECTION" FORM TO ENGINEER PRIOR TO CONSTRUCTION OF SHORING.

DO NOT USE THE STANDARD SHORING DESIGNS WHEN VERY SOFT SOIL OR MUCK IS PRESENT WITHIN THE SHORING EMBEDMENT ZONE.

CONTRACTOR MUST VERIFY LOCATION OF GROUNDWATER TABLE PRIOR TO CONSTRUCTION OF SHORING.

THE CONTRACTOR HAS THE OPTION OF USING SOLDIER PILES SET IN DRILLED HOLES WITH A SHORTENED LENGTH EQUAL TO 75% OF THE EMBEDMENT DEPTHS SHOWN IN THE TABLE. FOR DRILLING REQUIREMENTS, SEE TEMPORARY SHORING FOR MAINTENANCE OF TRAFFIC SPECIAL PROVISION.

IF DESIGN EMBEDMENT DEPTH IS NOT ACHIEVED, THEN NOTIFY THE ENGINEER IMMEDIATELY.

GROUNDWATER TABLE CONDITIONS

1) WHEN WATER TABLE IS ABOVE THE BOTTOM OF EXCAVATION, SUBMIT CONTRACTOR SHORING DESIGN TO THE ENGINEER FOR APPROVAL.

2) WHEN WATER TABLE IS BELOW THE BOTTOM OF EXCAVATION AND ABOVE THE BOTTOM OF SHORING, USE "WATER TABLE" CASE.

3) WHEN WATER TABLE IS BELOW BOTTOM OF SHORING, USE "NO WATER TABLE" CASE.

| | | TEMPORARY SHORING | | | | | TEMPORARY SHORING - BARRIER SUPPORTED | | | | |
|---|---|---|---|---|---|---|---|---|---|---|---|
| | | CANTILEVER SHEETING | | DRIVEN SOLDIER PILE | | | CANTILEVER SHEETING | | DRIVEN SOLDIER PILE | | |
| CASE | HEIGHT (FT) | MINIMUM EMBEDMENT DEPTH (FT) | MINIMUM SECTION MODULUS ($IN^3$ / FT OF WALL) | MINIMUM EMBEDMENT DEPTH (FT) | | | MINIMUM EMBEDMENT DEPTH (FT) | MINIMUM SECTION MODULUS ($IN^3$ / FT OF WALL) | MINIMUM EMBEDMENT DEPTH (FT) | | |
| | | | | HP 10x42 | HP 12x53 | HP 14x73 | | | HP 10x42 | HP 12x53 | HP 14x73 |
| "NO WATER TABLE" | < 6 | 7.5 | 3.0 | 8.0 | 8.0 | 8.0 | 11.0 | 10.0 | 9.5 | 9.5 | 9.5 |
| | 7 | 8.5 | 4.5 | 9.5 | 9.5 | 9.5 | 12.0 | 12.0 | 10.5 | 10.5 | 10.5 |
| | 8 | 10.0 | 6.5 | 10.5 | 10.5 | 10.5 | 12.5 | 14.0 | 11.5 | 11.5 | 11.5 |
| | 9 | 11.0 | 9.5 | -- | 12.0 | 12.0 | 13.5 | 16.5 | -- | 12.5 | 12.5 |
| | 10 | 12.5 | 13.0 | -- | -- | 13.5 | 14.0 | 19.5 | -- | 13.5 | 13.5 |
| | 11 | 13.5 | 17.0 | -- | -- | 14.5 | 15.0 | 22.5 | -- | -- | 14.5 |
| "WATER TABLE" | < 6 | 11.5 | 4.5 | 11.5 | 11.5 | 11.5 | 16.0 | 12.0 | 13.0 | 13.0 | 13.0 |
| | 7 | 13.0 | 7.0 | 13.0 | 13.0 | 13.0 | 17.0 | 14.5 | 14.5 | 14.5 | 14.5 |
| | 8 | 15.0 | 10.0 | -- | 15.0 | 15.0 | 18.0 | 17.0 | -- | 15.5 | 15.5 |
| | 9 | 17.0 | 14.0 | -- | 17.0 | 17.0 | 19.0 | 20.0 | -- | 17.0 | 17.0 |
| | 10 | 18.5 | 19.5 | -- | -- | 18.5 | 20.0 | 23.5 | -- | -- | 18.5 |
| | 11 | 20.5 | 26.0 | -- | -- | -- | 21.0 | 28.0 | -- | -- | 20.0 |

NORTH CAROLINA PROFESSIONAL SEAL 022966 ENGINEER

5/2/06


PROJECT SERVICES UNIT
STANDARDS AND SPECIAL DESIGN
Office 919-250-4128 FAX 919-250-4119


# STANDARD TEMPORARY SHORING FOR MAINTENANCE OF TRAFFIC

ORIGINAL BY: SOILS & FOUNDATIONS DATE: 10-2001
MODIFIED BY: DATE:
CHECKED BY: DATE: 10/25/04
FILE SPEC.: ericward:/usr/details/stand/shoring detail.dgn


22-OCT-2004 14:43
W:\Special Details\ericward\usr\details\stand\tempshoring.dgn
ericward AT DS212260

| PROJECT REFERENCE NO. | SHEET NO. |
|---|---|
| U-3613B | 2-Y |

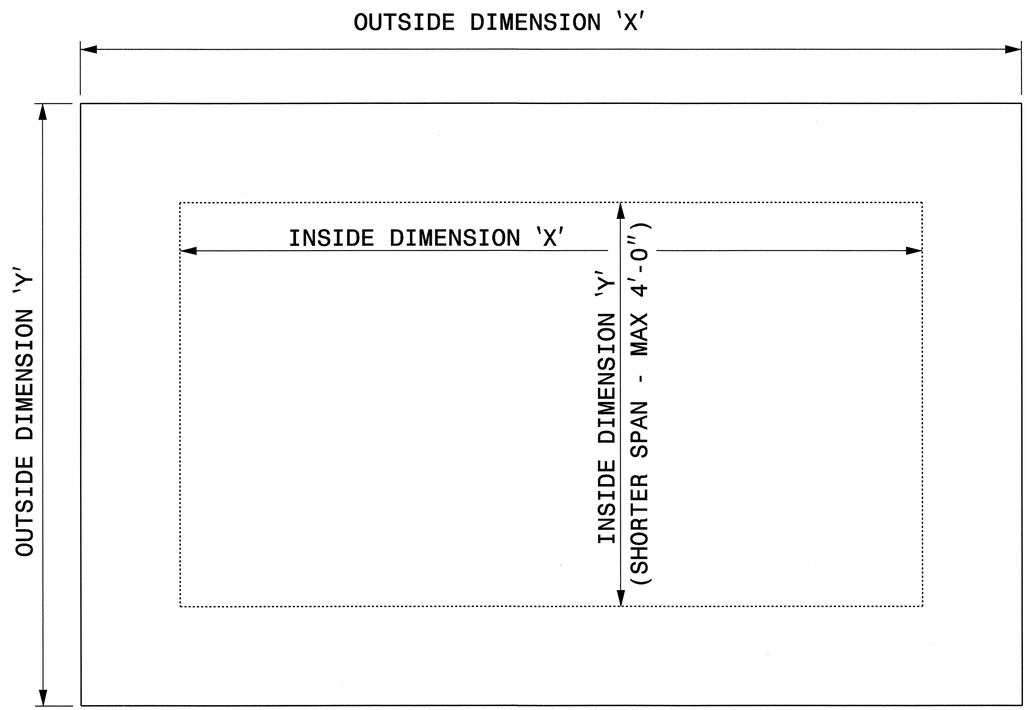


## PLAN VIEWS

GENERAL NOTES:

-USE GRADE A36 STEEL
-STEEL COVERS ARE FOR TEMPORARY USE FOR DURING PHASE CONSTRUCTION.
-FILL SHALL BE PLACED DIRECTLY OVER THE STEEL PLATES.
-SEE ROADWAY PLANS AND PROVISIONS FOR LOCATIONS
-QUANTITES TO BE PAID FOR AT THE UNIT PRICE BID PER EACH.

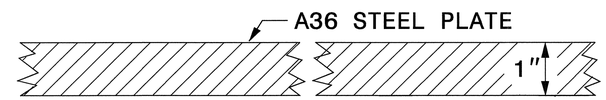


## SECTION VIEW OF STEEL TOP PLATE

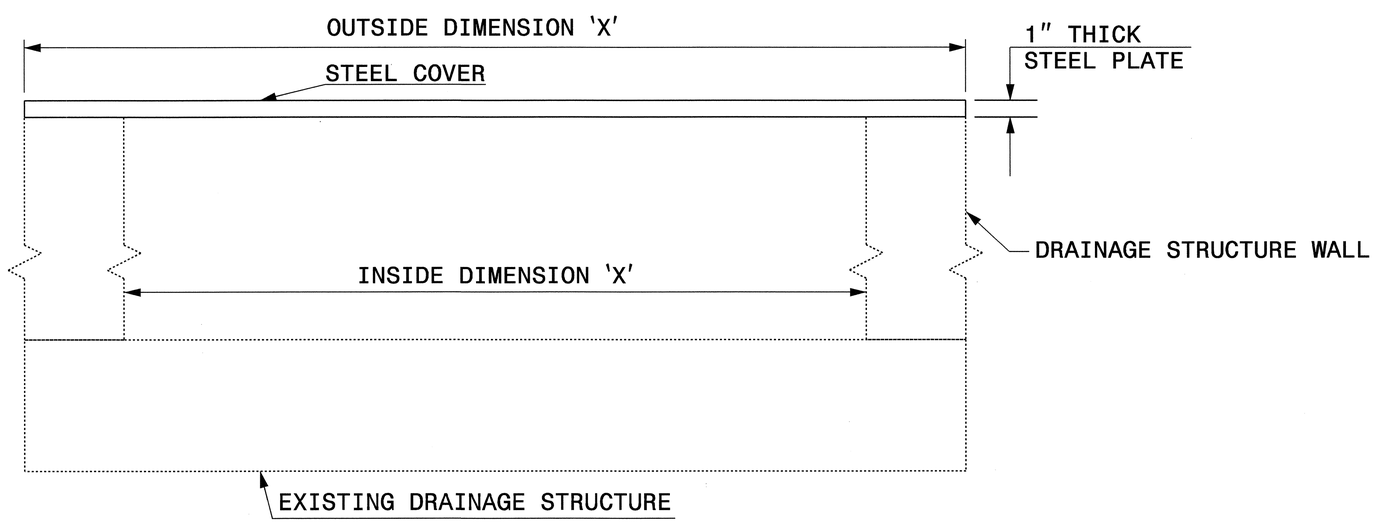


## ELEVATION VIEWS


**DESIGN SERVICES UNIT**
**STANDARDS AND SPECIAL DESIGN**
Office 919-250-4128 FAX 919-250-4119

**DETAIL OF TEMPORARY**
**1" STEEL COVER**
**OVER DRAINAGE STRUCTURE**

ORIGINAL BY: E.E. WARD DATE: 2-2-98
MODIFIED BY: DATE:
CHECKED BY: DATE: 7/12/04
FILE SPEC.: eric:/usr/details/metric/stand/stlcvr2.dgn

12-JUL-2004 10:09
W:\Special Details\ericward\usr\details\metric\stand\stlcvr2.dgn
eric:ward AT DS212260

| PROJECT REFERENCE NO. | SHEET NO. |
|---|---|
| U-3613B | 2-Z |

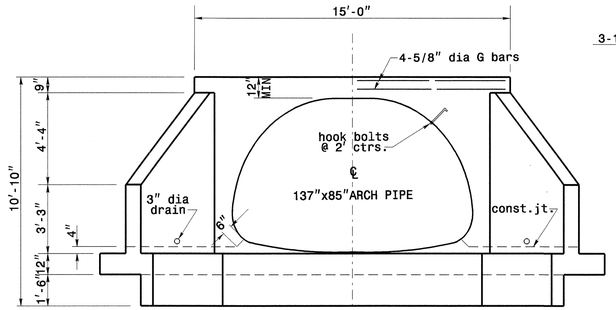


ELEVATION

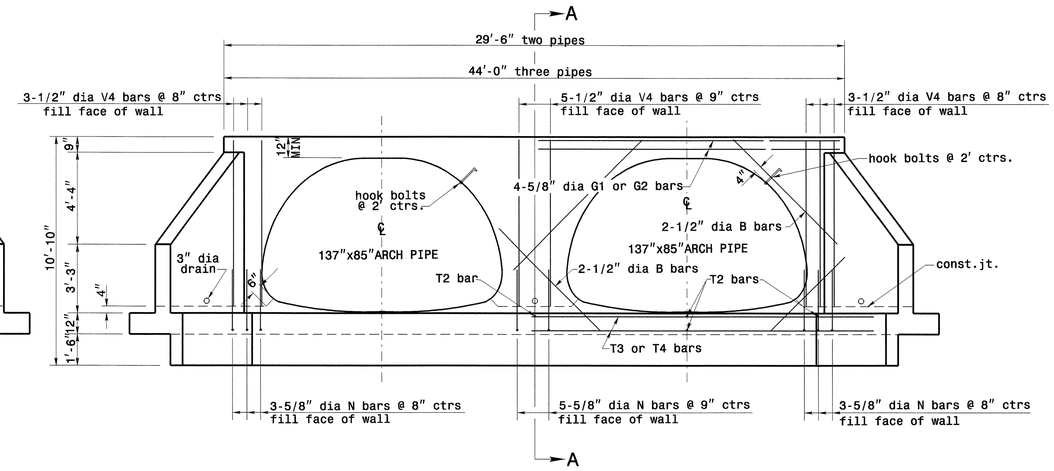


ELEVATION

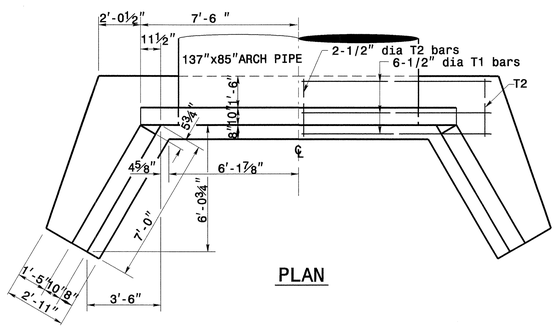


PLAN

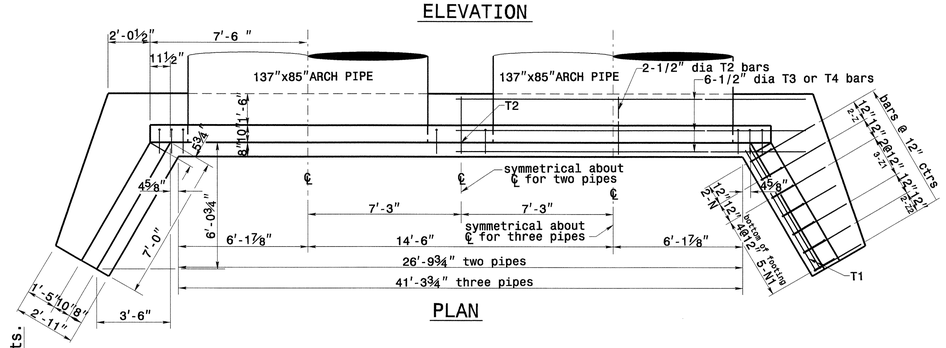


PLAN

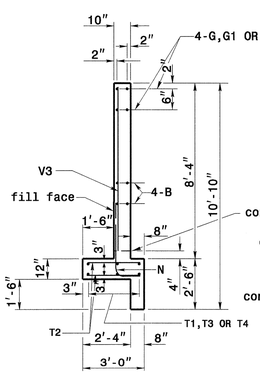


SECTION - AA

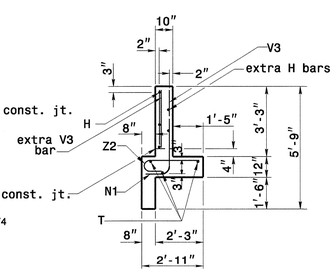


END OF WING

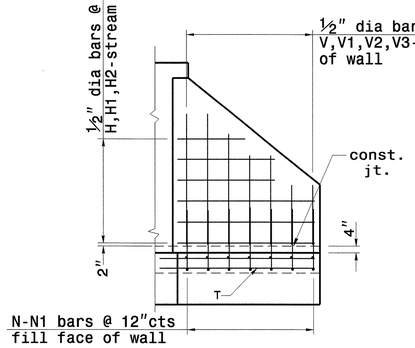


WING ELEVATION

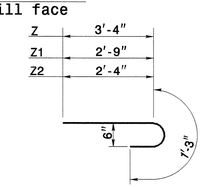


"Z" BARS

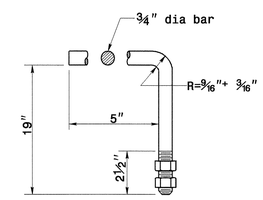


HOOK BOLT

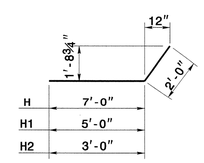


"H" BARS

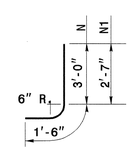


"N" BARS

"H", "N", & "Z" BAR DIMENSIONS ARE OUT TO OUT.

## DESIGN DATA

| | |
|---|---|
| Specifications | A.A.S.H.T.O. (1977) |
| Steel in tension | 20,000 LBS. PER SQ.IN. |
| Concrete in compression | 1,200 LBS. PER SQ.IN. |
| Shear Class "A" Concrete | SEE A.A.S.H.T.O. |
| Equiv. fluid pressure of earth | 30 LBS.PER CU. FT. |

NOTES:

ALL CONCRETE TO BE CLASS "A".

ALL REINFORCING STEEL SHALL BE ASTMA615-GRADE 60.

ALL REINFORCING STEEL SHALL BE DEFORMED BARS. WHERE SPLICING OF REINFORCMENT IS NECESSARY, BARS ARE TO BE LAPPED 45 DIAMETERS. ALL DIMENSIONS RELATIVE TO REINFORCEMENT ARE TO CENTERS OF BARS.

THE FOOTING, CURTAIN WALL AND 4" OF WALL ARE TO BE POURED IN ONE OPERATION ALLOWING NO TIME FOR INITIAL SET TO TAKE PLACE BETWEEN THEM. THE REMAINING WALL SHALL THEN BE POURED IN ONE OPERATION.

ALL EXPOSED CORNERS ARE TO BE CHAMFERED 1".

3" DIAMETER DRAINS SHALL BE PLACED IN WALL AS SHOWN AND BE 6" ABOVE NORMAL FLOW LINE.

ALL MATERIAL AND WORKMANSHIP AS PER N.C.DEPARTMENT OF TRANSPORTATION STANDARD SPECIFICATIONS.

THE EXTRA BARS ARE PROVIDED FOR HOLDING REINFORCING STEEL IN CORRECT POSITION IN WING. 4H, 2H2, 6T, 2V, 2V2, 2V3

## BILL OF MATERIAL FOR ENDWALL

| REINF. STEEL | | | 1 PIPES | | 2 PIPES | | 3 PIPES | |
|---|---|---|---|---|---|---|---|---|
| BAR | SIZE | LENGTH | NO. | WEIGHT | NO. | WEIGHT | NO. | WEIGHT |
| B | #4 | 7'-0" | 8 | 37 | 16 | 75 | 24 | 112 |
| G | #5 | 14'-9" | 4 | 62 | - | - | - | - |
| G1 | #5 | 15'-9" | - | - | 8 | 132 | - | - |
| G2 | #5 | 23'-3½" | - | - | - | - | 8 | 194 |
| H | #4 | 9'-0" | 10 | 60 | 10 | 60 | 10 | 60 |
| H1 | #4 | 7'-0" | 4 | 19 | 4 | 19 | 4 | 19 |
| H2 | #4 | 5'-0" | 4 | 13 | 4 | 13 | 4 | 13 |
| N | #6 | 4'-6" | 10 | 46 | 15 | 70 | 20 | 94 |
| N1 | #5 | 4'-1" | 10 | 27 | 10 | 27 | 10 | 27 |
| T | #4 | 7'-0" | 6 | 28 | 6 | 28 | 6 | 28 |
| T1 | #4 | 18'-9" | 6 | 75 | - | - | - | - |
| T2 | #4 | 2'-9" | 4 | 7 | 7 | 13 | 10 | 18 |
| T3 | #4 | 16'-9" | - | - | 12 | 134 | - | - |
| T4 | #4 | 23'-9" | - | - | - | - | 12 | 190 |
| V | #5 | 5'-9" | 6 | 23 | 6 | 23 | 6 | 23 |
| V1 | #4 | 5'-3" | 2 | 7 | 2 | 7 | 2 | 7 |
| V2 | #4 | 4'-0" | 6 | 16 | 6 | 16 | 6 | 16 |
| V3 | #4 | 2'-9" | 6 | 11 | 6 | 11 | 6 | 11 |
| V4 | #4 | 7'-6" | 6 | 30 | 11 | 55 | 16 | 80 |
| Z | #6 | 4'-7" | 4 | 19 | 4 | 19 | 4 | 19 |
| Z1 | #5 | 4'-0" | 6 | 16 | 6 | 16 | 6 | 16 |
| Z2 | #4 | 3'-7" | 4 | 10 | 4 | 10 | 4 | 10 |
| REINF. STEEL LBS. | | | | 506 | | 728 | | 937 |
| CON./R.C. CU. YDS. | | | 9 | | 13 | | 17.5 | |

NORTH CAROLINA PROFESSIONAL SEAL 022966 ENGINEER JOSEPH S. HUNT
5/4/06


PROJECT SERVICES UNIT
STANDARDS AND SPECIAL DESIGN
Office 919-250-4128 FAX 919-250-4119


# DETAIL OF REINFORCED CONCRETE ENDWALL FOR 137"X 85" (Pipe Arch)-90°

ORIGINAL BY: DATE:
MODIFIED BY: rnbritt DATE: 5-04-06
CHECKED BY: DATE: 5/4/06
FILE SPEC.: details/nbritt/english/rural/u3613b endwall137x85 90sk.dgn


04-MAY-2006 12:5
s:\contracts\contracts\special details\nbritt\english\urban\u3613b endwall 137x85 90sk.dgn
rnbritt AT PS228331

| PROJECT REFERENCE No. | SHEET No. |
|---|---|
| U-3613B | 1 of 2 (3) |

**STATE OF NORTH CAROLINA**
**DIVISION OF HIGHWAYS**
**ROADWAY SUMMARY OF QUANTITIES FOR CONTRACT - C201654**

| ItemNumber | Sec # | Quantity | Unit | Description |
|---|---|---|---|---|
| 0000100000-N | 800 | Lump Sum | | MOBILIZATION |
| 0000400000-N | 801 | Lump Sum | | CONSTRUCTION SURVEYING |
| 0036000000-E | 225 | 18,350 | CY | UNDERCUT EXCAVATION |
| 0043000000-N | 226 | Lump Sum | | GRADING |
| 0050000000-E | 226 | 1 | ACR | SUPPLEMENTARY CLEARING & GRUBBING |
| 0080000000-E | SP | 675 | TON | CLASS IV SUBGRADE STABILIZATION |
| 0134000000-E | 240 | 2,280 | CY | DRAINAGE DITCH EXCAVATION |
| 0141000000-E | 240 | 180 | LF | BERM DITCH CONSTRUCTION |
| 0195000000-E | 265 | 25,250 | CY | SELECT GRANULAR MATERIAL |
| 0196000000-E | 270 | 24,900 | SY | FABRIC FOR SOIL STABILIZATION |
| 0199000000-E | SP | 360 | SF | TEMPORARY SHORING |
| 0318000000-E | 300 | 2,290 | TON | FOUNDATION CONDITIONING MATERIAL, MINOR STRS |
| 0342000000-E | 310 | 28 | LF | **" SIDE DRAIN PIPE (30") |
| 0343000000-E | 310 | 52 | LF | 15" SIDE DRAIN PIPE |
| 0344000000-E | 310 | 144 | LF | 18" SIDE DRAIN PIPE |
| 0345000000-E | 310 | 136 | LF | 24" SIDE DRAIN PIPE |
| 0366000000-E | 310 | 10,160 | LF | 15" RC PIPE CULVERTS, CLASS III |
| 0372000000-E | 310 | 4,164 | LF | 18" RC PIPE CULVERTS, CLASS III |
| 0378000000-E | 310 | 3,276 | LF | 24" RC PIPE CULVERTS, CLASS III |
| 0384000000-E | 310 | 1,104 | LF | 30" RC PIPE CULVERTS, CLASS III |
| 0390000000-E | 310 | 652 | LF | 36" RC PIPE CULVERTS, CLASS III |
| 0396000000-E | 310 | 72 | LF | 42" RC PIPE CULVERTS, CLASS III |
| 0402000000-E | 310 | 8 | LF | 48" RC PIPE CULVERTS, CLASS III |
| 0414000000-E | 310 | 84 | LF | 60" RC PIPE CULVERTS, CLASS III |
| 0582000000-E | 310 | 544 | LF | 15" CS PIPE CULVERTS, 0.064" THICK |
| 0588000000-E | 310 | 828 | LF | 18" CS PIPE CULVERTS, 0.064" THICK |
| 0594000000-E | 310 | 204 | LF | 24" CS PIPE CULVERTS, 0.064" THICK |
| 0648000000-E | SP | 2 | EA | **" SADDLE BRANCH CONNECTOR (18") |
| 0708000000-E | 310 | 32 | LF | 15" BIT COAT CS PIPE CULVERTS, TYPE B 0.064" THICK |
| 0714000000-E | 310 | 56 | LF | 18" BIT COAT CS PIPE CULVERTS, TYPE B 0.064" THICK |
| 0807000000-E | 310 | 2 | EA | 18" BIT COAT CS PIPE ELBOWS, TYPE B 0.064" THICK |
| 0962000000-E | 320 | 126 | LF | **" X **" CAA STRUCTURAL PLATE PIPE ARCH, *****" THICK (137" x 85", 0.125") |
| 0995000000-E | 340 | 5,142 | LF | PIPE REMOVAL |
| 1121000000-E | 520 | 500 | TON | AGGREGATE BASE COURSE |
| 1220000000-E | 545 | 500 | TON | INCIDENTAL STONE BASE |
| 1330000000-E | 607 | 3,500 | SY | INCIDENTAL MILLING |
| 1489000000-E | 610 | 25,400 | TON | ASPHALT CONC BASE COURSE, TYPE B25.0B |
| 1498000000-E | 610 | 26,200 | TON | ASPHALT CONC INTERMEDIATE COURSE, TYPE I19.0B |
| 1519000000-E | 610 | 23,650 | TON | ASPHALT CONC SURFACE COURSE, TYPE S9.5B |
| 1560000000-E | 620 | 3,743 | TON | ASPHALT BINDER FOR PLANT MIX, GRADE PG 64-22 |
| 1693000000-E | 654 | 1,020 | TON | ASPHALT PLANT MIX, PAVEMENT REPAIR |
| 2022000000-E | 815 | 450 | CY | SUBDRAIN EXCAVATION |
| 2033000000-E | 815 | 340 | CY | SUBDRAIN FINE AGGREGATE |
| 2044000000-E | 815 | 2,000 | LF | 6" PERFORATED SUBDRAIN PIPE |
| 2055000000-E | 815 | 60 | EA | 6" SUBDRAIN PIPE WYES, TEES, & ELBOWS |
| 2077000000-E | 815 | 24 | LF | 6" OUTLET PIPE (SUBDRAINS) |
| 2132000000-N | 816 | 4 | EA | CONCRETE PAD FOR SHOULDER DRAIN PIPE OUTLET |
| 2190000000-N | 828 | 16 | EA | TEMPORARY STEEL PLATE COVERS FOR MASONRY DRAINAGE STRUCTURE |
| 2209000000-E | 838 | 5 | CY | ENDWALLS |
| 2220000000-E | 838 | 13 | CY | REINFORCED ENDWALLS |
| 2253000000-E | 840 | 6 | CY | PIPE COLLARS |
| 2264000000-E | 840 | 2 | CY | PIPE PLUGS |
| 2286000000-N | 840 | 265 | EA | MASONRY DRAINAGE STRUCTURES |
| 2297000000-E | 840 | 6 | CY | MASONRY DRAINAGE STRUCTURES |
| 2308000000-E | 840 | 38 | LF | MASONRY DRAINAGE STRUCTURES |
| 2364000000-N | 840 | 59 | EA | FRAME WITH TWO GRATES, STD 840.16 |
| 2366000000-N | 840 | 2 | EA | FRAME WITH TWO GRATES, STD 840.24 |
| 2374000000-N | 840 | 19 | EA | FRAME WITH GRATE & HOOD, STD 840.03, TYPE ** (E) |
| 2374000000-N | 840 | 71 | EA | FRAME WITH GRATE & HOOD, STD 840.03, TYPE ** (F) |
| 2374000000-N | 840 | 78 | EA | FRAME WITH GRATE & HOOD, STD 840.03, TYPE ** (G) |
| 2396000000-N | 840 | 37 | EA | FRAME WITH COVER, STD 840.54 |
| 2440000000-N | 840 | 3 | EA | CONCRETE APRON FOR CATCH BASIN |
| 2451000000-N | 840 | 13 | EA | CONCRETE APRON FOR DROP INLETS |
| 2529000000-E | SP | 382 | SF | GENERIC GRADING ITEM (SF) TEMPORARY FABRIC WALL |
| 2542000000-E | 846 | 3,500 | LF | 1'-6" CONCRETE CURB & GUTTER |
| 2549000000-E | 846 | 27,500 | LF | 2'-6" CONCRETE CURB & GUTTER |
| 2580000000-E | 846 | 200 | LF | CONCRETE VALLEY GUTTER |
| 2591000000-E | 848 | 14,000 | SY | 4" CONCRETE SIDEWALK |
| 2598000000-E | 848 | 730 | SY | CONCRETE WHEELCHAIR RAMPS |
| 2612000000-E | 848 | 2,000 | SY | 6" CONCRETE DRIVEWAY |
| 2619000000-E | 850 | 10 | SY | 4" CONCRETE PAVED DITCH |
| 2626000000-E | 852 | 1,900 | SY | 3" CONCRETE ISLAND COVERS |
| 2655000000-E | 852 | 3,400 | SY | 5" MONOLITHIC CONCRETE ISLANDS (KEYED IN) |
| 2830000000-N | 858 | 60 | EA | ADJUSTMENT OF MANHOLES |
| 2845000000-N | 858 | 140 | EA | ADJUSTMENT OF METER BOXES OR VALVE BOXES |
| 3030000000-E | 862 | 525 | LF | STEEL BM GUARDRAIL |
| 3150000000-N | 862 | 10 | EA | ADDITIONAL GUARDRAIL POSTS |
| 3210000000-N | 862 | 6 | EA | GUARDRAIL ANCHOR UNITS, TYPE CAT-1 |
| 3270000000-N | SP | 6 | EA | GUARDRAIL ANCHOR UNITS, TYPE 350 |
| 3360000000-E | 863 | 450 | LF | REMOVE EXISTING GUARDRAIL |
| 3628000000-E | 876 | 30 | TON | PLAIN RIP RAP, CLASS I |
| 3649000000-E | 876 | 91 | TON | PLAIN RIP RAP, CLASS B |
| 3656000000-E | 876 | 2,810 | SY | FILTER FABRIC FOR DRAINAGE |
| 3659000000-N | SP | 2 | EA | PREFORMED SCOUR HOLES WITH LEVEL SPREADER APRON |
| 4072000000-E | 903 | 927 | LF | SUPPORTS, 3-LB STEEL U-CHANNEL |
| 4096000000-N | 904 | 3 | EA | SIGN ERECTION, TYPE D |
| 4102000000-N | 904 | 73 | EA | SIGN ERECTION, TYPE E |
| 4108000000-N | 904 | 5 | EA | SIGN ERECTION, TYPE F |
| 4129000000-N | 906 | 2 | EA | RELOCATE SIGN, TYPE ***** (E) |
| 4155000000-N | 907 | 41 | EA | DISPOSAL OF SIGN SYSTEM, U-CHANNEL |
| 4192000000-N | 907 | 2 | EA | DISPOSAL OF SUPPORT, U-CHANNEL |
| 4412000000-E | SP | 1,100 | SF | WORK ZONE SIGNS (STATIONARY) |
| 4412100000-E | SP | 240 | SF | WORK ZONE SIGNS (PORTABLE) |
| 4412200000-E | SP | 354 | SF | WORK ZONE SIGNS (BARRICADE MOUNTED) |
| 4415000000-N | 1115 | 2 | EA | FLASHING ARROW PANELS, TYPE C |
| 4420000000-N | 1120 | 4 | EA | CHANGEABLE MESSAGE SIGN |
| 4425000000-N | 1125 | 6 | EA | WARNING FLAG SETS |
| 4430000000-N | 1130 | 900 | EA | DRUMS |
| 4435000000-N | 1135 | 200 | EA | CONES |
| 4446100000-E | SP | 360 | LF | BARRICADES (TYPE III) |
| 4450000000-N | 1150 | 6,720 | HR | FLAGGER |
| 4465000000-N | 1160 | 2 | EA | TEMPORARY CRASH CUSHIONS |
| 4470000000-N | 1160 | 2 | EA | RESET TEMPORARY CRASH CUSHIONS |
| 4480000000-N | 1165 | 2 | EA | TRUCK MOUNTED IMPACT ATTENUATOR (60 MPH) |
| 4485000000-E | 1170 | 200 | LF | PORTABLE CONCRETE BARRIER |
| 4500000000-E | 1170 | 200 | LF | RESET PORTABLE CONCRETE BARRIER |
| 4507000000-E | SP | 1,412 | LF | WATER FILLED BARRIER |
| 4508000000-E | SP | 643 | LF | RESET WATER FILLED BARRIER |
| 4510000000-N | SP | 720 | HR | POLICE |
| 4650000000-N | 1251 | 1,489 | EA | TEMPORARY RAISED PAVEMENT MARKERS |
| 4685000000-E | 1205 | 4,550 | LF | THERMOPLASTIC PAVEMENT MARKING LINES (4", 90 MILS) |
| 4686000000-E | 1205 | 36,127 | LF | THERMOPLASTIC PAVEMENT MARKING LINES (4", 120 MILS) |
| 4695000000-E | 1205 | 671 | LF | THERMOPLASTIC PAVEMENT MARKING LINES (8", 90 MILS) |
| 4697000000-E | 1205 | 3,122 | LF | THERMOPLASTIC PAVEMENT MARKING LINES (8", 120 MILS) |
| 4705000000-E | 1205 | 200 | LF | THERMOPLASTIC PAVEMENT MARKING LINES (16", 120 MILS) |
| 4710000000-E | 1205 | 1,375 | LF | THERMOPLASTIC PAVEMENT MARKING LINES (24", 120 MILS) |
| 4721000000-E | 1205 | 6 | EA | THERMOPLASTIC PAVEMENT MARKING CHARACTER (120 MILS) |
| 4725000000-E | 1205 | 195 | EA | THERMOPLASTIC PAVEMENT MARKING SYMBOL (90 MILS) |
| 4810000000-E | 1205 | 224,727 | LF | PAINT PAVEMENT MARKING LINES (4") |
| 4820000000-E | 1205 | 1,378 | LF | PAINT PAVEMENT MARKING LINES (8") |
| 4825000000-E | 1205 | 1,600 | LF | PAINT PAVEMENT MARKING LINES (12") |
| 4830000000-E | 1205 | 344 | LF | PAINT PAVEMENT MARKING LINES (16") |
| 4835000000-E | 1205 | 2,836 | LF | PAINT PAVEMENT MARKING LINES (24") |
| 4840000000-N | 1205 | 14 | EA | PAINT PAVEMENT MARKING CHARACTER |
| 4845000000-N | 1205 | 232 | EA | PAINT PAVEMENT MARKING SYMBOL |
| 4850000000-E | 1205 | 52,324 | LF | REMOVAL OF PAVEMENT MARKING LINES (4") |
| 4860000000-E | 1205 | 827 | LF | REMOVAL OF PAVEMENT MARKING LINES (8") |
| 4870000000-E | 1205 | 261 | LF | REMOVAL OF PAVEMENT MARKING LINES (24") |
| 4875000000-N | 1205 | 130 | EA | REMOVAL OF PAVEMENT MARKING SYMBOLS & CHARACTERS |
| 4905000000-N | 1253 | 1,532 | EA | SNOWPLOWABLE PAVEMENT MARKERS |
| 5300000000-E | 1505 | 1,300 | TON | FOUNDATION CONDITIONING MATERIAL, UTILITIES CLASS ******** (VI) |
| 5306000000-E | SP | 1,300 | TON | BEDDING MATERIAL, UTILITIES CLASS ********** (IV) |
| 5318000000-E | 1505 | 282 | TON | PAVEMENT REPAIR FOR UTILITY WORK |
| 5420000000-E | 1510 | 1,534 | LF | 1" COPPER WATER PIPE, TYPE K |
| 5432000000-E | 1510 | 297 | LF | 2" PVC WATER PIPE, SDR ******* (21, 200# WP) |
| 5438000000-E | 1510 | 49 | LF | 4" PVC WATER PIPE, SDR ******* (21, 200# WP) |
| 5444000000-E | 1510 | 1,722 | LF | 6" PVC WATER PIPE, SDR ******* (21, 200# WP) |
| 5462000000-E | 1510 | 364 | LF | 12" PVC WATER PIPE, SDR ****** (21, 200# WP) |
| 5468000000-E | 1510 | 12,447 | LF | **" PVC WATER PIPE, (C900), DR **. *****WP (12", 18, 150#) |
| 5474000000-E | 1510 | 511 | LF | 8" PVC WATER PIPE, (C900), DR **. *****WP (18, 150#) |
| 5476000000-E | 1510 | 4,847 | LF | ***" PVC WATER PIPE, (C-900), DR ****. ****#WP (6", 14, 200#) |

'28/99

| PROJECT REFERENCE NO. | SHEET NO. |
|---|---|
| U-3613B | 3 |

SHEET 2 OF 2

| ItemNumber | Sec # | Quantity | Unit | Description |
|---|---|---|---|---|
| 5476000000-E | 1510 | 765 | LF | ***" PVC WATER PIPE, (C-900), DR ****_****#WP (6", 18, 150#) |
| 5498000000-E | SP | 109 | LF | ***" PE WATER TUBING, SDR 9, *****WP (1", 200#) |
| 5516000000-E | 1510 | 52 | EA | 1" CORPORATION STOP |
| 5534000000-E | 1510 | 1 | EA | **" GATE VALVE & VALVE BOX, *****WP (4", 200#) |
| 5540000000-E | 1510 | 42 | EA | 6" GATE VALVE & VALVE BOX, 200# WP |
| 5546000000-E | 1510 | 8 | EA | 8" GATE VALVE & VALVE BOX, *****WP (200#) |
| 5558000000-E | 1510 | 19 | EA | 12" GATE VALVE & VALVE BOX, *****WP (200#) |
| 5582000000-E | 1510 | 37 | EA | **"X**" TAPPING SADDLE (12" X 1") |
| 5582000000-E | 1510 | 5 | EA | **"X**" TAPPING SADDLE (12" X 2") |
| 5582000000-E | 1510 | 2 | EA | **"X**" TAPPING SADDLE (2" X 1") |
| 5582000000-E | 1510 | 12 | EA | **"X**" TAPPING SADDLE (6" X 1") |
| 5582000000-E | 1510 | 1 | EA | **"X**" TAPPING SADDLE (8" X 1") |
| 5636000000-E | 1510 | 2 | EA | 12" TRANSITION COUPLING, ********** (PVC TO AC) |
| 5666000000-E | 1510 | 1 | EA | FIRE HYDRANT, *****# WP (150#) |
| 5672000000-N | 1510 | 15 | EA | RELOCATE EXISTING FIRE HYDRANT |
| 5708000000-E | 1520 | 50 | LF | **" PVC FORCE MAIN SEWER PIPE, ********** (4", SDR 21, 200# WP) |
| 5708000000-E | 1520 | 2,851 | LF | **" PVC FORCE MAIN SEWER PIPE, ********** (8", SDR 21, 200# WP) |
| 5798000000-E | 1530 | 336 | LF | FILL OR REMOVE ABANDONED **" PIPE, ********** (12", AC) |
| 5822000000-N | 1530 | 7 | EA | BREAK DOWN & REBUILD EXISTING MANHOLE |
| 5852000000-E | SP | 120 | LF | **" STEEL ENCASEMENT PIPE, *****" THICK, BY BORING & JACKING (16", 0.250") |
| 5852000000-E | SP | 150 | LF | **" STEEL ENCASEMENT PIPE, *****" THICK, BY BORING & JACKING (16", 0.281") |
| 5858000000-E | SP | 180 | LF | 12-3/4" STEEL ENCASEMENT PIPE, *****" THICK, BY BORING & JACKING (0.188") |
| 5864000000-E | SP | 150 | LF | 18" STEEL ENCASEMENT PIPE, *****" THICK, BY BORING & JACKING (0.312") |
| 5870000000-E | SP | 184 | LF | 24" STEEL ENCASEMENT PIPE, *****" THICK, BY BORING & JACKING (0.250") |
| 5870000000-E | SP | 150 | LF | 24" STEEL ENCASEMENT PIPE, *****" THICK, BY BORING & JACKING (0.375") |
| 5882000000-N | SP | 2 | EA | GENERIC UTILITY ITEM 12" INSERTING GATE VALVE & VALVE BOX, 200# WP (WATER) |
| 5882000000-N | SP | 14 | EA | GENERIC UTILITY ITEM 12" RESTRAINED RETAINER GLAND 200# WP |
| 5882000000-N | SP | 2 | EA | GENERIC UTILITY ITEM 12" X 12" DI LOCKING TEE |
| 5882000000-N | SP | 25 | EA | GENERIC UTILITY ITEM 12" X 6" DI LOCKING TEE |
| 5882000000-N | SP | 7 | EA | GENERIC UTILITY ITEM 12" X 8" DI LOCKING TEE |
| 5882000000-N | SP | 5 | EA | GENERIC UTILITY ITEM 2" BALL VALVE |
| 5882000000-N | SP | 1 | EA | GENERIC UTILITY ITEM 4" INSERTING GATE VALVE & VALVE BOX, 200# WP (SEWER) |
| 5882000000-N | SP | 1 | EA | GENERIC UTILITY ITEM 6" INSERTING GATE VALVE & VALVE BOX, 200# WP (WATER) |
| 5882000000-N | SP | 8 | EA | GENERIC UTILITY ITEM 6" RESTRAINED RETAINER GLAND 200# WP |

| ItemNumber | Sec # | Quantity | Unit | Description |
|---|---|---|---|---|
| 5882000000-N | SP | 1 | EA | GENERIC UTILITY ITEM 6" X 4" DI LOCKING TEE |
| 5882000000-N | SP | 11 | EA | GENERIC UTILITY ITEM 6" X 6" DI LOCKING TEE |
| 5882000000-N | SP | 14 | EA | GENERIC UTILITY ITEM 8" RESTRAINED RETAINER GLAND 200# WP |
| 5882000000-N | SP | 2 | EA | GENERIC UTILITY ITEM 8" SEWER LINE GATE VALVE AND VALVE BOX, 200# WP |
| 5882000000-N | SP | 3 | EA | GENERIC UTILITY ITEM BREAKDOWN REBUILD & ROTATE TOP FOR EXISTING MANHOLE |
| 5882000000-N | SP | 2 | EA | GENERIC UTILITY ITEM BREAKDOWN REBUILD & ROTATE TOP FOR EXISTING MANHOLE (CONCENTRIC TOP) |
| 5882000000-N | SP | 15 | EA | GENERIC UTILITY ITEM RELOCATE 4" SANITARY SEWER CLEANOUT |
| 5882000000-N | SP | 5 | EA | GENERIC UTILITY ITEM RELOCATE 6" SANITARY SEWER CLEANOUT |
| 5882000000-N | SP | 12 | EA | GENERIC UTILITY ITEM RELOCATE EXISTING RPZ BACKFLOW PREVENTION SYSTEM |
| 5882000000-N | SP | 47 | EA | GENERIC UTILITY ITEM RELOCATE EXISTING WATER METER |
| 5882000000-N | SP | 1 | EA | GENERIC UTILITY ITEM RELOCATE EXISTING WATER METER WITH NEW VAULT |
| 5882000000-N | SP | 4 | EA | GENERIC UTILITY ITEM ROTATE TOP FOR EXISTING MANHOLE |
| 5882000000-N | SP | 3 | EA | GENERIC UTILITY ITEM ROTATE TOP FOR EXISTING MANHOLE (CONCENTRIC TOP) |
| 5888000000-E | SP | 300 | LF | GENERIC UTILITY ITEM 10" HDPE FORCE MAIN SEWER PIPE SDR 9, 200# WP BY DIRECTIONAL BORE |
| 5888000000-E | SP | 20 | LF | GENERIC UTILITY ITEM 12" DI WATER PIPE, PC 350 |
| 5888000000-E | SP | 600 | LF | GENERIC UTILITY ITEM 14" HDPE WATER PIPE, SDR 9, 200# WP BY DIRECTIONAL BORE |
| 5888000000-E | SP | 1,000 | LF | GENERIC UTILITY ITEM 4" PVC SEWER PIPE, SCH 40 |
| 5888000000-E | SP | 400 | LF | GENERIC UTILITY ITEM 6" PVC SEWER PIPE, SCH 40 |
| 5888000000-E | SP | 100 | LF | GENERIC UTILITY ITEM 8" DI FORCE MAIN SEWER PIPE, PC 350 |
| 5888000000-E | SP | 250 | LF | GENERIC UTILITY ITEM 8" HDPE WATER PIPE, SDR 9, 200# WP BY DIRECTIONAL BORE |
| 5888000000-E | SP | 140 | LF | GENERIC UTILITY ITEM CEMENT GROUT FOR FILLING 4" PVC ABANDONED PIPE & ENCASEMENT |
| 5888000000-E | SP | 140 | LF | GENERIC UTILITY ITEM CEMENT GROUT FOR FILLING 6" PVC ABANDONED PIPE & ENCASEMENT |
| 5888000000-E | SP | 140 | LF | GENERIC UTILITY ITEM CEMENT GROUT FOR FILLING 8" PVC ABANDONED PIPE & ENCASEMENT |
| 5906000000-E | SP | 6,500 | LB | GENERIC UTILITY ITEM DUCTILE IRON SEWER PIPE FITTINGS, 250# MIN WP |
| 5906000000-E | SP | 10,325 | LB | GENERIC UTILITY ITEM DUCTILE IRON WATER PIPE FITTINGS, 250# MIN WP |
| 5912000000-N | SP | Lump Sum | | GENERIC UTILITY ITEM INSTALL 4" MDPE GAS MAIN |
| 6000000000-E | 1605 | 16,600 | LF | TEMPORARY SILT FENCE |
| 6006000000-E | 1610 | 790 | TON | STONE FOR EROSION CONTROL, CLASS A |
| 6009000000-E | 1610 | 1,220 | TON | STONE FOR EROSION CONTROL, CLASS B |
| 6012000000-E | 1610 | 1,575 | TON | SEDIMENT CONTROL STONE |
| 6015000000-E | 1615 | 35 | ACR | TEMPORARY MULCHING |
| 6018000000-E | 1620 | 1,250 | LB | SEED FOR TEMPORARY SEEDING |
| 6021000000-E | 1620 | 5 | TON | FERTILIZER FOR TEMPORARY SEEDING |
| 6024000000-E | 1622 | 230 | LF | TEMPORARY SLOPE DRAINS |
| 6027000000-N | 1622 | 5 | EA | INLET PROTECTION AT TEMPORARY SLOPE DRAINS |

| ItemNumber | Sec # | Quantity | Unit | Description |
|---|---|---|---|---|
| 6029000000-E | SP | 750 | LF | SAFETY FENCE |
| 6030000000-E | 1630 | 3,340 | CY | SILT EXCAVATION |
| 6036000000-E | 1631 | 2,900 | SY | MATTING FOR EROSION CONTROL |
| 6037000000-E | SP | 250 | SY | COIR FIBER MAT |
| 6038000000-E | SP | 4,000 | SY | PERMANENT SOIL REINFORCEMENT MAT |
| 6042000000-E | 1632 | 6,000 | LF | 1/4" HARDWARE CLOTH |
| 6045000000-E | SP | 455 | LF | **" TEMPORARY PIPE (18") |
| 6070000000-N | SP | 4 | EA | SPECIAL STILLING BASINS |
| 6084000000-E | 1660 | 35 | ACR | SEEDING & MULCHING |
| 6087000000-E | 1660 | 21 | ACR | MOWING |
| 6090000000-E | 1661 | 300 | LB | SEED FOR REPAIR SEEDING |
| 6093000000-E | 1661 | 0.75 | TON | FERTILIZER FOR REPAIR SEEDING |
| 6096000000-E | 1662 | 850 | LB | SEED FOR SUPPLEMENTAL SEEDING |
| 6108000000-E | 1665 | 27 | TON | FERTILIZER TOPDRESSING |
| 6111000000-E | SP | 275 | LF | IMPERVIOUS DIKE |
| 6114000000-N | SP | 2 | HR | SPECIALIZED HAND MOWING |
| ~~6117000000-N~~ 6132000000-N | ~~1675~~ SP | 36 | EA | RESPONSE FOR EROSION CONTROL |
| 6123000000-E | 1670 | 0.2 | ACR | REFORESTATION |
| 6126000000-E | SP | 0.2 | ACR | STREAMBANK REFORESTATION |
| 6132000000-N | SP | 8 | EA | GENERIC EROSION CONTROL ITEM FAIRCLOTH SKIMMER, 2" |
| 6132000000-N | SP | 3 | EA | GENERIC EROSION CONTROL ITEM FAIRCLOTH SKIMMER, 2-1/2" |
| 7000000000-E | 1705 | 38 | EA | PEDESTRIAN SIGNAL HEAD (**", ** SECTION) (16", 1 SECTION W/COUNTDOWN) |
| 7060000000-E | 1705 | 16,751 | LF | SIGNAL CABLE |
| 7120000000-E | 1705 | 73 | EA | VEHICLE SIGNAL HEAD (12", 3 SECTION) |
| 7132000000-E | 1705 | 2 | EA | VEHICLE SIGNAL HEAD (12", 4 SECTION) |
| 7144000000-E | 1705 | 20 | EA | VEHICLE SIGNAL HEAD (12", 5 SECTION) |
| 7180000000-N | 1706 | 12 | EA | BACKPLATE |
| 7252000000-E | 1710 | 14,300 | LF | MESSENGER CABLE (1/4") |
| 7264000000-E | 1710 | 1,648 | LF | MESSENGER CABLE (3/8") |
| 7276000000-E | 1715 | 150 | LF | JACK & BORE |
| 7279000000-E | 1715 | 825 | LF | TRACER WIRE |
| 7288000000-E | 1715 | 460 | LF | TRENCHING (PAVED) |
| 7300000000-E | 1715 | 9,252 | LF | TRENCHING (UNPAVED) |
| 7301000000-E | SP | 495 | LF | DIRECTIONAL DRILL POLYETHYLENE CONDUIT, *****" (** CONDUIT) (2", 1) |
| 7301000000-E | SP | 1,465 | LF | DIRECTIONAL DRILL POLYETHYLENE CONDUIT, *****" (** CONDUIT) (2", 2) |
| 7324000000-N | 1716 | 58 | EA | JUNCTION BOX (STANDARD SIZE) |
| 7336000000-N | 1716 | 11 | EA | JUNCTION BOX (OVER-SIZED) |
| 7360000000-N | 1720 | 12 | EA | WOOD POLE |
| 7372000000-N | 1721 | 24 | EA | GUY ASSEMBLY |
| 7408000000-E | 1722 | 3 | EA | 1" RISER WITH WEATHERHEAD |
| 7420000000-E | 1722 | 15 | EA | 2" RISER WITH WEATHERHEAD |
| 7432000000-E | 1722 | 8 | EA | 2" RISER WITH HEAT SHRINK TUBING |
| 7444000000-E | 1725 | 12,326 | LF | INDUCTIVE LOOP SAWCUT |
| 7456000000-E | 1726 | 24,971 | LF | LEAD-IN CABLE |
| 7516000000-E | 1730 | 18,095 | LF | COMMUNICATIONS CABLE (**FIBER) (12) |
| 7552000000-N | 1731 | 6 | EA | INTERCONNECT CENTER |
| 7564000000-N | 1732 | 7 | EA | FIBER-OPTIC TRANSCEIVER |
| 7566000000-N | 1733 | 11 | EA | DELINEATOR MARKER |
| 7568000000-N | SP | 1 | EA | FURNISH FIBER-OPTIC RESTORATION KIT |
| 7574000000-N | SP | 1 | EA | FURNISH FIBER-OPTIC TRANSCEIVER |

| ItemNumber | Sec # | Quantity | Unit | Description |
|---|---|---|---|---|
| 7613000000-N | SP | 22 | EA | SOIL TEST |
| 7624000000-N | 1743 | 5 | EA | SIGNAL PEDESTAL WITH FOUNDATION |
| ~~7634000000-N~~ 7798000000-N | ~~1744~~ SP | 22 | EA | MAST ARM WITH METAL POLE DESIGN |
| 7636000000-N | 1745 | 11 | EA | SIGN FOR SIGNALS |
| 7684000000-N | 1750 | 6 | EA | SIGNAL CABINET FOUNDATION |
| 7828000000-N | 1751 | 6 | EA | CONTROLLER WITH CABINET (NEMA TS-2, TYPE 2 CONTROLLER, TYPE 1 CABINET, BASE MOUNTED) |
| 7852000000-N | SP | 44 | EA | DETECTOR CARD (NEMA TS-2) |
| 7980000000-N | SP | 1 | EA | GENERIC SIGNAL ITEM CCTV CAMERA ASSEMBLY |
| 7980000000-N | SP | 1 | EA | GENERIC SIGNAL ITEM FIBER OPTIC VIDEO/DATA RECEIVER |
| 7980000000-N | SP | 1 | EA | GENERIC SIGNAL ITEM FIBER OPTIC VIDEO/DATA TRANSMITTER |
| 7980000000-N | SP | 23 | EA | GENERIC SIGNAL ITEM LUMINAIRE MAST ARM |
| 7980000000-N | SP | 21 | EA | GENERIC SIGNAL ITEM METAL POLE W/ SINGLE MAST ARM |
| 7980000000-N | SP | 1 | EA | GENERIC SIGNAL ITEM METAL POLE WITH DUAL MAST ARM |
| 7990000000-E | SP | 165 | LF | GENERIC SIGNAL ITEM UNDERGROUND POLETHYLENE CONDUIT, (2", 1) |
| 7992000000-E | SP | 188 | CY | GENERIC SIGNAL ITEM DRILLED PIER FOUNDATION |

COMPUTED BY: JBG DATE: 05/31/05
CHECKED BY: DWG DATE: 12/13/05

STATE OF NORTH CAROLINA
DIVISION OF HIGHWAYS

# LIST OF PIPES, ENDWALLS, ETC. (FOR PIPES 48" & UNDER)

ABBREVIATIONS

| | |
|---|---|
| C.B. | CATCH BASIN |
| N.D.I. | NARROW DROP INLET |
| D.I. | DROP INLET |
| M.D.I. | MEDIAN DROP INLET |
| M.D.I. (N.S.) | MEDIAN DROP INLET (NARROW SLOT) |
| J.B. | JUNCTION BOX |
| M.H. | MANHOLE |
| T.B.D.I. | TRAFFIC BEARING DROP INLET |
| T.B.J.B. | TRAFFIC BEARING JUCTION BOX |

| STATION / SIZE / THICKNESS OR GAUGE | LOCATION (LT,RT, OR CL) | STRUCTURE NO. FROM | STRUCTURE NO. TO | TOP ELEVATION | INVERT ELEVATION | INVERT ELEVATION | SLOPE CRITICAL | CLASS III R.C. PIPE (UNLESS NOTED OTHERWISE) 12" | 15" | 18" | 24" | 30" | 36" | 42" | 48" | BITUMINOUS COATED C.S. PIPE TYPE B (UNLESS NOTED OTHRWISE) 12" .064 | 15" .064 | 18" .064 | 24" .064 | 30" .079 | 36" .079 | 42" .109 | 48" .109 | 15" SIDE DRAIN PIPE | 18" SIDE DRAIN PIPE | 24" SIDE DRAIN PIPE | ENDWALLS STD. 838.01 STD. 838.11 OR STD. 838.80 (UNLESS NOTED OTHERWISE) CU. YDS. R.C.P. | C.S.P. | QUANTITIES FOR DRAINAGE STRUCTURES PER EACH (0' THRU 5.0') | * TOTAL L.F. FOR PAY QUANTITY SHALL BE COL. 'A' + (1.3 X COL.'B') LIN. *FT. A 5.0' THRU 10.0' | B 10.0' AND ABOVE | C.B. STD. 840.01 OR STD. 840.02 | FRAME, GRATES AND HOOD STANDARD 840.03 TYPE OF GRATE E | F | G | D.I. STD. 840.14 OR STD. 840.15 | D.I. FRAME & GRATE STD. 840.16 | M.D.I. TYPE "B" STD. 840.18 OR 840.27 | M.D.I. (N.S.) FRAME WITH TWO GRATES STD. 840.24 | J.B. STD. 840.31 OR 840.32 | M.H. FRAME & COVER STD. 840.54 | T.B.J.B. STD. 840.34 | PREFORMED SCOUR HOLE | 30" SIDE DRAIN PIPE | CONCRETE APRON FOR CB | CONCRETE APRON FOR DI | CORR. STEEL ELBOWS NO. & SIZE | CONC. COLLARS CL. "B" C.Y. STD 840.72 | CONC. & BRICK PIPE PLUG, C.Y. STD. 840.71 | PIPE REMOVAL LIN.FT. | REMARKS |
|---|---|---|---|---|---|---|---|---|---|---|---|---|---|---|---|---|---|---|---|---|---|---|---|---|---|---|---|---|---|---|---|---|---|---|---|---|---|---|---|---|---|---|---|---|---|---|---|---|---|---|---|
| -L- 12+03.00 | LT | 1 | | 68.6 | | | | | | | | | | | | | | | | | | | | | | | | | 1 | | | 1 | | 1 | | | | | | | | | | | | | | | | | |
| | | 1 | OUT | | 66.5 | 66.4 | | | 8 | | | | | | | | | | | | | | | | | | | | | | | | | | | | | | | | | | | | | | | | | | |
| -L- 12+03.00 | RT | 2 | | 68.6 | | | | | | | | | | | | | | | | | | | | | | | | | 1 | | | 1 | | | 1 | | | | | | | | | | | | | | | | |
| | | 2 | OUT | | 66.5 | 66.5 | | | 4 | | | | | | | | | | | | | | | | | | | | | | | | | | | | | | | | | | | | | | | | | | |
| | | 2 | 3 | | 66.5 | 66.6 | | | 16 | | | | | | | | | | | | | | | | | | | | | | | | | | | | | | | | | | | | | | | | | | |
| -L- 12+23.00 | RT | 3 | | 68.7 | | | | | | | | | | | | | | | | | | | | | | | | | 1 | | | 1 | | | 1 | | | | | | | | | | | | | | | | |
| -L- 13+78.00 | RT | 4 | 5 | | | 65.7 | | | 8 | | | | | | | | | | | | | | | | | | | | | | | | | | | | | | | | | | | | | | | 0.399 | | | REMOVE EXISTING CB |
| -L- 13+78.00 | RT | 5 | | 68.8 | | | | | | | | | | | | | | | | | | | | | | | | | 1 | | | 1 | | | 1 | | | | | | | | | | | | | | | | |
| | | 5 | 6 | | 65.7 | 66.0 | | | 88 | | | | | | | | | | | | | | | | | | | | | | | | | | | | | | | | | | | | | | | | | | |
| -L- 14+76.00 | RT | 6 | | 69.1 | | | | | | | | | | | | | | | | | | | | | | | | | 1 | | | 1 | | | 1 | | | | | | | | | | | | | | | | |
| -L- 15+61.00 | LT | 7 | | 70.2 | 63.7 | | | | | | | | | | | | | | | | | | | | | | | | 1 | 1.5 | | | | | | 1 | 1 | | | | | | | | | | | | | | |
| -Y1- 19+10.00 | LT | 8 | | 70.1 | 63.8 | | | | | | | | | | | | | | | | | | | | | | | | 1 | 1.3 | | | | | | | | | | | 1 | 1 | | | | | | | | | REMOVE EXISTING DI |
| -Y1- 17+02.00 | LT | 9 | | 70.6 | | | | | | | | | | | | | | | | | | | | | | | | | 1 | | | 1 | | | 1 | | | | | | | | | | | | | | | | |
| | | 9 | 10 | | 68.1 | 68.0 | | | 40 | | | | | | | | | | | | | | | | | | | | | | | | | | | | | | | | | | | | | | | | | | |
| -Y1- 17+44.00 | LT | 10 | | 70.4 | | | | | | | | | | | | | | | | | | | | | | | | | 1 | | | 1 | | | 1 | | | | | | | | | | | | | | | | |
| | | 10 | 11 | | 67.7 | | | | | 32 | | | | | | | | | | | | | | | | | | | | | | | | | | | | | | | | | | | | | | | | | |
| -Y1- 17+75.00 | LT | 11 | | | | | | | | | | | | | | | | | | | | | | | | | | | | | | | | | | | | | | | | | | | | | | .4465 | | | REMOVE EXISTING CB |
| -Y1- 21+61.00 | LT | 12 | | 70.4 | 65.8 | | | | | | | | | | | | | | | | | | | | | | | | 1 | | | 1 | | | 1 | | | | | | | | | | | | | | | | REMOVE EXISTING CB |
| -Y1- 21+61.00 | LT | 13 | | 71.6 | 66.4 | | | | | | | | | | | | | | | | | | | | | | | | 1 | 0.2 | | | | | | | | | | | 1 | 1 | | | | | | | | | REMOVE EXISTING DI |
| -Y1- 19+03.00 | CL | 14 | | 71.5 | 65.2 | | | | | | | | | | | | | | | | | | | | | | | | 1 | 1.3 | | | | | | | | | | | 1 | 1 | | | | | | | | | REMOVE EXISTING DI |
| -L- 17+75.00 | RT | 15 | | 69.9 | | | | | | | | | | | | | | | | | | | | | | | | | 1 | | | 1 | 1 | | | | | | | | | | | | | | | | | | |
| | | 15 | 16 | | 66.9 | 67.1 | | | 20 | | | | | | | | | | | | | | | | | | | | | | | | | | | | | | | | | | | | | | | | | | |
| -L- 17+88.00 | RT | 16 | | 69.3 | | | | | | | | | | | | | | | | | | | | | | | | | 1 | | | | | | | | | 1 | 1 | | | | | | | | | | | | |
| | | 15 | 17 | | 66.9 | 66.5 | | | 120 | | | | | | | | | | | | | | | | | | | | | | | | | | | | | | | | | | | | | | | | 0.130 | 60 | REMOVE EXISTING DI AND 18" CONC |
| -L- 18+97.00 | RT | 17 | | 71.1 | | | | | | | | | | | | | | | | | | | | | | | | | 1 | | | 1 | | | 1 | | | | | | | | | | | | | | | | |
| | | 17 | 18 | | 66.5 | 66.6 | | | 24 | | | | | | | | | | | | | | | | | | | | | | | | | | | | | | | | | | | | | | | | 0.130 | 24 | REMOVE EXISTING DI AND 18" CONC |
| -L- 18+93.00 | RT | 18 | | 68.9 | | | | | | | | | | | | | | | | | | | | | | | | | 1 | | | | | | | | | 1 | 1 | | | | | | | | | | | | |
| | | 17 | 19 | | 66.5 | 66.3 | | | | 76 | | | | | | | | | | | | | | | | | | | | | | | | | | | | | | | | | | | | | | | 0.090 | | |
| -L- 19+72.00 | RT | 19 | | 72.1 | | | | | | | | | | | | | | | | | | | | | | | | | 1 | 0.1 | | 1 | | | 1 | | | | | | | | | | | | | | | | |
| | | 19 | 20 | | 67.0 | | | | 16 | | | | | | | | | | | | | | | | | | | | | | | | | | | | | | | | | | | | | | | 0.399 | | | REMOVE EXISTING JB |
| | | 19 | 21 | | 66.3 | 65.9 | | | | | 116 | | | | | | | | | | | | | | | | | | | | | | | | | | | | | | | | | | | | | | |
| -L- 20+90.00 | RT | 21 | | 73.1 | | | | | | | | | | | | | | | | | | | | | | | | | 1 | | | 1 | | | 1 | | | | | | | | | | | | | | | | |
| | | IN | 21 | | 70.5 | 70.1 | | | 20 | | | | | | | | | | | | | | | | | | | | | | | | | | | | | | | | | | | | | | | | | | |
| | | 21 | 22 | | 65.9 | 65.5 | | | | | 132 | | | | | | | | | | | | | | | | | | | | | | | | | | | | | | | | | | | | | | 64 | REMOVE 18" CONC |
| -L- 22+20.00 | RT | 22 | | 73.6 | | | | | | | | | | | | | | | | | | | | | | | | | 1 | | | 1 | | | 1 | | | | | | | | | | | | | | | | |
| | | IN | 22 | | 71.2 | 70.6 | | | 20 | | | | | | | | | | | | | | | | | | | | | | | | | | | | | | | | | | | | | | | | | | |
| | | 22 | 27 | | 65.5 | 65.2 | | | | | | 92 | | | | | | | | | | | | | | | | | | | | | | | | | | | | | | | | | | | | | |
| -L- 18+50.00 | LT | 23 | | | | | | | | | | | | | | | | | | | | | | | | | | | | | | | | | | | | | | | | | | | | | | | | 156 | REMOVE 15" CONC |
| -L- 17+75.00 | LT | 24 | | 69.5 | | | | | | | | | | | | | | | | | | | | | | | | | 1 | | | 1 | 1 | | | | | | | | | | | | | | | | | | |
| | | 24 | 25 | | 66.5 | 66.1 | | | 144 | | | | | | | | | | | | | | | | | | | | | | | | | | | | | | | | | | | | | | | | | | |
| -L- 19+17.00 | LT | 25 | | 70.8 | | | | | | | | | | | | | | | | | | | | | | | | | 1 | | | 1 | | 1 | | | | | | | | | | | | | | | 0.065 | 20 | REMOVE 18" PVC |
| | | 25 | 26 | | 66.1 | 65.6 | | | | 140 | | | | | | | | | | | | | | | | | | | | | | | | | | | | | | | | | | | | | | | | | |
| -L- 20+56.00 | LT | 26 | | 72.3 | | | | | | | | | | | | | | | | | | | | | | | | | 1 | 1.7 | | 1 | | 1 | | | | | | | | | | | | | | | | | |
| | | 26 | 27 | | 65.6 | 65.1 | | | | 200 | | | | | | | | | | | | | | | | | | | | | | | | | | | | | | | | | | | | | | | | | |
| -L- 22+54.00 | LT | 27 | | 73.4 | | | | | | | | | | | | | | | | | | | | | | | | | 1 | 3.3 | | 1 | | 1 | | | | | | | | | | | | | | | | | |
| SHEET TOTALS | | | | | | | | | 528 | 448 | 248 | 92 | | | | | | | | | | | | | | | | | 23 | 9.4 | | 17 | 2 | 4 | 11 | 1 | 1 | 2 | 2 | | 3 | 3 | | | | | | 1.2445 | 0.415 | 324 | |

07-MAR-2006 11:44
r:\proj\u3613b.sum
$$$$USERNAME$$$$

6/20/00

COMPUTED BY: JBG DATE: 05/31/05
CHECKED BY: DWG DATE: 12/13/05

# STATE OF NORTH CAROLINA
# DIVISION OF HIGHWAYS

| PROJECT REFERENCE NO. | SHEET NO. |
|---|---|
| U-3613B | 3-B |

## *LIST OF PIPES, ENDWALLS, ETC. (FOR PIPES 48" & UNDER)*

| STATION / SIZE / THICKNESS OR GAUGE | LOCATION (LT,RT, OR CL) | STRUCTURE NO. FROM | STRUCTURE NO. TO | TOP ELEVATION | INVERT ELEVATION | INVERT ELEVATION | SLOPE CRITICAL | CLASS III R.C. PIPE (UNLESS NOTED OTHERWISE) 12" | 15" | 18" | 24" | 30" | 36" | 42" | 48" | BITUMINOUS COATED C.S. PIPE TYPE B (UNLESS NOTED OTHRWISE) 12" .064 | 15" .064 | 18" .064 | 24" .064 | 30" .079 | 36" .079 | 42" .109 | 48" .109 | 15" SIDE DRAIN PIPE | 18" SIDE DRAIN PIPE | 24" SIDE DRAIN PIPE | ENDWALLS STD. 838.01 STD. 838.11 OR STD. 838.80 (UNLESS NOTED OTHERWISE) CU. YDS. R.C.P. | C.S.P. | QUANTITIES FOR DRAINAGE STRUCTURES PER EACH (0' THRU 5.0') | * TOTAL L.F. FOR PAY QUANTITY SHALL BE COL. 'A' + (1.3 X COL.'B') LIN. *FT. A 5.0' THRU 10.0' | B 10.0' AND ABOVE | C.B. STD. 840.01 OR STD. 840.02 | FRAME, GRATES AND HOOD STANDARD 840.03 TYPE OF GRATE E | F | G | D.I. STD. 840.14 OR STD. 840.15 | D.I. FRAME & GRATE STD. 840.16 | M.D.I. TYPE "B" STD. 840.18 OR 840.27 | M.D.I. (N.S.) FRAME WITH TWO GRATES STD. 840.24 | J.B. STD. 840.31 OR 840.32 | M.H. FRAME & COVER STD. 840.54 | T.B.J.B. STD. 840.34 | PREFORMED SCOUR HOLE | 30" SIDE DRAIN PIPE | CONCRETE APRON FOR CB | CONCRETE APRON FOR DI | CORR. STEEL ELBOWS NO. & SIZE | CONC. COLLARS CL. "B" C.Y. STD 840.72 | CONC. & BRICK PIPE PLUG, C.Y. STD. 840.71 | PIPE REMOVAL LIN.FT. | REMARKS |
|---|---|---|---|---|---|---|---|---|---|---|---|---|---|---|---|---|---|---|---|---|---|---|---|---|---|---|---|---|---|---|---|---|---|---|---|---|---|---|---|---|---|---|---|---|---|---|---|---|---|---|---|
| | | 27 | 28 | | 65.1 | 64.8 | | | | | | 76 | | | | | | | | | | | | | | | | | | | | | | | | | | | | | | | | | | | | | | | |
| -L- 23+31.00 | LT | 28 | | 73.6 | | | | | | | | | | | | | | | | | | | | | | | | | 1 | 3.8 | | 1 | | 1 | | | | | | | | | | | | | | | | | |
| | | 28 | OUT | | 64.8 | 64.7 | | | | | | 40 | | | | | | | | | | | | | | | | | | | | | | | | | | | | | | | | | | | | | | | |
| -L- 22+80.00 | LT | 29 | | | | | | | | | | | | | | | | | | | | | | | | | | | | | | | | | | | | | | | | | | | | | | | | 222 | REMOVE 15" CONC |
| -L- 25+22.00 | RT | 30 | | 74.0 | | | | | | | | | | | | | | | | | | | | | | | | | 1 | | | 1 | | 1 | | | | | | | | | | | | | | | | | |
| | | 30 | 31 | | 70.0 | 70.1 | | | 16 | | | | | | | | | | | | | | | | | | | | | | | | | | | | | | | | | | | | | | | | | | |
| -L- 25+22.00 | RT | 31 | | 72.3 | | | | | | | | | | | | | | | | | | | | | | | | | 1 | | | | | | | 1 | 1 | | | | | | | | | | | | | | |
| | | 30 | 32 | | 70.0 | 69.6 | | | 128 | | | | | | | | | | | | | | | | | | | | | | | | | | | | | | | | | | | | | | | | | | |
| -L- 26+50.00 | RT | 32 | | 73.5 | | | | | | | | | | | | | | | | | | | | | | | | | 1 | | | 1 | | 1 | | | | | | | | | | | | | | | | | |
| | | 32 | 33 | | 69.6 | 69.8 | | | 16 | | | | | | | | | | | | | | | | | | | | | | | | | | | | | | | | | | | | | | | | | | |
| -L- 26+50.00 | RT | 33 | | 72.0 | | | | | | | | | | | | | | | | | | | | | | | | | 1 | | | | | | | 1 | 1 | | | | | | | | | | | | | | |
| | | 32 | 34 | | 69.6 | 69.2 | | | 120 | | | | | | | | | | | | | | | | | | | | | | | | | | | | | | | | | | | | | | | | | | |
| -L- 27+70.00 | RT | 34 | | 72.7 | | | | | | | | | | | | | | | | | | | | | | | | | 1 | | | 1 | | 1 | | | | | | | | | | | | | | | | | |
| | | 34 | 35 | | 69.2 | 69.5 | | | 36 | | | | | | | | | | | | | | | | | | | | | | | | | | | | | | | | | | | | | | | | | | |
| -L- 28+05.00 | RT | 35 | | 71.8 | | | | | | | | | | | | | | | | | | | | | | | | | 1 | | | | | | | 1 | 1 | | | | | | | | | | | | | | |
| -L- 28+12.00 | LT / RT | 36 | | | | | | | | | | | | | | | | | | | | | | | | | | | | | | | | | | | | | | | | | | | | | | | | 40 | REMOVE 15" CONC |
| | | 34 | 38 | | 69.2 | 68.8 | | | | 72 | | | | | | | | | | | | | | | | | | | | | | | | | | | | | | | | | | | | | | | | | |
| -L- 26+50.00 | LT | 37 | | 73.4 | | | | | | | | | | | | | | | | | | | | | | | | | 1 | | | 1 | | | 1 | | | | | | | | | | | | | | | | |
| | | 37 | 38 | | 70.4 | 69.6 | | | 120 | | | | | | | | | | | | | | | | | | | | | | | | | | | | | | | | | | | | | | | | | | |
| -L- 27+70.00 | LT | 38 | | 72.6 | | | | | | | | | | | | | | | | | | | | | | | | | 1 | | | 1 | | | 1 | | | | | | | | | | | | | | | | |
| | | 38 | OUT | | 68.8 | 68.6 | | | | 24 | | | | | | | | | | | | | | | | | | | | | | | | | | | | | | | | | | | | | | | | | |
| -L- 29+35.00 | RT | 39 | | 71.6 | | | | | | | | | | | | | | | | | | | | | | | | | 1 | | | | | | | 1 | 1 | | | | | | | | | | | | | | |
| | | 39 | 40 | | 69.4 | 68.1 | | | 16 | | | | | | | | | | | | | | | | | | | | | | | | | | | | | | | | | | | | | | | | | | |
| -L- 29+35.00 | RT | 40 | | 71.1 | | | | | | | | | | | | | | | | | | | | | | | | | 1 | | | 1 | | 1 | | | | | | | | | | | | | | | | | |
| | | 40 | 41 | | 68.1 | 67.8 | | | 68 | | | | | | | | | | | | | | | | | | | | | | | | | | | | | | | | | | | | | | | | | | |
| -L- 29+35.00 | LT | 41 | | 71.1 | | | | | | | | | | | | | | | | | | | | | | | | | 1 | | | 1 | | | 1 | | | | | | | | | | | | | | | | |
| | | 41 | OUT | | 67.8 | 67.7 | | | 24 | | | | | | | | | | | | | | | | | | | | | | | | | | | | | | | | | | | | | | | | | | |
| -L- 30+55.00 | RT | 42 | | 69.0 | | | | | | | | | | | | | | | | | | | | | | | | | 1 | | | | | | | 1 | 1 | | | | | | | | | | | | | | |
| | | 42 | 43 | | 66.8 | 66.7 | | | 24 | | | | | | | | | | | | | | | | | | | | | | | | | | | | | | | | | | | | | | | | | | |
| -L- 30+70.00 | RT | 43 | | 69.8 | | | | | | | | | | | | | | | | | | | | | | | | | 1 | | | 1 | | 1 | | | | | | | | | | | | | | | | | |
| | | 43 | 44 | | 66.7 | 66.4 | | | 68 | | | | | | | | | | | | | | | | | | | | | | | | | | | | | | | | | | | | | | | | | | |
| -L- 30+70.00 | LT | 44 | | 69.8 | | | | | | | | | | | | | | | | | | | | | | | | | 1 | | | 1 | | | 1 | | | | | | | | | | | | | | | | |
| | | 44 | OUT | | 66.4 | 66.3 | | | 20 | | | | | | | | | | | | | | | | | | | | | | | | | | | | | | | | | | | | | | | | | | |
| -L- 31+28.00 | RT | 45 | | | | | | | | | | | | | | | | | | | | | | | | | | | | | | | | | | | | | | | | | | | | | | | 0.364 | 70 | REMOVE 30" CONC |
| -L- 31+28.00 | LT | 46 | | | 66.3 | 65.0 | | | | | 112 | | | | | | | | | | | | | | | | | | | | | | | | | | | | | | | | | | | | | | | | |
| -L- 34+43.00 | RT | 48 | | 66.9 | | | | | | | | | | | | | | | | | | | | | | | | | 1 | | | 1 | | 1 | | | | | | | | | | | | | | | | | |
| | | 48 | 49 | | 63.9 | 63.7 | | | 84 | | | | | | | | | | | | | | | | | | | | | | | | | | | | | | | | | | | | | | | | | | |
| -L- 35+28.00 | RT | 49 | | 66.8 | | | | | | | | | | | | | | | | | | | | | | | | | 1 | | | 1 | 1 | | | | | | | | | | | | | | | | | 12 | REMOVE 24" CONC |
| -L- 33+74.00 | LT | 50 | | | | | | | | | | | | | | | | | | | | | | | | | | | | | | | | | | | | | | | | | | | | | | | | 31 | REMOVE 15" CMP |
| -L- 34+43.00 | LT | 51 | | 66.9 | | | | | | | | | | | | | | | | | | | | | | | | | 1 | | | 1 | | | 1 | | | | | | | | | | | | | | | | |
| | | 51 | 52 | | 63.9 | 63.7 | | | 84 | | | | | | | | | | | | | | | | | | | | | | | | | | | | | | | | | | | | | | | | | | |
| | | 49 | 52 | | 63.7 | 63.4 | | | 72 | | | | | | | | | | | | | | | | | | | | | | | | | | | | | | | | | | | | | | | | | | |
| -L- 35+28.00 | LT | 52 | | 66.8 | | | | | | | | | | | | | | | | | | | | | | | | | 1 | | | 1 | 1 | | | | | | | | | | | | | | | | | | |
| | | 52 | 55 | | 63.4 | 62.6 | | | | 156 | | | | | | | | | | | | | | | | | | | | | | | | | | | | | | | | | | | | | | | | | |
| -L- 36+85.00 | RT | 54 | | 67.2 | | | | | | | | | | | | | | | | | | | | | | | | | 1 | | | 1 | | | 1 | | | | | | | | | | | | | | | | |
| | | 54 | 55 | | 64.2 | 64.0 | | | 68 | | | | | | | | | | | | | | | | | | | | | | | | | | | | | | | | | | | | | | | | | | |
| -L- 36+85.00 | LT | 55 | | 67.2 | | | | | | | | | | | | | | | | | | | | | | | | | 1 | | | 1 | | 1 | | | | | | | | | | | | | | | | | |
| | | 55 | OUT | | 62.6 | 61.6 | | | | 28 | | | | | | | | | | | | | | | | | | | | | | | | | | | | | | | | | | | | | | | | | |
| | | | | | | | | | | | | | | | | | | | | | | | | | | | | | | | | | | | | | | | | | | | | | | | | | |
| SHEET TOTAL | | | | | | | | | 964 | 280 | 112 | 116 | | | | | | | | | | | | | | | | | 21 | 3.8 | | 16 | 2 | 8 | 6 | 5 | 5 | | | | | | | | | | | | 0.364 | 375 | |

ABBREVIATIONS

- C.B. CATCH BASIN
- N.D.I. NARROW DROP INLET
- D.I. DROP INLET
- M.D.I. MEDIAN DROP INLET
- M.D.I. (N.S.) MEDIAN DROP INLET (NARROW SLOT)
- J.B. JUNCTION BOX
- M.H. MANHOLE
- T.B.D.I. TRAFFIC BEARING DROP INLET
- T.B.J.B. TRAFFIC BEARING JUCTION BOX

07-MAR-2006 11:44
r:\proj\u3613b.sum
$$$$USERNAME$$$$

RD212399 3/7/2006 full3b dwgardner RD-Oce34

COMPUTED BY: JBG DATE: 05/31/05
CHECKED BY: DWG DATE: 12/13/05

| PROJECT REFERENCE NO. | SHEET NO. |
|---|---|
| U-3613B | 3-C |

STATE OF NORTH CAROLINA
DIVISION OF HIGHWAYS

# LIST OF PIPES, ENDWALLS, ETC. (FOR PIPES 48" & UNDER)

| STATION / SIZE / THICKNESS OR GAUGE | LOCATION (LT,RT, OR CL) | STRUCTURE NO. FROM | STRUCTURE NO. TO | TOP ELEVATION | INVERT ELEVATION | INVERT ELEVATION | SLOPE CRITICAL | CLASS III R.C. PIPE (UNLESS NOTED OTHERWISE) 12" | 15" | 18" | 24" | 30" | 36" | 42" | 48" | BITUMINOUS COATED C.S. PIPE TYPE B (UNLESS NOTED OTHRWISE) 12" .064 | 15" .064 | 18" .064 | 24" .064 | 30" .079 | 30" | 36" .079 | 36" | 42" .109 | 42" | 48" .109 | 48" | 15" SIDE DRAIN PIPE | 18" SIDE DRAIN PIPE | 24" SIDE DRAIN PIPE | ENDWALLS STD. 838.01 STD. 838.11 OR STD. 838.80 (UNLESS NOTED OTHERWISE) CU. YDS. R.C.P. | C.S.P. | QUANTITIES FOR DRAINAGE STRUCTURES * TOTAL L.F. FOR PAY QUANTITY SHALL BE COL. 'A' + (1.3 X COL. 'B') PER EACH (0' THRU 5.0') | LIN. FT. A 5.0' THRU 10.0' | LIN. FT. B 10.0' AND ABOVE | C.B. STD. 840.01 OR STD. 840.02 | FRAME, GRATES AND HOOD STANDARD 840.03 TYPE OF GRATE E | F | G | D.I. STD. 840.14 OR STD. 840.15 | D.I. FRAME & GRATE STD. 840.16 | M.D.I. TYPE "B" STD. 840.18 OR 840.27 | M.D.I. (N.S.) FRAME WITH TWO GRATES STD. 840.24 | J.B. STD. 840.31 OR 840.32 | M.H. FRAME & COVER STD. 840.54 | T.B.J.B. STD. 840.34 | PREFORMED SCOUR HOLE | 30" SIDE DRAIN PIPE | CONCRETE APRON FOR CB | CONCRETE APRON FOR DI | CORR. STEEL ELBOWS NO. & SIZE | CONC. COLLARS CL. "B" C.Y. STD 840.72 | CONC. & BRICK PIPE PLUG, C.Y. STD. 840.71 | PIPE REMOVAL LIN.FT. | REMARKS |
|---|---|---|---|---|---|---|---|---|---|---|---|---|---|---|---|---|---|---|---|---|---|---|---|---|---|---|---|---|---|---|---|---|---|---|---|---|---|---|---|---|---|---|---|---|---|---|---|---|---|---|---|---|---|---|---|---|---|---|---|---|---|---|---|
| -L- 34+30.00 | RT | 47 | | 65.4 | | | | | | | | | | | | | | | | | | | | | | | | | | | | | 1 | | | 1 | | | 1 | | | | | | | | | | | | | | | | | | | | | | | 65 | REMOVE 15" CMP |
| | | 47 | 48A | | 62.4 | 62.3 | | | 20 | | | | | | | | | | | | | | | | | | | | | | | | | | | | | | | | | | | | | | | | | | | | | | | | | | | | | |
| -L- 34+35.00 | RT | 48A | | 67.9 | | | | | | | | | | | | | | | | | | | | | | | | | | | | | 1 | 1.5 | | | | | | | | | | | | | | | | | | | | | | | | | | | | | | |
| | | 48A | OUT | | 61.4 | 59.5 | | | | | | | 72 | | | | | | | | | | | | | | | | | | | | | | | | | | | | | | | | | | | | | | | | | | | | | | | | |
| | | 48A | 53A | | 61.4 | 62.7 | | | | | | | 240 | | | | | | | | | | | | | | | | | | | | | | | | | | | | | | | | | | | | | | | | | | | | | | | | |
| -L- 36+85.00 | RT | 53A | | 68.1 | | | | | | | | | | | | | | | | | | | | | | | | | | | | | 1 | | | | | | | | | | | | | | | | | | | | | | | | | | | | | | |
| | | 53A | 53 | | 64.3 | 64.4 | | | 4 | | | | | | | | | | | | | | | | | | | | | | | | | | | | | | | | | | | | | | | | | | | | | | | | | | | | | |
| -L- 36+85.00 | RT | 53 | | 67.6 | | | | | | | | | | | | | | | | | | | | | | | | | | | | | 1 | | | | | | 1 | 1 | | | | | | | | | | | | | | | | | | | | | | | |
| | | 53A | 58 | | 62.7 | 63.8 | | | | | | | 200 | | | | | | | | | | | | | | | | | | | | | | | | | | | | | | | | | | | | | | | | | | | | | | | | |
| -L- 38+97.00 | RT | 56 | | 68.5 | | | | | | | | | | | | | | | | | | | | | | | | | | | | | 1 | | | 1 | | | | | | | | | | | | | | | | | | | | | | | | | | | |
| | | 56 | 57 | | 65.5 | 65.5 | | | 12 | | | | | | | | | | | | | | | | | | | | | | | | | | | | | | | | | | | | | | | | | | | | | | | | | | | | | |
| -L- 38+85.00 | RT | 57 | | 68.6 | | | | | | | | | | | | | | | | | | | | | | | | | | | | | 1 | | | | | | 1 | 1 | | | | | | | | | | | | | | | | | | | | | | | |
| | | 57 | 58 | | 65.5 | 65.4 | | | 4 | | | | | | | | | | | | | | | | | | | | | | | | | | | | | | | | | | | | | | | | | | | | | | | | | | | | | |
| -L- 38+85.00 | RT | 58 | | 69.2 | | | | | | | | | | | | | | | | | | | | | | | | | | | | | 1 | 0.4 | | | | | | | | | | | | | | | | | | | | | | | | | | | | | |
| | | 58 | 62 | | 63.8 | 64.2 | | | | | | | 64 | | | | | | | | | | | | | | | | | | | | | | | | | | | | | | | | | | | | | | | | | | | | | | | | |
| -L- 39+50.00 | RT/LT | 59 | | | | | | | | | | | | | | | | | | | | | | | | | | | | | | | | | | | | | | | | | | | | | | | | | | | | | | | | | | 207 | REMOVE EXISTING CB, 15", 18", & 24" CONC |
| -L- 39+74.00 | RT | 60 | | 69.0 | | | | | | | | | | | | | | | | | | | | | | | | | | | | | 1 | | | 1 | | | 1 | | | | | | | | | | | | | | | | | | | | | | | |
| | | 60 | 61 | | 66.0 | 65.9 | | | 24 | | | | | | | | | | | | | | | | | | | | | | | | | | | | | | | | | | | | | | | | | | | | | | | | | | | | | |
| -L- 39+52.00 | RT | 61 | | 68.9 | | | | | | | | | | | | | | | | | | | | | | | | | | | | | 1 | | | | | | 1 | 1 | | | | | | | | | | | | | | | | | | | | | | | |
| | | 61 | 62 | | 65.9 | 65.7 | | | 8 | | | | | | | | | | | | | | | | | | | | | | | | | | | | | | | | | | | | | | | | | | | | | | | | | | | | | |
| -L- 39+52.00 | RT | 62 | | 69.6 | | | | | | | | | | | | | | | | | | | | | | | | | | | | | 1 | 0.4 | | | | | | | | | | | | | | | | | | | | | | | | | | | | | |
| | | 62 | 63A | | 64.2 | 64.4 | | | | | | | 60 | | | | | | | | | | | | | | | | | | | | | | | | | | | | | | | | | | | | | | | | | | | | | | | | |
| -L- 40+15.00 | RT | 63A | | 69.9 | | | | | | | | | | | | | | | | | | | | | | | | | | | | | 1 | 0.5 | | | | | | | | | | | | | | | | | | | | | | | | | | | | | |
| -L- 40+15.00 | RT | 63 | | 68.0 | | | | | | | | | | | | | | | | | | | | | | | | | | | | | 1 | | | | | | 1 | 1 | | | | | | | | | | | | | | | | | | | | | | | |
| | | 63 | 63A | | 65.7 | 65.6 | | | 8 | | | | | | | | | | | | | | | | | | | | | | | | | | | | | | | | | | | | | | | | | | | | | | | | | | | | | |
| -L- 40+15.00 | RT | 64 | | 69.1 | | | | | | | | | | | | | | | | | | | | | | | | | | | | | 1 | | | 1 | | | | | | | | | | | | | | | | | | | | | | | | | | | |
| | | 64 | 65 | | 66.1 | 65.9 | | | 68 | | | | | | | | | | | | | | | | | | | | | | | | | | | | | | | | | | | | | | | | | | | | | | | | | | | | | |
| -L- 40+15.00 | | 65 | | 69.1 | | | | | | | | | | | | | | | | | | | | | | | | | | | | | 1 | | | 1 | | | 1 | | | | | | | | | | | | | | | | | | | | | | | |
| | | 65 | OUT | | 65.9 | 65.0 | | | 32 | | | | | | | | | | | | | | | | | | | | | | | | | | | | | | | | | | | | | | | | | | | | | | | | | | | | | |
| -Y2- 10+74.00 | RT/LT | 66 | | | 65.6 | 64.4 | | | | | | | | 72 | | | | | | | | | | | | | | | | | 4.5 | | | | | | | | | | | | | | | | | | | | | | | | | | | | | | |
| | | 63A | 68 | | 64.4 | 65.2 | | | | | | 120 | | | | | | | | | | | | | | | | | | | | | | | | | | | | | | | | | | | | | | | | | | | | | | | | | |
| -L- 41+36.00 | RT | 67 | | 68.1 | | | | | | | | | | | | | | | | | | | | | | | | | | | | | 1 | | | | | | 1 | 1 | | | | | | | | | | | | | | | | | | | | | | | |
| | | 67 | 68 | | 65.8 | 65.7 | | | 8 | | | | | | | | | | | | | | | | | | | | | | | | | | | | | | | | | | | | | | | | | | | | | | | | | | | | | |
| -L- 41+36.00 | RT | 68 | | 70.5 | | | | | | | | | | | | | | | | | | | | | | | | | | | | | 1 | 0.3 | | | | | | | | | | | | | | | | | | | | | | | | | | | | | |
| | | | | | | | | | | | | | | | | | | | | | | | | | | | | | | | | | | | | | | | | | | | | | | | | | | | | | | | | | | | | | |
| | | | | | | | | | | | | | | | | | | | | | | | | | | | | | | | | | | | | | | | | | | | | | | | | | | | | | | | | | | | | | |
| | | 68 | 69 | | 65.2 | 65.5 | | | | | | 64 | | | | | | | | | | | | | | | | | | | | | | | | | | | | | | | | | | | | | | | | | | | | | | | | 50 | REMOVE 24" CONC |
| -L- 42+02.00 | RT | 69 | | 71.0 | | | | | | | | | | | | | | | | | | | | | | | | | | | | | 1 | 0.5 | | | | | | | | | | | | | | | | | | | | | | | | | | | | | REMOVE MANHOLE |
| | | 69 | 70A | | 65.5 | 65.7 | | | | | | 36 | | | | | | | | | | | | | | | | | | | | | | | | | | | | | | | | | | | | | | | | | | | | | | | | 44 | REMOVE 24" CONC |
| -L- 42+42.00 | RT | 70 | | 68.3 | | | | | | | | | | | | | | | | | | | | | | | | | | | | | 1 | | | | | | 1 | 1 | | | | | | | | | | | | | | | | | | | | | | | |
| | | 70 | 70A | | 66.1 | 65.9 | | | 8 | | | | | | | | | | | | | | | | | | | | | | | | | | | | | | | | | | | | | | | | | | | | | | | | | | | | | |
| -L- 42+42.00 | RT | 70A | | 71.2 | | | | | | | | | | | | | | | | | | | | | | | | | | | | | 1 | 0.5 | | | | | | | | | | | | | | | | | | | | | | | | | | | | | |
| -L- 42+42.00 | RT | 71 | | 70.4 | | | | | | | | | | | | | | | | | | | | | | | | | | | | | 1 | | | 1 | | | 1 | | | | | | | | | | | | | | | | | | | | | | | |
| | | 71 | 72 | | 67.4 | 67.2 | | | 68 | | | | | | | | | | | | | | | | | | | | | | | | | | | | | | | | | | | | | | | | | | | | | | | | | | | | | |
| -L- 42+42.00 | LT | 72 | | 70.4 | | | | | | | | | | | | | | | | | | | | | | | | | | | | | 1 | | | 1 | | | 1 | | | | | | | | | | | | | | | | | | | | | | | |
| | | 72 | OUT | | 67.2 | 65.6 | | | 24 | | | | | | | | | | | | | | | | | | | | | | | | | | | | | | | | | | | | | | | | | | | | | | | | | | | | | |
| -L- 43+40.00 | LT | 73 | | | | | | | | | | | | | | | | | | | | | | | | | | | | | | | | | | | | | | | | | | | | | | | | | | | | | | | | | | 20 | REMOVE 15" CONC |
| | | 70A | 74 | | 66.0 | 67.0 | | | | | | 168 | | | | | | | | | | | | | | | | | | | | | | | | | | | | | | | | | | | | | | | | | | | | | | | | | | |
| | | | | | | | | | | | | | | | | | | | | | | | | | | | | | | | | | | | | | | | | | | | | | | | | | | | | | | | | | | | | | |
| SHEET TOTAL | | | | | | | | | 288 | | | 388 | 636 | 72 | | | | | | | | | | | | | | | | | 4.5 | | 21 | 4.1 | | 7 | | 4 | 3 | 6 | 6 | | | 8 | 8 | | | | | | | | | | | | | | | 386 | |

| ABBREVIATIONS | |
|---|---|
| C.B. | CATCH BASIN |
| N.D.I. | NARROW DROP INLET |
| D.I. | DROP INLET |
| M.D.I. | MEDIAN DROP INLET |
| M.D.I. (N.S.) | MEDIAN DROP INLET (NARROW SLOT) |
| J.B. | JUNCTION BOX |
| M.H. | MANHOLE |
| T.B.D.I. | TRAFFIC BEARING DROP INLET |
| T.B.J.B. | TRAFFIC BEARING JUCTION BOX |

6/28/00

07-MAR-2006 11:44
$$$$USERNAME$$$$ $$$$u3613b.sum

RD212399 3/7/2006 full3c dwgardner RD-Oce34

COMPUTED BY: JBG DATE: 05/31/05
CHECKED BY: DWG DATE: 12/13/05

6/20/00

STATE OF NORTH CAROLINA
DIVISION OF HIGHWAYS

| PROJECT REFERENCE NO. | SHEET NO. |
|---|---|
| U-3613B | 3-D |

# LIST OF PIPES, ENDWALLS, ETC. (FOR PIPES 48" & UNDER)

ABBREVIATIONS

| | |
|---|---|
| C.B. | CATCH BASIN |
| N.D.I. | NARROW DROP INLET |
| D.I. | DROP INLET |
| M.D.I. | MEDIAN DROP INLET |
| M.D.I. (N.S.) | MEDIAN DROP INLET (NARROW SLOT) |
| J.B. | JUNCTION BOX |
| M.H. | MANHOLE |
| T.B.D.I. | TRAFFIC BEARING DROP INLET |
| T.B.J.B. | TRAFFIC BEARING JUCTION BOX |

| STATION | LOCATION (LT, RT, OR CL) | STRUCTURE NO. FROM | STRUCTURE NO. TO | TOP ELEVATION | INVERT ELEVATION | INVERT ELEVATION | SLOPE CRITICAL | CLASS III R.C. PIPE (UNLESS NOTED OTHERWISE) 12" | 15" | 18" | 24" | 30" | 36" | 42" | 48" | BITUMINOUS COATED C.S. PIPE TYPE B (UNLESS NOTED OTHRWISE) 12" .064 | 15" .064 | 18" .064 | 24" .064 | 30" .079 | 36" .079 | 42" .109 | 48" .109 | 15" SIDE DRAIN PIPE | 18" SIDE DRAIN PIPE | 24" SIDE DRAIN PIPE | ENDWALLS STD. 838.01 STD. 838.11 OR STD. 838.80 (UNLESS NOTED OTHERWISE) CU. YDS. R.C.P. | C.S.P. | QUANTITIES FOR DRAINAGE STRUCTURES PER EACH (0' THRU 5.0') | * TOTAL L.F. FOR PAY QUANTITY SHALL BE COL. 'A' + (1.3 X COL. 'B') LIN. *FT. A 5.0' THRU 10.0' | B 10.0' AND ABOVE | C.B. STD. 840.01 OR STD. 840.02 | FRAME, GRATES AND HOOD STANDARD 840.03 TYPE OF GRATE E | F | G | D.I. STD. 840.14 OR STD. 840.15 | D.I. FRAME & GRATE STD. 840.16 | M.D.I. TYPE "B" STD. 840.18 OR 840.27 | M.D.I. (N.S.) FRAME WITH TWO GRATES STD. 840.24 | J.B. STD. 840.31 OR 840.32 | M.H. FRAME & COVER STD. 840.54 | T.B.J.B. STD. 840.34 | PREFORMED SCOUR HOLE | 30" SIDE DRAIN PIPE | CONCRETE APRON FOR CB | CONCRETE APRON FOR DI | CORR. STEEL ELBOWS NO. & SIZE | CONC. COLLARS CL. "B" C.Y. STD 840.72 | CONC. & BRICK PIPE PLUG, C.Y. STD. 840.71 | PIPE REMOVAL LIN.FT. | REMARKS |
|---|---|---|---|---|---|---|---|---|---|---|---|---|---|---|---|---|---|---|---|---|---|---|---|---|---|---|---|---|---|---|---|---|---|---|---|---|---|---|---|---|---|---|---|---|---|---|---|---|---|---|---|
| -L- 44+12.00 | RT | 74 | | 72.1 | | | | | | | | | | | | | | | | | | | | | | | | | 1 | 0.1 | | | | | | | | | | 1 | 1 | | | | | | | | | | |
| | | IN | 74 | | 68.6 | 68.4 | | | 20 | | | | | | | | | | | | | | | | | | | | | | | | | | | | | | | | | | | | | | | | | 20 | REMOVE 12" CMP |
| | | 74 | 75A | | 67.0 | 67.4 | | | | | 76 | | | | | | | | | | | | | | | | | | | | | | | | | | | | | | | | | | | | | | | | |
| -L- 44+89.00 | RT | 75 | | 70.4 | | | | | | | | | | | | | | | | | | | | | | | | | 1 | | | | | | | 1 | 1 | | | | | | | | | | | | | | |
| | | 75 | 75A | | 68.1 | 68.0 | | | 8 | | | | | | | | | | | | | | | | | | | | | | | | | | | | | | | | | | | | | | | | | | |
| -L- 44+89.00 | RT | 75A | | 72.5 | | | | | | | | | | | | | | | | | | | | | | | | | 1 | 0.1 | | | | | | | | | | 1 | 1 | | | | | | | | | | |
| | | 75A | 79 | | 67.4 | 67.6 | | | | | 48 | | | | | | | | | | | | | | | | | | | | | | | | | | | | | | | | | | | | | | | 41 | REMOVE 24" CONC |
| -L- 44+89.00 | RT | 76 | | 71.7 | | | | | | | | | | | | | | | | | | | | | | | | | 1 | | | 1 | | | 1 | | | | | | | | | | | | | | | | |
| | | 76 | 77 | | 68.7 | 68.5 | | | 68 | | | | | | | | | | | | | | | | | | | | | | | | | | | | | | | | | | | | | | | | | | |
| -L- 44+89.00 | LT | 77 | | 71.7 | | | | | | | | | | | | | | | | | | | | | | | | | 1 | | | 1 | | 1 | | | | | | | | | | | | | | | | | |
| | | 77 | OUT | | 68.5 | 67.7 | | | 24 | | | | | | | | | | | | | | | | | | | | | | | | | | | | | | | | | | | | | | | | | | |
| -L- 45+42.00 | RT | 78 | | 70.9 | | | | | | | | | | | | | | | | | | | | | | | | | 1 | | | | | | | 1 | 1 | | | | | | | | | | | | | | |
| | | 78 | 79 | | 68.6 | 68.5 | | | 8 | | | | | | | | | | | | | | | | | | | | | | | | | | | | | | | | | | | | | | | | | | |
| -L- 45+42.00 | RT | 79 | | 72.6 | | | | | | | | | | | | | | | | | | | | | | | | | 1 | | | | | | | | | | | 1 | 1 | | | | | | | | | | |
| | | 79 | 81 | | 67.6 | 68.0 | | | | | 104 | | | | | | | | | | | | | | | | | | | | | | | | | | | | | | | | | | | | | | | | |
| -L- 46+50.00 | RT | 80 | | 70.9 | | | | | | | | | | | | | | | | | | | | | | | | | 1 | | | | | | | 1 | 1 | | | | | | | | | | | | | | |
| | | 80 | 81 | | 68.7 | 68.6 | | | 12 | | | | | | | | | | | | | | | | | | | | | | | | | | | | | | | | | | | | | | | | | | |
| -L- 46+50.00 | RT | 81 | | 73.0 | | | | | | | | | | | | | | | | | | | | | | | | | 1 | | | | | | | | | | | 1 | 1 | | | | | | | | | | |
| | | 81 | 82 | | 68.0 | 68.6 | | | | | 136 | | | | | | | | | | | | | | | | | | | | | | | | | | | | | | | | | | | | | | | 57 | REMOVE 24" CONC |
| | | IN | 82 | | 68.7 | 68.6 | | | 12 | | | | | | | | | | | | | | | | | | | | | | | | | | | | | | | | | | | | | | | | | | |
| -L- 47+88.50 | RT | 82 | | 73.5 | | | | | | | | | | | | | | | | | | | | | | | | | 1 | | | | | | | | | | | 1 | 1 | | | | | | | | | | |
| -L- 47+88.50 | RT | 83 | | 72.6 | | | | | | | | | | | | | | | | | | | | | | | | | 1 | | | 1 | | | 1 | | | | | | | | | | | | | | | | |
| | | 83 | 84 | | 69.6 | 69.4 | | | 68 | | | | | | | | | | | | | | | | | | | | | | | | | | | | | | | | | | | | | | | | | | |
| -L- 47+88.50 | LT | 84 | | 72.6 | | | | | | | | | | | | | | | | | | | | | | | | | 1 | | | 1 | | 1 | | | | | | | | | | | | | | | | | |
| | | 84 | OUT | | 69.4 | 68.3 | | | 24 | | | | | | | | | | | | | | | | | | | | | | | | | | | | | | | | | | | | | | | | | | |
| -L- 48+65.00 | RT | 85 | | | | | | | | | | | | | | | | | | | | | | | | | | | | | | | | | | | | | | | | | | | | | | | | 24 | REMOVE 18" CONC |
| -L- 48+75.00 | LT | 86 | | | | | | | | | | | | | | | | | | | | | | | | | | | | | | | | | | | | | | | | | | | | | | | 0.13 | 36 | REMOVE 15" CMP |
| -L- 48+75.00 | LT | 87 | | | | | | | | | | | | | | | | | | | | | | | | | 48 | | | | | | | | | | | | | | | | | | | | | | | | | | |
| -L- 49+96.00 | RT | 88 | | 73.2 | | | | | | | | | | | | | | | | | | | | | | | | | 1 | | | 1 | | | 1 | | | | | | | | | | | | | | | | |
| | | 88 | 89 | | 70.2 | 70.0 | | | 56 | | | | | | | | | | | | | | | | | | | | | | | | | | | | | | | | | | | | | | | | | | |
| -L- 50+55.00 | RT | 89 | | 73.6 | | | | | | | | | | | | | | | | | | | | | | | | | 1 | | | 1 | | | 1 | | | | | | | | | | | | | | | | |
| | | 89 | 91 | | 70.0 | 69.8 | | | 68 | | | | | | | | | | | | | | | | | | | | | | | | | | | | | | | | | | | | | | | | | | |
| -L- 50+22.00 | LT | 90 | | 73.3 | | | | | | | | | | | | | | | | | | | | | | | | | 1 | | | 1 | | 1 | | | | | | | | | | | | | | | | | |
| | | 90 | 91 | | 70.3 | 70.2 | | | 32 | | | | | | | | | | | | | | | | | | | | | | | | | | | | | | | | | | | | | | | | | | |
| -L- 50+50.00 | LT | 92 | | 72.5 | | | | | | | | | | | | | | | | | | | | | | | | | 1 | | | | | | | 1 | 1 | | | | | | | | | | | | | | |
| | | 92 | 91 | | 70.3 | 70.2 | | | 16 | | | | | | | | | | | | | | | | | | | | | | | | | | | | | | | | | | | | | | | | | | |
| -L- 50+55.00 | LT | 91 | | 73.4 | | | | | | | | | | | | | | | | | | | | | | | | | 1 | | | 1 | | 1 | | | | | | | | | | | | | | | | | |
| | | 91 | 94 | | 69.8 | 69.4 | | | | 116 | | | | | | | | | | | | | | | | | | | | | | | | | | | | | | | | | | | | | | | | | |
| -L- 51+40.00 | LT | 93 | | | | | | | | | | | | | | | | | | | | | | | | | | | | | | | | | | | | | | | | | | | | | | | | 52 | REMOVE 15" CONC |
| -L- 51+69.00 | LT | 94 | | 73.8 | | | | | | | | | | | | | | | | | | | | | | | | | 1 | | | 1 | | 1 | | | | | | | | | | | | | | | | | |
| | | 94 | 95 | | 70.5 | 70.6 | | | 16 | | | | | | | | | | | | | | | | | | | | | | | | | | | | | | | | | | | | | | | | | | |
| -L- 51+69.00 | LT | 95 | | 72.8 | | | | | | | | | | | | | | | | | | | | | | | | | 1 | | | | | | | 1 | 1 | | | | | | | | | | | | | | |
| -L- 53+40.00 | LT | 96 | | | | | | | | | | | | | | | | | | | | | | | | | | | | | | | | | | | | | | | | | | | | | | | | 75 | REMOVE 24" CONC |
| SHEET TOTAL | | | | | | | | | 432 | 116 | 364 | | | | | | | | | | | | | | 48 | | | | 19 | 0.2 | | 9 | | 5 | 4 | 5 | 5 | | | 5 | 5 | | | | | | | | 0.13 | 305 | |

07-MAR-2006 11:44
r:\proj\u3613b.sum
$$$$USERNAME$$$$

6/20/00

| | |
|---|---|
| COMPUTED BY: JBG | DATE: 05/31/05 |
| CHECKED BY: DWG | DATE: 12/13/05 |

STATE OF NORTH CAROLINA
DIVISION OF HIGHWAYS

| PROJECT REFERENCE NO. | SHEET NO. |
|---|---|
| U-3613B | 3-E |

# LIST OF PIPES, ENDWALLS, ETC. (FOR PIPES 48" & UNDER)

| STATION / SIZE / THICKNESS OR GAUGE | LOCATION (LT,RT, OR CL) | STRUCTURE NO. FROM | STRUCTURE NO. TO | TOP ELEVATION | INVERT ELEVATION | INVERT ELEVATION | SLOPE CRITICAL | CLASS III R.C. PIPE (UNLESS NOTED OTHERWISE) 12" | 15" | 18" | 24" | 30" | 36" | 42" | 48" | BITUMINOUS COATED C.S. PIPE TYPE B (UNLESS NOTED OTHRWISE) 12" .064 | 15" .064 | 18" .064 | 24" .064 | 30" .079 | 36" .079 | 42" .109 | 48" .109 | 15" SIDE DRAIN PIPE | 18" SIDE DRAIN PIPE | 24" SIDE DRAIN PIPE | ENDWALLS STD. 838.01 STD. 838.11 OR STD. 838.80 (UNLESS NOTED OTHERWISE) CU. YDS. R.C.P. | C.S.P. | QUANTITIES FOR DRAINAGE STRUCTURES PER EACH (0' THRU 5.0') | * TOTAL L.F. FOR PAY QUANTITY SHALL BE COL. 'A' + (1.3 X COL.'B') LIN. *FT. A 5.0' THRU 10.0' | B 10.0' AND ABOVE | C.B. STD. 840.01 OR STD. 840.02 | FRAME, GRATES AND HOOD STANDARD 840.03 TYPE OF GRATE E | F | G | D.I. STD. 840.14 OR STD. 840.15 | D.I. FRAME & GRATE STD. 840.16 | M.D.I. TYPE "B" STD. 840.18 OR 840.27 | M.D.I. (N.S.) FRAME WITH TWO GRATES STD. 840.24 | J.B. STD. 840.31 OR 840.32 | M.H. FRAME & COVER STD. 840.54 | T.B.J.B. STD. 840.34 | PREFORMED SCOUR HOLE | 30" SIDE DRAIN PIPE | CONCRETE APRON FOR CB | CONCRETE APRON FOR DI | CORR. STEEL ELBOWS NO. & SIZE | CONC. COLLARS CL. "B" C.Y. STD 840.72 | CONC. & BRICK PIPE PLUG, C.Y. STD. 840.71 | PIPE REMOVAL LIN.FT. | REMARKS |
|---|---|---|---|---|---|---|---|---|---|---|---|---|---|---|---|---|---|---|---|---|---|---|---|---|---|---|---|---|---|---|---|---|---|---|---|---|---|---|---|---|---|---|---|---|---|---|---|---|---|---|---|
| | | 94 | 97 | | 69.4 | 68.9 | | | | | 196 | | | | | | | | | | | | | | | | | | | | | | | | | | | | | | | | | | | | | | | | |
| -L- 53+70.00 | LT | 97 | | 74.1 | | | | | | | | | | | | | | | | | | | | | | | | | 1 | 0.2 | | 1 | | 1 | | | | | | | | | | | | | | | | 28 | REMOVE 12" CONC |
| | | 97 | 98 | | 68.9 | 68.7 | | | | | 44 | | | | | | | | | | | | | | | | | | | | | | | | | | | | | | | | | | | | | | | | |
| -L- 54+17.00 | LT | 98 | | 74.0 | | | | | | | | | | | | | | | | | | | | | | | | | 1 | 0.3 | | 1 | | 1 | | | | | | | | | | | | | | | | | |
| | | 98 | 99 | | 68.8 | 68.9 | | | 16 | | | | | | | | | | | | | | | | | | | | | | | | | | | | | | | | | | | | | | | | | | |
| -L- 54+08.00 | LT | 99 | | 71.1 | | | | | | | | | | | | | | | | | | | | | | | | | 1 | | | | | | | 1 | 1 | | | | | | | | | | | | | | |
| | | 98 | OUT | | 68.7 | 68.4 | | | | | | 108 | | | | | | | | | | | | | | | | | | | | | | | | | | | | | | | | | | | | | | 70 | REMOVE 15" CONC AND 18" CONC |
| | | 98 | 102 | | 69.5 | 71.1 | | | 176 | | | | | | | | | | | | | | | | | | | | | | | | | | | | | | | | | | | | | | | | | | |
| -L- 55+76.00 | RT | 100 | | 73.6 | | | | | | | | | | | | | | | | | | | | | | | | | 1 | | | | | | | 1 | 1 | | | | | | | | | | | | | | |
| | | 100 | 101 | | 71.4 | 71.3 | | | 24 | | | | | | | | | | | | | | | | | | | | | | | | | | | | | | | | | | | | | | | | | | |
| -L- 55+75.50 | RT | 101 | | 77.3 | | | | | | | | | | | | | | | | | | | | | | | | | 1 | 1.0 | | 1 | | | 1 | | | | | | | | | | | | | | 0.09 | | |
| | | 101 | 102 | | 71.3 | 71.1 | | | 72 | | | | | | | | | | | | | | | | | | | | | | | | | | | | | | | | | | | | | | | | | | |
| -L- 56+00.00 | LT | 102 | | 74.5 | | | | | | | | | | | | | | | | | | | | | | | | | 1 | | | 1 | | 1 | | | | | | | | | | | | | | | | | |
| | | 102 | 103 | | 71.5 | 71.8 | | | 16 | | | | | | | | | | | | | | | | | | | | | | | | | | | | | | | | | | | | | | | | | | |
| -L- 56+00.00 | LT | 103 | | 74.0 | | | | | | | | | | | | | | | | | | | | | | | | | 1 | | | | | | | 1 | 1 | | | | | | | | | | | | | | |
| | | | | | | | | | | | | | | | | | | | | | | | | | | | | | | | | | | | | | | | | | | | | | | | | | | | |
| -L- 56+85.00 | LT | 104 | | | | | | | | | | | | | | | | | | | | | | | | | | | | | | | | | | | | | | | | | | | | | | | | 20 | REMOVE 12" CMP |
| -L- 58+70.00 | RT | 105 | | | | | | | | | | | | | | | | | | | | | | | | | | | | | | | | | | | | | | | | | | | | | | | | 20 | REMOVE 18" CONC |
| -L- 59+00.00 | CL | 106 | | | | | | | | | | | | | | | | | | | | | | | | | | | | | | | | | | | | | | | | | | | | | | | 0.09 | | REMOVE HEADWALL |
| -L- 58+55.00 | LT | 107 | | 75.0 | | | | | | | | | | | | | | | | | | | | | | | | | 1 | | | 1 | | | 1 | | | | | | | | | | | | | | | | |
| | | 107 | 108 | | 72.0 | 71.8 | | | 72 | | | | | | | | | | | | | | | | | | | | | | | | | | | | | | | | | | | | | | | | | | |
| -L- 59+30.00 | LT | 108 | | 74.9 | | | | | | | | | | | | | | | | | | | | | | | | | 1 | | | 1 | | | 1 | | | | | | | | | | | | | | | | |
| | | 108 | 109 | | 71.8 | 72.0 | | | 16 | | | | | | | | | | | | | | | | | | | | | | | | | | | | | | | | | | | | | | | | | | |
| -L- 59+30.00 | LT | 109 | | 74.2 | | | | | | | | | | | | | | | | | | | | | | | | | 1 | | | | | | | 1 | 1 | | | | | | | | | | | | | | |
| | | 108 | 110 | | 71.8 | 71.1 | | | 256 | | | | | | | | | | | | | | | | | | | | | | | | | | | | | | | | | | | | | | | | | | |
| -L- 61+86.00 | LT | 110 | | 74.1 | | | | | | | | | | | | | | | | | | | | | | | | | 1 | | | 1 | | | 1 | | | | | | | | | | | | | | | 32 | REMOVE 15" CONC |
| | | 110 | 111 | | 71.1 | 71.4 | | | 16 | | | | | | | | | | | | | | | | | | | | | | | | | | | | | | | | | | | | | | | | | | |
| -L- 61+86.00 | LT | 111 | | 73.8 | | | | | | | | | | | | | | | | | | | | | | | | | 1 | | | | | | | 1 | 1 | | | | | | | | | | | | | | |
| | | 111 | 112 | | 71.4 | 71.6 | | | 44 | | | | | | | | | | | | | | | | | | | | | | | | | | | | | | | | | | | | | | | | | | |
| -L- 62+35.00 | LT | 112 | | 73.8 | | | | | | | | | | | | | | | | | | | | | | | | | 1 | | | | | | | 1 | 1 | | | | | | | | | | | | | | |
| -L- 60+25.00 | RT | 113 | | | | | | | | | | | | | | | | | | | | | | | | | | | | | | | | | | | | | | | | | | | | | | | 0.09 | | |
| -Y5- 11+45.00 | LT | 114 | | 74.7 | | | | | | | | | | | | | | | | | | | | | | | | | 1 | | | 1 | | 1 | | | | | | | | | | | | | | | | | |
| | | 114 | OUT | | 71.7 | 71.7 | | | 24 | | | | | | | | | | | | | | | | | | | | | | | | | | | | | | | | | | | | | | | | | | |
| | | 110 | 115 | | 70.9 | 70.5 | | | | 68 | | | | | | | | | | | | | | | | | | | | | | | | | | | | | | | | | | | | | | | | | |
| -L- 61+86.00 | RT | 115 | | 74.1 | | | | | | | | | | | | | | | | | | | | | | | | | 1 | | | 1 | | 1 | | | | | | | | | | | | | | | | 20 | REMOVE 15" CONC |
| | | 115 | 116 | | 70.4 | 70.0 | | | | | 140 | | | | | | | | | | | | | | | | | | | | | | | | | | | | | | | | | | | | | | | 276 | REMOVE DI'S AND 18" CONC |
| -L- 63+26.00 | RT | 116 | | 73.9 | | | | | | | | | | | | | | | | | | | | | | | | | 1 | | | 1 | | 1 | | | | | | | | | | | | | | | | | |
| | | 116 | 117 | | 70.0 | 69.6 | | | | | 104 | | | | | | | | | | | | | | | | | | | | | | | | | | | | | | | | | | | | | | | | |
| -L- 64+30.00 | RT | 117 | | 73.8 | | | | | | | | | | | | | | | | | | | | | | | | | 1 | | | 1 | | 1 | | | | | | | | | | | | | | | | | |
| | | 117 | 118 | | 69.6 | 69.4 | | | | | 88 | | | | | | | | | | | | | | | | | | | | | | | | | | | | | | | | | | | | | | | | |
| -L- 65+20.00 | RT | 118 | | 73.9 | | | | | | | | | | | | | | | | | | | | | | | | | 1 | | | 1 | 1 | | | | | | | | | | | | | | | | | | |
| | | 118 | OUT | | 69.1 | 69.1 | | | | | | | 16 | | | | | | | | | | | | | | | | | | | | | | | | | | | | | | | | | | | | | | |
| | | 118 | 119 | | 69.4 | 70.1 | | | | 76 | | | | | | | | | | | | | | | | | | | | | | | | | | | | | | | | | | | | | | | | 20 | REMOVE 18" CONC |
| -L- 66+00.00 | RT | 119 | | 74.0 | | | | | | | | | | | | | | | | | | | | | | | | | 1 | | | 1 | | | 1 | | | | | | | | | | | | | | | | |
| | | 119 | 120 | | 70.1 | 70.8 | | | | 232 | | | | | | | | | | | | | | | | | | | | | | | | | | | | | | | | | | | | | | | | | |
| SHEET TOTAL | | | | | | | | | 732 | 376 | 572 | 108 | 16 | | | | | | | | | | | | | | | | 19 | 1.5 | | 13 | 1 | 7 | 5 | 6 | 6 | | | | | | | | | | | | 0.27 | 486 | |

**ABBREVIATIONS**

| | |
|---|---|
| C.B. | CATCH BASIN |
| N.D.I. | NARROW DROP INLET |
| D.I. | DROP INLET |
| M.D.I. | MEDIAN DROP INLET |
| M.D.I. (N.S.) | MEDIAN DROP INLET (NARROW SLOT) |
| J.B. | JUNCTION BOX |
| M.H. | MANHOLE |
| T.B.D.I. | TRAFFIC BEARING DROP INLET |
| T.B.J.B. | TRAFFIC BEARING JUCTION BOX |

07-MAR-2006 11:44
r:\proj\u3613b.sum
$$$$USERNAME$$$$

RD212399 3/7/2006 full3e dwgardner RD-Oce34

6/20/00

COMPUTED BY: JBG DATE: 05/31/05
CHECKED BY: DWG DATE: 12/13/05

STATE OF NORTH CAROLINA
DIVISION OF HIGHWAYS

| PROJECT REFERENCE NO. | SHEET NO. |
|---|---|
| U-3613B | 3-F |

# LIST OF PIPES, ENDWALLS, ETC. (FOR PIPES 48" & UNDER)

| STATION / SIZE / THICKNESS OR GAUGE | LOCATION (LT,RT, OR CL) | STRUCTURE NO. FROM | STRUCTURE NO. TO | TOP ELEVATION | INVERT ELEVATION | INVERT ELEVATION | SLOPE CRITICAL | CLASS III R.C. PIPE (UNLESS NOTED OTHERWISE) 12" | 15" | 18" | 24" | 30" | 36" | 42" | 48" | BITUMINOUS COATED C.S. PIPE TYPE B (UNLESS NOTED OTHRWISE) 12" .064 | 15" .064 | 18" .064 | 24" .064 | 30" .079 | 36" .079 | 42" .109 | 48" .109 | 15" SIDE DRAIN PIPE | 18" SIDE DRAIN PIPE | 24" SIDE DRAIN PIPE | ENDWALLS STD. 838.01 STD. 838.11 OR STD. 838.80 (UNLESS NOTED OTHERWISE) CU. YDS. R.C.P. | C.S.P. | QUANTITIES FOR DRAINAGE STRUCTURES PER EACH (0' THRU 5.0') | * TOTAL L.F. FOR PAY QUANTITY SHALL BE COL. 'A' + (1.3 X COL.'B') LIN. *FT. A 5.0' THRU 10.0' | B 10.0' AND ABOVE | C.B. STD. 840.01 OR STD. 840.02 | FRAME, GRATES AND HOOD STANDARD 840.03 TYPE OF GRATE E | F | G | D.I. STD. 840.14 OR STD. 840.15 | D.I. FRAME & GRATE STD. 840.16 | M.D.I. TYPE "B" STD. 840.18 OR 840.27 | M.D.I. (N.S.) FRAME WITH TWO GRATES STD. 840.24 | J.B. STD. 840.31 OR 840.32 | M.H. FRAME & COVER STD. 840.54 | T.B.J.B. STD. 840.34 | PREFORMED SCOUR HOLE | 30" SIDE DRAIN PIPE | CONCRETE APRON FOR CB | CONCRETE APRON FOR DI | CORR. STEEL ELBOWS NO. & SIZE | CONC. COLLARS CL. "B" C.Y. STD 840.72 | CONC. & BRICK PIPE PLUG, C.Y. STD. 840.71 | PIPE REMOVAL LIN.FT. | REMARKS |
|---|---|---|---|---|---|---|---|---|---|---|---|---|---|---|---|---|---|---|---|---|---|---|---|---|---|---|---|---|---|---|---|---|---|---|---|---|---|---|---|---|---|---|---|---|---|---|---|---|---|---|---|
| -L- 68+35.50 | RT | 120 | | 74.1 | | | | | | | | | | | | | | | | | | | | | | | | | 1 | | | 1 | | | 1 | | | | | | | | | | | | | | | | |
| | | 120 | 121 | | 71.1 | 71.4 | | | 72 | | | | | | | | | | | | | | | | | | | | | | | | | | | | | | | | | | | | | | | | | | |
| -L- 69+16.00 | RT | 121 | | 74.4 | | | | | | | | | | | | | | | | | | | | | | | | | 1 | | | 1 | | | 1 | | | | | | | | | | | | | | | | |
| | | 121 | 122 | | 71.4 | 71.5 | | | 16 | | | | | | | | | | | | | | | | | | | | | | | | | | | | | | | | | | | | | | | | | | |
| -L- 69+16.00 | RT | 122 | | 73.7 | | | | | | | | | | | | | | | | | | | | | | | | | 1 | | | | | | | 1 | 1 | | | | | | | | | | | | | | |
| | | 118 | 125 | | 69.4 | 70.0 | | | | | | 72 | | | | | | | | | | | | | | | | | | | | | | | | | | | | | | | | | | | | | | 40 | REMOVE 18" CONC |
| -L- 64+30.00 | LT | 123 | | 73.7 | | | | | | | | | | | | | | | | | | | | | | | | | 1 | | | | | | | 1 | 1 | | | | | | | | | | | | | | |
| | | 123 | 124 | | 71.5 | 70.8 | | | 16 | | | | | | | | | | | | | | | | | | | | | | | | | | | | | | | | | | | | | | | | | | |
| -L- 64+30.00 | LT | 124 | | 73.8 | | | | | | | | | | | | | | | | | | | | | | | | | 1 | | | 1 | | | 1 | | | | | | | | | | | | | | | | |
| | | 124 | 125 | | 70.8 | 70.6 | | | 72 | | | | | | | | | | | | | | | | | | | | | | | | | | | | | | | | | | | | | | | | | 32 | REMOVE 18" CONC |
| -L- 65+04.00 | LT | 125 | | 74.2 | | | | | | | | | | | | | | | | | | | | | | | | | 1 | | | 1 | 1 | | | | | | | | | | | | | | | | | | |
| | | IN | 125 | | 71.3 | 70.0 | | | | | | 16 | | | | | | | | | | | | | | | | | | | | | | | | | | | | | | | | | | | | | | | |
| | | 125 | 126 | | 71.2 | 71.5 | | | 48 | | | | | | | | | | | | | | | | | | | | | | | | | | | | | | | | | | | | | | | | | 60 | REMOVE 15" CONC |
| -L- 65+55.00 | LT | 126 | | 74.5 | | | | | | | | | | | | | | | | | | | | | | | | | 1 | | | 1 | | 1 | | | | | | | | | | | | | | | | | |
| | | 126 | 127 | | 71.5 | 72.0 | | | 16 | | | | | | | | | | | | | | | | | | | | | | | | | | | | | | | | | | | | | | | | | | |
| -L- 65+55.00 | LT | 127 | | 74.2 | | | | | | | | | | | | | | | | | | | | | | | | | 1 | | | | | | | 1 | 1 | | | | | | | | | | | | | | |
| | | | | | | | | | | | | | | | | | | | | | | | | | | | | | | | | | | | | | | | | | | | | | | | | | | | |
| -L- 70+30.00 | LT/RT | 128 | | | | | | | | | | | | | | | | | | | | | | | | | | | | | | | | | | | | | | | | | | | | | | | | 84 | REMOVE 18" CONC |
| -L- 71+25.00 | RT | 129 | | 73.5 | | | | | | | | | | | | | | | | | | | | | | | | | 1 | | | | | | | 1 | 1 | | | | | | | | | | | | | | |
| | | 129 | 130 | | 71.3 | 71.2 | | | 16 | | | | | | | | | | | | | | | | | | | | | | | | | | | | | | | | | | | | | | | | | | |
| -L- 71+22.00 | RT | 130 | | 74.5 | | | | | | | | | | | | | | | | | | | | | | | | | 1 | | | 1 | | 1 | | | | | | | | | | | | | | | | | |
| | | 130 | 132 | | 71.2 | 70.5 | | | | 128 | | | | | | | | | | | | | | | | | | | | | | | | | | | | | | | | | | | | | | | | | |
| -L- 72+20.00 | RT | 131 | | | | | | | | | | | | | | | | | | | | | | | | | | | | | | | | | | | | | | | | | | | | | | | | 60 | REMOVE 18" CONC |
| -L- 72+56.00 | RT | 132 | | 73.8 | | | | | | | | | | | | | | | | | | | | | | | | | 1 | | | 1 | | 1 | | | | | | | | | | | | | | | | | |
| | | 132 | 133 | | 70.5 | 69.9 | | | | 116 | | | | | | | | | | | | | | | | | | | | | | | | | | | | | | | | | | | | | | | | | |
| -L- 73+76.00 | RT | 133 | | 73.4 | | | | | | | | | | | | | | | | | | | | | | | | | 1 | | | 1 | | 1 | | | | | | | | | | | | | | | | | |
| | | 133 | 134 | | 69.9 | 69.0 | | | | 124 | | | | | | | | | | | | | | | | | | | | | | | | | | | | | | | | | | | | | | | | | |
| -L- 75+00.00 | RT | 134 | | 72.5 | | | | | | | | | | | | | | | | | | | | | | | | | 1 | | | 1 | | 1 | | | | | | | | | | | | | | | | | |
| | | 134 | 135 | | 69.0 | 68.1 | | | | 116 | | | | | | | | | | | | | | | | | | | | | | | | | | | | | | | | | | | | | | | | | |
| -L- 76+20.00 | RT | 135 | | 71.6 | | | | | | | | | | | | | | | | | | | | | | | | | 1 | | | 1 | | 1 | | | | | | | | | | | | | | | | | |
| | | 135 | 136 | | 68.6 | 69.0 | | | 16 | | | | | | | | | | | | | | | | | | | | | | | | | | | | | | | | | | | | | | | | | | |
| -L- 76+20.00 | RT | 136 | | 74.7 | | | | | | | | | | | | | | | | | | | | | | | | | 1 | 0.7 | | | | | | 1 | 1 | | | | | | | | | | | | | | |
| | | 135 | 137 | | 67.8 | 66.8 | | | | | 140 | | | | | | | | | | | | | | | | | | | | | | | | | | | | | | | | | | | | | | | 114 | REMOVE 18" CONC |
| -L- 77+64.00 | RT | 137 | | 70.5 | | | | | | | | | | | | | | | | | | | | | | | | | 1 | | | 1 | | 1 | | | | | | | | | | | | | | | | | |
| | | 137 | 138 | | 66.8 | 66.7 | | | | | 116 | | | | | | | | | | | | | | | | | | | | | | | | | | | | | | | | | | | | | | | | |
| -L- 78+84.00 | RT | 138 | | 69.8 | | | | | | | | | | | 8 | | | | | | | | | | | | | | 1 | 1.2 | | 1 | | 1 | | | | | | | | | | | | | | 1.0126 | | | |
| | | 138 | 139 | | 63.6 | 64.0 | | | | | | 108 | | | | | | | | | | | | | | | | | | | | | | | | | | | | | | | | | | | | | | | |
| -L- 79+94.00 | RT | 139 | | 69.4 | | | | | | | | | | | | | | | | | | | | | | | | | 1 | 0.4 | | 1 | | 1 | | | | | | | | | | | | | | | | | |
| | | 139 | 140 | | 64.0 | 64.2 | | | | | | 60 | | | | | | | | | | | | | | | | | | | | | | | | | | | | | | | | | | | | | | | |
| -L- 80+55.00 | RT | 140 | | 69.3 | | | | | | | | | | | | | | | | | | | | | | | | | 1 | 0.1 | | 1 | 1 | | | | | | | | | | | | | | | | | | |
| | | 140 | 140A | | 66.3 | 67.2 | | | 24 | | | | | | | | | | | | | | | | | | | | | | | | | | | | | | | | | | | | | | | | | 42 | REMOVE 15" CONC |
| -L- 80+60.00 | RT | 140A | | 69.3 | | | | | | | | | | | | | | | | | | | | | | | | | 1 | | | 1 | 1 | | | | | | | | | | | | | | | | | | |
| | | 140 | 141 | | 64.2 | 64.9 | | | | 68 | | | | | | | | | | | | | | | | | | | | | | | | | | | | | | | | | | | | | | | | | |
| | | 140 | 151 | | 65.4 | 65.7 | | | | | 84 | | | | | | | | | | | | | | | | | | | | | | | | | | | | | | | | | | | | | | | | |
| -L- 81+23.00 | RT | 141 | | 70.0 | | | | | | | | | | | | | | | | | | | | | | | | | 1 | 0.1 | | | | | | | | | | 1 | 1 | | | | | | | | | | |
| SHEET TOTAL | | | | | | | | | 296 | 552 | 340 | 256 | | | 8 | | | | | | | | | | | | | | 21 | 2.5 | | 15 | 3 | 9 | 3 | 5 | 5 | | | 1 | 1 | | | | | | | 1.0126 | | 432 | |

ABBREVIATIONS

| | |
|---|---|
| C.B. | CATCH BASIN |
| N.D.I. | NARROW DROP INLET |
| D.I. | DROP INLET |
| M.D.I. | MEDIAN DROP INLET |
| M.D.I. (N.S.) | MEDIAN DROP INLET (NARROW SLOT) |
| J.B. | JUNCTION BOX |
| M.H. | MANHOLE |
| T.B.D.I. | TRAFFIC BEARING DROP INLET |
| T.B.J.B. | TRAFFIC BEARING JUCTION BOX |

07-MAR-2006 11:44
r:\proj\u3613b.sum
$$$$USERNAME$$$$

COMPUTED BY: JBG DATE: 05/31/05
CHECKED BY: DWG DATE: 12/13/05

| PROJECT REFERENCE NO. | SHEET NO. |
|---|---|
| U-3613B | 3-G |

STATE OF NORTH CAROLINA
DIVISION OF HIGHWAYS

# LIST OF PIPES, ENDWALLS, ETC. (FOR PIPES 48" & UNDER)

| STATION / SIZE / THICKNESS OR GAUGE | LOCATION (LT,RT, OR CL) | STRUCTURE NO. FROM | STRUCTURE NO. TO | TOP ELEVATION | INVERT ELEVATION | INVERT ELEVATION | SLOPE CRITICAL | CLASS III R.C. PIPE (UNLESS NOTED OTHERWISE) 12" | 15" | 18" | 24" | 30" | 36" | 42" | 48" | BITUMINOUS COATED C.S. PIPE TYPE B (UNLESS NOTED OTHRWISE) 12" .064 | 15" .064 | 18" .064 | 24" .064 | 30" .079 | 30" .079 | 36" .079 | 36" .109 | 42" .109 | 48" .109 | 15" SIDE DRAIN PIPE | 18" SIDE DRAIN PIPE | 24" SIDE DRAIN PIPE | ENDWALLS STD. 838.01 STD. 838.11 OR STD. 838.80 (UNLESS NOTED OTHERWISE) CU. YDS. R.C.P. | CU. YDS. C.S.P. | QUANTITIES FOR DRAINAGE STRUCTURES * TOTAL L.F. FOR PAY QUANTITY SHALL BE COL. 'A' + (1.3 X COL. 'B') LIN. *FT. PER EACH (0' THRU 5.0') | LIN. *FT. A 5.0' THRU 10.0' | LIN. *FT. B 10.0' AND ABOVE | C.B. STD. 840.01 OR STD. 840.02 | FRAME, GRATES AND HOOD STANDARD 840.03 TYPE OF GRATE E | F | G | D.I. STD. 840.14 OR STD. 840.15 | D.I. FRAME & GRATE STD. 840.16 | M.D.I. TYPE "B" STD. 840.18 OR 840.27 | M.D.I. (N.S.) FRAME WITH TWO GRATES STD. 840.24 | J.B. STD. 840.31 OR 840.32 | M.H. FRAME & COVER STD. 840.54 | T.B.J.B. STD. 840.34 | PREFORMED SCOUR HOLE | 30" SIDE DRAIN PIPE | CONCRETE APRON FOR CB | CONCRETE APRON FOR DI | CORR. STEEL ELBOWS NO. & SIZE | CONC. COLLARS CL. "B" C.Y. STD 840.72 | CONC. & BRICK PIPE PLUG, C.Y. STD. 840.71 | PIPE REMOVAL LIN.FT. | REMARKS |
|---|---|---|---|---|---|---|---|---|---|---|---|---|---|---|---|---|---|---|---|---|---|---|---|---|---|---|---|---|---|---|---|---|---|---|---|---|---|---|---|---|---|---|---|---|---|---|---|---|---|---|---|---|---|
| | | 141 | 142 | | 64.9 | 65.3 | | | | 48 | | | | | | | | | | | | | | | | | | | | | | | | | | | | | | | | | | | | | | | | | | | 20 | REMOVE 18" CONC |
| -Y6- 12+57.00 | LT | 142 | | 69.0 | | | | | | | | | | | | | | | | | | | | | | | | | | 1 | | | 1 | | 1 | | | | | | | | | | | | | | | | | | | |
| | | IN | 142 | | 66.7 | 65.3 | | | 16 | | | | | | | | | | | | | | | | | | | | | | | | | | | | | | | | | | | | | | | | | | | | |
| | | 142 | 143 | | 65.3 | 65.6 | | | | 60 | | | | | | | | | | | | | | | | | | | | | | | | | | | | | | | | | | | | | | | | | | | |
| -Y6- 12+59.00 | RT | 143 | | 68.8 | | | | | | | | | | | | | | | | | | | | | | | | | | 1 | | | 1 | | | 1 | | | | | | | | | | | | | | | | | | |
| | | IN | 143 | | 66.6 | 65.6 | | | | 16 | | | | | | | | | | | | | | | | | | | | | | | | | | | | | | | | | | | | | | | | | | | |
| -Y6- 11+40.00 | RT | 144 | | | | | | | | | | | | | | | | | | | | | | | | 56 | | | | | | | | | | | | | | | | | | | | | | | | | | | 60 | REMOVE 15" CONC |
| -L- 73+20.00 | LT | 145 | | | | | | | | | | | | | | | | | | | | | | | | | | | | | | | | | | | | | | | | | | | | | | | | | | | 60 | REMOVE 18" CONC |
| | | 135 | 146 | | 68.6 | 68.8 | | | 72 | | | | | | | | | | | | | | | | | | | | | | | | | | | | | | | | | | | | | | | | | | | | |
| -L- 76+15.00 | LT | 146 | | 71.8 | | | | | | | | | | | | | | | | | | | | | | | | | | 1 | | | 1 | | | 1 | | | | | | | | | | | | | | | | | | |
| | | 146 | 147 | | 68.8 | 69.9 | | | 12 | | | | | | | | | | | | | | | | | | | | | | | | | | | | | | | | | | | | | | | | | | | | |
| -L- 76+15.00 | LT | 147 | | 72.1 | | | | | | | | | | | | | | | | | | | | | | | | | | 1 | | | | | | | | 1 | 1 | | | | | | | | | | | | | | | |
| -L- 78+95.00 | LT/RT | 148 | | | | | | | | | | | | | | | | | | | | | | | | | | | | | | | | | | | | | | | | | | | | | | | | | | | 184 | REMOVE 15" CMP, 18" CMP, & 18" CONC |
| -L- 78+95.00 | LT | 149 | | 69.8 | | | | | | | | | | | | | | | | | | | | | | | | | | 1 | | | 1 | | | 1 | | | | | | | | | | | | | | | | | | |
| | | 149 | 150 | | 66.8 | 66.5 | | | 84 | | | | | | | | | | | | | | | | | | | | | | | | | | | | | | | | | | | | | | | | | | | | |
| -L- 79+79.00 | LT | 150 | | 69.5 | | | | | | | | | | | | | | | | | | | | | | | | | | 1 | | | 1 | | | 1 | | | | | | | | | | | | | | | | | | |
| | | 150 | 151 | | 66.5 | 66.0 | | | | 72 | | | | | | | | | | | | | | | | | | | | | | | | | | | | | | | | | | | | | | | | | | | 48 | REMOVE 18" CONC |
| -L- 80+55.00 | LT | 151 | | 69.5 | | | | | | | | | | | | | | | | | | | | | | | | | | 1 | | | 1 | 1 | | | | | | | | | | | | | | | | | | | | |
| | | 151 | 152 | | 66.0 | 66.2 | | | 32 | | | | | | | | | | | | | | | | | | | | | | | | | | | | | | | | | | | | | | | | | | | | |
| -L- 80+88.00 | LT | 152 | | 69.5 | | | | | | | | | | | | | | | | | | | | | | | | | | 1 | | | 1 | | | 1 | | | | | | | | | | | | | | | | | | |
| | | 152 | 153 | | 66.2 | 66.4 | | | 44 | | | | | | | | | | | | | | | | | | | | | | | | | | | | | | | | | | | | | | | | | | | | |
| -L- 81+24.00 | LT | 153 | | 70.0 | | | | | | | | | | | | | | | | | | | | | | | | | | 1 | | | | | | | | | | 1 | 1 | | | | | | | | | | | | | |
| | | 153 | 154 | | 66.4 | 66.7 | | | 60 | | | | | | | | | | | | | | | | | | | | | | | | | | | | | | | | | | | | | | | | | | | | 14 | REMOVE 18" CONC |
| -Y6- 14+93.00 | LT | 154 | | 69.7 | | | | | | | | | | | | | | | | | | | | | | | | | | 1 | | | 1 | | 1 | | | | | | | | | | | | | | | | | | |
| | | IN | 154 | | 67.9 | 66.7 | | | 12 | | | | | | | | | | | | | | | | | | | | | | | | | | | | | | | | | | | | | | | | | | | | |
| -Y6- 16+33.00 | LT | 155 | | | | | | | | | | | | | | | | | | | | | | | 52 | | | | | | | | | | | | | | | | | | | | | | | | | | | 52 | REMOVE 18" CONC |
| | | IN | 156 | | 68.1 | 67.0 | | | 16 | | | | | | | | | | | | | | | | | | | | | | | | | | | | | | | | | | | | | | | | | | | | |
| -Y6- 14+92.00 | RT | 156 | | 70.0 | | | | | | | | | | | | | | | | | | | | | | | | | | 1 | | | 1 | | | 1 | | | | | | | | | | | | | | | | | | |
| | | 156 | 157 | | 67.0 | 66.2 | | | 44 | | | | | | | | | | | | | | | | | | | | | | | | | | | | | | | | | | | | | | | | | | | | |
| -Y6- 14+51.00 | RT | 157 | | 69.9 | | | | | | | | | | | | | | | | | | | | | | | | | | 1 | | | | | | | | | | 1 | 1 | | | | | | | | | | | | | |
| | | 157 | 158 | | 66.2 | 66.0 | | | 68 | | | | | | | | | | | | | | | | | | | | | | | | | | | | | | | | | | | | | | | | | | | | |
| -L- 83+13.00 | LT | 158 | | 69.4 | | | | | | | | | | | | | | | | | | | | | | | | | | 1 | | | 1 | | | 1 | | | | | | | | | | | | | | | | | | |
| | | 158 | 159 | | 66.4 | 67.0 | | | 12 | | | | | | | | | | | | | | | | | | | | | | | | | | | | | | | | | | | | | | | | | | | | |
| -L- 83+13.00 | LT | 159 | | 69.2 | | | | | | | | | | | | | | | | | | | | | | | | | | 1 | | | | | | | | 1 | 1 | | | | | | | | | | | | | | | |
| | | | | | | | | | | | | | | | | | | | | | | | | | | | | | | | | | | | | | | | | | | | | | | | | | | | | | | |
| | | 158 | 160 | | 66.0 | 65.6 | | | | 128 | | | | | | | | | | | | | | | | | | | | | | | | | | | | | | | | | | | | | | | | | | | |
| -L- 84+45.00 | LT | 160 | | 69.1 | | | | | | | | | | | | | | | | | | | | | | | | | | 1 | | | 1 | | | 1 | | | | | | | | | | | | | | | | | | |
| | | 160 | 161 | | 65.6 | 65.0 | | | | 144 | | | | | | | | | | | | | | | | | | | | | | | | | | | | | | | | | | | | | | | | | | | |
| -L- 85+90.00 | LT | 161 | | 68.4 | | | | | | | | | | | | | | | | | | | | | | | | | | 1 | | | 1 | | | 1 | | | | | | | | | | | | | | | | | | |
| | | 161 | 162 | | 65.2 | 66.1 | | | 16 | | | | | | | | | | | | | | | | | | | | | | | | | | | | | | | | | | | | | | | | | | | | |
| -L- 85+90.00 | LT | 162 | | 68.3 | | | | | | | | | | | | | | | | | | | | | | | | | | 1 | | | | | | | | 1 | 1 | | | | | | | | | | | | | | | |
| | | 161 | 163 | | 64.7 | 64.2 | | | | | 112 | | | | | | | | | | | | | | | | | | | | | | | | | | | | | | | | | | | | | | | | | | |
| -L- 87+03.00 | LT | 163 | | 68.8 | | | | | | | | | | | | | | | | | | | | | | | | | | 1 | | | 1 | | | 1 | | | | | | | | | | | | | | | | | | |
| | | 163 | 174 | | 64.2 | 64.0 | | | | | 72 | | | | | | | | | | | | | | | | | | | | | | | | | | | | | | | | | | | | | | | | | | 52 | REMOVE CB & 18" CONC |
| | | 163 | 164 | | 65.4 | 65.6 | | | 56 | | | | | | | | | | | | | | | | | | | | | | | | | | | | | | | | | | | | | | | | | | | | |
| SHEET TOTAL | | | | | | | | 544 | 468 | 184 | | | | | | | | | | | | | | | 52 | 56 | | | | 18 | | | 13 | 1 | 4 | 8 | | 3 | 3 | | | 2 | 2 | | | | | | | | | | | 490 | |

ABBREVIATIONS

| | |
|---|---|
| C.B. | CATCH BASIN |
| N.D.I. | NARROW DROP INLET |
| D.I. | DROP INLET |
| M.D.I. | MEDIAN DROP INLET |
| M.D.I. (N.S.) | MEDIAN DROP INLET (NARROW SLOT) |
| J.B. | JUNCTION BOX |
| M.H. | MANHOLE |
| T.B.D.I. | TRAFFIC BEARING DROP INLET |
| T.B.J.B. | TRAFFIC BEARING JUCTION BOX |

6/20/00
07-MAR-2006 11:44
$$$$USERNAME$$$$ $$$$$$$$ U3613b.sum
RD212399 3/7/2006 full3g dwgardner RD-Oce34

COMPUTED BY: JBG DATE: 05/31/05
CHECKED BY: DWG DATE: 12/13/05

| PROJECT REFERENCE NO. | SHEET NO. |
|---|---|
| U-3613B | 3-H |

STATE OF NORTH CAROLINA
DIVISION OF HIGHWAYS

# LIST OF PIPES, ENDWALLS, ETC. (FOR PIPES 48" & UNDER)

| STATION / SIZE / THICKNESS OR GAUGE | LOCATION (LT,RT, OR CL) | STRUCTURE NO. FROM | STRUCTURE NO. TO | TOP ELEVATION | INVERT ELEVATION | INVERT ELEVATION | SLOPE CRITICAL | CLASS III R.C. PIPE (UNLESS NOTED OTHERWISE) 12" | 15" | 18" | 24" | 30" | 36" | 42" | 48" | BITUMINOUS COATED C.S. PIPE TYPE B (UNLESS NOTED OTHRWISE) 12" .064 | 15" .064 | 18" .064 | 24" .064 | 30" .079 | 30" .079 | 36" .109 | 42" .109 | 48" .109 | 15" SIDE DRAIN PIPE | 18" SIDE DRAIN PIPE | 24" SIDE DRAIN PIPE | ENDWALLS STD. 838.01 STD. 838.11 OR STD. 838.80 (UNLESS NOTED OTHERWISE) CU. YDS. R.C.P. | C.S.P. | QUANTITIES FOR DRAINAGE STRUCTURES * TOTAL L.F. FOR PAY QUANTITY SHALL BE COL. 'A' + (1.3 X COL.'B') LIN. FT. PER EACH (0' THRU 5.0') | 5.0' THRU 10.0' A | 10.0' AND ABOVE B | C.B. STD. 840.01 OR STD. 840.02 | FRAME, GRATES AND HOOD STANDARD 840.03 TYPE OF GRATE E | F | G | D.I. STD. 840.14 OR STD. 840.15 | D.I. FRAME & GRATE STD. 840.16 | M.D.I. TYPE "B" STD. 840.18 OR 840.27 | M.D.I. (N.S.) FRAME WITH TWO GRATES STD. 840.24 | J.B. STD. 840.31 OR 840.32 | M.H. FRAME & COVER STD. 840.54 | T.B.J.B. STD. 840.34 | PREFORMED SCOUR HOLE | 30" SIDE DRAIN PIPE | CONCRETE APRON FOR CB | CONCRETE APRON FOR DI | CORR. STEEL ELBOWS NO. & SIZE | CONC. COLLARS CL. "B" C.Y. STD 840.72 | CONC. & BRICK PIPE PLUG, C.Y. STD. 840.71 | PIPE REMOVAL LIN.FT. | REMARKS |
|---|---|---|---|---|---|---|---|---|---|---|---|---|---|---|---|---|---|---|---|---|---|---|---|---|---|---|---|---|---|---|---|---|---|---|---|---|---|---|---|---|---|---|---|---|---|---|---|---|---|---|---|---|---|
| -L- 87+65.00 | LT | 164 | | 68.6 | | | | | | | | | | | | | | | | | | | | | | | | | | 1 | | | 1 | | 1 | | | | | | | | | | | | | | | | | | | |
| -L- 84+25.00 | RT | 165 | | 69.0 | | | | | | | | | | | | | | | | | | | | | | | | | | 1 | | | 1 | | | 1 | | | | | | | | | | | | | | | | | | |
| | | 165 | 166 | | 66.3 | 66.1 | | | 44 | | | | | | | | | | | | | | | | | | | | | | | | | | | | | | | | | | | | | | | | | | | | |
| -L- 83+75.00 | RT | 166 | | 69.3 | | | | | | | | | | | | | | | | | | | | | | | | | | 1 | | | | | | | | 1 | 1 | | | | | | | | | | | | | | | | |
| | | 166 | 167 | | 66.1 | 66.1 | | | 20 | | | | | | | | | | | | | | | | | | | | | | | | | | | | | | | | | | | | | | | | | | | | |
| -L- 83+72.00 | RT | 167 | | 69.1 | | | | | | | | | | | | | | | | | | | | | | | | | | 1 | | | 1 | | | 1 | | | | | | | | | | | | | | | | | | | |
| | | 167 | 168 | | 66.1 | 65.9 | | | 68 | | | | | | | | | | | | | | | | | | | | | | | | | | | | | | | | | | | | | | | | | | | 58 | REMOVE 18" CONC |
| -L- 84+45.00 | RT | 168 | | 69.7 | | | | | | | | | | | | | | | | | | | | | | | | | | 1 | | | 1 | | | 1 | | | | | | | | | | | | | | | | | | | |
| | | 168 | 169 | | 65.9 | 65.4 | | | | 136 | | | | | | | | | | | | | | | | | | | | | | | | | | | | | | | | | | | | | | | | | | | |
| -L- 85+85.00 | RT | 169 | | 69.8 | | | | | | | | | | | | | | | | | | | | | | | | | | 1 | | | 1 | 1 | | | | | | | | | | | | | | | | | | | | |
| | | 169 | 170 | | 66.4 | 66.5 | | | 12 | | | | | | | | | | | | | | | | | | | | | | | | | | | | | | | | | | | | | | | | | | | | |
| -L- 85+85.00 | RT | 170 | | 68.7 | | | | | | | | | | | | | | | | | | | | | | | | | | 1 | | | | | | | | 1 | 1 | | | | | | | | | | | | | | | | |
| | | 169 | 171 | | 65.4 | 65.1 | | | | | 32 | | | | | | | | | | | | | | | | | | | | | | | | | | | | | | | | | | | | | | | | | | |
| -L- 86+22.00 | RT | 171 | | 70.0 | | | | | | | | | | | | | | | | | | | | | | | | | | 1 | | | 1 | 1 | | | | | | | | | | | | | | | | | | | | |
| | | 171 | 172 | | 66.6 | 66.7 | | | 28 | | | | | | | | | | | | | | | | | | | | | | | | | | | | | | | | | | | | | | | | | | | | |
| -L- 86+22.00 | RT | 172 | | 69.9 | | | | | | | | | | | | | | | | | | | | | | | | | | 1 | | | | | | | | 1 | 1 | | | | | | | | | | | 1 | | | | | |
| -L- 87+03.00 | RT | 173 | | 69.0 | | | | | | | | | | | | | | | | | | | | | | | | | | 1 | | | 1 | | | 1 | | | | | | | | | | | | | | | | | | |
| | | 173 | OUT | | 66.0 | 66.0 | | | 12 | | | | | | | | | | | | | | | | | | | | | | | | | | | | | | | | | | | | | | | | | | | | |
| -L- 87+07.00 | RT | 174 | | 70.6 | | | | | | | | | | | | | | | | | | | | | | | | | | 1 | 1.6 | | 1 | | | 1 | | | | | | | | | | | | | | | | | | |
| | | 174 | OUT | | 64.0 | 63.6 | | | | | | 32 | | | | | | | | | | | | | | | | | | | | | | | | | | | | | | | | | | | | | | | | | |
| | | 171 | 174 | | 65.1 | 64.4 | | | | | 84 | | | | | | | | | | | | | | | | | | | | | | | | | | | | | | | | | | | | | | | | | 60 | REMOVE 15" CMP |
| -L- 89+51.00 | RT | 175 | | 70.2 | | | | | | | | | | | | | | | | | | | | | | | | | | 1 | | | 1 | | | 1 | | | | | | | | | | | | | 1 | | | | | |
| | | 175 | 176 | | 67.2 | 65.7 | | | 40 | | | | | | | | | | | | | | | | | | | | | | | | | | | | | | | | | | | | | | | | | | | | |
| -L- 89+51.00 | LT | 176 | | 68.7 | | | | | | | | | | | | | | | | | | | | | | | | | | 1 | | | 1 | | | 1 | | | | | | | | | | | | | | | | | | |
| | | 176 | 177 | | 65.7 | 65.5 | | | 60 | | | | | | | | | | | | | | | | | | | | | | | | | | | | | | | | | | | | | | | | | | | | |
| -L- 90+14.00 | LT | 177 | | 68.5 | | | | | | | | | | | | | | | | | | | | | | | | | | 1 | | | 1 | | | 1 | | | | | | | | | | | | | | | | | | |
| | | IN | 177 | | 67.0 | 65.2 | | | | 16 | | | | | | | | | | | | | | | | | | | | | | | | | | | | | | | | | | | | | | | | | | | |
| | | 177 | 178 | | 65.1 | 64.4 | | | | 124 | | | | | | | | | | | | | | | | | | | | | | | | | | | | | | | | | | | | | | | | | | | |
| -L- 91+44.00 | LT | 178 | | 68.0 | | | | | | | | | | | | | | | | | | | | | | | | | | 1 | | | 1 | | | 1 | | | | | | | | | | | | | | | | | | |
| | | 178 | 179 | | 65.0 | 66.2 | | | 40 | | | | | | | | | | | | | | | | | | | | | | | | | | | | | | | | | | | | | | | | | | | | |
| -L- 91+44.00 | RT | 179 | | 69.4 | | | | | | | | | | | | | | | | | | | | | | | | | | 1 | | | | | | | | 1 | 1 | | | | | | | | | | | 1 | | | | | |
| | | 178 | 180 | | 64.4 | 63.7 | | | | 108 | | | | | | | | | | | | | | | | | | | | | | | | | | | | | | | | | | | | | | | | | | 60 | REMOVE 18" CONC & HW |
| | | 180 | OUT | | 63.7 | 63.5 | | | | 20 | | | | | | | | | | | | | | | | | | | | | | | | | | | | | | | | | | | | | | | | | | | |
| -L- 92+54.00 | LT | 180 | | 67.2 | | | | | | | | | | | | | | | | | | | | | | | | | | 1 | | | 1 | | | 1 | | | | | | | | | | | | | | | | | | |
| | | 180 | 181 | | 64.2 | 65.3 | | | 40 | | | | | | | | | | | | | | | | | | | | | | | | | | | | | | | | | | | | | | | | | | | | |
| -L- 92+54.00 | RT | 181 | | 68.3 | | | | | | | | | | | | | | | | | | | | | | | | | | 1 | | | | | | | | 1 | 1 | | | | | | | | | | | 1 | | | | | |
| -L- 91+45.00 | RT | 182 | | 69.1 | | | | | | | | | | | | | | | | | | | | | | | | | | 1 | | | | | | | | 1 | 1 | | | | | | | | | | | | | | | | |
| | | 182 | 183 | | 66.9 | 66.6 | | | 12 | | | | | | | | | | | | | | | | | | | | | | | | | | | | | | | | | | | | | | | | | | | | |
| -L- 91+45.00 | RT | 183 | | 70.8 | | | | | | | | | | | | | | | | | | | | | | | | | | 1 | | | | | | | | | | 1 | 1 | | | | | | | | | | | | 68 | REMOVE DI, 15" CONC, & HW |
| | | 183 | 186 | | 66.6 | 63.6 | | | 188 | | | | | | | | | | | | | | | | | | | | | | | | | | | | | | | | | | | | | | | | | | | | |
| SHEET TOTAL | | | | | | | | | 564 | 404 | 116 | 32 | | | | | | | | | | | | | | | | | | 20 | 1.6 | | 13 | 2 | 3 | 8 | | 6 | 6 | | | 1 | 1 | | | | | | | 1 | 3 | | | | 246 | |

ABBREVIATIONS

| | |
|---|---|
| C.B. | CATCH BASIN |
| N.D.I. | NARROW DROP INLET |
| D.I. | DROP INLET |
| M.D.I. | MEDIAN DROP INLET |
| M.D.I. (N.S.) | MEDIAN DROP INLET (NARROW SLOT) |
| J.B. | JUNCTION BOX |
| M.H. | MANHOLE |
| T.B.D.I. | TRAFFIC BEARING DROP INLET |
| T.B.J.B. | TRAFFIC BEARING JUCTION BOX |

6/20/00
07-MAR-2006 11:43
$$$$USERNAME$$$$ u3613b.sum
RD212399 3/7/2006 full3h dwgardner RD-Oce34

COMPUTED BY: JBG DATE: 05/31/05
CHECKED BY: DWG DATE: 12/13/05

| PROJECT REFERENCE NO. | SHEET NO. |
|---|---|
| U-3613B | 3-1 |

STATE OF NORTH CAROLINA
DIVISION OF HIGHWAYS

# LIST OF PIPES, ENDWALLS, ETC. (FOR PIPES 48" & UNDER)

| STATION / SIZE / THICKNESS OR GAUGE | LOCATION (LT,RT, OR CL) | STRUCTURE NO. FROM | STRUCTURE NO. TO | TOP ELEVATION | INVERT ELEVATION | INVERT ELEVATION | SLOPE CRITICAL | CLASS III R.C. PIPE (UNLESS NOTED OTHERWISE) 12" | 15" | 18" | 24" | 30" | 36" | 42" | 48" | BITUMINOUS COATED C.S. PIPE TYPE B (UNLESS NOTED OTHRWISE) 12" .064 | 15" .064 | 18" .064 | 24" .064 | 30" .079 | 30" .079 | 36" | 42" .109 | 48" .109 | 15" SIDE DRAIN PIPE | 18" SIDE DRAIN PIPE | 24" SIDE DRAIN PIPE | ENDWALLS STD. 838.01 STD. 838.11 OR STD. 838.80 (UNLESS NOTED OTHERWISE) CU. YDS. R.C.P. | C.S.P. | QUANTITIES FOR DRAINAGE STRUCTURES * TOTAL LF. FOR PAY QUANTITY SHALL BE COL. 'A' + (1.3 X COL.'B') PER EACH (0' THRU 5.0') | LIN. *FT. A 5.0' THRU 10.0' | B 10.0' AND ABOVE | C.B. STD. 840.01 OR STD. 840.02 | FRAME, GRATES AND HOOD STANDARD 840.03 TYPE OF GRATE E | F | G | D.I. STD. 840.14 OR STD. 840.15 | D.I. FRAME & GRATE STD. 840.16 | M.D.I. TYPE "B" STD. 840.18 OR 840.27 | M.D.I. (N.S.) FRAME WITH TWO GRATES STD. 840.24 | J.B. STD. 840.31 OR 840.32 | M.H. FRAME & COVER STD. 840.54 | T.B.J.B. STD. 840.34 | PREFORMED SCOUR HOLE | 30" SIDE DRAIN PIPE | CONCRETE APRON FOR CB | CONCRETE APRON FOR DI | CORR. STEEL ELBOWS NO. & SIZE | CONC. COLLARS CL. "B" C.Y. STD 840.72 | CONC. & BRICK PIPE PLUG, C.Y. STD. 840.71 | PIPE REMOVAL LIN.FT. | REMARKS |
|---|---|---|---|---|---|---|---|---|---|---|---|---|---|---|---|---|---|---|---|---|---|---|---|---|---|---|---|---|---|---|---|---|---|---|---|---|---|---|---|---|---|---|---|---|---|---|---|---|---|---|---|---|---|
| -L- 93+15.00 | RT | 184 | | 66.5 | | | | | | | | | | | | | | | | | | | | | | | | | | 1 | | | | | | 1 | 1 | | | | | | | | | | | | | | | | |
| | | 184 | 185 | | 64.3 | 63.8 | | | 16 | | | | | | | | | | | | | | | | | | | | | | | | | | | | | | | | | | | | | | | | | | | |
| -L- 93+35.00 | RT | 185 | | 66.0 | | | | | | | | | | | | | | | | | | | | | | | | | | 1 | | | | | | 1 | 1 | | | | | | | | | | | | | | | | |
| | | 185 | 186 | | 63.8 | 63.6 | | | 12 | | | | | | | | | | | | | | | | | | | | | | | | | | | | | | | | | | | | | | | | | | | |
| -L- 93+35.00 | RT | 186 | | 67.8 | | | | | | | | | | | | | | | | | | | | | | | | | | 1 | | | | | | | | | 1 | 1 | | | | | | | | | | | | |
| | | 186 | 188 | | 63.6 | 62.5 | | | 120 | | | | | | | | | | | | | | | | | | | | | | | | | | | | | | | | | | | | | | | | | | | |
| -L- 94+60.00 | RT | 187 | | 65.8 | | | | | | | | | | | | | | | | | | | | | | | | | | 1 | | | | | | 1 | 1 | | | | | | | | | | | | | | | | |
| | | 187 | 188 | | 62.6 | 62.5 | | | 12 | | | | | | | | | | | | | | | | | | | | | | | | | | | | | | | | | | | | | | | | | | | |
| -L- 94+60.00 | RT | 188 | | 66.7 | | | | | | | | | | | | | | | | | | | | | | | | | | 1 | | | | | | | | | 1 | 1 | | | | | | | | | | | | |
| -L- 94+60.00 | RT | 189 | | 65.8 | | | | | | | | | | | | | | | | | | | | | | | | | | 1 | | | 1 | | | | | | | | | | | | | | | | | | | |
| | | 189 | 190 | | 62.8 | 62.6 | | | 68 | | | | | | | | | | | | | | | | | | | | | | | | | | | | | | | | | | | | | | | | | | | |
| -L- 94+60.00 | LT | 190 | | 65.6 | | | | | | | | | | | | | | | | | | | | | | | | | | 1 | | | 1 | | | | | | | | | | | | | | | | | | | |
| | | 190 | OUT | | 62.6 | 62.5 | | | 20 | | | | | | | | | | | | | | | | | | | | | | | | | | | | | | | | | | | | | | | | | | | |
| | | 188 | 192 | | 62.5 | 60.6 | | | 164 | | | | | | | | | | | | | | | | | | | | | | | | | | | | | | | | | | | | | | | | | | 48 | REMOVE 24" CONC |
| -L- 96+30.00 | RT | 192 | | 64.8 | | | | | | | | | | | | | | | | | | | | | | | | | | 1 | | | | | | | | | 1 | 1 | | | | | | | | | | | | |
| | | 192 | 191 | | 61.1 | 61.3 | | | 12 | | | | | | | | | | | | | | | | | | | | | | | | | | | | | | | | | | | | | | | | | | | |
| -L- 96+30.00 | RT | 191 | | 64.5 | | | | | | | | | | | | | | | | | | | | | | | | | | 1 | | | | | | 1 | 1 | | | | | | | | | | | | | | | | |
| | | 192 | 193 | | 60.6 | 58.8 | | | | 224 | | | | | | | | | | | | | | | | | | | | | | | | | | | | | | | | | | | | | | | | | | |
| -L- 98+55.00 | RT | 193 | | 62.7 | | | | | | | | | | | | | | | | | | | | | | | | | | 1 | | | | | | | | | 1 | 1 | | | | | | | | | | | | |
| | | 193 | 194 | | 58.3 | 56.1 | | | | | 380 | | | | | | | | | | | | | | | | | | | | | | | | | | | | | | | | | | | | | | | | 76 | REMOVE 18" CONC |
| -L- 102+30.00 | RT | 194 | | 60.5 | | | | | | | | | | | | | | | | | | | | | | | | | | 1 | | | | | | | | | 1 | 1 | | | | | | | | | | | | |
| | | 194 | OUT | | 56.1 | 55.9 | | | | | 12 | | | | | | | | | | | | | | | | | | | | | | | | | | | | | | | 1 | | | | | | | | | | |
| -L- 93+75.00 | LT/RT | 195 | | | | | | | | | | | | | | | | | | | | | | | | | | | | | | | | | | | | | | | | | | | | | | | | 0.232 | 80 | REMOVE DI, 15" CONC, & 18" CONC |
| -L- 93+89.00 | LT | 196 | | 66.0 | | | | | | | | | | | | | | | | | | | | | | | | | | 1 | | 1 | | 1 | | | | | | | | | | | | | | | | | | |
| | | 196 | OUT | | 63.0 | 63.0 | | | 20 | | | | | | | | | | | | | | | | | | | | | | | | | | | | | | | | | | | | | | | | | | | |
| -L- 97+55.00 | LT | 197 | | | | | | | | | | | | | | | | | | | | | | | | | | | | | | | | | | | | | | | | | | | | | | | | | 28 | REMOVE 15" CONC |
| -L- 97+89.00 | RT | 198 | | 62.7 | | | | | | | | | | | | | | | | | | | | | | | | | | 1 | | 1 | | | 1 | | | | | | | | | | | | | | | | | |
| | | 198 | 199 | | 59.7 | 59.5 | | | 72 | | | | | | | | | | | | | | | | | | | | | | | | | | | | | | | | | | | | | | | | | | | |
| -L- 97+89.00 | LT | 199 | | 62.7 | | | | | | | | | | | | | | | | | | | | | | | | | | 1 | | 1 | | 1 | | | | | | | | | | | | | | | | | 24 | REMOVE 18" CONC |
| | | 199 | OUT | | 59.5 | 59.4 | | | 24 | | | | | | | | | | | | | | | | | | | | | | | | | | | | | | | | | | | | | | | | | | | |
| -L- 98+94.00 | LT | 200 | | 60.6 | | | | | | | | | | | | | | | | | | | | | | | | | | 1 | | 1 | | 1 | | | | | | | | | | | | | | | | | | |
| | | 200 | 201 | | 57.6 | 57.3 | | | 44 | | | | | | | | | | | | | | | | | | | | | | | | | | | | | | | | | | | | | | | | | | 104 | REMOVE DIs, & 30" CMP |
| -L- 99+42.00 | LT | 201 | | 60.6 | | | | | | | | | | | | | | | | | | | | | | | | | | 1 | | 1 | | | 1 | | | | | | | | | | | | | | | | | |
| | | 201 | OUT | | 57.3 | 56.1 | | | 28 | | | | | | | | | | | | | | | | | | | | | | | | | | | | | | | | | | | | | | | | | | | |
| -L- 99+25.00 | LT | 202 | | | 57.2 | 56.4 | | | | | 208 | | | | | | | | | | | | | | | | | | | | | | | | | | | | | | | | | | | | | | | | |
| -L- 100+90.00 | RT | 203 | | 60.4 | | | | | | | | | | | | | | | | | | | | | | | | | | 1 | | 1 | | | 1 | | | | | | | | | | | | | | | | | |
| | | 203 | 204 | | 57.4 | 57.1 | | | 80 | | | | | | | | | | | | | | | | | | | | | | | | | | | | | | | | | | | | | | | | | | | |
| -L- 100+90.00 | LT | 204 | | 60.1 | | | | | | | | | | | | | | | | | | | | | | | | | | 1 | | 1 | | | 1 | | | | | | | | | | | | | | | | | |
| | | 204 | OUT | | 57.1 | 56.0 | | | 24 | | | | | | | | | | | | | | | | | | | | | | | | | | | | | | | | | | | | | | | | | | | |
| -L- 103+17.00 | RT | 205 | | 59.5 | | | | | | | | | | | | | | | | | | | | | | | | | | 1 | | 1 | | | 1 | | | | | | | | | | | | | | | | | |
| | | 205 | 206 | | 56.5 | 56.2 | | | 80 | | | | | | | | | | | | | | | | | | | | | | | | | | | | | | | | | | | | | | | | | | | |
| -L- 103+17.00 | LT | 206 | | 59.2 | | | | | | | | | | | | | | | | | | | | | | | | | | 1 | | 1 | | | 1 | | | | | | | | | | | | | | | | | |
| SHEET TOTAL | | | | | | | | | 796 | 224 | 600 | | | | | | | | | | | | | | | | | | | 20 | | 11 | | 5 | 6 | | 4 | 4 | | 5 | 5 | | 1 | | | | | | | | 0.232 | 360 | |

ABBREVIATIONS

| | |
|---|---|
| C.B. | CATCH BASIN |
| N.D.I. | NARROW DROP INLET |
| D.I. | DROP INLET |
| M.D.I. | MEDIAN DROP INLET |
| M.D.I. (N.S.) | MEDIAN DROP INLET (NARROW SLOT) |
| J.B. | JUNCTION BOX |
| M.H. | MANHOLE |
| T.B.D.I. | TRAFFIC BEARING DROP INLET |
| T.B.J.B. | TRAFFIC BEARING JUCTION BOX |

6/20/00

20-APR-2006 08:46
$$$$USERNAME$$$$ u3613b.sum

COMPUTED BY: JBG DATE: 10/10/02
CHECKED BY: DWG DATE: 12/13/05

STATE OF NORTH CAROLINA
DIVISION OF HIGHWAYS

| PROJECT REFERENCE NO. | SHEET NO. |
|---|---|
| U-3613B | 3-J |

# LIST OF PIPES, ENDWALLS, ETC. (FOR PIPES 48" & UNDER)

ABBREVIATIONS

| | |
|---|---|
| C.B. | CATCH BASIN |
| N.D.I. | NARROW DROP INLET |
| D.I. | DROP INLET |
| M.D.I. | MEDIAN DROP INLET |
| M.D.I. (N.S.) | MEDIAN DROP INLET (NARROW SLOT) |
| J.B. | JUNCTION BOX |
| M.H. | MANHOLE |
| T.B.D.I. | TRAFFIC BEARING DROP INLET |
| T.B.J.B. | TRAFFIC BEARING JUCTION BOX |

| STATION / SIZE / THICKNESS OR GAUGE | LOCATION (LT,RT, OR CL) | STRUCTURE NO. FROM | STRUCTURE NO. TO | TOP ELEVATION | INVERT ELEVATION | INVERT ELEVATION | SLOPE CRITICAL | CLASS III R.C.P. PIPE (UNLESS NOTED OTHERWISE) 12" | 15" | 18" | 24" | 30" | 36" | 42" | 48" | BITUMINOUS COATED C.S. PIPE TYPE B (UNLESS NOTED OTHRWISE) 12" .064 | 15" .064 | 18" .064 | 24" .064 | 30" .079 | 36" .079 | 42" .109 | 48" .109 | 15" SIDE DRAIN PIPE | 18" SIDE DRAIN PIPE | 24" SIDE DRAIN PIPE | ENDWALLS STD. 838.01 STD. 838.11 OR STD. 838.80 (UNLESS NOTED OTHERWISE) CU. YDS. R.C.P. | C.S.P. | QUANTITIES FOR DRAINAGE STRUCTURES PER EACH (0' THRU 5.0') | * TOTAL L.F. FOR PAY QUANTITY SHALL BE COL. 'A' + (1.3 X COL. 'B') LIN. *FT. A 5.0' THRU 10.0' | B 10.0' AND ABOVE | C.B. STD. 840.01 OR STD. 840.02 | FRAME, GRATES AND HOOD STANDARD 840.03 TYPE OF GRATE E | F | G | D.I. STD. 840.14 OR STD. 840.15 | D.I. FRAME & GRATE STD. 840.16 | M.D.I. TYPE "B" STD. 840.18 OR 840.27 | M.D.I. (N.S.) FRAME WITH TWO GRATES STD. 840.24 | J.B. STD. 840.31 OR 840.32 | M.H. FRAME & COVER STD. 840.54 | T.B.J.B. STD. 840.34 | PREFORMED SCOUR HOLE | 30" SIDE DRAIN PIPE | CONCRETE APRON FOR CB | CONCRETE APRON FOR DI | CORR. STEEL ELBOWS NO. & SIZE | CONC. COLLARS CL. "B" C.Y. STD 840.72 | CONC. & BRICK PIPE PLUG, C.Y. STD. 840.71 | PIPE REMOVAL LIN.FT. | REMARKS |
|---|---|---|---|---|---|---|---|---|---|---|---|---|---|---|---|---|---|---|---|---|---|---|---|---|---|---|---|---|---|---|---|---|---|---|---|---|---|---|---|---|---|---|---|---|---|---|---|---|---|---|---|
| | | 206 | OUT | | 55.0 | 53.2 | | | 28 | | | | | | | | | | | | | | | | | | | | | | | | | | | | | | | | | | | | | | | | | | |
| | | 206 | 207 | | 55.0 | 56.1 | | | 160 | | | | | | | | | | | | | | | | | | | | | | | | | | | | | | | | | | | | | | | | | | |
| -L- 104+81.00 | LT | 207 | | 59.3 | | | | | | | | | | | | | | | | | | | | | | | | | 1 | | | 1 | 1 | | | | | | | | | | | | | | | | | | |
| | | 207 | 208 | | 56.1 | 56.3 | | | 68 | | | | | | | | | | | | | | | | | | | | | | | | | | | | | | | | | | | | | | | | | | |
| -L- 104+81.00 | RT | 208 | | 59.3 | | | | | | | | | | | | | | | | | | | | | | | | | 1 | | | 1 | 1 | | | | | | | | | | | | | | | | | | |
| | | 209 | OUT | | 53.0 | 51.0 | | | 24 | | | | | | | | | | | | | | | | | | | | | | | | | | | | | | | | | | | | | | | | | | TIES TO EXISTING RCBC |
| -L- 105+45.00 | RT | 209 | | 60.2 | | | | | | | | | | | | | | | | | | | | | | | | | 1 | 2.2 | | | | | | | | | | 1 | 1 | | | | | | | | | | |
| | | 209 | 210 | | 53.0 | 53.7 | | | 244 | | | | | | | | | | | | | | | | | | | | | | | | | | | | | | | | | | | | | | | | | 64 | REMOVE 18" CMP |
| -L- 107+90.00 | RT | 210 | | 60.8 | | | | | | | | | | | | | | | | | | | | | | | | | 1 | 1.5 | | | | | | | | | | 1 | 1 | | | | | | | | | | |
| | | 210 | 211 | | 53.7 | 53.8 | | | 16 | | | | | | | | | | | | | | | | | | | | | | | | | | | | | | | | | | | | | | | | | | |
| -L- 107+90.00 | RT | 211 | | 56.0 | | | | | | | | | | | | | | | | | | | | | | | | | 1 | | | | | | | 1 | 1 | | | | | | | | | | | | | | |
| -L- 106+25.00 | RT | 212 | | | | | | | | | | | | | | | | | | | | | | | | | 40 | | | | | | | | | | | | | | | | | | | | | | | | | |
| -L- 106+66.00 | RT | 213 | | 59.5 | | | | | | | | | | | | | | | | | | | | | | | | | 1 | | | 1 | | | 1 | | | | | | | | | | | | | | | | |
| | | 213 | 214 | | 56.5 | 56.4 | | | 56 | | | | | | | | | | | | | | | | | | | | | | | | | | | | | | | | | | | | | | | | | | |
| -L- 107+24.00 | RT | 214 | | 59.6 | | | | | | | | | | | | | | | | | | | | | | | | | 1 | | | 1 | | | 1 | | | | | | | | | | | | | | | | |
| | | 214 | OUT | | 56.4 | 56.1 | | | 24 | | | | | | | | | | | | | | | | | | | | | | | | | | | | | | | | | | | | | | | | | | |
| | | 214 | 215 | | 56.4 | 57.1 | | | 92 | | | | | | | | | | | | | | | | | | | | | | | | | | | | | | | | | | | | | | | | | | |
| -L- 108+21.00 | RT | 215 | | 60.1 | | | | | | | | | | | | | | | | | | | | | | | | | 1 | | | 1 | | | 1 | | | | | | | | | | | | | | | | |
| | | 215 | 216 | | 57.1 | 58.4 | | | 232 | | | | | | | | | | | | | | | | | | | | | | | | | | | | | | | | | | | | | | | | | 20 | REMOVE 15" CONC |
| -L- 110+56.00 | RT | 216 | | 61.4 | | | | | | | | | | | | | | | | | | | | | | | | | 1 | | | 1 | | | 1 | | | | | | | | | | | | | | | | |
| | | 216 | 217 | | 58.4 | 59.5 | | | 216 | | | | | | | | | | | | | | | | | | | | | | | | | | | | | | | | | | | | | | | | | | |
| -L- 112+75.00 | RT | 217 | | 62.5 | | | | | | | | | | | | | | | | | | | | | | | | | 1 | | | 1 | | | 1 | | | | | | | | | | | | | | | | |
| -L- 106+66.00 | LT | 218 | | 59.5 | | | | | | | | | | | | | | | | | | | | | | | | | 1 | | | 1 | | 1 | | | | | | | | | | | | | | | | | |
| | | 218 | OUT | | 56.5 | 56.2 | | | 40 | | | | | | | | | | | | | | | | | | | | | | | | | | | | | | | | | | | | | | | | | | |
| -L- 108+21.00 | LT | 219 | | 60.1 | | | | | | | | | | | | | | | | | | | | | | | | | 1 | | | 1 | | 1 | | | | | | | | | | | | | | | | | |
| | | 219 | OUT | | 56.8 | 56.5 | | | | 36 | | | | | | | | | | | | | | | | | | | | | | | | | | | | | | | | | | | | | | | | | |
| | | 219 | 220 | | 56.8 | 58.2 | | | | 232 | | | | | | | | | | | | | | | | | | | | | | | | | | | | | | | | | | | | | | | 0.09 | | |
| -L- 110+56.00 | LT | 220 | | 61.4 | | | | | | | | | | | | | | | | | | | | | | | | | 1 | | | 1 | | 1 | | | | | | | | | | | | | | | | | |
| -L- 107+10.00 | LT | 221 | | | | | | | | | | | | | | | | | | | | | | | | | | 44 | | | | | | | | | | | | | | | | | | | | | | | 40 | REMOVE 24" HDPE |
| | | 220 | 222 | | 58.2 | 59.2 | | | | 216 | | | | | | | | | | | | | | | | | | | | | | | | | | | | | | | | | | | | | | | | | |
| -L- 112+75.00 | LT | 222 | | 62.5 | | | | | | | | | | | | | | | | | | | | | | | | | 1 | | | 1 | | 1 | | | | | | | | | | | | | | | | | |
| | | 222 | 223 | | 59.5 | 60.5 | | | 276 | | | | | | | | | | | | | | | | | | | | | | | | | | | | | | | | | | | | | | | | | | |
| -L- 115+55.00 | LT | 223 | | 63.5 | | | | | | | | | | | | | | | | | | | | | | | | | 1 | | | 1 | | 1 | | | | | | | | | | | | | | | | | |
| | | 223 | 224 | | 60.5 | 62.8 | | | 20 | | | | | | | | | | | | | | | | | | | | | | | | | | | | | | | | | | | | | | | | | | |
| -L- 115+66.00 | LT | 224 | | 65.0 | | | | | | | | | | | | | | | | | | | | | | | | | 1 | | | | | | | 1 | 1 | | | | | | | | | | | | | | |
| | | 223 | 225 | | 60.5 | 61.2 | | | 88 | | | | | | | | | | | | | | | | | | | | | | | | | | | | | | | | | | | | | | | | | | |
| -L- 116+48.00 | LT | 225 | | 64.2 | | | | | | | | | | | | | | | | | | | | | | | | | 1 | | | 1 | | 1 | | | | | | | | | | | | | | | | | |
| | | 225 | 226 | | 61.2 | 62.4 | | | 40 | | | | | | | | | | | | | | | | | | | | | | | | | | | | | | | | | | | | | | | | | | |
| -L- 116+48.00 | RT | 226 | | 65.6 | | | | | | | | | | | | | | | | | | | | | | | | | 1 | | | | | | | 1 | 1 | | | | | | | | | 1 | | | | | |
| -L- 115+00.00 | LT/RT | 227 | | | | | | | | | | | | | | | | | | | | | | | | | | | | | | | | | | | | | | | | | | | | | | | | 66 | REMOVE 15" CMP AND 12" CONC |
| SHEET TOTAL | | | | | | | | | 1624 | 484 | | | | | | | | | | | | | | | 40 | 44 | | | 18 | 3.7 | | 13 | 2 | 6 | 5 | 3 | 3 | | | 2 | 2 | | | | | 1 | | | 0.09 | 190 | |

| COMPUTED BY: JBG | DATE: 05/31/05 |
|---|---|
| CHECKED BY: DWG | DATE: 12/13/05 |

| PROJECT REFERENCE NO. | SHEET NO. |
|---|---|
| U-3613B | 3-K |

STATE OF NORTH CAROLINA
DIVISION OF HIGHWAYS

# LIST OF PIPES, ENDWALLS, ETC. (FOR PIPES 48" & UNDER)

| STATION / SIZE / THICKNESS OR GAUGE | LOCATION (LT, RT, OR CL) | STRUCTURE NO. FROM | STRUCTURE NO. TO | TOP ELEVATION | INVERT ELEVATION | INVERT ELEVATION | SLOPE CRITICAL | CLASS III R.C. PIPE (UNLESS NOTED OTHERWISE) 12" | 15" | 18" | 24" | 30" | 36" | 42" | 48" | BITUMINOUS COATED C.S. PIPE TYPE B (UNLESS NOTED OTHRWISE) 12" .064 | 15" .064 | 18" .064 | 24" .064 | 24" .079 | 30" .079 | 30" .079 | 36" .109 | 42" .109 | 48" .109 | 48" .109 | 15" SIDE DRAIN PIPE | 18" SIDE DRAIN PIPE | 24" SIDE DRAIN PIPE | ENDWALLS STD. 838.01 STD. 838.11 OR STD. 838.80 (UNLESS NOTED OTHERWISE) CU. YDS. R.C.P. | C.S.P. | QUANTITIES FOR DRAINAGE STRUCTURES * TOTAL L.F. FOR PAY QUANTITY SHALL BE COL. "A" + (1.3 X COL. "B") LIN. FT. A: PER EACH (0' THRU 5.0') | B: 5.0' THRU 10.0' | B: 10.0' AND ABOVE | C.B. STD. 840.01 OR STD. 840.02 | FRAME, GRATES AND HOOD STANDARD 840.03 TYPE OF GRATE E | F | G | D.I. STD. 840.14 OR STD. 840.15 | D.I. FRAME & GRATE STD. 840.16 | M.D.I. TYPE "B" STD. 840.18 OR 840.27 | M.D.I. (N.S.) FRAME WITH TWO GRATES STD. 840.24 | J.B. STD. 840.31 OR 840.32 | M.H. FRAME & COVER STD. 840.54 | T.B.J.B. STD. 840.34 | PREFORMED SCOUR HOLE | 30" SIDE DRAIN PIPE | CONCRETE APRON FOR CB | CONCRETE APRON FOR DI | CORR. STEEL ELBOWS NO. & SIZE | CONC. COLLARS CL. "B" C.Y. STD 840.72 | CONC. & BRICK PIPE PLUG, C.Y. STD. 840.71 | PIPE REMOVAL LIN.FT. | REMARKS |
|---|---|---|---|---|---|---|---|---|---|---|---|---|---|---|---|---|---|---|---|---|---|---|---|---|---|---|---|---|---|---|---|---|---|---|---|---|---|---|---|---|---|---|---|---|---|---|---|---|---|---|---|---|---|
| -L- 119+00.00 | RT | 228 | | 65.4 | | | | | | | | | | | | | | | | | | | | | | | | | | | 1 | | | | | | | | 1 | 1 | | | | | | | | | | | | 1 | | | | | |
| | | 228 | 229 | | 62.3 | 61.2 | | | 40 | | | | | | | | | | | | | | | | | | | | | | | | | | | | | | | | | | | | | | | | | | | | | |
| -L- 119+00.00 | LT | 229 | | 64.2 | | | | | | | | | | | | | | | | | | | | | | | | | | | 1 | | | 1 | | | 1 | | | | | | | | | | | | | | | | | | | |
| | | 229 | 230 | | 61.2 | 60.8 | | | 132 | | | | | | | | | | | | | | | | | | | | | | | | | | | | | | | | | | | | | | | | | | | | | |
| -L- 120+37.00 | LT | 230 | | 63.8 | | | | | | | | | | | | | | | | | | | | | | | | | | | 1 | | | 1 | | | 1 | | | | | | | | | | | | | | | | | | | |
| | | 230 | 231 | | 60.8 | 60.7 | | | 24 | | | | | | | | | | | | | | | | | | | | | | | | | | | | | | | | | | | | | | | | | | | | | |
| | | IN | 231 | | 61.2 | 60.1 | | | | 8 | | | | | | | | | | | | | | | | | | | | | | | | | | | | | | | | | | | | | | | | | | 0.4465 | | | |
| -L- 120+65.00 | LT | 231 | | 63.9 | | | | | | | | | | | | | | | | | | | | | | | | | | | 1 | | | 1 | 1 | | | | | | | | | | | | | | | | | | | | |
| | | 231 | 232 | | 60.1 | 59.8 | | | | | 92 | | | | | | | | | | | | | | | | | | | | | | | | | | | | | | | | | | | | | | | | | | | |
| -L- 121+60.00 | LT | 232 | | 64.1 | | | | | | | | | | | | | | | | | | | | | | | | | | | 1 | | | 1 | | 1 | | | | | | | | | | | | | | | | | | | |
| | | 232 | 233 | | 61.1 | 61.9 | | | | 116 | | | | | | | | | | | | | | | | | | | | | | | | | | | | | | | | | | | | | | | | | | | | |
| -L- 122+78.00 | LT | 233 | | 64.9 | | | | | | | | | | | | | | | | | | | | | | | | | | | 1 | | | 1 | | 1 | | | | | | | | | | | | | | | | | | | |
| | | 232 | 236 | | 59.8 | 59.6 | | | | | | 72 | | | | | | | | | | | | | | | | | | | | | | | | | | | | | | | | | | | | | | | | | | |
| -L- 121+10.00 | LT / RT | 234 | | | | | | | | | | | | | | | | | | | | | | | | | | | | | | | | | | | | | | | | | | | | | | | | | | | | 180 | REMOVE HW, 18"&30" CONC, & 18"&30" CMP |
| -L- 120+57.00 | RT | 235 | | 63.8 | | | | | | | | | | | | | | | | | | | | | | | | | | | 1 | | | 1 | | | 1 | | | | | | | | | | | | | | | | | | | |
| | | 235 | 236 | | 60.8 | 60.5 | | | 112 | | | | | | | | | | | | | | | | | | | | | | | | | | | | | | | | | | | | | | | | | | | | | |
| -L- 121+71.00 | RT | 236 | | 64.1 | | | | | | | | | | | | | | | | | | | | | | | | | | | 1 | | | 1 | | | 1 | | | | | | | | | | | | | | | | | | | |
| | | 236 | 237 | | 59.6 | 59.1 | | | | | | 32 | | | | | | | | | | | | | | | | | | | | | | | | | | | | | | | | | | | | | | | | | | |
| -L- 121+50.00 | RT | 237 | | 62.6 | | | | | | | | | | | | | | | | | | | | | | | | | | | 1 | | | | | | | | 1 | 1 | | | | | | | | | | | | | | | | |
| | | 237 | OUT | | | | | | | | | 8 | | | | | | | | | | | | | | | | | | | | | | | | | | | | | | | | | | | | | | | | 0.656 | | | |
| | | 236 | 238 | | 61.1 | 62.4 | | | 176 | | | | | | | | | | | | | | | | | | | | | | | | | | | | | | | | | | | | | | | | | | | | | |
| -L- 123+50.00 | RT | 238 | | 65.4 | | | | | | | | | | | | | | | | | | | | | | | | | | | 1 | | | 1 | | | 1 | | | | | | | | | | | | | | | | | | 32 | REMOVE 15" CONC |
| | | 238 | 239 | | 62.4 | 63.5 | | | 168 | | | | | | | | | | | | | | | | | | | | | | | | | | | | | | | | | | | | | | | | | | | | | |
| -L- 125+17.50 | RT | 239 | | 66.5 | | | | | | | | | | | | | | | | | | | | | | | | | | | 1 | | | 1 | | | 1 | | | | | | | | | | | | | | | | | | | |
| | | 239 | 240 | | 63.5 | 64.5 | | | 28 | | | | | | | | | | | | | | | | | | | | | | | | | | | | | | | | | | | | | | | | | | | | | |
| -L- 125+17.50 | RT | 240 | | 67.6 | | | | | | | | | | | | | | | | | | | | | | | | | | | 1 | | | | | | | | 1 | 1 | | | | | | | | | | | | 1 | | | | |
| -L- 123+45.00 | RT | 241 | | | | | | | | | | | | | | | | | | | | | | | | | | | | | | | | | | | | | | | | | | | | | | | | | | | 32 | REMOVE 15" CONC |
| | | | | | | | | | | | | | | | | | | | | | | | | | | | | | | | | | | | | | | | | | | | | | | | | | | | | | | | |
| -Y11- 11+29.00 | LT | 242 | | | 65.1 | 64.9 | | | | 60 | | | | | | | | | | | | | | | | | | | | | | | | | | | | | | | | | | | | | | | | | | | 60 | REMOVE 15" CONC |
| | | IN | 243 | | 64.9 | 64.3 | | | 16 | | | | | | | | | | | | | | | | | | | | | | | | | | | | | | | | | | | | | | | | | | | | | | |
| -L- 126+48.00 | RT | 243 | | 67.9 | | | | | | | | | | | | | | | | | | | | | | | | | | | 1 | | | | | | | | | | 1 | 1 | | | | | | | | | | | | | |
| | | 243 | 244 | | 64.3 | 62.4 | | | 296 | | | | | | | | | | | | | | | | | | | | | | | | | | | | | | | | | | | | | | | | | | | | | |
| -L- 129+45.00 | RT | 244 | | 66.0 | | | | | | | | | | | | | | | | | | | | | | | | | | | 1 | | | | | | | | | | 1 | 1 | | | | | | | | | | | | | 20 | REMOVE 15" CONC |
| | | 244 | 245 | | 62.4 | 62.5 | | | 12 | | | | | | | | | | | | | | | | | | | | | | | | | | | | | | | | | | | | | | | | | | | | | |
| -L- 129+45.00 | RT | 245 | | 64.8 | | | | | | | | | | | | | | | | | | | | | | | | | | | 1 | | | | | | | | 1 | 1 | | | | | | | | | | | | | | | |
| | | 244 | 252 | | 62.4 | 59.9 | | | 148 | | | | | | | | | | | | | | | | | | | | | | | | | | | | | | | | | | | | | | | | | | | | | |
| -L- 126+90.00 | LT | 246 | | | | | | | | | | | | | | | | | | | | | | | | | | | | | | | | | | | | | | | | | | | | | | | | | | | 20 | REMOVE 15" CONC |
| | | | | | | | | | | | | | | | | | | | | | | | | | | | | | | | | | | | | | | | | | | | | | | | | | | | | | | | |
| -L- 128+16.00 | LT | 247 | | 67.7 | | | | | | | | | | | | | | | | | | | | | | | | | | | 1 | | | | | | | | 1 | 1 | | | | | | | | | | | | 1 | | | | |
| | | 247 | 248 | | 64.5 | 63.7 | | | 88 | | | | | | | | | | | | | | | | | | | | | | | | | | | | | | | | | | | | | | | | | | | | | |
| -L- 129+07.00 | LT | 248 | | 66.9 | | | | | | | | | | | | | | | | | | | | | | | | | | | 1 | | | | | | | | 1 | 1 | | | | | | | | | | | | 1 | | | | |
| | | 248 | 249 | | 62.5 | 62.3 | | | 32 | | | | | | | | | | | | | | | | | | | | | | | | | | | | | | | | | | | | | | | | | | | | | |
| -L- 129+07.00 | LT | 249 | | 67.0 | | | | | | | | | | | | | | | | | | | | | | | | | | | 1 | | | 1 | | | 1 | | | | | | | | | | | | | | | | | | | |
| | | 249 | OUT | | 62.3 | 61.6 | | | 24 | | | | | | | | | | | | | | | | | | | | | | | | | | | | | | | | | | | | | | | | | | | | | |
| SHEET TOTAL | | | | | | | | | 1296 | 184 | 92 | 112 | | | | | | | | | | | | | | | | | | | 18 | | | 10 | 1 | 2 | 7 | | 6 | 6 | | | 2 | 2 | | | | | | | | 4 | | 1.1025 | | 344 | |

ABBREVIATIONS

| | |
|---|---|
| C.B. | CATCH BASIN |
| N.D.I. | NARROW DROP INLET |
| D.I. | DROP INLET |
| M.D.I. | MEDIAN DROP INLET |
| M.D.I. (N.S.) | MEDIAN DROP INLET (NARROW SLOT) |
| J.B. | JUNCTION BOX |
| M.H. | MANHOLE |
| T.B.D.I. | TRAFFIC BEARING DROP INLET |
| T.B.J.B. | TRAFFIC BEARING JUCTION BOX |

6/20/00

07-MAR-2006 11:43
$$$$USERNAME$$$$ u3613b.sum

6/20/00

COMPUTED BY: JBG DATE: 05/31/05
CHECKED BY: DWG DATE: 12/13/05

| PROJECT REFERENCE NO. | SHEET NO. |
|---|---|
| U-3613B | 3-L |

STATE OF NORTH CAROLINA
DIVISION OF HIGHWAYS

## LIST OF PIPES, ENDWALLS, ETC. (FOR PIPES 48" & UNDER)

| STATION / SIZE / THICKNESS OR GAUGE | LOCATION (LT, RT, OR CL) | STRUCTURE NO. FROM | STRUCTURE NO. TO | TOP ELEVATION | INVERT ELEVATION | INVERT ELEVATION | SLOPE CRITICAL | CLASS III R.C. PIPE (UNLESS NOTED OTHERWISE) 12" | 15" | 18" | 24" | 30" | 36" | 42" | 48" | BITUMINOUS COATED C.S. PIPE TYPE B (UNLESS NOTED OTHRWISE) 12" .064 | 15" .064 | 18" .064 | 24" .064 | 30" .079 | 36" .079 | 42" .109 | 48" .109 | 15" SIDE DRAIN PIPE | 18" SIDE DRAIN PIPE | 24" SIDE DRAIN PIPE | ENDWALLS STD. 838.01 STD. 838.11 OR STD. 838.80 (UNLESS NOTED OTHERWISE) CU. YDS. R.C.P. | C.S.P. | QUANTITIES FOR DRAINAGE STRUCTURES * TOTAL L.F. FOR PAY QUANTITY SHALL BE COL. 'A' + (1.3 X COL.'B') PER EACH (0' THRU 5.0') | LIN. *FT. A 5.0' THRU 10.0' | B 10.0' AND ABOVE | C.B. STD. 840.01 OR STD. 840.02 | FRAME, GRATES AND HOOD STANDARD 840.03 TYPE OF GRATE E | F | G | D.I. STD. 840.14 OR STD. 840.15 | D.I. FRAME & GRATE STD. 840.16 | M.D.I. TYPE "B" STD. 840.18 OR 840.27 | M.D.I. (N.S.) FRAME WITH TWO GRATES STD. 840.24 | J.B. STD. 840.31 OR 840.32 | M.H. FRAME & COVER STD. 840.54 | T.B.J.B. STD. 840.34 | PREFORMED SCOUR HOLE | 30" SIDE DRAIN PIPE | CONCRETE APRON FOR CB | CONCRETE APRON FOR DI | CORR. STEEL ELBOWS NO. & SIZE | CONC. COLLARS CL. "B" C.Y. STD 840.72 | CONC. & BRICK PIPE PLUG, C.Y. STD. 840.71 | PIPE REMOVAL LIN.FT. | REMARKS |
|---|---|---|---|---|---|---|---|---|---|---|---|---|---|---|---|---|---|---|---|---|---|---|---|---|---|---|---|---|---|---|---|---|---|---|---|---|---|---|---|---|---|---|---|---|---|---|---|---|---|---|---|
| | | 248 | 250 | | 62.5 | 62.7 | | | 36 | | | | | | | | | | | | | | | | | | | | | | | | | | | | | | | | | | | | | | | | | | |
| -L- 129+07.00 | LT | 250 | | 65.7 | | | | | | | | | | | | | | | | | | | | | | | | | 1 | | | 1 | | 1 | | | | | | | | | | | | | | | | | |
| -L- 130+34.00 | RT | 251 | | 64.4 | | | | | | | | | | | | | | | | | | | | | | | | | 1 | | | 1 | | 1 | | | | | | | | | | | | | | | | | |
| | | 251 | 251A | | 61.4 | 61.1 | | | 80 | | | | | | | | | | | | | | | | | | | | | | | | | | | | | | | | | | | | | | | | | | |
| -L- 130+18.00 | | 251A | | 65.1 | | | | | | | | | | | | | | | | | | | | | | | | | 1 | | | 1 | | | 1 | | | | | | | | | | | | | | | 30 | REMOVE 15" CONC |
| -L- 130+95.00 | RT | 252 | | 64.0 | | | | | | | | | | | | | | | | | | | | | | | | | 1 | | | | | | | | | | | | 1 | 1 | | | | | | | | 132 | REMOVE DI AND 15" CONC |
| | | 252 | 253 | | 59.0 | 59.3 | | | 36 | | | | | | | | | | | | | | | | | | | | | | | | | | | | | | | | | | | | | | | | | | |
| -Y12- 11+14.00 | RT | 253 | | 62.3 | | | | | | | | | | | | | | | | | | | | | | | | | 1 | | | 1 | | | 1 | | | | | | | | | | | | | | | | |
| | | 253 | IN | | 59.3 | 59.6 | | | 20 | | | | | | | | | | | | | | | | | | | | | | | | | | | | | | | | | | | | | | | | | | |
| | | 253 | 254 | | 59.3 | 59.5 | | | 32 | | | | | | | | | | | | | | | | | | | | | | | | | | | | | | | | | | | | | | | | | | |
| -Y12- 11+14.00 | LT | 254 | | 62.5 | | | | | | | | | | | | | | | | | | | | | | | | | 1 | | | 1 | | 1 | | | | | | | | | | | | | | | | | |
| | | 254 | IN | | 59.5 | 59.7 | | | 12 | | | | | | | | | | | | | | | | | | | | | | | | | | | | | | | | | | | | | | | | | | |
| | | 255 | OUT | | 59.7 | 58.7 | | | | 24 | | | | | | | | | | | | | | | | | | | | | | | | | | | | | | | | | | | | | | | | | |
| | | 251A | 255 | | 61.1 | 60.8 | | | 100 | | | | | | | | | | | | | | | | | | | | | | | | | | | | | | | | | | | | | | | | | | |
| -L- 131+22.00 | LT | 255 | | 64.1 | | | | | | | | | | | | | | | | | | | | | | | | | 1 | | | 1 | | | 1 | | | | | | | | | | | | | | | 130 | REMOVE DI'S AND 24" CMP |
| | | 255 | 256 | | 59.7 | 59.9 | | | 52 | | | | | | | | | | | | | | | | | | | | | | | | | | | | | | | | | | | | | | | | | | |
| -L- 131+77.00 | LT | 256 | | 62.9 | | | | | | | | | | | | | | | | | | | | | | | | | 1 | | | 1 | | | 1 | | | | | | | | | | | | | | | | |
| | | IN | 257 | | 61.2 | 60.5 | | | | | 20 | | | | | | | | | | | | | | | | | | | | | | | | | | | | | | | | | | | | | | | | |
| -Y12A- 10+72.00 | LT | 257 | | 64.2 | | | | | | | | | | | | | | | | | | | | | | | | | 1 | | | 1 | | | 1 | | | | | | | | | | | | | | | | |
| | | 257 | 258 | | 60.5 | 60.1 | | | | | 48 | | | | | | | | | | | | | | | | | | | | | | | | | | | | | | | | | | | | | | | | |
| -Y12A- 10+64.00 | RT | 258 | | 63.8 | | | | | | | | | | | | | | | | | | | | | | | | | 1 | | | 1 | | 1 | | | | | | | | | | | | | | | | | |
| | | 258 | OUT | | 60.1 | 58.7 | | | | | 20 | | | | | | | | | | | | | | | | | | | | | | | | | | | | | | | | | | | | | | | | |
| | | 252 | 259 | | 59.0 | 58.3 | | | | 116 | | | | | | | | | | | | | | | | | | | | | | | | | | | | | | | | | | | | | | | | | |
| | | IN | 259 | | 59.5 | 59.3 | | | 16 | | | | | | | | | | | | | | | | | | | | | | | | | | | | | | | | | | | | | | | | | | |
| -L- 132+13.00 | RT | 259 | | 63.6 | | | | | | | | | | | | | | | | | | | | | | | | | 1 | 0.3 | | | | | | | | | | 1 | 1 | | | | | | | | | 130 | REMOVE DI'S AND 15" CONC |
| | | 259 | 259A | | 58.3 | 56.8 | | | | 236 | | | | | | | | | | | | | | | | | | | | | | | | | | | | | | | | | | | | | | | | | |
| -L- 134+51.00 | RT | 259A | | 61.8 | | | | | | | | | | | | | | | | | | | | | | | | | 1 | | | | | | | | | | | 1 | 1 | | | | | | | | | | |
| | | 259A | OUT | | 56.8 | 55.0 | | | | | | | | | | | | 36 | | | | | | | | | | | | | | | | | | | | | | | | | | | | | 2@18" | | | | SADDLE BRANCH CONNECTOR |
| -L- 134+12.00 | RT | 260 | | 61.0 | | | | | | | | | | | | | | | | | | | | | | | | | 1 | | | 1 | | 1 | | | | | | | | | | | | | | | | 140 | REMOVE DI'S AND 15" CONC |
| | | 260 | 261 | | 57.7 | 57.8 | | | 48 | | | | | | | | | | | | | | | | | | | | | | | | | | | | | | | | | | | | | | | | | | |
| -L- 134+63.00 | RT | 261 | | 60.8 | | | | | | | | | | | | | | | | | | | | | | | | | 1 | | | 1 | 1 | | | | | | | | | | | | | | | | | | |
| | | 261 | 262 | | 57.8 | 58.0 | | | 20 | | | | | | | | | | | | | | | | | | | | | | | | | | | | | | | | | | | | | | | | | | |
| -L- 134+83.00 | RT | 262 | | 61.0 | | | | | | | | | | | | | | | | | | | | | | | | | 1 | | | 1 | 1 | | | | | | | | | | | | | | | | | | |
| | | IN | 263A | | 58.3 | 57.4 | | | | | 40 | | | | | | | | | | | | | | | | | | | | | | | | | | | | | | | | | | | | | | | | |
| -L- 133+00.00 | LT | 263A | | 63.5 | | | | | | | | | | | | | | | | | | | | | | | | | 1 | 1.1 | | | | | | | | | | | 1 | 1 | | | | | | | | 80 | REMOVE 24" CMP |
| | | 263A | OUT | | 57.4 | 56.5 | | | | | 40 | | | | | | | | | | | | | | | | | | | | | | | | | | | | | | | | | | | | | | | | |
| | | IN | 263 | | 59.4 | 59.0 | | | | | | | | | | | 32 | | | | | | | | | | | | | | | | | | | | | | | | | | | | | | 0.399 | | | |
| -L- 133+00.00 | LT | 263 | | 61.7 | | | | | | | | | | | | | | | | | | | | | | | | | 1 | 1.8 | | | | | | | | | | | 1 | 1 | | | | | | | | | |
| | | 263 | 263B | | 54.9 | 54.1 | | | 208 | | | | | | | | | | | | | | | | | | | | | | | | | | | | | | | | | | | | | | | | | | |
| -L- 135+12.00 | | 263B | | 61.8 | | | | | | | | | | | | | | | | | | | | | | | | | 1 | 2.7 | | | | | | | | | | 1 | 1 | | | | | | | | | | |
| | | 263B | OUT | | 54.1 | 54.0 | | | | | | | | | | | | 20 | | | | | | | | | | | | | | | | | | | | | | | | | | | | | | | | | SADDLE BRANCH CONNECTOR |
| -L- 133+45.50 | LT | 264 | | 61.5 | | | | | | | | | | | | | | | | | | | | | | | | | 1 | | | 1 | | | 1 | | | | | | | | | | | | | | | | |
| | | 264 | OUT | | 57.0 | 56.5 | | | 28 | | | | | | | | | | | | | | | | | | | | | | | | | | | | | | | | | | | | | | | | | | |
| | | 264 | 265 | | 57.0 | 57.5 | | | 64 | | | | | | | | | | | | | | | | | | | | | | | | | | | | | | | | | | | | | | | | | | |
| -L- 134+12.00 | LT | 265 | | 61.0 | | | | | | | | | | | | | | | | | | | | | | | | | 1 | | | 1 | | | 1 | | | | | | | | | | | | | | | | |
| | | 265 | 260 | | 57.5 | 57.7 | | | 68 | | | | | | | | | | | | | | | | | | | | | | | | | | | | | | | | | | | | | | | | | | |
| | | 265 | 266 | | 57.6 | 57.8 | | | 68 | | | | | | | | | | | | | | | | | | | | | | | | | | | | | | | | | | | | | | | | | | |
| -L- 134+83.00 | LT | 266 | | 60.8 | | | | | | | | | | | | | | | | | | | | | | | | | 1 | | | 1 | 1 | | | | | | | | | | | | | | | | | | |
| SHEET TOTAL | | | | | | | | | 888 | 376 | 168 | | | | | | 32 | 56 | | | | | | | | | | | 21 | 5.9 | | 15 | 3 | 5 | 7 | | | | | 3 | 6 | 3 | | | | | 2@18" | 0.399 | | 642 | |

ABBREVIATIONS

C.B. CATCH BASIN
N.D.I. NARROW DROP INLET
D.I. DROP INLET
M.D.I. MEDIAN DROP INLET
M.D.I. (N.S.) MEDIAN DROP INLET (NARROW SLOT)
J.B. JUNCTION BOX
M.H. MANHOLE
T.B.D.I. TRAFFIC BEARING DROP INLET
T.B.J.B. TRAFFIC BEARING JUCTION BOX

07-MAR-2006 11:43
r:\proj\u3613b.sum
$$$$USERNAME$$$$

RD212399 3/7/2006 full31 dwgardner RD-Oce34

6/20/00

COMPUTED BY: JBG DATE: 05/31/05
CHECKED BY: DWG DATE: 12/13/05

STATE OF NORTH CAROLINA
DIVISION OF HIGHWAYS

| PROJECT REFERENCE NO. | SHEET NO. |
|---|---|
| U-3613B | 3-M |

# LIST OF PIPES, ENDWALLS, ETC. (FOR PIPES 48" & UNDER)

ABBREVIATIONS

| | |
|---|---|
| C.B. | CATCH BASIN |
| N.D.I. | NARROW DROP INLET |
| D.I. | DROP INLET |
| M.D.I. | MEDIAN DROP INLET |
| M.D.I. (N.S.) | MEDIAN DROP INLET (NARROW SLOT) |
| J.B. | JUNCTION BOX |
| M.H. | MANHOLE |
| T.B.D.I. | TRAFFIC BEARING DROP INLET |
| T.B.J.B. | TRAFFIC BEARING JUCTION BOX |

| STATION | LOCATION (LT,RT, OR CL) | STRUCTURE NO. | | TOP ELEVATION | INVERT ELEVATION | INVERT ELEVATION | SLOPE CRITICAL | CLASS III R.C. PIPE (UNLESS NOTED OTHERWISE) | | | | | | | | BITUMINOUS COATED C.S. PIPE TYPE B (UNLESS NOTED OTHRWISE) | | | | | | | | 15" SIDE DRAIN PIPE | 18" SIDE DRAIN PIPE | 24" SIDE DRAIN PIPE | ENDWALLS STD. 838.01 STD. 838.11 OR STD. 838.80 (UNLESS NOTED OTHERWISE) CU. YDS. | | QUANTITIES FOR DRAINAGE STRUCTURES | * TOTAL L.F. FOR PAY QUANTITY SHALL BE COL. 'A' + (1.3 X COL.'B') LIN. *FT. | | C.B. STD. 840.01 OR STD. 840.02 | FRAME, GRATES AND HOOD STANDARD 840.03 TYPE OF GRATE | | | D.I. STD. 840.14 OR STD. 840.15 | D.I. FRAME & GRATE STD. 840.16 | M.D.I. TYPE "B" STD. 840.18 OR 840.27 | M.D.I. (N.S.) FRAME WITH TWO GRATES STD. 840.24 | J.B. STD. 840.31 OR 840.32 | M.H. FRAME & COVER STD. 840.54 | T.B.J.B. STD. 840.34 | PREFORMED SCOUR HOLE | 30" SIDE DRAIN PIPE | CONCRETE APRON FOR CB | CONCRETE APRON FOR DI | CORR. STEEL ELBOWS NO. & SIZE | CONC. COLLARS CL. "B" C.Y. STD 840.72 | CONC. & BRICK PIPE PLUG, C.Y. STD. 840.71 | PIPE REMOVAL LIN.FT. | REMARKS |
|---|---|---|---|---|---|---|---|---|---|---|---|---|---|---|---|---|---|---|---|---|---|---|---|---|---|---|---|---|---|---|---|---|---|---|---|---|---|---|---|---|---|---|---|---|---|---|---|---|---|---|---|
| SIZE | | | | | | | | 12" | 15" | 18" | 24" | 30" | 36" | 42" | 48" | 12" | 15" | 18" | 24" | 30" | 36" | 42" | 48" | | | | | | | | | | | | | | | | | | | | | | | | | | | | |
| THICKNESS OR GAUGE | | FROM | TO | | | | | | | | | | | | | .064 | .064 | .064 | .064 | .079 | .079 | .109 | .109 | | | | R.C.P. | C.S.P. | PER EACH (0' THRU 5.0') | A 5.0' THRU 10.0' | B 10.0' AND ABOVE | | E | F | G | | | | | | | | | | | | | | | | |
| -L- 136+43.00 | RT | 267A | | 62.6 | | | | | | | | | | | | | | | | | | | | | | | | | 1 | | | 1 | | 1 | | | | | | | | | | | 1 | | | | | | |
| | | 267A | 267 | | 59.6 | 59.3 | | | 24 | | | | | | | | | | | | | | | | | | | | | | | | | | | | | | | | | | | | | | | | | | |
| -L- 136+17.00 | RT | 267 | | 62.3 | | | | | | | | | | | | | | | | | | | | | | | | | 1 | | | 1 | | 1 | | | | | | | | | | | 1 | | | | | | |
| | | 267 | 268 | | 59.3 | 58.3 | | | 40 | | | | | | | | | | | | | | | | | | | | | | | | | | | | | | | | | | | | | | | | | | |
| -L- 136+17.00 | LT | 268 | | 61.3 | | | | | | | | | | | | | | | | | | | | | | | | | 1 | | | 1 | | 1 | | | | | | | | | | | | | | | | | |
| | | 268 | 269 | | 58.3 | 58.0 | | | 64 | | | | | | | | | | | | | | | | | | | | | | | | | | | | | | | | | | | | | | | | | | |
| -L- 136+85.00 | LT | 269 | | 61.7 | | | | | | | | | | | | | | | | | | | | | | | | | 1 | | | 1 | | 1 | | | | | | | | | | | | | | | | | |
| | | 269 | OUT | | 58.0 | 57.9 | | | | 20 | | | | | | | | | | | | | | | | | | | | | | | | | | | | | | | | | 1 | | | | | | | | |
| | | 269 | 271 | | 58.7 | 60.3 | | | 136 | | | | | | | | | | | | | | | | | | | | | | | | | | | | | | | | | | | | | | | | | 128 | REMOVE 15" CP & 15" CONC |
| -L- 138+25.00 | LT | 271 | | 63.3 | | | | | | | | | | | | | | | | | | | | | | | | | 1 | | | 1 | | 1 | | | | | | | | | | | | | | | | | |
| | | 271 | 270 | | 60.3 | 61.7 | | | 40 | | | | | | | | | | | | | | | | | | | | | | | | | | | | | | | | | | | | | | | | | | |
| -L- 138+27.00 | RT | 270 | | 64.9 | | | | | | | | | | | | | | | | | | | | | | | | | 1 | | | | | | | 1 | 1 | | | | | | | | | 1 | | | | | |
| | | 271 | 272 | | 60.3 | 63.0 | | | 220 | | | | | | | | | | | | | | | | | | | | | | | | | | | | | | | | | | | | | | | | | | |
| -L- 140+52.00 | LT | 272 | | 66.0 | | | | | | | | | | | | | | | | | | | | | | | | | 1 | | | 1 | | 1 | | | | | | | | | | | | | | | | 32 | REMOVE 15" CONC |
| | | 272 | 273 | | 63.0 | 64.2 | | | 40 | | | | | | | | | | | | | | | | | | | | | | | | | | | | | | | | | | | | | | | | | | |
| -L- 140+51.00 | RT | 273 | | 67.4 | | | | | | | | | | | | | | | | | | | | | | | | | 1 | | | | | | | 1 | 1 | | | | | | | | | 1 | | | | | |
| | | 272 | 274 | | 63.0 | 64.2 | | | 12 | | | | | | | | | | | | | | | | | | | | | | | | | | | | | | | | | | | | | | | | | | |
| -L- 140+51.00 | LT | 274 | | 66.4 | | | | | | | | | | | | | | | | | | | | | | | | | 1 | | | | | | | 1 | 1 | | | | | | | | | | | | | | |
| -L- 142+20.00 | LT | 275 | | | | | | | | | | | | | | | | | | | | | | | | | | | | | | | | | | | | | | | | | | | | | | | | 30 | REMOVE 15" CONC |
| -L- 142+85.00 | LT | 276 | | | | | | | | | | | | | | | | | | | | | | | | | | | | | | | | | | | | | | | | | | | | | | | | 20 | REMOVE 18" CONC |
| -L- 143+85.00 | LT | 277 | | 67.2 | | | | | | | | | | | | | | | | | | | | | | | | | 1 | | | | | | | 1 | 1 | | | | | | | | | | | | | | |
| | | 277 | 278 | | 65.0 | 64.8 | | | 40 | | | | | | | | | | | | | | | | | | | | | | | | | | | | | | | | | | | | | | | | | | |
| -L- 144+25.00 | LT | 278 | | 67.3 | | | | | | | | | | | | | | | | | | | | | | | | | 1 | | | | | | | 1 | 1 | | | | | | | | | | | | | | |
| | | 278 | 279 | | 64.8 | 64.5 | | | 16 | | | | | | | | | | | | | | | | | | | | | | | | | | | | | | | | | | | | | | | | | | |
| -L- 144+25.00 | LT | 279 | | 67.5 | | | | | | | | | | | | | | | | | | | | | | | | | 1 | | | 1 | | | 1 | | | | | | | | | | | | | | | 24 | REMOVE 18" CONC |
| | | 279 | 280 | | 64.5 | 64.2 | | | 88 | | | | | | | | | | | | | | | | | | | | | | | | | | | | | | | | | | | | | | | | | | |
| -L- 145+18.00 | LT | 280 | | 67.2 | | | | | | | | | | | | | | | | | | | | | | | | | 1 | | | 1 | | | 1 | | | | | | | | | | | | | | 0.13 | | REMOVE HEADWALL |
| | | 280 | 282 | | 64.2 | 64.2 | | | 32 | | | | | | | | | | | | | | | | | | | | | | | | | | | | | | | | | | | | | | | | | | |
| -L- 145+00.00 | LT | 281 | | 68.5 | | | | | | | | | | | | | | | | | | | | | | | | | 1 | | | | | | | 1 | 1 | | | | | | | | | 1 | | | | | |
| | | 281 | 282 | | 65.3 | 65.2 | | | 16 | | | | | | | | | | | | | | | | | | | | | | | | | | | | | | | | | | | | | | | | | | |
| -L- 145+20.00 | LT | 282 | | 68.4 | | | | | | | | | | | | | | | | | | | | | | | | | 1 | | | | | | | 1 | 1 | | | | | | | | | 1 | | | | | |
| | | 282 | 283 | | 64.2 | 63.8 | | | | 132 | | | | | | | | | | | | | | | | | | | | | | | | | | | | | | | | | | | | | | | | | |
| -Y14- 12+67.00 | LT | 283 | | 67.7 | | | | | | | | | | | | | | | | | | | | | | | | | 1 | | | 1 | | 1 | | | | | | | | | | | | | | | | | |
| | | 283 | OUT | | 63.8 | 63.7 | | | | 32 | | | | | | | | | | | | | | | | | | | | | | | | | | | | | | | | | | | | | | | | | |
| | | OUT | 284 | | 62.5 | 62.6 | | | | | 40 | | | | | | | | | | | | | | | | | | | | | | | | | | | | | | | | | | | | | | | | |
| -Y14- 12+65.00 | RT | 284 | | 67.6 | | | | | | | | | | | | | | | | | | | | | | | | | 1 | | | 1 | | | 1 | | | | | | | | | | | | | | | | |
| SHEET TOTAL | | | | | | | | | 768 | 184 | 40 | | | | | | | | | | | | | | | | | | 17 | | | 10 | | 7 | 3 | 7 | 7 | | | | | | 1 | | 2 | 4 | | | 0.13 | 234 | |

07-MAR-2006 11:43
r:\proj\u3613b.sum
$$$$USERNAME$$$$

RD212399 3/7/2006 full3m dwgardner RD-Oce34

6/20/00

COMPUTED BY: JBG DATE: 05/31/05
CHECKED BY: DWG DATE: 12/13/05

STATE OF NORTH CAROLINA
DIVISION OF HIGHWAYS

| PROJECT REFERENCE NO. | SHEET NO. |
|---|---|
| U-3613B | 3-N |

# LIST OF PIPES, ENDWALLS, ETC. (FOR PIPES 48" & UNDER)

| STATION | LOCATION (LT,RT, OR CL) | STRUCTURE NO. | | TOP ELEVATION | INVERT ELEVATION | INVERT ELEVATION | SLOPE CRITICAL | CLASS III R.C. PIPE (UNLESS NOTED OTHERWISE) | | | | | | | | BITUMINOUS COATED C.S. PIPE TYPE B (UNLESS NOTED OTHRWISE) | | | | | | | | | | | | | 15" SIDE DRAIN PIPE | 18" SIDE DRAIN PIPE | 24" SIDE DRAIN PIPE | ENDWALLS STD. 838.01 STD. 838.11 OR STD. 838.80 (UNLESS NOTED OTHERWISE) | | QUANTITIES FOR DRAINAGE STRUCTURES | * TOTAL L.F. FOR PAY QUANTITY SHALL BE COL. 'A' + (1.3 X COL.'B') | | C.B. STD. 840.01 OR STD. 840.02 | FRAME, GRATES AND HOOD STANDARD 840.03 | | | | D.I. STD. 840.14 OR STD. 840.15 | D.I. FRAME & GRATE STD. 840.16 | M.D.I. TYPE "B" STD. 840.18 OR 840.27 | M.D.I. (N.S.) FRAME WITH TWO GRATES STD. 840.24 | J.B. STD. 840.31 OR 840.32 | M.H. FRAME & COVER STD. 840.54 | T.B.J.B. STD. 840.34 | PREFORMED SCOUR HOLE | 30" SIDE DRAIN PIPE | | | | | | | | CONCRETE APRON FOR CB | CONCRETE APRON FOR DI | CORR. STEEL ELBOWS NO. & SIZE | CONC. COLLARS CL. "B" C.Y. STD 840.72 | CONC. & BRICK PIPE PLUG, C.Y. STD. 840.71 | PIPE REMOVAL LIN.FT. | REMARKS |
|---|---|---|---|---|---|---|---|---|---|---|---|---|---|---|---|---|---|---|---|---|---|---|---|---|---|---|---|---|---|---|---|---|---|---|---|---|---|---|---|---|---|---|---|---|---|---|---|---|---|---|---|---|---|---|---|---|---|---|---|---|---|---|---|---|
| SIZE | | | | | | | | 12" | 15" | 18" | 24" | 30" | 36" | 42" | 48" | 12" | 15" | 18" | 24" | | 30" | | 36" | | 42" | | 48" | | | | | CU. YDS. | | PER EACH (0' THRU 5.0') | LIN. *FT. A | B | | TYPE OF GRATE | | | | | | | | | | | | | | | | | | | | | | | | | | |
| THICKNESS OR GAUGE | | FROM | TO | | | | | | | | | | | | | .064 | .064 | .064 | .064 | | .079 | | .079 | | .109 | | .109 | | | | | R.C.P. | C.S.P. | | 5.0' THRU 10.0' | 10.0' AND ABOVE | | E | F | G | | | | | | | | | | | | | | | | | | | | | | | | |
| | | | | | | | | | | | | | | | | | | | | | | | | | | | | | | | | | | | | | | | | | | | | | | | | | | | | | | | | | | | | | | | | |
| | | 284 | 285 | | 62.6 | 62.8 | | | | | 88 | | | | | | | | | | | | | | | | | | | | | | | | | | | | | | | | | | | | | | | | | | | | | | | | | | | | | |
| -L- 146+10.00 | RT | 285 | | 69.9 | | | | | | | | | | | | | | | | | | | | | | | | | | | | | | 1 | 2.1 | | | | | | | | | | | 1 | 1 | | | | | | | | | | | | | | | | | |
| | | 285 | 286 | | 62.8 | 63.1 | | | | | 96 | | | | | | | | | | | | | | | | | | | | | | | | | | | | | | | | | | | | | | | | | | | | | | | | | | | | |
| -L- 147+04.50 | RT | 286 | | 69.3 | | | | | | | | | | | | | | | | | | | | | | | | | | | | | | 1 | 1.2 | | 1 | 1 | | | | | | | | | | | | | | | | | | | | | | | | | | |
| | | | | | | | | | | | | | | | | | | | | | | | | | | | | | | | | | | | | | | | | | | | | | | | | | | | | | | | | | | | | | | | | |
| | | 286 | 287 | | 63.1 | 63.6 | | | | | 156 | | | | | | | | | | | | | | | | | | | | | | | | | | | | | | | | | | | | | | | | | | | | | | | | | | | | |
| -L- 148+63.00 | RT | 287 | | 69.8 | | | | | | | | | | | | | | | | | | | | | | | | | | | | | | 1 | 1.2 | | 1 | | | 1 | | | | | | | | | | | | | | | | | | | | | | 20 | REMOVE 15" CONC |
| | | IN | 287 | | 68.9 | 66.8 | | | 176 | | | | | | | | | | | | | | | | | | | | | | | | | | | | | | | | | | | | | | | | | | | | | | | | | | | | | | | |
| | | 287 | 288 | | 63.6 | 63.8 | | | | 68 | | | | | | | | | | | | | | | | | | | | | | | | | | | | | | | | | | | | | | | | | | | | | | | | | | | | | |
| | | | | | | | | | | | | | | | | | | | | | | | | | | | | | | | | | | | | | | | | | | | | | | | | | | | | | | | | | | | | | | | | |
| -L- 148+63.00 | LT | 288 | | 67.1 | | | | | | | | | | | | | | | | | | | | | | | | | | | | | | 1 | | | 1 | | 1 | | | | | | | | | | | | | | | | | | | | | | | | | |
| | | 288 | 289 | | 63.9 | 64.4 | | | 144 | | | | | | | | | | | | | | | | | | | | | | | | | | | | | | | | | | | | | | | | | | | | | | | | | | | | | | | |
| -L- 150+11.00 | LT | 289 | | 67.4 | | | | | | | | | | | | | | | | | | | | | | | | | | | | | | 1 | | | 1 | | 1 | | | | | | | | | | | | | | | | | | | | | | | | 68 | REMOVE CB AND 15" CONC |
| | | 286 | 290 | | 64.1 | 64.2 | | | 28 | | | | | | | | | | | | | | | | | | | | | | | | | | | | | | | | | | | | | | | | | | | | | | | | | | | | | |
| | | | | | | | | | | | | | | | | | | | | | | | | | | | | | | | | | | | | | | | | | | | | | | | | | | | | | | | | | | | | | | | | |
| -L- 147+04.50 | RT | 290 | | 68.8 | | | | | | | | | | | | | | | | | | | | | | | | | | | | | | 1 | | | | | | | | 1 | 1 | | | | | | | | | | | | | | | | | | 1 | | | | | |
| | | 290 | 291 | | 64.2 | 64.3 | | | 40 | | | | | | | | | | | | | | | | | | | | | | | | | | | | | | | | | | | | | | | | | | | | | | | | | | | | | | | |
| -L- 147+04.50 | LT | 291 | | 67.5 | | | | | | | | | | | | | | | | | | | | | | | | | | | | | | 1 | | | 1 | 1 | | | | | | | | | | | | | | | | | | | | | | | | | | |
| | | 291 | 292 | | 64.3 | 64.5 | | | 52 | | | | | | | | | | | | | | | | | | | | | | | | | | | | | | | | | | | | | | | | | | | | | | | | | | | | | | | |
| | | | | | | | | | | | | | | | | | | | | | | | | | | | | | | | | | | | | | | | | | | | | | | | | | | | | | | | | | | | | | | | | |
| -L- 146+50.00 | LT | 292 | | 67.5 | | | | | | | | | | | | | | | | | | | | | | | | | | | | | | 1 | | | 1 | | | 1 | | | | | | | | | | | | | | | | | | | | | | | | |
| -L- 145+85.00 | LT | 293 | | | | | | | | | | | | | | | | | | | | | | | | | | | | | | | | | | | | | | | | | | | | | | | | | | | | | | | | | | | | | 88 | REMOVE 18" CONC |
| -L- 150+11.00 | LT/RT | 294 | | | | | | | | | | | | | | | | | | | | | | | | | | | | | | | | | | | | | | | | | | | | | | | | | | | | | | | | | | | | 0.09 | 24 | REMOVE 15" CONC |
| | | | | | | | | | | | | | | | | | | | | | | | | | | | | | | | | | | | | | | | | | | | | | | | | | | | | | | | | | | | | | | | | |
| -Y14- 7+10.00 | RT | 295 | | | | | | | | | | | | | | | | | | | | | | | | | | | | | | | | | | | | | | | | | | | | | | | | | 28 | | | | | | | | | | | | | | |
| -Y14- 7+60.00 | LT/RT | 296 | | | 61.4 | 61.3 | | | | | 52 | | | | | | | | | | | | | | | | | | | | | | | | | | | | | | | | | | | | | | | | | | | | | | | | | | | | |
| -Y14- 9+35.00 | LT | 297 | | | | | | | | | | | | | | | | | | | | | | | | | | | | | 24 | | | | | | | | | | | | | | | | | | | | | | | | | | | | | | | | 20 | REMOVE 15" CONC |
| -Y14- 9+85.00 | RT | 298 | | | | | | | | | | | | | | | | | | | | | | | | | | | | | | | | | | | | | | | | | | | | | | | | | | | | | | | | | | | | | 24 | REMOVE 15" CONC |
| | | | | | | | | | | | | | | | | | | | | | | | | | | | | | | | | | | | | | | | | | | | | | | | | | | | | | | | | | | | | | | | | |
| | | IN | 299 | | 61.9 | 61.8 | | | | | 24 | | | | | | | | | | | | | | | | | | | | | | | | | | | | | | | | | | | | | | | | | | | | | | | | | | | | | |
| -Y14- 9+95.00 | RT | 299 | | 65.0 | | | | | | | | | | | | | | | | | | | | | | | | | | | | | | 1 | | | | | | | | 1 | 1 | | | | | | | | | | | | | | | | | | | | | | | |
| | | 299 | OUT | | 61.8 | 61.7 | | | | | 24 | | | | | | | | | | | | | | | | | | | | | | | | | | | | | | | | | | | | | | | | | | | | | | | | | | | | | |
| -Y14- 10+00.00 | RT | 300 | | | | | | | | | | | | | | | | | | | | | | | | | | | | | | | | | | | | | | | | | | | | | | | | | | | | | | | | | | | | | 24 | REMOVE DI & 15" CONC |
| -Y14- 10+20.00 | LT | 301 | | | | | | | | | | | | | | | | | | | | | | | | | | | | | 44 | | | | | | | | | | | | | | | | | | | | | | | | | | | | | | | | 40 | REMOVE 15" CONC |
| -Y14- 11+80.00 | RT | 302 | | | | | | | | | | | | | | | | | | | | | | | | | | | | | 24 | | | | | | | | | | | | | | | | | | | | | | | | | | | | | | | | 20 | REMOVE 15" CONC |
| | | | | | | | | | | | | | | | | | | | | | | | | | | | | | | | | | | | | | | | | | | | | | | | | | | | | | | | | | | | | | | | | |
| | | | | | | | | | | | | | | | | | | | | | | | | | | | | | | | | | | | | | | | | | | | | | | | | | | | | | | | | | | | | | | | | | |
| | | | | | | | | | | | | | | | | | | | | | | | | | | | | | | | | | | | | | | | | | | | | | | | | | | | | | | | | | | | | | | | | | |
| | | | | | | | | | | | | | | | | | | | | | | | | | | | | | | | | | | | | | | | | | | | | | | | | | | | | | | | | | | | | | | | | | |
| SHEET TOTAL | | | | | | | | | 440 | 68 | 440 | | | | | | | | | | | | | | | | | | | | 92 | | | 9 | 4.5 | | 6 | 2 | 2 | 2 | | 2 | 2 | | | 1 | 1 | | | 28 | | | | | | | | | 1 | | | 0.09 | 328 | |
| | | | | | | | | | | | | | | | | | | | | | | | | | | | | | | | | | | | | | | | | | | | | | | | | | | | | | | | | | | | | | | | | |
| | | | | | | | | | | | | | | | | | | | | | | | | | | | | | | | | | | | | | | | | | | | | | | | | | | | | | | | | | | | | | | | | | |
| | | | | | | | | | | | | | | | | | | | | | | | | | | | | | | | | | | | | | | | | | | | | | | | | | | | | | | | | | | | | | | | | | |
| | | | | | | | | | | | | | | | | | | | | | | | | | | | | | | | | | | | | | | | | | | | | | | | | | | | | | | | | | | | | | | | | | |
| PROJECT TOTAL | | | | | | | | | 10160 | | 3276 | | 652 | | 8 | | 32 | 56 | | | | | | | | | | | 52 | 144 | 136 | 4.5 | | 265 | 37.2 | | 168 | 19 | 71 | 78 | | 59 | 59 | 2 | 2 | 30 | 36 | 6 | 2 | 28 | | | | | | | | 3 | 13 | 2@18" | 3.7586 | 1.821 | 5142 | |
| | | | | | | | | | | 4164 | | 1104 | | 72 | | | | | | | | | | | | | | | | | | | | | | | | | | | | | | | | | | | | | | | | | | | | | | | | | | |
| SAY | | | | | | | | | | | | | | | | | | | | | | | | | | | | | | | | 5.0 | | | 38 | | | | | | | | | | | | | | | | | | | | | | | | | | 4.0 | 2.0 | | |
| | | | | | | | | | | | | | | | | | | | | | | | | | | | | | | | | | | | | | | | | | | | | | | | | | | | | | | | | | | | | | | | | |
| | | | | | | | | | | | | | | | | | | | | | | | | | | | | | | | | | | | | | | | | | | | | | | | | | | | | | | | | | | | | | | | | | |

ABBREVIATIONS

| | |
|---|---|
| C.B. | CATCH BASIN |
| N.D.I. | NARROW DROP INLET |
| D.I. | DROP INLET |
| M.D.I. | MEDIAN DROP INLET |
| M.D.I. (N.S.) | MEDIAN DROP INLET (NARROW SLOT) |
| J.B. | JUNCTION BOX |
| M.H. | MANHOLE |
| T.B.D.I. | TRAFFIC BEARING DROP INLET |
| T.B.J.B. | TRAFFIC BEARING JUCTION BOX |

07-MAR-2006 11:43
r:\proj\u3613b.sum
$$$$USERNAME$$$$

COMPUTED BY: JBG DATE: 06/27/05
CHECKED BY: DWG DATE: 12/13/05

| PROJECT REFERENCE NO. | SHEET NO. |
|---|---|
| U-3613B | 3-0 |

STATE OF NORTH CAROLINA
DIVISION OF HIGHWAYS

# LIST OF PIPES, ENDWALLS, ETC. (FOR PIPES 54" & OVER)

| STATION | LOCATION (LT,RT, OR CL) | STRUCTURE NO. FROM | STRUCTURE NO. TO | TOP ELEVATION | INVERT ELEVATION | INVERT ELEVATION | SLOPE CRITICAL | CLASS III R.C. PIPE (UNLESS NOTED OTHERWISE) | | | | | | BITUMINOUS COATED C.S. PIPE TYPE B | | | | | | | | | | | STRUCTURAL PLATE PIPE | | | | | | | REINFORCED ENDWALLS | | MASONARY DRAINAGE STRUCTURES CUBIC YARDS | C.B. STD. 840.01 OR STD. 840.02 | FRAME, GRATES AND HOOD STANDARD 840.03 TYPE OF GRATE | | | J.B. STD. 840.31 OR 840.32 | M.H. FRAME & COVER STD. 840.54 | REMARKS |
|---|---|---|---|---|---|---|---|---|---|---|---|---|---|---|---|---|---|---|---|---|---|---|---|---|---|---|---|---|---|---|---|---|---|---|---|---|---|---|---|---|---|
| SIZE | | | | | | | | 54" | 60" | 66" | 72" | 78" | 84" | 54" | | | 54" SHOP ELONGATED | | 60" | | 66" | | 72" | | 60" | | 66" | | 72" | | 11'-5" X 7'-1" STRUCTURAL PLATE ALUMINUM | WITH R.C. – C.Y. | WITH STRUCTURAL PLATE ALUMINUM – C.Y. | | | E | F | G | | | |
| THICKNESS OR GAUGE | | | | | | | | | | | | | | .109 | .138 | .168 | .138 | .168 | .138 | .168 | .138 | .168 | .138 | .168 | 12 | 10 | 12 | 10 | 12 | 10 | .125 | | | | | | | | | | |
| 32+96.00 | LT. | IN | 46A | | 58.7 | 58.5 | | | 40 | | | | | | | | | | | | | | | | | | | | | | | | | | | | | | | | |
| | | 46A | | 68.5 | | | | | | | | | | | | | | | | | | | | | | | | | | | | | | 5.9517 | | | | | 1 | 1 | |
| | | 46A | OUT | | 58.5 | 58.4 | | | 44 | | | | | | | | | | | | | | | | | | | | | | | | | | | | | | | | |
| 135+24.00 | LT./RT. | | | | | | | | | | | | | | | | | | | | | | | | | | | | | | 126 | | 13 | | | | | | | | RETAIN AND EXTEND |
| SHEET TOTAL | | | | | | | | | 84 | | | | | | | | | | | | | | | | | | | | | | 126 | | 13 | 5.9517 | | | | | 1 | 1 | |
| SAY | | | | | | | | | | | | | | | | | | | | | | | | | | | | | | | | | | 6 | | | | | | | |

ABBREVIATIONS

| | |
|---|---|
| C.B. | CATCH BASIN |
| N.D.I. | NARROW DROP INLET |
| D.I. | DROP INLET |
| M.D.I. | MEDIAN DROP INLET |
| M.D.I. (N.S.) | MEDIAN DROP INLET (NARROW SLOT) |
| J.B. | JUNCTION BOX |
| M.H. | MANHOLE |
| T.B.D.I. | TRAFFIC BEARING DROP INLET |
| T.B.J.B. | TRAFFIC BEARING JUCTION BOX |

## GUARDRAIL SUMMARY

| SURVEY LINE | BEG. STA. | END STA. | LOCATION | LENGTH STRAIGHT | LENGTH SHOP CURVED | LENGTH DOUBLE FACED | WARRANT POINT APPROACH END | WARRANT POINT TRAILING END | "N" DIST. FROM E.O.L. | TOTAL SHOULDER WIDTH | FLARE LENGTH APPROACH END | FLARE LENGTH TRAILING END | W APPROACH END | W TRAILING END | ANCHORS TYPE GRAU 350 | ANCHORS CAT-1 | IMPACT ATTENUATOR TYPE 350 EA | G | NG | REMOVE EXISTING GUARDRAIL | REMARKS |
|---|---|---|---|---|---|---|---|---|---|---|---|---|---|---|---|---|---|---|---|---|---|
| –L– | 33+82.00 | 32+32.00 | RT. | 150 | | | 33+57 | 33+67 | 14 | 14 | 50 | | 1 | | 1 | 1 | | | | | |
| –L– | 33+22.00 | 34+72.00 | LT. | 150 | | | 33+54 | 33+29 | 14 | 14 | 50 | | 1 | | 1 | 1 | | | | | |
| –L– | 103+51.00 | 105+26.00 | RT. | 175 | | | 104+83 | 105+23 | 12 | 14 | 50 | | 1 | | 1 | 1 | | | | | |
| –L– | 122+93.00 | 124+30.5 | RT. | 137.5 | | | 124+08 | 124+29.50 | 10 | 14 | 50 | | 1 | | 1 | 1 | | | | | |
| | | | | | | | | | | | | | | | | | | | | | |
| –L– | 134+19.00 | 135+19.00 | RT. | 100 | | | 134+70 | 135+11 | 14 | 14 | 50 | | 1 | | 1 | 1 | | | | | |
| –L– | 135+28.00 | 136+28.00 | LT. | 100 | | | 135+74.50 | 135+34 | 14 | 14 | 50 | | 1 | | 1 | 1 | | | | | |
| –L– | 48+83.00 | 49+60.00 | RT. | | | | | | | | | | | | | | | | | 77 | |
| –L– | 50+03.00 | 50+81.00 | LT. | | | | | | | | | | | | | | | | | 78 | |
| –L– | 102+71.00 | 105+56.00 | RT. | | | | | | | | | | | | | | | | | 285 | |
| SUBTOTALS | | | | 812.5 | | | | | | | | | | | 6 | 6 | | | | 440 | |
| DEDUCTIONS FOR ANCHORS 6 GRAU–350 @ 50' | | | | –300 | | | | | | | | | | | | | | | | | |
| 6 CAT–1 @ 6.25' | | | | –37.5 | | | | | | | | | | | | | | | | | |
| PROJECT TOTALS | | | | 475 | | | | | | | | | | | 6 | 6 | | | | 440 | |
| SAY | | | | 525 | | | | | | | | | | | | | | | | 450 | |
| ADDITIONAL GUARDRAIL POST = 10 EA. | | | | | | | | | | | | | | | | | | | | | |

"N" = DISTANCE FROM EDGE OF LANE TO FACE OF GUARDRAIL.
TOTAL SHOULDER WIDTH = DISTANCE FROM EDGE OF TRAVEL LANE TO SHOULDER BREAK POINT.
FLARE LENGTH = DISTANCE FROM LAST SECTION OF PARALLEL GUARDRAIL TO END OF GUARDRAIL.
W = TOTAL WIDTH OF FLARE FROM BEGINNING OF TAPER TO END OF GUARDRAIL.
G = GATING IMPACT ATTENUATOR TYPE 350
NG = NON–GATING IMPACT ATTENUATOR TYPE 350

## SUMMARY OF "ASPHALT" PAVEMENT BREAK–UP
### IN SQUARE YARDS

| LINE | STATION TO STATION | LOCATION | LENGTH | WIDTH | SQUARE YARDS |
|---|---|---|---|---|---|
| –L– | 20+00.00 TO 22+50.00 | LT/RT | 250 | 46 | 1278 |
| –L– | 54+00.00 TO 55+00.00 | LT/RT | 100 | 36 | 400 |
| –Y4– | 11+75.00 TO 12+24.90 | LT/RT | 49.90 | 28 | 155 |
| –Y7– | 11+50.00 TO 11+66.89 | LT/RT | 16.89 | 22 | 41 |
| –Y14– | 13+00.00 TO 13+70.09 | LT/RT | 70.09 | 66.75 | 520 |
| | | | | | |
| | | | | TOTAL | 2394 |
| | | | | SAY | 2400 |

## SUMMARY OF "ASPHALT" PAVEMENT REMOVAL
### IN SQUARE YARDS

| LINE | STATION TO STATION | LOCATION | LENGTH | WIDTH | SQUARE YARDS |
|---|---|---|---|---|---|
| | | | | | |
| –L– | 19+00.00 TO 20+00.00 | LT/RT | 100 | 48' | 533 |
| –L– | 22+50.00 TO 25+00.00 | LT/RT | 250 | 41' | 1139 |
| –L– | 45+50.00 TO 54+00 | RT | 850 | 36' | 3400 |
| –L– | 55+00.00 TO 57+00.00 | RT | 200 | 36' | 800 |
| –L– | 86+65.00 TO 89+66.92 | MEDIAN | | | 514 |
| –L– | 103+55.00 TO 111+60.00 | MEDIAN | | | 1398 |
| –L– | 135+12.50 TO 137+29.75 | MEDIAN | | | 364 |
| –L– | 120+20.00 TO 121+33.50 | MEDIAN | | | 180 |
| | | | | | |
| | | | | | |
| –Y10– | 11+50.00 TO 11+71.73 | LT/RT | 21.73 | 50' | 121 |
| –Y11– | 11+25.00 TO 11+65.05 | LT/RT | 40.05 | 20' | 89 |
| –Y12– | 11+25.00 TO 11+62.78 | LT/RT | 37.78 | 20' | 84 |
| | | | | | |
| FINAL PVMT. DESIGN – PAVEMENT REMOVAL CONTINGENCY ITEM | | | | | 3500 |
| | | | | TOTAL | 12122 |
| | | | | SAY | 12150 |

SEE SHEETS TCP–5 AND TCP–6 FOR TEMPORARY PLAIN CS PIPES

## LIST OF TEMPORARY PLAIN CS PIPES

| STATION | LOCATION | FROM | TO | 15" CS PIPE | 18" CS PIPE | 24" CS PIPE | CONC. COLLARS CL. "B" C.Y. STD 840.72 |
|---|---|---|---|---|---|---|---|
| –L– 14+25.00 | RT | A | | 44 | | | |
| –L– 28+20.00 | RT | B | | | 32 | | |
| –L– 38+25.00 | RT | C | | | 108 | | 0.4465 |
| –L– 39+50.00 | RT | D | | | | 20 | 1.1052 |
| –L– 46+90.00 | RT | E | | | | 60 | |
| –L– 55+30.00 | RT | F | | 56 | | | |
| –L– 58+70.00 | RT | G | | | 28 | | |
| –L– 60+25.00 | RT | H | | | | 64 | |
| –L– 63+80.00 | RT | I | | | 108 | | |
| –L– 65+35.00 | RT | J | | | 28 | | |
| –L– 70+20.00 | RT | K | | | 32 | | |
| –L– 72+25.00 | RT | L | | | 60 | | |
| –L– 76+50.00 | RT | M | | | 64 | | |
| –L– 79+20.00 | RT | N | | | 76 | | |
| –L– 84+15.00 | RT | O | | | 52 | | |
| –L– 86+70.00 | RT | P | | | 64 | | |
| –L– 91+45.00 | RT | Q | | 48 | | | |
| –L– 93+10.00 | RT | R | | | 44 | | |
| –L– 93+55.00 | RT | S | | | 28 | | |
| –L– 118+70.00 | RT | T | | | 104 | | |
| –L– 121+20.00 | RT | U | | | | 60 | |
| –L–122+75.00 | RT | V | | 32 | | | |
| –L–124+45.00 | RT | W | | 40 | | | |
| –L–125+95.00 | RT | X | | 64 | | | |
| –L–128+25.00 | RT | Y | | 36 | | | |
| –L–129+60.00 | RT | Z | | 32 | | | |
| –L–130+75.00 | RT | AA | | 68 | | | |
| –L–132+95.00 | RT | BB | | 60 | | | |
| –L–137+35.00 | RT | CC | | 64 | | | |
| TOTAL | | | | 544 | 828 | 204 | 1.5517 |
| SAY | | | | | | | 2.0 |

05-MAY-2006 11:19
r:\proj\u3613b.sum
$$$$USERNAME$$$$

COMPUTED BY: DWG DATE: 020306
CHECKED BY: JBG DATE: 020606

| PROJECT REFERENCE NO. | SHEET NO. |
|---|---|
| U-3613B | 3-P |

DIVISION OF HIGHWAYS
STATE OF NORTH CAROLINA

# SUMMARY OF EARTHWORK

## IN CUBIC YARDS

| LOCATION | | UNCLASSIFIED EXCAVATION | UNDERCUT | EMBANKMENT PLUS % | BORROW | TOTAL WASTE |
|---|---|---|---|---|---|---|
| STATION | STATION | | | | | |
| PHASE I | | | | | | |
| WIDEN -L- RIGHT | | | | | | |
| SUMMARY NO. 1 | | | | | | |
| -L- 12+00.00 | -L- 16+20.70 | 473 | | | | 47 |
| TOTAL SUMMARY NO. 1 | | 473 | | | | 47 |
| SUMMARY NO. 2 | | | | | | |
| -L- 27+04.00 | -L- 30+90.00 | 109 | | 49 | | 60 |
| -L- 31+68.00 | -L- 33+95.00 | 20 | | 48 | 30 | 2 |
| -L- 38+00.00 | -L- 38+90.00 | 10 | | 23 | 14 | 1 |
| -L- 39+33.00 | -L- 39+66.00 | 2 | | 6 | 4 | |
| -L- 46+00.00 | -L- 46+58.00 | 6 | | 29 | 24 | 1 |
| TOTAL SUMMARY NO. 2 | | 147 | | 155 | 72 | 64 |
| SUMMARY NO. 3 | | | | | | |
| -L- 47+20.00 | -L- 49+68.00 | 35 | | 73 | 41 | 3 |
| TOTAL SUMMARY NO. 3 | | 35 | | 73 | 41 | 3 |
| SUMMARY NO. 4 | | | | | | |
| -L- 51+50.00 | -L- 81+19.00 | 1556 | 1585 | 2595 | 1195 | 1741 |
| TOTAL SUMMARY NO. 4 | | 1556 | 1585 | 2595 | 1195 | 1741 |
| SUMMARY NO. 5 | | | | | | |
| -L- 82+66.00 | -L- 88+44.00 | 178 | 245 | 435 | 293 | 281 |
| -L- 89+97.00 | -L- 94+29.00 | 116 | 127 | 275 | 182 | 150 |
| -L- 97+26.00 | -L- 98+91.00 | 17 | 183 | 266 | 252 | 186 |
| TOTAL SUMMARY NO. 5 | | 311 | 555 | 976 | 727 | 617 |
| SUMMARY NO. 6 | | | | | | |
| -L- 116+46.00 | -L- 138+37.00 | 839 | 1020 | 2145 | 1474 | 1188 |
| -L- 140+90.00 | -L- 143+25.00 | 93 | | 3 | | 90 |
| TOTAL SUMMARY NO. 6 | | 932 | 1020 | 2148 | 1474 | 1278 |
| PHASE II | | | | | | |
| CONSTRUCT -L- LEFT | | | | | | |
| SUMMARY NO. 7 | | | | | | |
| -L- 12+00.00 | -L- 16+20.70 | 63 | | 221 | 164 | 6 |
| -Y- 10+18.01 | -Y- 11+00.00 | 3 | | 45 | 42 | |
| -Y1- 18+48.72 | -Y1- 26+25.00 | 284 | | 276 | 20 | 28 |
| TOTAL SUMMARY NO. 7 | | 350 | | 542 | 226 | 34 |

| LOCATION | | UNCLASSIFIED EXCAVATION | UNDERCUT | EMBANKMENT PLUS % | BORROW | TOTAL WASTE |
|---|---|---|---|---|---|---|
| STATION | STATION | | | | | |
| SUMMARY NO. 8 | | | | | | |
| -L- 17+25.00 | -L- 49+82.00 | 5210 | 5093 | 16534 | 11845 | 5614 |
| -Y1A- 10+34.00 | -Y1A- 11+00.00 | 12 | | 35 | 24 | 1 |
| -Y2- 10+34.03 | -Y2- 11+67.37 | 73 | | 120 | 54 | 7 |
| TOTAL SUMMARY NO. 8 | | 5295 | 5093 | 16689 | 11923 | 5622 |
| SUMMARY NO. 9 | | | | | | |
| -L- 49+92.00 | -L- 81+85.97 | 701 | 2493 | 7934 | 7303 | 2563 |
| -Y6- 14+08.98 | -Y6- 17+66.61 | 278 | | 508 | 258 | 28 |
| TOTAL SUMMARY NO. 9 | | 979 | 2493 | 8442 | 7561 | 2591 |
| SUMMARY NO. 10 | | | | | | |
| -L- 81+85.97 | -L- 111+00.00 | 7511 | 2555 | 6098 | 89 | 4057 |
| -Y9- 10+34.01 | -Y9- 11+00.00 | 14 | | 4 | | 10 |
| TOTAL SUMMARY NO. 10 | | 7525 | 2555 | 6102 | 89 | 4067 |
| SUMMARY NO. 11 | | | | | | |
| -L- 111+00.00 | -L- 141+00.00 | 3432 | 1818 | 5343 | 2597 | 2504 |
| TOTAL SUMMARY NO. 11 | | 3432 | 1818 | 5343 | 2597 | 2504 |
| SUMMARY NO. 12 | | | | | | |
| -L- 141+00.00 | -L- 151+70.00 | 218 | | 550 | 376 | 44 |
| TOTAL SUMMARY NO. 12 | | 218 | | 550 | 376 | 44 |
| PHASE III | | | | | | |
| CONSTRUCT -L- RIGHT | | | | | | |
| SUMMARY NO. 13 | | | | | | |
| -L- 12+00.00 | -L- 16+20.70 | 186 | | 320 | 153 | 19 |
| -Y1- 17+00.00 | -Y1- 18+48.72 | 18 | | 15 | | 3 |
| TOTAL SUMMARY NO. 13 | | 204 | | 335 | 153 | 22 |
| SUMMARY NO. 14 | | | | | | |
| -L- 17+25.00 | -L- 49+82.00 | 843 | | 5324 | 4565 | 84 |
| TOTAL SUMMARY NO. 14 | | 843 | | 5324 | 4565 | 84 |
| SUMMARY NO. 15 | | | | | | |
| -L- 49+92.00 | -L- 81+85.97 | 770 | | 4801 | 4108 | 77 |
| -Y4- 11+00.00 | -Y4- 12+24.90 | | | 359 | 359 | |
| -Y5- 11+00.00 | -Y5- 11+66.53 | | | 88 | 88 | |
| -Y6- 9+40.00 | -Y6- 13+40.92 | 405 | | 180 | | 225 |
| TOTAL SUMMARY NO. 15 | | 1175 | | 5428 | 4555 | 302 |

Note: Approximate quantities only. Unclassified Excavation, Borrow Excavation, Fine Grading, Clearing and Grubbing, Breaking of Existing Pavement, and Removal of Exisiting Pavement will be paid for at the contract lump sum price for "Grading."

6/4/99
01-MAY-2006 15:48
c:\pro_ncdot\pro\u3613bs3p.sum
es\pro_ncdot\dgn\u3613bs3p.dgn

| COMPUTED BY: DWG | DATE: 02/03/06 |
|---|---|
| CHECKED BY: JBG | DATE: 02/06/06 |

| PROJECT REFERENCE NO. | SHEET NO. |
|---|---|
| U-3613B | 3-Q |

DIVISION OF HIGHWAYS
STATE OF NORTH CAROLINA

# SUMMARY OF EARTHWORK

## IN CUBIC YARDS

| LOCATION | | UNCLASSIFIED EXCAVATION | UNDERCUT | EMBANKMENT PLUS % | BORROW | TOTAL WASTE |
|---|---|---|---|---|---|---|
| STATION | STATION | | | | | |
| | | | | | | |
| SUMMARY NO. 16 | | | | | | |
| -L- 81+85.97 | -L- 111+00.00 | 662 | 664 | 4989 | 4459 | 796 |
| -Y7- 10+75.00 | -Y7- 11+66.89 | 24 | | 75 | 56 | 5 |
| -Y8- 10+00.00 | -Y8- 11+69.12 | 182 | | | | 36 |
| TOTAL SUMMARY NO. 16 | | 868 | 664 | 5064 | 4515 | 837 |
| | | | | | | |
| SUMMARY NO. 17 | | | | | | |
| -L- 111+00.00 | -L- 141+00.00 | 763 | 201 | 4366 | 3756 | 354 |
| -Y10- 9+32.00 | -Y10- 11+71.73 | 102 | | 189 | 107 | 20 |
| -Y11- 10+00.00 | -Y11- 11+65.05 | 298 | | 8 | | 290 |
| -Y12- 10+00.00 | -Y12- 11+62.56 | 92 | | 59 | | 33 |
| -Y13- 10+85.00 | -Y13- 11+99.11 | 18 | | 44 | 30 | 4 |
| TOTAL SUMMARY NO. 17 | | 1273 | 201 | 4666 | 3893 | 701 |
| | | | | | | |
| SUMMARY NO. 18 | | | | | | |
| -L- 141+00.00 | -L- 151+70.00 | 39 | | 2505 | 2474 | 8 |
| -Y14- 6+30.00 | -Y14- 13+70.00 | 1211 | | 1579 | 610 | 242 |
| -Y16- 11+80.00 | -Y16- 12+63.53 | 20 | | 3 | | 17 |
| TOTAL SUMMARY NO. 18 | | 1270 | | 4087 | 3084 | 267 |
| | | | | | | |
| SUMMARY TOTALS | | 26886 | 15984 | 68519 | 47046 | 20825 |
| WASTE IN LIEU OF BORROW | | | | | -571 | -571 |
| SHOULDER MATERIAL | | | | 94 | 94 | |
| LOSS DUE TO C&G (500+1300) | | -1800 | | | 1800 | |
| GRADE POINT UNDERCUT (700+300) | | | 1000 | 1250 | 1250 | 1000 |
| CONTINGENCY UNDERCUT (500+500+350) | | | 1350 | 1688 | 1688 | 1350 |
| *LESS SELECT GRANULAR MATERIAL | | | | -25250 | -25250 | |
| GRAND TOTALS | | 25086 | 18334 | 46301 | 26057 | 22604 |
| | | | | | | |
| +5% TO REPLACE TOPSOIL IN BORROW PIT | | | | | 1303 | |
| | | | | | | |
| PROJECT GRAND TOTALS | | 25086 | 18334 | | 27360 | |
| | | | | | | |
| SAY | | 25100 | 18350 | | 27375 | |
| DRAINAGE DITCH EXCAVATION = 2280 CY | | | | | | |
| | | | | | | |
| FABRIC FOR SOIL STABILIZATION = 24900 SY | | | | | | |
| | | | | | | |
| CLASS IV SUBGRADE STABILIZATION = 675 TONS | | | | | | |
| | | | | | | |
| *UNDERCUT AREAS ARE BACKFILLED WITH EMBANKMENT WITHIN EARTHWORK SUMMARY; THEREFORE, THE SELECT | | | | | | |
| GRANULAR MATERIAL IS DEDUCTED FROM THE BORROW QUANTITY AT THE END OF SUMMARY TOTALS | | | | | | |

Note: Approximate quantities only. Unclassified Excavation, Borrow Excavation, Fine Grading, Clearing and Grubbing, Breaking of Existing Pavement, and Removal of Exisiting Pavement will be paid for at the contract lump sum price for "Grading."

6/4/99
01-MAY-2006 15:48
f:\design\roadways\u3613bs3q.dgn

| PROJECT REFERENCE NO. | SHEET NO. |
|---|---|
| U-3613B | 3-R |

STATE OF NORTH CAROLINA
DIVISION OF HIGHWAYS

# PARCEL INDEX SHEET

| PARCEL No. | SHEET No. | PROPERTY OWNER NAME |
|---|---|---|
| 1 | 4 | PITT COMMUNITY COLLEGE |
| 2 | 4 | PITT COMMUNITY COLLEGE |
| 4 | 4,5 | PEACE PRESBYTERIAN CHURCH |
| 5 | 4 | MARIE WILLIAMS |
| 6 | 4,5 | R T ARNOLD |
| 7 | 5 | COLLICE C. MOORE & J. TILMON KEEL |
| 8 | 5 | SHENANDOAH INVESTMENT GROUP, LLC |
| 9 | 5 | LINDA E. KEEL |
| 10 | 5 | LINDA E. KEEL, ET AL |
| 11 | 5 | LINDA E. KEEL, ET AL |
| 12 | 5 | BLAIR DEVELOPMENT GROUP, LLC |
| 13 | 5 | INTERSTATE REALTY, LLC |
| 14 | 5,6 | SHENANDOAH INVESTMENT GROUP, LLC |
| 14A | 6 | FAITH AND VICTORY CHURCH, INC |
| 15 | 6 | BOYS CLUB OF PITT COUNTY |
| 16 | 6,7 | JACK JONE, LLC |
| 16A | 7 | GREENVILLE UTILITIES COMM. |
| 17 | 6 | COLLICE C. MOORE, ET AL |
| 18 | 6 | SOUTHERN PARK, INC. |
| 19 | 6 | JDS HOLDINGS, LLC |
| 20 | 6,7 | WINTERVILLE ASSOC. |
| 21 | 7 | TOWN OF WINTERVILLE |
| 21A | 7 | SOUTHERN COAST LINE RAILROAD R/W |
| 22 | 7,16 | MARY VIRGINIA L. JONES |
| 23 | 7 | CAROLINA CLASSICS CATFISH, INC. |
| 24 | 7,16 | RICHARD L.& MAUREEN M. HARRINGTON |
| 25 | 7 | CAROLINA CLASSICS CATFISH, INC. |
| 26 | 7 | BOBBY E.& EDNA TAYLOR |
| 27 | 7,8 | TEMPLE FREE WILL BAPTIST CHURCH |
| 28 | 7,8 | ROBERT W. HEFFERNAN, JR. |
| 29 | 7,8 | TEMPLE FREE WILL BAPTIST CHURCH |
| 30 | 8 | JAMES & JOANNE BAILEY |
| 31 | 8 | CORNERSTONE OF GREENVILLE |
| 32 | 8 | CORNERSTONE OF GREENVILLE |
| 33 | 8 | JULIUS D.& BARBARA J. PARKER |
| 34 | 8 | STALLINGS INVESTMENTS |
| 35 | 8 | JULIUS & BARBARA PARKER |
| 36 | 8 | STALLINGS INVESTMENTS |
| 37 | 8,9 | NOVCOUX UN LLC |
| 38 | 8,9 | JOSEPH D.& MAXINE A. SPEIGHT |
| 38A | 8 | VINCENT PEELE PROPERTIES, LLC |
| 39 | 9 | CHARLES C. McLAURIN |
| 40 | 9 | LSR ASSOC. LLC |
| 41 | 9 | ALBRITTON REALTY GROUP, LLC |
| 42 | 9 | BRANCH BANKING & TRUST COMPANY |
| 43 | 9 | ANGELA G. STEWART |
| 44 | 9 | SOUTHERN BANK & TRUST COMPANY |
| 45 | 9 | SOUTH HALL SUBDIVISION |
| 46 | 9,10 | ALMA PARAMORE |
| 46A | 9 | DARWIN E. PARAMORE, ET UX |
| 46B | 10,11 | CLARK LAND COMPANY, LLC |
| 46C | 11 | CITY OF GREENVILLE |
| 47 | 9 | WALTER L. WILLIAMS |
| 48 | 9 | CHARLES R. HARDEE |
| 48A | 9 | GARY W. HARDEE |
| 49 | 9,10 | JAMES F.& PHYLLIS H. BRADLEY |
| 50 | 9,10 | THOMAS W.& REBECCA MOYE |
| 51 | 10 | BYUNG LEE |
| 52 | 10 | TREETOPS LLC |
| 53 | 10 | TREETOPS LLC |
| 54 | 10 | SNODIE ALLEN PARAMORE JR. |
| 55 | 10 | FALCON CHILDREN'S HOME INC |
| 56 | 10 | IGNATIUS T. WATERMAN |
| 57 | 10 | SHIRLEY A. CARRAWAY |
| 58 | 10 | W.& J. SANDERS |
| 59 | 10 | SHANON M. CARTER |
| 60 | 10,11 | TREETOPS LLC |
| 61 | 11 | TREETOPS LLC |
| 62 | 11 | GREENVILLE PROPERTIES |
| 63 | 11 | CARTRETTE LLC |
| 64 | 11 | BLANCHE D. WATSON |
| 65 | 11 | CYNTHIA B. GROATHOUSE |

5/28/99

07-FEB-2006 09:27
r:\proj\3613\psh_parcel index.dgn
$$$$USERNAME$$$$

| PROJECT REFERENCE NO. | SHEET NO. |
|---|---|
| U-3613B | 3-S |

STATE OF NORTH CAROLINA
DIVISION OF HIGHWAYS

# PARCEL INDEX SHEET

| PARCEL No. | SHEET No. | PROPERTY OWNER NAME |
|---|---|---|
| 66 | 11 | REGINALD & BONITA SPAIN |
| 67 | 11 | REGINALD & BONITA SPAIN |
| 68 | 11 | REGINALD & BONITA SPAIN |
| 69 | 11,12 | RT DEVELOPMENT,INC. |
| 70 | 11,12 | JOYNER P.TRIPP |
| 71 | 12 | WILLIAM F.HOFFMAN |
| 72 | 12 | REGINALD & BONITA SPAIN |
| 73 | 12 | LINDA L.GADDIS |
| 74 | 12 | OCTAVIO & OGLA FLORES |
| 75 | 12 | GREYSTONE MOBILE HOME PARK,LLC |
| 76 | 12 | GREYSTONE MOBILE HOME PARL,LLC |
| 77 | 12 | FIRETOWER CROSSING,LLC |
| 78 | 12 | FIRETOWER CROSSING,LLC |
| 79 | 12 | FIRETOWER CROSSING,LLC |
| 80 | 12 | FIRETOWER CROSSING,LLC |
| 81 | 12 | FIRETOWER CROSSING,LLC |
| 82 | 12 | FIRETOWER CROSSING,LLC |
| 83A | 12 | KAREN W.BRIGHT |
| 83B | 12 | ANTHONY S.HART,ET UX |
| 83C | 12 | JESSE C.MOORE,ET UX |
| 83D | 12 | JOANNE T.CHILDS |
| 83E | 12 | KERRY P.HOUSE |
| 83F | 12 | MILDRED GODWIN |
| 83G | 12 | ROBERT E.EARNHARDT |
| 83H | 12 | MATTHEW A.ALDRIDGE,ET UX |
| 84 | 12 | N.C.FOREST SERVICE |
| 85 | 13 | JUDY WORTHINGTON McLAWHORN/GOLD WORTHINGTON WALKER |
| 85A | 12,13 | REGGIE SPAIN CONSTRUCTION,LLC |
| 85B | 12 | KAREN W.BRIGHT |
| 85C | 12,13 | CORY LEE SCOTT |
| 85D | 13 | RANDOLPH JEFFORY |
| 85E | 13 | EDWARD GILBERT |
| 85F | 13 | BOBBY DIXON |
| 85G | 13 | FIRST SOUTH BANK |
| 86 | 13 | WILTON E.& LENA J.EVANS |
| 87 | 13 | RALPH C.TUCKER |
| 88 | 13 | HARRY H.McLEAN |
| 89 | 13 | LINDA LOU EVANS |
| 90 | 13 | FLANDERS EQUITY CORP. |
| 91 | 13 | W.G.POLLARD,JR. |
| 92 | 14 | EDGAR WALL |
| 93 | 13,14 | COVENANT UNITED METHODIST CHURCH OF GREENVILLE |
| 94 | 14 | COVENANT UNITED METHODIST CHURCH OF GREENVILLE |
| 95 | 14 | COVENANT UNITED METHODIST CHURCH OF GREENVILLE |
| 95A | 17 | COVENANT UNITED METHODIST CHURCH |
| 96 | 14 | WILLARD G.POLLARD,JR. |
| 97 | 14 | WILLARD G.POLLARD,JR. |
| 98 | 14 | ROY F.COX |
| 99 | 14 | ALLAN C.BROWN |
| 100 | 14 | GEORGE & SYLVIA HOUGHENS |
| 101 | 14 | CARMON LORENZO,ET UX |
| 102 | 14 | COVENANT UNITED METHODIST CHURCH |
| 103 | 14 | JUDSON BLOUNT III |
| 104 | 14 | JOHN SHOCKEY |
| 105 | 14 | HUGH LINDSLEY |
| 107 | 17 | COVENANT UNITED METHODIST CHURCH |

07-FEB-2006 09:27
s:\proj\3613b\rdy_psh_parcel index.dgn
$$$$USERNAME$$$$

| REVISIONS |
|---|
| |

| PROJECT REFERENCE NO. | SHEET NO. |
|---|---|
| U-3613B | 4 |
| R/W SHEET NO. | |
| ROADWAY DESIGN ENGINEER | HYDRAULICS ENGINEER |

NORTH CAROLINA PROFESSIONAL SEAL 14571 ENGINEER JAMES A. SPEER — 5/01/06

NORTH CAROLINA PROFESSIONAL SEAL 20870 ENGINEER MARC T. SHOWN — 5-1-06

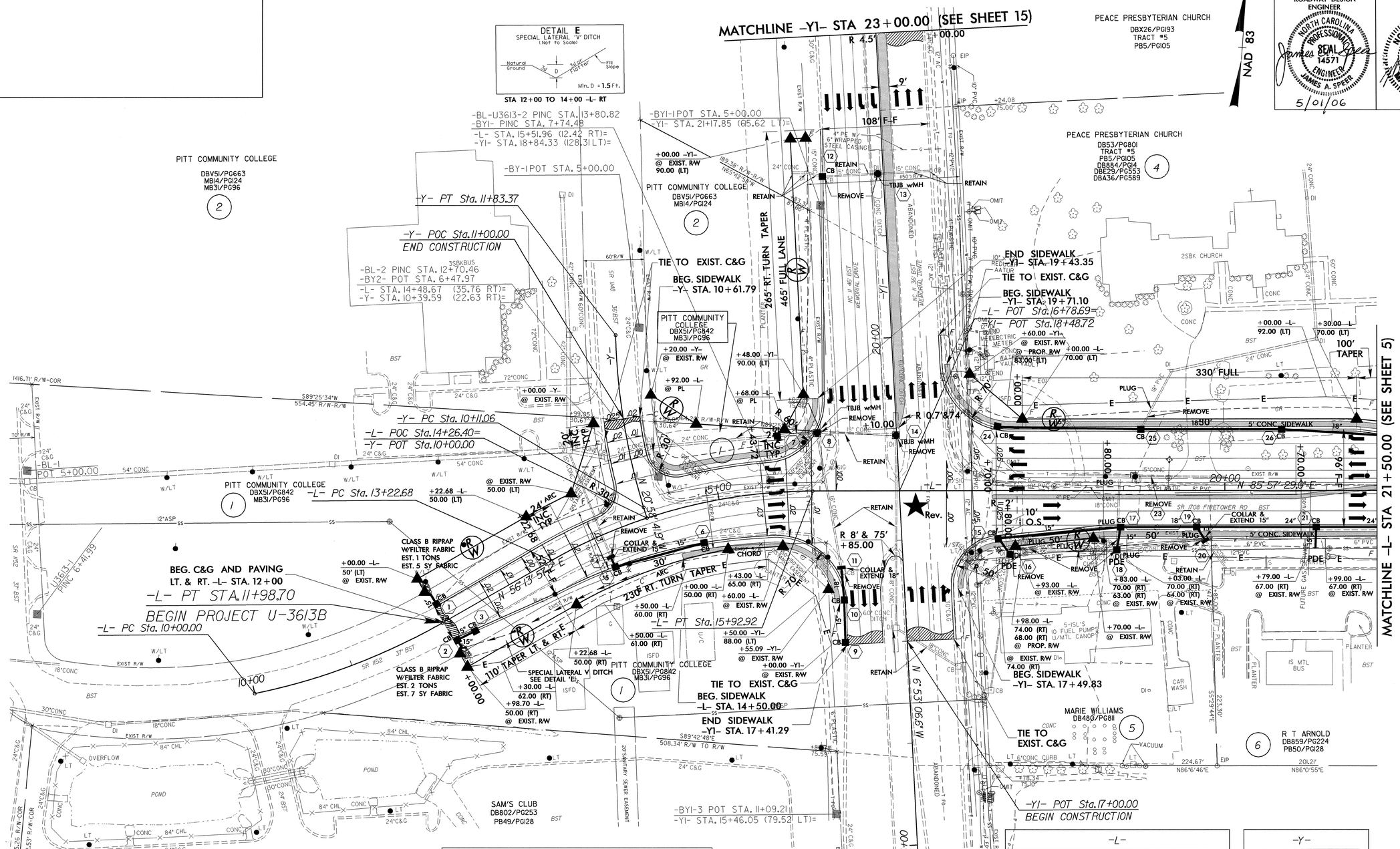


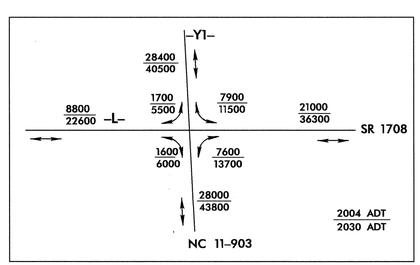


| -L- | |
|---|---|
| PI Sta 11+00.20 | PI Sta 14+60.92 |
| Δ = 18° 16' 20.4" (LT) | Δ = 29° 43' 31.9" (RT) |
| D = 9° 11' 45.1" | D = 11° 00' 00.0" |
| L = 198.70' | L = 270.23' |
| T = 100.20' | T = 138.23' |
| R = 623.06' | R = 520.87' |
| | SE = 0.02-0.025 |
| | RO = 180' |

| -Y- |
|---|
| PI Sta 10+97.75 |
| Δ = 15° 30' 27.9" (RT) |
| D = 9° 00' 00.0" |
| L = 172.31' |
| T = 86.68' |
| R = 636.62' |
| SE = EX. |

★ Rev. REVISED SIGNAL

SEE SHEET 18 FOR -L- PROFILE
SEE SHEET 24 FOR -Y- PROFILE
SEE SHEET 24 FOR -Y1- PROFILE
SEE SHEET TCP-5 & TCP-6 FOR LOCATION OF OF WIDENING AND TEMP. DRAINAGE

06-MAR-2006 12:01
u3613bs04.dgn
$$$$USERNAME$$$$

RD212399 3/6/2006 u3613bs04 dwgardner RD-Oce34

7/12/99

| REVISIONS |
|---|
| |

| PROJECT REFERENCE NO. | SHEET NO. |
|---|---|
| U-3613B | 5 |
| R/W SHEET NO. | |
| ROADWAY DESIGN ENGINEER | HYDRAULICS ENGINEER |

NORTH CAROLINA PROFESSIONAL SEAL 14571 ENGINEER JAMES A. SPEER — 5/01/06

NORTH CAROLINA PROFESSIONAL SEAL 20870 ENGINEER MARC T. SHOWN — 5.1.06

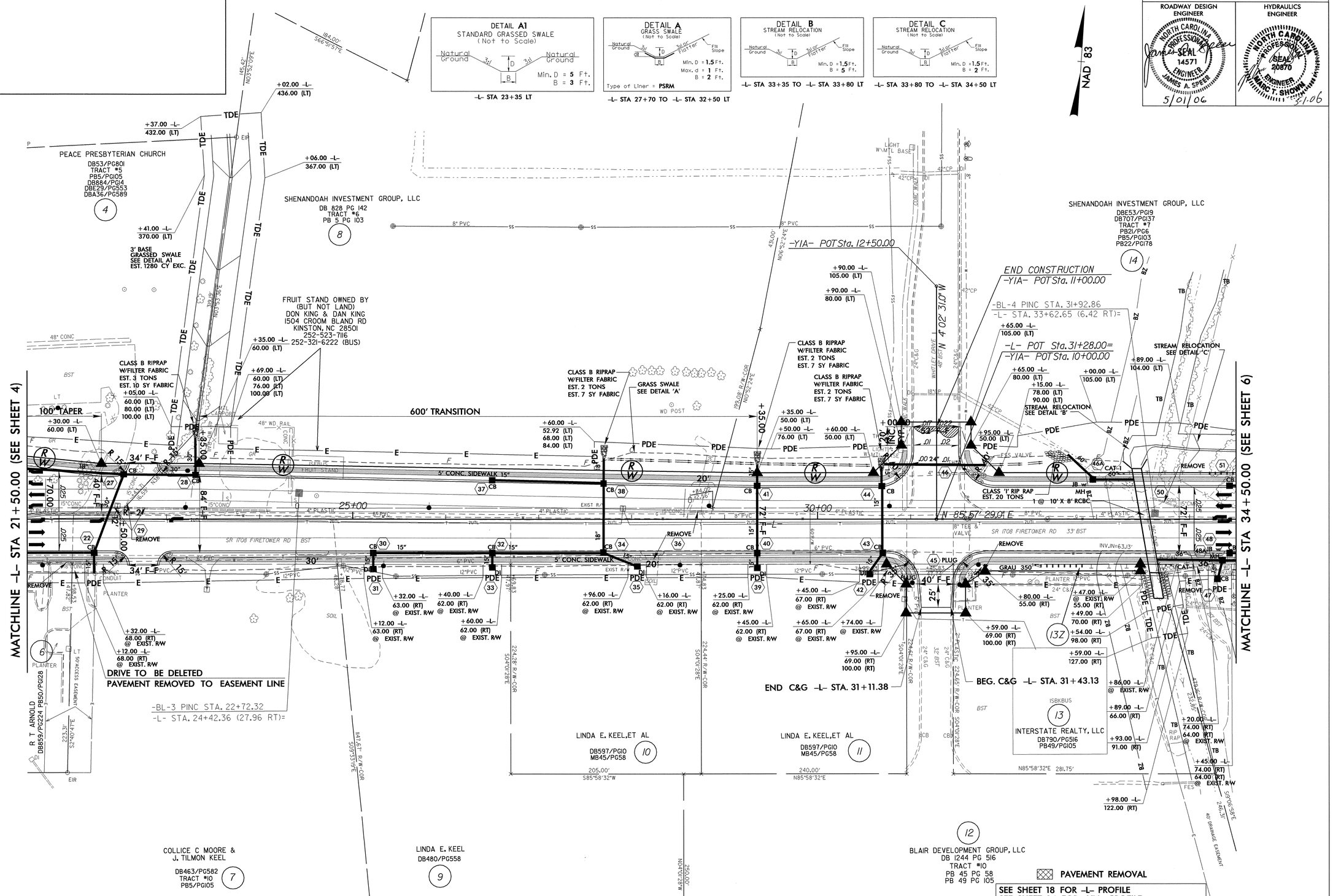


20-APR-2006 09:58
$$$$USERNAME$$$$
$$$$DGN$$$$.dgn

RD212399 4/20/2006 u3613bs05 dwgardner RD-Oce34

7/2/99

| REVISIONS |
|---|
| |

| PROJECT REFERENCE NO. | SHEET NO. |
|---|---|
| U-3613B | 6 |
| R/W SHEET NO. | |
| ROADWAY DESIGN ENGINEER | HYDRAULICS ENGINEER |
| NORTH CAROLINA PROFESSIONAL SEAL 14571 ENGINEER JAMES A. SPEER 5/01/06 | NORTH CAROLINA PROFESSIONAL SEAL 20870 ENGINEER MARC T. SHOWN 5-1-06 |

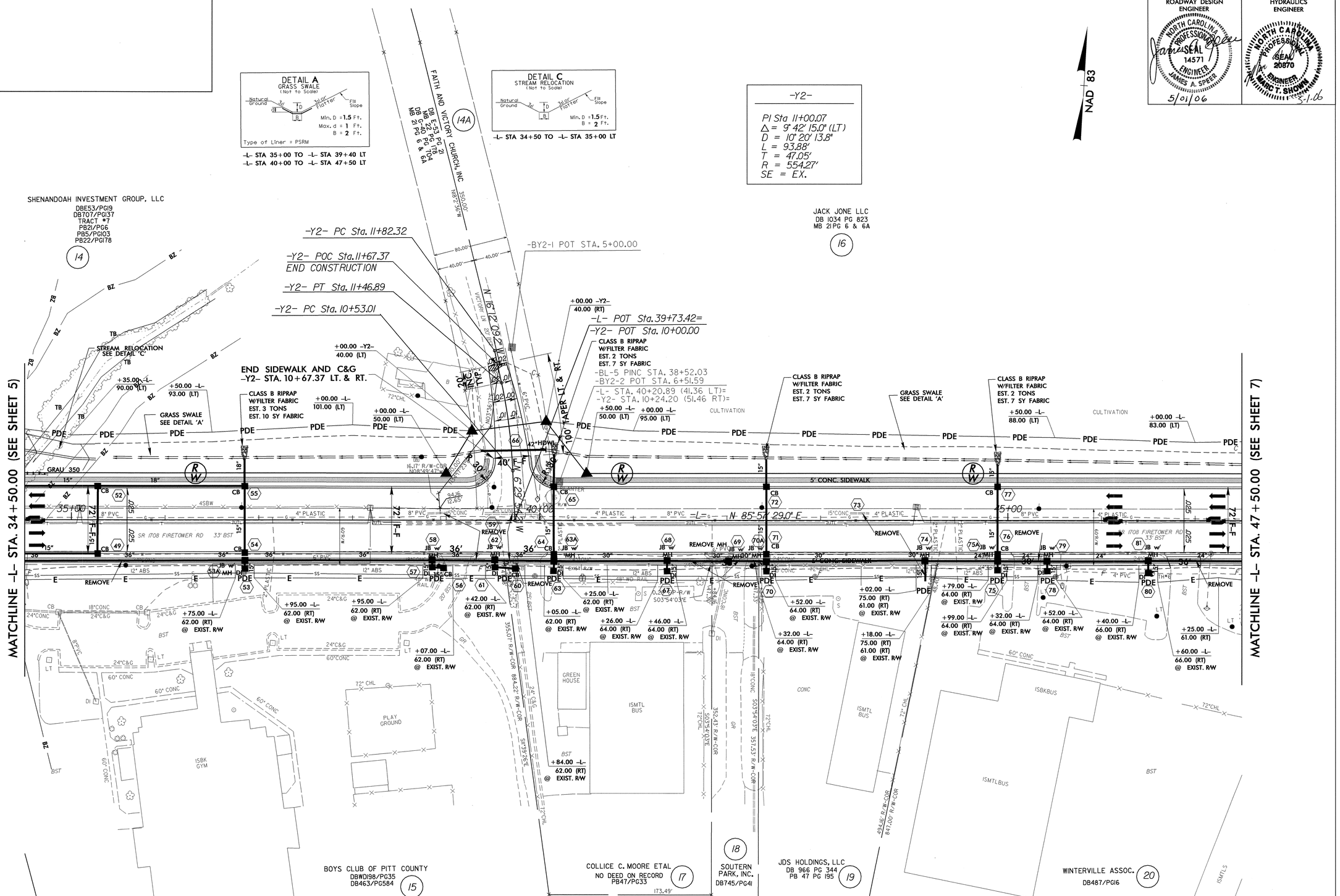


06-MAR-2006 12:01
f:\proj\u3613bs\dgn\u3613bs06.dgn
$$$$USERNAME$$$$

RD212399 3/6/2006 u3613bs06 dwgardner RD-Oce34

7/2/99

| REVISIONS |
|---|
| |

| PROJECT REFERENCE NO. | SHEET NO. |
|---|---|
| U-3613B | 7 |
| R/W SHEET NO. | |
| ROADWAY DESIGN ENGINEER | HYDRAULICS ENGINEER |
| NORTH CAROLINA PROFESSIONAL SEAL 14571 ENGINEER JAMES A. SPEER 5/01/06 | NORTH CAROLINA PROFESSIONAL SEAL 20870 ENGINEER MARC T. SHOWN 5-1-06 |

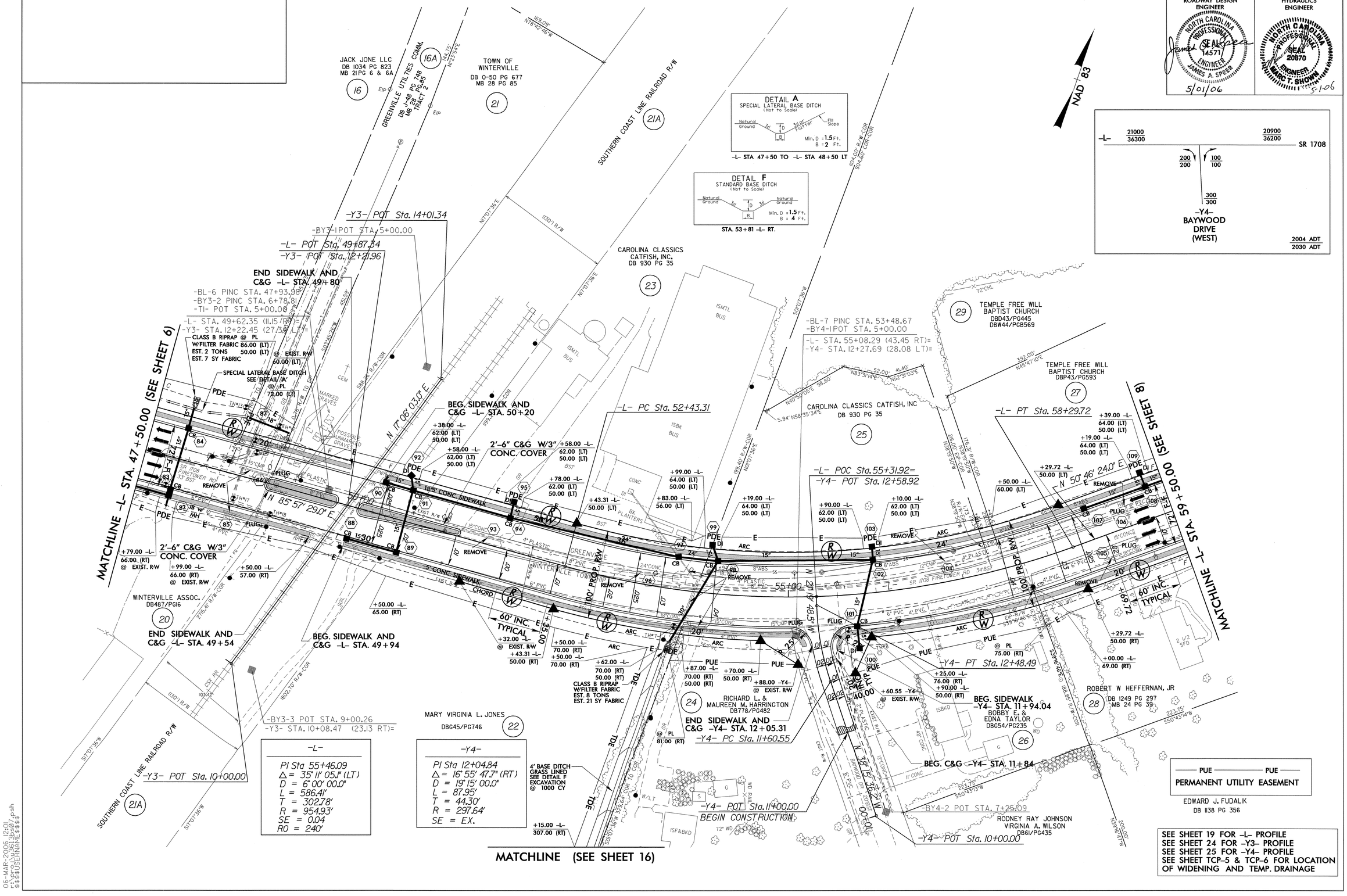


06-MAR-2006 12:01
r:\roadway\proj\u3613bs_rdy.psh
$$$$USERNAME$$$$

RD212399 3/6/2006 u3613bs07 dwgardner RD-Oce34

| REVISIONS |
|---|
| |

| PROJECT REFERENCE NO. | SHEET NO. |
|---|---|
| U-3613B | 8 |
| R/W SHEET NO. | |
| ROADWAY DESIGN ENGINEER | HYDRAULICS ENGINEER |
| NORTH CAROLINA PROFESSIONAL SEAL 14571 ENGINEER JAMES A. SPEER 5/01/06 | NORTH CAROLINA PROFESSIONAL SEAL 20870 ENGINEER MARC T. SHOWN 5-1-06 |

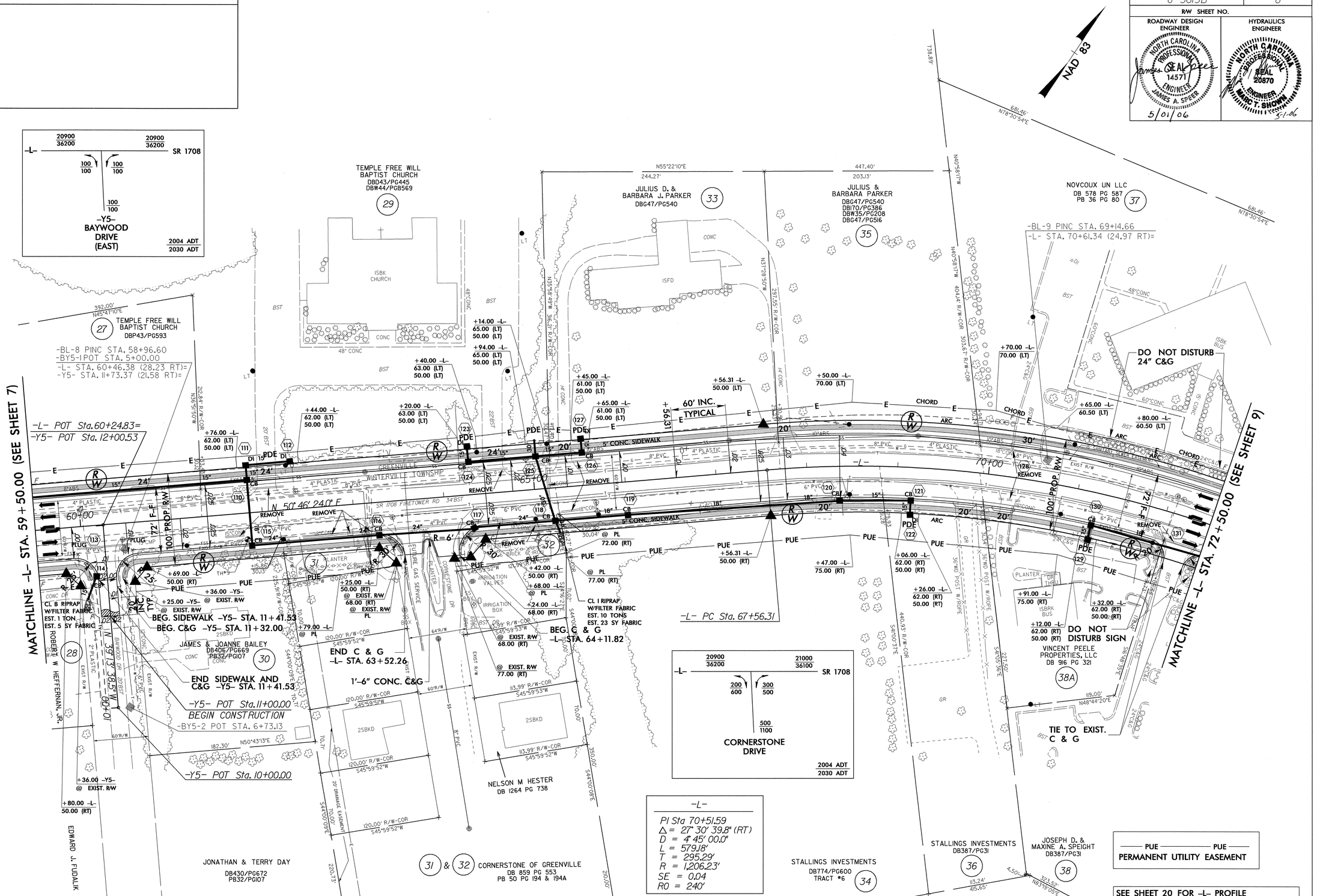


06-MAR-2006 12:01
$$$$PROJECT$$$$
$$$$USERNAME$$$$

RD212399 3/6/2006 u3613bs08 dwgardner RD-Oce34

7/2/99

| REVISIONS |
|---|
| |

| PROJECT REFERENCE NO. | SHEET NO. |
|---|---|
| U-3613B | 9 |
| R/W SHEET NO. | |

ROADWAY DESIGN ENGINEER — NORTH CAROLINA PROFESSIONAL SEAL 14571 ENGINEER JAMES A. SPEER — 5/01/06

HYDRAULICS ENGINEER — NORTH CAROLINA PROFESSIONAL SEAL 20870 ENGINEER MARC T. SHOWN — 5-1-06

| -L- |
|---|
| PI Sta 80+38.76 |
| Δ = 1° 45' 21.6" (RT) |
| D = 0° 30' 00.0" |
| L = 351.20' |
| T = 175.61' |
| R = 11,459.16' |
| SE = N.C. |

| -Y6- | |
|---|---|
| PI Sta 15+99.64 | PI Sta 18+55.88 |
| Δ = 1° 38' 39.4" (LT) | Δ = 3° 29' 27.6" (LT) |
| D = 1° 45' 00.0" | D = 2° 27' 40.2" |
| L = 93.96' | L = 141.84' |
| T = 46.98' | T = 70.94' |
| R = 3,274.04' | R = 2,328.00' |
| SE = N.C. | SE = N.C. |

DETAIL D
SPECIAL CUT DITCH
(Not to Scale)
Natural Ground — 3:1 — D — 4:1 or Flatter — Front Ditch Slope
Min. D = 1.5 Ft.

-Y6- STA 10+50 TO -Y6- STA 12+50 LT
-Y6- STA 10+50 TO -Y6- STA 12+50 RT
-Y6- STA 15+00 TO -Y6- STA 17+00 LT
-Y6- STA 14+90 TO -Y6- STA 17+25 RT

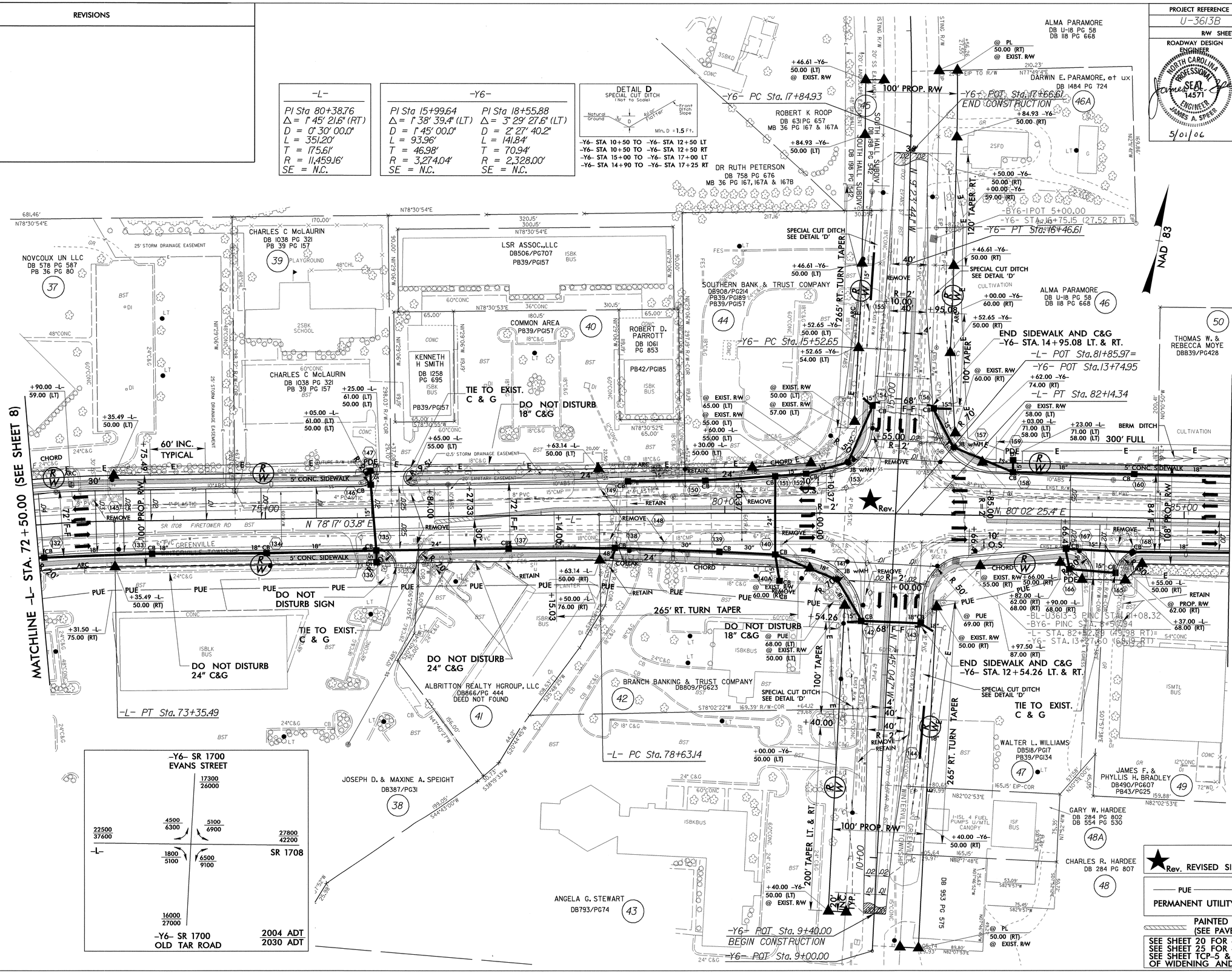


| -Y6- SR 1700 EVANS STREET | | |
|---|---|---|
| 17300 / 26000 | | |
| 4500 / 6300 | 5100 / 6900 | |
| 22500 / 37600 | | 27800 / 42200 |
| -L- | 1800 / 5100 | 6500 / 9100 | SR 1708 |
| 16000 / 27000 | | |
| -Y6- SR 1700 OLD TAR ROAD | | 2004 ADT / 2030 ADT |

★ Rev. REVISED SIGNAL

—PUE— —PUE— PERMANENT UTILITY EASEMENT

PAINTED ISLAND (SEE PAVE. MARKING PLANS)

SEE SHEET 20 FOR -L- PROFILE
SEE SHEET 25 FOR -Y6- PROFILE
SEE SHEET TCP-5 & TCP-6 FOR LOCATION OF WIDENING AND TEMP. DRAINAGE

20-APR-2006 13:55
c:\pw_work\rd212399\u3613bs09.dgn
$$$$USERNAME$$$$

RD212399 4/20/2006 u3613bs09 dwgardner RD-Oce34

| REVISIONS |
|---|
| |

| PROJECT REFERENCE NO. | SHEET NO. |
|---|---|
| U-3613B | 10 |
| R/W SHEET NO. | |

ROADWAY DESIGN ENGINEER — NORTH CAROLINA PROFESSIONAL SEAL 14571 ENGINEER JAMES A. SPEER — 5/01/06

HYDRAULICS ENGINEER — NORTH CAROLINA PROFESSIONAL SEAL 20870 ENGINEER MARC T. SHOWN — 5-1-06

27400 / 41700 — 27000 / 41300 — SR 1708

1000 / 1000 — 600 / 600

1600 / 1600

-Y7- WINDING BRANCHES ROAD

2004 ADT / 2030 ADT

DETAIL A
GRASS SWALE
(Not to Scale)

Natural Ground — 3:1 — d — D — B — 3:1 — 30.00' Flat Ter — Fill Slope

Min. D = 1.5 Ft.
Max. d = 1 Ft.
B = 2 Ft.

Type of Liner = PSRM

-L- STA 92+50 TO -L- STA 100+50 LT

-L-

PI Sta 89+45.15
Δ = 15° 12' 37.6" (LT)
D = 3° 00' 00.0"
L = 507.01'
T = 255.01'
R = 1,909.86'
SE = 0.035

-Y7-

PI Sta 11+00.58
Δ = 7° 16' 31.7" (RT)
D = 3° 37' 17.8"
L = 200.89'
T = 100.58'
R = 1,582.05'
SE = N.C.

NAD 83

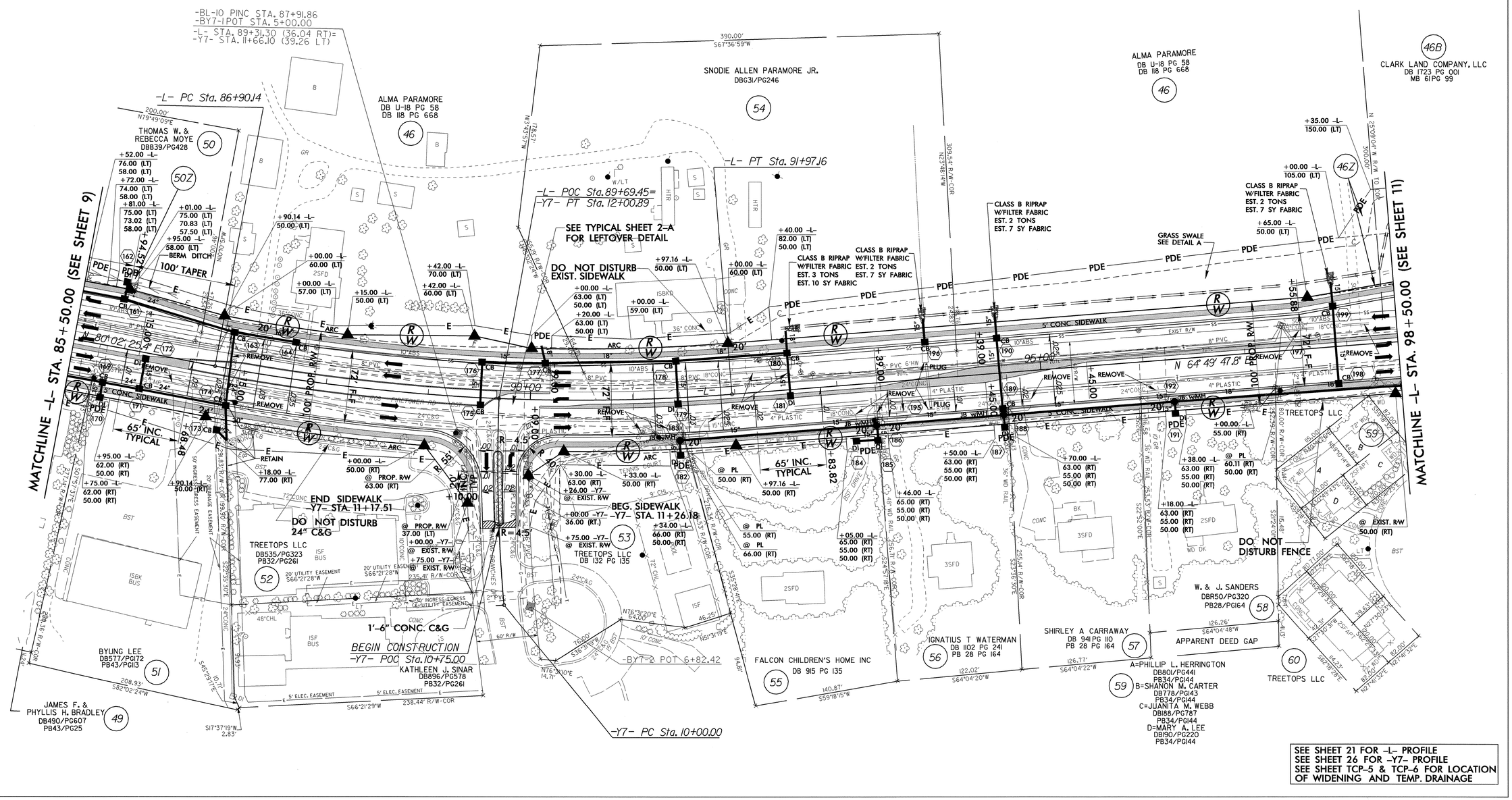


SEE SHEET 21 FOR -L- PROFILE
SEE SHEET 26 FOR -Y7- PROFILE
SEE SHEET TCP-5 & TCP-6 FOR LOCATION OF WIDENING AND TEMP. DRAINAGE

| PROJECT REFERENCE NO. | SHEET NO. |
|---|---|
| U-3613B | 11 |
| R/W SHEET NO. | |

ROADWAY DESIGN ENGINEER: NORTH CAROLINA PROFESSIONAL SEAL 14571 ENGINEER JAMES A. SPEER — 5/01/06

HYDRAULICS ENGINEER: NORTH CAROLINA PROFESSIONAL SEAL 20870 ENGINEER MARC T. SHOWN — 3-1-06

7/2/99

REVISIONS

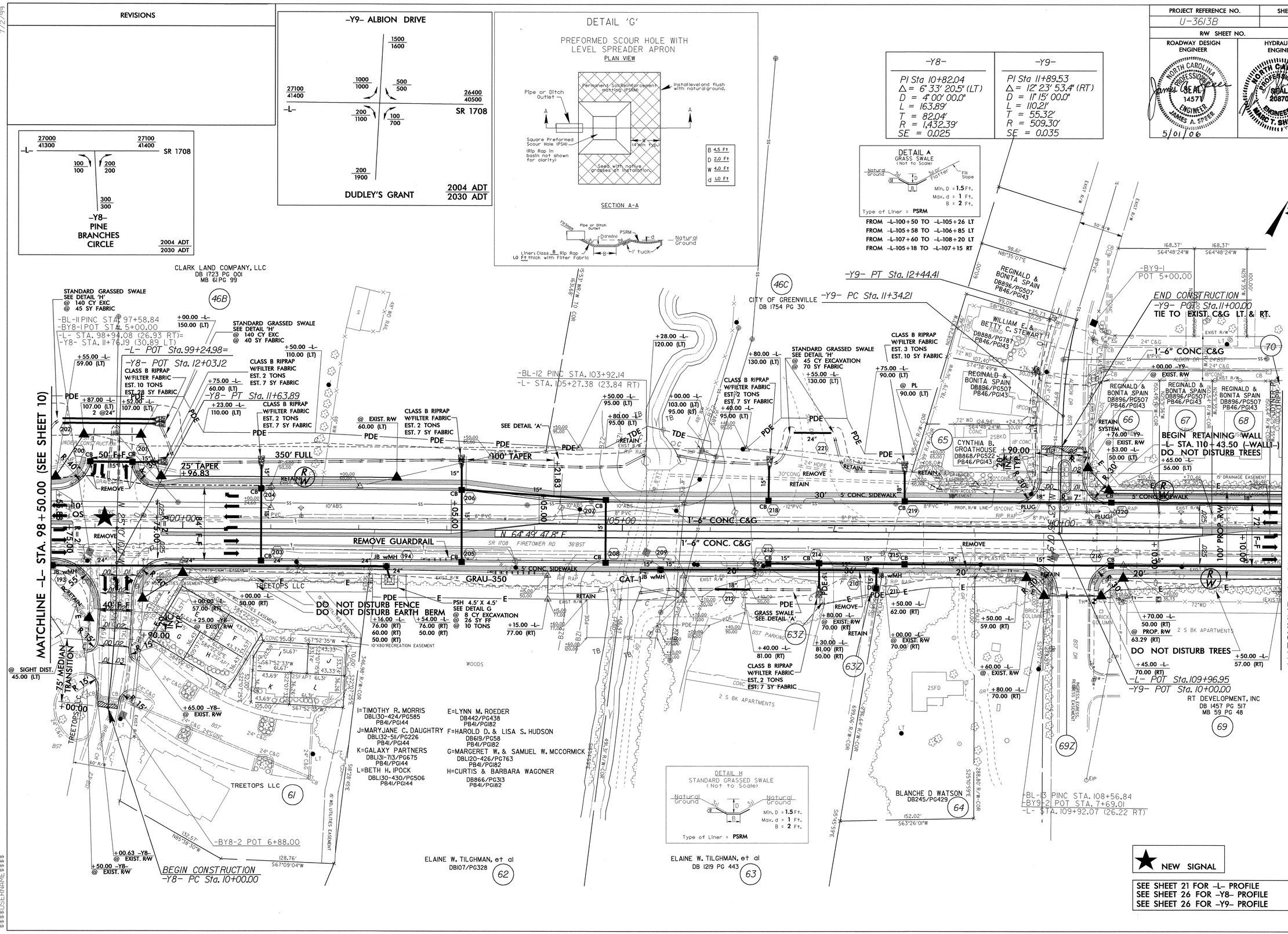


SEE SHEET 21 FOR -L- PROFILE
SEE SHEET 26 FOR -Y8- PROFILE
SEE SHEET 26 FOR -Y9- PROFILE

06-MAR-2006 12:00
r:\proj\3613bs11_sht\
$$$$USERNAME$$$$

RD212399 3/6/2006 u3613bs11 dwgardner RD-Oce34

| REVISIONS |
|---|
| |

| PROJECT REFERENCE NO. | SHEET NO. |
|---|---|
| U-3613B | 12 |
| R/W SHEET NO. | |
| ROADWAY DESIGN ENGINEER | HYDRAULICS ENGINEER |
| NORTH CAROLINA PROFESSIONAL SEAL 14571 ENGINEER JAMES A. SPEER 5/01/06 | NORTH CAROLINA PROFESSIONAL SEAL 20820 ENGINEER MARC T. SHOWN 5-1-06 |

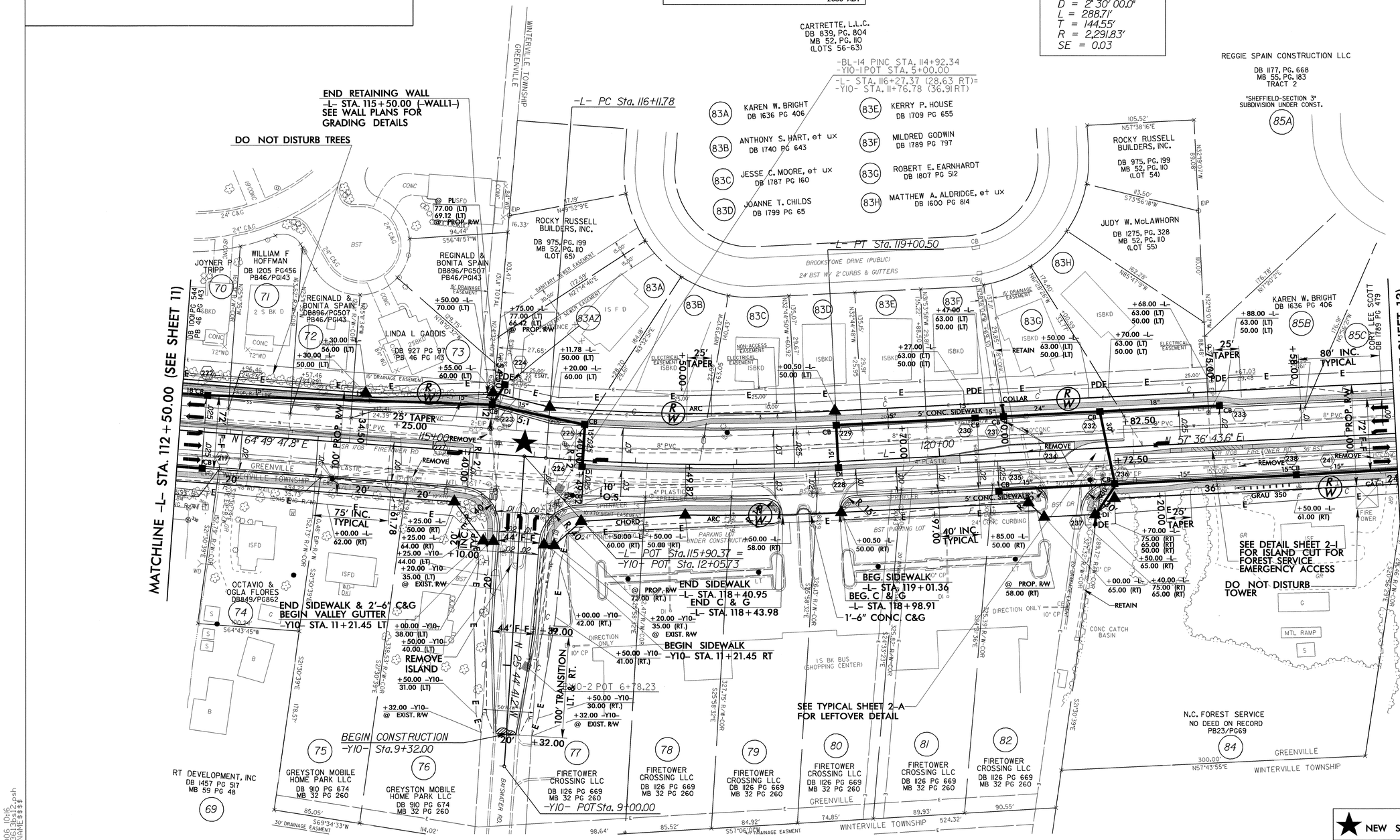


7/2/99

20-APR-2006 10:16
S:\PROJECTS\U3613B\RW\sheets\u3613bs12.dgn
$$$$USERNAME$$$$

RD212399 4/20/2006 u3613bs12 dwgardner RD-Oce34

7/12/99

| REVISIONS |
|---|
| |

| PROJECT REFERENCE NO. | SHEET NO. |
|---|---|
| U-3613B | 13 |
| R/W SHEET NO. | |
| ROADWAY DESIGN ENGINEER | HYDRAULICS ENGINEER |

NORTH CAROLINA PROFESSIONAL SEAL 14571 ENGINEER JAMES A. SPEER — 5/01/06

NORTH CAROLINA PROFESSIONAL SEAL 20870 ENGINEER MARC T. SHOWN — 5-1-06

**-Y11-**

PI Sta 10+46.00
Δ = 7° 34' 44.2" (RT)
D = 8° 15' 00.0"
L = 91.87'
T = 46.00'
R = 694.49'
SE = 0.033

**-L-**

PI Sta 127+01.53
Δ = 4° 21' 23.0" (RT)
D = 1° 30' 00.0"
L = 290.43'
T = 145.28'
R = 3,819.72'
SE = 0.025

PI Sta 139+77.26
Δ = 17° 53' 45.4" (LT)
D = 2° 30' 00.0"
L = 715.84'
T = 360.86'
R = 2,291.83'
SE = 0.03

**DETAIL C**
SPECIAL CUT DITCH
(Not to Scale)

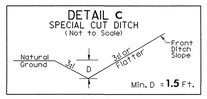


-Y11- STA 10+00 TO 11+50 RT & LT
-Y12- STA 10+00 TO 11+00 RT & LT

**DETAIL A**
GRASS SWALE
(Not to Scale)

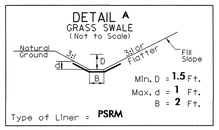


FROM -L-129+00 TO -L-135+50

NAD 83

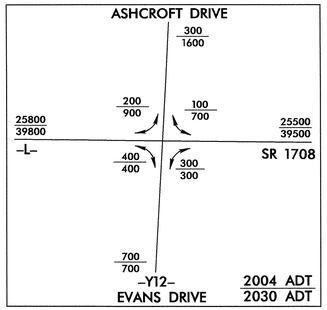





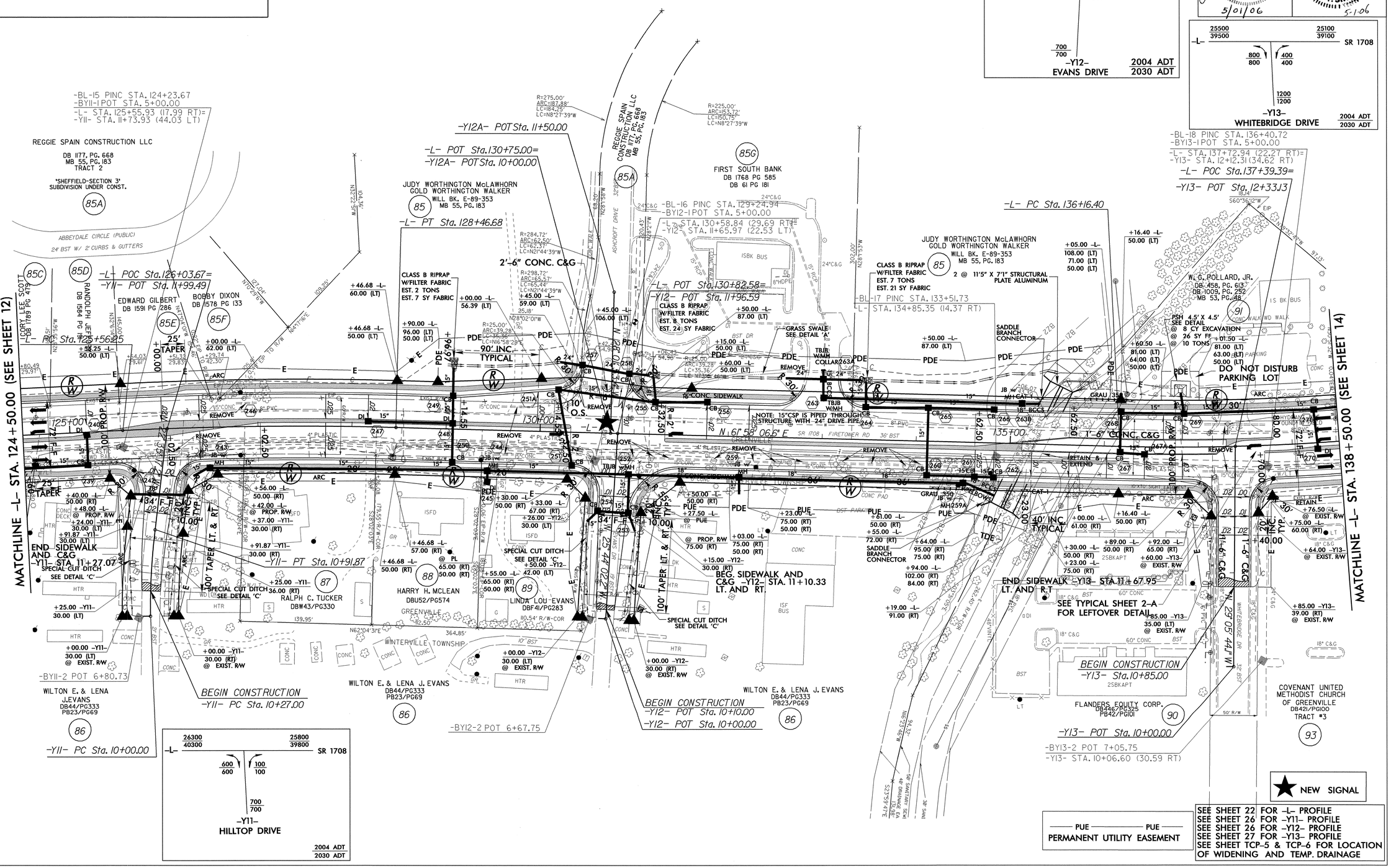





★ NEW SIGNAL

—— PUE —— PUE ——
PERMANENT UTILITY EASEMENT

SEE SHEET 22 FOR -L- PROFILE
SEE SHEET 26 FOR -Y11- PROFILE
SEE SHEET 26 FOR -Y12- PROFILE
SEE SHEET 27 FOR -Y13- PROFILE
SEE SHEET TCP-5 & TCP-6 FOR LOCATION OF WIDENING AND TEMP. DRAINAGE

20-APR-2006 10:33
n:\proj\3613b\sht\sheet13.dgn
$$$$USERNAME$$$$

RD212399 4/20/2006 u3613bs13 dwgardner RD-Oce34

| REVISIONS |
|---|
| |

| PROJECT REFERENCE NO. | SHEET NO. |
|---|---|
| U-3613B | 14 |
| R/W SHEET NO. | |

ROADWAY DESIGN ENGINEER: NORTH CAROLINA PROFESSIONAL SEAL 14571 ENGINEER JAMES A. SPEER — James A. Speer — 5/01/06

HYDRAULICS ENGINEER: NORTH CAROLINA PROFESSIONAL SEAL 20870 ENGINEER MARC T. SHOMA — 5-1-06

| -L- | |
|---|---|
| PI Sta 139+77.26 | PI Sta 149+75.62 |
| Δ = 17° 53' 45.4" (LT) | Δ = 14° 24' 15.9" (LT) |
| D = 2° 30' 00.0" | D = 3° 45' 00.0" |
| L = 715.84' | L = 384.12' |
| T = 360.86' | T = 193.08' |
| R = 2,291.83' | R = 1,527.89' |
| SE = 0.03 | SE = 0.04 |

| -Y16- |
|---|
| PI Sta 11+81.08 |
| Δ = 55° 57' 13.4" (RT) |
| D = 85° 00' 00.0" |
| L = 65.83' |
| T = 35.81' |
| R = 67.41' |
| SE = 0.04 |

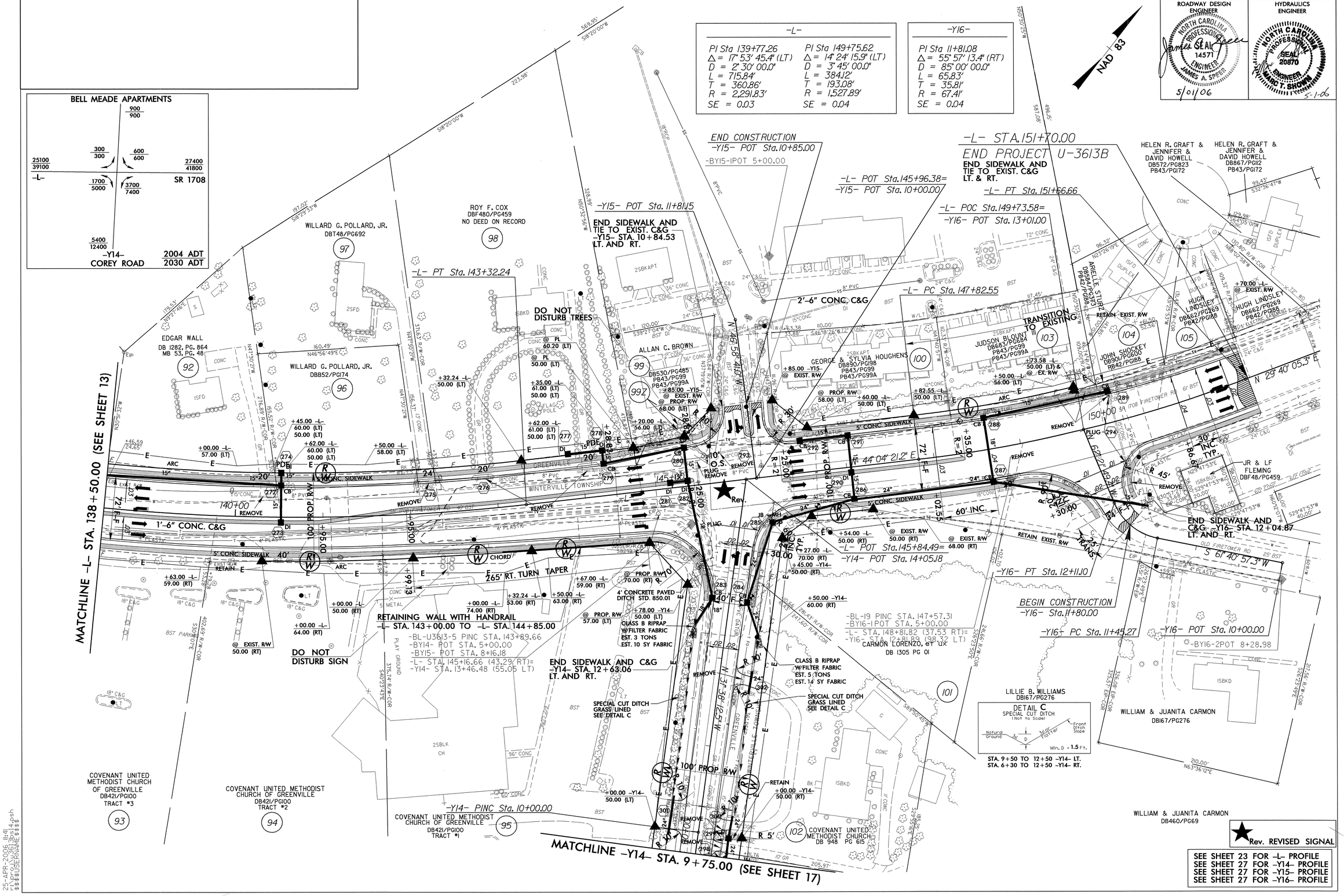


SEE SHEET 23 FOR -L- PROFILE
SEE SHEET 27 FOR -Y14- PROFILE
SEE SHEET 27 FOR -Y15- PROFILE
SEE SHEET 27 FOR -Y16- PROFILE

7/2/99

25-APR-2006 11:41
r:\proj\u3613bs14.psh
f:$$USERNAME$$$$

RD212399 4/25/2006 u3613bs14 dwgardner RD-Oce34

7/2/99

| REVISIONS |
|---|
| |

| PROJECT REFERENCE NO. | SHEET NO. |
|---|---|
| U-3613B | 15 |
| R/W SHEET NO. | |
| ROADWAY DESIGN ENGINEER | HYDRAULICS ENGINEER |
| 5/01/06 | 5-1-06 |

NAD 83

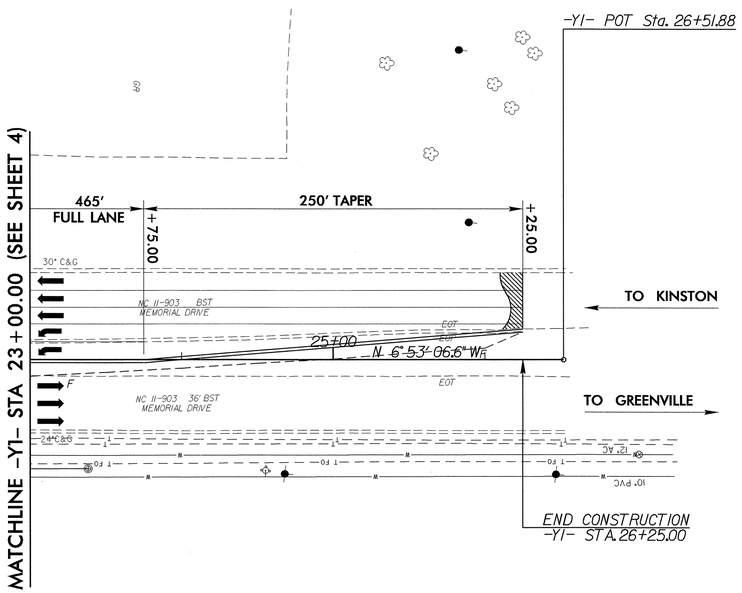


SEE SHEET 24 FOR -Y1- PROFILE

06-MAR-2006 12:00
r:\roadway\proj\3613bs10.dgn
$$$$USERNAME$$$$

7/2/99

| REVISIONS |
|---|
| |

| PROJECT REFERENCE NO. | SHEET NO. |
|---|---|
| U-3613B | 16 |
| R/W SHEET NO. | |
| ROADWAY DESIGN ENGINEER | HYDRAULICS ENGINEER |

NORTH CAROLINA PROFESSIONAL SEAL 14571 ENGINEER JAMES A. SPIGER
5/01/06

NORTH CAROLINA PROFESSIONAL SEAL 20870 ENGINEER MARC T. SHOMAN

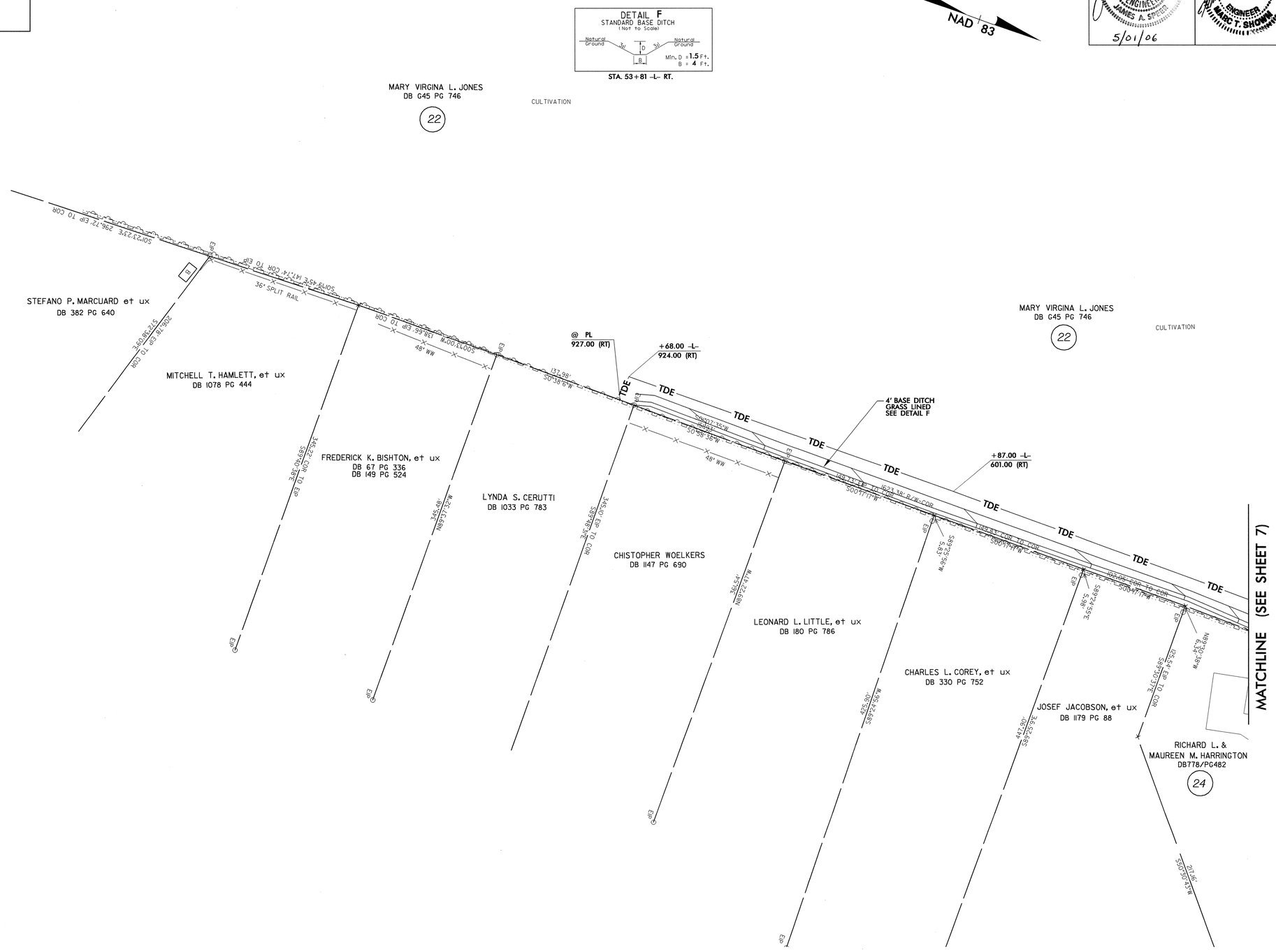


06-MAR-2006 12:00
r:\proj\3613\16.dgn
$$$$USERNAME$$$$

RD212399 3/6/2006 u3613bs16 dwgardner RD-Oce34

7/2/99

| REVISIONS |
|---|
| |

| PROJECT REFERENCE NO. | SHEET NO. |
|---|---|
| U-3613B | 17 |
| R/W SHEET NO. | |
| ROADWAY DESIGN ENGINEER | HYDRAULICS ENGINEER |
| NORTH CAROLINA PROFESSIONAL SEAL 14571 ENGINEER JAMES A. SPEER 5/01/06 | NORTH CAROLINA PROFESSIONAL SEAL 20870 ENGINEER MARC T. SHOWN 5-1-06 |

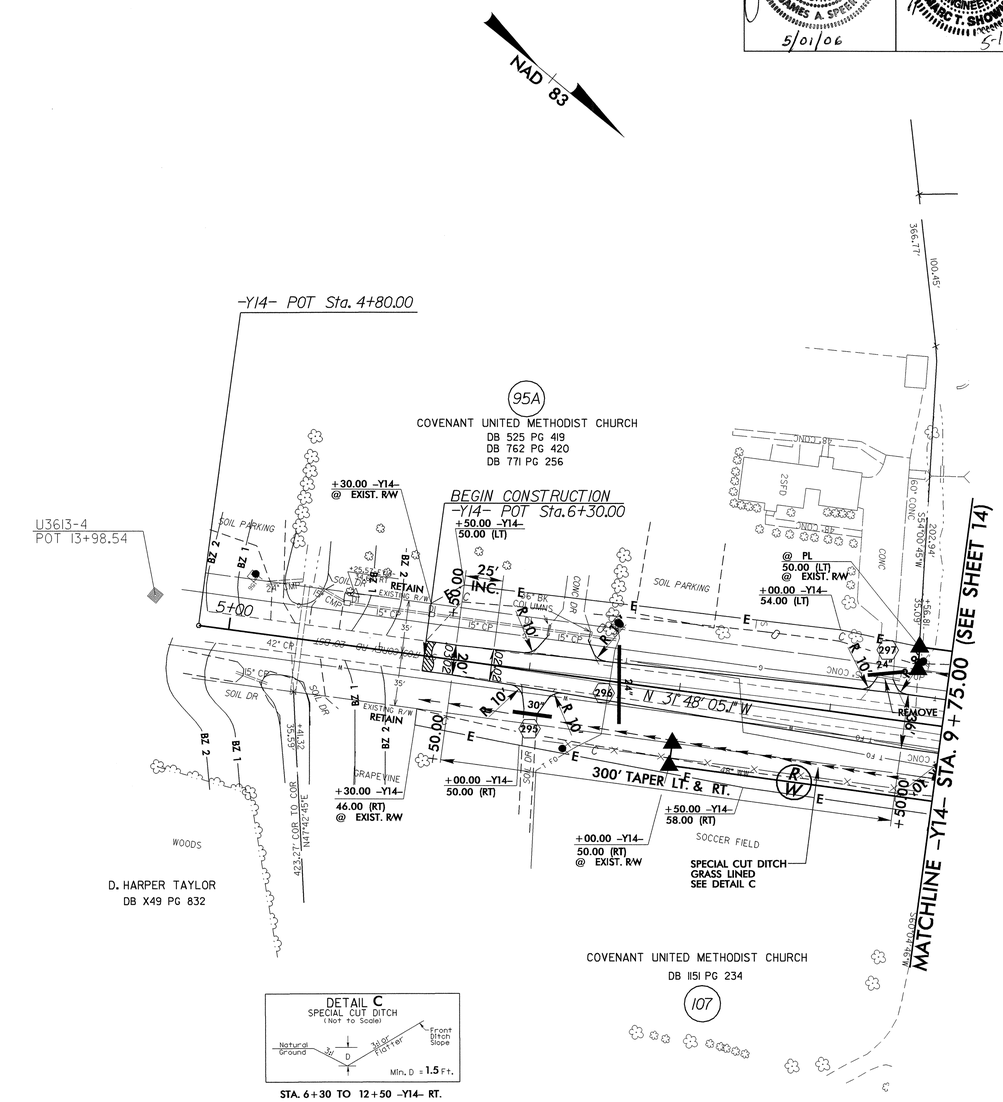


SEE SHEET 27 FOR -Y14- PROFILE

20-APR-2006 10:25
r:\roadway\proj\u3613bs17.dgn
$$$$USERNAME$$$$

RD212399 4/20/2006 u3613bs17 dwgardner RD-Oce34

5/28/99

| PROJECT REFERENCE NO. | SHEET NO. |
|---|---|
| U-3613B | 18 |

ROADWAY DESIGN ENGINEER

NORTH CAROLINA PROFESSIONAL SEAL 14571 ENGINEER JAMES A. SPIVEY

5/01/06

HYDRAULICS ENGINEER

NORTH CAROLINA PROFESSIONAL SEAL 20870 ENGINEER MARC T. SHOWN

5-1-06

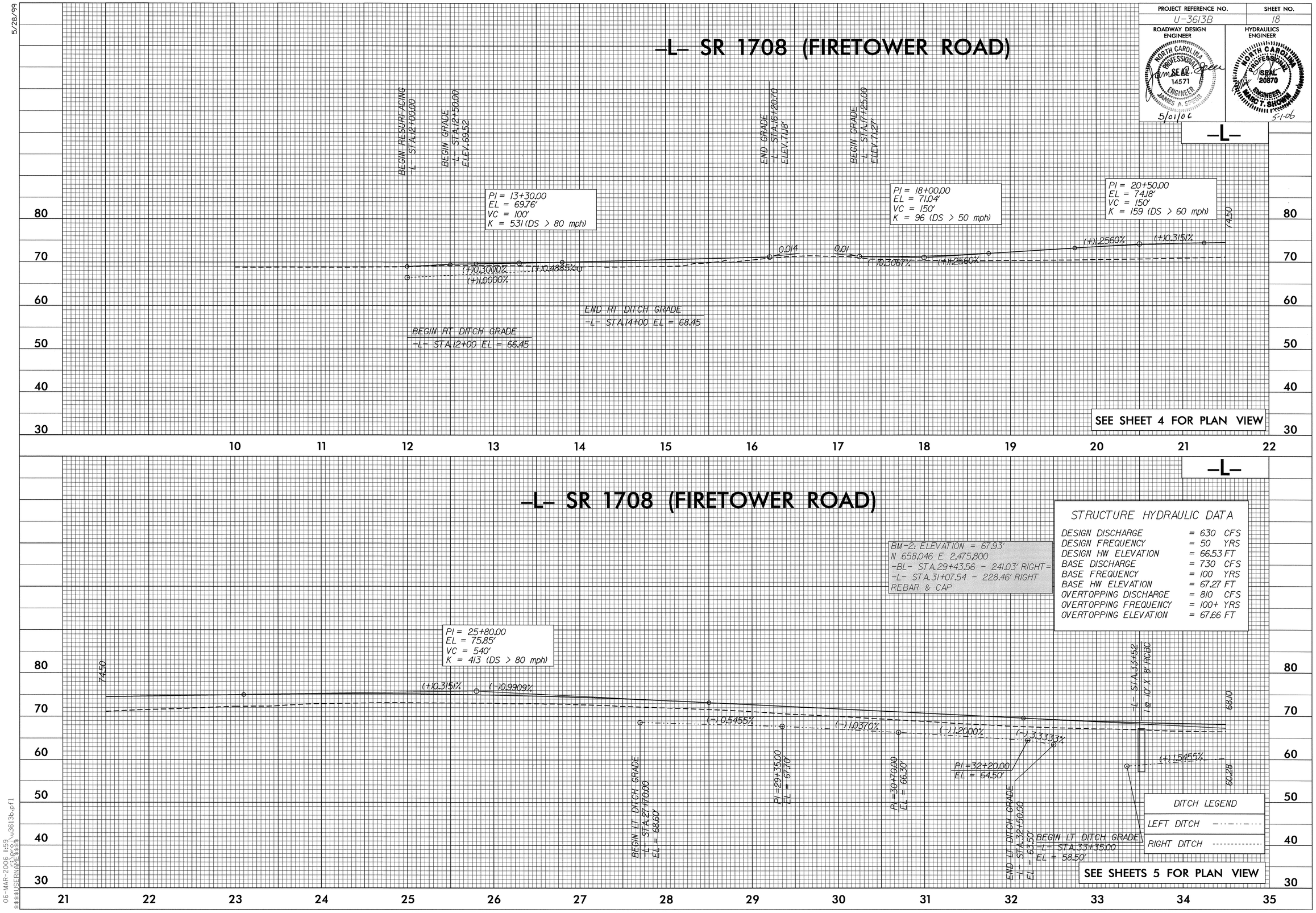


06-MAR-2006 11:59
$$$$USERNAME$$$$ u3613b.pfl

RD212399 3/6/2006 u3613bs18 dwgardner RD-Oce34

5/28/99

| PROJECT REFERENCE NO. | SHEET NO. |
|---|---|
| U-3613B | 19 |

ROADWAY DESIGN ENGINEER
NORTH CAROLINA PROFESSIONAL SEAL 14571 ENGINEER JAMES A. CREER
5/01/06

HYDRAULICS ENGINEER
NORTH CAROLINA PROFESSIONAL SEAL 20870 ENGINEER MARC T. SHOWN
5-1-06

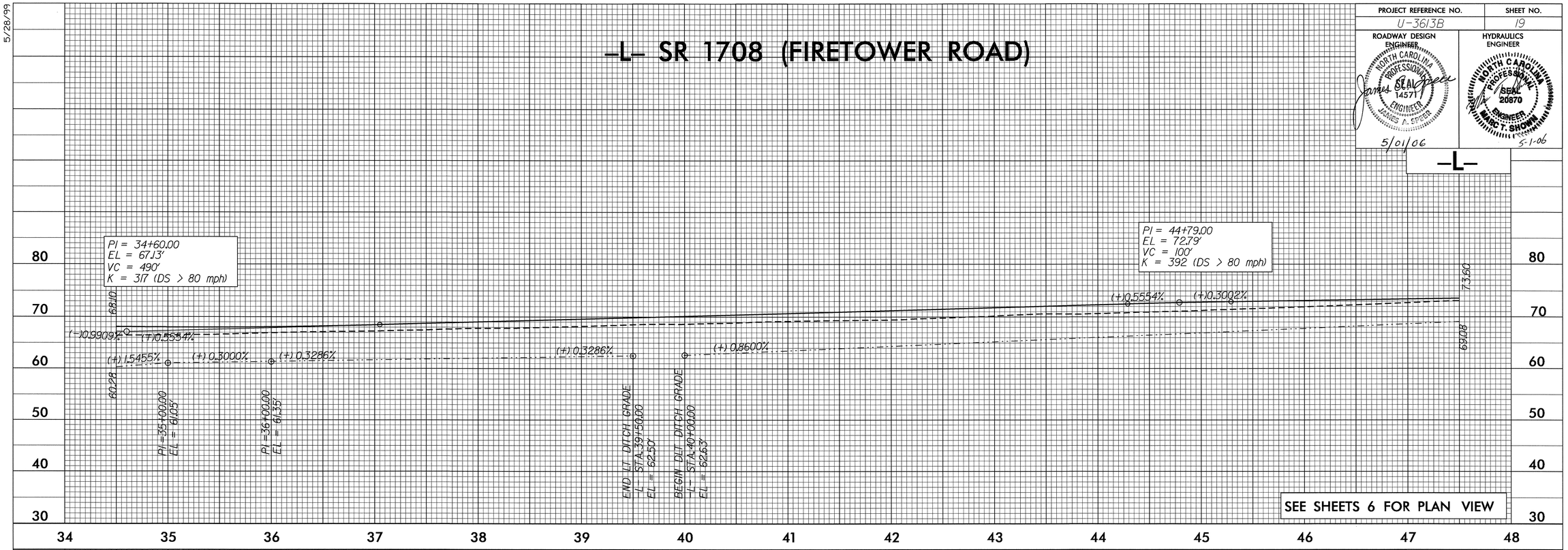


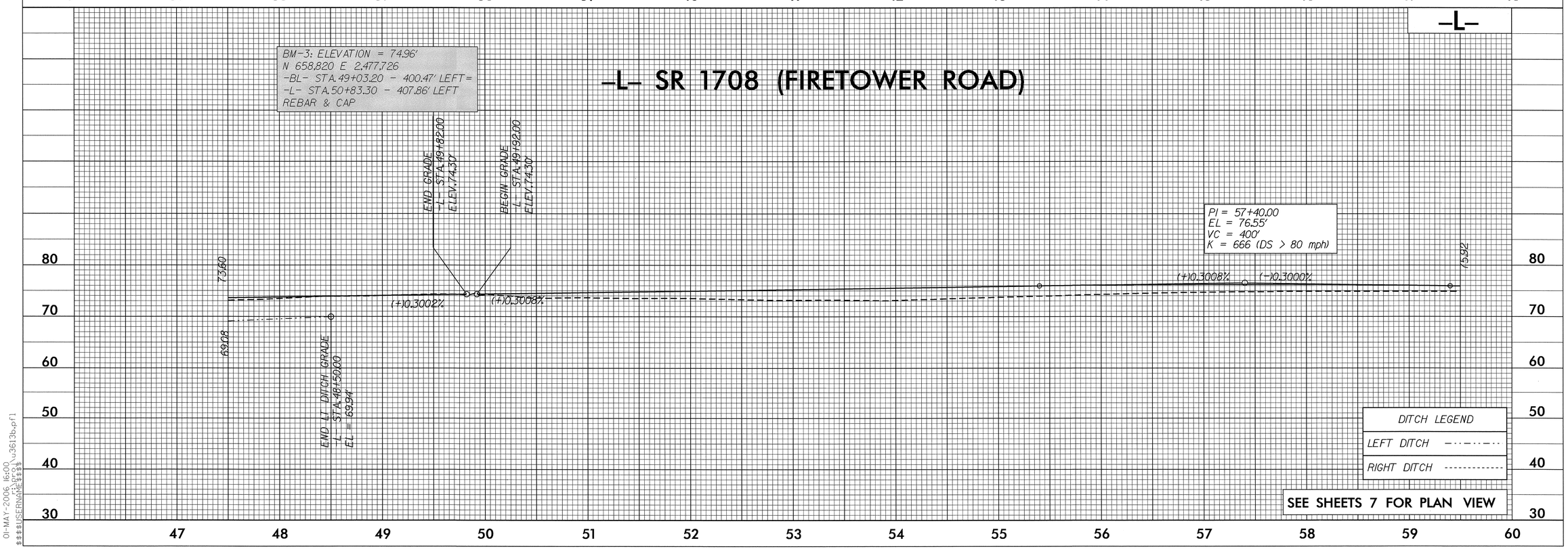


01-MAY-2006 16:00
$$$$USERNAME$$$$ \u3613b.pf1

5/28/99

| PROJECT REFERENCE NO. | SHEET NO. |
|---|---|
| U-3613B | 20 |

ROADWAY DESIGN ENGINEER

NORTH CAROLINA PROFESSIONAL SEAL 14571 ENGINEER JAMES A. SPEER

James A. Speer 5/01/06

HYDRAULICS ENGINEER

NORTH CAROLINA PROFESSIONAL SEAL 20670 ENGINEER MARC T. SHOWS

5-1-06

# -L- SR 1708 (FIRETOWER ROAD)

BM-4: ELEVATION = 72.59'
N 659,532 E 2,479,308
-BL- STA. 69+11.89 - 164.89' LEFT =
-L- STA. 70+21.37 - 184.56' LEFT
BOXCUT IN BACK OF CURB

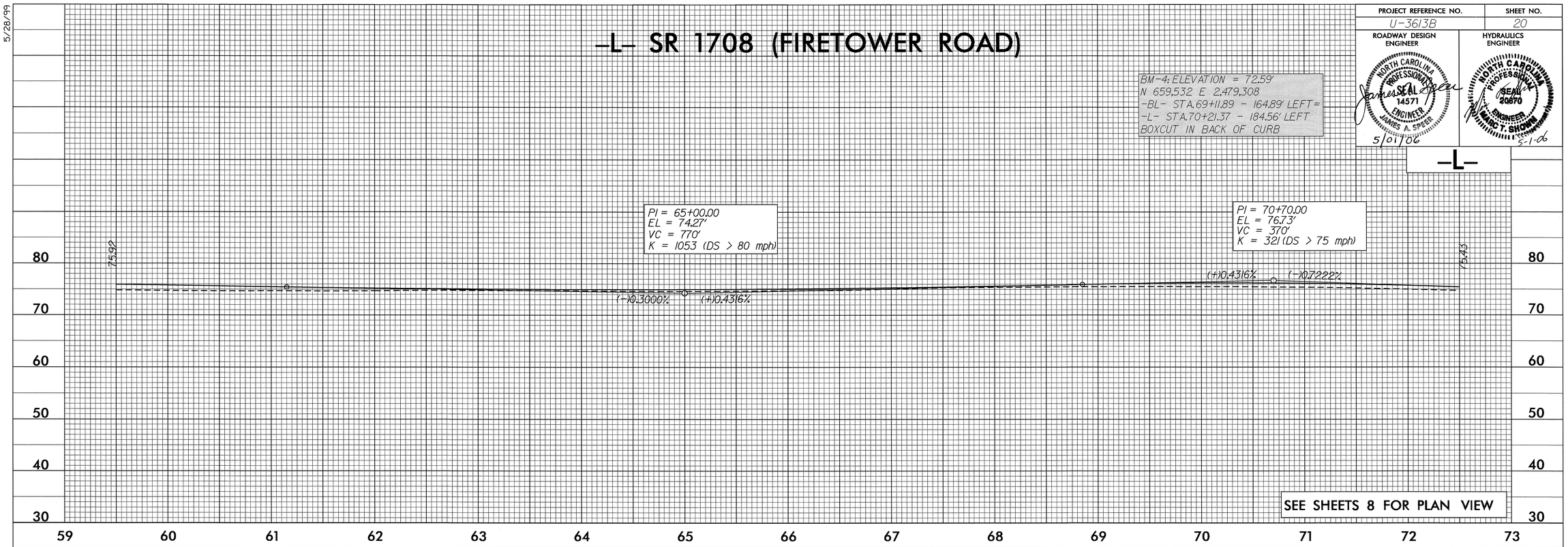


SEE SHEETS 8 FOR PLAN VIEW

# -L- SR 1708 (FIRETOWER ROAD)

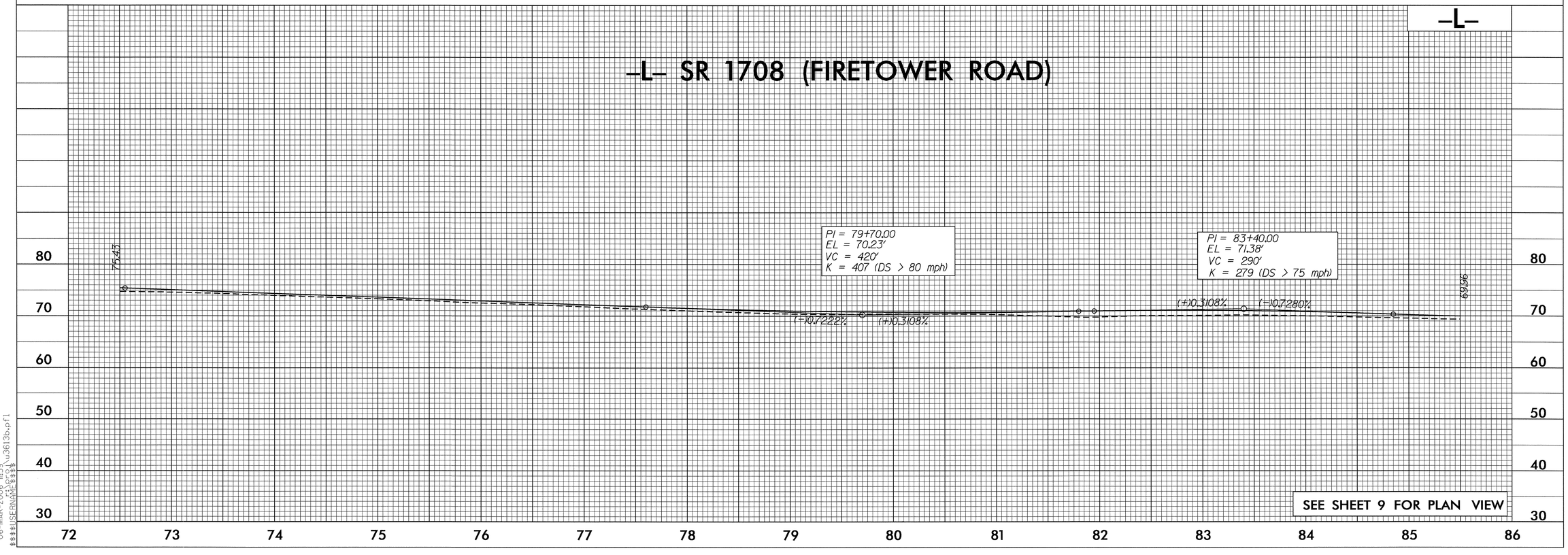


SEE SHEET 9 FOR PLAN VIEW

06-MAR-2006 11:59
$$$$USERNAME$$$$ c:\u3613bs.pl

RD212399 3/6/2006 u3613bs20 dwgardner RD-Oce34

5/28/99

| PROJECT REFERENCE NO. | SHEET NO. |
|---|---|
| U-3613B | 21 |

ROADWAY DESIGN ENGINEER
NORTH CAROLINA PROFESSIONAL SEAL 14571 ENGINEER JAMES A. SPEER
James A. Speer
5/01/06

HYDRAULICS ENGINEER
NORTH CAROLINA PROFESSIONAL SEAL 20870 ENGINEER MARC T. SHOWN
5-1-06

# -L- SR 1708 (FIRETOWER RD.)

-L-

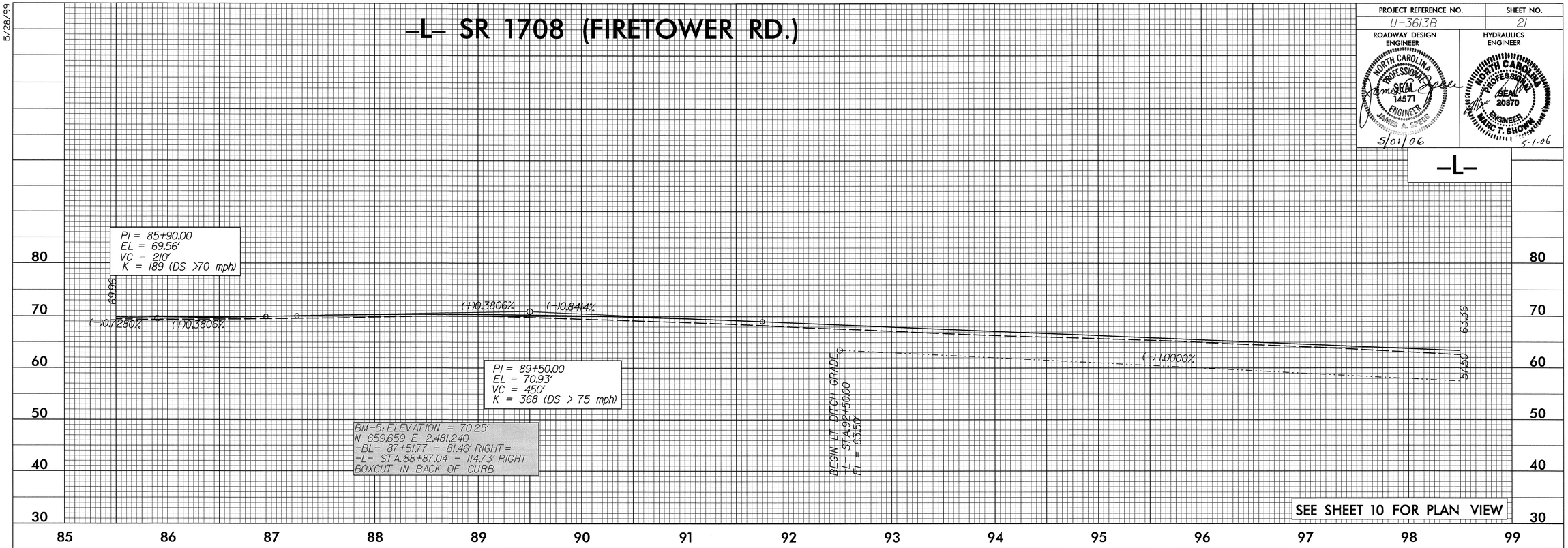


SEE SHEET 10 FOR PLAN VIEW

# -L- SR 1708 (FIRETOWER RD.)

-L-

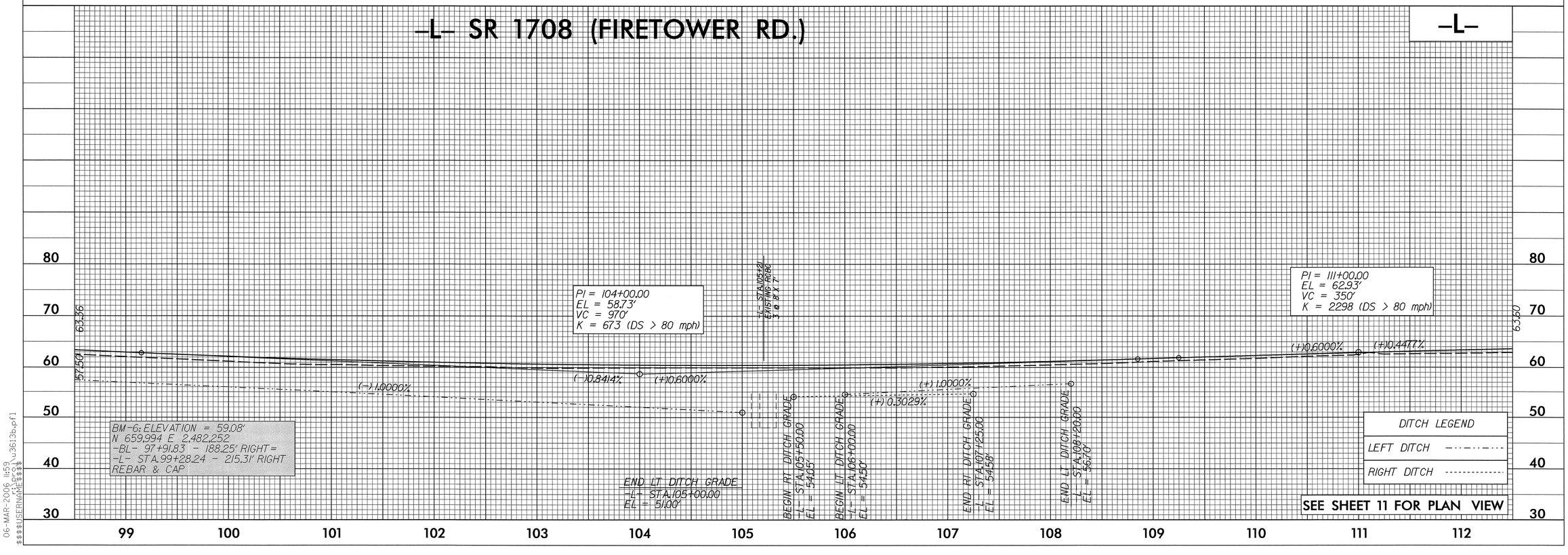


SEE SHEET 11 FOR PLAN VIEW

06-MAR-2006 11:59
$$$$USERNAME$$$$ c:\pwworking\u3613bs.pl1

5/28/99

| PROJECT REFERENCE NO. | SHEET NO. |
|---|---|
| U-3613B | 22 |

ROADWAY DESIGN ENGINEER: NORTH CAROLINA PROFESSIONAL SEAL 14571 ENGINEER JAMES A. SPEER — 5/01/06

HYDRAULICS ENGINEER: NORTH CAROLINA PROFESSIONAL SEAL 20870 ENGINEER MARC T. SHOWN — 5-1-06

# -L- SR 1708 (FIRETOWER RD.)

-L-

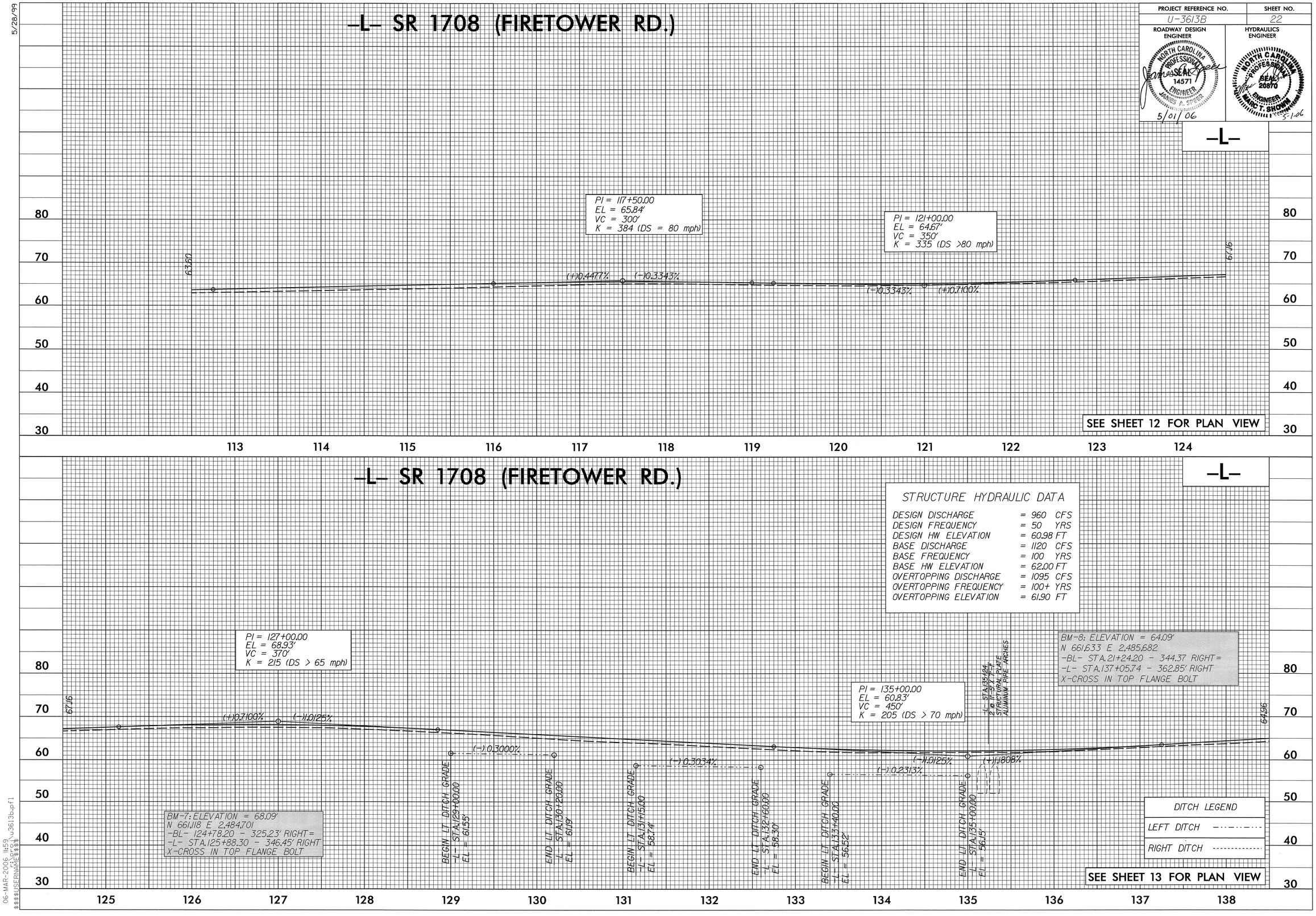


06-MAR-2006 11:59
$$$$USERNAME$$$$ u3613b.pf1

RD212399 3/6/2006 u3613bs22 dwgardner RD-Oce34

5/28/99

# -L- SR 1708 (FIRETOWER RD.)

| PROJECT REFERENCE NO. | SHEET NO. |
|---|---|
| U-3613B | 23 |

ROADWAY DESIGN ENGINEER

NORTH CAROLINA PROFESSIONAL SEAL 14571 ENGINEER JAMES A. SPENCER

5/01/06

HYDRAULICS ENGINEER

NORTH CAROLINA PROFESSIONAL SEAL 20870 ENGINEER MARC T. SHOWALTER

3-7-06

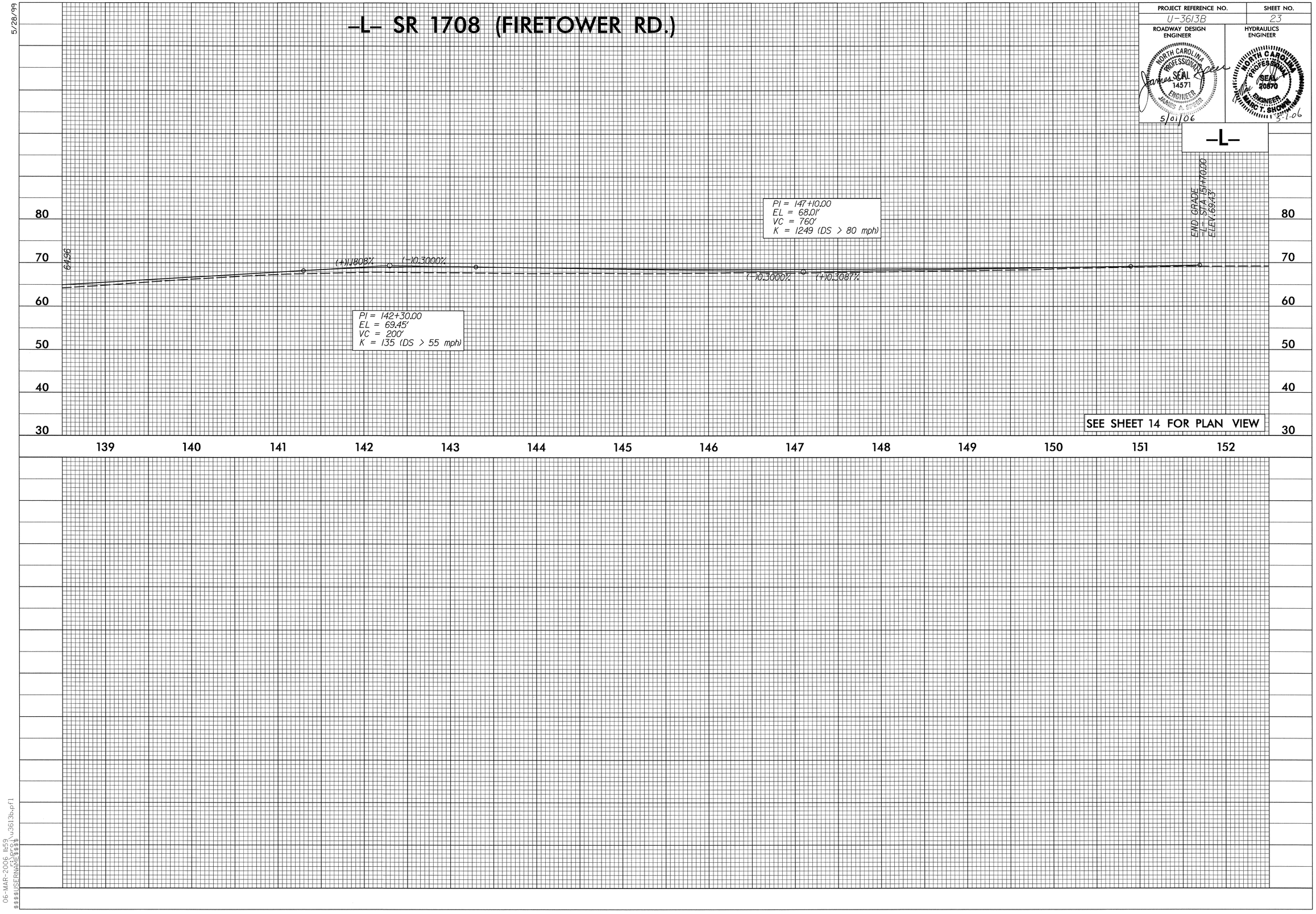


SEE SHEET 14 FOR PLAN VIEW

06-MAR-2006 11:59
$$$$USERNAME$$$$
u3613bs.pl1

RD212399 3/6/2006 u3613bs23 dwgardner RD-Oce34

5/28/99

| PROJECT REFERENCE NO. | SHEET NO. |
|---|---|
| U-3613B | 24 |

ROADWAY DESIGN ENGINEER — NORTH CAROLINA PROFESSIONAL SEAL 14571 ENGINEER JAMES A. SPEER — 5/01/06

HYDRAULICS ENGINEER — NORTH CAROLINA PROFESSIONAL SEAL 20870 ENGINEER MARC T. SHOWALTER — 5-1-06

# -Y- LINES

## -Y- SR 1148

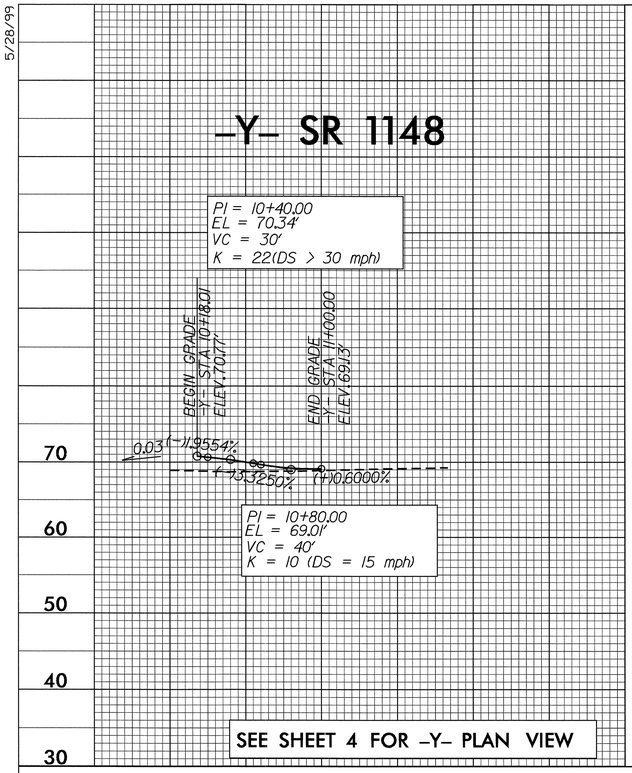


SEE SHEET 4 FOR -Y- PLAN VIEW

## -Y1- NC 11-903

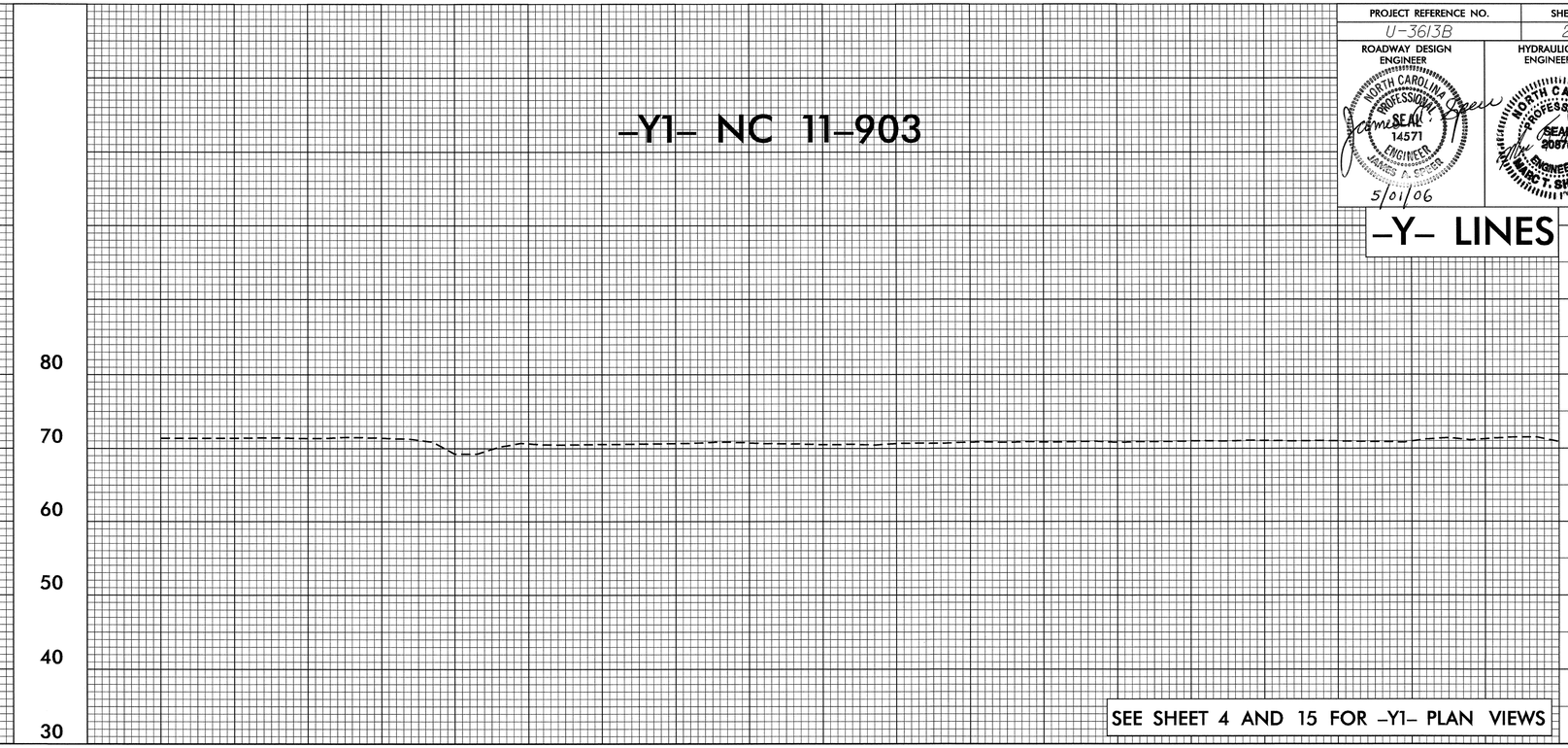


SEE SHEET 4 AND 15 FOR -Y1- PLAN VIEWS

## -Y1A- WHITLEY DRIVE

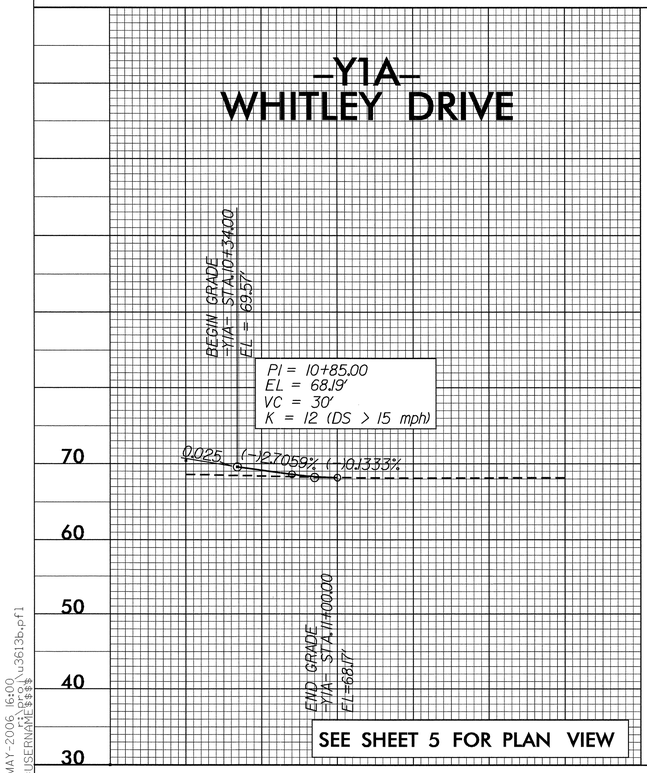


SEE SHEET 5 FOR PLAN VIEW

## -Y2- VICTORY LANE

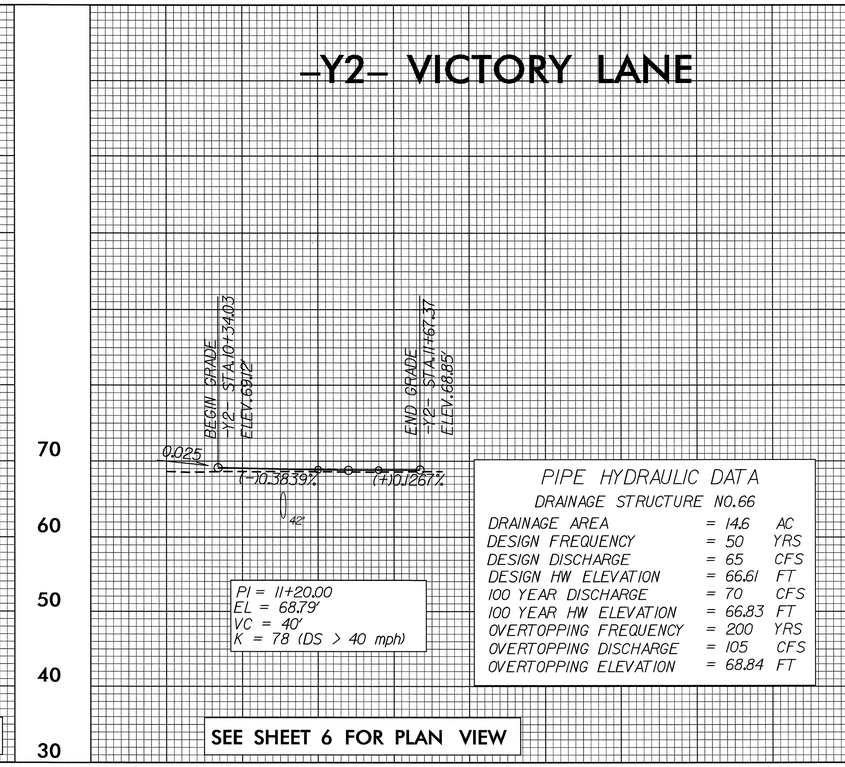


SEE SHEET 6 FOR PLAN VIEW

PIPE HYDRAULIC DATA

DRAINAGE STRUCTURE NO. 66

| | | |
|---|---|---|
| DRAINAGE AREA | = 14.6 | AC |
| DESIGN FREQUENCY | = 50 | YRS |
| DESIGN DISCHARGE | = 65 | CFS |
| DESIGN HW ELEVATION | = 66.61 | FT |
| 100 YEAR DISCHARGE | = 70 | CFS |
| 100 YEAR HW ELEVATION | = 66.83 | FT |
| OVERTOPPING FREQUENCY | = 200 | YRS |
| OVERTOPPING DISCHARGE | = 105 | CFS |
| OVERTOPPING ELEVATION | = 68.84 | FT |

## -Y3- CSX RAILROAD

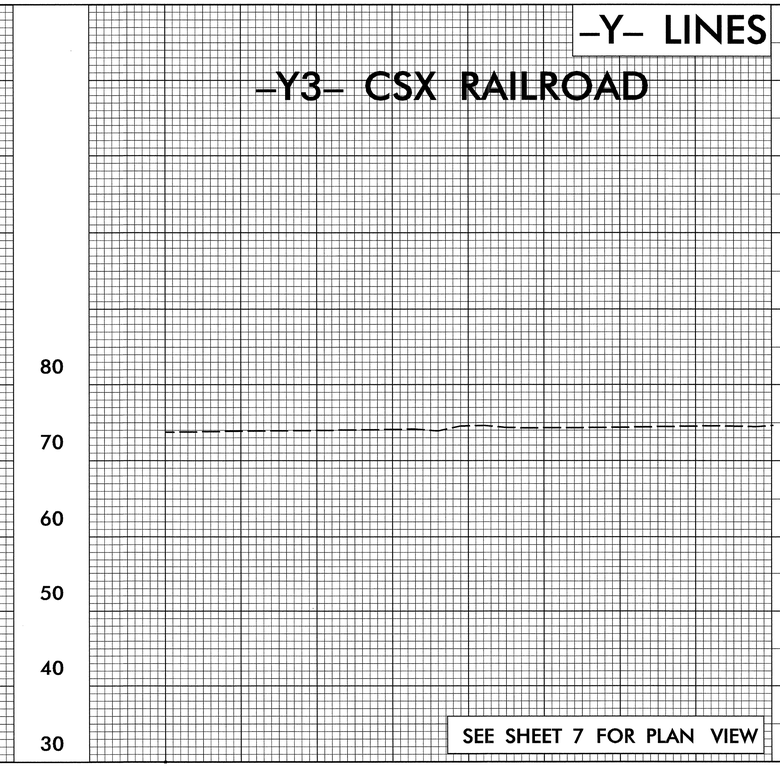


SEE SHEET 7 FOR PLAN VIEW

01-MAY-2006 16:00
$$$$USERNAME$$$$ u3613b.pf1

5/28/99

| PROJECT REFERENCE NO. | SHEET NO. |
|---|---|
| U-3613B | 25 |

ROADWAY DESIGN ENGINEER

NORTH CAROLINA PROFESSIONAL SEAL 14371 ENGINEER JAMES A. SPEER

5/01/06

HYDRAULICS ENGINEER

NORTH CAROLINA PROFESSIONAL SEAL 20870 ENGINEER MARC T. SHOWN

5-1-06

# -Y- LINES

## -Y4- BAYWOOD DRIVE

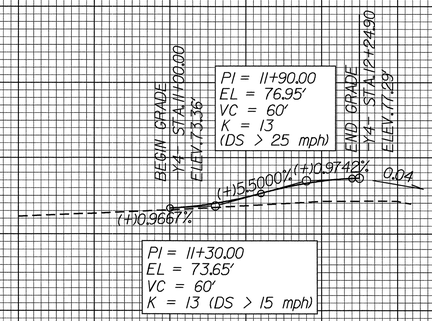


SEE SHEET 7 FOR PLAN VIEW

## -Y5- BAYWOOD DRIVE

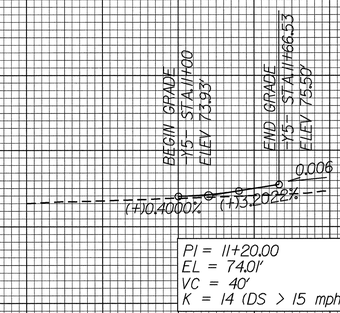


SEE SHEET 8 FOR PLAN VIEW

# -Y- LINES

## -Y6- SR 1700 EVANS ST/OLD TAR ROAD

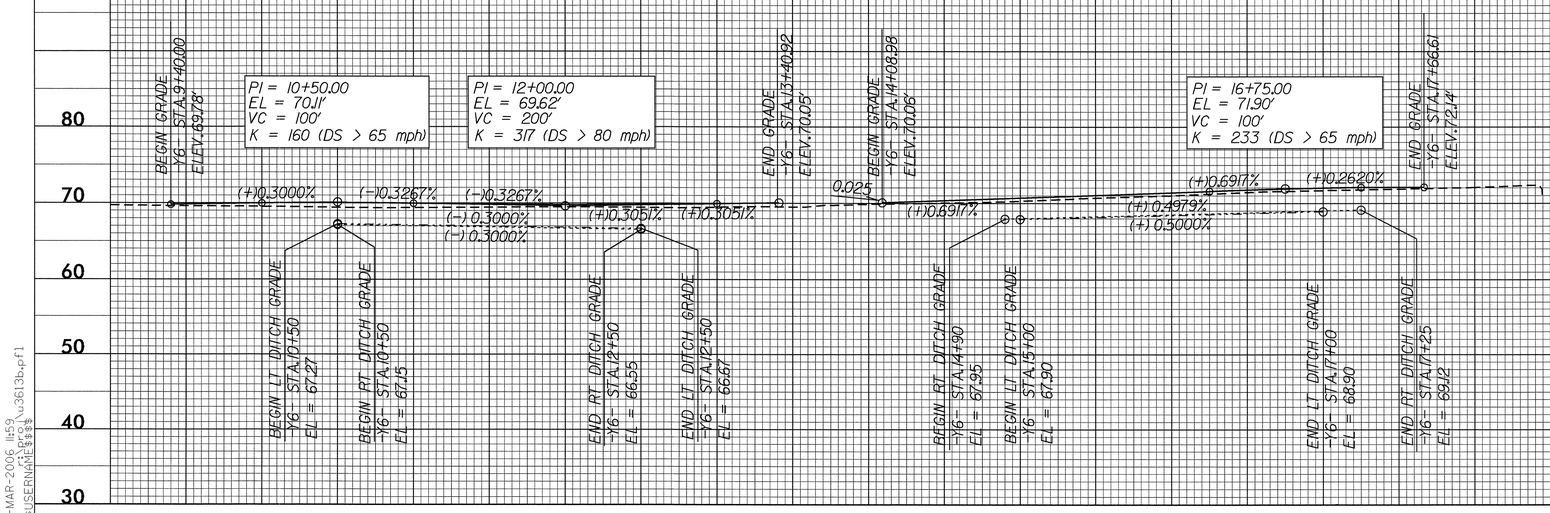


| DITCH LEGEND | |
|---|---|
| LEFT DITCH | —·—·—·— |
| RIGHT DITCH | ---------- |

SEE SHEET 9 FOR PLAN VIEW

06-MAR-2006 11:59
$$$$USERNAME$$$$
MKEMP01 u3613bs.pl1

RD212399 3/6/2006 u3613bs25 dwgardner RD-Oce34

5/28/99

| PROJECT REFERENCE NO. | SHEET NO. |
|---|---|
| U-3613B | 26 |

ROADWAY DESIGN ENGINEER — NORTH CAROLINA PROFESSIONAL SEAL 14571 ENGINEER JAMES A. CRIDER — 5/01/06

HYDRAULICS ENGINEER — NORTH CAROLINA PROFESSIONAL SEAL 20870 ENGINEER MARC T. SHOWN — 5-1-06

# -Y- LINES

## -Y7- WINDING BRANCHES ROAD

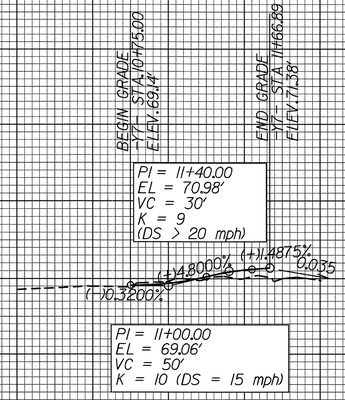


SEE SHEET 10 FOR PLAN VIEW

## -Y8- PINE BRANCHES ROAD

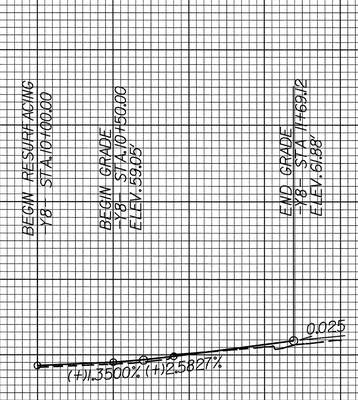


SEE SHEET 11 FOR PLAN VIEW

## -Y9- ALBION DRIVE

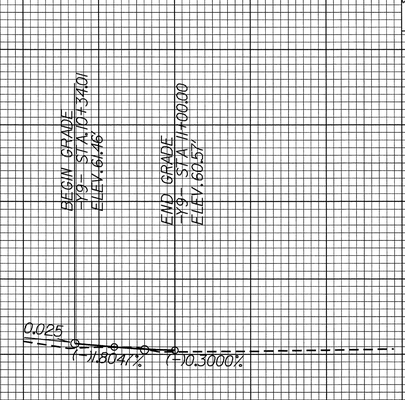


SEE SHEET 11 FOR PLAN VIEW

## -Y10- BAYSWATER ROAD

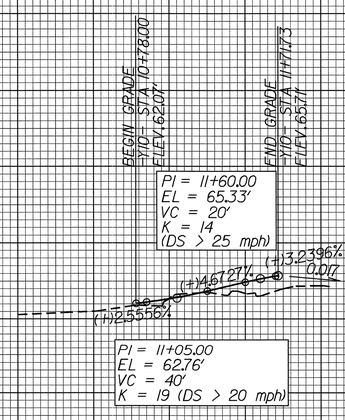


SEE SHEET 12 FOR PLAN VIEW

## -Y11- HILLTOP DRIVE

PIPE HYDRAULIC DATA

DRAINAGE STRUCTURE NO.242

| | | |
|---|---|---|
| DRAINAGE AREA | = 1.05 | AC |
| DESIGN FREQUENCY | = 25 | YRS |
| DESIGN DISCHARGE | = 1.2 | CFS |
| DESIGN HW ELEVATION | = 65.91 | FT |
| 100 YEAR DISCHARGE | = 1.4 | CFS |
| 100 YEAR HW ELEVATION | = 65.93 | FT |
| OVERTOPPING FREQUENCY | = 500+ | YRS |
| OVERTOPPING DISCHARGE | = 9.0 | CFS |
| OVERTOPPING ELEVATION | = 67.00 | FT |

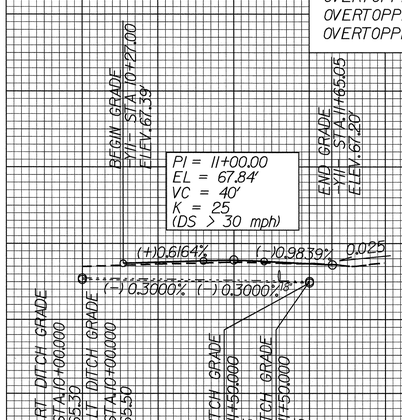


SEE SHEET 13 FOR PLAN VIEW

## -Y12- EVANS DRIVE

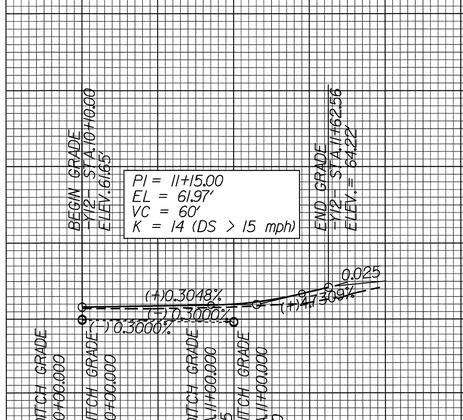


SEE SHEET 13 FOR PLAN VIEW

DITCH LEGEND

LEFT DITCH

RIGHT DITCH

01-MAY-2006 16:00
$$$$USERNAME$$$$ u3613b.pf1

5/28/99

| PROJECT REFERENCE NO. | SHEET NO. |
|---|---|
| U-3613B | 27 |

ROADWAY DESIGN ENGINEER — NORTH CAROLINA PROFESSIONAL SEAL 14571 ENGINEER JAMES A. SEGER — 5/01/06

HYDRAULICS ENGINEER — NORTH CAROLINA PROFESSIONAL SEAL 20870 ENGINEER MARC T. SHOWN — 5-1-06

## -Y13-
## WHITEBRIDGE DRIVE

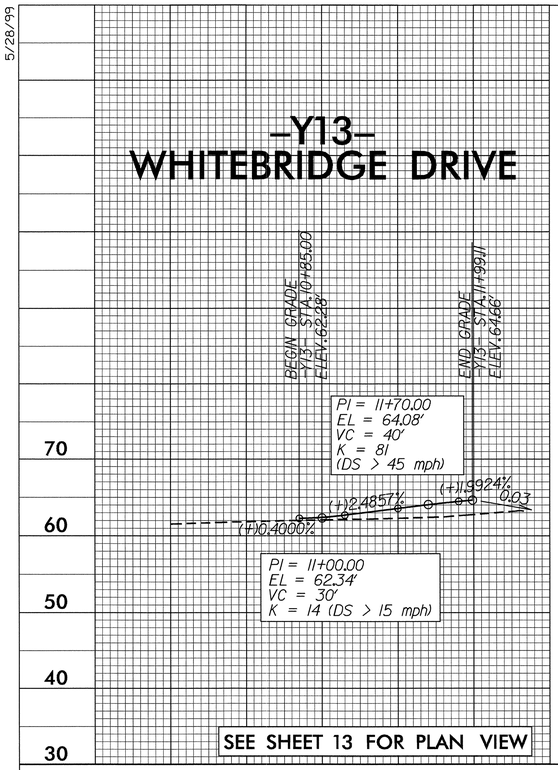


SEE SHEET 13 FOR PLAN VIEW

### PIPE HYDRAULIC DATA

DRAINAGE STRUCTURE NO. 296

| | | | |
|---|---|---|---|
| DRAINAGE AREA | = | N/A | AC |
| DESIGN FREQUENCY | = | 50 | YRS |
| DESIGN DISCHARGE | = | 11.0 | CFS |
| DESIGN HW ELEVATION | = | 63.18 | FT |
| 100 YEAR DISCHARGE | = | 11.5 | CFS |
| 100 YEAR HW ELEVATION | = | 63.21 | FT |
| OVERTOPPING FREQUENCY | = | N/A | YRS |
| OVERTOPPING DISCHARGE | = | N/A | CFS |
| OVERTOPPING ELEVATION | = | N/A | FT |

## -Y14-
## SR 1709 COREY ROAD

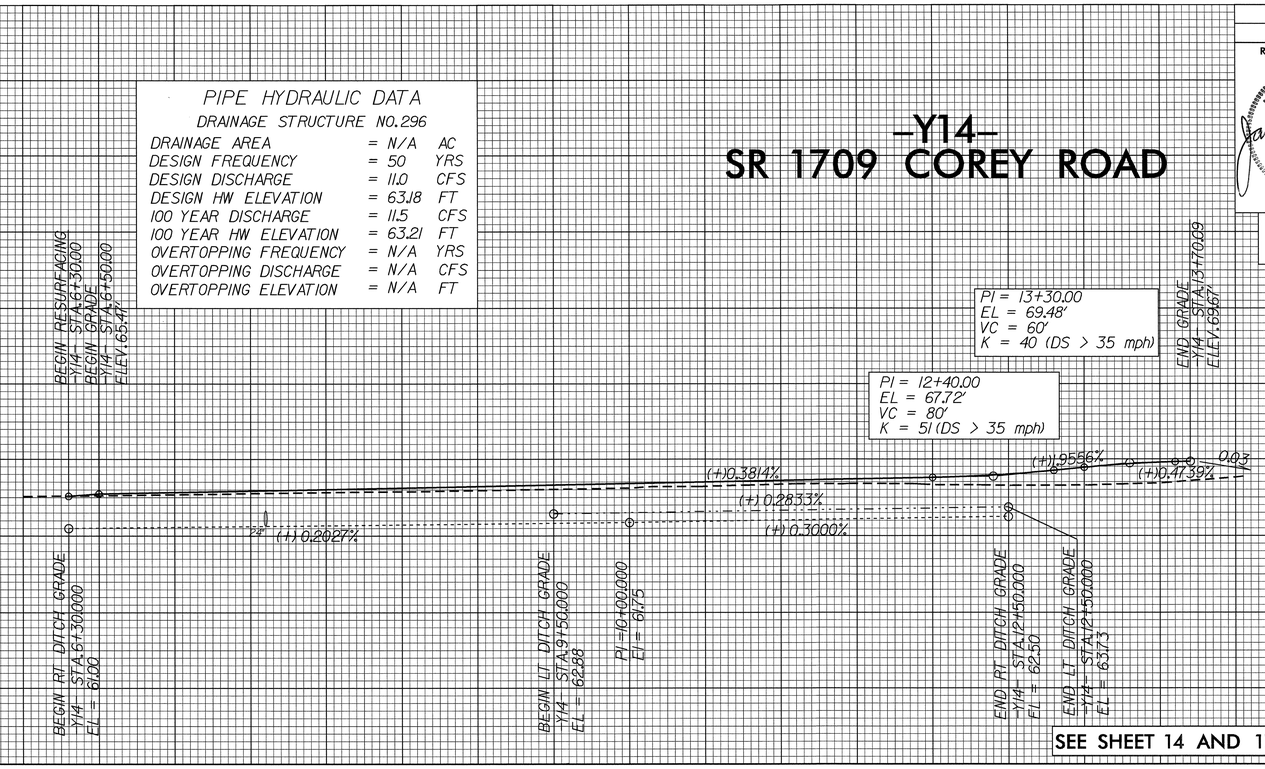


SEE SHEET 14 AND 17 FOR PLAN VIEW

## -Y- LINES

## -Y15-

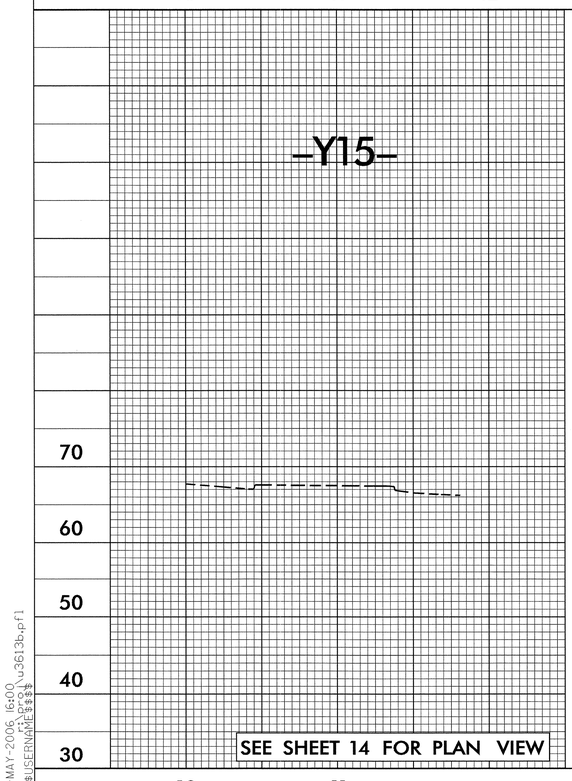


SEE SHEET 14 FOR PLAN VIEW

## -Y16-
## OLD FIRE TOWER ROAD

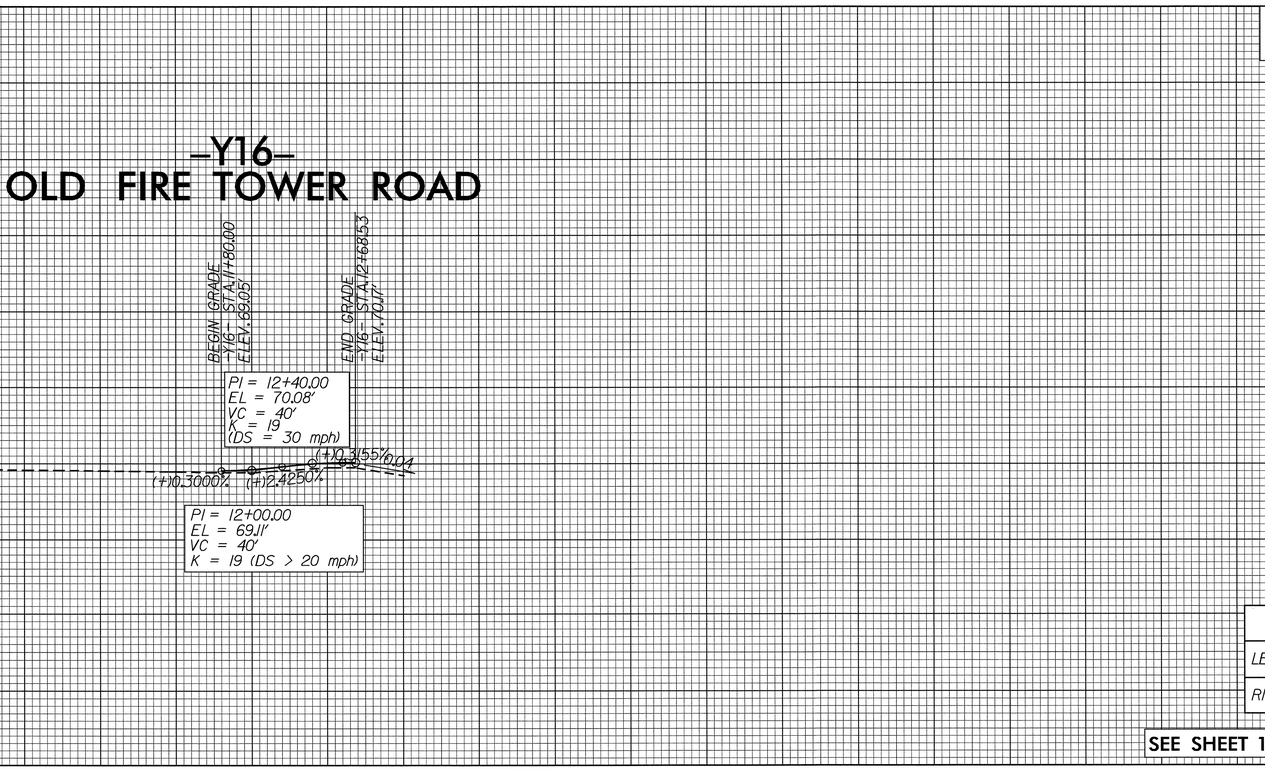


SEE SHEET 14 FOR PLAN VIEW

## -Y- LINES

| DITCH LEGEND | |
|---|---|
| LEFT DITCH | -·-·-·- |
| RIGHT DITCH | ---------- |

01-MAY-2006 16:00
$$$$$$$USERNAME$$$$$$ u3613b.pf1

RD226364 5/1/2006 u3613bs27 jbgauthier RD-Oce34