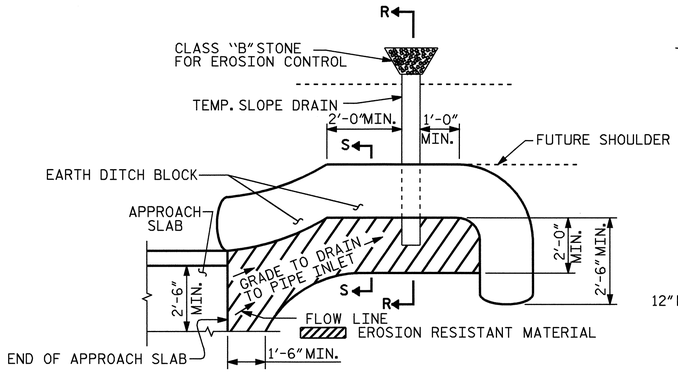

NOTE: IMMEDIATELY AFTER THE CONSTRUCTION OF THE APPROACH SLAB, THE CONTRACTOR SHALL PROVIDE TEMPORARY BERM AND SLOPE DRAIN. CONTRACTOR SHALL GRADE TO PIPE INLET AND PROVIDE EROSION RESISTANT MATERIAL AS SHOWN. THE EROSION RESISTANT MATERIAL SHALL BE EITHER 1) ASPHALT PLANT MIX, TYPE 1 OR TYPE 2, MIN. 2" DEPTH, 2) EROSION CONTROL MAT, OR 3) CONCRETE, AS DIRECTED BY THE ENGINEER. THE SLOPE DRAIN SHALL CONSIST OF A NON-PERFORATED TEMPORARY DRAINAGE PIPE, 12 INCHES IN DIAMETER.

PLAN VIEW

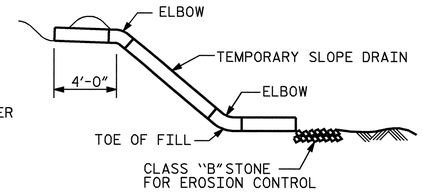

SECTION R-R

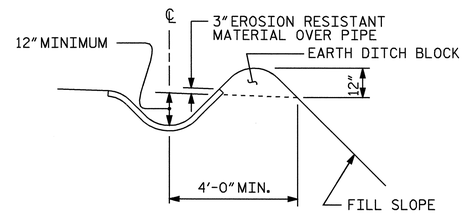

SECTION S-S

TEMPORARY BERM AND SLOPE DRAIN DETAILS

(TO BE USED WHEN SHOULDER BERM GUTTER IS REQUIRED)

NOTES

THE COST OF THE BARRIER RAIL ON THE APPROACH SLAB SHALL BE INCLUDED IN THE LUMP SUM CONTRACT PRICE BID FOR BRIDGE APPROACH SLABS.

FOR REINFORCED BRIDGE APPROACH FILL INCLUDING FABRIC, IMPERMEABLE GEOMEMBRANE, 4" Ø DRAINAGE PIPE, #78M STONE, AND SELECT MATERIAL, SEE ROADWAY PLANS.

TEMPORARY DRAINAGE AND TEMPORARY BERM AND SLOPE DRAINS WILL BE PAID FOR UNDER THE LUMP SUM PRICE FOR BRIDGE APPROACH SLAB.

AREA BETWEEN THE WINGWALL AND APPROACH SLAB SHALL BE GRADED TO DRAIN THE WATER AWAY FROM THE FILL FACE OF THE BRIDGE AND SHALL BE PAVED. SEE ROADWAY PLANS.

THE 6" COMP. A.B.C. SHALL EXTEND 10'-0" BEYOND THE END OF THE APPROACH SLAB AND 1'-0" OUTSIDE OF EACH EDGE OF SLAB.

THE CONTRACTOR MAY USE 4" TYPE B-25.0B ASPHALT CONCRETE BASE COURSE IN LIEU OF 6" COMP. A.B.C. IF THIS OPTION IS USED, THE BASE COURSE SHALL EXTEND 1'-0" BEYOND THE END OF THE APPROACH SLAB AND THE WIDTH SHALL BE THE SAME AS THAT OF THE APPROACH SLAB.

THE CONTRACTOR MAY USE 5" CLASS "A" CONCRETE BASE IN LIEU OF 6" COMP. A.B.C. IF THIS OPTION IS USED, THE CONCRETE BASE SHALL EXTEND 1'-0" BEYOND THE END OF THE APPROACH SLAB AND THE WIDTH SHALL BE THE SAME AS THAT OF THE APPROACH SLAB. THE CONCRETE SHALL BE FINISHED TO A SMOOTH SURFACE AND A LAYER OF 30 LB ROOFING FELT SHALL BE PLACED BETWEEN THE CONCRETE BASE AND THE APPROACH SLAB TO PREVENT BOND. THE APPROACH SLAB SHALL NOT BE CAST UNTIL THE CONCRETE BASE HAS REACHED AN AGE OF THREE CURING DAYS.

FOR JOINT DETAILS, SEE "PRESTRESSED CONCRETE CORED SLAB UNIT" SHEETS.

THE JOINT AT THE END BENT SHALL BE SEALED AS SOON AS PRACTICAL AFTER THE CONSTRUCTION OF THE APPROACH SLABS.

APPROACH SLAB GROOVING IS NOT REQUIRED.

BILL OF MATERIAL

FOR APPROACH SLAB AT END BENT No. 1

BAR	NO.	SIZE	TYPE	LENGTH	WEIGHT
✱A1	46	#5	STR	17'-9"	852
A2	46	#4	STR	17'-4"	533
✱B1	54	#6	STR	10'-9"	872
✱B2	1	#6	STR	6'-10"	10
✱B3	1	#6	STR	4'-1"	6
✱B4	1	#6	STR	1'-11"	3
B5	54	#8	STR	11'-3"	1622
B6	1	#8	STR	6'-10"	18
B7	1	#8	STR	4'-1"	11
B8	1	#8	STR	1'-11"	5
✱B9	7	#5	STR	12'-3"	89
✱B10	7	#5	STR	11'-4"	83
✱B11	1	#5	3	7'-7"	8
✱B12	1	#5	3	5'-7"	6
✱S1	49	#5	STR	3'-4"	170
✱S2	49	#5	1	4'-2"	213
✱S3	21	#5	2	2'-4"	51

REINFORCING STEEL LBS. 2,189

✱EPOXY COATED REINFORCING STEEL LBS. 2,363

CLASS AA CONCRETE BREAKDOWN

POUR 1 SLAB 13.4 C. Y.
POUR 2 RAIL 2.5 C. Y.

CLASS AA CONCRETE 15.9 C. Y.

FOR APPROACH SLAB AT END BENT No. 2

BAR	NO.	SIZE	TYPE	LENGTH	WEIGHT
✱A3	23	#5	STR	30'-9"	738
A4	46	#4	STR	16'-4"	502
✱B13	54	#6	STR	11'-1"	899
B14	54	#8	STR	11'-4"	1634
✱B15	7	#5	STR	11'-8"	85
✱B16	7	#5	STR	11'-5"	83
✱B17	1	#5	3	6'-0"	6
✱B18	1	#5	3	6'-9"	7
✱S1	48	#5	STR	3'-4"	167
✱S2	48	#5	1	4'-2"	209
✱S3	20	#5	2	2'-4"	49

REINFORCING STEEL LBS. 2,136

✱EPOXY COATED REINFORCING STEEL LBS. 2,243

CLASS AA CONCRETE BREAKDOWN

POUR 1 SLAB 13.4 C. Y.
POUR 2 RAIL 2.3 C. Y.

CLASS AA CONCRETE 15.7 C. Y.

BAR TYPES

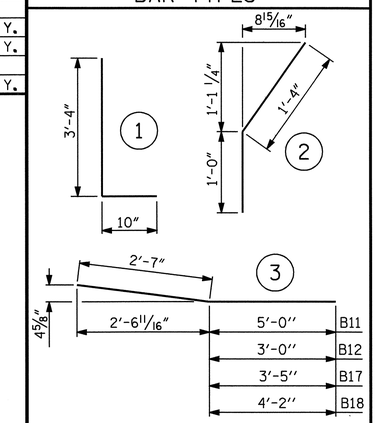

ALL BAR DIMENSIONS ARE OUT TO OUT

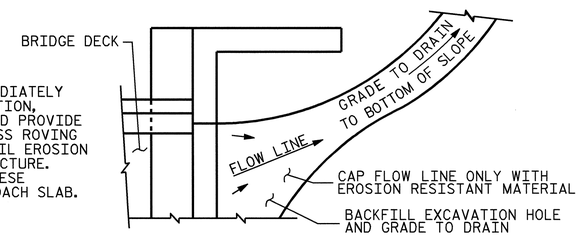

NOTE: IF THE APPROACH SLAB IS NOT CONSTRUCTED IMMEDIATELY AFTER THE BACKFILLING OF THE END BENT EXCAVATION, GRADE TO DRAIN TO THE BOTTOM OF THE SLOPE AND PROVIDE EROSION RESISTANT MATERIAL, SUCH AS FIBERGLASS ROVING OR AS DIRECTED BY THE ENGINEER TO PREVENT SOIL EROSION AND TO PROTECT THE AREA ADJACENT TO THE STRUCTURE. THE CONTRACTOR WILL BE REQUIRED TO REMOVE THESE MATERIALS PRIOR TO CONSTRUCTION OF THE APPROACH SLAB.

TEMPORARY DRAINAGE DETAIL

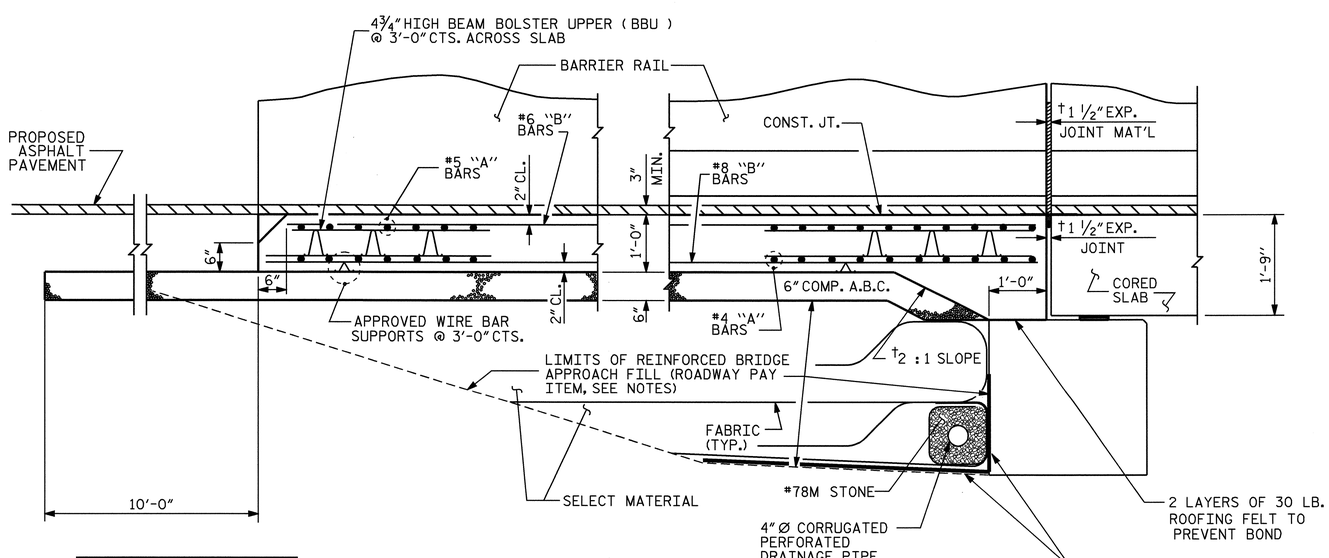

† NORMAL TO END BENT

SECTION THRU SLAB

PROJECT NO. B-3709
WATAUGA COUNTY
STATION: 16+99.00 -L-

SHEET 4 OF 4

STATE OF NORTH CAROLINA
DEPARTMENT OF TRANSPORTATION
RALEIGH

BRIDGE APPROACH SLAB FOR PRESTRESSED CONCRETE CORED SLAB WITH BARRIER RAIL

NORTH CAROLINA PROFESSIONAL SEAL 11310 ENGINEER DOUGLAS E. PETREY 3/9/05

REVISIONS						SHEET NO.
NO.	BY:	DATE:	NO.	BY:	DATE:	S-23
1			3			TOTAL SHEETS
2			4			23

ASSEMBLED BY : MIKE BRITT		DATE : 1-24-05	
CHECKED BY : B.N. GRADY		DATE : 1/05	
DRAWN BY : LES	8/01	REV. 10/17/00	RWW/LES
CHECKED BY : RDR	8/01	REV. 7/10/01	LES/RDR
		REV. 5/7/03R	RWW/JTE

08-MAR-2005 14:21
W:\squadw\b3709\mbrltt\Microstation\B3709_sd_RevAS.dgn
achesson