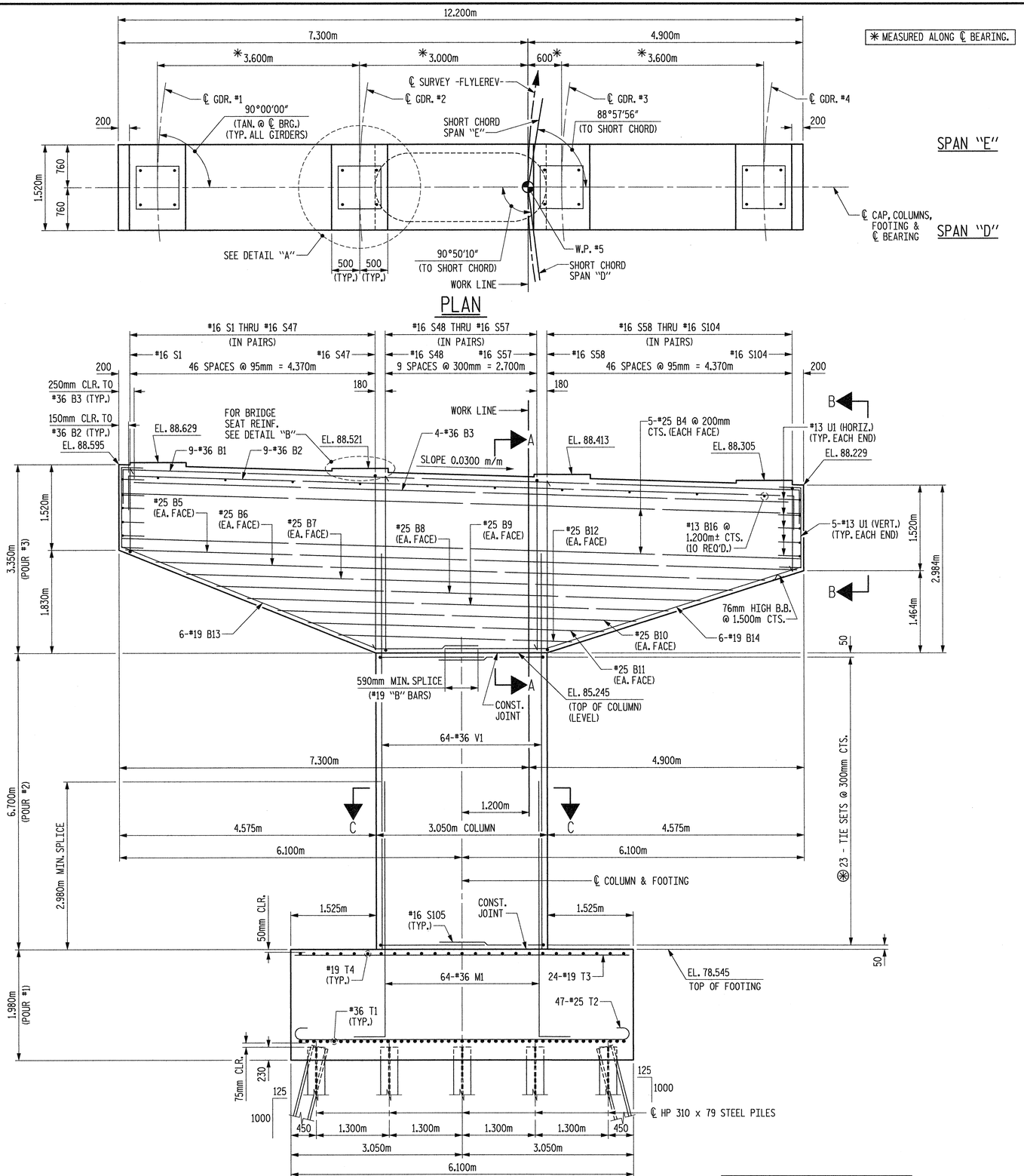


NOTES:

STIRRUPS IN CAP MAY BE SHIFTED AS NECESSARY TO CLEAR ANCHOR BOLTS.

PILES SHALL BE DRIVEN TO A MINIMUM BEARING CAPACITY OF 530 kN EACH.

FOR PILE SPLICE DETAILS, SEE "SUBSTRUCTURE END BENT #1", SHEET 3 OF 3.

WHEN DRIVING PILES, THE MAXIMUM BLOW COUNT SHALL NOT BE EXCEEDED

DETAILED DRAWINGS FOR FALSEWORK AND FORMS FOR THIS HAMMERHEAD BENT SHALL BE SUBMITTED FOR BENT CAP. SEE SHEET SNSM AND SPECIAL PROVISIONS.

FOR OTHER NOTES, SEE "GENERAL NOTES AND TOTAL BILL OF MATERIAL" SHEET.

FOR END ELEVATION, SECTION A-A, END VIEW B-B AND SECTION C-C, SEE SHEET 2 OF 3.

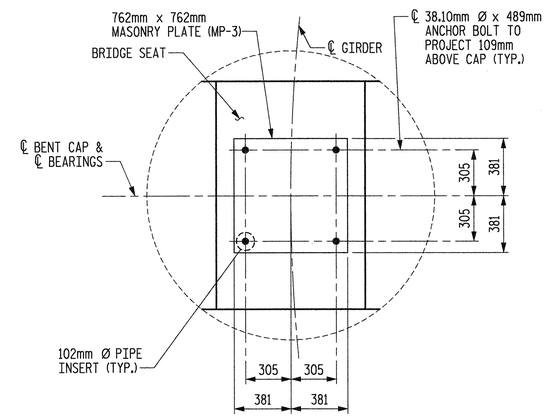


DETAIL "A"

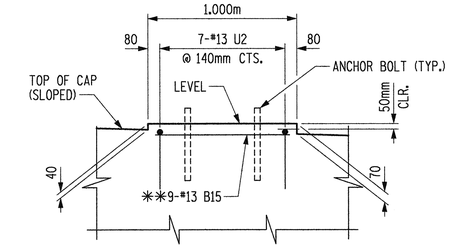


DETAIL "B"

✱✱ 9-#13 B15 SHALL BE PLACED IN LINE WITH THE 9-#36 B1.

PROJECT NO. R-2552AA

WAKE-JOHNSTON COUNTY

STATION: 28+31.359 -I1Y1-

SHEET 1 OF 3

STATE OF NORTH CAROLINA
DEPARTMENT OF TRANSPORTATION
RALEIGH

SUBSTRUCTURE
BENT #4

METRIC

Plans prepared by:
KO & ASSOCIATES, P.C.
Consulting Engineers
1011 SCHAUB DR. SUITE #202
RALEIGH, N.C. 27606
For Division of Highways

NORTH CAROLINA PROFESSIONAL SEAL 5601 ENGINEER CHIH KUO KO

DWG. NO. 46

| REVISIONS | | | | | | SHEET NO. |
|---|---|---|---|---|---|---|
| NO. | BY: | DATE: | NO. | BY: | DATE: | S-129 |
| 1 | | | 3 | | | TOTAL SHEETS |
| 2 | | | 4 | | | 429 |

DRAWN BY B.E. LANNING DATE JAN. 2005
CHECKED BY J.C. KO / A.K. ORR DATE JAN. 2005

PLOT: 01/27/2005 04:18:52 PM Ko & Associates, P.C.
FILE NAME: r:\r2552aa_sd1-b4a_R3.dgn