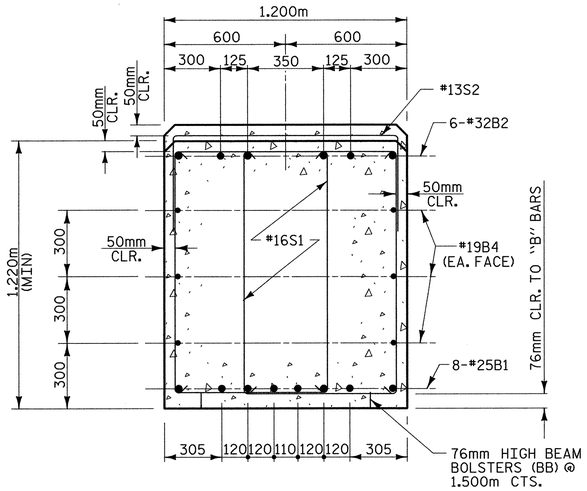

SECTION A-A

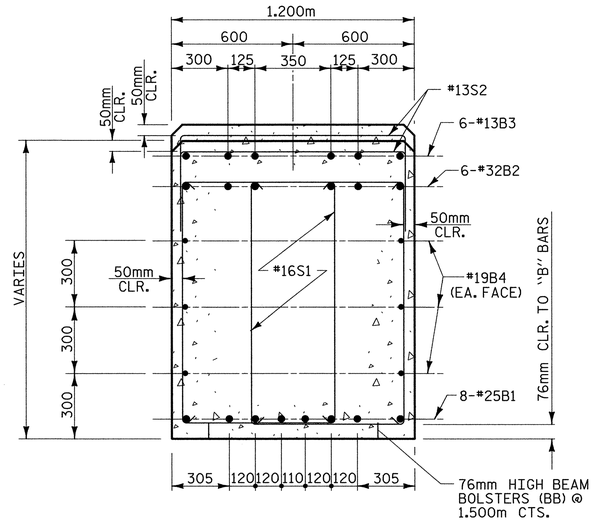

SECTION B-B

NOTES:

STIRRUPS IN THE CAP MAY BE SHIFTED AS NECESSARY TO CLEAR ANCHOR BOLTS.

HOOKS ON "V" BARS MAY BE TURNED AS NECESSARY FOR PLACING REINFORCING STEEL.

THE CONTRACTOR'S ATTENTION IS CALLED TO THE FACT THAT THE LONGITUDINAL REINFORCEMENT FOR THE DRILLED PIERS IS DETAILED WITH ONE METER OF EXTRA LENGTH.

ALL STEEL IN THE DRILLED PIERS IS INCLUDED IN THE PAY ITEMS FOR "REINFORCING STEEL" AND "SPIRAL COLUMN REINFORCING STEEL".

FOR PERMANENT STEEL CASING, SEE SPECIAL PROVISIONS FOR DRILLED PIERS.

BAR TYPES

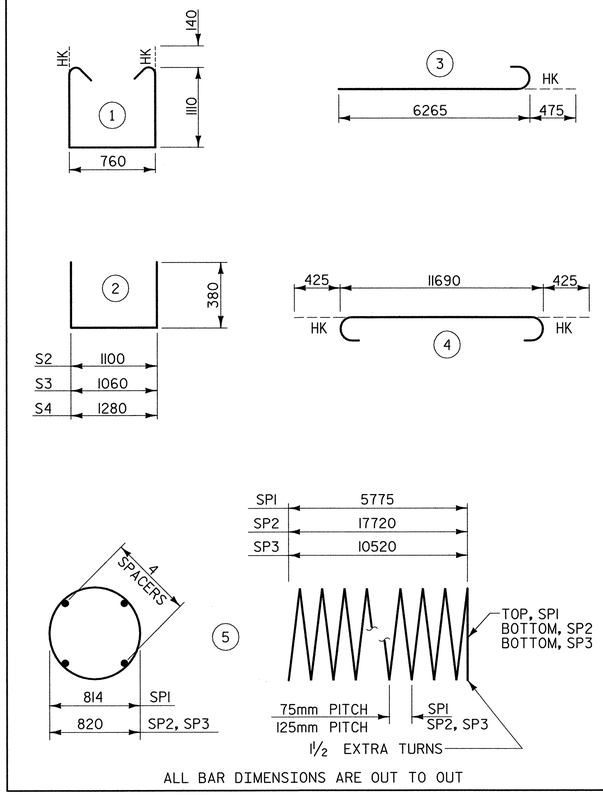

ALL BAR DIMENSIONS ARE OUT TO OUT

** THE SP1 SPIRAL REINFORCING STEEL SHALL BE W20 OR D-20 COLD DRAWN WIRE OR #13 PLAIN OR DEFORMED BAR

THE SP2 & SP3 SPIRAL REINFORCING STEEL SHALL BE W31 OR D-31 COLD DRAWN WIRE OR #16 PLAIN OR DEFORMED BAR

BILL OF MATERIAL

FOR BENT 1

BAR	NO.	SIZE	TYPE	LENGTH	WEIGHT
B1	8	#25	STR	11700	372
B2	6	#32	4	12540	482
B3	6	#13	STR	4600	27
B4	6	#19	STR	11700	157
M1	20	#36	STR	21040	3327
M2	10	#36	STR	13840	1094
S1	80	#16	1	3260	405
S2	33	#13	2	1860	61
S3	14	#13	2	1820	25
S4	4	#13	2	2040	8
V1	30	#36	3	6740	1599
TOTAL REINFORCING STEEL =					7557 kg
SP1	3	**	5	193608	577
SP2	2	**	5	357612	1110
SP3	1	**	5	212307	330
SPIRAL COLUMN REINFORCING STEEL =					2017 kg

CLASS "A" CONCRETE - CU. METERS

POUR 2 (COLUMNS)	11.2 C.M.
POUR 3 (CAP)	18.5 C.M.
TOTAL	29.7 C.M.

DRILLED PIER @ BENT 1

1066mm DIA. DRILLED PIERS IN SOIL =	40.1 LIN M.
1066mm DIA. DRILLED PIER NOT IN SOIL =	5.9 LIN M.
PERMANENT STEEL CASING FOR 1066mm DIA. DRILLED PIER =	8.2 LIN M.
SID INSPECTION =	1 EA.
SPT TESTING =	3 EA.
CROSSHOLE SONIC LOGGING =	1 EA.
CSL TUBES =	194.4 LIN M.
DRILLED PIER CONC. (FOR INFORMATION ONLY) =	41.1 C.M.

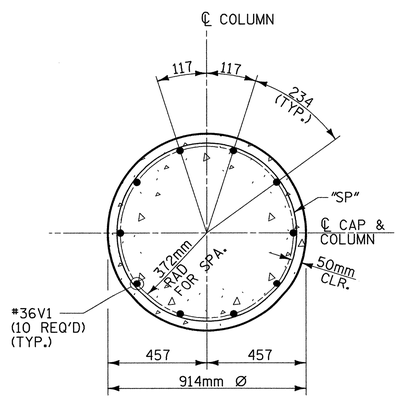

SECTION THRU COLUMN

(ALL COLUMNS SIMILAR)
(SEE ELEVATION FOR BAR MARKS)

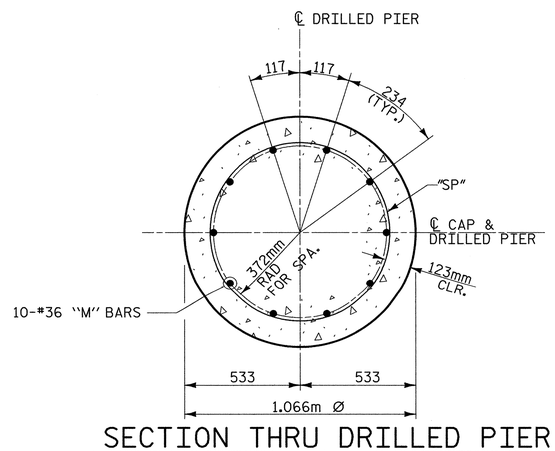

SECTION THRU DRILLED PIER

(ALL DRILLED PIERS SIMILAR)
(SEE ELEVATION FOR BAR MARKS)

PROJECT NO. R-2552AA
WAKE - JOHNSTON COUNTY
STATION: 14+38.000 -LREV- POT

SHEET 2 OF 2

STATE OF NORTH CAROLINA
DEPARTMENT OF TRANSPORTATION
RALEIGH

SUBSTRUCTURE BENT 1 (RIGHT LANE)

PLANS PREPARED BY:
MULKEY ENGINEERS & CONSULTANTS
PO Box 33127 RALEIGH, N.C. 27636
(919) 851-1912
(919) 851-1918 (FAX)
WWW.MULKEYINC.COM

NORTH CAROLINA PROFESSIONAL SEAL 14114 ENGINEER ROBERT C. LARSON
2/11/05

REFERENCE NO. BR-27

REVISIONS						SHEET NO.
NO.	BY:	DATE:	NO.	BY:	DATE:	S-210
1			3			TOTAL SHEETS
2			4			429

DRAWN BY : J. P. SHERMAN DATE : 11/04
CHECKED BY : R. C. LARSON DATE : 12/04

02/04/2005 01:47:03 AM G:\projects\2004\213.0\R-2552\Structures\Site 4\Right Lane\R2552AL_S0_BL02.dgn