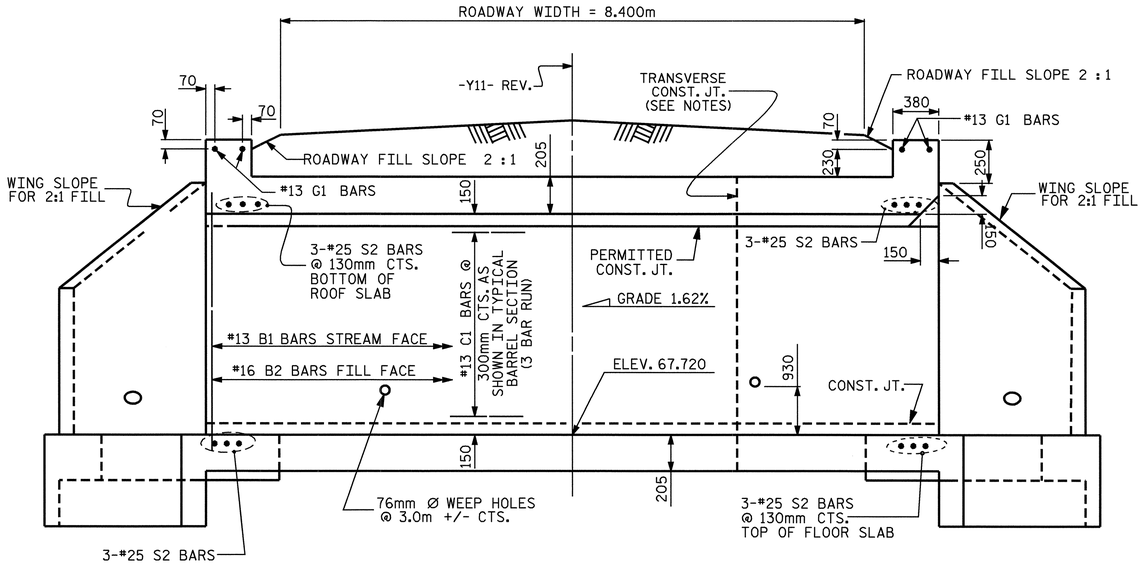

CULVERT SECTION NORMAL TO ROADWAY

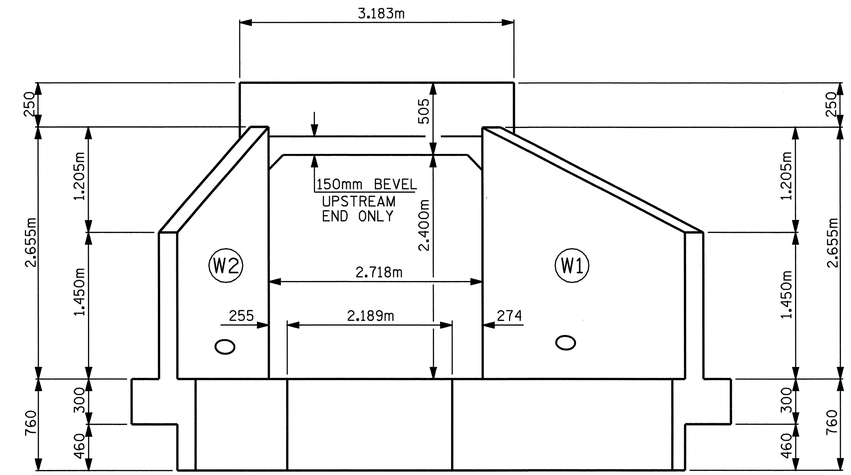

END ELEVATION NORMAL TO SKEW

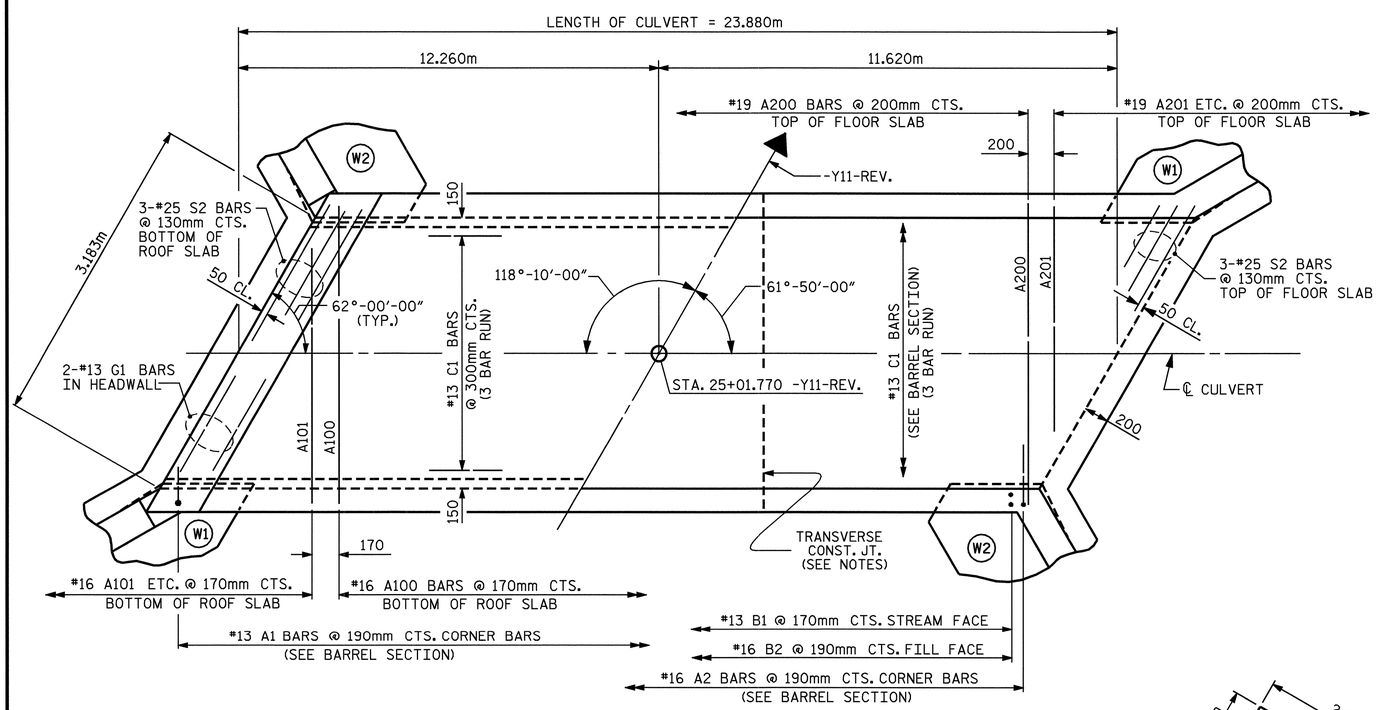

PART PLAN - ROOF SLAB

PART PLAN - FLOOR SLAB

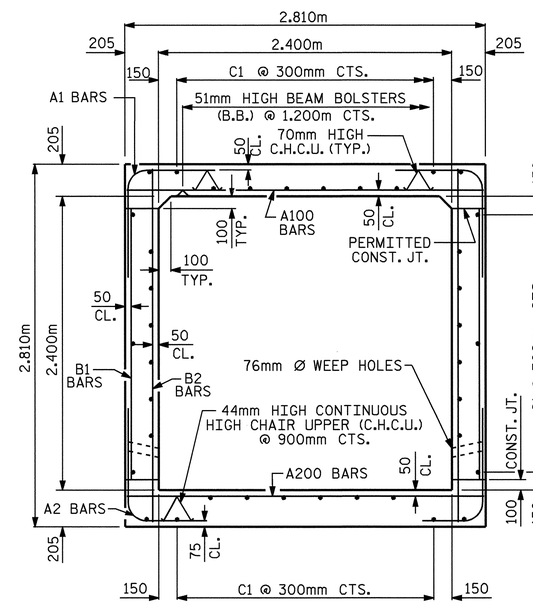

RIGHT ANGLE SECTION OF BARREL

THERE ARE 38 "C" BARS IN SECTION OF BARREL

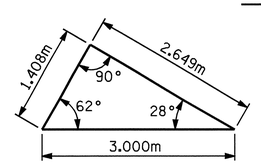

SKEW TRIANGLE

BILL OF MATERIAL

BAR	NO.	SIZE	TYPE	LENGTH	WEIGHT
A100	132	#16	STR	2660	545
A101	4	#16	STR	1980	12
A102	4	#16	STR	1340	8
A103	4	#16	STR	720	4
A200	112	#19	STR	2660	666
A201	4	#19	STR	1880	17
A202	4	#19	STR	1120	10
A1	252	#13	6	1240	311
A2	252	#16	6	1380	540
B1	282	#13	STR	2640	740
B2	252	#16	STR	2180	853
C1	114	#13	STR	8300	941
G1	4	#13	STR	3040	12
S2	12	#25	STR	3040	145

REINFORCING STEEL = 4804 KG

** SPLICE LENGTH CHART **

BAR	SIZE	SPLICE LENGTH
B1	13	540
C1	13	590

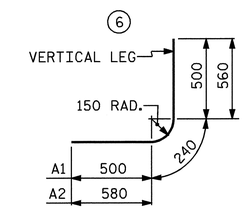

BAR TYPE

DIMENSIONS ARE OUT TO OUT

PROJECT NO. R-2552B
JOHNSTON COUNTY
STATION: 25+01.770 -Y11-REV.

SHEET 2 OF 3

STATE OF NORTH CAROLINA
DEPARTMENT OF TRANSPORTATION
RALEIGH

BARREL STANDARD SINGLE 2.400m X 2.400m CONCRETE BOX CULVERT 61°-50'-00" SKEW

ASSEMBLED BY :	J.B. WILSON	DATE :	1/31/2005
CHECKED BY :	D.A. GLADDEN	DATE :	2/8/2005
DRAWN BY :	EEM	6/97	
CHECKED BY :	ARB	7/97	

NORTH CAROLINA PROFESSIONAL SEAL 20125 ENGINEER MARSHALL G. CHEEK, JR. 3-14-05

REVISIONS							
NO.	BY:	DATE:	NO.	BY:	DATE:	SHEET NO.	C-15
1			3			TOTAL SHEETS	42
2			4				

STR. #