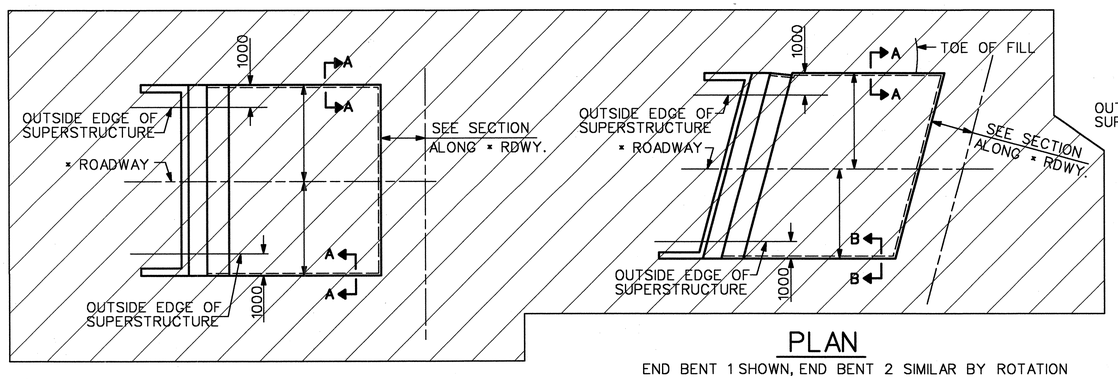

PLAN

END BENT 1 SHOWN, END BENT 2 SIMILAR BY ROTATION

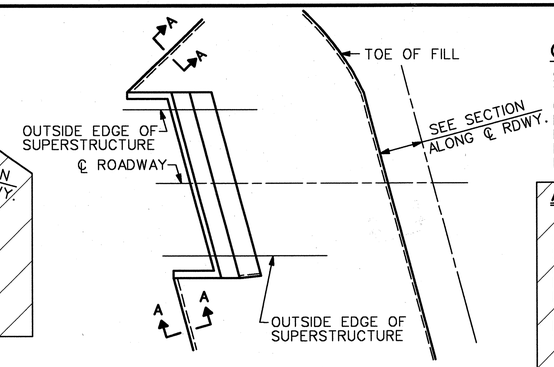

GENERAL NOTES

SLOPE PROTECTION SHALL BE PLACED UNDER THE ENDS OF THE BRIDGE AS SHOWN IN THE DETAILS. THE CONTRACTOR, AT HIS OPTION, MAY USE ALTERNATE "B" ONLY FOR HIGHWAY OVER HIGHWAY GRADE SEPARATIONS WITH 2:1 END BENT SLOPE IN RURAL, UNPOPULATED AREAS. STRAIGHT EDGING WILL NOT BE REQUIRED UNLESS, IN THE OPINION OF THE ENGINEER, VISUAL INSPECTION INDICATES A NEED FOR IT. METHOD OF MEASUREMENT AND BASIS OF PAYMENT SHALL BE AS PRESCRIBED IN SECTION 462 OF THE STANDARD SPECIFICATIONS. FOR BERM WIDTH, SEE GENERAL DRAWING.

ALTERNATE "A"

ALTERNATE "A" SHALL CONSIST OF 100mm POURED-IN-PLACE CONCRETE PAVING AS SHOWN IN THE DETAILS ON THIS SHEET. CONCRETE SHALL BE CLASS "B". THE CONCRETE SURFACE SHALL BE FLOATED WITH A WOODEN FLOAT AND FINISHED. WELDED WIRE FABRIC REINFORCING SHALL BE 152 X 152 - W9.1 X W9.1, 1520mm WIDE. SLOPE PROTECTION SHALL BE POURED IN 1520mm STRIPS AS SHOWN IN THE "POURING DETAIL" WITH 600mm LONG #13 BARS PLACED ALONG THE SLOPE BETWEEN STRIPS AT 450mm MAXIMUM SPACING. SLOPE PROTECTION MAY BE POURED IN ALTERNATE 1220mm AND 1520mm STRIPS AS SHOWN IN THE "OPTIONAL POURING DETAIL" WITH ADJACENT RUNS OF WELDED WIRE FABRIC LAPPING AT LEAST 152mm. THE COST OF THE WELDED WIRE FABRIC AND #13 BARS, IF USED, SHALL BE INCLUDED IN THE CONTRACT UNIT PRICE BID PER SQUARE METER FOR SLOPE PROTECTION.

ALTERNATE "B"

ALTERNATE "B" SHALL CONSIST OF A COMBINATION CONCRETE SLAB AND STONE SLOPE PROTECTION. THE CONCRETE PORTIONS SHALL CONSIST OF PAVED STRIPS ALONG THE DITCH AS SHOWN IN THE DETAILS. FILTER FABRIC AND 200mm OF STONE SHALL BE PLACED OVER THE REMAINING AREA SHOWN ON THE PLANS TO BE COVERED WITH SLOPE PROTECTION. CONCRETE SHALL BE CLASS "B". THE COST OF THE CONCRETE, FILTER FABRIC, STONE AND WELDED WIRE FABRIC 152 X 152 MW9.1 X MW9.1 SHALL BE INCLUDED IN THE CONTRACT UNIT PRICE BID PER SQUARE METER FOR SLOPE PROTECTION. SUBGRADING, STONE TYPE, STONE SIZING, AND HERBICIDE PROTECTION, SHALL BE IN ACCORDANCE WITH THE STANDARD SPECIFICATIONS EXCEPT THE HERBICIDE TYPE SHALL BE SUBMITTED TO THE ENGINEER FOR APPROVAL PRIOR TO APPLICATION.

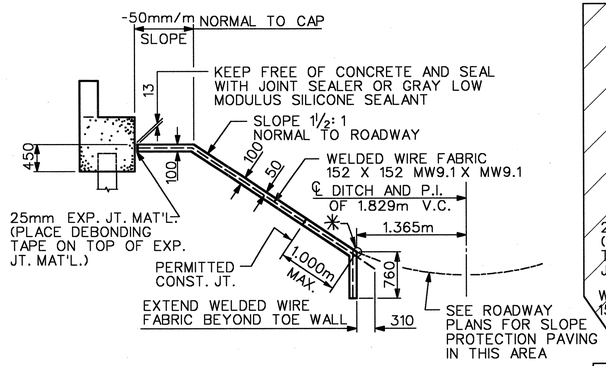

SECTION ALONG ℄ ROADWAY WHEN FILL CATCHES IN DITCH

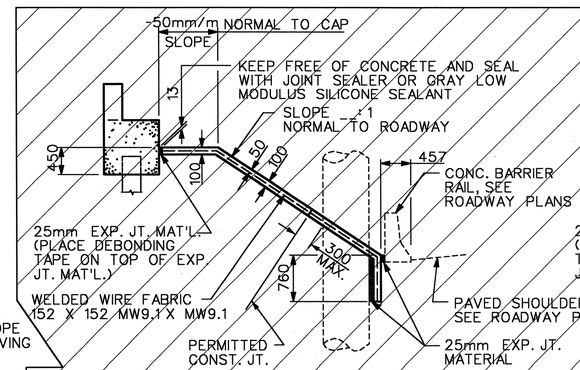

SECTION ALONG * ROADWAY WITH SHOULDER PIER

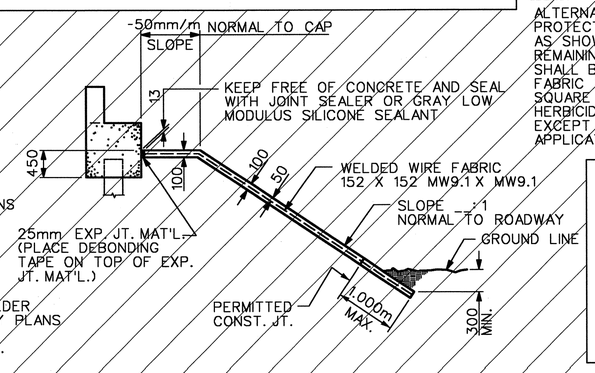

SECTION ALONG * ROADWAY WHEN DITCH IS NOT PROVIDED

* THE SLOPE PROTECTION ELEVATIONS LISTED ON THE GENERAL DRAWING ARE TAKEN AT THIS POINT.

DETAILS FOR ALTERNATE "A"

BRIDGE @ STA. 78+35.547 -L- STA. 12+97.374 -Y10-	100mm SLOPE PROTECTION	* WELDED WIRE FABRIC 1520mm WIDE
	SQUARE METERS	APPROX. METERS
END BENT 1	381	297
END BENT 2	345	290

*QUANTITY SHOWN IS BASED ON 1520mm POURS.

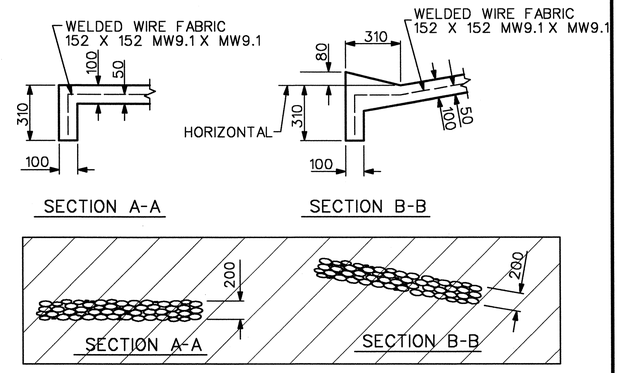

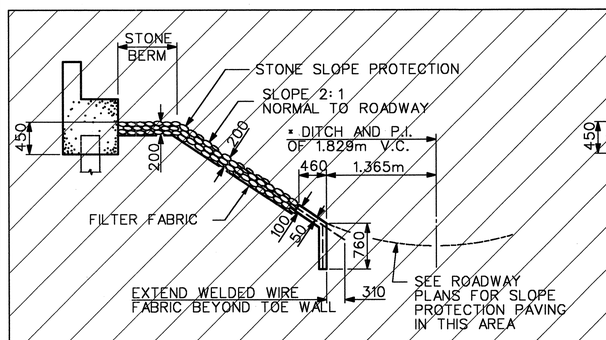

SECTION ALONG ℄ ROADWAY WHEN FILL CATCHES IN DITCH

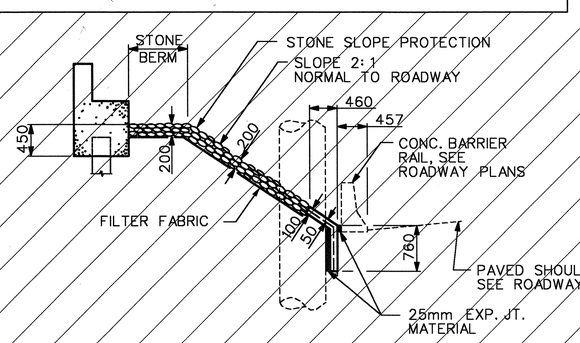

SECTION ALONG * ROADWAY WITH SHOULDER PIER

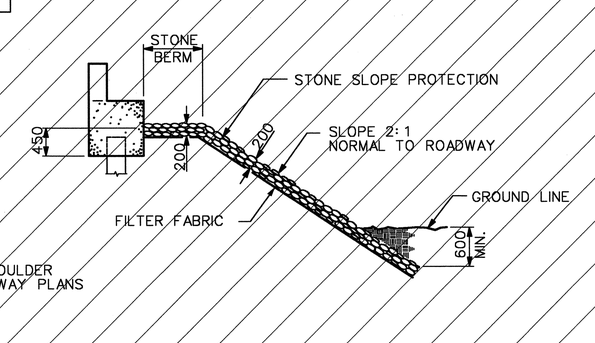

SECTION ALONG * ROADWAY WHEN DITCH IS NOT PROVIDED

DETAILS FOR ALTERNATE "B"

PLAN WHERE CONCRETE SLOPE PROTECTION MUST BE PLACED AROUND A BENT COLUMN

THIS STANDARD DRAWING REVIEWED AND ADAPTED FOR USE AT THE REFERENCED LOCATION BY THE UNDERSIGNED.

NORTH CAROLINA PROFESSIONAL SEAL 027415 ENGINEER ADAM J. REEDER
2-13-04

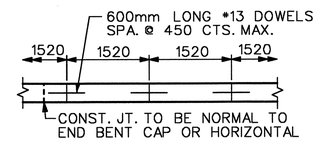

STRIP WIDTHS MAY VARY IN CURVED PORTION.

POURING DETAIL

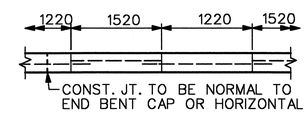

POUR A 1220mm STRIP FIRST. STRIP WIDTHS MAY VARY IN CURVED PORTION.

OPTIONAL POURING DETAIL

PROJECT NO. R-2552B
JOHNSTON COUNTY
STATION: 78+35.547 -L-
12+97.374 -Y10-
SHEET 1 OF 2

STATE OF NORTH CAROLINA
DEPARTMENT OF TRANSPORTATION
RALEIGH

STANDARD SLOPE PROTECTION DETAILS (LEFT LANE)

ASSEMBLED BY : SD	DATE : 7/03
CHECKED BY : JL	DATE : 9/03

DRAWN BY : ELR 5/92	REV. 10/17/00 RWW/LES
CHECKED BY : GRP 6/92	REV. 7/10/01 LES/RDR
	REV. 5/7/03 RWW/JTE

REVISIONS								SHEET NO.
NO.	BY:	DATE:	NO.	BY:	DATE:			S-49
1			3					TOTAL SHEETS
2			4					431

STD. NO. SP16