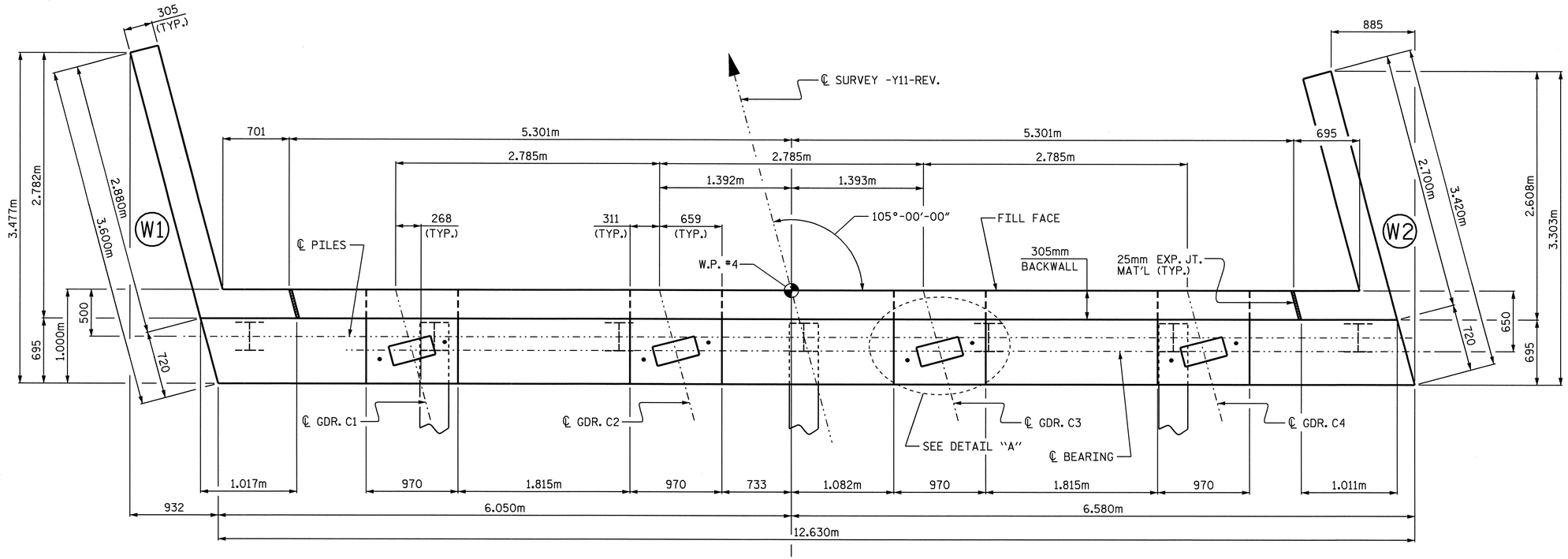

PLAN

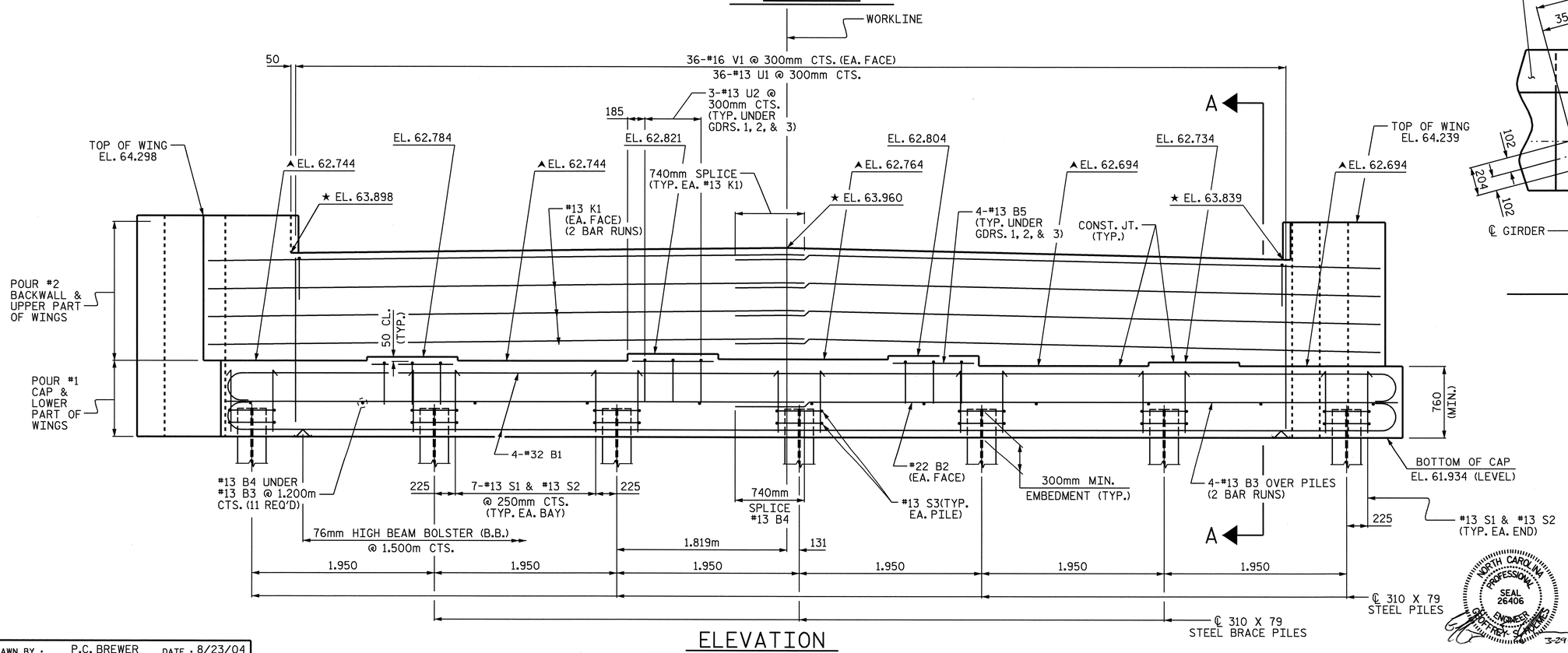

ELEVATION

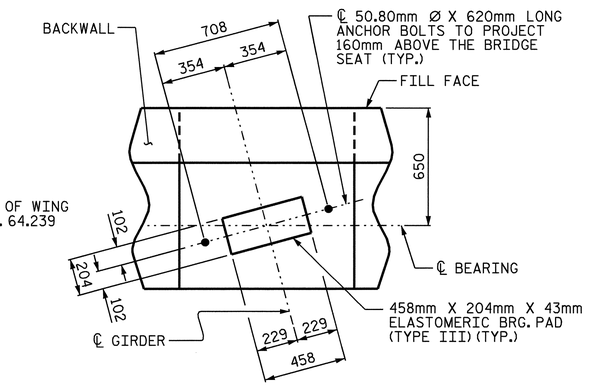

DETAIL "A"

NOTES:

STIRRUPS AND U2 BARS IN CAP MAY BE SHIFTED AS NECESSARY TO CLEAR ANCHOR BOLTS.

THE #13 V1 BARS IN BACKWALL SHALL BE PLACED 50mm CLEAR FROM TOP OF BACKWALL.

FOR EPOXY PROTECTIVE COATING, SEE SPECIAL PROVISIONS.

BACKWALL SHALL BE PLACED BEFORE APPLYING THE EPOXY PROTECTIVE COATING.

THE TOP SURFACE OF THE CAP EXCEPT THE BRIDGE SEAT BUILDUPS SHALL BE SLOPED TRANSVERSELY FROM THE FILL FACE TO THE BACK FACE AT THE RATE OF 2%.

THE CONTRACTOR SHALL PROVIDE FOR INSTALLATION OF THE 102mmØ DRAIN PIPE THROUGH THE WING WALL AS REQUIRED FOR REINFORCED BRIDGE APPROACH FILLS, SEE THE ROADWAY PLANS. REINFORCING STEEL IN THE WING WALL MAY BE SHIFTED AS NECESSARY TO CLEAR THE DRAIN PIPE.

THE TOP SURFACE AREA OF THE END BENT CAP SHALL BE CURED IN ACCORDANCE WITH THE STANDARD SPECIFICATIONS EXCEPT THAT THE MEMBRANE CURING COMPOUND SHALL NOT BE USED.

★ THIS ELEVATION TAKEN ON FILL FACE OF BACKWALL.

▲ FOR LOCATION OF ELEVATIONS BETWEEN BUILD-UPS, SEE SECTION A-A, SHEET 3 OF 3.

PROJECT NO. R-2552B

JOHNSTON COUNTY

STATION: 14+72.000-Y11-REV.

SHEET 1 OF 3

STATE OF NORTH CAROLINA
DEPARTMENT OF TRANSPORTATION
RALEIGH

SUBSTRUCTURE

END BENT No. 2

NORTH CAROLINA PROFESSIONAL SEAL 26406 ENGINEER
STRUCTURE STANDARDS
3-29-05

REVISIONS								SHEET NO.
NO.	BY:	DATE:	NO.	BY:	DATE:			S-173
1			3					TOTAL SHEETS
2			4					431

DRAWN BY : P.C. BREWER DATE : 8/23/04
CHECKED BY : H. LUCAS DATE : 9/13/04

29-MAR-2005 08:32
S:\PG3\R2552B~1\r2552b_sd_eb2_04.dgn
rmartin

STR. #4