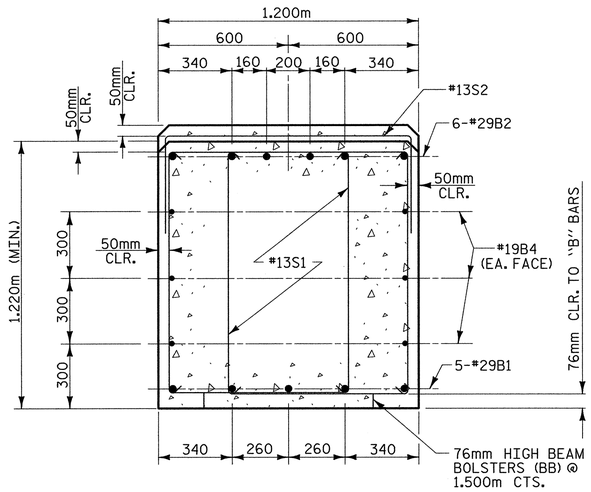

SECTION A-A

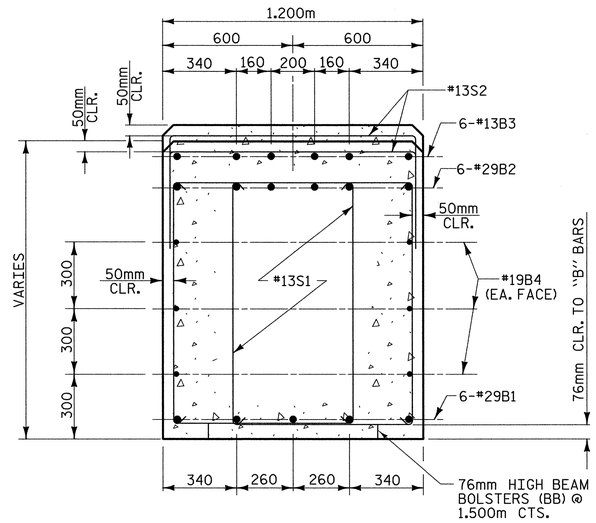

SECTION B-B

NOTES:

STIRRUPS IN THE CAP MAY BE SHIFTED AS NECESSARY TO CLEAR ANCHOR BOLTS.

HOOKS ON "V" BARS MAY BE TURNED AS NECESSARY FOR PLACING REINFORCING STEEL.

THE CONTRACTOR'S ATTENTION IS CALLED TO THE FACT THAT THE LONGITUDINAL REINFORCEMENT FOR THE DRILLED PIERS IS DETAILED WITH ONE METER OF EXTRA LENGTH.

ALL STEEL IN THE DRILLED PIERS IS INCLUDED IN THE PAY ITEMS FOR "REINFORCING STEEL" AND "SPIRAL COLUMN REINFORCING STEEL".

BAR TYPES

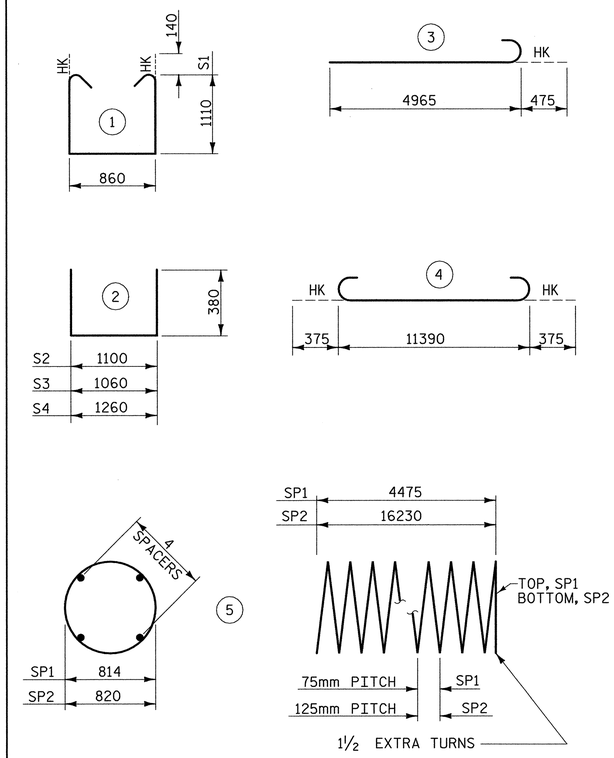

ALL BAR DIMENSIONS ARE OUT TO OUT

BILL OF MATERIAL

FOR BENT 2

BAR	NO.	SIZE	TYPE	LENGTH	WEIGHT
B1	5	#29	STR	11400	226
B2	6	#29	4	12140	289
B3	6	#13	STR	4500	27
B4	6	#19	STR	11400	153
M1	30	#36	STR	19560	4640
S1	84	#13	1	3360	281
S2	33	#13	2	1860	61
S3	14	#13	2	1820	25
S4	4	#13	2	2020	8
V1	30	#36	3	5440	1290
TOTAL REINFORCING STEEL =					7000 kg
SP1	3	**	5	150025	447
SP2	3	**	5	327542	1525
SPIRAL COLUMN REINFORCING STEEL =					1972 kg

CLASS "A" CONCRETE - CU. METERS

POUR 2 (COLUMNS)	8.7 C.M.
POUR 3 (CAP)	18.0 C.M.
TOTAL	26.7 C.M.

DRILLED PIER @ BENT 2

1066mm DIA. DRILLED PIERS IN SOIL =	42.5 LIN M.
1066mm DIA. DRILLED PIERS NOT IN SOIL =	6.3 LIN M.
SPT TESTING =	3 EA.
SID INSPECTION =	1 EA.
CSL TUBES =	205.2 LIN M.
DRILLED PIER CONC. (FOR INFORMATION ONLY) =	43.5 C.M.

** THE SP1 SPIRAL REINFORCING STEEL SHALL BE W20 OR D-20 COLD DRAWN WIRE OR #13 PLAIN OR DEFORMED BAR

THE SP2 SPIRAL REINFORCING STEEL SHALL BE W31 OR D-31 COLD DRAWN WIRE OR #16 PLAIN OR DEFORMED BAR

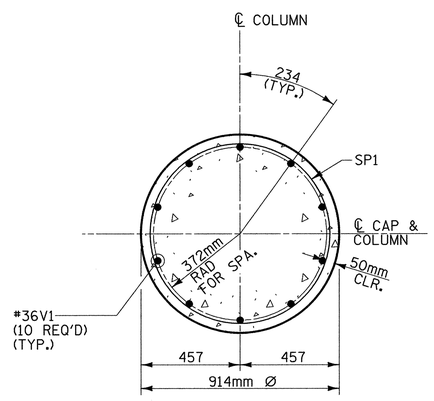

SECTION THRU COLUMN

(ALL COLUMNS SIMILAR)
(SEE ELEVATION FOR BAR MARKS)

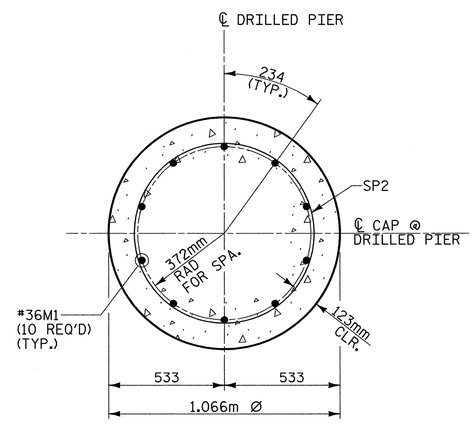

SECTION THRU DRILLED PIER

(ALL DRILLED PIERS OTHER COLUMNS SIMILAR)
(SEE ELEVATION FOR BAR MARKS)

PROJECT NO. R-2552C

JOHNSTON COUNTY

STATION: 109+56.000 -L2LT- POT

SHEET 2 OF 2

STATE OF NORTH CAROLINA
DEPARTMENT OF TRANSPORTATION
RALEIGH

SUBSTRUCTURE BENT 2 (LEFT LANE)

PLANS PREPARED BY:
MULKEY ENGINEERS & CONSULTANTS
PO Box 33127
RALEIGH, N.C. 27636
(919) 851-1912
(919) 851-1918 (FAX)
WWW.MULKEYINC.COM

NORTH CAROLINA PROFESSIONAL SEAL 19114 ENGINEER ROBERT C. LARSON
2/25/05

REFERENCE NO. BL-27

REVISIONS						SHEET NO.
NO.	BY:	DATE:	NO.	BY:	DATE:	S-210
1			3			TOTAL SHEETS
2			4			431

DRAWN BY : J. P. SHERMAN DATE : 12/04
CHECKED BY : R. C. LARSON DATE : 12/04

02/21/2005 07:08:34 AM r:\Structures\Site 1\Left Lane\R2552C_SD_B2_02.dgn