REINFORCING BAR SCHEDULE
UNIT 1 (SPAN A & B)

REINFORCING STEEL

BAR	NO.	SIZE	TYPE	LENGTH	WEIGHT
A1	262	#16	STR	12880	5237
A2	2	#16	STR	12760	40
A3	2	#16	STR	12460	39
A4	2	#16	STR	12160	38
A5	2	#16	STR	11860	37
A6	2	#16	STR	11560	36
A7	2	#16	STR	11260	35
A8	2	#16	STR	10980	34
A9	2	#16	STR	10680	33
A10	2	#16	STR	10380	32
A11	2	#16	STR	10080	31
A12	2	#16	STR	9780	30
A13	2	#16	STR	9500	29
A14	2	#16	STR	9200	29
A15	2	#16	STR	8900	28
A16	2	#16	STR	8600	27
A17	2	#16	STR	8300	26
A18	2	#16	STR	8020	25
A19	2	#16	STR	7720	24
A20	2	#16	STR	7420	23
A21	2	#16	STR	7120	22
A22	2	#16	STR	6820	21
A23	2	#16	STR	6540	20
A24	2	#16	STR	6240	19
A25	2	#16	STR	5940	18
A26	2	#16	STR	5640	18
A27	2	#16	STR	5360	17
A28	2	#16	STR	5060	16
A29	2	#16	STR	4760	15
A30	2	#16	STR	4460	14
A31	2	#16	STR	4160	13
A32	2	#16	STR	3880	12
A33	2	#16	STR	3580	11
A34	2	#16	STR	3280	10
A35	2	#16	STR	2980	9
A36	2	#16	STR	2700	8
A37	2	#16	STR	2400	7
A38	2	#16	STR	2100	7
A39	2	#16	STR	1820	6
A40	2	#16	STR	1520	5
A41	2	#16	STR	1220	4
A42	2	#16	STR	920	3
A43	2	#16	STR	640	2
A44	2	#16	STR	340	1
B1	132	#16	STR	17780	3642
K1	16	#16	5	2400	60
K2	16	#16	STR	2080	52
S1	56	#13	4	2220	124
S2	120	#13	7	840	100
U1	24	#13	8	3900	93

TOTAL REINFORCING STEEL Kg 10182

EPOXY COATED REINF. STEEL

BAR	NO.	SIZE	TYPE	LENGTH	WEIGHT
A45 ✱	262	#16	STR	12880	5237
A46 ✱	2	#16	STR	12480	39
A47 ✱	2	#16	STR	12180	38
A48 ✱	2	#16	STR	11880	37
A49 ✱	2	#16	STR	11580	36
A50 ✱	2	#16	STR	11280	35
A51 ✱	2	#16	STR	10980	34
A52 ✱	2	#16	STR	10700	33
A53 ✱	2	#16	STR	10400	32
A54 ✱	2	#16	STR	10100	31
A55 ✱	2	#16	STR	9800	30
A56 ✱	2	#16	STR	9500	29
A57 ✱	2	#16	STR	9220	29
A58 ✱	2	#16	STR	8920	28
A59 ✱	2	#16	STR	8620	27
A60 ✱	2	#16	STR	8320	26
A61 ✱	2	#16	STR	8020	25
A62 ✱	2	#16	STR	7740	24
A63 ✱	2	#16	STR	7440	23
A64 ✱	2	#16	STR	7140	22
A65 ✱	2	#16	STR	6840	21
A66 ✱	2	#16	STR	6540	20
A67 ✱	2	#16	STR	6260	19
A68 ✱	2	#16	STR	5960	18
A69 ✱	2	#16	STR	5660	18
A70 ✱	2	#16	STR	5360	17
A71 ✱	2	#16	STR	5060	16
A72 ✱	2	#16	STR	4780	15
A73 ✱	2	#16	STR	4480	14
A74 ✱	2	#16	STR	4180	13
A75 ✱	2	#16	STR	3880	12
A76 ✱	2	#16	STR	3600	11
A77 ✱	2	#16	STR	3300	10
A78 ✱	2	#16	STR	3000	9
A79 ✱	2	#16	STR	2700	8
A80 ✱	2	#16	STR	2420	8
A81 ✱	2	#16	STR	2120	7
A82 ✱	2	#16	STR	1820	6
A83 ✱	2	#16	STR	1540	5
A84 ✱	2	#16	STR	1240	4
A85 ✱	2	#16	STR	940	3
A86 ✱	2	#16	STR	640	2
A87 ✱	2	#16	STR	360	1
A88 ✱	6	#19	STR	1520	20
B2 ✱	120	#13	STR	8880	1059
B3 ✱	30	#19	STR	7460	500
B4 ✱	30	#19	STR	12120	813
B5 ✱	56	#19	STR	8440	1056
G1 ✱	2	#16	STR	14860	46
K3 ✱	10	#13	STR	6680	66
K4 ✱	4	#13	9	3760	15
K5 ✱	40	#13	STR	2400	95
K6 ✱	8	#13	STR	1920	15
K7 ✱	12	#25	2	6520	311
K8 ✱	8	#25	1	4160	132
K9 ✱	16	#19	STR	2420	87
S3 ✱	64	#16	3	1780	177
S4 ✱	64	#13	6	960	61

TOTAL EPOXY COATED REINFORCING STEEL Kg 10525

REINFORCING BAR SCHEDULE
UNIT 2 (SPAN C & D)

REINFORCING STEEL

BAR	NO.	SIZE	TYPE	LENGTH	WEIGHT
A89	372	#16	STR	12880	7436
A90	2	#16	STR	12680	39
A91	2	#16	STR	12340	38
A92	2	#16	STR	12020	37
A93	2	#16	STR	11680	36
A94	2	#16	STR	11360	35
A95	2	#16	STR	11020	34
A96	2	#16	STR	10700	33
A97	2	#16	STR	10360	32
A98	2	#16	STR	10040	31
A99	2	#16	STR	9700	30
A100	2	#16	STR	9360	29
A101	2	#16	STR	9040	28
A102	2	#16	STR	8700	27
A103	2	#16	STR	8380	26
A104	2	#16	STR	8040	25
A105	2	#16	STR	7720	24
A106	2	#16	STR	7380	23
A107	2	#16	STR	7060	22
A108	2	#16	STR	6720	21
A109	2	#16	STR	6400	20
A110	2	#16	STR	6060	19
A111	2	#16	STR	5740	18
A112	2	#16	STR	5400	17
A113	2	#16	STR	5080	16
A114	2	#16	STR	4740	15
A115	2	#16	STR	4420	14
A116	2	#16	STR	4080	13
A117	2	#16	STR	3760	12
A118	2	#16	STR	3420	11
A119	2	#16	STR	3100	10
A120	2	#16	STR	2760	9
A121	2	#16	STR	2440	8
A122	2	#16	STR	2100	7
A123	2	#16	STR	1780	6
A124	2	#16	STR	1440	4
A125	2	#16	STR	1120	3
A126	2	#16	STR	800	2
A127	2	#16	STR	460	1
B6	160	#16	STR	15720	3904
B11	40	#22	STR	18000	2190
K10	16	#16	5	2460	61
K11	16	#16	5	2420	60
S6	56	#13	4	3460	193
S7	184	#13	7	1020	187
U2	20	#13	8	5040	100
U3	16	#13	6	3460	55

TOTAL REINFORCING STEEL Kg 14961

EPOXY COATED REINF. STEEL

BAR	NO.	SIZE	TYPE	LENGTH	WEIGHT
A128 ✱	372	#16	STR	12880	7436
A129 ✱	2	#16	STR	12400	38
A130 ✱	2	#16	STR	12060	37
A131 ✱	2	#16	STR	11740	36
A132 ✱	2	#16	STR	11400	35
A133 ✱	2	#16	STR	11080	34
A134 ✱	2	#16	STR	10740	33
A135 ✱	2	#16	STR	10420	32
A136 ✱	2	#16	STR	10080	31
A137 ✱	2	#16	STR	9740	30
A138 ✱	2	#16	STR	9420	29
A139 ✱	2	#16	STR	9080	28
A140 ✱	2	#16	STR	8760	27
A141 ✱	2	#16	STR	8420	26
A142 ✱	2	#16	STR	8100	25
A143 ✱	2	#16	STR	7760	24
A144 ✱	2	#16	STR	7440	23
A145 ✱	2	#16	STR	7100	22
A146 ✱	2	#16	STR	6780	21
A147 ✱	2	#16	STR	6440	20
A148 ✱	2	#16	STR	6120	19
A149 ✱	2	#16	STR	5780	18
A150 ✱	2	#16	STR	5460	17
A151 ✱	2	#16	STR	5120	16
A152 ✱	2	#16	STR	4800	15
A153 ✱	2	#16	STR	4460	14
A154 ✱	2	#16	STR	4140	13
A155 ✱	2	#16	STR	3800	12
A156 ✱	2	#16	STR	3480	11
A157 ✱	2	#16	STR	3140	10
A158 ✱	2	#16	STR	2820	9
A159 ✱	2	#16	STR	2480	8
A160 ✱	2	#16	STR	2160	7
A161 ✱	2	#16	STR	1820	6
A162 ✱	2	#16	STR	1500	5
A163 ✱	2	#16	STR	1160	4
A164 ✱	2	#16	STR	840	3
A165 ✱	2	#16	STR	520	2
A166 ✱	6	#19	STR	1520	20
B7 ✱	240	#13	STR	7020	1675
B8 ✱	30	#22	STR	12020	1097
B9 ✱	30	#22	STR	16040	1464
B10 ✱	56	#22	STR	12360	2106
G1 ✱	2	#16	STR	14860	46
K12 ✱	10	#13	STR	6660	66
K13 ✱	4	#13	9	3760	15
K14 ✱	40	#13	STR	2780	111
K15 ✱	16	#13	STR	1740	28
K16 ✱	12	#25	2	6900	329
K17 ✱	8	#25	1	4360	139
K18 ✱	32	#16	STR	1780	88
K19 ✱	24	#19	STR	1760	94
S8 ✱	48	#16	3	1780	133
S9 ✱	48	#13	6	1060	51

TOTAL EPOXY COATED REINFORCING STEEL Kg 15638

BAR TYPES

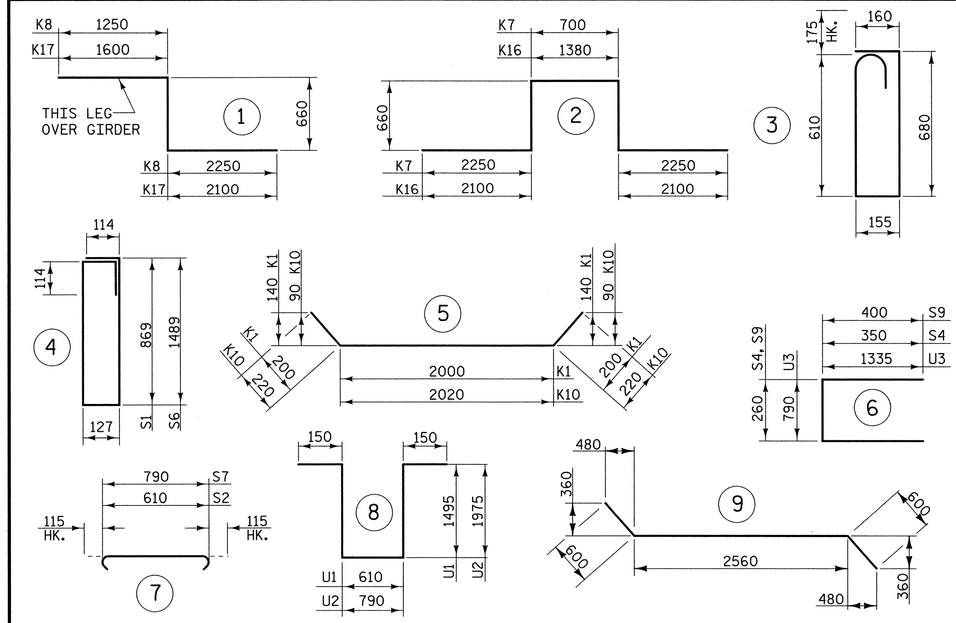

ALL BAR DIMENSIONS ARE OUT TO OUT

SUPERSTRUCTURE BILL OF MATERIAL

	UNIT 1				UNIT 2		
	CLASS A-A CONCRETE	REINFORCING STEEL	EPOXY COATED REINF. STEEL		CLASS A-A CONCRETE	REINFORCING STEEL	EPOXY COATED REINF. STEEL
	(CU. METER)	(kg)	(kg)		(CU. METER)	(kg)	(kg)
POUR 1	81.7			POUR 1	134.9		
POUR 2	114.4			POUR 2	176.7		
TOTALS ✱✱	196.1	10182	10525	TOTALS ✱✱	311.6	14961	15638

✱✱ QUANTITIES FOR BARRIER RAIL ARE NOT INCLUDED

SUPERSTRUCTURE REINFORCING STEEL LENGTHS ARE BASED ON THE FOLLOWING MINIMUM SPLICE LENGTHS

BAR SIZE	SUPERSTRUCTURE EXCEPT APPROACH SLABS, PARAPET, AND BARRIER RAIL		APPROACH SLABS		PARAPET AND BARRIER RAIL
	EPOXY COATED	UNCOATED	EPOXY COATED	UNCOATED	
#13	610	540	610	540	840
#16	770	660	770	660	1050
#19	920	790	1190	790	1330
#22	1580	1060			
#25	2080	1390			

✱ EPOXY COATED REINFORCING STEEL

METRIC

PROJECT NO. R-2552C

JOHNSTON COUNTY

STATION: 110+37.000 -L2RT- POC

GROOVING BRIDGE FLOORS

	UNIT 1	UNIT 2	TOTAL
APPROACH SLABS	79.4 SQ.METER	79.4 SQ.METER	158.8 SQ.METER
BRIDGE DECK	571.6 SQ.METER	860.0 SQ.METER	1431.6 SQ.METER
TOTAL	651.0 SQ.METER	939.4 SQ.METER	1590.4 SQ.METER

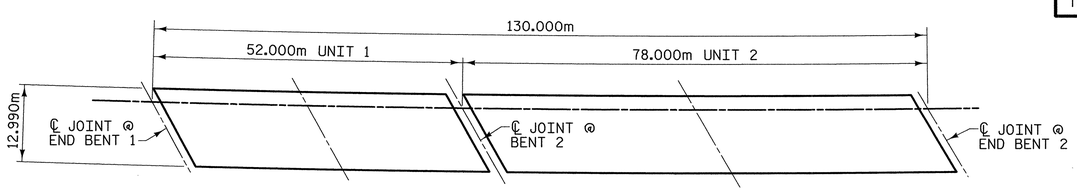

LAYOUT FOR COMPUTING AREA OF REINFORCED CONCRETE DECK SLAB

(SQ. METERS = 1688.7)

PLANS PREPARED BY:

MULKEY ENGINEERS & CONSULTANTS
PO Box 33127
RALEIGH, N.C. 27636
(919) 851-1912
(919) 851-1918 (FAX)
WWW.MULKEYINC.COM

NORTH CAROLINA PROFESSIONAL ENGINEER SEAL 14118 ROBERT C. LARSON
2/25/05

REFERENCE NO. BR-22

STATE OF NORTH CAROLINA
DEPARTMENT OF TRANSPORTATION
RALEIGH

SUPERSTRUCTURE BILL OF MATERIAL (RIGHT LANE)

REVISIONS						SHEET NO.
NO.	BY:	DATE:	NO.	BY:	DATE:	S-247
1			3			TOTAL SHEETS
2			4			431

DRAWN BY : W. B. ALLEN DATE : 10/04
CHECKED BY : R. C. LARSON DATE : 11/04

02/21/2005 08:04:40 AM G:\project\2004\03.DIR-2552\Structures\Site 1\Right Lane\R2552C_SD_BM_04.dgn