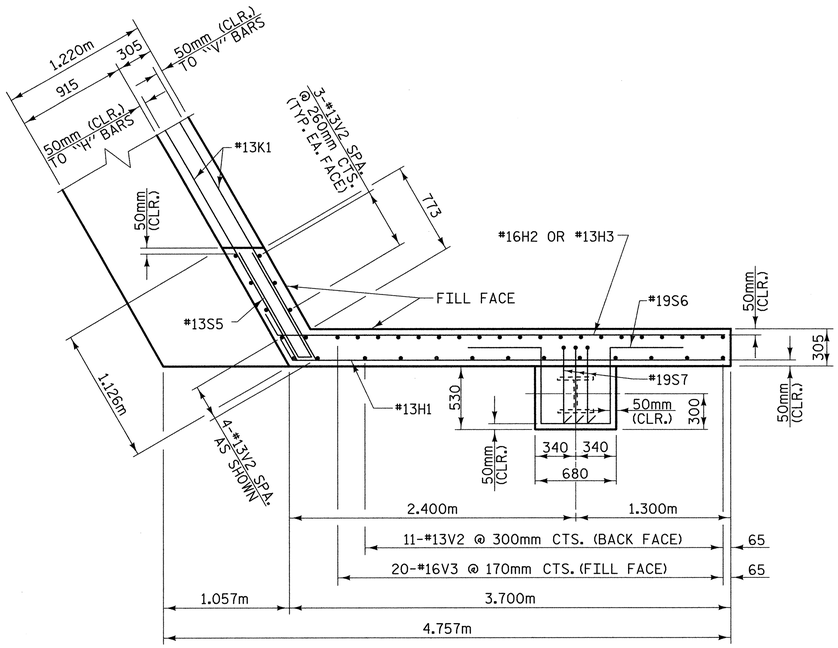


W1 PLAN OF LEFT WING

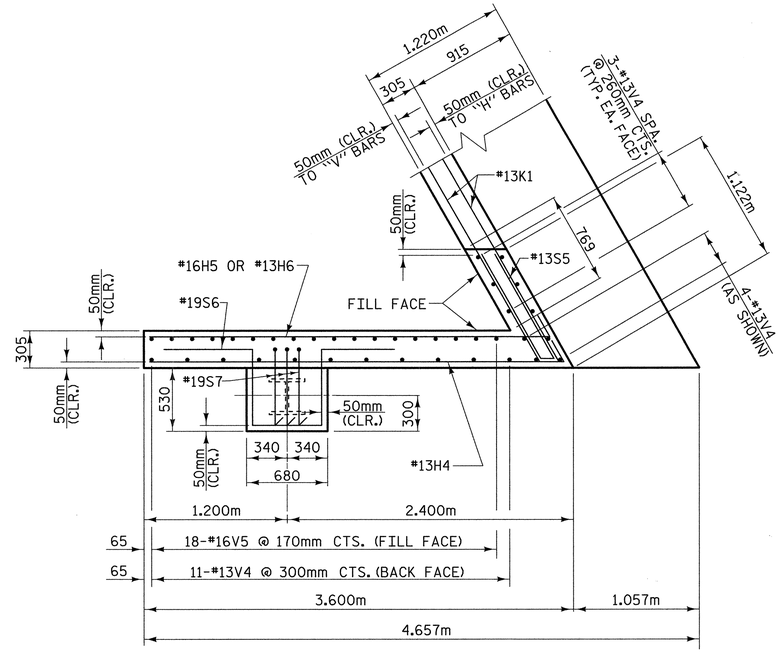


W2 PLAN OF RIGHT WING

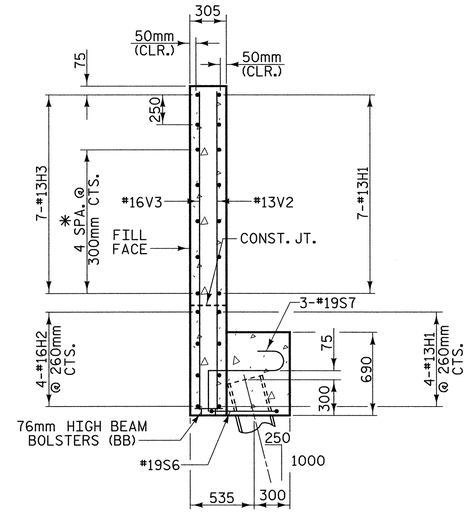


SECTION A-A

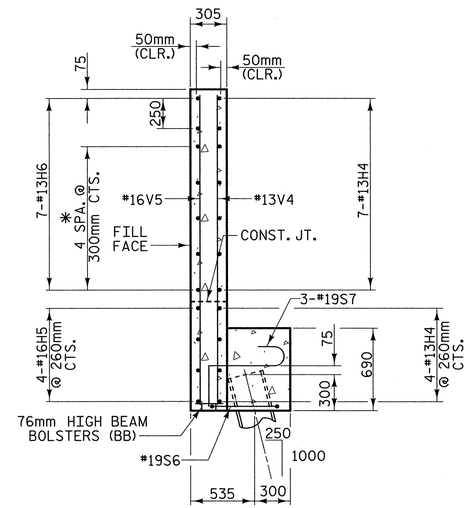


SECTION B-B

✱ MATCH "H" BARS TO "K" BARS IN BACKWALL AS SHOWN

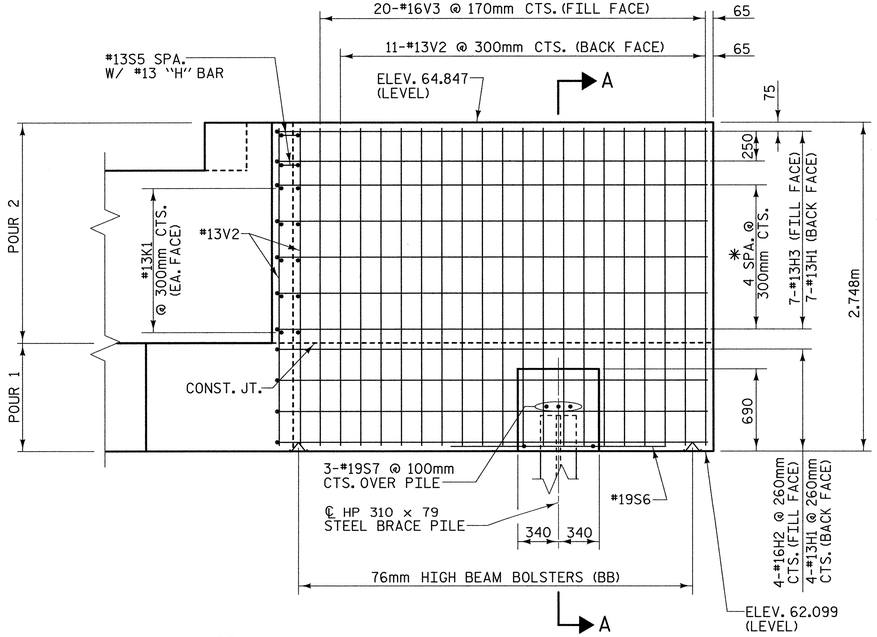


W1 ELEVATION OF LEFT WING

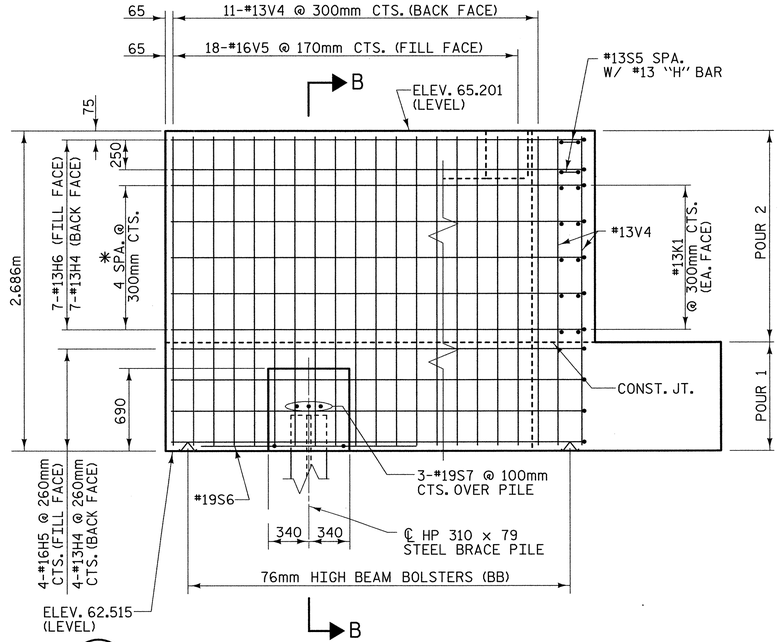


W2 ELEVATION OF RIGHT WING

PROJECT NO. R-2552C

JOHNSTON COUNTY

STATION: 110+37.000 -L2RT- POC

METRIC

SHEET 2 OF 3

STATE OF NORTH CAROLINA
DEPARTMENT OF TRANSPORTATION
RALEIGH

# SUBSTRUCTURE END BENT 1 (RIGHT LANE)

PLANS PREPARED BY:
MULKEY ENGINEERS & CONSULTANTS
PO Box 33127
RALEIGH, N.C. 27636
(919) 851-1912
(919) 851-1918 (FAX)
WWW.MULKEYINC.COM

NORTH CAROLINA PROFESSIONAL SEAL 14114 ENGINEER ROBERT C. LARSON 2/25/05

| REVISIONS | | | | | | | SHEET NO. |
|---|---|---|---|---|---|---|---|
| NO. | BY: | DATE: | NO. | BY: | DATE: | | S-249 |
| 1 | | | 3 | | | | TOTAL SHEETS |
| 2 | | | 4 | | | | 431 |

REFERENCE NO. BR-24

DRAWN BY : J. P. SHERMAN DATE : 11/04
CHECKED BY : R. C. LARSON DATE : 1/05

02/21/2005 08:04:58 AM G:\projects\2004\213.00\R-2552\Structures\Site 1\Right Lane\R2552C_S0_EL02.dgn