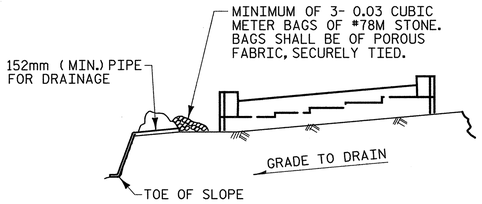

BAGGED STONE AND PIPE SHALL BE PLACED IMMEDIATELY AFTER COMPLETION OF END BENT EXCAVATION. PIPE MAY BE EITHER CONCRETE, CORRUGATED STEEL, CORRUGATED ALUMINUM ALLOY, OR CORRUGATED PLASTIC. PERFORATED PIPE WILL NOT BE ALLOWED.

BAGGED STONE SHALL REMAIN IN PLACE UNTIL THE ENGINEER DIRECTS THAT IT BE REMOVED. THE CONTRACTOR SHALL REMOVE AND DISPOSE OF SILT ACCUMULATIONS AT BAGGED STONE WHEN SO DIRECTED BY THE ENGINEER. BAGS SHALL BE REMOVED AND REPLACED WHENEVER THE ENGINEER DETERMINES THAT THEY HAVE DETERIORATED AND LOST THEIR EFFECTIVENESS.

NO SEPARATE PAYMENT WILL BE MADE FOR THIS WORK AND THE ENTIRE COST OF THIS WORK SHALL BE INCLUDED IN THE UNIT CONTRACT PRICE FOR THE SEVERAL PAY ITEMS.

TEMPORARY DRAINAGE AT END BENT

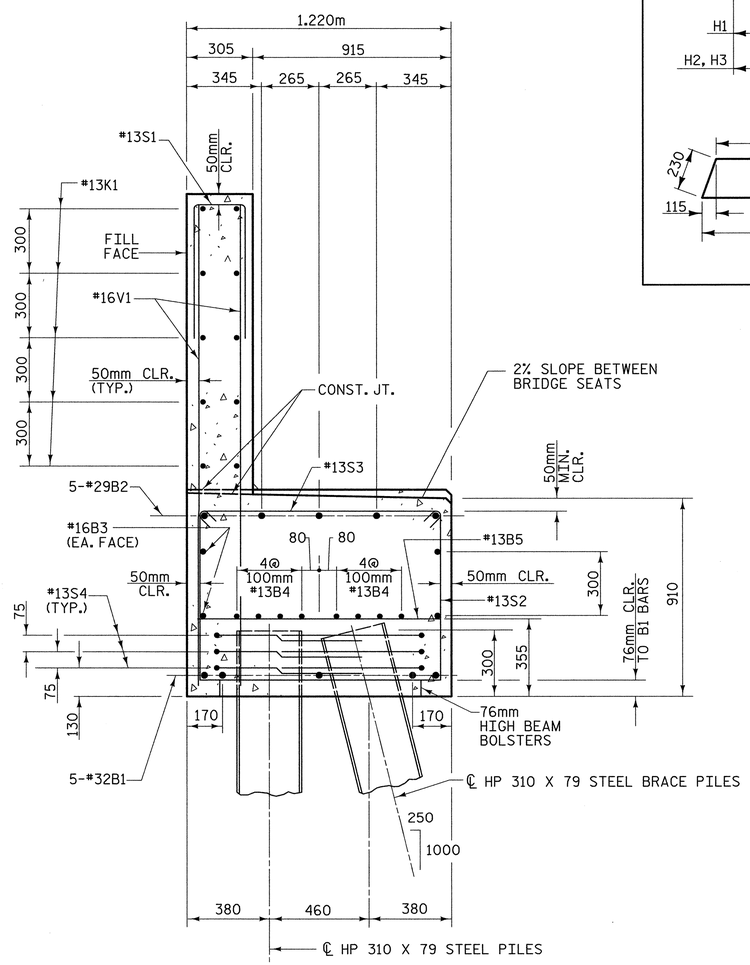

SECTION A-A

BAR TYPES

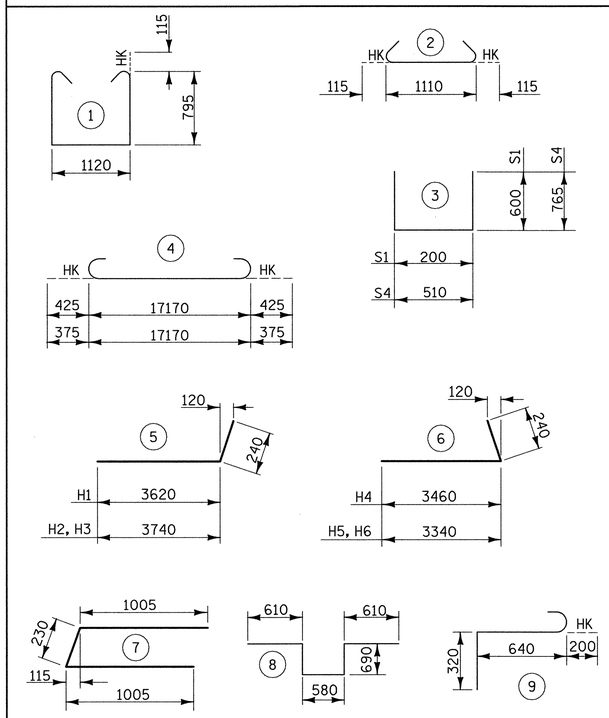

ALL BAR DIMENSIONS ARE OUT TO OUT

BILL OF MATERIAL

FOR END BENT 1

BAR	NO.	SIZE	TYPE	LENGTH	WEIGHT
B1	5	#32	4	18020	577
B2	5	#29	4	17920	356
B3	4	#16	STR	17180	107
B4	16	#13	STR	8980	143
B5	14	#13	STR	1120	16
H1	11	#13	5	3860	42
H2	4	#16	5	3980	25
H3	7	#13	5	3980	28
H4	11	#13	6	3700	40
H5	4	#16	6	3580	22
H6	7	#13	6	3580	25
K1	20	#13	STR	8980	179
S1	50	#13	STR	1400	70
S2	50	#13	1	2940	146
S3	50	#13	2	1340	67
S4	30	#13	3	2040	61
S5	4	#13	7	2240	9
S6	2	#19	8	3180	14
S7	6	#19	9	1160	16
V1	100	#16	STR	2200	341
V2	21	#13	STR	2640	55
V3	20	#16	STR	2640	82
V4	21	#13	STR	2580	54
V5	18	#16	STR	2580	72

TOTAL REINFORCING STEEL = 2547 kg

CLASS "A" CONCRETE - CU. METERS

POUR 1	22.0 C. M.
POUR 2	11.2 C. M.
TOTAL	33.2 C. M.

HP 310 X 79 STEEL PILES

12 PILES REQUIRED - LIN. METERS 180

METRIC

PROJECT NO. R-2552C

JOHNSTON COUNTY

STATION: 110+37.000 -L2RT- POC

SHEET 3 OF 3

STATE OF NORTH CAROLINA
DEPARTMENT OF TRANSPORTATION
RALEIGH

SUBSTRUCTURE END BENT 1 (RIGHT LANE)

PLANS PREPARED BY:
MULKEY ENGINEERS & CONSULTANTS
PO Box 33127 Raleigh, N.C. 27636
(919) 851-1912
(919) 851-1918 (FAX)
WWW.MULKEYINC.COM

NORTH CAROLINA PROFESSIONAL SEAL 14114 ENGINEER ROBERT C. LARSON
2/25/05

REFERENCE NO. BR-25

REVISIONS						
NO.	BY:	DATE:	NO.	BY:	DATE:	
1			3			
2			4			

SHEET NO. S-250

TOTAL SHEETS 431

DRAWN BY : J. P. SHERMAN DATE : 11/04
CHECKED BY : R. C. LARSON DATE : 1/05

02/21/2005 12:56:49 PM G:\projects\2004\203.dir\R-2552\Structures\Site 1\Right Lane\R2552C_SD_E1_03.dgn