05-NOV-2004 14:46
W:\Special Details\ericward\stds\02' Stds to Special Details\english\42210\0422d10.dgn
ericward AT DS212260

STATE OF NORTH CAROLINA
DEPT. OF TRANSPORTATION
DIVISION OF HIGHWAYS
RALEIGH, N.C.

ENGLISH DETAIL DRAWING FOR
REINFORCED BRIDGE APPROACH FILLS

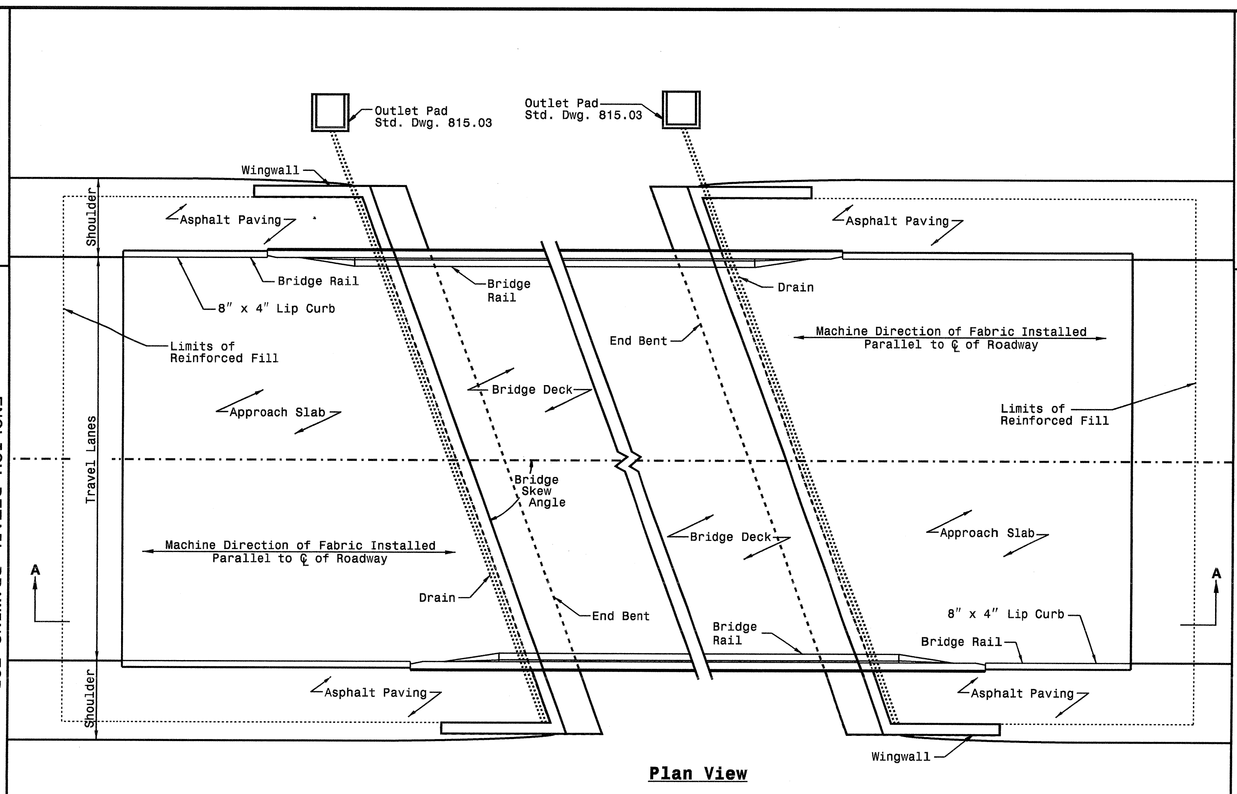

Plan View

SHEET 1 OF 4
422D10

STATE OF NORTH CAROLINA
DEPT. OF TRANSPORTATION
DIVISION OF HIGHWAYS
RALEIGH, N.C.

ENGLISH DETAIL DRAWING FOR
REINFORCED BRIDGE APPROACH FILLS

SHEET 1 OF 4
422D10

STATE OF NORTH CAROLINA
DEPT. OF TRANSPORTATION
DIVISION OF HIGHWAYS
RALEIGH, N.C.

ENGLISH DETAIL DRAWING FOR
REINFORCED BRIDGE APPROACH FILLS
PRESTRESSED AND PLATE GIRDER BRIDGES

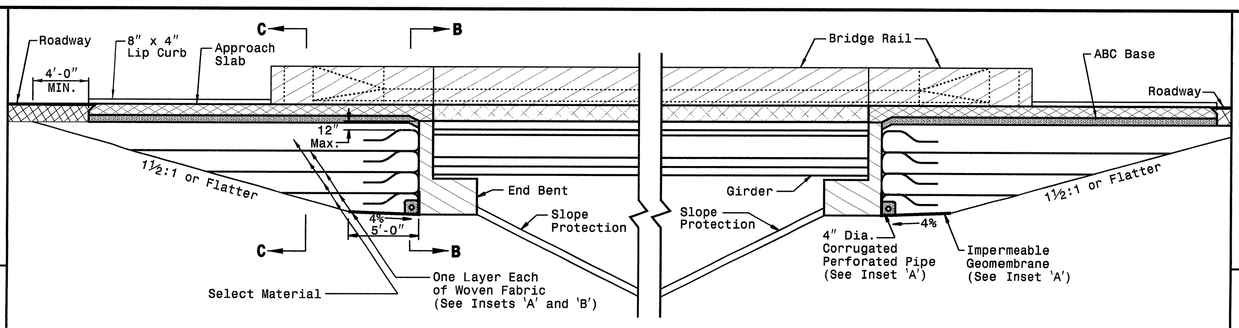

SECTION A-A

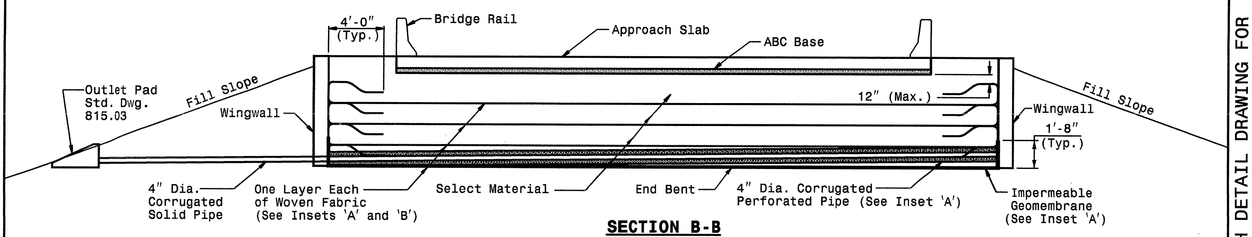

SECTION B-B

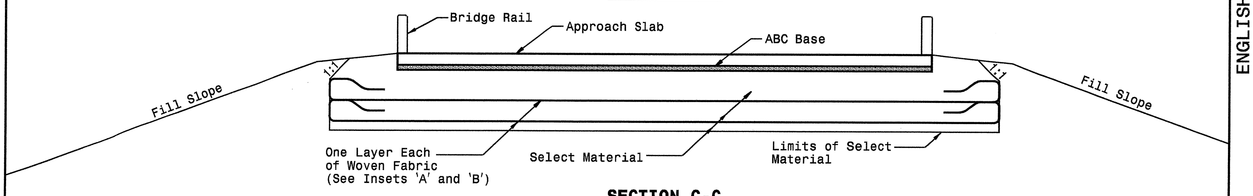

SECTION C-C

SHEET 2 OF 4
422D10

STATE OF NORTH CAROLINA
DEPT. OF TRANSPORTATION
DIVISION OF HIGHWAYS
RALEIGH, N.C.

ENGLISH DETAIL DRAWING FOR
REINFORCED BRIDGE APPROACH FILLS
PRESTRESSED AND PLATE GIRDER BRIDGES

SHEET 2 OF 4
422D10

PROJECT SERVICES UNIT
STANDARDS AND SPECIAL DESIGN
Office 919-250-4128 FAX 919-250-4119

SEE PLATE FOR TITLE

ORIGINAL BY: 2002 STANDARDS DATE: 01-15-02
MODIFIED BY: E.E. WARD DATE: 11-04-04
CHECKED BY: [signature] DATE: 11/2/04
FILE SPEC.: stds/02stdstodetails/english/422d10.dgn

NORTH CAROLINA PROFESSIONAL SEAL 022966 ENGINEER JOHN S. HOWERTON
2/8/05

PROJECT REFERENCE NO. B-4260
SHEET NO. 2-G