METAL POLE No. 6 and 7

PROJECT REFERENCE NO.	SHEET NO.
U-3302	SIG.14

Design Loading for METAL POLE NO. 6

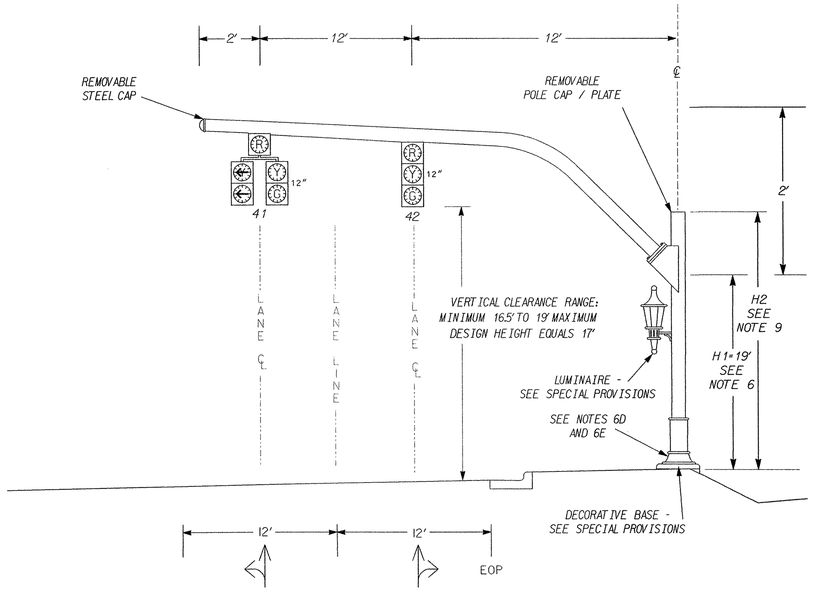

ELEVATION VIEW

Design Loading for METAL POLE NO. 7

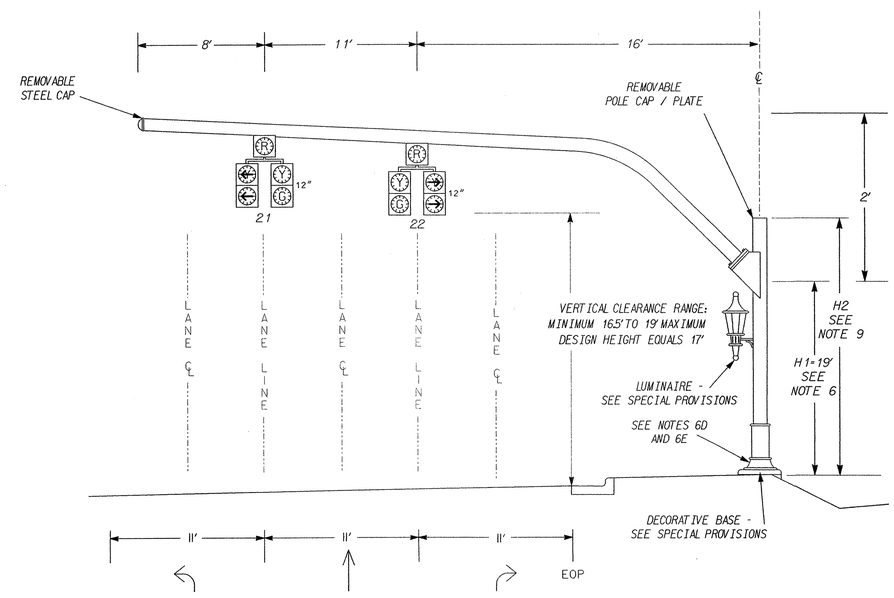

ELEVATION VIEW

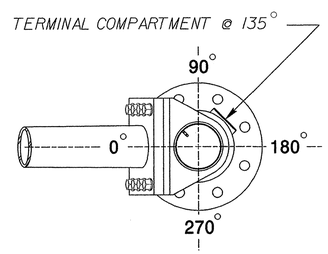

PLAN VIEW
RADIAL ORIENTATION

MAST ARM LOADING SCHEDULE

LOADING SYMBOL	DESCRIPTION	AREA	SIZE	WEIGHT
	SIGNAL HEAD 12"-5 SECTION-WITH BACKPLATE AND ASTRO-BRAC	16.3 S.F.	42.0" W X 56.0" L	103 LBS
	SIGNAL HEAD 12"-4 SECTION-WITH BACKPLATE AND ASTRO-BRAC	11.5 S.F.	25.5" W X 66.0" L	74 LBS
	SIGNAL HEAD 12"-3 SECTION-WITH BACKPLATE AND ASTRO-BRAC	9.3 S.F.	25.5" W X 52.5" L	60 LBS
	SIGN RIGID MOUNTED WITH ASTRO-SIGN-BRAC	5.0 S.F.	24.0" W X 30.0" L	11 LBS
STREET NAME SIGN	STREET NAME SIGN RIGID MOUNTED WITH ASTRO-SIGN-BRAC	12.0 S.F.	18.0" W X 96.0" L	27 LBS

NOTES

Design Reference Material

1. Design the traffic signal structure and foundation in accordance with:
   - The 4th Edition 2001 AASHTO "Standard Specifications for Structural Supports for Highway Signs, Luminaires, and Traffic Signals" including all of the latest interim revisions.
   - The 2002 NCDOT "Standard Specifications for Roads and Structures". The latest addenda to these specifications can be found in the traffic signal project special provisions.
   - The 2002 NCDOT Roadway Standard Drawings.
   - The traffic signal project plans and special provisions.
   - The NCDOT "Metal Pole Standards" located at the following NCDOT website: http://www.doh.state.nc.us/preconstruct/traffic/tmssu/SMS/metal_pole/poles.htm

Design Requirements

2. Comply with the provisions of Section 1744 "Structure Design of Signal Supports" in the NCDOT Standard Specifications and the latest addenda to these specifications.
3. Design the traffic signal structure using the loading conditions shown in the elevation views. These are anticipated worst case "Design loads" and may not represent the actual loads that will be applied at the time of the installation. The contractor should refer to the traffic signal plans for the actual loads that will be applied at the time of the installation.
4. Ensure that the structure design meets the following deflection criteria.
   - The maximum allowable deflection at the tip of the mast arm due to the combined vertical deflection of the pole and the arm is 3.0% of the total mast arm length under maximum dead loading conditions.
   - As provided for in article 11.8 of the 2001 AASHTO Specification, when the equivalent static design wind effect from truck-induced gusts are applied to the structure, the total deflection at the free end of all traffic signal arms should be limited to 8 inches (200mm) vertically.
   - Conform to article 10.4.2 of the 2001 AASHTO Specification.

   Design the arm-to-pole connection so the mast arm slopes upward away from the pole at an angle of 3 degrees above horizontal to offset the vertical deflection of the mast arm. The pole manufacturer may design a different arm slope as long as the deflection criterion above is included in the design.
5. The pole manufacturer may substitute a clamp-type bolted connection instead of a welded connection as long as the roadway clearance range is within the allowable limit. If bolted connections are used, the pole manufacturer must ensure that factory drilled holes are provided in the connection plate to allow easy installation of the shear bolts that lock the mast arm to the pole. The contractor will field drill the holes in the pole wall for these bolts.
6. The mast arm attachment height (H1) shown is based on the following design assumptions:
   a. Mast arm slope and deflection are not considered in determining the arm attachment height as they are assumed to offset each other.
   b. Signal heads attached to the mast arm are rigid mounted and below the arm.
   c. The roadway clearance height is 17 feet from the bottom of the signal head backplate.
   d. The top of the pole base plate is .75 feet above the ground elevation.
   e. The ground elevation at the proposed centerline of the foundation is 0.5 feet minimum above the highest point on the roadway along where the the mast arm will cross.
7. The contractor is responsible for verifying that the mast arm attachment height (H1) will provide the roadway clearance range of 16.5' to 19.0' from the roadway prior to submitting final shop drawings for approval. The contractor also must verify that the mast arm length shown will allow proper positioning of the signal heads over the roadway.
8. If pole location adjustments are required, the contractor must gain approval from the engineer as this may affect the mast arm lengths and arm attachment heights. The contractor may contact the Signals & Geometrics structural engineer for assistance at (919) 733-3915.
9. The pole manufacturer will determine the total height of the pole (H2) using the greater of the following:
   - Mast arm attachment height (H1) plus 2 feet, or
   - H1 plus ½ of the total height of the mast arm attachment assembly plus 1 foot.
10. NCDOT prefers using 8 anchor bolts to secure the structure to the foundation. The pole manufacturer may provide a design that specifies less than 8 anchor bolts as long as design calculations are provided and approved. A minimum of 8 anchor bolts must be provided when the design calls for a mast arm length equal to or greater than 50 feet, or in any design where dual mast arms are required. Two-inch anchor bolts are required in all designs. The pole manufacturer should design the structure whenever possible to conform to bolt circle patterns that are specified in the NCDOT Metal Pole Standards.
11. The contractor is responsible for providing soil penetration testing data (SPT) to the pole manufacturer so site specific foundations can be designed.

This Plan Shall Supersede
The Plan Previously Signed
and Sealed On 6/28/04

Mattern & Craig
CONSULTING ENGINEERS • SURVEYORS
12 BROAD STREET
ASHEVILLE, NORTH CAROLINA 28801
(828) 254-2201
FAX (828) 254-4562

Prepared in the Offices of:
Traffic Engineering and Safety Systems Branch
Signals and Geometrics Section
STATE OF NORTH CAROLINA DEPARTMENT OF TRANSPORTATION
122 N. McDowell St., Raleigh, NC 27603

Metal Pole Details

US 25 (Merrimon Avenue / Broadway Street) at Woodfin Street

Division 13 Buncombe County Asheville

PLAN DATE:	April 2004	REVIEWED BY:	Voso
PREPARED BY:	Richardsen	REVIEWED BY:	

SCALE: 0 N/A N/A

REVISIONS	INIT.	DATE

SEAL
NORTH CAROLINA PROFESSIONAL SEAL 022599 ENGINEER JAMES B. VOSO
SIGNATURE James B Voso DATE 12/17/04
SIG. INVENTORY NO. 13-0252

$$$$$SYSTIME$$$$$
$$$$$USERNAME$$$$