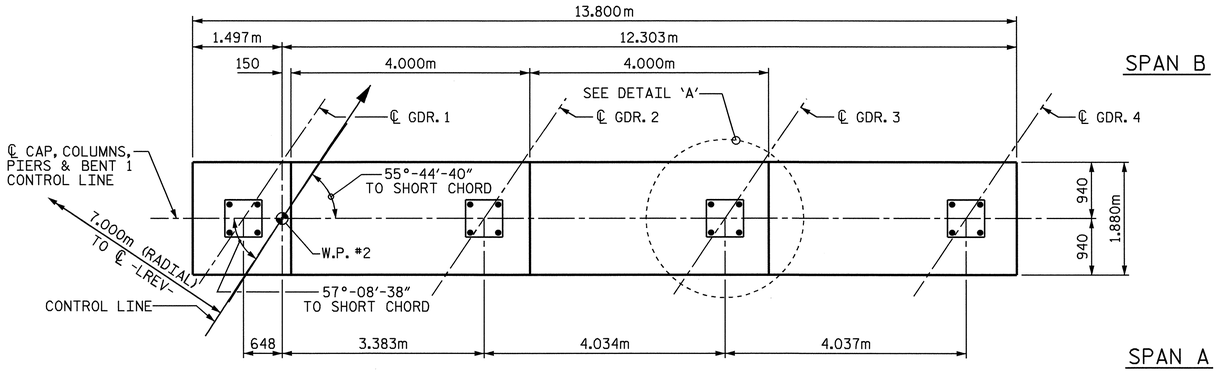

PLAN

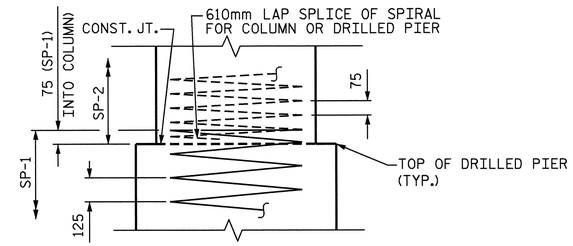

DETAIL 'B'

NOTES

STIRRUPS IN CAP MAY BE SHIFTED AS NECESSARY TO CLEAR ANCHOR BOLTS.

HOOKS ON "V" BARS MAY BE TURNED AS NECESSARY FOR PLACING REINFORCING STEEL.

ALL STEEL IN THE DRILLED PIERS IS INCLUDED IN THE PAY ITEMS FOR "REINFORCING STEEL" AND "SPIRAL COLUMN REINFORCING STEEL".

THE CONTRACTOR'S ATTENTION IS CALLED TO THE FACT THAT THE LONGITUDINAL REINFORCEMENT FOR THE DRILLED PIERS IS DETAILED WITH ONE METER OF EXTRA LENGTH.

SPLICING OF THE LONGITUDINAL BARS IN THE DRILLED PIER WILL NOT BE PERMITTED.

THE LOCATION OF THE CONSTRUCTION JOINT IN THE DRILLED PIERS IS BASED ON AN APPROXIMATE GROUND LINE ELEVATION. IF THE CONSTRUCTION JOINT IS ABOVE THE ACTUAL GROUND LINE ELEVATION, THE CONTRACTOR SHALL PLACE THE CONSTRUCTION JOINT 300mm BELOW THE GROUND LINE.

FOR DRILLED PIERS , SEE SPECIAL PROVISIONS.

THE CONTRACTOR SHALL ADJUST THE GIRDER BUILDUPS AS NECESSARY TO INCORPORATE A MAXIMUM PERMISSIBLE VARIATION IN POT BEARING DEPTH OF 13mm, SEE SPECIAL PROVISION FOR POT BEARINGS.

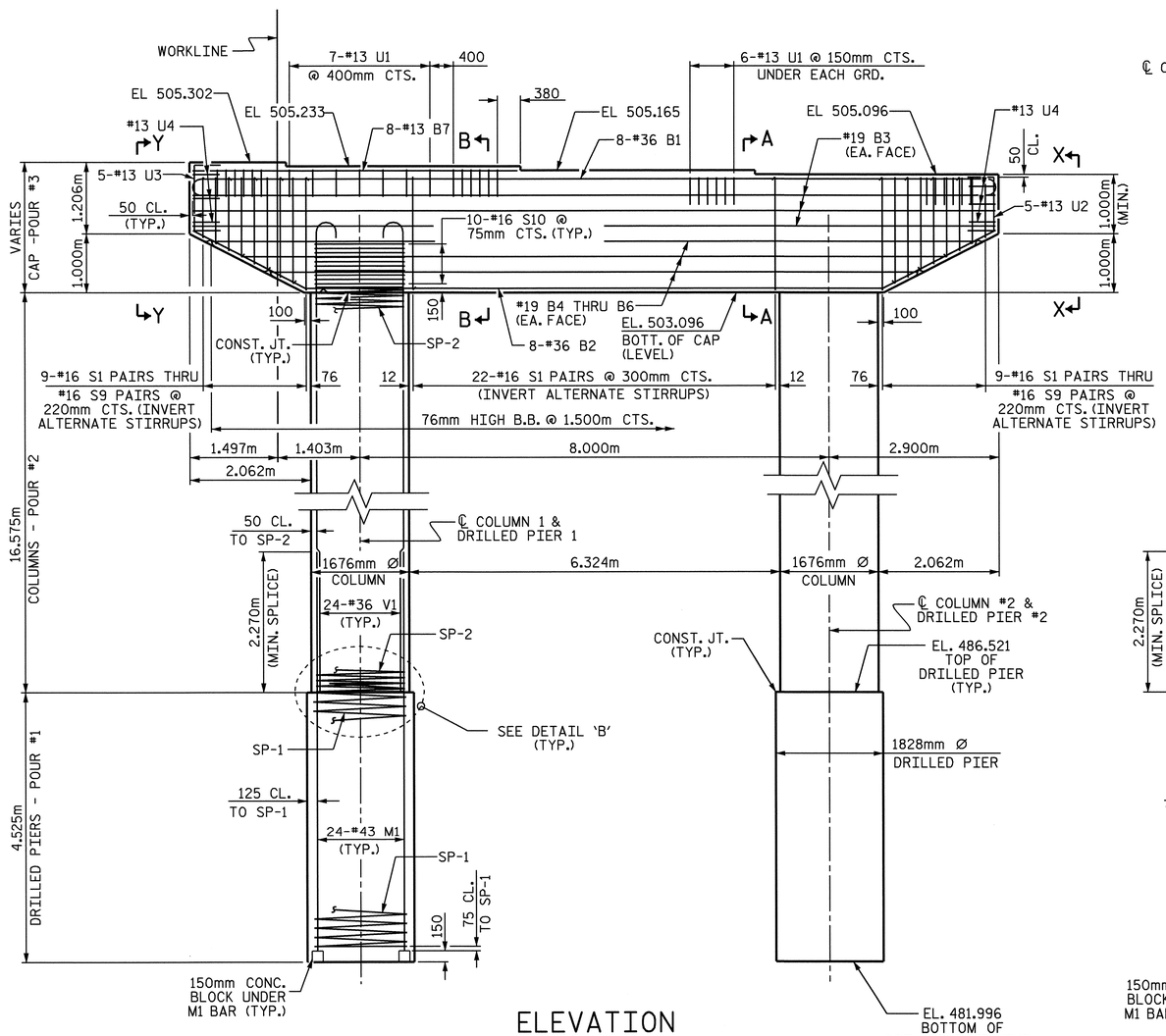

ELEVATION

(REINFORCING STEEL AND DIMENSIONS ARE TYPICAL FOR BOTH PIERS & COLUMNS.)

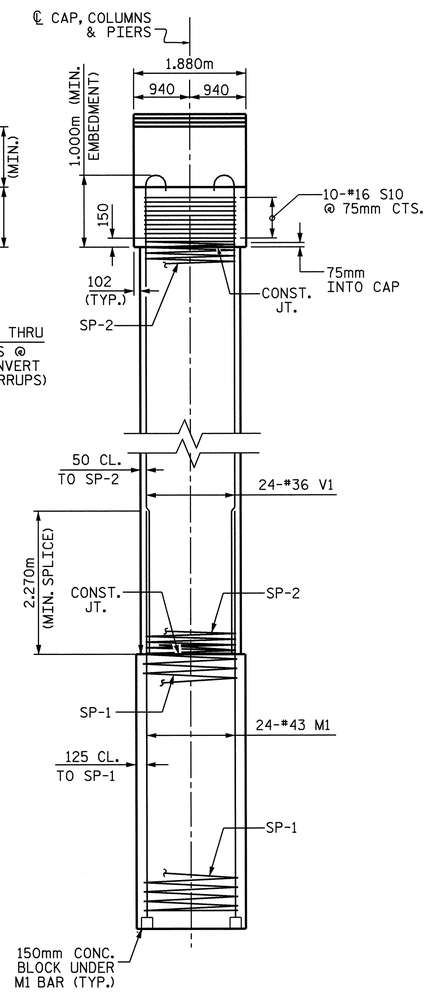

ELEVATION

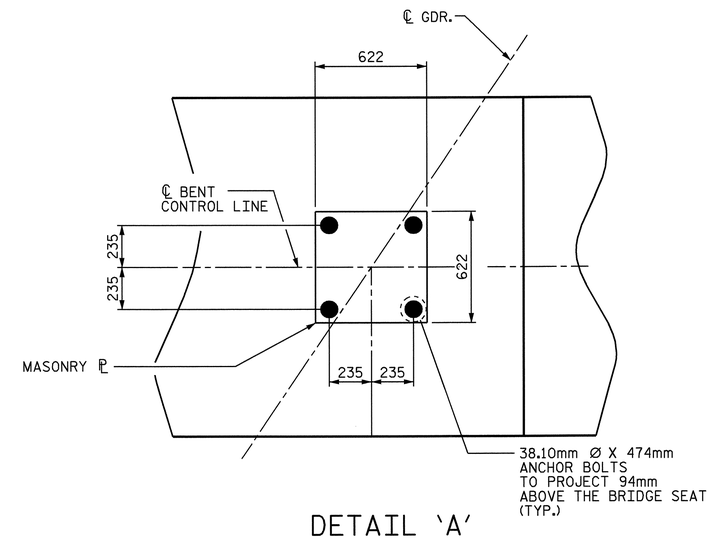

DETAIL 'A'

PROJECT NO. R-0977A
CHEROKEE COUNTY
STATION: 41+19.524-LREV-

SHEET 1 OF 2

STATE OF NORTH CAROLINA
DEPARTMENT OF TRANSPORTATION
RALEIGH

SUBSTRUCTURE

BENT 1

NORTH CAROLINA PROFESSIONAL SEAL 21638 ENGINEER LAURA E. SUTTON
12/22/04

REVISIONS							SHEET NO.
NO.	BY:	DATE:	NO.	BY:	DATE:		S-158
1			3				TOTAL SHEETS
2			4				230

DRAWN BY : A. K. PATEL DATE : 10/8/04
CHECKED BY : J. D. HAWK DATE : 10/18/04

21-DEC-2004 07:23
W:\SquadL\r0977a\str4\Jhawk\R0977A_sd_B*_04.dgn
lsutton

STR. #4