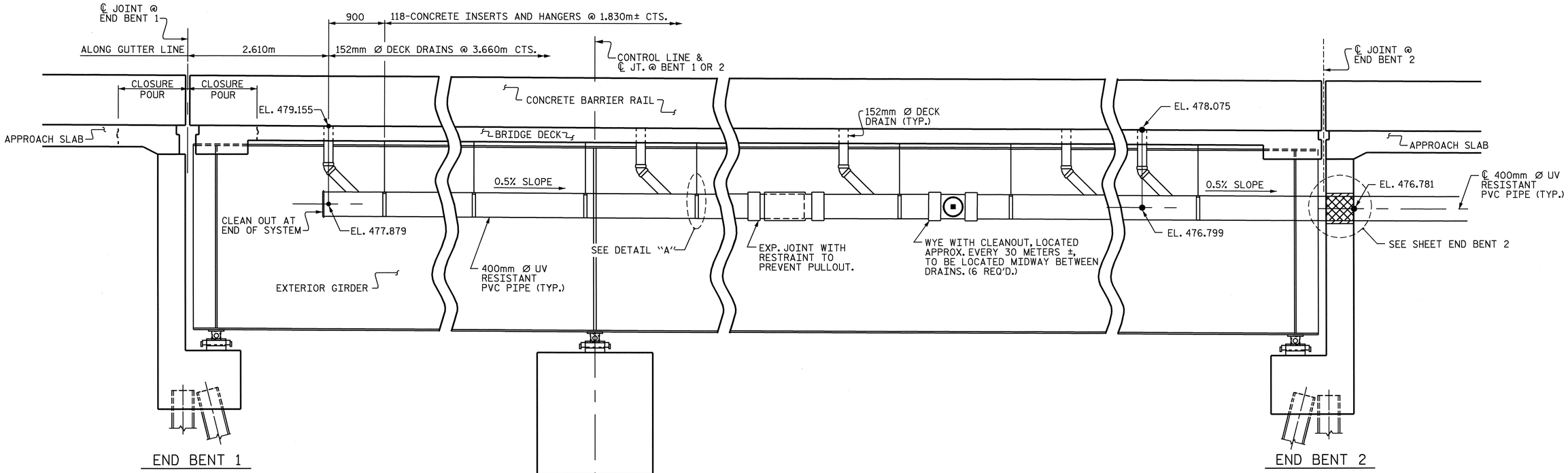

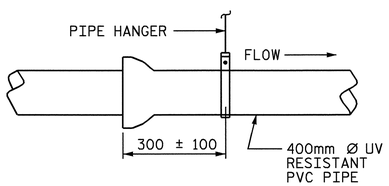

DETAIL "A"

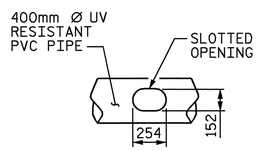

SLOT DETAIL

BENT 1 OR 2

ELEVATION OF DRAINAGE SYSTEM

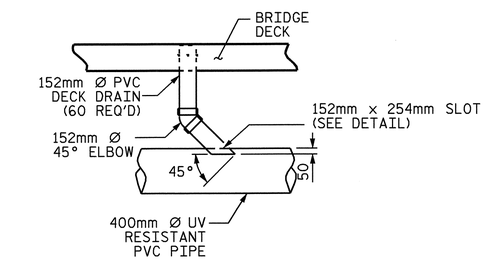

ELEVATION VIEW OF DECK DRAIN AND DRAIN LINE INTERSECTION

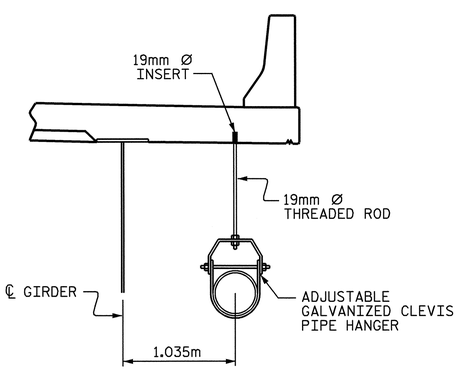

SECTION THRU DRAINAGE SYSTEM AT TYPICAL HANGER

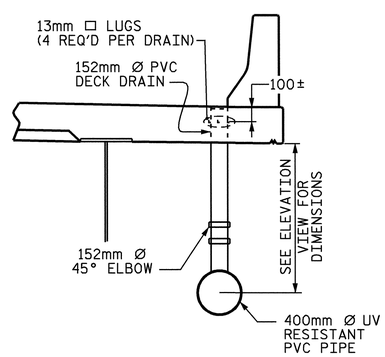

SECTION THRU DRAINAGE SYSTEM AT 152mm Ø DECK DRAINS

NOTE: FOR LOCATION OF 152mm Ø DECK DRAINS, SEE "PLAN OF SPANS" SHEETS.

TOP OF DECK DRAIN IS TO BE SET 10mm BELOW SURFACE OF SLAB.

4 - 13mm □ LUGS ARE TO BE GLUED TO THE PVC PIPE AT EQUAL SPACES AROUND THE DECK DRAIN.

NOTES

SEE "PLAN OF SPANS" SHEETS, FOR LOCATION OF 152mm Ø DECK DRAINS.

THE DRAINAGE SYSTEM DETAILS ARE SCHEMATIC DRAWINGS ONLY.

PROVIDE EXPANSION JOINTS IN THE DRAIN PIPE AT A MINIMUM SPACING OF 7.5m.

THE CONTRACTOR SHALL SUBMIT FOR ACCEPTANCE, PRIOR TO PURCHASE, A PLAN FOR THE PVC DRAINAGE SYSTEM, INCLUDING ATTACHMENTS TO THE BRIDGE SUPERSTRUCTURE.

THE CONTRACTOR SHALL BE RESPONSIBLE FOR DETERMINING THE HORIZONTAL AND VERTICAL ALIGNMENT OF THE PVC DRAINAGE SYSTEM USING NECESSARY FITTINGS, ELBOWS, TEES, AND WYES TO PROVIDE A CONTINUOUS DRAINAGE SYSTEM.

DRAINAGE SYSTEM WILL BE PAID FOR UNDER THE PAY ITEM "STRUCTURE DRAINAGE SYSTEM".

FOR "STRUCTURE DRAINAGE SYSTEM", SEE SPECIAL PROVISIONS.

THE CONTRACTOR SHALL DETERMINE THE QUANTITY OF FITTINGS, PIPE LENGTHS, GUIDES, AND ATTACHMENTS REQUIRED TO CARRY THE WATER FROM THE DECK DRAINS TO THE OUTLETS.

BOLTS, NUTS, AND WASHERS SHALL BE HIGH STRENGTH AND GALVANIZED IN ACCORDANCE WITH THE STANDARD SPECIFICATIONS.

CONCRETE INSERTS SHALL BE OF AN APPROVED GALVANIZED TYPE HAVING A MINIMUM WORKING LOAD TENSION CAPACITY OF 11.1 kN.

IN LIEU OF CASTING INSERTS INTO THE DECK, RODS MAY BE ADHESIVELY ANCHORED TO THE DECK. FOR ADHESIVELY ANCHORED ANCHOR BOLTS OR DOWELS, SEE SPECIAL PROVISIONS.

PIPE AND FITTINGS SHALL BE PVC, SDR 35, ASTM D 3034.

FITTING JOINTS SHALL BE SOLVENT CEMENT TYPE.

PIPE JOINTS SHALL BE ELASTOMERIC TYPE.

PROJECT NO. R-0977A
CHEROKEE COUNTY
STATION: 16+02.300 -LC1B-

STATE OF NORTH CAROLINA
DEPARTMENT OF TRANSPORTATION
RALEIGH

SUPERSTRUCTURE

STRUCTURE DRAINAGE SYSTEM

NORTH CAROLINA PROFESSIONAL SEAL 21638 ENGINEER LAURA E. SUTTON
12/22/04

REVISIONS						SHEET NO.
NO.	BY:	DATE:	NO.	BY:	DATE:	S-9
1			3			TOTAL SHEETS
2			4			230

STR. #1

DRAWN BY : A.S. CALLAWAY DATE : 3/5/04
CHECKED BY : B.N. BARODAWALA DATE : 10/15/04

21-DEC-2004 07:13
W:\SquadL\r0977a\str1\scallaway\R0977A_sd_UT_01.dgn
lsutton