CH ENGINEERING
PO BOX 30128 RALEIGH, NC 27622
TELE 919.788.0224 FAX 919.788.0232

PROJ. REFERENCE NO.	SHEET NO.
B-3375	TCP-10

STEP 4 A AND B

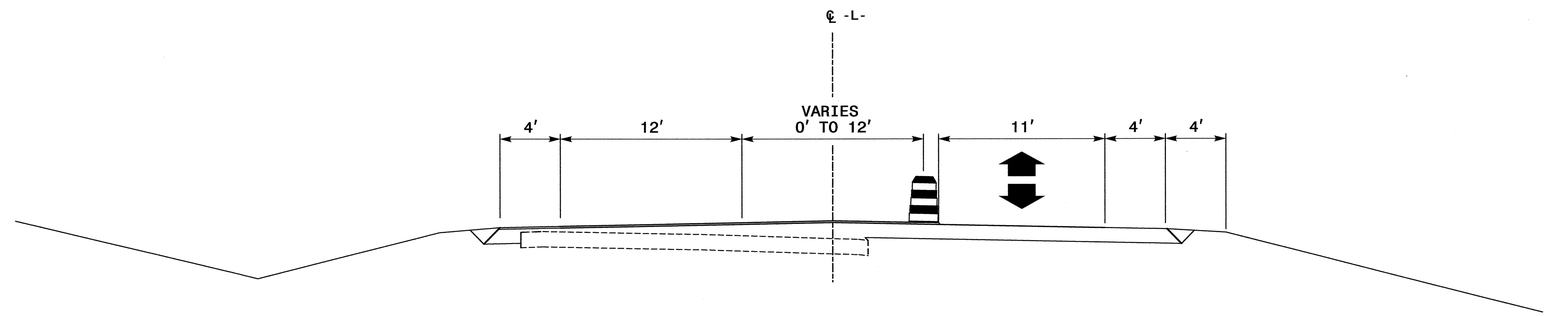

STA 32+30+/- TO STA 56+76+/-

STEP 4 C AND D

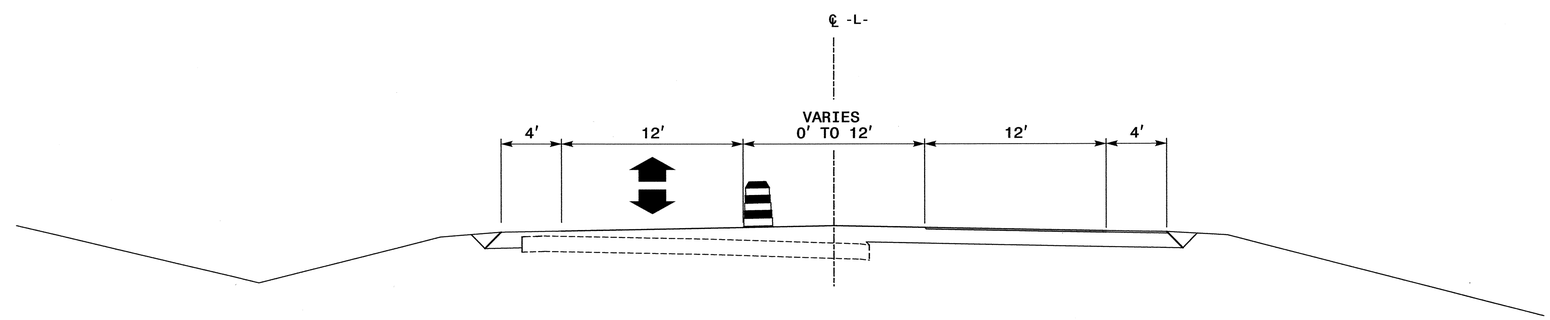

STA 32+30+/- TO STA 56+76+/-

NORTH CAROLINA PROFESSIONAL SEAL 21047 ENGINEER KEVIN W. BISBY
10-11-2004

PHASE III - STEP 3

SCALE:	NONE
DATE:	4/2004
DWG. BY:	KWB
DESIGN BY:	KWB
REVIEWED BY:	TRH

DIVISION OF HIGHWAYS STATIC ENGINEERING BRANCH STATIC CONTROL UNIT

REVISIONS

CADD FILE