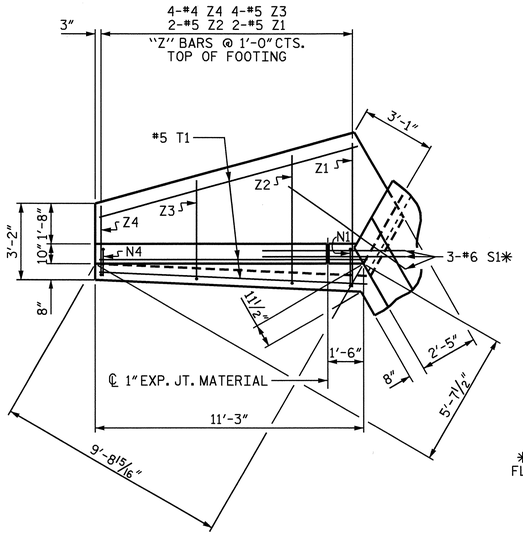

✱ S1 BARS @ BOTTOM OF FLOOR SLAB AND FOOTING

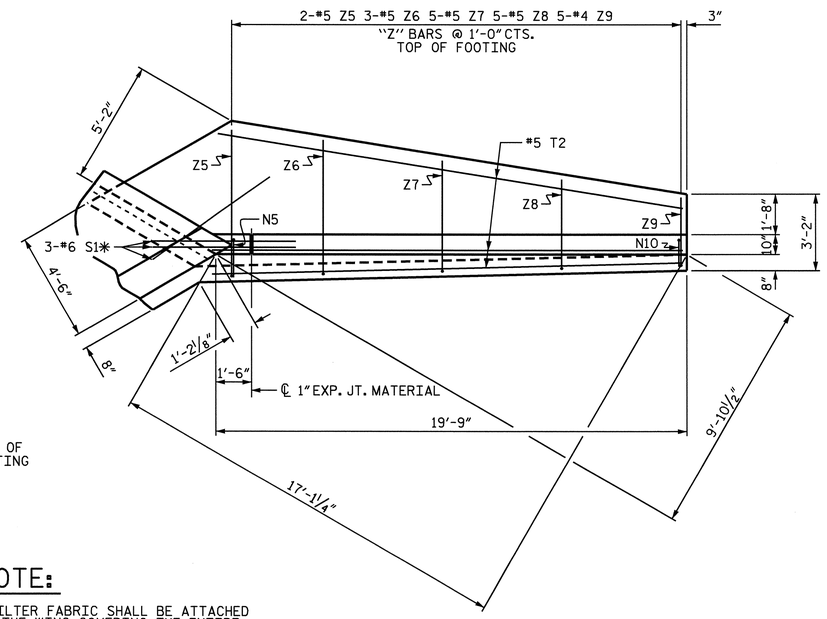

NOTE:

A 3 FOOT STRIP OF FILTER FABRIC SHALL BE ATTACHED TO THE FILL FACE OF THE WING COVERING THE ENTIRE LENGTH OF THE EXPANSION JOINT.

PLAN W2

PLAN W1

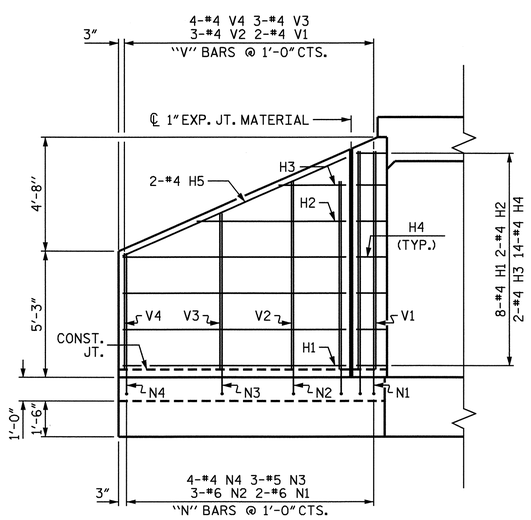

ELEVATION W2

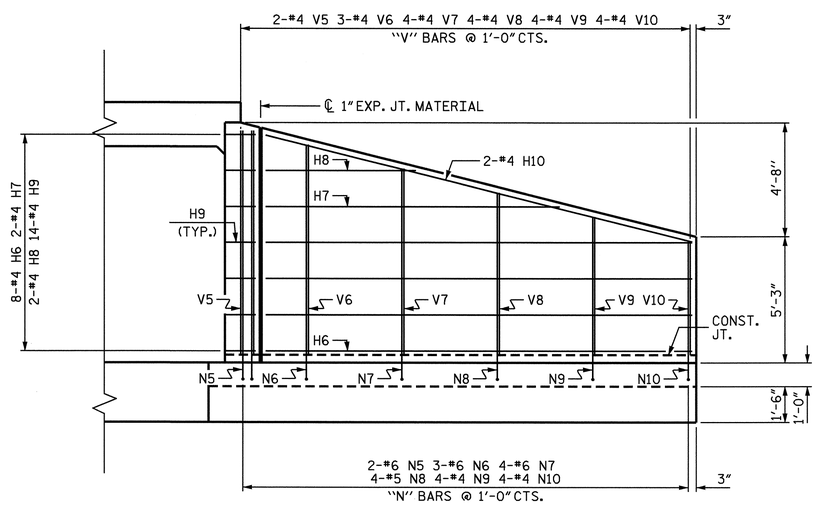

ELEVATION W1

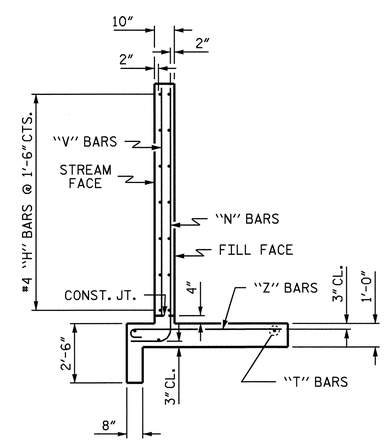

TYPICAL WING SECTION

BAR TYPES

ALL BAR DIMENSIONS ARE OUT TO OUT.

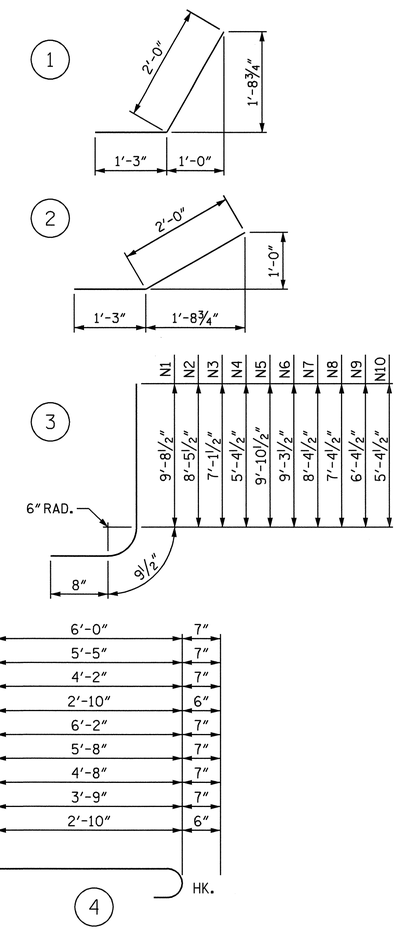

BILL OF MATERIAL

BAR	NO.	SIZE	TYPE	LENGTH	WEIGHT
H1	8	#4	STR	9'-4"	50
H2	2	#4	STR	6'-3"	8
H3	2	#4	STR	2'-10"	4
H4	14	#4	1	3'-3"	30
H5	2	#4	STR	10'-2"	14
H6	8	#4	STR	17'-10"	95
H7	2	#4	STR	12'-4"	16
H8	2	#4	STR	6'-3"	8
H9	14	#4	2	3'-3"	30
H10	2	#4	STR	18'-5"	25
N1	2	#6	3	11'-2"	34
N2	3	#6	3	9'-11"	45
N3	3	#5	3	8'-7"	27
N4	4	#4	3	6'-10"	18
N5	2	#6	3	11'-4"	34
N6	3	#6	3	10'-9"	48
N7	4	#6	3	9'-10"	59
N8	4	#5	3	8'-10"	37
N9	4	#4	3	7'-10"	21
N10	4	#4	3	6'-10"	18
S1	6	#6	STR	6'-0"	54
T1	3	#5	STR	11'-3"	35
T2	3	#5	STR	19'-9"	62
V1	2	#4	STR	9'-1"	12
V2	3	#4	STR	7'-10"	16
V3	3	#4	STR	6'-6"	13
V4	4	#4	STR	4'-10"	13
V5	2	#4	STR	9'-4"	12
V6	3	#4	STR	8'-9"	18
V7	4	#4	STR	7'-9"	21
V8	4	#4	STR	6'-9"	18
V9	4	#4	STR	5'-9"	15
V10	4	#4	STR	4'-9"	13
Z1	2	#5	4	6'-7"	14
Z2	2	#5	4	6'-0"	13
Z3	4	#5	4	4'-9"	20
Z4	4	#4	4	3'-4"	9
Z5	2	#5	4	6'-9"	14
Z6	3	#5	4	6'-3"	20
Z7	5	#5	4	5'-3"	27
Z8	5	#5	4	4'-4"	23
Z9	5	#4	4	3'-4"	11
REINFORCING STEEL FOR 2 WINGS					1074 LBS

CLASS A CONCRETE
2 WINGS 15.1 CY
1 END CURTAIN WALL 0.7 CY
TOTAL 15.8 CY

PROJECT NO. B-3375
WAKE COUNTY
STATION: 40+04.00 -L-

SHEET 4 OF 4

STATE OF NORTH CAROLINA
DEPARTMENT OF TRANSPORTATION
RALEIGH

STANDARD WINGS FOR CONCRETE BOX CULVERT

H = 9'-0" SLOPE = 2:1
60° SKEW

NORTH CAROLINA PROFESSIONAL SEAL 025516 ENGINEER EMILY E. MURRAY
12/17/04

REVISIONS						SHEET NO.
NO.	BY:	DATE:	NO.	BY:	DATE:	C-4
1			3			TOTAL SHEETS
2			4			4

ASSEMBLED BY : C.MILLER DATE : 12/03
CHECKED BY : W.D.CRUTCHER DATE : 12/03
DRAWN BY : CCJ 12/99
CHECKED BY : RWW 03/00