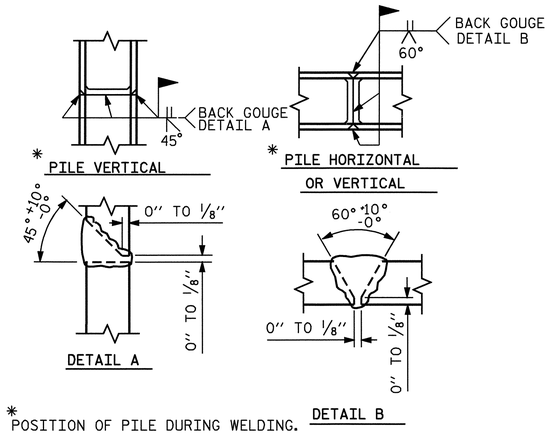

* POSITION OF PILE DURING WELDING.

PILE SPLICE DETAILS

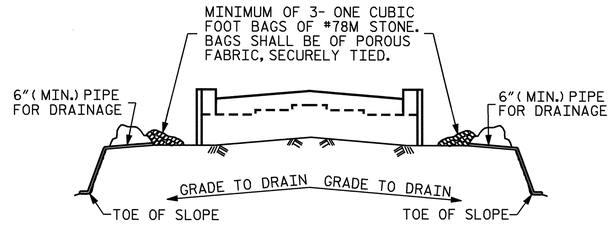

BAGGED STONE AND PIPE SHALL BE PLACED IMMEDIATELY AFTER COMPLETION OF END BENT EXCAVATION. PIPE MAY BE EITHER CONCRETE, CORRUGATED STEEL, CORRUGATED ALUMINUM ALLOY, OR CORRUGATED PLASTIC. PERFORATED PIPE WILL NOT BE ALLOWED.

BAGGED STONE SHALL REMAIN IN PLACE UNTIL THE ENGINEER DIRECTS THAT IT BE REMOVED. THE CONTRACTOR SHALL REMOVE AND DISPOSE OF SILT ACCUMULATIONS AT BAGGED STONE WHEN SO DIRECTED BY THE ENGINEER. BAGS SHALL BE REMOVED AND REPLACED WHENEVER THE ENGINEER DETERMINES THAT THEY HAVE DETERIORATED AND LOST THEIR EFFECTIVENESS.

NO SEPARATE PAYMENT WILL BE MADE FOR THIS WORK AND THE ENTIRE COST OF THIS WORK SHALL BE INCLUDED IN THE UNIT CONTRACT PRICE BID FOR THE SEVERAL PAY ITEMS.

TEMPORARY DRAINAGE AT END BENT

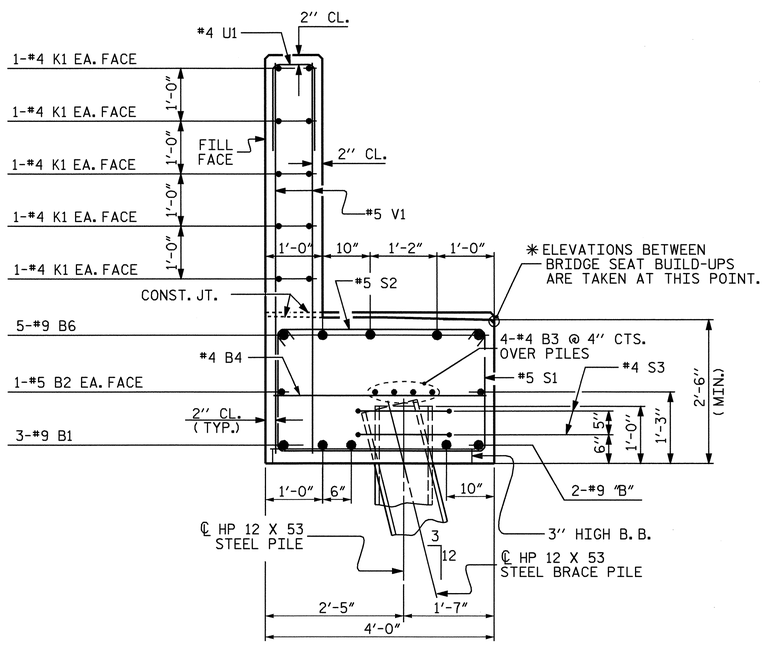

SECTION A-A

BAR TYPES

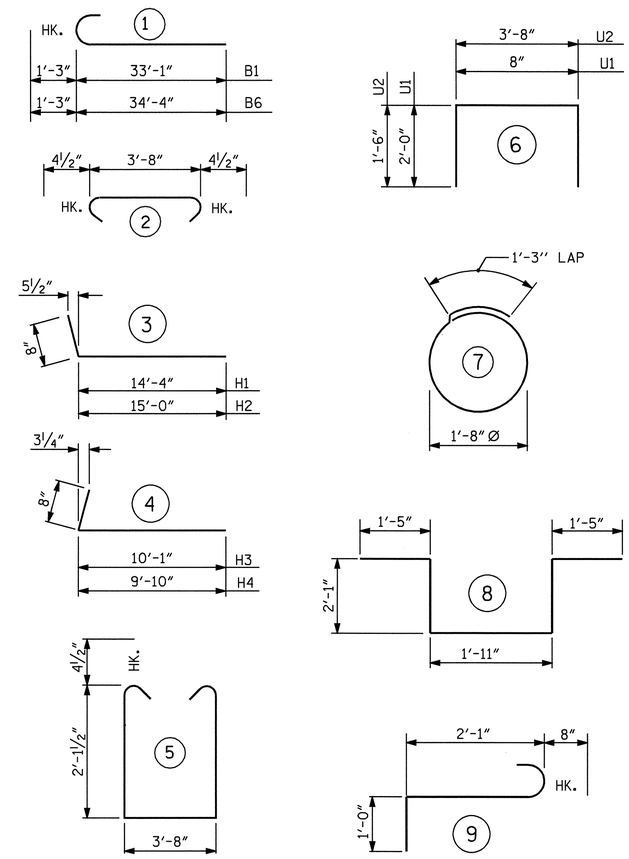

ALL BAR DIMENSIONS ARE OUT TO OUT.

BILL OF MATERIAL

END BENT #1

BAR	NO.	SIZE	TYPE	LENGTH	WEIGHT
B1	10	#9	1	34'-4"	1167
B2	4	#5	STR	31'-6"	131
B3	12	#4	STR	21'-8"	174
B4	16	#4	STR	3'-8"	39
B5	10	#4	STR	3'-6"	23
B6	10	#9	1	35'-7"	1210
B7	5	#4	STR	12'-9"	43
K1	30	#4	STR	21'-8"	434
K2	4	#4	STR	3'-1"	8
K3	4	#4	STR	3'-0"	8
H1	10	#5	3	15'-0"	156
H2	10	#5	3	15'-8"	163
H3	10	#5	4	10'-9"	112
H4	10	#5	4	10'-6"	110
S1	89	#4	5	8'-8"	515
S2	89	#4	2	4'-5"	263
S3	24	#4	7	6'-6"	104
S4	3	#6	9	3'-9"	17
S5	1	#6	8	8'-11"	13
U1	55	#4	6	4'-8"	171
U2	17	#4	6	6'-8"	76
V1	110	#5	STR	7'-4"	841
V2	36	#5	STR	8'-10"	332
V3	28	#5	STR	8'-9"	256
REINFORCING STEEL				=	6366 LBS

CLASS "A" CONCRETE BREAKDOWN

POUR #1 CAP & LOWER OF WINGS
CU. YDS. 26.8
POUR #2 BACKWALL & UPPER OF WINGS
CU. YDS. 17.0
TOTAL CLASS A CONCRETE
CU. YDS. 43.8
HP 12 X 53 STEEL PILES
NO. 13 195 LIN. FT.

STEEL PILE POINTS EA. 13

PROJECT NO. B-3300
ASHE COUNTY
STATION: 17+36.00 -L-

SHEET 3 OF 3

STATE OF NORTH CAROLINA
DEPARTMENT OF TRANSPORTATION
RALEIGH

SUBSTRUCTURE

END BENT #1

NORTH CAROLINA PROFESSIONAL SEAL 20125 ENGINEER MARSHALL G. CHEEK, JR.
1-5-05

REVISIONS						SHEET NO.
NO.	BY:	DATE:	NO.	BY:	DATE:	S-15
1			3			TOTAL SHEETS
2			4			23

DRAWN BY : ZION JAMES RORIE DATE : 9/15/04
CHECKED BY : M.G. CHEEK DATE : 10/4/04