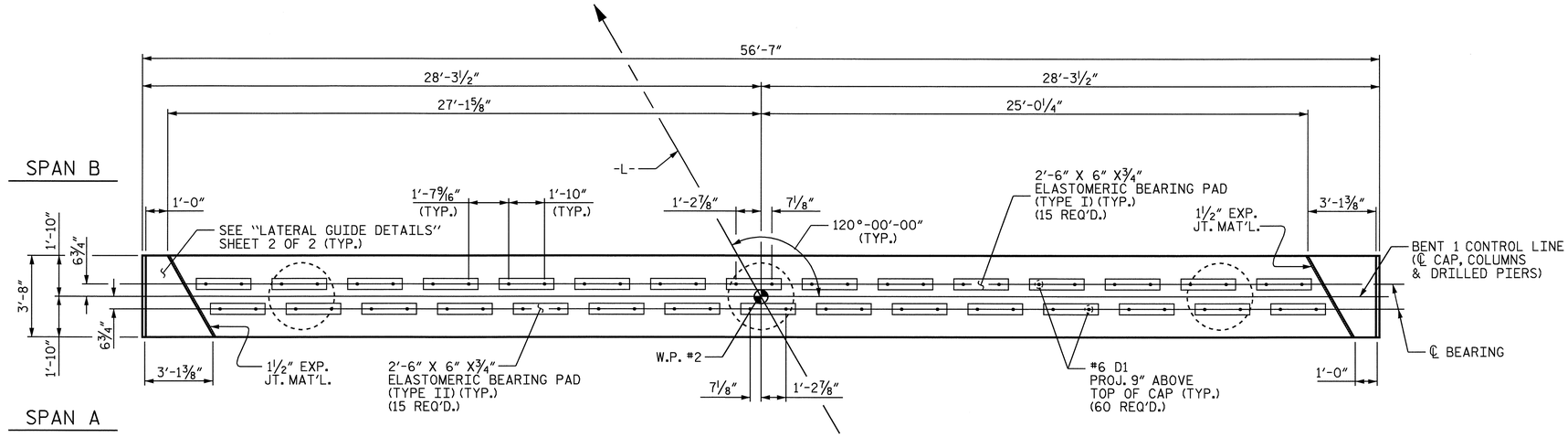

PLAN

NOTES

REINFORCING STEEL IN CAP MAY BE SHIFTED AS NECESSARY TO CLEAR DOWELS.

HOOKS ON "V" BARS MAY BE TURNED AS NECESSARY FOR PLACING REINFORCING STEEL.

LATERAL GUIDE AT END OF CAP IS NOT TO BE POURED UNTIL AFTER CORED SLAB UNITS ARE IN PLACE.

ALL STEEL IN THE DRILLED PIERS IS INCLUDED IN THE PAY ITEMS FOR "REINFORCING STEEL" AND "SPIRAL COLUMN REINFORCING STEEL" OR "EPOXY COATED SPIRAL COLUMN REINFORCING STEEL".

THE CONTRACTORS ATTENTION IS CALLED TO THE FACT THAT THE LONGITUDINAL REINFORCEMENT FOR THE DRILLED PIERS IS DETAILED WITH 3 FEET OF EXTRA LENGTH.

SPLICING OF THE LONGITUDINAL BARS IN THE DRILLED PIER WILL NOT BE PERMITTED.

MECHANICAL COUPLERS SHALL BE USED TO JOIN THE LONGITUDINAL DRILLED PIER REINFORCING STEEL TO THE COLUMN REINFORCING STEEL. THE HEIGHT OF THE COUPLERS SHALL BE STAGGERED ON ALTERNATING BARS BY 1'-6" AND THE DRILLED PIER AND COLUMN STEEL SHALL BE CUT ACCORDINGLY. SEE SPECIAL PROVISIONS FOR MECHANICAL BUTT SPLICING FOR REINFORCING STEEL.

NO SEPARATE PAYMENT SHALL BE MADE FOR ANY ADDITIONAL STEEL REQUIRED IN CONSTRUCTION OF DRILLED PIER AS THIS IS CONSIDERED INCIDENTAL TO THE LINEAR FOOT PRICE FOR DRILLED PIER.

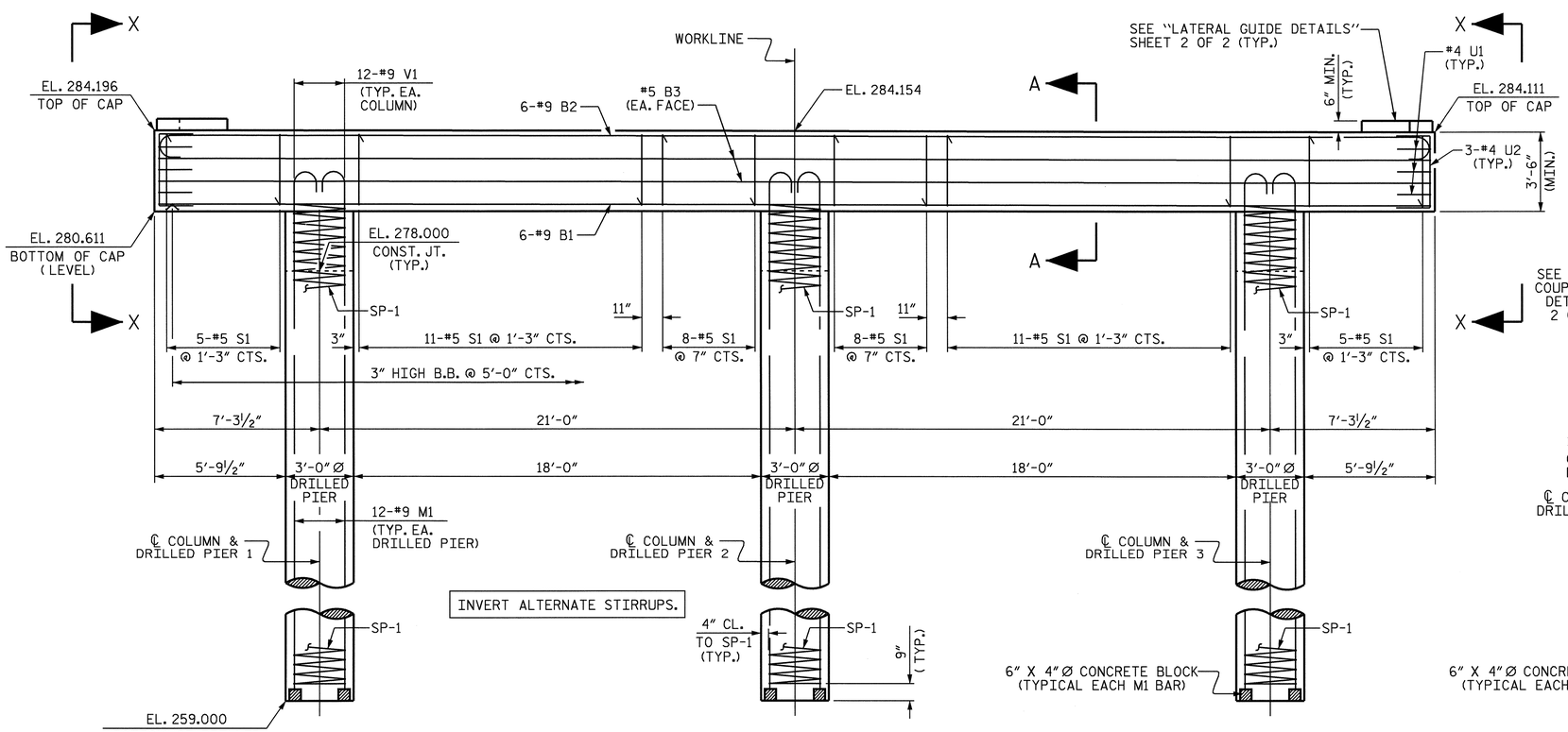

ELEVATION

REINFORCING STEEL AND DIMENSIONS TYPICAL FOR ALL DRILLED PIERS AND COLUMNS

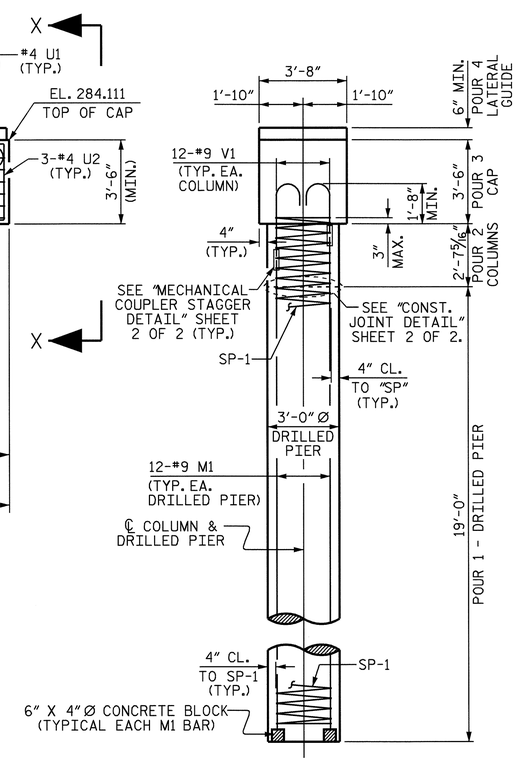

END ELEVATION

NORTH CAROLINA PROFESSIONAL SEAL 14855 ENGINEER DOUGLAS R. CALHOUN
11-8-04

PROJECT NO. B-3451
DURHAM COUNTY
STATION: 14+99.30 -L-

SHEET 1 OF 2

STATE OF NORTH CAROLINA
DEPARTMENT OF TRANSPORTATION
RALEIGH

SUBSTRUCTURE
BENT 1

REVISIONS						SHEET NO.
NO.	BY:	DATE:	NO.	BY:	DATE:	S-18
1			3			TOTAL SHEETS
2			4			27

DRAWN BY : T. A. HARRIS DATE : 5/15/03
CHECKED BY : K. P. SEDAI DATE : 5/28/03