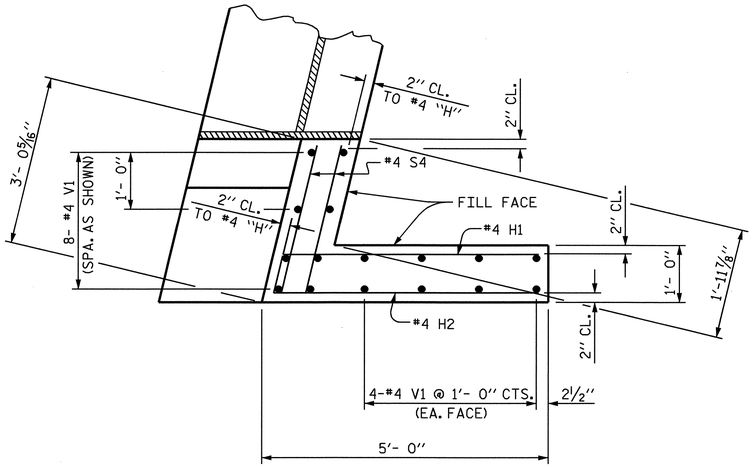

PLAN OF WING (1)

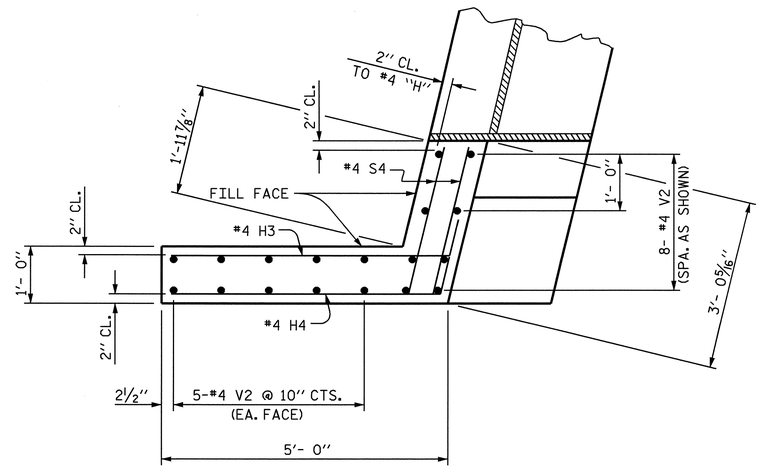

PLAN OF WING (2)

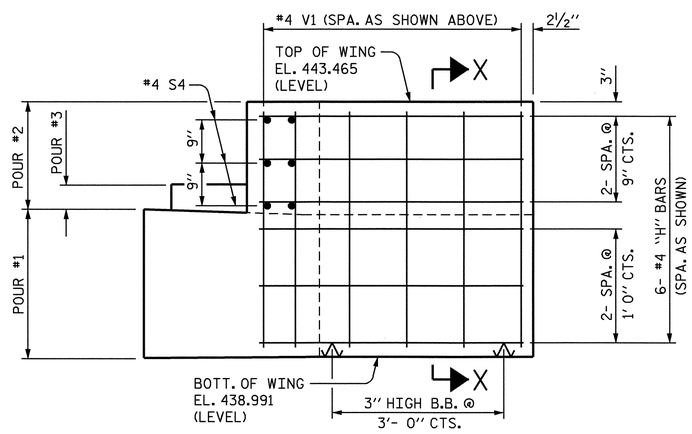

ELEVATION OF WING (1)

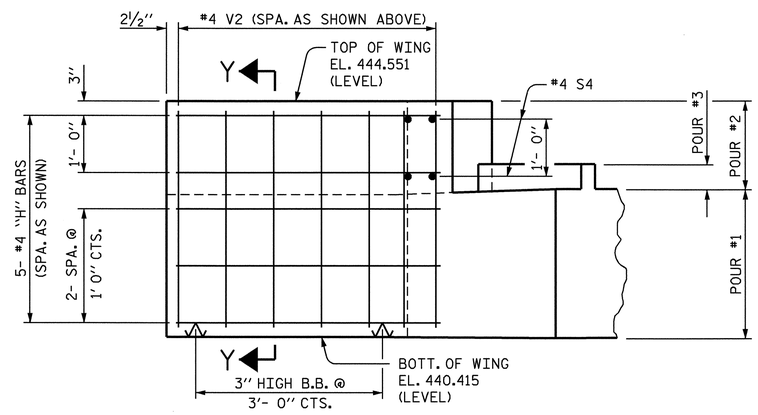

ELEVATION OF WING (2)

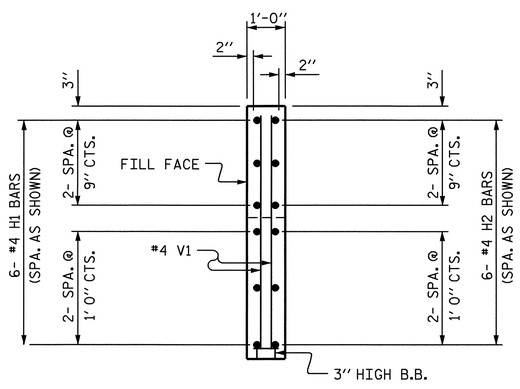

SECTION "X-X"

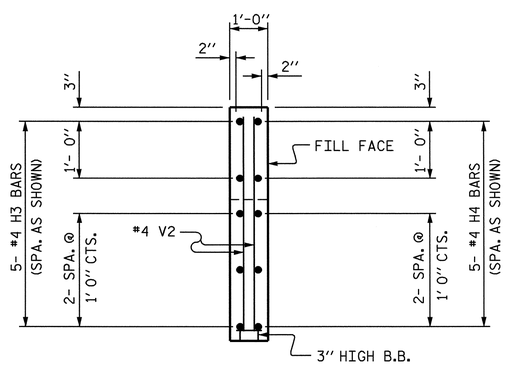

SECTION "Y-Y"

NOTES

STIRRUPS IN CAP MAY BE SHIFTED AS NECESSARY TO CLEAR DOWELS.

PIPE DRAINS MAY BE SHIFTED SLIGHTLY AS NECESSARY TO CLEAR REINFORCING STEEL AND DOWELS.

FOR PIPE DRAIN DETAILS, SEE SHEET 3 OF 3.

THE LATERAL GUIDE AT EACH END OF THE CAP IS NOT TO BE POURED UNTIL AFTER THE CORED SLAB UNITS ARE IN PLACE.

THE CONTRACTOR SHALL PROVIDE FOR INSTALLATION OF THE 4" DIAMETER DRAIN PIPE THROUGH THE WING WALL AS REQUIRED FOR REINFORCED BRIDGE APPROACH FILLS, SEE THE ROADWAY PLANS. REINFORCING STEEL IN THE WING WALL MAY BE SHIFTED AS NECESSARY TO CLEAR THE DRAIN PIPE.

PROJECT NO. B-3504
RANDOLPH COUNTY
STATION: 18+70.50 -L-

SHEET 2 OF 3

STATE OF NORTH CAROLINA
DEPARTMENT OF TRANSPORTATION
RALEIGH

SUBSTRUCTURE
END BENT #1

NORTH CAROLINA PROFESSIONAL SEAL 15825 ENGINEER BRUCE D. KLAPPENBACH
6-24-04

REVISIONS						SHEET NO.
NO.	BY:	DATE:	NO.	BY:	DATE:	S-13
1			3			TOTAL SHEETS
2			4			27

DRAWN BY : D. A. GLADDEN DATE : 5-13-04
CHECKED BY : M. G. SHAIKH DATE : 6-14-04

17-JUN-2004 15:40
w:\squadl\B3504\dgladden\Microstation\b3504ebt.dgn
dgladden