KCI Associates of North Carolina, P.A.
RALEIGH OFFICE
ENGINEERS ● PLANNERS ● ECOLOGISTS
SUITE 200, LANDMARK CENTER I
4601 SIX FORKS RD.
RALEIGH, N.C. 27609-5210
(919) 783-9214

| PROJECT REFERENCE NO. | SHEET NO. |
|---|---|
| B-3865 | 2-A |
| R/W SHEET NO. | |
| ROADWAY DESIGN ENGINEER | PAVEMENT DESIGN ENGINEER |

NORTH CAROLINA PROFESSIONAL SEAL 21785 ENGINEER MICHELLE R. BRUMFIELD 2/25/04

NORTH CAROLINA PROFESSIONAL SEAL 22896 ENGINEER CLARK S. MORRISON 2/27/04

REVISIONS

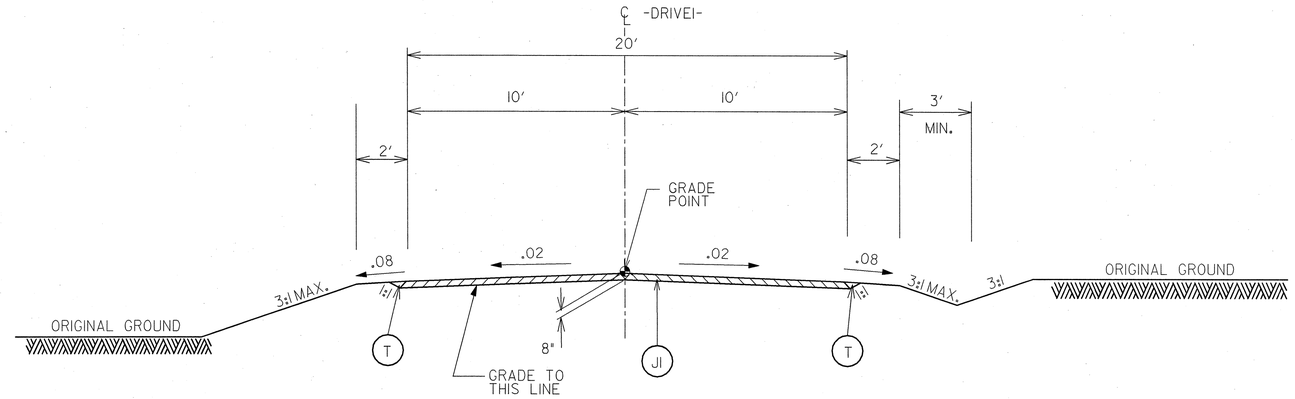


## TYPICAL SECTION NO.4

-DRIVE1-

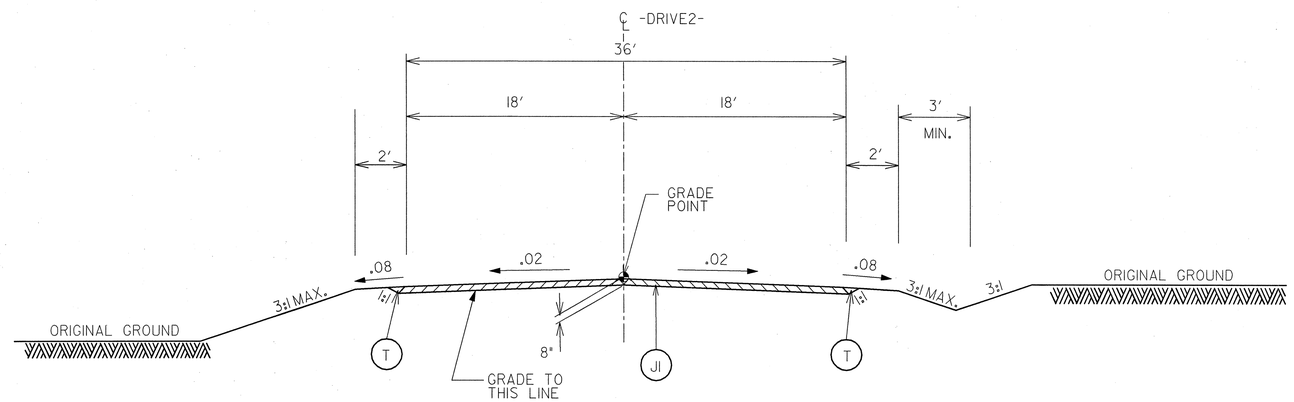


## TYPICAL SECTION NO.5

-DRIVE2-

## PAVEMENT SCHEDULE

| CODE | DESCRIPTION |
|---|---|
| C1 | PROP. APPROX. 1 1/4" ASPHALT CONC. SURFACE COURSE, TYPE S9.5B, AT AN AVERAGE RATE OF 140 LBS PER SQ. YARD. |
| C2 | PROP. APPROX. 2 1/2" ASPHALT CONC. SURFACE COURSE, TYPE S9.5B, AT AN AVERAGE RATE OF 140 LBS PER SQ. YARD IN EACH OF TWO LAYERS. |
| C3 | PROP. APPROX. 1 1/2" ASPHALT CONC. SURFACE COURSE, TYPE S9.5B, AT AN AVERAGE RATE OF 168 LBS PER SQ. YARD. |
| C4 | PROP. VAR. DEPTH ASPHALT CONC. SURFACE COURSE, TYPE S9.5B, AT AN AVERAGE RATE OF 112 LBS PER SQ. YARD PER 1" DEPTH. TO BE PLACED IN LAYERS NOT TO EXCEED 1-1/2" IN DEPTH. |
| D1 | PROP. APPROX. 2 1/4" ASPHALT CONC. INTERMEDIATE COURSE, TYPE 119.0B, AT AN AVERAGE RATE OF 256.5 LBS PER SQ. YARD. |
| D2 | PROP. VAR. DEPTH ASPHALT CONCRETE INTERMEDIATE COURSE, TYPE 119.0B, AT AN AVERAGE RATE OF 114 LBS. PER SQ. YD. PER 1" DEPTH, TO BE PLACED IN LAYERS NOT LESS THAN 2 1/4" IN DEPTH OR GREATER THAN 4" IN DEPTH. |
| E1 | PROP. APPROX. 3 1/2" ASPHALT CONC. BASE COURSE, TYPE B25.0B, AT AN AVERAGE RATE OF 399 LBS PER SQ. YARD. |
| E2 | PROP. VAR. DEPTH ASPHALT CONC. BASE COURSE, TYPE B25.0B, AT AN AVERAGE RATE OF 114 LBS PER SQ. YARD PER 1" DEPTH. TO BE PLACED IN LAYERS NOT GREATER THAN 5 1/2" IN DEPTH OR LESS THAN 3" IN DEPTH. |
| JI | PROP. 8" AGGREGATE BASE COURSE. |
| P | PRIME COAT AT THE RATE OF .35 GAL. PER SQ. YD. |
| T | EARTH MATERIAL. |
| U | EXISTING PAVEMENT MATERIAL. |
| W | VAR. DEPTH ASPHALT PAVEMENT. (SEE WEDGING DETAIL) |

USE 1:1 PAVEMENT EDGE SLOPES UNLESS OTHERWISE NOTED