PROJECT REFERENCE NO.	SHEET NO.
U-4010	SIG.30

STATE OF NORTH CAROLINA
DEPT. OF TRANSPORTATION
DIVISION OF HIGHWAYS
RALEIGH, N.C.

9-03

ENGLISH STANDARD DRAWING FOR
METAL POLES
MISCELLANEOUS DETAILS

SHEET 3 OF 3
1740.01

MOUNTING POINT DETAIL

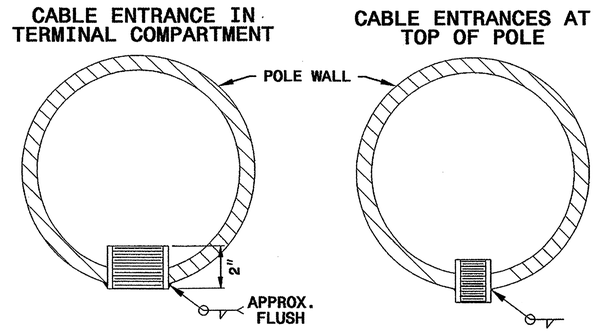

HALF COUPLING WITH INTERNAL 3" THREADS TO ACCEPT 3" METALLIC CONDUIT

SEE GENERAL NOTE NO. 1 ON SHEET 2 OF THIS STANDARD DRAWING FOR FABRICATION DETAILS.

HALF COUPLINGS WITH INTERNAL 1" & 2" THREADS TO ACCEPT 1" & 2" METALLIC CONDUITS

SEE GENERAL NOTE NO. 2 ON SHEET 2 OF THIS STANDARD DRAWING FOR FABRICATION DETAILS.

CABLE STRAIN RELIEF

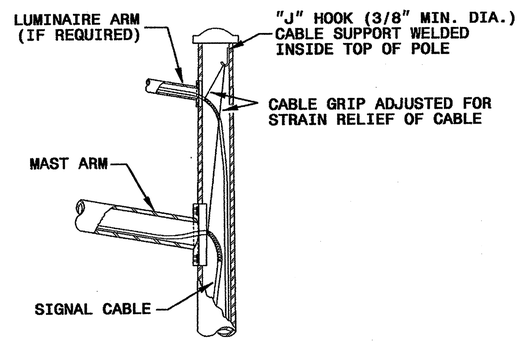

METAL POLE GROUNDING DETAIL

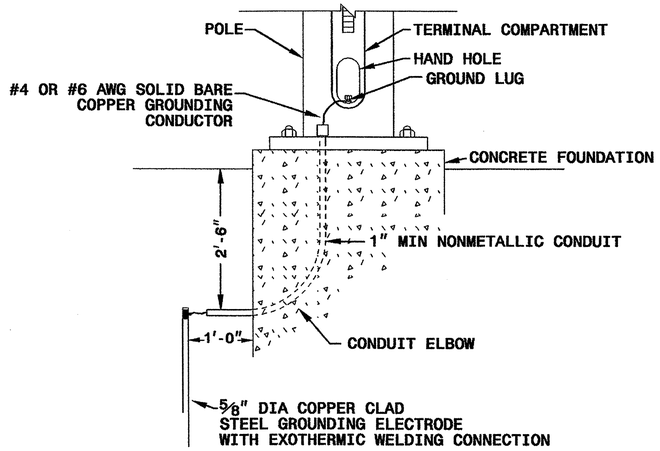

ATTACHMENT OF CABLE TO INTERMEDIATE METAL POLE

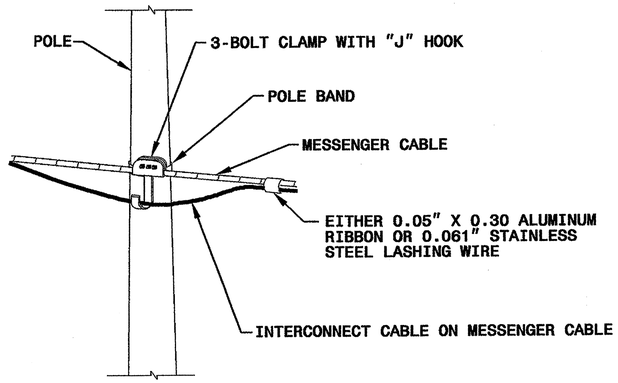

STATE OF NORTH CAROLINA
DEPT. OF TRANSPORTATION
DIVISION OF HIGHWAYS
RALEIGH, N.C.

9-03

ENGLISH STANDARD DRAWING FOR
METAL POLES
MISCELLANEOUS DETAILS

SHEET 3 OF 3
1740.01

Structural Engineer	Electrical Engineer
NORTH CAROLINA PROFESSIONAL SEAL 028094 ENGINEER DEBESH C. SARKAR	NORTH CAROLINA PROFESSIONAL SEAL 16286 ENGINEER MILTON I. DEAN
D. Sarkar 9.19.2003	Milton I. Dean 9/22/03
SIGNATURE DATE	SIGNATURE DATE

Standard Drawings

Traffic Management and Signal Systems Unit
122 N. McDowell St., Raleigh, NC 27603

See Plate for Title

Original: 2002 Standards

19-SEP-2003 14:27
w:\#Peoples-Unit\#Workgroups\#03RoadwayStandardDwgs\#english\#plan sheets\#174001 second.dgn
polexander