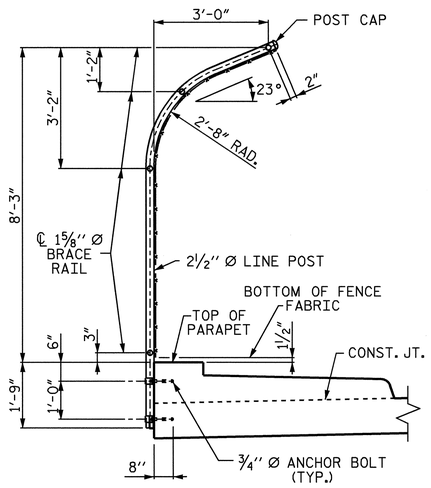

SECTION THRU FENCE

3 BAR METAL RAIL NOT SHOWN FOR CLARITY

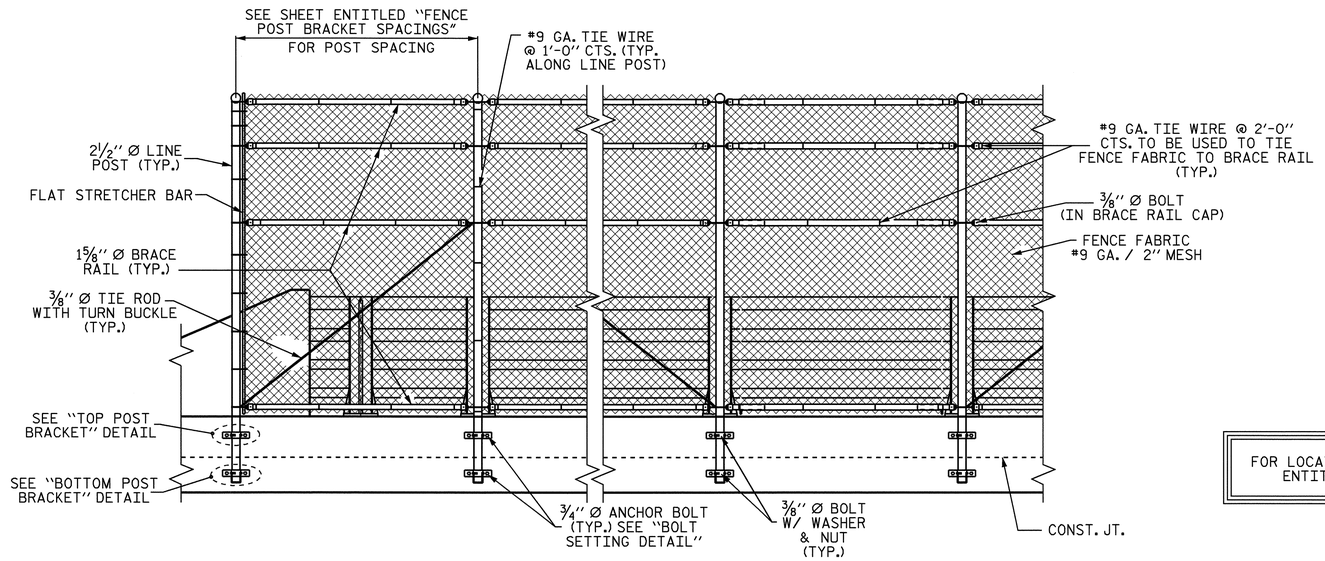

ELEVATION

NOTES

FOR CHAIN LINK FENCE FOR PROTECTION OF RAILROAD, SEE SPECIAL PROVISIONS.

MATERIAL FOR ANCHOR BOLTS SHALL BE TYPE 304 STAINLESS STEEL WITH A MINIMUM 9000 PSI ULTIMATE STRENGTH. NUTS AND WASHERS SHALL BE TYPE 304 STAINLESS STEEL. ANCHOR BOLTS SHALL BE EMBEDDED AS PER ASHESIVE BONDING SYSTEM MANUFACTURER SPECIFICATIONS. NUTS SHALL BE AMERICAN STANDARD FINISHED HEXAGON THICK NUTS, CLASS 2B THREADS.

FOR SETTING ANCHOR BOLTS, THE CONTRACTOR SHALL USE AN ADHESIVE BONDING SYSTEM. SEE SPECIAL PROVISIONS FOR ADHESIVELY ANCHORED ANCHOR BOLTS OR DOWELS.

ADHESIVE ANCHOR SYSTEM SHALL HAVE A MINIMUM PULLOUT STRENGTH OF 10 KIPS.

ALL FENCE MATERIAL SHALL MEET THE REQUIREMENTS OF SECTION 1050 OF THE STANDARD SPECIFICATIONS. GALVANIZE ALL STEEL PARTS AND HARDWARE IN ACCORDANCE WITH ARTICLE 1076 OF THE STANDARD SPECIFICATIONS.

WELDING SHALL BE DONE IN ACCORDANCE WITH ARTICLE 1072-20 OF THE STANDARD SPECIFICATIONS.

TESTING OF THE ANCHOR BOLTS TO 90% OF THE SPECIFIED STRENGTH SHALL BE PERFORMED AT THE OPTION OF THE ENGINEER.

LENGTH = 252.67 LIN. FT.

FOR LOCATION OF FENCE POST BRACKETS, SEE SHEET ENTITLED "FENCE POST BRACKET SPACINGS"

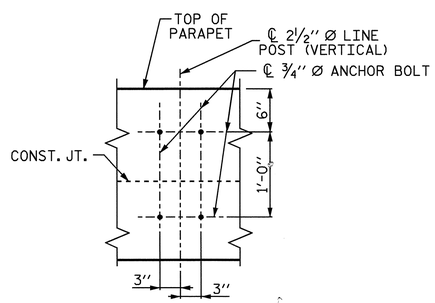

BOLT SETTING DETAIL

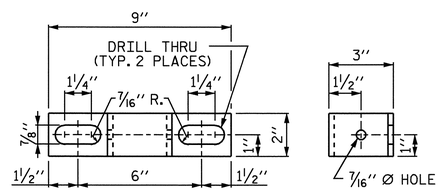

ELEVATION

RIGHT SIDE VIEW

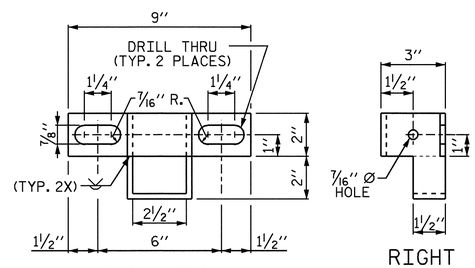

ELEVATION

RIGHT SIDE VIEW

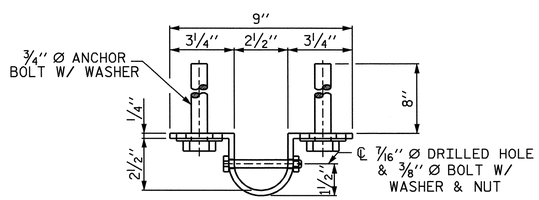

PLAN

TOP POST BRACKET

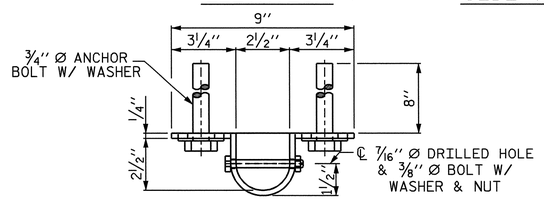

PLAN

BOTTOM POST BRACKET

PROJECT NO. U-0620

CUMBERLAND COUNTY

STATION: 161+95.29 -L-

SHEET 1 OF 2

STATE OF NORTH CAROLINA
DEPARTMENT OF TRANSPORTATION
RALEIGH

BRIDGE MOUNTED CHAIN LINK FENCE DETAILS

NORTH CAROLINA PROFESSIONAL SEAL 19825 ENGINEER BRUCE D. KLAPPENBACH
8-10-04

REVISIONS						SHEET NO.
NO.	BY:	DATE:	NO.	BY:	DATE:	S-71
1			3			TOTAL SHEETS
2			4			129

DRAWN BY : M. G. SHAIKH DATE : 05-11-04
CHECKED BY : G. M. PATTERSON DATE : 5-17-04