BILL OF MATERIAL - APPROACH SLAB @ END BENT#1

BAR	NO.	SIZE	TYPE	LENGTH	WEIGHT
✳A1	49	#5	STR	36'- 7"	1870
A2	98	#4	STR	19'- 4"	1266
✳A101	2	#5	STR	34'-11"	73
✳A102	2	#5	STR	32'-10"	68
✳A103	2	#5	STR	30'-10"	64
✳A104	2	#5	STR	28'- 9"	60
✳A105	2	#5	STR	26'- 8"	56
✳A106	2	#5	STR	24'- 8"	51
✳A107	2	#5	STR	22'- 7"	47
✳A108	2	#5	STR	20'- 7"	43
✳A109	2	#5	STR	18'- 6"	39
✳A110	2	#5	STR	16'- 5"	34
✳A111	2	#5	STR	14'- 5"	30
✳A112	2	#5	STR	12'- 4"	26
✳A113	2	#5	STR	10'- 3"	21
✳A114	2	#5	STR	8'- 3"	17
✳A115	2	#5	STR	6'- 2"	13
✳A116	2	#5	STR	4'- 1"	9
✳A117	2	#5	STR	2'- 1"	4
A201	4	#4	STR	18'- 5"	49
A202	4	#4	STR	17'- 4"	46
A203	4	#4	STR	16'- 4"	44
A204	2	#4	STR	28'- 9"	38
A205	2	#4	STR	26'- 8"	36
A206	2	#4	STR	24'- 8"	33
A207	2	#4	STR	22'- 7"	30
A208	2	#4	STR	20'- 7"	27
A209	2	#4	STR	18'- 6"	25
A210	2	#4	STR	16'- 5"	22
A211	2	#4	STR	14'- 5"	19
A212	2	#4	STR	12'- 4"	16
A213	2	#4	STR	10'- 3"	14
A214	2	#4	STR	8'- 3"	11
A215	2	#4	STR	6'- 2"	8
A216	2	#4	STR	4'- 1"	5
A217	2	#4	STR	2'- 1"	3
✳B1	7	#5	STR	11'- 4"	83
✳B3	1	#5	3	6'- 8"	7
✳B5	8	#4	STR	22'- 9"	122
✳D1	28	#4	STR	0'-10"	16
✳G1	43	#4	STR	5'- 4"	153
✳G3	1	#5	STR	40'- 7"	42

BAR	NO.	SIZE	TYPE	LENGTH	WEIGHT
✳S1	28	#5	STR	3'- 3"	95
✳S2	20	#5	1	4'- 1"	85
✳S3	10	#5	2	2'- 3"	23
✳B101	2	#6	STR	24'- 4"	73
✳B102	2	#6	STR	24'-10"	75
✳B103	2	#6	STR	25'- 4"	76
✳B104	2	#6	STR	25'-10"	78
✳B105	2	#6	STR	26'- 4"	79
✳B106	2	#6	STR	26'- 9"	80
✳B107	2	#6	STR	27'- 3"	82
✳B108	2	#6	STR	27'- 9"	83
✳B109	2	#6	STR	28'- 3"	85
✳B110	2	#6	STR	28'- 9"	86
✳B111	2	#6	STR	29'- 3"	88
✳B112	2	#6	STR	29'- 9"	89
✳B113	2	#6	STR	30- 2"	91
✳B114	2	#6	STR	30'- 8"	92
✳B115	2	#6	STR	31'- 2"	94
✳B116	2	#6	STR	31'- 8"	95
✳B117	2	#6	STR	32'- 2"	97
✳B118	2	#6	STR	32'- 8"	98
✳B119	2	#6	STR	33'- 2"	100
✳B120	2	#6	STR	33'- 7"	101
✳B121	2	#6	STR	34'- 1"	102
✳B122	2	#6	STR	34'- 7"	104
✳B123	2	#6	STR	35'- 1"	105
✳B124	2	#6	STR	35'- 7"	107
✳B125	2	#6	STR	36'- 1"	108
✳B126	2	#6	STR	36'- 6"	110
✳B127	2	#6	STR	37'- 0"	111
✳B128	2	#6	STR	37'- 6"	113
✳B129	2	#6	STR	38'- 0"	114
✳B130	2	#6	STR	38'- 6"	116
✳B131	2	#6	STR	39'- 0"	117
✳B132	2	#6	STR	39'- 5"	118
✳B133	2	#6	STR	39-11"	120
✳B134	2	#6	STR	40'- 5"	121
✳B135	2	#6	STR	40'-11"	123
✳B136	2	#6	STR	41'- 5"	124
✳B137	2	#6	STR	41'-11"	126

BAR	NO.	SIZE	TYPE	LENGTH	WEIGHT
B201	2	#8	STR	24'- 9"	132
B202	2	#8	STR	25'- 3"	135
B203	2	#8	STR	25'- 9"	138
B204	2	#8	STR	26'- 3"	140
B205	2	#8	STR	26'- 9"	143
B206	2	#8	STR	27'- 2"	145
B207	2	#8	STR	27'- 8"	148
B208	2	#8	STR	28'- 2"	150
B209	2	#8	STR	28'- 8"	153
B210	2	#8	STR	29'- 2"	156
B211	2	#8	STR	29'- 8"	158
B212	2	#8	STR	30'- 2"	161
B213	2	#8	STR	30- 7"	163
B214	2	#8	STR	31- 1"	166
B215	2	#8	STR	31'- 7"	169
B216	2	#8	STR	32'- 1"	171
B217	2	#8	STR	32'- 7"	174
B218	2	#8	STR	33'- 1"	177
B219	2	#8	STR	33'- 7"	179
B220	2	#8	STR	34'- 0"	182
B221	2	#8	STR	34'- 6"	184
B222	2	#8	STR	35'- 0"	187
B223	2	#8	STR	35'- 6"	190
B224	2	#8	STR	36'- 0"	192
B225	2	#8	STR	36'- 6"	195
B226	2	#8	STR	36'-11"	197
B227	2	#8	STR	37'- 5"	200
B228	2	#8	STR	37'-11"	202
B229	2	#8	STR	38'- 5"	205
B230	2	#8	STR	38'-11"	208
B231	2	#8	STR	39'- 5"	210
B232	2	#8	STR	39'-10"	213
B233	2	#8	STR	40- 4"	215
B234	2	#8	STR	40'-10"	218
B235	2	#8	STR	41'- 4"	221
B236	2	#8	STR	41'-10"	223
B237	2	#8	STR	42'- 4"	226

REINFORCING STEEL	LBS.	8318
✳EPOXY COATED REINFORCING STEEL	LBS.	6832
CLASS AA CONCRETE BREAKDOWN		
POUR 1 SLAB	C. Y.	47.1
POUR 2 SIDEWALK & BARRIER RAIL	C. Y.	4.9
CLASS AA CONCRETE	C. Y.	52.0

BILL OF MATERIAL - APPROACH SLAB @ END BENT#2

BAR	NO.	SIZE	TYPE	LENGTH	WEIGHT
✳A1	49	#5	STR	36'- 7"	1870
A2	98	#4	STR	19'- 4"	1266
✳A121	2	#5	STR	34'- 3"	71
✳A122	2	#5	STR	31'- 5"	66
✳A123	2	#5	STR	28'- 8"	60
✳A124	2	#5	STR	25'-11"	54
✳A125	2	#5	STR	23'- 1"	48
✳A126	2	#5	STR	20'- 4"	42
✳A127	2	#5	STR	17'- 6"	37
✳A128	2	#5	STR	14'- 9"	31
✳A129	2	#5	STR	12'- 0"	25
✳A130	2	#5	STR	9'- 2"	19
✳A131	2	#5	STR	6'- 5"	13
✳A132	2	#5	STR	3'- 8"	8
✳A133	1	#5	STR	2'- 3"	2
A221	4	#4	STR	18'- 0"	48
A222	4	#4	STR	16'- 7"	44
A223	2	#4	STR	28'- 8"	38
A224	2	#4	STR	25'-11"	35
A225	2	#4	STR	23'- 1"	31
A226	2	#4	STR	20'- 4"	27
A227	2	#4	STR	17'- 6"	23
A228	2	#4	STR	14'- 9"	20
A229	2	#4	STR	12'- 0"	16
A230	2	#4	STR	9'- 2"	12
A231	2	#4	STR	6'- 5"	9
A232	2	#4	STR	3'- 8"	5
A233	1	#4	STR	2'- 3"	2
✳B2	7	#5	STR	11'- 8"	85
✳B4	1	#5	3	6'- 2"	6
✳B6	8	#4	STR	14'- 3"	76

BAR	NO.	SIZE	TYPE	LENGTH	WEIGHT
✳D1	16	#4	STR	0'-10"	9
✳G1	25	#4	STR	5'- 4"	89
✳G4	1	#5	STR	39'- 2"	41
✳S1	28	#5	STR	3'- 3"	95
✳S2	20	#5	1	4'- 1"	85
✳S3	10	#5	2	2'- 3"	23
✳B141	3	#6	STR	37'- 0"	167
✳B142	3	#6	STR	36'- 6"	164
✳B143	3	#6	STR	35'-11"	162
✳B144	3	#6	STR	35'- 5"	160
✳B145	3	#6	STR	34'-10"	157
✳B146	3	#6	STR	34'- 4"	155
✳B147	3	#6	STR	33'- 9"	152
✳B148	3	#6	STR	33'- 3"	150
✳B149	3	#6	STR	32'- 8"	147
✳B150	3	#6	STR	32'- 2"	145
✳B151	3	#6	STR	31'- 7"	142
✳B152	3	#6	STR	31'- 1"	140
✳B153	3	#6	STR	30- 6"	137
✳B154	3	#6	STR	30'- 0"	135
✳B155	3	#6	STR	29'- 5"	133
✳B156	3	#6	STR	28'-11"	130
✳B157	3	#6	STR	28'- 4"	128
✳B158	3	#6	STR	27'-10"	125
✳B159	3	#6	STR	27'- 3"	123
✳B160	3	#6	STR	26'- 9"	121
✳B161	3	#6	STR	26'- 2"	118
✳B162	3	#6	STR	25'- 8"	116
✳B163	3	#6	STR	25'- 2"	113
✳B164	3	#6	STR	24'- 7"	111
✳B165	2	#6	STR	24'- 3"	73

BAR	NO.	SIZE	TYPE	LENGTH	WEIGHT
B241	3	#8	STR	37'- 5"	300
B242	3	#8	STR	36'-11"	296
B243	3	#8	STR	36'- 4"	291
B244	3	#8	STR	35'-10"	287
B245	3	#8	STR	35'- 3"	282
B246	3	#8	STR	34'- 9"	278
B247	3	#8	STR	34'- 2"	274
B248	3	#8	STR	33'- 8"	270
B249	3	#8	STR	33'- 1"	265
B250	3	#8	STR	32'- 7"	261
B251	3	#8	STR	32'- 0"	256
B252	3	#8	STR	31'- 6"	252
B253	3	#8	STR	30-11"	248
B254	3	#8	STR	30'- 5"	244
B255	3	#8	STR	29'-10"	239
B256	3	#8	STR	29'- 4"	235
B257	3	#8	STR	28'- 9"	230
B258	3	#8	STR	28'- 3"	226
B259	3	#8	STR	27'- 8"	222
B260	3	#8	STR	27'- 2"	218
B261	3	#8	STR	26'- 7"	213
B262	3	#8	STR	26'- 1"	209
B263	3	#8	STR	25'- 7"	205
B264	3	#8	STR	25'- 0"	200
B265	2	#8	STR	24'- 8"	132

REINFORCING STEEL	LBS.	7709
✳EPOXY COATED REINFORCING STEEL	LBS.	6259
CLASS AA CONCRETE BREAKDOWN		
POUR 1 SLAB	C. Y.	43.6
POUR 2 SIDEWALK & BARRIER RAIL	C. Y.	3.4
CLASS AA CONCRETE	C. Y.	47.0

BAR TYPES

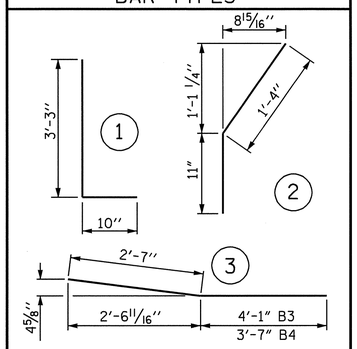

ALL BAR DIMENSIONS ARE OUT TO OUT

PROJECT NO. U-0620
CUMBERLAND COUNTY
STATION: 161+95.29 -L-

SHEET 4 OF 6

STATE OF NORTH CAROLINA
DEPARTMENT OF TRANSPORTATION
RALEIGH

BRIDGE APPROACH SLAB
FOR FLEXIBLE PAVEMENT
(LEFT LANE)

NORTH CAROLINA PROFESSIONAL SEAL 15825 ENGINEER BRUCE D. KLAPPENBACH
8-4-04

REVISIONS					
NO.	BY:	DATE:	NO.	BY:	DATE:
1			3		
2			4		

SHEET NO. S-86
TOTAL SHEETS 129

DRAWN BY : G.M.Patterson DATE : 6/08/04
CHECKED BY : D.A. GLADDEN DATE : 7/08/04

27-JUL-2004 08:02
W:\squadl\U0620\Str2and3\mpatterson\Microstation\u0620_sd_as_02.dgn
bklappenbach

STR #2 NCDOS