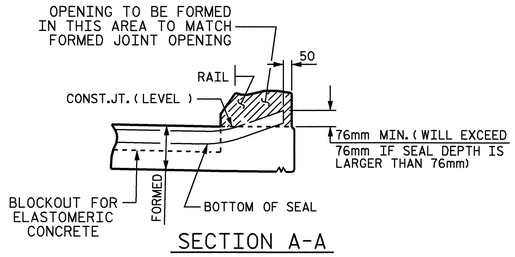

SECTION A-A

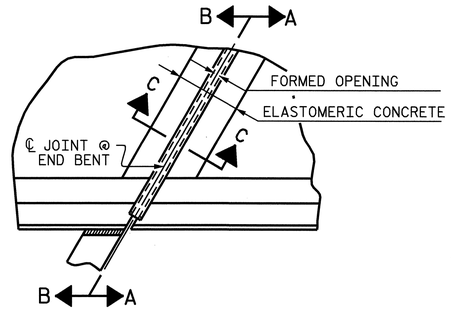

PLAN

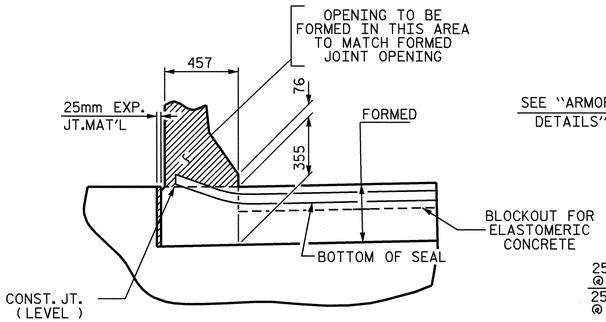

SECTION B-B

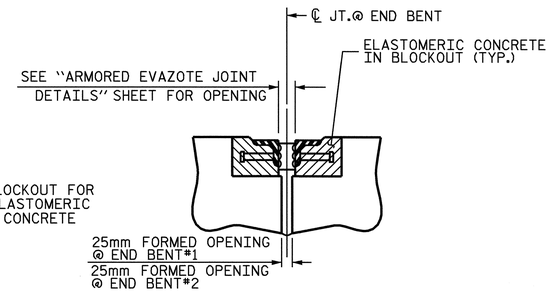

SECTION C-C
ARMORED EVAZOTE JOINT SEAL

JOINT SEAL DETAILS @ END BENT

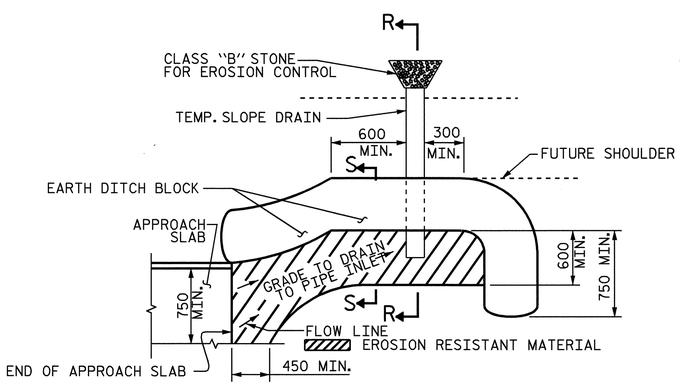

NOTE: IMMEDIATELY AFTER THE CONSTRUCTION OF THE APPROACH SLAB, THE CONTRACTOR SHALL PROVIDE TEMPORARY BERM AND SLOPE DRAIN. CONTRACTOR SHALL GRADE TO PIPE INLET AND PROVIDE EROSION RESISTANT MATERIAL AS SHOWN. THE EROSION RESISTANT MATERIAL SHALL BE EITHER 1) ASPHALT PLANT MIX, TYPE 1 OR TYPE 2, MIN. 50mm DEPTH, 2) EROSION CONTROL MAT, OR 3) CONCRETE, AS DIRECTED BY THE ENGINEER. THE SLOPE DRAIN SHALL CONSIST OF A NON-PERFORATED TEMPORARY DRAINAGE PIPE, 305mm IN DIAMETER.

PLAN VIEW

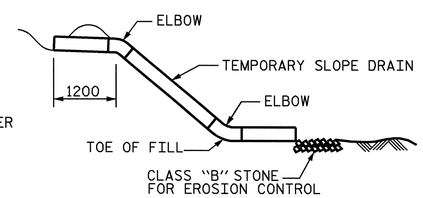

SECTION R-R

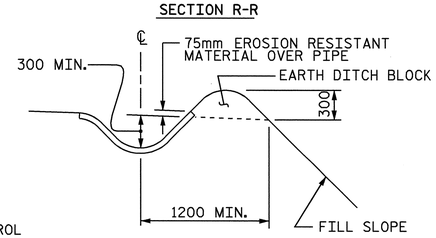

SECTION S-S

TEMPORARY BERM AND SLOPE DRAIN DETAILS

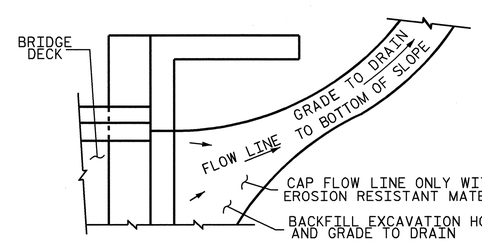

NOTE: IF THE APPROACH SLAB IS NOT CONSTRUCTED IMMEDIATELY AFTER THE BACKFILLING OF THE END BENT EXCAVATION, GRADE TO DRAIN TO THE BOTTOM OF THE SLOPE AND PROVIDE EROSION RESISTANT MATERIAL, SUCH AS FIBERGLASS ROVING OR AS DIRECTED BY THE ENGINEER TO PREVENT SOIL EROSION AND TO PROTECT THE AREA ADJACENT TO THE STRUCTURE. THE CONTRACTOR WILL BE REQUIRED TO REMOVE THESE MATERIALS PRIOR TO CONSTRUCTION OF THE APPROACH SLAB.

TEMPORARY DRAINAGE DETAIL

BILL OF MATERIAL
FOR ONE APPROACH SLAB
(2 REQ'D)

BAR	NO.	SIZE	TYPE	LENGTH	WEIGHT
✳A1	98	#16	STR	6240	949
A2	100	#13	STR	6120	608
✳A101	2	#16	STR	10980	34
✳A102	2	#16	STR	10340	32
✳A103	2	#16	STR	9700	30
✳A104	2	#16	STR	9040	28
✳A105	2	#16	STR	8400	26
✳A106	2	#16	STR	7760	24
✳A107	2	#16	STR	7180	22
✳A108	2	#16	STR	6540	20
✳A109	2	#16	STR	5900	18
✳A110	2	#16	STR	5260	16
✳A111	2	#16	STR	4600	14
✳A112	2	#16	STR	3960	12
✳A113	2	#16	STR	3320	10
✳A114	2	#16	STR	2680	8
✳A115	2	#16	STR	2040	6
✳A116	2	#16	STR	1400	4
✳A117	2	#16	STR	740	2
A201	4	#13	STR	5800	23
A202	4	#13	STR	5500	22
A203	4	#13	STR	5180	21
A204	4	#13	STR	4840	19
A205	2	#13	STR	8420	17
A206	2	#13	STR	7780	15
A207	2	#13	STR	7200	14
A208	2	#13	STR	6560	13
A209	2	#13	STR	5920	12
A210	2	#13	STR	5260	10
A211	2	#13	STR	4620	9
A212	2	#13	STR	3980	8
A213	2	#13	STR	3340	7
A214	2	#13	STR	2700	5
A215	2	#13	STR	2060	4
A216	2	#13	STR	1400	3
A217	2	#13	STR	760	2
✳B1	7	#16	STR	3560	39
✳B2	7	#16	STR	3460	38
✳B3	1	#16	3	1820	3
✳B4	1	#16	3	2020	3

BAR	NO.	SIZE	TYPE	LENGTH	WEIGHT
✳B101	3	#19	STR	7260	49
✳B102	3	#19	STR	7460	50
✳B103	3	#19	STR	7680	51
✳B104	3	#19	STR	7880	53
✳B105	3	#19	STR	8080	54
✳B106	3	#19	STR	8300	56
✳B107	3	#19	STR	8500	57
✳B108	3	#19	STR	8720	58
✳B109	3	#19	STR	8920	60
✳B110	3	#19	STR	9140	61
✳B111	3	#19	STR	9340	63
✳B112	3	#19	STR	9560	64
✳B113	3	#19	STR	9760	65
✳B114	3	#19	STR	9980	67
✳B115	3	#19	STR	10180	68
✳B116	3	#19	STR	10400	70
✳B117	3	#19	STR	10600	71
✳B118	3	#19	STR	10820	73
✳B119	3	#19	STR	11020	74
✳B120	3	#19	STR	11240	75
✳B121	3	#19	STR	11440	77
✳B122	3	#19	STR	11660	78
✳B123	3	#19	STR	11860	80
✳B124	3	#19	STR	12080	81
✳B125	3	#19	STR	12280	82
✳B126	3	#19	STR	12500	84
B201	3	#25	STR	7540	90
B202	3	#25	STR	7740	92
B203	3	#25	STR	7960	95
B204	3	#25	STR	8160	97
B205	3	#25	STR	8380	100
B206	3	#25	STR	8580	102
B207	3	#25	STR	8800	105
B208	3	#25	STR	9000	107
B209	3	#25	STR	9220	110
B210	3	#25	STR	9420	112
B211	3	#25	STR	9640	115
B212	3	#25	STR	9840	117
B213	3	#25	STR	10060	120
B214	3	#25	STR	10260	122
B215	3	#25	STR	10480	125
B216	3	#25	STR	10680	127

BAR	NO.	SIZE	TYPE	LENGTH	WEIGHT
B217	3	#25	STR	10900	130
B218	3	#25	STR	11100	132
B219	3	#25	STR	11320	135
B220	3	#25	STR	11520	137
B221	3	#25	STR	11740	140
B222	3	#25	STR	11940	142
B223	3	#25	STR	12140	145
B224	3	#25	STR	12360	147
B225	3	#25	STR	12560	150
B226	3	#25	STR	12780	152
✳G1	1	#16	STR	12880	20
✳S1	58	#16	STR	940	85
✳S2	42	#16	1	1180	77
✳S3	20	#16	2	640	20

REINFORCING STEEL	kg.	3957
✳EPOXY COATED REINFORCING STEEL	kg.	3261
CLASS AA CONCRETE BREAKDOWN		
POUR 1 SLAB	C.M.	37.3
POUR 2 RAIL	C.M.	1.6
CLASS AA CONCRETE	C.M.	39.9

BAR TYPES

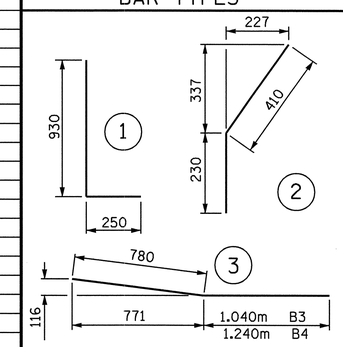

ALL BAR DIMENSIONS ARE OUT TO OUT

PROJECT NO. R-2610B
CHATHAM COUNTY
STATION: 22+83.400-L-

SHEET 3 OF 3

STATE OF NORTH CAROLINA
DEPARTMENT OF TRANSPORTATION
RALEIGH

BRIDGE APPROACH SLAB DETAILS

ASSEMBLED BY : D. A. DAVENPORT	DATE : 2-04		
CHECKED BY : G. M. Patterson	DATE : 2-25-04		
DRAWN BY : FCJ 11/88	REV. 8/16/99	RAL/LES	
CHECKED BY : ARB 11/88	REV. 10/17/00	RWW/LES	
	REV. 5/7/03	RWW/JTE	

REVISIONS

NO.	BY:	DATE:	NO.	BY:	DATE:
1			3		
2			4		

SHEET NO. S-30
TOTAL SHEETS 60

NORTH CAROLINA PROFESSIONAL SEAL 10730 ENGINEER D. ANDRE DAVENPORT, JR.

STR.#1 STD. NO. BAS10SM

02-JUL-2004 11:09
w:\squadj\r2610b\tbarbour\Microstation\strconcrete\R-2610B_sd_AS_01.dgn
ddavenport