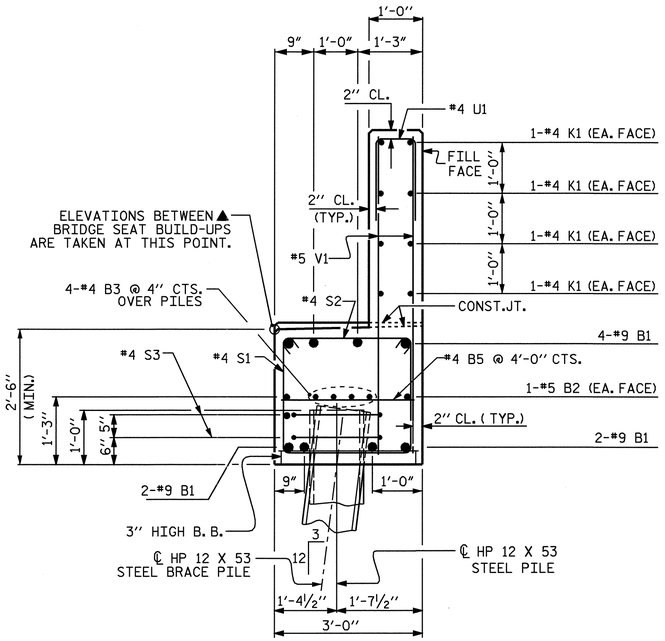

SECTION A-A

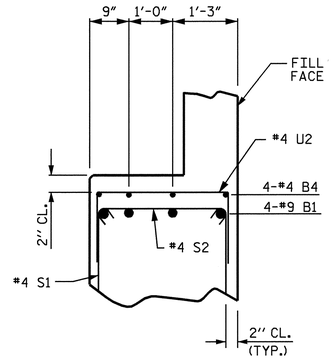

PARTIAL SECTION B-B

BAR TYPES

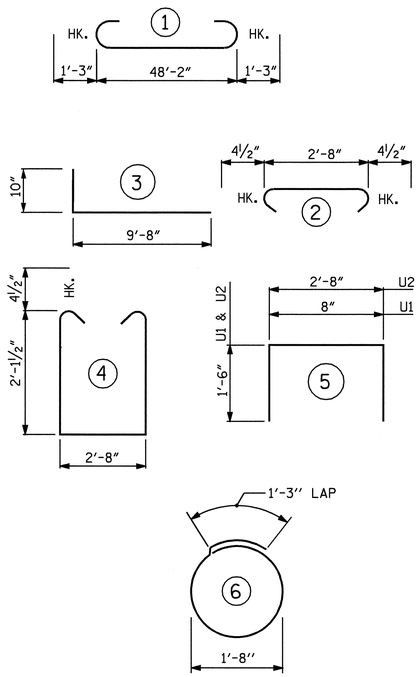

ALL BAR DIMENSIONS ARE OUT TO OUT.

BILL OF MATERIAL
END BENT No. 2

BAR	NO.	SIZE	TYPE	LENGTH	WEIGHT
B1	8	9	1	50'-8"	1378
B2	2	5	STR	48'-3"	101
B3	8	4	STR	25'-4"	135
B4	12	4	STR	2'-11"	23
B5	12	4	STR	2'-8"	21
H1	36	5	3	10'-6"	394
K1	16	4	STR	25'-4"	271
K2	8	4	STR	3'-2"	17
S1	54	4	4	7'-8"	277
S2	54	4	2	3'-5"	123
S3	18	4	6	6'-6"	78
U1	42	4	5	3'-8"	103
U2	9	4	5	5'-8"	34
V1	84	5	STR	5'-10"	511
V2	56	5	STR	7'-5"	433
REINFORCING STEEL (LBS.)					3899

CLASS A CONCRETE BREAKDOWN

POUR #1 (CAP & LOWER WINGS) = 15.9 C.Y.

POUR #2 (BACKWALL & UPPER WINGS = 10.9 C.Y.

TOTAL CLASS A CONCRETE = 26.8 C.Y.

HP 12 X 53 STEEL PILES NO. 9 270 LIN. FT.

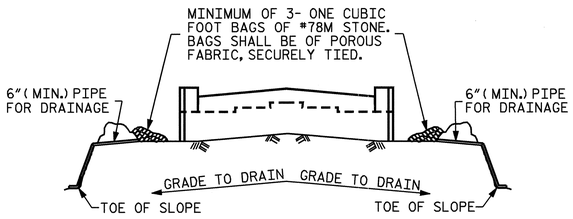

BAGGED STONE AND PIPE SHALL BE PLACED IMMEDIATELY AFTER COMPLETION OF END BENT EXCAVATION. PIPE MAY BE EITHER CONCRETE, CORRUGATED STEEL, CORRUGATED ALUMINUM ALLOY, OR CORRUGATED PLASTIC. PERFORATED PIPE WILL NOT BE ALLOWED.

BAGGED STONE SHALL REMAIN IN PLACE UNTIL THE ENGINEER DIRECTS THAT IT BE REMOVED. THE CONTRACTOR SHALL REMOVE AND DISPOSE OF SILT ACCUMULATIONS AT BAGGED STONE WHEN SO DIRECTED BY THE ENGINEER. BAGS SHALL BE REMOVED AND REPLACED WHENEVER THE ENGINEER DETERMINES THAT THEY HAVE DETERIORATED AND LOST THEIR EFFECTIVENESS.

NO SEPARATE PAYMENT WILL BE MADE FOR THIS WORK AND THE ENTIRE COST OF THIS WORK SHALL BE INCLUDED IN THE UNIT CONTRACT PRICE BID FOR THE SEVERAL PAY ITEMS.

TEMPORARY DRAINAGE AT END BENT

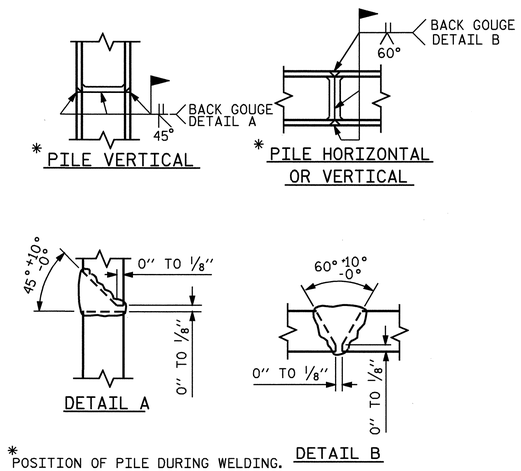

*POSITION OF PILE DURING WELDING.

PILE SPLICE DETAILS

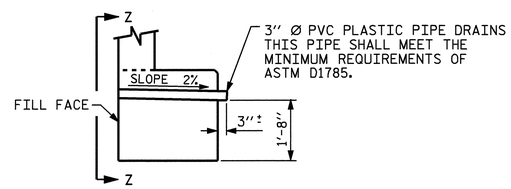

SECTION THRU CAP

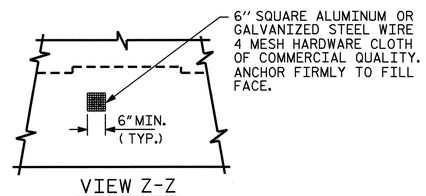

VIEW Z-Z

NOTE: NO SEPARATE PAYMENT WILL BE MADE FOR FURNISHING AND INSTALLING THE PVC PLASTIC PIPE DRAINS, HARDWARE CLOTH AND FASTENERS. THE ENTIRE COST OF THIS WORK SHALL BE INCLUDED IN THE UNIT CONTRACT PRICE BID FOR THE SEVERAL PAY ITEMS.

PIPE DRAIN DETAILS

PROJECT NO. B-3623
CABARRUS COUNTY
STATION: 18+37.50-L-

SHEET 3 OF 3

STATE OF NORTH CAROLINA
DEPARTMENT OF TRANSPORTATION
RALEIGH

SUBSTRUCTURE

END BENT No. 2

NORTH CAROLINA PROFESSIONAL SEAL 10750 ENGINEER DOUGLAS C. OUTLAW, JR.
12/12/03

REVISIONS						SHEET NO.
NO.	BY:	DATE:	NO.	BY:	DATE:	S-31
1			3			TOTAL SHEETS
2			4			34

DRAWN BY : D. L. PLATICA DATE : 5/19/03
CHECKED BY : P.C. BREWER DATE : 9/27/03