METRIC	PROJECT REFERENCE NO.	SHEET NO.
	U-2734	Sig. 68

METAL POLE NO. 5 (MAST ARM A)

(SEE NOTE 4)

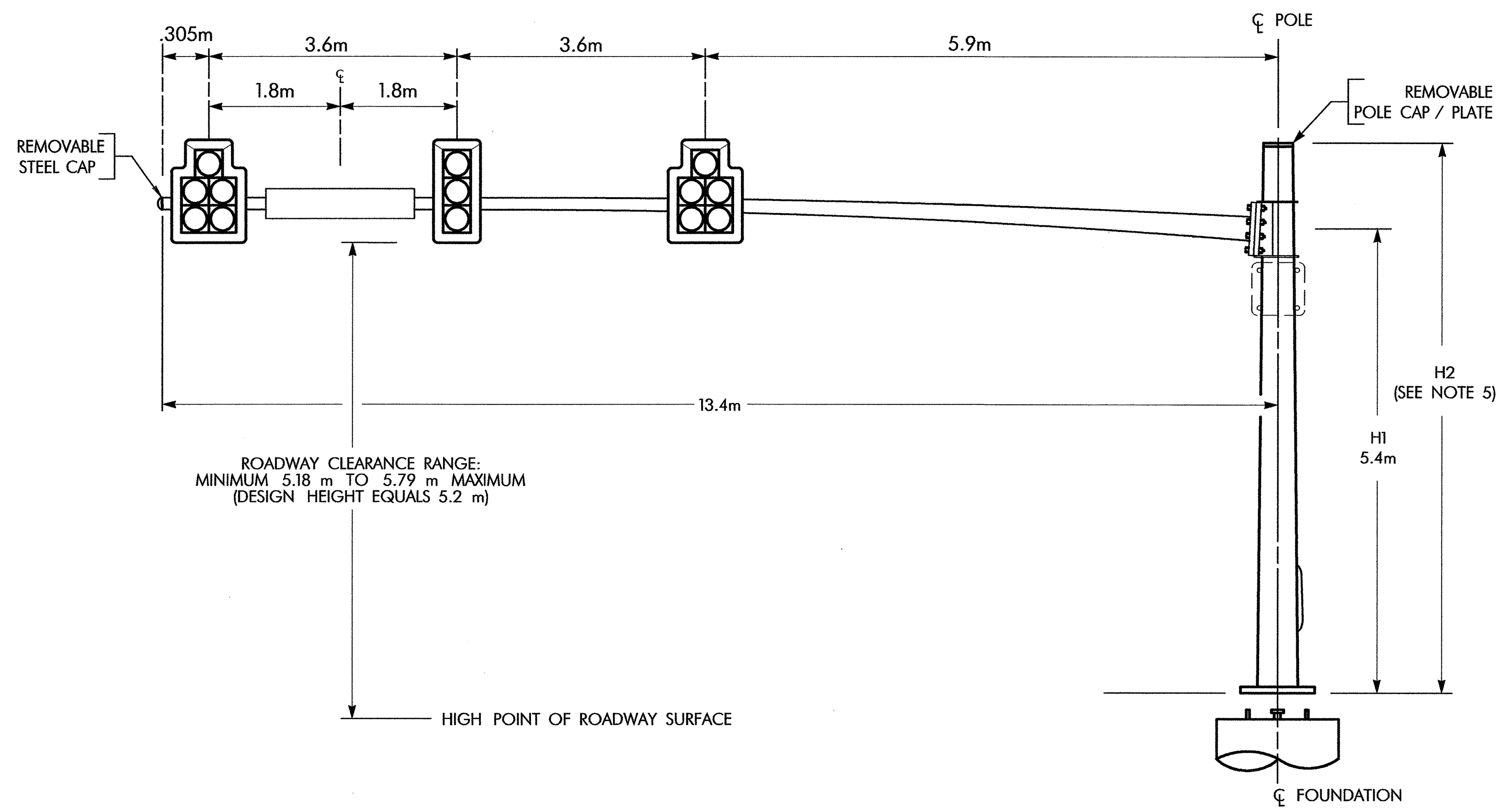

METAL POLE NO. 5 (MAST ARM B)

(SEE NOTE 4)

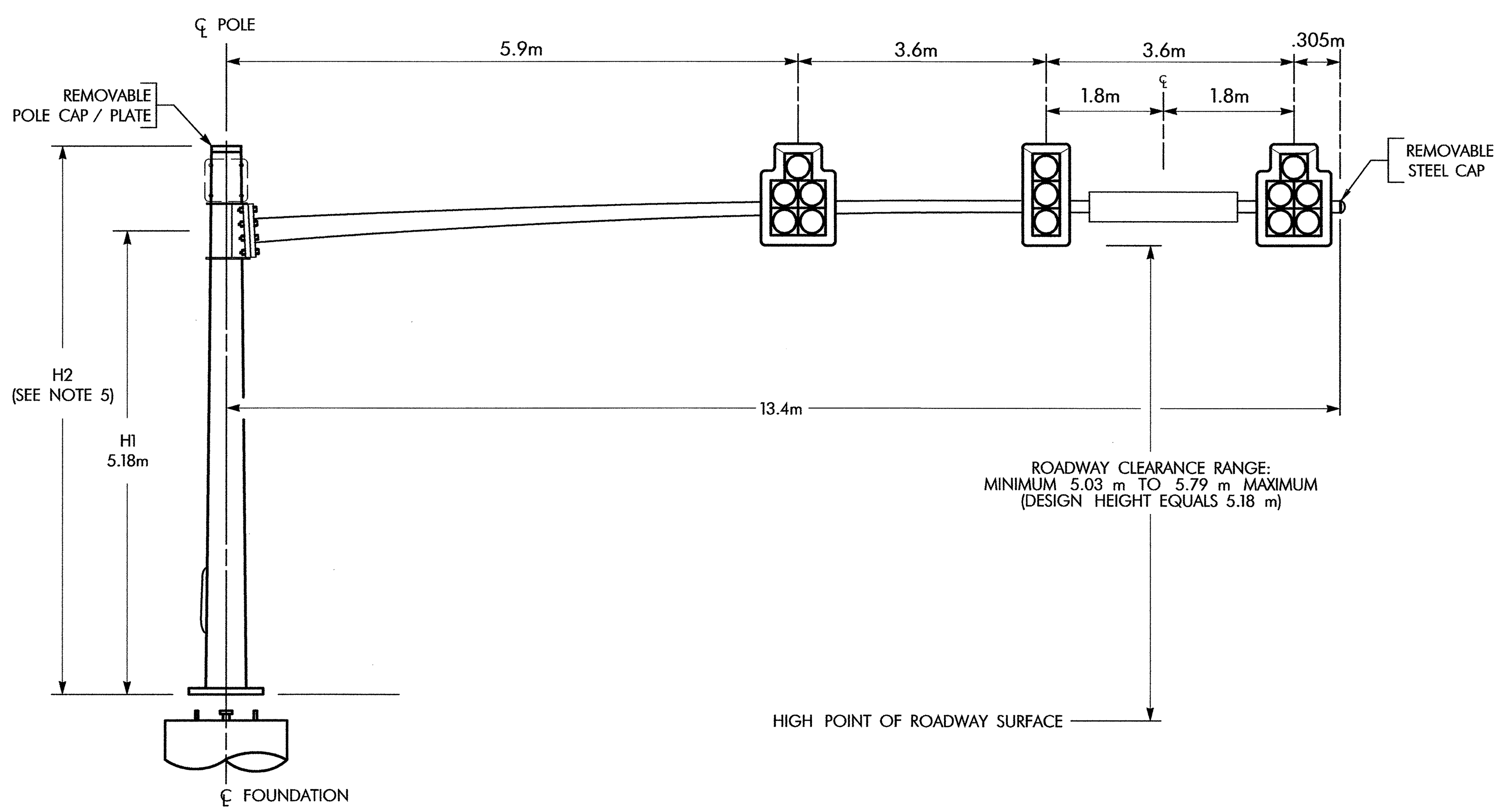

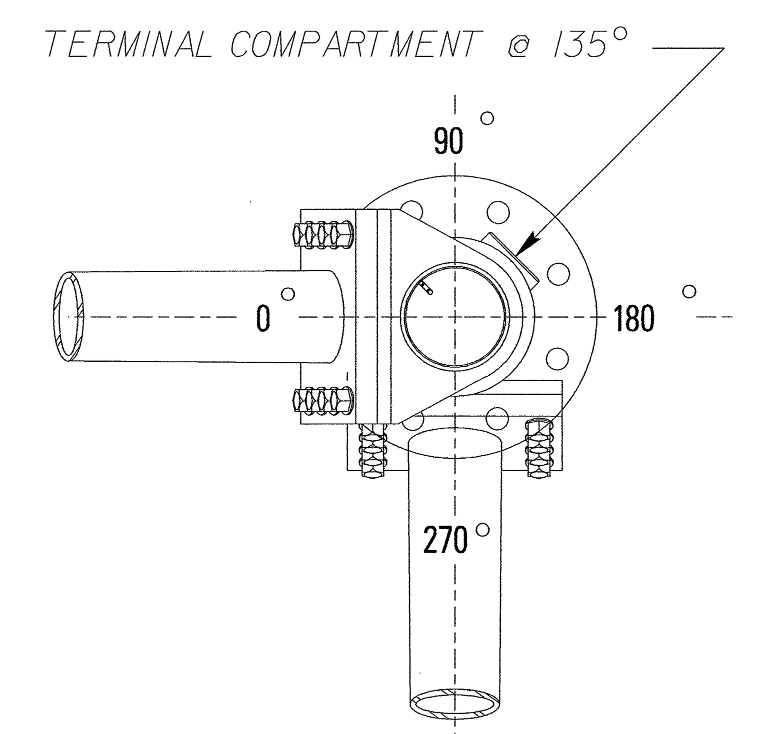

PLAN VIEW
RADIAL ORIENTATION

PLAN VIEW

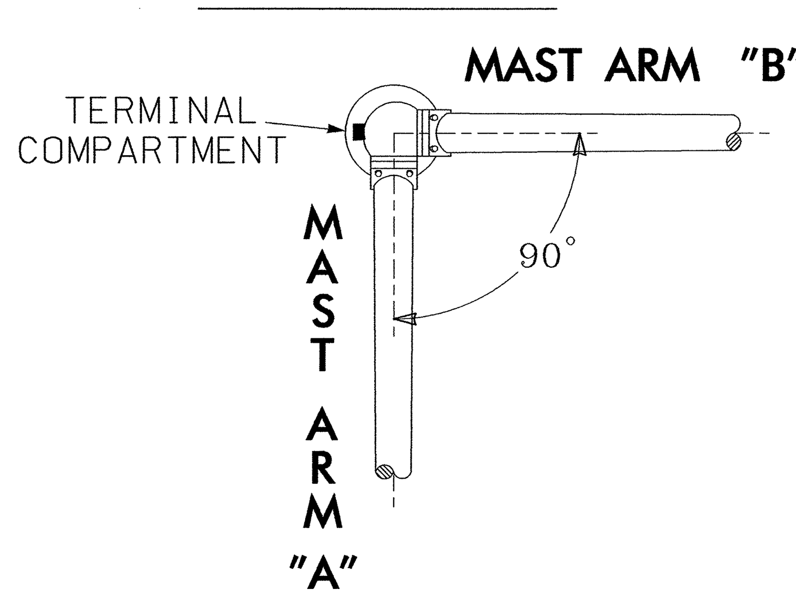

TYPICAL ARM ATTACHMENT

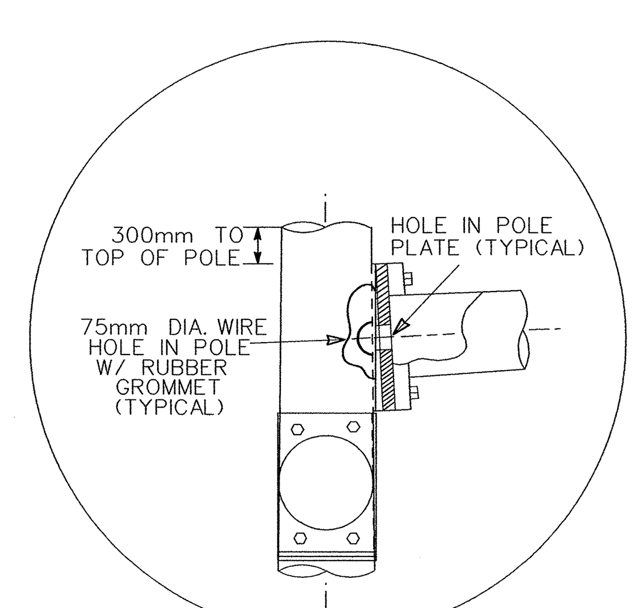

MAST ARM LOADING SCHEDULE

LOADING SYMBOL	DESCRIPTION	AREA (m2)	SIZE (mm)	WEIGHT (kg)
	SIGNAL HEAD 500mm–5 SECTION–WITH BACKPLATE AND ASTRO–BRAC	1.5 S.M.	1070 W X 1420 L	46.7
	SIGNAL HEAD 500mm–3 SECTION–WITH BACKPLATE AND ASTRO–BRAC	0.9 S.M.	650 W X 1340 L	27.2
	WILMINGTON STREET SIGN WITH 2 ASTRO–BRACS (BY OTHERS)	1.12 S.M.	460 W X 2440 L	13.0

NOTES

1. THE TRAFFIC SIGNAL STRUCTURE THAT WILL BE DESIGNED USING INFORMATION SHOWN ON THIS DRAWING SHALL BE DESIGNED IN ACCORDANCE WITH THE "ROADWAY STANDARD DRAWINGS NCDOT" DATED JANUARY 2002 AND "STANDARD SPECIFICATIONS FOR ROADS FOR HIGHWAY SIGNS, LUMINARIES, AND TRAFFIC SIGNALS. AND STRUCTURES"DATED JANUARY 2002 AND THE AASHTO 4TH EDITION 2001, 2002 INTERIM TO STANDARD SPECIFICATIONS FOR STRUCTURAL SUPPORTS
2. THE MASTARM ATTACHMENT HEIGHT (H1) FOR THE METAL POLE WAS DETERMINED USING CROSS SECTIONS ALONG EACH MASTARM, AND THE FOLLOWING DESIGN CRITERIA:
   - SIGNAL HEAD CLEARANCE FROM ROADWAY OF 5.18 METERS IS ASSUMED.
   - SIGNAL HEADS MOUNTED ON THE MASTARMS ARE RIGID MOUNTED AND VERTICALLY CENTERED ON THE ARM. IF VERTICAL ADJUSTMENTS ARE REQUIRED TO MAINTAIN A UNIFORM HORIZONTAL APPEARANCE OF THE SIGNAL HEADS ALONG THE MASTARM, THE ADJUSTMENTS SHALL BE MADE WITHIN THE ROADWAY CLEARANCE RANGE SHOWN ON THE ELEVATION VIEWS.
3. THE CONTRACTOR IS RESPONSIBLE FOR VERIFYING THE MASTARM LENGTH AND ATTACHMENT HEIGHT SHOWN WILL PROVIDE THE REQUIRED VERTICAL CLEARANCES FROM THE ROADWAY PRIOR TO SUBMITTING FINAL SHOP DRAWINGS.
4. THE METAL POLE, MASTARMS, AND FOUNDATIONS ARE TO BE DESIGNED USING THE DESIGN LOADINGS SHOWN ON THIS SHEET. THESE ARE ANTICIPATED "WORST CASE" LOADING CONDITIONS. REFER TO THE TRAFFIC SIGNAL DESIGN FOR ACTUAL LOADING CONDITIONS THAT WILL BE APPLIED AT THE TIME OF INSTALLATION.
5. THE ACTUAL HEIGHT OF THE POLE (H2) SHALL BE DETERMINED BY THE POLE MANUFACTURER BASED ON THE FOLLOWING DESIGN CRITERIA:
   - H2 SHALL BE EQUAL TO H1 PLUS .610 METER, OR
   - H1 PLUS 1/2 OF THE TOTAL HEIGHT OF THE MAST ARM GUSSET PLATE ASSEMBLY PLUS .305 METER, WHICHEVER IS GREATER.

   THE CONTRACTOR IS RESPONSIBLE FOR INSURING THAT THIS INFORMATION IS RELAYED TO THE MANUFACTURER, AND THAT IT IS CLEARLY SHOWN ON THE SHOP DRAWING.
6. THE CONTRACTOR IS RESPONSIBLE FOR PROVIDING SOIL PENETRATION TESTING (SPT) DATA TO THE FABRICATOR WHEN REQUESTS ARE SUBMITTED FOR POLE DESIGNS.
7. THE MAXIMUM ALLOWABLE DEFLECTION AT THE TIP OF THE MAST ARM DUE TO THE COMBINED DEFLECTION OF THE POLE AND THE ARM SHALL NOT EXCEED 3.0% OF THE TOTAL MAST ARM LENGTH UNDER MAXIMUM DEAD LOADING CONDITIONS.

Metal Pole Loading Diagrams

Prepared for:
Traffic Engineering and Safety Systems Branch
Signals and Geometrics Section
State of North Carolina Department of Transportation
122 N. McDowell St., Raleigh, NC 27603

US 76 (Wrightsville Ave.)/
(Military Cutoff Road)
at
SR 1996 (Wrightsville Ave.) and Business Driveway

Division 3 New Hanover County Wilmington

PLAN DATE:	Nov. 2003	REVIEWED BY:	L. M. Eddins
PREPARED BY:	H. M. Surti	REVIEWED BY:	S. S. Asefnia

SCALE 0 N/A

REVISIONS	INIT.	DATE

SEAL

NORTH CAROLINA PROFESSIONAL ENGINEER SEAL 20104 SEPIDEH S. ASEFNIA

SIGNATURE 2/26/04 DATE

SIG. INVENTORY NO.

$$$$SYSTIME$$$$
$$$$$$$$$$$$$$$$DGN$$$$$$$$$$$$$$$$
$$$$USERNAME$$$$