METRIC	PROJECT REFERENCE NO.	SHEET NO.
	R-2911A	SIG. 2

PHASING DIAGRAM

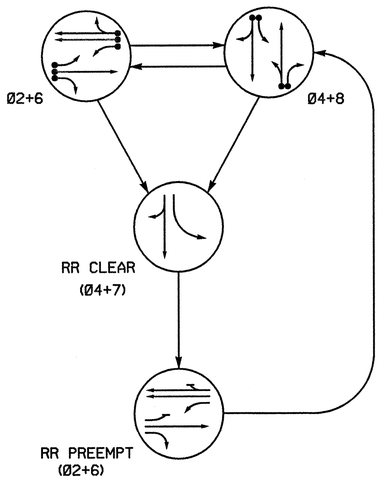

PHASING DIAGRAM DETECTION LEGEND

- DETECTED MOVEMENT
- UNDETECTED MOVEMENT (OVERLAP)
- UNSIGNALIZED MOVEMENT
- PEDESTRIAN MOVEMENT

TABLE OF OPERATION

SIGNAL FACE	PHASE Ø2+6	Ø4+8	CLEAR	RR PREEMPT	FLASH
21,22	G	R	R	G	Y
41	R	G	G	R	R
42	R	G	G	R	R
61,62	G	R	R	G	Y
81,82	R	G	R	R	R
SIGN A	OFF	OFF	ON	ON	OFF
SIGN B	OFF	OFF	ON	ON	OFF

SIGNAL FACE I.D.

Denotes L.E.D.

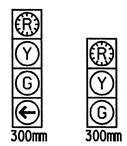

41 — 21,22, 42, 61,62, 81,82

LOOP & DETECTOR UNIT INSTALLATION CHART
NEMA CONTROLLER WITH TS-2 CABINET

INDUCTIVE LOOPS						DETECTOR UNITS						
LOOP NO.	SIZE (m)	TURNS	DIST. FROM STOPBAR (m)	NEW	EXISTING	NEMA PHASE	NEW	EXISTING	TIMING FEATURE	TIMING TIME	PLACE CALL DURING PHASE	INHIBIT DELAY DURING GREEN9
2A,2B	1.8X1.8	4	90		X	2		X	EXTEND	1.8 SEC.	ALL	NO
2C	1.8X1.8	4	27		X	2		X	-	- SEC.	ALL	NO
2D	1.8X18	2-4-2	0		X	2		X	DELAY	3 SEC.	ALL	NO
4A	1.8X18	2-4-2	0		X	4		X	DELAY	3 SEC.	ALL	YES
4B	1.8X9	2-4-2	0		X	4		X	DELAY	10 SEC.	ALL	YES
6A,6B	1.8X1.8	5	90	X		6	X		EXTEND	1.8 SEC.	ALL	NO
6C,6D	1.8X1.8	4	27	X		6	X		-	- SEC.	ALL	NO
6E	1.8X18	2-4-2	0	X		6	X		DELAY	3 SEC.	ALL	NO
8A	1.8X18	2-4-2	0	X		8	X		DELAY	3 SEC.	ALL	YES
8B	1.8X9	2-4-2	0	X		8	X		DELAY	15 SEC.	ALL	YES

2 PHASE ACTUATED WITH RR PREEMPTION (ISOLATED)

NOTES

1. Refer to "Roadway Standard Drawings NCDOT" dated January 2002 and "Standard Specifications for Roads and Structures" dated January 2002.
2. This location contains railroad preemption phasing. Do not program signal for late night flashing operation.
3. Ensure flashing operation does not alter operation of blank out signs.
4. Reposition existing signal heads numbered 81 and 82.
5. Program phase 4 and phase 8 for dual entry.
6. Set all detector units to presence mode.

PLAN QUANTITIES

Pay Item	Meters
Signal Cable	0
Messenger Cable	0
Lead-in Cable	485

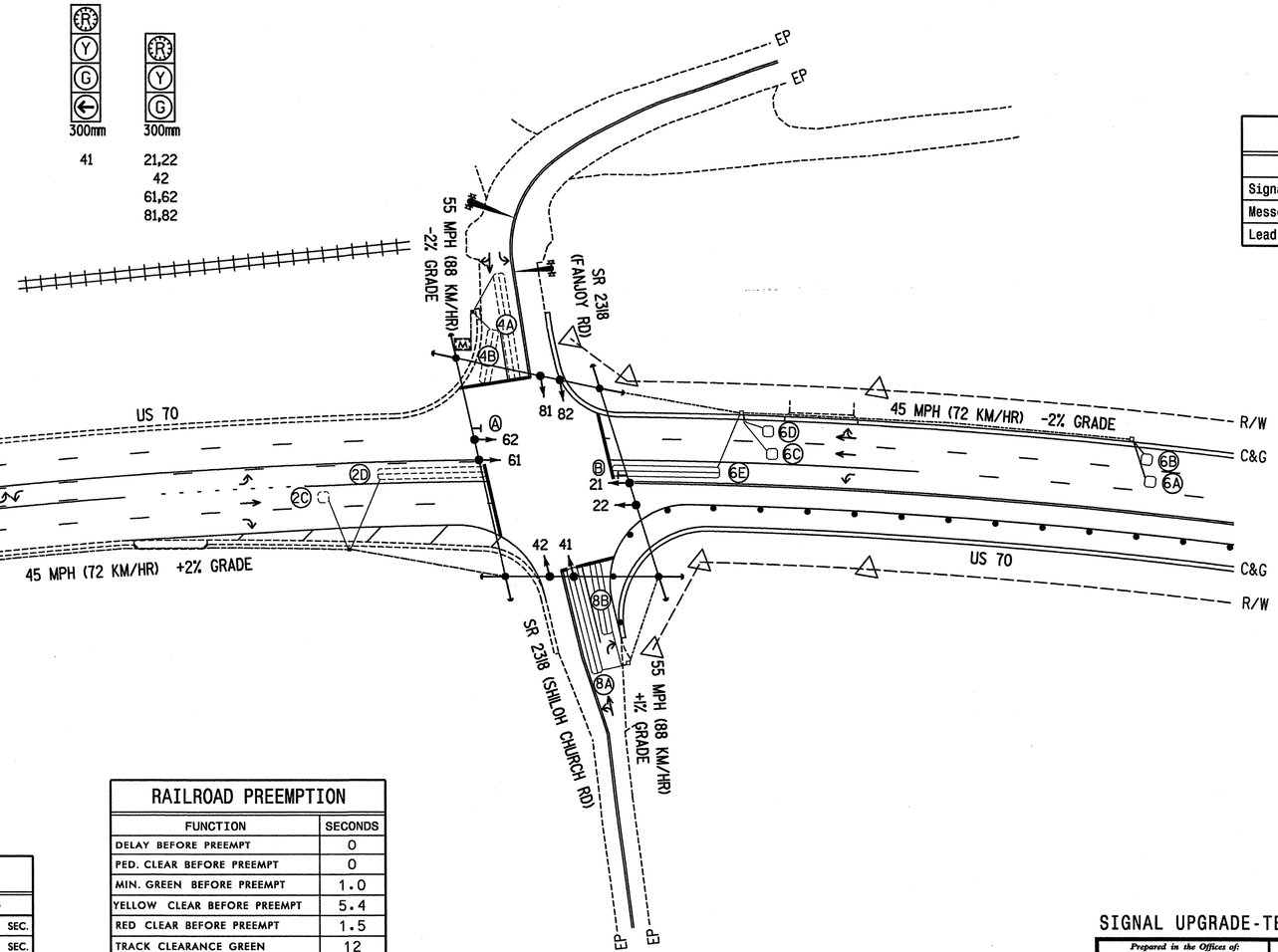

LEGEND

PROPOSED		EXISTING
	Traffic Signal Head	
	Modified Signal Head	N/A
	Sign	
	Pedestrian Signal Head With Push Button & Sign	
	Signal Pole with Guy	
	Signal Pole with Sidewalk Guy	
	Inductive Loop Detector	
M	Master Controller & Cabinet	M
	Junction Box	
	50mm Underground Conduit	
N/A	Right of Way with Marker	
	Directional Arrow	
	Pavement Marking Arrow	
A	"NO RIGHT TURN - TRAIN" Blankout Sign	A
B	"NO LEFT TURN - TRAIN" Blankout Sign	B

TIMING CHART
NEMA CONTROLLER

PHASE	Ø2	Ø4	Ø6	Ø8
MINIMUM GREEN	12 SEC.	7 SEC.	12 SEC.	7 SEC.
PASSAGE/GAP	2.0 SEC.	1.0 SEC.	2.0 SEC.	1.0 SEC.
YELLOW CHANGE INT.	4.7 SEC.	5.4 SEC.	4.7 SEC.	5.4 SEC.
RED CLEARANCE	1.5 SEC.	1.5 SEC.	1.5 SEC.	1.5 SEC.
MAX. 1	60 SEC.	30 SEC.	60 SEC.	30 SEC.
RECALL POSITION	MIN. RECALL	NONE	MIN. RECALL	NONE
VEHI. CALL MEMORY	LOCK	NONLOCK	LOCK	NONLOCK

RAILROAD PREEMPTION

FUNCTION	SECONDS
DELAY BEFORE PREEMPT	0
PED. CLEAR BEFORE PREEMPT	0
MIN. GREEN BEFORE PREEMPT	1.0
YELLOW CLEAR BEFORE PREEMPT	5.4
RED CLEAR BEFORE PREEMPT	1.5
TRACK CLEARANCE GREEN	12
TRACK CLEARANCE YELLOW	5.4
TRACK CLEARANCE RED	1.5
PREEMPT DWELL MIN. GREEN	12
YELLOW CLR AFTER PREEMPT	4.7
RED CLEAR AFTER PREEMPT	1.5

SIGNAL UPGRADE-TEMPORARY

ARCADIS
G & M of North Carolina, Inc.
WWW.ARCADIS-US.COM
801 Corporate Center Drive, Suite 300
Raleigh, NC 27607-5073
Tel: 919/854-1282 Fax: 919/854-5448

Prepared in the Offices of:
Public Transportation and Safety Division
STATE OF NORTH CAROLINA DEPARTMENT OF TRANSPORTATION
Signals and Geometric Section
122 N. McDowell St., Raleigh, NC 27603

SCALE 5 0 10 — 1:500

US 70
AT
SR 2318
(SHILOH CHURCH/FANJOY ROAD)
DIVISION 12 IREDELL COUNTY E. OF STATESVILLE

PLAN DATE:	AUGUST 2002	REVIEWED BY:	K. MILAM
PREPARED BY:	X. FAN	REVIEWED BY:	

REVISIONS	INIT.	DATE

SEAL
NORTH CAROLINA PROFESSIONAL SEAL 21080 ENGINEER TYSON A. GRAVES
SEAL NOT VALID UNLESS SIGNED AND DATED
SIGNATURE — DATE 1-23-03
SIG. INVENTORY NO. 12-1137T

$$$$:$SYSTIME$$$$
$$$$:$$$$