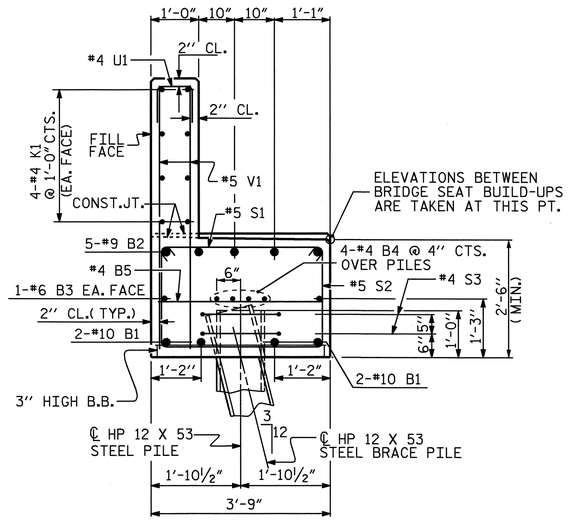

SECTION A-A

BAR TYPES

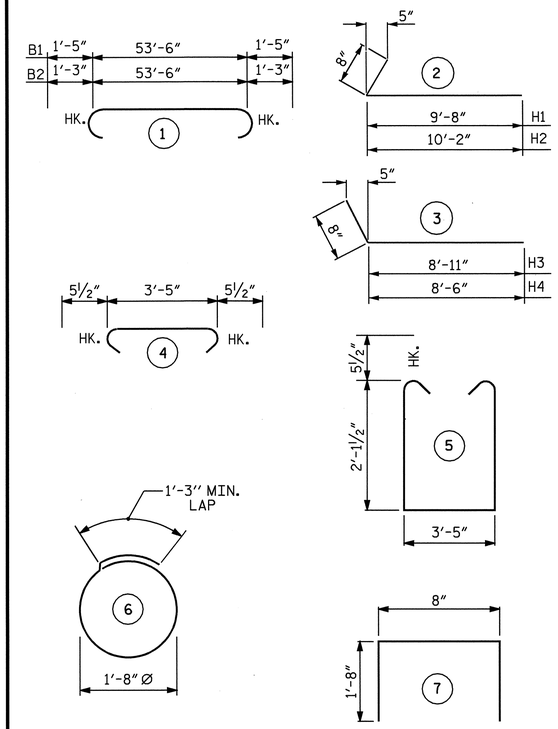

ALL BAR DIMENSIONS ARE OUT TO OUT.

BILL OF MATERIAL
END BENT 2

BAR	NO.	SIZE	TYPE	LENGTH	WEIGHT
B1	4	10	1	56'-4"	970
B2	5	9	1	56'-0"	952
B3	2	6	STR	53'-8"	161
B4	8	4	STR	28'-1"	150
B5	14	4	STR	3'-5"	32
H1	9	5	2	10'-4"	97
H2	9	5	2	10'-10"	102
H3	9	5	3	9'-7"	90
H4	9	5	3	9'-2"	86
K1	16	4	STR	28'-1"	300
K2	4	4	STR	3'-4"	9
K3	4	4	STR	3'-3"	9
S1	49	5	4	4'-4"	221
S2	49	5	5	8'-7"	439
S3	16	4	6	6'-6"	69
U1	47	4	7	4'-0"	126
V1	94	5	STR	6'-1"	596
V2	30	5	STR	7'-3"	227
V3	26	5	STR	7'-8"	208
REINFORCING STEEL TOTAL					LBS. 4844

CLASS A CONCRETE

POUR #1 CAP & LOWER
PORTION OF WINGS 21.1 CU. YD.

POUR #2 BACKWALL & UPPER
PORTION OF WINGS 11.5 CU. YD.

TOTAL CLASS A CONCRETE 32.6 CU. YD.

HP 12 X 53 STEEL PILES

(LEFT)	NO. 4	LIN. FEET	40
(RIGHT)	NO. 4	LIN. FEET	100

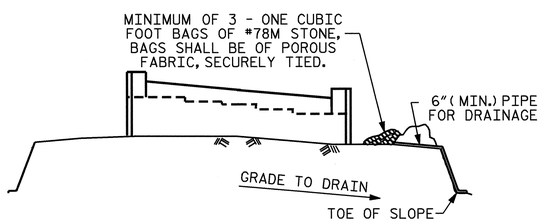

BAGGED STONE AND PIPE SHALL BE PLACED IMMEDIATELY AFTER COMPLETION OF END BENT EXCAVATION. PIPE MAY BE EITHER CONCRETE, CORRUGATED STEEL, CORRUGATED ALUMINUM ALLOY, OR CORRUGATED PLASTIC. PERFORATED PIPE WILL NOT BE ALLOWED.

BAGGED STONE SHALL REMAIN IN PLACE UNTIL THE ENGINEER DIRECTS THAT IT BE REMOVED. THE CONTRACTOR SHALL REMOVE AND DISPOSE OF SILT ACCUMULATIONS AT BAGGED STONE WHEN SO DIRECTED BY THE ENGINEER. BAGS SHALL BE REMOVED AND REPLACED WHENEVER THE ENGINEER DETERMINES THAT THEY HAVE DETERIORATED AND LOST THEIR EFFECTIVENESS.

NO SEPARATE PAYMENT WILL BE MADE FOR THIS WORK AND THE ENTIRE COST OF THIS WORK SHALL BE INCLUDED IN THE UNIT CONTRACT PRICE BID FOR THE SEVERAL PAY ITEMS.

TEMPORARY DRAINAGE AT END BENT

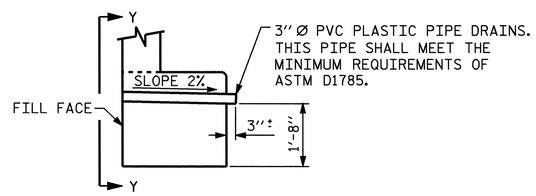

SECTION THRU CAP

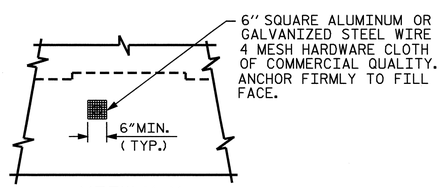

VIEW Y-Y

NOTE: NO SEPARATE PAYMENT WILL BE MADE FOR FURNISHING AND INSTALLING THE PVC PLASTIC PIPE DRAINS, HARDWARE CLOTH AND FASTENERS. THE ENTIRE COST OF THIS WORK SHALL BE INCLUDED IN THE UNIT CONTRACT PRICE BID FOR THE SEVERAL PAY ITEMS.

PIPE DRAIN DETAILS

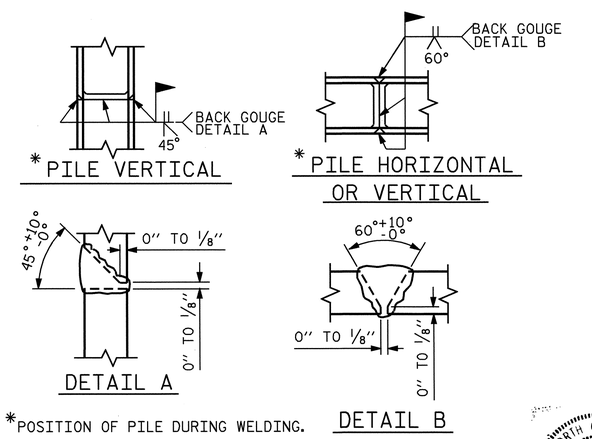

*POSITION OF PILE DURING WELDING.

PILE SPLICE DETAILS

PROJECT NO. B-3649
GUILFORD COUNTY
STATION: 17+39.20 -L-

SHEET 3 OF 3

STATE OF NORTH CAROLINA
DEPARTMENT OF TRANSPORTATION
RALEIGH

SUBSTRUCTURE
END BENT 2

NORTH CAROLINA PROFESSIONAL SEAL 11259 ENGINEER DAVID R. ANDERSON
4-4-04

REVISIONS						SHEET NO.
NO.	BY:	DATE:	NO.	BY:	DATE:	S-27
1			3			TOTAL SHEETS
2			4			32

DRAWN BY : S. M. RASHIDI DATE : 4/29/03
CHECKED BY : M. A. ALLEN DATE : 01-04